https://truckmanualshub.com/

⚠ SAFETY FIRST

This symbol, the industry's "Safety Alert Symbol", is used throughout this manual and on labels on the machine itself to warn of the possibility of personal injury. Read these instructions carefully.

It is essential that you read the instructions and safety regulations before you attempt to repair or use this unit.

⚠ **DANGER**	**: Indicates an imminently hazardous situation which, if not avoided, will result in death or serious injury.**
⚠ **WARNING**	**: Indicates a potentially hazardous situation which, if not avoided, could result in death or serious injury.**
⚠ **CAUTION**	**: Indicates a potentially hazardous situation which, if not avoided, may result in minor or moderate injury.**
■ **IMPORTANT**	**: Indicates that equipment or property damage could result if instructions are not followed.**
■ **NOTE**	**: Gives helpful information.**

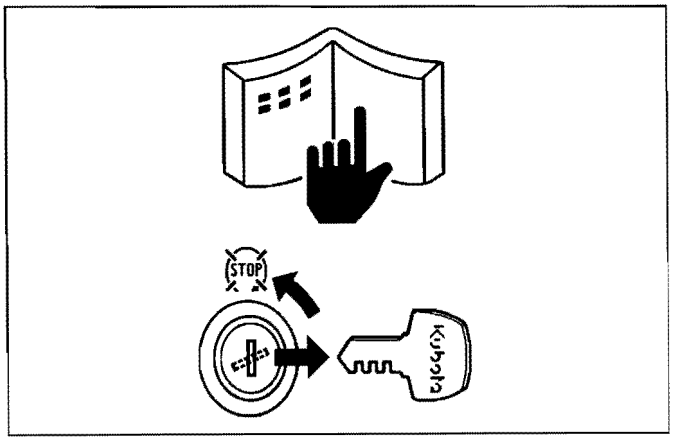

BEFORE SERVICING AND REPAIRING

- Read all instructions and safety instructions in this manual and on your machine safety decals.
- Clean the work area and machine.
- Park the machine on a firm and level ground, and set the parking brake.
- Lower the implement to the ground.
- Stop the engine, and remove the key.
- Disconnect the battery negative cable.
- Hang a "**DO NOT OPERATE**" tag in operator station.

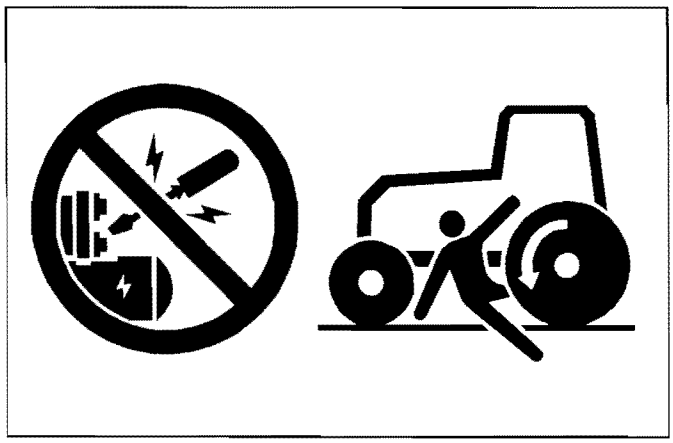

SAFETY STARTING

- Do not start the engine by shorting across starter terminals or bypassing the safety start switch.
- Do not alter or remove any part of machine safety system.
- Before starting the engine, make sure that all shift levers are in neutral positions or in disengaged positions.
- Never start the engine while standing on ground. Start the engine only from operator's seat.

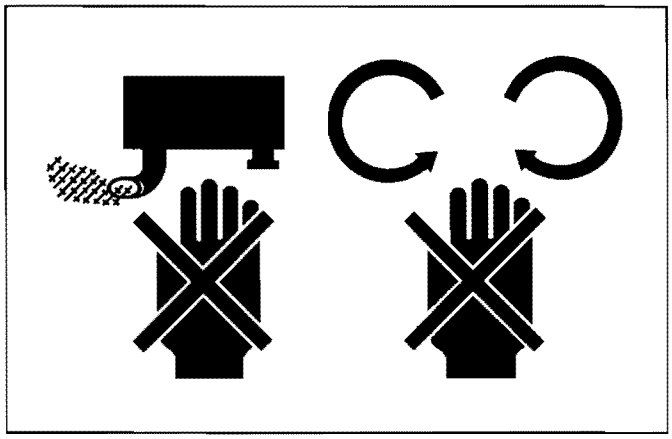

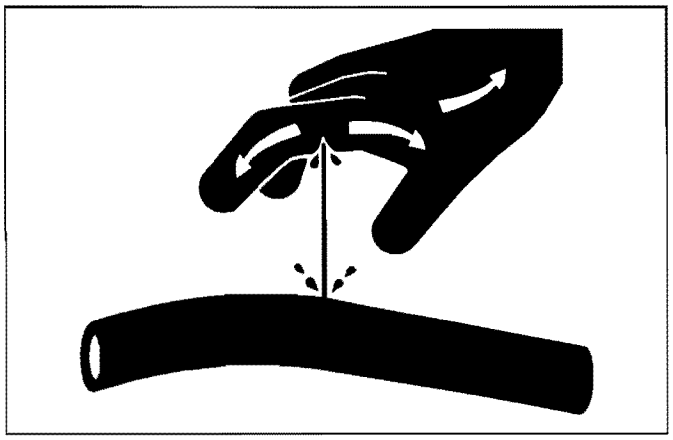

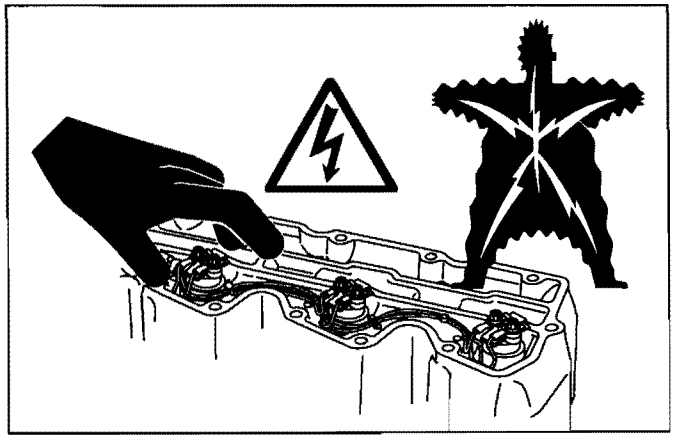

SAFETY WORKING

- Do not work on the machine while under the influence of alcohol, medication, or other substances or while fatigued.
- Wear close fitting clothing and safety equipment appropriate to the job.
- Use tools appropriate to the work. Makeshift tools, parts, and procedures are not recommended.
- When servicing is performed together by two or more persons, take care to perform all work safely.
- Do not work under the machine that is supported solely by a jack. Always support the machine by safety stands.
- Do not touch the rotating or hot parts while the engine is running.
- Never remove the radiator cap while the engine is running, or immediately after stopping. Otherwise, hot water will spout out from radiator. Only remove radiator cap when cool enough to touch with bare hands. Slowly loosen the cap to first stop to relieve pressure before removing completely.
- Escaping fluid (fuel or hydraulic oil) under pressure can penetrate the skin causing serious injury. Relieve pressure before disconnecting hydraulic or fuel lines. Tighten all connections before applying pressure.
- Do not open high-pressure fuel system.
  High-pressure fluid remaining in fuel lines can cause serious injury. Do not disconnect or attempt repair fuel lines, sensors, or any other components between the high-pressure fuel pump and injectors on engines with high pressure common rail fuel system.
- High voltage exceeding 100 V is generated in the ECU, and is applied to the injector.
  Pay sufficient caution to electric shock when performing work activities.

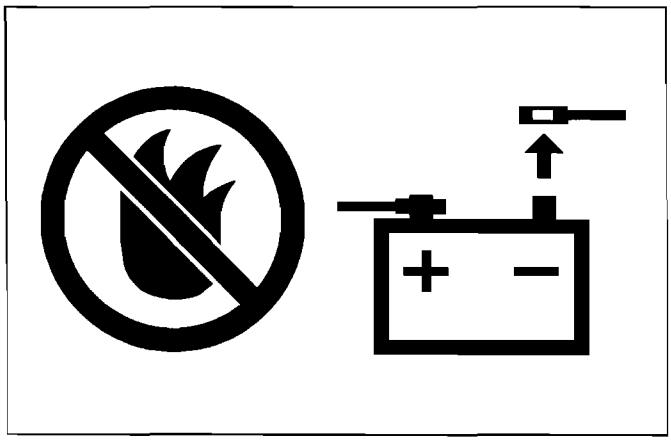

AVOID FIRES

- Fuel is extremely flammable and explosive under certain conditions. Do not smoke or allow flames or sparks in your working area.
- To avoid sparks from an accidental short circuit, always disconnect the battery negative cable first and connect it last.
- Battery gas can explode. Keep sparks and open flame away from the top of battery, especially when charging the battery.
- Make sure that no fuel has been spilled on the engine.

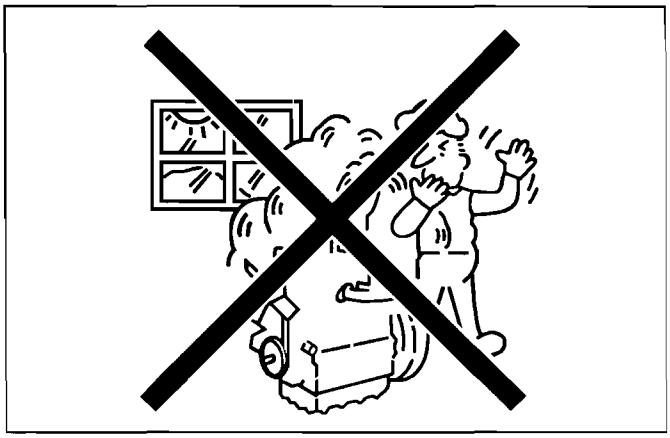

VENTILATE WORK AREA

- If the engine must be running to do some work, make sure the area is well ventilated. Never run the engine in a closed area. The exhaust gas contains poisonous carbon monoxide.

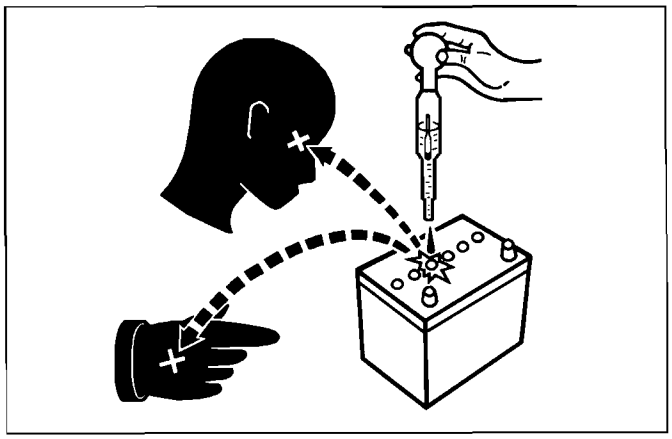

PREVENT ACID BURNS

- Sulfuric acid in battery electrolyte is poisonous. It is strong enough to burn skin, clothing and cause blindness if splashed into eyes. Keep electrolyte away from eyes, hands and clothing. If you spill electrolyte on yourself, flush with water, and get medical attention immediately.

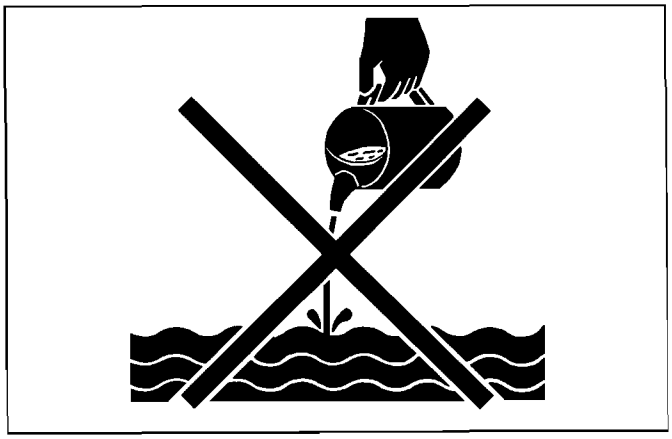

DISPOSE OF FLUIDS PROPERLY

- Do not pour fluids into the ground, down a drain, or into a stream, pond, or lake. Observe relevant environmental protection regulations when disposing of oil, fuel, coolant, electrolyte and other harmful waste.

https://truckmanualshub.com/

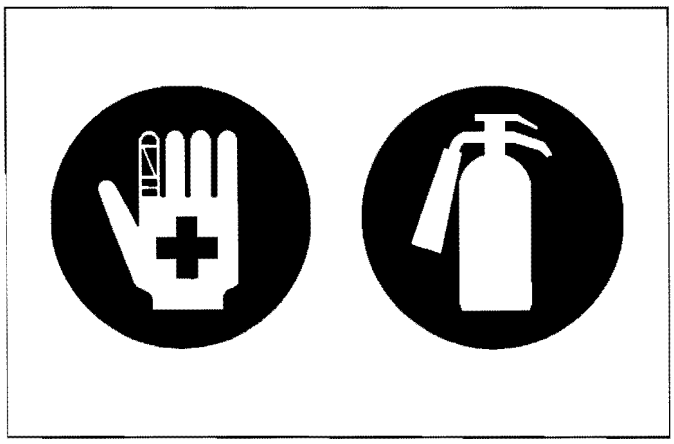

PREPARE FOR EMERGENCIES

- Keep a first aid kit and fire extinguisher handy at all times.
- Keep emergency numbers for doctors, ambulance service, hospital and fire department near your telephone.

SAFETY DECALS

The following safety decals are installed on the machine.
If a decal becomes damaged, illegible or is not on the machine, replace it. The decal part number is listed in the parts list.

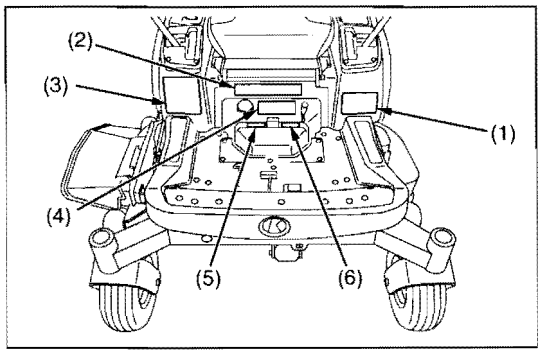

(1) Part No. K3181-6585-0

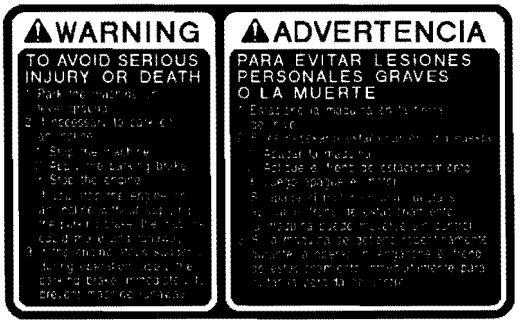

1BDABCQAP093A

(2) Part No. K3271-6585-1

1BDABDEAP038A

(3) Part No. K3271-6581-0

1BDABCYAP064A

(4) Part No. K3271-6587-0

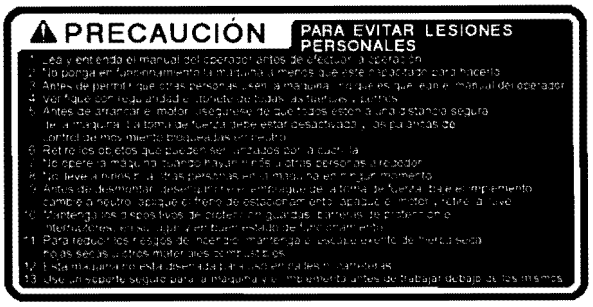

1BDABCYAP065A

(5) Part No. K3131-6568-1

1BDABDEAP024A

(6) Part No. K3131-6569-1

1BDABDEAP025A

3GZAAAKCP001A

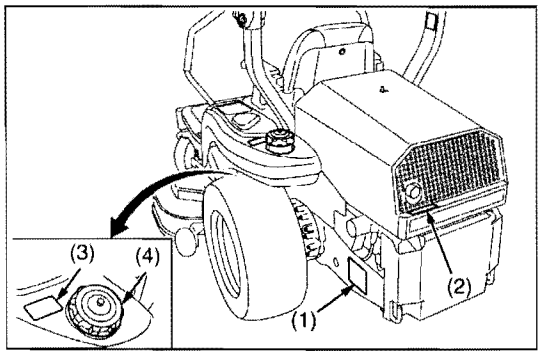

(1) Part No. K3271-6583-0

1BDABCYAP066A

(2) Part No. K3271-6532-0

1BDABCYAP067A

(3) Part No. K3181-6587-2

Gasoline fuel only

No fire

1BDAIATAP001A

(4) Part No. K3181-2481-1

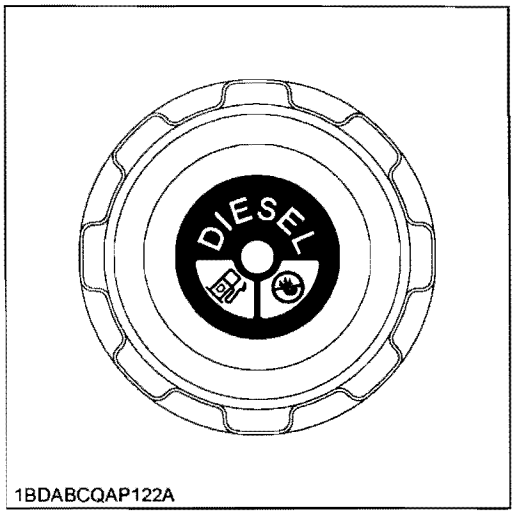

1BDABCQAP122A

3GZAAAKCP002A

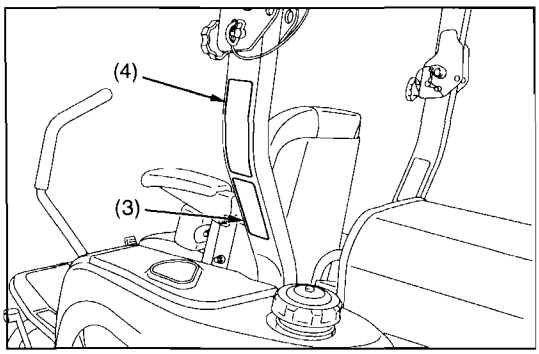

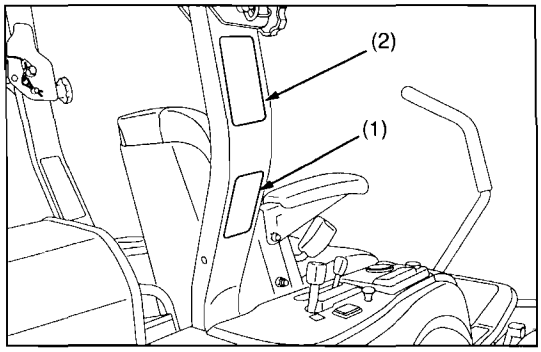

(1) Part No. K3181-6564-0

1BDABCQAP100A

(2) Part No. K3181-6563-0

1BDABCQAP101A

(3) Part No. K3181-6566-0

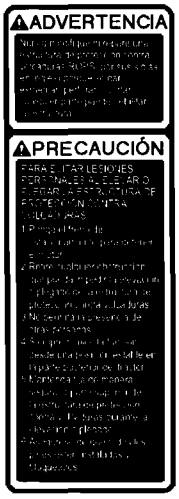

1BDABCQAP135A

(4) Part No. K3181-6565-0

1BDABCQAP134A

3GZAAAKCP003A

https://truckmanualshub.com/

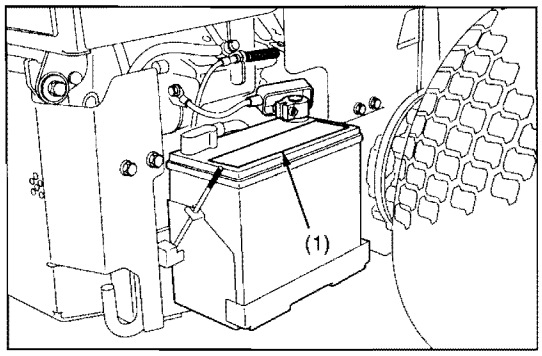

(1) Part No. K3181-6115-1

1BDABCQAP124A

DANGER / POISON
- SHIELD EYES
  EXPLOSIVEGASES can cause blindness or injury.
- NO SPARKS / FLAMES / SMOKING
- SULFURIC ACID can cause blindness or servere burns.
- Flush eyes immediately with water.
- Get medical help fast.

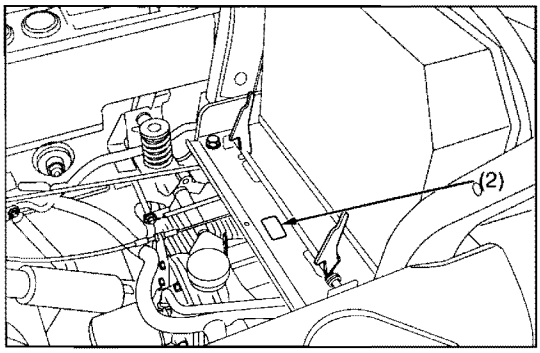

(2) Part No. K3111-6591-1
Do not get your hands close to fan belt.

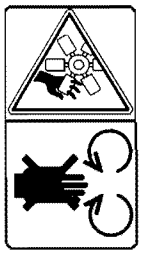

1BDABCQAP107A

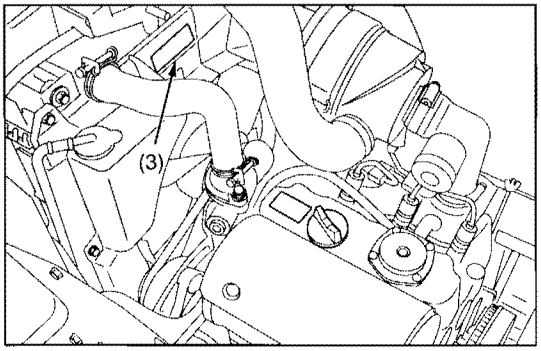

(3) Part No. K3181-6586-1
Do not get your hands close to engine fan and fan belt.

1BDABCQAP108A

3GZAAAKCP004A

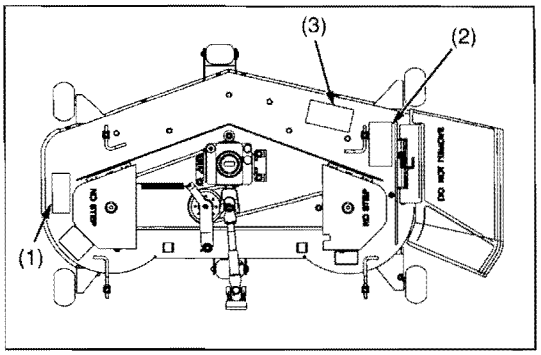

(1) Part No. K5681-7312-0

1BDACAEAP015B

(2) Part No. K5681-7311-0

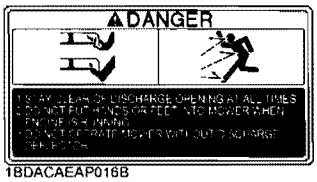

1BDACAEAP016B

(3) Part No. K5681-7310-0

1BDACAEAP017B

CARE OF DANGER, WARNING AND CAUTION LABELS

1. Keep danger, warning and caution labels clean and free from obstructing material.
2. Clean danger, warning and caution labels with soap and water, dry with a soft cloth.
3. Replace damaged or missing danger, warning and caution labels with new labels.
4. If a component with danger, warning and caution label(s) affixed is replaced with new part, make sure new label(s) is(are) attached in the same location(s) as the replaced component.
5. Mount new danger, warning and caution labels by applying on a clean dry surface and pressing any bubbles to outside edge.

3GZAAAKCP005A

SPECIFICATIONS

Model			ZD221-48	ZD221-54
Engine	Model		D782-E3-ZD-1	
	Maximum engine power (Gross)		15.7 kW (21 HP)*1	
	Type		Liquid-cooled	
	Number of cylinders		3	
	Bore and stroke		67 x 73.6 mm (2.64 x 2.90 in.)	
	Total displacement		778 cm^3 (47.5 cu.in.)	
	Rated revolution		3200 min^{-1} (rpm)	
	Fuel		Diesel fuel No. 1 [below – 10 °C (14 °F)] Diesel fuel No. 2 [above – 10 °C (14 °F)]	
	Starter		Electric starter with battery, glow plug, 12 V, 1.0 kW	
	Lubrication		Forced lubrication by gear pump	
	Cooling		Liquid with pressurized radiator	
	Battery		51 R (12 V, RC : 70 min, CCA : 450 A)	
Capacities	Fuel tank		23 L (6.1 U.S.gals, 5.1 Imp.gals)	
	Engine crankcase (with filter)		3.5 L (3.70 U.S.qts, 3.08 Imp.qts)	
	Engine coolant		1.2 L (1.27 U.S.qts, 1.06 Imp.qts)	
	Recovery tank		0.25 L (0.26 U.S.qts, 0.22 Imp.qts)	
	Transmission including rear axle gear case		7.5 L (7.9 U.S.qts, 6.60 Imp.qts)*3	
Dimensions	Overall length		2130 mm (83.9 in.)	
	Overall width Without mower deck		1210 mm (47.7 in.)	
	Overall height	With ROPS upright	1775 mm (69.9 in.)	
		With ROPS folded	1320 mm (51.9 in.)	
	Wheel base		1295 mm (51.0 in.)	
	Minimum ground clearance		130 mm (5.12 in.) with 54 in., with 48 in.	
	Tread	Front	860 mm (33.9 in.)	
		Rear	930 mm (36.3 in.)	

NOTE: Specifications and design subject to change without notice.
*1 : Manufacurer's estimate
*2 : At 3200 min^{-1} (rpm)
*3 : Oil amount when the oil level is at the upper level.

Model			ZD221-48	ZD221-54
Weight (with Mower Deck)			545 kg (1202 lbs) with 48 in.	555 kg (1224 lbs) with 54 in.
Travelling system	Tires	Front	13 x 5.0-6 (4PR) Rib	
		Rear	23 x 10.5-12 (4PR) Turf	
	Travelling speeds	Forward	0 to 14.5 km/h (0 to 9.0 mph)*2	
		Reverse	0 to 8.0 km/h (0 to 5.0 mph)*2	
	Steering		2-Hand levers	
	Transmission		2-Hydrostatic transmission with gear	
	Parking brake		Wet multi discs / foot applied, released	
	Min. turning radius		0 mm (0 in.)	
PTO	Revolution		1 speed (2530 rpm at 3200 engine rpm)	
	Drive system		Shaft drive, KUBOTA 10 tooth in involute spline	
	Clutch type		Wet multi discs	
	PTO brake		Wet single disc	

NOTE: Specifications and design subject to change without notice.
*1 : Manufacurer's estimate
*2 : At 3200 min^{-1} (rpm)
*3 : Oil amount when the oil level is at the upper level.

W1030228

Model			RCK48P-222Z	RCK54P-227Z
PRO commercial deck (fabricated deck)	Suitable machine		ZD221	
	Mounting method		Quick joint, parallel linkage	
	Adjustment of cutting height		Dial gauge	
	Cutting width		1225 mm (48 in.)	1375 mm (54 in.)
	Cutting height		25 to 127 mm (1.0 to 5.0 in.)	
	Weight (approx.)		106 kg (234 lbs)	119 kg (262 lbs)
	Blade spindle speed		64.8 r/s (3890 min^{-1} (rpm))*1	58.0 r/s (3480 min^{-1} (rpm))*1
	Blade tip velocity		86.4 m/s (17000 fpm)*1	86.6 m/s (17000 fpm)*1
	Blade length		424 mm (16.7 in.)	475 mm (18.7 in.)
	Number of blades		3	
	Dimensions	Total length	880 mm (34.6 in.)	925 mm (36.4 in.)
		Total width	1552 mm (61.1 in.)	1710 mm (67.3 in.)
		Total height	340 mm (13.3 in.)	340 mm (13.3 in.)

NOTE: Specifications and design subject to change without notice.
*1 : Engine max. revolution.

W1036076

DIMENSIONS

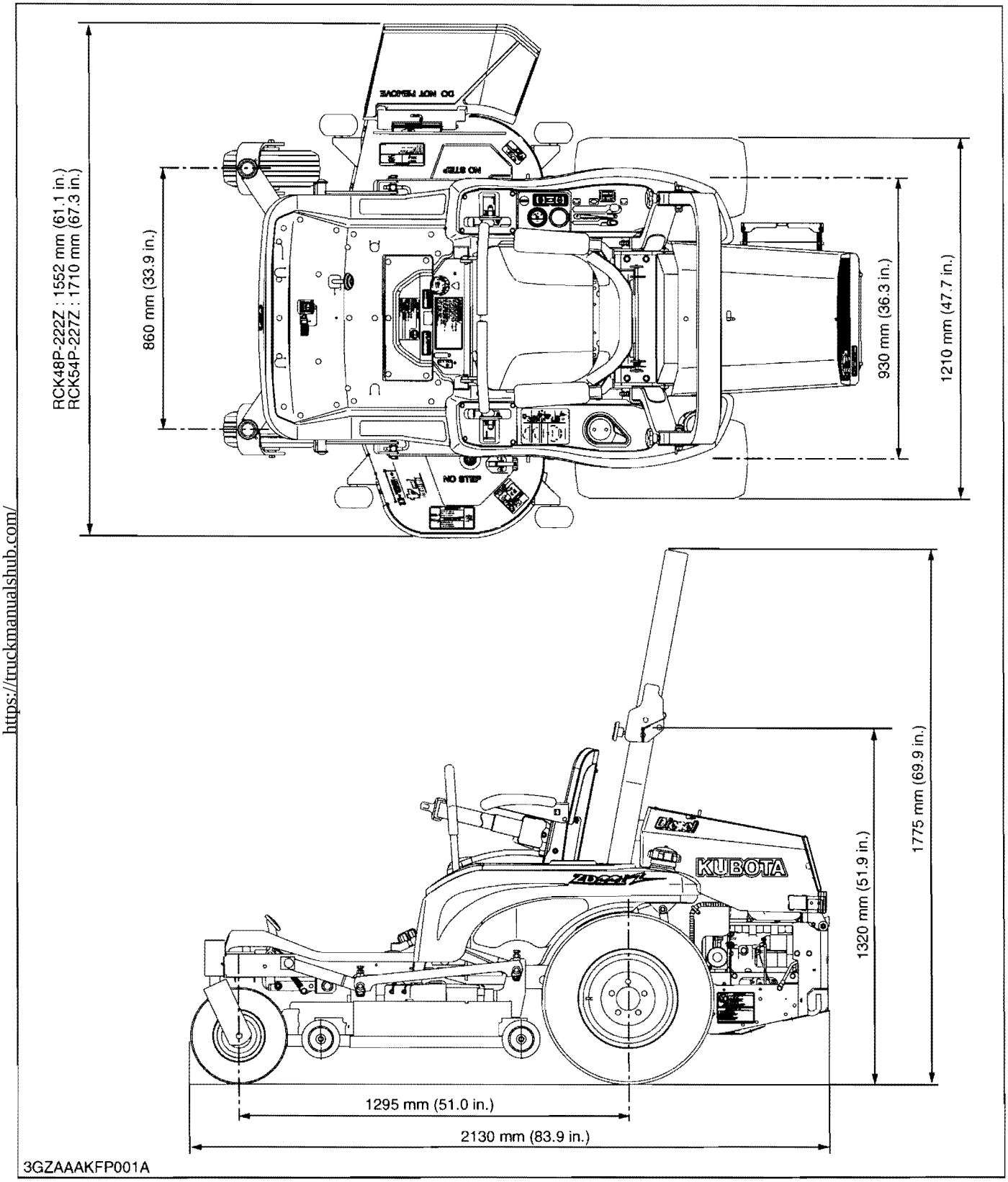

https://truckmanualshub.com/

https://truckmanualshub.com/

GENERAL

CONTENTS

1. IDENTIFICATION G-1
2. GENERAL PRECAUTIONS G-2
3. CYLINDER NYMBER G-2
4. HANDLING PRECAUTIONS FOR ELECTRICAL PARTS AND WIRING .. G-3
   [1] WIRING G-3
   [2] BATTERY G-5
   [3] FUSE G-5
   [4] CONNECTOR G-5
   [5] HANDLING OF CIRCUIT TESTER G-6
5. LUBRICANTS, FUEL AND COOLANT G-7
6. TIGHTENING TORQUES G-10
   [1] GENERAL USE SCREWS, BOLTS AND NUTS G-10
   [2] STUD BOLTS G-10
   [3] METRIC SCREWS, BOLTS AND NUTS G-11
   [4] AMERICAN STANDARD SCREWS, BOLTS AND NUTS WITH UNC OR UNF THREADS G-11
   [5] PLUGS G-11
7. MAINTENANCE CHECK LIST G-12
8. CHECK AND MAINTENANCE G-14
   [1] DAILY CHECK G-14
   [2] CHECK POINTS OF INITIAL 50 HOURS G-18
   [3] CHECK POINT OF INITIAL 400 HOURS G-20
   [4] CHECK POINTS OF EVERY 50 HOURS G-23
   [5] CHECK POINTS OF EVERY 100 HOURS G-29
   [6] CHECK POINTS OF EVERY 150 HOURS G-34
   [7] CHECK POINTS OF EVERY 200 HOURS G-34
   [8] CHECK POINT OF EVERY 400 HOURS G-38
   [9] CHECK POINT OF EVERY 1500 HOURS G-39
   [10]CHECK POINTS OF EVERY 3000 HOURS G-40
   [11]CHECK POINTS OF EVERY 1 YEAR G-41
   [12]CHECK POINT OF EVERY 2 YEARS G-44
   [13]OTHERS G-46
9. SPECIAL TOOLS G-49
   [1] SPECIAL TOOLS FOR ENGINE G-49
   [2] SPECIAL TOOLS FOR MACHINE G-55
10. IMPLEMENT LIMITATIONS G-56

https://truckmanualshub.com/

https://truckmanualshub.com/

1. IDENTIFICATION

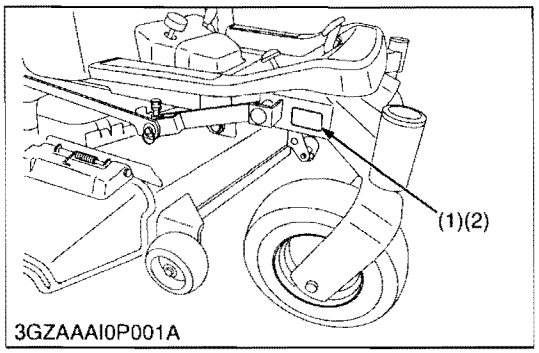

3GZAAAI0P001A

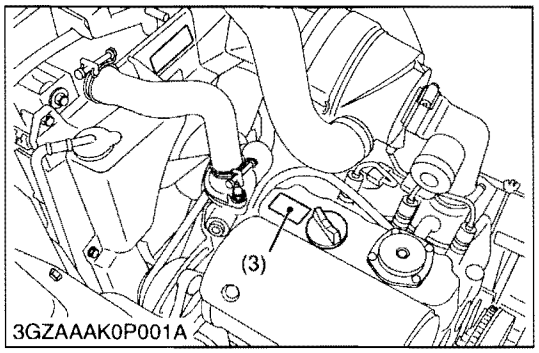

3GZAAAK0P001A

[A]

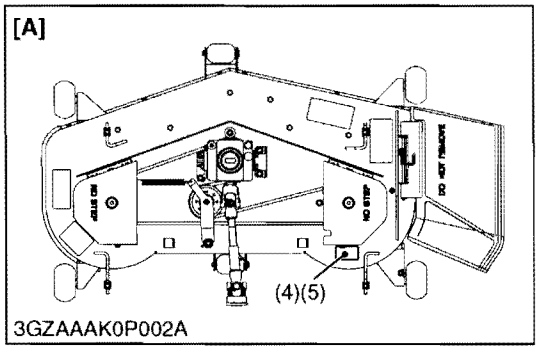

3GZAAAK0P002A

[B]

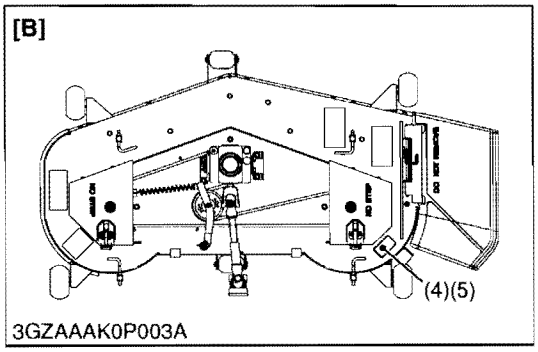

3GZAAAK0P003A

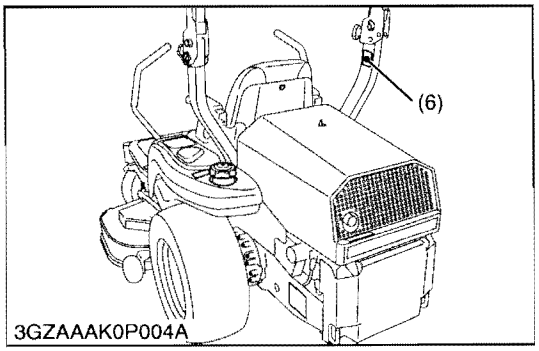

3GZAAAK0P004A

When contacting your local KUBOTA distributor, always specify engine serial number (3), machine serial number (2), mower serial number (4) and hour meter reading.

(1) Machine Identification Plate
(2) Machine Serial Number
(3) Engine Serial Number
(4) Mower Serial Number
(5) Mower Identification Plate
(6) ROPS Serial Number

[A] RCK48P
[B] RCK54P

W1010714

2. GENERAL PRECAUTIONS

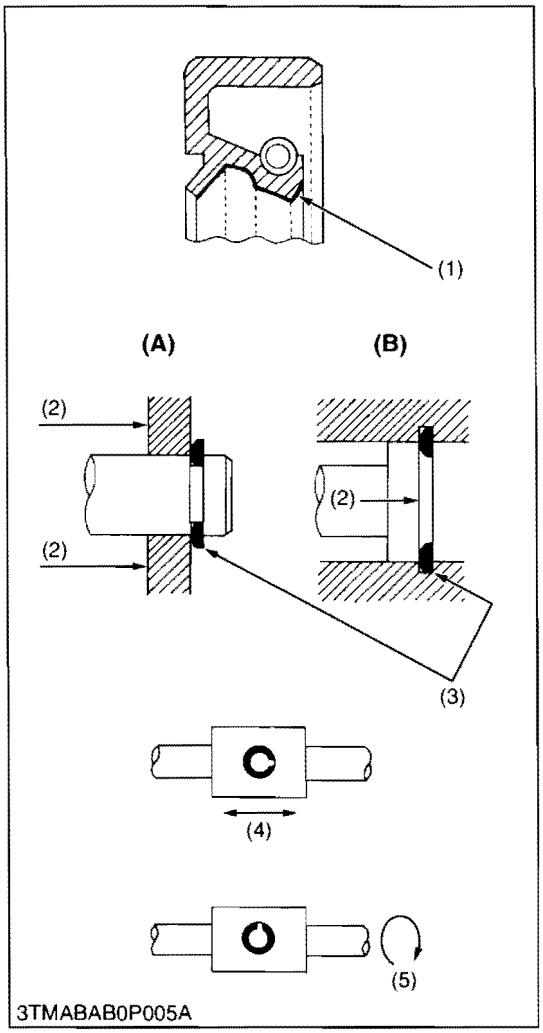

- During disassembly, carefully arrange removed parts in a clean area to prevent confusion later. Screws, bolts and nuts should be installed in their original position to prevent reassembly errors.
- When special tools are required, use KUBOTA genuine special tools. Special tools which are not frequently used should be made according to the drawings provided.
- Before disassembling or servicing electrical wires, always disconnect the ground cable from the battery first.
- Remove oil and dirt from parts before measuring.
- Use only KUBOTA genuine parts for parts replacement to maintain machine performance and to assure safety.
- Gaskets and O-rings must be replaced during reassembly. Apply grease to new O-rings or oil seals before assembling. See the figure left side.
- When reassembling external snap rings or internal snap rings, they must be positioned so that sharp edge faces against the direction from which a force is applied. See the figure left side.
- When inserting spring pins, their splits must face the direction from which a force is applied. See the figure left side.
- To prevent damage to the hydraulic system, use only specified fluid or equivalent.

(1) Grease
(2) Force
(3) Sharp Edge
(4) Axial Force
(5) Rotating Movement

(A) External Snap Ring
(B) Internal Snap Ring

W1010904

3. CYLINDER NYMBER

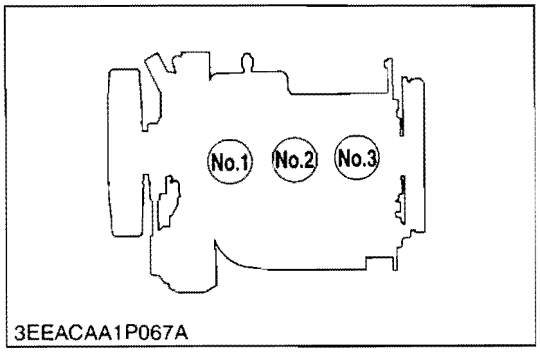

The cylinder numbers of KUBOTA diesel engine are designated as shown in the figure.

The sequence of cylinder numbers is given as No.1, No.2 and No.3 starting from the gear case side.

W1011077

4. HANDLING PRECAUTIONS FOR ELECTRICAL PARTS AND WIRING

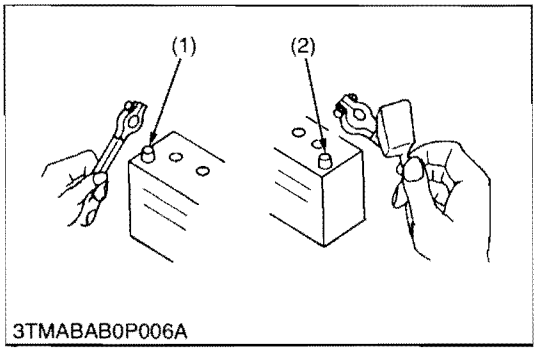

To ensure safety and prevent damage to the machine and surrounding equipment, heed the following precautions in handling electrical parts and wiring.

■ **IMPORTANT**

- **Check electrical wiring for damage and loosened connection every year. To this end, educate the customer to do his or her own check and at the same time recommend the dealer to perform periodic check for a fee.**
- **Do not attempt to modify or remodel any electrical parts and wiring.**
- **When removing the battery cables, disconnect the negative cable first. When installing the battery cables, connect the positive cable first.**

(1) Negative Terminal (2) Positive Terminal

W1011114

[1] WIRING

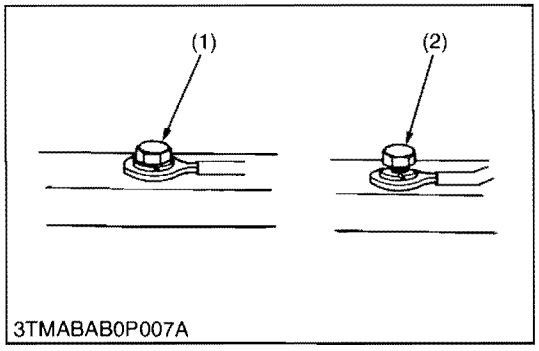

- Securely tighten wiring terminals.

(1) Correct (Securely tighten) (2) Incorrect (Loosening leads to faulty contact)

W1011216

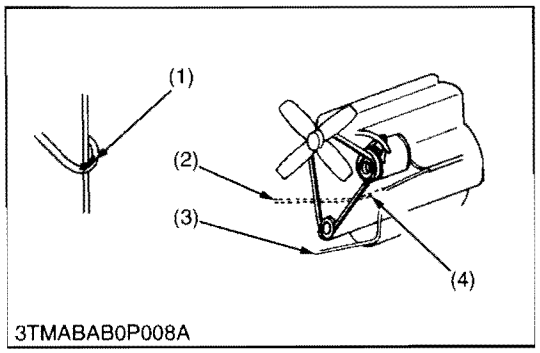

- Do not let wiring contact dangerous part.

(1) Wiring (Correct) (3) Dangerous Part
(2) Wiring (Incorrect) (4) Dangerous Part

W1011313

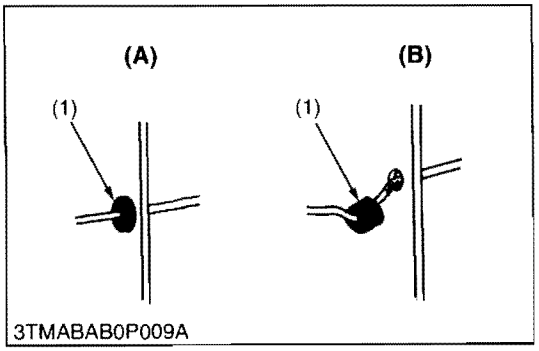

- Securely insert grommet.

(1) Grommet **(A) Correct** **(B) Incorrect**

W1011388

https://truckmanualshub.com/

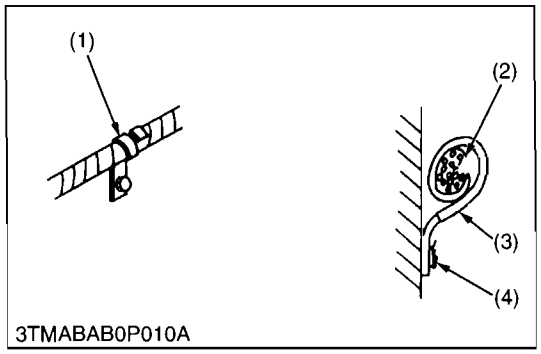

- Securely clamp, being careful not to damage wiring.

(1) Clamp
  • Wind Clamp Spirally
(2) Wire Harness
(3) Clamp
(4) Welding Dent

W1011458

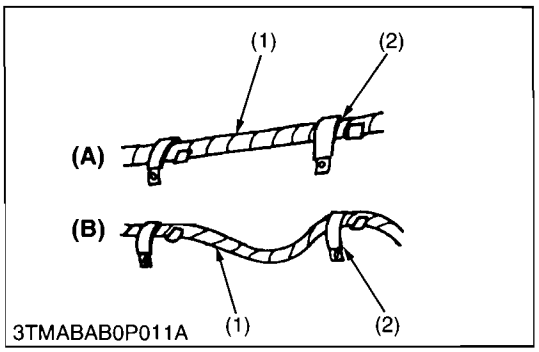

- Clamp wiring so that there is no twist, unnecessary sag, or excessive tension, except for movable part, where sag be required.

(1) Wiring
(2) Clamp
(A) Correct
(B) Incorrect

W1011587

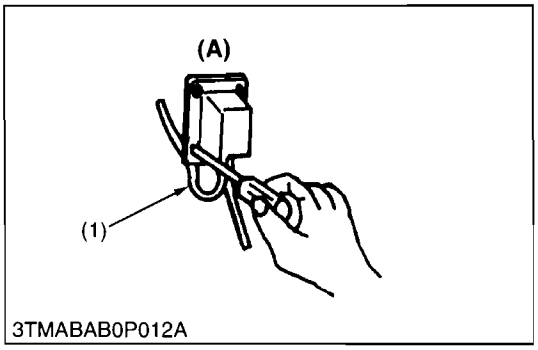

- In installing a part, take care not to get wiring caught by it.

(1) Wiring
(A) Incorrect

W1011670

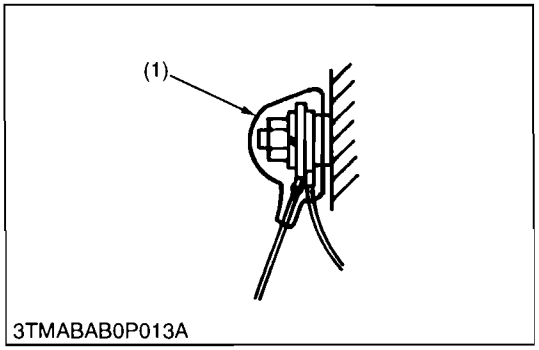

- After installing wiring, check protection of terminals and clamped condition of wiring, only connect battery.

(1) Cover
  • Securely Install Cover

W1011735

[2] BATTERY

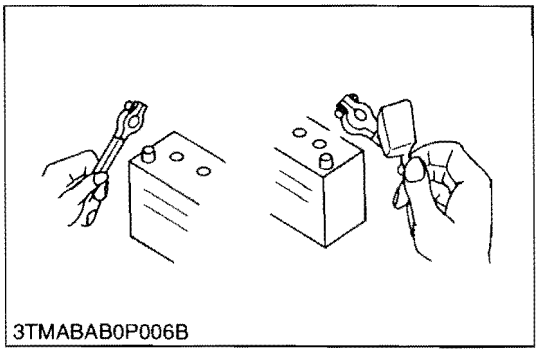
3TMABAB0P006B

- Take care not to confuse positive and negative terminal posts.
- When removing battery cables, disconnect negative cable first. When installing battery cables, check for polarity and connect positive cable first.
- Do not install any battery with capacity other than is specified (Ah).
- After connecting cables to battery terminal posts, apply high temperature grease to them and securely install terminal covers on them.
- Do not allow dirt and dust to collect on battery.

CAUTION

- **Take care not to let battery liquid spill on your skin and clothes. If contaminated, wash it off with water immediately.**
- **Before recharging the battery, remove it from the machine.**
- **Before recharging, remove cell caps.**
- **Do recharging in a well-ventilated place where there is no open flame nearby, as hydrogen gas and oxygen are formed.**

W1011816

[3] FUSE

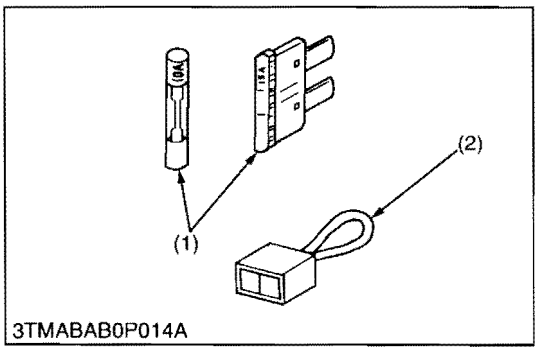

3TMABAB0P014A

- Use fuses with specified capacity.
  Neither too large or small capacity fuse is acceptable.
- Never use steel or copper wire in place of fuse.
- Do not install working light, radio set, etc. on machine which is not provided with reserve power supply.
- Do not install accessories if fuse capacity of reserve power supply is exceeded.

(1) Fuse (2) Slow Blow Fuse

W1012092

[4] CONNECTOR

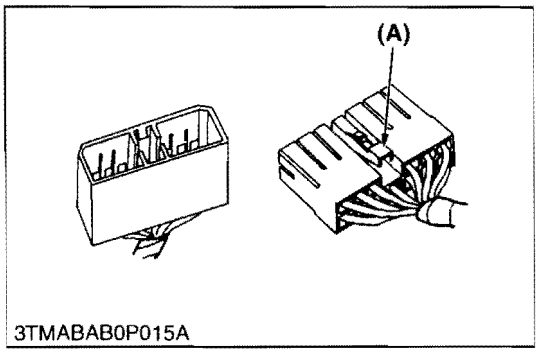

3TMABAB0P015A

- For connector with lock, push lock to separate.

(A) Push

W1012211

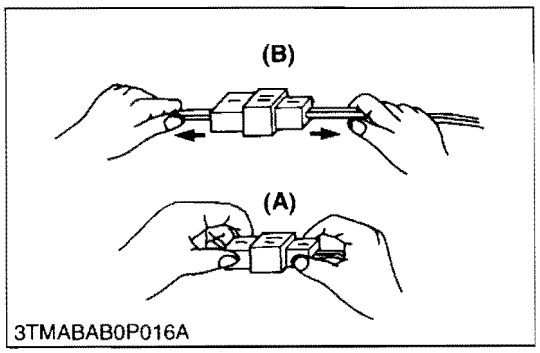

3TMABAB0P016A

- In separating connectors, do not pull wire harnesses.
- Hold connector bodies to separate.

(A) Correct **(B) Incorrect**

W1012272

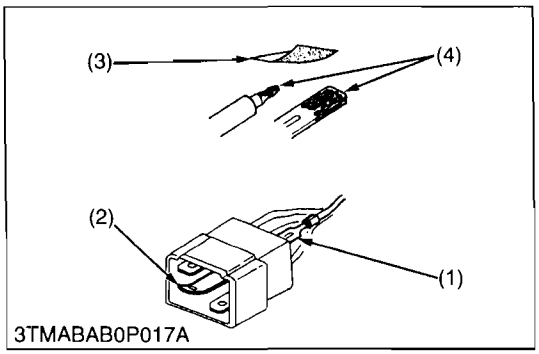

3TMABAB0P017A

- Use sandpaper to remove rust from terminals.
- Repair deformed terminal. Make certain there is no terminal being exposed or displaced.

(1) Exposed Terminal
(2) Bend Terminal
(3) Sandpaper
(4) Rust

W1012346

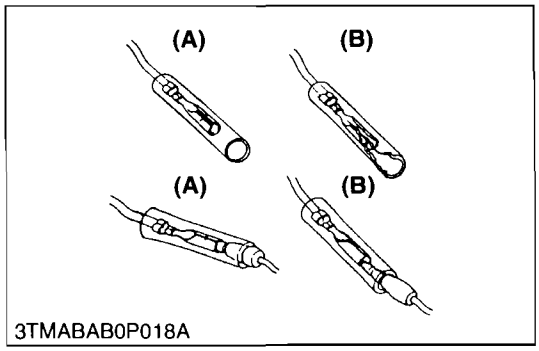

3TMABAB0P018A

- Make certain that there is no female connector being too open.

(A) Correct **(B) Incorrect**

W1012430

[5] HANDLING OF CIRCUIT TESTER

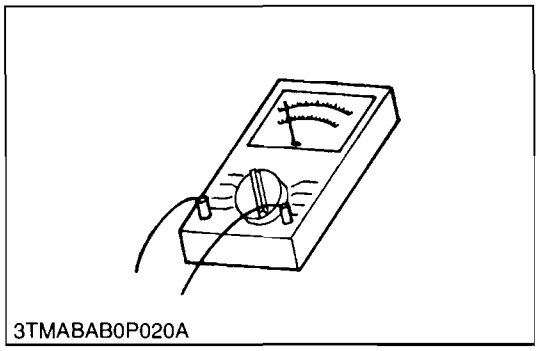
3TMABAB0P020A

- Use tester correctly following manual provided with tester.
- Check for polarity and range.

W1012684

5. LUBRICANTS, FUEL AND COOLANT

No.	Place		Capacity ZD221	Lubricants, fuel and coolant
1	Fuel		23 L 6.1 U.S.gals 5.1 Imp.gals	No. 2-D diesel fuel No. 1-D diesel fuel if temperature is below –10 °C (14 °F)
2	Coolant	Cooling system	1.2 L 1.27 U.S.qts 1.06 Imp.qts	Fresh clean water (soft water) with anti-freeze
		Recovery tank	0.25 L 0.26 U.S.qts 0.22 Imp.qts	
3	Engine crankcase		3.5 L* 3.70 U.S.qts 3.08 Imp.qts	Engine oil : Refer to page G-9. Below 0 °C (32 °F) : SAE30, SAE10W-30 or 15W-40 0 to 25 °C (32 to 77 °F) : SAE20, SAE10W-30 or 15W-40 Above 25 °C (77 °F) : SAE10W, SAE10W-30 or 15W-40
4	Transmission case with filter, hose and rear axle gear case (RH and LH)		7.5 L 7.9 U.S.qts 6.60 Imp.qts	KUBOTA UDT or SUPER UDT fluid**
5	Mower gear case		0.15 L 0.16 U.S.qts 0.13 Imp.qts	SAE 90 gear oil (API service classification : more than GL-3)

■ **NOTE**
- *** Oil amount when the oil level is the upper of the oil level gauge.**
- **** KUBOTA original transmission hydraulic fluid.**

■ **IMPORTANT**
- **To prevent serious damage to hydraulic system, use only KUBOTA genuine fluid or its equivalent.**

https://truckmanualshub.com/

Greasing, oiling (Machine)				
No.	**Place**	**No. of greasing point**	**Capacity**	**Type of grease**
6	Front axle	2	Until grease overflows.	Multipurpose type grease NLGI-2 or NLGI-1 (GC-LB)
7	Front wheel	2		
8	Parking brake lock pedal	1		
9	Front lift arm	2		
10	Universal joint	3		
11	Seat adjuster	2		
12	Cable (throttle cable, mower lift cable)	3	Moderate amount	Engine oil
13	Motion control lever pivot bushing, and contact position	6		
Greasing (Mower)				
14	Universal joint	3	Until grease overflows.	Multipurpose EP2 grease NLGI Grade No.2
15	Three spindle shafts	3		
16	Belt tension pulley	1		
17	Belt tension pivot	1		
18	Anti scalp roller	1		
19	Front anti-scalp roller pivot boss	2		

■ **NOTE**

Engine Oil :

- **Oil used in the engine should have an American Petroleum Institute (API) service classification and Proper SAE Engine Oil according to the ambient temperatures as shown above:**
- **With the emission control now in effect, the CF-4 and CG-4 lubricating oils have been developed for use of a low-sulfur fuel on on-road vehicle engines. When an off-road vehicle engine runs on a high-sulfur fuel, it is advisable to employ the "CF or better" lubricating oil with a high Total Base Number (TBN of 10 minimum).**
- **Refer to the following table for the suitable API classification of engine oil according to the Fuel : (Low Sulfur or High Sulfur Fuels).**

Fuel used	Engine oil classification (API classification)
High Sulfur Fuel (≥ 500 ppm)	**CF** (If the "CF-4, CG-4, CH-4, or CI-4" lubricating oil is used with a high-sulfur fuel, change the lubricating oil at shorter intervals. (approximately half))
Low Sulfur Fuel (< 500 ppm) or Ultra Low Sulfur Fuel (< 15 ppm)	**CF, CF-4, CG-4, CH-4** or **CI-4**

- **The CJ-4 engine oil is intended for DPF (Diesel Particulate Filter) type engines, and cannot be used on this tractor.**

Fuel :

- **Cetane number of 45 minimum. Cetane number greater than 50 is preferred, especially for temperatures below –20 °C (–4 °F) or elevations above 1500 m (5000 ft).**
- **If diesel sulfur content greater than 0.5 % sulfur content is used, reduce the service interval for engine oil and filter by 50 %.**
- **DO NOT use diesel fuel with sulfur content greater than 1.0 %.**
- **Diesel fuels specified to EN 590 or ASTM D975 are recommended.**
- **No.2-D is a distillate fuel of lower volatility for engines in industrial and heavy mobile service. (SAE J313 JUN87)**
- **Since this engine adopts EPA Tier 4 and Interim Tier 4 standards, the use of low sulfur fuel or ultra low sulfur fuel is mandatory in EPA regulated area (North America). Therefore, please use No.2-D S500 or S15 diesel fuel as an alternative to No.2-D, or use No.1-D S500 or S15 diesel fuel as an alternative to No.1-D if outside air temperature is below –10 °C (14 °F).**

Transmission Oil :

The oil used to lubricate the transmission is also used as hydraulic fluid. To insure proper operation of the hydraulic system and to complete lubrication of the transmission, it is important that a multi-grade transmission fluid is used in this system. We recommend the use of KUBOTA UDT or SUPER UDT fluid for optimum protection and performance. (Consult your local KUBOTA Dealer for further detail.)

Do not mix different brands together.

- **Indicated capacities of water and oil are manufacturer's estimate.**

6. TIGHTENING TORQUES

[1] GENERAL USE SCREWS, BOLTS AND NUTS

Screws, bolts, and nuts whose tightening torques are not specified in this Workshop Manual should be tightened according to the table below.

Indication on top of bolt	⬡ ④ No-grade or 4T						⑦ 7T						⑨ 9T		
Material of bolt	SS400, S20C						S43C, S48C						SCr435, SCM435		
Material of opponent part	Ordinariness			Aluminum			Ordinariness			Aluminum			Ordinariness		
Unit / Diameter	N·m	kgf·m	lbf·ft	N·m	kgf·m	lbf·ft	N·m	kgf·m	lbf·ft	N·m	kgf·m	lbf·ft	N·m	kgf·m	lbf·ft
M6 (6 mm, 0.24 in.)	7.9 to 9.3	0.80 to 0.95	5.8 to 6.8	7.9 to 8.8	0.80 to 0.90	5.8 to 6.5	9.81 to 11.2	1.00 to 1.15	7.24 to 8.31	7.9 to 8.8	0.80 to 0.90	5.8 to 6.5	12.3 to 14.2	1.25 to 1.45	9.05 to 10.4
M8 (8 mm, 0.31 in.)	18 to 20	1.8 to 2.1	13 to 15	17 to 19	1.7 to 2.0	13 to 14	24 to 27	2.4 to 2.8	18 to 20	18 to 20	1.8 to 2.1	13 to 15	30 to 34	3.0 to 3.5	22 to 25
M10 (10 mm, 0.39 in.)	40 to 45	4.0 to 4.6	29 to 33	32 to 34	3.2 to 3.5	24 to 25	48 to 55	4.9 to 5.7	36 to 41	40 to 44	4.0 to 4.5	29 to 32	61 to 70	6.2 to 7.2	45 to 52
M12 (12 mm, 0.47 in.)	63 to 72	6.4 to 7.4	47 to 53	–	–	–	78 to 90	7.9 to 9.2	58 to 66	63 to 72	6.4 to 7.4	47 to 53	103 to 117	10.5 to 12.0	76.0 to 86.7
M14 (14 mm, 0.55 in.)	108 to 125	11.0 to 12.8	79.6 to 92.5	–	–	–	124 to 147	12.6 to 15.0	91.2 to 108	–	–	–	167 to 196	17.0 to 20.0	123 to 144
M16 (16 mm, 0.63 in.)	167 to 191	17.0 to 19.5	123 to 141	–	–	–	197 to 225	20.0 to 23.0	145 to 166	–	–	–	260 to 304	26.5 to 31.0	192 to 224
M18 (18 mm, 0.71 in.)	246 to 284	25.0 to 29.0	181 to 209	–	–	–	275 to 318	28.0 to 32.5	203 to 235	–	–	–	344 to 402	35.0 to 41.0	254 to 296
M20 (20 mm, 0.79 in.)	334 to 392	34.0 to 40.0	246 to 289	–	–	–	368 to 431	37.5 to 44.0	272 to 318	–	–	–	491 to 568	50.0 to 58.0	362 to 419

W1034542

[2] STUD BOLTS

Material of opponent part	Ordinariness			Aluminum		
Unit / Diameter	N·m	kgf·m	lbf·ft	N·m	kgf·m	lbf·ft
M8 (8 mm, 0.31 in.)	12 to 15	1.2 to 1.6	8.7 to 11	8.9 to 11	0.90 to 1.2	6.5 to 8.6
M10 (10 mm, 0.39 in.)	25 to 31	2.5 to 3.2	18 to 23	20 to 25	2.0 to 2.6	15 to 18
M12 (12 mm, 0.47 in.)	29.5 to 49.0	3.0 to 5.0	21.7 to 36.1	31.4	3.2	23.1
M14 (14 mm, 0.55 in.)	62 to 73	6.3 to 7.5	46 to 54	–	–	–
M16 (16 mm, 0.63 in.)	98.1 to 112	10.0 to 11.5	72.4 to 83.1	–	–	–
M18 (18 mm, 0.71 in.)	172 to 201	17.5 to 20.5	127 to 148	–	–	–

W1048139

https://truckmanualshub.com/

[3] METRIC SCREWS, BOLTS AND NUTS

Grade	Property class 8.8 (8.8)			Property class 10.9 (10.9)		
Unit / Nominal Diameter	N·m	kgf·m	lbf·ft	N·m	kgf·m	lbf·ft
M8	24 to 27	2.4 to 2.8	18 to 20	30 to 34	3.0 to 3.5	22 to 25
M10	48 to 55	4.9 to 5.7	36 to 41	61 to 70	6.2 to 7.2	45 to 52
M12	78 to 90	7.9 to 9.2	58 to 66	103 to 117	10.5 to 12.0	76 to 86.7
M14	124 to 147	12.6 to 15.0	91.2 to 108	167 to 196	17.0 to 20.0	123 to 144
M16	197 to 225	20.0 to 23.0	145 to 166	260 to 304	26.5 to 31.0	192 to 224

W1016172

[4] AMERICAN STANDARD SCREWS, BOLTS AND NUTS WITH UNC OR UNF THREADS

Grade	SAE GR.5			SAE GR.8		
Unit / Nominal Diameter	N·m	kgf·m	lbf·ft	N·m	kgf·m	lbf·ft
5/16	23.1 to 27.7	2.35 to 2.83	17.0 to 20.5	32.6 to 39.3	3.32 to 4.00	24.0 to 29.0
3/ 8	48 to 56	4.9 to 5.8	35.0 to 42.0	61.1 to 73.2	6.23 to 7.46	45.0 to 54.0
1/ 2	109 to 130	11.1 to 13.2	80.0 to 96.0	149.2 to 178.9	15.21 to 18.24	110.0 to 132.0
9/16	149.2 to 178.9	15.21 to 18.24	110.0 to 132.0	217.0 to 260.3	22.12 to 26.54	160.0 to 192.0
5/ 8	203.4 to 244	20.74 to 24.88	150.0 to 180.0	298.3 to 357.9	30.42 to 36.49	220.0 to 264.0

W1022485

[5] PLUGS

Shape	Size	Material of opponent part					
		Ordinariness			Aluminum		
		N·m	kgf·m	lbf·ft	N·m	kgf·m	lbf·ft
Tapered screw 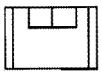	R1/8	13 to 21	1.3 to 2.2	9.4 to 15	13 to 21	1.3 to 2.0	9.4 to 15
	R1/4	25 to 44	2.5 to 4.5	18 to 32	25 to 34	2.5 to 3.5	18 to 25
	R3/8	49 to 88	5.0 to 9.0	37 to 65	49.0 to 58	5.0 to 6.0	37 to 43
	R1/2	59 to 107	6.0 to 11.0	44 to 79.5	59 to 78	6.0 to 8.0	44 to 57
Straight screw 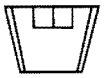	G1/4	25 to 34	2.5 to 3.5	18 to 25	–	–	–
	G3/8	62 to 82	6.3 to 8.4	46 to 60	–	–	–
	G1/2	49 to 88	5.0 to 9.0	37 to 65	–	–	–

0000001666E

7. MAINTENANCE CHECK LIST

No.	Items	Period	Service interval													Refe-rence page		
			50	100	150	200	250	300	350	400	450	500	550	600	After since			
1	Engine oil	Change	★			☆				☆				☆	every 200 Hr	G-18		
2	Engine oil filter	Replace	★			☆				☆				☆	every 200 Hr	G-18		
3	Transmission fluid and rear axle gear case (RH and LH) fluid	Change								★					every 400 Hr	G-21		
4	Transmission oil filter	Replace	★			☆				☆				☆	every 200 Hr	G-19		
5	Transmission strainer	Clean								★					every 400 Hr	G-22		
6	Motion control lever pivot	Adjust				☆				☆				☆	every 200 Hr	G-36		
7	Safety device	Check	☆	☆	☆	☆	☆	☆	☆	☆	☆	☆	☆	☆	every 50 Hr	G-23		
8	Mower gear box oil	Check	☆	☆	☆	☆	☆	☆	☆	☆	☆	☆	☆	☆	every 50 Hr	G-28		
		Change			☆			☆			☆			☆	every 150 Hr	G-34		
9	Greasing (without mower)	–	☆	☆	☆	☆	☆	☆	☆	☆	☆	☆	☆	☆	every 50 Hr	G-25		
10	Oiling	Oil	☆	☆	☆	☆	☆	☆	☆	☆	☆	☆	☆	☆	every 50 Hr	G-27		
11	Air cleaner primary element	Clean		☆		☆		☆		☆		☆		☆	every 100 Hr	G-29	*1	@
		Replace													every 1 year	G-41		
	Secondary element	Replace													every 1 year	G-41		
12	Fuel filter element	Check		☆		☆		☆		☆		☆		☆	every 100 Hr	G-29		@
		Replace								☆					every 400 Hr	G-38	*2	
13	Fuel line	Check		☆		☆		☆		☆		☆		☆	every 100 Hr	G-29		@
		Replace													every 2 years	G-44	*2	
14	Fan belt	Adjust		☆		☆		☆		☆		☆		☆	every 100 Hr	G-30		
15	Parking brake	Adjust		☆		☆		☆		☆		☆		☆	every 100 Hr	G-31	*2	
16	Battery condition	Check		☆		☆		☆		☆		☆		☆	every 100 Hr	G-32		
17	Radiator hose and clamp	Check				☆				☆				☆	every 200 Hr	G-36		
		Replace													every 2 years	G-44	*2	
18	Hydraulic hose	Check				☆				☆				☆	every 200 Hr	G-37		
		Replace													every 2 years	G-44	*2	

W1037757

https://truckmanualshub.com/

No.	Items \ Period		Service interval													Refe-rence page		
			50	100	150	200	250	300	350	400	450	500	550	600	After since			
19	Intake air line	Check				☆				☆				☆	every 200 Hr	G-37		@
		Replace													every 2 years	G-44	*3	
20	Fuel injection nozzle injection pressure	Check													every 1500 Hr	G-39		@
21	Injection pump	Check													every 3000 Hr	G-40		@
22	Radiator	Clean													every 1 year	G-42		
23	Coolant	Change													every 1 year	G-42		
24	Mower gear box oil seal	Replace													every 2 years	G-45	*2	
25	Fuel system	Bleed													Service as required	G-48		
26	Fuse	Replace														G-46		
27	Blade	Replace														G-47		
28	Mower belt	Replace														G-48		

W1025112

■ **IMPORTANT**

- **The jobs indicated by ★ must be done initially.**
  ***1 This maintenance should be done daily more often in dusty condition than in normal conditions. Suggested cleaning interval is every 100 hours in normal conditions.**
  ***2 These items should be serviced by an authorized KUBOTA Dealer, unless the owner has the proper tools and is mechanically proficient.**
- **The items listed above (@ marked) are registered as emission related critical parts by KUBOTA in the U.S.EPA non-road emission regulation. As the engine owner, you are responsible for the performance of the required maintenance on the engine according to the above instruction.**
  Please see the Warranty Statement in detail.

8. CHECK AND MAINTENANCE

CAUTION

- **Be sure to check and service the machine on a flat place with engine shut off, the parking brake on and chock the wheels.**

[1] DAILY CHECK

To prevent trouble from occurring, it is important to know the condition of the machine. Check the following items before starting.

Checking

- Check areas where previous trouble was experienced.
- Walk around the machine.

1. Tire pressure, wear and damage
2. Oil and water leak
3. Engine oil level
4. Transmission fluid level
5. Coolant level in the recovery tank
6. Damage of machine body, tightness of all bolts and nuts
7. Radiator screen
8. Brake play
9. Air cleaner primary element
10. Fuel level
11. Oiling

- Mower

1. Oil leak
2. Make sure blade cap screws are tight.
3. Check blades for wear or damage.
4. Check all hardware.
5. Make sure all pins are in place.
6. Mower deck cleaning
7. Greasing

- While sitting in the operator's seat,

1. Motion control lever
2. Parking brake

- Turning the key switch **"ON"**

1. Performance of the Easy Checker (TM) light

- Starting the engine,

1. Color of the exhaust fumes
2. Safety start switch, seat safety control and another safety control and other safety devices.
3. Check for abnormal noise and vibration.

- Others

1. Check the areas where previous trouble was experienced.

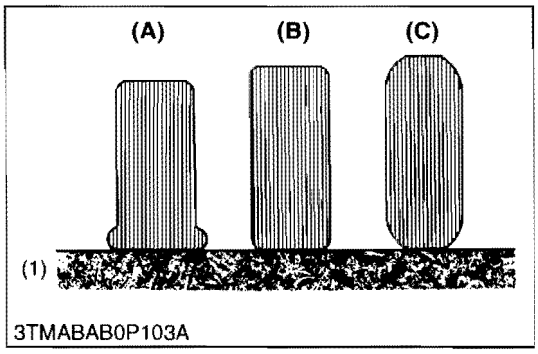

Checking Tire Pressure

WARNING

- **Do not attempt to mount a tire on a rim. This should be done by a qualified person with the proper equipment.**
- **Always maintain the correct tire pressure.**
  Inflation pressure in front tires rises quickly when using compressed air.
  Do not inflate tires above the recommended pressure shown in the Operator's Manual.

IMPORTANT

- **Do not use tires larger than specified.**

Inflation Pressure

Though the inflation pressure is factory-set to the prescribed level, it naturally drops slowly in the course of time. Thus, check it and inflate as necessary.

	Tire Sizes	Recommended Inflation Pressure
Front	13 x 5.0-6, 4PR Rib	270 kPa (2.8 kgf/cm^2, 40 psi)
Rear	23 × 10.5-12, 4PR Turf	140 kPa (1.4 kgf/cm^2, 20 psi)

(1) Ground

(A) Insufficient
(B) Normal
(C) Excessive

W1041550

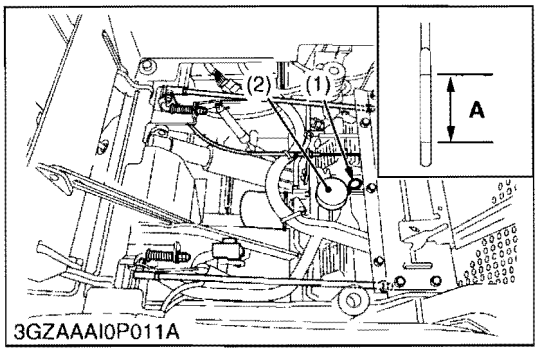

Checking Transmission Fluid Level

1. Park the machine on a flat surface, lower the implement to the ground and shut off engine and remove the key.
2. Raise and lock the operator's seat.
3. To check the oil level, draw out the dipstick, wipe it clean, replace it, and draw it out again. Check to see that the oil level lies between the two notches. If the level is too low, add new oil to the prescribed level at the oil inlet.
   (See page G-7.)

IMPORTANT

- **If oil level is low, do not run engine.**

(1) Oil Level Dipstick
(2) Oil Plug and Breather Cup

(A) Oil level is acceptable within this range.

W1041984

https://truckmanualshub.com/

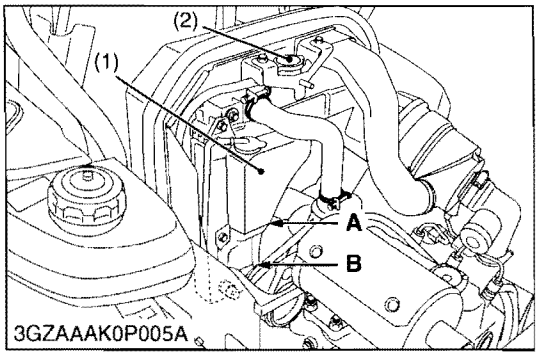

Checking Coolant Level

CAUTION

- **Do not remove the radiator cap when the engine is hot. Then loosen cap slightly to the stop to relieve any excess pressure before removing cap completely.**

Check the coolant level daily both the radiator and the recovery tank before staring engine.

1. Remove the radiator cap and check to see that the coolant level is just below the fill port.
2. Check to see that the coolant level is between the **"FULL"** and **"LOW"** marks of recovery tank.
3. When the coolant level drops due to evaporation, add water only up to just below the fill port of the radiator and the full level of the recovery tank.
   In case of leakage, add anti-freeze and water in the specified mixing ratio up to the full level.
   (See page G-7.)

IMPORTANT

- **If the radiator cap has to be removed, follow the caution above and securely retighten the cap.**
- **Use clean, distilled water and anti-freeze to fill the recovery tank.**

(1) Recovery Tank — **A : FULL**
(2) Radiator Cap — **B : LOW**

W1042377

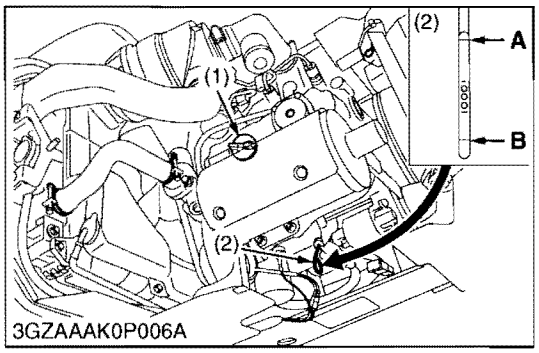

Checking Engine Oil Level

CAUTION

- **Always stop the engine and remove the key before checking oil.**

1. Check engine oil before starting and 5 minutes or more after the engine has stopped.
2. Wipe dipstick area clean.
3. To check the oil level, remove the dipstick, wipe it clean, replace it, and draw it out again. Check to see that the oil level is between the two lines.
4. Add new oil to the prescribed level at the oil port if necessary.
5. When using a different brand or viscosity oil from the previous one, remove all of the old oil and oil filter. Never mix two different types of oil.
6. Use the proper Engine Oil SAE according to the ambient temperatures. (See page G-7.)

(1) Engine Oil Port — **A : Upper Level**
(2) Oil Level Dipstick — **B : Lower Level**

W1042659

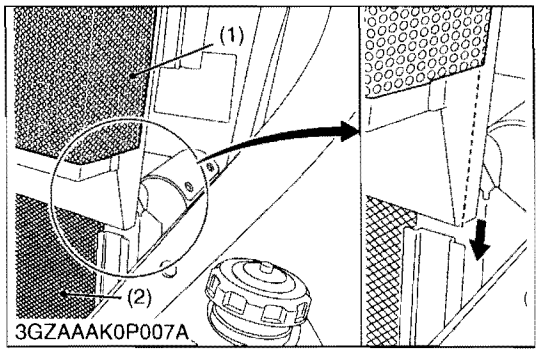

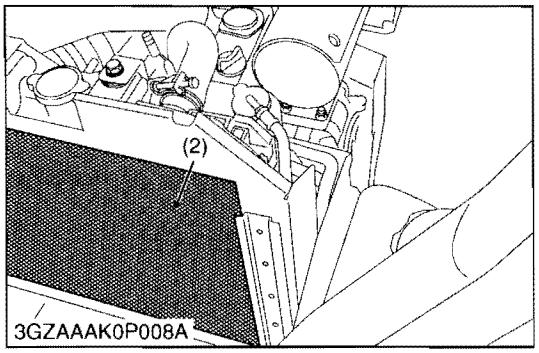

Checking and Cleaning Radiator to Prevent Overheating

CAUTION

- **Be sure to stop the engine and remove the key before cleaning.**

IMPORTANT

- **The air intake area must be clear of debris to prevent the engine from overheating.**

Daily or after every 5 hours of operation, check to be sure the radiator screen and the radiator core are clean. Dirt or chaff on the radiator screen or radiator core decrease cooling performance.

1. Remove the radiator screen and the panel screen, and remove all foreign material.
2. Remove the dust from between the fins and the tube.
3. Tighten the fan drive belt as necessary. For this, refer to "EVERY 100 HOURS" in Maintenance section.
4. If scale forms in the tube, clean with the scale inhibitor or its equivalent.
5. Each time the panel screen is covered with grass during operation, rub it off the screen with hand. Check the radiator screen from time to time if grass accumulates.
6. If the dust or chaff has accumulated inside of the bonnet, remove the radiator screen and clean inside completely.
   After cleaning, replace the radiator screens properly.

NOTE

- **When assembling the panel screen, be sure to fit it in the runners.**

(1) Panel Screen (2) Radiator Screen

W1043048

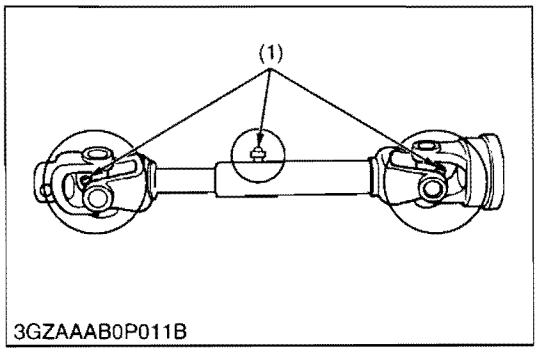

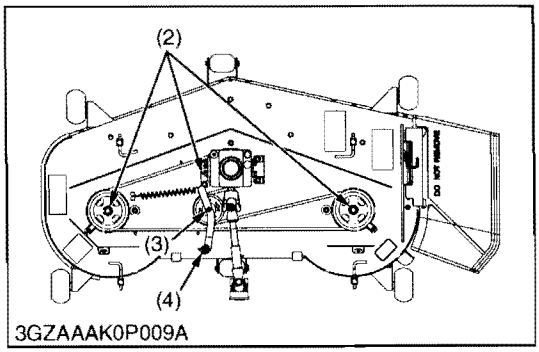

Greasing (Mower)

CAUTION

- **Be sure to stop the engine and remove the key before greasing.**

1. Apply grease to the following position as figures.

(1) Mower Universal Joint (3) Belt Tension Pulley
(2) Spindle Shaft (4) Belt Tension Pivot

W1043490

[2] CHECK POINTS OF INITIAL 50 HOURS

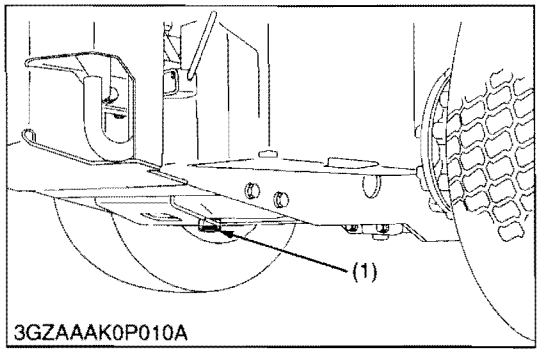

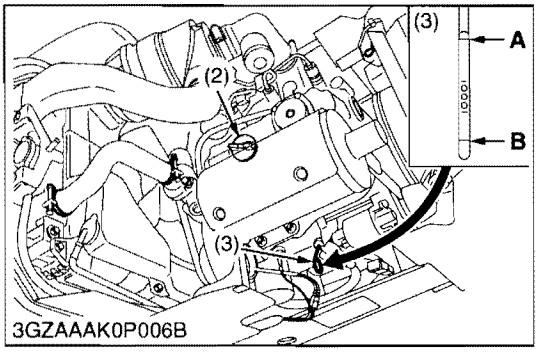

Changing Engine Oil

CAUTION

- **Be sure to stop the engine before changing oil.**

1. Start and warm up the engine for approx. 5 minutes.
2. Place an oil pan underneath the engine.
3. To change the used oil, remove the drain plug (1) at the bottom of the engine and drain the oil completely.
4. Screw in the drain plug (1).
5. Fill with the new oil up to upper line on the dipstick (3).

IMPORTANT

- **When using oil of different manufacture or viscosity from the previous one, remove all of the old oil.**
- **Never mix two different type of oil.**
- **Use the proper SAE engine oil according to ambient temperatures.**
  Refer to "LUBRICANTS, FUEL AND COOLANT".
  (See page G-7.)

Engine oil capacity	3.5 L 3.70 U.S.qts 3.08 Imp.qts

(1) Drain Plug
(2) Oil Inlet Plug
(3) Dipstick

A : Upper Level
B : Lower Level

W1030749

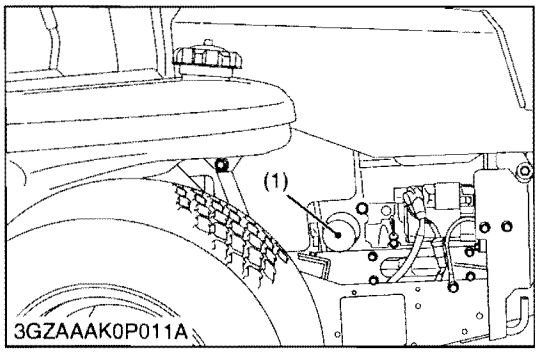

Replacing Engine Oil Filter Cartridge

CAUTION

- **Be sure to stop the engine before changing the oil filter cartridge.**
- **Allow engine to cool down sufficiently, oil can be hot and may cause burns.**

1. Remove the engine oil filter cartridge (1) with the filter wrench.
2. Apply a slight coat of oil onto the rubber gasket of new cartridge.
3. To install the new cartridge, screw it in by hand. Over tightening may cause deformation of rubber gasket.
4. After the cartridge has been replaced, the engine oil level normally lowers a little. Add engine oil to proper level. Check for oil leaks around filter gasket.

IMPORTANT

- **To prevent serious damage to the engine, element of recommended type must be used. Use only a genuine KUBOTA filter or its equivalent.**

(1) Engine Oil Filter Cartridge

W1030949

https://truckmanualshub.com/

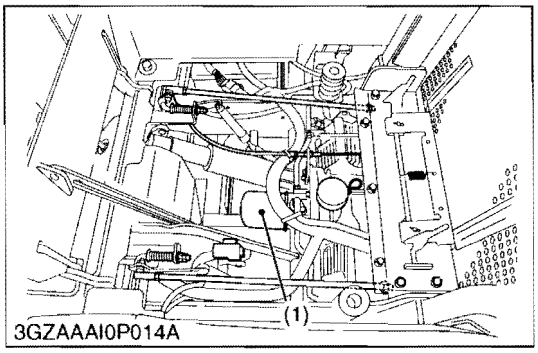

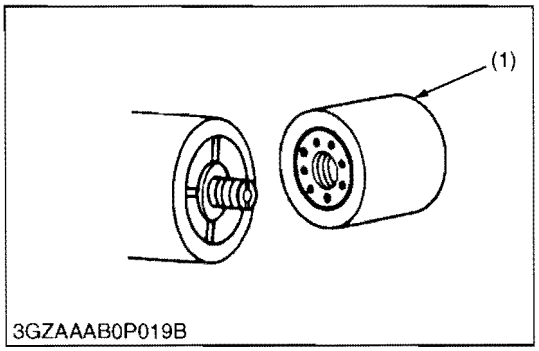

Replacing HST Transmission Oil Filter Cartridge

CAUTION

- **Be sure to stop the engine before changing the oil filter cartridge.**
- **Allow transmission case to cool down sufficiently; oil can be hot and may cause burns.**

1. The HST transmission oil filter cartridge must be changed every 200 service hours.
2. Place an oil pan underneath the oil filter cartridge. (Do not drain oil.)
3. Remove the oil filter cartridge by using the filter wrench.
4. Apply a slight coat of oil onto the cartridge gasket.
5. Tighten the filter quickly until it contacts the mounting surface. Tighten filter by hand an additional 1/2 turn only.
6. After the new cartridge has been replaced, the transmission fluid level normally lowers a little. Add fluid to proper level. Check for oil leaks around filter gasket.

■ IMPORTANT

- **To prevent serious damage or premature failure to the hydraulic system, use only a KUBOTA genuine filter.**

(1) HST Transmission Oil Filter Cartridge

W1031068

[3] CHECK POINT OF INITIAL 400 HOURS

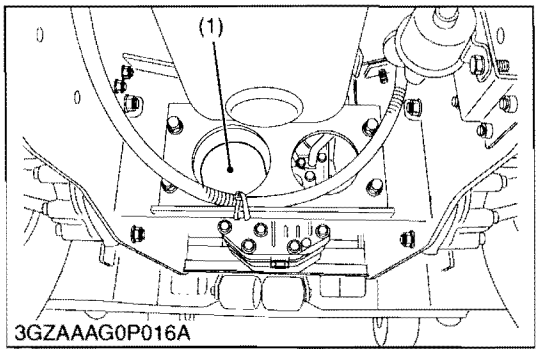

3GZAAAG0P016A

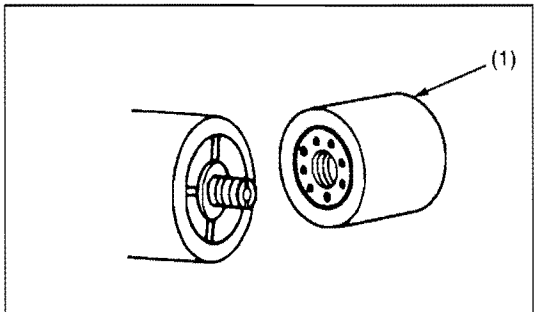

3GZAAAB0P019B

Replacing Transmission Oil Filter Cartridge

CAUTION

- **Be sure to stop the engine before changing the oil filter cartridge.**
- **Allow transmission case to cool down sufficiently; oil can be hot and may cause burns.**

1. The oil filter cartridge must be changed every 400 service hours.
2. To drain the transmission oil, place oil pan underneath the transmission case and the rear axle gear case (RH and LH) and remove the drain plug at the bottom of the transmission case and the rear axle gear case (RH and LH).
3. After draining, reinstall the drain plugs.
4. Remove the oil filter cartridge by using the filter wrench.
5. Apply a slight coat of oil onto the cartridge gasket.
6. Tighten the filter quickly until it contacts the mounting surface. Tighten filter by hand an additional 1/2 turn only.
7. After the new cartridge has been replaced, the transmission fluid level normally lowers a little. Add fluid to proper level. Check for oil leaks around filter gasket.

IMPORTANT

- **To prevent serious damage or premature failure to the hydraulic system, use only a KUBOTA genuine filter.**

(1) Transmission Oil Filter Cartridge

W1051648

https://truckmanualshub.com/

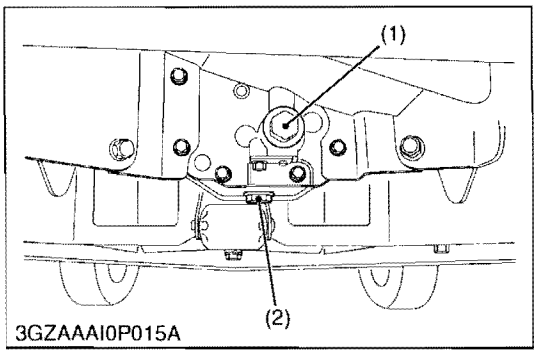

3GZAAAI0P015A

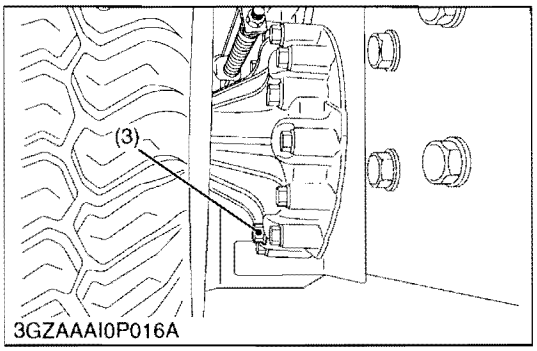

3GZAAAI0P016A

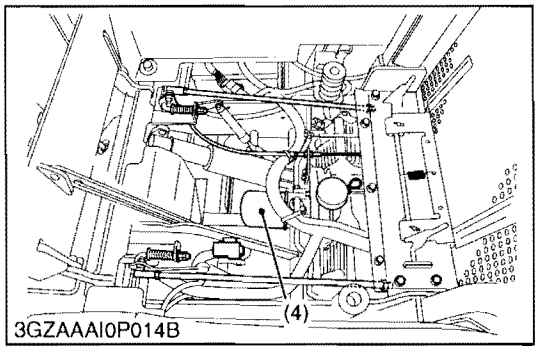

3GZAAAI0P014B

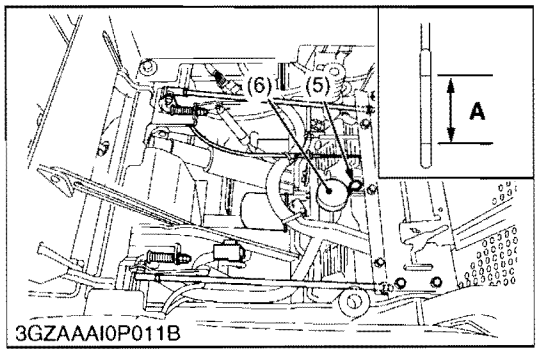

3GZAAAI0P011B

Changing Transmission Fluid and Rear Axle Gear Case Oil (RH and LH)

CAUTION

- **Be sure to stop the engine and remove the key before changing or checking the oil.**
- **Allow transmission case to cool down sufficiently; oil can be hot and may cause burns.**

The fluid in the transmission case is also used for the hydrostatic drive system.

1. To drain the transmission oil, place oil pan underneath the transmission case and remove the drain plug at the bottom of the transmission case.
2. After draining, disassemble and clean the strainer and charge the oil filter cartridge. After reassembling, fill with UDT, SUPER UDT hydrostatic transmission fluid or its equivalent.
3. After running the engine for a few minutes, stop it and check the oil level again; add oil to the prescribed level.

IMPORTANT

- **Operate only at low RPM's immediately after changing the transmission fluid and filter cartridge.**
  Keep the engine at medium speed for a few minutes to insure proper lubrication of all parts so there is no damage to transmission.

Transmission fluid capacity (with filter and hose)	7.5 L 7.9 U.S.qts 6.60 Imp.qts

(1) Drain Plug (Center Case)
(2) Transmission Strainer
(3) Drain Plug (Axle Case)
(4) Transmission Oil Filter
(5) Oil Dipstick
(6) Oil Plug and Breather Cup

A : Oil level acceptable within this range.

W1048918

https://truckmanualshub.com/

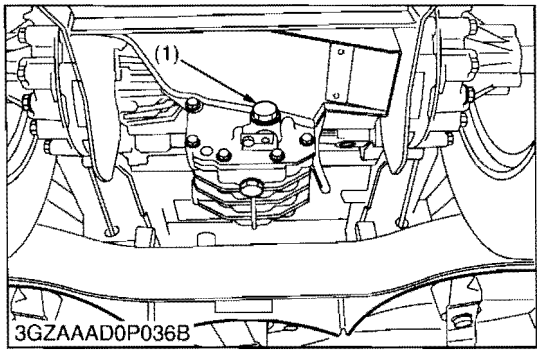

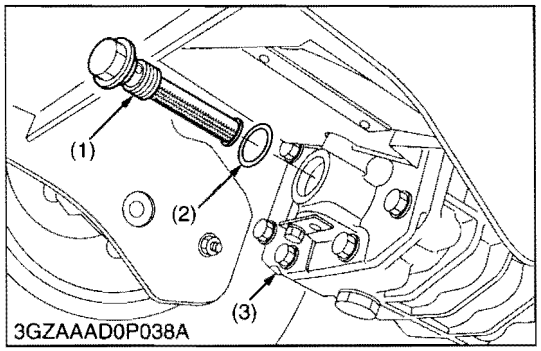

Cleaning Transmission Oil Strainer

1. When changing the transmission fluid, disassemble and rinse the strainer with nonflammable solvent to completely clean off filings.
2. Check O-rings, replace if damaged, cracked or hardened. When reassembling be careful not to damage the parts.

■ **NOTE**

- **Since the fine filings in the oil can damage the precision component parts of the hydraulic system, the end of the suction line is provided with an oil strainer.**

(1) Strainer
(2) O-ring
(3) Center Case Covers

W1030203

[4] CHECK POINTS OF EVERY 50 HOURS

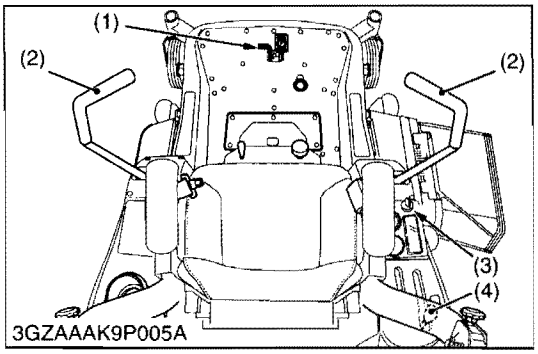

Checking Safety Device

CAUTION

- **Do not allow anyone near the machine while testing.**
- **If the machine does not pass one of the following tests, do not operate the machine.**
- **Sit on operator's seat for all tests except for Test 1.**

■ **IMPORTANT**

- **Check the following tests before operating the machine.**

■ **Test 1 (OPERATOR NOT ON THE SEAT)**

1. Securely set the parking brake.
2. Shift the PTO lever (4) to **"DISENGAGE" (OFF)** position.
3. Set the motion control levers (3) to the **"NEUTRAL LOCK"** position.
4. Turn the key switch (3) to **"START"** position.
5. The engine must not crank.

■ **Test 2 (OPERATOR ON THE SEAT)**

1. Do not set the parking brake. (Release it from test 1.)
2. Shift the PTO lever (4) to **"DISENGAGE" (OFF)** position.
3. Set the motion control levers (2) to the **"NEUTRAL LOCK"** position.
4. Turn the key switch (3) to **"START"** position.
5. The engine must not crank.

■ **Test 3 (OPERATOR ON THE SEAT)**

1. Securely set the parking brake.
2. Shift the PTO lever (4) to **"DISENGAGE" (OFF)** position.
3. Grasp the motion control levers (2) and move then inward from **"NEUTRAL LOCK"** position to **"NEUTRAL"** position and then release the levers.
4. Turn the key switch (3) to **"START"** position.
5. The engine must not crank.

■ **Test 4 (OPERATOR ON THE SEAT)**

1. Securely set the parking brake.
2. Shift the PTO lever (4) to **"ENGAGE" (ON)** position.
3. Grasp the motion control levers (2) to the **"NEUTRAL LOCK"** position to **"NEUTRAL"** position.
4. Turn the key switch (3) to **"START"** position.
5. The engine must not crank.

■ **Test 5 (OPERATOR ON THE SEAT)**

1. Start the engine.
2. Keeps the parking brake securely set.
3. Shift the PTO lever (4) to **"DISENGAGE" (OFF)** position.
4. Grasp the motion control levers (2) and move then inward from **"NEUTRAL LOCK"** position to **"NEUTRAL"** position and then release the levers.
5. The engine must shut off after a short time delay.

■ **IMPORTANT**

- **For this test only, the engine will shut off in a few seconds.**

(1) Parking Brake Lock Pedal
(2) Motion Control Lever
(3) Key Switch
(4) PTO Lever

(To be continued)

https://truckmanualshub.com/

(Continued)

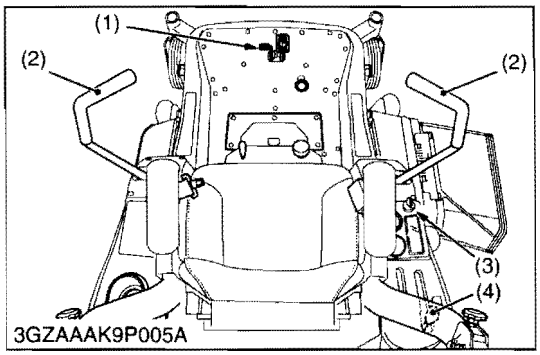

■ **Test 6 (OPERATOR ON THE SEAT)**

1. Start the engine.
2. Do not set the parking brake.
3. Shift the PTO lever (4) to **"DISENGAGE" (OFF)** position.
4. Grasp the motion control levers (2) and move then inward from **"NEUTRAL LOCK"** position to **"NEUTRAL"** position and then release the levers.
5. Stand up. (Do not get off the machine.)
6. The engine must shut off.

■ **Test 7 (OPERATOR ON THE SEAT)**

1. Start the engine.
2. Do not set the parking brake.
3. Shift the PTO lever (4) to **"ENGAGE" (ON)** position.
4. Stand up. (Do not get off the machine.)
5. The engine must shut off.

(1) Parking Brake Lock Pedal
(2) Motion Control Lever
(3) Key Switch
(4) PTO Lever

W1050412

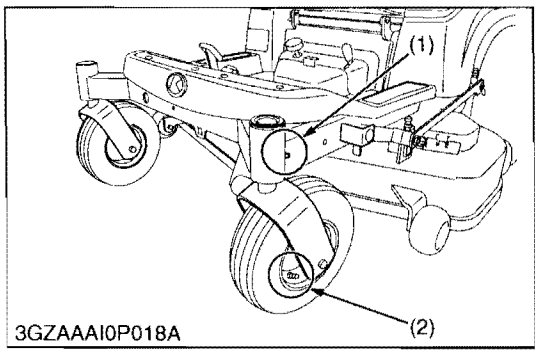

3GZAAAI0P018A

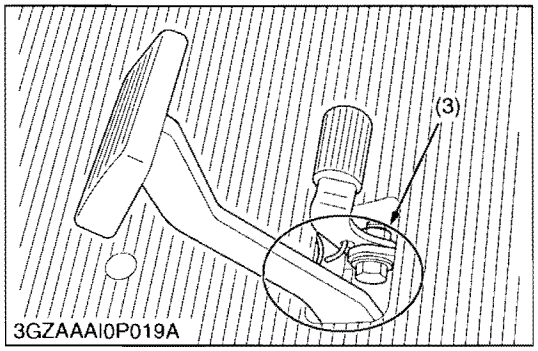

3GZAAAI0P019A

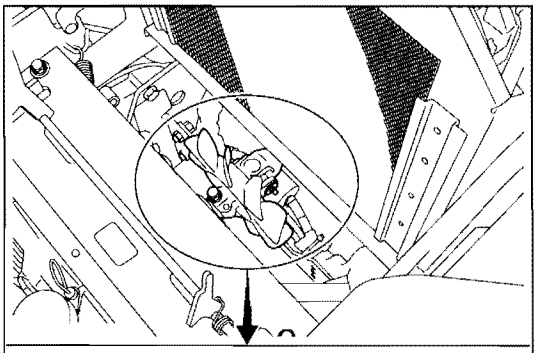

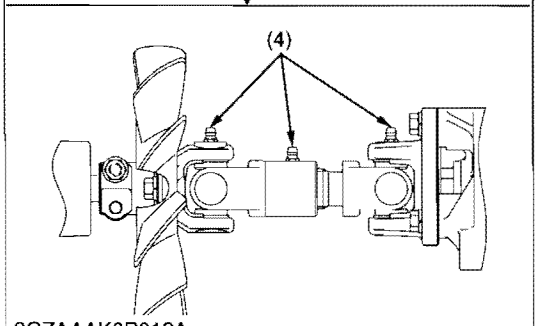

3GZAAAK0P012A

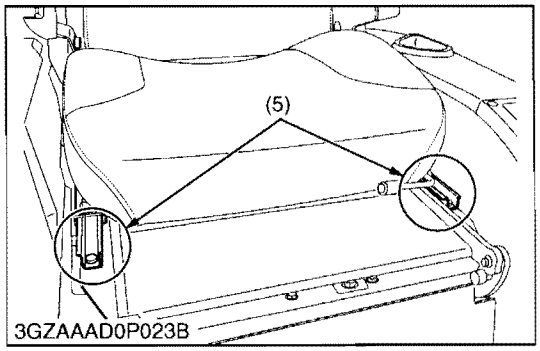

3GZAAAD0P023B

Greasing

1. Apply a grease to the following positions as figures.

CAUTION

- **Be sure to stop the engine and remove the key before greasing.**

(1) Front Axle (LH, RH)
(2) Front Wheel (LH, RH)
(3) Parking Brake Lock Pedal
(4) Machine Universal Joint
(5) Seat Adjuster

(To be continued)

https://truckmanualshub.com/

(Continued)

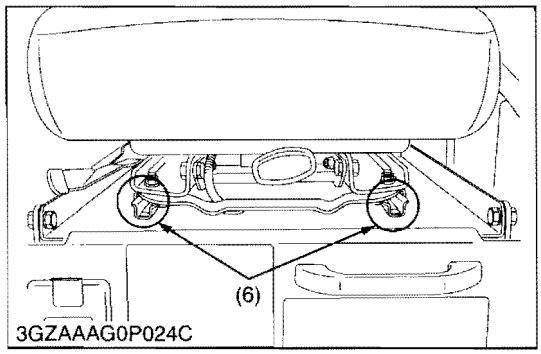

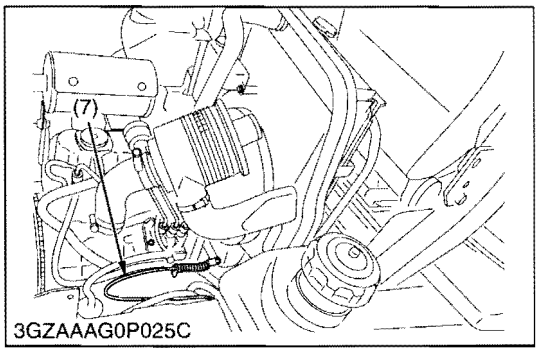

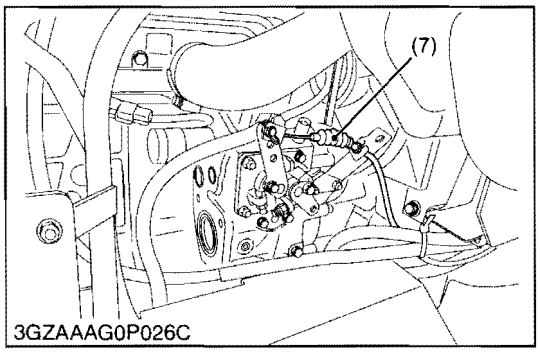

1. Apply a grease to the following position as figures.

CAUTION

- **Be sure to stop the engine and remove the key before greasing.**

(6) Seat Adjuster (7) Throttle Cable (Oil)

W1034228

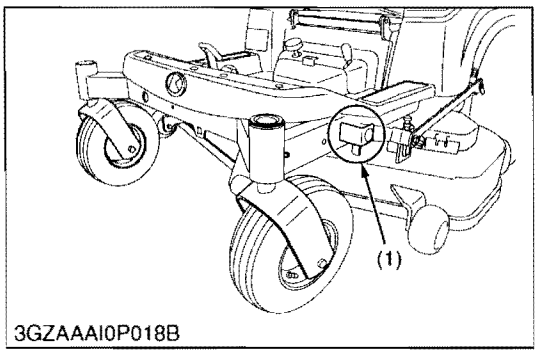

3GZAAAI0P018B

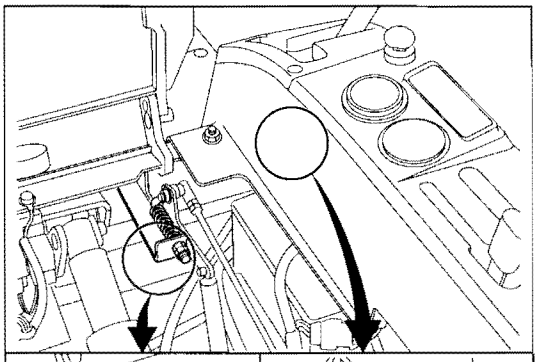

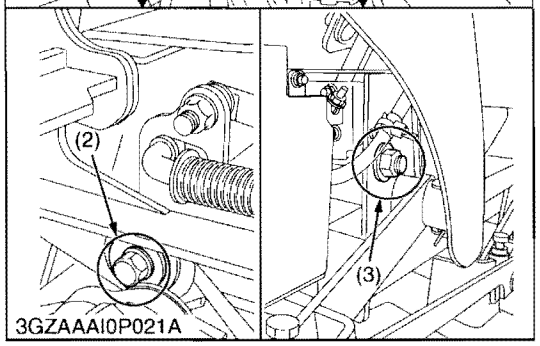

3GZAAAI0P021A

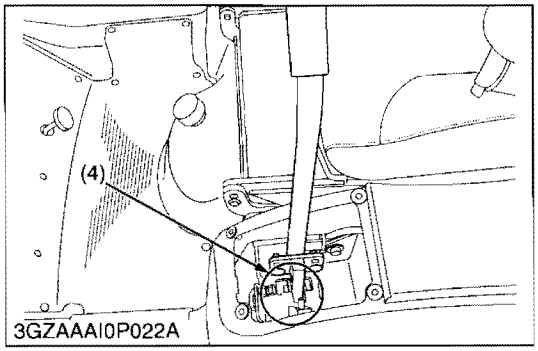

3GZAAAI0P022A

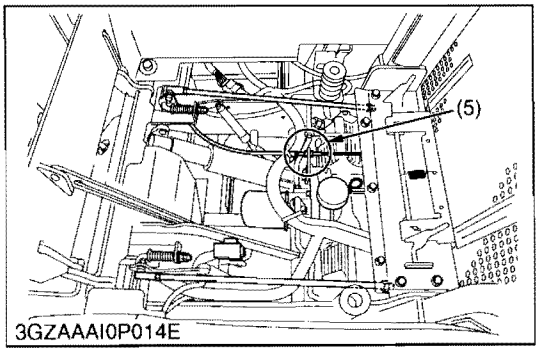

3GZAAAI0P014E

Oiling

1. Apply oil to the following positions as figures.

CAUTION

- **Be sure to stop the engine and remove the key before greasing.**

(1) Front Lift Arm (LH, RH)
(2) Motion Control Lever Pivot Bushing (LH, RH)
(3) Bushing
(4) Motion Control Lever Contact Position (LH, RH)
(5) Lift Control Cable (Oil)

(To be continued)

(Continued)

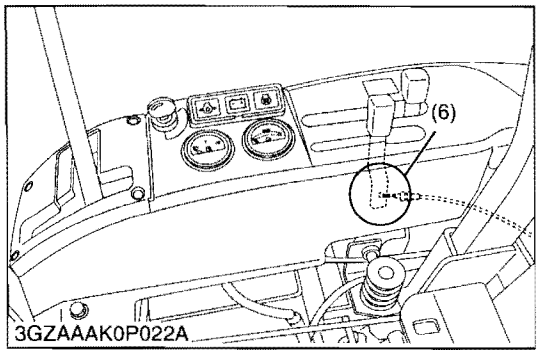

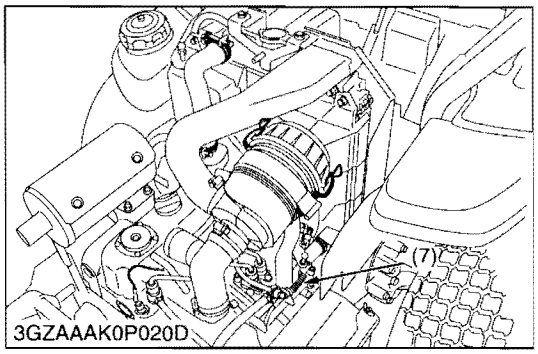

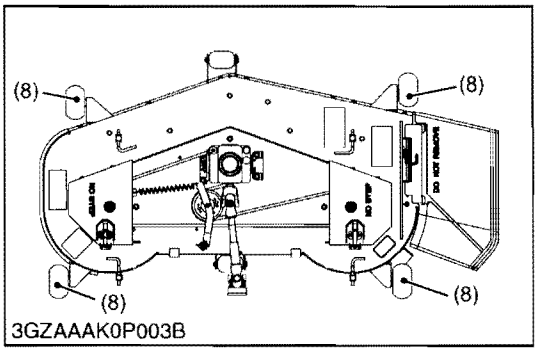

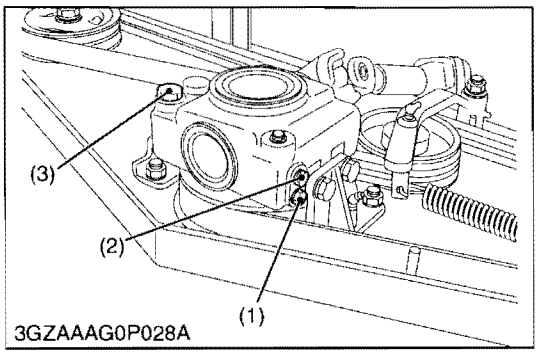

1. Apply oil to the following positions as figures.

CAUTION

- **Be sure to stop the engine and remove the key before greasing.**

(6) Throttle Cable (Oil)
(7) Throttle Cable (Oil)
(8) Anto-scalp Rollers

W1048721

Checking Gear Box Oil Level

CAUTION

Always stop the engine and remove the key before checking oil.

1. Park the machine on a flat surface and lower the mower to the ground.
   To check the oil level, loosen check plug bolt and check to see that the oil level is just below the check plug port.
   If the level is too low, add new oil to the prescribed level at the oil inlet.
   (See page G-7.)

(1) Drain Plug (Bolt)
(2) Check Plug (Bolt)
(3) Oil Filler Plug

W1054012

[5] CHECK POINTS OF EVERY 100 HOURS

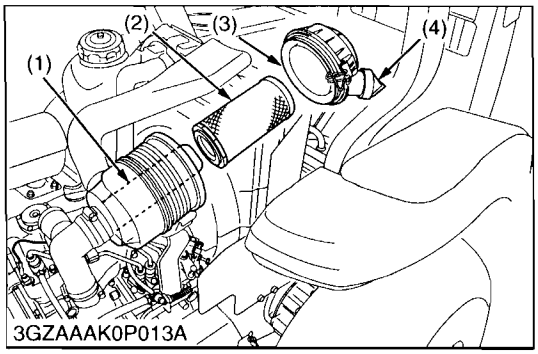

Cleaning Air Cleaner Primary Element

1. Remove the air cleaner cover and primary element.
2. Clean the primary element:
   When dry dust adheres to the element, blow compressed air from the inside, turning the element. Pressure of compressed air must be under 205kPa (2.1 kgf/cm^2, 30 psi).
3. Replace air cleaner primary element:
   Once yearly or after every sixth cleaning, whichever comes first.

■ **NOTE**
- **Check to see if the evacuator valve is blocked with dust.**

■ **IMPORTANT**
- **The air cleaner uses a dry element, never apply oil.**
- **Do not run the engine with filter element removed.**
- **Operating in dusty conditions requires more frequent maintenance.**
- **Align the arrow marks when reinstalling the air cleaner cover.**
- **Do not touch the secondary element except in cases where replacing is required.**
  (See "Replacing Air Cleaner Primary Element and Secondary Element" in "EVERY 1 YEAR" in "PERIODIC SERVICE" section.)

■ **Evacuator Valve**

Open the evacuator valve once a week under ordinary conditions or daily when used in a dusty place to get rid of large particles of dust and dirt.

(1) Secondary (Safety) Element
(2) Primary Element
(3) Cover
(4) Evacuator Valve

W1048601

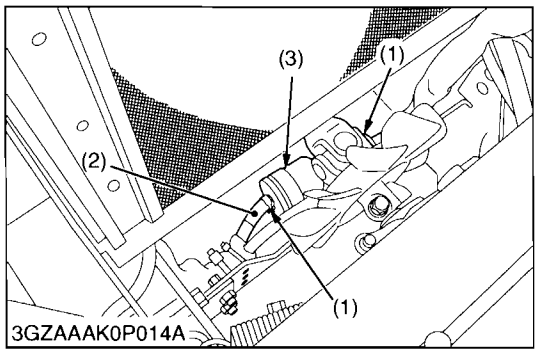

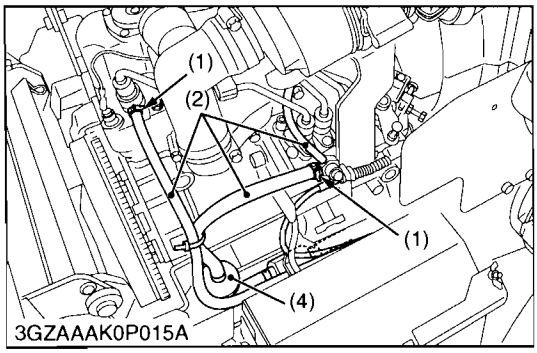

Checking Fuel Lines and Fuel Filter

CAUTION
- **Be sure to stop the engine and remove the key when attempting to make the following checks and changes.**
- **Never fail to check the fuel lines periodically. The fuel lines are subject to wear and aging. Fuel may leak out onto the running engine, causing a fire.**

The fuel line connections should be checked annually or every 100 service hours, whichever comes first.

1. The fuel lines is made of rubber and ages regardless of service period.
2. If the fuel line and clamps are found damages or deteriorated, replace them.
3. Check fuel filter, if it is clogged by debris or contaminated with water, and replace it.

■ **IMPORTANT**
- **When the fuel line is disconnected for maintenance or repair, close both ends of the fuel line with a piece of clean cloth or paper to prevent dust and dirt from entering. In addition, particular care must be taken not to admit dust and dirt into the fuel pump. Entrance of even a small amount dust and dirt causes premature wear and malfunction of the fuel pump and injector components.**

(1) Pipe Clamps
(2) Fuel Line
(3) Fuel Filter
(4) Fuel Pump

W1034725

https://truckmanualshub.com/

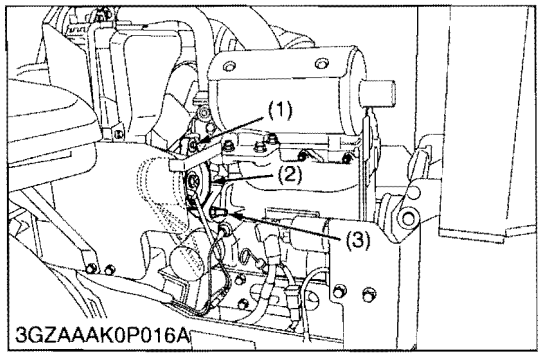

Adjusting Fan Belt Tension

CAUTION

- **Be sure to stop the engine and remove the key before checking belt tension.**

1. If the fan drive belt becomes loose, the engine may overheat.
2. To adjust, loosen bolts and turn the alternator to tighten the belt.
3. After adjustment, securely tighten the bolts.

Moderate belt tension:

The belt deflect approx. 10 mm (0.4 in.) when the center of the belt is depressed with finger pressure of 98 N (10 kgf, 22 lbf).

Fan belt tension **(A)**	Factory spec.	Approx. 10 mm 0.4 in.

IMPORTANT

- **When replacing fan belt, be careful not to catch it on the cap under the water pump. See the illustration to the left.**

(1) Tension Bolt
(2) Alternator
(3) Adjustment Bolt

W1037821

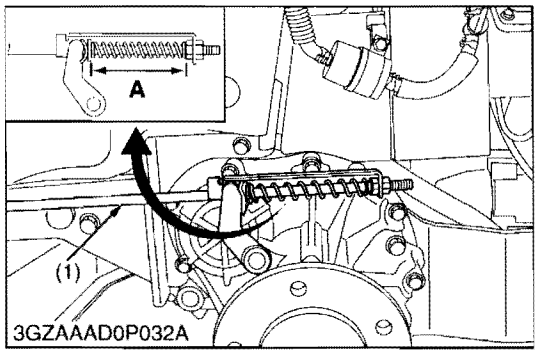

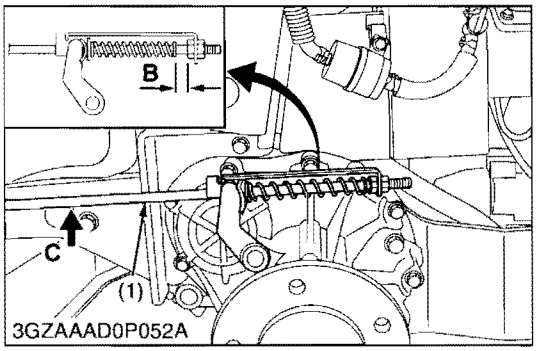

Adjusting Parking Brake

CAUTION

- **Park the machine on a hard and level surface.**
- **Stop the engine and chock the wheels before checking or adjusting.**

IMPORTANT

- **Wrong adjustment may cause machine damage.**

Check brake spring

1. Place the motion control levers to **"NEUTRAL LOCK"** position.
2. Be sure to chock the rear wheels.
3. Apply the parking brake to the lock position.
4. Check the length of the brake springs on both sides.
5. Release the parking brake completely.
6. Hold the brake rod lightly.
7. Check the brake spring play.
8. If these dimensions are not correct, adjust them.

Proper brake spring length with the brake applied to the lock position (**A**)	Factory spec.	115 to 117 mm 4.53 to 4.61 in.

Proper brake spring play (**B**)	Factory spec.	The spring must have play Reference : 0.5 to 1.0 mm 0.02 to 0.04 in.

Adjustment of brake spring play

1. Place the motion control lever to the **"NEUTRAL LOCK"** position.
2. Be sure to chock the rear wheels.
3. Release the parking brake completely.
4. Loosen the lock nuts.
5. Hold the brake rod by hand.
6. Tighten the nut to the correct space between the end of the spring and the nut.
7. Lock the nuts.
8. Adjust the other side spring to the same dimension.

Adjustment of brake length

1. Place the motion control lever to the **"NEUTRAL LOCK"** position.
2. Apply the parking brake to the lock position.
3. Loosen the lock nuts.
4. Adjust the spring length to the recommendation.
5. Lock the nuts.
6. Check the brake spring play to the recommendation. If there is no play, adjust the brake spring play again.
7. Adjust the other side spring to the same dimension.

(1) Brake Rod

A : Parking Brake Spring Length
B : Parking Brake Spring Play
C : Hold the Brake Rod

W1059278

https://truckmanualshub.com/

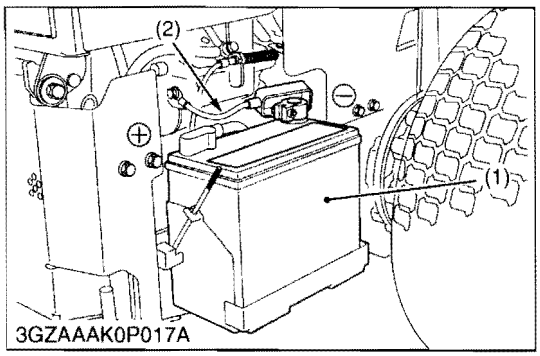

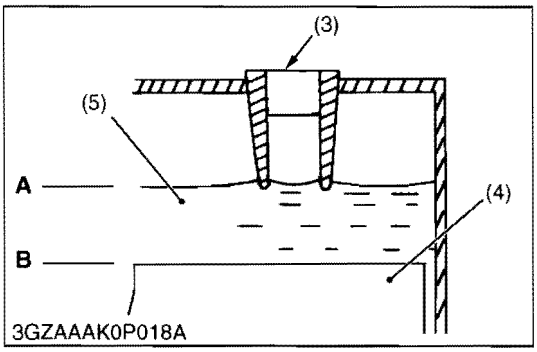

Checking Battery Condition

DANGER

For the refillable type battery, follow the instructions below.

- **Do not use or charge the refillable type battery if the fluid level is below the LOWER (lower limit level) mark.**
  Otherwise, the battery component parts may prematurely deteriorate, which may shorten the battery's service life or cause an explosion. Check the fluid level regularly and add distilled water as required so that the fluid level is between the UPPER and LOWER levels.

CAUTION

- **Never remove the vent cap while the engine is running.**
- **Keep electrolyte away from eyes, hands and clothes. If you are spattered with it, wash it away completely with water immediately and get medical attention.**
- **Wear eye protection and rubber gloves when working around battery.**

Mishandling the battery shortens the service life and adds to maintenance costs.

The original battery is a maintenance-free, non accessible type battery.

If the battery is weak, the engine will be difficult to start and the lights will become dim. It is important to check the battery periodically.

■ Battery Charging

DANGER

- **When the battery is being activated, hydrogen and oxygen gases in the battery are extremely explosive. Keep open sparks and flames away from the battery at all times, especially when charging the battery.**

CAUTION

- **When charging battery, ensure that the vent caps are securely in place (if equipped).**
- **When disconnecting the cables from the battery, start with the negative terminal first.**
  When connecting the cables to the battery, start with the positive terminal first.
- **Never check battery charge by placing a metal object across the posts.**
  Use a voltmeter or hydrometer.

(1) Battery
(2) Ground Cable
(3) Vent Well
(4) Separator
(5) Electrolyte

+ : Positive terminal
– : Negative terminal
A : Highest Level
B : Lowest Level

(To be continued)

(Continued)

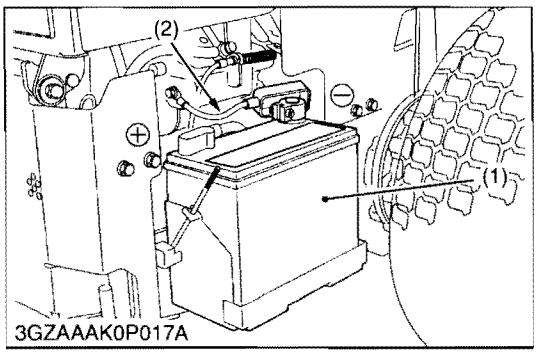

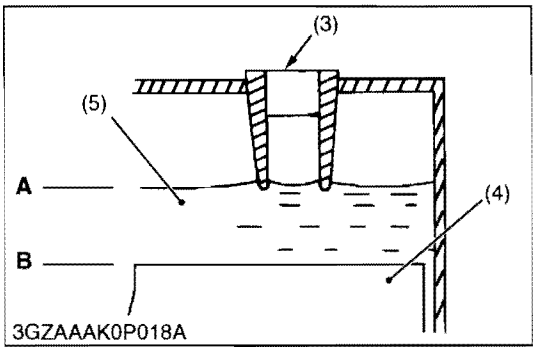

(For accessible maintainable type batteries with removable vent caps.)

1. Make sure each electrolyte level is at the bottom of vent wells, if necessary add distilled water in a well-ventilated area.
2. The water in the electrolyte evaporates during recharging. Liquid shortage damages the battery. Excessive liquid spills over and damages the machine body.
3. To slow charge the battery, connect the battery positive terminal to the charger positive terminal and the negative to the negative, then recharge in the standard fashion.
4. A boost charge is only for emergencies. It will partially charge the battery at a higher rate and in a short time.
   When using a boost-charged battery, it is necessary to recharge the battery as soon as possible.
   Failure to do this will shorten the battery's service life.
5. When the specific gravity of electrolyte reaches 1.27 to 1.29, charge has completed.
6. When exchanging an old battery with new one, use a battery of equal specification shown in.

Battery type	Volts (V)	Reserve capacity (min)	Cold cranking Amps
51R	12	70	450

(For non-accessible maintenance-free type batteries.)
Maintenance-free, non-accessible batteries are designed to eliminate the need to add water. Yet the volume of electrolyte above plates may eventually become depleted due to abnormal conditions such as high heat or improper regulator setting. Use a voltmeter to check the state of charge. (See reference chart to determine if charging is necessary.)

Battery voltage	Reference state of charge
12.6	100 % (Full charge)
12.4	75 %
12.2	50 %
12.0	25 %
11.8	0 %

(1) Battery
(2) Ground Cable
(3) Vent Well
(4) Separator
(5) Electrolyte

+ : Positive terminal
– :Negative terminal
A : Highest Level
B : Lowest Level

W1083097

[6] CHECK POINTS OF EVERY 150 HOURS

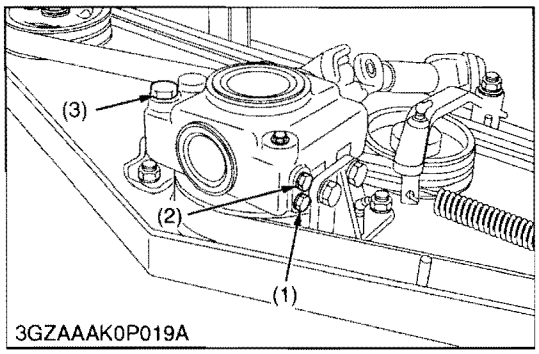

Changing Mower Gear Box Oil

CAUTION

- **Be sure to stop the engine and remove the ley before changing the oil.**

1. To drain the used oil, remove the drain plug (1) and the oil filter plug (3) at the gear box and drain the oil completely into the oil pan.
2. After draining reinstall the drain plug (1).
3. Remove the oil level check plug (2).
4. Fill with the new oil up to the check plug port. (See "LUBRICANTS AND FUEL" in this section.)
5. After filling reinstall the check plug (2) and the filler plugs (3).

(1) Drain Plug (Bolt)
(2) Check Plug (Bolt)
(3) Oil Filter Plug

W1036280

[7] CHECK POINTS OF EVERY 200 HOURS

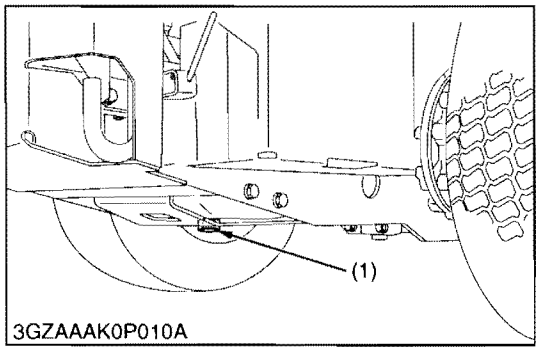

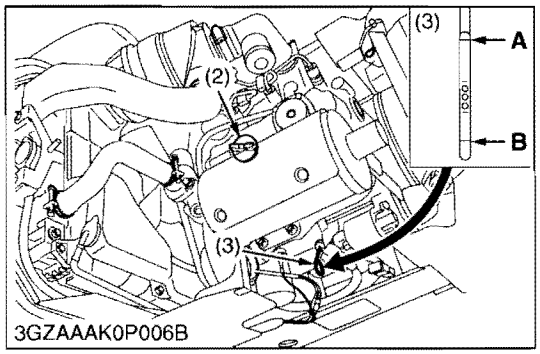

Changing Engine Oil

CAUTION

- **Be sure to stop the engine before changing oil.**

1. Start and warm up the engine for approx. 5 minutes.
2. Place an oil pan underneath the engine.
3. To change the used oil, remove the drain plug (1) at the bottom of the engine and drain the oil completely.
4. Screw in the drain plug (1).
5. Fill with the new oil up to upper line on the dipstick (3).

IMPORTANT

- **When using oil of different manufacture or viscosity from the previous one, remove all of the old oil.**
- **Never mix two different type of oil.**
- **Use the proper SAE engine oil according to ambient temperatures.**
  Refer to "LUBRICANTS, FUEL AND COOLANT".
  (See page G-7.)

Engine oil capacity	3.5 L 3.70 U.S.qts 3.08 Imp.qts

(1) Drain Plug
(2) Oil Inlet Plug
(3) Dipstick

A : Upper Level
B : Lower Level

W1054834

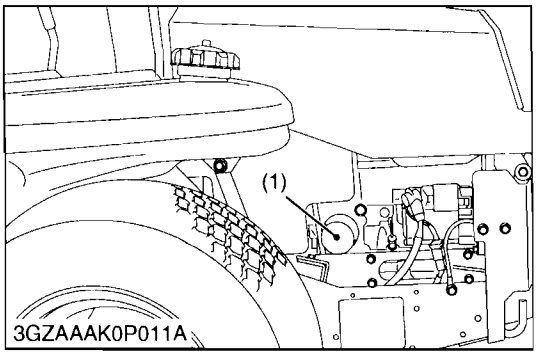

Replacing Engine Oil Filter Cartridge

CAUTION

- **Be sure to stop the engine before changing the oil filter cartridge.**
- **Allow engine to cool down sufficiently, oil can be hot and may cause burns.**

1. Remove the engine oil filter cartridge (1) with the filter wrench.
2. Apply a slight coat of oil onto the rubber gasket of new cartridge.
3. To install the new cartridge, screw it in by hand. Over tightening may cause deformation of rubber gasket.
4. After the cartridge has been replaced, the engine oil level normally lowers a little. Add engine oil to proper level. Check for oil leaks around filter gasket.

IMPORTANT

- **To prevent serious damage to the engine, element of recommended type must be used. Use only a genuine KUBOTA filter or its equivalent.**

(1) Engine Oil Filter Cartridge

W1055661

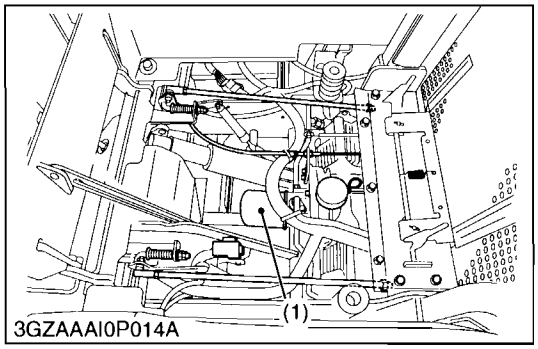

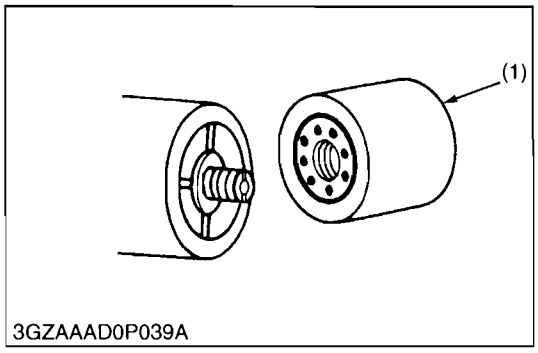

Replacing HST Transmission Oil Filter Cartridge

CAUTION

- **Be sure to stop the engine before changing the oil filter cartridge.**
- **Allow transmission case to cool down sufficiently; oil can be hot and may cause burns.**

1. The HST transmission oil filter cartridge must be changed every 200 service hours.
2. Place an oil pan underneath the oil filter cartridge. (Do not drain oil.)
3. Remove the oil filter cartridge by using the filter wrench.
4. Apply a slight coat of oil onto the cartridge gasket.
5. Tighten the filter quickly until it contacts the mounting surface. Tighten filter by hand an additional 1/2 turn only.
6. After the new cartridge has been replaced, the transmission fluid level normally lowers a little. Add fluid to proper level. Check for oil leaks around filter gasket.

IMPORTANT

- **To prevent serious damage or premature failure to the hydraulic system, use only a KUBOTA genuine filter.**

(1) HST Transmission Oil Filter Cartridge

W1055822

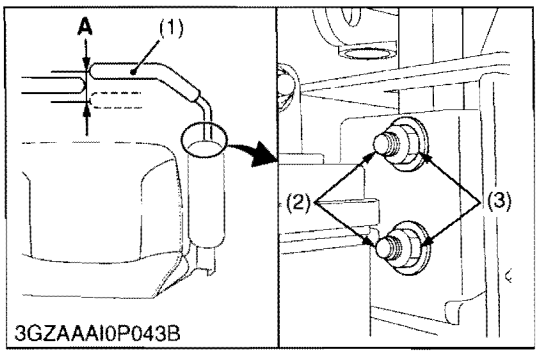

Adjusting Motion Control Lever Pivot

CAUTION

- **Be sure to stop the engine and set the parking brake to "ON" before checking.**

Lever free travel **(A)**	Factory spec.	2 to 15 mm 0.08 to 0.59 in.

1. Set the motion control lever (1) in the **"NEUTRAL"** position.
2. Slightly move the lever back and forth and measure the free travel at the top of lever stroke.
3. If the free travel limits are exceeded, remove the fender and retighten the nut (3) to specified torque.

NOTE

- **If the motion control lever pivot bolt (2) is maladjusted, speed control may be difficult.**

Tightening torque	Pivot bolt	18.6 to 20.6 N·m 1.9 to 2.1 kgf·m 13.7 to 15.2 lbf·ft

(1) Motion Control Lever
(2) Bolt
(3) Nut

(A) Free Travel

W1063124

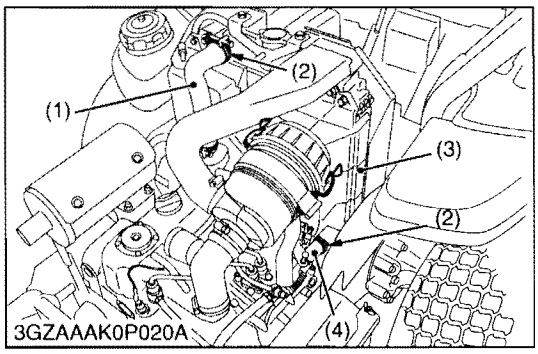

Checking Radiator Hose and Clamp

NOTE

- **Check to see if the radiator hoses are properly fixed every 200 hours of operation or 6 months, whichever comes first.**

1. If the clamp bands (2) are loose or water leaks, tighten the clamp band (2) securely.
2. If the radiator hoses (1) (4) are swollen, hardened or cracked, replace the radiator hoses (1) (4) and tighten the hose clamps (2) securely.

NOTE

- **Take the following actions in the event the coolant temperature be nearly or more than the boiling point, what is called "Overheating".**
- **Park the machine in a safe place and keep the engine unloaded idling.**
- **Do not stop the engine suddenly, but stop it after about 5 minutes of unloaded idling**
- **Keep yourself well away from the machine for further 10 minutes or while the steam is blown out.**
- **Checking that there gets no danger such as burning, get rid of the causes of overheating and then start the engine again.**

(1) Radiator Upper Hose
(2) Clamp
(3) Radiator
(4) Radiator Lower Hose

W1036392

https://truckmanualshub.com/

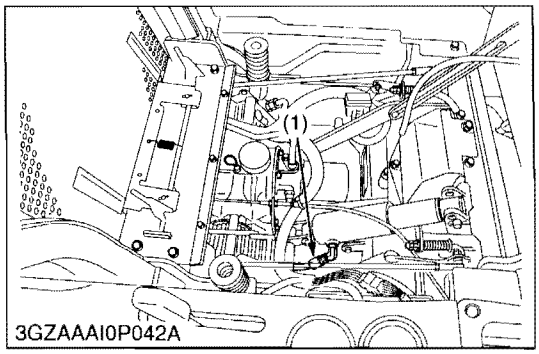

Checking Hydraulic Hose

CAUTION

- **Be sure to stop the engine and remove the key before checking and replacing hydraulic hose.**
- **Allow transmission case to cool down sufficiently; oil can be hot and may cause burns.**

1. Check to see the hose is tight and not damaged.
2. If the worn or damaged of the hose is found, replace it.

(1) Mower Lift Cylinder Hose

W1036641

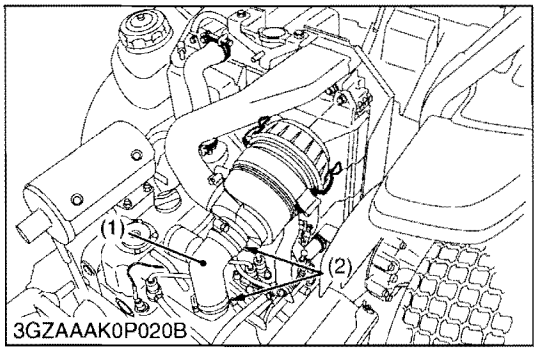

Checking Intake Air Line

1. Check to see that hoses and hose clamps are tight and not damaged.
2. If hoses and clamps are found worn or damaged, replace or repair them at once.

(1) Hose (2) Clamp

W1037686

https://truckmanualshub.com/

[8] CHECK POINT OF EVERY 400 HOURS

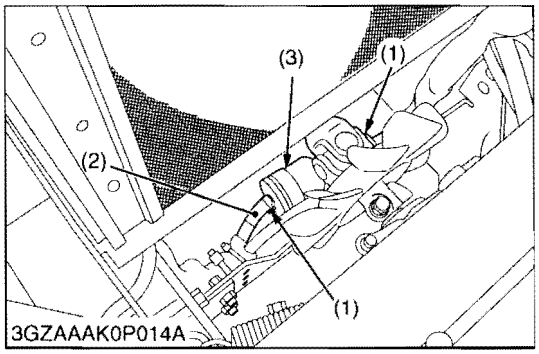

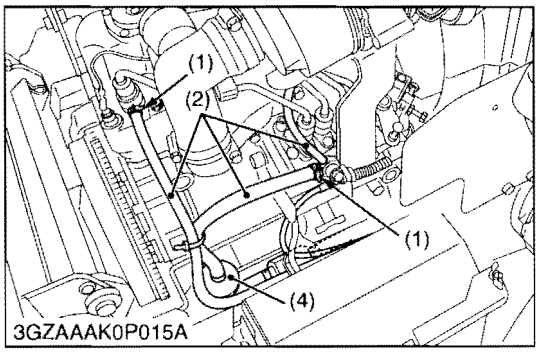

Replacing Fuel Filter Elements

■ **IMPORTANT**

- **This job should not be done in the field, but in a clean place.**

1. Place an oil pan under the fuel filter element (3) (4).
2. Loosen the pipe clamps (1).
3. Remove the fuel filter element (3) (4) and close the fuel line (2) with a clean pins quickly.
4. Replace the fuel filter elements with KUBOTA genuine filter elements.
5. Clean the leaked fuel with a waste.
6. Bleed the fuel system.

(1) Pipe Clamp
(2) Fuel Line
(3) Fuel Filter Element 1
(4) Fuel Filter Element 2

W1040109

https://truckmanualshub.com/

[9] CHECK POINT OF EVERY 1500 HOURS

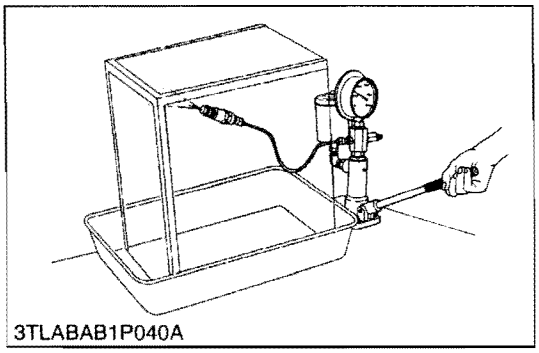
3TLABAB1P040A

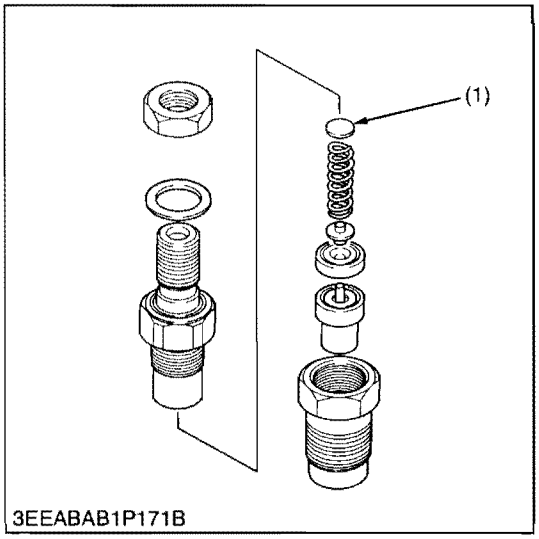

3EEABAB1P171B

Checking Fuel Injection Nozzle Injection Pressure

1. Set the injection nozzle to a nozzle tester.
2. Slowly move the tester handle to measure the pressure at which fuel begins jetting out from the nozzle.
3. If the measurement is not within the factory specifications, replace the adjusting washer (1) in the nozzle holder to adjust it.

(Reference)

- Pressure variation with 0.01 mm (0.0004 in.) difference of adjusting washer thickness.
  Approx. 235 kPa (2.4 kgf/cm^2, 34 psi)

Fuel injection pressure	Factory spec.	13.73 to 14.70 MPa 140.0 to 150.0 kgf/cm^2 1991 to 2133 psi

(1) Adjusting Washer

0

[10] CHECK POINT OF EVERY 3000 HOURS

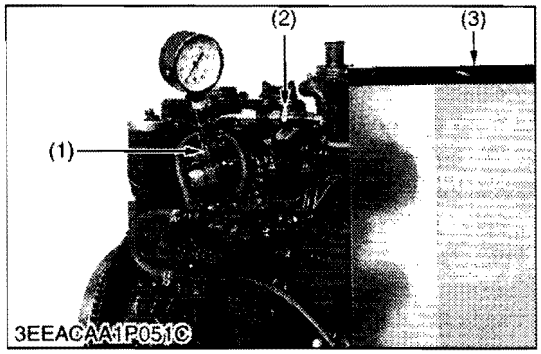

Checking Injection Pump

■ Fuel Tightness of Pump Element

1. Remove the engine stop solenoid.
2. Remove the injection pipes and glow plugs.
3. Install the injection pump pressure tester to the injection pump.
4. Install the injection nozzle (2) jetted with the proper injection pressure to the injection pump pressure tester (1). (Refer to the photo.)
5. Set the speed control lever to the maximum speed position.
6. Run the starter to increase the pressure.
7. If the pressure can not reach the allowable limit, replace the pump with new one or repair with a Kubota-authorized pump service shop.

Fuel tightness of pump element	Allowable limit	13.73 MPa 140.0 kgf/cm^2 1991 psi

■ Fuel Tightness of Delivery Valve

1. Remove the engine stop solenoid.
2. Remove the injection pipes and glow plugs.
3. Set a pressure tester to the fuel injection pump.
4. Install the injection nozzle (2) jetted with the proper injection pressure to the injection pump pressure tester (1).
5. Run the starter to increase the pressure.
6. Stop the starter when the fuel jets from the injection nozzle. After that, turn the flywheel by the hand and raise the pressure to approx. 13.73 MPa (140.0 kgf/cm^2, 1991 psi).
7. Now turn the flywheel back about half a turn (to keep the plunger free). Maintain the flywheel at this position and clock the time taken for the pressure to drop from 13.73 to 12.75 MPa (from 140.0 to 130.0 kgf/cm^2, from 1991 to 1849 psi).
8. Measure the time needed to decrease the pressure from 13.73 to 12.75 MPa (140.0 to 130.0 kgf/cm^2, 1991 to 1849 psi).
9. If the measurement is less than allowable limit, replace the pump with new one or repair with a Kubota-authorized pump service shop.

Fuel tightness of delivery valve	Factory spec.	10 seconds 13.73 → 12.75 MPa 140.0 → 130.0 kgf/cm^2 1991 → 1849 psi
	Allowable limit	5 seconds 13.73 → 12.75 MPa 140.0 → 130.0 kgf/cm^2 1991 → 1849 psi

■ NOTE

- **Never try to disassemble the injection pump assembly. For repairs, you are strongly requested to contact a Kubota-authorized pump service shop.**

(1) Injection Pump Pressure Tester
(2) Injection Nozzle
(3) Protection Cover for Jetted Fuel

https://truckmanualshub.com/

[11] CHECK POINTS OF EVERY 1 YEAR

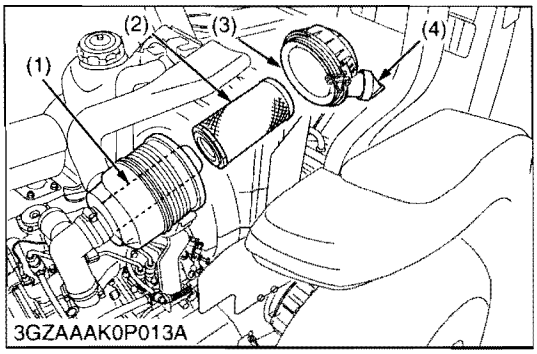

3GZAAAK0P013A

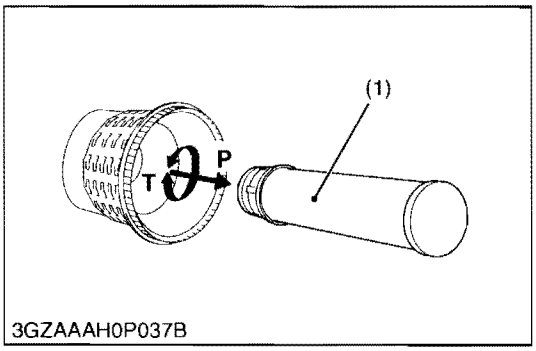

3GZAAAH0P037B

Replacing Air Cleaner Primary Element and Secondary Element

1. Replace the air cleaner primary element (2) and the air cleaner secondary element (1) with a KUBOTA genuine element.
2. While turning the air cleaner secondary element (1) slightly, pull it out.

■ **IMPORTANT**

- **The air cleaner uses a dry element, never apply oil.**
- **Do not run the engine with filter element removed.**
- **Be sure to refit the air cleaner cover (1) as shown in the figure. If the air cleaner cover (1) is improperly fitted, evacuator valve (4) will not function and dust will adhere to the element.**
- **If it is loose, dust and dirt may be sucked in, wearing down the cylinder and piston rings earlier and thereby resulting in poor power output.**
- **To prevent serious damage to the engine, use only a KUBOTA genuine filter element.**

(1) Secondary (Safety) Element
(2) Primary Element
(3) Cover
(4) Evacuator Valve

P : Pull out
T : Turn

W1037268

https://truckmanualshub.com/

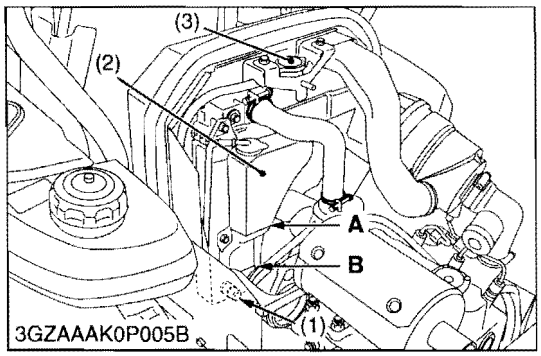

Flushing Cooling System and Changing Coolant

CAUTION

- **Do not remove the radiator cap when the engine is hot. Then loosen cap slightly to the stop to relieve any excess pressure before removing cap completely.**

1. Stop the engine and let cool down.
2. To drain the coolant, open the radiator drain cock (4) and remove the radiator drain plug (3) and remove the radiator cap (1). The radiator cap (1) must be removed to completely drain the coolant.
3. After all coolant is drained, close the drain cock (4) and install the drain plug (3).
4. Fill with clean water and cooling system cleaner.
5. Follow directions of the cleaner instruction.
6. After flushing, fill with clean water and anti-freeze until the coolant level is just below the fill port on the radiator. Install the radiator cap (1) securely.
7. Fill with coolant up to the **"FULL"** mark on the recovery tank.
8. Start and operate the engine for a few minutes.
9. Stop the engine and let cool. Check coolant level of recovery tank (2) and add coolant if necessary.

■ IMPORTANT

- **Do not start engine without coolant.**
- **Use clean, fresh water and anti-freeze to fill the radiator and recovery tank.**
- **When the anti-freeze is mixed with water, the anti-freeze mixing ratio must be less than 50 %.**
- **Securely tighten radiator cap. If the cap is loose or improperly fitted, water may leak out and the engine could overheat.**
- **Refer to "LUBRICANTS, FUEL AND COOLANT". (See page G-7.)**

Coolant capacity	Cooling system	2.6 L 2.7 U.S.qts 2.3 Imp.qts
		3.8 L 4.0 U.S.qts 3.3 Imp.qts
	Recovery tank	0.25 L 0.26 U.S.qts 0.22 Imp.qts

(1) Radiator Cap
(2) Recovery Tank
(3) Drain Plug
(4) Drain Cock

A: FULL
B: LOW

(To be continued)

(Continued)

■ **Anti-Freeze**

If coolant freezes, the cylinders and radiator can be damaged. It is necessary, if the ambient temperature falls below 0 °C (32 °F), to remove coolant mix it with anti-freeze and full the radiator with it.

1. There are two types of anti-freeze available; use the permanent type (PT) for this engine.
2. Before adding anti-freeze for the first time, clean the radiator interior by pouring fresh water and draining it a few times.
3. The procedure for mixing of water and anti-freeze differs according to the maker of the anti-freeze and the ambient temperature, basically should be referred to SAE J1034, more specially also to SAE J814c.
4. Mix the anti-freeze with water, and then fill in to the radiator.

Vol % Anti-freeze	Freezing Point		Boiling Point*	
	°C	°F	°C	°F
40	– 24	– 12	106	222
50	– 37	– 34	108	226

* At 101 kPa (760 mmHg) pressure (atmospheric). A higher boiling point is obtained by using a radiator pressure cap which permits the development of pressure within the cooling system.

■ **NOTE**

- **The above date represent industry standards that necessitate a minimum glycol content in the concentrates anti-freeze.**
- **When the coolant level drops due to evaporation, add water only. In case of leakage, add anti-freeze and water in the specified mixing ratio.**
- **Anti-freeze absorbs moisture. Keep unused anti-freeze in a tightly sealed container.**
- **Do not use radiator cleaning agents when anti-freeze has been added to the coolant. (Anti-freeze contains an anti-corrosive agent, which will react with the radiator cleaning agent forming sludge which will affect the engine parts.)**

W1037402

[12] CHECK POINTS OF EVERY 2 YEARS

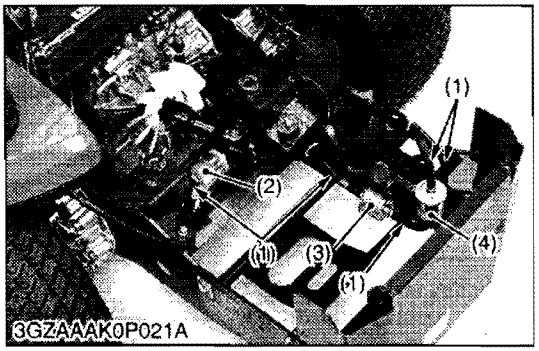

Replacing Fuel Lines

■ **IMPORTANT**

- **This job should not be done in the field, but in a clean place.**

1. Place an oil pan under the fuel line (1).
2. Loosen the pipe clamps.
3. Replace the full lines (1) with KUBOTA genuine parts.
4. Wipe the leaked fuel with a waste.
5. Bleed the fuel system.

(1) Fuel Line
(2) Fuel Element 1
(3) Fuel Feed Pump
(4) Fuel Element 2

W1082371

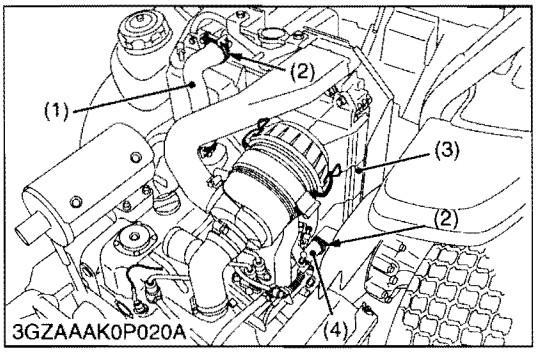

Replacing Radiator Hose

1. Replace the radiator hoses (1) (4) with the new ones.
2. It the clamp (2) is improper, replace it with a new one.

(1) Upper Hose
(2) Clamp
(3) Radiator
(4) Lower Hose

W1067436

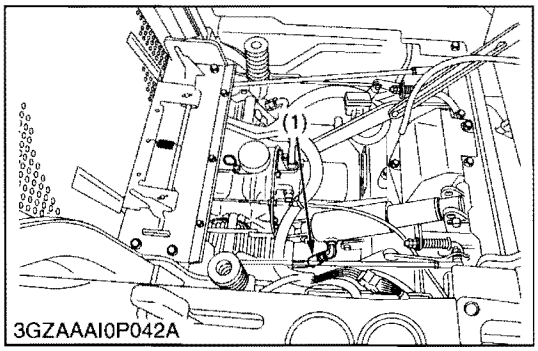

Replacing Hydraulic Hose

1. Replace the mower lift cylinder hose (1) with a new one.

(1) Mower Lift Cylinder Hose

W1067327

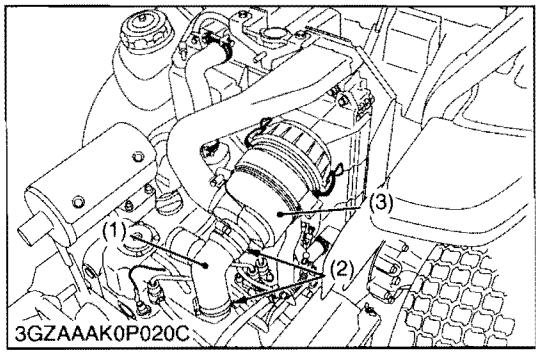

Replacing Intake Air Line

1. Replace the intake air hose (1) with a new one.

(1) Intake Air Hose
(2) Clamp
(3) Air Cleaner Assembly

W1052932

https://truckmanualshub.com/

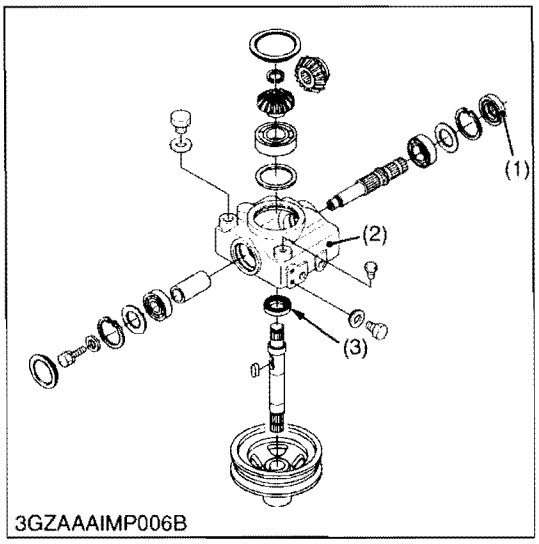

Replacing Mower Gear Box Oil Seals

1. Replace the mower gear box oil seals (1), (3).

(1) Oil Seal
(2) Mower Gear Box
(3) Oil Seal

W1038357

https://truckmanualshub.com/

[13] OTHERS

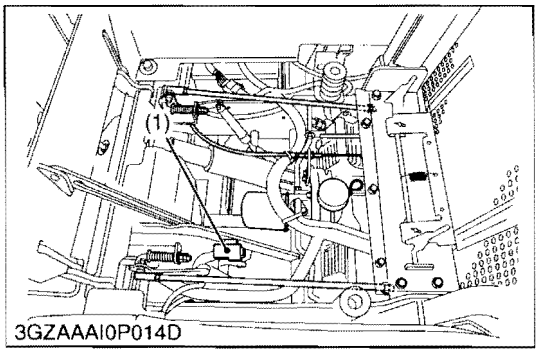

3GZAAAI0P014D

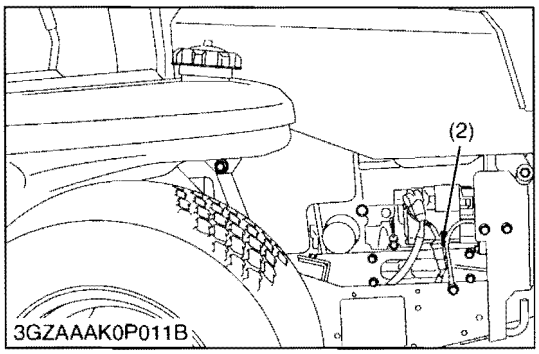

3GZAAAK0P011B

Replacing Fuses

Replacement of the fuse

1. Raise the operator's seat.
2. Remove the blown fuse.
3. Place a new fuse of the same capacity in position.

■ IMPORTANT

- **Never "jump" the fuse with wire or foil or install a larger capacity fuse than is recommended.**

■ Protected Circuit

FUSE NO. (ID LABEL)	CAPACITY (A)	Protected circuit
1	20A	Engine stop
	15A	Charge system
	15A	Main system
	15A	Aux. outlet
	10A	Control system
	(20A)	*(Work light)
2	Slow blow fuse 50 A	Check circuit against wrong battery connection

*Option : The fuse should be in only when the work light is attached.

(1) Fuse Location (2) Slow Blow Fuse

W1038470

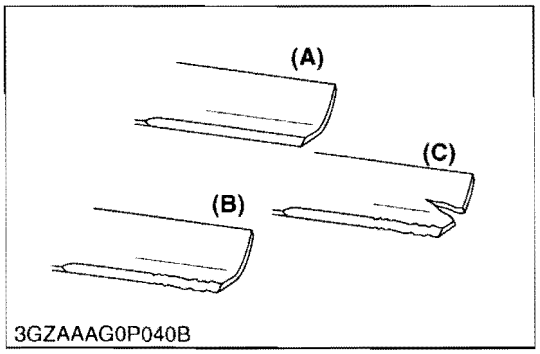

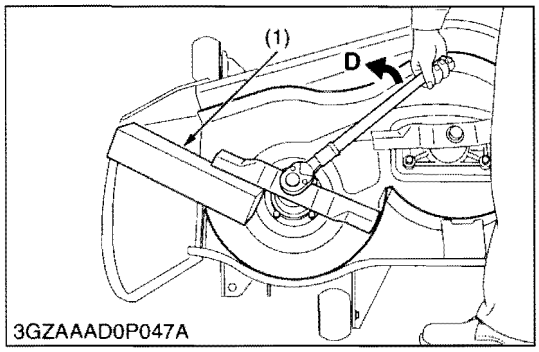

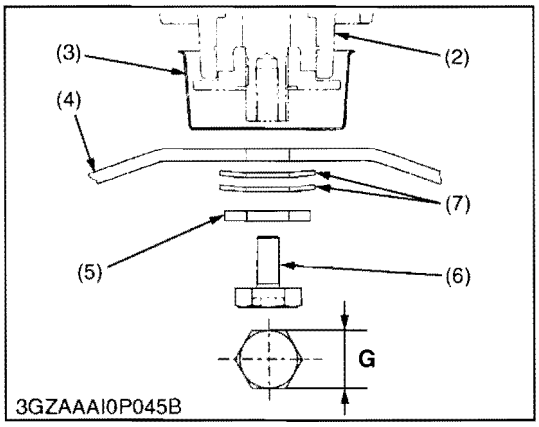

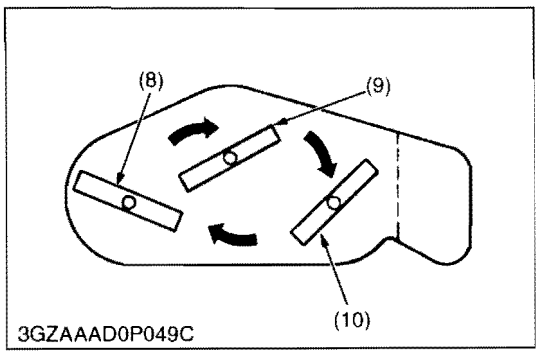

Replacing Mower Blade

CAUTION

To avoid personal injury :

- **Be sure to stop the engine and remove the key.**
- **Blade may be sharp. When you handle blades, wear heavy gloves or wrap end of blade with a rag.**

Checking

The blade cutting edges should be kept sharp at all times.
Sharpen the cutting engines, if they resemble blade **(B)**.
Replace the blades if they appear similar to blade **(C)**.

Replacing

1. Tilt up the mower deck.
2. Wedge a block of wood between the blade and mower housing or use a box wrench over the pulley nut to prevent the spindle from rotating while removing the blade bolts; loosen the blade bolt and illustrated.

IMPORTANT

- **Use the proper metric size box or socket wrench to tighten or loosen the blade mounting bolt.**

3. To sharpen the blades yourself, clamp the blade securely in a vise.
   Use a large mill file and file along the original bevel until sharp.
4. To check the blade for balance, place a small rod through the center hole. If the blade is not balanced, file the heavy side of the blade until balance is achieved.
5. Pass the spline boss through the blade and 2 cup washers, and tighten the bolt.

NOTE

- **Make sure that the cup washer is not flattened out or worn; this cause blade to slip excessively.**
  Replace the 2 cup washers if either is damaged.

6. Before checking or replacing the blade, wipe grass and mud off the top and inside of the mower. Especially clean up the inside of the belt cover, because otherwise the belt life will be reduced.

IMPORTANT

- **Tighten the three blade bolts to 98 to 117.6 N·m (10 to 12 kgf·m, 72 to 87 lbf·ft) of torque.**
- **The blade bolts have right hand threads. Turn them counterclockwise to loosen.**
- **To prolong the service life of the blades, reposition them as shown in the figure below periodically.**

(1) Wooden Block
(2) Spindle Holder
(3) Spindle Guard
(4) Blade
(5) Lock Washer
(6) Bolt
(7) 2-Cup Washer (Plate Spring)
(8) LH Blade
(9) Center Blade
(10) RH Blade

(A) New Blade
(B) Worn Blade
(C) Cracked Blade
(D) "Loosen"
(G) 30.2 mm (1.19 in.)

W1035579

https://truckmanualshub.com/

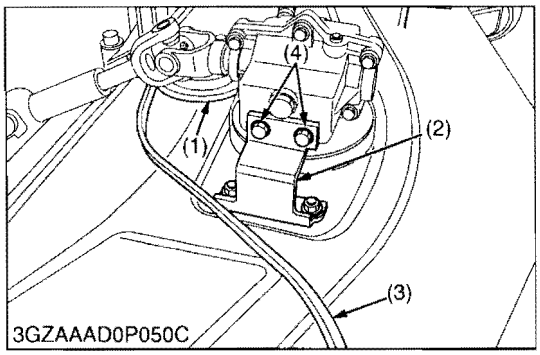

Replacing Mower Belt

1. Remove the mower deck from the machine according to the procedure "DISMOUNTING THE MOWER DECK".
2. Remove the left and right hand shield from the mower deck.
3. Clean around the gear box.
4. Remove the belt from the tension pulley.
5. Remove the right hand bracket which mounts the gear box to the mower deck and slip the belt over the top of the gear box.
6. To install a new belt, reverse the above procedure.

Tightening torque	Bracket mounting bolt	77.6 to 90.2 N·m 8.0 to 9.2 kgf·m 57.1 to 66.5 lbf·ft

(1) Tension Pulley
(2) Bracket (RH)
(3) Belt
(4) Bracket Mounting Bolt

W1036546

Bleeding Fuel System

Air must be removed:

1. When the fuel filter or lines are removed.
2. When tank is completely empty.
3. After the machine has not been used for a long period of time.

Bleeding procedure is as follows:

1. Fill the fuel tank with fuel.
2. Start the engine and run for about 30 seconds, and then stop the engine.

W1069400

9. SPECIAL TOOLS

[1] SPECIAL TOOLS FOR ENGINE

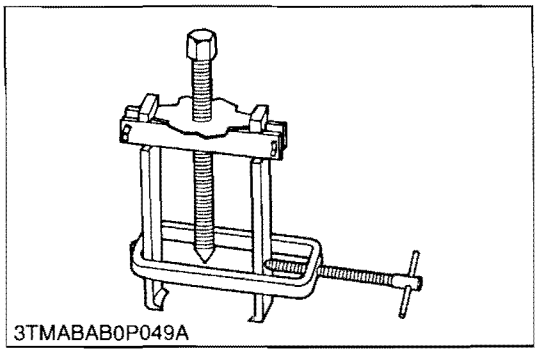
3TMABAB0P049A

Special Use Puller Set

Code No.: 07916-09032

Application: Use exclusively for pulling out bearing, gears and other parts with ease.

W10520950

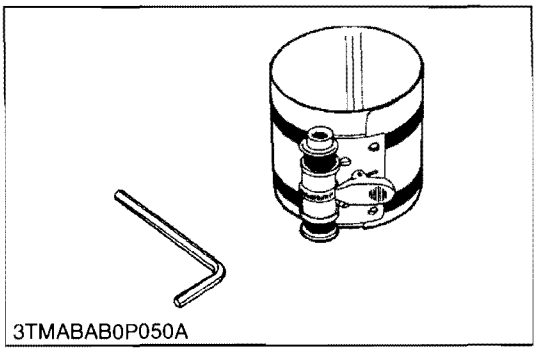
3TMABAB0P050A

Piston Ring Compressor

Code No.: 07909-32111

Application: Use exclusively for pushing in the piston with piston rings into the cylinder.

W10520290

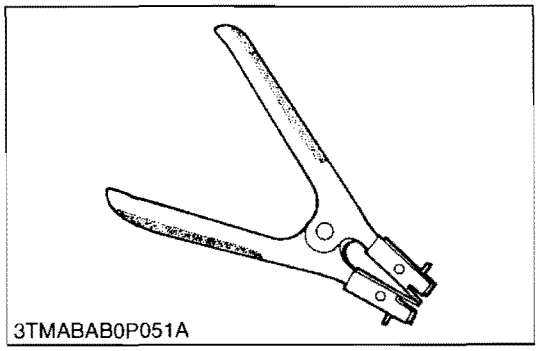
3TMABAB0P051A

Piston Ring Tool

Code No.: 07909-32121

Application: Use exclusively for removing or installing the piston ring with ease.

W10241500

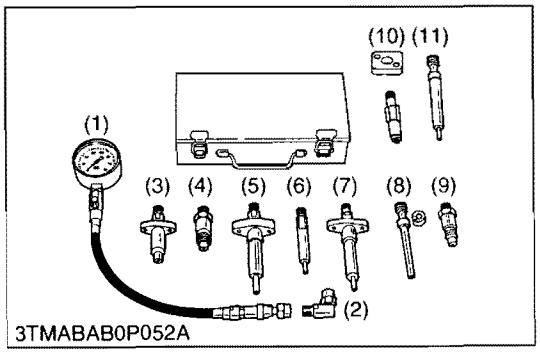

3TMABAB0P052A

Diesel Engine Compression Tester

Code No.: 07909-30208 (Assembly) 07909-31251 (G)
07909-30934 (A to F) 07909-31271 (I)
07909-31211 (E and F) 07909-31281 (J)
07909-31231 (H)

Application: Use to measure diesel engine compression and diagnostics of need for major overhaul.

(1) Gauge
(2) **L** Joint
(3) Adaptor **A**
(4) Adaptor **B**
(5) Adaptor **C**
(6) Adaptor **E**
(7) Adaptor **F**
(8) Adaptor **G**
(9) Adaptor **H**
(10) Adaptor **I**
(11) Adaptor **J**

W10508990

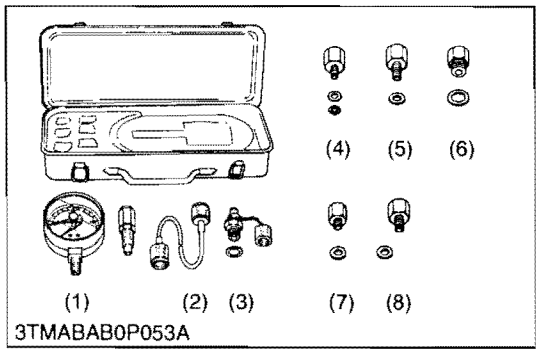

Oil Pressure Tester

Code No.: 07916-32032
Application: Use to measure lubricating oil pressure.

(1) Gauge
(2) Cable
(3) Threaded Joint
(4) Adaptor 1
(5) Adaptor 2
(6) Adaptor 3
(7) Adaptor 4
(8) Adaptor 5

W10243180

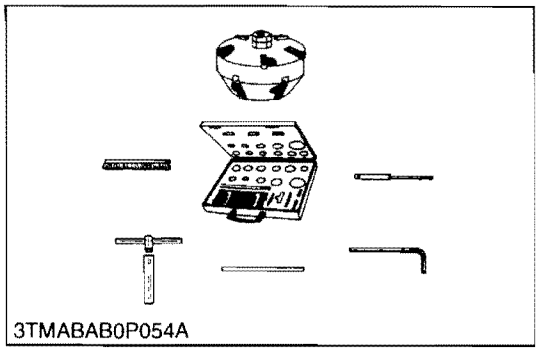

Valve Seat Cutter

Code No.: 07909-33102
Application: Use to reseat valves.
Angle: 0.785 rad (45°)
0.262 rad (15°)
Diameter: 28.6 mm (1.126 in.) 38.0 mm (1.496 in.)
31.6 mm (1.244 in.) 41.3 mm (1.626 in.)
35.0 mm (1.378 in.) 50.8 mm (2.000 in.)

W10244580

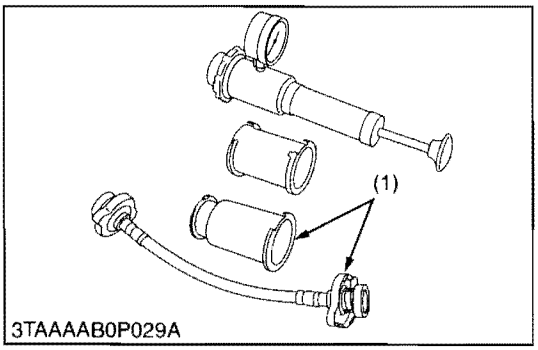

Radiator Tester

Code No.: 07909-31551
Application: Use to check of radiator cap pressure, and leaks from cooling system.
Remarks: Adaptor (1) BANZAI Code No. RCT-2A-30S.

W10519660

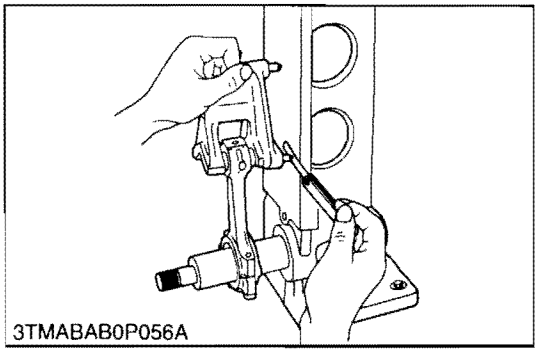

Connecting Rod Alignment Tool

Code No.: 07909-31661
Application: Use to check the connecting rod alignment.
Applicable: Connecting rod big end I.D.
range 30 to 75 mm (1.18 to 2.95 in.) dia.
Connecting rod length
65 to 300 mm (2.57 to 11.81 in.)

W10245830

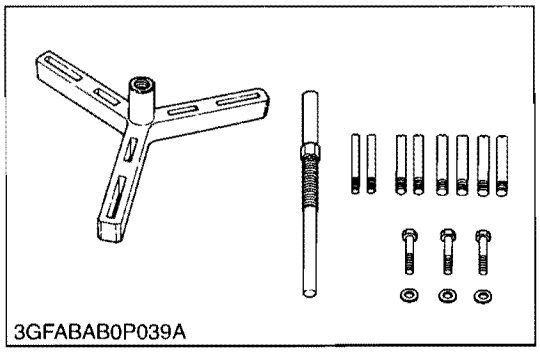

Flywheel Puller

Code No.: 07916-32011
Application: Use exclusively for removing the flywheel with ease.

W1038597

https://truckmanualshub.com/

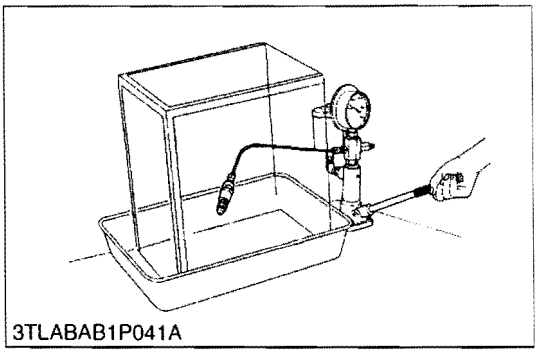
3TLABAB1P041A

Nozzle Tester

Code No.: 07909-31361
Application: Use to check the fuel injection pressure and spray pattern of nozzle.
Measuring range: 0 to 50 MPa (0 to 500 kgf/cm^2, 0 to 7000 psi)

W10246530

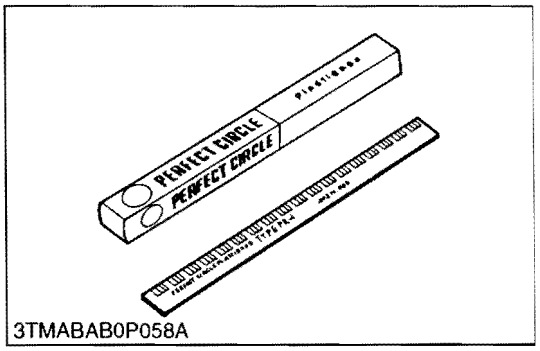

3TMABAB0P058A

Plastigage

Code No.: 07909-30241
Application: Use to check the oil clearance between crankshaft and bearing, etc.
Measuring range:
Green .... 0.025 to 0.076 mm (0.001 to 0.003 in.)
Red ..... 0.051 to 0.152 mm (0.002 to 0.006 in.)
Blue ..... 0.102 to 0.229 mm (0.004 to 0.009 in.)

W10247190

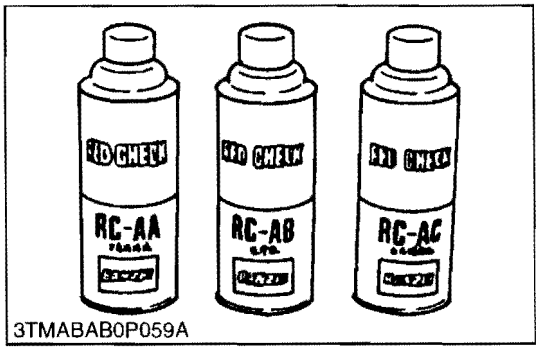

3TMABAB0P059A

Red Check

Code No.: 07909-31371
Application: Use to check cracks on cylinder head, cylinder block, etc.

W10249090

■ **NOTE**

- **The following special tools are not provided, so make them referring to the figure.**

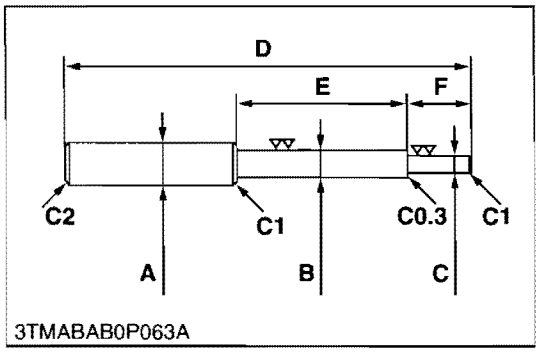

3TMABAB0P063A

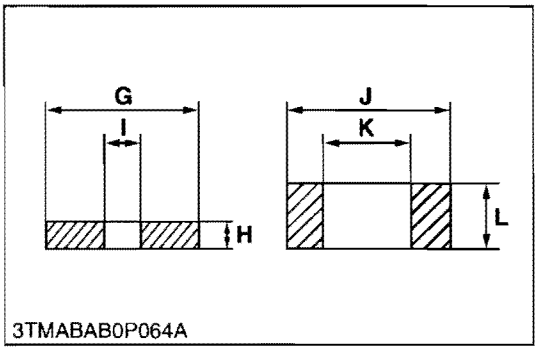

3TMABAB0P064A

Valve Guide Replacing Tool

Application: Use to press out and press fit the valve guide.

A	20 mm dia. (0.79 in. dia.)
B	9.96 to 9.98 mm dia. 0.3921 to 0.3929 in.dia.
C	5.5 to 5.7 mm dia. (0.2165 to 0.2244 in.dia.)
D	200 mm (7.87 in.)
E	80 mm (3.15 in.)
F	40 mm (1.58 in.)
G	15 mm (0.59 in.)
H	5 mm (0.197 in.)
I	6.0 to 6.1 mm dia. (0.236 to 0.240 in.dia.)
J	18 mm dia. (0.71 in.dia.)
K	10.6 to 10.7 mm dia. (0.417 to 0.421 in.dia.)
L	7 mm (0.276 in.)
C1	Chamfer 1.0 mm (0.039 in.)
C2	Chamfer 2.0 mm (0.079 in.)
C0.3	Chamfer 0.3 mm (0.012 in.)

W1038973

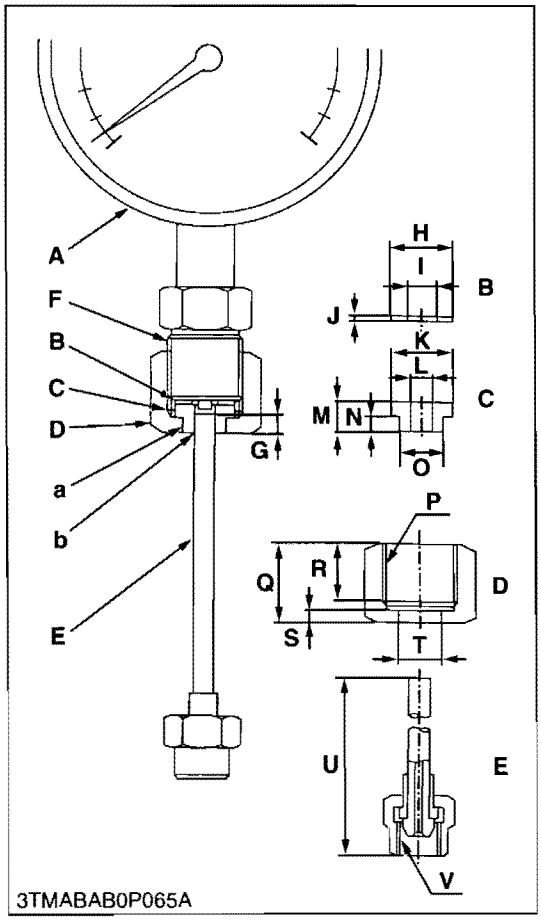

3TMABAB0P065A

Injection Pump Pressure Tester

Application: Use to check fuel tightness of injection pumps.

A	Pressure gauge full scale : More than 29.4 MPa (300 kgf/cm^2, 4267 psi)
B	Copper gasket
C	Flange (Material : Steel)
D	Hex. nut 27 mm (1.06 in.) across the plat
E	Injection Pipe
F	PF 1/2
G	5 mm (0.20 in.)
H	17 mm dia. (0.67 in.dia.)
I	8 mm dia. (0.31 in.dia.)
J	1.0 mm (0.039 in.)
K	17 mm dia. (0.67 in.dia.)
L	6.10 to 6.20 mm dia. (0.2402 to 0.2441 in. dia.)
M	8 mm (0.31 in.)
N	4 mm (0.16 in.)
O	11.97 to 11.99 mm dia. (0.4713 to 0.4721 in. dia.)
P	PF 1/2
Q	23 mm (0.91 in.)
R	17 mm (0.67 in.)
S	4 mm (0.16 in.)
T	12.00 to 12.02 mm dia. (0.4724 to 0.4732 in. dia.)
U	100 mm (3.94 in.)
V	M12 x P1.5
a	Adhesive application
b	Fillet welding on the enter circumference

W1038691

https://truckmanualshub.com/

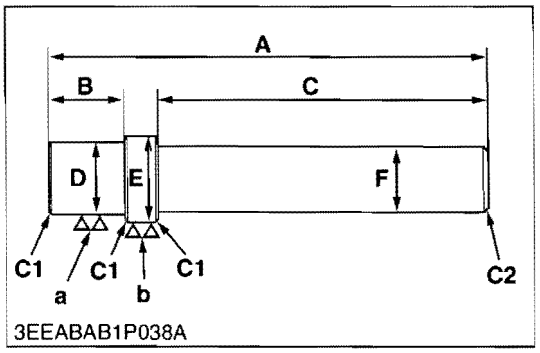

Bushing Replacing Tool

Application: Use to press out and press fit the bushing.

1. For small end bushing

A	145 mm (5.71 in.)
B	20 mm (0.79 in.)
C	100 mm (3.94in.)
D	19.90 to 19.95 mm dia. (0.7835 to 0.7854 in. dia.)
E	21.90 to 21.95 mm dia. (0.8622 to 0.8642 in. dia.)
F	25 mm dia. (0.98 in. dia.)
a	6.3 μm (250 μin.)
b	6.3 μm (250 μin.)

2. For idle gear bushing

A	150 mm (5.91 in.)
B	20 mm (0.79 in.)
C	100 mm (3.94 in.)
D	19.90 to 19.95 mm dia. (0.7835 to 0.7854 in. dia.)
E	21.90 to 21.95 mm dia. (0.8622 to 0.8642 in. dia.)
F	25 mm dia. (0.98 in.dia.)
a	6.3 μm (250 μin.)
b	6.3 μm (250 μin.)

W12358870

https://truckmanualshub.com/

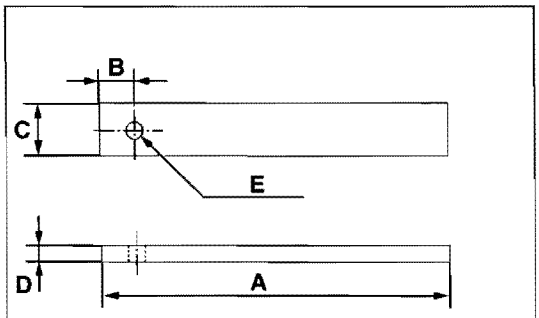

3TMABAB0P067B

Flywheel Stopper

Application: Use to loosen and tighten the flywheel screw.

A	200 mm (7.87 in.)
B	20 mm (0.79 in.)
C	30 mm (1.18 in.)
D	8 mm (0.31 in.)
E	10 mm dia. (0.39 in. dia.)

W12365478

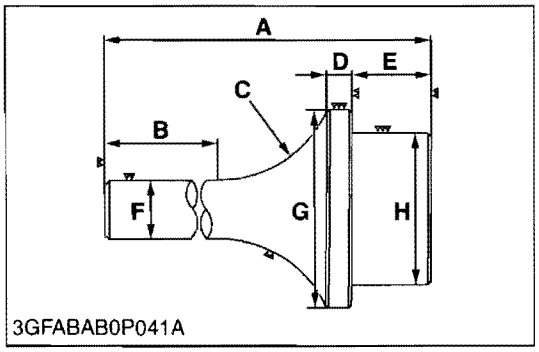

3GFABAB0P041A

Crankshaft Bearing 1 Replacing Tool

Application: Use to press out and press fit the crankshaft bearing 1.

[Press Out]

A	135 mm (5.31 in.)
B	72 mm (2.83 in.)
C	1.57 rad. (40°)
D	10 mm (0.39 in.)
E	22 mm (0.87 in.)
F	20 mm dia. (0.79 in. dia.)
G	48.90 to 48.95 mm dia. (1.9251 to 1.9271 in. dia.)
H	43.90 to 43.95 mm dia. (1.7283 to 1.7303 in. dia.)

[Press Fit]

A	130 mm (5.12 in.)
B	72 mm (2.83 in.)
C	1.57 rad. (40°)
D	9 mm (0.35 in.)
E	24 mm (0.95 in.)
F	20 mm dia. (0.79 in. dia.)
G	68 mm dia. (2.68 in. dia.)
H	39.90 to 39.95 mm dia. (1.5709 to 1.5728 in. dia.)

W78965412

[2] SPECIAL TOOLS FOR MACHINE

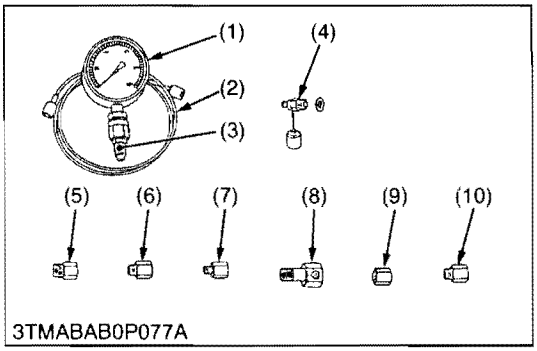

Relief Valve Pressure Tester

Code No.: 07916-50045

Application: This allows easy measurement of relief set pressure.

(1) Gauge (07916-50322)
(2) Cable (07916-50331)
(3) Threaded Joint (07916-50401)
(4) Threaded Joint (07916-50341)
(5) Adaptor **B** (M18 × P1.5) (07916-50361)
(6) Adaptor **C** (PS3/8) (07916-50371)
(7) Adaptor **D** (PT1/8) (07916-50381)
(8) Adaptor **E** (PS3/8) (07916-50392)
(9) Adaptor **F** (PF1/2) (07916-62601)
(10) Adaptor **58** (PT1/4) (07916-52391)

W1026741

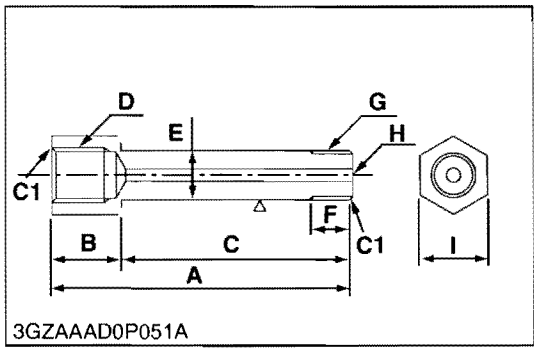

HST Relief Valve Adaptor

Application: This adaptor is used to measure the HST relief valve pressure.

A	80 mm (3.15 in.)
B	20 mm (0.79 in.)
C	60 mm (2.36 in.)
D	G 1/4 × 15 mm (0.59 in.)
E	12 mm (0.47 in.)
F	13 mm dia. (0.51 in. dia.)
G	G 1/4
H	3 mm dia. (0.118 in. dia.)
I	19 mm (0.75 in.)
C1	Chamfer 1.0 mm (0.039 in.)

W1040355

https://truckmanualshub.com/

10. IMPLEMENT LIMITATIONS

The KUBOTA Tractor has been thoroughly tested for proper performance with implements sold or approved by KUBOTA. Use with implements which are not sold or approved by KUBOTA and which exceed the maximum specifications listed below, or which are otherwise unfit for use with the KUBOTA Tractor may result in malfunctions or failures of the tractor, damage to other property and injury to the operator or others. [Any malfunctions or failures of the tractor resulting from use with improper implements are not covered by the warranty.]

	Maximum loading weight		Implement weight W1	Maximum total weight
	Front axle Wf	Rear axle Wr		
ZD221	145 kg (319 lbs)	510 kg (1124 lbs)	140 kg (308 lbs)	655 kg (1444 lbs)

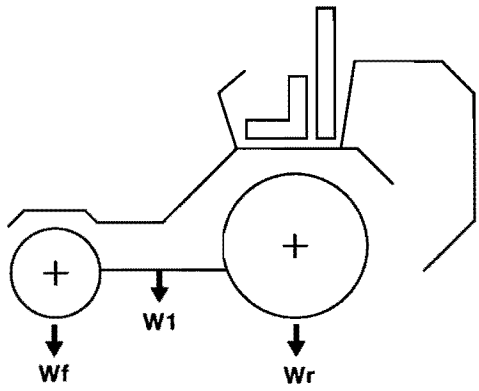

3GZAAAG0P042A

https://truckmanualshub.com/

SERVICING

CONTENTS

1. TROUBLESHOOTING 1-S1
2. SERVICING SPECIFICATIONS 1-S5
3. TIGHTENING TORQUES 1-S11
4. CHECKING, DISASSEMBLING AND SERVICING 1-S12
   [1] CHECKING AND ADJUSTING 1-S12
      (1) Engine Body 1-S12
      (2) Lubricating System 1-S14
      (3) Cooling System 1-S14
      (4) Fuel System 1-S17
   [2] SEPARATING ENGINE 1-S21
   [3] DISASSEMBLING AND ASSEMBLING 1-S25
      (1) Cylinder Head and Valve 1-S25
      (2) Gear Case and Timing Gears 1-S29
      (3) Piston and Connecting Rod 1-S33
      (4) Flywheel and Crankshaft 1-S36
   [4] SERVICING 1-S40
      (1) Cylinder Head and Valves 1-S40
      (2) Timing Gears, Camshaft and Governor Gear 1-S46
      (3) Piston and Connecting Rod 1-S49
      (4) Crankshaft 1-S51
      (5) Cylinder 1-S56
      (6) Oil Pump 1-S57

https://truckmanualshub.com/

1. TROUBLESHOOTING

Symptom	Probable Cause	Solution	Reference Page
Engine Does Not Start	No fuel	Replenish fuel	G-7
	Air in the fuel system	Vent air	G-48
	Water in the fuel system	Change fuel and repair or replace fuel system	–
	Fuel pipe clogged	Clean or replace	G-44
	Fuel filter clogged	Replace	G-38
	Excessively high viscosity of fuel or engine oil at low temperature	Use specified fuel or engine oil	G-7
	Fuel with low cetane number	Use specified fuel	–
	Fuel leak due to loose injection pipe retaining nut	Tighten retaining nut	–
	Incorrect injection timing	Adjust	1-S17
	Fuel camshaft worn	Replace	1-S32
	Injection nozzle clogged	Clean or replace	1-S25
	Injection pump malfunctioning	Replace	1-S29
	Seizure of crankshaft, camshaft, piston, cylinder or bearing	Repair or replace	1-S31 to 39 1-S46 to 56
	Compression leak from cylinder	Replace head gasket, tighten cylinder head screw, glow plug and nozzle holder	1-S27
	Improper valve timing	Correct or replace timing gear	1-S31
	Piston ring and cylinder worn	Replace	1-S34, S35
	Excessive valve clearance	Adjust	1-S13
	Stop solenoid malfunctioning	Replace	–
Starter Does Not Run	Battery discharged	Charge	G-32
	Starter malfunctioning	Repair or replace	1-S24
	Key switch malfunctioning	Replace	5-S8
	Wiring disconnected	Connect	–

W1014322

https://truckmanualshub.com/

Symptom	Probable Cause	Solution	Reference Page
Engine Revolution Is Not Smooth	Fuel filter clogged or dirty	Replace	G-38
	Air cleaner clogged	Clean or replace	G-29
	Fuel leak due to loose injection pipe retaining nut	Tighten retaining nut	1-S25
	Injection pump malfunctioning	Replace	1-S29
	Incorrect nozzle opening pressure	Adjust	1-S19
	Injection nozzle stuck or clogged	Replace	1-S25
	Governor malfunctioning	Repair	1-S32
Either White or Blue Exhaust Gas Is Observed	Excessive engine oil	Reduce to specified level	G-16
	Piston ring and cylinder worn or stuck	Replace	1-S34, 35
	Incorrect injection timing	Adjust	1-S17
Either Black or Dark Gray Exhaust Gas Is Observed	Overload	Lessen the load	–
	Low grade fuel used	Use specified fuel	–
	Fuel filter clogged	Replace	G-29
	Air cleaner clogged	Clean or replace	G-29
	Deficient nozzle injection	Replace nozzle	1-S25

W1014322

Symptom	Probable Cause	Solution	Reference Page
Deficient Output	Incorrect injection timing	Adjust	1-S17
	Engine's moving parts seem to be seizing	Repair or replace	–
	Injection pump malfunctioning	Replace	1-S29
	Deficient nozzle injection	Replace nozzle	1-S25
	Compression leak	Check the compression pressure and repair	1-S12
	Gas leak from exhaust system	Repair or replace	–
Excessive Lubricant Oil Consumption	Piston ring's gap facing the same direction	Shift ring gap direction	1-S35
	Oil ring worn or stuck	Replace	1-S35
	Piston ring groove worn	Replace piston	1-S34, 35
	Valve stem and valve guide worn	Replace	1-S41, 42
	Crankshaft bearing and crank pin bearing worn	Replace	1-S39, 52
	Oil leaking due to defective seals or packing	Replace	–
Fuel Mixed into Lubricant Oil	Injection pump's plunger worn	Replace	1-S29
	Deficient nozzle injection	Replace nozzle	1-S25
	Injection pump broken	Replace	1-S29
Water Mixed into Lubricant Oil	Head gasket defective	Replace	1-S27
	Cylinder block or cylinder head flawed	Replace	1-S27
Low Oil Pressure	Engine oil insufficient	Replenish	G-7
	Oil strainer clogged	Clean	1-S33
	Relief valve stuck with dirt	Clean	–
	Relief valve spring weaken or broken	Replace	–
	Excessive oil clearance of crankshaft bearing	Replace	1-S53
	Excessive oil clearance of crankpin bearing	Replace	1-S52
	Excessive oil clearance of rocker arm	Replace	1-S44
	Oil passage clogged	Clean	–
	Different type of oil	Use specified type of oil	G-7
	Oil pump defective	Replace	–

W1014322

Symptom	Probable Cause	Solution	Reference Page
High Oil Pressure	Different type of oil	Use specified type of oil	G-7
	Relief valve defective	Replace	–
Engine Overheated	Engine oil insufficient	Replenish	G-7
	Fan belt broken or elongated	Replace or adjust	G-30
	Coolant insufficient	Replenish	G-7
	Radiator net and radiator fin clogged with dust	Clean	–
	Inside of radiator corroded	Clean or replace	G-42
	Coolant flow route corroded	Clean or replace	–
	Radiator cap defective	Replace	–
	Overload running	Reduce the load	–
	Head gasket defective	Replace	1-S27
	Incorrect injection timing	Adjust	1-S17
	Unsuitable fuel used	Use specified fuel	G-7
Battery Quickly Discharged	Battery electrolyte insufficient	Replenish distilled water and charge	G-32
	Fan belt slips	Adjust belt tension or replace	G-30
	Wiring disconnected	Connect	–
	Rectifier defective	Replace	–
	Dynamo defective	Replace	1-S24
	Battery defective	Replace	1-S22

W1014322

2. SERVICING SPECIFICATIONS

ENGINE BODY

Item		Factory Specification	Allowable Limit
Valve Clearance (Cold)		0.145 to 0.185 mm 0.00571 to 0.00728 in.	–
Compression Pressure		2.84 to 3.24 MPa 29.0 to 33.0 kgf/cm^2 413 to 469 psi	2.26 MPa 23.0 kgf/cm^2 327 psi
Difference among Cylinders		–	10 % or less
Top Clearance		0.50 to 0.70 mm 0.0197 to 0.0276 in.	–
Cylinder Head Surface	Flatness	–	0.05 mm 0.0020 in.
Valve Recessing	Intake and Exhaust	–0.10 to 0.10 mm –0.0039 to 0.0039 in.	0.30 mm 0.0118 in.
Valve Stem to Valve Guide	Clearance	0.030 to 0.057 mm 0.00118 to 0.00224 in.	0.10 mm 0.0039 in.
Valve Stem	O.D.	5.968 to 5.980 mm 0.23496 to 0.23543 in.	–
Valve Guide	I.D.	6.010 to 6.025 mm 0.23661 to 0.23720 in.	–
Valve Face	Angle	0.785 rad 45 °	–
Valve Seat	Angle	0.785 rad 45 °	–
	Width	2.12 mm 0.0835 in.	–
Valve Spring	Free Length	31.3 to 31.8 mm 1.232 to 1.252 in.	28.4 mm 1.118 in.
	Tilt	–	1.2 mm 0.047 in.
	Setting Load / Setting Length	64.7 N / 27.0 mm 6.6 kgf / 27.0 mm 14.6 lbf / 1.063 in.	54.9 N / 27.0 mm 5.6 kgf / 27.0 mm 12.3 lbf / 1.063 in.

W10138740

ENGINE BODY (Continued)

Item		Factory Specification	Allowable Limit
Rocker Arm Shaft to Rocker Arm	Oil Clearance	0.016 to 0.045 mm 0.00063 to 0.00177 in.	0.15 mm 0.0059 in.
Rocker Arm Shaft	O.D.	10.473 to 10.484 mm 0.41232 to 0.41276 in.	–
Rocker Arm	I.D.	10.500 to 10.518 mm 0.41339 to 0.41410 in.	–
Push Rod	Alignment	–	0.25 mm 0.0098 in.
Tappet to Tappet Guide	Oil Clearance	0.016 to 0.052 mm 0.00063 to 0.00205 in.	0.10 mm 0.0039 in.
Tappet	O.D.	17.966 to 17.984 mm 0.70732 to 0.70803 in.	–
Tappet Guide	I.D.	18.000 to 18.018 mm 0.70866 to 0.70937 in.	–
Timing Gear			
Crank Gear to Idle Gear	Backlash	0.043 to 0.124 mm 0.00169 to 0.00488 in.	0.15 mm 0.0059 in.
Idle Gear to Cam Gear	Backlash	0.047 to 0.123 mm 0.00185 to 0.00484 in.	0.15 mm 0.0059 in.
Idle Gear to Injection Pump Gear	Backlash	0.046 to 0.124 mm 0.00181 to 0.00488 in.	0.15 mm 0.0059 in.
Crank Gear to Oil Pump Drive Gear	Backlash	0.041 to 0.123 mm 0.00161 to 0.00484 in.	0.15 mm 0.0059 in.
Idle Gear	Side Clearance	0.20 to 0.51 mm 0.0079 to 0.0201 in.	0.80 mm 0.0315 in.
Camshaft	Side Clearance	0.15 to 0.31 mm 0.0059 to 0.0122 in.	0.50 mm 0.0197 in.
	Alignment	–	0.01 mm 0.0004 in.
Cam Height	Intake and Exhaust	26.88 mm 1.0583 in.	26.83 mm 1.0563 in.
Camshaft Journal to Cylinder Block Bore	Oil Clearance	0.050 to 0.091 mm 0.00197 to 0.00358 in.	0.15 mm 0.0059 in.
Camshaft Journal	O.D.	32.934 to 32.950 mm 1.29661 to 1.29724 in.	–
Cylinder Block Bore	I.D.	33.000 to 33.025 mm 1.29921 to 1.30020 in.	–

W1013874

ENGINE BODY (Continued)

Item		Factory Specification	Allowable Limit
Idle Gear Shaft to Idle Gear Bushing	Oil Clearance	0.020 to 0.084 mm 0.00079 to 0.00331 in.	0.10 mm 0.0039 in.
Idle Gear Shaft	O.D.	19.967 to 19.980 mm 0.78610 to 0.78661 in.	–
Idle Gear Bushing	I.D.	20.000 to 20.051 mm 0.78740 to 0.78941 in.	–
Piston Pin Bore	I.D.	20.000 to 20.013 mm 0.78740 to 0.78791 in.	20.05 mm 0.7894 in.
Piston Pin to Small End Bushing	Oil Clearance	0.014 to 0.038 mm 0.00055 to 0.00150 in.	0.10 mm 0.0039 in.
Piston Pin	O.D.	20.002 to 20.011 mm 0.78748 to 0.78783 in.	–
Small End Bushing	I.D.	20.025 to 20.040 mm 0.78839 to 0.78897 in.	–
Piston Pin to Small End Bushing (Spare Parts)	Oil Clearance	0.015 to 0.075 mm 0.00059 to 0.00295 in.	0.15 mm 0.0059 in.
Small End Bushing	I.D.	20.026 to 20.077 mm 0.78843 to 0.79043 in.	–
Piston Ring Gap	Top Ring	0.15 to 0.30 mm 0.0059 to 0.0118 in.	1.20 mm 0.0472 in.
	Second Ring	0.30 to 0.45 mm 0.0118 to 0.0177 in.	1.20 mm 0.0472 in.
	Oil Ring	0.15 to 0.30 mm 0.0059 to 0.0118 in.	1.20 mm 0.0472 in.
Piston Ring to Piston Ring Groove Second Ring	Clearance	0.090 to 0.120 mm 0.00354 to 0.00472 in.	0.15 mm 0.0059 in.
Oil Ring	Clearance	0.04 to 0.08 mm 0.0016 to 0.0031 in.	0.15 mm 0.0059 in.
Connecting Rod	Alignment	–	0.05 mm 0.0020 in.
Crankshaft	Side Clearance	0.15 to 0.31 mm 0.0059 to 0.0122 in.	0.50 mm 0.0197 in.
	Alignment	–	0.02 mm 0.0008 in.

W10138740

ENGINE BODY (Continued)

Item		Factory Specification	Allowable Limit
Crankpin to Crankpin Bearing	Oil Clearance	0.020 to 0.051 mm 0.00079 to 0.00201 in.	0.15 mm 0.0059 in.
Crankpin	O.D.	33.959 to 33.975 mm 1.33697 to 1.33760 in.	–
Crankpin Bearing	I.D.	33.995 to 34.010 mm 1.33839 to 1.33898 in.	–
Crankshaft Journal to Crankshaft Bearing 1	Oil Clearance	0.034 to 0.106 mm 0.00134 to 0.00417 in.	0.20 mm 0.0079 in.
Crankshaft Journal	O.D.	39.934 to 39.950 mm 1.57221 to 1.57284 in.	–
Crankshaft Bearing 1	I.D.	39.984 to 40.040 mm 1.57417 to 1.57638 in.	–
Crankshaft Journal to Crankshaft Bearing 2 (Flywheel Side)	Oil Clearance	0.028 to 0.059 mm 0.00110 to 0.00232 in.	0.20 mm 0.0079 in.
Crankshaft Journal	O.D.	43.934 to 43.950 mm 1.72968 to 1.73031 in.	–
Crankshaft Bearing 2	I.D.	43.978 to 43.993 mm 1.73142 to 1.73201 in.	–
Crankshaft Journal to Crankshaft Bearing 3 (Intermediate)	Oil Clearance	0.028 to 0.059 mm 0.00110 to 0.00232 in.	0.20 mm 0.0079 in.
Crankshaft Journal	O.D.	39.934 to 39.950 mm 1.57221 to 1.57284 in.	–
Crankshaft Bearing 3	I.D.	39.978 to 39.993 mm 1.57394 to 1.57453 in.	–
Cylinder Liner	I.D.	67.000 to 67.019 mm 2.63779 to 2.63854 in.	67.150 mm 2.64370 in.
Cylinder Liner [Oversize : 0.25 mm (0.0098 in.)]	I.D.	67.250 to 67.269 mm 2.64764 to 2.64839 in.	67.400 mm 2.65354 in.

W10138740

LUBRICATING SYSTEM

Item		Factory Specification	Allowable Limit
Engine Oil Pressure	At Idle Speed	More than 49 kPa 0.5 kgf/cm^2 7 psi	–
	At Rated Speed	196 to 441 kPa 2.0 to 4.5 kgf/cm^2 28 to 64 psi	147 kPa 1.5 kgf/cm^2 21 psi
Inner Rotor to Outer Rotor	Clearance	0.03 to 0.14 mm 0.0012 to 0.0055 in.	–
Outer Rotor to Pump Body	Clearance	0.07 to 0.15 mm 0.0028 to 0.0059 in.	–
Inner Rotor to Cover	Clearance	0.075 to 0.135 mm 0.00295 to 0.00531 in.	–

W10139730

COOLING SYSTEM

Fan Belt	Tension	7.0 to 9.0 mm / 98 N (10 kgf, 22 lbf) 0.28 to 0.35 in. / 98 N (10 kgf, 22 lbf)	–
Thermostat	Valve Opening Temperature (At Beginning)	69.5 to 72.5 °C 157.1 to 162.5 °F	–
	Valve Opening Temperature (Opened Completely)	85 °C 185 °F	–
Radiator Cap	Pressure Falling Time	10 seconds or more 88 → 59 kPa 0.9 → 0.6 kgf/cm^2 13 → 9 psi	–
Radiator	Water Leakage Test Pressure	No leak at specified pressure 177 kPa 1.8 kgf/cm^2 25.7 psi	–

W10135990

https://truckmanualshub.com/

FUEL SYSTEM

Item		Factory Specification	Allowable Limit
Injection Pump	Injection Timing (3200 min^{-1} (rpm))	0.28 to 0.31 rad (16 to 18°) before T.D.C.	–
Pump Element	Fuel Tightness	–	13.73 MPa 140 kgf/cm^2 1991 psi
Delivery Valve	Fuel Tightness	10 seconds 13.73 → 12.75 MPa 140 → 130 kgf/cm^2 1991 → 1849 psi	5 seconds 13.73 → 12.75 MPa 140 → 130 kgf/cm^2 1991 → 1849 psi
Injection Nozzle	Injection Pressure	13.73 to 14.71 MPa 140 to 150 kgf/cm^2 1991 to 2134 psi	–
Injection Nozzle Valve Seat	Valve Seat Tightness	When the pressure is 12.75 MPa (130 kgf/cm^2, 1849 psi), the valve seat must be fuel tightness.	–

W10139730

3. TIGHTENING TORQUES

Tightening torques of screws, bolts and nuts on the table below are especially specified.
(For general use screws, bolts and nuts : See page G-10.)

Item	Size x Pitch	N·m	kgf·m	lbf·ft
*Cylinder head cover screw	M6 x 1	6.86 to 11.3	0.7 to 1.15	5.1 to 8.3
Injection pipe retaining nut	M12 x 1.5	24.5 to 34.3	2.5 to 3.5	18.1 to 25.3
Overflow pipe retaining nut	M12 x 1.5	19.6 to 24.5	2.0 to 2.5	14.5 to 18.1
Nozzle holder assembly	M20 x 1.5	49.0 to 68.6	5.0 to 7.0	36.2 to 50.6
Glow plug	M8 x 1	7.8 to 14.7	0.8 to 1.5	5.8 to 10.8
*Rocker arm bracket nut	M6 x 1	9.81 to 11.2	1.00 to 1.15	7.24 to 8.31
*Cylinder head screw	M8 x 1.25	37.3 to 42.2	3.8 to 4.3	27.5 to 31.1
*Fan drive pulley screw	M12 x 1.5	117.7 to 127.5	12.0 to 13.0	86.8 to 94.0
*Idle gear shaft mounting screw	M6 x 1	9.8 to 11.3	1.00 to 1.15	7.2 to 8.3
Oil pump mounting screw	M8 x 1.25	17.7 to 21.6	1.80 to 2.20	13.0 to 15.9
*Connecting rod screw	M7 x 0.75	26.5 to 30.4	2.7 to 3.1	19.5 to 22.4
*Flywheel screw	M10 x 1.25	53.9 to 58.8	5.5 to 6.0	39.8 to 43.4
Bearing case cover mounting screw	M6 x 1	9.8 to 11.3	1.00 to 1.15	7.2 to 8.3
*Main bearing case screw 2	M7 x 1	26.5 to 30.4	2.7 to 3.1	19.5 to 22.4
*Main bearing case screw 1	M6 x 1	12.7 to 15.7	1.3 to 1.6	9.4 to 11.6
Oil pressure switch	PT 1/8	15 to 19	1.5 to 2.0	11 to 14
Nozzle holder	–	34.3 to 39.2	3.5 to 4.0	25.3 to 28.9
Drain plug with copper gasket	M12 x 1.25	32.4 to 37.3	3.3 to 3.8	23.9 to 27.5
Drain plug with copper gasket	M22 x 1.5	63.7 to 73.5	6.5 to 7.5	47.0 to 54.2
Drain plug with rubber coated gasket	M22 x 1.5	44.1 to 53.9	4.5 to 5.5	32.5 to 39.8

W1013236

■ **NOTE**

- **For "*" marked screws, bolts and nuts on the table, apply engine oil to their threads and seats before tightening.**
- **The letter "M" in Size x Pitch means that the screw, bolt or nut dimension stands for metric. The size is the nominal outside diameter in mm of the threads. The pitch is the nominal distance in mm between two threads.**

https://truckmanualshub.com/

4. CHECKING, DISASSEMBLING AND SERVICING

[1] CHECKING AND ADJUSTING

(1) Engine Body

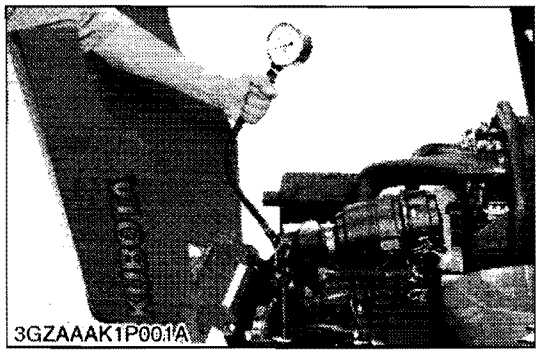

Compression Pressure

1. Run the engine until it is warmed up.
2. Stop the engine.
3. Remove the air cleaner, the muffler and all glow plugs (or nozzles).
4. Set a compression tester with the adaptor to the glow plug hole (or nozzle hole).
   Nozzle hole : Adaptor **H** (07909-31231)
   Glow plug hole : Adaptor **L** (07909-31301)
5. After making sure that the stop lever is set at the stop position (non-injection), run the engine with the starter and measure the compression pressure.
6. Repeat steps 4 and 5 for each cylinder.
7. If the measurement is below the allowable limit, apply a small amount of oil to the cylinder wall through the glow plug hole (or nozzle hole) and measure the compression pressure again.
8. If the compression pressure is still less than the allowable limit, check the top clearance, valve clearance and cylinder head.
9. If the compression pressure increases after applying oil, check the cylinder wall and piston rings.

■ **NOTE**

- **Check the compression pressure with the specified valve clearance.**
- **Always use a fully charged battery for performing this test.**
- **Variances in cylinder compression values should be under 10 %.**

Compression pressure	Factory spec.	2.84 to 3.24 MPa 29 to 33 kgf/cm^2 412 to 469 psi
	Allowable limit	2.26 MPa 23 kgf/cm^2 327 psi

0

https://truckmanualshub.com/

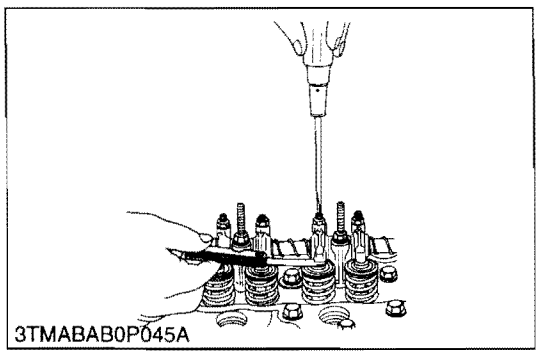

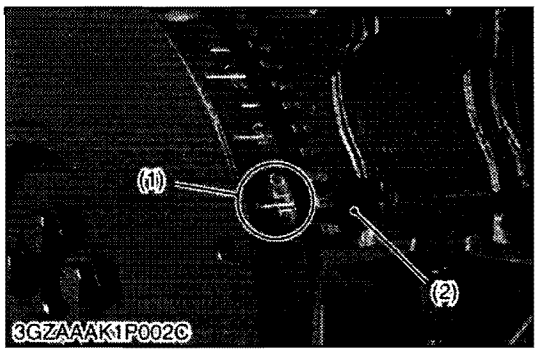

Valve Clearance

■ IMPORTANT

- **Valve clearance must be checked and adjusted when engine is cold.**

1. Remove the cylinder head cover and the glow plugs.
2. Align the **"1TC"** mark (1) on the flywheel and alignment mark so that the No. 1 piston comes to the compression top dead center.
3. Check the following valve clearance marked with "☆" using a thickness gauge.
4. If the clearance is not within the factory specifications, adjust with the adjusting screw.
5. Then turn the flywheel 6.28 rad (360 °), and align the **"1TC"** mark (1) on the flywheel and alignment mark so that the No. 1 piston comes to the overlap position.
6. Check the following valve clearance marked with "☆" using a feeler gauge.

Number of cylinders / Valve arrangement / Adjustable cylinder location of piston		3 cylinder	
		IN.	EX.
When No. 1 piston is at compression top dead center	1st	☆	☆
	2nd		☆
	3rd	☆	
When No. 1 piston is at overlap position	1st		
	2nd	☆	
	3rd		☆

Valve clearance	Factory spec.	0.145 to 0.185 mm 0.00571 to 0.00728 in.

■ NOTE

- **The sequence of cylinder numbers is given as No. 1, No. 2 and No. 3 starting from the gear case side.**
- **After adjusting the valve clearance, secure the adjusting screw with the lock nut.**

(1) **"1TC"** Mark (2) Alignment Mark Plate

0

(2) Lubricating System

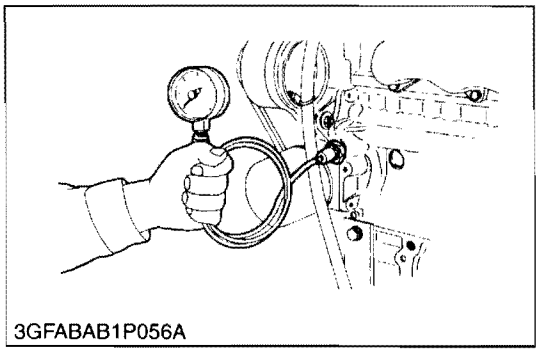
3GFABAB1P056A

Engine Oil Pressure

1. Remove the engine oil pressure switch, and set an oil pressure tester.
2. Start the engine. After warming up, measure the oil pressure of both idling and rated speeds.
3. If the oil pressure is less than the allowable limit, check the following.

- Engine oil insufficient
- Oil pump defective
- Oil strainer clogged
- Oil filter cartridge clogged
- Oil gallery clogged
- Excessive oil clearance
- Foreign matter in the relief valve

Engine oil pressure	At idle speed	Factory spec.	More than 49 kPa 0.50 kgf/cm^2 7.1 psi
	At rated speed	Factory spec.	197 to 441 kPa 2.00 to 4.50 kgf/cm^2 28.5 to 64.0 psi
		Allowable limit	147 kPa 1.50 kgf/cm^2 21.3 psi

(When reassembling)

- After checking the engine oil pressure, tighten the engine oil pressure switch to the specified torque.

Tightening torque	Oil pressure switch	15 to 19 N·m 1.5 to 2.0 kgf·m 11 to 14 lbf·ft

0

(3) Cooling System

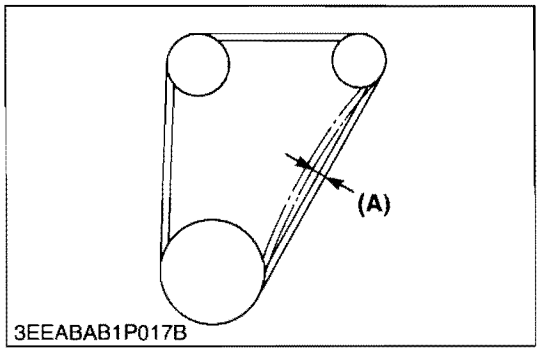

3EEABAB1P017B

Fan Belt Tension

1. Measure the deflection **(A)**, depressing the belt halfway between the fan drive pulley and alternator pulley at specified force 98 N (10 kgf, 22 lbf).
2. If the measurement is not within the factory specifications, loosen the alternator mounting screws and relocate the alternator to adjust.

Deflection **(A)**	Factory spec.	7.0 to 9.0 mm 0.28 to 0.35 in.

(A) Deflection

0

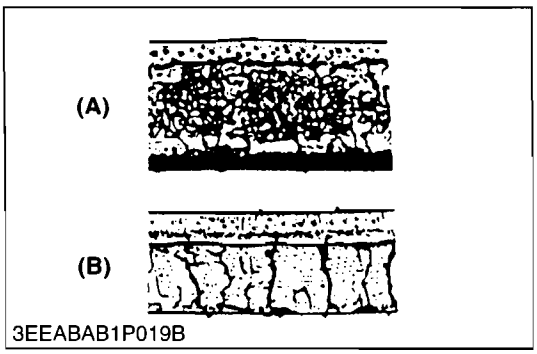

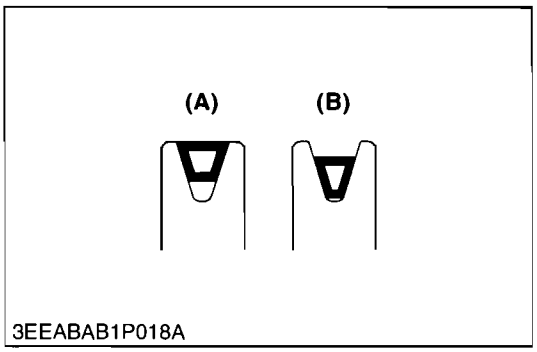

Fan Belt Damage and Wear

1. Check the fan belt for damage.
2. If the fan belt is damaged, replace it.
3. Check if the fan belt is worn and sunk in the pulley groove.
4. If the fan belt is nearly worn out and deeply sunk in the pulley groove, replace it.

(A) Good **(B) Bad**

CAUTION

- **When removing the radiator cap, wait at least ten minutes after the engine has stopped and cooled down. Otherwise, hot water may gush out, scalding nearby people.**

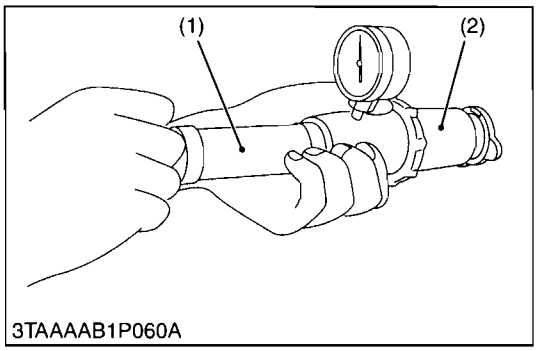

Radiator Cap Air Leakage

1. Set a radiator tester (1) and an adaptor (2) on the radiator cap.
2. Apply the specified pressure 88 kPa (0.9 kgf/cm^2, 13 psi), and measure the time for the pressure to fall to 59 kPa (0.6 kgf/cm^2, 9 psi).
3. If the measurement is less than the factory specification, replace the radiator cap.

Pressure falling time	Factory spec.	More than 10 seconds for pressure fall from 88 to 59 kPa (from 0.90 to 0.60 kgf/cm^2, from 13 to 8.5 psi)

(1) Radiator Tester (2) Adaptor

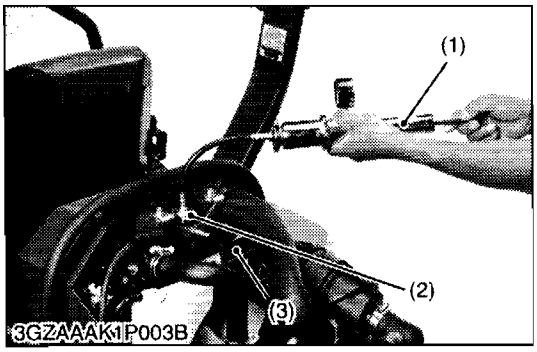

Radiator Water Leakage

1. Pour a specified amount of water into the radiator.
2. Set a radiator tester (1) and an adaptor (2) and raise the water pressure to the specified pressure.
3. Check the radiator for water leaks.
4. If water leaks from the pinhole, repair with the radiator cement. When water leak is excessive, replace the radiator.

Radiator water leakage test pressure	Factory spec.	177 kPa 1.8 kgf/cm^2 25.7 psi

(1) Radiator Tester (3) Radiator
(2) Adaptor

https://truckmanualshub.com/

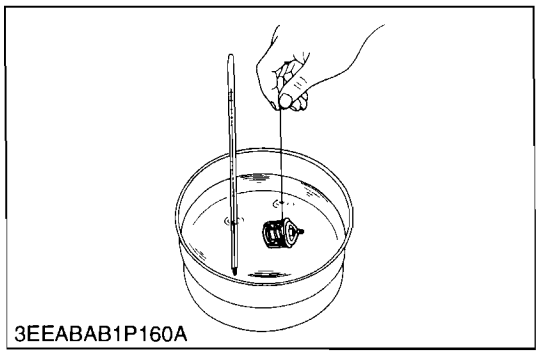
3EEABAB1P160A

Thermostat Valve Opening Temperature

1. Suspend the thermostat in the water by a string with its end inserted between the valve and seat.
2. Heating the water gradually, read the temperature when the valve opens and leaves the string.
3. Continue heating and read the temperature when the valve opens approx. 8 mm (0.315 in.).
4. If the measurement is not within the factory specifications, replace the thermostat.

Thermostat's valve opening temperature	Factory spec.	69.5 to 72.5 °C 157.1 to 162.5 °F
Temperature at which thermostat completely opens	Factory spec.	85 °C 185 °F

(4) Fuel System

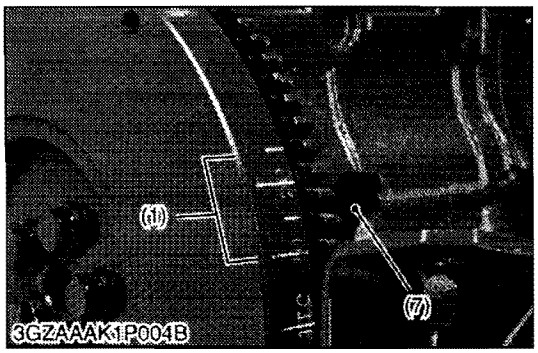

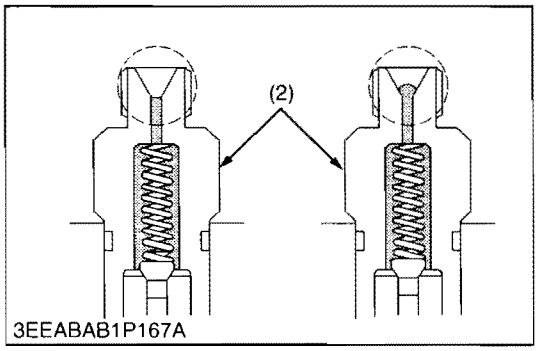

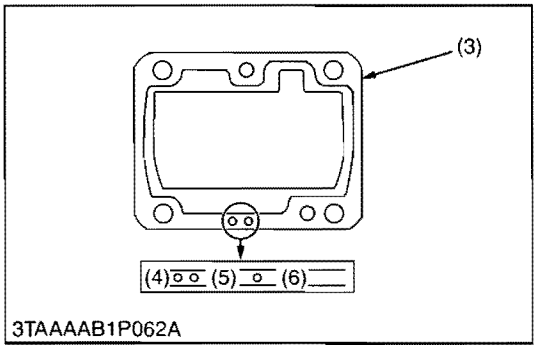

Injection Timing

1. Remove the injection pipes.
2. Remove the engine stop solenoid.
3. Turn the flywheel counterclockwise (viewed from flywheel side) until the fuel fills up to the hole of the delivery valve holder (2) for No. 1 cylinder.
4. After the fuel fills up to the hole of the delivery valve holder for No. 1 cylinder, turn back (clockwise) the flywheel around 1.57 rad (90 °).
5. Turn the flywheel counterclockwise to set at around 0.44 rad (25 °) before T.D.C..
6. Slowly turn the flywheel counterclockwise and stop turning when the fuel begins to come up, to get the present injection timing.
7. Check to see the degree on flywheel.
   The flywheel gas mark "1TC", "10" and "20" for the crank angle before the top dead center of No. 1 cylinder.
8. If injection timing is out of adjustment, readjust the timing with shims.

Injection timing	Factory spec.	0.28 to 0.31 rad (17.25 to 18.75 °) before T.D.C.

■ **NOTE**

- **The liquid gasket is not required for assembling.**
- **Shims are available in thickness of 0.175 mm (0.00689 in.), 0.20 mm (0.0079 in.), 0.25 mm (0.0098 in.) and 0.30 mm (0.012 in.). Combine these shims for adjustments.**
- **The 0.175 mm thick shim is coated only on the lower face. Therefore, do not use the 0.175 mm thick shim as the top shim of the combination (injection pump side), because this cause oil leakage.**
- **Addition or reduction of shim (0.05 mm, 0.002 in.) delays or advances the injection timing by approx. 0.0087 rad (0.50 °).**
- **In disassembling and replacing the injection pump, be sure to use the same number of new shims with the same thickness.**

(1) Timing Line
(2) Delivery Valve Holder
(3) Shim (Soft Metal Gasket Shim)
(4) Two-holes : 0.175 mm (0.00689 in.)
Two-holes : 0.20 mm (0.0079 in.)
(5) One-hole : 0.25 mm (0.0098 in.)
(6) Without hole : 0.30 mm (0.012 in.)
(7) Alignment Mark Plate

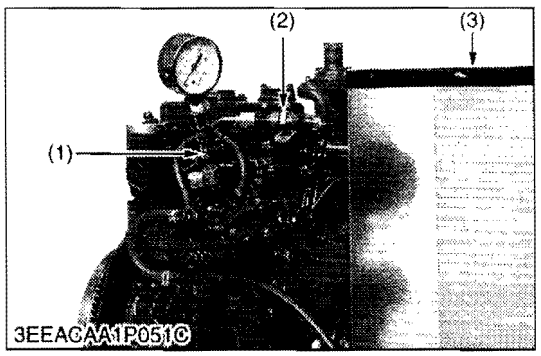

Fuel Tightness of Pump Element

1. Remove the engine stop solenoid.
2. Remove the injection pipes and glow plugs.
3. Install the injection pump pressure tester to the injection pump.
4. Install the injection nozzle (2) jetted with the proper injection pressure to the injection pump pressure tester (1). (Refer to the photo.)
5. Set the speed control lever to the maximum speed position.
6. Run the starter to increase the pressure.
7. If the pressure can not reach the allowable limit, replace the pump with new one or repair with a Kubota-authorized pump service shop.

Fuel tightness of pump element	Allowable limit	13.73 MPa 140.0 kgf/cm^2 1991 psi

■ **NOTE**

- **Never try to disassemble the injection pump assembly. For repairs, you are strongly requested to contact a Kubota-authorized pump service shop.**

(1) Injection Pump Pressure Tester (3) Protection Cover for Jetted Fuel
(2) Injection Nozzle

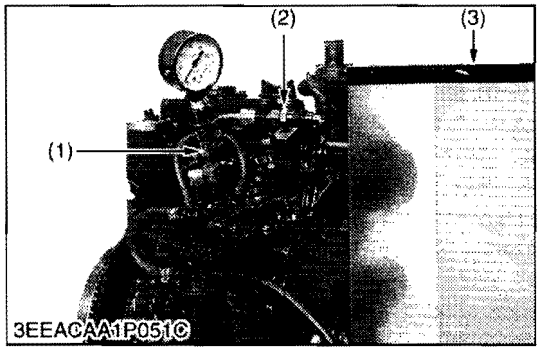

Fuel Tightness of Delivery Valve

1. Remove the engine stop solenoid.
2. Remove the injection pipes and glow plugs.
3. Set a pressure tester to the fuel injection pump.
4. Install the injection nozzle (2) jetted with the proper injection pressure to the injection pump pressure tester (1).
5. Run the starter to increase the pressure.
6. Stop the starter when the fuel jets from the injection nozzle. After that, turn the flywheel by the hand and raise the pressure to approx. 13.73 MPa (140.0 kgf/cm^2, 1991 psi).
7. Now turn the flywheel back about half a turn (to keep the plunger free). Maintain the flywheel at this position and clock the time taken for the pressure to drop from 13.73 to 12.75 MPa (from 140.0 to 130.0 kgf/cm^2, from 1991 to 1849 psi).
8. Measure the time needed to decrease the pressure from 13.73 to 12.75 MPa (140.0 to 130.0 kgf/cm^2, 1991 to 1849 psi).
9. If the measurement is less than allowable limit, replace the pump with new one or repair with a Kubota-authorized pump service shop.

Fuel tightness of delivery valve	Factory spec.	10 seconds 13.73 → 12.75 MPa 140.0 → 130.0 kgf/cm^2 1991 → 1849 psi
	Allowable limit	5 seconds 13.73 → 12.75 MPa 140.0 → 130.0 kgf/cm^2 1991 → 1849 psi

■ **NOTE**

- **Never try to disassemble the injection pump assembly. For repairs, you are strongly requested to contact a Kubota-authorized pump service shop.**

(1) Injection Pump Pressure Tester (3) Protection Cover for Jetted Fuel
(2) Injection Nozzle

CAUTION

- **Check the nozzle injection pressure and condition after confirming that there is nobody standing in the direction the fume goes. If the fume from the nozzle directly contacts the human body, cells may be destroyed and blood poisoning may be caused.**

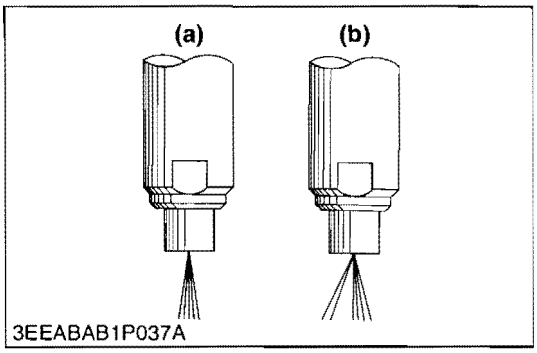

Nozzle Spraying Condition

1. Set the injection nozzle to a nozzle tester, and check the nozzle spraying condition.
2. If the spraying condition is defective, replace the nozzle piece.

(a) Good **(b) Bad**

0

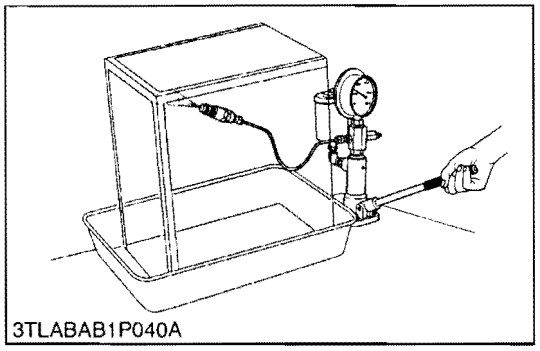

Fuel Injection Pressure

1. Set the injection nozzle to a nozzle tester.
2. Slowly move the tester handle to measure the pressure at which fuel begins jetting out from the nozzle.
3. If the measurement is not within the factory specifications, replace the adjusting washer (1) in the nozzle holder to adjust it.

(Reference)

- Pressure variation with 0.01 mm (0.0004 in.) difference of adjusting washer thickness.
  Approx. 235 kPa (2.4 kgf/cm^2, 34 psi)

Fuel injection pressure	Factory spec.	13.73 to 14.70 MPa 140.0 to 150.0 kgf/cm^2 1991 to 2133 psi

(1) Adjusting Washer

0

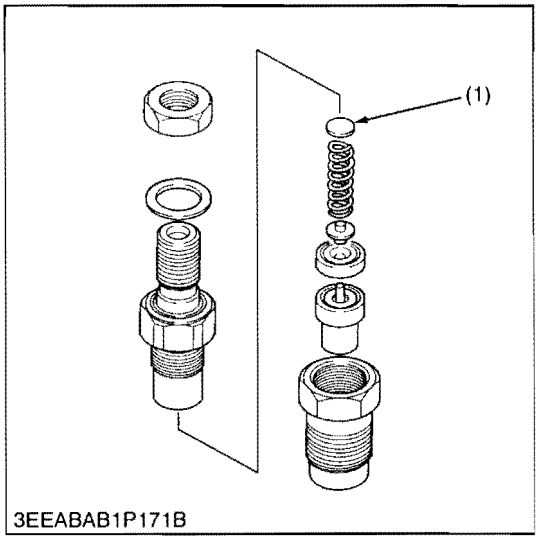

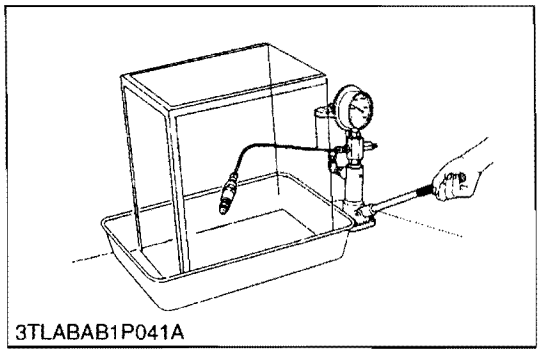
3TLABAB1P041A

Valve Seat Tightness

1. Set the injection nozzle to a nozzle tester.
2. Raise the fuel pressure, and keep at 12.75 MPa (130.0 kgf/cm^2, 1849 psi) for 10 seconds.
3. If any fuel leak is found, replace the nozzle piece.

Valve seat tightness	Factory spec.	No fuel leak at 12.75 MPa 130.0 kgf/cm^2 1849 psi

0

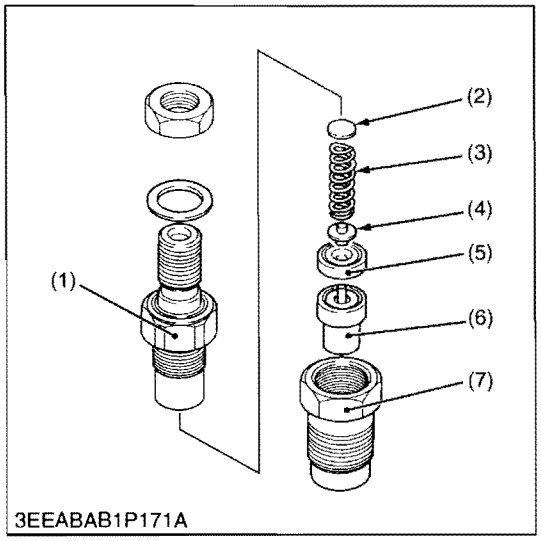

3EEABAB1P171A

Nozzle Holder

1. Secure the nozzle retaining nut (7) with a vise.
2. Remove the nozzle holder (1), and take out parts inside.

(When reassembling)

- Assemble the nozzle in clean fuel oil.
- Install the push rod (4), noting its direction.
- After assembling the nozzle, be sure to adjust the fuel injection pressure.

Tightening torque	Nozzle holder	35 to 39 N·m 3.5 to 4.0 kgf·m 26 to 28 lbf·ft
	Overflow pipe retaining nut	20 to 24 N·m 2.0 to 2.5 kgf·m 15 to 18 lbf·ft
	Nozzle holder assembly	49 to 68 N·m 5.0 to 7.0 kgf·m 36 to 50 lbf·ft

(1) Nozzle Holder
(2) Adjusting Washer
(3) Nozzle Spring
(4) Push Rod
(5) Distance Piece
(6) Nozzle Piece
(7) Nozzle Retaining Nut

[2] SEPARATING ENGINE

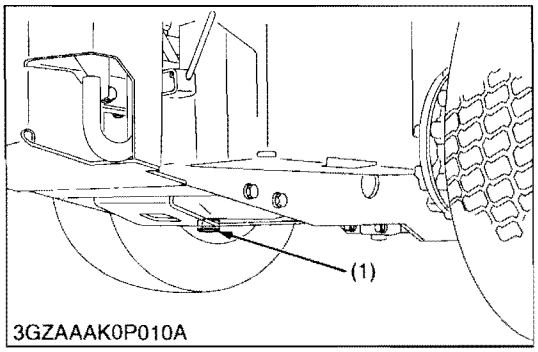

3GZAAAK0P010A

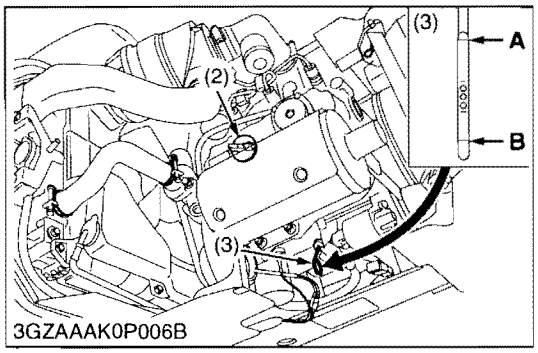

3GZAAAK0P006B

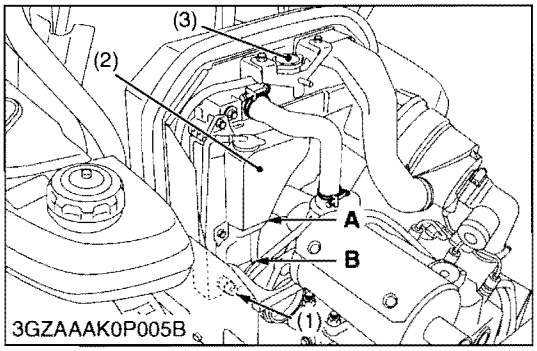

3GZAAAK0P005B

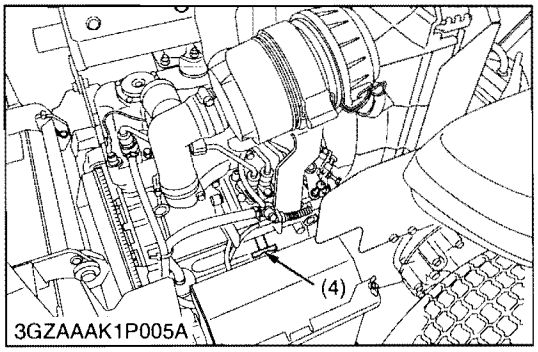

3GZAAAK1P005A

Draining Engine Oil

1. Park the machine on level ground.
2. Start and warm up the engine for approx. 5 minutes.
3. Place an oil pan underneath the engine.
4. Remove the drain plug (1) to drain oil.
5. After draining, screw in the drain plug (1).

(When refilling)

- Fill the engine oil up to the upper line on the dipstick (3).

Engine oil capacity	3.5 L 3.70 U.S.qts 3.08 Imp.qts

■ **IMPORTANT**

- **Never mix two different type of oil.**
- **Use the proper SAE Engine Oil according to ambient temperatures.**
  Refer to "LUBRICANTS, FUEL AND COOLANT". (See page G-7.)

(1) Drain Plug
(2) Oil Inlet Plug
(3) Dipstick

Draining Coolant

CAUTION

- **Never open the radiator cap while operating or immediately after stopping. Otherwise, hot water will spout out from the radiator. Wait for more than ten minutes to cool the radiator, before opening the cap.**

1. Stop the engine and let cool down.
2. Remove the radiator coolant drain plug (1) and engine coolant drain plug (4) to drain the coolant.
3. Remove the radiator cap (3) to completely drain the coolant.
4. After all coolant is drained, close the drain plugs.

Coolant	Capacity	Radiator	2.7 L 2.85 U.S.qts 2.38 Imp.qts
		Recovery tank	0.25 L 0.26 U.S.qts 0.22 Imp.qts

(1) Radiator Coolant Drain Plug
(2) Recovery Tank
(3) Radiator Cap
(4) Engine Coolant Drain Cock

A : Upper Level
B : Lower Level

https://truckmanualshub.com/

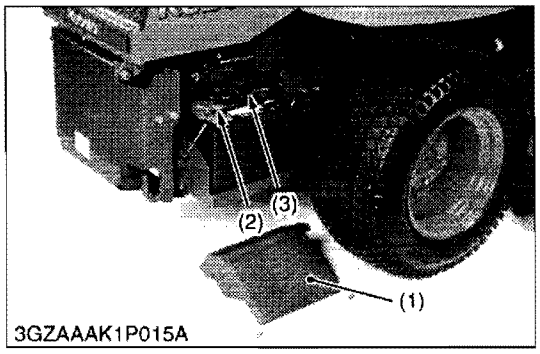

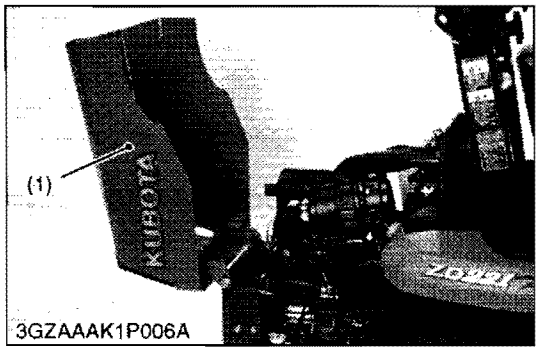

Battery

CAUTION

- **When disconnecting the battery cables, disconnect the negative cable from the battery first. When connecting, connect the positive cable to the battery first.**

1. Remove the battery cover (1).
2. Disconnect the negative cable (3) from the battery.
3. Disconnect the positive cable (2) from the battery.

(1) Battery Cover
(2) Positive Cable
(3) Negative Cable

Bonnet

1. Remove the snap pin and bonnet mounting screw, then remove the bonnet (1).

(1) Bonnet

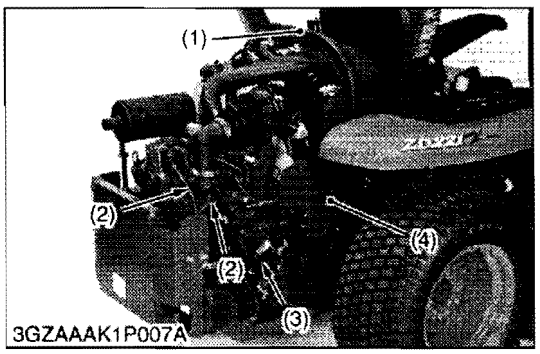

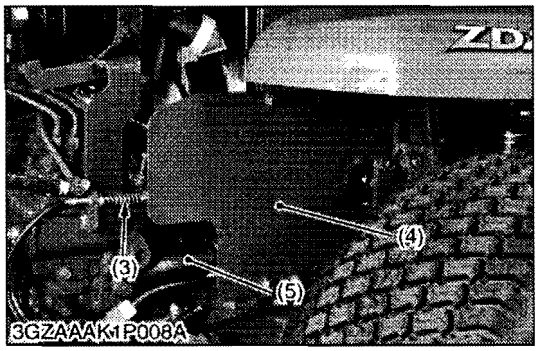

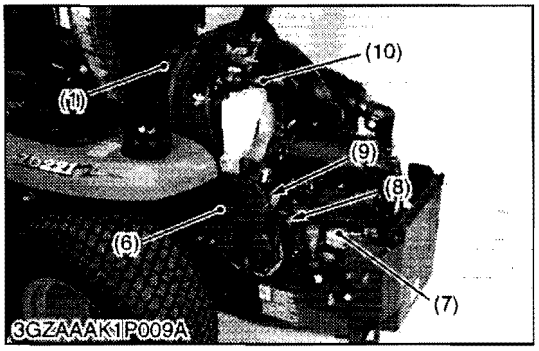

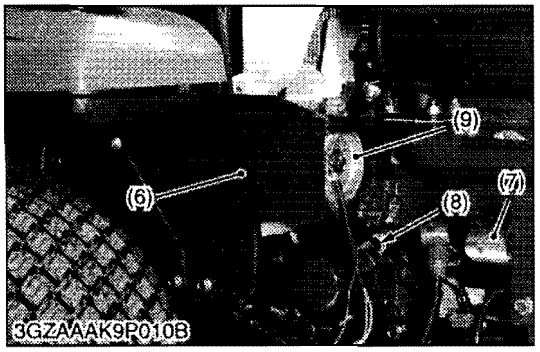

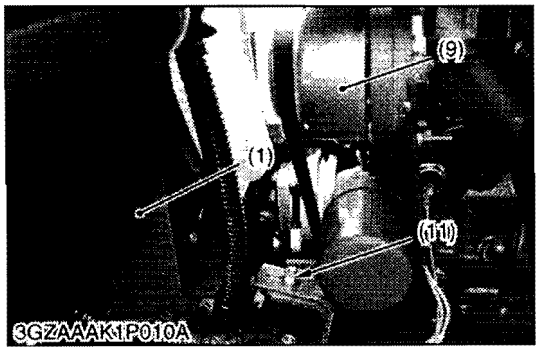

Radiator Assembly, Fuel Hoses Wiring Harness and Accelerator Wire

1. Disconnect the wiring connectors for engine stop solenoid, the glow plug, the coolant temperature sensor, the engine oil pressure switch (8) and dynamo (9).
2. Disconnect the ST terminal connector and the positive cable from the starter motor (7).
3. Remove the frame plates (4) (6).
4. Disconnect the accelerator wire (3).
5. Disconnect the fuel hoses (2) from engine.
6. Disconnect the water hoses (5), (10) from the radiator assembly (1).
7. Remove the radiator assembly (1) from the machine body.

(When reassembling)

- When accelerator wire is installed, adjust the wiring length as hit both the idling speed adjusting bolt and the maximum speed adjusting bolt by lever within the stroke of the accelerator lever.

(1) Radiator Assembly
(2) Fuel Hose
(3) Accelerator Wire
(4) Frame Plate (RH)
(5) Lower Radiator Hose
(6) Frame Plate (LH)
(7) Starter Motor
(8) Oil Pressure Switch
(9) Dynamo
(10) Upper Radiator Hose
(11) Engine Mounting Nut

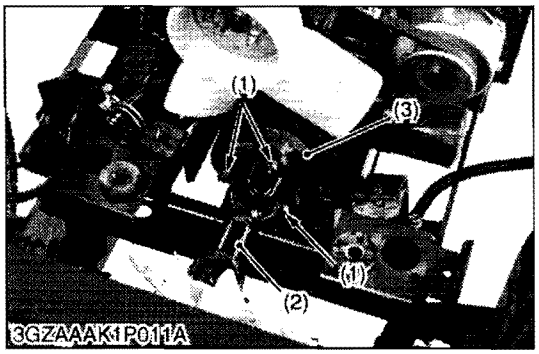

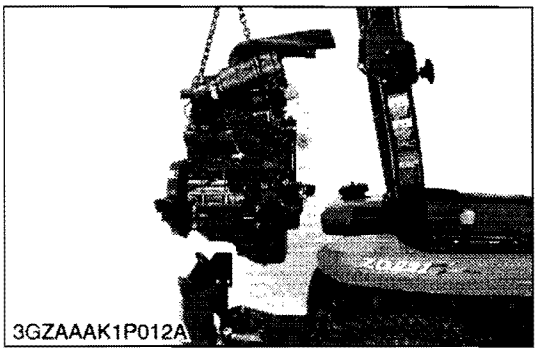

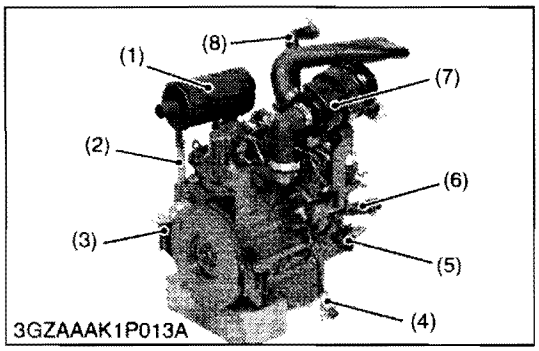

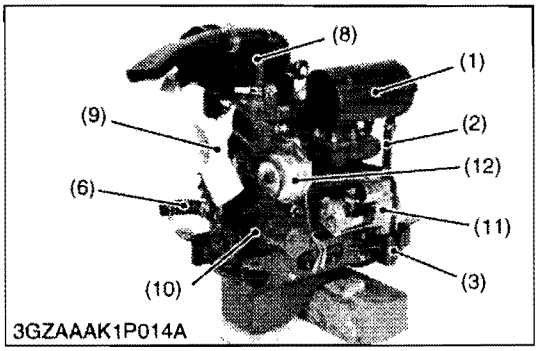

Separating Engine

1. Remove the engine mounting nuts.
2. Remove the universal joint mounting bolts (1).
3. Disconnect the universal joint (2) from the fun drive pulley (3).
4. Separate the engine from the machine body.

(When reassembling)

- Apply grease to the grease nipples on the universal joint.

Tightening torque	Universal joint mounting bolt	26.0 to 28.0 N·m 2.7 to 2.9 kgf·m 19.2 to 20.7 lbf·ft
	Engine mounting nut	23.5 to 27.5 N·m 2.4 to 2.8 kgf·m 17.4 to 20.3 lbf·ft

(1) Universal Joint Mounting Bolt
(2) Universal Joint
(3) Fan Drive Pulley

Air Cleaner, Muffler, Fan and Engine Outer Parts

1. Remove the muffler (5) and the muffler stay (2).
2. Remove the fan belt (10), the dynamo (12) and the cooling fan (9).
3. Remove the starter motor (11).
4. Remove the lower hose (6) and the upper hose (8).
5. Remove the air cleaner assembly (7).
6. Remove the battery cable (4).
7. After hooking the engine support mounting bolts. Remove the engine supports (3) (5).
   Set the engine stands to the engine.

(When reassembling)

- Check to see that there are no cracks on the belt.

■ **IMPORTANT**

- **After reassembling the fan belt, be sure to adjust the fan belt tension.**

Tightening torque	Engine support mounting bolt	48.1 to 55.9 N·m 4.9 to 5.7 kgf·m 35.4 to 41.2 lbf·ft

(1) Muffler
(2) Muffler Stay
(3) Engine Support (LH)
(4) Battery Cable
(5) Engine Support (RH)
(6) Lower Hose
(7) Air Cleaner Assembly
(8) Upper Hose
(9) Cooling Fan
(10) Fan Belt
(11) Starter Motor
(12) Dynamo

[3] DISASSEMBLING AND ASSEMBLING

(1) Cylinder Head and Valve

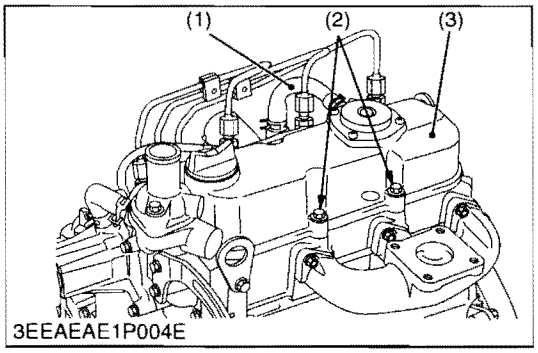

Cylinder Head Cover

1. Disconnect the breather hose (1).
2. Remove the cylinder head cover screw (2).
3. Remove the cylinder head cover (3).

(When reassembling)

- Check to see if the cylinder head cover gasket is not defective.

Tightening torque	Cylinder head cover screw	9.81 to 11.2 N·m 1.00 to 1.15 kgf·m 7.23 to 8.31 lbf·ft

(1) Breather Hose
(2) Cylinder Head Cover Screw
(3) Cylinder Head Cover

W1028468

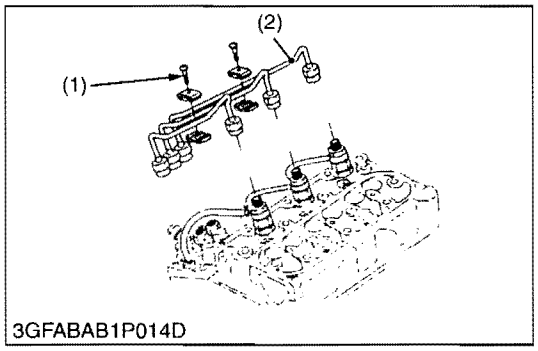

Injection Pipes

1. Loosen the screws to the pipe clamp (1).
2. Detach the injection pipes (2).

(When reassembling)

- Sent compressed air into the pipes to blow out dust. Then, reassemble the pipes in the reverse order.

Tightening torque	Injection pipe retaining nut	25 to 34 N·m 2.5 to 3.5 kgf·m 18 to 25 lbf·ft

(1) Pipe Clamp
(2) Injection Pipe

W1028640

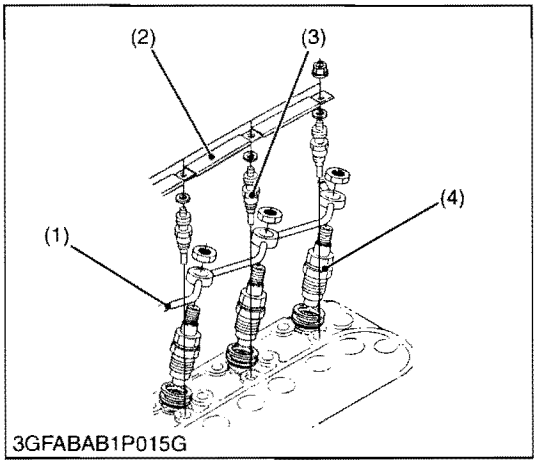

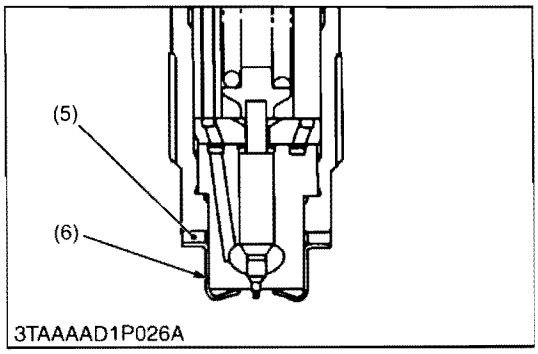

Nozzle Holder Assembly and Glow Plug

1. Remove the overflow pipe (1).
2. Remove the nozzle holder assemblies (4).
3. Remove the copper gasket (5) and heat seal (6).
4. Remove the lead (2) from the glow plugs (3).
5. Remove the glow plugs (3).

(When reassembling)

- Replace the copper gasket and heat seal with new one.

Tightening torque	Overflow pipe retaining nut	20 to 24 N·m 2.0 to 2.5 kgf·m 15 to 18 lbf·ft
	Nozzle holder assembly	49 to 68 N·m 5.0 to 7.0 kgf·m 37 to 50 lbf·ft
	Glow plug	8 to 14 N·m 0.8 to 1.5 kgf·m 6 to 10 lbf·ft

(1) Overflow Pipe
(2) Lead
(3) Glow Plug
(4) Nozzle Holder Assembly
(5) Copper Gasket
(6) Heat Seal

W1024604

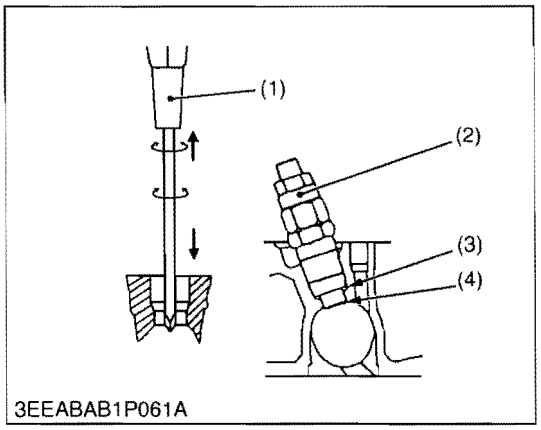

3EEABAB1P061A

Nozzle Heat Seal Service Removal Procedure

■ **IMPORTANT**

- **Use a plus (phillips head) screw driver (1) that has a diameter which is bigger than the heat seal hole (Approx. 6 mm (1/4 in.)).**

1. Drive screw driver (1) lightly into the heat seal hole.
2. Turn screw driver three or four times each way.
3. While turning the screw driver, slowly pull the heat seal (4) out together with the injection nozzle gasket (3).
4. If the heat seal drops, repeat the above procedure.

(When reassembling)

- Heat seal and injection nozzle gasket must be changed when the injection nozzle is removed for cleaning or for service.

(1) Plus Screw Driver
(2) Nozzle Holder
(3) Injection Nozzle Gasket
(4) Heat Seal

W1021255

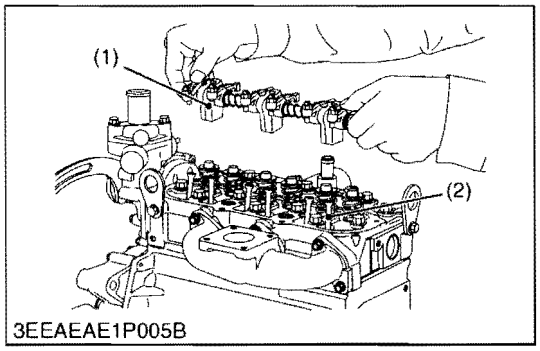

3EEAEAE1P005B

Rocker Arm and Push Rod

1. Remove the rocker arm bracket screws.
2. Detach the rocker arm assembly (1).
3. Remove the push rods (2).

(When reassembling)

- When putting the push rods (2) onto the tappets (3), check to see if their ends are properly engaged with the dimples.

■ **IMPORTANT**

- **After installing the rocker arm, be sure to adjust the valve clearance.**

Tightening torque	Rocker arm bracket screw	9.81 to 11.2 N·m 1.00 to 1.15 kgf·m 7.24 to 8.31 lbf·ft

(1) Rocker Arm Assembly
(2) Push Rod
(3) Tappet

W1021437

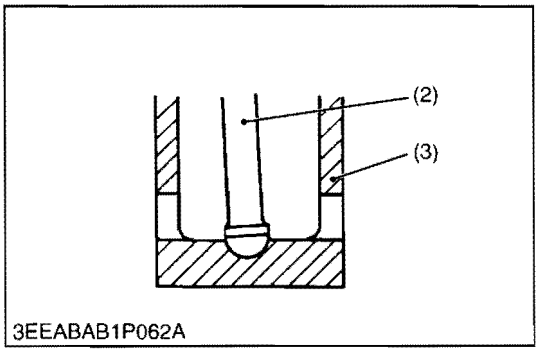

3EEABAB1P062A

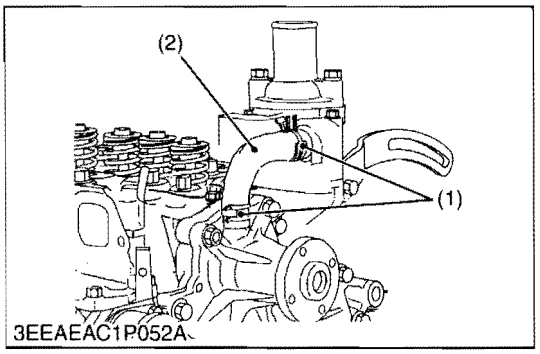

3EEAEAC1P052A

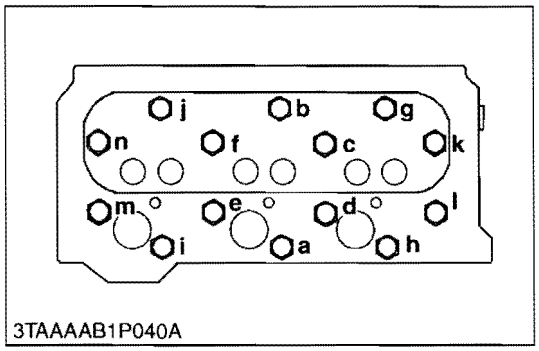

3TAAAAB1P040A

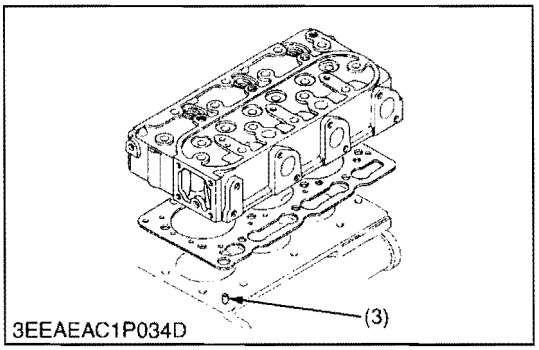

3EEAEAC1P034D

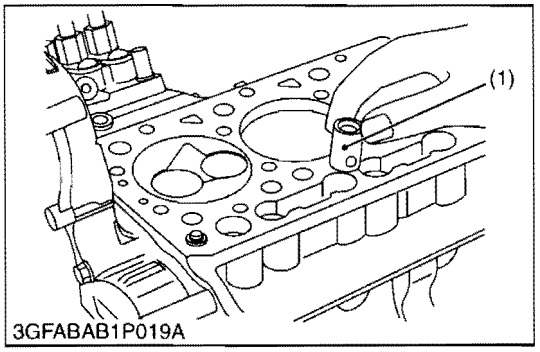

3GFABAB1P019A

Cylinder Head and Cylinder Head Gasket

1. Loosen the pipe clamps (1), and remove the water return pipe (2).
2. Remove the cylinder head screw in the order of (**n**) to (**a**) and remove the cylinder head.
3. Remove the cylinder head gasket.

(When reassembling)

- Replace the cylinder head gasket with new one.
- When mounting the gasket, set it to the pin pipe holes. Take care not to mount it reversely.
- The cylinder head should be free of scratches and dust.
- Install the cylinder head, using care not to damage the gasket.
- After applying engine oil to the thread of screws, tighten them in several steps and specified sequence (**a**) to (**n**).

■ **NOTE**

- **Do not use O-ring on the pin pipe.**
- **It is not necessary to retighten the cylinder head screw and to readjust valve clearance after the engine is warmed up.**

Tightening torque	Cylinder head screw	37.3 to 42.2 N·m 3.8 to 4.3 kgf·m 27.5 to 31.1 lbf·ft

(1) Clamp
(2) Return Pipe
(3) Pin Pipe

n to a : To Loosen
a to n : To Tighten

W10205250

Tappets

1. Remove the tappets (1) from the crankcase.

(When reassembling)

- Visually check the contact between tappets and cams for proper rotation. If defect is found, replace tappets.
- Before installing the tappets, apply engine oil thinly around them.

■ **IMPORTANT**

- **Do not change the combination of tappet and tappet guide.**

(1) Tappet

W10209700

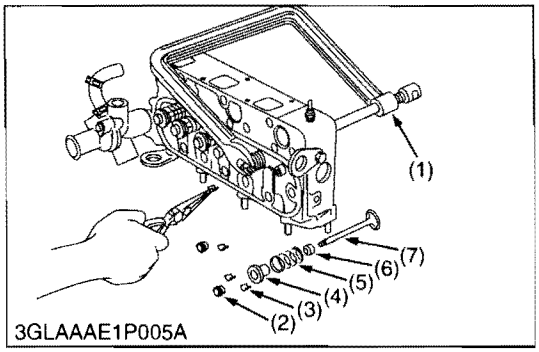

Valves

1. Remove the valve caps (2).
2. Remove the valve spring collet (3), pushing the valve spring retainer (4) by valve spring replacer (1).
3. Remove the valve spring retainer (4), valve spring (5) and valve stem seal (6).
4. Remove the valve (7).

(When reassembling)

- Wash the valve stem and valve guide hole, and apply engine oil sufficiently.
- After installing the valve spring collets, lightly tap the stem to assure proper fit with a plastic hammer.

■ **IMPORTANT**

- **Do not change the combination of valve and valve guide.**

(1) Valve Spring Replacer
(2) Valve Cap
(3) Valve Spring Collet
(4) Valve Spring Retainer
(5) Valve Spring
(6) Valve Stem Seal
(7) Valve

W10211070

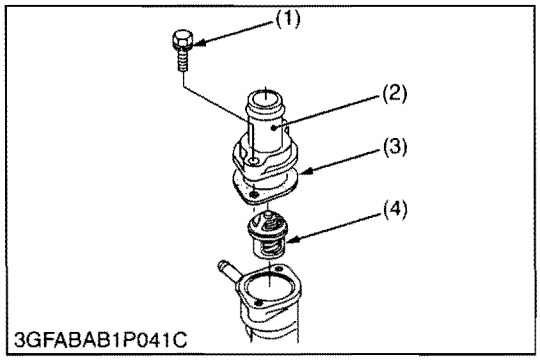

Thermostat Assembly

1. Remove the thermostat cover mounting screws (1), and remove the thermostat cover (2).
2. Remove the thermostat assembly (4).

(When reassembling)

- Apply a liquid gasket (Three Bond 1215 or equivalent) only at the thermostat cover side of the gasket (3).

(1) Thermostat Cover Mounting Screw
(2) Thermostat Cover
(3) Thermostat Cover Gasket
(4) Thermostat Assembly

W10363950

(2) Gear Case and Timing Gears

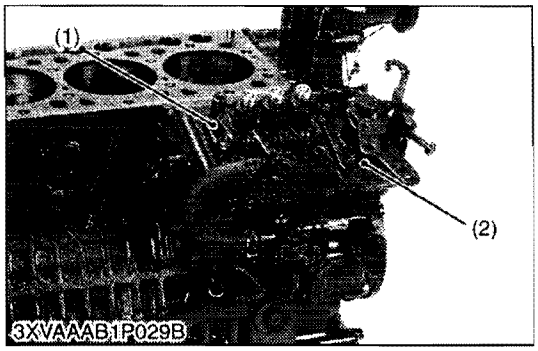

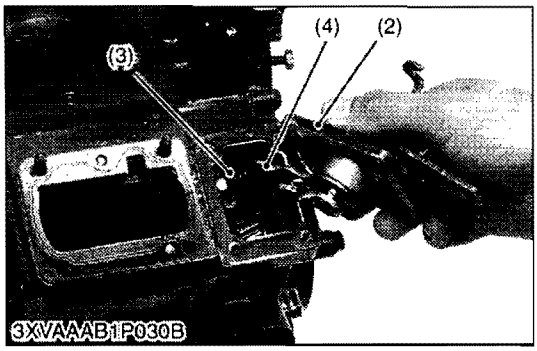

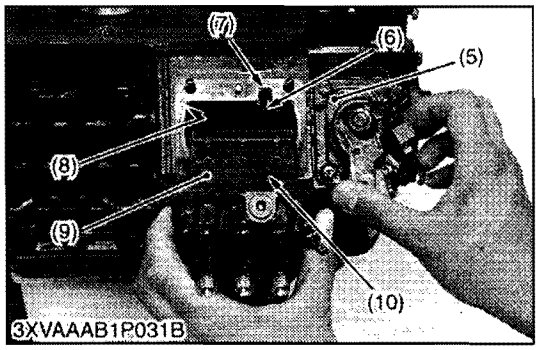

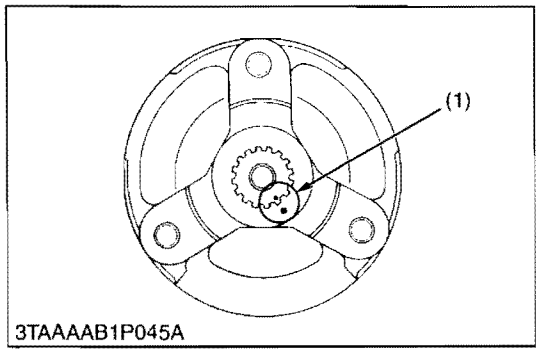

Injection Pump and Speed Control Plate

1. Remove the socket head screws and nuts, and remove the injection pump (1).
2. Remove the screws and separate the speed control plate (2), taking care not to damage the governor spring (3).
3. Disconnect the governor spring (3) and remove the speed control plate (2).

(When reassembling)

- Hook the governor spring (3) to the governor lever (4) first and install the speed control plate (2).
- Be sure to place the copper washers underneath two screws (5). (Two screws (5) in the upper of the speed control plate (2).)
- Position the slot (6) on the fork lever just under the slot (7) on the crankcase.
- Insert the injection pump (1) so that the control rod (9) should be pushed by the idling adjusting spring (8) at its end and the pin (10) on the rod engages with the slow (6) on the fork lever (as shown in the photo).

■ **NOTE**

- **The sealant is applied to both sides of the soft metal gasket shim. The liquid gasket is not required for assembling.**
- **Addition or reduction of shim (0.05 mm, 0.0020 in.) delays or advances the injection timing by approx. 0.0087 rad (0.5 °).**
- **In disassembling and replacing, be sure to use the same number of new gasket shims with the same thickness.**

(1) Injection Pump
(2) Speed Control Plate
(3) Governor Spring
(4) Governor Lever
(5) Screw and Copper Washer
(6) Slot (Fork Lever Side)
(7) Slot (Crankcase Side)
(8) Idling Adjusting Spring
(9) Control Rod
(10) Pin

W1063799

Fan Drive Pulley

1. Secure the flywheel to keep it from turning.
2. Remove the fan drive pulley screw.
3. Draw out the fan drive pulley with a puller.

(When reassembling)

- Install the pulley to crankshaft, aligning the mark (1) on them (3-cylinder engine).
- Apply engine oil to the fan drive pulley retaining screw. And tighten it.

Tightening torque	Fan drive pulley screw	117.7 to 127.5 N·m 12.0 to 13.0 kgf·m 86.8 to 94.0 lbf·ft

(1) Aligning Mark

W10181950

https://truckmanualshub.com/

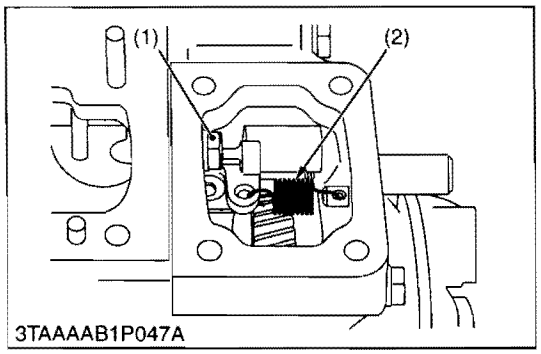

3TAAAAB1P047A

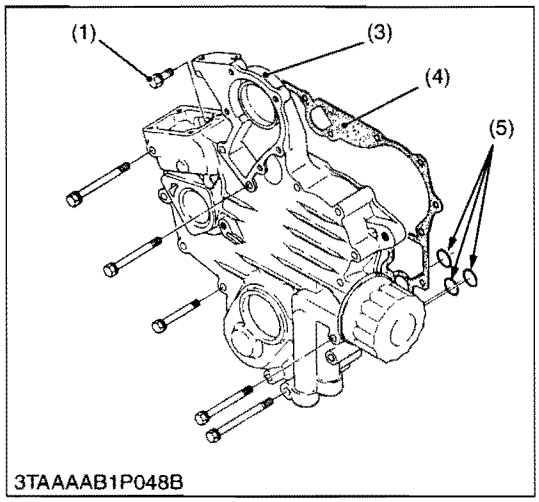

3TAAAAB1P048B

Gear Case

1. Remove the screw (1).
2. Disconnect the start spring (2) in the speed control plate mounting hole.
3. Remove the gear case (3).

(When reassembling)

- Apply a liquid gasket (Three Bond 1215 or equivalent) to both sides of the gear case gasket (4).
- Be sure to set three O-rings (5) inside the gear case.

(1) Screw
(2) Start Spring
(3) Gear Case
(4) Gear Case Gasket
(5) O-rings

W10174840

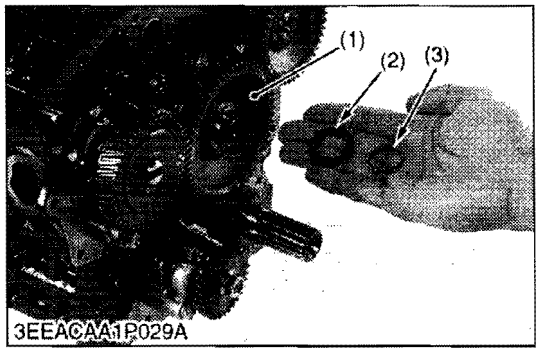

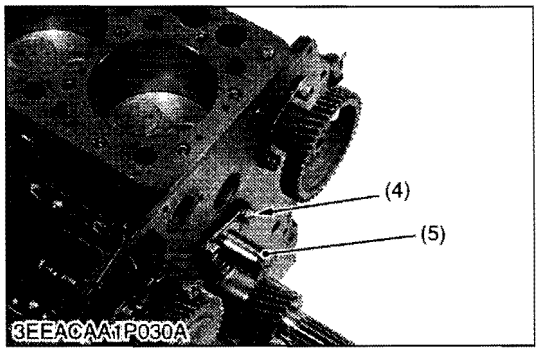

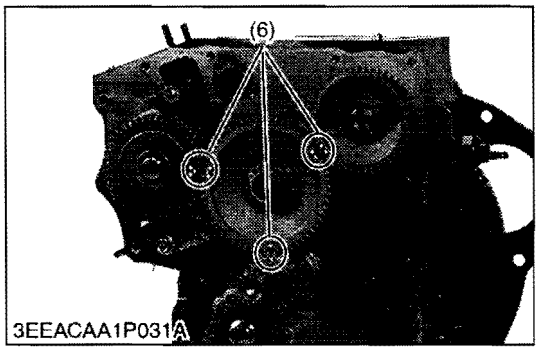

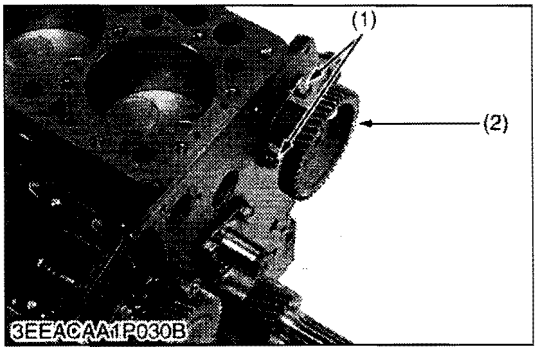

Idle Gear

1. Remove the external snap ring (3), the collar (2) and the idle gear (1).
2. Remove the idle gear shaft mounting screws (4).
3. Remove the idle gear shaft (5) (if necessary).

(When reassembling)

- Apply engine oil to the idle gear shaft mounting screw (4). And tighten them.
- Install the idle gear, aligning the mark (6) on the gears referring to the photo.

Tightening torque	Idle gear shaft mounting screw	9.8 to 11.3 N·m 1.00 to 1.15 kgf·m 7.2 to 8.3 lbf·ft

(1) Idle Gear
(2) Idle Gear Collar
(3) External Snap Ring
(4) Idle Gear Shaft Mounting Screw
(5) Idle Gear Shaft
(6) Alignment Mark

W1030437

Camshaft

1. Remove the camshaft mounting screws (1) and draw out the camshaft with gear (2) on it.

(When reassembling)

- When install the camshaft, apply engine oil to the camshaft journals.
- Apply engine oil to the camshaft mounting screws. And tighten them.

(1) Camshaft Mounting Screw
(2) Camshaft Gear

W1030808

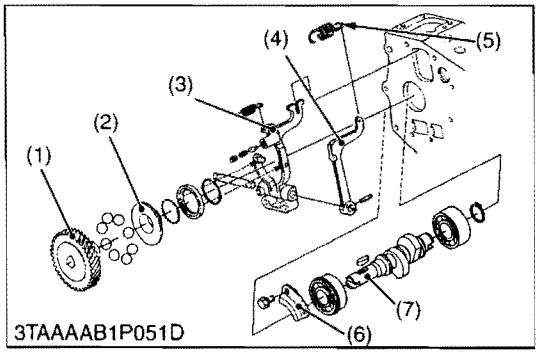

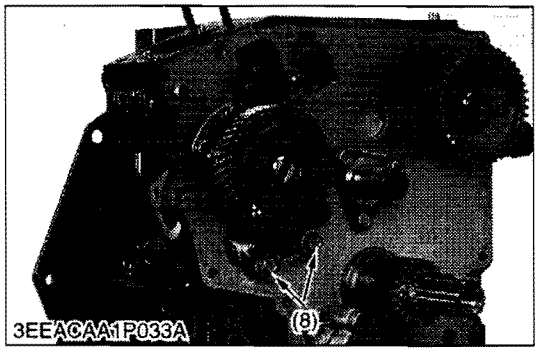

Fuel Camshaft

1. Remove the retaining plate (6).
2. Remove the fork lever holder mounting screws (8), then draw out the injection pump gear (1) and fuel camshaft (7) with the governor fork assembly.

(When reassembling)

- Hook the governor spring (5) to the fork lever 2 (4) before installing the fork lever assembly to the crankcase.

(1) Injection Pump Gear
(2) Governor Sleeve
(3) Fork Lever 1
(4) Fork Lever 2
(5) Governor Spring
(6) Retaining Plate
(7) Fuel Camshaft
(8) Fork Lever Holder Mounting Screw

W10178820

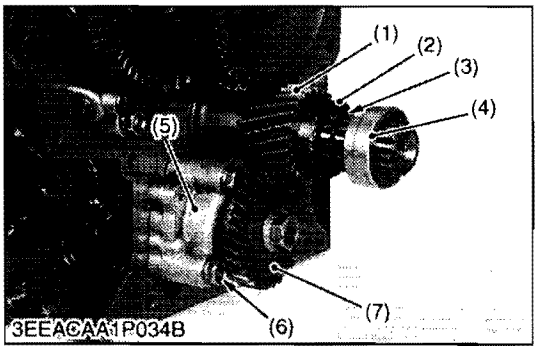

Oil Pump and Crankshaft Gear

1. Remove the oil pump gear (7).
2. Remove the oil pump mounting screw (6) and the oil pump (5).
3. Remove the collar (4), O-ring (3) and crankshaft oil slinger (2).
4. Remove the crankshaft gear (1) with a puller.

(When reassembling)

- Install the collar (4) after aligning the marks on the gears. (See the photo at "Idle Gear".)

Tightening torque	Oil pump mounting screw	17.7 to 21.6 N·m 1.80 to 2.20 kgf·m 13.0 to 15.9 lbf·ft

(1) Crankshaft Gear
(2) Crankshaft Oil Slinger
(3) O-ring
(4) Crankshaft Collar
(5) Oil Pump
(6) Oil Pump Mounting Screw
(7) Oil Pump Gear

W10180290

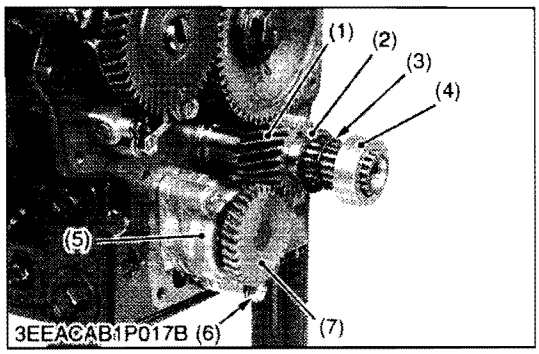

Oil Pump and Crankshaft Gear

1. Remove the oil pump mounting screw (6) and the oil pump (5).
2. Remove the collar (4), O-ring (3) and crankshaft oil slinger (2).
3. Remove the crankshaft gear (1) with a puller.

(When reassembling)

- Install the collar (4) after aligning the marks on the gears. (See the photo at "Idle Gear".)

Tightening torque	Oil pump mounting screw	17.7 to 21.6 N·m 1.80 to 2.20 kgf·m 13.0 to 15.9 lbf·ft

(1) Crankshaft Gear
(2) Crankshaft Oil Slinger
(3) O-ring
(4) Crankshaft Collar
(5) Oil Pump
(6) Oil Pump Mounting Screw
(7) Oil Pump Gear

W10314010

(3) Piston and Connecting Rod

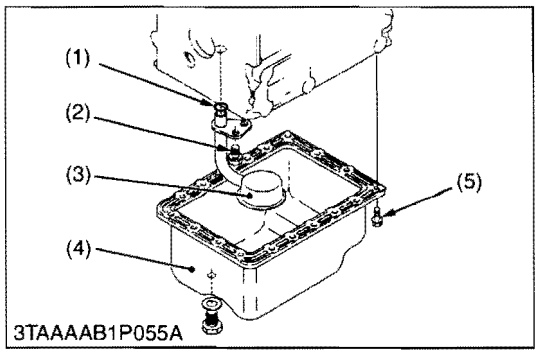

3TAAAAB1P055A

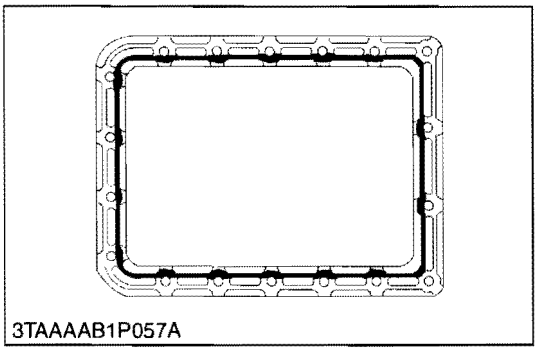
3TAAAAB1P057A

Oil Pan and Oil Strainer

1. Remove the oil pan mounting screws (5).
2. Remove the oil pan (4).
3. Remove the oil strainer (3).

(When reassembling)

- After cleaning the oil strainer, check to see that the filter mesh in clean, and install it.
- Visually check the O-ring (1), apply engine oil, and install it.
- Securely fit the O-ring to the oil strainer.
- To avoid uneven tightening, tighten oil pan mounting screws in diagonal order form the center.

■ **IMPORTANT**

- **Scrape off the old adhesive completely. Wipe the sealing surface clean using waste cloth soaked with gasoline. Now apply new adhesive 3 to 5 mm (0.12 to 0.20 in.) thick all over the contact surface. Apply the adhesive also on the center of the flange as well as on the inner wall of each screw hole.**
- **Cut the nozzle of the "liquid gasket" container at its second notch. Apply "liquid gasket" about 5 mm (0.20 in.) thick. Within 20 minutes after the application of fluid sealant, reassemble the components. Wait then for about 30 minutes, and pour oil in the crankcase.**

(1) O-ring
(2) Screw
(3) Oil Strainer
(4) Oil Pan
(5) Oil Pan Mounting Screw

W1071963

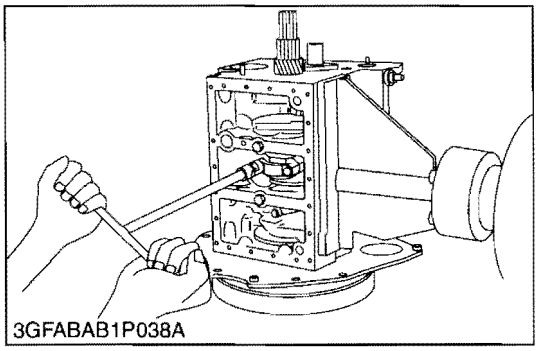
3GFABAB1P038A

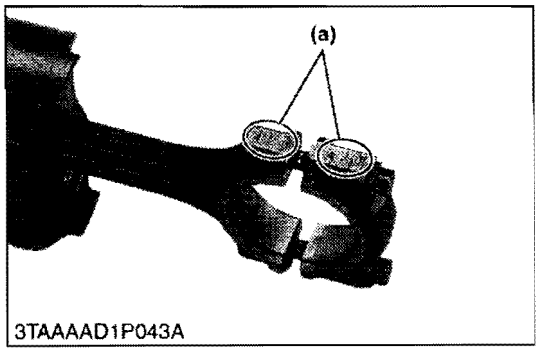

3TAAAAD1P043A

Connecting Rod

1. Remove the connecting rod cap.

(When reassembling)

- Align the marks **(a)** with each other. (Face the marks toward the injection pump.)
- Apply engine oil to the connecting rod screws and lightly screw it in by hand, then tighten it to the specified torque.
  If the connecting rod screw won't be screwed in smoothly, clean the threads.
  If the connecting rod screw is still hard to screw in, replace it.

Tightening torque	Connecting rod screw	27 to 30 N·m 2.7 to 3.1 kgf·m 20 to 22 lbf·ft

(a) Mark

W10242740

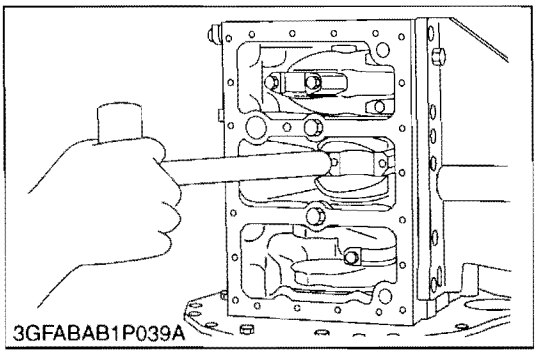
3GFABAB1P039A

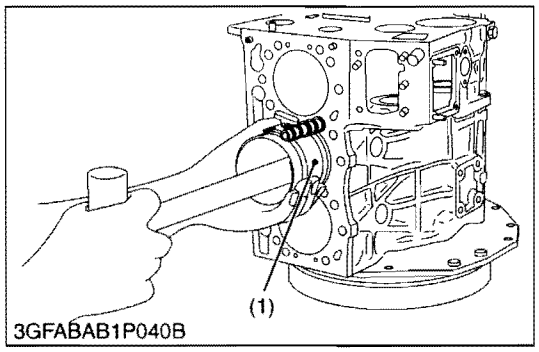

3GFABAB1P040B

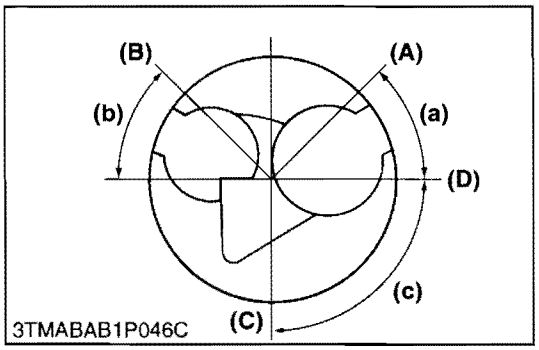

3TMABAB1P046C

Pistons

1. Turn the flywheel and bring the piston to top dead center.
2. Draw out the piston upward by lightly tapping it from the bottom of the crankcase with the grip of a hammer.
3. Draw out the other piston in the same method as above.

(When reassembling)

- Before inserting the piston into the cylinder, apply enough engine oil to the piston.
- When inserting the piston into the cylinder, face the mark on the connecting rod to the injection pump.

■ IMPORTANT

- **Do not change the combination of cylinder and piston. Make sure of the position of each piston by marking. For example, mark "1" on the No.1 piston.**
- **When installing the piston into the cylinder, place the gaps of all the piston rings as shown in the figure.**
- **Carefully insert the pistons using a piston ring compressor (1). Otherwise, their chrome-plated section may be scratched, causing trouble inside the cylinder.**

(1) Piston Ring Compressor
(A) Top Ring Gap
(B) Second Ring Gap
(C) Oil Ring Gap
(D) Piston Pin Hole
(a) 0.79 rad (45 °)
(b) 0.79 rad (45 °)
(c) 1.57 rad (90 °)

W10277450

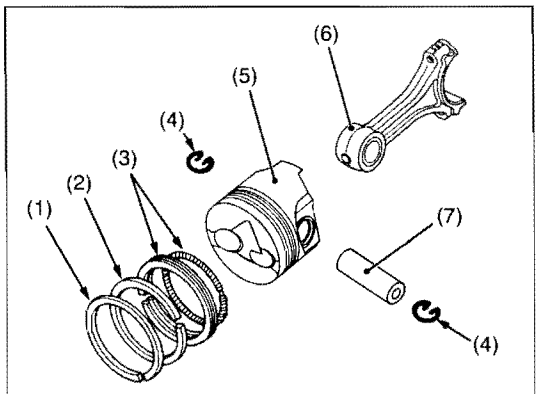

3TMABAB1P047A

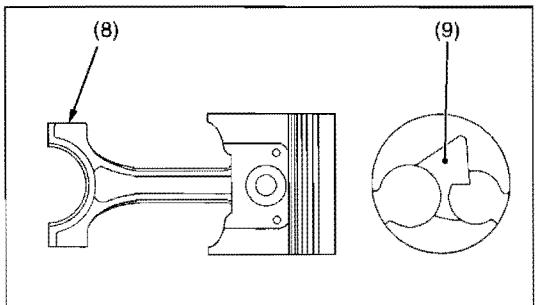

3TAAAAB1P058A

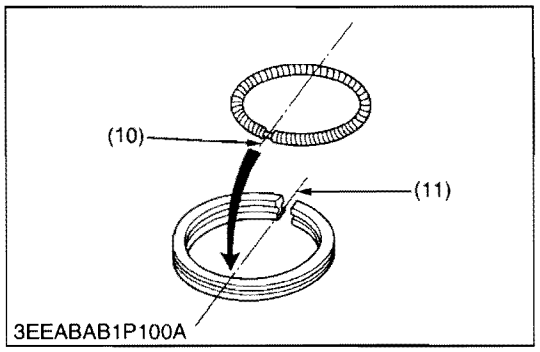

3EEABAB1P100A

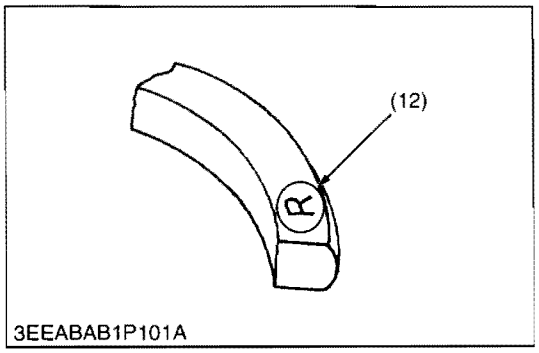

3EEABAB1P101A

Piston Ring and Connecting Rod

1. Remove the piston rings using a piston ring tool.
2. Remove the piston pin (7), and separate the connecting rod (6) from the piston (5).

(When reassembling)

- When installing the ring, assemble the rings so that the manufacturer's mark (12) near the gap faces the top of the piston.
- When installing the oil ring onto the piston, place the expander joint (10) on the opposite side of the oil ring gap (11).
- Apply engine oil to the piston pin.
- When installing the connecting rod to the piston, immerse the piston in 80 °C (176 °F) oil for 10 to 15 minutes and insert the piston pin to the piston.
- When installing the connecting rod to the piston, align the mark (8) on the connecting rod to the fan-shaped concave (9).

■ **NOTE**

- **Mark the same number on the connecting rod and the piston so as not to change the combination.**

(1) Top Ring
(2) Second Ring
(3) Oil Ring
(4) Piston Pin Snap Ring
(5) Piston
(6) Connecting Rod
(7) Piston Pin
(8) Mark
(9) Fan-shaped Concave
(10) Expander Joint
(11) Oil Ring Gap
(12) Manufacturer's Mark

W10281670

(4) Flywheel and Crankshaft

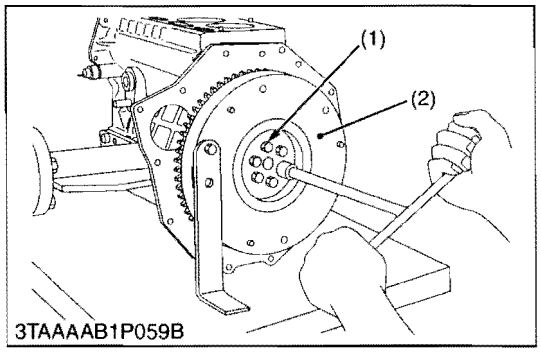

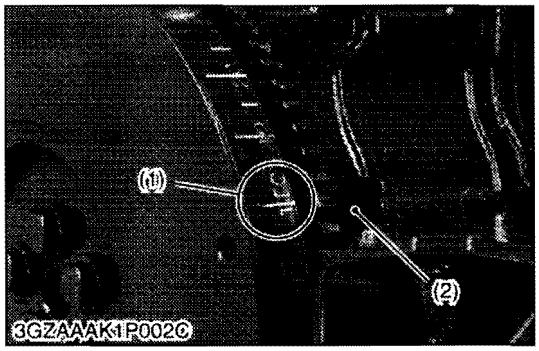

Flywheel

1. Secure the flywheel to keep it from turning, using a flywheel stopper.
2. Remove all flywheel screws (1) and then remove the flywheel (2).

(When reassembling)

- Align the **"1TC"** mark **(a)** on the outer surface of the flywheel horizontally with the alignment mark. Now fit the flywheel in position.
- Apply engine oil to the threads and the undercut surface of the flywheel screw and fit the screw.

Tightening torque	Flywheel screw	54 to 58 N·m 5.5 to 6.0 kgf·m 40 to 43 lbf·ft

(1) Flywheel Screw
(2) Flywheel
(3) Alignment Mark Plate

(a) 1TC Mark

W10290240

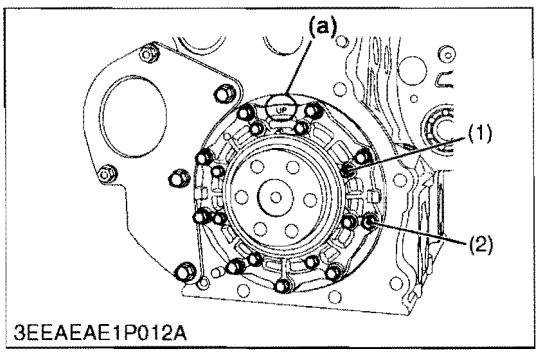

3EEAEAE1P012A

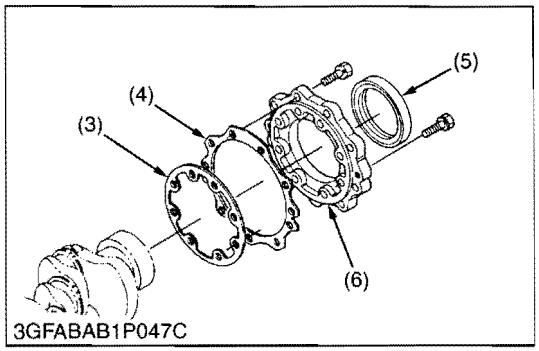

3GFABAB1P047C

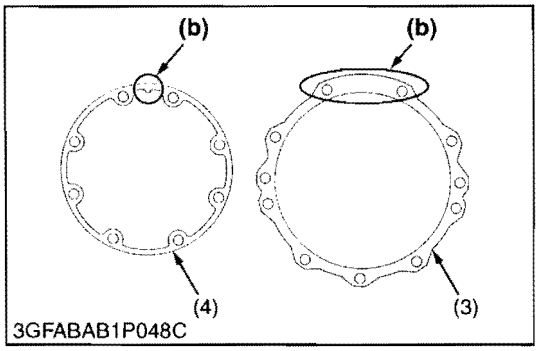

3GFABAB1P048C

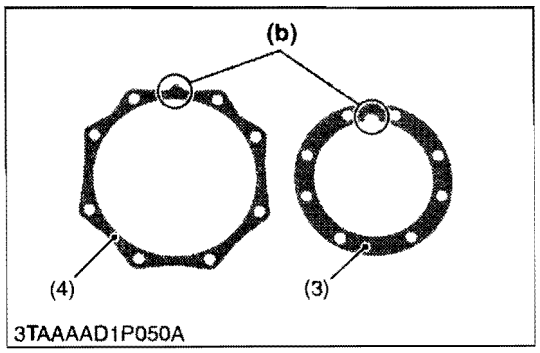

3TAAAAD1P050A

Bearing Case Cover

1. Remove the bearing case cover mounting screws.
2. Remove the bearing case cover (6).

(When reassembling)

- Fit the bearing case gasket (3) and the bearing case cover gasket (4) with correct directions.
- Install the bearing case cover (6) to position the casting mark **"UP"** on it upward.
- Apply engine oil to the oil seal (5) lip and take care that it is not rolled when installing.
- Tighten the bearing case cover mounting screws with even force on the diagonal line.

Tightening torque	Bearing case cover mounting screw	9.81 to 11.2 N·m 1.00 to 1.15 kgf·m 7.23 to 8.31 lbf·ft

(1) Bearing Case Cover Mounting Screw (Inside)
(2) Bearing Case Cover Mounting Screw (Outside)
(3) Bearing Case Gasket
(4) Bearing Case Cover Gasket
(5) Oil Seal
(6) Bearing Case Cover
(a) Top Mark "UP"
(b) Upside

W10292140

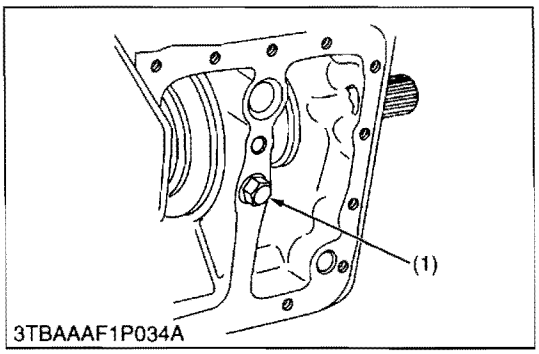

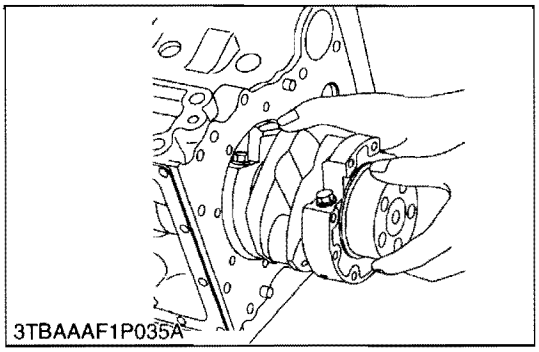

Crankshaft Assembly

1. Remove the main bearing case screw 2 (1).
2. Turn the crankshaft to set the crank pin of the third cylinder to the bottom dead center. Then draw out the crankshaft until the crank pin of the second cylinder comes to the center of the third cylinder.
3. Turn the crankshaft by 2.09 rad. (120°) counterclockwise to set the crank pin of the second cylinder to the bottom dead center. Draw out the crankshaft until the crank pin of the first cylinder comes to the center of the third cylinder.
4. Repeat the above steps to draw out all the crankshafts.

(When reassembling)

- Clean the oil passage of the crankshaft with compressed air.
- Install the crankshaft assembly, aligning the screw hole of main bearing case screw 2 with the screw hole of crankcase.
- When tightening the main bearing case 2, apply oil to the main bearing case screw 2 and screw by hand before tightening the specific torque. If not smooth to screw by hand, align the screw holes between the crankcase and the main bearing case.

Tightening torque	Main bearing case screw 2	27 to 30 N·m 2.7 to 3.1 kgf·m 20 to 22 lbf·ft

(1) Main Bearing Case Screw 2

W1031360

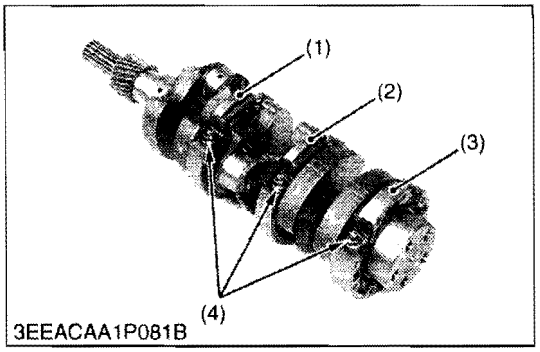

3EEACAA1P081B

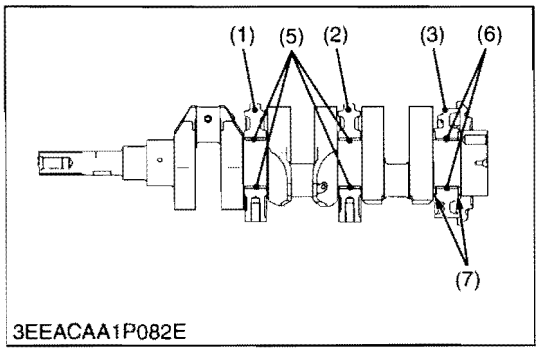

3EEACAA1P082E

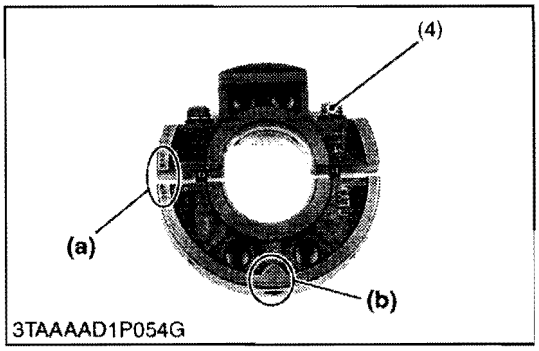

3TAAAAD1P054G

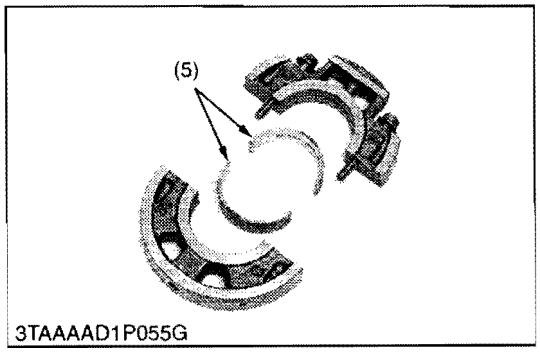

3TAAAAD1P055G

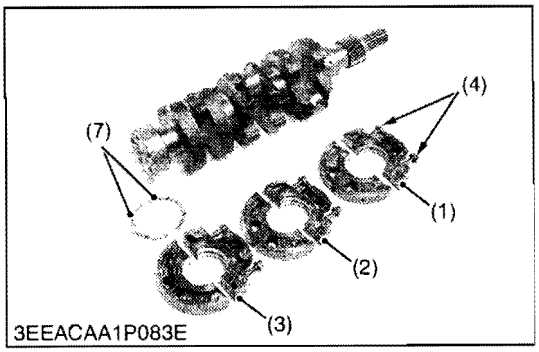

3EEACAA1P083E

Main Bearing Case Assembly

1. Remove the two main bearing case screws 1 (4), and remove the main bearing case assembly 1 (1), being careful with crankshaft bearing 3 (5).
2. Remove the main bearing case assembly 2 (2) and the main bearing case assembly (3) as above. Keep in mind, however, that the thrust bearing (7) is installed in the main bearing case assembly (3).

(When reassembling)

- Clean the oil passage in the main bearing cases.
- Apply clean engine oil to the bearings.
- Install the main bearing case assemblies in original positions. Since diameters of main bearing cases vary, install them in order of marking **(b)** from the gear case side. (Refer to the figure.).
- Match the alignment numbers **(a)** on the main bearing case assembly 1 (1).
- Do the same for the main bearing case assembly 2 (2) and the main bearing case assembly (3) too.
- When installing the main bearing case 1 and 2, face the mark **"FLYWHEEL"** to the flywheel.
- Install the thrust bearing (7) with its oil groove facing outward.
- Confirm that the main bearing case moves smoothly after tightening the main bearing case screw 1 to the specified torque.

Tightening torque	Main bearing case screw 1	13 to 15 N·m 1.3 to 1.6 kgf·m 9.4 to 11 lbf·ft

(1) Main Bearing Case Assembly 1
(2) Main Bearing Case Assembly 2
(3) Main Bearing Case Assembly
(4) Main Bearing Case Screw 1
(5) Crankshaft Bearing 3
(6) Crankshaft Bearing 2
(7) Thrust Bearing

(a) Alignment Number
(b) Marking (1 or 2)

W1031597

[4] SERVICING

(1) Cylinder Head and Valves

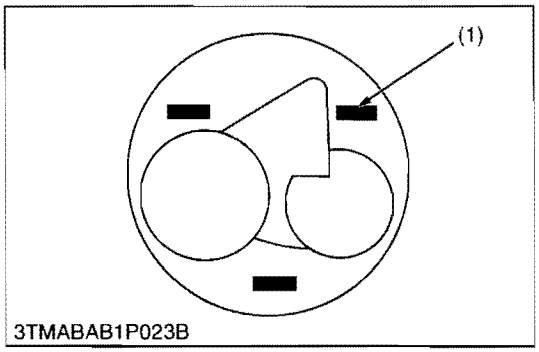

3TMABAB1P023B

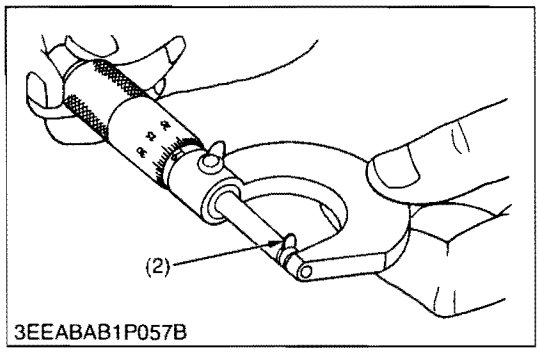

3EEABAB1P057B

Top Clearance

1. Remove the cylinder head. (Do not attempt to remove the cylinder head gasket.)
2. Move the piston up and stick a strip of fuse [1.5 mm dia. (0.059 in. dia.), 5 to 7 mm long (0.197 to 0.276 in. long)] on the piston head at three positions with grease so as to avoid the intake and exhaust valves and the combustion chamber ports.
3. Lower the piston, and install the cylinder head and tighten the cylinder head screws to the specified torque.
4. Turn the flywheel until the piston exceeds top dead center.
5. Remove the cylinder head, and measure the thickness of the squeezed fuses.
6. If the measurement is not within the factory specifications, check the oil clearance between the crankpin and crankpin bearing and between the piston pin and small end bushing.

■ **NOTE**

- **After checking the top clearance, be sure to assemble the cylinder head with a new cylinder head gasket.**

Top clearance	Factory spec.	0.50 to 0.70 mm 0.020 to 0.027 in.

Tightening torque	Cylinder head screw	38 to 42 N·m 3.8 to 4.3 kgf·m 28 to 31 lbf·ft

(1) Fuse (2) Fuse

W1020190

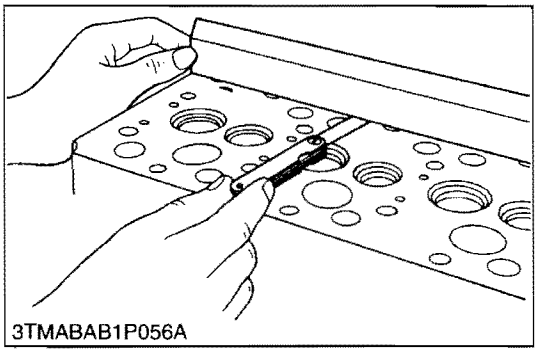
3TMABAB1P056A

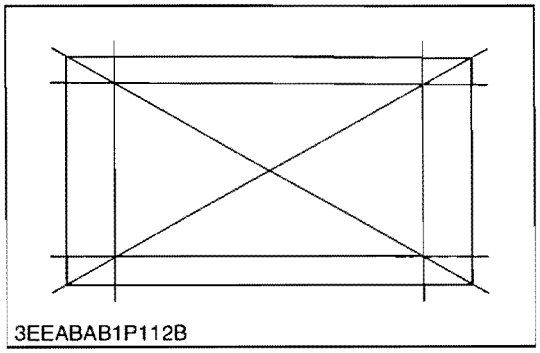
3EEABAB1P112B

Cylinder Head Surface Flatness

1. Clean the cylinder head surface.
2. Place a straightedge on the cylinder head's four sides and two diagonal as shown in the figure.
3. Measure the clearance with a thickness gauge.
4. If the measurement exceeds the allowable limit, correct it with a surface grinder.

■ **IMPORTANT**

- **Do not place the straightedge on the combustion chamber.**
- **Be sure to check the valve recessing after correcting.**

Cylinder head surface flatness	Allowable limit	0.05 mm 0.002 in.

W1027737

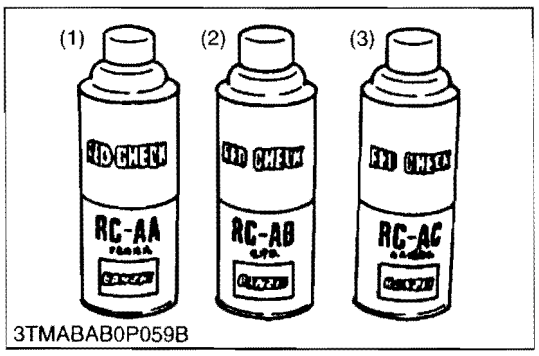

3TMABAB0P059B

Cylinder Head Flaw

1. Prepare an air spray red check.
2. Clean the surface of the cylinder head with detergent (2).
3. Spray the cylinder head surface with the red permeative liquid (1). Leave it five to ten minutes after spraying.
4. Wash away the read permeative liquid on the cylinder head surface with the detergent (2).
5. Spray the cylinder head surface with white developer (3).
6. If flawed, it can be identified as red marks.

(1) Red Permeative Liquid
(2) Detergent
(3) White Developer

W1076542

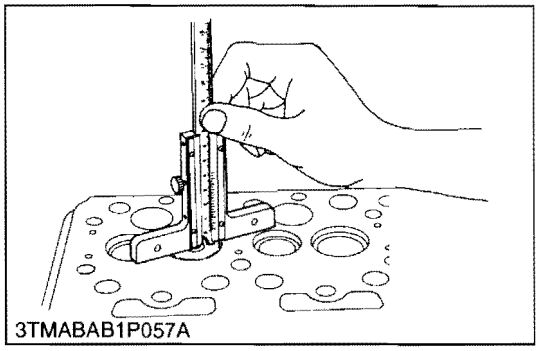
3TMABAB1P057A

Valve Recessing

1. Clean the cylinder head surface, valve face and valve seat.
2. Insert the valve into the valve guide.
3. Measure the valve recessing with a depth gauge.
4. If the measurement exceeds the allowable limit, replace the valve.
5. If it still exceeds the allowable limit after replacing the valve, replace the cylinder head.

Valve recessing (Intake and exhaust)	Factory spec.	0.10 (protrusion) to 0.10 (recessing) mm 0.0039 (protrusion) to 0.0039 (recessing) in.
	Allowable limit	0.30 (recessing) mm 0.012 (recessing) in.

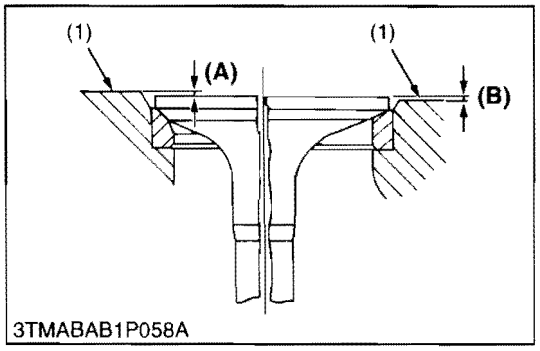

3TMABAB1P058A

(1) Cylinder Head Surface
(A) Recessing
(B) Protrusion

W10768800

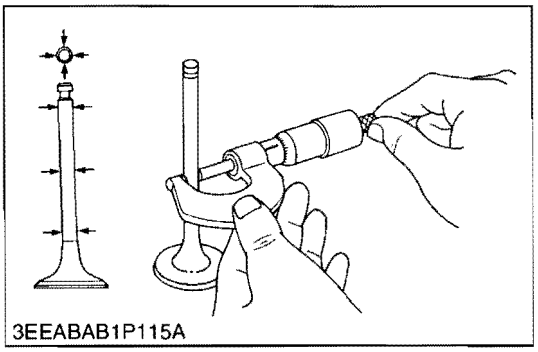
3EEABAB1P115A

Clearance between Valve Stem and Valve Guide

1. Remove carbon from the valve guide section.
2. Measure the valve stem O.D. with an outside micrometer.
3. Measure the valve guide I.D. with a small hole gauge, and calculate the clearance.
4. If the clearance exceeds the allowable limit, replace the valves. If it still exceeds the allowable limit, replace the valve guide.

Clearance between valve stem and valve guide	Factory spec.	0.030 to 0.057 mm 0.0012 to 0.0022 in.
	Allowable limit	0.10 mm 0.0039 in.

Valve stem O.D.	Factory spec.	5.968 to 5.980 mm 0.2350 to 0.2354 in.
Valve guide I.D.	Factory spec.	6.010 to 6.025 mm 0.2366 to 0.2372 in.

W10774950

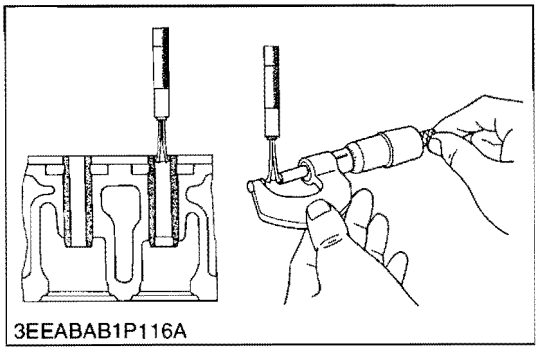
3EEABAB1P116A

https://truckmanualshub.com/

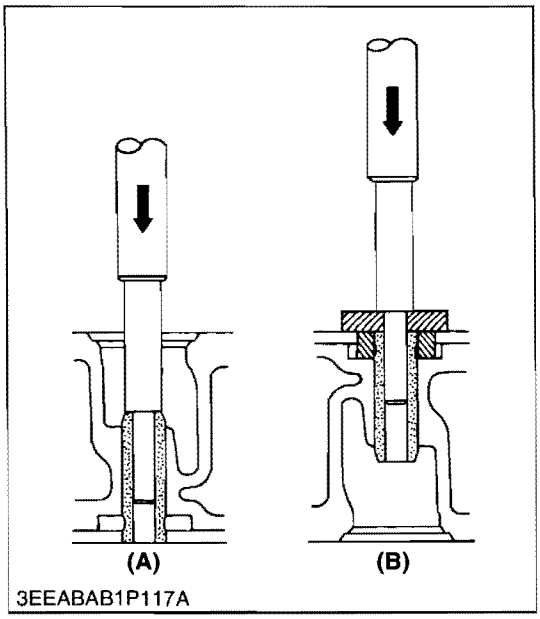

3EEABAB1P117A

Replacing Valve Guide

(When removing)

1. Press out the used valve guide using a valve guide replacing tool. (See page **"SPECIAL TOOLS"**.)

(When installing)

1. Clean a new valve guide and valve guide bore, and apply engine oil to them.
2. Press in a new valve guide using a valve guide replacing tool.
3. Ream precisely the I.D. of the valve guide to the specified dimension.

Valve guide I.D. (Intake and exhaust)	Factory spec.	6.010 to 6.025 mm 0.2366 to 0.2372 in.

■ **IMPORTANT**

- **Do not hit the valve guide with a hammer during replacement.**

(A) When Removing **(B) When Installing**

W10278890

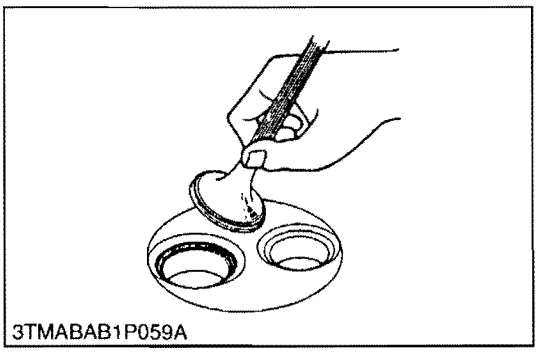
3TMABAB1P059A

Valve Seating

1. Coat the valve face lightly with prussian blue and put the valve on its seat to check the contact.
2. If the valve does not seat all the way around the valve seat or the valve contact is less than 70 %, correct the valve seating as follows.
3. If the valve contact does not comply with the reference value, replace the valve or correct the contact of valve seating.

Valve seat width	Factory spec.	2.12 mm 0.0835 in.

(1) Correct
(2) Incorrect
(3) Incorrect

W10282190

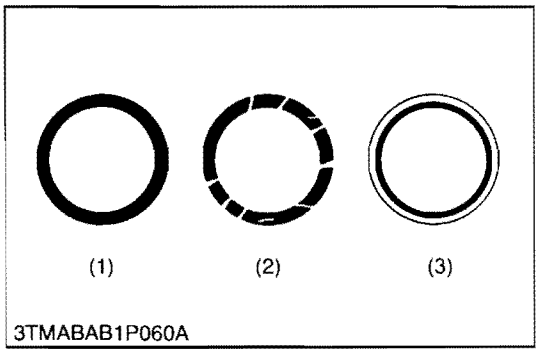

3TMABAB1P060A

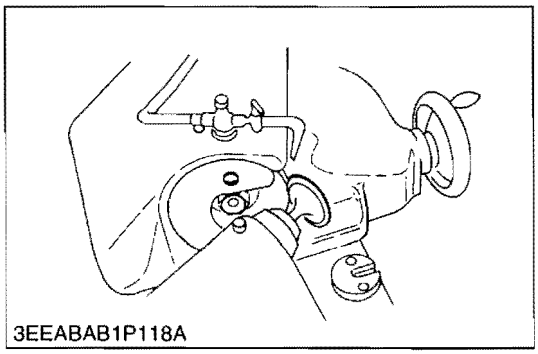
3EEABAB1P118A

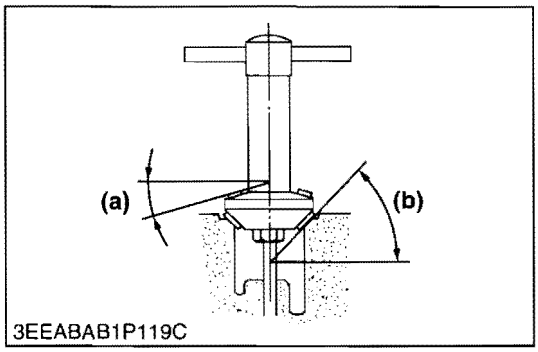

3EEABAB1P119C

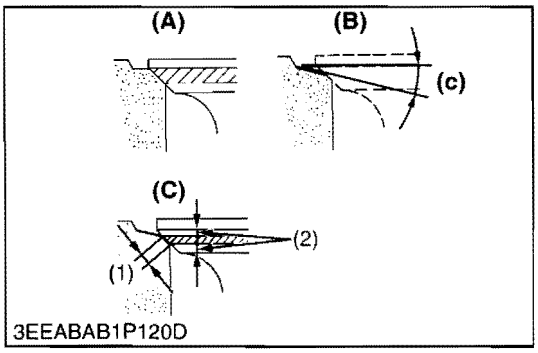

3EEABAB1P120D

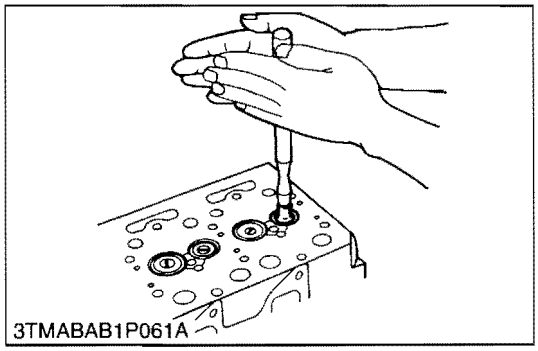
3TMABAB1P061A

Correcting Valve and Valve Seat

■ **NOTE**

- **Before correcting the valve and seat, check the valve stem and the I.D. of valve guide section, and repair them if necessary.**
- **After correcting the valve seat, be sure to check the valve recessing.**

1) Correcting Valve

1. Correct the valve with a valve refacer.

Valve face angle	Factory spec.	0.785 rad 45 °

2) Correcting Valve Seat

1. Slightly correct the seat surface with a 1.0 rad (60 °) (intake valve) or 0.79 rad (45 °) (exhaust valve) valve seat cutter.
2. Resurface the seat surface with a 0.52 rad (30 °) valve seat cutter to intake valve seat and with a 0.26 rad (15 °) valve seat cutter to exhaust valve seat so that the width is close to specified valve seat width (2.12 mm, 0.0835 in.).
3. After resurfacing the seat, inspect for even valve seating, apply a thin film of compound between the valve face and valve seat, and fit them with valve lapping tool.
4. Check the valve seating with prussian blue. The valve seating surface should show good contact all the way around.

Valve seat angle	Factory spec.	0.785 rad 45 °

(1) Valve Seat Width
(2) Identical Dimensions

(A) Check Contact
(B) Correct Seat Width
(C) Check Contact
(a) 0.26 rad (15 °) or 0.52 rad (30 °)
(b) 0.79 rad (45 °) or 1.0 rad (60 °)
(c) 0.52 rad (30 °) or 0.26 rad (15 °)

W10283500

Valve Lapping

1. Apply compound evenly to the valve lapping surface.
2. Insert the valve into the valve guide. Lap the valve onto its seat with a valve flapper or screwdriver.
3. After lapping the valve, wash the compound away and apply oil, then repeat valve lapping with oil.
4. Apply prussian blue to the contact surface to check the seated rate. If it is less than 70 %, repeat valve lapping again.

■ **IMPORTANT**

- **When valve lapping is performed, be sure to check the valve recessing and adjust the valve clearance after assembling the valve.**

W10288140

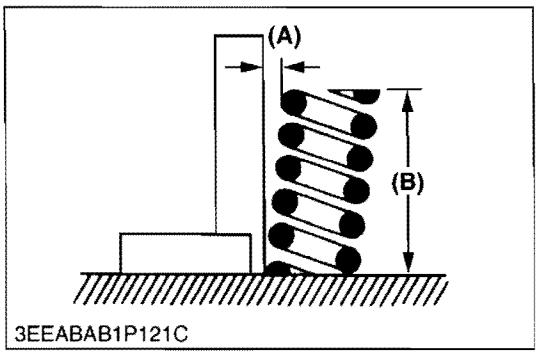

3EEABAB1P121C

Free Length and Tilt of Valve Spring

1. Measure the free length **(B)** of valve spring with vernier calipers. If the measurement is less than the allowable limit, replace it.
2. Put the valve spring on a surface plate, place a square on the side of the valve spring.
3. Check to see if the entire side is in contact with the square. Rotate the valve spring and measure the maximum tilt **(A)**. If the measurement exceeds the allowable limit, replace it.
4. Check the entire surface of the valve spring for scratches. If there is any defect, replace it.

Tilt **(A)**	Allowable limit	1.2 mm 0.047 in.

Free length **(B)**	Factory spec.	31.3 to 31.8 mm 1.24 to 1.25 in.
	Allowable limit	28.4 mm 1.12 in.

(A) Tilt **(B) Free Length**

W10289350

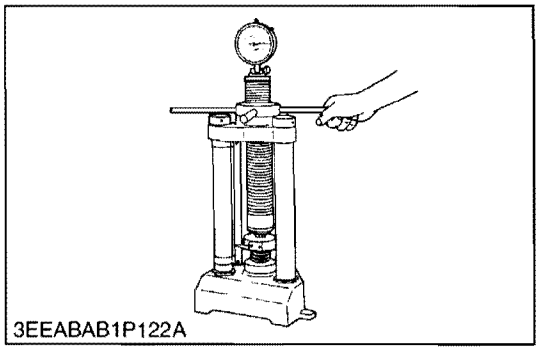
3EEABAB1P122A

Valve Spring Setting Load

1. Place the valve spring on a tester and compress it to the same length it is actually compressed in the engine.
2. Read the compression load on the gauge.
3. If the measurement is less than the allowable limit, replace it.

Setting load / Setting length	Factory spec.	65 N / 27.0 mm 6.6 kgf / 27.0 mm 15 lbf / 1.06 in.
	Allowable limit	55 N / 27.0 mm 5.6 kgf / 27.0 mm 12 lbf / 1.06 in.

W10784360

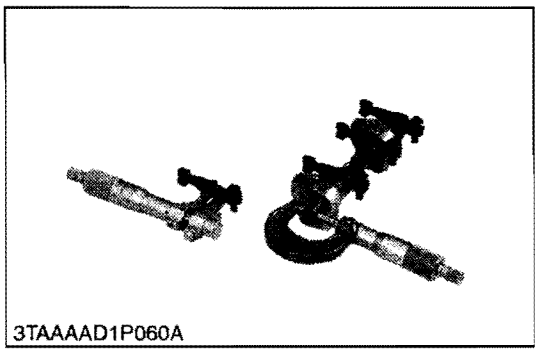
3TAAAAD1P060A

Oil Clearance between Rocker Arm and Rocker Arm Shaft

1. Measure the rocker arm shaft O.D. with an outside micrometer.
2. Measure the rocker arm I.D. with an inside micrometer, and then calculate the oil clearance.
3. If the oil clearance exceeds the allowable limit, replace the rocker arm and measure the oil clearance again. If it still exceeds the allowable limit, replace also the rocker arm shaft.

Oil clearance between rocker arm and rocker arm shaft	Factory spec.	0.016 to 0.045 mm 0.00063 to 0.0017 in.
	Allowable limit	0.15 mm 0.0059 in.

Rocker arm shaft O.D.	Factory spec.	10.473 to 10.484 mm 0.41233 to 0.41275 in.
Rocker arm I.D.	Factory spec.	10.500 to 10.518 mm 0.41339 to 0.41409 in.

W10291500

https://truckmanualshub.com/

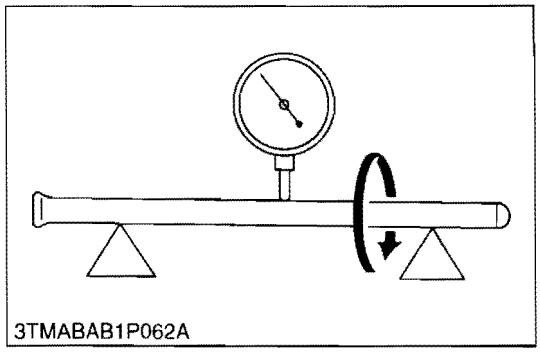
3TMABAB1P062A

Push Rod Alignment

1. Place the push rod on V blocks.
2. Measure the push rod alignment.
3. If the measurement exceeds the allowable limit, replace the push rod.

Push rod alignment	Allowable limit	0.25 mm 0.0098 in.

W10292900

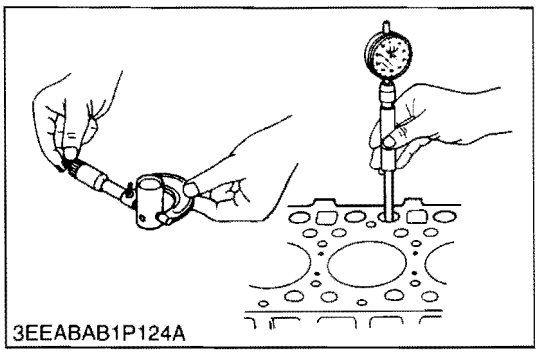
3EEABAB1P124A

Oil Clearance between Tappet and Tappet Guide Bore

1. Measure the tappet O.D. with an outside micrometer.
2. Measure the I.D. of the tappet guide bore with a cylinder gauge, and calculate the oil clearance.
3. If the oil clearance exceeds the allowable limit or the tappet is damaged, replace the tappet.

Oil clearance between tappet and tappet guide bore	Factory spec.	0.016 to 0.052 mm 0.00063 to 0.0020 in.
	Allowable limit	0.10 mm 0.0039 in.

Tappet O.D.	Factory spec.	17.966 to 17.984 mm 0.70733 to 0.70803 in.
Tappet guide bore I.D.	Factory spec.	18.000 to 18.018 mm 0.70866 to 0.70937 in.

W1051412

(2) Timing Gears, Camshaft and Governor Gear

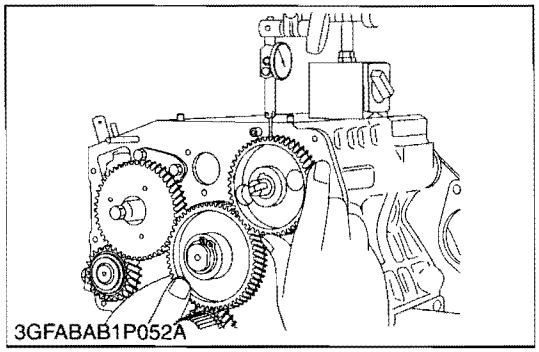
3GFABAB1P052A

Timing Gear Backlash

1. Set a dial indicator (lever type) with its tip on the gear tooth.
2. Move the gear to measure the backlash, holding its mating gear.
3. If the backlash exceeds the allowable limit, check the oil clearance of the shafts and the gear.
4. If the oil clearance is proper, replace the gear.

Backlash between idle gear and crank gear	Factory spec.	0.043 to 0.124 mm 0.00169 to 0.00488 in.
	Allowable limit	0.15 mm 0.0059 in.

Backlash between idle gear and cam gear	Factory spec.	0.047 to 0.123 mm 0.00185 to 0.00484 in.
	Allowable limit	0.15 mm 0.0059 in.

Backlash between idle gear and injection pump gear	Factory spec.	0.046 to 0.124 mm 0.00181 to 0.00488 in.
	Allowable limit	0.15 mm 0.0059 in.

Backlash between oil pump drive gear and crank gear	Factory spec.	0.041 to 0.123 mm 0.00161 to 0.00484 in.
	Allowable limit	0.15 mm 0.0059 in.

W10280630

Governor Gear Backlash

Backlash between injection pump gear and governor gear	Factory spec.	0.030 to 0.117 mm 0.0012 to 0.00460 in.
	Allowable limit	0.15 mm 0.0059 in.

W1041576

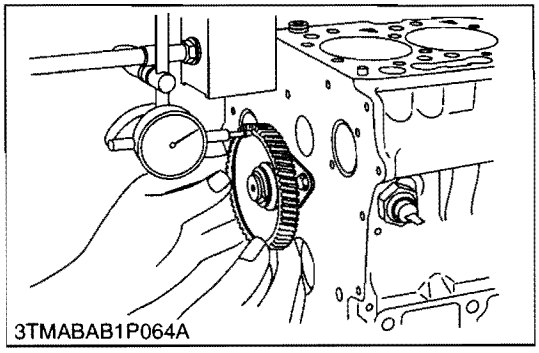
3TMABAB1P064A

Idle Gear and Idle Gear 1 Side Clearance

1. Set a dial indicator with its tip on the idle gear.
2. Measure the side clearance by moving the idle gear to the front and rear.
3. If the measurement exceeds the allowable limit, replace the idle gear collar.

Idle gear and idle gear 1 side clearance	Factory spec.	0.20 to 0.51 mm 0.0079 to 0.020 in.
	Allowable limit	0.80 mm 0.031 in.

W10285590

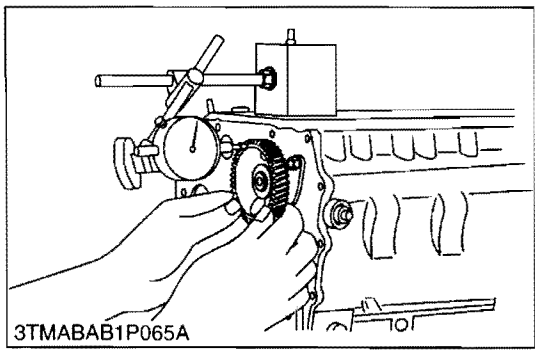
3TMABAB1P065A

Camshaft Side Clearance

1. Set a dial indicator with its tip on the camshaft.
2. measure the side clearance by moving the cam gear to the front to rear.
3. If the measurement exceeds the allowable limit, replace the camshaft stopper.

Camshaft side clearance	Factory spec.	0.15 to 0.31 mm 0.0059 to 0.012 in.
	Allowable limit	0.50 mm 0.0197 in.

W10295630

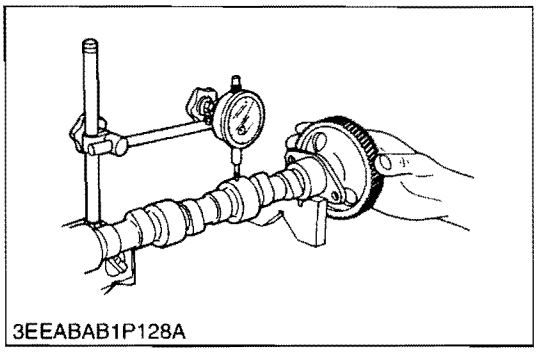
3EEABAB1P128A

Camshaft Alignment

1. Support the camshaft with V blocks on the surface plate at both end journals.
2. Set a dial indicator with its tip on the intermediate journal.
3. Measure the camshaft alignment.
4. If the measurement exceeds the allowable limit, replace the camshaft.

Camshaft alignment	Allowable limit	0.01 mm 0.0004 in.

W10296710

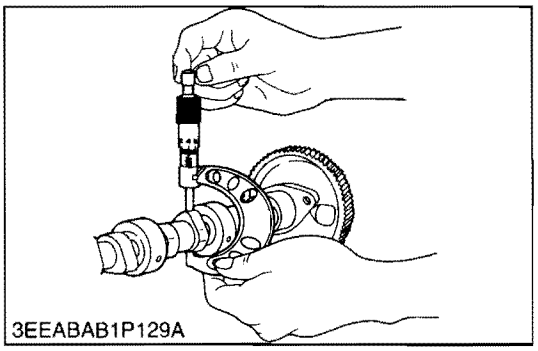
3EEABAB1P129A

Cam Height

1. Measure the height of the cam at its highest point with an outside micrometer.
2. If the measurement is less than the allowable limit, replace the camshaft.

Cam height of intake and exhaust	Factory spec.	26.88 mm 1.058 in.
	Allowable limit	26.83 mm 1.056 in.

W10297880

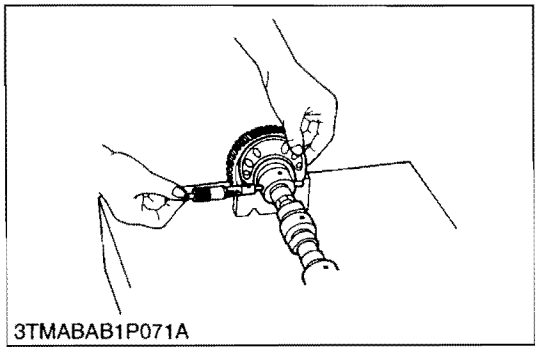
3TMABAB1P071A

Oil Clearance of Camshaft Journal

1. Measure the camshaft journal O.D. with an outside micrometer.
2. Measure the cylinder block bore I.D. for camshaft with a cylinder gauge, and calculate the oil clearance.
3. If the oil clearance exceeds the allowable limit, replace the camshaft.

Oil clearance of camshaft journal	Factory spec.	0.050 to 0.091 mm 0.00197 to 0.00358 in.
	Allowable limit	0.15 mm 0.0059 in.

Camshaft journal O.D.	Factory spec.	32.934 to 32.950 mm 1.2966 to 1.2972 in.
Camshaft Bearing I.D. (Cylinder block bore I.D.)	Factory spec.	33.000 to 33.025 mm 1.2992 to 1.3002 in.

W10299330

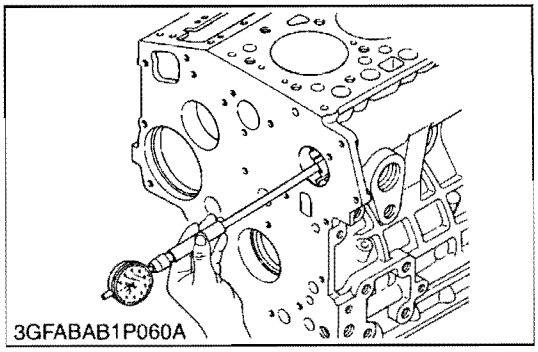
3GFABAB1P060A

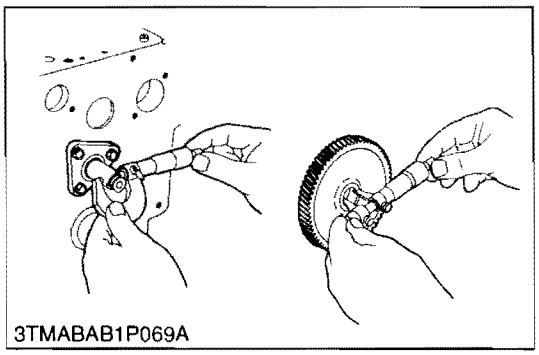
3TMABAB1P069A

Oil Clearance between Idle Gear, Idle Gear 1, Idle Gear Shaft and Idle Gear Bushing

1. Measure the idle gear shaft O.D. with an outside micrometer.
2. Measure the idle gear bushing I.D. with an inside micrometer, and calculate the oil clearance.
3. If the oil clearance exceeds the allowable limit, replace the bushing.
   If it still exceeds the allowable limit, replace the idle gear shaft.

Oil clearance between idle gear shaft and idle gear bushing	Factory spec.	0.020 to 0.084 mm 0.00079 to 0.0033 in.
	Allowable limit	0.10 mm 0.0039 in.

Idle gear shaft O.D.	Factory spec.	19.967 to 19.980 mm 0.78611 to 0.78661 in.
Idle gear bushing I.D.	Factory spec.	20.000 to 20.051 mm 0.78740 to 0.78941 in.

W10301050

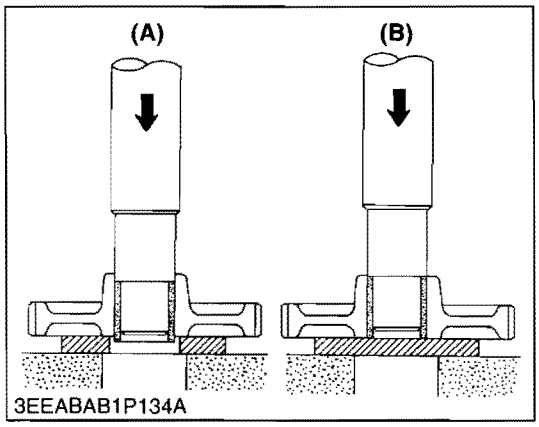

3EEABAB1P134A

Replacing Idle Gear Bushing

(When removing)

1. Press out the used idle gear bushing using an idle gear bushing replacing tool. (See page **"SPECIAL TOOLS"**.)

(When installing)

1. Clean a new idle gear bushing and idle gear bore, and apply engine oil to them.
2. Press in a new bushing using an idle gear bushing replacing tool, until it is flush with the end of the idle gear.

(A) When Removing **(B) When Installing**

W10302410

(3) Piston and Connecting Rod

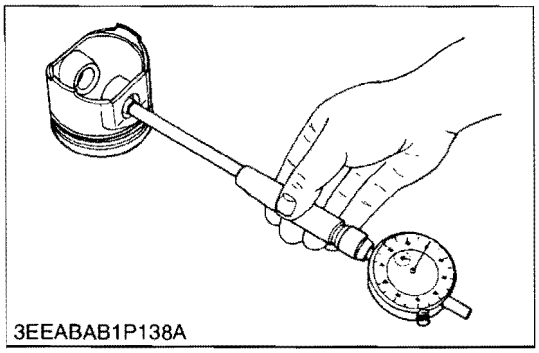
3EEABAB1P138A

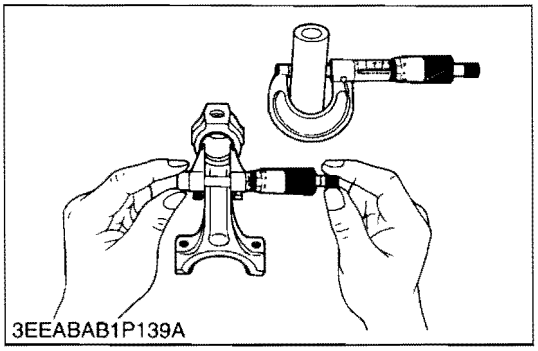
3EEABAB1P139A

Piston Pin Bore I.D.

1. Measure the piston pin bore I.D. in both the horizontal and vertical directions with a cylinder gauge.
2. If the measurement exceeds the allowable limit, replace the piston.

Piston pin bore I.D.	Factory spec.	22.000 to 22.013 mm 0.86615 to 0.86665 in.
	Allowable limit	22.03 mm 0.8673 in.

W10304770

Oil Clearance between Piston Pin and Small End Bushing

1. Measure the piston pin O.D. where it contacts the bushing with an outside micrometer.
2. Measure the small end bushing I.D. with an inside micrometer, and calculate the oil clearance.
3. If the oil clearance exceeds the allowable limit, replace the bushing. If it still exceeds the allowable limit, replace the piston pin.

Oil clearance between piston pin and small end bushing	Factory spec.	0.014 to 0.038 mm 0.00055 to 0.0014 in.
	Allowable limit	0.10 mm 0.0039 in.

Piston pin O.D.	Factory spec.	20.002 to 20.011 mm 0.78748 to 0.78783 in.
Small end bushing I.D.	Factory spec.	20.025 to 20.040 mm 0.78839 to 0.78898 in.

W10305740

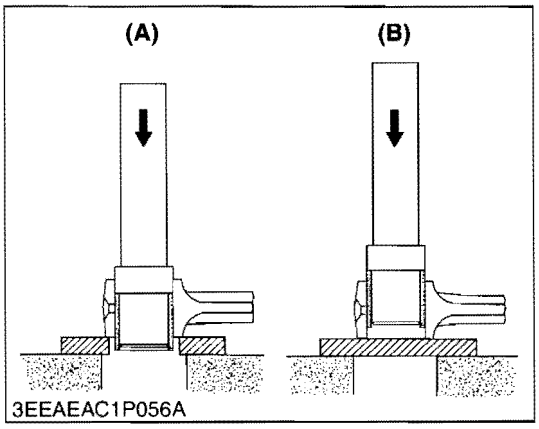

3EEAEAC1P056A

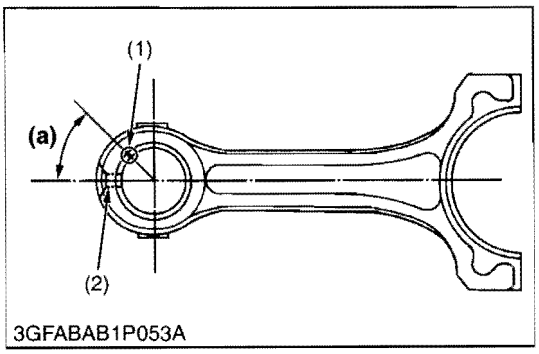

3GFABAB1P053A

Replacing Small End Bushing

(When removing)

1. Press out the used bushing using a small end bushing replacing tool. (See page **"SPECIAL TOOLS"**.)

(When installing)

1. Clean a new small end bushing and bore, and apply engine oil to them.
2. Using a small end bushing replacing tool, press in a new bushing (service parts) taking due care to see that the connecting rod oil hole matches the bushing hole.

Oil clearance between piston pin and small end bushing (Spare parts)	Factory spec.	0.015 to 0.075 mm 0.00059 to 0.0030 in.
	Allowable limit	0.15 mm 0.0059 in.

Small end bushing I.D. (Spare parts)	Factory spec.	20.026 to 20.077 mm 0.78843 to 0.79043 in.

(1) Seam
(2) Oil Hole

(A) When Removing
(B) When Installing
(a) 0.79 rad (45 °)

W10307120

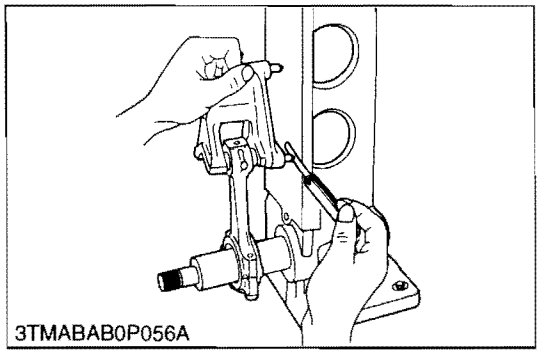
3TMABAB0P056A

Connecting Rod Alignment

■ **NOTE**

- **Since the I.D. of the connecting rod small end bushing is the basis of this check, check bushing for wear beforehand.**

1. Install the piston pin into the connecting rod.
2. Install the connecting rod on the connecting rod alignment tool.
3. Put a gauge over the piston pin, and move it against the face plate.
4. If the gauge does not fit squarely against the face plate, measure the space between the pin of the gauge and the face plate.
5. If the measurement exceeds the allowable limit, replace the connecting rod.

Connecting rod alignment	Allowable limit	0.05 mm 0.002 in.

W10314620

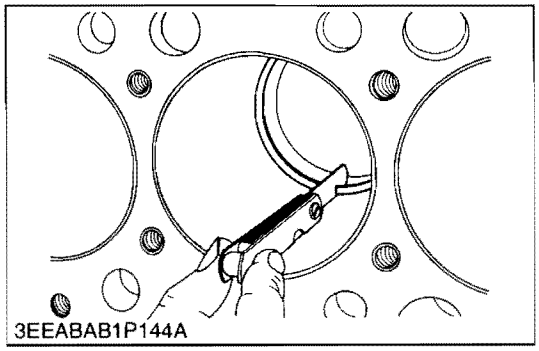
3EEABAB1P144A

Piston Ring Gap

1. Insert the piston ring into the lower part of the cylinder (the least worn out part) with a piston.
2. Measure the ring gap with a thickness gauge.
3. If the measurement exceeds the allowable limit, replace the piston ring.

Piston ring gap	Top ring	Factory spec.	0.15 to 0.30 mm 0.0059 to 0.011 in.
		Allowable limit	1.20 mm 0.0472 in.
	Second ring	Factory spec.	0.30 to 0.45 mm 0.012 to 0.017 in.
		Allowable limit	1.20 mm 0.0472 in.
	Oil ring	Factory spec.	0.15 to 0.30 mm 0.0059 to 0.011 in.
		Allowable limit	1.20 mm 0.0472 in.

W10310120

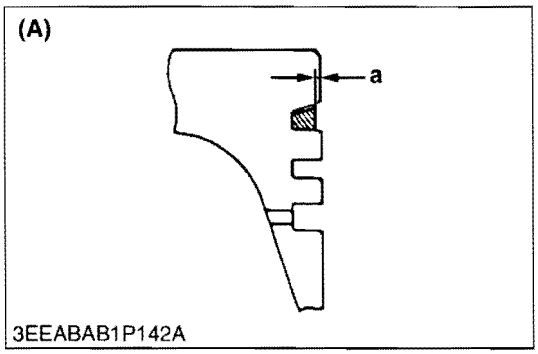

3EEABAB1P142A

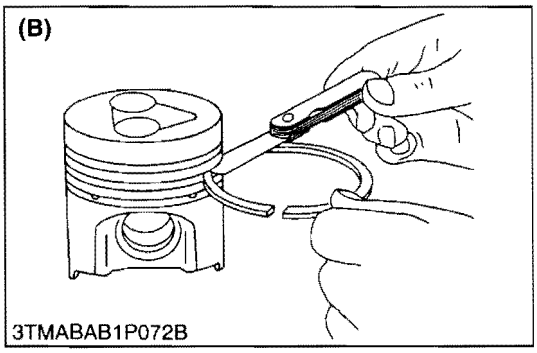

3TMABAB1P072B

Clearance between Piston ring and Piston Ring Groove

1. Clean the rings and the ring grooves, and install each ring in its groove.
2. Measure the clearance between the ring and the groove with a feeler gauge or depth gauge.
3. If the clearance exceeds the allowable limit, replace the piston ring.
4. If the clearance still exceeds the allowable limit with new ring, replace the piston.

Clearance between piston ring and piston ring groove	Second ring	Factory spec.	0.090 to 0.12 mm 0.0036 to 0.0047 in.
		Allowable limit	0.15 mm 0.0059 in.
	Oil ring	Factory spec.	0.04 to 0.08 mm 0.002 to 0.0031 in.
		Allowable limit	0.15 mm 0.0059 in.

Factory specification : **a**	More than 0.2 mm 0.008 in.

(A) Top Ring (Key Stone Type) **(B) 2nd, Oil Ring**

W10312390

(4) Crankshaft

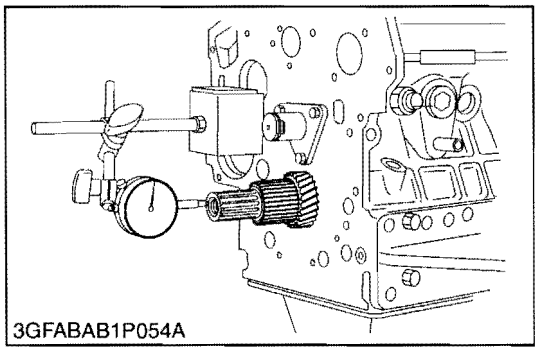
3GFABAB1P054A

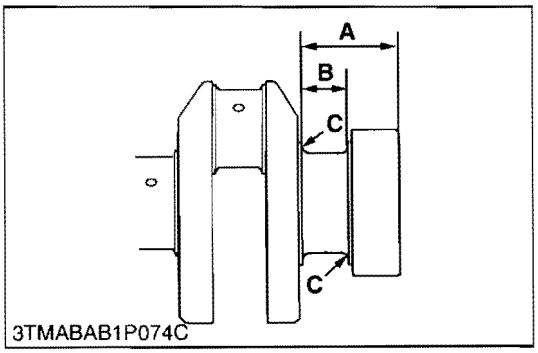

3TMABAB1P074C

Crankshaft Side Clearance

1. Set a dial indicator with its tip on the end of the crankshaft.
2. Measure the side clearance by moving the crankshaft to the front and rear.
3. If the measurement exceeds the allowable limit, replace the thrust bearings.
4. If the same size bearing is useless because of the crankshaft journal wear, replace it with an oversize one referring to the table and figure.

Crankshaft side clearance	Factory spec.	0.15 to 0.31 mm 0.0059 to 0.012 in.
	Allowable limit	0.50 mm 0.020 in.

(Reference)

- Oversize dimensions of crankshaft journal

Oversize	0.2 mm 0.008 in.	0.4 mm 0.02 in.
Dimension **A**	46.10 to 46.30 mm 1.815 to 1.822 in.	46.30 to 46.50 mm 1.823 to 1.831 in.
Dimension **B**	23.40 to 23.45 mm 0.9213 to 0.9232 in.	23.80 to 23.85 mm 0.9370 to 0.9390 in.
Dimension **C**	1.8 to 2.2 mm radius 0.071 to 0.086 in. radius	1.8 to 2.2 mm radius 0.071 to 0.086 in. radius
The crankshaft journal must be fine-finished to higher than ▽▽▽▽. (0.8S)		

W10317070

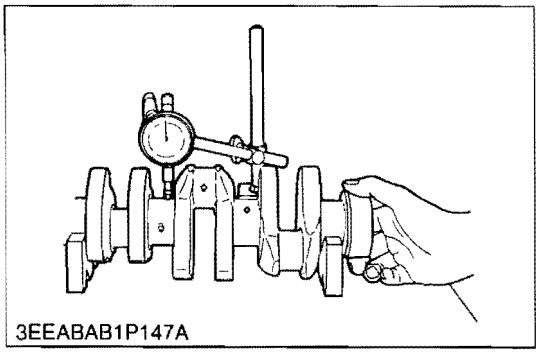
3EEABAB1P147A

Crankshaft Alignment

1. Support the crankshaft with V blocks on the surface plate at both end journals.
2. Set a dial indicator with its tip on the intermediate journal.
3. Measure the crankshaft alignment.
4. If the measurement exceeds the allowable limit, replace the crankshaft.

Crankshaft alignment	Allowable limit	0.02 mm 0.0008 in.

W10330010

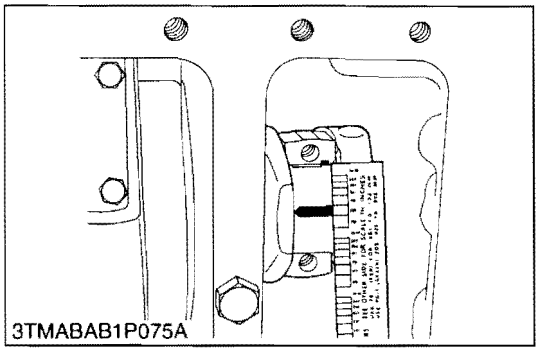
3TMABAB1P075A

Oil Clearance between Crankpin and Crankpin Bearing

1. Clean the crankpin and crankpin bearing.
2. Put a strip of plastigage on the center of the crankpin.
3. Install the connecting rod cap and tighten the connecting rod screws to the specified torque, and remove the cap again.
4. Measure the amount of the flattening with the scale, and get the oil clearance.
5. If the oil clearance exceeds the allowable limit, replace the crankpin bearing.
6. If the same size bearing is useless because of the crankpin wear, replace it with an undersize one referring to the table and figure.

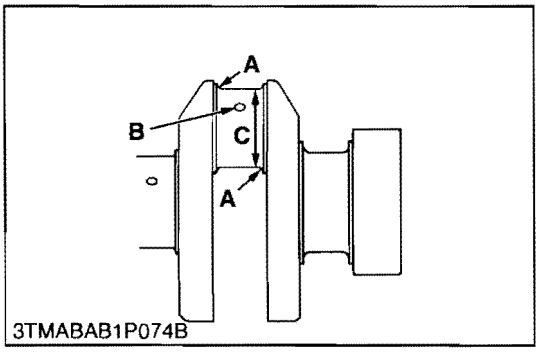

3TMABAB1P074B

■ **NOTE**

- **Never insert the plastigage into the crankpin oil hole.**
- **Be sure not to move the crankshaft while the connecting rod screws are tightened.**

Oil clearance between crankpin and crankpin bearing	Factory spec.	0.020 to 0.051mm 0.00079 to 0.0020 in.
	Allowable limit	0.15 mm 0.0059 in.

Crankpin O.D.	Factory spec.	33.959 to 33.975 mm 1.3370 to 1.3375 in.
Crankpin bearing I.D.	Factory spec.	33.995 to 34.010 mm 1.3384 to 1.3389 in.

(Reference)

- Undersize dimensions of crankpin

Undersize	0.20 mm 0.0079 in.	0.40 mm 0.016 in.
Dimension **A**	2.3 to 2.7 mm radius 0.091 to 0.10 in.radius	2.3 to 2.7 mm radius 0.091 to 0.10 in.radius
*Dimension **B**	1.0 to 1.5 mm relief 0.040 to 0.059 in. relief	1.0 to 1.5 mm relief 0.040 to 0.059 in. relief
Dimension **C**	33.759 to 33.775 mm dia. 1.3291 to 1.32973 in. dia.	33.559 to 33.575 mm dia. 1.3213 to 1.3218 in. dia.
The crankpin must be fine-finished to higher than VVVV. (0.8S) *Holes to be de-burred and edges rounded with 1.0 to 1.5 mm (0.0394 to 0.0591 in.) relief.		

W10331060

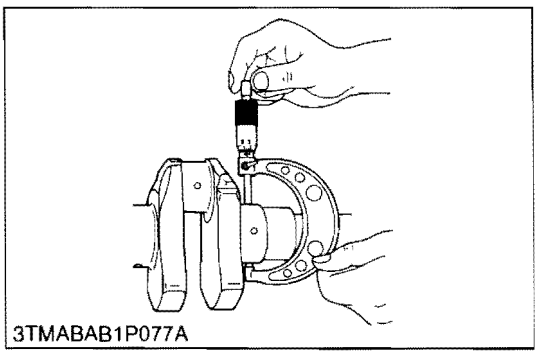
3TMABAB1P077A

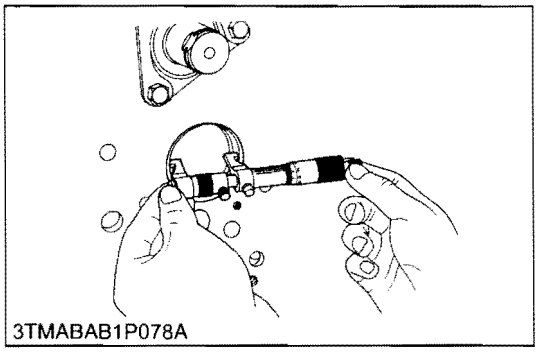
3TMABAB1P078A

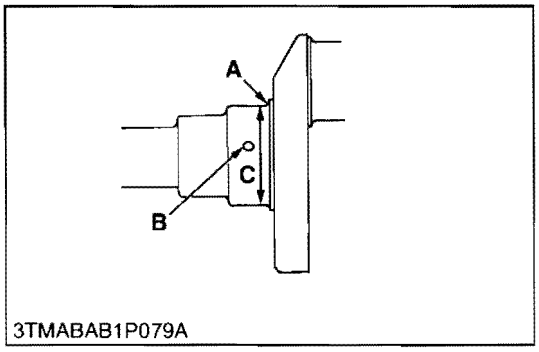

3TMABAB1P079A

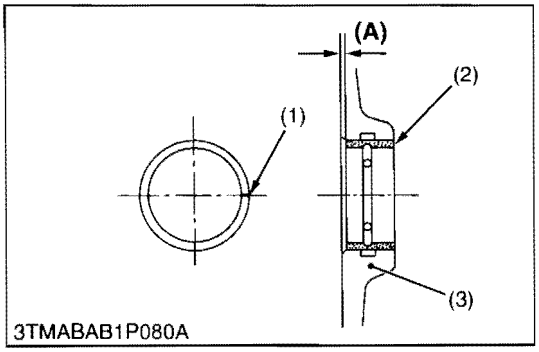

3TMABAB1P080A

Oil Clearance between Crankshaft Journal and Crankshaft Bearing 1

1. Measure the O.D. of the crankshaft front journal with an outside micrometer.
2. Measure the I.D. of the crankshaft bearing 1 with an inside micrometer, and calculate the oil clearance.
3. If the clearance exceeds the allowable limit, replace the crankshaft bearing 1.
4. If the same size bearing is useless because of the crankshaft journal wear, replace it with an undersize one referring to the table and figure.

Oil Clearance between crankshaft journal and crankshaft bearing 1	Factory spec.	0.0340 to 0.106 mm 0.00134 to 0.00417 in.
	Allowable limit	0.20 mm 0.0079 in.

Crankshaft journal O.D.	Factory spec.	39.934 to 39.950 mm 1.5722 to 1.5728 in.
Crankshaft bearing 1 I.D.	Factory spec.	39.984 to 40.040 mm 1.5742 to 1.5764 in.

(Reference)

- Undersize dimensions of crankshaft journal

Undersize	0.2 mm 0.008 in.	0.4 mm 0.016 in.
Dimension **A**	1.8 to 2.2 mm radius 0.071 to 0.087 in.radius	1.8 to 2.2 mm radius 0.071 to 0.087 in.radius
*Dimension **B**	1.0 to 1.5 mm relief 0.040 to 0.059 in. relief	1.0 to 1.5 mm relief 0.040 to 0.059 in. relief
Dimension **C**	39.734 to 39.750 mm dia. 1.5643 to 1.5650 in. dia.	39.534 to 39.550 mm dia. 1.5565 to 1.5571 in. dia.
The crankshaft journal must be fine-finished to higher than ▽▽▽▽ (0.8S). *Holes to be de-burred and edges rounded with 1.0 to 1.5 mm (0.0394 to 0.0591 in.) relief.		

W10337170

Replacing Crankshaft Bearing 1

(When removing)

1. Press out the used crankshaft bearing 1 using a crankshaft bearing 1 replacing tool. (See page **"SPECIAL TOOLS"**.)

(When installing)

1. Clean a new crankshaft bearing 1 and crankshaft journal bore, and apply engine oil to them.
2. Using a crankshaft bearing 1 replacing tool, press in a new bearing 1 (2) so that its seam (1) directs toward the exhaust manifold side. (See figure.)

Dimension **(A)**	Factory spec.	0 to 0.3 mm 0 to 0.01 in.

(1) Seam
(2) Crankshaft Bearing 1
(3) Cylinder Block
(A) Dimension

W10339460

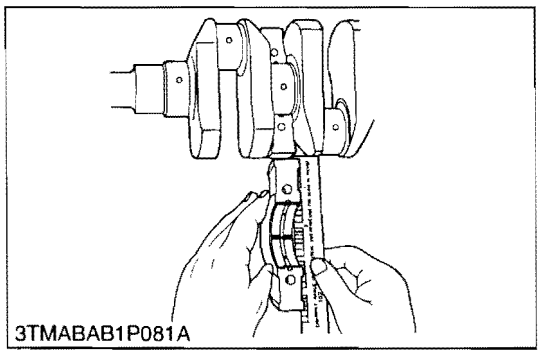
3TMABAB1P081A

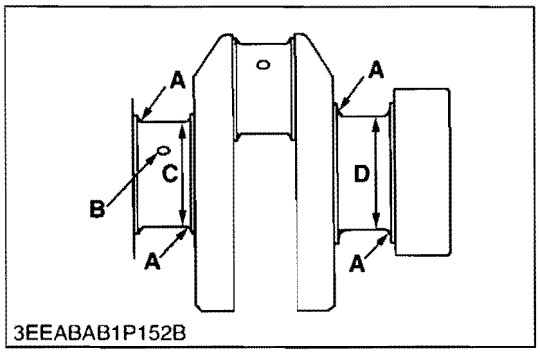

3EEABAB1P152B

Oil Clearance between Crankshaft Journal and Crankshaft Bearing 2 (Crankshaft Bearing 3)

1. Put a strip of plastigage on the center of the journal.
2. Install the bearing case and tighten the baring case screws 1 to the specified torque, and remove the bearing case again.
3. Measure the amount of the flattening with the scale and get the oil clearance.
4. If the clearance exceeds the allowable limit, replace the crankshaft bearing 2 (1) and crankshaft bearing (3).
5. If the same size bearing is useless because of the crankshaft journal wear, replace it with an undersize one referring to the table and figure.

■ **NOTE**

- **Be sure not to move the crankshaft while the bearing case screws are tightened.**

Oil clearance between crankshaft journal and crankshaft bearing 2 (crankshaft bearing 3)	Factory spec.	0.028 to 0.059 mm 0.0011 to 0.0023 in.
	Allowable limit	0.20 mm 0.0079 in.

Crankshaft journal O.D. (Flywheel side)	Factory spec.	43.934 to 43.950 mm 1.7297 to 1.7303 in.
Crankshaft bearing 2 I.D.	Factory spec.	43.978 to 43.993 mm 1.7315 to 1.7320 in.

Crankshaft journal O.D. (Intermediate)	Factory spec.	39.934 to 39.950 mm 1.5722 to 1.5728 in.
Crankshaft bearing 3 I.D.	Factory spec.	39.978 to 39.993 mm 1.5740 to 1.5745 in.

(Reference)

- Undersize dimensions of crankshaft journal

Undersize	0.2 mm 0.008 in.	0.4 mm 0.016 in.
Dimension **A**	1.8 to 2.2 mm radius 0.071 to 0.087 in.radius	1.8 to 2.2 mm radius 0.071 to 0.087 in.radius
*Dimension **B**	1.0 to 1.5 mm relief 0.040 to 0.059 in. relief	1.0 to 1.5 mm relief 0.040 to 0.059 in. relief
Dimension **C**	39.734 to 39.750 mm dia. 1.5643 to 1.5650 in. dia.	39.534 to 39.550 mm dia. 1.5565 to 1.5571 in. dia.
Dimension **D**	43.734 to 43.750 mm dia. 1.7219 to 1.7224 in. dia.	43.534 to 43.550 mm dia. 1.7140 to 1.7145 in. dia.
The crankshaft journal must be fine-finished to higher than ▽▽▽▽ (0.8S). *Holes to be de-burred and edges rounded with 1.0 to 1.5 mm (0.0394 to 0.0591 in.) relief.		

W10340750

https://truckmanualshub.com/

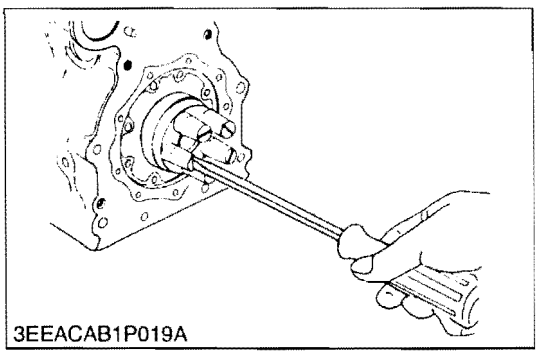
3EEACAB1P019A

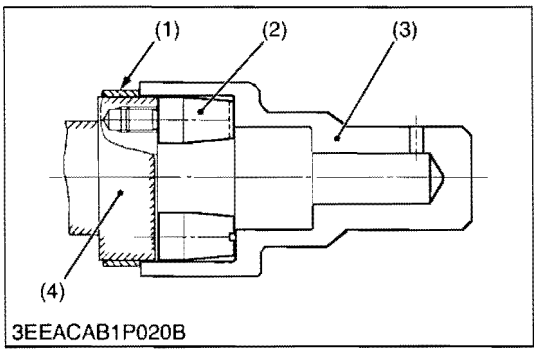

3EEACAB1P020B

Replacing Crankshaft Sleeve

1. Remove the used crankshaft sleeve.
2. Set the sleeve guide (2) to the crankshaft.
3. Heat a new sleeve to a temperature between 150 and 200 °C (302 and 392 °F), and fix the sleeve to the crankshaft as shown in figure.
4. Press fit the sleeve using the auxiliary socket for pushing (3).

■ **NOTE**

- **Mount the sleeve with its largely chamfered surface facing outward.**
- **Should heating is not enough, a sleeve might stop halfway, so careful.**

(1) Crankshaft Sleeve
(2) Sleeve Guide
(3) Auxiliary Socket for Pushing
(4) Crankshaft

W1045923

(5) Cylinder

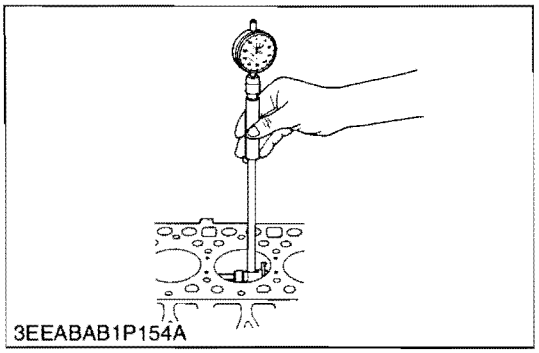
3EEABAB1P154A

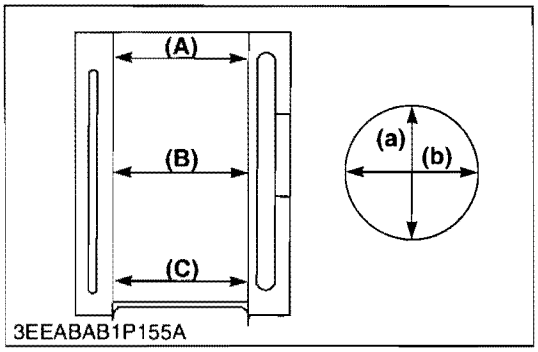

3EEABAB1P155A

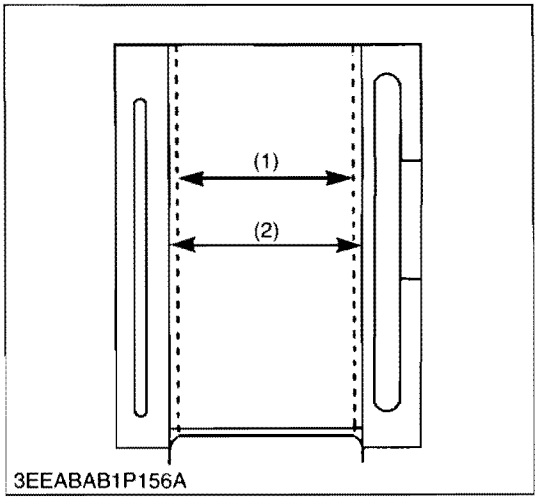

3EEABAB1P156A

Cylinder Wear

1. Measure the I.D. of the cylinder at the six positions (see figure) with a cylinder gauge to find the maximum and minimum I.D.'s.
2. Get the difference (Maximum wear) between the maximum and the minimum I.D.'s.
3. If the wear exceeds the allowable limit, bore and hone to the oversize dimension. (Refer to **"Correcting Cylinder"**.)
4. Visually check the cylinder wall for scratches. If deep scratches are found, the cylinder should be bored. (Refer to **"Correcting Cylinder"**.)

Cylinder liner I.D.	Factory spec.	67.000 to 67.019 mm 2.6378 to 2.6385 in.
	Allowable limit	67.150 mm 2.6437 in.

(A) Top
(B) Middle
(C) Bottom (Skirt)

(a) Right-angled to Piston Pin
(b) Piston Pin Direction

W10343890

Correcting Cylinder (Oversize)

1. When the cylinder is worn beyond the allowable limit, bore and hone it to the specified dimension.

Cylinder liner I.D.	Factory spec.	67.250 to 67.269 mm 2.6477 to 2.6483 in.
	Allowable limit	67.400 mm 2.6535 in.
Finishing	Hone to 2.2 to 3.0 μmRz (0.000087 to 0.00012 in.μRz) ▽▽▽.	

2. Replace the piston and piston rings with oversize ones.
   Oversize : 0.25 mm (0.0098 in.)

■ **NOTE**

- **When the oversize cylinder is worn beyond the allowable limit, replace the cylinder block with a new one.**

(1) Cylinder I.D. (Before Correction) (2) Cylinder I.D. (Oversize)

W10344480

(6) Oil Pump

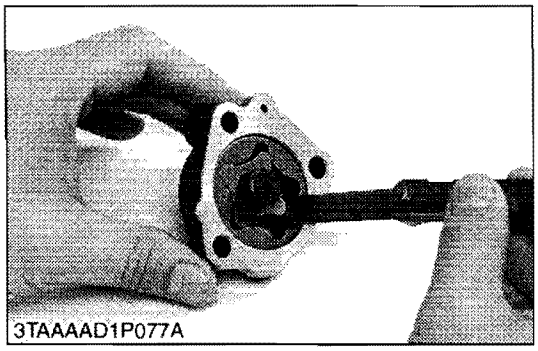
3TAAAAD1P077A

Rotor Lobe Clearance

1. Measure the clearance between lobes of the inner rotor and the outer rotor with a thickness gauge.
2. If the clearance exceeds the factory specifications, replace the oil pump rotor assembly.

Rotor lobe clearance	Factory spec.	0.030 to 0.14 mm 0.0012 to 0.0055 in.

W10378950

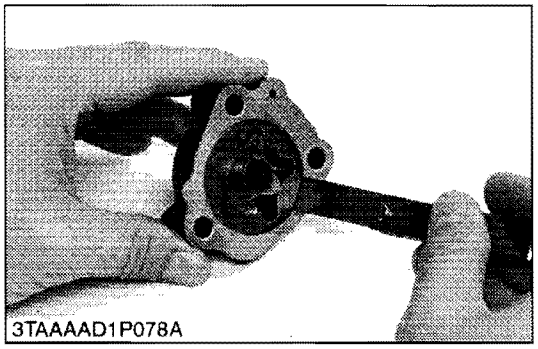
3TAAAAD1P078A

Clearance between Outer Rotor and Pump Body

1. Measure the clearance between the outer rotor and the pump body with a thickness gauge.
2. If the clearance exceeds the factory specifications, replace the oil pump rotor assembly.

Clearance between outer rotor and pump body	Factory spec.	0.070 to 0.15 mm 0.0028 to 0.0059 in.

W10381420

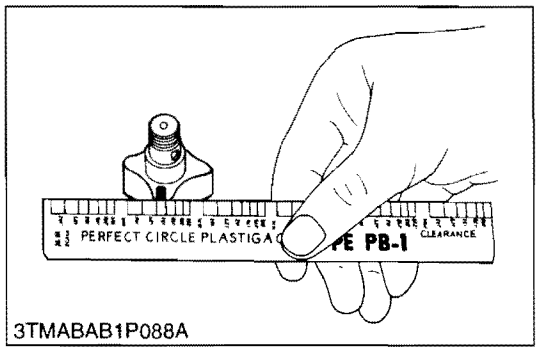

3TMABAB1P088A

Clearance between Rotor and Cover

1. Put a strip of plastigage onto the rotor face with grease.
2. Install the cover and tighten the screws.
3. Remove the cover carefully, and measure the amount of the flattening with the scale and get the clearance.
4. If the clearance exceeds the factory specifications, replace oil pump rotor assembly.

Clearance between rotor and cover	Factory spec.	0.0750 to 0.135 mm 0.00296 to 0.00531 in.

W10382660

https://truckmanualshub.com/

https://truckmanualshub.com/

MECHANISM

CONTENTS

1. STRUCTURE 2-M1
2. TRAVELLING SYSTEM 2-M2
   [1] HYDROSTATIC TRANSMISSION 2-M2
      (1) Structure 2-M2
      (2) Pump and Motor 2-M3
      (3) Check Valve and High Pressure Relief Valve 2-M4
      (4) Oil Flow 2-M5
      (5) Power Trains Operation 2-M6
      (6) Control Linkage 2-M7
      (7) Final Reduction Gear Section 2-M8
      (8) PTO System 2-M9

https://truckmanualshub.com/

1. STRUCTURE

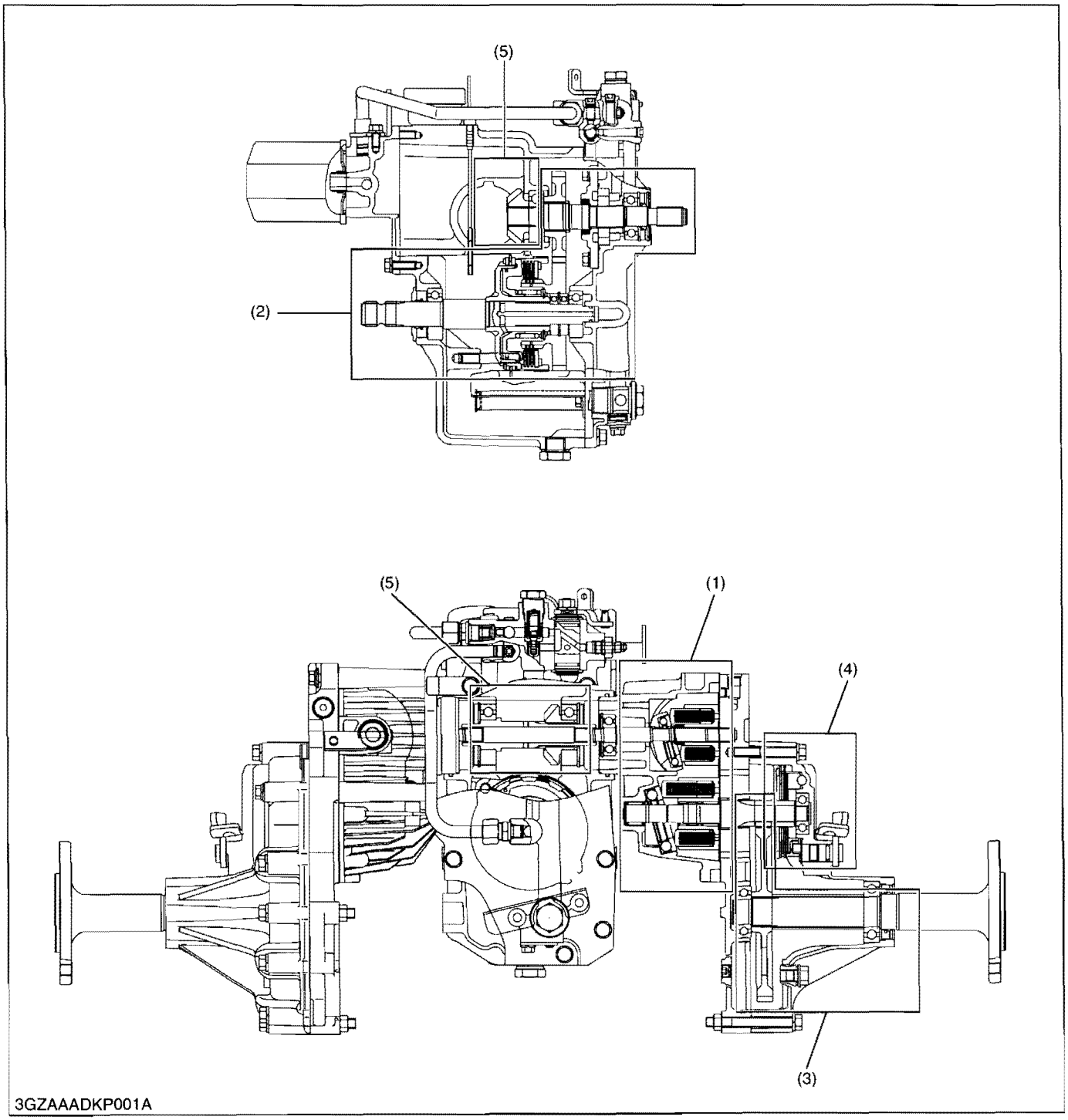

(1) Hydrostatic Transmission (3) Final Reduction Gear Section (4) Brake Section (5) Bevel Gear Section
(2) PTO Section

Transmission consists of bevel gear section (5) hydrostatic transmission (1), brake section (4), final reduction gear section (3), and PTO section (2).

Power from engine is transmitted through transmission to mower and rear wheels.

2. TRAVELLING SYSTEM

[1] HYDROSTATIC TRANSMISSION

(1) Structure

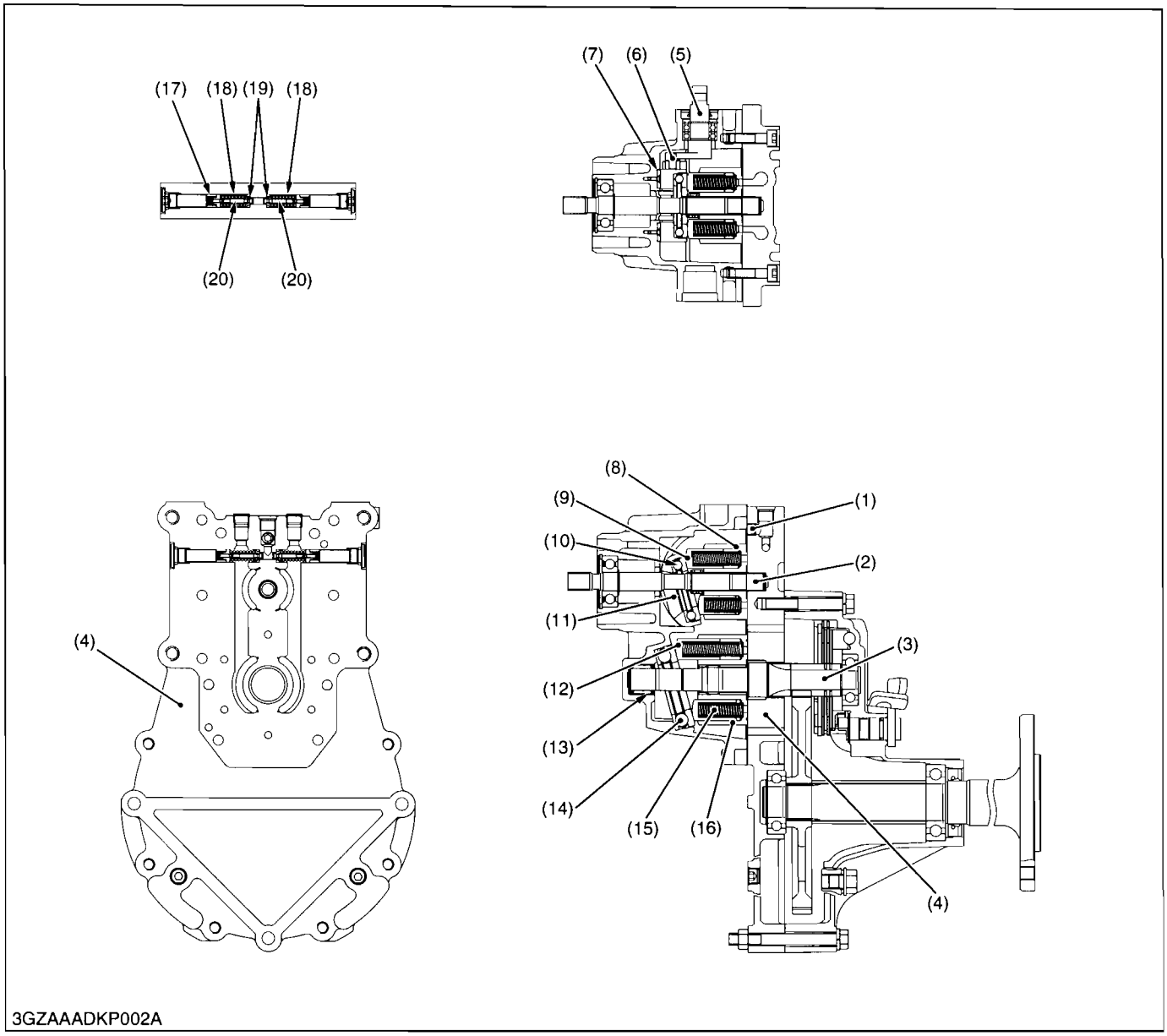

(1) Lubricating Orifice	(6) Slot Guide	(11) Swashplate	(16) Cylinder Block (Motor)
(2) Pump Shaft	(7) Cradle Bearing	(12) Piston (Motor)	(17) Check Valve Spring
(3) Brake Shaft (8T)	(8) Cylinder Block (Pump)	(13) Needle Bearing	(18) Relief Valve Spring
(4) Center Section	(9) Piston (Pump)	(14) Thrust Ball Bearing	(19) Check Valve
(5) Trunnion Arm	(10) Thrust Ball Bearing	(15) Piston Spring	(20) High Pressure Relief Valve

The hydrostatic transmission consists of variable displacement piston pump, fixed displacement piston motor and valve system.

(2) Pump and Motor

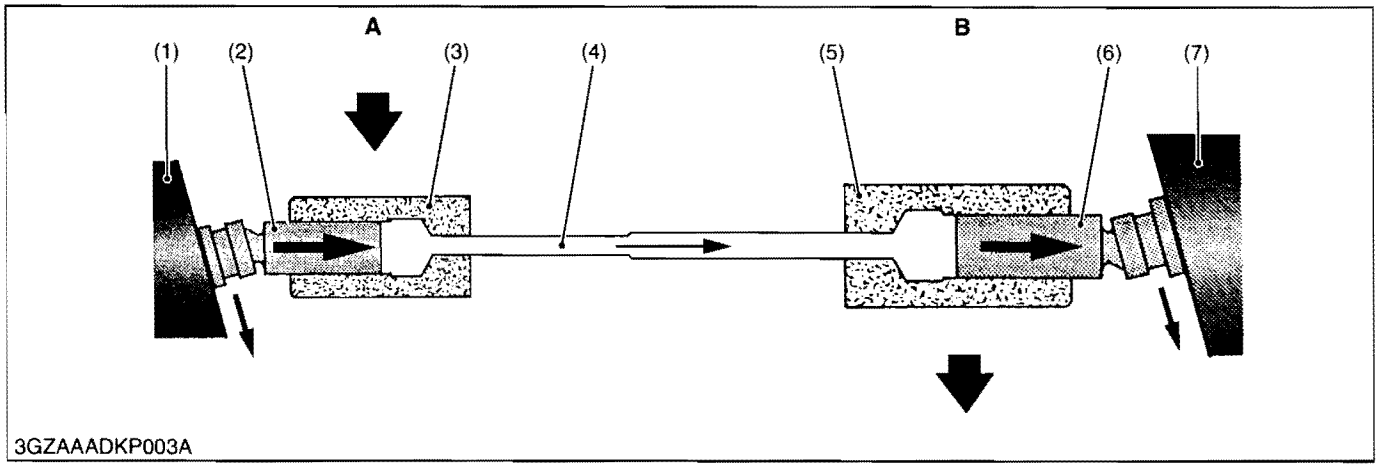

(1) Swashplate
(2) Piston
(3) Cylinder
(4) Oil
(5) Cylinder
(6) Piston
(7) Swashplate

A : Pump
B : Motor

Pump and motor cylinder, each containing pistons, are connected by lines, Cylinders and lines are filled with oil. Pistons ride against swashplates located in pump and motor.

In the pump, as the cylinder rotates, pistons move across the sloping face of swashplate and slide in or out of their cylinder bores. The oil, forced out by the pump pistons, cause the motor pistons to slide out of their cylinder bores.

In the motor, sliding out of the cylinder and moving across the sloping face of swashplate, the pistons rotate the cylinder.

■ Torque rise

Diameter of pump cylinder block is smaller than motor cylinder block. Number of piston in pump cylinder block are five pieces. Seven pieces of piston are in motor cylinder block.

Since oil charged per one revolution from pump cylinder block is less than oil per one revolution from motor cylinder block, pump speeds at pump shaft is reduced at motor shaft and the torque is risen at motor shaft.

(3) Check Valve and High Pressure Relief Valve

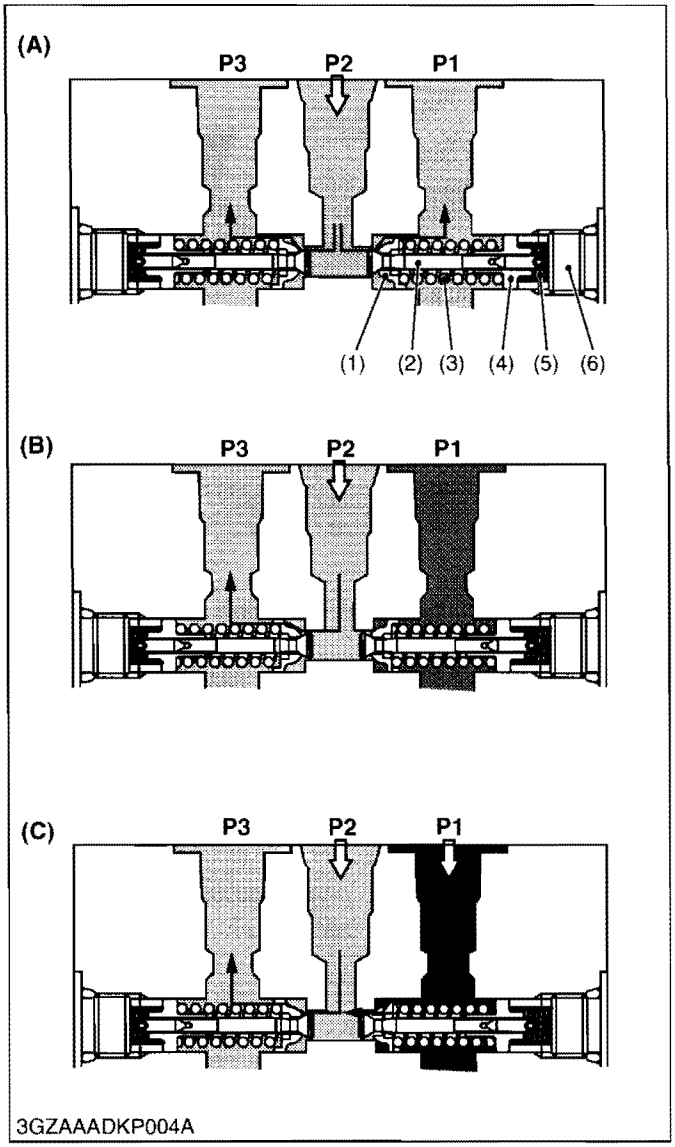

The check and high-pressure relief valve consists of pressure poppet (2), check valve seat (1), relief valve spring (3), spring guide (4) and check valve spring (5).

The valve is used to prevent an overload that would happen at a quick start, sudden stop or even during usual running. This valve doubles as a check valve.

The check and high-pressure relief valves are laid out facing each other as shown in the figure.

In neutral, both valves are open and charging oil enters into the main oil circuit through the valves. **(A)**

At normal operation, the check valve in the high-pressure side is closed and it pushes and opens the another one. An excessive charge flow goes through the charge relief valve into HST housing. **(B)**

The check and high-pressure relief valve along the high-pressure line serves as a a high-pressure relief valve. If the pressure exceeds a high-pressure limit level, the pressure poppet opens itself against the relief valve spring (3) force and opens the valve seat that is located between the check valve seat (1) and the pressure poppet (2). Now the flow goes from **P1** to **P2** and **P3**. **(C)**

If the **P1** pressure drops, the relief valve spring forces the valve seat closed against the pressure. The high-pressure oil at **P1** does not flow to **P2** any longer.

As discussed above, the check and high-pressure relief valve protects engines, pumps, motors, gears and even the machine itself from overload.

Oil temperature	Valve operating pressure
50 °C (122 °F)	23.5 to 25.5 MPa 240 to 260 kgf/cm^2 3408 to 3698 psi

(1) Check Valve Seat
(2) Pressure Poppet
(3) Relief Valve Spring
(4) Spring Guide
(5) Check Valve Spring
(6) Valve Plug

(A) In Neutral (Stop)
(B) When Check Valve Activating (Normal Operation)
(C) When High Pressure Relief Valve Activating
P1 : Forward
P2 : Change
P3 : Reverse

W1013434

(4) Oil Flow

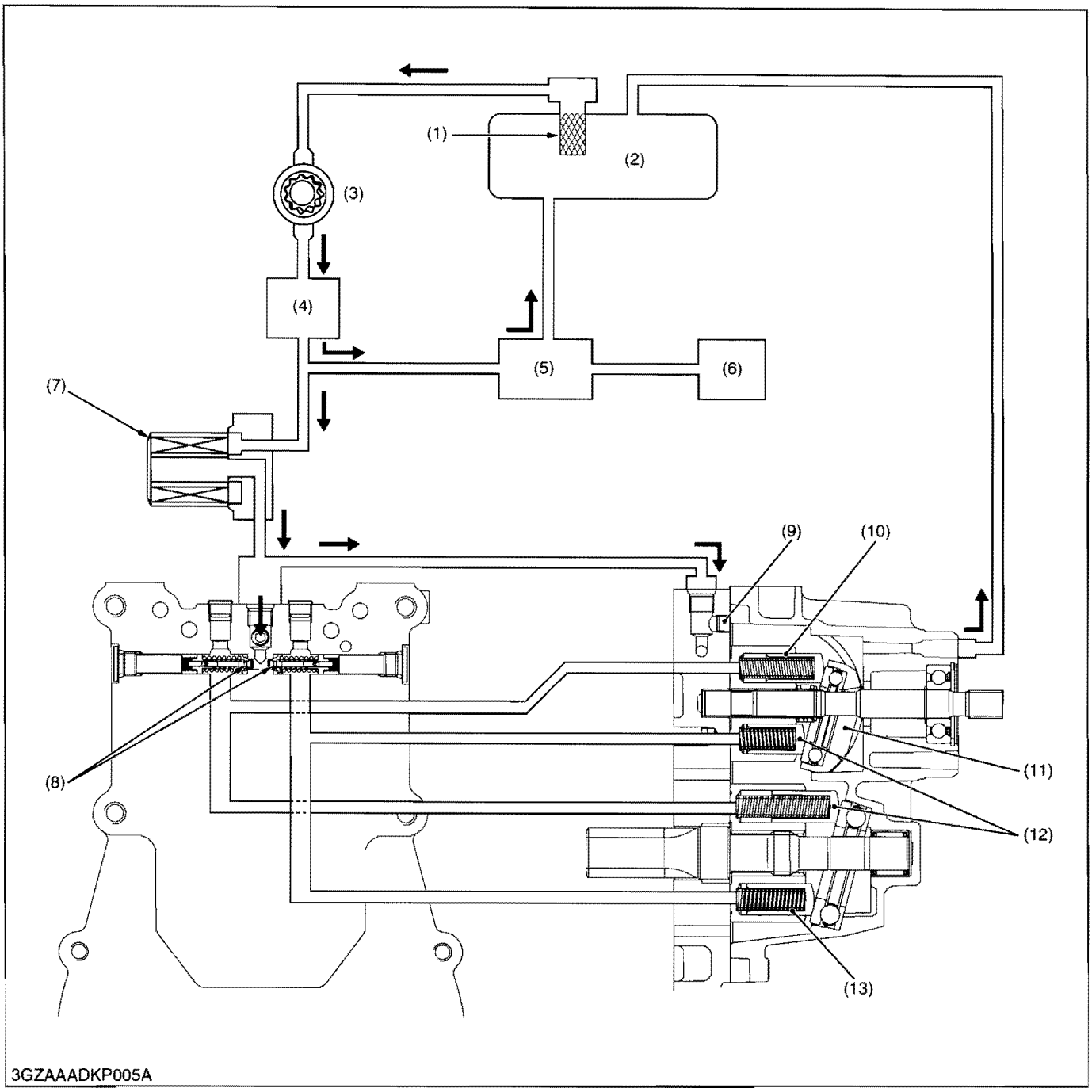

(1) Oil Strainer
(2) Transmission Case
(3) Hydraulic Pump
(4) Control Valve
(5) Regulator Valve
(6) PTO Clutch
(7) Oil Filter Cartridge
(8) Check and High Pressure Relief Valve
(9) Lubricating Orifice
(10) Cylinder Block (Pump)
(11) Swashplate
(12) Piston
(13) Cylinder Block (Motor)

The pump and motor are joined in a closed hydraulic loop and most of oil circulates within the main oil circuit.

A little oil lubricates and oozes out from the clearance between the moving parts of the case. Then oil in the main oil circuit of the HST needs to be supplied a want.

The charge oil is sent to the HST housing after the control valve and oil filter pass with the hydraulic pump.

The charge oil aids smooth operation of pistons for pump and motor. And overflow oil from HST housing return to the transmission case.

(5) Power Trains Operation

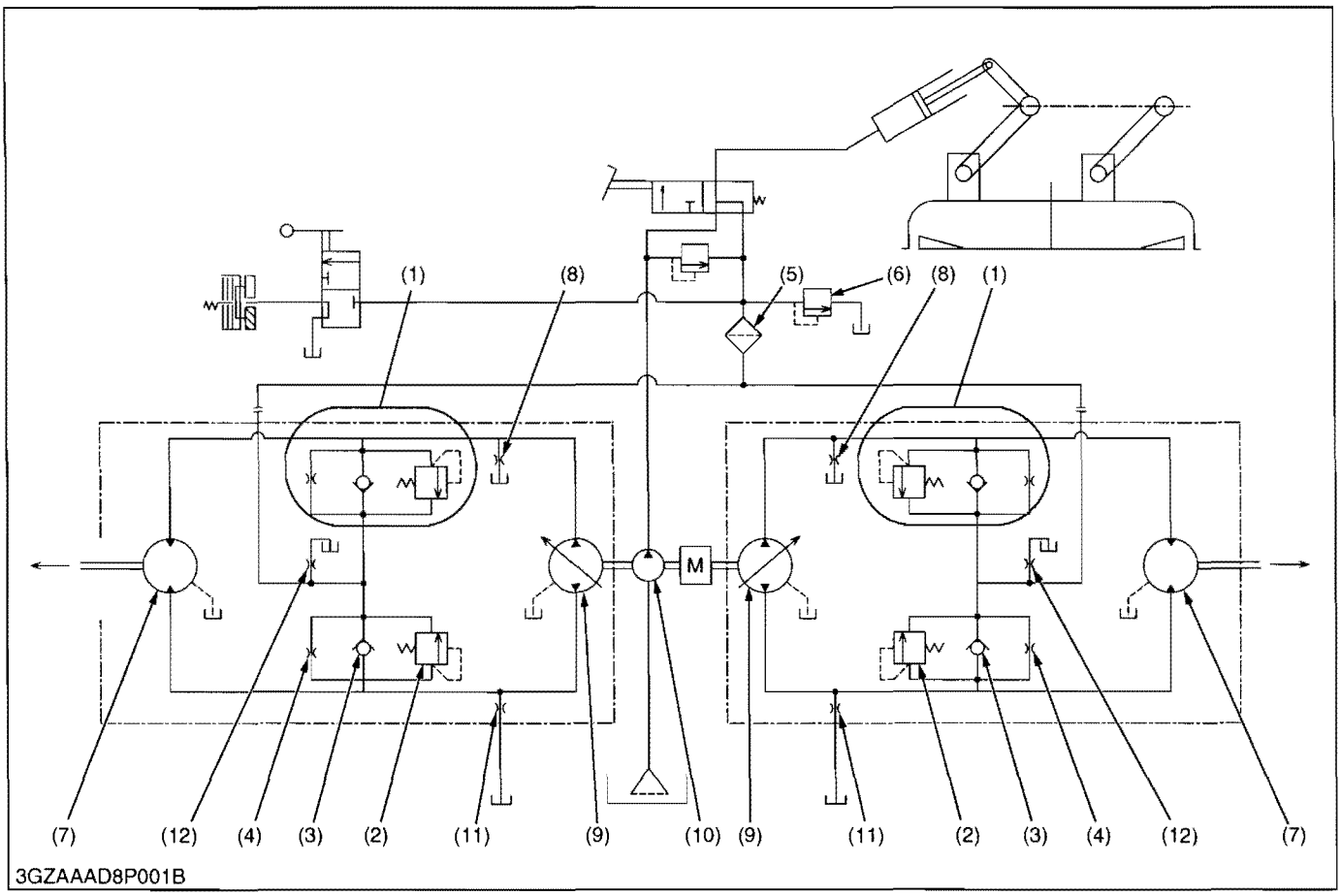

(1) Check and High Pressure Relief Valve
(2) High Pressure Relief Valve
(3) Check Valve
(4) Neutral Orifice
(5) Oil Filter
(6) Regulator Valve
(7) Motor
(8) Lubricating Orifice
(9) Pump
(10) Hydraulic Pump
(11) Orifice (To Transmission)
(12) Orifice (To Rear Axle Case)

■ Neutral

With the control levers in the **NEUTRAL** position, the piston springs in the pump block in the pumps force the swash plates to a position that is parallel to the pump body. With the swash plates parallel to the pump body, the pistons do not reciprocate in the cylinder block, they merely rotate, and no oil is being drawn in or discharged from the pump. The machine is in a zero displacement position and the machine remains stationary.

Oil returning from the HST housing and hydraulic pump is directed through the regulating valve before returning to the transmission case.

■ Forward

As the control levers are pushed forward, the swash plates in the pumps move from the neutral position (parallel to the pump body) to a forward angle position. Piston springs inside the cylinder bores force the pistons against the swash plates.

As the cylinder block rotates, the pistons follow the contour of the swash plate, moving outward, drawing oil into their bores. As the cylinder block continues to rotate, the pistons are forced into their bores, discharging oil under pressure.

High-pressure oil from the pumps is routed to the motors, driving the machine forward.

■ Reverse

Reverse operation is accomplished by reversing the angle applied to the pump swash plates, reversing the flow of high-pressure oil to the motors.

(6) Control Linkage

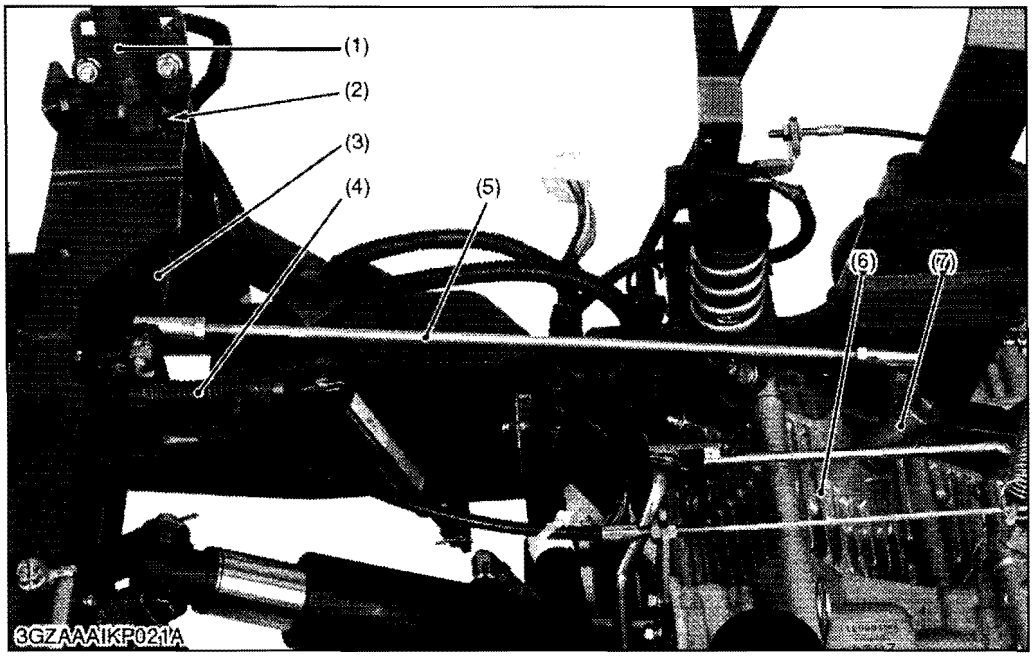

(1) Motion Control Lever
(2) Neutral Slot
(3) Speed Shaft
(4) Speed Limit Spring
(5) Speed Control Rod
(6) HST
(7) Trunnion Arm

W1014701

The motion control lever (1) and the trunnion shaft of variable swashplate are linked with the speed shaft (3), speed control rod (5) and the trunnion arm (7). As the motion control lever (1) is pushed, the swashplate rotates and forward travelling speed increases. Pulling the motion control lever (1) increases reverse speed.

A neutral position can be requested by the thing to operate the motion control lever (1). Moreover, it is possible to fix to a neutral position by putting the motion control lever (1) in the neutral slot (2). The motion control lever (1) is pushed by the speed limit spring's (4) working when the motion control lever (1) is removed from the neutral slot (2). As the result, the machine synchronizes with the movement of the motion control lever (1) and begins to move slowly. (The machine is set like this.) The damper connected to the speed shaft (3) restricts the movement of the linkage to prevent abrupt operation or reversing.

■ Steering

The Zero-Turn Mower does not have a separate steering system. Steering is accomplished by varying the wheel motor speeds. This gives the machine a zero-turn capability.

As the control levers are moved to a full left turn position, the right hydraulic pump is moved to the full-speed forward position and the left pump is moved to the full-speed reverse position. This will allow the machine to pivot around its center.

https://truckmanualshub.com/

(7) Final Reduction Gear Section

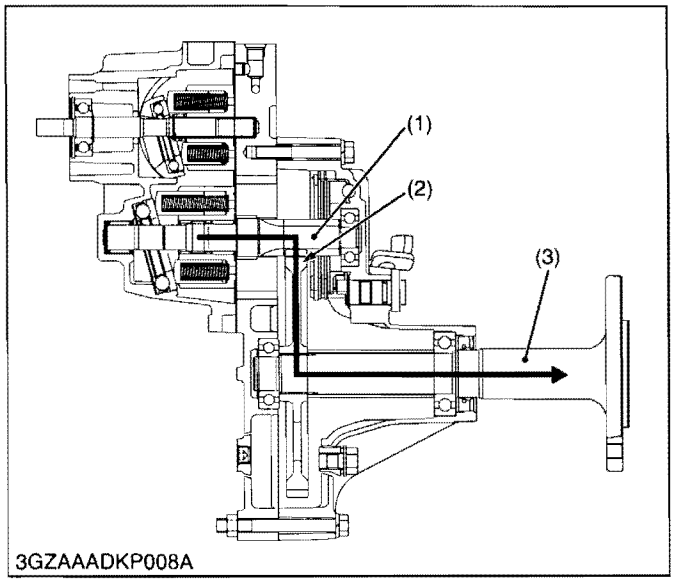

As for this machine, power is transmitted from the gear on the brake shaft (1) to the rear axle (3) through 70T gear.

(1) Brake Shaft (8T)
(2) 70T Gear
(3) Rear Axle

W1014957

(8) PTO System

■ PTO Clutch and Valve

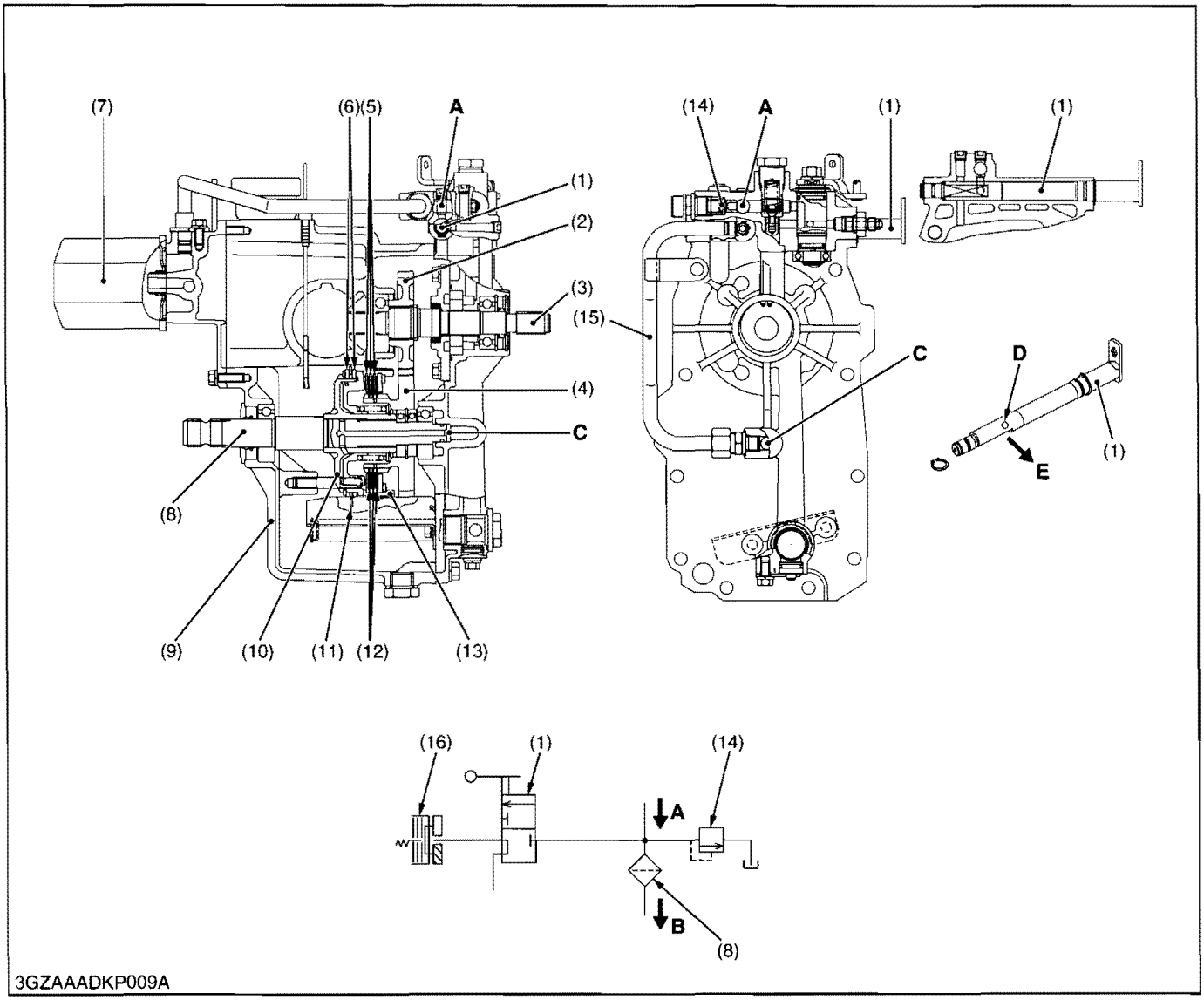

(1) PTO Valve Lever
(2) 34T Gear
(3) Input Shaft
(4) 43T Gear
(5) PTO Clutch Plate
(6) PTO Brake Plate
(7) Oil Filter Cartridge
(8) PTO Shaft
(9) Center Case
(10) Piston
(11) PTO Brake Disk
(12) PTO Clutch DIsk
(13) PTO Case
(14) Regulator Valve
(15) PTO Pipe

A : From Hydraulic Pump to Valve Lever
B : To Hydrostatic Transmission
C : From PTO Valve Lever to PTO Shaft
D : From Hydraulic Pump
E : To PTO Shaft

The ZD series equipped with hydraulic independent PTO clutch (wet multi-plates type). Therefore, the engine power could engage or disengage to the PTO shaft (8) without stopping the machine movement.

The PTO clutch pack (16) has three clutch disks (12), three clutch plates (5), clutch piston (10) and so on.

The clutch piston (10) is actuated by hydraulic oil flow the hydraulic pump through regulator valve (14).

https://truckmanualshub.com/

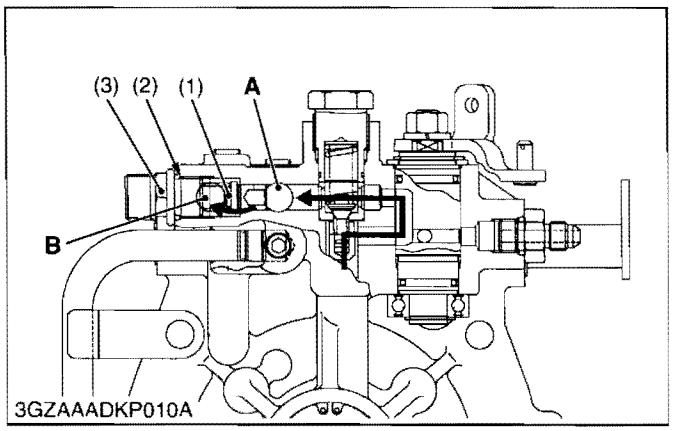

■ Regulator Valve

This machine is controlled with the regulator valve so that the oil sent from the hydraulic pump may become the setting pressure. And the oil flows into oil filter cartridge PTO clutch and hydrostatic transmission.

(Reference)

- Regulator valve setting pressure : 0.5 to 0.7 MPa
  5.0 to 7.0 kgf/cm^2
  71.2 to 101.1 psi

(1) Poppet
(2) Spring
(3) Plug

A : From Hydraulic Pump to Oil Filter Cartridge, PTO Clutch and Hydrostatic Transmission
B : To Transmission Case

W1015421

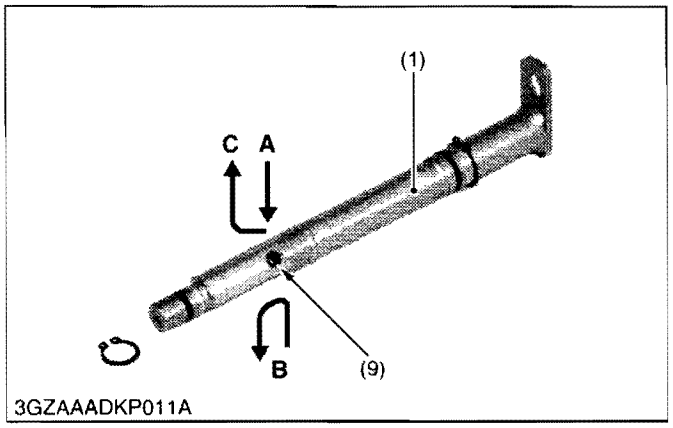

■ PTO Clutch "Disengaged"

After starting the engine, when the PTO clutch lever is set at the **"Disengaged"** position, the hole (9) of PTO valve lever (1) dose not face to hydraulic pump port.

Since oil from hydraulic pump is blocked at the PTO valve lever (1), oil dose not flow to the PTO shaft. Blocked oil flows to the oil filter cartridge or to the regulator valve.

Oil in the clutch pack drained through the PTO valve lever into the transmission case.

Thus the clutch piston (4) is pushed back by the spring (6). When the piston (4) is pushed back, the piston pushed the brake plate (3) and brake disk, the rotation and drag of the PTO shaft (2) stop.

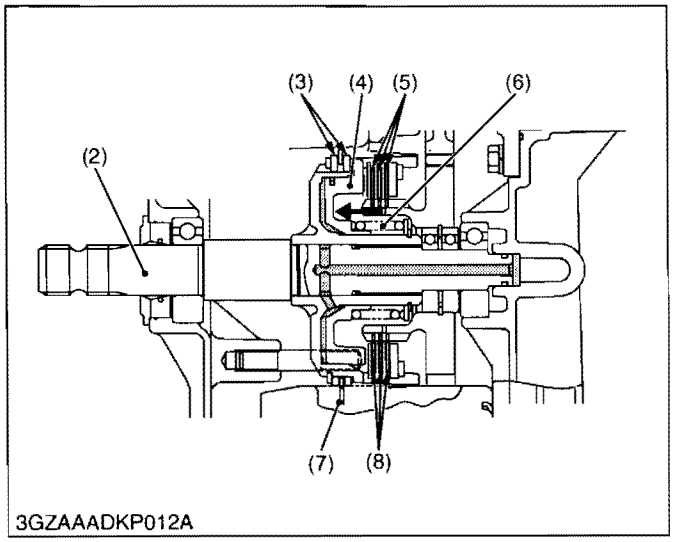

(1) PTO Valve Lever
(2) PTO Shaft
(3) PTO Brake Plate
(4) Piston
(5) PTO Clutch Plate
(6) Spring
(7) PTO Brake Disk
(8) PTO Clutch Disk
(9) Hole

A : From Hydraulic Pump
B : To Transmission Case
C : To Oil Filter Cartridge or Regulator Valve

W1015803

https://truckmanualshub.com/

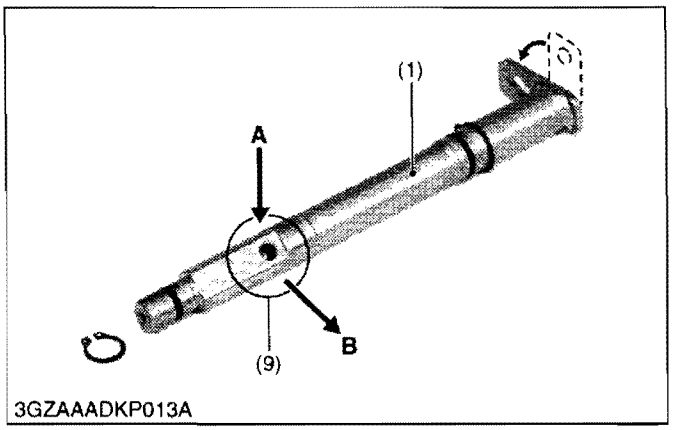

3GZAAADKP013A

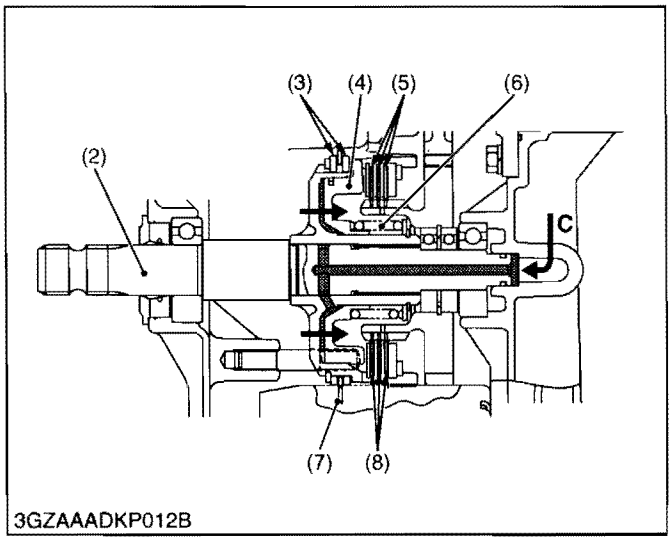

3GZAAADKP012B

■ PTO Clutch "Engaged"

When the PTO clutch lever is set at the **"Engaged"** position, the PTO clutch valve (1) rotates.

"L" shape oil inner passage in the PTO clutch valve (1) forms the oil line to the PTO clutch pack.

Oil entering the clutch pack pushes the clutch piston (4) to engage the clutch pack.

(1) PTO Valve Lever
(2) PTO Shaft
(3) PTO Brake Plate
(4) Piston
(5) PTO Clutch Plate
(6) Spring
(7) PTO Brake Disk
(8) PTO Clutch Disk
(9) Oil Inner Passage

A : From Hydraulic Pump
B : To PTO Shaft
C : To PTO Pipe

W1016171

■ Parking Brake

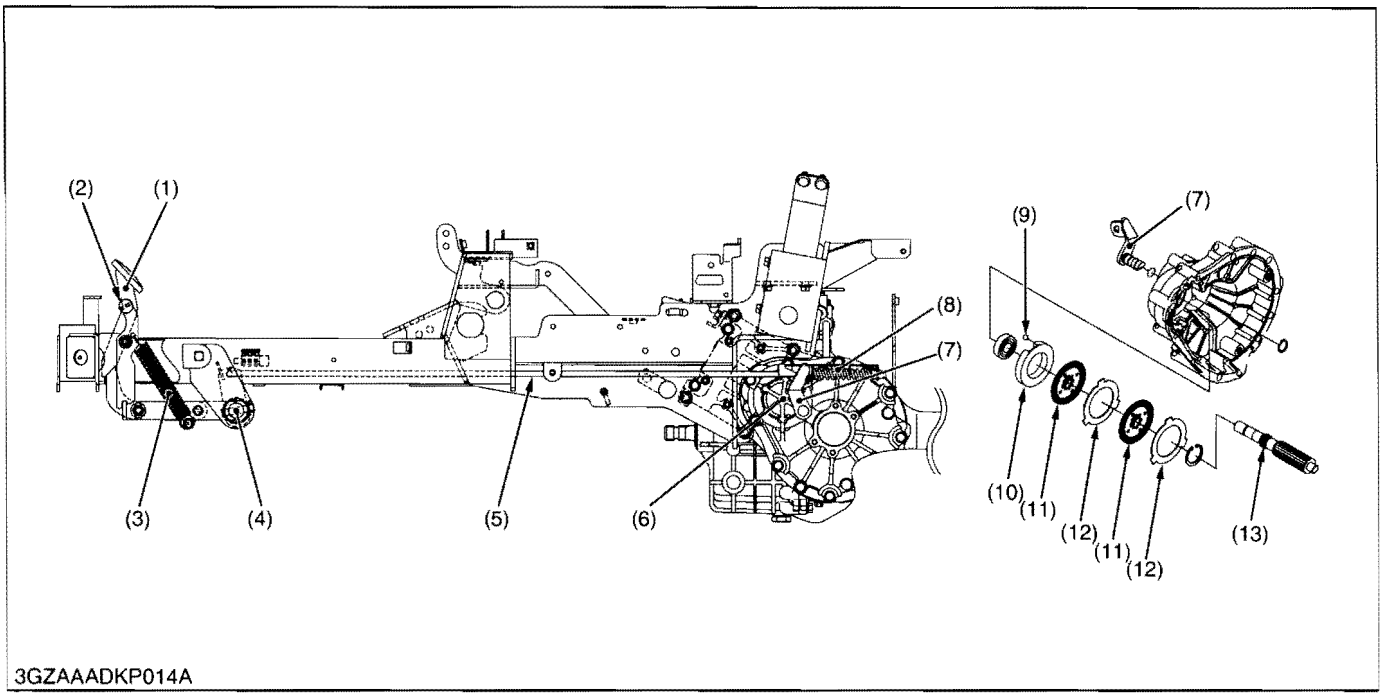

(1) Brake Pedal
(2) Parking Lock Pedal
(3) Brake Pedal Return Spring
(4) Brake Shaft
(5) Brake Rod
(6) Brake Assembly
(7) Brake Arm
(8) Brake Spring
(9) Ball
(10) Actuator
(11) Brake Disk
(12) Brake Plate
(13) HST Motor Shaft (Brake)

The parking brake is composed of brake pedal (1), parking lock pedal (2), brake pedal return spring (3), brake shaft (4), brake rods (5), brake arms (7) and brake assemblies (6).

The brake is mechanical wet disks type.

When the brake pedal (1) is pressed, the brake shaft (4) is rotated forward and the brake rods (5) is pulled forward. And the brake arms (7) are rotated forward.

The brake arms (7) is connected mechanically to the grooves of the actuators (10).

The brake arms (7) rotates the actuators (10) and the actuators (10) mounting on three balls pushes the brake disks (11) and brake plates (12) to stop the brake shafts rotation.

As both the brake pedal (1) and parking lock pedal (2) are pressed, the parking brake will be applied and locked.

https://truckmanualshub.com/

SERVICING

CONTENTS

1. TROUBLESHOOTING 2-S1
2. SERVICING SPECIFICATIONS 2-S3
3. TIGHTENING TORQUES 2-S4
4. CHECKING, DISASSEMBLING AND SERVICING 2-S5
   [1] CHECKING AND ADJUSTING 2-S5
   [2] SEPARATING TRANSAXLE 2-S13
   [3] DISASSEMBLING TRANSAXLE 2-S16
   [4] SERVICING 2-S23
      (1) Hydrostatic Transmission 2-S23
      (2) Transmission Case 2-S24
      (3) PTO Clutch 2-S27
      (4) Brake 2-S27

https://truckmanualshub.com/

1. TROUBLESHOOTING

Symptom	Probable Cause	Solution	Reference Page
Vehicle Will Not Stop in Neutral Position	Improper neutral adjustment	Adjust neutral	2-S5
	Improper speed change rod adjustment	Adjust	2-S5
Vehicle Jerky and Noisy When Starting	Transmission oil insufficient	Replenish	2-S13
	Air entering from suction pipe	Replenish	–
	Oil Strainer clogged	Clean	G-22
	Transmission oil filter cartridge clogged	Replace	G-20
	Hydrostatic transmission defective	Replace	2-S15
Loss of Power	Control linkage defective	Repair or replace	–
	Transmission oil insufficient	Replenish	2-S13
	Oil strainer clogged	Clean	G-22
	Transmission oil filter cartridge clogged	Replace	G-20
	Hydraulic pump defective	Replace	2-S17
	Hydrostatic transmission defective	Replace	2-S15
System Operates in One Direction Only	Check valve defective	Replace	2-S18
	Control linkage defective	–	–
System Operating Hot	Transmission oil insufficient	Replenish	2-S13
	Oil strainer clogged	Clean	G-22
	Transmission oil filter cartridge clogged	Replace	G-20
	Overload working	–	–
Noise from Transmission	Transmission oil insufficient	Replenish	2-S13
	Gear worn	Replace	–
	Improper backlash between 16T bevel gear and 19T bevel gear	Adjust	2-S25
	Bearing worn	Replace	2-S25

W1014322

https://truckmanualshub.com/

TRAVELLING GEAR SHIFT SECTION

Symptom	Probable Cause	Solution	Reference Page
Noise from Transmission	Transmission oil insufficient	Refill	2-S13
	Gear worn or broken	Replace	–
	Bearings worn	Replace	2-S25

W1013580

PTO SECTION

PTO Clutch Slip	Operating pressure is low	Check	2-S10
	PTO clutch valve malfunctioning	Repair or replace	2-S17
	Clutch disk or drive plate excessively worn	Replace	2-S21
PTO Shaft Does Not Rotate	PTO clutch malfunctioning	Repair or replace	2-S21
PTO Clutch Operating Pressure Is Low	Transmission oil improper or insufficient	Replenish or change	2-S13
	Regulator valve malfunctioning	Check or replace	2-S17
PTO Clutch Drags	Brake plate excessively worn	Replace	2-S27
	Clutch spring weaken or broken	Replace	2-S27
	Deformation of pressure plate or steel plate	Replace	2-S27

W1013718

PARKING BRAKE SECTION

Brake Drags	Brake spring play too small	Adjust	2-S11
	Brake return spring weaken or broken	Replace	2-S11
Poor Braking Force	Brake spring play excessive	Adjust	2-S11

W1013718

2. SERVICING SPECIFICATIONS

Item		Factory Specification	Allowable Limit
Regulator Valve	Setting pressure	0.49 to 0.68 MPa 5.0 to 7.0 kgf/cm^2 72 to 99 psi	–
PTO Clutch	Operating pressure	Above 0.49 MPa Above 5.0 kgf/cm^2 Above 72 psi	–
Creeping Speed At Maximum Engine rpm	Wheel rotation	8 to 10 min^{-1} (rpm)	–
Check and High Pressure Relief Valve	Relief valve setting Pressure	23.6 to 25.4 MPa 240 to 260 kgf/cm^2 3420 to 3690 psi	–
Maximum Speed At Maximum Engine rpm	Wheel rotation	148 to 150 min^{-1} (rpm)	–
Motion control lever Alignment	Gap Space	0 to2 mm 0 to 0.07 in. 10 to 20 mm 0.40 to 0.78 in.	– –
16T Bevel Gear to 19T Bevel Gear	Backlash	0.13 to 0.25 mm 0.0052 to 0.0098 in.	–
Brake Spring	Length (with the brake applied to the lock position) Play	115 to 117 mm 4.53 to 4.60 in. 0.50 to 1.0 mm 0.020 to 0.039 in.	– –

W1013874

https://truckmanualshub.com/

3. TIGHTENING TORQUES

Tightening torques of screws, bolts and nuts on the table below are especially specified.
(For general use screws, bolts and nuts : See page G-10.)

Item	N·m	kgf·m	lbf·ft
Motion control lever mounting bolt and nut	18 to 20	1.8 to 2.1	13 to 15
Hydrostatic transmission mounting screw	25 to 29	2.5 to 3.0	18 to 21
Rear wheel mounting nut	65 to 75	6.6 to 7.7	48 to 55
Transaxle mounting screw (M12)	78 to 90	7.9 to 9.2	58 to 66
Transaxle mounting screw (M10)	48 to 55	4.9 to 5.7	36 to 41
M12 7T Aluminium	63 to 72	6.4 to 7.4	47 to 53
M10 7T Aluminum	40 to 44	4.0 to 4.5	29 to 32
M12 7T	78 to 90	7.9 to 9.2	58 to 66
M10 7T	48 to 55	4.9 to 5.7	36 to 41
Hydraulic pump housing mounting screw	40 to 44	4.0 to 4.5	29 to 32
Center cover mounting screw	40 to 44	4.0 to 4.5	29 to 32
Center section mounting hex. socket head screw	18 to 20	1.8 to 2.1	13 to 15
Check and high pressure relief valve plug	30 to 44	3.0 to 4.5	22 to 32

W1012736

4. CHECKING, DISASSEMBLING AND SERVICING

[1] CHECKING AND ADJUSTING

Checking Neutral of HST

1. Park machine safely.
2. Set the motion control levers are in the **NEUTRAL** position.
3. Move the PTO lever to **OFF** position and apply the parking brake.
4. With the operator on the seat and start the engine.
5. Move the throttle lever to **Max. speed** position.
6. Release the parking brake.
7. Check the drive wheels, the wheel should not move.
8. If movements is noted, perform adjustment as follows.

W1013128

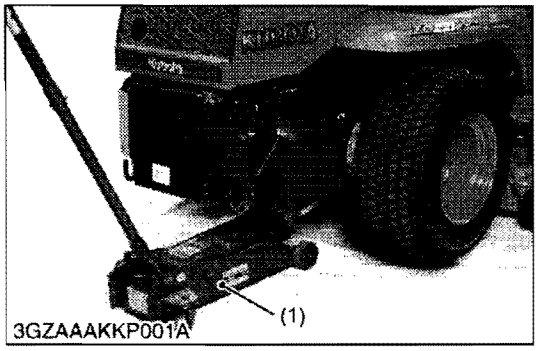

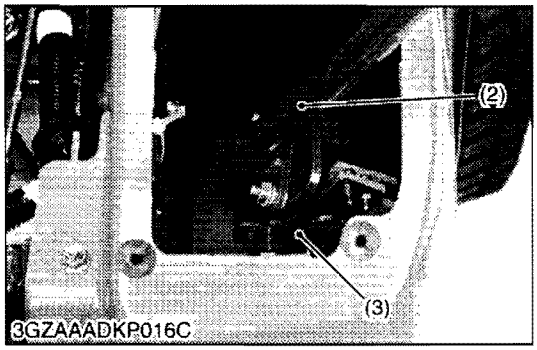

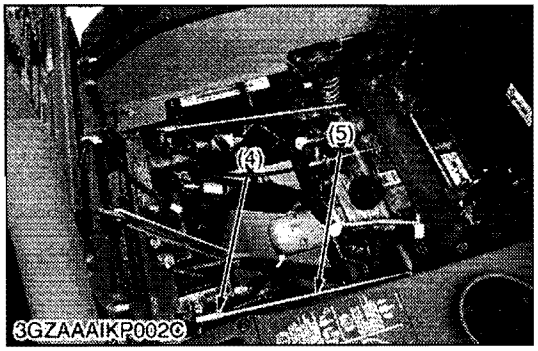

Adjusting Neutral of HST

CAUTION

- **Park the machine on a hard and level surface.**
- **If it is necessary to run engine in an enclosed area, use a gas tight exhaust pipe extension to remove the fumes.**
- **Always try to work in a well-ventilated are.**
- **Lift up and secure with jack stands or blocking the rear of the machine, do not run the machine while adjusting.**
- **Do not adjust only one of the following adjustment; exclude "MOTION CONTROL LEVER POSITION". They are relative each other.**

1. Turn key switch to **OFF** position.
2. Apply the parking brake. Remove the motion control lever cover.
3. Set the motion control levers (2) to **Neutral lock** position.
4. Remove the set knobs of seat frame, then raise and latch the seat assembly.
5. Remove the connector from the seat safety switch, then **temporarily** install a jumper wire across the terminals in the connector of the wiring harness.
6. Raise the rear of machine and block up so that rear wheel can rotate freely.
7. Loosen the lock nuts from the ball joints on the two rods.
8. Start the engine.
9. Move the throttle lever to **Max. speed** position.
10. Release the parking brake.
11. Adjust the speed control rod (5) length by rotating the double nuts on the rod appropriate direction until the rear wheel no rotation from reverse rotation.
12. The left rod assembly controls left wheel and the right rod assembly controls right wheel.
13. Repeat on opposite side of unit, tighten lock nuts (4) securely against ball joint.
14. Shut off the machine. Install the motion control lever covers. Remove jumper wire from wire harness connector and plug connector or into seat safety switch.

■ IMPORTANT

- **The right and left motion control lever (2) can be adjusted independently.**
- **This machine has a creep speed.**

(1) Garage Jack
(2) Motion Control Lever
(3) Guide Plate
(4) Lock Nut
(5) Speed Control Rod

W1013414

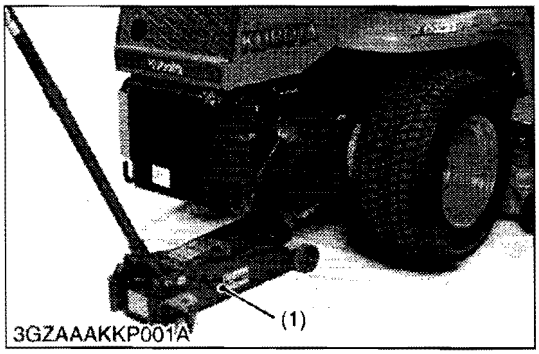

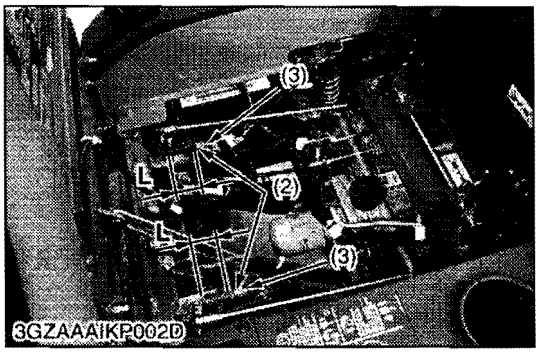

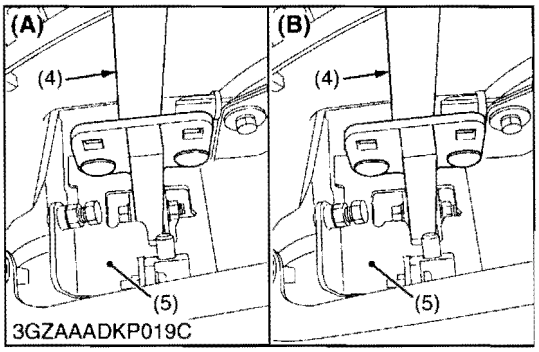

Checking Creep in Forward

CAUTION

- **Park the machine on a hard and lever surface.**
- **If it is necessary to run engine in an enclosed area, use a gas tight exhaust pipe extension to remove the fumes.**
- **Always try to work in a well-ventilated area.**
- **Lift up and secure with jack stands or blocking the rear of the machine, do not run the machine while adjusting.**
- **Do not adjust only one of the following adjustment; exclude "MOTION CONTROL LEVER POSITION". They are relative each other.**

■ CREEP SPEED

1. Lift-up and secure with garage jack or blocking the rear of the machine frame.
2. Remove both rear wheels.
3. Start the engine, and run at maximum speed.
4. Place the lever in **"NEUTRAL"** position.
5. Pull the lever to the reverse maximum position and release the lever.
6. Measure the axle rotation.
7. Loosen the lock nut and adjust the creep speed control bolt length so that the axle rotation is between 8 to 10 revolutions per minute. (Do not change spring length **L** = 55 to 56 mm (2.17 to 2.2 in.))
8. Lock the nut.
9. Check the axle creep rpm again. If it is not correct, adjust again.
10. Adjust the other side **"CREEP SPEED"** equally.
11. After adjustment, make sure to stop the engine immediately.

■ IMPORTANT

- **The right and left motion control lever (4) can be adjusted independently.**

Wheel rotation	Factory spec.	8 to 10 min^{-1} (rpm) at max. engine speed

■ NOTE

- **Because the adjustment valve might change into the adjustment for a long time by the weight of the motion control lever (5), it is a noted thing.**

(1) Garage Jack
(2) Lock Nut
(3) Creep Speed Control Bolt
(4) Motion Control Lever
(5) Guide Plate

(A) CREEP Position
(B) NEUTRAL Position

L : 55 to 56 mm (2.17 to 2.2 in.)

W1014005

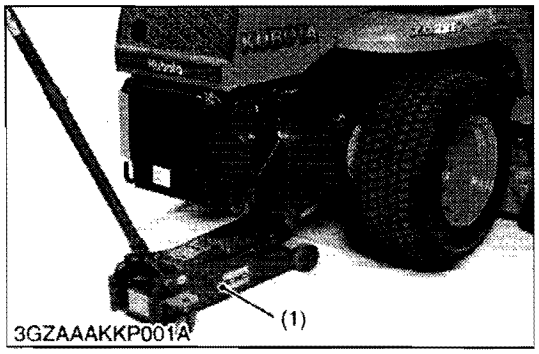

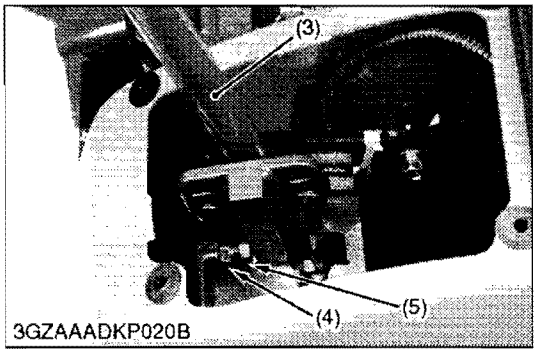

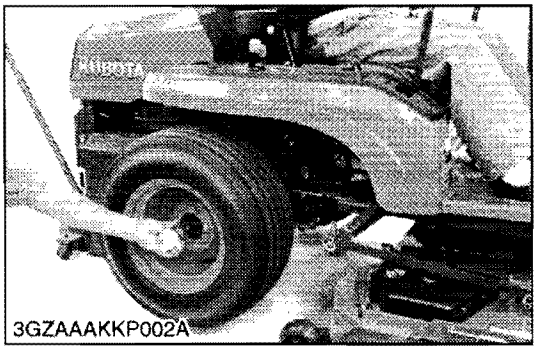

Adjusting Maximum Speed

CAUTION

- **Park the machine on a hard and level surface.**
- **If it is necessary to run engine in an enclosed area, use a gas tight exhaust pipe extension to remove the fumes.**
- **Always try to work in a well-ventilated area.**
- **Lift up and secure with jack stands or blocking the rear of the machine, do not run the machine while adjusting.**
- **Do not adjust only one of the following adjustment; exclude "MOTION CONTROL LEVER POSITION". They are relative each other.**

1. Turn key switch to **OFF** position.
2. Apply the parking brake.
3. Set the motion control lever (2) to **Neutral lock** position.
4. Remove the set knobs of seat frame, then raise and latch the seat assembly.
5. Remove the connector from the seat safety switch, then **temporarily** install a jumper wire across the terminals in the connector of the wiring harness.
6. Remove the motion control lever covers.
7. Raise the rear of machine and block up so that rear wheel can rotate freely.
8. Start the engine.
9. Move the throttle lever to **Max. speed** position.
10. Push the motion control lever (2) to the front until the speed set bolt (4) comes into contact with the stopper plate.

NOTE

- **At this time, the thing that the speed set bolt (4) touches the stopper plate is.**

11. Measure the rotations of rear wheel.
12. If the measurement is not within the factory specifications, loosen the lock nut (3) and adjust the length of speed set bolt (4).

Max. speed: Wheel rotation	Factory spec.	148 to 150 min^{-1} (rpm) at max. engine speed.

NOTE

- **The right and left speed set bolt can be adjusted independently.**

(1) Garage Jack
(2) Motion Control Lever
(3) Lock Nut
(4) Speed Set Bolt

W1015052

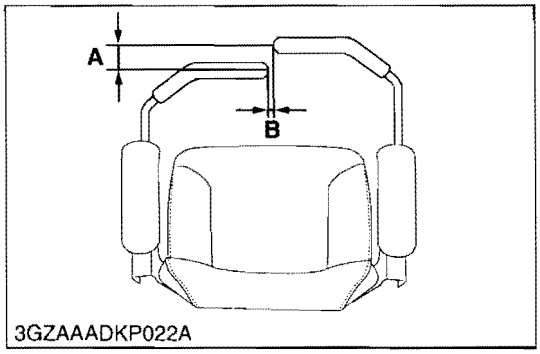

3GZAAADKP022A

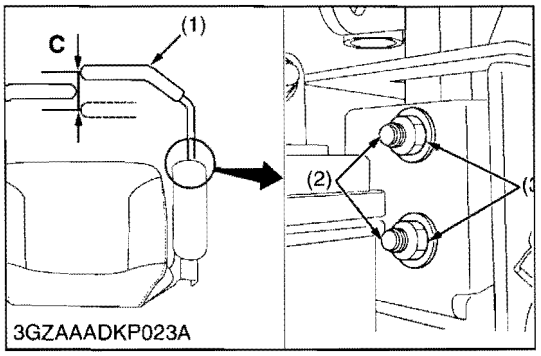

3GZAAADKP023A

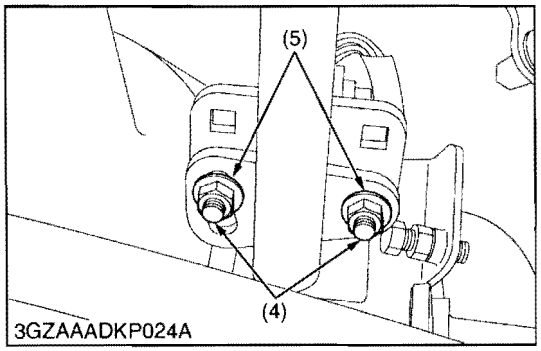

3GZAAADKP024A

Checking Motion Control Lever Alignment

CAUTION

- **When checking, park the tractor on flat ground, apply the parking brake.**

1. Check the gap **A** and space **B**between the motion control levers, at the maximum forward position.
   If positions of the motion control levers are unequal, an adjustment is necessary.

[When adjusting alignment]

1. Stop the engine and apply the parking brake.
2. Loosen the nut and remove the boot.

■ **Lever position (High or Low)**

3. Remove the screw (2) and select the motion control lever position, high or low.
4. Tighten the screw (2) and install the boot.

■ **Lever alignment (Right and Left)**

5. Loosen the screws (2).
6. Slide both motion control levers forward or rearward to desired position within tab slots until levers are aligned.
7. Tighten the screws (2).

Gap **A**	Factory spec.	0 to 2 mm 0 to 0.07 in.
Space **B**	Factory spec.	10 to 20 mm 0.40 to 0.78 in.

■ **NOTE**

- **If the ends of the levers strike against each other while in the "NEUTRAL" position, move the levers outward to the "NEUTRAL LOCK" position and carefully bend them outward.**
- **Move them back to the "NEUTRAL" position and check for the recommended space.**

(1) Motion Control Lever
(2) Screw
(3) Nut
(4) Screw
(5) Nut

A : Gap
B : Space
C : Free Travel

W1016316

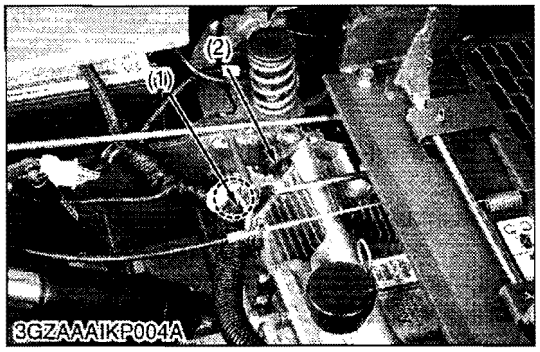

Checking Hydrostatic Transmission

CAUTION

- **When checking, park the machine on flat ground, apply the parking brake.**
- **Sit on operator's seat for checking.**

1. After worming up the machine, apply the parking brake and set the stop wood (chock) to the rear wheels.
2. Remove the plug (1) from the HST and set the HST adaptor. Then install the pressure gauge.

NOTE

- **Note that the allen wrench does not come off firmly because the plug is not loose hard. Otherwise, the plug (1) might be damaged, and the plug not be loosened.**

3. The safety switch for motion control lever is **temporarily** turned on, and the state which can be checked is made.
4. Start the engine.
5. Move the throttle lever to **Max. speed** position.
6. Grasp the motion control lever and move then inward from **"NEUTRAL LOCK"** position to position and then slowly push forward. And measure the pressure of HST.
7. At this time, if pressure rise to 15.0 MPa (153 kgf/cm^2, 2180 psi), it is assumed OK.

NOTE

- **If pressure exceeds 25.5 MPa (260 kgf/cm^2, 3698 psi) rear wheel can not be locked with parking brake. Please fix the rear wheel hub with the stick etc., pressure at time.**

8. If the operation pressure does not rises to 15.0 MPa (153 kgf/cm^2, 2175 psi), repair or replace the HST.

(Reference)

Check and high pressure relief valve pressure	Factory spec.	23.6 to 25.4 MPa 240 to 260 kgf/cm^2 3420 to 3690 psi

IMPORTANT

- **When the check and high pressure relief valve pressure is measured, the thing that the relief valve is not operated continuously for 5 seconds or more. Otherwise, HST might to break.**

(1) Plug (Forward Side) (2) Plug (Reverse Side)

W1017398

https://truckmanualshub.com/

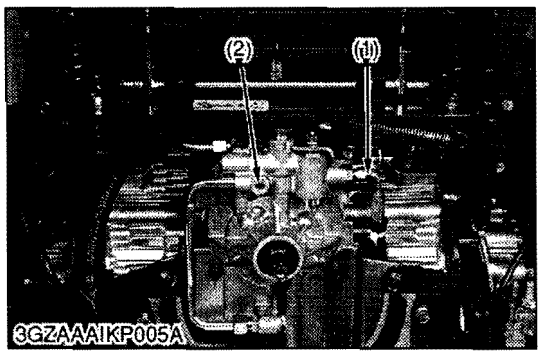

PTO Clutch Operating Pressure (Hydrostatic Transmission Charge Pressure)

CAUTION

- **When checking, park the tractor on flat ground, apply the parking brake.**

1. Remove the plug (2), then install the adaptor cable and pressure gauge.
2. Start the engine and set at maximum speed.
3. At this time, read the pressure gauge.
4. If the pressure is not within the factory specifications, check the regulator valve and related hydraulic components.

PTO clutch operating pressure	Factory spec.	Above 0.49 MPa Above 5.0 kgf/cm^2 Above 72 psi

Condition

- Engine speed ..... Maximum
- Oil temperature ..... 45 to 55 °C
  113 to 131 °F

(1) PTO Clutch Lever (2) Plug

W1017788

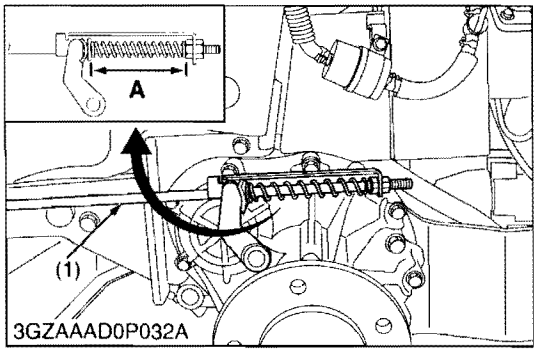

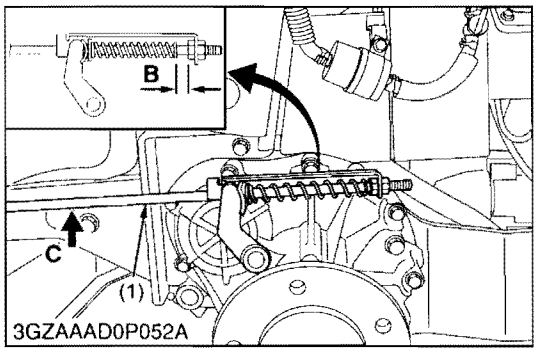

Checking and Adjusting Parking Brake

CAUTION

- **Park the machine on a firm and level surface.**
- **Stop the engine and chock the wheels before checking or adjusting.**

IMPORTANT

- **Wrong adjustment may cause machine damage.**

Check brake spring

1. Place the motion control levers to the **"NEUTRAL LOCK"** position.
2. Be sure to chock the rear wheels.
3. Apply the parking brake to the lock position.
4. Check the length of the brake springs on both sides.

Proper brake spring length **(A)** with the brake applied to the lock position	Factory spec.	115 to 117 mm 4.53 to 4.60 in.

5. Release the parking brake completely.
6. Hold the brake rod (1) lightly.
7. Check the brake spring play.

Proper brake spring play **(B)**	Factory spec.	The spring must have play. 0.50 to 1.0 mm 0.020 to 0.039 in.

8. If these dimensions are not correct, adjust them.

Adjustment of brake spring play

1. Place the motion control lever to the **"NEUTRAL LOCK"** position.
2. Be sure to cock the rear wheels.
3. Release the parking brake completely.
4. Loosen the lock nuts.
5. Hold the brake rod (1) by hand.
6. Tighten the nut to the correct space between the end of the spring and the nut.
7. Lock the nuts.
8. Adjust the other side spring to the same dimension.

Adjustment of brake length

1. Place the motion control lever to the **"NEUTRAL LOCK"** position.
2. Apply the parking brake to the lock position.
3. Loosen the lock nuts.
4. Adjust the spring length to the recommendation.
5. Lock the nuts.
6. Check the brake spring play to the recommendation. If there is no play, adjust the brake spring play again.
7. Adjust the other side spring to the same dimension.

(1) Brake Rod

A : Parking Brake Rod Spring Length
B : Parking Brake Spring Play
C : Holding the Brake Rod

W1018053

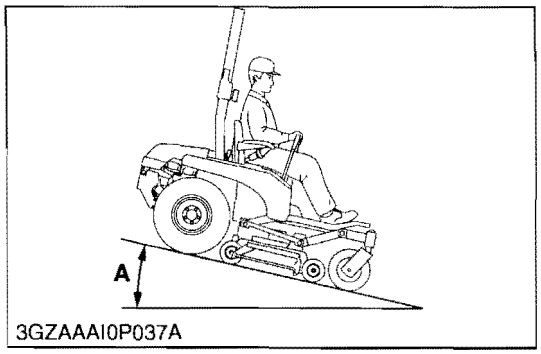

Checking Parking Brake on the Slope

1. Place the machine on a 17° ramp **A**.
2. Apply the parking brake.
3. Place the motion control levers in **"NEUTRAL LOCK"** position and shut off the engine.
4. Check that the machine does not move.

■ **NOTE**

- **For parking brake test purposes, only use 17° ramp "A".**

A : 17° ramp

W1018886

[2] SEPARATING TRANSAXLE

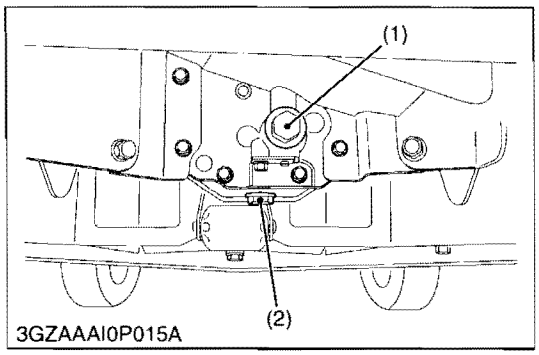

3GZAAAI0P015A

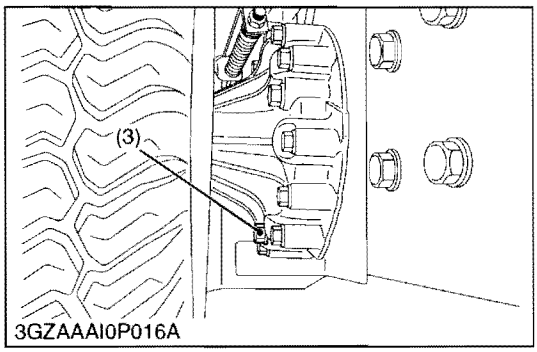

3GZAAAI0P016A

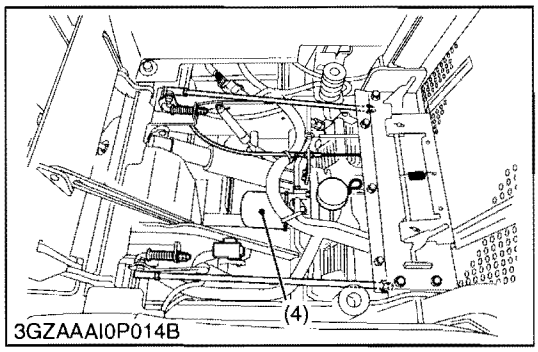

3GZAAAI0P014B

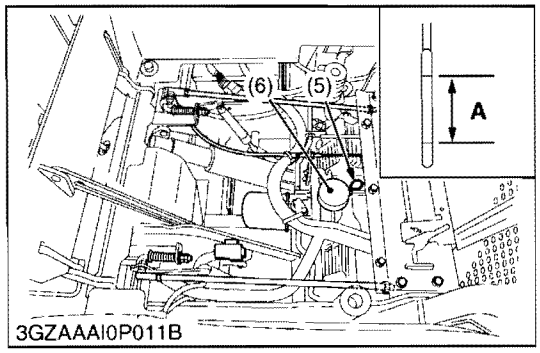

3GZAAAI0P011B

Draining Transmission Fluid and Rear Axle Gear Case Oil (RH and LH)

CAUTION

To avoid personal injury:

- **Be sure to stop the engine and remove the key before changing or checking the oil.**
- **Allow transmission case to cool down sufficiently; oil can be hot and may cause burns.**

1. To drain the transmission oil, place the oil pan underneath the transmission case and remove the drain plug at the bottom of the transmission case.
2. After draining, disassemble and clean the strainer and change the oil filter cartridge. After reassembling, fill with UDT or SUPER UDT hydrostatic transmission fluid, or its equivalent.
3. After running the engine for a few minutes, stop it and check the oil level again; add oil to the prescribed level.

IMPORTANT

- **Operate only at low RPM's immediately after changing the transmission fluid and the filter cartridge.**
  Keep the engine at medium speed for a few minutes to insure proper lubrication of all parts so there is no damage to the transmission.

Transmission fluid capacity	7.5 L 7.9 U.S.qts 6.60 Imp.qts

(1) Transmission Strainer
(2) Drain Plug of Center Case
(3) Drain Plug of Axle Case
(4) Transmission Oil Filter
(5) Oil Level Dipstick
(6) Oil Plug and Breather Cup

A : Oil level acceptable within this range.

W1019123

Dismounting Engine

1. Refer to **"ENGINE"** section. (See page 1-S13.)

W1019340

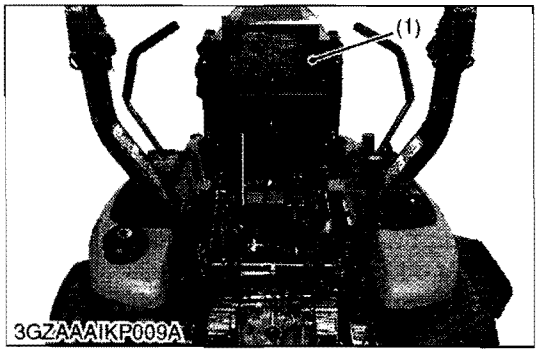

Removing Seat Assembly

1. Disconnect the seat switch connector.
2. Remove the seat assembly (1).

(1) Seat Assembly

W1019404

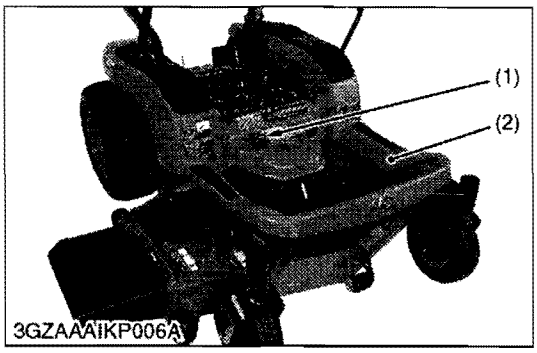

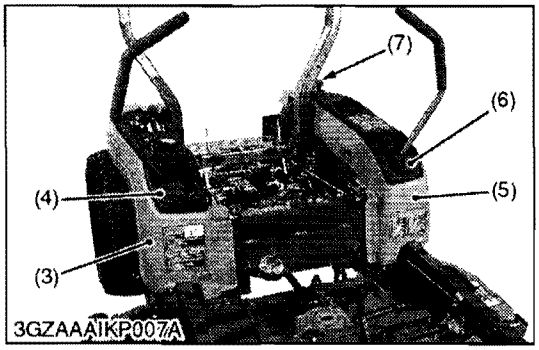

Removing Motion Control Lever Cover, Fenders and Fuel Tank Cap

1. Remove the cutting height adjusting dial (1), the parking brake pedal, the mower lift pedal and the step (2).
2. Remove the motion control lever cover (RH and LH) (4), (6).
3. Remove the fuel tank cap (7).
4. Remove the fender (RH and LH) (3), (5).

(1) Cutting Height Adjusting Dial
(2) Step
(3) Fender (RH)
(4) Motion Control Lever Cover (RH)
(5) Fender (LH)
(6) Motion Control Lever Cover (LH)
(7) Fuel Tank Cap

W1019588

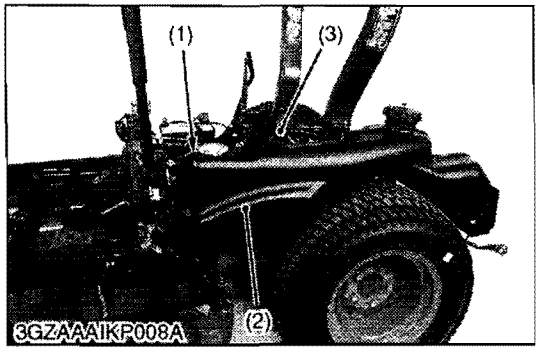

Removing Fuel Tank

1. Disconnect the lead wire (1) from fuel level sensor and fuel hose (3) from the fuel tank (2).
2. Remove the fuel tank (2).

(1) Lead Wire
(2) Fuel Tank
(3) Fuel Hose

W1019841

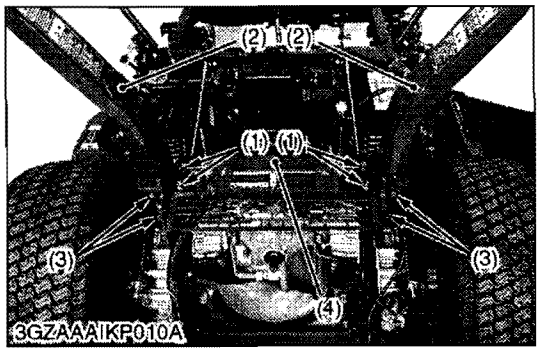

Removing Beam and ROPS

1. Remove the bolts (1).
2. Remove the beam (4).
3. Remove the bolts from ROPS.
4. Remove the ROPS, upper and remove ROPS, under (2) from the machine.

(When assembling)

Tightening torque	ROPS mounting bolt	48 to 55 N·m 4.9 to 5.7 kgf·m 36 to 41 lbf·ft

(1) Bolt
(2) ROPS, Under
(3) Bolt
(4) Beam

W1020015

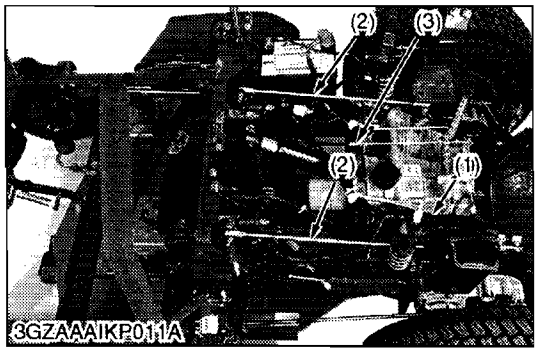

Disconnecting Wiring Harness, PTO Cable and HST Speed Control Rod

1. Disconnect the connectors from the switches.
2. Remove the wiring harness (1) from the transmission case.
3. Remove the speed control rods (2).
4. Disconnect the PTO cable (3).

(1) Wiring Harness
(2) Speed Control Rod
(3) PTO Cable

W1020254

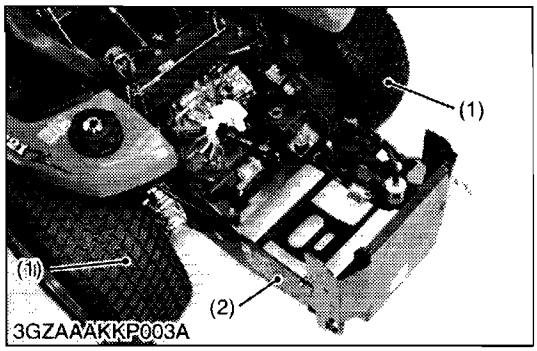

Disconnecting Parking Brake Rods and Mower Lift Cylinder Hose

1. Lift the machine and apply the rigid jacks under the main frame.
2. Remove the rear wheels (1).
3. Remove the brake rod pins and the brake rods (3) (4).
4. Disconnect the mower lift cylinder hose (5).

(When reassembling)

Tightening torque	Rear wheel mounting screw	65 to 75 N·m 6.6 to 7.7 kgf·m 48 to 55 lbf·ft

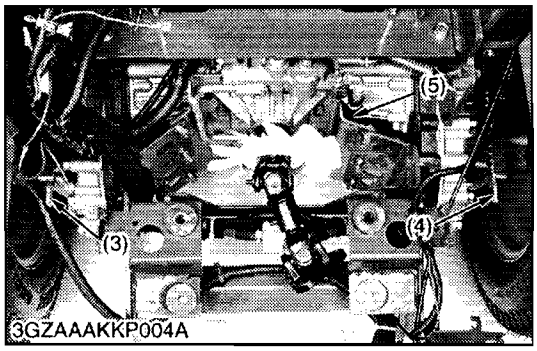

■ **NOTE**

- **After assembling the parking brake rods, be sure check the parking brake spring length and play. If the measurement is not within the factory specifications, adjust the spring length and play.**

(1) Rear Wheel
(2) engine Frame
(3) Brake Rod (LH)
(4) Brake Rod (RH)
(5) Mower Lift Cylinder Hose
(6) Cooling Fan
(7) Universal Joint Mounting Bolt

W1020512

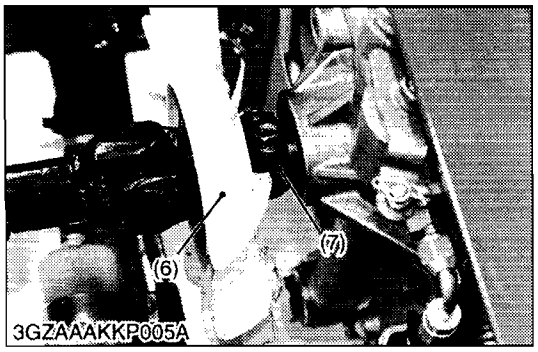

Separating Transaxle Assembly

1. Remove the transaxle mounting screws.
2. Separate the transaxle from the machine.

(When reassembling)

Tightening torque	Transaxle mounting screw (M12)	78 to 90 N·m 7.9 to 9.2 kgf·m 58 to 66 lbf·ft
	Transaxle mounting screw (M10)	48 to 55 N·m 4.9 to 5.7 kgf·m 36 to 41 lbf·ft

W1020761

https://truckmanualshub.com/

[3] DISASSEMBLING TRANSAXLE

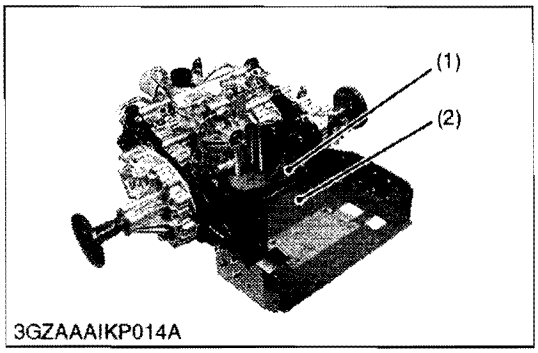

3GZAAAIKP014A

Removing Engine Frame

1. Remove the screen base (1) and engine frame (2).

(When reassembling)

Tightening torque	Engine frame mounting screw	48 to 55 N·m 4.9 to 5.7 kgf·m 36 to 41 lbf·ft

(1) Screen Base (2) Engine Frame

W1020929

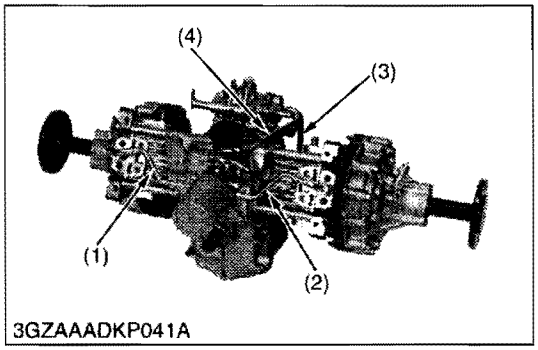

3GZAAADKP041A

Removing Hydraulic Pipes from Transmission Case

1. Loosen the nuts of hydraulic pipes.
2. Disconnect and remove the hydraulic pipes from transmission case.
3. Remove the rear axle case (RH and LH) (5), (6).
4. Remove the front center cover (7).

(When reassembling)

Tightening torque	Hydraulic pipe nut	40 to 44 N·m 4.0 to 4.5 kgf·m 29 to 32 lbf·ft

(1) HST Pipe (RH)
(2) HST Pipe (LH)
(3) PTO Pipe
(4) HST Charge Pipe
(5) Rear Axle Case (RH)
(6) Rear Axle Case (LH)
(7) Front Center Cover

W1021081

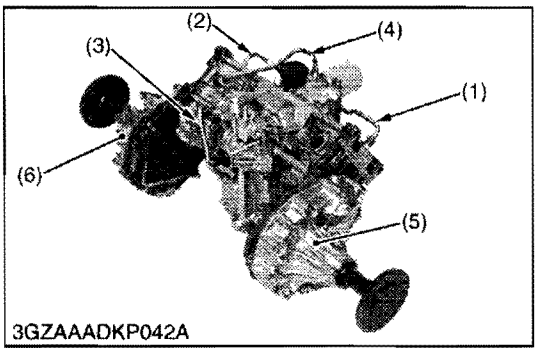

3GZAAADKP042A

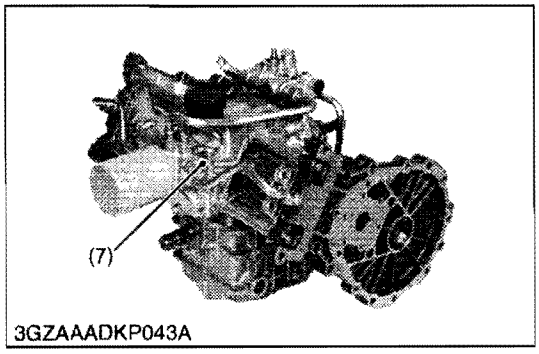

3GZAAADKP043A

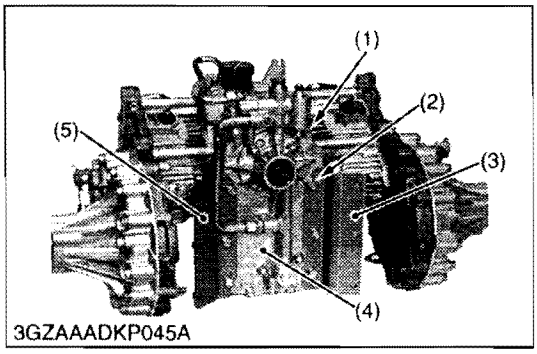

3GZAAADKP045A

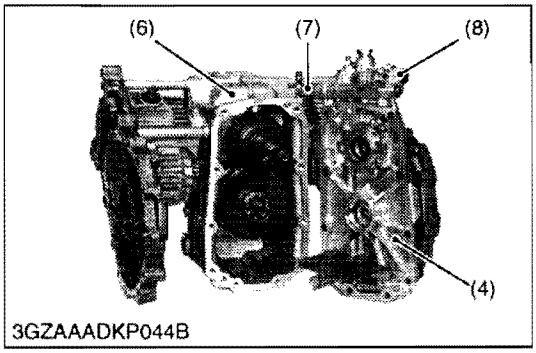

3GZAAADKP044B

Removing Center Cover Assembly

1. Remove the front connecting plate (LH, RH) (5), (3).
2. Remove the center cover assembly (4) from transmission case (6).
3. Remove the external snap ring and PTO clutch lever (7).

(When reassembling)

- Take care not to damage the oil seal.

Tightening torque	Center cover mounting screw	40 to 44 N·m 4.0 to 4.5 kgf·m 29 to 32 lbf·ft

(1) Screw (M10 x 45 mm)
(2) Screw (M10 x 50 mm)
(3) Front Connecting Plate (RH)
(4) Center Cover Assembly
(5) Front Connecting Plate (LH)
(6) Transmission Case
(7) PTO Clutch Lever
(8) Plug for Regulator Valve

W1021358

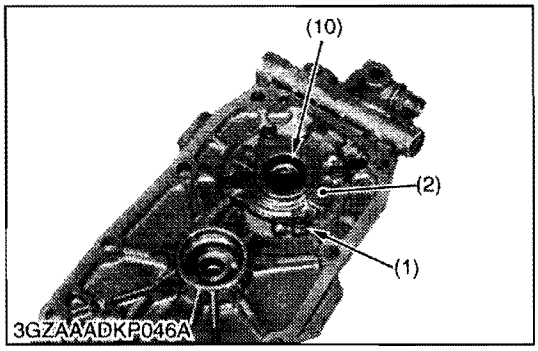

3GZAAADKP046A

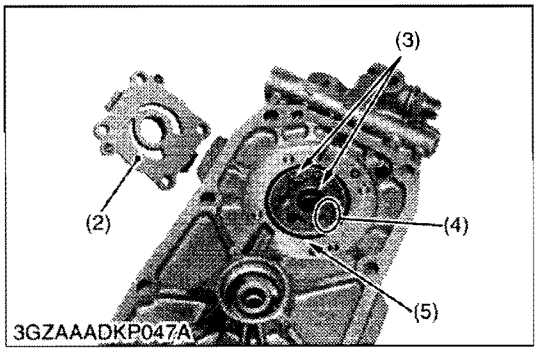

3GZAAADKP047A

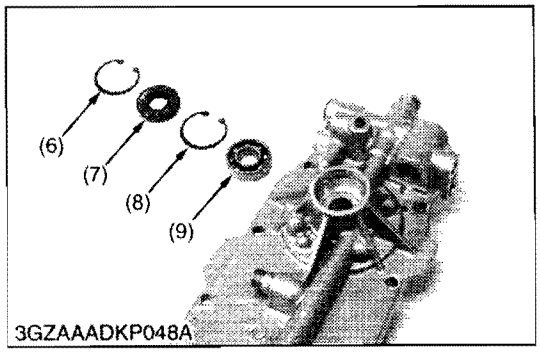

3GZAAADKP048A

Removing HST Charge Pump and Oil Seal

1. Remove the HST charge pump cover mounting screws (1).
2. Remove the HST charge pump cover (2).
3. Remove the HST charge pump (3).
4. Remove the internal snap ring (6) and the oil seal (7).
5. Remove the internal snap ring (8) and the bearing (9).

(When reassembling)

- Take care not damage the O-ring (5).
- Face the punch mark (4) to the HST charge pump cover (2).
- Face the seal lip of the oil seal (10) to the bevel gear section side.

Tightening torque	HST Charge pump cover mounting screw	18 to 20 N·m 1.8 to 2.1 kgf·m 13 to 15 lbf·ft

(1) Screw
(2) HST Charge Pump Cover
(3) HST Charge Pump
(4) Punch Mark
(5) O-ring
(6) Internal Snap Ring
(7) Oil Seal
(8) Internal Snap Ring
(9) Bearing
(10) Oil Seal

W1021724

https://truckmanualshub.com/

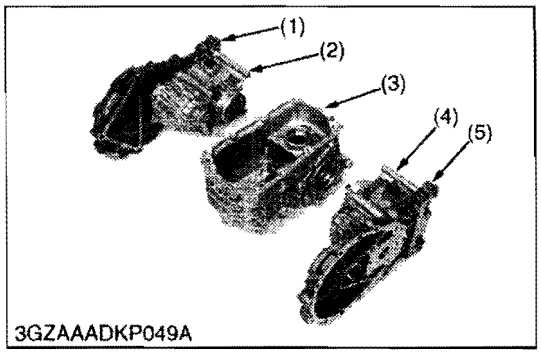

3GZAAADKP049A

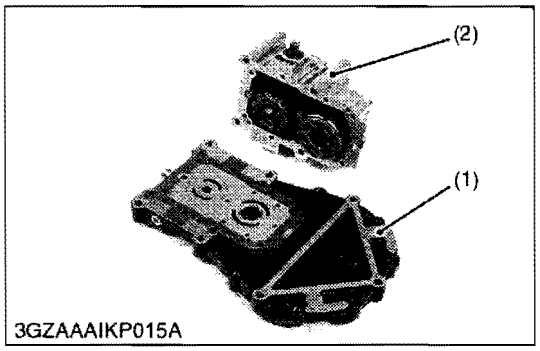

3GZAAAIKP015A

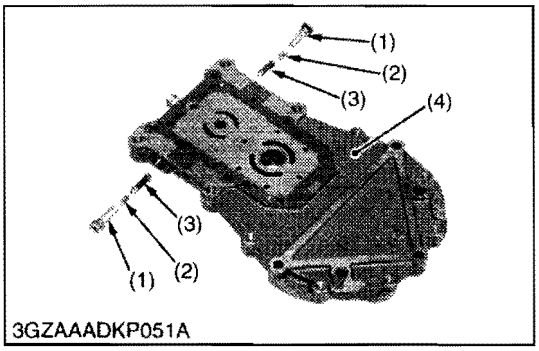

3GZAAADKP051A

Removing Hydrostatic Transmission Assembly and Center Section

1. Remove the hydrostatic transmission assembly (HST) (2), (4) with the center section (1), (5) from transmission case (3).
2. Remove the hydrostatic transmission assembly (HST) (2), (4) from the center section (1), (5).

(When reassembling)

- Place a new gasket on the HST housing.

■ **NOTE**

- **Take care not to damage the surface of cylinder blocks pistons and center section.**

Tightening torque	Hydrostatic transmission mounting screw	25 to 29 N·m 2.5 to 3.0 kgf·m 18 to 21 lbf·ft
	Center section mounting hex. socket head screw	18 to 20 N·m 1.8 to 2.1 kgf·m 13 to 15 lbf·ft

(1) Center Section (LH)
(2) HST (LH)
(3) Transmission Case
(4) HST (RH)
(5) Center Section (RH)

W1022137

Check and High Pressure Relief Valve Assembly

1. Remove the plug (1) and draw out the spring (2) and check and high pressure relief valve assembly (3).

(When reassembling)

- Take care not to damage the O-ring on the plug.

Tightening torque	Check and high pressure relief valve plug	30 to 44 N·m 3.0 to 4.5 kgf·m 22 to 32 lbf·ft

(1) Plug
(2) Spring
(3) Check and High Pressure Relief Valve Assembly
(4) Center Section

W1022513

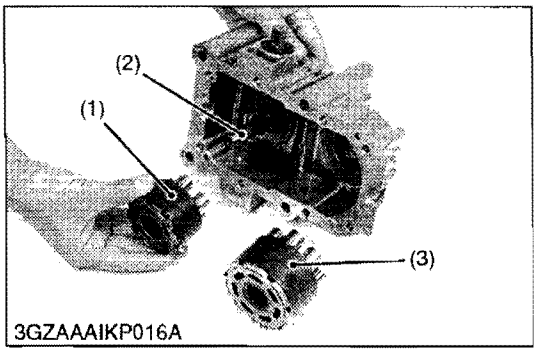

3GZAAAIKP016A

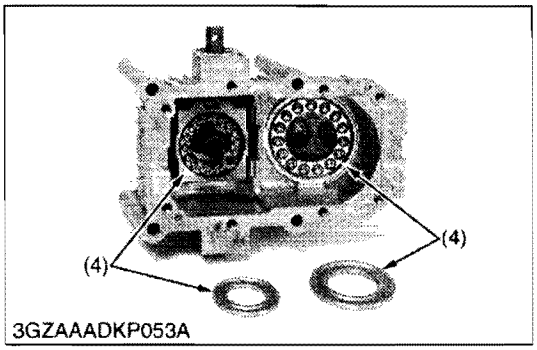

3GZAAADKP053A

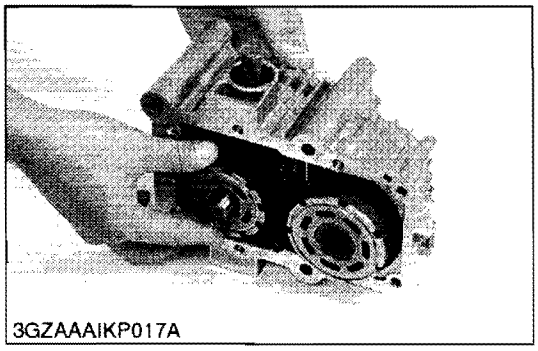
3GZAAAIKP017A

Removing Cylinder Block Assembly and Thrust Ball Bearing

1. Lay the housing on its side.
2. Slide out the cylinder block assembly (pump) (1).
3. Slide out the cylinder block assembly (motor) (3).
4. Remove the thrust ball bearing (4).

■ **NOTE**

- **Take care not to damage the surface of the cylinder blocks.**

(When reassembling)

- Apply clean fluid to the surface of cylinder block.

(1) Cylinder Block Assembly (Pump)
(2) Pump Shaft
(3) Cylinder Block Assembly (Motor)
(4) Thrust Ball Bearing

W1022577

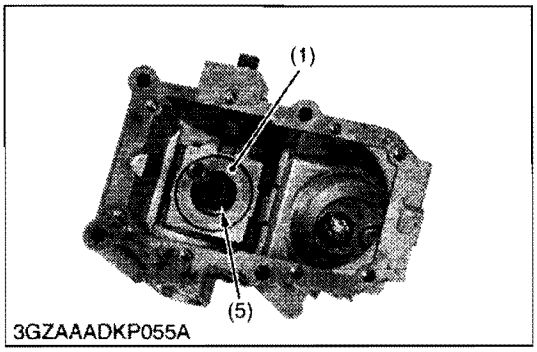

3GZAAADKP055A

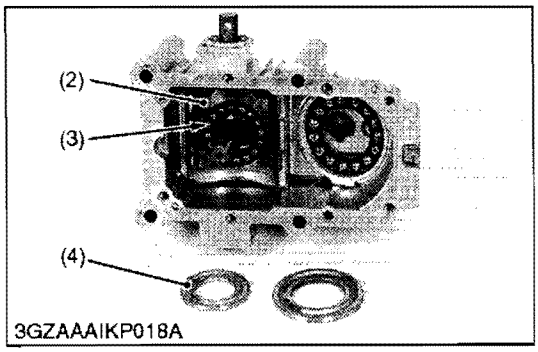

3GZAAAIKP018A

Swashplate

1. Remove the spring (5) and external snap ring.
2. Remove the swashplate (1) from the housing.
3. Remove the thrust plate (4), thrust ball bearing (3) and thrust washer (2) from the swashplate.

(When reassembling)

- Apply clean fluid to the thrust washer and thrust plate.

(1) Swashplate
(2) Thrust Washer
(3) Thrust Ball Bearing
(4) Thrust Plate
(5) Spring

W1023104

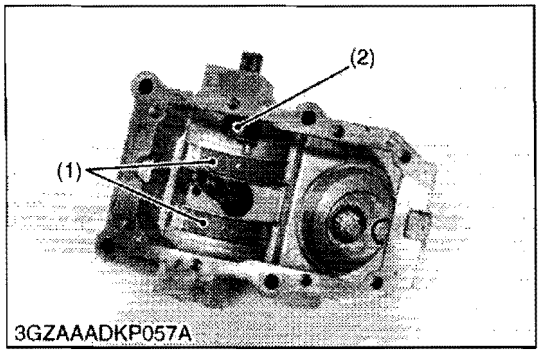

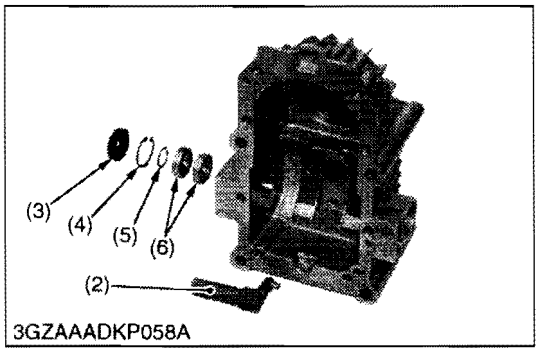

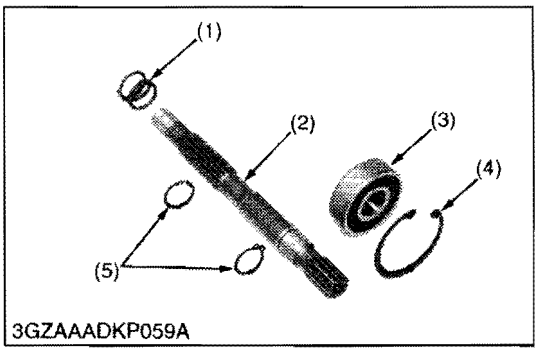

Slot Guide and Cradle Bearing

1. Remove the slot guide from the trunnion arm (2).
2. Remove the cradle bearing (1) from the housing.
3. Remove the oil seal (3), the internal snap ring (4), (5) and the ball bearings (6).

(1) Cradle Bearing
(2) Trunnion Arm
(3) Oil Seal
(4) Internal Snap Ring
(5) Internal Snap Ring
(6) Ball Bearing

W1023352

Pump Shaft

1. Remove the internal snap ring (4).
2. Tap the pump shaft (2) with a plastic hammer slightly to side out it from the housing with the ball bearing (3).

(When reassembling)

- Install the ball bearing to the pump shaft.
- Install the pump shaft into the hydrostatic transmission case.

(1) Spring
(2) Pump Shaft
(3) Ball Bearing
(4) Internal Snap Ring
(5) External Snap Ring

W1023671

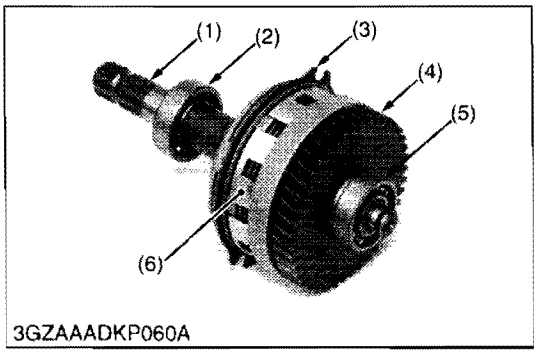

3GZAAADKP060A

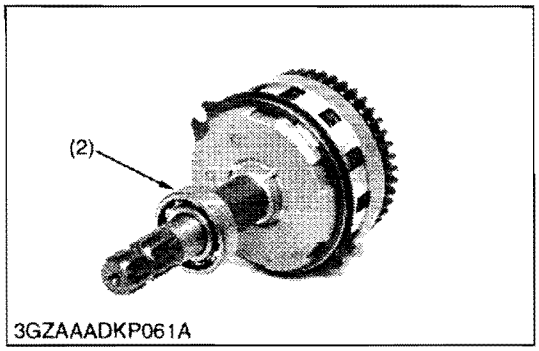

3GZAAADKP061A

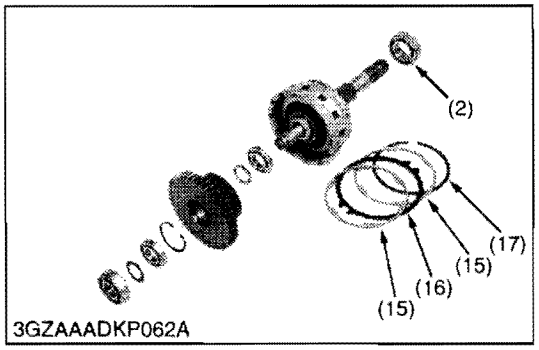

3GZAAADKP062A

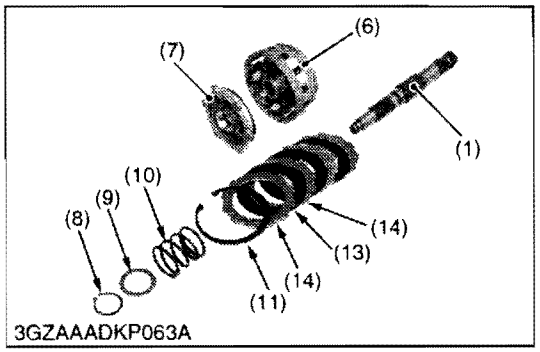

3GZAAADKP063A

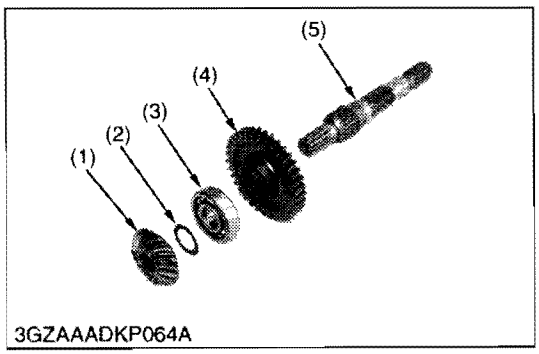

3GZAAADKP064A

Disassembling PTO Clutch Assembly

1. Remove the bearing (5) and 43T gear (4).
2. Tap out the PTO clutch shaft (1) from the clutch case (6).
3. Remove the ball bearing (2), the external snap ring (17), brake plate (15) and brake disk (16).
4. Remove the external snap ring (18), spring collar (9) and clutch spring (10).
5. Remove the internal snap ring (11), piston (7), braking plates (12), (14) and clutch disks (13).

(When reassembling)

- Align splines of 43T gear (4) and clutch disks (13) and check it to rotate smoothly.
- Do not damage clutch disks (13).

(1) PTO Shaft
(2) Ball Bearing
(3) PTO Brake Disk
(4) 43T Gear
(5) Ball Bearing
(6) PTO Clutch Case
(7) Piston
(8) External Snap Ring
(9) Spring Collar
(10) Clutch Spring
(11) Internal Snap Ring
(12) Braking Plate
(13) Clutch Disk
(14) Clutch Plate
(15) Brake Plate
(16) Brake Disk
(17) External Snap Ring

W1023896

Disassembling Input Shaft

1. Remove 16T gear (1) with puller.
2. Tap input shaft (5) with soft hammer.

(When reassembling)

- Check and adjust the backlash. (See page 2-S24.)

(1) 16T Gear
(2) Adjusting Shim
(3) Ball Bearing
(4) 34T Gear
(5) Input Shaft

W1024502

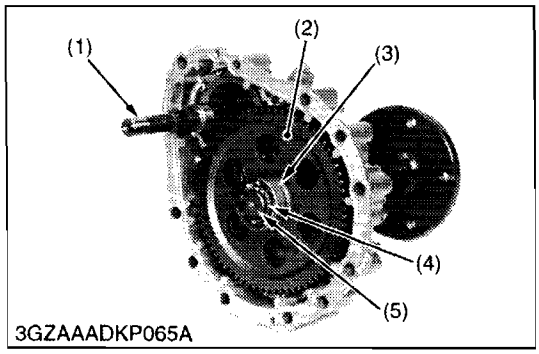

3GZAAADKP065A

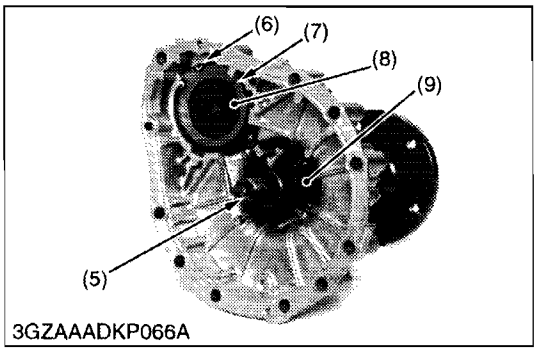

3GZAAADKP066A

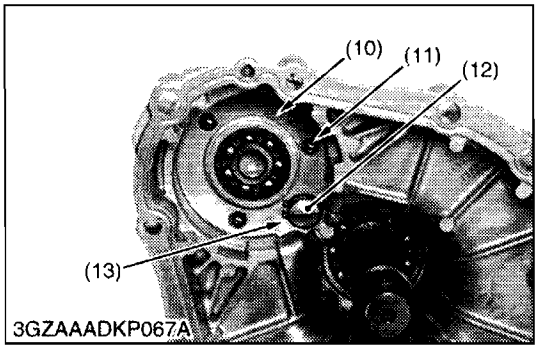

3GZAAADKP067A

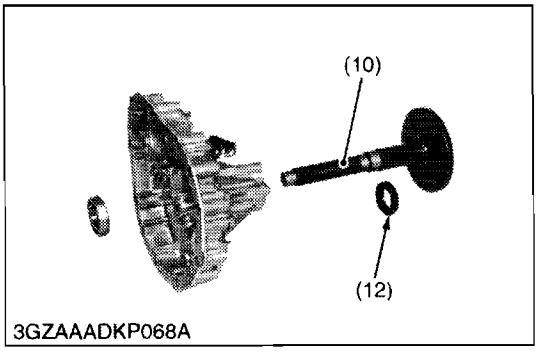

3GZAAADKP068A

Disassembling Rear Axle Case and Brake Shaft

1. Remove external snap ring (4) and remove ball bearing (3) with puller.
2. Remove 70T gear (2) and brake shaft (1).
3. Remove internal snap ring (6) and friction plates (7) and brake disks (8).
4. Remove external snap ring (13), brake arm (12), and balls (11).
5. Tap out rear axle (5) from rear axle case.

(When reassembling)

- Align splines of brake shaft (1) and brake disks (8).
- Do not damage brake disks (8).
- Apply transmission fluid to brake disks (8).
- Do not damage oil seal (14).

(1) Brake Shaft
(2) 70T Gear
(3) Ball Bearing
(4) External Snap Ring
(5) Rear Axle
(6) Internal Snap Ring
(7) Friction Plate
(8) Brake Disk
(9) Collar
(10) Rear Axle Case
(11) Ball
(12) Brake Arm
(13) External Snap Ring
(14) Oil Seal

W1024719

[4] SERVICING

(1) Hydrostatic Transmission

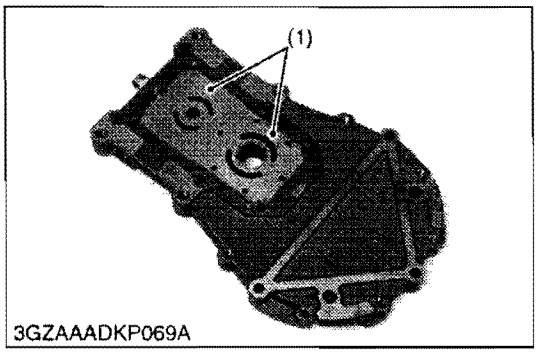

Center Section

1. Check the surface (1) of center section for scratches or wear. If deep scratch or excessive wear is found, replace the hydrostatic transmission assembly.

(1) Surface

W1025459

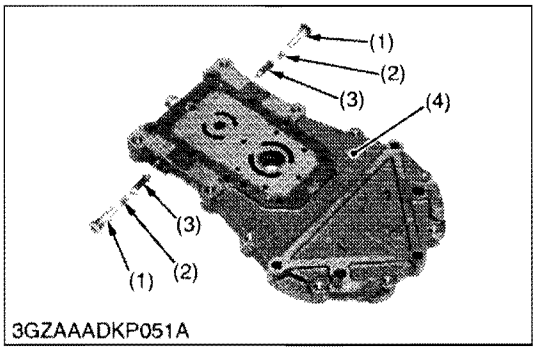

Check and High Pressure Relief Valve

1. Check the check and high pressure relief valve assembly (3) for scratches and damage.
2. Check the spring (2) for breakage and wear.
3. If anything unusual, replace the ball and spring.

(1) Plug
(2) Spring
(3) Check and High Pressure Relief Valve Assembly
(4) Center Section

W1025573

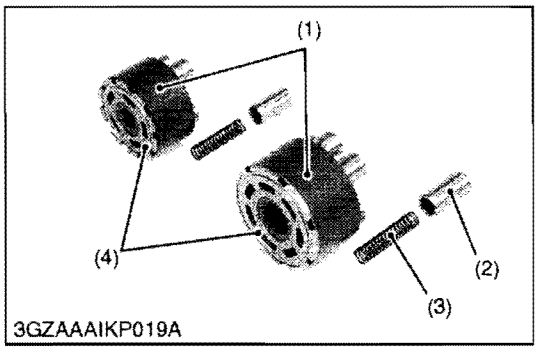

Cylinder Block Assembly

1. Check the cylinder blocks (1) and pistons (2) for scratches and wear.
2. If scratch or worn, replace the cylinder block assembly.
3. Check that the piston (2) and spring (3) are in each cylinder bore.
4. Check the pistons for their free movement in the cylinder block bores.
5. If the piston or the cylinder block is scored, replace the cylinder block assembly.
6. Check the polished face (4) or cylinder block for scoring.
7. If scored, replace the cylinder block assembly.

■ **IMPORTANT**

- **Do not interchange pistons between pump and motor cylinder block. Pistons and cylinder blocks are matched.**

(1) Cylinder Block
(2) Piston
(3) Spring
(4) Polished Face

W1025739

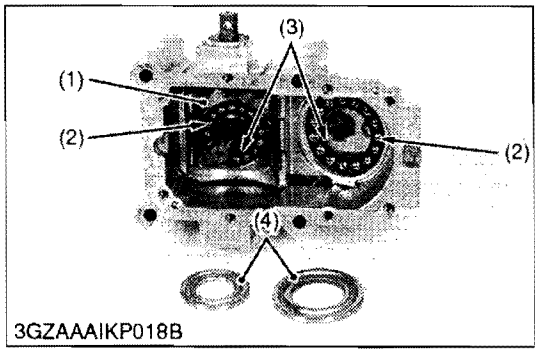

3GZAAAIKP018B

Thrust Washer, Thrust Ball Bearing and Thrust Plate

1. Check the thrust ball bearing (3) for scratches and excessive wear.
2. If worn, replace.
3. Check the thrust plate (4) for scratches and excessive wear.
4. If worn or scored, replace.

(1) Swashplate
(2) Thrust Ball Bearing
(3) Thrust Washer
(4) Thrust Plate

W1025993

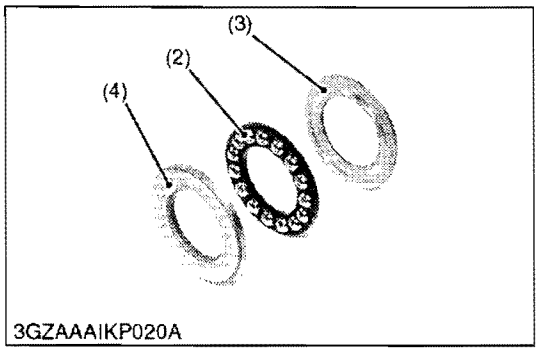

3GZAAAIKP020A

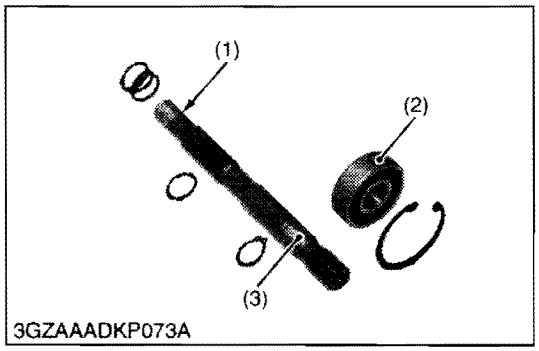

3GZAAADKP073A

Pump Shaft

1. Check the bearing surface (3) and the ball bearing (2).
2. If the shaft is rough or grooved, replace it.
3. If the ball bearing is worn, replace it.

(1) Pump Shaft
(2) Ball Bearing
(3) Bearing Surface

W1026251

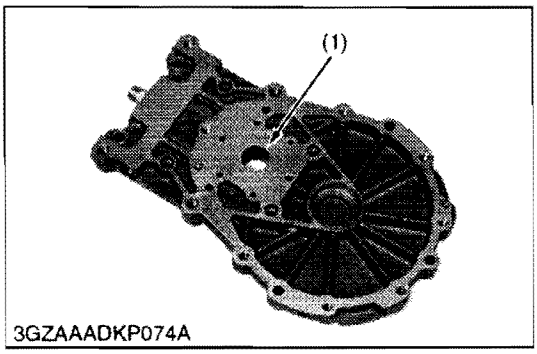

3GZAAADKP074A

Bush

1. Check the bush (1) for wear.
2. If the bush is worn or damaged, replace it.

(1) Bush

W1026420

(2) Transmission Case

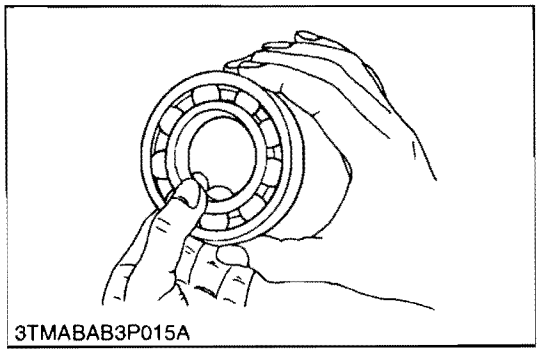
3TMABAB3P015A

Checking Bearing

1. Hold the inner race, and push and pull the outer race in all directions to check for wear and roughness.
2. Apply transmission fluid to the bearing, and hold the inner race. Then, turn the outer race to check rotation.
3. If there is any defect, replace it.

W1026562

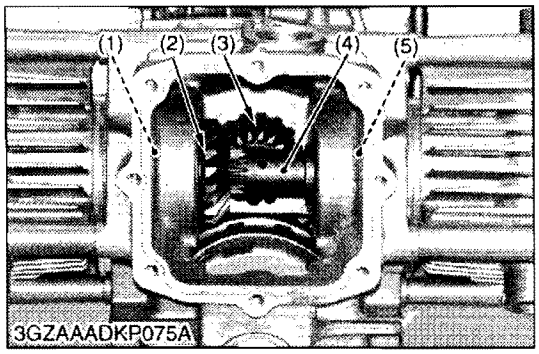

Backlash and Tooth Contact between 19T Bevel Gear and 16T Bevel Gear

1. Measure the backlash between the 19T (2) bevel gear and 16T (3) bevel gear.
2. When the backlash is too large, decrease the number of shims in the side of the spiral bevel gear, and insert the removed shims in the opposite side, When the backlash is too small, decrease the number of shims in the side of the differential case, and insert the removed shims in the opposite side.
3. Adjust the backlash properly by repeating the above procedure.
4. Apply red lead lightly over several teeth at three positions equally spaced on the hypoid ring gear.
5. Turn the 19T bevel gear by input shaft while pressing a wooden piece against the periphery of the bevel gear.
6. Check the tooth contact, if not proper, adjust according to the following instruction.

Backlash between 16T bevel gear and 19T bevel gear	Factory spec.	0.13 to 0.25 mm 0.0052 to 0.0098 in.
Tooth contact	Factory spec.	More than 25 % red lead contact area on the gear tooth surface
The position of tooth contact point	Factory spec.	the center of tooth contact at 3/10 of the entire width from the small end

(1) Shim
(2) 19T Bevel Gear
(3) 16T Bevel Gear
(4) Joint Shaft
(5) Shim

W1026662

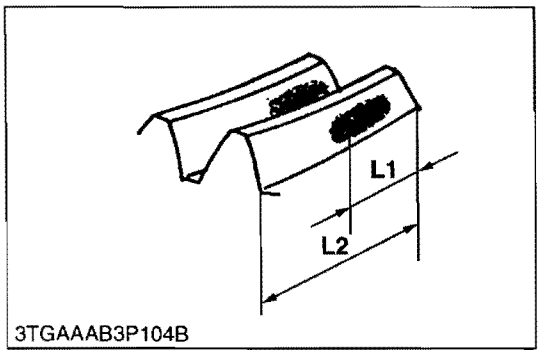

3TGAAAB3P104B

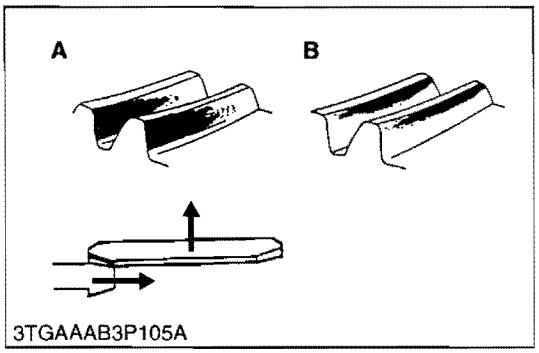

3TGAAAB3P105A

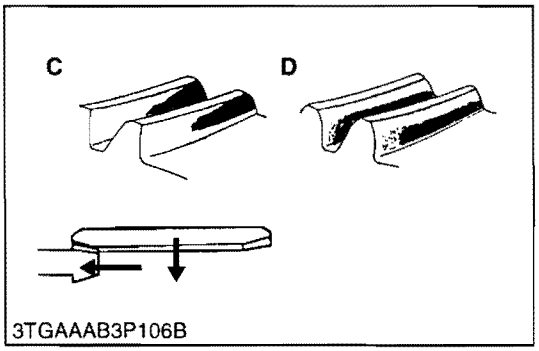

3TGAAAB3P106B

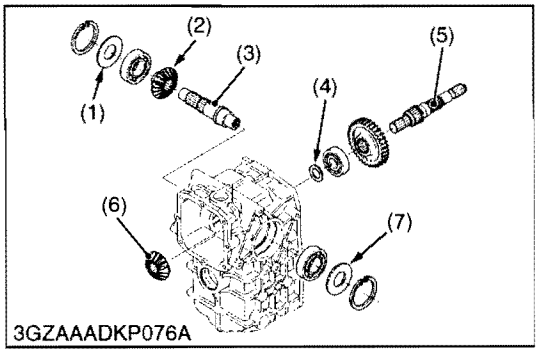

3GZAAADKP076A

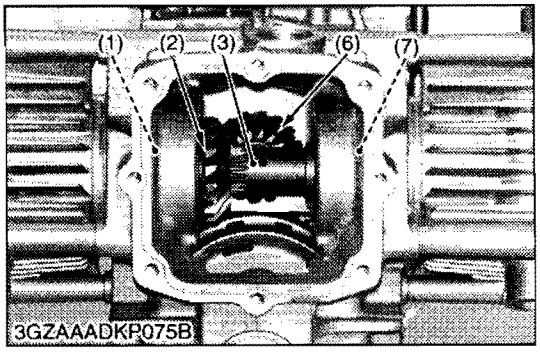

3GZAAADKP075B

Correcting of Tooth Contact

1. Proper contact
   - Proper contact.
2. Correcting of the heel contact and shallow contact
   - It is confirmed whether there is a shim (3).
   - The 16T bevel gear (6) can be moved to backward by doing to add the shim (4) when not is. (The shim is made the state as it is when there is a shim (4).)
   - And place the 19T bevel gear (2) side shim to the shim (7) to move the 19T bevel outside.
   - Repeat above until the proper tooth contact and backlash are achieved.
3. Correcting of the toe contact and deep contact
   - It is confirmed whether there is a shim (4).
   - The 16T bevel gear (6) can be moved to backward by removing the shim (4) if there is a shim. (The shim (4) is not put when there is no shim.)
   - And place the shim (7) side to the 19T bevel gear (2) side shim to move the 19T bevel gear inside.
   - Repeat above until the proper tooth contact and backlash are achieved.

(1) Shim
(2) 19T Bevel Gear
(3) Joint Shaft
(4) Shim
(5) Input Shaft
(6) 16T Bevel Gear
(7) Shim

L1 : Tooth Contact
L2 : Tooth Bottom
A : Heel Contact
B : Shallow Contact
C : Toe Contact
D : Deep Contact

W1027039

(3) PTO Clutch

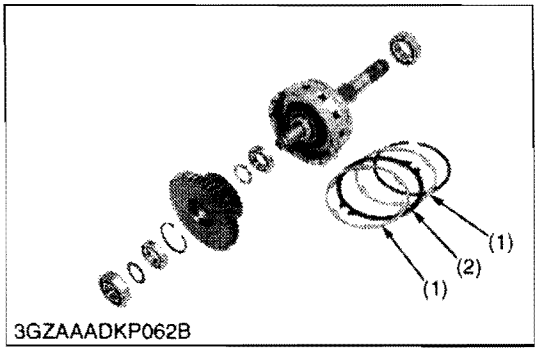

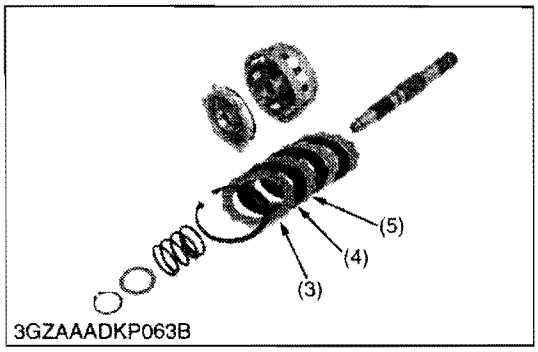

Checking PTO Brake Disk and PTO Clutch Disks

1. Check the surface of the brake plates (1) and the brake disks (2). If excessive wear is found, replace it to a new one.
2. Check the surface of the braking plate (3), PTO clutch disks (4) and PTO clutch plates (5).
3. If excessive wear is found, replace it to a new one.

(1) Brake Plate
(2) Brake Disk
(3) Braking Plate
(4) Brake Disk
(5) Brake Plate

W1027637

(4) Brake

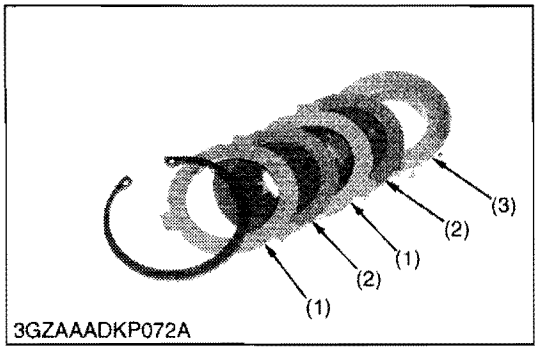

Checking Brake Disks, Friction Plates and Actuator

1. Check the surface of the brake disks (2), friction plates (1) and actuator (3). If excessive wear is found, replace it to a new one.

(1) Friction Plate
(2) Brake Disk
(3) Actuator

W1028126

https://truckmanualshub.com/

https://truckmanualshub.com/

MECHANISM

CONTENTS

1. STRUCTURE 3-M1

https://truckmanualshub.com/

1. STRUCTURE

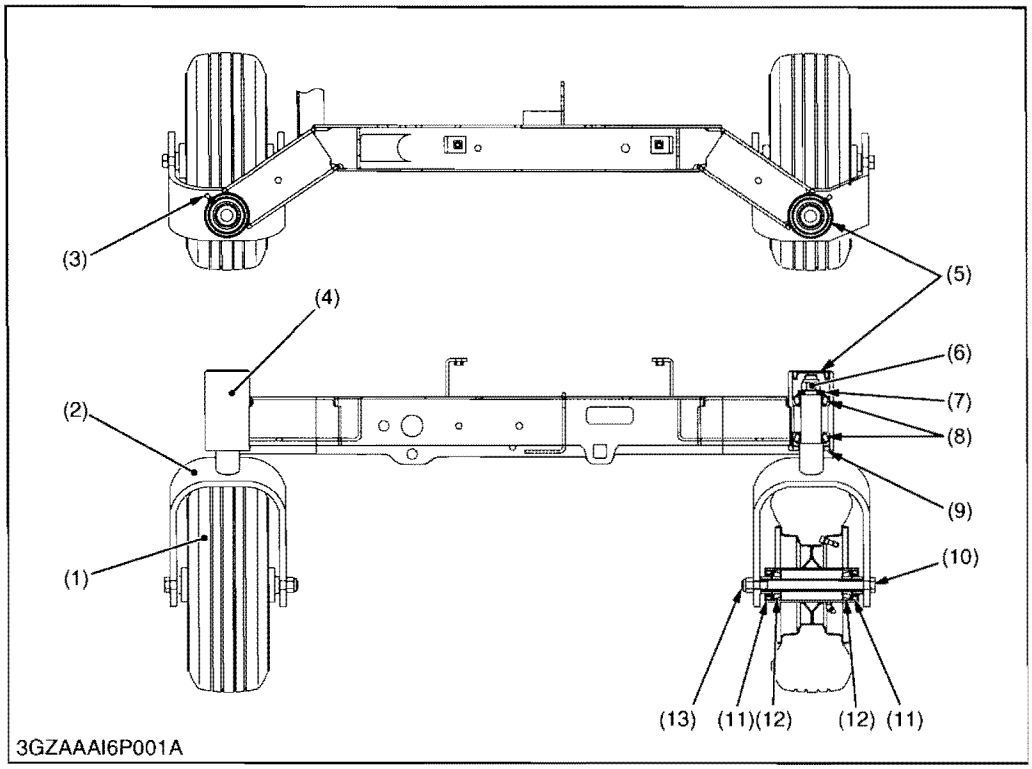

(1) Front Tire
(2) Wheel Bracket
(3) Grease Fitting
(4) Machine Frame
(5) Cap
(6) Lock Nut
(7) Plate Spring
(8) Bearing
(9) Oil Seal
(10) Hex. Bolt
(11) Oil Seal
(12) Thrust Ball Bearing
(13) Locking Nut

W1012688

Front tires (1) are assembled to wheel bracket (2). Wheel brackets are fixed directly to the machine frame (4). Since the front axle is not constructed, the front wheels are not stable on uneven ground in a grass field.

https://truckmanualshub.com/

https://truckmanualshub.com/

SERVICING

CONTENTS

1. TROUBLESHOOTING 3-S1
2. TIGHTENING TORQUES 3-S2
3. CHECKING, DISASSEMBLING AND SERVICING 3-S3
   [1] DISASSEMBLING AND ASSEMBLING 3-S3
      (1) Separating Front Wheel and Wheel Bracket 3-S3

https://truckmanualshub.com/

https://truckmanualshub.com/

1. TROUBLESHOOTING

Symptom	Probable Cause	Solution	Reference Page
Front Wheels Wander to Right or Left	Clearance between machine frame and wheel bracket excessive	Replace	3-S3
	Plate spring disk direction wrong	Change	3-S3
	Wheel bracket nut tightening torque not enough	Tighten up	3-S3

W1014322

https://truckmanualshub.com/

2. TIGHTENING TORQUES

Tightening torques of screws, bolts and nuts on the table below are especially specified.
(For general use screws, bolts and nuts : See page G-10.)

Item	N·m	kgf·m	lbf·ft
Wheel bolt and lock nut	20 to 25	2.1 to 2.5	15 to 18
Wheel bracket lock nut	70 to 80	7.2 to 8.1	52 to 59

W1012736

3. CHECKING, DISASSEMBLING AND SERVICING

[1] DISASSEMBLING AND ASSEMBLING

(1) Separating Front Wheel and Wheel Bracket

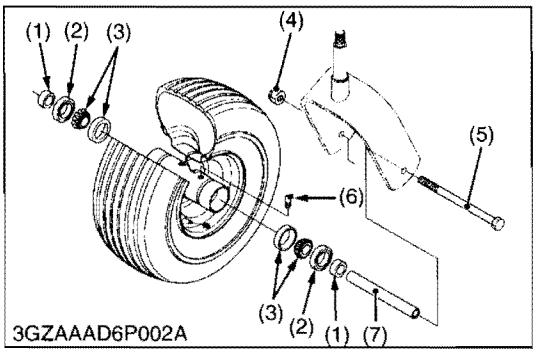

Remove the front Wheel

1. Inspect all parts for wear or damage. Replace the parts as needed.

(When reassembling)

- Apply grease to grease fittings (6). (See page G-24.)

Tightening torque	Front wheel mounting bolt and locking nut	20 to 25 N·m 2.1 to 2.5 kgf·m 15 to 18 lbf·ft

(1) Spacer
(2) Oil Seal
(3) Thrust Ball Bearing
(4) Locking Nut
(5) Hex. Bolt
(6) Grease Fitting
(7) Sleeve

W1010912

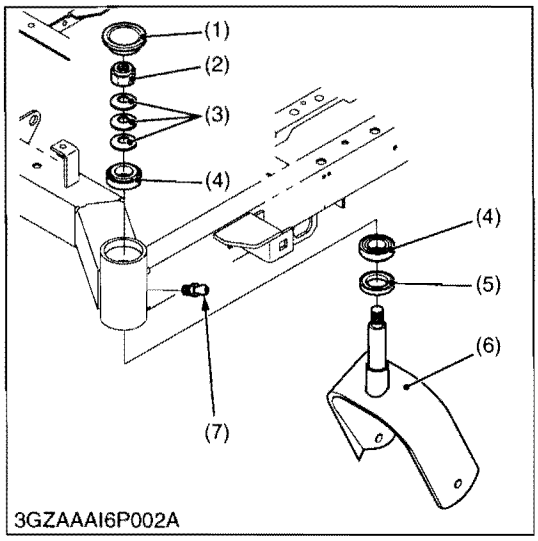

Remove the Wheel Bracket

1. Remove the wheel cap (1).
2. Remove the lock nut (2) and wheel bracket (6).
3. Inspect all parts for wear or damage. Replace the parts as needed.

(When reassembling)

- Do not mistake the direction when reassembling the plate spring (3), bearings (4) and oil seal (5).

Tightening torque	Locking nut tightening torque	70 to 80 N·m 7.2 to 8.1 kgf·m 52 to 59 lbf·ft

(1) Wheel Cup
(2) Lock Nut
(3) Plate Spring
(4) Bearing
(5) Oil Seal
(6) Wheel Bracket
(7) Grease Fitting

W1011142

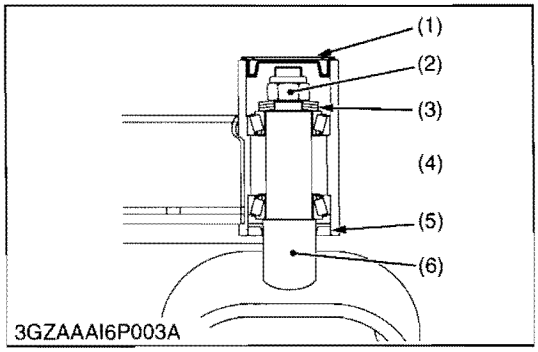

https://truckmanualshub.com/

https://truckmanualshub.com/

MECHANISM

CONTENTS

1. HYDRAULIC CIRCUIT 4-M1
2. HYDRAULIC PUMP 4-M2
3. HYDRAULIC CONTROL VALVE AND VALVE ADAPTOR 4-M3
4. LIFT CYLINDER 4-M6
5. MOWER LINKAGE 4-M7

https://truckmanualshub.com/

1. HYDRAULIC CIRCUIT

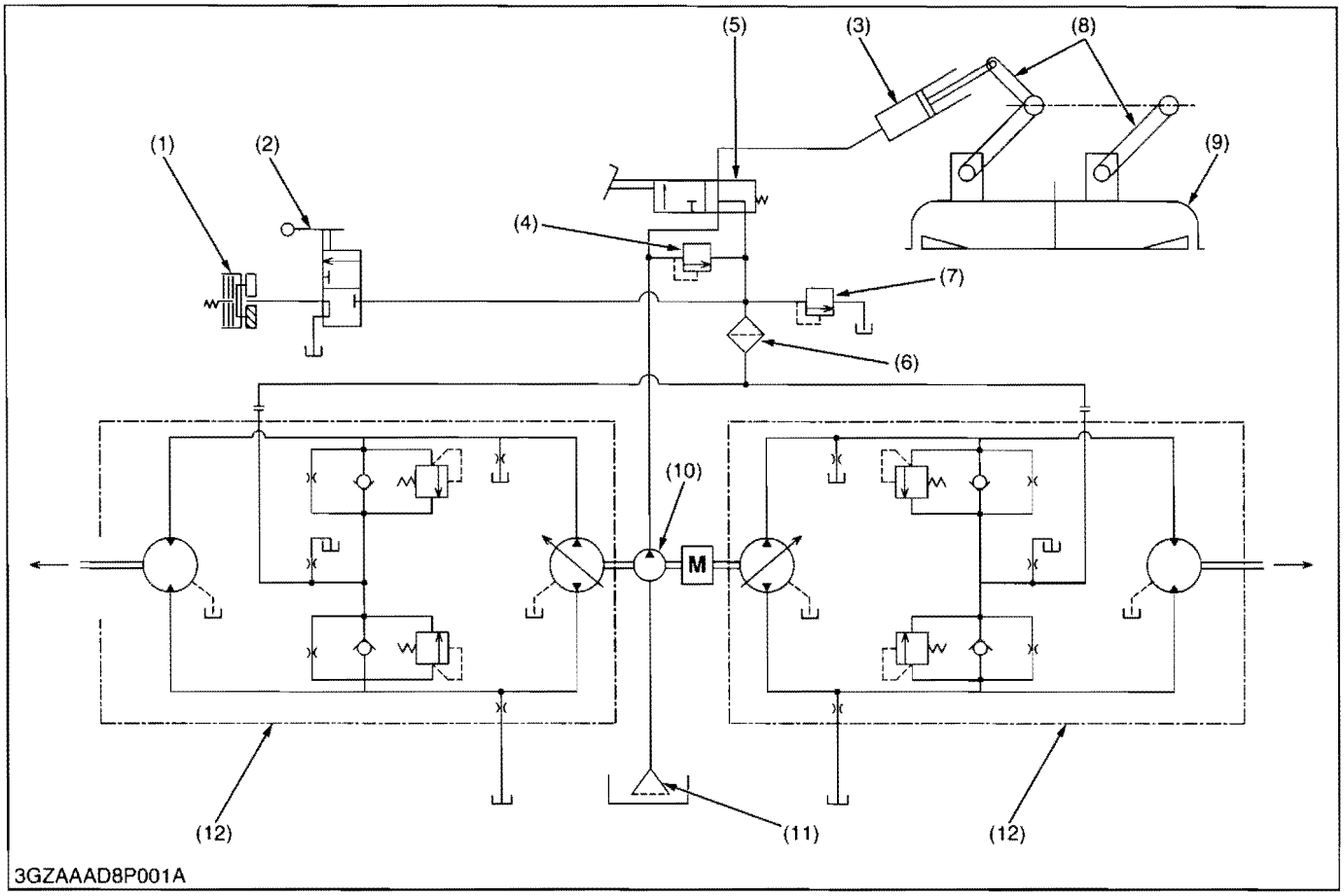

(1) PTO Clutch	(4) Relief Valve	(7) Regulator Valve	(10) Hydraulic Pump
(2) PTO Clutch Valve	(5) Control Valve	(8) Mower Link	(11) Oil Strainer
(3) Mower Lift Cylinder	(6) Oil Filter	(9) Mower Deck	(12) Hydrostatic Transmission

The hydraulic system of this machine is composed of a hydraulic pump (10), control valve assembly (5), mower lift cylinder (3) and other components.

This system has the following functions.

Oil is supplied by hydraulic pump (10) which is driven by engine.

Power from the input shaft (pump shaft) is distributed right and left with the bevel gears and drives each hydrostatic transmission (12).

Moreover, oil from the hydraulic pump (10) is sent to the transmission centre case through the control valve. On the other hand, oil is regulated with the regulator valve (7) to constant pressure and sent to the hydrostatic transmission (12) and PTO clutch (1).

https://truckmanualshub.com/

2. HYDRAULIC PUMP

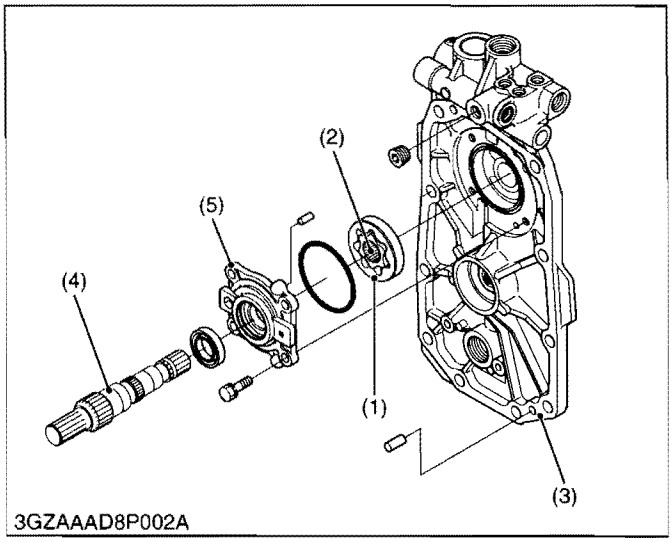

The oil pump in this transmission is a trochoid pump.

Inside the pump body, the 6 lobe inner rotor (2) is eccentrically engaged with the 7 lobe outer rotor (1). The inner rotor is driven by the input shaft, which in turn rotate the outer rotor.

(1) Outer Rotor
(2) Inner Rotor
(3) Center Cover
(4) Input Shaft
(5) Charge Pump Cover

W1012875

3. HYDRAULIC CONTROL VALVE AND VALVE ADAPTOR

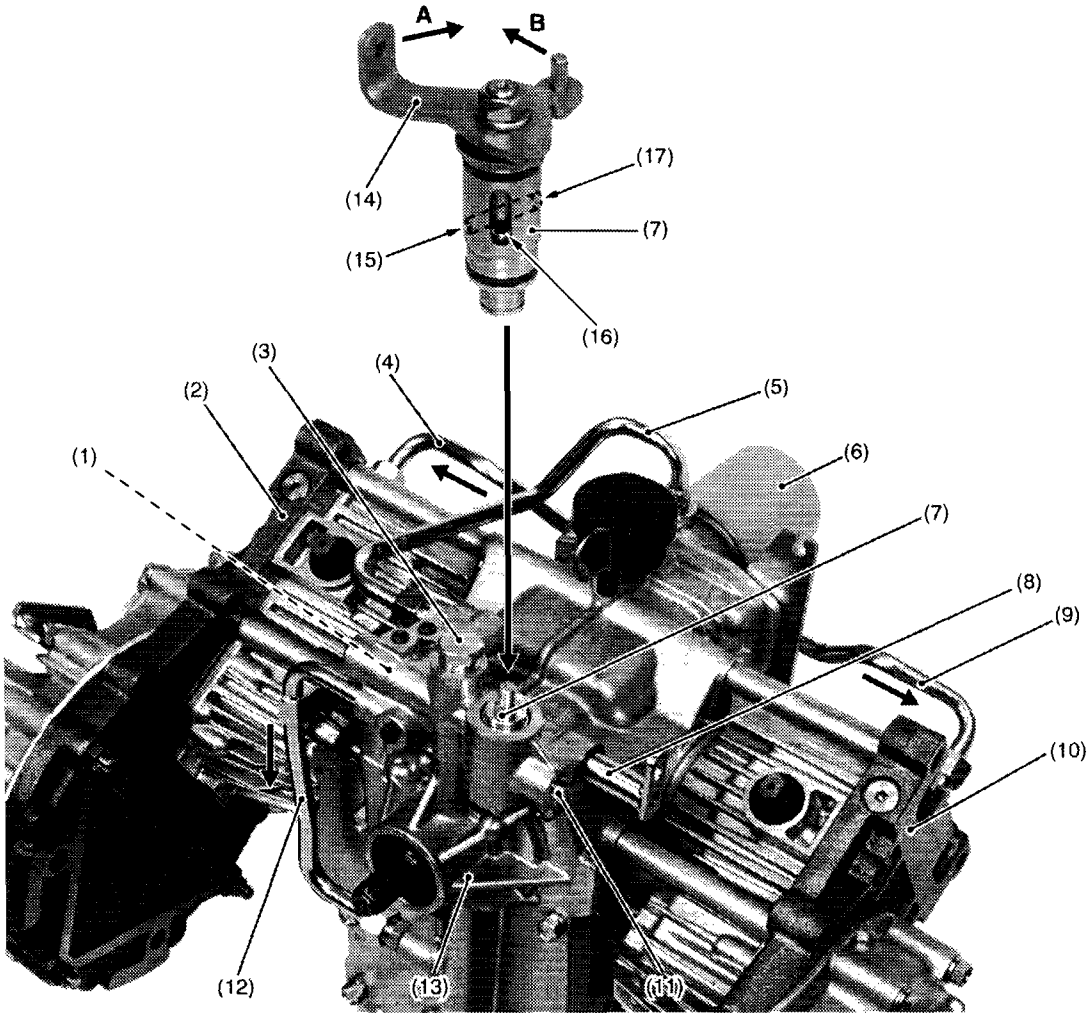

3GZAAAD8P003A

(1) Regulator Valve
(2) Center Section
(3) Relief Valve
(4) Delivery Pipe from OIl Filter to HST
(5) Delivery Pipe to Oil Filter
(6) Oil Filter
(7) Control Valve
(8) PTO Valve
(9) Delivery Pipe from Oil Filter to HST
(10) Center Section
(11) Lift Cylinder Point from Control Valve
(12) Delivery Pipe to PTO Clutch
(13) Center Cover Case
(14) Lift Arm
(15) Inner Passage
(16) Inner Passage
(17) Groove

A : Connection to Return Spring
B : Connection to Lift Wire

The hydraulic system consists of the control valve (7), lift cylinder and etc..

Filtered oil is forced out by the hydraulic pump to the control valve (7) through the relief valve (3).

The control valve switches the oil flow, and oil is channeled to the lift cylinder or returned to the transmission case (hydrostatic transmission charge line) through the center cover case (13).

Control valve is a type of spool.

Control valve has two inner passages (15), (16). These two passages (15), (16) cross in the control valve (7).

Lift arm (14) is connect to the mower lift pedal with a lift wire and it is connected to the machine frame with a return spring.

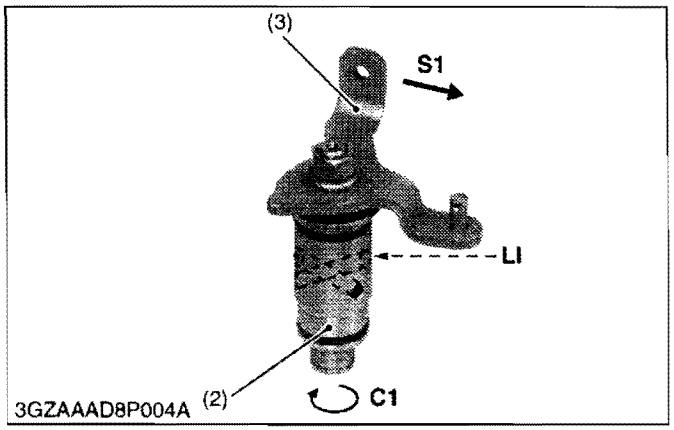

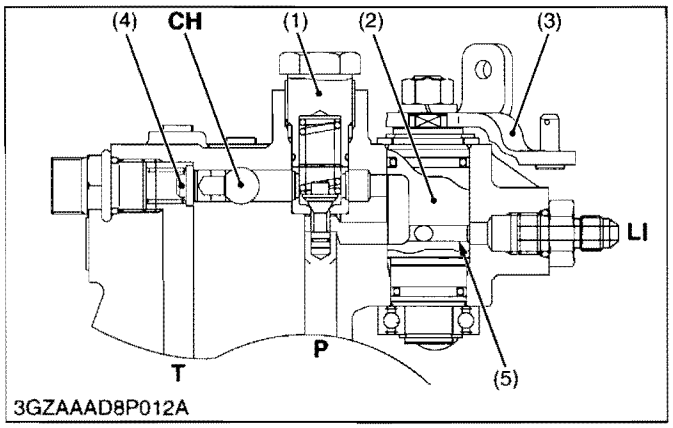

■ When Engine is Stopped

When engine is stopped, hydraulic pump is not driven.

Since high-pressured hydraulic oil is not fed to hydraulic circuit, relief valve (1), control valve (2) and regulator valve (4) are not opened.

Lift arm (3) of control valve is pulled by lift arm return spring, and control valve (2) keeps still its original position.

After starting engine, hydraulic pump is driven.

Since pressured hydraulic oil is fed to hydraulic circuit, oil is fed through control valve (2) and charge port (**CH**) to oil filter, hydraulic PTO clutch and hydrostatic transmission.

(1) Relief Valve
(2) Control Valve
(3) Lift Arm
(4) Regulator Valve
(5) Control Valve Inner Passage

P : Oil from Pump
LI : Oil to Lift Cylinder
CH : Charge Port (Oil to Oil Filter Hydraulic PTO Clutch and HST)
T : Oil to Tank
LI : Lift Cylinder Port
S1 : Lift Arm Spring Force
C1 : Control Valve Rotation

W1013312

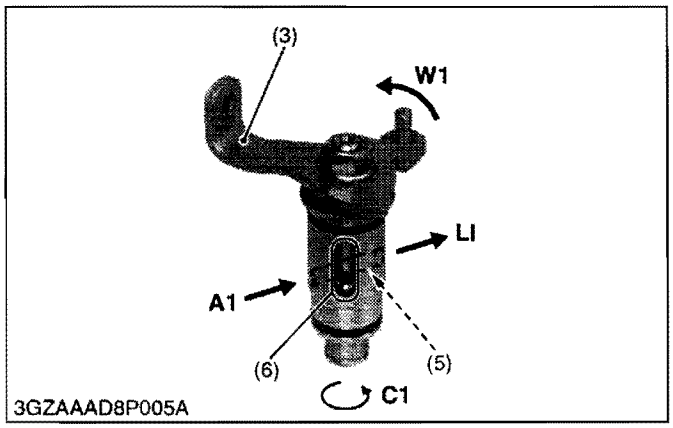

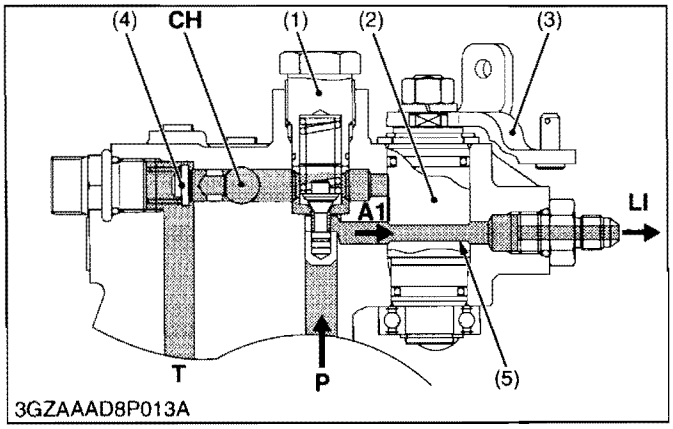

■ Mower "LIFTING" Position

After starting engine and while operator pushes the mower lift pedal, lift wire pulls the lift arm (3) forward and control valve (2) is turned counterclockwise.

Control valve has two inner passages. One passage consists of two small holes. Other hole consists groove hole and small hole.

Two passages cross in the control valve body.

Since the small hole of control valve (2) faces relief valve, high-pressured hydraulic oil from pump port (**P**) flows to control valve inner passage (5) the lift cylinder, and mower is lifted up.

(1) Relief Valve
(2) Control Valve
(3) Lift Arm
(4) Regulator Valve
(5) Control Valve Inner Passage
(6) Control Valve Groove

P : Oil from Pump
LI : Oil to Lift Cylinder
CH : Charge Port (Oil to Oil Filter Hydraulic PTO Clutch and HST)
T : Oil to Tank
LI : Lift Cylinder Port
S1 : Lift Arm Spring Force
C1 : Control Valve Rotation

W1013662

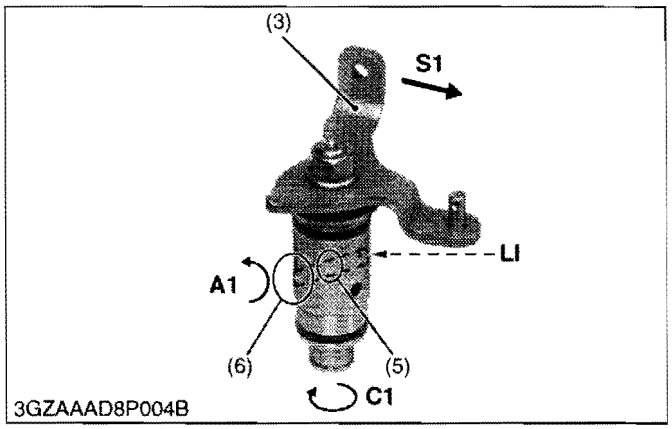

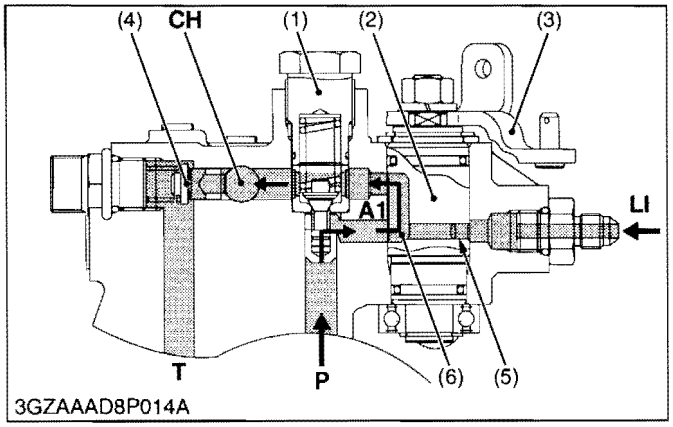

■ Mower "OPERATING" Position

When operator release his foot from mower lift pedal, control arm return spring pulls lift arm (3) clockwise, and control valve is turned clockwise.

Groove (6) of control valve faces to relief valve (1). Hole in the groove (6) is connected to lift cylinder port (**LI**).

High-pressured oil from pump is delivered through lift cylinder groove to relief valve. Hydraulic oil in the lift cylinder returns through control valve inner passage (5) back to control valve groove and relief valve (1).

Since oil in the lift cylinder flows to relief valve, oil pressure drops, and mower lowers.

(1) Relief Valve
(2) Control Valve
(3) Lift Arm
(4) Regulator Valve
(5) Control Valve Inner Passage
(6) Control Valve Groove

P : Pressured Oil from Pump
A1 : Pressured Oil from Groove to Relief Valve
LI : Oil from Lift Cylinder
CH : Charge Port (Pressured Oil to Oil Filter, Hydraulic PTO Clutch and HST)
S1 : Lift Arm Spring Force
C1 : Control Valve Rotation

W1013830

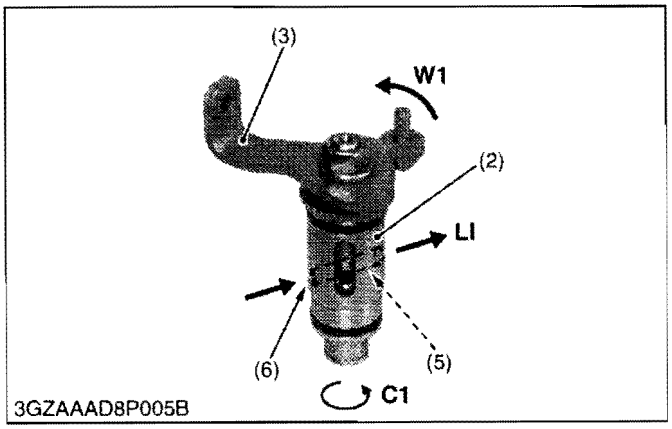

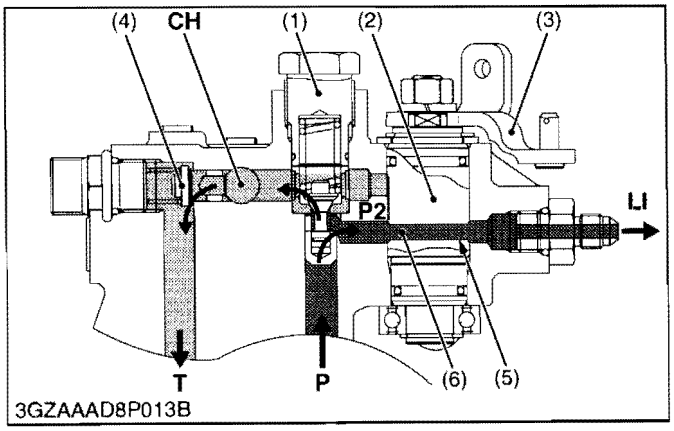

■ Mower "HIGHEST" Position

While operator continues to push the mower lift pedal, lift wire pulls the lift arm (3) forward more and control valve is turned counterclockwise.

Control valve hole (6) faces to relief valve (1).

Pressured oil from pump flows to lift cylinder.

Since oil fills in the lift cylinder, the pressure in the lift cylinder increases at highest pressure.

And mower is kept at the highest position.

Pressured oil opens the relief valve poppet and the regulator valve.

Oil is drained to the tank.

(1) Relief Valve
(2) Control Valve
(3) Lift Arm
(4) Regulator Valve
(5) Control Valve Inner Passage
(6) Control Valve Groove

P : Pressured Oil from Pump
LI : Oil from Lift Cylinder
P2 : Pressured Oil from Relief Valve
CH : Charge Port (Pressured Oil to Oil Filter, Hydraulic PTO Clutch and HST)
T : Oil to Tank
W1 : Lift Arm Rotation
C1 : Control Valve Rotation

W1014133

https://truckmanualshub.com/

4. LIFT CYLINDER

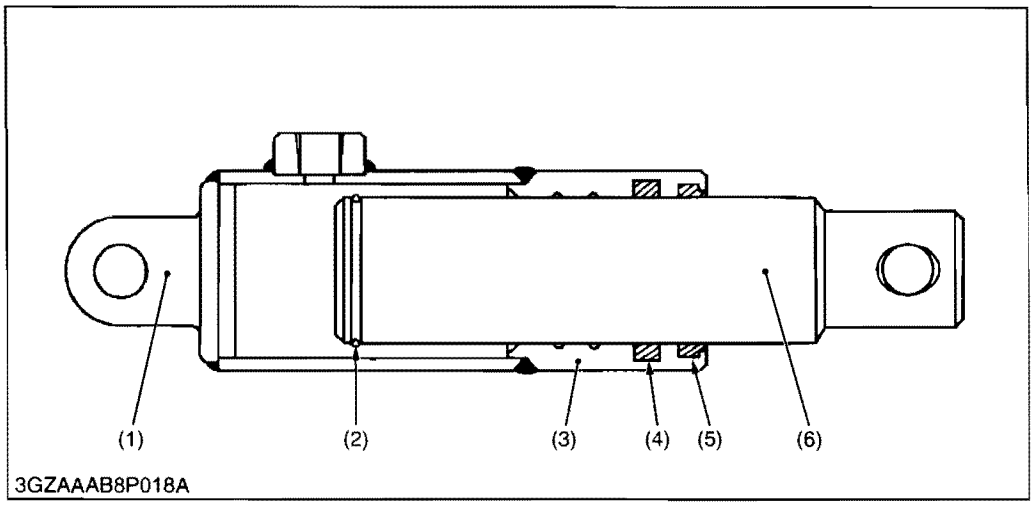

(1) Tube End
(2) Snap Ring
(3) Cylinder Tube
(4) Packing
(5) Scraper
(6) Piston Rod

W1014485

The lift cylinder consists of the tube end (1), cylinder tube (3), piston rod (6) and other parts as shown in the figure above.

This cylinder is single acting type.

5. MOWER LINKAGE

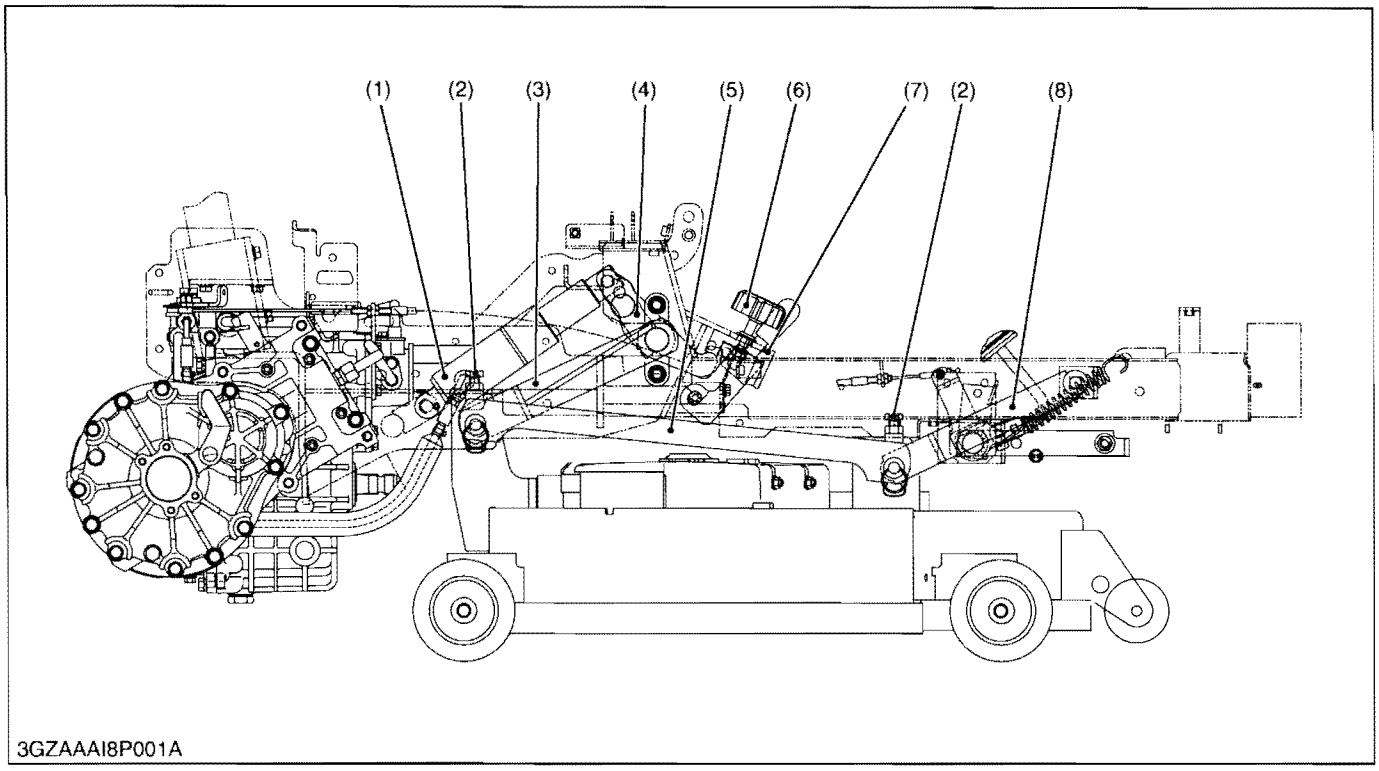

(1) Lift Cylinder
(2) Cutting Height Fine Tuning Bolt
(3) Rear Arm
(4) Horizon Plate
(5) Lift Shaft
(6) Cutting Height Adjusting Dial
(7) Adjusting Cam
(8) Front Arm

The lift shaft (5) and rear arm (3) are connected directly with joint pins.

Front arm (8) and rear arm (3) are linked with horizon plate (4).

As the hydraulic control lever moves to up position, lift cylinder (1) is extended and lift shaft (3) is rotated to pull the rear arm (3) rearward. As a result, mower is lifted.

The cutting height adjusting dial (6) adjusts cutting height of mower by rotating the adjusting cam (7).

The level of mower deck is adjusted by adjusting the cutting height fine tuning bolt length (2).

https://truckmanualshub.com/

https://truckmanualshub.com/

SERVICING

CONTENTS

1. TROUBLESHOOTING 4-S1
2. SERVICING SPECIFICATIONS 4-S2
3. TIGHTENING TORQUES 4-S3
4. CHECKING, DISASSEMBLING AND SERVICING 4-S4
   [1] HYDRAULIC CONTROL VALVE AND RELIEF VALVE 4-S4
      (1) Checking and Adjusting 4-S4
      (2) Disassembling and Assembling 4-S4
   [2] LIFT CYLINDER 4-S6
      (1) Disassembling and Assembling 4-S6

https://truckmanualshub.com/

https://truckmanualshub.com/

1. TROUBLESHOOTING

Symptom	Probable Cause	Solution	Reference Page
Mower Does Not Rise	Control valve malfunctioning	Repair or replace	4-S4
	Lift cylinder damaged	Replace	4-S6
	Relief valve spring damaged	Replace	4-S4
	Relief valve setting pressure too low	Adjust	4-S4
	Hydraulic pump defective	Replace	2-S17
	Oil strainer clogged	Clean or replace	G-22
	Insufficient transmission oil	Refill	G-21
Mower Does Not Lower	Control valve malfunctioning	Repair or replace	4-S4
Mower Drops by Its Weight	Lift cylinder worn or damaged	Replace	4-S6
	Control valve malfunctioning	Replace	4-S4

W1014322

https://truckmanualshub.com/

2. SERVICING SPECIFICATIONS

Item		Factory Specification	Allowable Limit
Relief Valve (Control Valve)	Setting Pressure	3.0 to 3.5 MPa 31 to 35 kgf/cm^2 440 to 500 psi	–

W1013874

https://truckmanualshub.com/

3. TIGHTENING TORQUES

Tightening torques of screws, bolts and nuts on the table below are especially specified.
(For general use screws, bolts and nuts : See page G-10.)

Item	N·m	kgf·m	lbf·ft
Bush mounting screw	48 to 55	4.9 to 5.7	36 to 41

W1012736

4. CHECKING, DISASSEMBLING AND SERVICING

[1] HYDRAULIC CONTROL VALVE AND RELIEF VALVE

(1) Checking and Adjusting

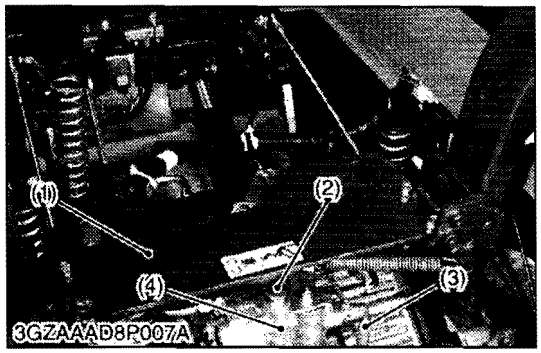

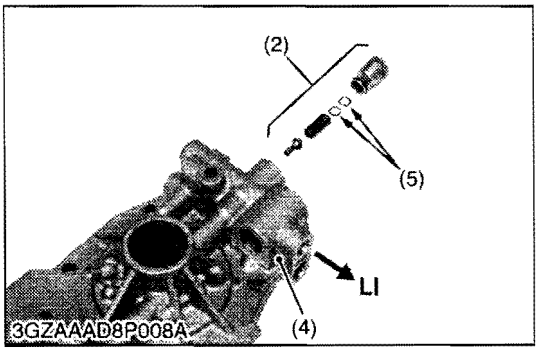

Relief Valve Setting Pressure

1. Remove the beam kit (1).
2. Disconnect the lift cylinder hose (3) from the joint of center cover (4).
3. Install the adaptor, cable and pressure gauge.
4. If the pressure is not within the factory specifications, adjust with the adjusting shims (5).

Relief valve setting pressure	Factory spec.	3.0 to 3.5 MPa 31 to 35 kgf/cm^2 440 to 500 psi

Condition

- Engine speed ..... Maximum
- Oil temperature ..... 45 to 55 °C (113 to 131 °F)

(Reference)

- Thickness of adjusting shims (5) : 0.2 mm (0.008 in.)
  0.3 mm (0.01 in.)
  0.8 mm (0.03 in.)

(1) Beam Kit
(2) Relief Valve
(3) Lift Cylinder Hose
(4) Center Cover
(5) Adjusting Shim

LI : Oil to Lift Cylinder

W1011046

(2) Disassembling and Assembling

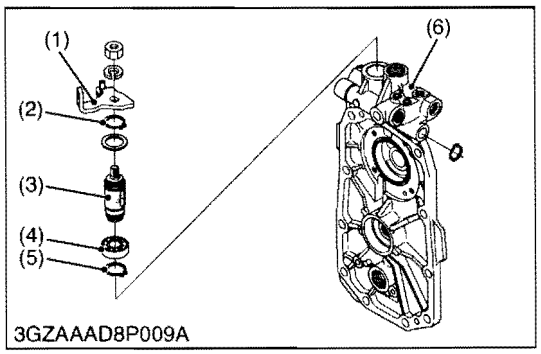

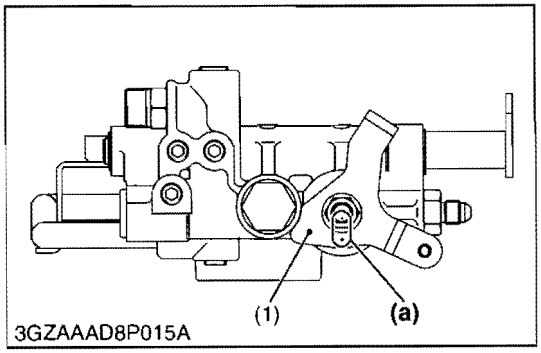

Remove Control Valve

1. Remove the beam kit over the transmission case.
2. Remove the lift wire from lift arm (1).
3. Remove the lift arm (1), external snap rings (5) and ball bearing (4).
4. Remove the control valve (3).

(When reassembling)

- Take care not to damage the control valve (3).
- Align the alignment mark **(a)** on control valve (3) and lift arm (1).

(1) Lift Arm
(2) External Snap Ring
(3) Control Valve
(4) Ball Bearing
(5) External Snap Ring
(6) Center Cover

(a) Alignment Mark

W1011462

https://truckmanualshub.com/

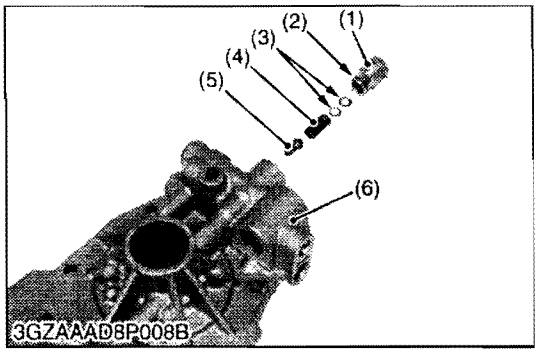

Removing Relief Valve

1. Unscrew the plug (1).
2. Remove adjusting shims (3) spring (4) and spool (5).

(When reassembling)

- Install the relief valve noting the number of adjusting shims (3).

■ **IMPORTANT**

- **After reassembling the relief valve, be sure to adjust its setting pressure. (See page 4-S4.)**

(1) Plug
(2) O-ring
(3) Adjusting Shim
(4) Adjusting Shim
(5) Poppet
(6) Center Cover

W1011741

[2] LIFT CYLINDER

(1) Disassembling and Assembling

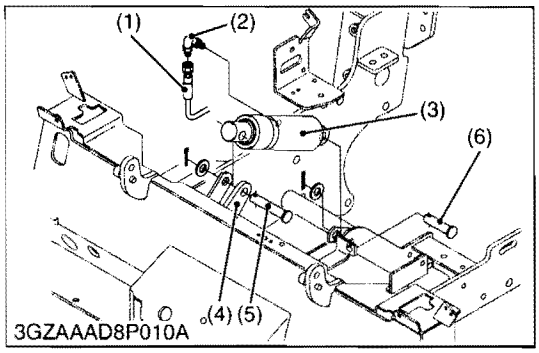

Removing Lift Cylinder

1. Disconnect the cylinder hose (1) from the lift cylinder (3).
2. Remove the joint pins (5), (6), and remove the lift cylinder (3).
3. If oil leaks are found, change the lift cylinder as an assembly.

(When reassembling)

- Use hydraulic thread sealer on the taper thread of adaptor (2).

(1) Cylinder Hose
(2) Adaptor
(3) Lift Cylinder
(4) Lift Shaft
(5) Joint Pin
(6) Joint Pin

W1012151

Disassembling Mower Linkage

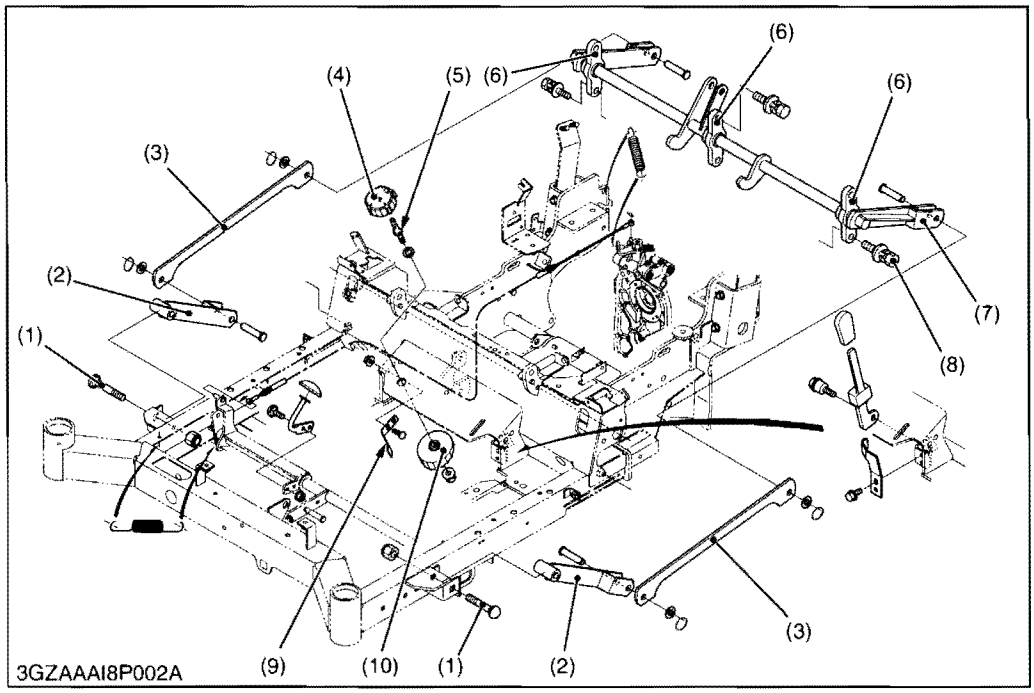

(1) Front Arm Mounting Screw
(2) Front Arm
(3) Horizon Plate
(4) Cutting Height Adjusting Dial Knob
(5) Cutting Height Adjusting Rod
(6) Bush
(7) Lift Shaft Comp.
(8) Screw
(9) Spring Retainer
(10) Adjusting Cam

W1012401

1. Remove the both front arm mounting screws (1), then remove the front arms (2).
2. Remove the both clevis pins and the horizon plate (3).
3. Remove the both side of bush mounting screws (8) and remove the lift shaft comp. (7).
4. Remove the spring retainer (9).
5. Remove the cutting height adjusting dial knob (4).
6. Remove the nut and remove the adjusting cam (10) and cutting height adjusting rod (5).

(When reassembling)

Tightening torque	Bush mounting screw	48 to 55 N·m 4.9 to 5.7 kgf·m 36 to 41 lbf·ft

W1131675

https://truckmanualshub.com/

MECHANISM

CONTENTS

1. WIRING DIAGRAM 5-M1
2. STARTING SYSTEM 5-M2
   [1] RELAY 5-M3
   [2] STARTER 5-M4
   [3] GLOW PLUG 5-M5
   [4] SAFETY SWITCH 5-M5
   [5] FUEL PUMP 5-M6
   [6] ENGINE STOP SOLENOID 5-M6
3. CHARGING SYSTEM 5-M7
   [1] AC DYNAMO 5-M8
   [2] REGULATOR 5-M8
   [3] EASY CHECKER 5-M9
4. GAUGES 5-M10
   [1] FUEL QUANTITY 5-M11
   [2] COOLANT TEMPERATURE 5-M11

https://truckmanualshub.com/

1. WIRING DIAGRAM

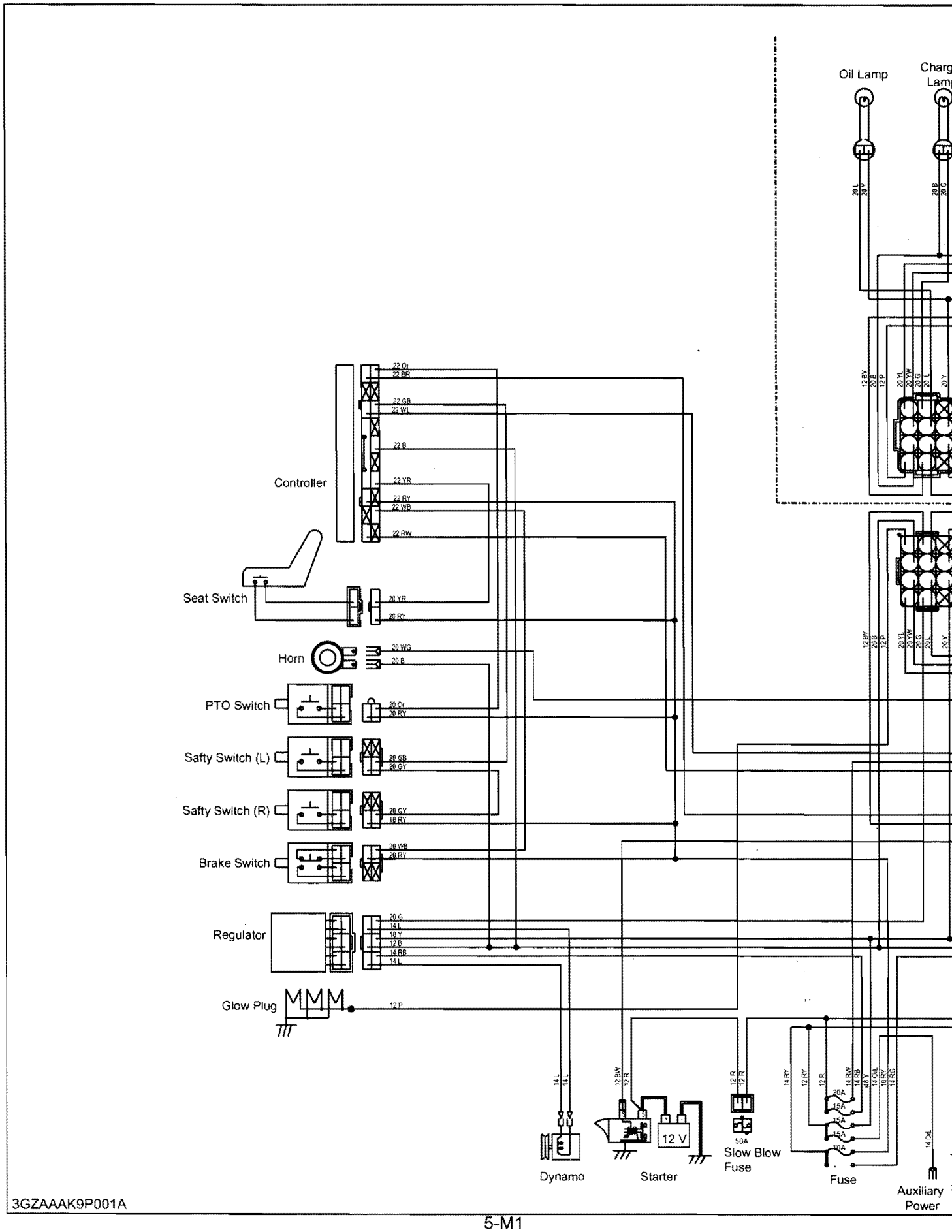

https://truckmanualshub.com/

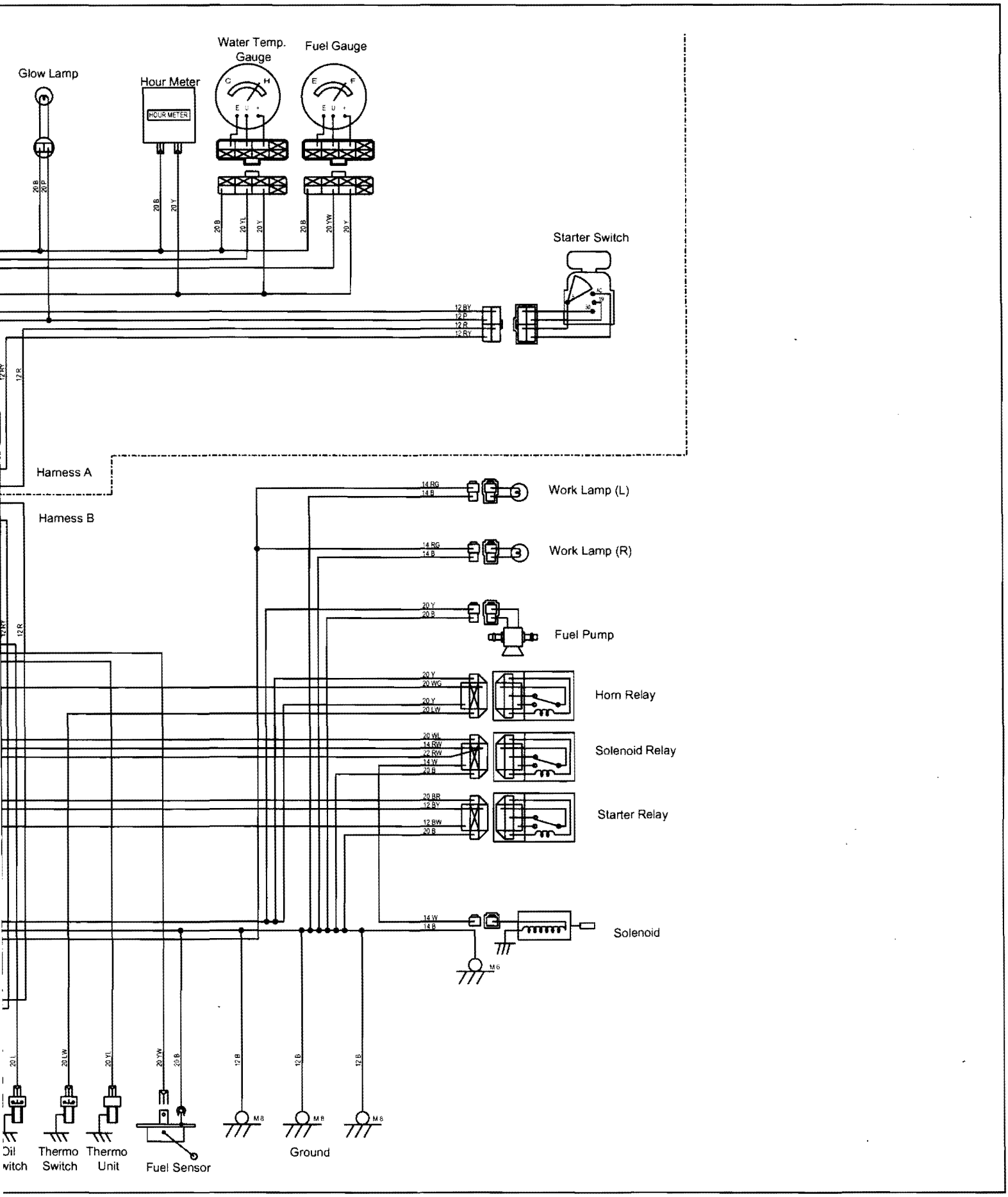

2. STARTING SYSTEM

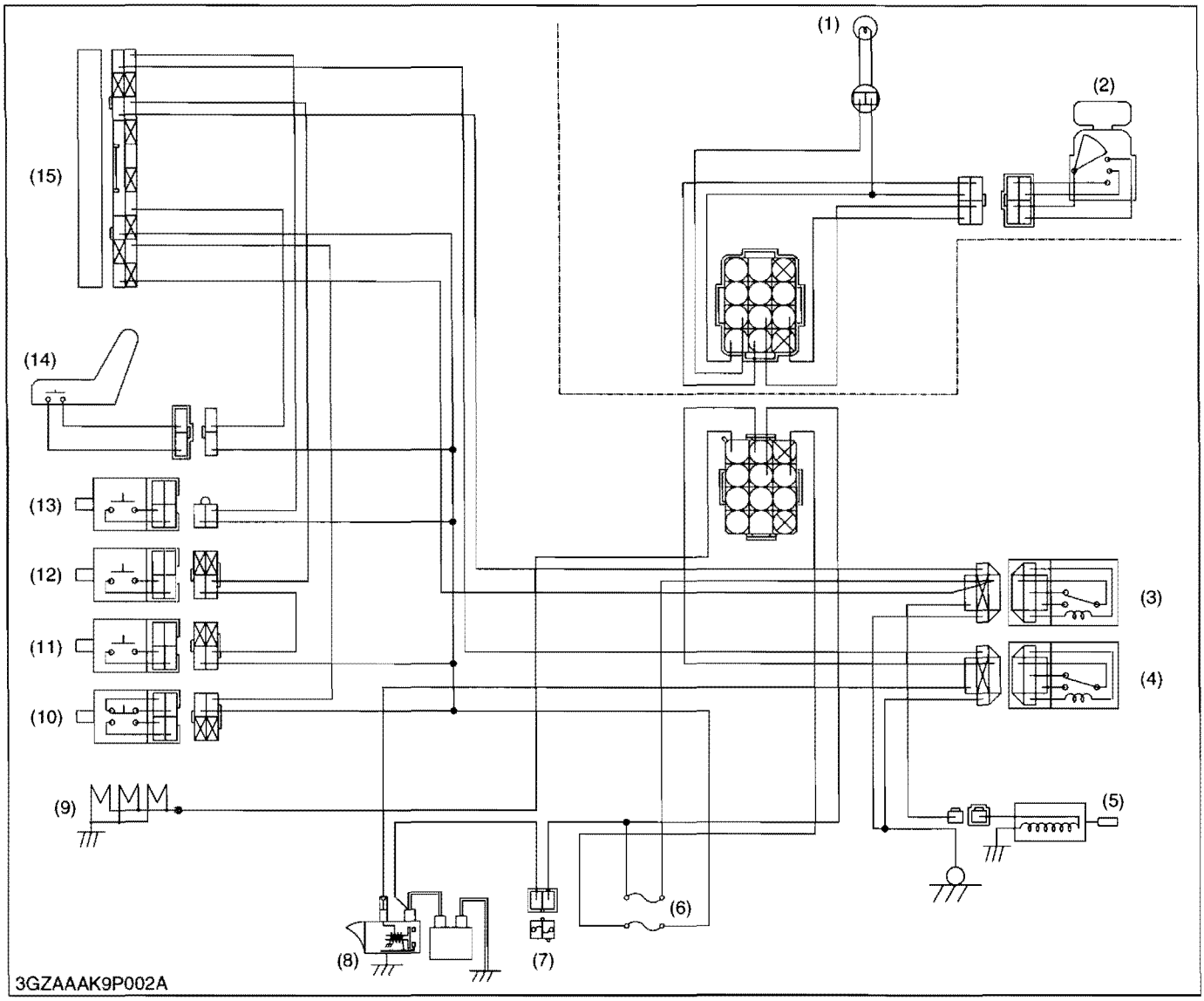

(1) Glow Lamp
(2) Starter Switch
(3) Solenoid Relay
(4) Starter Relay
(5) Solenoid
(6) Fuse
(7) Slow Blow Fuse
(8) Starter
(9) Glow Plug
(10) Brake Switch
(11) Safety Switch (RH)
(12) Safety Switch (LH)
(13) PTO Switch
(14) Seat Switch
(15) Controller

When the main switch is turned to the **PREHEAT** position, the terminal **30** is connected to the terminals **19** and **AC**. The glow plugs become red-hot, and the preheat indicator lamp also lights on while preheating.

When the main switch is then turned to the **START** position with the safety switches on, the terminal **30** is connected to the terminals **50** and **AC**. Consequently, battery current flows to the starter motor and start the engine.

The main switch automatically returns to the **ON** position, the terminal **30** is connected only to the terminal **AC**, thereby causing the starting circuit to be opened, stopping the starter motor.

When the main switch turned from the **ON** position to the **OFF** position, the fuel cut-off solenoid moves the fuel injection pump control rack to the **"No Fuel Injection"** position and stop the engine.

https://truckmanualshub.com/

[1] RELAY

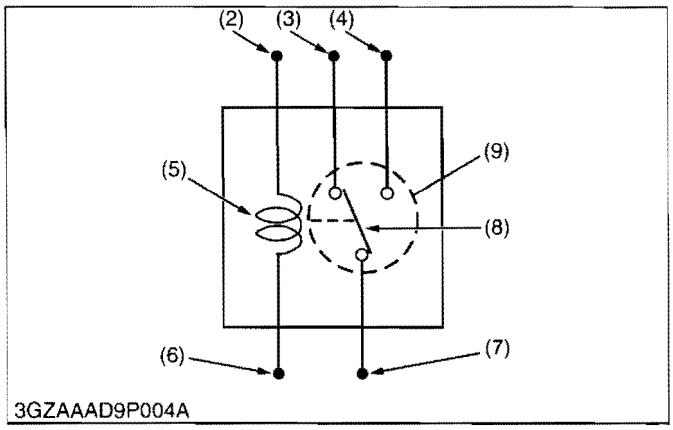

3GZAAAD9P004A

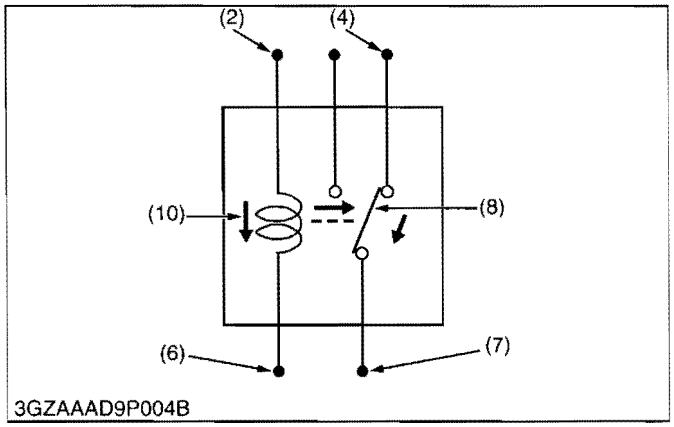

3GZAAAD9P004B

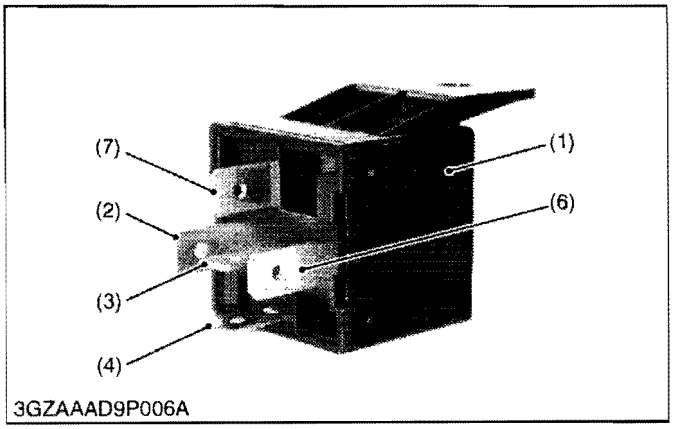

3GZAAAD9P006A

■ Relay

Relay (1) basically consists of relay winding (2) and mechanical contact points (9).

Current flowing from switch to relay winding (5) cause **"ON (Close)"** or **"OFF (Open)"** of mechanical contact points (9).

When current is applied to the winding (energized) (10), a magnetic field pushes the contact lever (8) and normally open terminal is connected.

Function of relay (1) is to control current to be controlled in circuit from distant place (switch location place).

Another function of relay (1) is to control large current by small current.

function of each relay are as follows.

- Relay 1 : Relay to horn (overheat alarm relay)
- Relay 2 : Relay to start engine (starter relay)
- Relay 3 : Relay to stop engine (solenoid relay)

(1) Relay
(2) **85** Terminal
(3) **87** Terminal
(4) **87** Terminal
(5) Relay Winding
(6) **86** Terminal
(7) **30** Terminal
(8) Contact Lever
(9) Mechanical Contact Points
(10) Winding (Energized)

W1016715

[2] STARTER

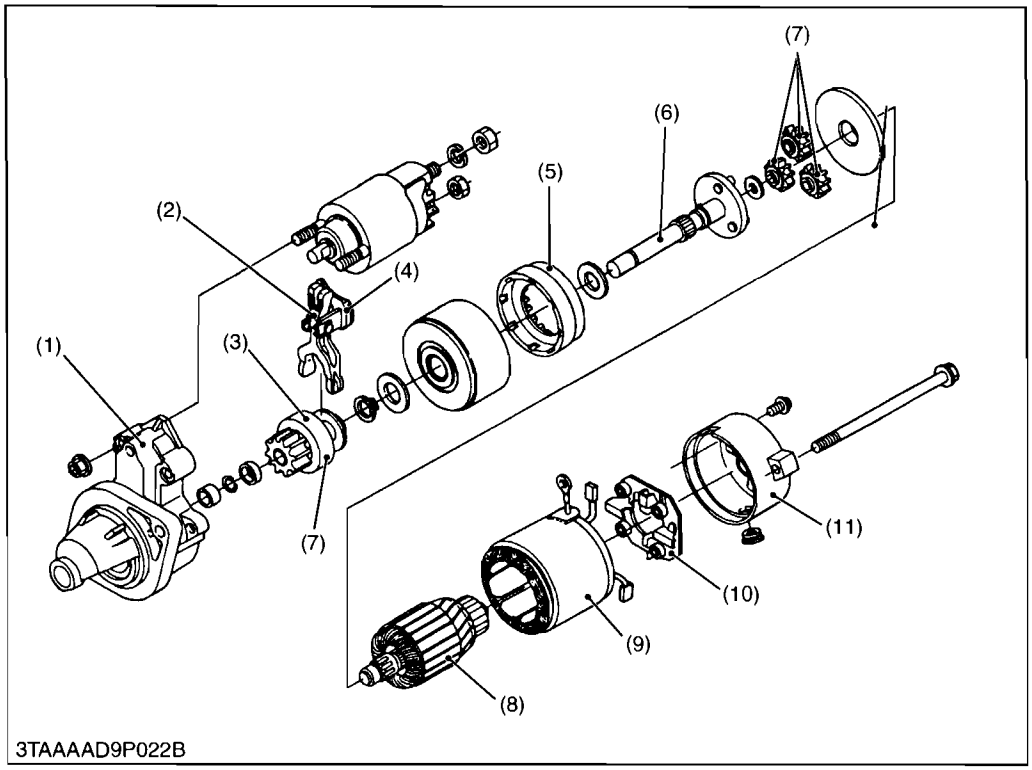

(1) Housing
(2) Magnetic Switch
(3) Overrunning Clutch
(4) Drive Lever
(5) Internal Gear
(6) Gear Shaft
(7) Planetary Gear
(8) Armature Shaft
(9) Yoke
(10) Brush Holder
(11) Rear End Holder

W1012893

The reduction system is used planetary gears, and the speed of gear shaft (6) is reduced to approximately one fifth of the armature shaft (8).

https://truckmanualshub.com/

[3] GLOW PLUG

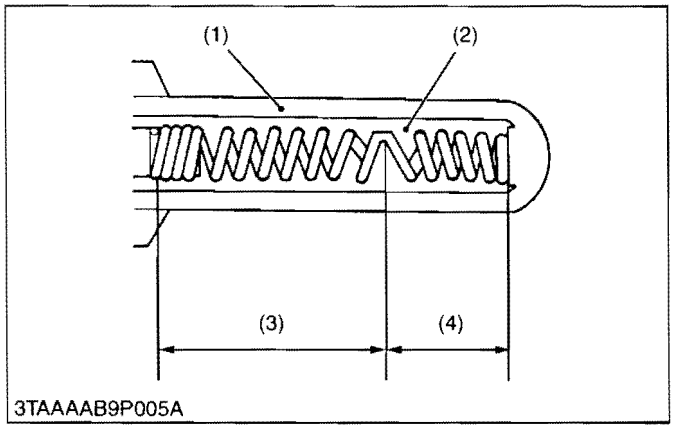

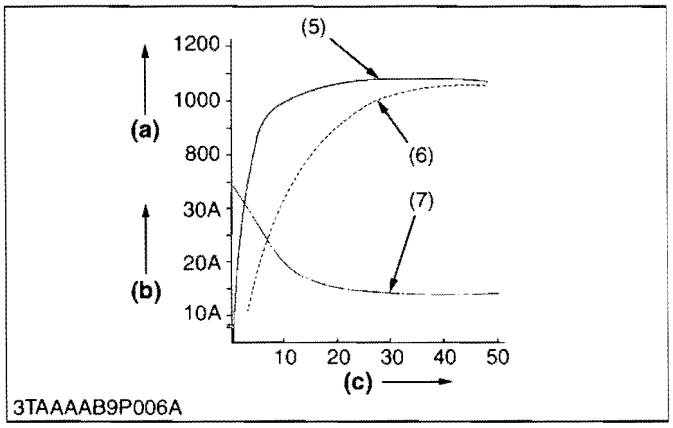

This plug is a two-material type QGS (Quick Glow System) for quick temperature rise, and has self-controlling function as well as excellent durability.

The heater (4) connected in series to the heater (3), which also functions as the resistor, is incorporated in the sheath tube (1) of the super glow plug.

The resistance of this heater (3) cum resistor is small when the temperature is low, while the resistance becomes large when the temperature rises.

Therefore, because sufficient current is flown to the heater (4) during the initial period of energization, the temperature rises quickly and the resistance grows with the rise in the temperature of the resistor, the flowing current is reduces to prevent the heater (4) from being heated.

The ignition point is in the area of 2 to 3 mm (0.079 to 0.118 in.) from the tip of the plug in order to reduce its projection into the combustion chamber.

(1) Sheath Tube
(2) Insulation Powder
(3) Heater also functioning as a Resistor
(4) Heater
(5) Super Glow Plug
(6) Conventional Quick-heating type Glow Plug
(7) Glow Plug Current

(a) Glow Plug Temperature (°C)
(b) Current (A)
(c) Time (Sec.)

W1013021

[4] SAFETY SWITCH

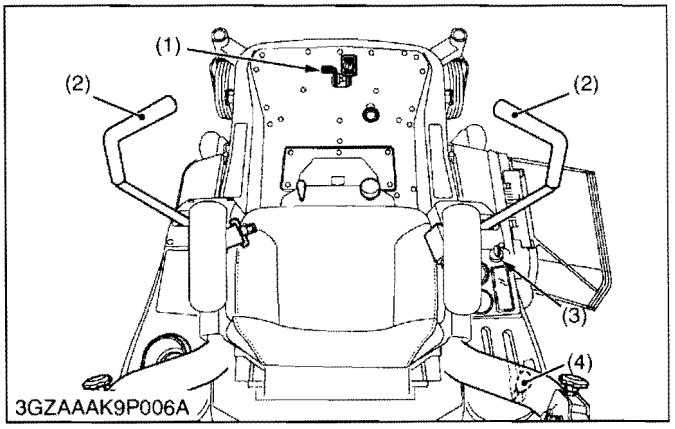

Switches are located at the motion control levers, at the parking brake pedal, at the PTO lever and under the operator's seat.

Function of switch is to control current from main switch to relay.

Switches are changed to **"CLOSE"** or **"OPEN"** electrically by changing the motion control levers, or sitting on the operator's seat or engaging the parking brake.

By selecting either normally open or normally closed contact, the switch function is determined.

Safety switch	Type
Seat switch	Normally open
PTO lever switch	Normally open
Parking brake switch	Normally close
Motion control lever (LH) switch	Normally open
Motion control lever (RH) switch	Normally open

(1) Parking Brake Switch
(2) Motion Control Lever Switch
(3) Seat Switch
(4) PTO Lever Switch

W1013337

[5] FUEL PUMP

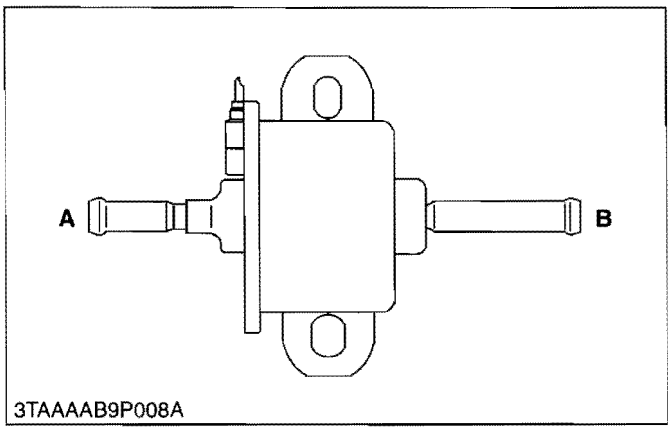

An electro magnetic fuel pump uses a transistor that causes the pump to start pumping fuel when the main switch is turned to the **"ON"** position.

Therefore, fuel is supplied to the fuel injection pump regardless of engine speed. This pump is driven by the battery. It can therefore be operated even with the engine being stopped.

A : Inlet **B : Outlet**

W1013306

[6] ENGINE STOP SOLENOID

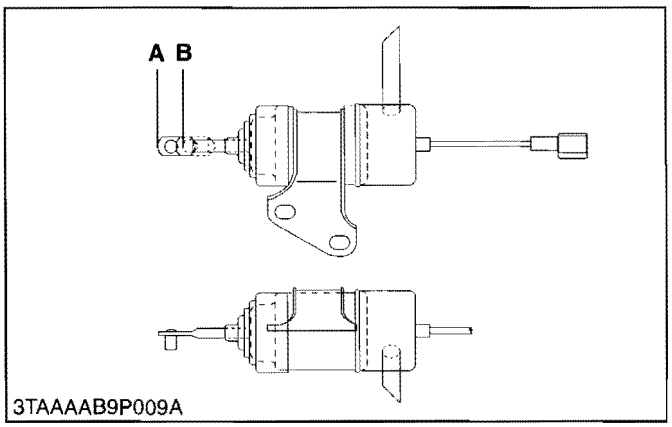

Controller is provided to actuate the engine stop solenoid approx. 10 seconds to stop after the main switch is turned from **ON** position to **OFF** position.

Flowing of the battery current into the coil while the controller's timer works attracts the plunger to actuate the stop lever or control rack of the injection pump. When the battery current stops, the plunger is returned to the original position by the spring.

a : ON **[A] ZD321, ZD323**
b : OFF **[B] ZD326, ZD331**

W1013394

https://truckmanualshub.com/

3. CHARGING SYSTEM

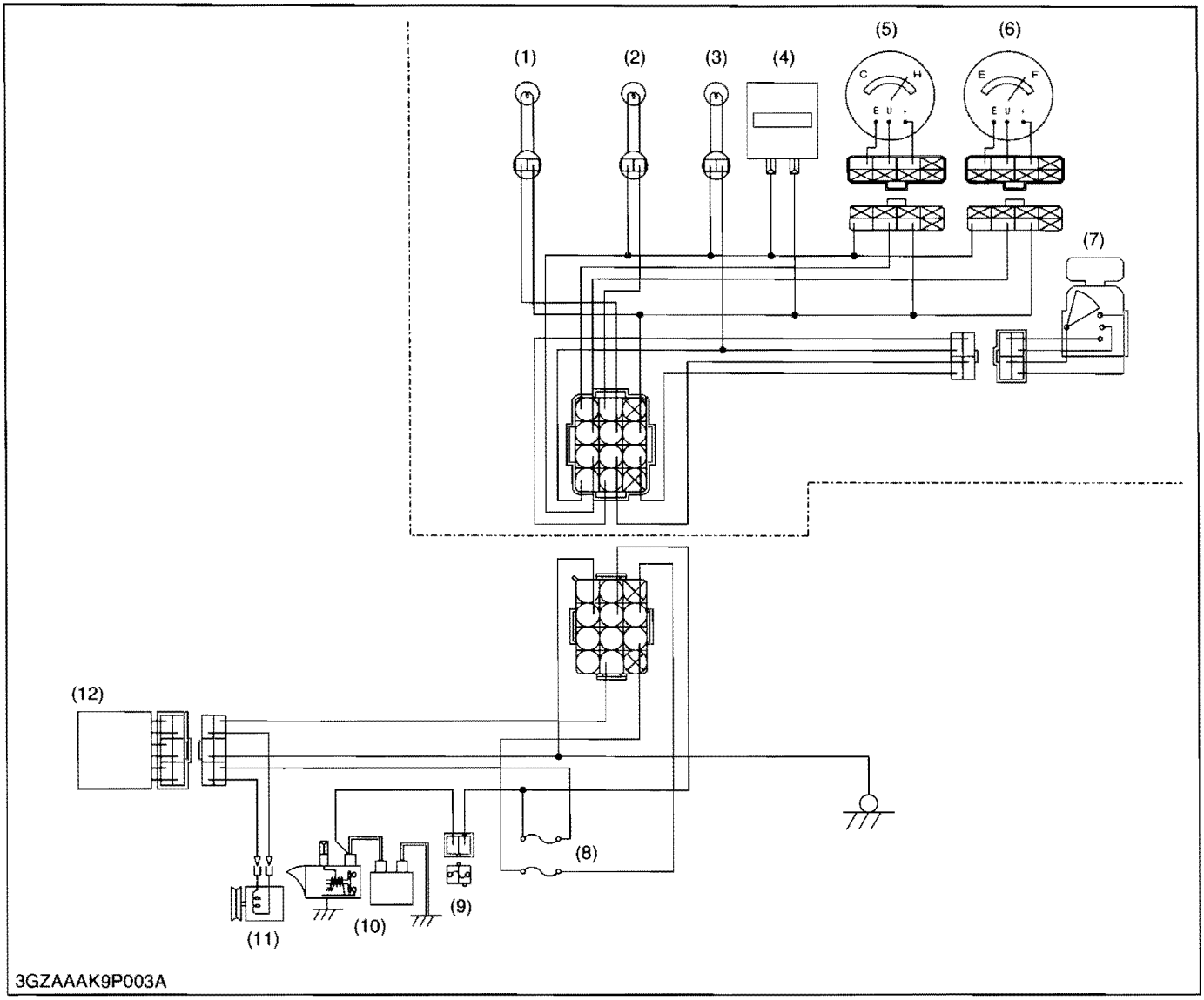

(1) Oil Lamp	(4) Hour Meter	(7) Starter Switch	(10) Starter
(2) Charge Lamp	(5) Water Temperature Gauge	(8) Fuse	(11) Dynamo
(3) Glow Lamp	(6) Fuel Gauge	(9) Slow Blow Fuse	(12) Regulator

The charging system supplies electric power for various electrical devices and also charges the battery while the engine runs.

It consists of a AC dynamo and a regulator.

[1] AC DYNAMO

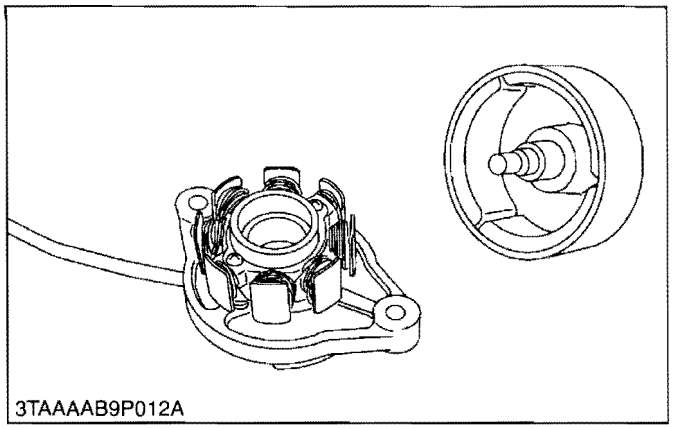
3TAAAAB9P012A

The dynamo is an 8-8 pole rotating magnet type generator. It is simple in construction, consisting of a stator and rotor. The rotor is made up of eight permanent magnet pole pieces assembled on a shaft and rotates on the center of the stator around which eight electromagnetic coils are provided for.

This dynamo produces higher voltage in slow speed rotation, and charges electric current to the battery during engine idling.

W1013535

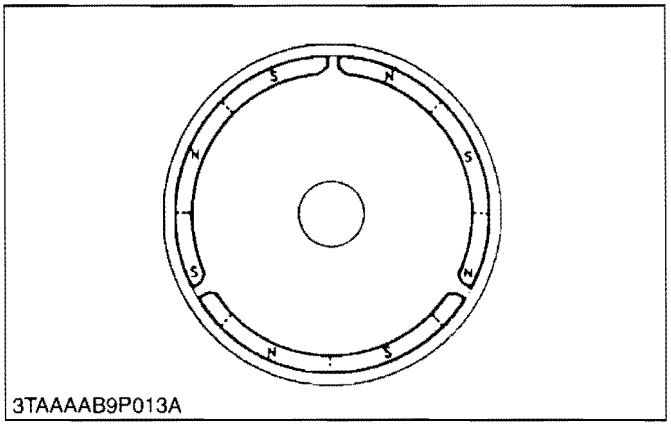

3TAAAAB9P013A

[2] REGULATOR

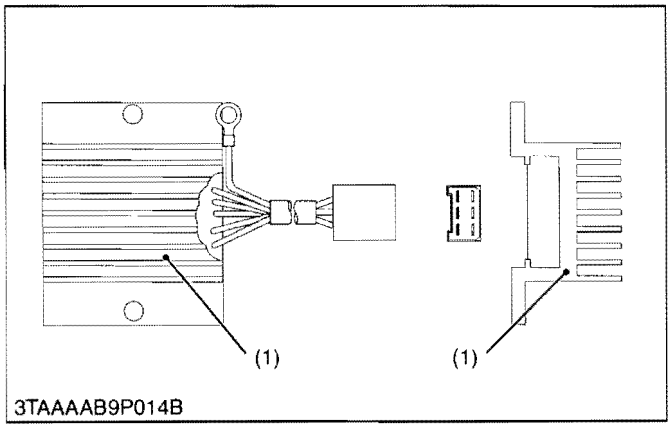

3TAAAAB9P014B

The regulator performs rectification and voltage regulation.

The regulator converts AC into DC which flows through the power consuming circuits and the battery, and also charges the battery.

If however, the battery voltage exceeds a certain level, the DC current is cut off from the charging circuit to prevent overcharging.

(1) Regulator

W1013678

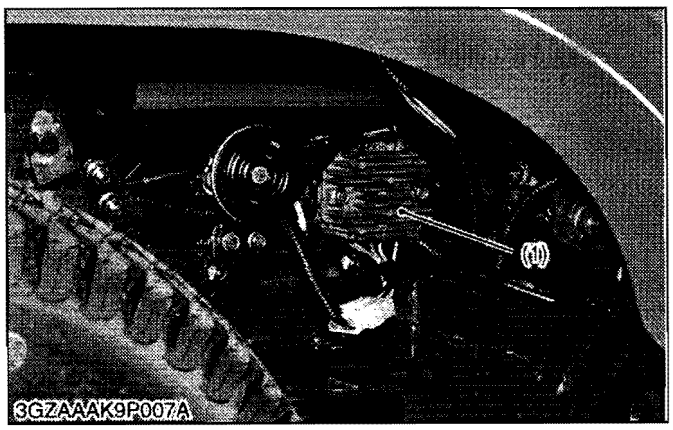

3GZAAAK9P007A

[3] EASY CHECKER

To check the conditions of tractor easily before and during operation, easy checker combination of lamps on the easy checker board is provided.

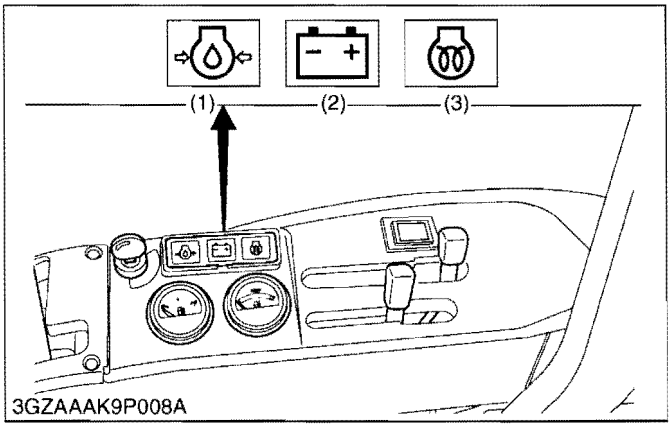

3GZAAAK9P008A

■ Indication Items

(1) Oil Pressure Lamp

When the engine oil pressure is low, this lamp illuminates.

(2) Charge Lamp

When the charging system is not functioning properly, this lamp illuminates.

(3) Pre-heat Indicator Lamp

When the key switch is in the **"Pre-heat"** position, the pre-heat indicator lamp illuminates.

(4) Fuel Lamp

When the fuel in the RH tank goes below the prescribed level, the fuel level warning lamp illuminates.

W1013747

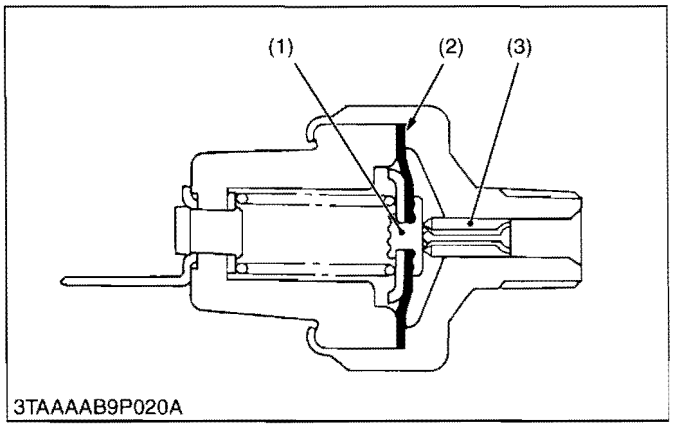

3TAAAAB9P020A

■ Oil Pressure Switch

While oil pressure is high and the force applied to the diaphragm (2) is larger than the spring tension, the terminal contact (1) is open separated from the body contact (3). If the pressure drops below approx. 49 kPa (0.5 kgf/cm^2, 7.1 psi), the contact closes.

(1) Terminal Contact
(2) Diaphragm
(3) Body Contact

W1013868

4. GAUGES

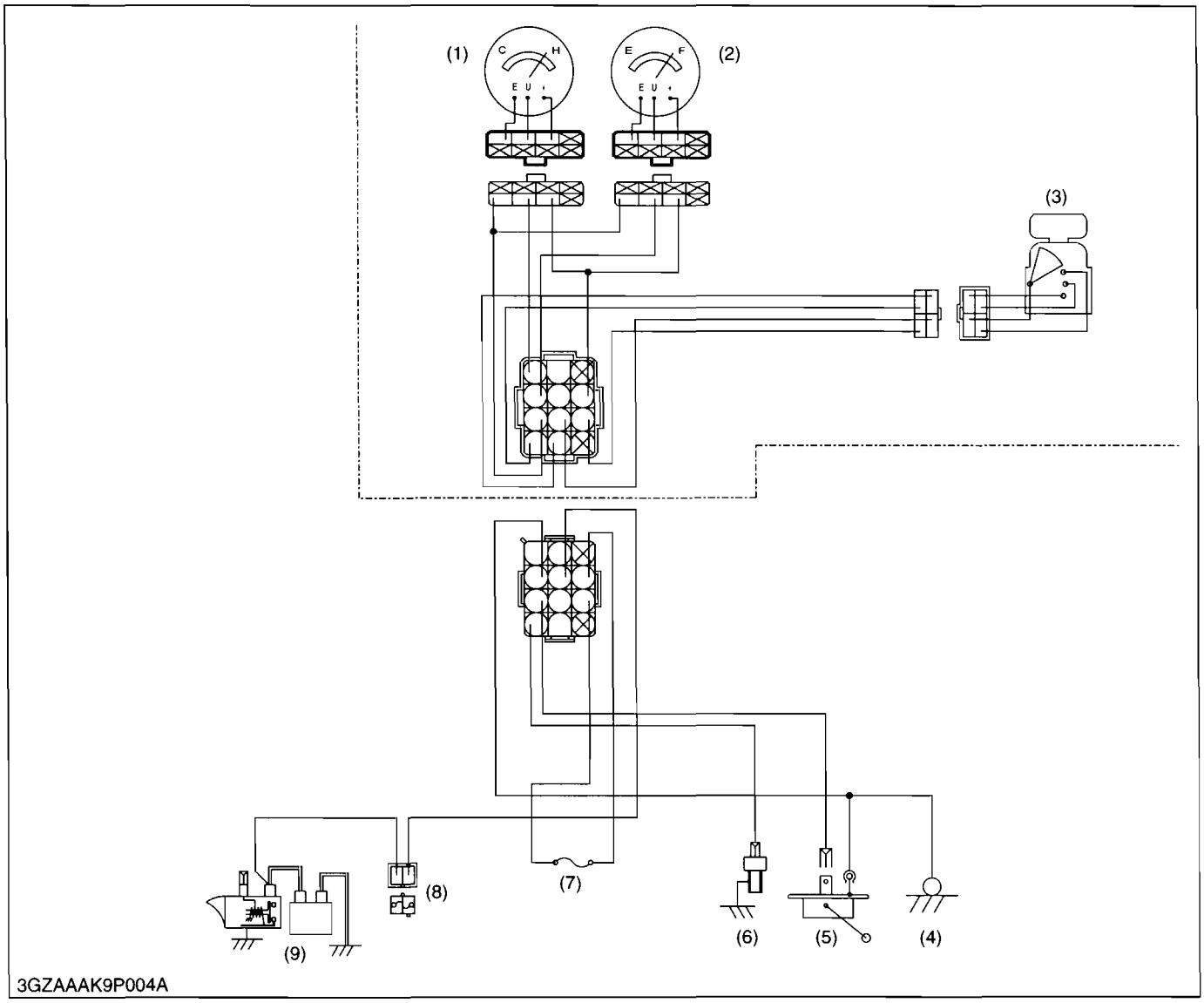

(1) Water Temperature Gauge
(2) Fuel Gauge
(3) Starter Switch
(4) Ground
(5) Fuel Sensor
(6) Thermo Unit
(7) Fuse
(8) Slow Blow Fuse
(9) Starter

The fuel quantity and coolant temperature are indicated by the ammeters. The ammeters indicate each amperage flowing through the fuel level sensor for the fuel quantity detection and through the coolant temperature sensor for the coolant temperature detection.

[1] FUEL QUANTITY

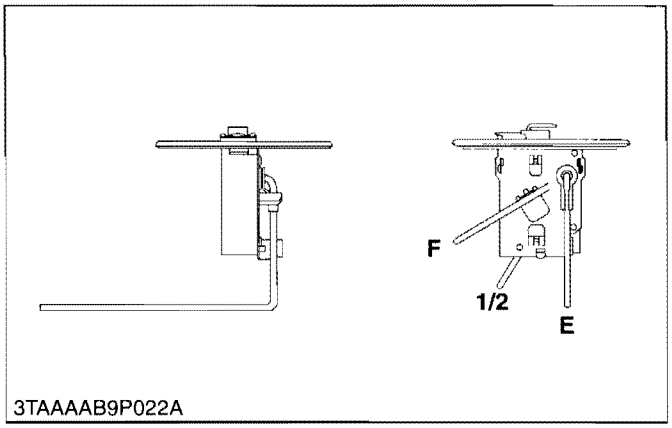

3TAAAAB9P022A

■ Fuel Level Sensor

The remaining fuel quantity is detected by the fuel level sensor installed in the fuel tank and indicated on the fuel gauge. For detection, a float and a resistor are used.

As the float lowers, the resistance of the variable resistor varies. The relation between the amount of fuel and the resistance is as follows.

F	1/2	E (Remaining fuel of approx. 2.0 L, 0.53 U.S.gal., 0.44 Imp.gal.)
1 to 5 Ω	28.5 to 36.5 Ω	103 to 117 Ω

W1013985

[2] COOLANT TEMPERATURE

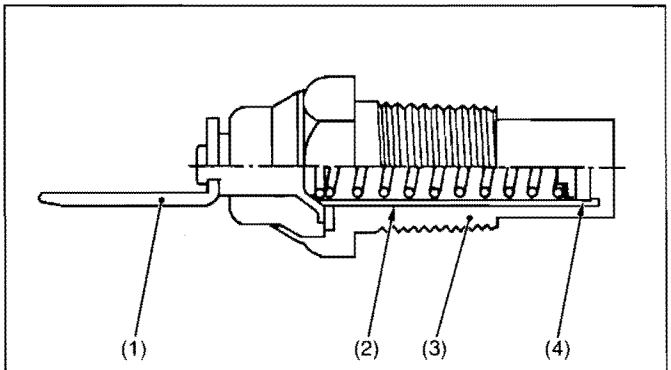

3TRAAAA9P034A

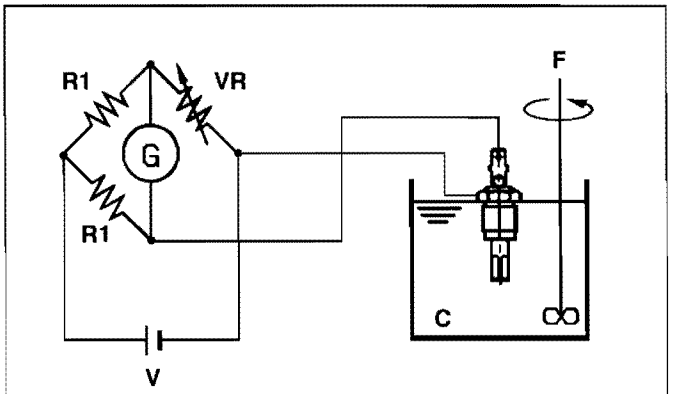

3EEAAAA1P181B

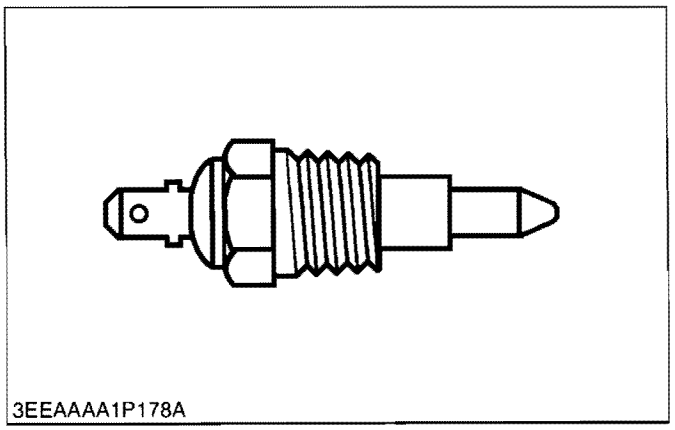
3EEAAAA1P178A

■ Coolant Temperature Sensor (Thermo Unit)

The coolant temperature sensor is installed to the cylinder head of engine, and its tip is in touch with the coolant. It contains a thermistor (4) whose electrical resistance decreases as the temperature increases.

Current varies with changes in the coolant temperature, and the increases or decreases in the current move the pointer of gauge.

Characteristics of Thermistor		
Temperature	**Resistance of VR : ★**	**Condition**
50 °C (122 °F)	153.9 Ω	(A)
80 °C (176 °F)	51.9 Ω	
100 °C (212 °F)	27.4 Ω	
120 °C (248 °F)	16.1 Ω	

★ When galvarnometer shows 0 (Zero).

Condition	Setting Value
(A)	R1 : 54.945 to 55.055 Ω V : DC 6.9 to 7.1 V

(1) Terminal
(2) Insulator
(3) Body
(4) Thermistor

C : Coolant or Silicon Oil
G : Galvanometer
VR : Variable Resistor
F : Flow Velocity (0.14 to 0.15 m/s)

W1021761

■ Coolant Temperature Switch

The coolant temperature switch is installed to the water flange of engine, and its tip is in touch with the coolant.

The overheat alarm activates when the coolant temperature goes up more than the specified value.

When the coolant temperature falls below the specified value, the overheat alarm stops.

Characteristics of Coolant Temperature Switch		
Type	**Operation Temperature**	
	Horn operates	**Horn stops**
Normally open	120 to 126 °C (248 to 258 °F)	116 °C (241 °F)

W1020324

https://truckmanualshub.com/

SERVICING

CONTENTS

1. TROUBLESHOOTING 5-S1
2. SERVICING SPECIFICATIONS 5-S3
3. TIGHTENING TORQUES 5-S4
4. CHECKING, DISASSEMBLING AND SERVICING 5-S5
   [1] CHECKING 5-S5
      (1) Battery 5-S5
      (2) Safety Switches 5-S7
      (3) Main Switch 5-S8
      (4) Starter 5-S9
      (5) Glow Plug 5-S9
      (6) Safety Switch 5-S10
      (7) Fuel Pump 5-S11
      (8) Engine Stop Solenoid 5-S11
      (9) Charging System 5-S12
      (10)Lighting System 5-S13
      (11)Gauges 5-S14
      (12)Cooling System 5-S15
   [2] DISASSEMBLING AND ASSEMBLING 5-S18
      (1) Starting System 5-S18
      (2) Charging System 5-S18
   [3] SERVICING 5-S19
      (1) Starting System 5-S19
      (2) Charging System 5-S21

https://truckmanualshub.com/

1. TROUBLESHOOTING

Symptom	Probable Cause	Solution	Reference Page
All Electrical Equipments Do Not Operate	Battery discharged or defective	Recharge or replace	G-32
	Battery positive cable disconnected or improperly connected	Repair or replace	5-S5
	Battery negative cable disconnected or improperly connected	Repair or replace	5-S5
	Slow blow fuse blown	Replace	–
Fuse Blown Frequently	Short-circuited	Repair or replace	G-46

W1014322

BATTERY

Battery Discharges Too Quickly	Battery defective	Replace	G-32
	Dynamo defective	Replace	1-S24
	IC regulator defective	Replace	–
	Wiring harness disconnected or improperly connected (between battery positive terminal and regulator **B** terminal)	Repair or replace	–
	Cooling fan belt slipping	Adjust tension	G-30

W1013718

STARTING SYSTEM

Starter Motor Does Not Operate	Battery discharged or defective	Recharge or replace	G-32
	Slow blow fuse blown	Replace	G-46
	Safety switch defective	Replace	5-S10
	Wiring harness disconnected or improperly connected (between main switch **50** terminal and safety switches, between safety switches and starter motor, between battery positive terminal and starter motor)	Repair or replace	–
	Starter motor defective	Repair or replace	5-S18
	Main switch defective	Replace	–
Engine Does Not Stop When Main Switch Is Turned OFF	Fuse blown (20 A)	Replace	G-46
	Wiring harness disconnected or improperly connected (between main switch **AC** terminal and engine stop solenoid)	Repair or replace	–
	Engine stop solenoid defective	Replace	–
	Controller defective	Replace	–
Engine Does Not Start	Engine stop solenoid defective	Replace	–
	Controller defective	Replace	–

W1010823

CHARGING SYSTEM

Symptom	Probable Cause	Solution	Reference Page
Charging Lamp Does Not Light When Main Switch Is Turned ON	Fuse blown (15 A)	Replace	G-46
	Wiring harness disconnected or improperly connected (between main switch **AC** terminal and panel board, between panel board and dynamo)	Repair or replace	–
	Dynamo defective	Repair or replace	1-S24, 5-S18
	Regulator defective	Replace	–
Charging Lamp Does Not Go Off When Engine Is Running	Wiring harness disconnected or improperly connected (between main switch **30** terminal and dynamo, between panel board and dynamo)	Repair or replace	–
	Dynamo defective	Repair or replace	1-S24, 5-S18
	Regulator defective	Replace	–

W1013580

GAUGES

Fuel Gauge Does Not Function	Fuel gauge defective	Replace	5-S16
	Fuel level sensor defective	Replace	5-S14
	Wiring harness disconnected or improperly connected (between fuel gauge and fuel level sensor)	Repair or replace	–
Coolant Temperature Gauge Does Not Function	Coolant temperature gauge defective	Replace	5-S15
	Coolant temperature sensor defective	Replace	5-S16
	Wiring harness disconnected or improperly connected (between coolant temperature gauge and coolant temperature sensor)	Repair or replace	–

W1011186

2. SERVICING SPECIFICATIONS

Item		Factory Specification	Allowable Limit
Battery	Voltage	More than 12 V	–
	Potential Difference	Less than 0.1 V	–
Glow Plug	Resistance	Approx. 0.9 Ω	–
Starter			
Commutator	O.D.	30.0 mm 1.181 in.	29.0 mm 1.142 in.
	Difference of O.D.'s	Less than 0.02 mm 0.0008 in.	0.05 mm 0.0020 in.
Mica	Undercut	0.50 to 0.80 mm 0.0197 to 0.0315 in.	0.20 mm 0.0079 in.
Brush	Length	14.0 mm 0.551 in.	9.0 mm 0.354 in.
AC Dynamo	Charging Current / Dynamo Speed	14 to 15 A / 5200 rpm	–
	Charging Voltage / Dynamo Speed	14 to 15 V / 5200 rpm	–

W1013874

https://truckmanualshub.com/

3. TIGHTENING TORQUES

Tightening torques of screws, bolts and nuts on the table below are especially specified.
(For general use screws, bolts and nuts : See page G-10.)

Item	N·m	kgf·m	lbf·ft
Starter (**B** terminal nut)	5.9 to 11.8	0.6 to 1.2	4.3 to 8.7
AC dynamo (Stator nut)	39.2 to 44.1	4.0 to 4.5	28.9 to 32.5

W1012736

4. CHECKING, DISASSEMBLING AND SERVICING

CAUTION

- **To avoid accidental short circuit, be sure to attach the positive cable to the positive terminal before the negative cable is attached to the negative terminal.**
- **Never remove the battery cap while the engine is running.**
- **Keep electrolyte away from eyes, hands and clothes. If you are spattered with it, wash it away completely with water immediately.**
- **Keep open sparks and flames away from the battery at all times. Hydrogen gas mixed with oxygen becomes very explosive.**

IMPORTANT

- **If the machine is to be operated for a short time without battery (using a slave battery for starting), use additional current (lights) while engine is running and insulate terminal of battery. If this advice is disregarded, damage to alternator and regulator may result.**

[1] CHECKING

(1) Battery

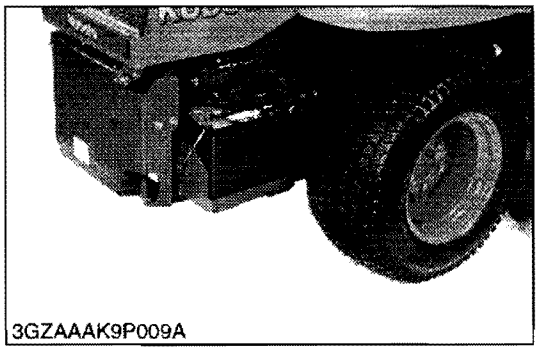

3GZAAAK9P009A

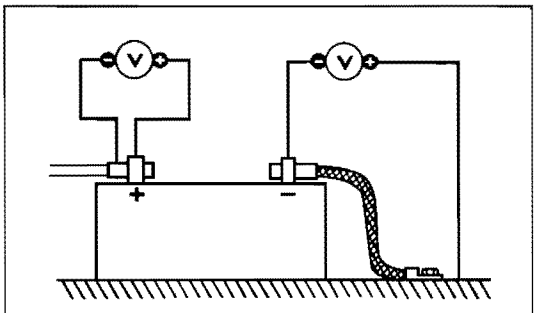

3TMABAB9P001A

Battery Voltage

1. Stop the engine and turn the main switch off.
2. Connect the COM (–) lead of the voltmeter to the battery's negative terminal post and the (+) lead to the positive terminal post, and measure the battery voltage.
3. If the battery voltage is less than the factory specification, check the battery specific gravity and recharge the battery.

Battery voltage	Factory spec.	More than 12 V

W1015335

Battery Terminal Connection

1. Turn the main switch on, and turn on the head light.
2. Measure the voltage with a voltmeter across the battery's positive terminal post and the cable terminal, and the voltage across the battery's negative terminal post and the chassis.
3. If the measurement exceeds the factory specification, clean the battery terminal posts and cable clamps, and tighten them firmly.

Potential difference	Factory spec.	Less than 0.1 V

W1015435

https://truckmanualshub.com/

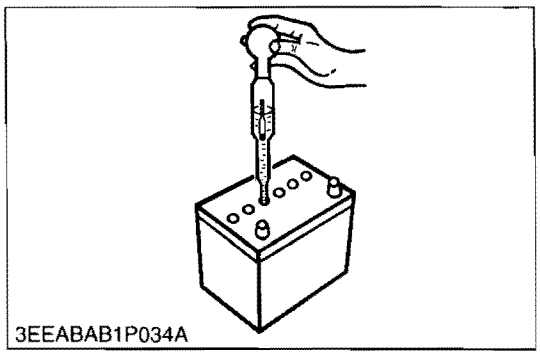
3EEABAB1P034A

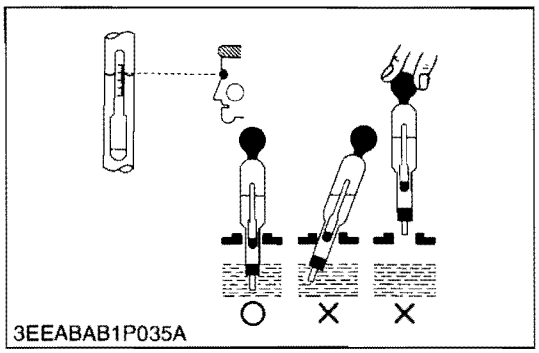

3EEABAB1P035A

Battery Specific Gravity

1. Check the specific gravity of the electrolyte in each cell with a hydrometer.
2. When the electrolyte temperature differs from that at which the hydrometer was calibrated, correct the specific gravity reading following the formula mentioned in **(Reference)**.
3. If the specific gravity is less than 1.215 (after it is corrected for temperature), charge or replace the battery.
4. If the specific gravity differs between any two cells by more than 0.05, replace the battery.

■ **NOTE**

- **Hold the hydrometer tube vertical without removing it from the electrolyte.**
- **Do not suck too much electrolyte into the tube.**
- **Allow the float to move freely and hold the hydrometer at eye level.**
- **The hydrometer reading must be taken at the highest electrolyte level.**

(Reference)

- Specific gravity slightly varies with temperature. To be exact, the specific gravity decreases by 0.0007 with an increase of 1 °C (0.0004 with an increase of 1 °F) in temperature, and increases by 0.0007 with a decreases of 1 °C (0.0004 with a decrease of 1 °F).
  Therefore, using 20 °C (68 °F) as a reference, the specific gravity reading must be corrected by the following formula:
  - Specific gravity at 20 °C = Measured value + 0.0007 × (electrolyte temperature – 20 °C)
  - Specific gravity at 68 °F = Measured value + 0.0004 × (electrolyte temperature – 68 °F)

Specific Gravity	State of Charge
1.260 Sp. Gr.	100 % Charged
1.230 Sp. Gr.	75 % Charged
1.200 Sp. Gr.	50 % Charged
1.170 Sp. Gr.	25 % Charged
1.140 Sp. Gr.	Very Little Useful Capacity
1.110 Sp. Gr.	Discharged

At an electrolyte temperature of 20 °C (68 °F)

W1015530

(2) Safety Switches

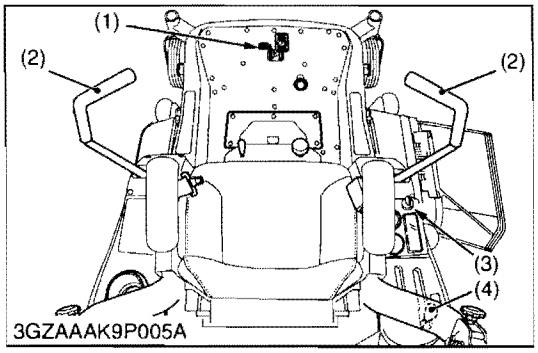

Method of Inspecting Each Control

A defective location can be judge by checking function of each safety switch one by one as shown in the table below.

(Reference)

- Type of Safety Switch
  Parking Brake Lever ... Normal Close
  Motion Control Lever ... Normal Open
  PTO Lever ..... Normal Open
  Operator Seat ... Normal Open

(1) Parking Brake Lock Pedal
(2) Motion Control Lever
(3) Key Switch
(4) PTO Lever

W1016450

Combination	State of set such as operation levers					Control operation	
	Motion control lever (LH)	Motion control lever (RH)	PTO lever	Parking brake pedal	Operator seat	Automatic engine stop	Engine start (Right or wrong)
1	Parking position (Neutral)	Parking position (Neutral)	Off position	Lock position	On the seat	Keep running**	Possible
2					Leave the seat*		Impossible
3				Release position*	On the seat		
4			On position*	Lock position			
5		Operating position*	Off position			Stop few seconds later	
6	Operating position*	Parking position					

* In this part, the safety switch is a position of off. And it is a checked place.
** In this part, the voltage of the terminal of the engine stop solenoid is 0 V.

W1016546

■ **How to read meaning from table above.**

After the engine start, for instance,

1. If the engine does not stop in combination 2 when leaving the seat, the seat safety switch is bad. Moreover, the engine cannot be started without as every sitting on the seat.
2. If the engine starts with the parking brake released at combination 3, the parking brake safety switch is bad.
3. If the engine starts in combination 4 when the PTO lever is **ON** position, the PTO lever switch is bad.
4. If the engine starts in combinations 5 and 6 when the motion control lever is a **Operating** position, the motion control lever safety switch is bad. Moreover, the engine stops if the parking pedal is not released within two seconds after the engine starts.

(3) Main Switch

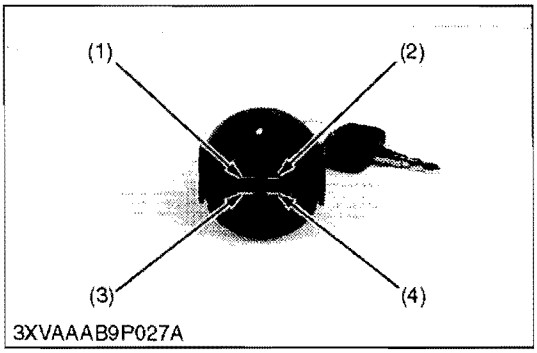

Main Switch Continuity

1) Main Switch Key at OFF Position

1. Set the main switch **OFF** position.
2. Measure the resistance with an ohmmeter across the **B** terminal and the **ACC** terminal, **B** terminal and **ST** terminal, **B** terminal and **G** terminal.
3. If infinity is not indicated, the contacts of the main switch are faulty.

Resistance	**B** terminal – **ACC** terminal	Infinity
	B terminal – **ST** terminal	
	B terminal – **G** terminal	

2) Main Switch Key at ON Position

1. Set the main switch **ON** position.
2. Measure the resistance with an ohmmeter across the **B** terminal and the **ACC** terminal.
3. If 0 ohm is not indicated, the **B** – **ACC** contact of the main switch are faulty.

Resistance	**B** terminal – **ACC** terminal	0 Ω

3) Main Switch Key at PREHEAT Position

1. Set and hold the main switch key at the **PREHEAT** position.
2. Measure the resistance with an ohmmeter across the **B** terminal and the **G** terminal, and measure the resistance across the **B** terminal and the **ACC** terminal.
3. If 0 ohm is not indicated, these contacts of the main switch are faulty.

Resistance	**B** terminal – **G** terminal	0 Ω
	B terminal – **ACC** terminal	

4) Main Switch Key at START Position

1. Set and hold the main switch key at the **START** position.
2. Measure the resistance with an ohmmeter across the **B** terminal and the **G** terminal, across the **B** terminal and the **ST** terminal, and across the **B** terminal and the **ACC** terminal.
3. If 0 ohm is not indicated, these contacts of the main switch are faulty.

Resistance	**B** terminal – **G** terminal	0 Ω
	B terminal – **ST** terminal	
	B terminal – **ACC** terminal	

(1) **G** Terminal
(2) **ACC** Terminal
(3) **ST** Terminal
(4) **B** Terminal

W10136580

(4) Starter

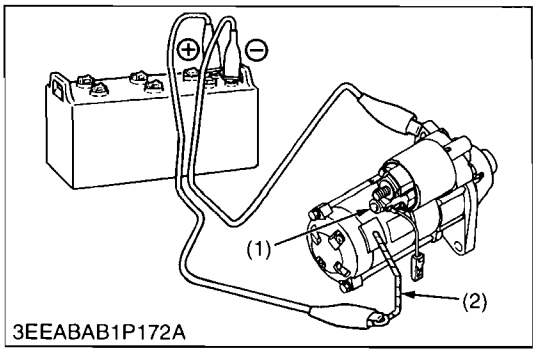

Motor Test

CAUTION

- **Secure the starter to prevent it from jumping up and down while testing the motor.**

1. Disconnect the battery negative cable from the battery.
2. Disconnect the battery positive cable and the leads from the starter.
3. Remove the starter from the engine.
4. Disconnect the connecting lead (2) from the starter **C** terminal (1).
5. Connect a jumper lead from the connecting lead (2) to the battery positive terminal post.
6. Connect a jumper lead momentarily between the starter motor housing and the battery negative terminal post.
7. If the motor does not run, check the motor.

(1) **C** Terminal (2) Connecting Lead

W1018134

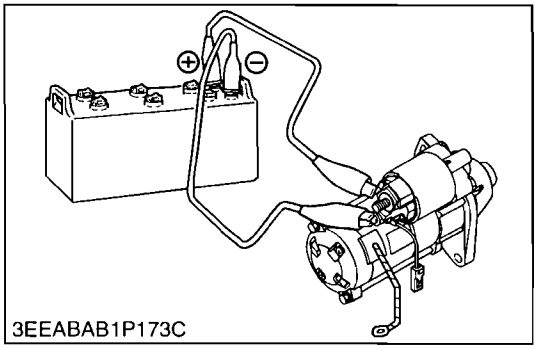

Magnet Switch Test (Pull-in, Holding Coils)

NOTE

- **Each test should be carried out for a start time (3 to 5 seconds), and at half of the rated voltage (6V)**

1) Checking Pull-in Coil

1. Connect jumper lead from the battery's negative terminal post to the **C** terminal.
2. The plunger should be attached strongly when a jumper lead is connected from the battery positive terminal to the **S** terminal.

2) Checking Holding Coil

1. Connect jumper leads from the battery's negative terminal post to the body and the battery's positive terminal post to the **S** terminal.
2. Push the plunger in by hand and release it. Then, the plunger should remain being attracted.

W1018490

(5) Glow Plug

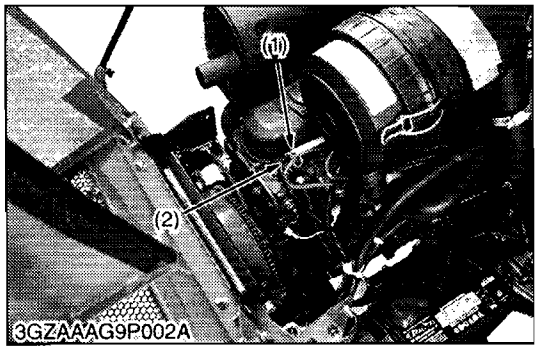

Lead Terminal Voltage

1. Disconnect the wiring lead (1) from the glow plug (2) after turning the main switch off.
2. Turn the main switch key to the **"PREHEAT"** position, and measure the voltage between the lead terminal and the chassis.
3. Turn the main switch key to the **"START"** position, and measure the voltage with a voltmeter between the lead terminal and the chassis.
4. If the voltage at either position differs from the battery voltage, the wiring harness or main switch is faulty.

Voltage (Lead terminal - Chassis)	Main switch key at **"PREHEAT"**	Approx. battery voltage
	Main switch key at **"START"**	Approx. battery voltage

(1) Wiring Lead (Positive) (2) Glow Plug

W1018667

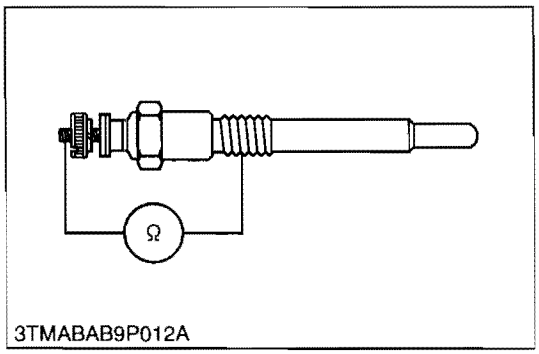

Glow Plug Continuity

1. Disconnect the lead from the glow plugs.
2. Measure the resistance with an ohmmeter between the glow plug terminal and the chassis.
3. If 0 ohm is indicated, the screw at the tip of the glow plug and the housing are short-circuited.
4. If the factory specification is not indicated, the glow plug is faulty.

Glow plug resistance	Factory spec.	Approx. 0.9 Ω

W1018992

(6) Safety Switch

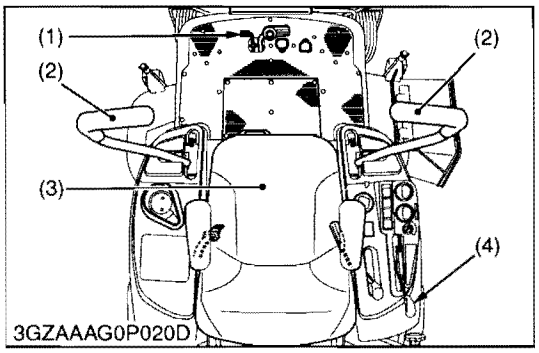

Safety Switch Continuity

1. Remove the safety switch leads.
2. Connect the circuit tester to the safety switch leads.
3. Measure the resistance between leads.
4. If the safety switch is defective, replace it.

Resistance (Across switch terminal) · Motion control lever · PTO lever · Operator seat	When switch push is pushed	0 Ω
	When switch push is released	Infinity

Resistance (Across switch terminal) · Parking brake pedal	When actuator is pushed	Infinity
	When actuator is released	0 Ω

(1) Safety Switch
(2) Parking Brake Lock Pedal
(3) Motion Control Lever
(4) Operator Seat
(5) PTO Lever

W1019187

(7) Fuel Pump

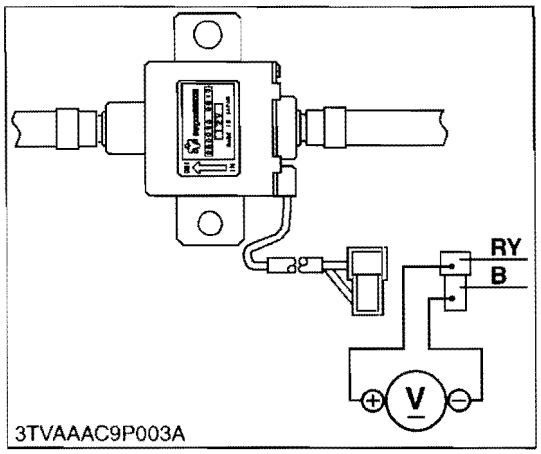

Connector Voltage

1. Disconnect the **2P** connector from the fuel pump.
2. Turn the main switch key to the **"ON"** position, and measure the voltage with a voltmeter between the connector terminals.
3. If the voltage differs from the battery voltage, the wiring harness or main switch is faulty.

Voltage	Between connector terminals	Approx. battery voltage

W1019413

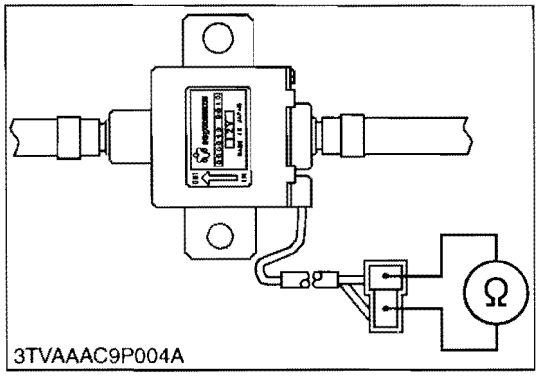

Fuel Pump Continuity

1. Disconnect the **2P** connector from the fuel pump.
2. Check the continuity between the connector terminals with an ohmmeter.
3. If it does not conduct, the fuel pump is faulty.

W1019534

(8) Engine Stop Solenoid

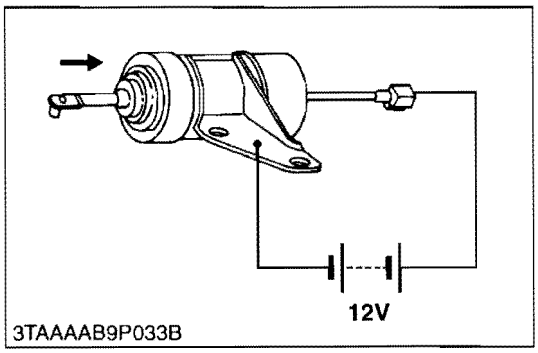

Engine Stop Solenoid Test

1. Disconnect the connector from the engine stop solenoid.
2. Remove the engine stop solenoid from the engine.
3. Connect the jumper leads from the battery positive terminal to the connector, and from the battery negative terminal to the engine stop solenoid body.
4. If the solenoid plunger is not attracted, the engine stop solenoid is faulty.

(1) White (2) Black

W1019658

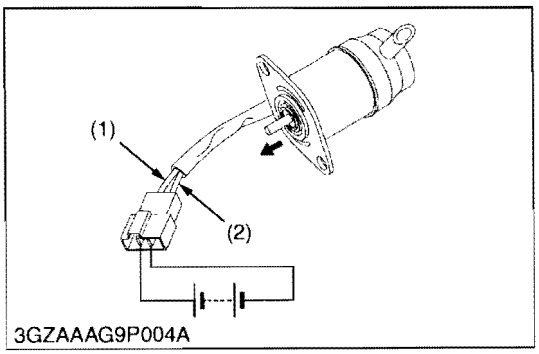

(9) Charging System

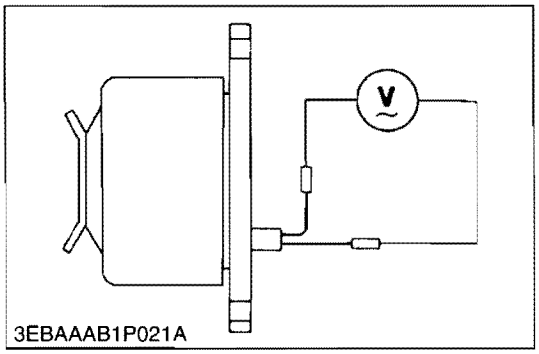

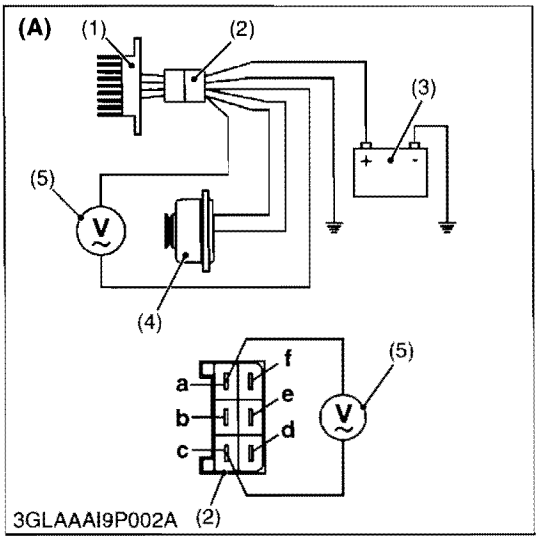

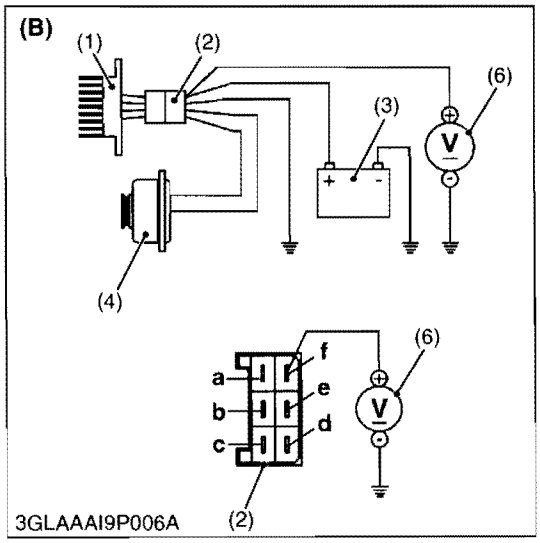

No-load Dynamo Output

1. Disconnect the lead wires from the dynamo.
2. Start the engine and operate the dynamo at the rated speed.
3. Measure the output voltage with a volt meter.
4. If the measurement is not within the specified values, replace the dynamo.

No-load output	Factory spec.	AC 20 V or more

W1048417

Regulation Voltage

CAUTION

- **To avoid personal injury, do not touch the rotating or hot parts while the engine is running.**

NOTE

- **Before performing this checking, make sure that the no-load dynamo output is proper.**
- **Complete the charging circuit with fully charged battery.**

1. Rum the engine at the rated speed.
2. Keeping the coupler (2) of regulator being connected, measure the voltage with a volt meter (5) across the terminal blue (**a**) and terminal blue (**c**). (Refer to figure **(A)**.)
3. If the measurement is not within the specified value, replace the wire harness between the dynamo (4) and regulator (1).
4. If the measurement is within the specified value, measure the voltage with a volt meter (6) across the terminal red (**f**) and chassis. (Refer to figure **(B)**.)
5. If the measurement is not within specified value, replace the regulator (1).

Voltage	Terminal blue (**a**) - Terminal blue (**c**)	AC 20 V or more
	Terminal red (**f**) - Chassis	DC 14 to 15 V

(1) Regulator
(2) Coupler
(3) Battery
(4) Dynamo
(5) Volt Meter (AC)
(6) Volt Meter (DC)

a : Terminal Blue
b : Terminal Black
c : Terminal Blue
d : Terminal Green
e : Terminal Yellow
f : Terminal Red

W1015722

(10) Lighting System

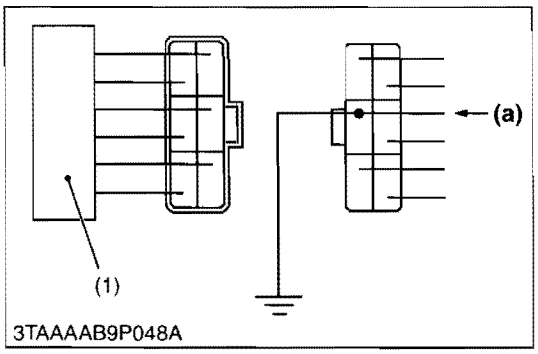

Charge Lamp (Charging Circuit)

1. Remove the under panel.
2. Disconnect the **6P** connector from the regulator after turning the main switch **OFF**.
3. Turn the main switch **ON** and connect a jumper lead from the wiring harness connector terminal (Black) to the chassis.
4. If the charge lamp does not light, the wiring harness or fuse is faulty.

(1) Regulator **(a) From Charge Lamp**

W1024567

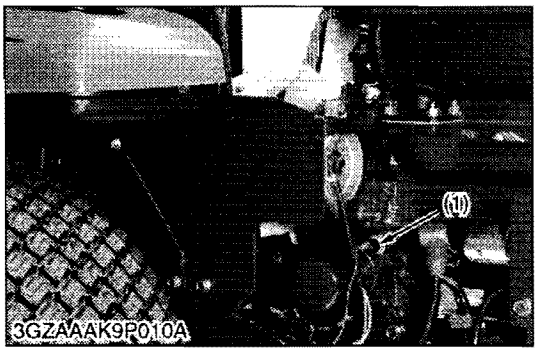

Engine Oil Pressure Lamp

1. Disconnect the lead from the engine oil pressure switch after turning the main switch **OFF**.
2. Turn the main switch **ON** and connect a jumper lead from the lead to the chassis.
3. If the engine oil pressure indicator lamp does not light, the wiring harness is faulty.

(1) Engine Oil Pressure Switch **(a) From Oil Pressure Lamp**

W1024686

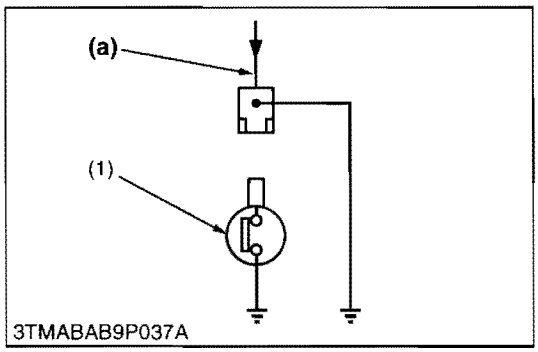

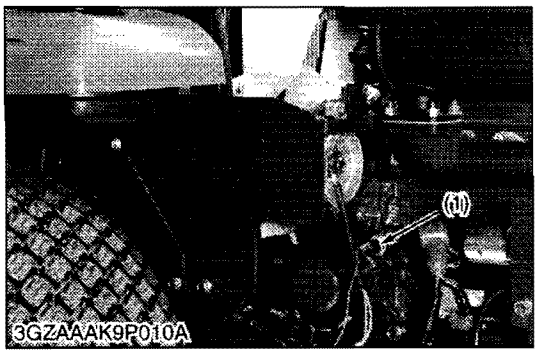

Engine Oil Pressure Switch Continuity

1. Measure the resistance with an ohmmeter across the switch terminal and the chassis.
2. If 0 ohm is not indicated in the normal state, the switch is faulty.
3. If infinity is not indicated at pressure over 4.9 kPa (0.5 kgf/cm^2, 7 psi), the switch is faulty.

Resistance (Switch terminal - Chassis)	In normal state	0 Ω
	At pressure over approx. 4.9 kPa (0.5 kgf/cm^2, 7 psi)	Infinity

(1) Engine Oil Pressure Switch

W1024804

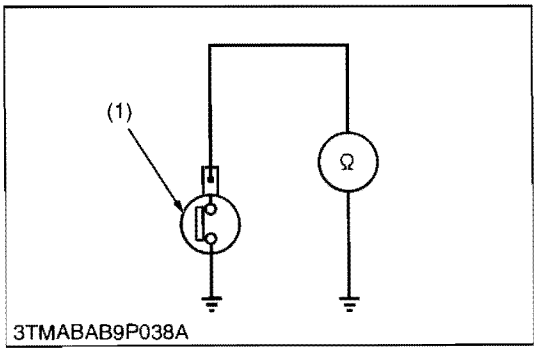

(11) Gauges

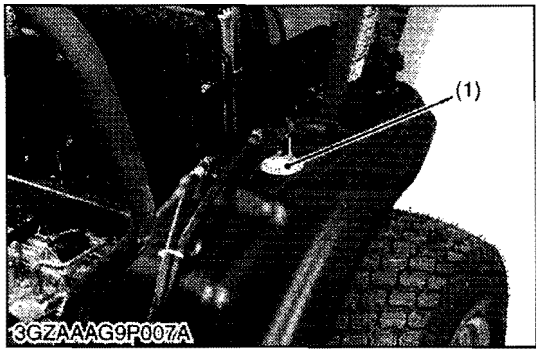

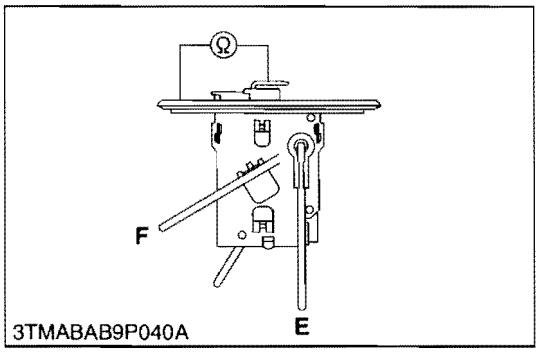

Fuel Level Sensor

1) Sensor Continuity

1. Remove the fuel level sensor from the fuel tank.
2. Measure the resistance with an ohmmeter across the sensor terminal and its body.
3. If the reference values are not indicated, the sensor is faulty.

Resistance (Sensor terminal – its body)	Reference value	Float at upper-most position	1 to 5 Ω
		Float at lower-most position	103 to 117 Ω

(1) Fuel Level Sensor

E : Empty
F : Full

W1018566

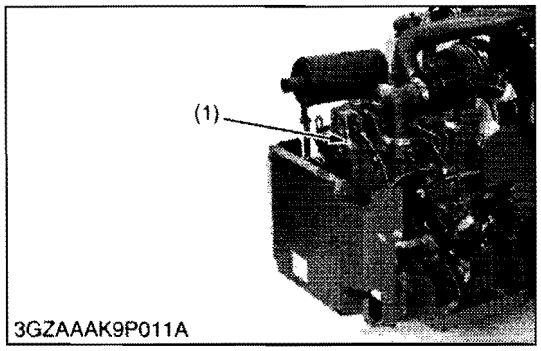

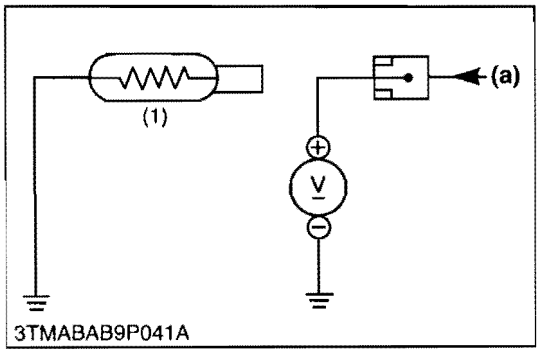

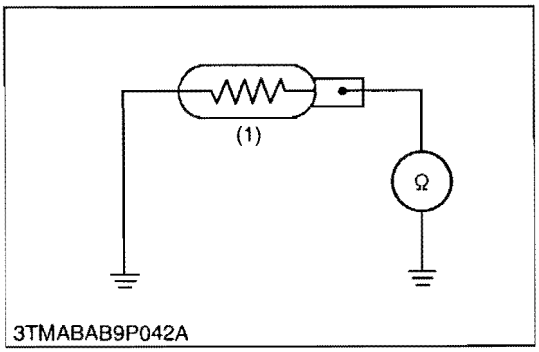

Coolant Temperature Sensor

1) Lead Terminal Voltage

1. Disconnect the lead from the coolant temperature sensor after turning the main switch **OFF**.
2. Turn the main switch **ON** and measure the voltage with a voltmeter across the lead terminal and the chassis.
   If the voltage differs from the battery voltage, the wiring harness, fuse or coolant temperature gauge is faulty.

Voltage	Lead terminal – Chassis	Approx. battery voltage

2) Sensor Continuity

1. Measure the resistances with an ohmmeter across the sensor terminal and the chassis.
2. If the reference value is not indicated, the sensor is faulty.

Resistance (Sensor terminal – Chassis)	Reference value	Approx. 16.1 Ω at 120 °C (248 °F) Approx. 27.4 Ω at 100 °C (212 °F) Approx. 51.9 Ω at 80 °C (176 °F) Approx. 153.9 Ω at 50 °C (122 °F)

(1) Coolant Temperature Sensor **(a) From Temperature Gauge**

W1025104

https://truckmanualshub.com/

(12) Cooling System

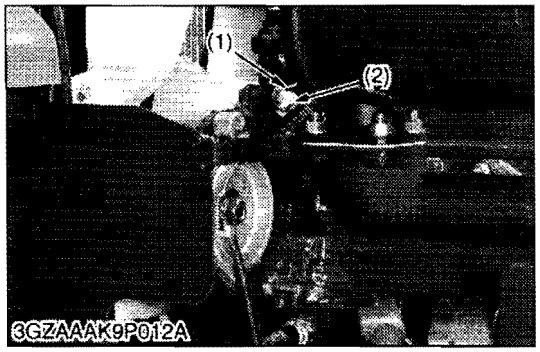

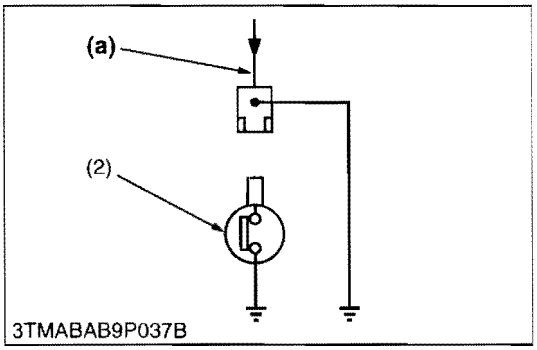

Horn Wiring Harness

1. Disconnect the wiring lead (1) from the coolant temperature switch after turning the main switch **OFF**.
2. Turn the main switch **ON** and connect a jumper lead from lead to the chassis.
3. If the horn does not operate wiring harness or relay is faulty.

(1) Wiring Lead
(2) Coolant Temperature Sensor
(a) From Fan Motor Relay

W1018763

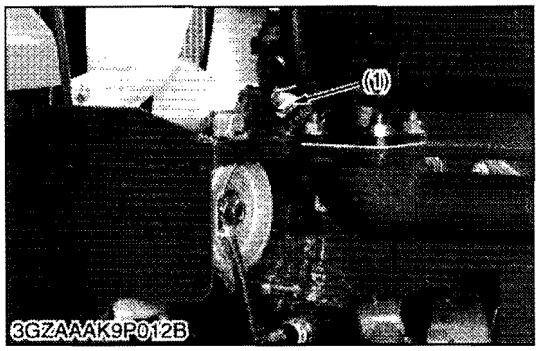

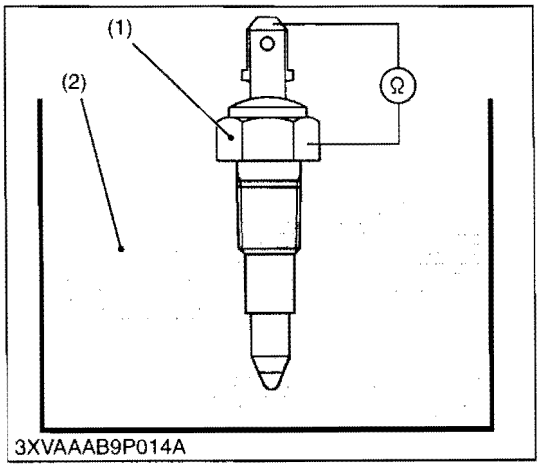

Coolant Temperature Switch

1. Measure the resistance with an ohmmeter across the switch terminal and the switch body.
2. If 0 ohm is not indicated in the coolant temperature at 194 °C (201 °F) or more, the sensor is faulty.
3. If infinity is not indicated in the coolant temperature at lower than 90 °C (194 °F), the sensor is faulty.

Resistance (Switch terminal – Switch body)	At coolant temperature lower than 116 °C (241 °F)	Infinity
	At coolant temperature more than 120 to 126 °C (248 to 258 °F)	0 Ω

(1) Coolant Temperature Sensor
(2) Coolant

W1018994

https://truckmanualshub.com/

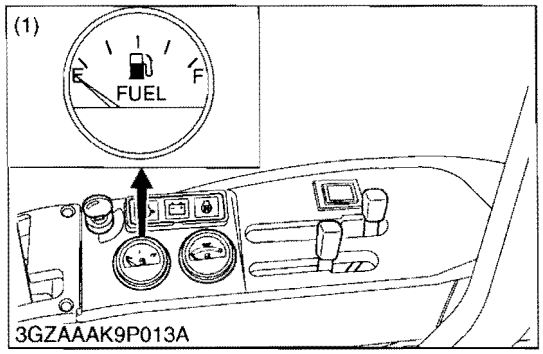

3GZAAAK9P013A

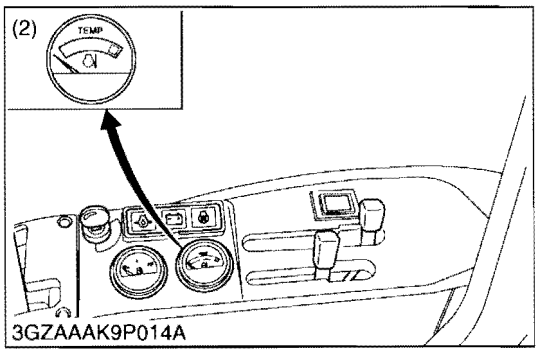

3GZAAAK9P014A

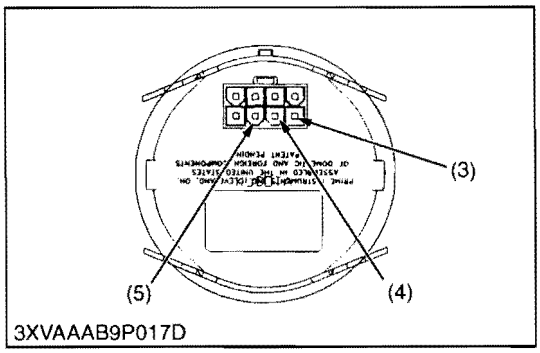

3XVAAAB9P017D

Fuel Gauge and Coolant Temperature Gauge Operation

1. Remove the under panel.
2. Turn the main switch to **ON** position. Measure the voltage with a voltmeter across the **I** terminal (5) and **GND** terminal (3) of the gauge.
3. If approx. battery voltage is indicated, the ignition and ground lead connections are good.
4. Turn the main switch to **OFF** position. Connect a jumper lead between **S** terminal (4) and **GND** terminal (3) of the gauge.
5. Turn the main switch to **ON** position. If the gauge resisters a full scale reading under those conditions, the gauge is good. If less than full scale reading is indicated, the gauge is defective and should be replaced.

(1) Fuel Gauge
(2) Temperature Gauge
(3) **GND** Terminal
(4) **S** Terminal
(5) I Terminal

W1027205

https://truckmanualshub.com/

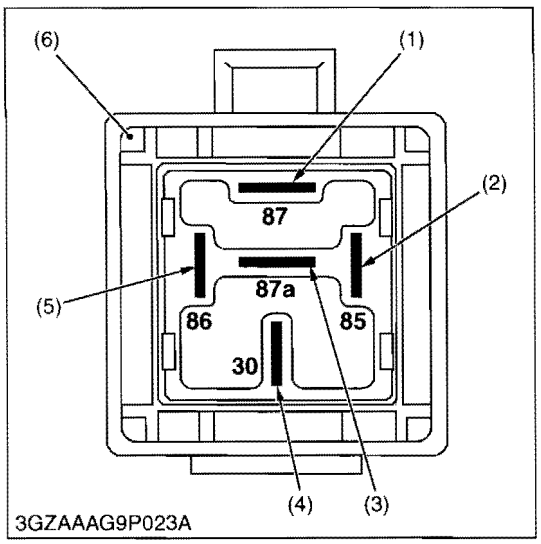

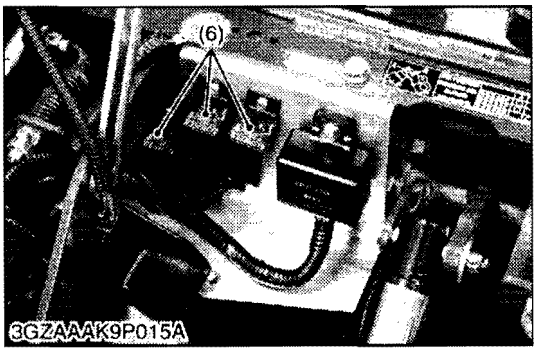

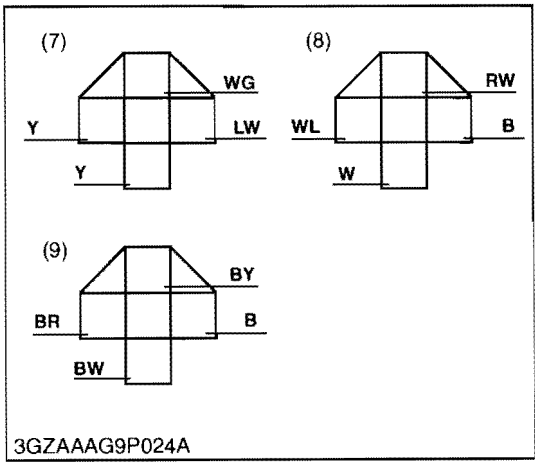

Relay (Horn, Solenoid and Starter)

1. Disconnect the connector from relay (6) after turning the main switch off.
2. Remove the relay from bracket.
3. Measure the resistance with an ohmmeter across the terminal **85** (2) to terminal **86** (5), terminal **87** (1) to terminal **87a** (3) and terminal **87** (1) to terminal **30** (4).
4. If resistance differs from the factory specifications, the relay is faulty.

Resistance	Terminal **85** (2) – Terminal **86** (5)	Approx. 90 Ω
	Terminal **87** (1) – Terminal **87a** (3)	0 Ω
	Terminal **87** (1) – Terminal **30** (4)	Infinity

(1) Terminal **87**
(2) Terminal **85**
(3) Terminal **87a**
(4) Terminal **30**
(5) Terminal **86**
(6) Relay (Horn, Solenoid and Starter)
(7) Horn Relay Connector
(8) Solenoid Relay Connector
(9) Starter Relay Connector

W1019186

[2] DISASSEMBLING AND ASSEMBLING

(1) Starting System

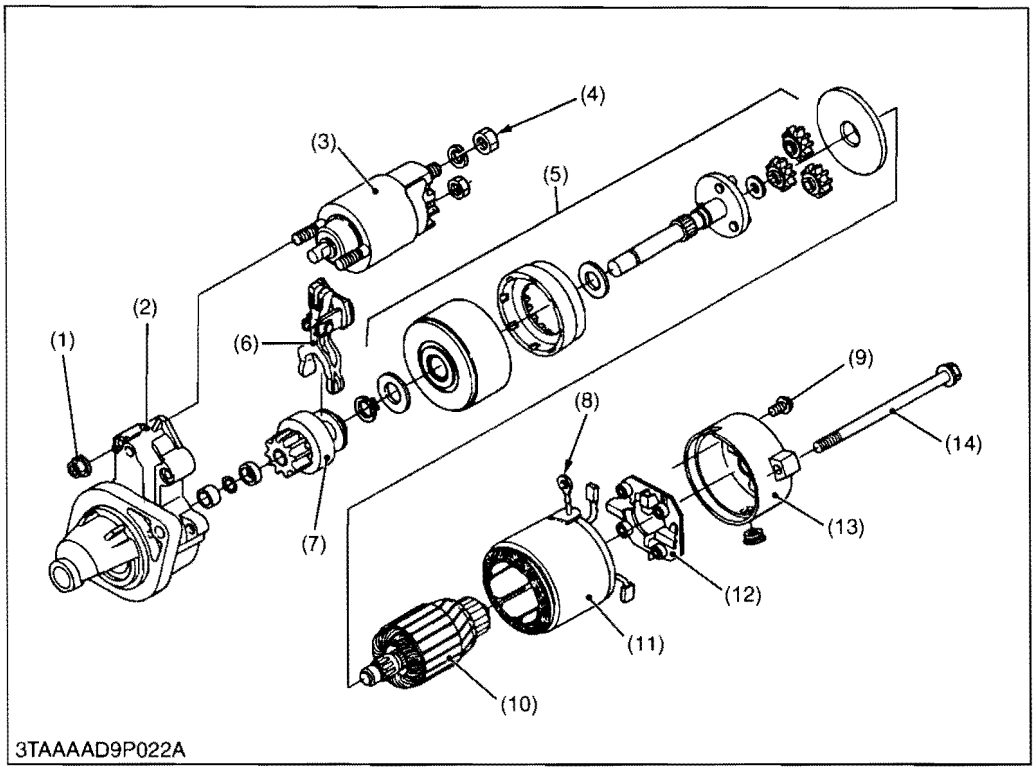

(1) Magnetic Switch Mounting Nut
(2) Housing
(3) Magnetic Switch
(4) **C** Terminal Nut
(5) Shaft Assembly
(6) Drive Lever
(7) Overrunning Clutch
(8) Connecting Lead
(9) Mounting Screw
(10) Armature
(11) Yoke
(12) Brush Holder
(13) Rear End Holder
(14) Through Bolt

W1019204

1. Unscrew the **C** terminal nut (4), and disconnect the connecting lead (8).
2. Unscrew the magnetic switch mounting nuts (1), and remove the magnetic switch (3) from the housing (2).
3. Unscrew the through bolts (14) and mounting screw (9), and remove the rear end frame (13).
4. Remove the brush from the brush holder while holding the spring up.
5. Remove the brush holder (12).
6. Draw out the armature (10) and yoke (11) from the housing.
7. Draw out the shaft assembly (5) with the drive lever (6) and overrunning clutch (7) from the housing.

(2) Charging System

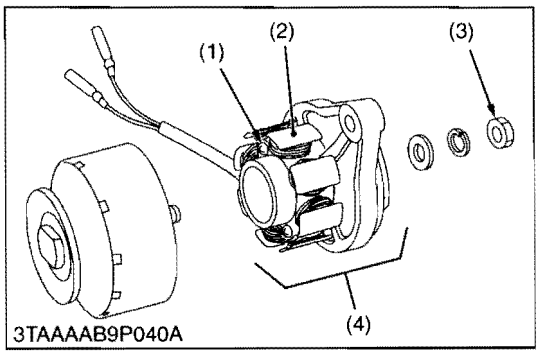

Stator

1. Remove the nut (3) and separate the stator comp. (4).
2. Unscrew the screws (1) and remove the stator (2).

(When reassembling)

Tightening torque	Nut	39.2 to 44.1 N·m 4.0 to 4.5 kgf·m 28.9 to 32.5 lbf·ft

(1) Screw
(2) Stator
(3) Nut
(4) Stator Comp.

W1024139

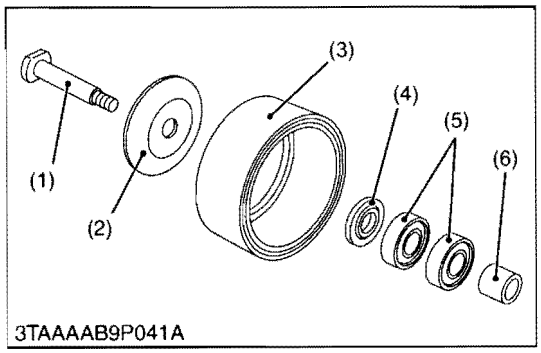

Rotor

1. Tap out the shaft (1) from the rotor (3).

(When reassembling)

- Take care the direction of the collar (4), the flat side should face to the pulley (2) side.

(1) Shaft
(2) Pulley
(3) Rotor
(4) Collar
(5) Bearings
(6) Collar

W1024281

[3] SERVICING

(1) Starting System

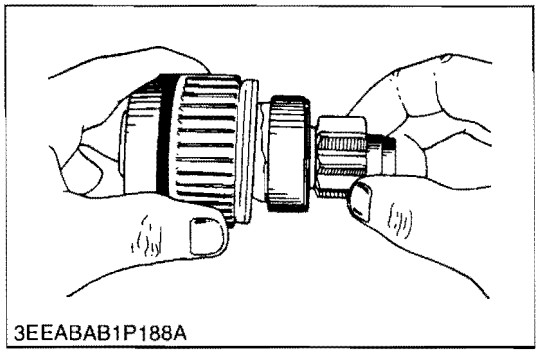
3EEABAB1P188A

Overrunning Clutch

1. Inspect the pinion for wear or damage.
2. If there is any defect, replace the overrunning clutch assembly.
3. Check that the pinion turns freely and smoothly in the overrunning direction and does not slip in the cranking direction.
4. If the pinion slips or does not rotate in the both directions, replace the overrunning clutch assembly.

W1022548

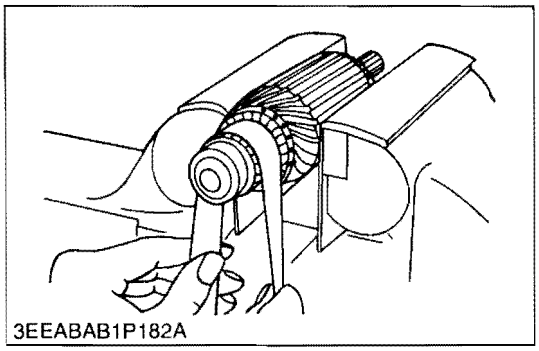
3EEABAB1P182A

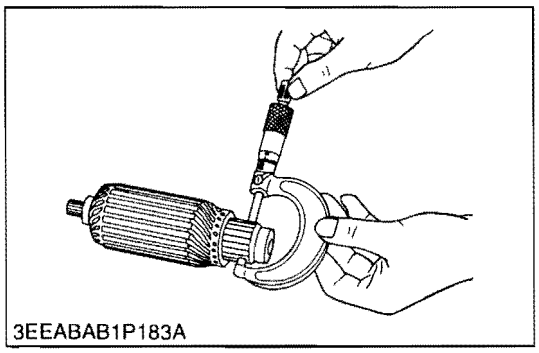
3EEABAB1P183A

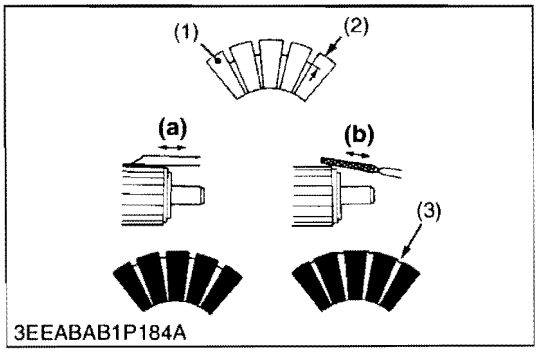

3EEABAB1P184A

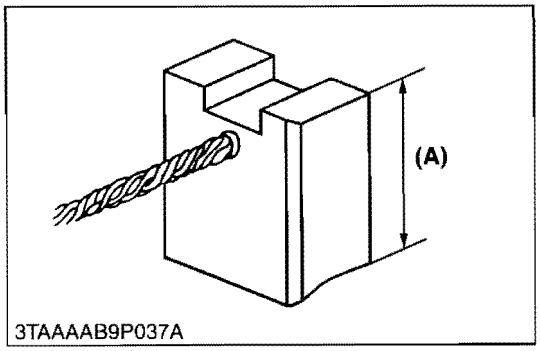

3TAAAAB9P037A

Commutator and Mica

1. Check the contact face of the commutator for wear, and grind the commutator with emery paper if it is slightly worn.
2. Measure the commutator O.D. with an outside micrometer at several points.
3. If the minimum O.D. is less than the allowable limit, replace the armature.
4. If the difference of the O.D.'s exceeds the allowable limit, correct the commutator on a lathe to the factory specification.
5. Measure the mica undercut.
6. If the undercut is less than the allowable limit, correct it with a saw blade and chamfer the segment edges.

Commutator O.D.	Factory spec.	30.0 mm 1.181 in.
	Allowable limit	29.0 mm 1.142 in.

Difference of O.D.'s	Factory spec.	Less than 0.02 mm Less than 0.0008 in.
	Allowable limit	0.05 mm 0.0020 in.

Mica undercut	Factory spec.	0.50 to 0.80 mm 0.0197 to 0.0315 in.
	Allowable limit	0.20 mm 0.0079 in.

(1) Segment
(2) Undercut
(3) Mica

(a) Correct
(b) Incorrect

W1022696

Brush Wear

1. If the contact face of the brush is dirty or dusty, clean it with emery paper.
2. Measure the brush length **(A)** with vernier calipers.
3. If the length is less than the allowable limit, replace the yoke assembly and brush holder.

Brush length **(A)**	Factory spec.	14.0 mm 0.551 in.
	Allowable limit	9.0 mm 0.354 in.

W1022961

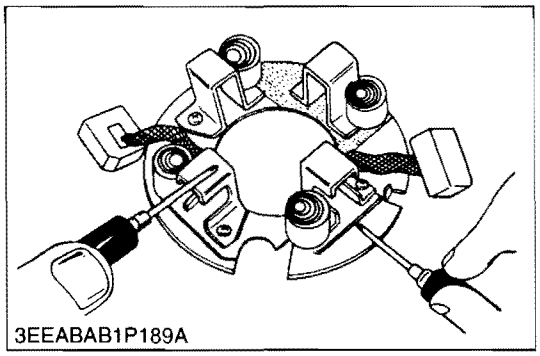
3EEABAB1P189A

Brush Holder

1. Check the continuity across the brush holder and the holder support with an ohmmeter.
2. If it conducts, replace the brush holder.

W1023089

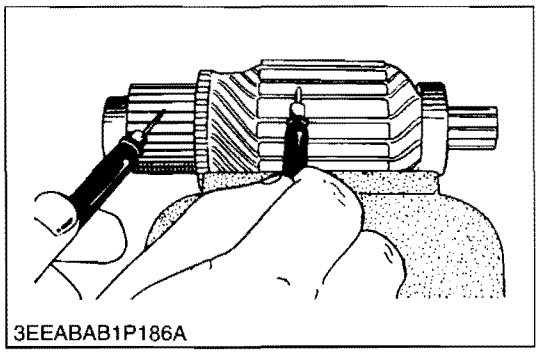
3EEABAB1P186A

Armature Coil

1. Check the continuity across the commutator and armature coil core with an ohmmeter.
2. If it conducts, replace the armature.
3. Check the continuity across the segments of the commutator with an ohmmeter.
4. If it does not conduct, replace the armature.

W1023212

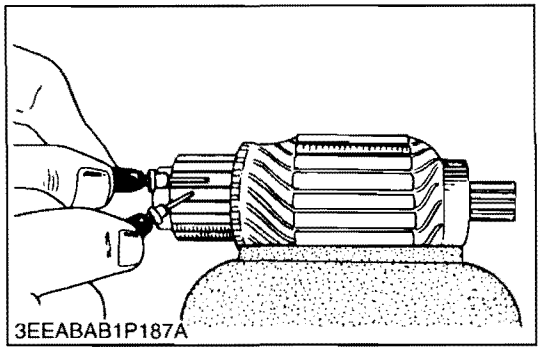
3EEABAB1P187A

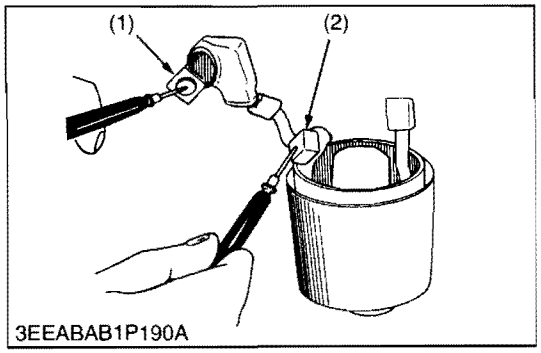

3EEABAB1P190A

Field Coil

1. Check the continuity across the lead (1) and brush (2) with an ohmmeter.
2. If it does not conduct, replace the yoke assembly.
3. Check the continuity across the brush (2) and yoke (3) with an ohmmeter.
4. If it conducts, replace the yoke assembly.

(1) Lead
(2) Brush
(3) Yoke

W1023312

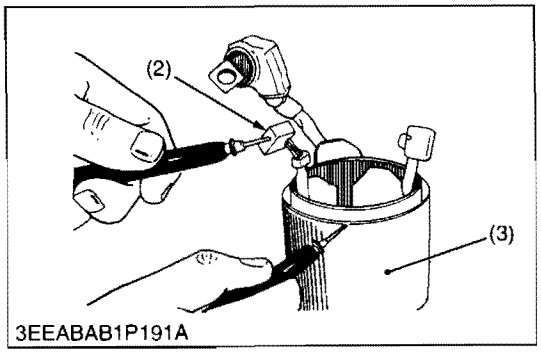

3EEABAB1P191A

https://truckmanualshub.com/

(2) Charging System

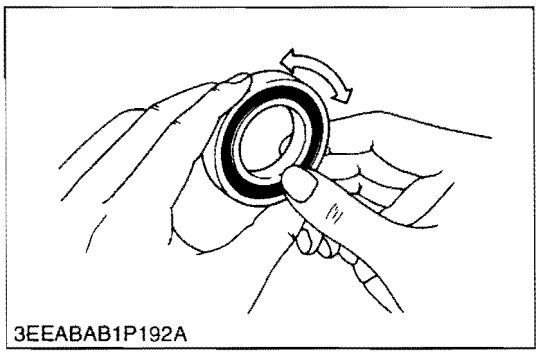
3EEABAB1P192A

Bearing

1. Check the bearing for smooth rotation.
2. If it does not rotate smoothly, replace it.

W1024489

https://truckmanualshub.com/

https://truckmanualshub.com/

MECHANISM

CONTENTS

1. STRUCTURE 6-M1
[1] POWER TRANSMISSION 6-M1
[2] LIFTING MECHANISM 6-M2

https://truckmanualshub.com/

https://truckmanualshub.com/

1. STRUCTURE

[1] POWER TRANSMISSION

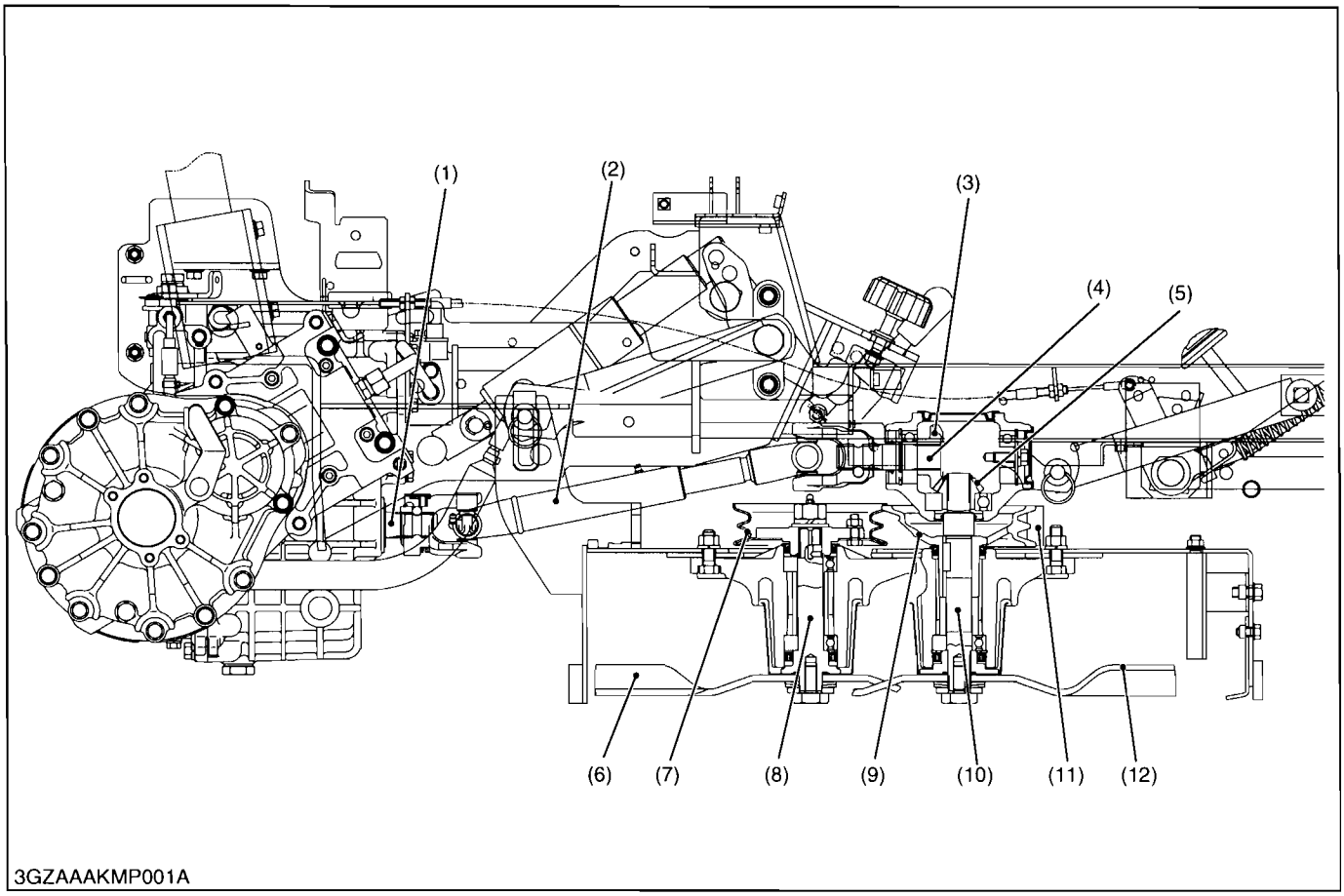

(1) PTO Shaft
(2) Universal Joint
(3) 22T Bevel Gear (RCK48P)
18T Bevel Gear (RCK54P)
(4) Pinion Shaft
(5) 15T Bevel Gear (RCK48P)
16T Bevel Gear (RCK54P)
(6) Outer Blade
(7) Outer Pulley
(8) Blade Shaft
(9) Center Pulley
(10) Bevel Gear Shaft
(11) Mower Belt
(12) Center Blade

The power is transmitted from PTO shaft to blades as follows.

■ **Center Blade**

PTO Shaft (1) → Universal Joint (2) → Pinion Shaft (4) → Bevel Gear (3) → Bevel Gear (5) → Bevel Gear Shaft (10) → Center Blade (12).

■ **Outer Blades**

PTO Shaft (1) → Universal Joint (2) → Pinion Shaft (4) → Bevel Gear (3) → Bevel Gear (5) → Bevel Gear Shaft (10) → Center Pulley (9) → Mower Belt (11) → Outer Pulley (7) → Blade Shaft (8) → Outer Blade (6).

https://truckmanualshub.com/

[2] LIFTING MECHANISM

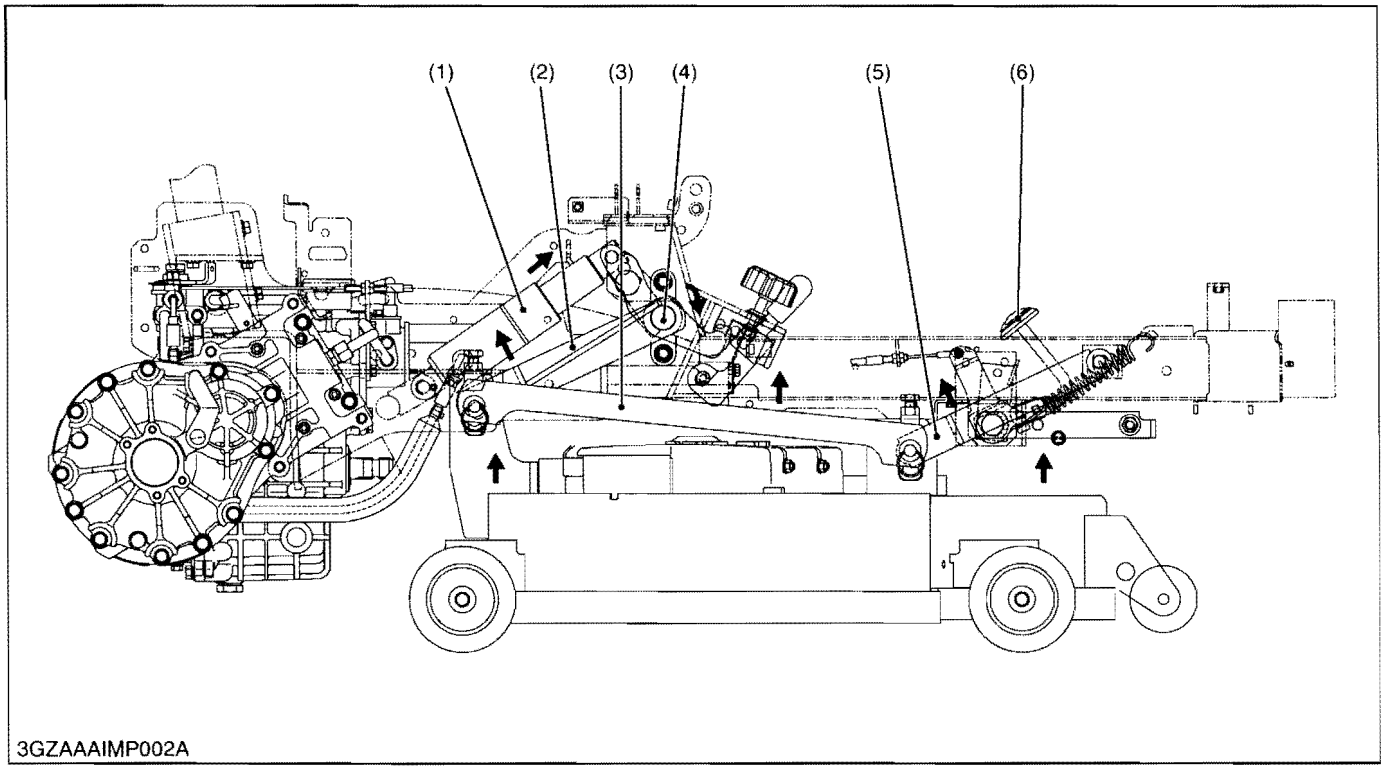

(1) Lift Cylinder
(2) Rear Arm
(3) Horizon Plate
(4) Lift Shaft
(5) Front Arm
(6) Hydraulic Lift Control Pedal

The lifting of mower is performed by the hydraulic system on the machine.

For avoiding danger, the mower should be kept lifting when traveling. When the hydraulic lift control pedal (6) is moved to **"UP"** position, the rear arms (2) are risen with lift shaft (4) by the oil pressure of hydraulic system.

Therefore, front arms (5) connected with the horizon plates (3) are lifted at the same time.

As this link system is a parallel linkage, the mower can be kept parallel at every position.

CAUTION

- **Never operate mower in transport position.**

https://truckmanualshub.com/

SERVICING

CONTENTS

1. TROUBLESHOOTING 6-S1
2. SERVICING SPECIFICATIONS 6-S2
3. TIGHTENING TORQUES 6-S3
4. CHECKING, DISASSEMBLING AND ASSEMBLING 6-S4
   [1] CHECKING AND ADJUSTING 6-S4
   [2] DISASSEMBLING AND ASSEMBLING 6-S8
      (1) RCK48S 6-S8
      (2) RCK48P and RCK54P 6-S11
   [3] SERVICING 6-S15
      (1) RCK48S 6-S15
      (2) RCK48P and RCK54P 6-S15

https://truckmanualshub.com/

1. TROUBLESHOOTING

Symptom	Probable Cause	Solution	Reference Page
Blade Does Not Turn	PTO system malfunctioning	Check transmission	–
	Broken mower belt	Replace mower belt	G-48
Blade Speed Is Slow	Loosen mower belt	Replace mower belt or tension spring	G-48
	Clogged grass	Remove grass	–
	Flattened out or worn cup washer	Replace cup washer	6-S8, S11
	Engine rpm too low	Mow at full throttle, check and reset engine rpm	–
Cutting Is Poor	Worn or bent mower blade	Sharpen or replace mower blade	6-S8, S11
	Loosen mower blade screw	Retighten mower blade screw	6-S8, S11
	Cutting height improper	Adjust cutting height	6-S5
	Ground speed too fast	Slow-down	–
	Low wheel inflation	Add air to correct	–
	Anti-scalp rollers not adjusted correctly	Adjust anti-scalp rollers	6-S4
Mower Is Not Lifted	Broken linkage system	Replace linkage system	–
	Trouble of hydraulic system	Check hydraulic system	–

W1014322

2. SERVICING SPECIFICATIONS

Item		Factory Specification	Allowable Limit
Bevel Gears in Gear Box	Backlash	0.13 to 0.25 mm 0.0052 to 0.0098 in.	0.40 mm 0.02 in.
Front Tip of Blade to Rear Tip of Blade	Difference	0 to 6.0 mm 0 to 0.24 in.	–
Left Tip of Blade to Right Tip of Blade	Difference	Less than 3 mm 0.1 in.	–

W1013874

https://truckmanualshub.com/

3. TIGHTENING TORQUES

Tightening torques of screws, bolts and nuts on the table below are especially specified.
(For general use screws, bolts and nuts: See page G-10.)

[RCK48S]

Item	N·m	kgf·m	lbf·ft
Mower blade screw	103 to 117	10.5 to 12.0	76.0 to 86.7
Gear box screw	24 to 28	2.4 to 2.8	18 to 20
Gear box mounting screw (for aluminum gear case)	40 to 44	4.0 to 4.5	29 to 32
Gear box mounting screw	48 to 55	4.9 to 5.7	36 to 41
Center pulley holder screw	79 to 90	8.0 to 9.2	58 to 66
Outer pulley mounting nut	167 to 186	17.0 to 19.0	123 to 137
Pulley holder mounting screw	78 to 90	7.9 to 9.2	58 to 66

W1012736

[RCK48P, RCK54P]

Mower blade screw	98.1 to 117	10.0 to 12.0	72.4 to 86.7
Gear box mounting screw (Standard type / Reamer type)	79 to 90	8.0 to 9.2	58 to 66
Center pulley holder screw (Standard type / Reamer type)	79 to 90	8.0 to 9.2	58 to 66
Outer pulley mounting nut	167 to 186	17.0 to 19.0	123 to 137
Pulley holder mounting screw	78 to 90	7.9 to 9.2	58 to 66

W1012736

4. CHECKING, DISASSEMBLING AND ASSEMBLING

[1] CHECKING AND ADJUSTING

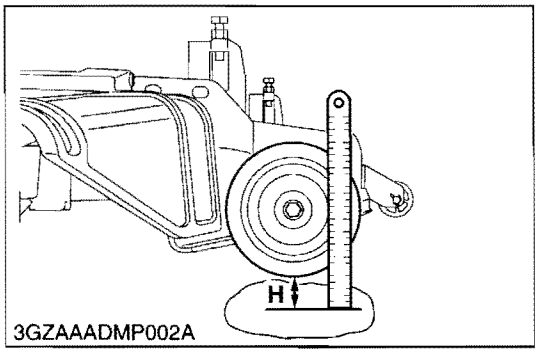

3GZAAADMP002A

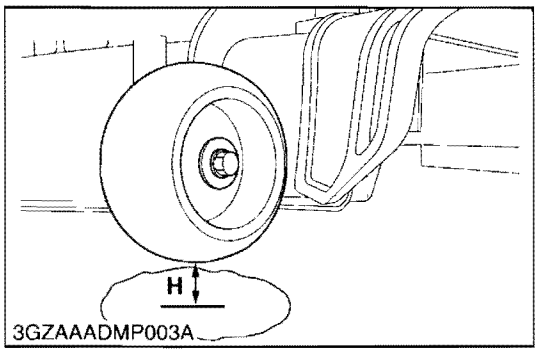

3GZAAADMP003A

Adjusting Anti-scalp Rollers

CAUTION

To avoid personal injury;
- **Park the machine on a firm and level surface.**
- **Apply the parking brake.**
- **Stop the engine and remove the key.**
- **Wait for all moving parts to stop.**

■ **IMPORTANT**
- **The flattest cut can be achieved by having the anti-scalp rollers adjusted off the ground.**
  Check anti-scalp roller adjustments each time the mower deck cutting height is changed.
  It is recommended that all the anti-scalp rollers be kept off the ground to minimize scuffing.

1. Check the machine wheel pressure.
   Inflate wheels to the correct pressure. (See table below.).

	Inflation Pressure
Front wheel	270 kPa, 2.8 kgf/cm^2, 40 psi
Rear wheel	140 kPa, 1.4 kgf/cm^2, 20 psi

2. Start the engine.
3. Raise up the mower deck to the transport position.
   (Also the top end of the lift.)
4. Turn the cutting height control dial to adjust height.
5. Lower the mower deck.

■ **Front side anti-scalp roller**

6. Adjust height **H** of the rear side anti-scalp roller to one of four positions to approximately 19 mm (0.75 in.) between rollers and ground. Adjust both side rollers to the same height.
7. Install the roller with attaching hardware.

■ **Rear side anti-scalp roller**

8. Adjust height **H** of the front side anti-scalp roller to one of seven positions to approximately 19 mm (0.75 in.) between rollers and ground. Adjust both side rollers to the same height.
9. Install the roller with attaching hardware.

H : Height 19 mm (0.75 in.)

W1015131

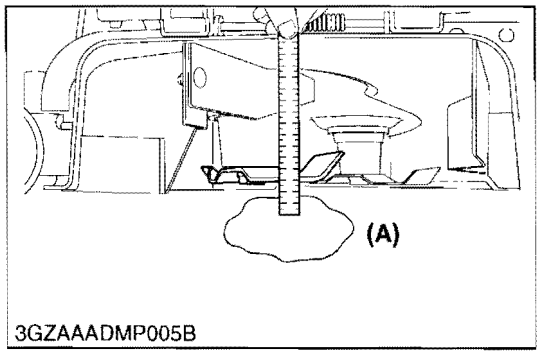

Checking Level (Side-to-Side)

CAUTION

To avoid personal injury;

- **Park the machine on a firm and level surface.**
- **Apply the parking brake.**
- **Disengage PTO (OFF).**
- **Stop the engine, remove the key and remove the mower u-joint while checking or adjust the level of the mower deck.**

IMPORTANT

- **Check the machine tire pressure.**
  inflate tires to the correct pressure.

NOTE

- **Mower deck anti-scalp rollers should not contact the ground.**

1. Raise the mower deck to the transport position. (Also the top end.)
2. Turn the cutting height set dial to the 3 in. cutting height position.
3. Lower the mower deck.
4. Position the right mower blade in the Side-to-Side position.
5. Measure from outside blade tip to the level surface with a short ruler or leveling gauge.

Height of the blade at the concrete surface	Reference value	76 mm 3 in.

NOTE

- **There is difference of the blade height between on the concrete and ground.**

6. Check that the left side blade is same height.
   The difference between both measurements should be less than 3 mm (1/8 in.)
7. If the Side-to-Side adjustment is not within the given tolerance, adjustment necessary.

Side-to-side adjustment	Factory spec.	Less than 3 mm 1/8 in.

(A) Side

W1015552

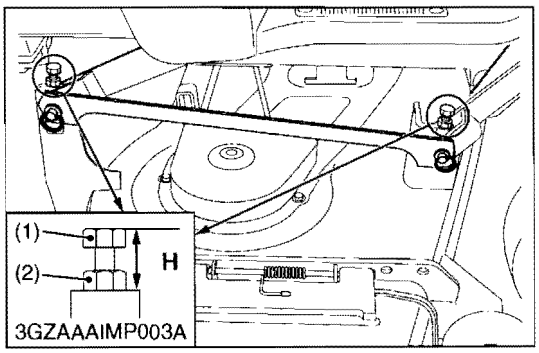

Adjusting Level (Side-to-Side)

1. Raise up the mower deck to the transport position. (Also the top end.)
2. Turn the cutting height set dial to the 3 in. cutting height position.
3. Place 51 mm (2 in.) height wood blocks under each side of the mower deck.
   Anti-scalp rollers must not reset on the wood block.
4. Lower the mower deck.
5. Position mower blade in the Side-to-Side position.
6. Loosen the lock nuts of the right side of the machine.
7. Adjust the cutting height fine tuning bolts to set 76 mm (3 in.) height.
   Front and rear side bolts must be adjusted.
8. Lock the nuts.
9. Adjust the left side equally.
10. Check the side-to-side level and if it is not level, adjustment necessary.

(1) Cutting Height Fine Tuning Bolt
(2) Lock Nut

H : Length of Cutting Height Fine Tuning Bolt

W1016013

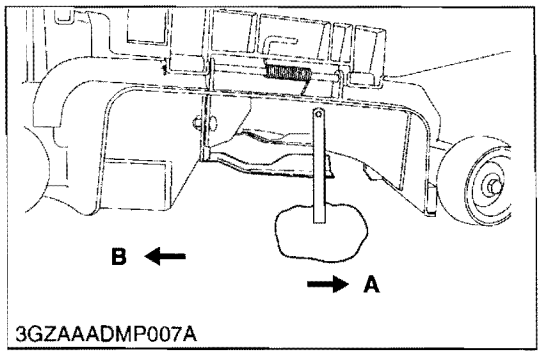

Checking Level (Front-to-Rear)

CAUTION

To avoid personal injury;

- **Park the machine on a firm and level surface.**
- **Engage the parking brake.**
- **Disengage PTO.**
- **Stop the engine, remove the key and remove the mower u-joint while checking or adjusting the level of the mower deck.**

IMPORTANT

- **Check the machine tire pressure.**
  Inflate tires to the correct pressure.

NOTE

- **Mower deck anti-scalp rollers should not contact the ground.**

1. Raise the mower deck to the transport position. (Also the top end.)
2. Turn the cutting height set dial to the 3 in. cutting height position.
3. Lower the mower deck.
4. Position the right mower blade in the Front-to-Rear position.
5. Measure from the right front blade tip to the level surface with a short ruler or leveling gauge.
6. Turn the blade 180 ° and measure from right rear blade tip to the level surface.
7. Check that the left side blade has the same dimension. The difference between both measurements should be less than 6 mm (1/4 in.).
   Front side must be lower than rear side.
8. If the Front-to-Rear adjustment is not within the given tolerance, adjustment is necessary.

Front-to-rear adjustment	Factory spec.	Less than 6 mm 1/4 in. Front side must be lower than rear side.

(A) Front **(B) Rear**

W1016278

https://truckmanualshub.com/

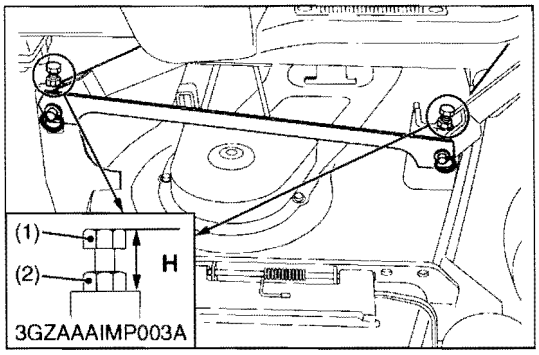

Adjusting Level (Front-to-Rear)

1. Raise up the mower deck to the transport position. (Also the top end.)
2. Turn the cutting height set dial to the 3 in. cutting height position.
3. Place 51 mm (2 in.) height wood blocks under each side of the mower deck.
   Anti-scalp rollers must not reset on the wood block.
4. Lower the mower deck.
5. Loosen the lock nuts of the front side of the machine.
6. Adjust the cutting height fine tuning bolts to set 76 mm (3 in.) height.
   Both front side bolts must be adjusted.
7. Lock the nuts.
8. Adjust the other side equally.

■ **IMPORTANT**

- **The difference between both measurements should be less than 6 mm (1/4 in.).**
  Front side must be lower than rear side.

9. Check the front-to-rear level and if it is not level, adjustment necessary.

(1) Cutting Height Fine Tuning Bolt
(2) Lock Nut
H : Length of Cutting Height Fine Tuning Bolt

W1016650

[2] DISASSEMBLING AND ASSEMBLING

(1) RCK48S

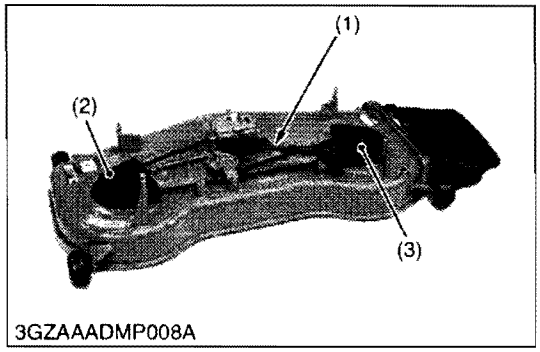

3GZAAADMP008A

Universal Joint and Belt Covers

1. Remove the universal joint (1).
2. Remove the left and right belt covers (2), (3).

(1) Universal Joint
(2) Belt Cover (Left)
(3) Belt Cover (Right)

W1016963

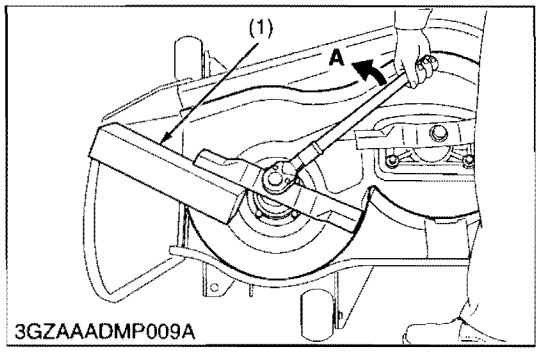

3GZAAADMP009A

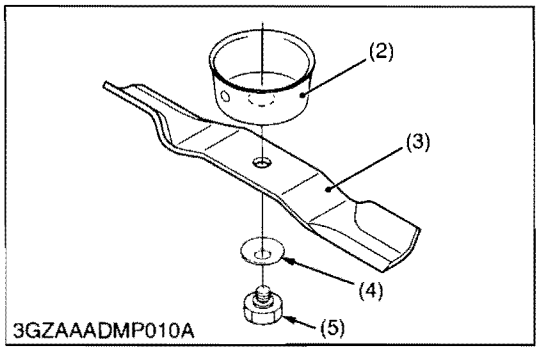

3GZAAADMP010A

Mower Blades (Center Blade and Outer Blades)

1. Turn over the mower.
2. Unscrew the mower blade screw (5), and remove the cup washer (4), mower blade (3) and dust cover (2).

■ **NOTE**

- **To remove the blade securely, wedge a wooden block (1) between one blade and the mower deck in such position that it will hold the blade safely while loosing or tightening the blade screw.**

(When reassembling)

- Be sure to assemble the cup washer (4) between the mower blade (3) and mower blade screw (5).

■ **IMPORTANT**

- **Make sure the cup washer (4) is not flattened out or worn, causing blade to slip easily.**
  Replace cup washer if it is damaged.

Tightening torque	Mower blade screw	103 to 117 N·m 10.5 to 12.0 kgf·m 76.0 to 86.7 lbf·ft

(1) Wooden Block
(2) Dust Cover
(3) Mower Blade
(4) Cup Washer (Plate Spring)
(5) Mower Blade Screw

A : Loosen

W1017102

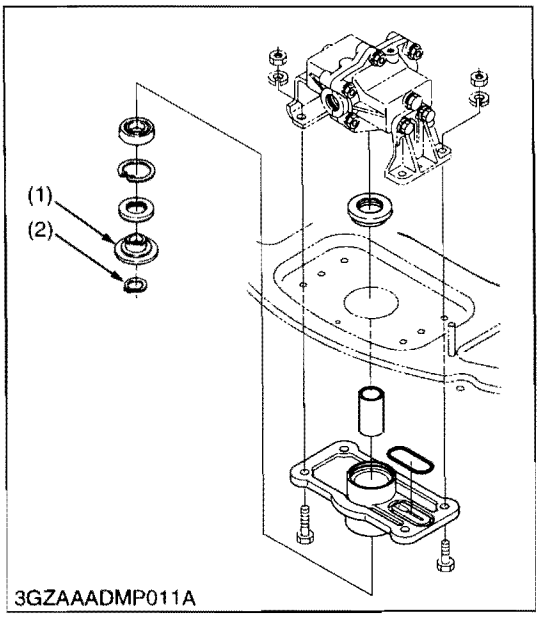

3GZAAADMP011A

Spline Boss

1. Remove the external snap ring (2).
2. Remove the spline boss (1).

(1) Blade Boss
(2) External Snap Ring

W1017384

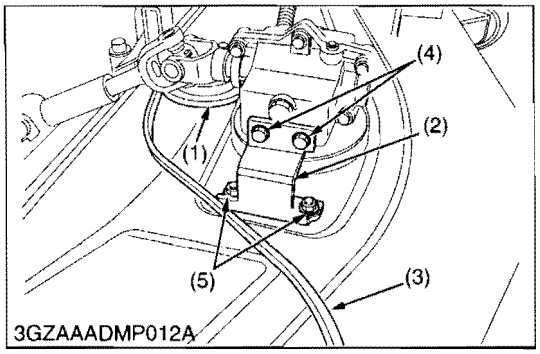

Gear Box and Mower Belt

1. Remove the left and right hand shield from the mower deck.
2. Clean around the gear box.
3. Remove the belt from the tension pulley.
4. Remove the right hand bracket which mounts the gear box to the mower deck and slip the belt over the top of the gear box.

Tightening torque	Gear box mounting screw (for aluminum gear case)	40 to 44 N·m 4.0 to 4.5 kgf·m 29 to 32 lbf·ft
	Gear box mounting screws and nuts	48 to 55 N·m 4.9 to 5.7 kgf·m 36 to 41 lbf·ft

(1) Tension Pulley
(2) Bracket (RH)
(3) Belt
(4) Bolt
(5) Bolt and Nut

W1017524

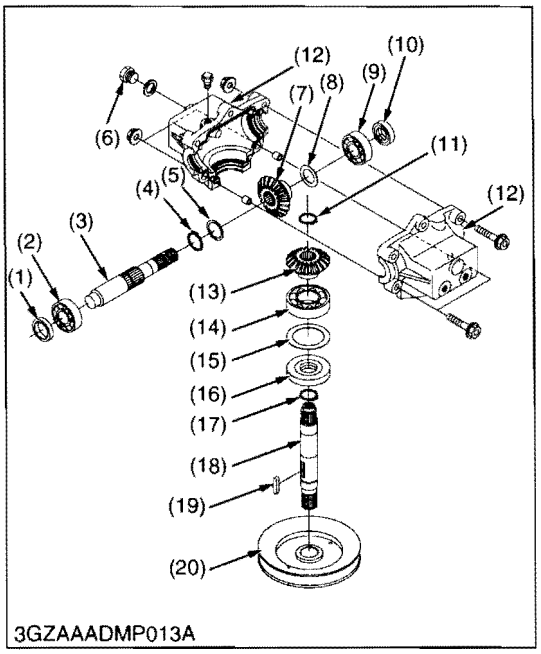

Disassembling Gear Box

1. Unscrew the drain plug (6), and drain the gear box oil.
2. Remove the center pulley (20) with a puller.
3. Remove the gear box.
4. Open the gear box.
5. Remove the input shaft (3) and the blade shaft (18).
6. Disassemble the input shaft (3) and the blade shaft (18).

(When reassembling)

- Replace the oil seals (1), (10), (16) and gear box caps with new ones.
- Check the backlash and turning torque.
  If not proper, adjust with the shims.
- After cleaning dirty and gear box oil and the gear box surface, apply the liquid gasket.

Tightening torque	Gear box screw	24 to 28 N·m 2.4 to 2.8 kgf·m 18 to 20 lbf·ft

(1) Oil Seal
(2) Ball Bearing
(3) Input Shaft
(4) External Circlip
(5) Shim
(6) Drain Plug
(7) Bevel Gear
(8) Shim
(9) Ball Bearing
(10) Oil Seal
(11) External Circlip
(12) Bevel Gear Case
(13) Bevel Gear
(14) Ball Bearing
(15) Shim
(16) Oil Seal
(17) External Circlip
(18) Blade Shaft
(19) Feather Key
(20) Center Pulley

W1017827

https://truckmanualshub.com/

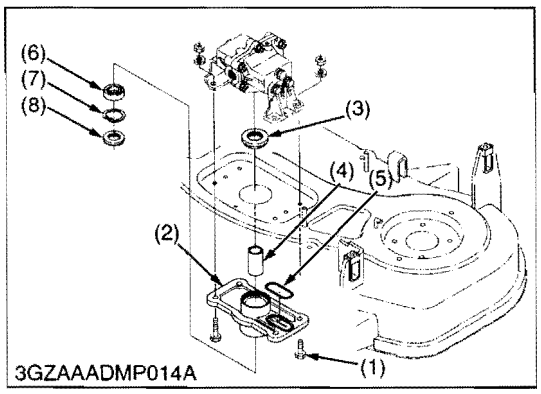

Center Pulley Holder

1. Unscrew the center pulley holder screw (1).
2. Remove the upper oil seal (3) and lower oil seal (8).
3. Remove the internal snap ring (7) and ball bearing (6).

(When reassembling)

- Replace the oil seals (3), (8) with new ones.
- Install the screws (10) at their original positions.

■ **NOTE**

- **When reassembling the center pulley holder (2), gear box and gear box stays, screw the all screws by hand temporary.**
- **Tighten the screws in the order as below, to prevent the incline the gear box.**

Tightening torque	Center pulley holder screw	79 to 90 N·m 8.0 to 9.2 kgf·m 58 to 66 lbf·ft

(1) Screw
(2) Center Pulley Holder
(3) Oil Seal
(4) Collar
(5) O-ring
(6) Ball Bearing
(7) Internal Circlip
(8) Lower Oil Seal

W1018256

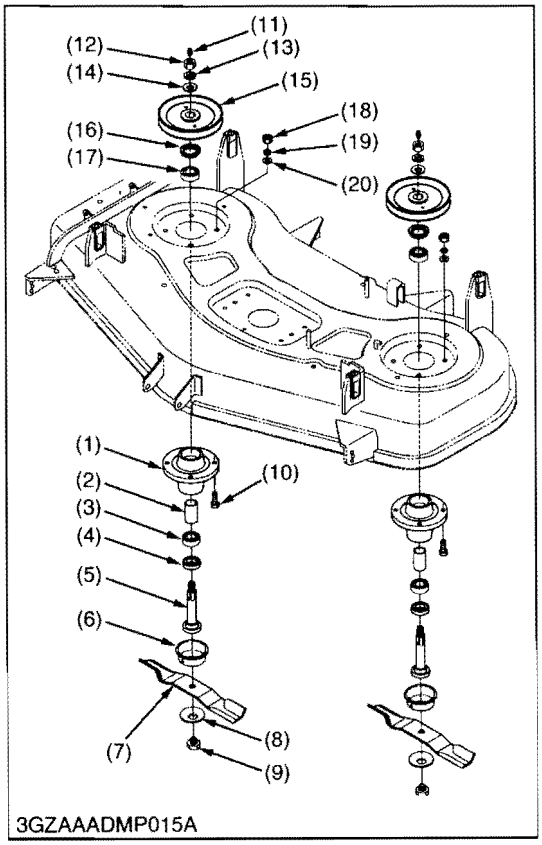

Outer Pulley and Blade Shaft

1. Unscrew the outer mounting nut (12), and remove the outer pulley (15).
2. Unscrew the pulley holder mounting screws (10), and separate the left pulley holder (1) from the mower deck.
3. Remove the blade bolt (9) and blade (7).
4. Remove the oil seal (4).
5. Remove the ball bearings (17), (3) from the blade shaft (5).
6. Remove the left pulley holder and blade shaft as above.

Tightening torque	Outer pulley mounting nut	167 to 186 N·m 17.0 to 19.0 kgf·m 123 to 137 lbf·ft
	Pulley holder mounting screw	78 to 90 N·m 7.9 to 9.2 kgf·m 58 to 66 lbf·ft

(1) Pulley Holder
(2) Collar
(3) Ball Bearing
(4) Lower Oil Seal
(5) Blade Shaft
(6) Dust Cover
(7) Blade
(8) Plate Spring
(9) Blade Bolt
(10) Bolt
(11) Grease Nipple
(12) Spring Washer
(13) Spring Washer
(14) Plain Washer
(15) Blade Side Pulley
(16) Upper Oil Seal
(17) Ball Bearing
(18) Nut
(19) Spring Washer
(20) Plain Washer

W1018575

https://truckmanualshub.com/

(2) RCK48P and RCK54P

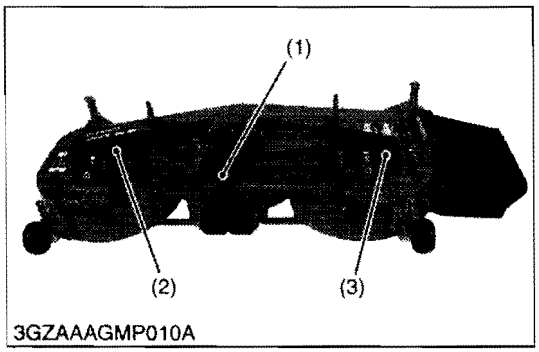

Universal Joint and Belt Covers

1. Remove the universal joint (1).
2. Remove the left and right belt covers (2), (3).

(1) Universal Joint
(2) Belt Cover (Left)
(3) Belt Cover (Right)

W1012580

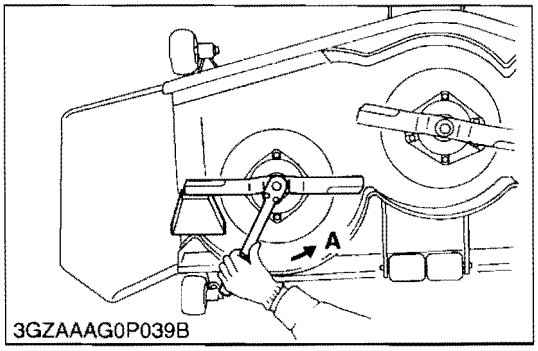

Mower Blades (Center Blade and Outer Blades)

1. Turn over the mower.
2. Unscrew the mower blade screw (5), and remove the lock washer (4), two cup washers (3), mower blade (2) and dust cover (1).

■ **NOTE**

- **To remove the blade securely, wedge a block of wood between one blade and the mower deck in such position that it will hold the blade safely while loosing or tightening the blade screw.**

(When reassembling)

- Be sure to assemble the two cup washers between the mower blade and spline boss.

■ **IMPORTANT**

- **Make sure the cup washer is not flattened out or worn, causing blade to slip easily.**
  Replace two cup washers if either is damaged.

Tightening torque	Mower blade screw	98.1 to 117 N·m 10.0 to 12.0 kgf·m 72.4 to 86.7 lbf·ft

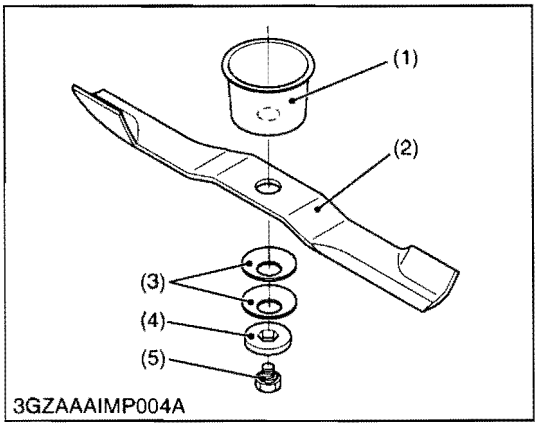

(1) Dust Cover
(2) Mower Blade
(3) Cup Washer (Plate Spring)
(4) Lock Washer
(5) Mower Blade Screw

A : Loosen

W1012667

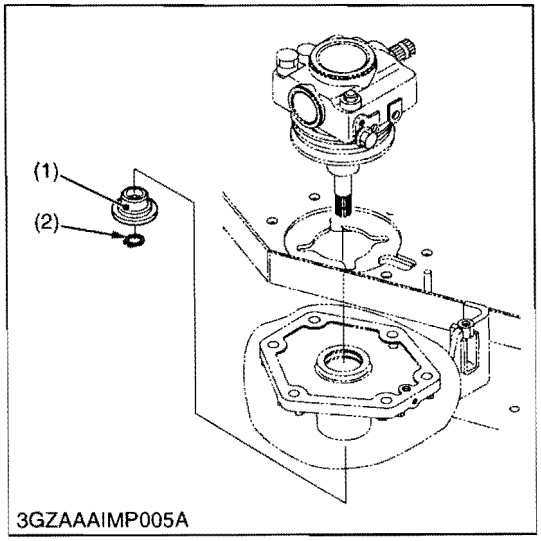

Blade Boss

1. Remove the external snap ring (2).
2. Remove the blade boss (1).

(1) Blade Boss
(2) External Snap Ring

W1012871

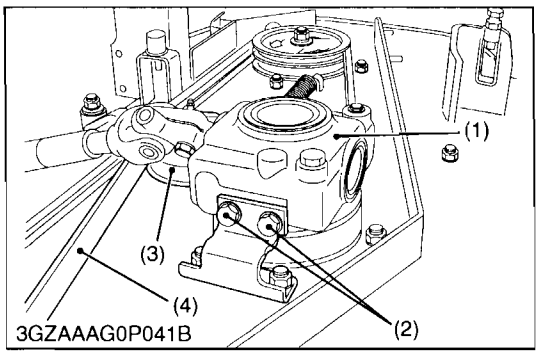

Gear Box and Mower Belt

1. Remove the mower deck from the machine.
2. Remove the left and right hand shield from the mower deck.
3. Clean around the gear box.
4. Remove the belt from the tension pulley.
5. Remove the right hand bracket which mounts the gear box to the mower deck and slip the belt over the top of the gear box.
6. To install a new belt, reverse the above procedure.

(When reassembling)

- Install the reamer screws at their original positions as shown in the figure.

Tightening torque	Gear box mounting screw	79 to 90 N·m 8.0 to 9.2 kgf·m 58 to 66 lbf·ft

(1) Gear Box
(2) Gear Box Mounting Screw
(3) Tension Pulley
(4) Mower Belt

W1012961

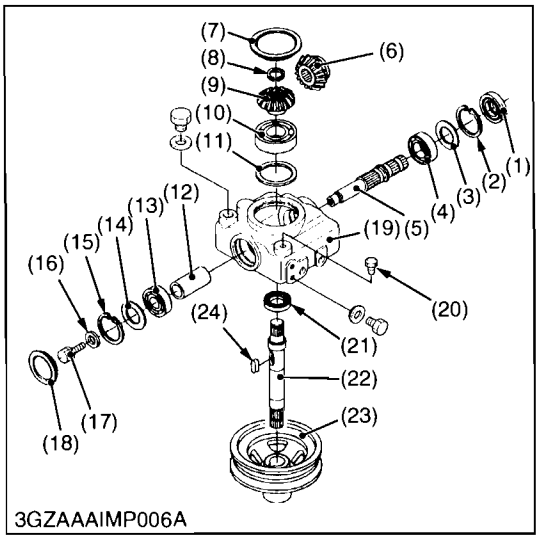

Disassembling Gear Box

1. Unscrew the drain plug, and drain the gear box oil.
2. Remove the center pulley (23) with a puller, and remove the feather key (24) on the bevel gear shaft.
3. Remove the gear box caps (7), (18).
4. Remove the oil seal (1), external snap ring (2) and shim (3).
5. Remove the screw (17), washer (16) and tap out the pinion shaft (5) with ball bearing (4).
6. Remove the bevel gear (6) and pinion shaft collar (12).
7. Remove the internal snap ring (15) and shims (14).
8. Remove the ball bearing (13).
9. Remove the external snap ring (8), and draw out the bevel gear shaft (22).
10. Remove the bevel gear (9) with ball bearing (10).

(When reassembling)

- Replace the oil seals (1), (21) and gear box caps (7), (18) with new ones.
- Check the backlash and turning torque.
  If not proper, adjust with the shims (3), (11) and (14).

(1) Oil Seal
(2) Internal Snap Ring
(3) Shim
(4) Ball Bearing
(5) Pinion Shaft
(6) 19T Bevel Gear
(7) Gear Box Cap
(8) External Snap Ring
(9) 15T Bevel Gear
(10) Ball Bearing
(11) Shim
(12) Pinion Shaft Collar
(13) Ball Bearing
(14) Shim
(15) Internal Snap Ring
(16) Washer
(17) Screw
(18) Gear Box Cap
(19) Gear Box
(20) Breather
(21) Oil Seal
(22) Bevel Gear Shaft
(23) Center Pulley
(24) Feather Key

W1018511

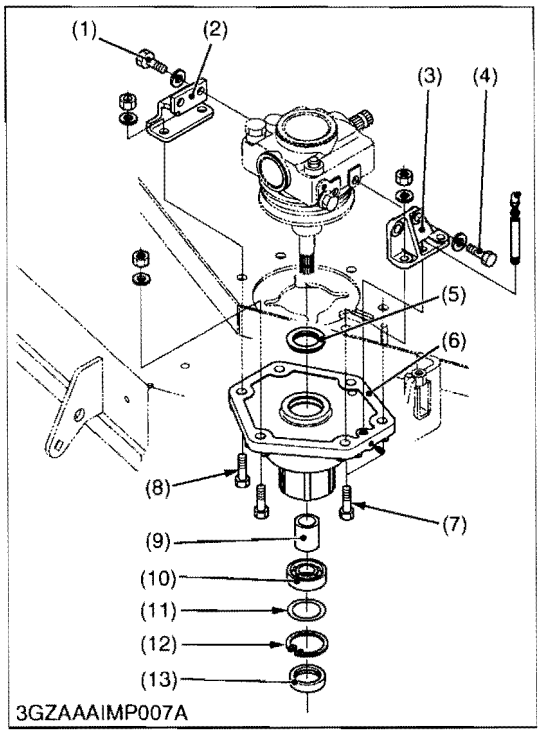

Center Pulley Holder

1. Unscrew the center pulley holder screws (8) and reamer screws (7).
2. Remove the upper oil seal (5) and lower oil seal (13).
3. Remove the internal snap ring (12) and ball bearing (10).

(When reassembling)

- Replace the oil seals (5), (13) with new ones.
- Install the reamer screws (10) at their original positions as shown in the figure.

■ **NOTE**

- **When reassembling the center pulley holder (6), gear box and gear box stays (2), (3), screw the all screws by hand temporary.**
- **Tighten the screws in the order as below, to prevent the incline the gear box.**
- **Tighten the reamer screws (4) to the gear box first, then tighten the reamer screws (7) to the center pulley holder (6) with specified torque.**
- **Tighten the gear box screws (1) to the gear box, then tighten the center pulley holder screws (8) with specified torque.**
- **See page 6-S8 for tightening torque of gear box screw.**

Tightening torque	Center pulley holder screw (Standard type / Reamer type)	79 to 90 N·m 8.0 to 9.2 kgf·m 58 to 66 lbf·ft

(1) Gear Box Screw
(2) Gear Box Stay RH
(3) Gear Box Stay LH
(4) Gear Box Reamer Screw
(5) Oil Seal
(6) Center Pulley Holder
(7) Center Pulley Holder Reamer Screw
(8) Center Pulley Holder Screw
(9) Collar
(10) Ball Bearing
(11) Shim
(12) Internal Snap Ring
(13) Oil Seal

W1013720

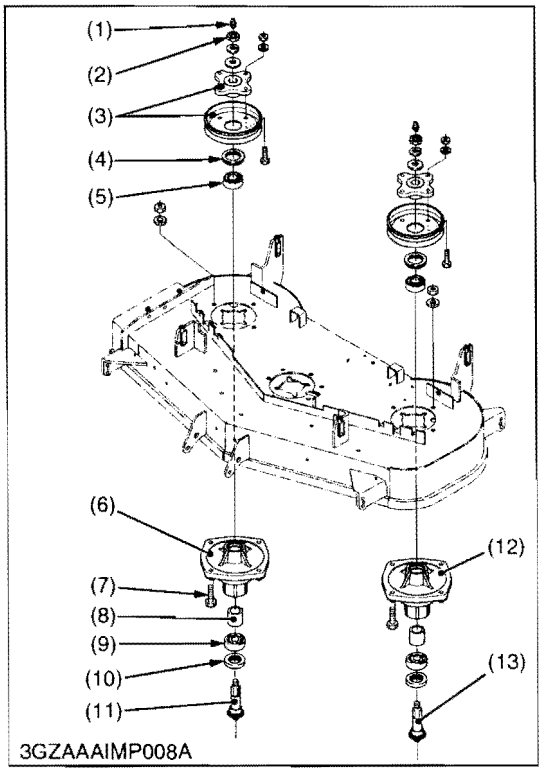

Outer Pulley and Blade Shaft

1. Unscrew the outer pulley mounting nut (2), and remove the outer pulley assembly (3).
2. Tap out the left blade shaft (12) with the ball bearing (9) and oil seal (10), taking care not to damage the grease nipple (1).
3. Remove the ball bearing (9) and oil seal (10) from the blade shaft (11).
4. Unscrew the pulley holder mounting screws (7), and separate the right pulley holder (6) from the mower deck.
5. Remove the oil seal (4) and ball bearing (5).
6. Remove the left pulley holder (12) and blade shaft (13) as above.

(When reassembling)

- Replace the oil seals (4) and (10) with new ones.

Tightening torque	Outer pulley mounting nut	167 to 186 N·m 17.0 to 19.0 kgf·m 123 to 137 lbf·ft
	Pulley holder mounting screw	79 to 90 N·m 8.0 to 9.2 kgf·m 58 to 66 lbf·ft

(1) Grease Nipple
(2) Outer Pulley Mounting Nut
(3) Outer Pulley Assembly
(4) Oil Seal
(5) Ball Bearing
(6) Pulley Holder (RH)
(7) Pulley Holder Mounting Screw
(8) Collar
(9) Ball Bearing
(10) Oil Seal
(11) Blade Shaft
(12) Pulley Holder (LH)
(13) Blade Shaft

W1013387

[3] SERVICING

(1) RCK48S

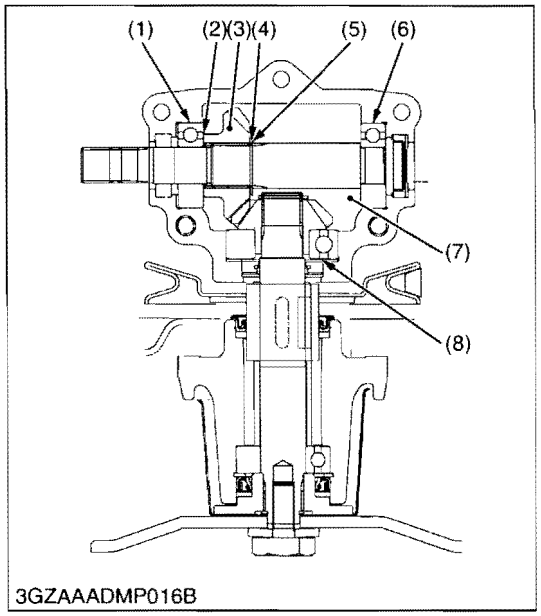

Backlash between Bevel Gears

1. Disassemble the bevel gear case (LH, RH) of gear box.
2. Place fuses the bevel gear (3) on the input shaft (7).
3. Turn the input shaft (7).
4. Take out the fuses, and measure the thickness of fuses with an outside micrometer. (Backlash equal thickness of fuse)
5. If the backlash exceeds the allowable limit, adjust with shims (2), (5), (8).

Backlash between bevel gears	Factory spec.	0.13 to 0.25 mm 0.0052 to 0.0098 in.
	Allowable limit	0.40 mm 0.02 in.

(Reference)

- Thickness of adjusting shims (2), (4) : 0.2 mm (0.008 in.)
  0.3 mm (0.01 in.)
- Thickness of adjusting shims (8) : 0.2 mm (0.008 in.)
  0.3 mm (0.01 in.)

(1) Ball Bearing
(2) Shim
(3) Bevel Gear
(4) Shim
(5) External Circlip
(6) Ball Bearing
(7) Input Shaft
(8) Shim

W1021268

(2) RCK48P and RCK54P

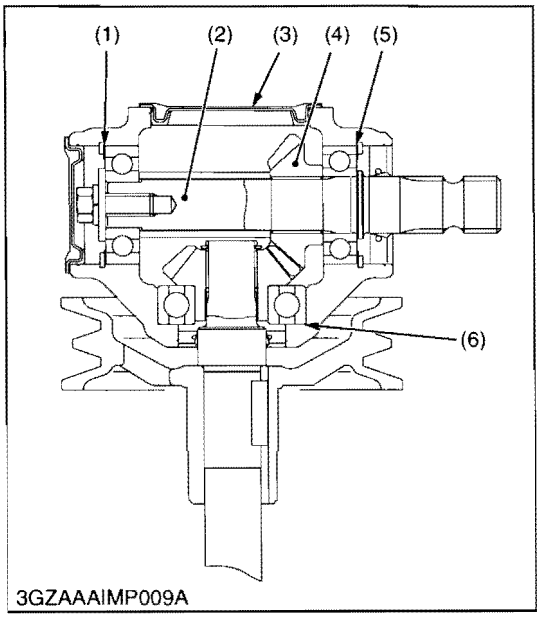

Backlash between Bevel Gears

1. Remove the gear box cap (3).
2. Place fuses the bevel gear (4) on the pinion shaft (2).
3. Turn the pinion shaft (2).
4. Take out the fuses, and measure the thickness of fuses with an outside micrometer. (Backlash equal thickness of fuse)
5. If the backlash exceeds the allowable limit, adjust with shims (1), (5), (6).

Backlash between bevel gears	Factory spec.	0.13 to 0.25 mm 0.0052 to 0.0098 in.
	Allowable limit	0.40 mm 0.02 in.

(Reference)

- Thickness of adjusting shims (1), (4) : 0.2 mm (0.008 in.)
  0.3 mm (0.01 in.)
- Thickness of adjusting shims (6) : 0.1 mm (0.004 in.)
  0.2 mm (0.008 in.)

(1) Shim
(2) Pinion Shaft
(3) Gear Box Cap
(4) Bevel Gear
(5) Shim
(6) Shim

W1020126

https://truckmanualshub.com/