https://truckmanualshub.com/

WSM

WORKSHOP MANUAL
TRACTOR

B1700
B2100
B2400

Kubota

https://truckmanualshub.com/

https://truckmanualshub.com/

TO THE READER

This Workshop Manual has been prepared to provide servicing personnel with information on the mechanism, service and maintenance of KUBOTA Tractors B1700, B2100 and B2400. It is divided into two parts, "Mechanism" and "Servicing" for each section.

■ Mechanism

Information on the construction and function are included. This part should be understood before proceeding with troubleshooting, disassembling and servicing.

■ Servicing

Under the heading "General" section comes general precautions, check and maintenance and special tools. Other section, there are troubleshooting, servicing specification lists, checking and adjusting, disassembling and assembling, and servicing which cover procedures, precautions, factory specifications and allowable limits.

All information, illustrations and specifications contained in this manual are based on the latest production information available at the time of publication.

The right is reserved to make changes in all information at any time without notice.

March '95

© KUBOTA Corporation 1995

https://truckmanualshub.com/

⚠ SAFETY FIRST

This symbol, the industry's "Safety Alert Symbol", is used throughout this manual and decals on the machine itself to warn of the possibility of personal injury. Read these instructions carefully.
It is essential that you read the instructions and safety regulations before you attempt to repair or use this unit.

⚠ **DANGER** : Indicates an imminently hazardous situation which, if not avoided, will result in death or serious injury.

⚠ **WARNING** : Indicates a potentially hazardous situation which, if not avoided, could result in death or serious injury.

⚠ **CAUTION** : Indicates a potentially hazardous situation which, if not avoided, may result in minor or moderate injury.

■ **IMPORTANT** : Indicates that equipment or property damage could result if instructions are not followed.

■ **NOTE** : Gives helpful information.

SAFETY SERVICING AND REPAIRING

(1) Before working on the machine :
- Park the machine on a firm and level ground, and set the parking brake.
- Lower the implement or mower to the ground.
- Stop the engine, and remove the key.
- Disconnect the battery's ground cable.
- Clean the work area and machine.

(2) Do not work on the machine while under the influence of alcohol, medication, or other substances or while fatigued.
(3) Do not wear a necktie, scarf, necklace, loose or bulky clothing when you work near machine tools or moving parts.
(4) Use tools appropriate to the work. Makeshift tools, parts, and procedures will not make good repairs.
(5) When servicing is performed together by two or more persons, take care to perform all work safely.
(6) Do not work under the machine that is supported solely by a jack. Always support the machine by safety stands.

https://truckmanualshub.com/

(7) If the engine must be running to do same work, make sure the area is well ventilated. Never run the engine in a closed area. The exhaust gas contains poisonous carbon monoxide.
(8) Do not touch the rotating or hot parts while the engine is running.
(9) Fuel is extremely flammable and explosive under certain conditions. Do not smoke or allow flames or sparks in your working area.
(10) To avoid sparks from an accidental short circuit, always disconnect the battery's ground cable first and connect it last.
(11) Sulfuric acid in battery electrolyte is poisonous. It is strong enough to burn skin, clothing and cause blindness if splashed into eyes. Keep electrolyte away from eyes, hands and clothing. If you spill electrolyte on yourself, flush with water, and get medical attention immediately.
(12) Battery gas can explode. Keep sparks and open flame away from the top of battery, especially when charging the battery.
(13) Never remove the radiator cap while the engine is running, or immediately after stopping. Otherwise, hot water will spout out from radiator. Wait for more than ten minutes to cool the radiator, before removing the cap.
(14) Escaping fluid (fuel or hydraulic oil) under pressure can penetrate the skin causing serious injury. Relieve pressure before disconnecting hydraulic or fuel lines. Tighten all connections before applying pressure.
(15) Do not start the engine by shorting across starter terminals.
(16) Unauthorized modifications to the machine may impair the function and / or safety and affect machine life.
(17) Do not alter or remove any part of machine safety system.
(18) Keep a first aid kit and fire extinguisher handy at all times.
(19) Be sure to chock the wheels to prevent accident during servicing the machine.

https://truckmanualshub.com/

SAFETY DECALS

- **The following safety decals are installed on the machine.**
  If a decal becomes damaged, illegible or is not on the machine, replace it. The decal part number is listed in the parts list.

(1) Part No. TA040-4965-2

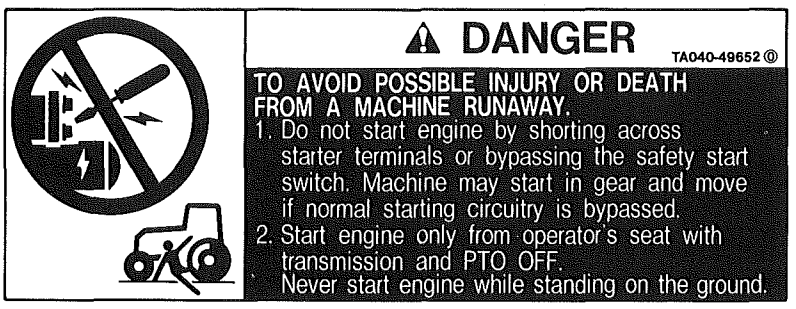

(2) Part No. TA040-4959-3

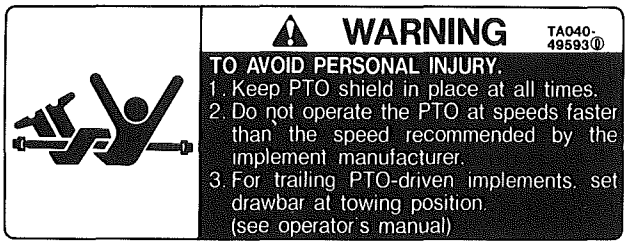

(3) Part No. 6C040-4741-1
No fire

(4) Part No. TA040-4935-1

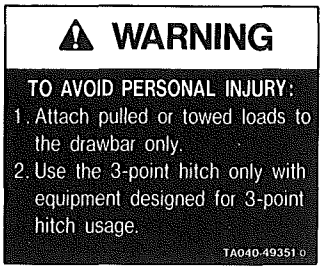

(5) Part No. 6C050-4724-1
【HST type】

(6) Part No. TA040-4958-1
Do not touch hot surface like muffler, etc.

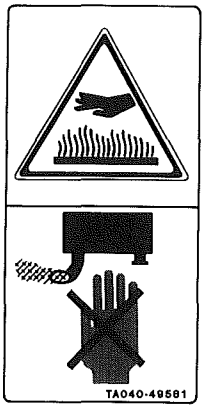

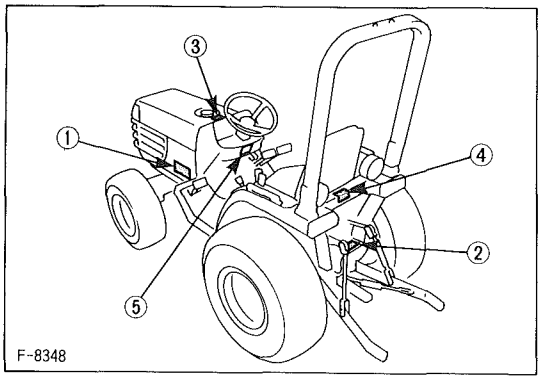

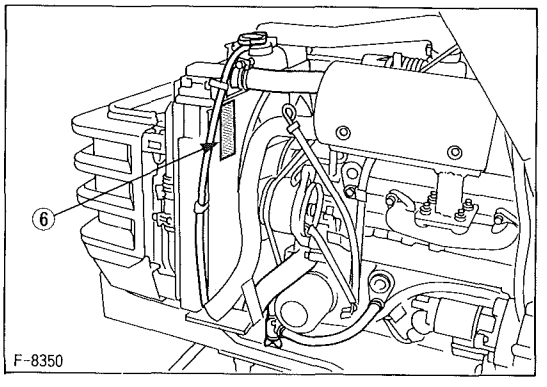

B177F001

https://truckmanualshub.com/

(7) Part No. TA040-4932-2

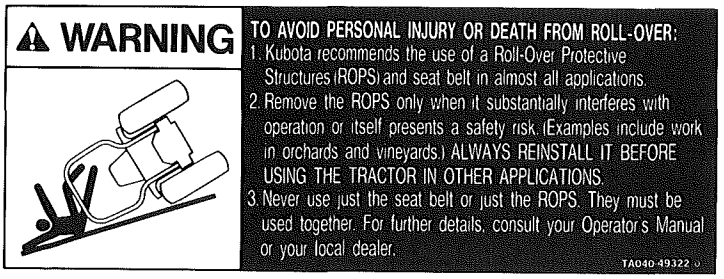

(8) Part No. 32751-4958-1
Stay clear of engine fan and fanbelt.

(9) Part No. 6C040-4742-1

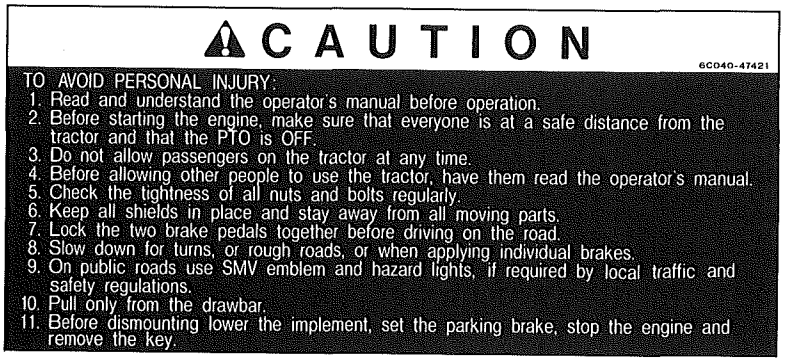

(10) Part No. 6C040-5559-1

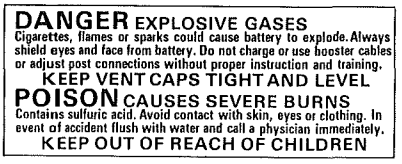

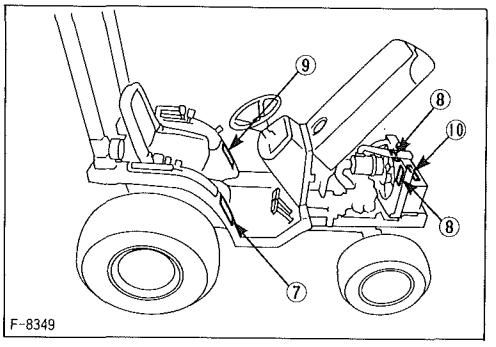

CARE OF DANGER, WARNING AND CAUTION LABELS

1. Keep danger, warning and caution labels clean and free from obstructing material.
2. Clean danger, warning and caution labels with soap and water, dry with a soft cloth.
3. Replace damaged or missing danger, warning and caution labels with new labels from your local KUBOTA dealer.
4. If a component with danger, warning and caution label (s) affixed is replaced with new part, make sure new label (s) is (are) attached in the same location (s) as the replaced component.
5. Mount new danger, warning and caution labels by applying on a clean dry surface and pressing any bubbles to outside edge.

B177F002

https://truckmanualshub.com/

SPECIFICATIONS

Model			B1700 HSD	B2100 HSD	B2400 HSD
PTO power			9.7 kW (13.0 HP)*	12.0 kW (16.0 HP)*	13.4 kW (18.0 HP)*
Engine	Maker		KUBOTA		
	Model		D905-D10	D1005-D10	D1105-D10
	Type		Indirect Injection. Vertical, water-cooled, 4-cycle diesel		
	Number of cylinders		3		
	Bore and stroke		72 x 73.6 mm (2.83 x 2.90 in.)	76 x 73.6 mm (2.99 x 2.90 in.)	78 x 78.4 mm (3.07 x 3.09 in.)
	Total displacement		898 cm³ (54.8 cu.in.)	1001 cm³ (61.1 cu.in.)	1123 cm³ (68.5 cu.in.)
	Engine gross power		12.7 kW (17.0 HP)	15.7 kW (21.0 HP)	17.9 kW (24.0 HP)
	Rated revolution		43.3 r/s (2600 rpm)		
	Maximum torque		51 N·m (38 ft-lbs)	59 N·m (44 ft-lbs)	67 N·m (50 ft-lbs)
	Battery		12V, RC : 71 min, CCA : 390 A (12V, RC : 79 min, CCA : 433A)		
	Starting system		Electric starting with cell starter 12V, 1.0 kW		
	Lubricating system		Forced lubrication by trochoidal pump		
	Cooling system		Pressurized radiator, forced circulation with water pump		
	Fuel		Diesel fuel No.2-D [above-10°C (14°F)], Diesel fuel No. 1 [below–10°C (14°F)]		
Capacities	Fuel tank		24 ℓ (6.3 U.S.gals, 5.3 Imp.gal)		
	Engine crankcase (with filter)		3.0 ℓ (3.2 U.S.qts, 2.6 Imp.qts)		
	Engine coolant		3.4 ℓ (3.6 U.S.qts, 2.6 Imp.qts)		
	Transmission case		12.0 ℓ (3.17 U.S.gals, 12.4 Imp.gals)		
	Front axle case		3.7 ℓ (3.9 U.S.qts, 3.3 Imp.qts)		
Dimensions	Overall length (without 3P)		2280 mm (89.8 in.)	2300 mm (90.6 in.)	2330 mm (91.7 in.)
	Overall width (min. tread)		989 mm (38.9 in.)	1077 mm (42.4 in.)	1175 mm (46.3 in.)
	Overall height (with ROPS)		1915 mm (75.4 in.)	1940 mm (76.4 in.)	1965 mm (77.4 in.)
	Overall height (top of seat)		1293 mm (50.9 in.)	1318 mm (51.9 in.)	1343 mm (52.9 in.)
	Wheelbase		1500 mm (59.0 in.)		
	Min. ground clearance		295 mm (11.6 in.)	305 mm (12.0 in.)	325 mm (12.8 in.)
	Treads	Front	835 mm (32.9 in.)	835 mm (32.9 in.)	835 mm (32.9 in.)
		Rear	778 to 948 mm (30.6 to 37.3 in.)	836 to 1006 mm (32.9 to 39.6 in.)	890 to 1064 mm (35.0 to 41.9 in.)
Weight (with ROPS)			635 kg (1402 lbs)	647 kg (1428 lbs)	662 kg (1461 lbs)
Clutch			Dry single plate		
Traveling system	Tires	Front	6-12	6-12	7-12
		Rear	8.3-16	9.5-16	11.2-16
	Steering		Integral type power steering		
	Transmission		Main-hydrostatic transmission, High-Low gear shift (2 forward, 2 reverse)		
	Brake		Wet disk		
	Min. turning radius (with brake)		2.1 m (6.9 feet)		
Hydraulic system	Hydraulic control system		Position Control		
	Pump capacity		22 ℓ/min (5.8 gals/min)		
	Three point hitch		SAE Category I		
	Max. lift force	At lift points	580 kg (1280 lbs)		
		24 in. behind lift points	460 kg (1015 lbs)		
PTO shaft	Rear-PTO		SAE 1-3/8, 6 splines		
	Revolution		543 rpm at 2600 engine rpm		
	Mid-PTO		USA No. 5 (KUBOTA 10-tooth) involute spline		
	Revolution		2537 rpm at 2600 engine rpm		

Note: * Manufacture's estimate the company reserves the right to change the specifications without notice.

https://truckmanualshub.com/

Model			B1700 D	B2100 D
PTO power			10.7 kW (14.0 HP)*	12.7 kW (17.0 HP)*
Engine	Maker		KUBOTA	
	Model		D905-D10	D1005-D10
	Type		Indirect Injection. Vertical, water-cooled, 4-cycle diesel	
	Number of cylinders		3	
	Bore and stroke		72 x 73.6 mm (2.83 x 2.90 in.)	76 x 73.6 mm (2.99 x 2.90 in.)
	Total displacement		898 cm³ (54.8 cu.in.)	1001 cm³ (61.1 cu.in.)
	Engine gross power		12.7 kW (17.0 HP)	15.7 kW (21.0 HP)
	Rated revolution		43.3 r/s (2600 rpm)	
	Maximum torque		51 N·m (38 ft-lbs)	59 N·m (44 ft-lbs)
	Battery		12V, RC : 71 min, CCA : 390 A (12V, RC : 79 min, CCA : 433A)	
	Starting system		Electric starting with cell starter 12V, 1.0 kW	
	Lubricating system		Forced lubrication by trochoidal pump	
	Cooling system		Pressurized radiator, forced circulation with water pump	
	Fuel		Diesel fuel No.2-D [above-10°C (14°F)], Diesel fuel No. 1 [below–10°C (14°F)]	
Capacities	Fuel tank		24 ℓ (6.3 U.S.gals, 5.3 Imp.gal)	
	Engine crankcase (with filter)		3.0 ℓ (3.2 U.S.qts, 2.6 Imp.qts)	
	Engine coolant		3.4 ℓ (3.6 U.S.qts, 2.6 Imp.qts)	
	Transmission case		11.0 ℓ (2.90 U.S.gals, 2.4 Imp.gals)	
	Front axle case		3.7 ℓ (3.9 U.S.qts, 3.3 Imp.qts)	
Dimensions	Overall length (without 3P)		2280 mm (89.8 in.)	2300 mm (90.6 in.)
	Overall width (min. tread)		989 mm (38.9 in.)	1077 mm (42.4 in.)
	Overall height (with ROPS)		1915 mm (75.4 in.)	1940 mm (76.4 in.)
	Overall height (top of seat)		1293 mm (50.9 in.)	1318 mm (51.9 in.)
	Wheelbase		1500 mm (59.0 in.)	
	Min. ground clearance		295 mm (11.6 in.)	305 mm (12.0 in.)
	Treads	Front	835 mm (32.9 in.)	835 mm (32.9 in.)
		Rear	778 to 948 mm (30.6 to 37.3 in.)	836 to 1006 mm (32.9 to 39.6 in.)
Weight (with ROPS)			625 kg (1380 lbs)	637 kg (1406 lbs)
Clutch			Dry single plate	
Traveling system	Tires	Front	6-12	6-12
		Rear	8.3-16	9.5-16
	Steering		Integral type power steering	
	Transmission		Main-hydrostatic transmission, High-Low gear shift (2 forward, 2 reverse)	
	Brake		Wet disk	
	Min. turning radius (with brake)		2.1 m (6.9 feet)	
Hydraulic system	Hydraulic control system		Position Control	
	Pump capacity		22 ℓ/min (5.8 gals/min)	
	Three point hitch		SAE Category I	
	Max. lift force	At lift points	580 kg (1280 lbs)	
		24 in. behind lift points	460 kg (1015 lbs)	
PTO shaft	Rear-PTO		SAE 1-3/8, 6 splines	
	Revolution		540 rpm at 2600 engine rpm	
	Mid-PTO		USA No. 5 (KUBOTA 10-tooth) involute spline	
	Revolution		2531 rpm at 2600 engine rpm	

Note: * Manufacture's estimate the company reserves the right to change the specifications without notice.

https://truckmanualshub.com/

TRAVELING SPEEDS

[HST Type]

(At rated engine rpm)

Model		B1700		B2100		B2400	
Tire size (Rear)		8.3-16		9.5-16		11.2-16	
	Hi-Lo gear shift lever	km/h	mph	km/h	mph	km/h	mph
Forward	Low	0 to 5.0	0 to 3.1	0 to 5.3	0 to 3.3	0 to 5.6	0 to 3.5
	High	0 to 12.3	0 to 7.7	0 to 13.2	0 to 8.2	0 to 13.9	0 to 8.7
Reverse	Low	0 to 5.0	0 to 3.1	0 to 5.3	0 to 3.3	0 to 5.6	0 to 3.5
	High	0 to 12.3	0 to 7.7	0 to 13.2	0 to 8.2	0 to 13.9	0 to 8.7

[Manual Transmission Type]

(At rated engine rpm)

Model				B1700		B2100	
Tire size (Rear)				8.3-16		9.5-16	
		Hi-Lo gear shift lever	Main gear shift lever	km/h	mph	km/h	mph
Forward	1	Low	1	1.0	0.6	1.0	0.6
	2		2	1.7	1.1	1.8	1.1
	3		3	3.1	1.9	3.3	2.1
	4	High	1	4.1	2.6	4.4	2.8
	5		2	7.3	4.6	7.8	4.9
	6		3	13.2	8.3	14.1	8.8
Reverse	1	Low	R	1.2	0.8	1.3	0.8
	2	High	R	5.2	3.2	5.5	3.5

The company reserves the right to change the specifications without notice.

DIMENSION

Maximum dimension is shown against farm tire variation.

Unit: mm (in.)

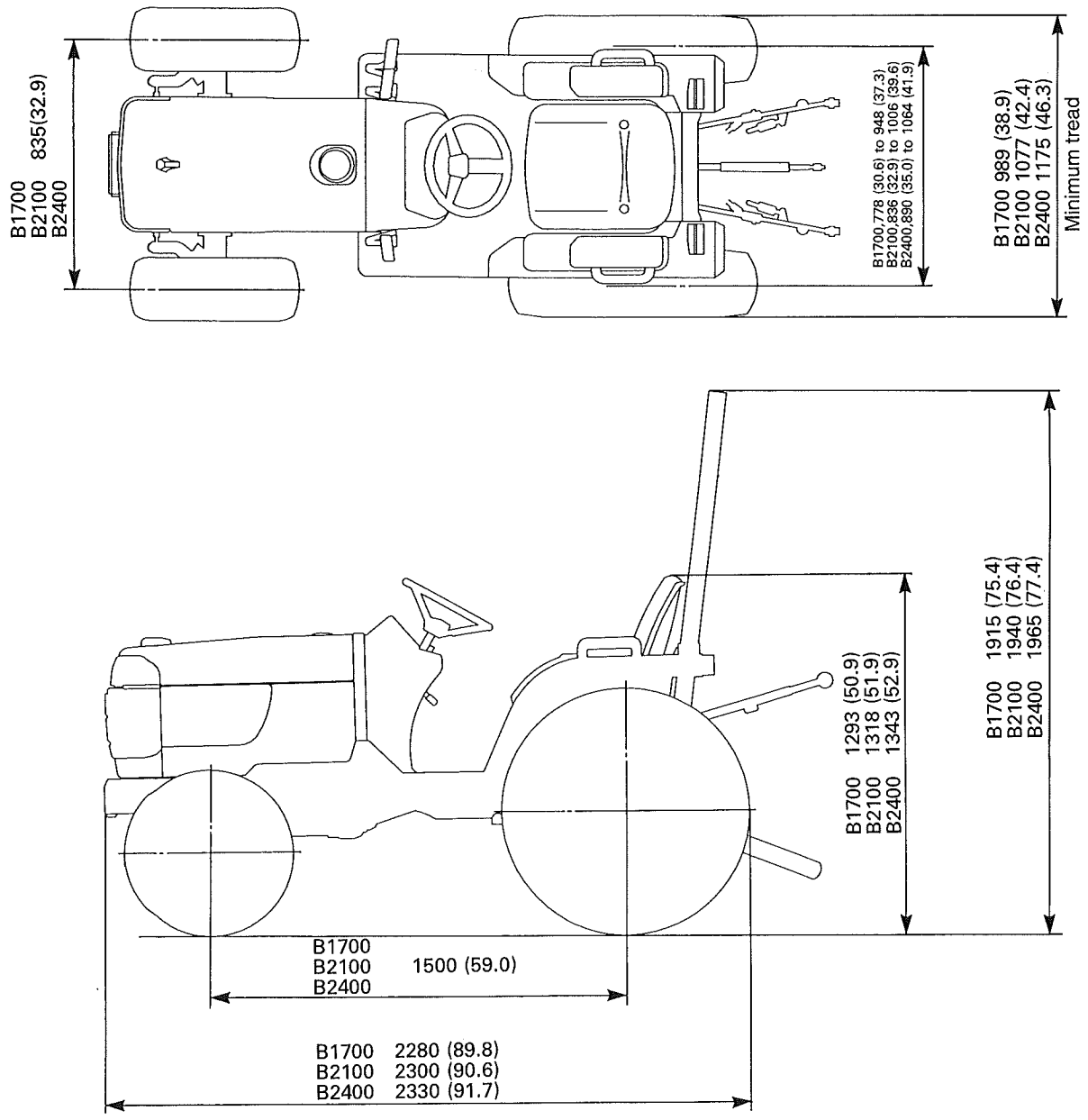

B177F003

https://truckmanualshub.com/

https://truckmanualshub.com/

https://truckmanualshub.com/

CONTENTS

[1] FEATURES G-1
[2] TRACTOR IDENTIFICATION G-2
[3] GENERAL PRECAUTIONS G-3
[4] HANDLING PRECAUTIONS FOR ELECTRICAL PARTS AND WIRING G-4
[5] LUBRICANTS, FUEL AND COOLING WATER G-8
[6] TIGHTENING TORQUES (GENERAL USE SCREWS, BOLTS AND NUTS) G-8
[7] MAINTENANCE CHECK LIST G-10
[8] CHECK AND MAINTENANCE G-11
(1) Daily Check G-11
(2) Check Points of Initial 50 Hours G-12
(3) Check Points of Every 50 Hours G-14
(4) Check Points of Every 100 Hours G-18
(5) Check Point of Every 200 Hours G-20
(6) Check Point of Every 300 Hours G-22
(7) Check Point of Every 400 Hours G-22
(8) Check Point of Every 800 Hours G-22
(9) Check Point of Every 1 Year G-23
(10) Check Point of Every 2 Years G-23
(11) Others G-25
[9] SPECIAL TOOLS G-26
(1) Special Tools for Engine G-26
(2) Special Tools for Tractor G-30
[10] TIRES G-33
(1) Type of Tire G-33
(2) Tread Adjustment G-34
(2)-1 Front Wheel G-34
(2)-2 Rear Wheels G-34
(3) Wheel Hub G-36
(4) Tire Pressure G-36
(5) Tire Liquid Injection G-37
[11] SPECIFICATIONS OF IMPLEMENT LIMITATIONS G-40

https://truckmanualshub.com/

https://truckmanualshub.com/

[1] FEATURES

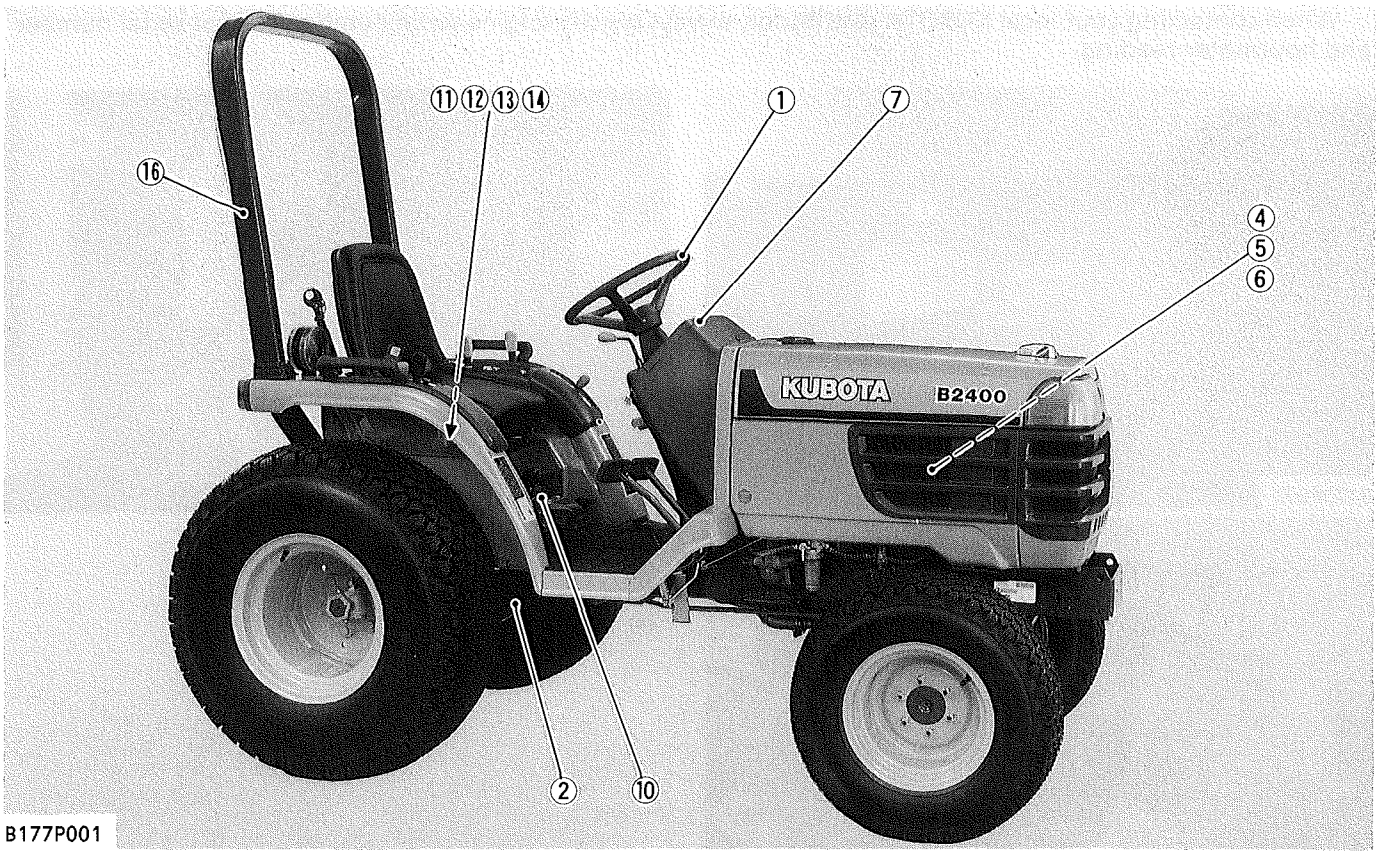

B177P001

(1) Integral Power Steering

(2) Standard Mid PTO

(3) Simultaneous Mounting of Both the Mid Mount Mower and Front Loader

(Loader is fully-compatible with the mower)

(4) E-TVCS Diesel Engine

(5) Engine Key Shut-Off System

(Engine key switch)

(6) Large Hydraulic Pump

(7) Combination Panel of Easy Checker

(Indicators for charging system, engine oil pressure, glow plug indicator and hazard light indicator. And fuel gauge and coolant temperature gauge)

(8) Main Shift Lever Located in the Right Side of Transmission

(9) New Design

(10) Variation of Transmission

(Manual Transmission and Hydrostatic Transmission)

(11) Wet Disc Brake

(12) Position Control Valve

(13) Hydraulic Block Type Outlet

(Outlet has the delivery pipe for 3 point hitch)

(14) Hydraulic Block Type Outlet

(Outlet has the right hand side of hydraulic cylinder)

(15) Auxiliary Control Valve (Option)

(16) ROPS

https://truckmanualshub.com/

[2] TRACTOR IDENTIFICATION

When contacting your local KUBOTA distributor, always specify engine serial number, tractor serial number and hourmeter reading.

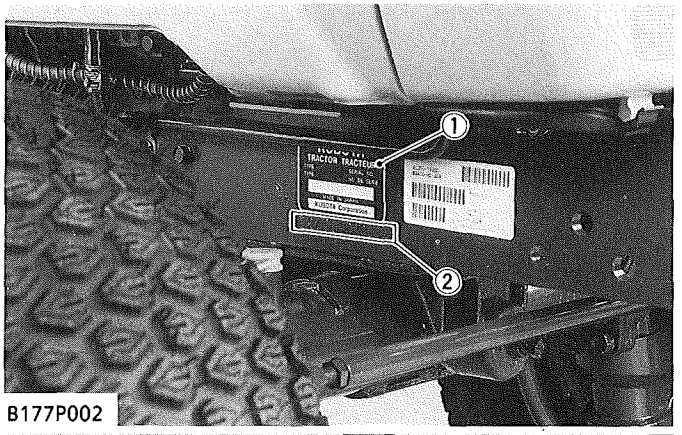

B177P002

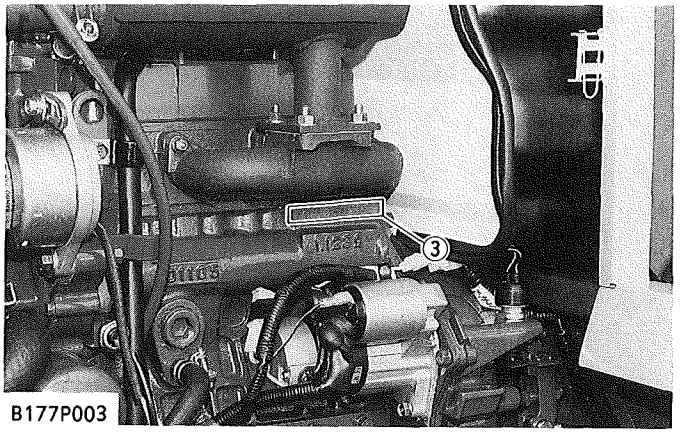

B177P003

B177P004

(1) Identification Plate
(2) Tractor Serial Number
(3) Engine Serial Number
(4) Hour Meter

https://truckmanualshub.com/

[3] GENERAL PRECAUTIONS

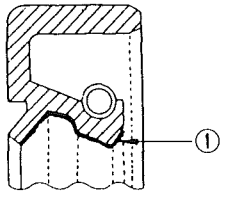

SG00F001

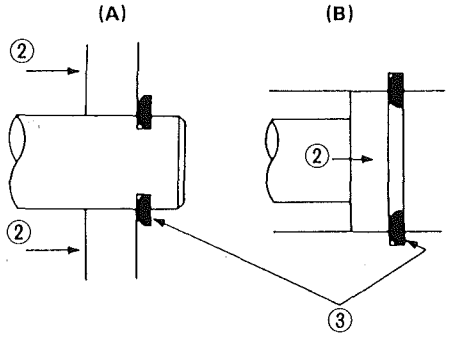

SG00F002

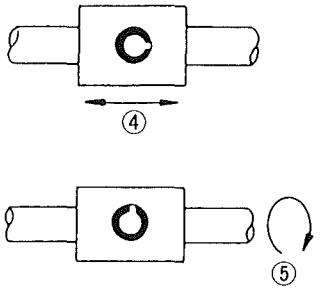

SG00F003

- During disassembly, carefully arrange removed parts in a clean area to prevent confusion later. Bolts and nuts should be installed in their original position to prevent reassembly errors.
- When special tools are required, use KUBOTA genuine special tools. Special tools which are not frequently used should be made according to the drawings provided.
- Before disassembling or servicing electrical wires, always disconnect the ground cable from the battery first.
- Remove oil and dirt from parts before measuring.
- Use only KUBOTA genuine parts for parts replacement to maintain tractor performance and to assure safety.
- Gaskets and O-rings must be replaced during reassembly. Apply grease to new O-rings or oil seals before assembling. See the figure left side.
- When reassembling external snap rings or internal snap rings, they must be positioned so that sharp edge faces against the direction from which a force is applied. See the figure left side.
- When inserting spring pins, their splits must face the direction from which a force is applied. See the figure left side.
- To prevent damage to the hydraulic system, use only specified fluid or equivalent.

(1) Grease
(2) Force
(3) Sharp Edge
(4) Axial Force
(5) Rotating Movement

[A] External Snap Ring
[B] Internal Snap Ring

https://truckmanualshub.com/

[4] HANDLING PRECAUTIONS FOR ELECTRICAL PARTS AND WIRING

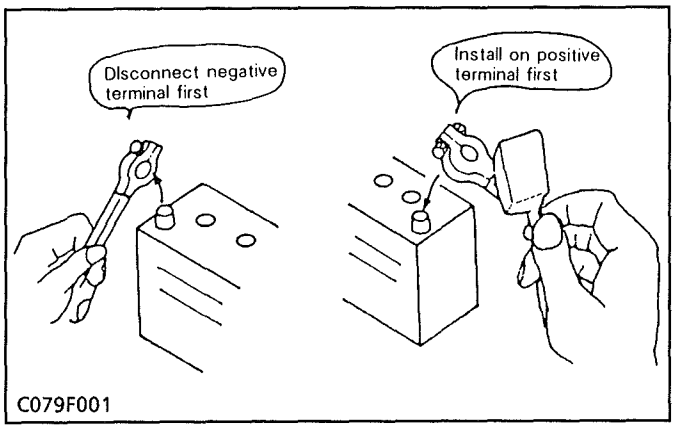

To ensure safety and prevent damage to the machine and surrounding equipment, heed the following precautions in handling electrical parts and wiring.

■ IMPORTANT

- **Check electrical wiring for damage and loosened connection every year. To this end, educate the customer to do his or her own check and at the same time recommend the dealer to perform periodic check for a fee.**
- **Do not attempt to modify or remodel any electrical parts and wiring.**
- **When removing the battery cord, disconnect the negative wire first. When installing the battery cord, connect the positive wire first.**

■ Wiring

- Securely tighten wiring terminals.

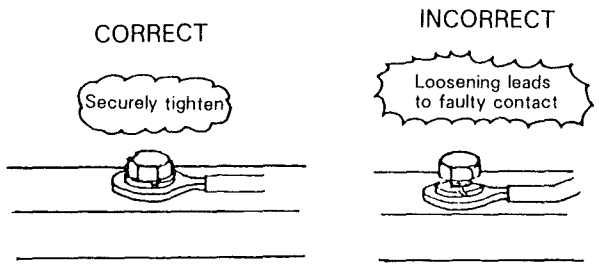

- Do not let wiring contact dangerous part.

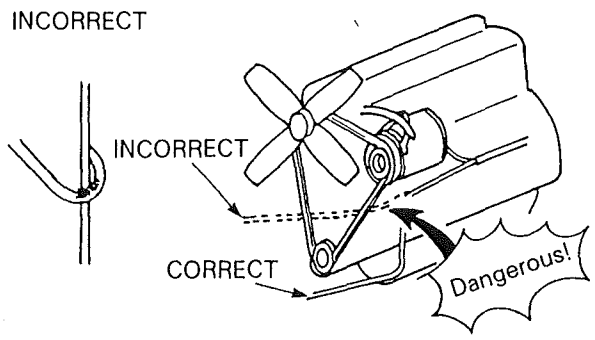

- Repair or change torn or aged wiring immediately.

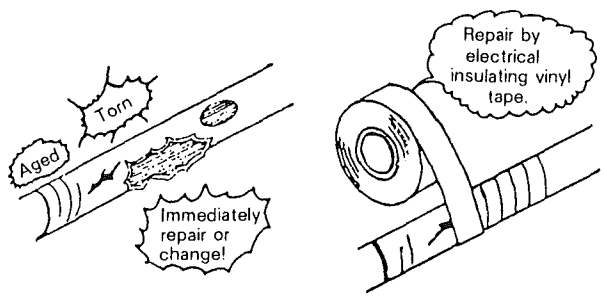

- Securely insert grommet.

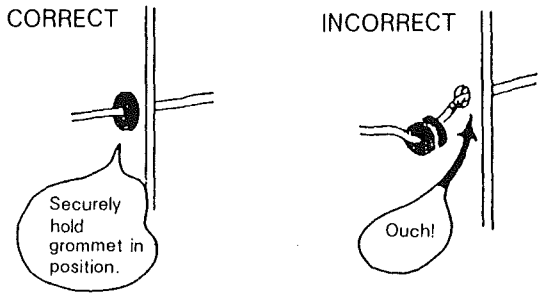

https://truckmanualshub.com/

- Securely clamp, being careful not to damage wiring.

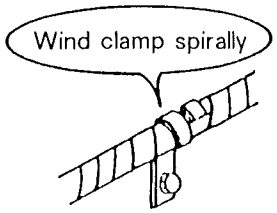

C079F007

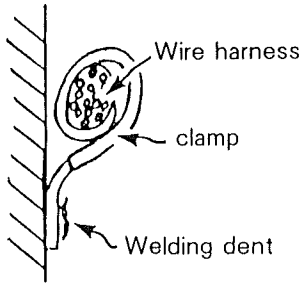

C079F008

- Clamp wiring so that there is no twist, unnecessary sag, or excessive tension, except for movable part, where sag may be required.

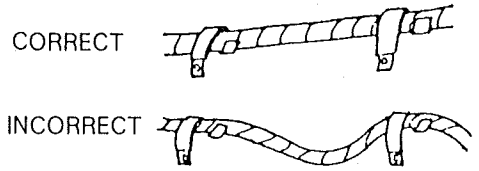

C079F009

- In installing a part, take care not to get wiring caught by it.

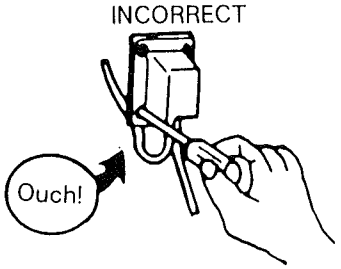

C079F010

- After installing wiring, check protection of terminals and clamped condition of wiring, only then connect battery.

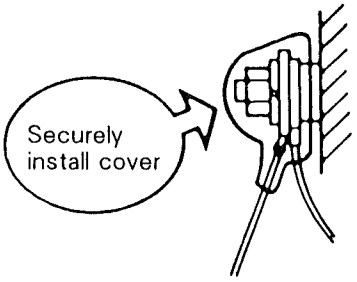

C079F011

Battery

Take care not to confuse positive and negative terminals.

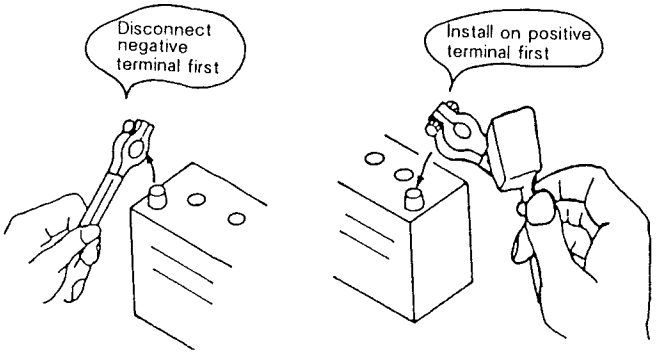

C079F001

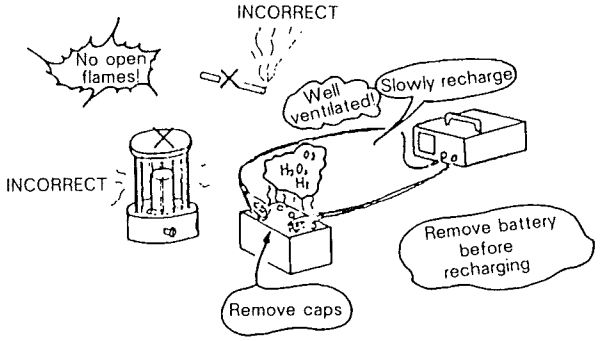

C079F013

- When removing battery cord, disconnect negative wire first. When installing battery cord, check for polarity and connect positive wire first.
- Do not install any battery with capacity other than is specified (Ah).
- After connecting cord to battery terminals, apply grease to them and securely install terminal covers on them.
- Do not allow dirt and dust to collect on battery.

⚠ CAUTION

- **Take care not to let battery liquid spill on your skin and clothes. If contaminated, wash it off with water immediately.**
- **Before recharging the battery, remove it from the machine.**
- **Before recharging, remove cell caps.**

⚠ CAUTION

- **Do recharging in a well-ventilated place where there is no open flame nearby, as hydrogen gas and oxygen are formed.**

https://truckmanualshub.com/

Fuse

- Use fuses with specified capacity.
- Never use steel or copper wire in place of fuse.

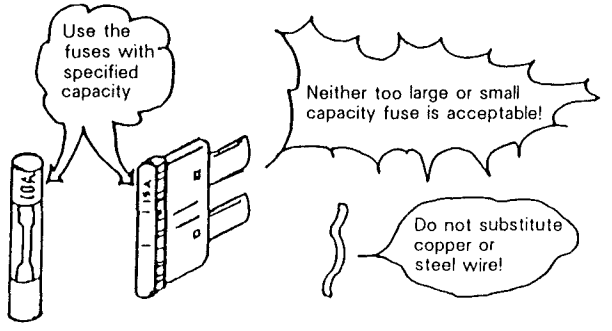

C079F014

- Do not install working light, radio set, etc. on machine which is not provided with reserve power supply.
- Do not install accessories if fuse capacity of reserve power supply is exceeded.

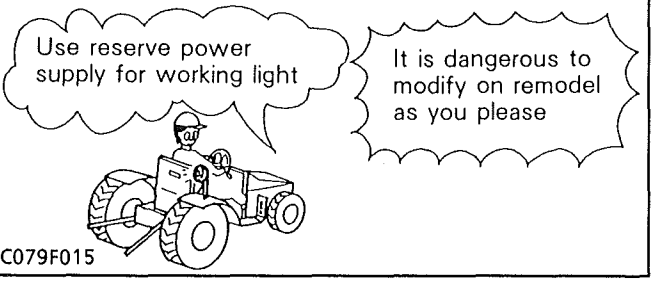

C079F015

Connector

- For connector with lock, push lock to separate.

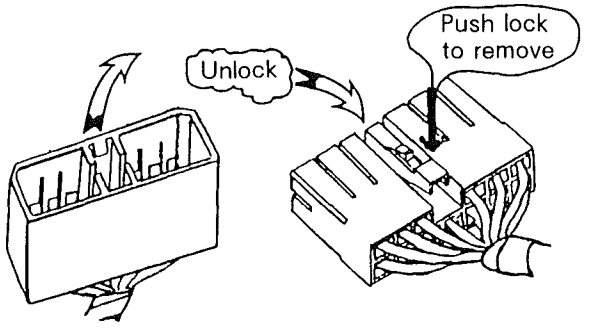

C079F016

- In separating connectors, do not pull wire harnesses.

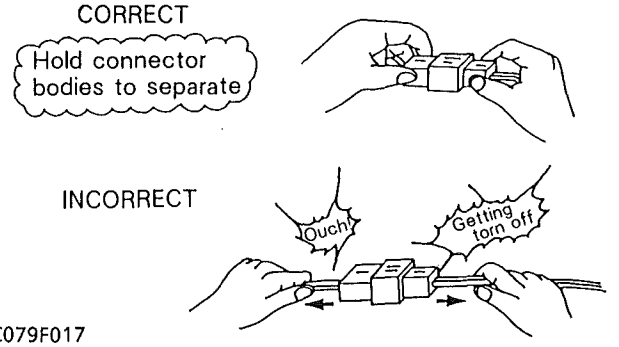

C079F017

- Use sandpaper to remove rust from terminals.
- Repair deformed terminal. Make certain there is no terminal being exposed or displaced.

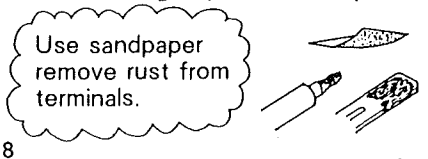

C079F018

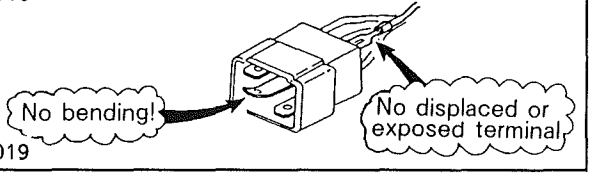

C079F019

- Make certain that there is no female connector being too open.

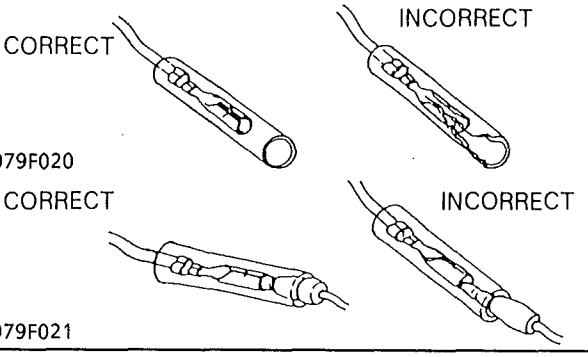

C079F020

C079F021

- Make certain plastic cover is large enough to cover whole connector.

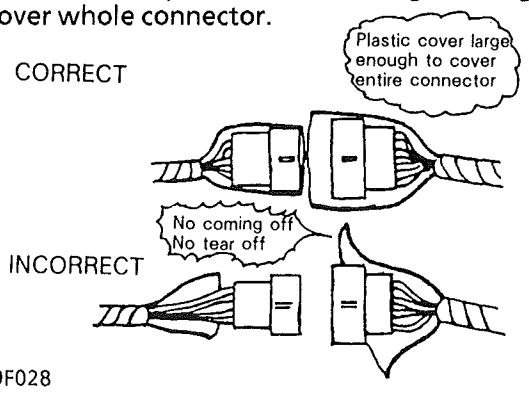

C079F028

https://truckmanualshub.com/

Handling of Circuit Testers

- Use tester correctly following manual provided with tester.
- Check for polarity and range.

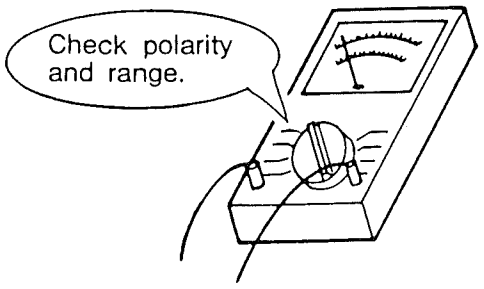

C079F026

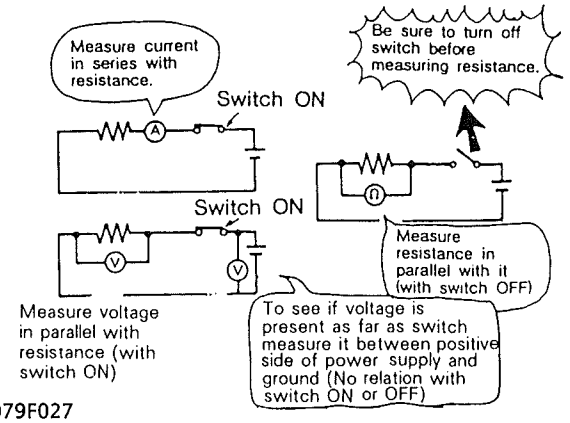

C079F027

Handling of Parts

- Do not throw or drop electrical parts and wire harnesses.

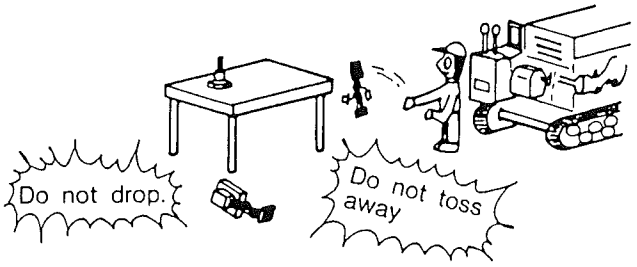

C079F023

- Do not pour water on electrical parts such as main switch and alternator.

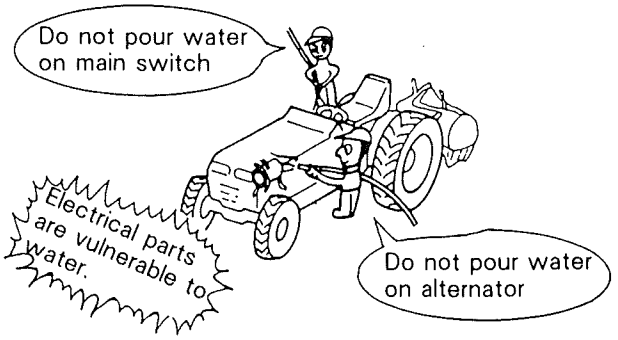

C079F025

Oil, Dust and Dirt

- If flammable material such as fuel, or lubricant spills, wipe it off with dry piece of cloth. Do not approach it with an open flame.
- Replace fuel pipe that is aged.
- Remove dirt and dust accumulated on heated part, wire harness, battery, etc.

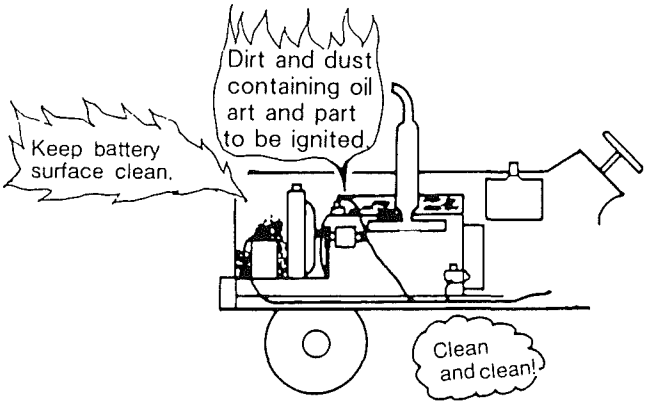

C079F024

https://truckmanualshub.com/

[5] LUBRICANTS, FUEL AND COOLING WATER

Place	Capacity			Lubricants, fuel and cooling water
	B1700	B2100	B2400	
Fuel tank	25 ℓ 6.6 U.S.gals. 5.5 Imp. gals.			No.2-D diesel fuel No.1-D diesel fuel if temperature is below – 10 °C (14 °F)
Cooling system	3.4 ℓ 3.6 U.S.qts. 3.0 Imp.qts.			Fresh clean water with anti-freeze
Engine crankcase	3.0 ℓ 3.2 U.S.qts. 2.6 Imp.qts.			Engine oil : API Service CC or CD Below 0 °C (32 °F) ····· SAE10W, 10W-30 or 10W-40 0 to 25 °C (32 to 77 °F) ····· SAE20, 10W-30 or 10W-40 Above 25 °C (77 °F) ····· SAE30, 10W-30 or 10W-40
Transmission case	11 ℓ 2.9 U.S.gals 2.4 Imp.gals	12 ℓ for HST 3.17 U.S.gals 2.6 Imp.gals		KUBOTA SUPER UDT fluid *
Front axle case [4WD]	3.7 ℓ 3.9 U.S.qts. 3.3 Imp.qts.			KUBOTA SUPER UDT fluid * or SAE 80, 90 gear oil
Greasing				
HST pedal	Until grease overflows			1 point — SAE multi-purpose type grease

* : KUBOTA original transmission hydraulic fluid

[6]-(1) TIGHTENING TORQUES (GENERAL USE SCREWS, BOLTS AND NUTS)

Screws, bolts and nuts whose tightening torques are not specified in this Workshop Manual should be tightened according to the table below.

Indication on top of bolt	4 No-grade or 4T						7 7T						9 9T		
Material of bolt	SS400, S20C						S43C, S48C						SCr435, SCM435		
Material of opponent part	Ordinariness			Aluminum			Ordinariness			Aluminum			Ordinariness		
Diameter \ Unit	N·m	kgf·m	ft-lbs	N·m	kgf·m	ft-lbs	N·m	kgf·m	ft-lbs	N·m	kgf·m	ft-lbs	N·m	kgf·m	ft-lbs
M 6 (6 mm, 0.24 in.)	7.84 to 9.31	0.80 to 0.95	5.79 to 6.87	7.84 to 8.83	0.80 to 0.90	5.79 to 6.51	9.80 to 11.2	1.00 to 1.15	7.24 to 8.32	7.84 to 8.83	0.80 to 0.90	5.79 to 6.51	12.3 to 14.2	1.25 to 1.45	9.05 to 10.5
M 8 (8 mm, 0.31 in.)	17.7 to 20.5	1.8 to 2.1	13.0 to 15.2	16.7 to 19.6	1.7 to 2.0	12.3 to 14.5	23.6 to 27.4	2.4 to 2.8	17.4 to 20.2	17.7 to 20.6	1.8 to 2.1	13.0 to 15.2	29.4 to 34.3	3.0 to 3.5	21.7 to 25.3

https://truckmanualshub.com/

[6]-(1) TIGHTENING TORQUES (GENERAL USE SCREWS, BOLTS AND NUTS)

Indication on top of bolt	4 No-grade or 4T						7 7T						9 9T		
Material of bolt	SS400, S20C						S43C, S48C						SCr435, SCM435		
Material of opponent part	Ordinariness			Aluminum			Ordinariness			Aluminum			Ordinariness		
Diameter \ Unit	N·m	kgf·m	ft-lbs	N·m	kgf·m	ft-lbs	N·m	kgf·m	ft-lbs	N·m	kgf·m	ft-lbs	N·m	kgf·m	ft-lbs
M10 (10 mm, 0.39 in.)	39.2 to 45.0	4.0 to 4.6	29.0 to 33.2	31.4 to 34.3	3.2 to 3.5	23.1 to 25.3	48.1 to 55.8	4.9 to 5.7	35.5 to 41.2	39.2 to 44.1	4.0 to 4.5	28.9 to 32.5	60.8 to 70.5	6.2 to 7.2	44.9 to 52.1
M12 (12 mm, 0.47 in.)	62.8 to 72.5	6.4 to 7.4	46.3 to 53.5				77.5 to 90.1	7.9 to 9.2	57.2 to 66.5	62.8 to 72.5	6.4 to 7.4	46.3 to 53.5	103 to 117	10.5 to 12.0	76.0 to 86.8
M14 (14 mm, 0.55 in.)	108 to 125	11.0 to 12.8	79.6 to 92.5				124 to 147	12.6 to 15.0	91.2 to 108				167 to 196	17.0 to 20.0	123 to 144
M16 (16mm, 0.63 in.)	167 to 191	17.0 to 19.5	123 to 141				196 to 225	20.0 to 23.0	145 to 166				260 to 303	26.5 to 31.0	192 to 224
M18 (18 mm, 0.71 in.)	245 to 284	25.0 to 29.0	181 to 210				275 to 318	28.0 to 32.5	203 to 235				343 to 401	35.0 to 41.0	254 to 297
M20 (20mm, 0.79 in.)	334 to 392	34.0 to 40.0	246 to 289				368 to 431	37.5 to 44.0	272 to 318				490 to 568	50.0 to 58.0	362 to 420

[6]-(2) TIGHTENING TORQUES FOR STUD BOLT

Material of opponent part	Ordinariness			Aluminum		
Diameter \ Unit	N·m	kgf·m	ft-lbs	N·m	kgf·m	ft-lbs
M8 (8 mm, 0.31 in.)	11.8 to 15.7	1.2 to 1.6	8.68 to 11.6	8.83 to 11.8	0.90 to 1.2	6.51 to 8.68
M10 (10 mm, 0.39 in.)	24.5 to 31.4	2.5 to 3.2	18.1 to 23.1	19.6 to 25.5	2.0 to 2.6	14.5 to 18.8
M12 (12 mm, 0.47 in.)	29.4 to 49.0	3.0 to 5.0	21.7 to 36.2	31.4	3.2	23.1

https://truckmanualshub.com/

[7] MAINTENANCE CHECK LIST

No.	Check point	Indication on hour meter (Change or check every interval shown below)																After purchase		Reference page
		50	100	150	200	250	300	350	400	450	500	550	600	650	700	750	800	1 year	2 years	
1	Greasing	○	○	○	○	○	○	○	○	○	○	○	○	○	○	○	○			G-14
2	Engine starting system checking	○	○	○	○	○	○	○	○	○	○	○	○	○	○	○	○			G-15
3	Wheel bolt torque checking	○	○	○	○	○	○	○	○	○	○	○	○	○	○	○	○			G-16
4	Battery condition checking	○	○	○	○	○	○	○	○	○	○	○	○	○	○	○	○			G-17
5	Engine oil changing	◎	○		○		○		○		○		○		○		○			G-18
6	Air cleaner element cleaning ★		○		○		○		○		○		○		○		○			G-18
7	Air cleaner element replacement																	○		G-18
8	Fuel filter element cleaning		○		○		○		○		○		○		○		○			G-18
9	Fuel filter element replacement								○								○			G-18
10	Fan belt tension adjustment		○		○		○		○		○		○		○		○			G-19
11	Clutch pedal free travel adjustment		○		○		○		○		○		○		○		○			G-19
12	Brake pedal free travel adjustment		○		○		○		○		○		○		○		○			G-20
13	Engine oil filter cartridge replacement	◎			○				○				○				○			G-12
14	Hydraulic oil filter cartridge replacement	◎					○						○							G-14
15	Transmission fluid changing	◎					○						○							G-13
16	Transmission strainer cleaning (HST type)	◎					○						○							G-13
17	Front axle case oil changing						○						○							G-22
18	Front axle pivot adjustment								○								○			G-22
19	Radiator hose and clamp checking				○				○				○				○			G-20
20	Radiator hose and clamp replacement																		○	G-24
21	Fuel line checking				○				○				○				○			G-21
22	Fuel line replacement																		○	G-24
23	Toe-in adjustment				○				○				○				○			G-21
24	Engine valve clearance adjustment																○			1-S18
25	Engine cooling system cleaning																		○	G-23
26	Coolant changing																		○	G-24
27	Fuel system bleeding ☆																			G-25

Note : The jobs indicated by ◎ must be done by all means 50 hours after the break-in respectively.
The jobs indicated by ☆ service as required.
★ Air cleaner should be cleaned more often in dusty conditions than in normal conditions.

https://truckmanualshub.com/

[7] MAINTENANCE CHECK LIST (Continued)

No.	Check point	Indication on hour meter (Change or check every interval shown below)																After purchase		Reference page
		50	100	150	200	250	300	350	400	450	500	550	600	650	700	750	800	1 year	2 years	
28	Clutch housing water draining ☆																			
29	Fuse replacement ☆																			
30	Light bulb replacement ☆																			

Note : The jobs indicated by ◎ must be done by all means 50 hours after the break-in respectively.
The jobs indicated by ☆ service as required.
★ Air cleaner should be cleaned more often in dusty conditions than in normal conditions.

[8] CHECK AND MAINTENANCE

⚠ CAUTION

- **Be sure to check and service the tractor on a flat place with engine shut off, the parking brake on and chock the wheels.**

(1) Daily Check

To prevent trouble from occurring, it is important to know the condition of the tractor. Check the following items before starting.

Checking

- Check areas where previous trouble was experienced.
- Walk around the tractor.
  1) Check the tire pressure, and check for wear and damage.
  2) Check for oil and water leaks.
  3) Check the engine oil level.
  4) Check the transmission fluid level.
  5) Check the coolant level.
  6) Check the condition of seat belt and ROPS attaching hardware.
  7) Check and clean the radiator screen.
  8) Check the bolts and nuts of the tires are tight.
  9) Check the SMV emblem for damage and cleaner replace as necessary if equipped.
  10) Check the front axle case oil level.
  11) Clean around the exhaust manifold and the muffler of the engine.
- While sitting in the operator's seat.
  1) Check the throttle pedal, brake pedals and clutch pedal.
  2) Check the parking brake.
  3) Check the steering wheel.
- Turning the key switch.
  1) Check the performance of the easy checker lights.
  2) Check head lights, tail lights and hazard lights. Clean if necessary.
  3) Check the performance of the meters and gauges.
- Starting the engine.
  1) Check to see that the lights on the Easy Checker go off.
  2) Check the color of the exhaust.
  3) Check the brakes for proper operation.

https://truckmanualshub.com/

(2) Check Points of Initial 50 Hours

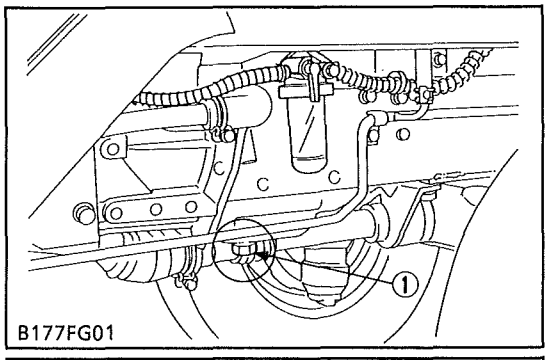

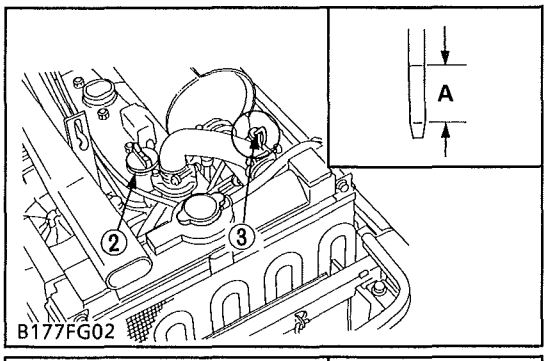

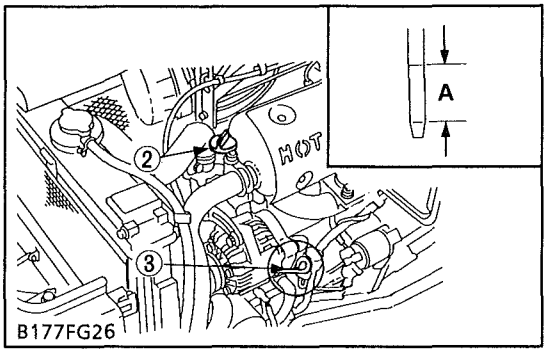

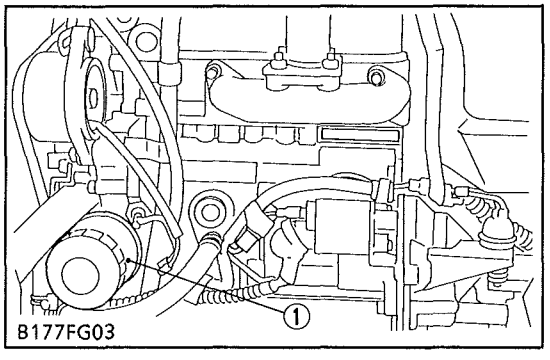

(1) Engine Oil Filter Cartridge

Changing Engine Oil

CAUTION

- **Before changing oil, be sure to stop the engine.**

1. Start and warm up the engine for approx. 5 minutes.
2. Place an oil pan underneath the engine.
3. To drain the used oil, remove the drain plug (1) at bottom of the engine and drain the oil completely.
4. Screw in the drain plug.
5. Fill new oil up to upper notch on the dipstick.

IMPORTANT

- **When using an oil of different manufacturer or viscosity from the previous one, remove all of the old oil. Never mix two different type of oil.**
- **Use the proper SAE Engine Oil according to ambient temperatures, Refer to "LUBRICANTS AND FLUID AND COOLING WATER" (See page G-8).**

Engine oil capacity	3.0 ℓ 3.2 U.S.qts 2.6 Imp.qts

[A] Oil level acceptable within this range.

(1) Drain Plug
(2) Oil Inlet Plug
(3) Dipstick

Replacing Engine Oil Filter Cartridge

CAUTION

- **Be sure to stop the engine before changing oil filter cartridge.**

1. Remove the oil filter cartridge with the filter wrench.
2. Apply a slight coat of oil onto the cartridge gasket.
3. To install the new cartridge, screw it in by hand. Over tightening may cause deformation of rubber gasket.
4. After the new cartridge has been replaced, the engine oil normally decrease a little. Thus see that the engine oil does not leak through the seal and be sure to read the oil level on the dipstick. Then, replenish the engine oil up to the specified level.

IMPORTANT

- **To prevent serious damage to the engine, replacement element must be highly efficient. Use only a KUBOTA genuine filter or its equivalents.**

https://truckmanualshub.com/

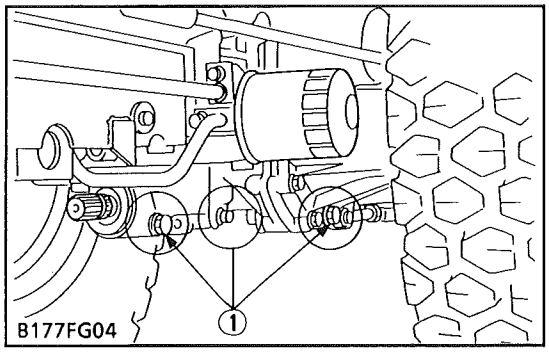

B177FG04

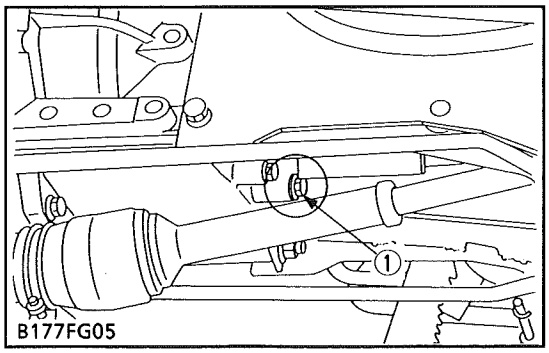

B177FG05

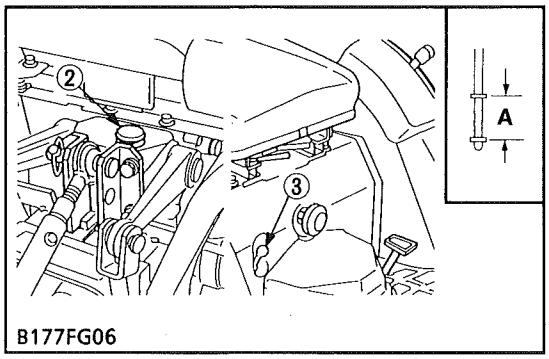

B177FG06

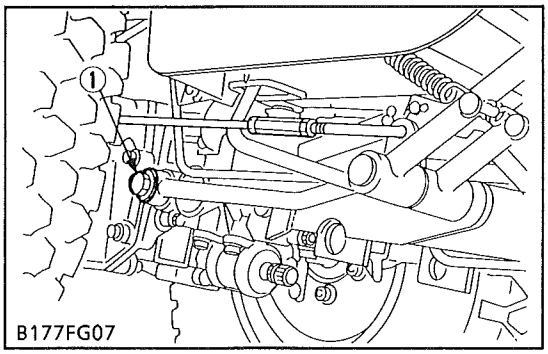

B177FG07

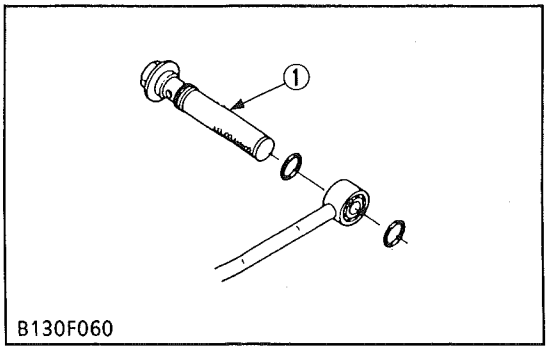

B130F060

Changing Transmission Oil

CAUTION

- **Be sure to stop the engine checking and changing the transmission oil.**

1. Place an oil pan underneath the transmission case.
2. Remove the drain plugs (1) at the bottom of the transmission case.
3. Drain the transmission oil.
4. After draining, screw in the four drain plugs.
5. Fill new oil from filling port after removing the filling plug (2) up to the upper notch on the dipstick.
6. After running the engine for a few minutes, stop it and check the oil level again, if low, add oil prescribed level.

IMPORTANT

- **Use only multi-grade transmission oil. Use of other oils may damage the transmission or hydraulic system. Refer to "LUBRICANTS AND FLUID" (See page G-8).**
- **Never work the tractor immediately after changing the transmission oil. Keeping the engine at medium speed for a few minutes to prevents damage to the transmission.**
- **Do not mix different blands oil together.**

Transmission oil capacity	HST type	12 ℓ 3.17 U.S.gals 2.6 Imp.gals
	Manual transmission type	11 ℓ 2.90 U.S.gals 2.4 Imp.gals

[A] Oil level acceptable within this range.

(1) Drain Plug
(2) Filling Plug
(3) Dipstick

Cleaning Transmission Oil Strainer (HST type)

Since the fine filings in the oil could impair the component parts of hydraulic system which is precision built to withstand high pressure, the suction line end is provided with an oil strainer. When changing the transmission fluid, disassemble and rinse the strainer with kerosene to completely clean off filings. For reassembly, be careful not to damage the parts.

(1) Strainer

https://truckmanualshub.com/

[HST type]

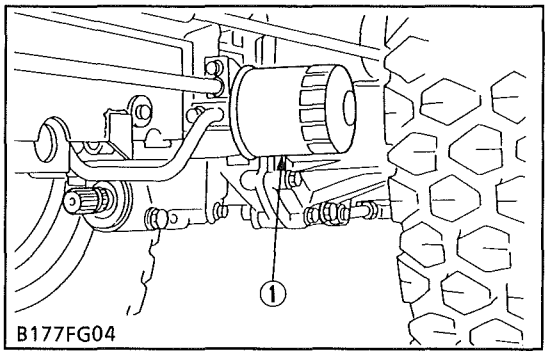

[Manual transmission type]

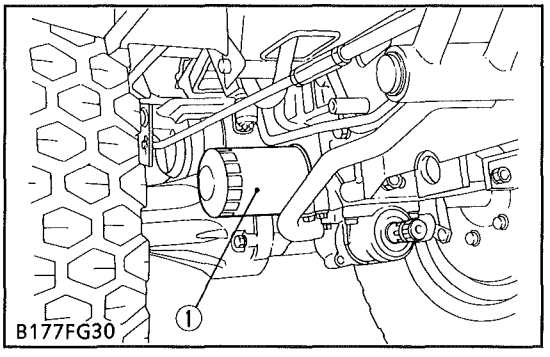

(1) Transmission Oil Filter Cartridge

Replacing Transmission Oil Filter Cartridge

CAUTION

- **Be sure to stop the engine before changing the oil filters.**

1. Remove the oil filter cartridge by using a filter wrench.
2. Apply a slight coat of oil onto the cartridge gasket.
3. To install the new cartridge, screw it in by hand. Over tightening may cause deformation of rubber gasket.
4. After the new cartridge has been replaced, the transmission fluid level will normally decrease slightly. Make sure that the transmission fluid does not leak through the seal. Check the fluid level.

IMPORTANT

- **To prevent serious damage to the hydraulic system, the replacement filter must be a highly efficient, 10 μm filter for HST type and 98 μm filter for manual transmission type. Use only a genuine KUBOTA filter or its equivalent.**
- **When using the auxiliary hydraulics, replace the transmission oil filter cartridge after initial 50 service hours.**

NOTE

- **Affected serial number for manual transmission type are as shown below.**

Model	Tractor Serial No.
B1700D	above 50340
B1700E	above 10077
B2100D	above 50324

(3) Check Points of Every 50 Hours

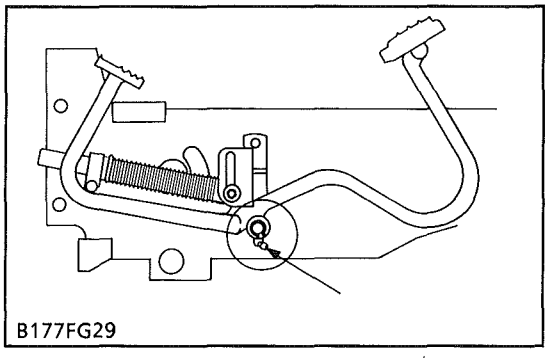

Greasing

1. Apply grease to the HST pedal until overflows.

[HST type]

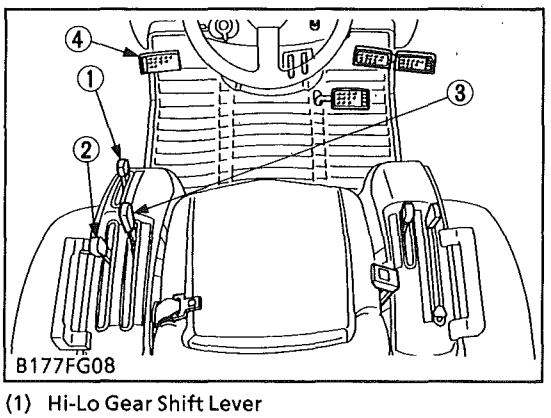

(1) Hi-Lo Gear Shift Lever
(2) Rear-PTO Gear Shift Lever
(3) Mid-PTO Gear Shift Lever
(4) Clutch Pedal

Checking Engine Start System

CAUTION

To avoid personal injury :

- **Do not allow anyone near the tractor while testing.**
- **If the tractor does not pass the test do not operate the tractor.**

Preparation before testing

1. Sit on operator's seat.
2. Set the parking brake and stop the engine.
3. [Manual transmission type]
   Shift the main gear shift lever in "NEUTRAL" position.
3. [HST type]
   Shift the Hi-Lo gear shift lever in "NEUTRAL" position.
4. Shift the rear-PTO gear shift lever and mid-PTO gear shift lever to "OFF" position.
5. Fully depress the clutch pedal.

https://truckmanualshub.com/

[Manual transmission type]

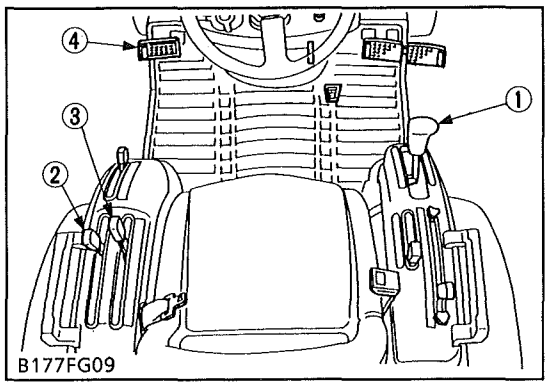

(1) Main Gear Shift Lever
(2) Rear-PTO Gear Shift Lever
(3) Mid-PTO Gear Shift Lever
(4) Clutch Pedal

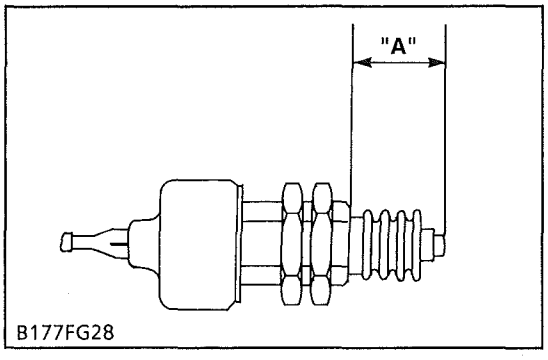

(1) Safety Switch

■ Test 1 : for safety switch on the clutch linkage

1. Release the clutch pedal.
2. Turn the key to "START" position.
3. The engine must not crank.

■ Test 2 : for safety switch on the traveling gear shift linkage

1. Fully depress the clutch pedal.
2. Shift the main gear shift lever [Manual transmission type] or Hi-Lo gear shift lever [HST type] to 'Desired" position.
3. Turn the key to "START" position.
4. The engine must not crank.

■ Test 3 : for safety switch on the rear PTO gear shift linkage

1. Shift the main gear shift lever [Manual transmission type] or Hi-Lo gear shift lever [HST type] to "NEUTRAL" position.
2. Shift the rear-PTO gear shift lever to "ON" position.
3. Turn the key to "START" position.
4. The engine must not crank.

■ Test 4 : for safety switch on the mid-PTO gear shift linkage

1. Shift the rear-PTO gear shift lever to "OFF" position.
2. Shift the Mid-PTO gear shift lever to "ON" position.
3. Turn the key to "START" position.
4. The engine must not crank.

■ After testing : If crank any test of the above, adjust or replace the required safety switch.

When adjusting the safety switches keep the each linkage at condition indicated below.

1. Clutch pedal linkage → Fully depress the clutch pedal.
2. Traveling gear shift linkage → Shift the main gear shift lever or Hi-Lo gear shift lever to "NEUTRAL" position.
3. PTO gear shift linkage → Shift the rear-PTO gear shift lever and mid-PTO gear shift lever to "OFF" position.

Safety switch distance : "A"	Factory spec.	17 to 21 mm 0.67 to 0.83 in.

https://truckmanualshub.com/

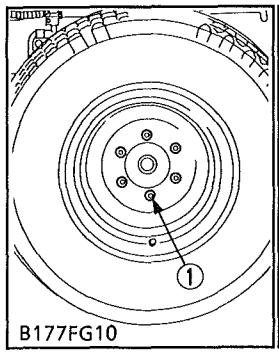

B177FG10

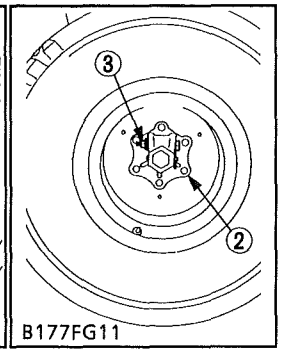

B177FG11

(1) Front Wheel Mounting Nut
(2) Rear Wheel Hub Mounting Nut
(3) Cotter Setting Bolt and Nut

Checking Wheel Mounting Screws and Nuts Tightening Torque

CAUTION

To avoid personal injury :
- **Never operate tractor with a loose rim, wheel, or axle.**
- **Any time bolts and nuts are loosened, retighten to specified torque.**
- **Check all bolts and nuts frequently and keep them tight.**

1. Check wheel bolts and nuts regularly especially when new. If there are loosened, tighten as follows.

Tightening torque	Front wheel mounting nuts	77 to 90 N·m 7.9 to 9.2 kgf·m 57 to 67 ft-lbs
	Rear wheel hub mounting nuts	108 to 125 N·m 11.0 to 12.8 kgf·m 80 to 93 ft-lbs
	Cotter setting bolt and nut	123 to 147 N·m 12.6 to 15.0 kgf·m 91 to 108 ft-lbs

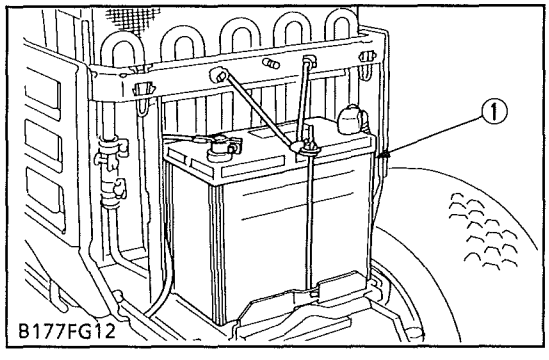

B177FG12

(1) Battery

Checking Battery Condition

CAUTION

To avoid personal injury :
- **Never remove the vent plugs while the engine is running.**
- **Keep electrolyte away from eyes, hands ana clothes, If you are spattered with it, wash it away completely with water immediately and get medical attention.**
- **Wear eye protection and rubber gloves when working around battery.**

1. Mishandling the battery shortens the service life and adds to maintenance costs.
2. The original battery is maintenance free type battery, but need some servicing.
   If the battery is weak, the engine is difficult to start and the lights become dim. It is important check the battery periodically.

https://truckmanualshub.com/

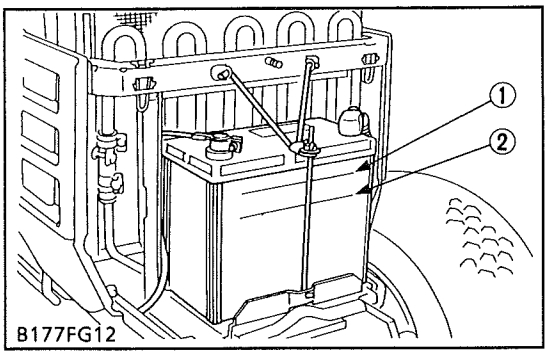

(1) Highest Level
(2) Lowest Level

Table 1 [with AC dynamo]

Tractor model	Battery type	Volts (V)	Capacity at 5H.R (A.H)
B1700 B2100 B2400	50B24L(S)-MF	12	36

Tractor model	Reserve Capacity (min)	Cold Cranking Amps	Normal Charging Rate (A)
B1700 B2100 B2400	71	390	4.5

Table 2 [with alternator]

Tractor model	Battery type	Volts (V)	Capacity at 5H.R (A.H)
B2100 B2400	55B24L(S)-MF	12	36

Tractor model	Reserve Capacity (min)	Cold Cranking Amps	Normal Charging Rate (A)
B2100 B2400	79	433	4.5

Battery Charging

⚠ CAUTION

To avoid personal injury :

- **When the battery is being activated, hydrogen and oxygen gases in the battery are extremely explosive. Keep open sparks and flames away from the battery at all times, especially when charging the battery.**
- **When charging battery, remove battery vent plugs.**
- **When disconnecting the cable from the battery, start with the negative terminal first.**
  When connecting the cable to the battery, start with the positive terminal first.
- **Never check battery charge by placing a metal object across the posts.**
  Use a voltmeter or hydrometer.

1. Make sure each electrolyte level is to the bottom of vent wells, if necessary add distilled water in a well-ventilated area.
2. The water in the electrolyte evaporates during recharging. Liquid shortage damages the battery. Excessive liquid spills over and damages the tractor body.
3. To slow charge the battery, connect the battery positive terminal to the charger positive terminal and the negative to the negative, then recharge in the standard fashion.
4. A boost charge is only for emergencies. It will partially charges the battery at a high rate and in a short time.
   When using a boost-charged battery, it is necessary to recharge the battery as early as possible.
   Failure to do this will shorten the battery's service life.
5. When the specific gravity of electrolyte become between 1.27 and 1.29 charge has completed.
6. When exchanging an old battery into new one, use battery of equal specification shown in **table 1** or **table 2**.

■ Direction for Storage

1. When storing the tractor for long periods of time, remove the battery from tractor, adjust the electrolyte to the proper level and store in a dry place out of direct sunlight.
2. The battery self-discharges while it is stored.
   Recharge it once every three months in hot seasons and once every six months in cold seasons.

https://truckmanualshub.com/

(4) Check Points of Every 100 Hours

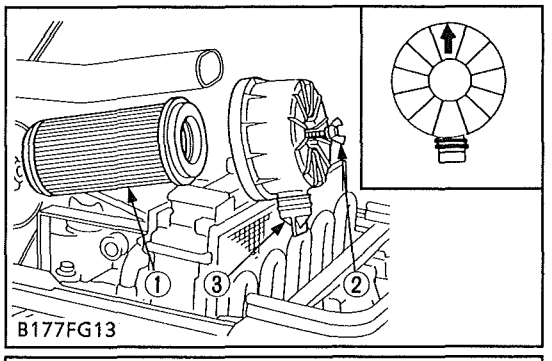

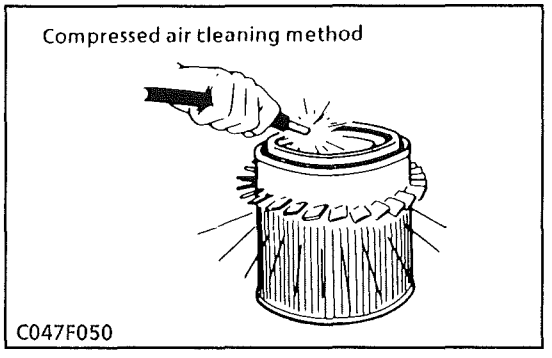

(1) Element
(2) Wing Bolt
(3) Evacuator Valve

Changing Engine Oil

Refer to page G-12.

Cleaning Air Cleaner Element

1. Remove the element.
2. Clean the element :
   1) When dry dust adheres to the element, blow compressed air from the inside turning the element. Pressure of compressed air must be under 686 kPa (7 kgf/cm^2, 99 psi).
   2) When carbon or oil adheres to the element, soak the element in detergent for 15 minutes then wash it several times in water, rinse with clean water and dry it naturally. After element is fully dried, inspect inside of the element with a light and check if it is damaged or not. (referring to the instructions on the label attached to the element.)
3. Replace air cleaner element if :
   Once yearly or after every sixth cleaning, whichever comes first.

■ IMPORTANT

- **The air cleaner uses a dry element, never apply oil.**
- **Do not run the engine with filter element removed.**
- **Make sure the wing nut or bolt with rubber dust seal for the element is tight enough.**
  If it is loose, dust and dirt may be sucked in, wearing down the cylinder and piston rings earlier and thereby resulting in poor power output.
- **Be sure to refit the dust cup with the arrow ↑ (on the rear) upright. If the dust cup is improperly fitted, dust passes by the baffle and directly adheres to the element.**

■ Evacuator Valve

Open the evacuator valve once a week under ordinary condition - or daily when used in a dusty place - to get rid of large particles of dust and dirt.

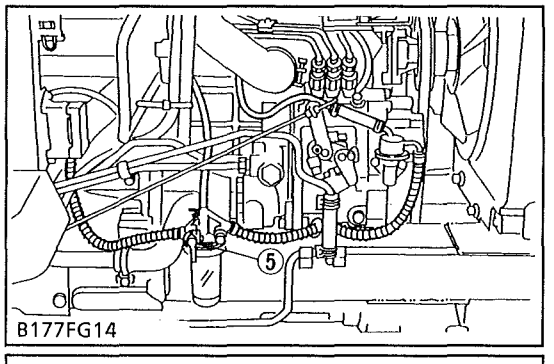

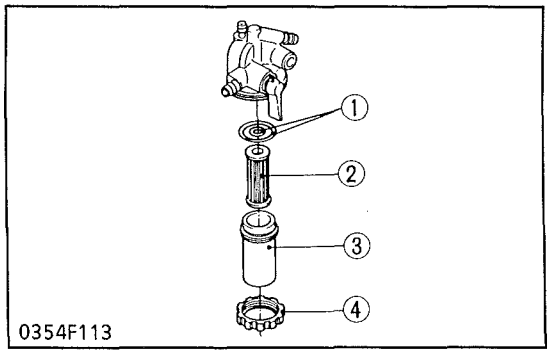

Cleaning Fuel Filter

When operation period reaches approx. 100 hours, clean the fuel filter.

This job should not be done in the field, but in a clean place so as to prevent dust from entering fuel system.

1. Close the fuel filter cock.
2. Unscrew and remove the screw ring, and remove the filter bowl (3), and rinse the inside with kerosene.
3. Take out the element (2) and dip it in the kerosene to rinse.
4. After cleaning reassembling the fuel filter, keeping out dust and dirt.
5. Bleed the fuel system. (Refer to G-25)

■ IMPORTANT

- **If dust and dirt enter the fuel, the fuel pump and injection nozzle are subject to wear. To prevent this, be sure to clean the fuel filter bowl periodically.**

(1) O-ring
(2) Element
(3) Filter Bowl
(4) Screw Ring
(5) Fuel Filter Cock

https://truckmanualshub.com/

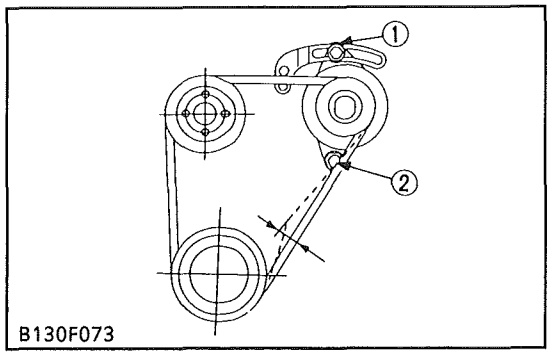

(1) Adjusting Screw (2) Tension Bolt

Checking Fan Belt Tension

CAUTION

To avoid personal injury :

- **Be sure to stop engine before checking belt tension.**

1. Stop the engine and remove the key.
2. Apply moderate thumb pressure to belt between pulleys.
3. If tension is incorrect, loosen the dynamo mounting bolts (or alternator mounting bolts) and, using a lever placed between the dynamo (or alternator) and the engine block, pull the dynamo (or alternator) out until the deflection of the belt falls within acceptable limits.
4. Replace fan belt if it is damaged.

Fan belt tension	Factory spec.	A deflection of between 7 to 9 mm (0.28 to 0,34 in.) when the belt is pressed in the middle of the span.

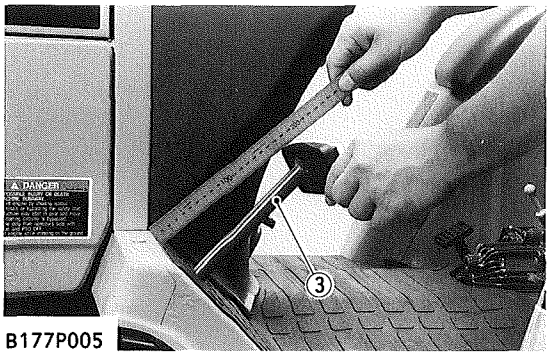

B177P005

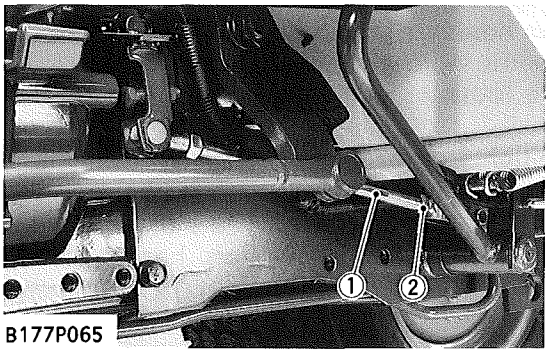

B177P065

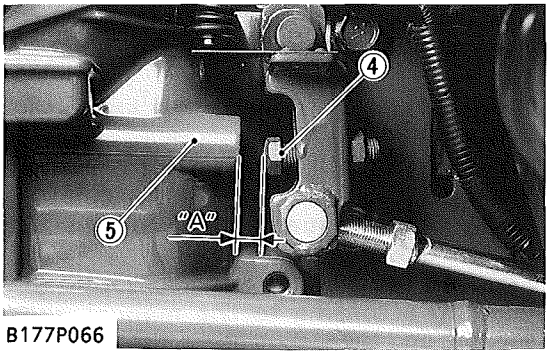

B177P066

Checking Clutch Pedal Free Travel

CAUTION

- **When checking, park the tractor on flat ground, apply the parking brake, stop the engine and remove the key.**

1. Slightly depress the clutch pedal (3) and measure free travel at top of pedal stroke.
2. If the measurement is not within the factory specifications, loosen the lock nut (2) and adjust the clutch rod (1) length.
3. After adjusting it, be sure to keep the following distance for clutch pedal stopper bolt (4).
4. After adjusting them, try to start engine. If no start, check the safety switch setting position.

Clutch pedal free travel	Factory spec.	20 to 30 mm 0.8 to 1.2 in.
Stopper bolt distance : "A"	Factory spec.	8.5 mm 0.3 in.

(1) Clutch Rod
(2) Lock Nut
(3) Clutch Pedal
(4) Clutch Pedal Stopper Bolt
(5) Clutch Housing

https://truckmanualshub.com/

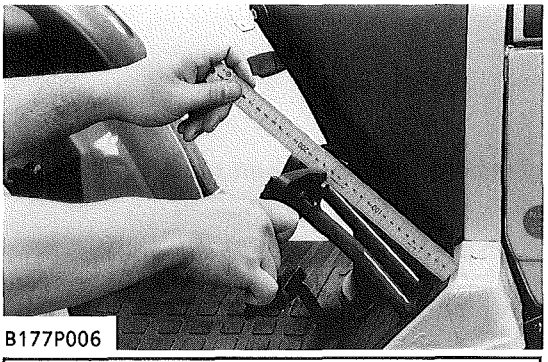
B177P006

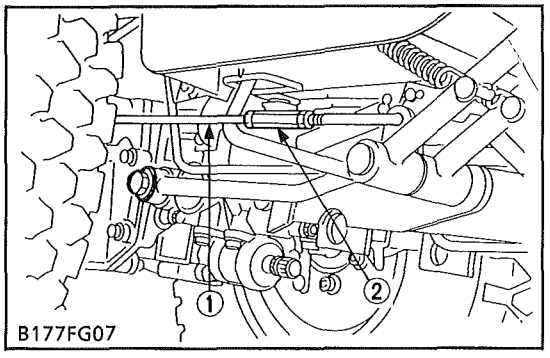

B177FG07

(1) Brake Rod (2) Turn Buckle

(5) Check Point of Every 200 Hours

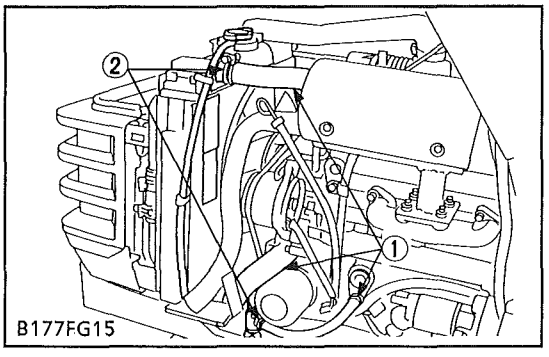

B177FG15

(1) Radiator Hose (2) Clamp Band

Checking Brake Pedal Free Travel

CAUTION

To avoid personal injury :

- **Stop the engine and chock the wheels before checking brake pedal.**

1. Release the parking brake.
2. Slightly depress the brake pedals and measure free travel at top of pedal stroke.
3. If the measurement is not within the factory specifications, loosen the lock nut and turn the turn buckle to adjust the brake rod length.
4. Retighten the lock nut securely.
   Keep the free travel in the right and left brake pedals equal.

Brake pedal free travel	Factory spec.	20 to 30 mm 0.8 to 1.2 in.

Replacing Engine Oil Filter Cartridge

See page G-12.

Checking Radiator Hose and Hose Clamp

Check to see if radiator hoses are properly fixed every 200 hours of operation or six months, whichever comes first.

1. If hose clamps are loose or water leaks, tighten bands securely.
2. Replace hoses and tighten hose clamps securely, if radiator hoses are swollen, hardened or cracked.
   Replace hoses and hose clamps every 2 years or earlier if checked and found that hoses are swollen, hardened or cracked.

■ Precaution at Overheating

Take the following actions in the event the coolant temperature be nearly or more than the boiling point, what is called "Overheating".

1. Stop the machine operation in a safe place and keep the engine unloaded idling.
2. Don't stop the engine suddenly, but stop it after about 5 minutes of unloaded idling.
3. Keep yourself well away from the machine for further 10 minutes or while the steam blown out.
4. Checking that there gets no danger such as burn, get rid of the causes of overheating according to the manual, see "Troubleshooting" section, and then, start again the engine.

https://truckmanualshub.com/

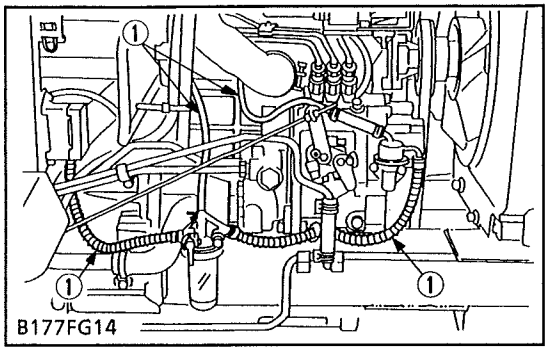

(1) Fuel Hose

Checking Fuel Line

CAUTION

- **Stop the engine when attempting the check and change prescribed below.**
- **Remember to check the fuel line periodically. The fuel line is subject to wear and aging, fuel may leak out onto the running engine, causing a fire.**

1. Check to see that all line and hose clamps are tight and not damaged.
2. If hoses and clamps are found worn or damaged, replace or repair them at once.
3. The fuel line is made of rubber and ages regardless of period of service. Replace the fuel pipe together with the clamp every two years and securely tighten.
4. However if the fuel pipe and clamp are found damaged or deteriorated earlier than two years, then change or remedy.
5. After the fuel line and clamp have been changed, bleed the fuel system.

IMPORTANT

- **When the fuel line is disconnected for change, close both ends of the fuel line with a piece of clean cloth or paper to prevent dust and dirt from entering. Entrance of dust and dirt causes malfunction of the fuel injection pump. In addition, particular care must be taken not to admit dust and dirt into the fuel pump.**

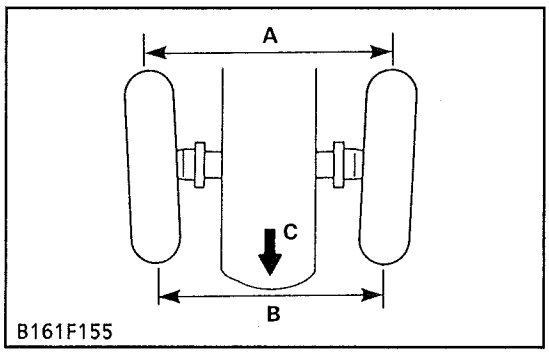

(A) Wheel to wheel distance at rear
(B) Wheel to wheel distance at front
(C) Front

Adjusting Toe-in

1. Park the tractor on the flat place.
2. Inflate the tires to the specified pressure.
3. Turn steering wheel so front wheels are in the straight ahead position.
4. Lower the implement, lock the park brake and stop the engine.
5. Measure distance between tire beads at front of tire, hub height.
6. Measure distance between tire beads at rear of tire, hub height.
7. Front distance should be 1 to 10 mm less than rear distance.
8. If the measurement is not within the factory specifications, adjust by changing the tie rod length.

Toe-in (A-B)	Factory spec.	1 to 10 mm 0.04 to 0.4 in.

Adjusting

1. Loosen the lock nuts and turn the tie rod to adjust the rod length until the proper toe-in measurement is obtained.
2. Retighten the lock nuts.

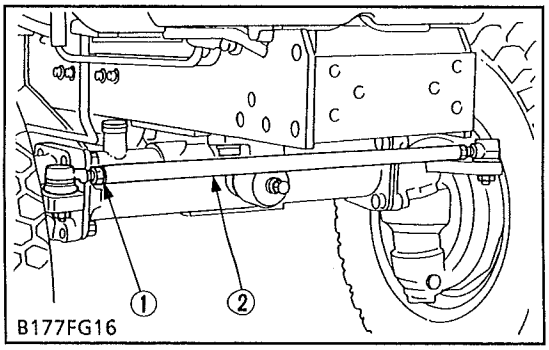

(1) Lock Nut (2) Tie Rod

https://truckmanualshub.com/

(6) Check Point of Every 300 Hours

Changing Transmission Fluid

See page G-11.

Cleaning Transmission Strainer

See page G-12.

Replacing Transmission Oil Filter Cartridge only for HST

See page G-12.

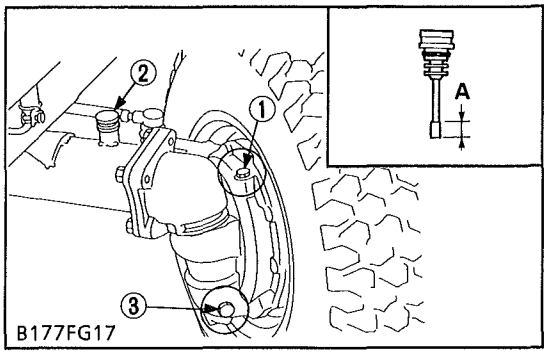

(1) Breather Plug
(2) Filling Plug with Dipstick
(3) Drain Plug
(A) Oil level is acceptable within this range.

Changing Front Axle Case Oil

1. Place the oil pans underneath the front axle case.
2. Remove the both right and left hand side drain plugs (3) and filling plug (2) to drain the oil.
3. Remove the right and left breather plugs.
4. After draining, reinstall the drain plugs (3).
5. Fill with new oil up to the upper notch on the dipstick.
6. After filling, reinstall the filling plug and breather plugs.

■ IMPORTANT

- **After ten minutes, check the oil level again, add oil to prescribed level.**
- **Use KUBOTA SUPER UDT fluid or SAE 80, 90 gear oil. Refer to "LUBRICANTS, FUEL AND COOLING WATER". (See page G-8.)**

Front axle case oil capacity	3.7 ℓ 3.9 U.S. qts 3.3 Imp. qts

(7) Check Point of Every 400 Hours

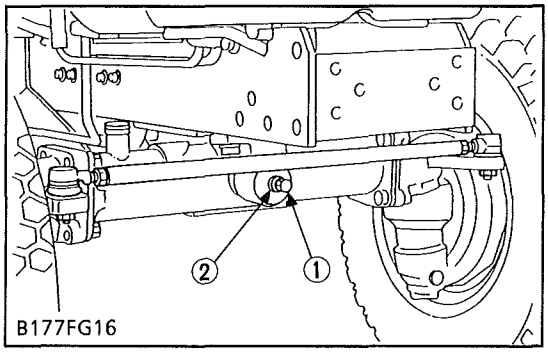

Adjusting Front Axle Pivot

1. Loosen the lock nut (2), tighten the adjusting screw (1) all the way, and then loosen the adjusting screw (1) by 1/6 turn.
2. Retighten the lock nut (2).

(1) Adjusting Screw (2) Lock Nut

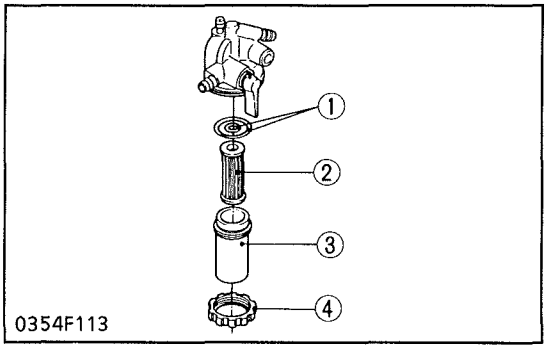

Replacing Fuel Filter Element

1. The fuel filter element should be replaced every 400 hours. See page G-18.

(1) O-ring (3) Filter Bowl
(2) Element (4) Screw Ring

(8) Check Point of Every 800 Hours

Checking Valve Clearance

See page 1-S18.

https://truckmanualshub.com/

(9) Check Point of Every 1 Year

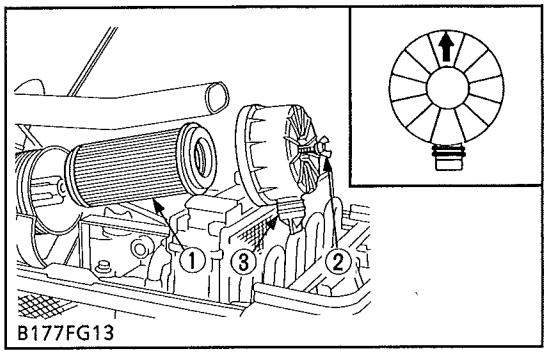

(1) Element
(2) Wing Bolt
(3) Evacuator Valve

Replacing Air Cleaner Element

1. Replace the air cleaner element (1).

■ NOTE

- **Every year or every 6 times of cleaning, replace the air cleaner element (1).**

■ IMPORTANT

- **The air cleaner uses a dry element, never apply oil.**
- **Do not run the engine with filter element removed.**
- **Make sure the wing nut or bolt with rubber dust seal for the element is tight enough.**
  If it is loose, dust and dirt may be sucked in, wearing down the cylinder and piston rings earlier and thereby resulting in poor power output.
- **Be sure to refit the dust cup with the arrow ↑ (on the rear) upright. If the dust cup is improperly fitted, dust passes by the baffle and directly adheres to the element.**

(10) Check Point of Every 2 Years

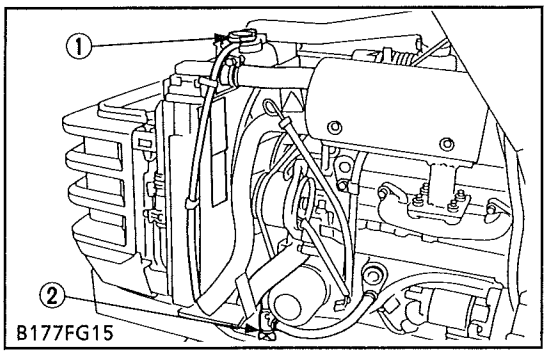

(1) Radiator Cap
(2) Drain Cock

Flush Cooling System and Changing Coolant

⚠ CAUTION

To avoid personal injury :

- **Do not remove the radiator cap when the engine is hot. Then loosen cap slightly to the stop to relieve any excess pressure before removing cap completely.**

1. Stop the engine and let cool down.
2. To drain the coolant, open the radiator drain cock, and remove radiator cap. The radiator cap must be removed to completely drain the coolant.
3. After all coolant is drained, close the drain plug.
4. Fill with clean water and cooling system cleaner.
5. Follow directions of the cleaner instruction.
6. After flushing, fill with clean water and anti-freeze until the coolant level is just below the port.
7. Start and operate the engine for few minutes.
8. Stop the engine. Check coolant level and add coolant if necessary.
9. Install the radiator cap securely.

■ IMPORTANT

- **Do not start engine without coolant.**
- **Use clean, fresh water and anti-freeze to fill the radiator.**
- **When the anti-freeze is mixed with water, the anti-freeze mixing ratio must be less than 50 %.**
- **Securely tighten radiator cap. If the cap is loose or improperly fitted, water may leak out and the engine could overheat.**

Coolant capacity	3.4 ℓ 3.6 U.S. qts 3.0 Imp. qts

https://truckmanualshub.com/

Flush Cooling System and Changing Coolant (Continued)

■ Anti-Freeze

If it freezes, cooling water can damage the cylinders and radiator. It is necessary, if the ambient temperature falls below 0 °C (32 °F), to remove cooling water after operating or to add anti-freeze to it.

1. There are two types of anti-freeze available; use the permanent type (PT) for this engine.
2. Before adding anti-freeze for the first time, clean the radiator interior by pouring fresh water and draining it a few times.
3. The procedure for mixing of water and anti-freeze differs according to the make of the anti-freeze and the ambient temperature, basically it should be referred to SAE J1034 standard, more specifically also to SAE J814c.
4. Mix the anti-freeze with water, and then fill in to the radiator.

Vol % Anti-freeze	Freezing Point		Boiling Point *	
	°C	°F	°C	°F
40	−24	−12	106	222
50	−37	−34	108	226

* At 760 mmHg pressure (atmospheric). A higher boiling point is obtained by using a radiator pressure cap which permits the development of pressure within the cooling system.

■ NOTE

- **The above data represent industry standards that necessitate a minimum glycol content in the concentrated anti-freeze.**
- **When the cooling water level drops due to evaporation, add water only. In case of leakage, add anti-freeze and water in the specified mixing ratio.**
- **Anti-freeze absorbs moisture. Keep unused anti-freeze in a tightly sealed container.**
- **Do not use radiator cleaning agents when anti-freeze has been added to the cooling water. (Anti-freeze contains an anti-corrosive agent, which will react with the radiator cleaning agent forming sludge which will affect the engine parts.)**

Replacing Radiator Hose (Water Pipes)

1. Replace the hoses and clamps.
   See page G-20. Checking Radiator Hose and Clamp.

Replacing Fuel Hose

1. Replace the hoses and clamps, if necessary.
   See page G-21. Checking Fuel Line.

https://truckmanualshub.com/

(11) Others

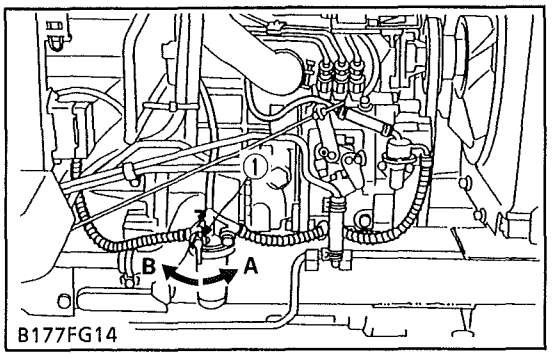

B177FG14

Bleeding Fuel System

1. Fill the fuel tank with fuel and open the fuel cock.
2. Start the engine and run for about 30 seconds, and then stop the engine.

(1) Fuel Cock
(A) CLOSE
(B) OPEN

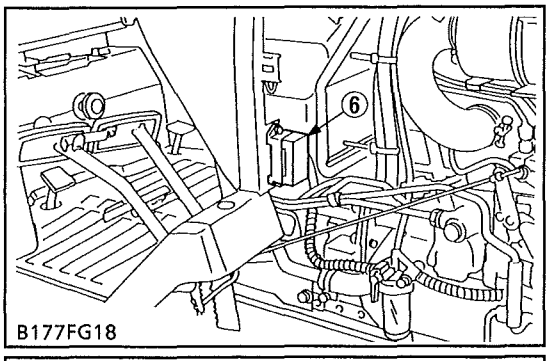

B177FG18

Replacing Fuse

1. The tractor electrical system is protected from potential damage by fuses.
   A blown fuse indicates that there is an overload or short somewhere in the electrical system.
2. If any of the fuses should blow, replace with a new one of the same capacity.

■ IMPORTANT

- **Before replacing a blown fuse, determine why the fuse blew and make any necessary repairs. Failure to follow this procedure may result in serious damage to the tractor electrical system. Refer to the troubleshooting section of this manual or your local KUBOTA dealer for specific information dealing with electrical problems.**
  If any of them should blow, replace with a new one of the same capacity,

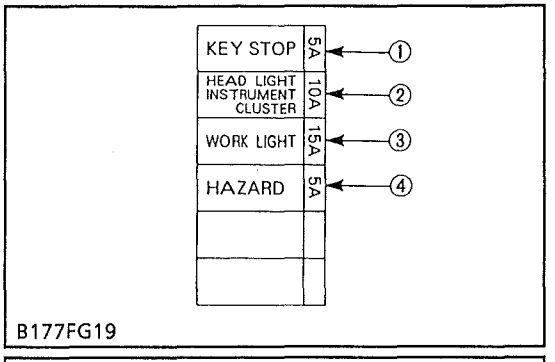

B177FG19

FUSE No.	CAPACITY (A)	Protected circuit
①	5	Key stop
②	10	Head lights
③	15	Work light
④	5	Hazard lights
⑤	Slow blow fuse 30 (Dynamo Type) 50 (Alternator Type)	Check circuit against wrong battery connection

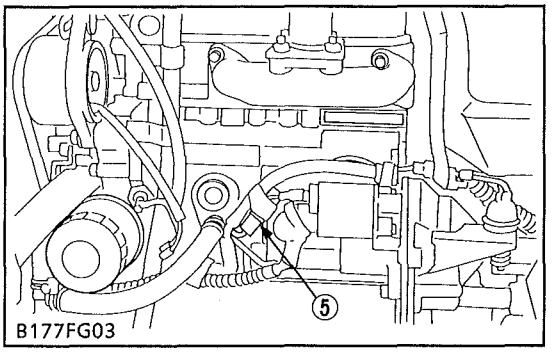

B177FG03

(6) Fuse Box

Replacing Light Bulb

(Head lights)
1. Take the bulb out of the light body and replace with new one.

(Other lights)
1. Detach the lens and replace the bulb.

Lights	Capacity
Head lights	15 W
Tail light	8 W
Hazard light	27 W

https://truckmanualshub.com/

[9] SPECIAL TOOLS

(1) Special Tools for Engine

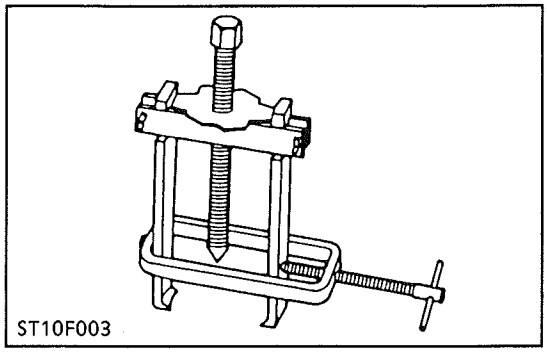

Special Use Puller Set

Code No.: 07916-09032
Application: Use exclusively for pulling out bearing, gears and other parts with ease.

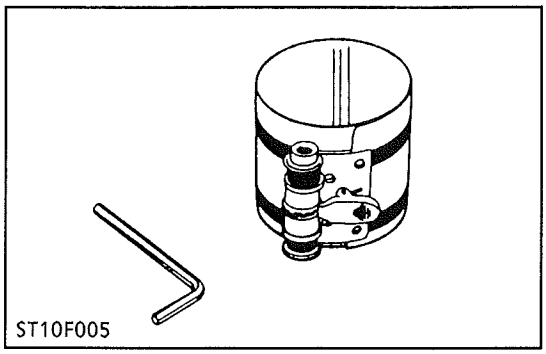

Piston Ring Compressor

Code No.: 07909-32111
Application: Use exclusively for pushing in the piston with ease.

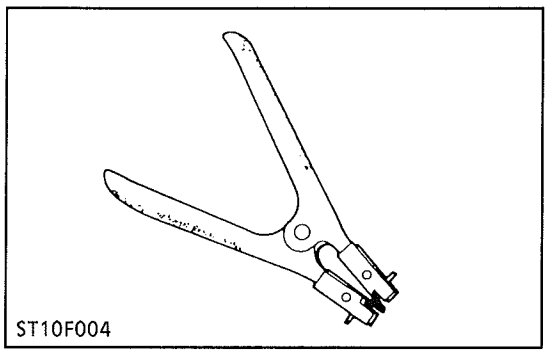

Piston Ring Tool

Code No.: 07909-32121
Application: Use exclusively for removing or installing the piston ring with ease.

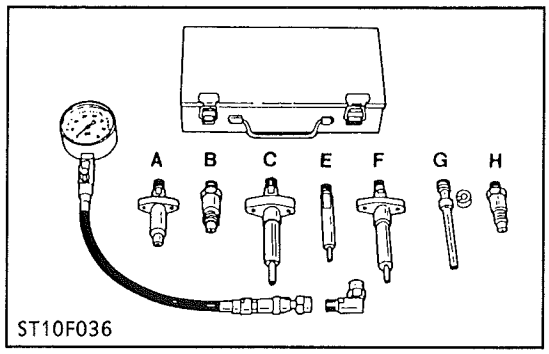

Diesel Engine Compression Tester (Including Adaptor G)

Code No.: 07909-30206 (Assembly)
07909-30933(A to F)
07909-31211 (E and F)
07909-31251 (G)
07909-31231 (H)
Application: Use for measuring diesel engine compression pressure. H is used for B1700·B2100·B2400.

https://truckmanualshub.com/

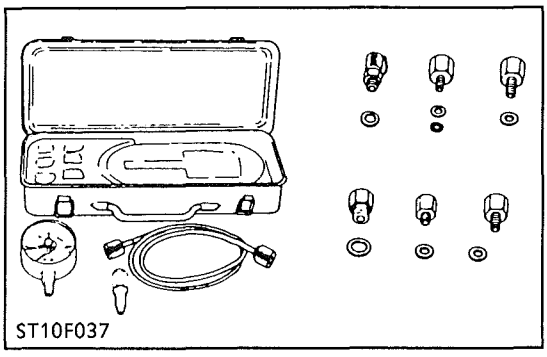
ST10F037

Oil Pressure Tester

Code No.: 07909-32032
Application: Use to measure lubricating, for all kinds of diesel engines.

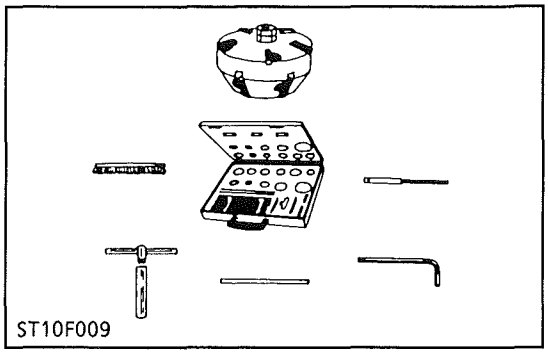
ST10F009

Valve Seat Cutter

Code No.: 07909-33102
Application: Use to reseat valves.
Angle: 0.785 rad. (45°)
0.262 rad. (15°)
Diameter: 28.6 mm (1.126 in)
31.6 mm (1.244 in)
35.0 mm (1.378 in)
38.0 mm (1.496 in)
41.3 mm (1.626 in)
50.8 mm (2.000 in)

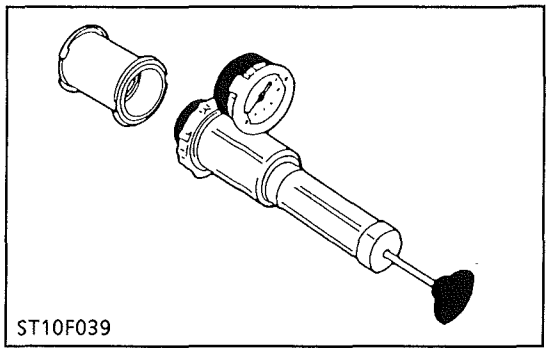
ST10F039

Radiator Tester

Code No.: 07909-31551
Application: Use to check of radiator cap pressure, and leaks from cooling systems.

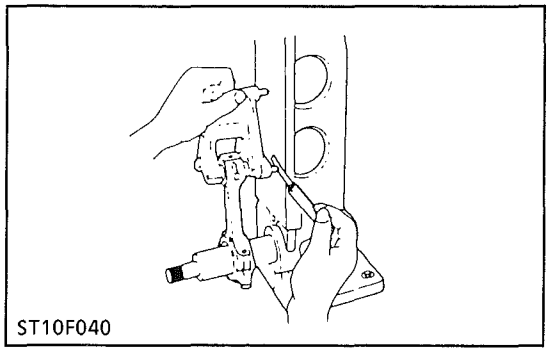
ST10F040

Connecting Rod Alignment Tool

Code No.: 07909-31661
Application: Use to check the connecting rod alignment.
Applicable: range Connecting rod large end I.D. 30 to 75 mm (1.18 to 2.95 in. dia.)
Connecting rod length 65 to 330 mm (2.56 to 12.99 in.)

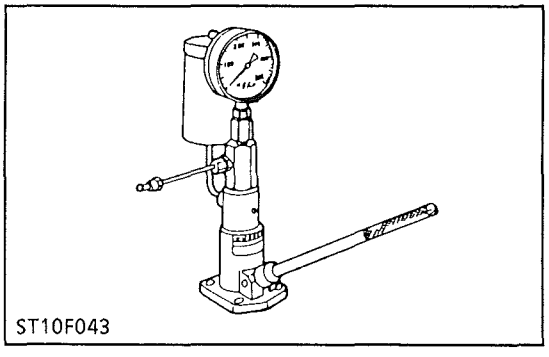
ST10F043

Nozzle Tester

Code No.: 07909-31361
Application: Use to check the fuel injection pressure and spraying condition of nozzle.
Measuring: range 0 to 49 MPa (0 to 500 kgf/cm^2, 0 to 7112 psi)

https://truckmanualshub.com/

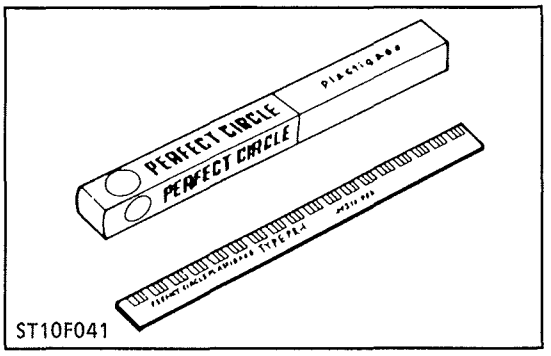

ST10F041

Press Gauge

Code No: 07909-30241

Application: Use to check the oil clearance between crankshaft and bearing, etc.

Measuring range:

Green	–	0.025 to 0.076 mm (0.001 to 0.003 in.)
Red	–	0.051 to 0.152 mm (0.002 to 0.006 in.)
Blue	–	0.102 to 0.229 mm (0.004 to 0.009 in.)

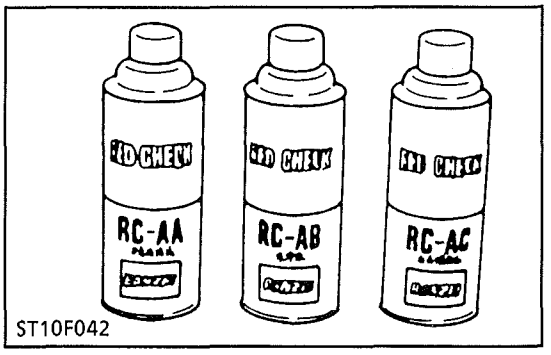

ST10F042

Red Check (Crack check liquid)

Code No.: 07909-31371

Application: Use to check cracks on cylinder head, cylinder block, etc.

■ **NOTE**

- **Following special tools are not provided, so make them referring to the figures.**

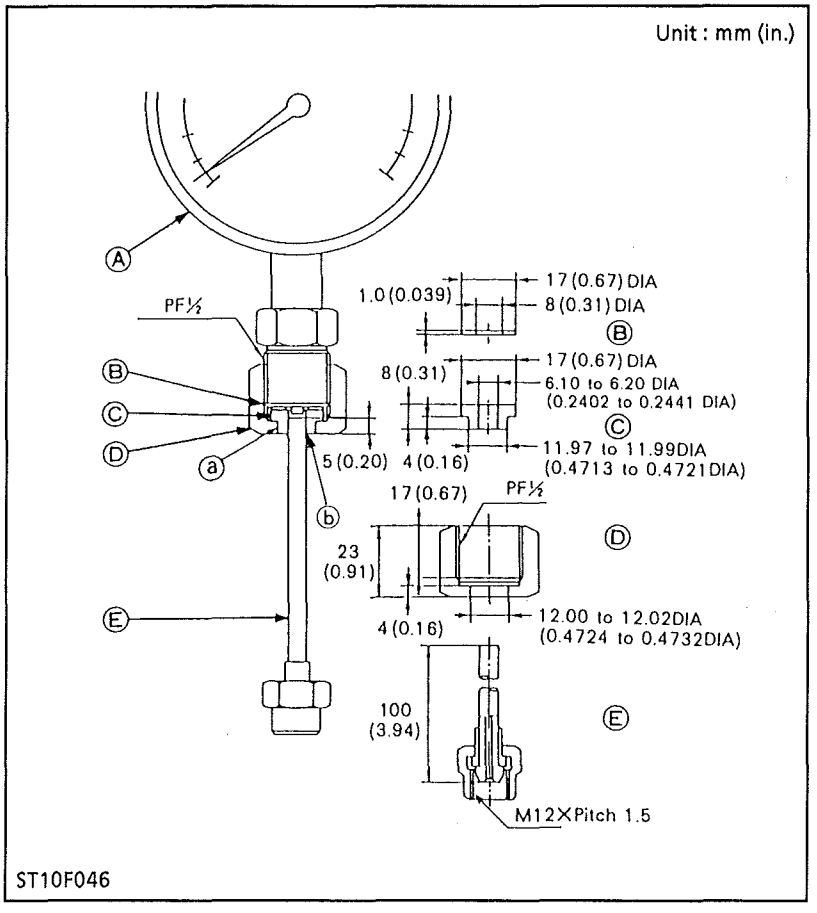

ST10F046

Injection Pump Pressure Tester

Application : Use to check fuel tightness of injection pumps.

■ **NOTE**

- **This special tool is not provided, so make it referring to the figure.**

A	Pressure gauge full scale more than 29.4 MPa (300 kgf/cm^2, 4267psi)
B	Gasket (copper)
C	Flange (steel)
D	Hex. nut with across the flat 27 mm (1.06 in.)
E	Injection pipe

(a) Adhesive Application
(b) Fillet Welding on the Enter Circumference

https://truckmanualshub.com/

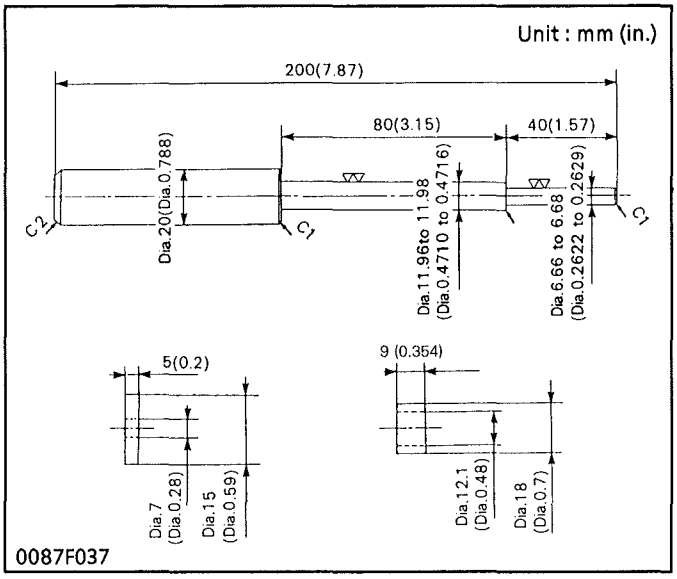

Valve Guide Replacing Tool

Application : Use to press out and to press fit the valve guide.

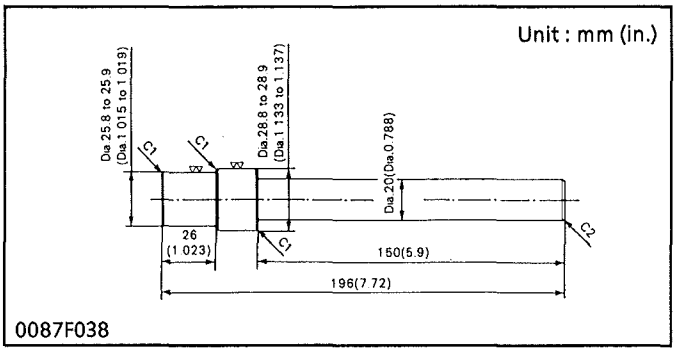

Idle Gear Bushing Replacing Tool

Application: Use to press out and to press fit the idle gear bushing.

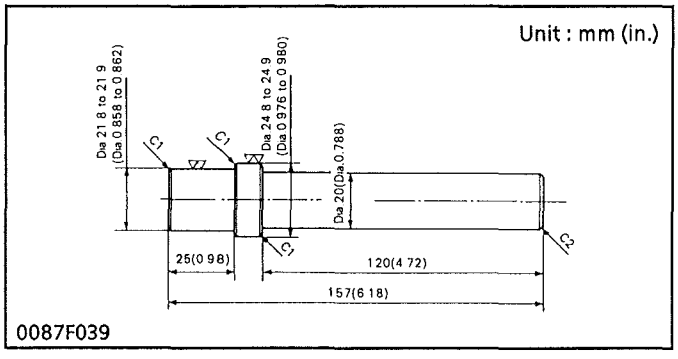

Small End Bushing Replacing Tool

Application: Use to press out and to press fit the small end bushing.

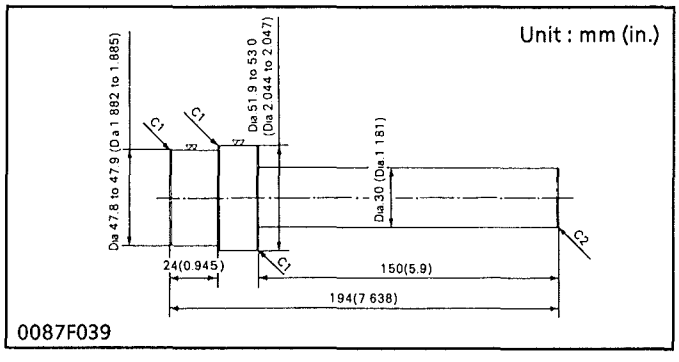

Crankshaft Bearing 1 Replacing Tool

Application: Use to press out and to press fit the crankshaft bearing 1.

https://truckmanualshub.com/

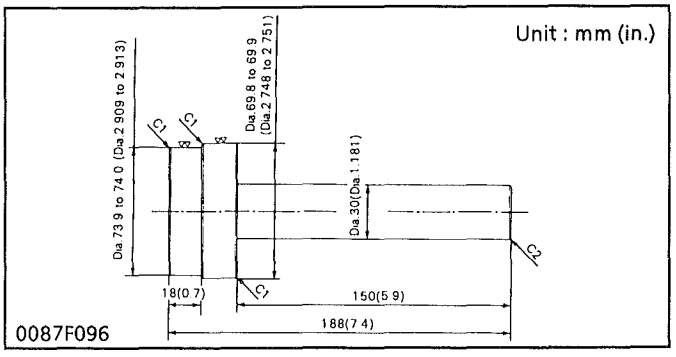

Governor Gear Holder Bushing Replacing Tool

Application: Use to press out and press fit the governot gear holder bushing.

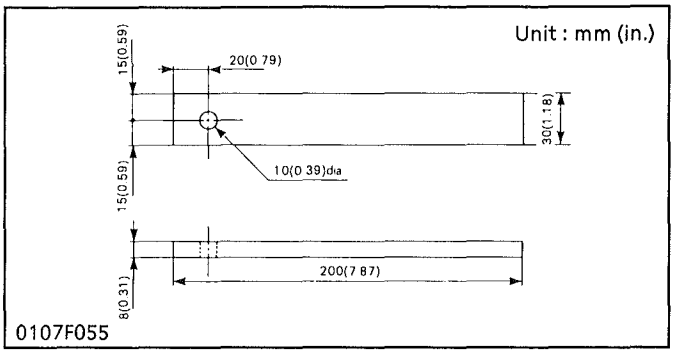

Flywheel Stopper

Application: Use to loosen and tighten the flywheel screw.

(2) Special Tools for Tractor

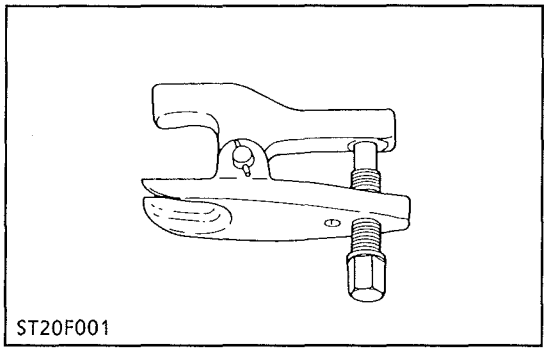

Tie Rod End Lifter

Code No.: 07909-39021

Application: This allows easy removal of tie rod end from tractor.

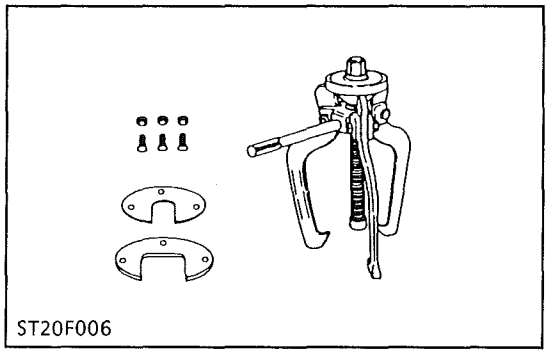

Steering Wheel Puller

Code No.: 07916-51090

Application: This allows easy removal of steering wheel without damaging steering shaft. For B and L series tractors, set the wheel support .

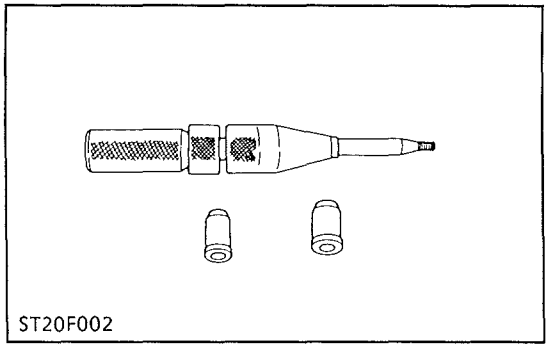

Clutch Center Tool (For B and L Series Tractors)

Application: The clutch center tool can be used for all B and L series tractors with a diaphragm clutch by changing tip guides. Center pice diameter is 16 mm (0.63 in.).

https://truckmanualshub.com/

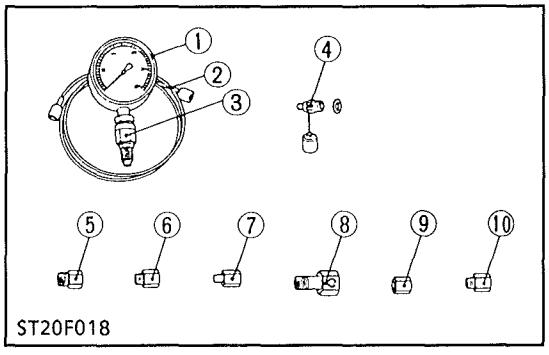

Relief Valve Set Pressure Tester

Code No.: 07916-50045

Application: This allows easy measurement of relief set pressure for all tractor models.

(1) Gauge (07916-50321)
(2) Cable (07916-50331)
(3) Threaded Joint (07916-50401)
(4) Threaded Joint (07916-50341)
(5) Adaptor **B** (M18X P1.5) (07916-50361)
(6) Adaptor **C** (PS3/8) (07916-50371)
(7) Adaptor **D** (PT1/8) (07916-50381)
(8) Adaptor **E** (PS3/8) (07916-50392)
(9) Adaptor **F** (PF1/2) (07916-62601)
(10) Adaptor **58** (PT1/4) (07916-52391)

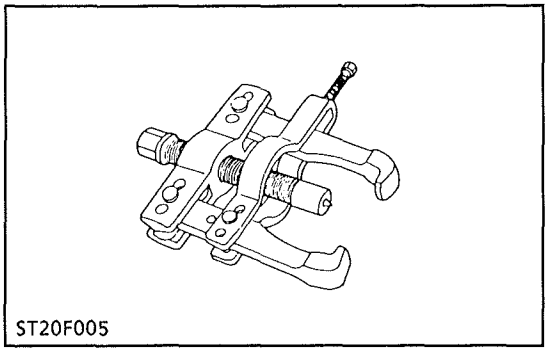

Pitman Arm Puller

Code No.: 07909-39011

Application: Use for pulling out pitman arm from tractor.

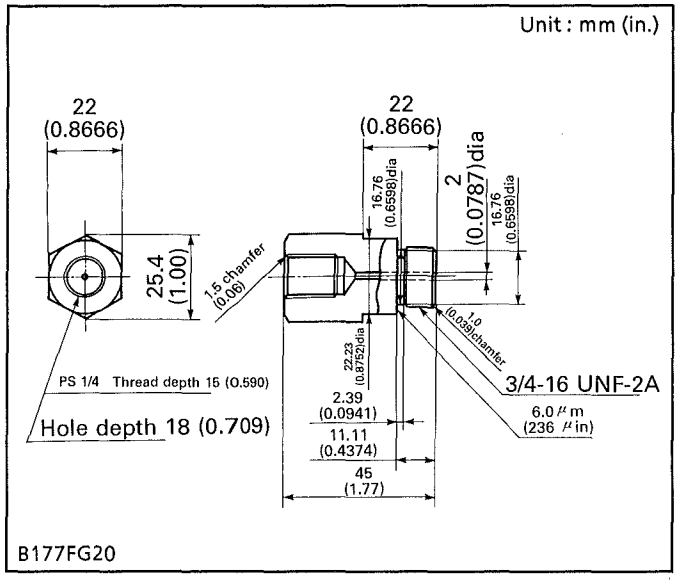

HST Adaptor (A)

Application: Use for checking the check and high pressure relief valve setting pressure.

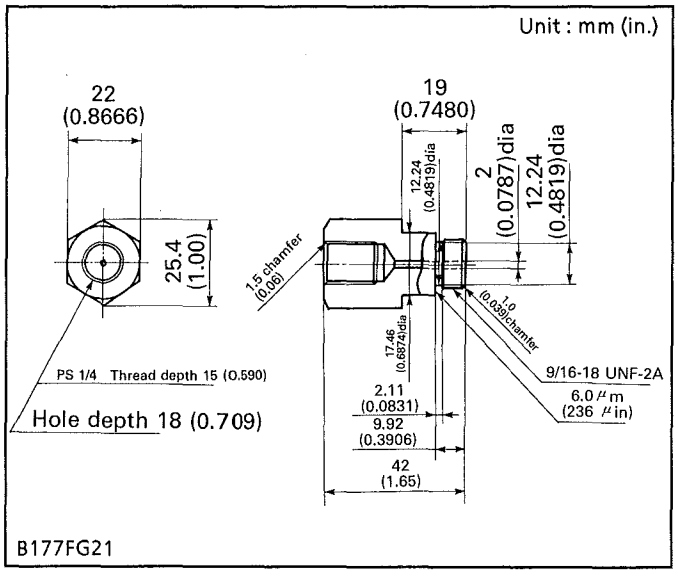

HST Adaptor (B)

Application: Use for checking the charge relief valve setting pressure.

https://truckmanualshub.com/

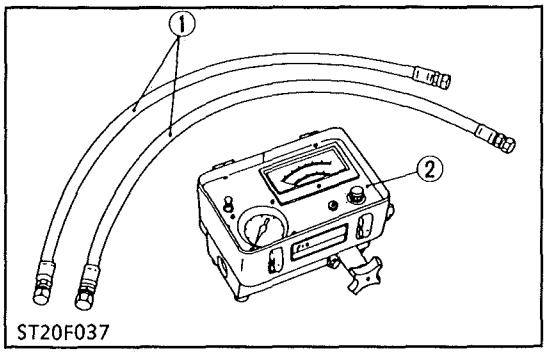

Flowmeter

Flowmeter Code No. : 07916-52791
Hydraulic Test Hose Code No. : 07916-52651 (1 pc.)
Application: This allows easy testing of hydraulic system.

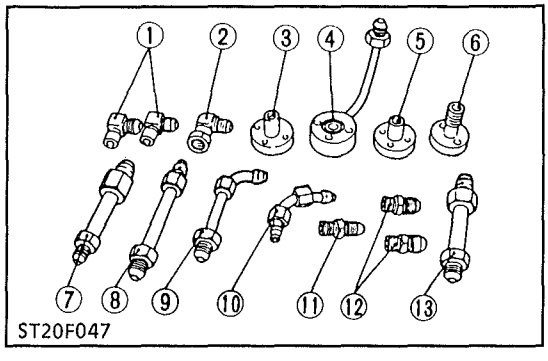

Adaptor Set

Code No.: 07916-54031
Application: Use for checking hydraulic pumps.

(1) Adaptor 52
(2) Adaptor 53
(3) Adaptor 54
(4) Adaptor 61
(5) Adaptor 62
(6) Adaptor 63
(7) Adaptor 64
(8) Adaptor 65
(9) Adaptor 66
(10) Adaptor 67
(11) Adaptor 68
(12) Adaptor 69
(13) Hydraulic Adaptor 1

https://truckmanualshub.com/

[10] TIRES

(1) Type of Tire

■ IMPORTANT

- **Do not use tires larger than specified.**
- **When you intend to mount different size of tires from equipped ones, consult your dealer about front drive gear ratio for detail.**
  Excessive wear of tires may occur due to improper gear ratio.

The following tires can be mounted on Models B1700, B2100 and B2400.

Type of Tire	Type of tractor	Front Tire		Rear Tire	
Farm Tire	4 Wheel Drive	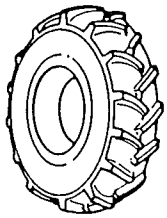 C045F070	[B1700, B2100] 6-12 [B2400] 7-12	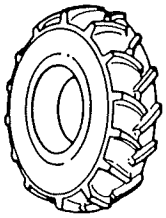 C045F070	[B1700] 8.3-16 [B2100] 9.5-16 [B2400] 11.2-16
Turf Tire	4 Wheel Drive	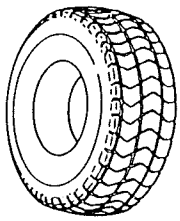 0011F118	[B1700, B2100, B2400] 23 x 8.50-12	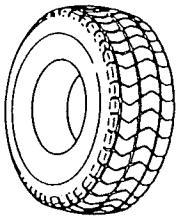 0011F118	[B1700, B2100, B2400] 33 x 12.5-15
Turf Tire and Bar Tire	4 Wheel Drive	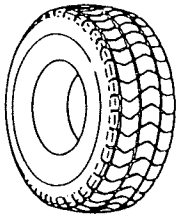 0011F118	[B1700, B2100, B2400] 20.5 x 8.00-10	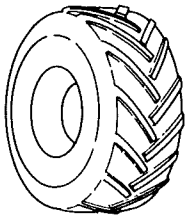 B177FG22	[B1700, B2100, B2400] 31 x 15.5-15
Indust-rial Tire	4 Wheel Drive	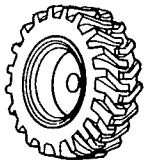 B105F046	[B1700, B2100, B2400] 12-16.5	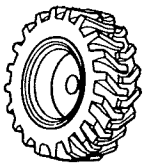 B105F046	[B1700, B2100, B2400] 23 x 8.50-12

https://truckmanualshub.com/

(2) Tread Adjustment

(2)-1 Front Wheel

Front tread cannot be adjusted.

■ IMPORTANT
- **Do not turn front discs to obtain wider tread.**

Models	B1700 B2100	B2400	B1700 B2100 B2400		B1700 B2100 B2400
Tires	6-12 Farm	7-12 Farm	21 x 8.00-10 Turf	23 x 8.50-12 Turf	12-16.5 Industrial
Tread	835 mm 32.9 in.		940 mm 37.0 in.	870 mm 34.3 in.	870 mm 34.3 in.
	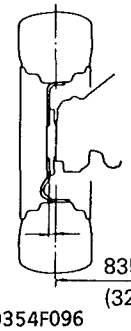 0354F096	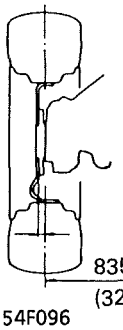 0354F096	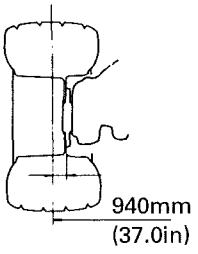 B177FG23	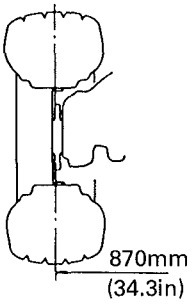 0354F097	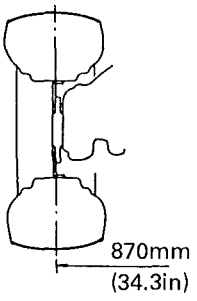 B177FG24

(2)-2 Rear Wheels

Rear tread can be adjusted in 2 or 3 steps depending on the model.

To change the tread
1. Loosen the nut of cotter pin bolt.
2. Remove the snap pin and wheel hub pin.
3. Change the tread to the desired position.
4. Re-set the wheel hub pin, snap pin and cotter pin bolt.

⚠ CAUTION
- **When working on slopes or working with trailer, set the wheel tread as wide as practical for the job for maximum stability.**

■ IMPORTANT
- **Always attach tires as shown in the drawings below.**
- **If not attached as illustrated, transmission parts may be damaged.**
- **Do not use tires larger than specified.**
- **When re-fitting or adjusting a wheel, tighten the bolts to the following torques then recheck after driving the tractor 200 m (200 yards) and there after daily check service.**

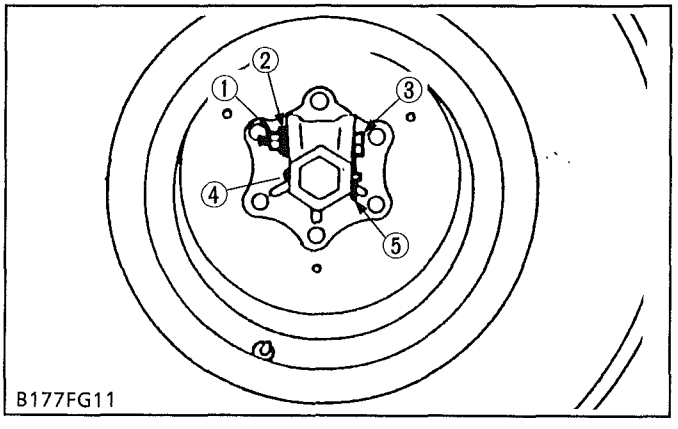

B177FG11

(When adjusting tread)

Tightening torque	Cotter setting bolt and nut	123 to 147 N·m 12.6 to 15.0 kgf·m 91 to 108 ft-lbs
	Wheel hub mounting nut	108 to 125 N·m 11.0 to 12.8 kgf·m 80 to 93 ft-lbs

(1) Nut
(2) Spring Lock Washer
(3) Bolt
(4) Wheel Hub Pin
(5) Snap Pin

https://truckmanualshub.com/

Models	B1700 B2100	B2400	B1700 B2100 B2400	B1700 B2100 B2400
Tires	8.3-16 Farm	9.5-16 Farm	11.2-16 Farm	33 x 12.5-15 Turf
Tread	948 mm to 778 mm (37.3 in. to 30.6 in.)	1006 mm to 836 mm (39.6 in. to 32.9 in.)	1064 mm to 890 mm (41.9 in. to 35.0 in.)	886 mm (34.9 in.)
	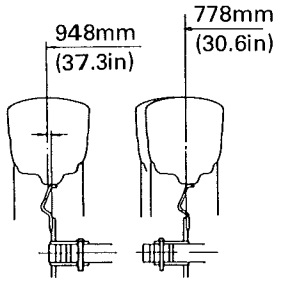 0354F099	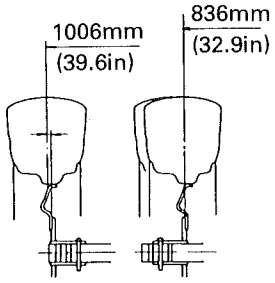 0354F099	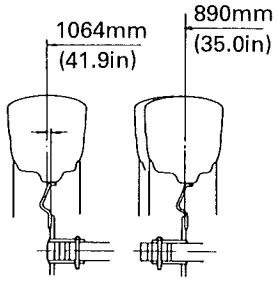 0354F099	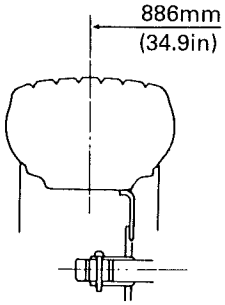 0354F105

Models	B1700 B2100 B2400	B1700 B2100 B2400
Tires	31 x 15.5-15 Bar	12-16.5 Industrial
Tread	942 mm (37.1 in.)	866, 966 mm (34.1, 38.0 in.)
	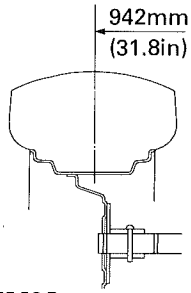 B177FG25	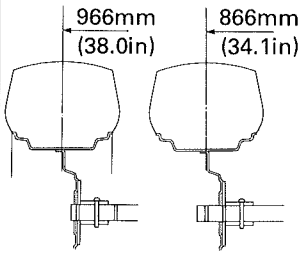 B177FG26

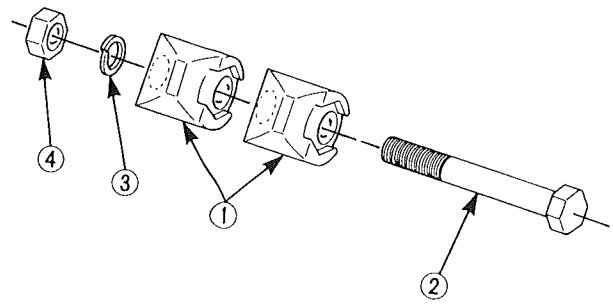

B177FG27

NOTE

- **Insert the bolt (2) from the indented side of both cotters and tighten the nut (4) with flat side of cotter as shown in figure.**

(1) Cotter
(2) Bolt
(3) Spring Lock Washer
(4) Nut

https://truckmanualshub.com/

(3) Wheel Hub

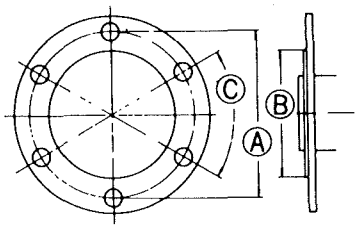

0319F072

	Front Wheel Hub	Rear Wheel Hub
Type	4WD	4WD
Screw circle diameter (A)	120 mm 4.72 in.	152 mm 6.0 in.
Number of screws	6	6
Screw sizes	M12 x Pitch 1.25	M14 x Pitch 1.5
Pilot bore diameter (B)	69.5 mm 2.74 in.	114 mm 4.49 in.
Hole spacing (C)	Equal 1.05 rad (60 deg.)	Equal 1.05 rad (60 deg.)

(4) Tire Pressure

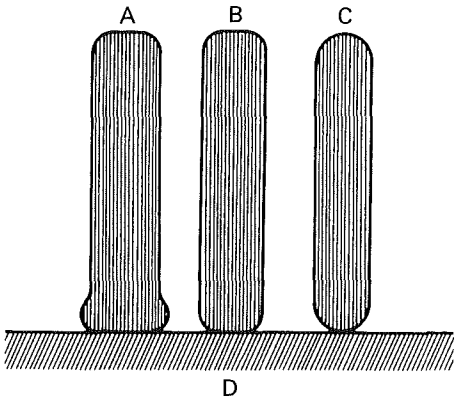

0301F097

CAUTION

To avoid personal injury:

- **Do not attempt to mount a tire. This should be done by a qualified person with the proper equipment.**

IMPORTANT

- **Do not use tires larger than specified.**
- **When you intend to mount different size of tires from equipped ones, consult your dealer about front drive gear ratio for detail.**
  Excessive wear of tires may occur due to improper gear ratio.

Though the tire pressure is factory-set to the prescribed level, it naturally drops slowly in the course of time. Thus, check it everyday and inflate as necessary. To inflate the wheel tires, use an air compressor or hand pump.

(A) Insufficient
(B) Standard
(C) Excessive
(D) Ground

- **Recommended inflation pressure**
  Maintain the pressure shown below.

	Tire sizes	Inflation Pressure
Rear	8.3 – 16, 4PR 9.5 – 16, 4PR 11.2 – 16, 4PR 33 x 12.5 – 15, 4PR 31 x 15.5 – 15, 4PR 12 – 16.5, 6PR	140 kPa (1.4 kgf/cm², 20 psi) 140 kPa (1.4 kgf/cm², 20 psi) 130 kPa (1.3 kgf/cm², 18 psi) 140 kPa (1.4 kgf/cm², 20 psi) 140 kPa (1.4 kgf/cm², 20 psi) 270 kPa (2.7 kgf/cm², 40 psi)
Front	6 – 12, 4PR 7 – 12, 4PR 23 x 8.50 – 12, 4PR 21 x 8.00 – 10, 4PR 23 x 8.50 – 12, 4PR	200 kPa (2.0 kgf/cm², 28 psi) 170 kPa (1.7 kgf/cm², 24 psi) 150 kPa (1.5 kgf/cm², 22 psi) 160 kPa (1.6 kgf/cm², 23 psi) 240 kPa (2.4 kgf/cm², 35 psi)

NOTE

- **Maintain the maximum pressure in front tires, if using a front loader or when equipped with lots of front weight.**

https://truckmanualshub.com/

(5) Tire Liquid Injection

Auxiliary weights can be used to increase traction force for plowing in fields or clayey grounds. Another way is to inject water or another liquid, such as a calcium chloride solution, in the tires. Water must not be used in winter since it freezes at 0°C (32°F).

The calcium chloride solution will not freeze and moreover, affords higher effect than water since its specific gravity is higher than that of water by about 20%.

Preparation of Calcium Chloride Solution

⚠ CAUTION

- **When making a calcium chloride solution, do not pour water over calcium chloride since this results in chemical reaction which will cause high temperature. Instead add a small amount of calcium chloride to the water at a time until the desiresd solution is achieved.**

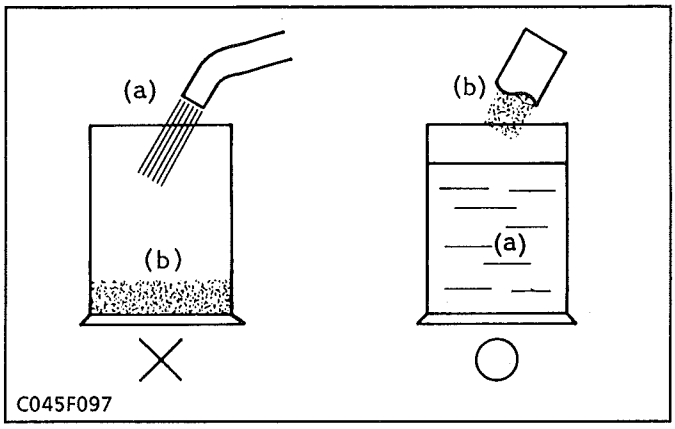

(a) Water (b) $CaCl_2$ (Calcium Chloride)

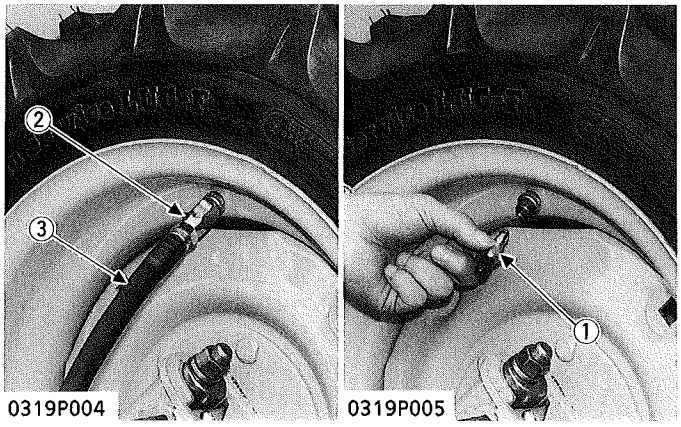

(1) Air Valve
(2) Injector
(3) Hose

■ **IMPORTANT**

- **Do not fill the front tire with liquid.**

Freezing temp.	Weight of $CaCl_2$ to be dissolved in 100 ℓ (26.5 U.S.gals., 22.0 Imp. gals.) of water
−5°C (23°F)	12 kg (26.4 lbs)
−10°C (14°F)	21 kg (46.3lbs)
−15°C (5°F)	28 kg (61.7 lbs)
−20°C (−4°F)	34 kg (75.0 lbs)
−25°C (−13°F)	40 kg (88.2 lbs)
−30°C (−22°F)	44 kg (97.0 lbs)
−35°C (−31°F)	49 kg (108.0 lbs)
−40°C (−40°F)	52 kg (114.6 lbs)
−45°C (−49°F)	56 kg (123.5 lbs)
−50°C (−58°F)	61 kg (134.5 lbs)

Attaching Injector

1. Liift the rear tires off the ground.
2. Turn the tire so that the air valve is at the top.
3. Remove the air valve (1), and atach the injector (2) (Code No: 07916-52511).

https://truckmanualshub.com/

Fig. 1

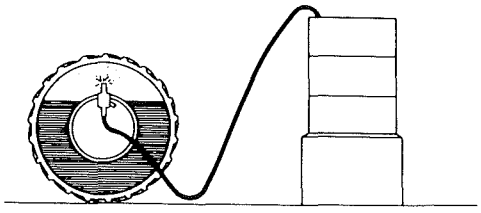

C045F098

Fig. 2

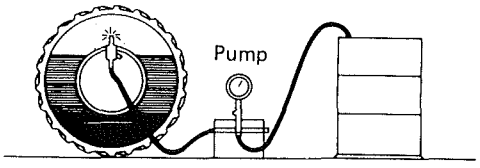

C045F099

Fig. 3

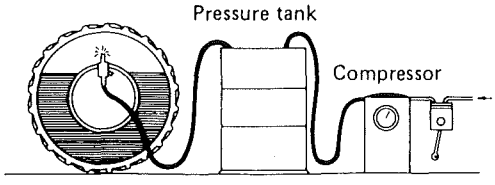

C045F100

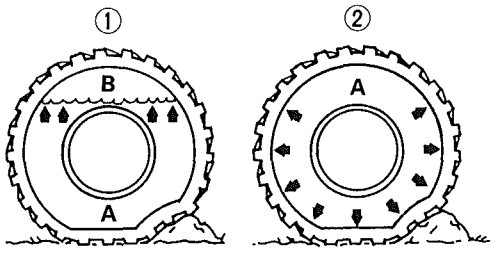

0309F058

Injection

CAUTION

- **When a calcium chloride solution is used, cool it before pouring it into the tire.**

The following four ways can be used to inject water or a calcium chloride solution into tires.

1. Gravity injection (Fig. 1)
2. Pump injection (Fig. 2)
3. Pressure tank injection (Fig. 3)
4. Injection directly from tap (only when water is being used).

NOTE

- **Once injection is completed, reset the air valve, and pump air into the tire to the specified pressure.**

CAUTION

- **Do not fill tires with water or solution more than 75 % of full capacity (to the valve stem level).**

(1) Correct –75 % Air compresses like a cushion
(2) Incorrect –100% Full Water can not be compressed

[A] Water
[B] Air

https://truckmanualshub.com/

■ Weight of Calcium Chloride Solution Filling 75 % of Full Capacity of a Tire.

Tire sizes	8.3 – 16	9.5 – 16	11.2 – 16	12 – 16.5
Slush free at –10 °C (13 °F) Solid at –30 °C (–23 °F) [Approx. 1 kg (2 lbs.) $CaCl_2$ per 4 ℓ (1 gal) of water]	35 kg (77 lbs)	54 kg (119 lbs)	70 kg (155 lbs)	74 kg (163 lbs)
Slush free at –24 °C (–12 °F) Solid at –47 °C (–52°F) [Approx. 1.5 kg (3.5 lbs.) $CaCl_2$ per 4 ℓ (1 gal) of water]	37 kg (82 lbs)	57 kg (126 lbs)	74 kg (163 lbs)	78 kg (172 lbs)
Slush free at –47 °C (–52 °F) Solid at –52 °C (–62 °F) [Approx. 2.25 kg (5 lbs.) $CaCl_2$ per 4 ℓ (1 gal) of water]	39 kg (86 lbs)	60 kg (132 lbs)	78 kg (172 lbs)	82 kg (181 lbs)

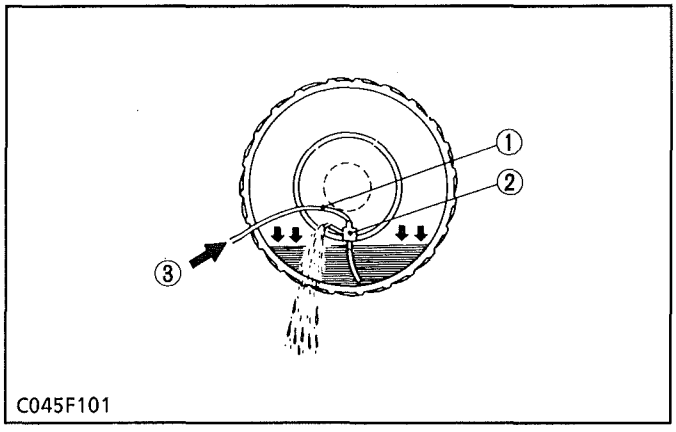

(1) Hose
(2) Injector
(3) Compressed Air

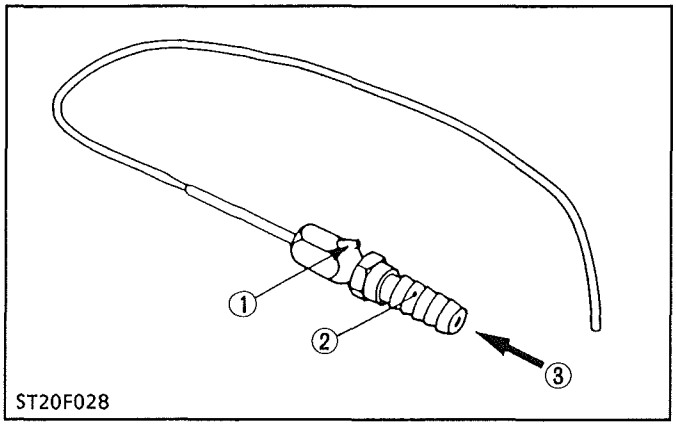

(1) Vent
(2) Injector
(3) Compressed Air

Draining Water or Solution

1. Lift the rear tires off the ground.
2. Turn the tire so that the air valve is at the bottom.
3. Remove the air valve, and drain liquid (liquid can only be drained to the level of the valve and liquid under that level remains inside).
4. To drain liquid completely, use the injector, and direct compressed air into the tire to force out the liquid through the injector's vent.

https://truckmanualshub.com/

[11] SPECIFICATIONS OF IMPLEMENT LIMITATIONS

The Kubota tractor has been thoroughly tested for proper performance with implements sold or approved by Kubota. Use with implements which exceed the maximum specifications listed below, or which are otherwise unfit for use with the Kubota tractor may result in malfunctions or failures of the tractor, damage to other property and injury to the operator or others.

(Any malfunctions or failure of the tractor resulting from use with improper implements are not covered by the warranty.)

	Tread (max. width) with farm tires		Lower link end max. loading weight **W0**
	Front	Rear	
B1700	835 mm (32.9 in.)	948 mm (37.3 in.)	300 kg (660 lbs)
B2100	835 mm (32.9 in.)	1006 mm (39.6 in.)	
B2400	835 mm (32.9 in.)	1064 mm (41.9 in.)	

	Actual figures		
	Implement weight **W1** and / or size	Max. Drawbar Load **W2**	Trailer loading weight **W3** Max. capacity
B1700	As in the following list (shown on the next page)	300 kg (660 lbs.)	1000 kg (2200 lbs.)
B2100			
B2400			

Lower link end max. loading weight ..... The max. allowable load which can be put the lowert link end : **W0**
Implement weight ..... The implement's weight which can be put on the lower link: **W1**
Max. drawbar load **W2**
Trailer loading weight ..... The max. loading weight for trailer (without trailer's weight): **W3**

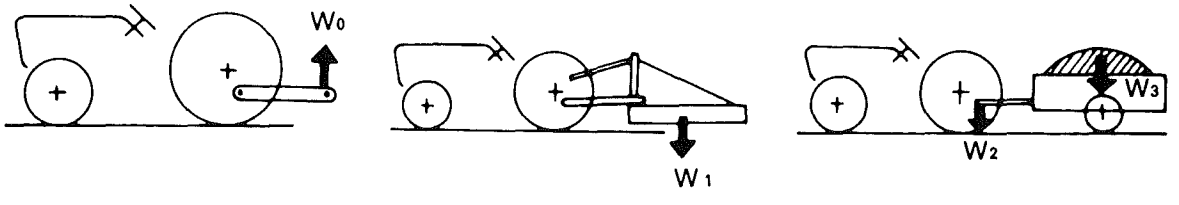

0350F051

https://truckmanualshub.com/

Implement		Remarks		B1700	B2100	B2400
Mower	Mid Mount	Max. Cutting Width Max. Weight	cm (in.) kg (lbs)	152 (60) 140 (300)	152 (60) 140 (300)	152 (60) 140 (300)
	Rotary-cutter (1 Blade)	Max. Cutting Width Max. Weight	cm (in.) kg (lbs)	107 (42) 140 (300)	107 (42) 140 (300)	122 (48) 180 (400)
	Rear-mount (2 or 3 Blade)	Max. Cutting Width Max. Weight	cm (in.) kg (lbs)	152 (60) 140 (300)	152 (60) 140 (300)	183 (72) 227 (500)
	Flail-mower	Max. Cutting Width	cm (in.)	107 (42)	107 (42)	122 (48)
	Sickle bar	Max. Cutting Width	cm (in.)	122 (48)	122 (48)	152 (60)
Rotary tiller		Max. Tilling Width Max. Weight	cm (in.) kg (lbs)	107 (42) 170 (375)	107 (42) 170 (375)	127 (50) 210 (465)
Bottom plow		Max. Size	cm (in.)	30 (12) x 1	36 (14) x 1	36 (14) x 1
Disc plow		Max. Size	cm (in.)	56 (22) x 1	56 (22) x 1	56 (22) x 1
Cultivator		Max. Size	cm (in.)	122 (48) 1 Row	122 (48) 1 Row	137 (54) 1 Row
Disc harrow		Max. Harrowing Width Max. Weight	cm (in.) kg (lbs)	122 (48) 120 (265)	137 (54) 140 (300)	152 (60) 190 (420)
Sprayer		Max. Tank Capacity	ℓ (U.S.gals.)	150 (40)	150 (40)	190 (50)
Front blade		Max. Cutting Width Sub Frame	cm (in.)	122 (48) Necessary	122 (48) Necessary	152 (60) Necessary
Rear blade		Max. Cutting Width Max. Weight	cm (in.) kg (lbs)	152 (60) 160 (350)	152 (60) 160 (350)	152 (60) 180 (400)
Front loader		Max. Lifting Capacity Max. Width Sub Frame	kg (lbs) cm (in.)	300 (660) 122 (48) Necessary	300 (660) 122 (48) Necessary	350 (770) 127 (50) Necessary
Box blade		Max. Cutting Width Max. Weight	cm (in.) kg (lbs)	107 (42) 170 (375)	107 (42) 170 (375)	132 (52) 227 (500)
Back hoe		Max. Digging Depth Max. Weight Sub Frame	cm (in.) kg (lbs)	183 (72) 270 (600) Necessary	183 (72) 270 (600) Necessary	183 (72) 320 (700) Necessary
Snow blower		Max. Working Width Max. Weight Sub Frame	cm (in.) kg (lbs)	107 (42) 160 (350) Necessary	122 (48) 160 (350) Necessary	152 (60) 200 (450) Necessary
Trailer		Max. load capacity	kg (lbs)	1000 (2200)	1000 (2200)	1000 (2200)

■ NOTE

- **Implement size may vary depending on soil operating conditions.**

https://truckmanualshub.com/

https://truckmanualshub.com/

MECHANISM

CONTENTS

[1] FEATURES 1-M1
[2] ENGINE BODY 1-M1
(1) Cylinder Block 1-M1
(2) Cylinder Head 1-M2
(3) Crankshaft 1-M2
(4) Piston and Piston Rings 1-M3
(5) Connecting Rod 1-M3
(6) Camshaft and Fuel Camshaft 1-M4
(7) Rocker Arm 1-M4
(8) Inlet and Exhaust Valves 1-M5
(9) Valve Timing 1-M5
(10) Flywheel 1-M6
(11) Air Cleaner 1-M6
(12) Muffler 1-M7
[3] LUBRICATING SYSTEM 1-M7
(1) General 1-M7
(2) Oil Pump 1-M8
(3) Relief Valve 1-M8
(4) Oil Filter Cartridge 1-M9
(5) Oil Pressure Switch 1-M9
[4] COOLING SYSTEM 1-M10
(1) Water Pump 1-M10
(2) Thermostat 1-M11
(3) Radiator 1-M11
(4) Radiator Cap 1-M11
[5] FUEL SYSTEM 1-M12
(1) Fuel Line 1-M12
(2) Fuel Filter 1-M12
(3) Fuel Feed Pump 1-M13
(4) Injection Pump 1-M14
(5) Injection Nozzle 1-M16
(6) Governor 1-M16

https://truckmanualshub.com/

https://truckmanualshub.com/

[1] FEATURES

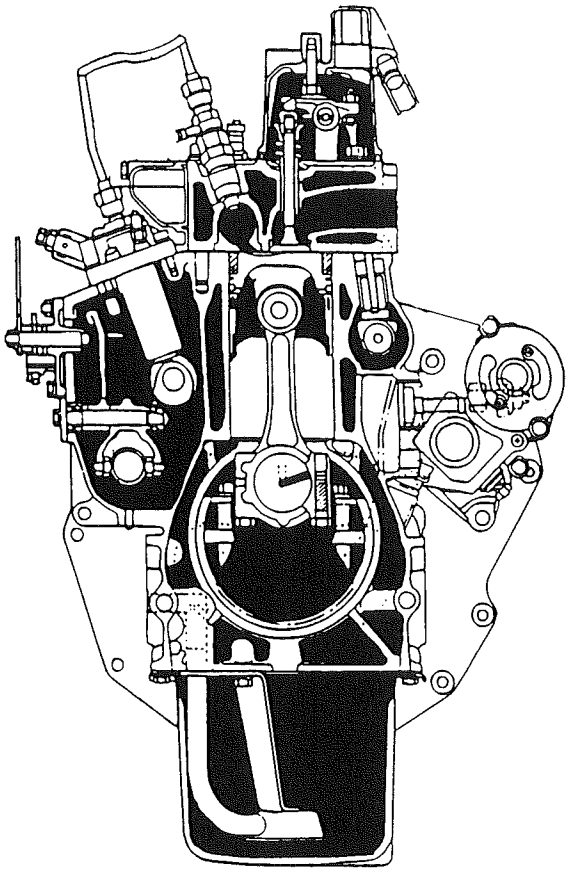

B130F002

The D905-D10, D1005-D10 and D1105-D10 are vertical, water-cooled, 4-cycle diesel engines.

It is incorporated KUBOTA's foremost technologies. With KUBOTA's E-TVCS (Three Vortex Combustion System), well-known Bosch MD type injection pump and the well-balanced designs, they give greater power, low fuel consumption, little vibration and quiet operation.

[2] ENGINE BODY

(1) Cylinder Block

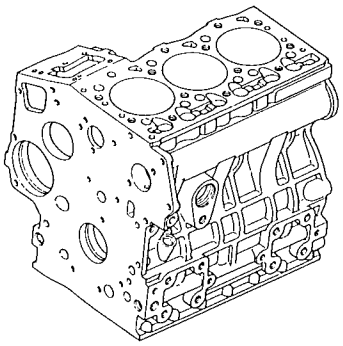

0343F103

The engine has a high durability tunnel-type cylinder block in which the crank bearing component is a constructed body. Furthermore, liner less type, allow effective cooling, less distortion, and greater wear-resistance. The noise level is reduced to a minimum because each cylinder has its own chamber.

https://truckmanualshub.com/

(2) Cylinder Head

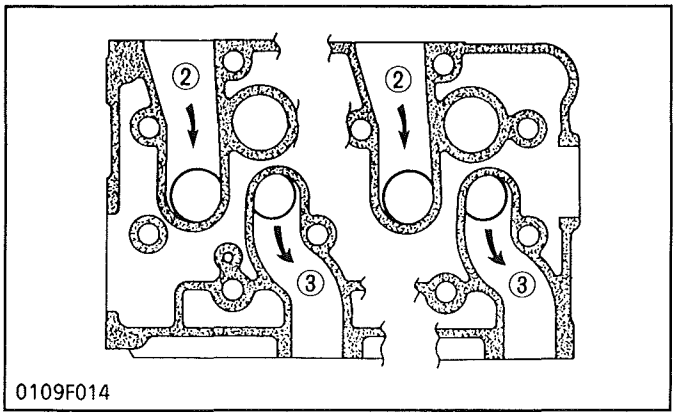

0109F014

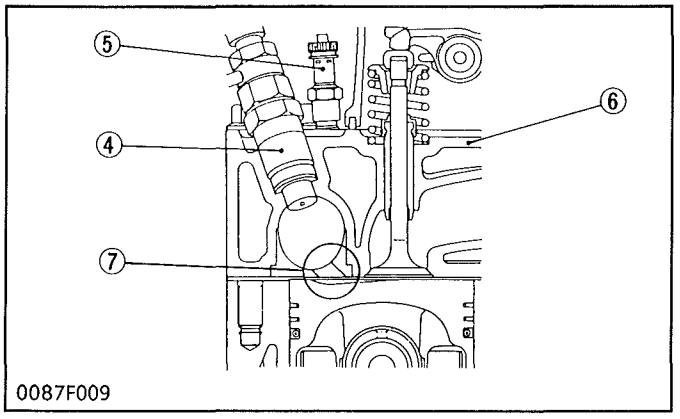

0087F009

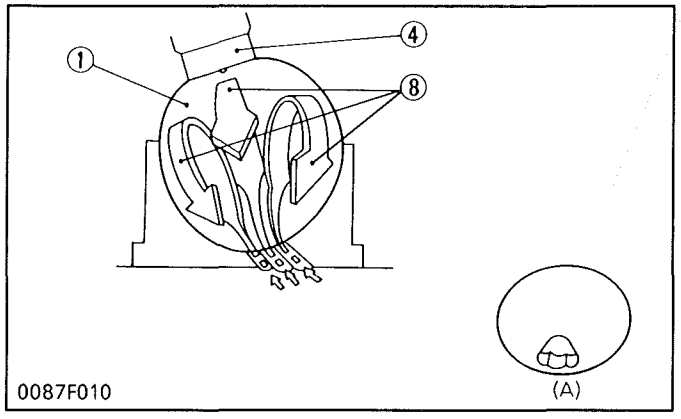

0087F010

The cross-flow type intake/exhaust ports in this engine have their openings at both sides of the cylinder head. Because overlaps of intake/exhaust ports are smaller than in ports of other types which have openings on one side, the suction air can be protected from being heated and expanded by heated exhaust air. The cool, high density suction air has high volume efficiency and raises the power of the engine. Furthermore, distortion of the cylinder head by heated exhaust gas is reduced because intake ports are arranged alternately. The combustion chamber is of KUBOTA's exclusive E-TVCS combustion chamber type. Suction air is whirled to be mixed effectively with fuel, prompting combustion and reducing fuel consumption.

In the combustion chamber are installed throttle type injection nozzle and rapid heating sheathed type glow plug. This glow plug assures easier than ever engine starts even at –15°C (5°F).

(1) Combustion Chamber
(2) Intake Port
(3) Exhaust Port
(4) Nozzle Assembly
(5) Glow Plug
(6) Cylinder Head
(7) Depression
(8) Compressed Air

[A] Connect to Combustion Chamber

(3) Crankshaft

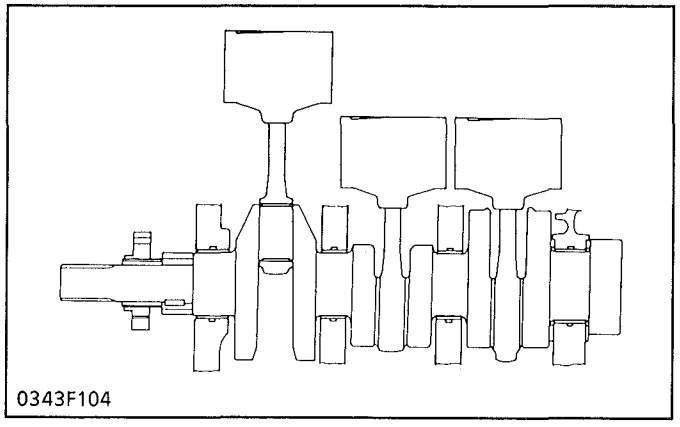
0343F104

The crankshaft with the connecting rod converts the reciprocating motion of the piston into the rotating motion.

The crankshaft is made of tough special alloy steel, and the journals, pins and oil seal sliding portions are induction hardened to increase the hardness for higher wear resistance.

The front journal is supported by a solid type bearing, the intermediate journal by a split type, and the rear journal by a split type with thrust bearings.

The crankshaft is provided with an oil gallery, through which engine oil is fed to the crankpin portion, and lubricate it.

https://truckmanualshub.com/

(4) Piston and Piston Rings

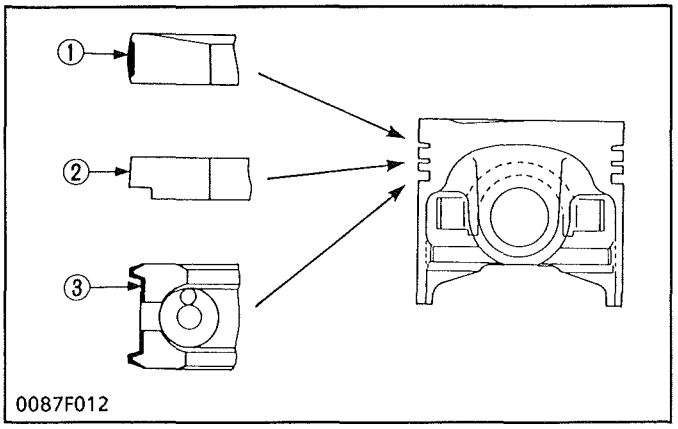

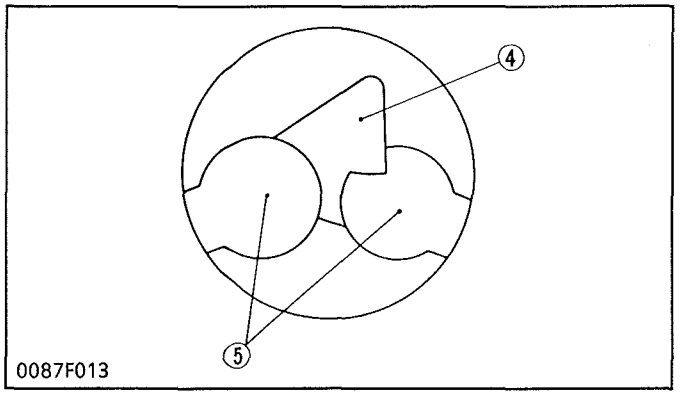

The piston has a slightly oval shape when cold (in consideration of thermal expansion) and a concave head.

Three rings are installed in grooves in the piston.

The top ring (1) is a keystone type, which can stand against heavy loads, and the barrel face on the ring fits well to the cylinder wall.

The second ring (2) is an undercut type, which effectively prevents the oil from being carried up.

The oil ring (3) has chamfered contact faces and an expander ring, which increase the pressure of the oil ring against the cylinder wall.

Several grooves are cut on the topland to help heat dissipate and to prevent scuffing.

(1) Top Ring
(2) Second Ring
(3) Oil Ring
(4) Depression
(5) Valve Recess

(5) Connecting Rod

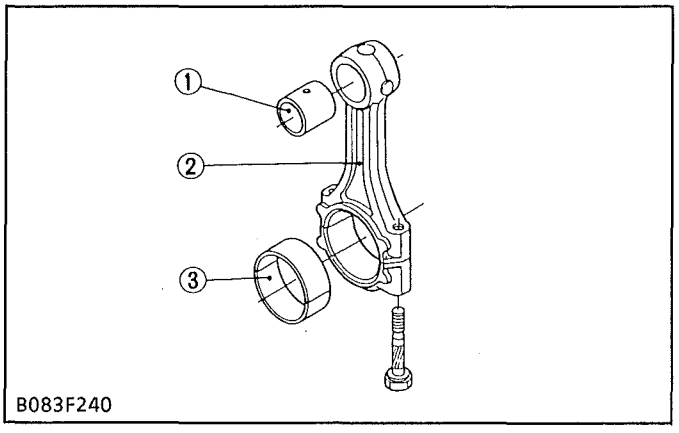

Connecting rod (2) is used to connect the piston with the crankshaft. The big end of the connecting rod has a crank pin bearing (3) (split type) and the small end has a small end bushing (1) (solid type).

(1) Small End Bushing
(2) Connecting Rod
(3) Crank pin Bearing

https://truckmanualshub.com/

(6) Camshaft and Fuel Camshaft

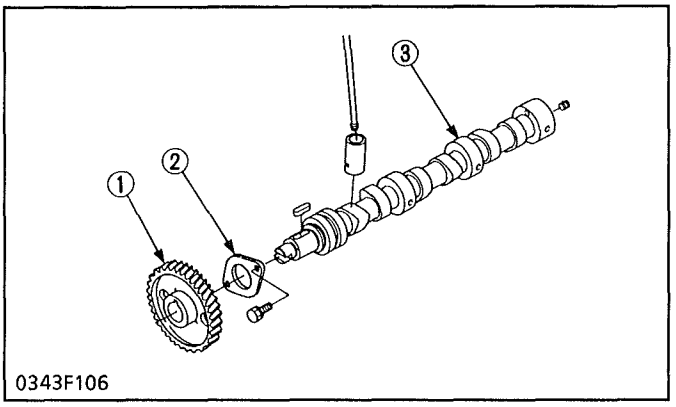

0343F106

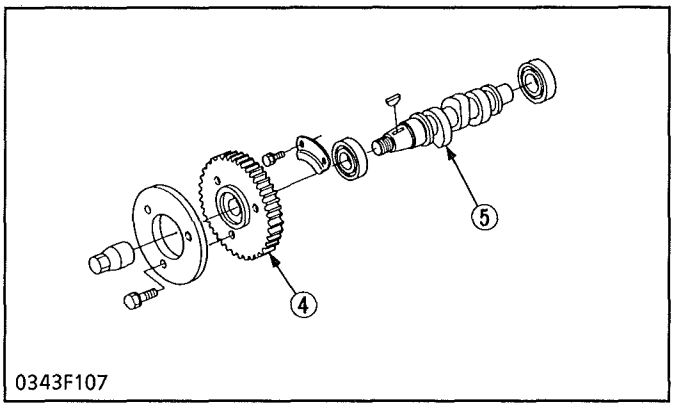

0343F107

The camshaft (3) is made of special cast iron and the journal and cam sections are chilled to resist wear. The journal sections are force-lubricated. The fuel camshaft (5) controls the reciprocating movement of the injection pump. The fuel camshaft is made of carbon steel and the cam sections are quenched and tempered to provide greater wear resistance.

(1) Cam Gear
(2) Camshaft Stopper
(3) Camshaft
(4) Injection Pump Gear
(5) Fuel Camshaft

(7) Rocker Arm

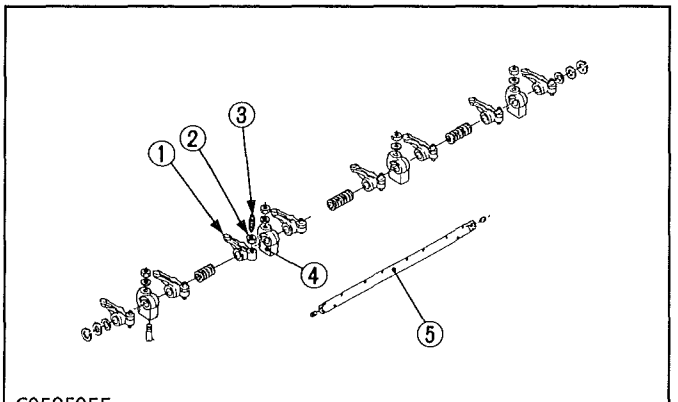

C059F055

The rocker arm assembly includes the rocker arms (1), rocker arm brackets (4) and rocker arm shaft (5) and converts the reciprocating movement of the push rods to an open/close movement of the inlet and exhaust valves.

Lubricating oil is pressurized through the bracket to the rocker arm shaft, which serves as a fulcrum so that the rocker arm and the entire system are lubricated sufficiently.

(1) Rocker Arm
(2) Lock Nut
(3) Adjusting Screw
(4) Rocker Arm Bracket
(5) Rocker Arm Shaft

https://truckmanualshub.com/

(8) Inlet and Exhaust Valves

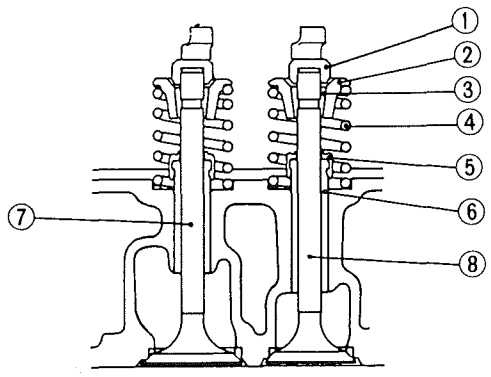

B111F003

The inlet and exhaust valves (7), (6) and their guides (6) are different from each other. Other parts, such as valve springs (4), valve spring retainers (3), valve spring collets (2), valve stem seals (5), and valve caps (1) are the same for both the inlet and exhaust valves. All contact or sliding parts are quenched and tempered to resist wear.

(1) Valve Cap
(2) Valve Spring Retainer
(3) Valve Spring Collet
(4) Valve Spring
(5) Valve Stem Seal
(6) Valve Guide
(7) Inlet Valve
(8) Exhaust Valve

(9) Valve Timing

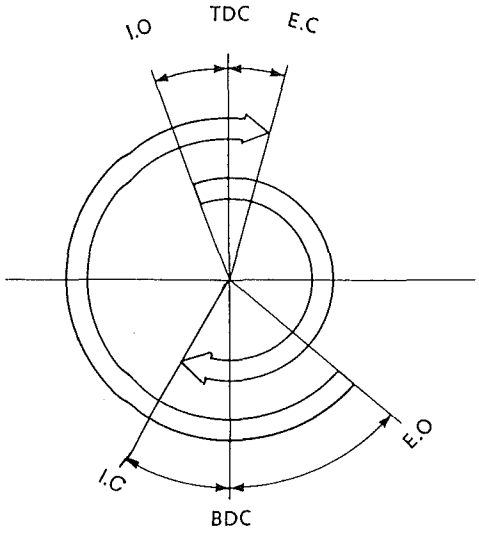

B177F101

The valve opening and closing timing is extremely important for effectively intaking air into the cylinder and sufficiently exhaust gas. An appropriate timing can be obtained by aligning the alignment marks on the crank gear and cam gear.

Inlet valve open (I.O)	0.24 rad. (14°) before T.D.C
Inlet valve close (I.C)	0.52 rad. (30°) after B.D.C.
Exhaust valve open (E.O)	0.96 rad. (55°) before B.D.C.
Exhaust valve close (E.C)	0.24 rad. (14°) after T.D.C.

https://truckmanualshub.com/

(10) Flywheel

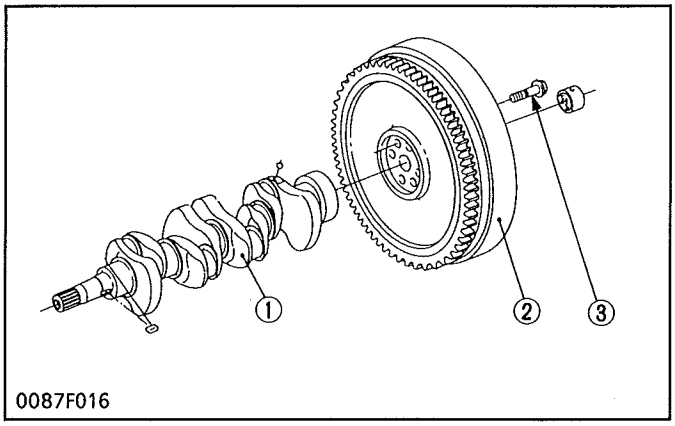

0087F016

The flywheel is connected with the crankshaft, it stores the rotating force in the combustion stroke as inertial energy to rotate the crankshaft smoothly.

The flywheel periphery is provided with marks showing fuel injection timing and top dead center.

The flywheel and crankshaft can be fixed to each other at a certain point according to the arrangement of flywheel mounting screw hole.

(1) Crankshaft
(2) Flywheel
(3) Flywheel Mounting Screw

[Markless type]

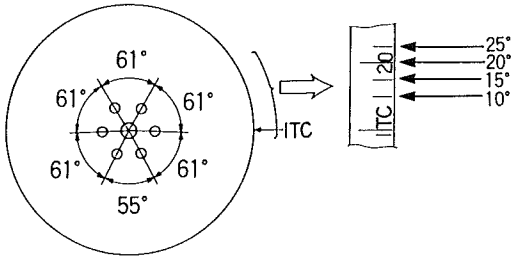

B028F024

On the circum ference of the flywheel are stamped the top dead cemter (1TC) mark for the 1st cylinder and four lines indicating every 0.087 rad. (5°) of crank angle from 0.175 rad. (10°) to 0.436 rad. (25°) before mark 1TC.

(11) Air Cleaner

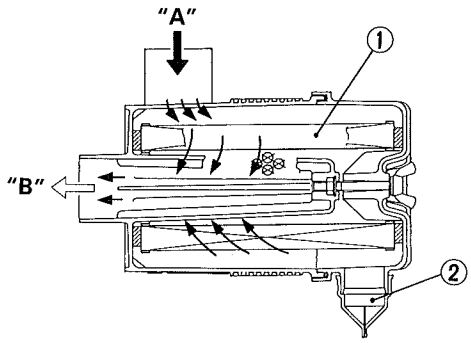

B177F102

The air cleaner is of a dry type with evacuator valve (2) for easy maintenance. The dust, while circulating in the air flow, is absorbed by the element (1) and thus prevented from entering the engine. The dust, while circulating in the air flow, is absorbed by the element (1) and thus prevented from entering the engine.

(1) Air Cleaner Element
(2) Evacuator Valve

[A] From Air Inlet
[B] Into Cylinder

https://truckmanualshub.com/

(12) Muffler

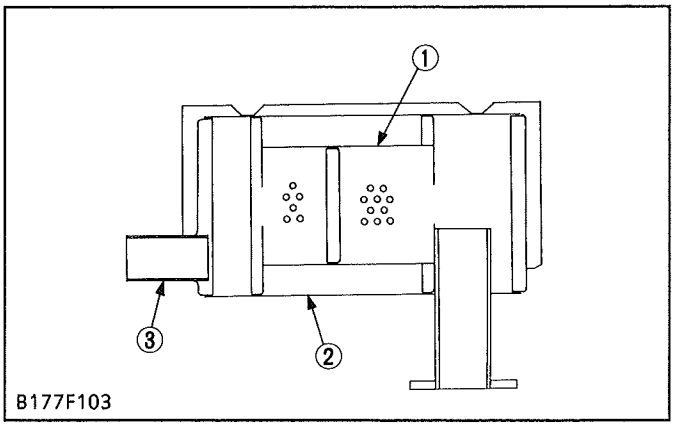

The muffler consists of an inner tube (1) with a series of holes and outer tube (2).

The exhaust noises are absorbed and dumped, while the gas pass through a series of holes on the inner tube (1).

(1) Inner Tube
(2) Outer Tube
(3) Exhaust Tube

[3] LUBRICATING SYSTEM

(1) General

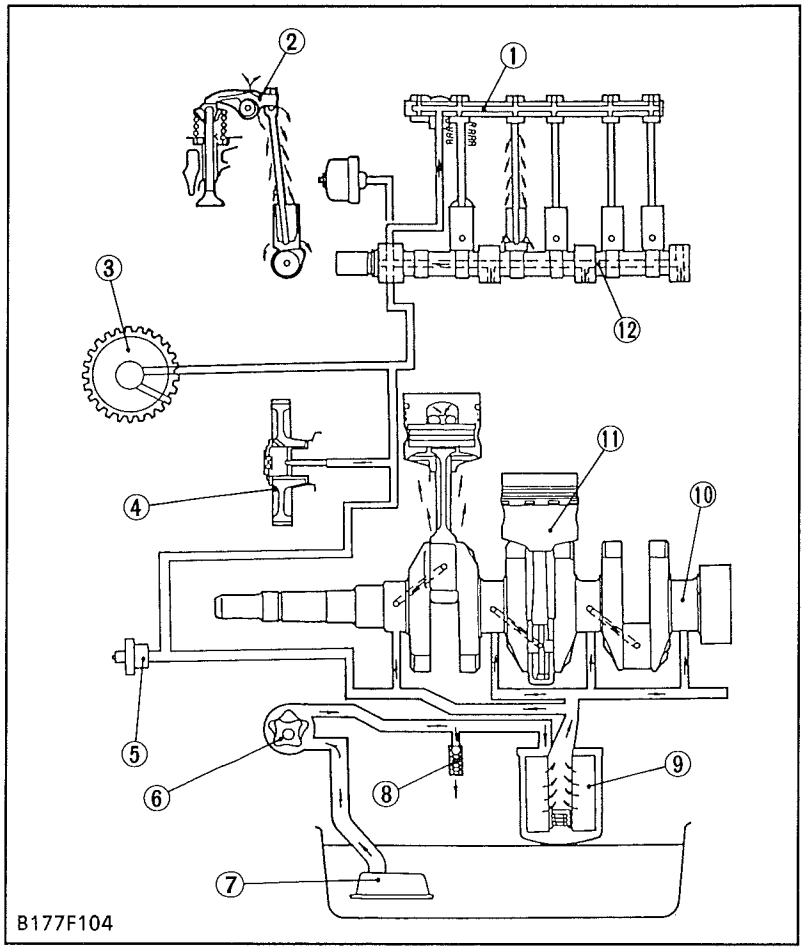

The lubricating system within this engine consists of an oil strainer, oil pump, relief valve, oil filter cartridge and oil switch.

The oil pump draws in lubricating oil from the oil pan through the oil strainer. The oil flows down to the filter cartridge, where it is further filtered.

Then the oil is force-fed to the crankshaft, connecting rods, idle gear, camshaft and rocker arm shaft and lubricates each part.

Some part of oil, splashed by the crankshaft or leaking and dropping from gaps of each part, lubricates these parts: pistons, cylinders, small ends of connecting rods, tappets, push rods, inlet and exhaust valves.

(1) Rocker Arm Shaft
(2) Rocker Arm
(3) Governor Gear
(4) Idle Gear 1
(5) Oil Pressure Switch
(6) Oil Pump
(7) Oil Strainer
(8) Relief Valve
(9) Oil Filter Cartridge
(10) Crankshaft
(11) Piston
(12) Camshaft

https://truckmanualshub.com/

(2) Oil Pump

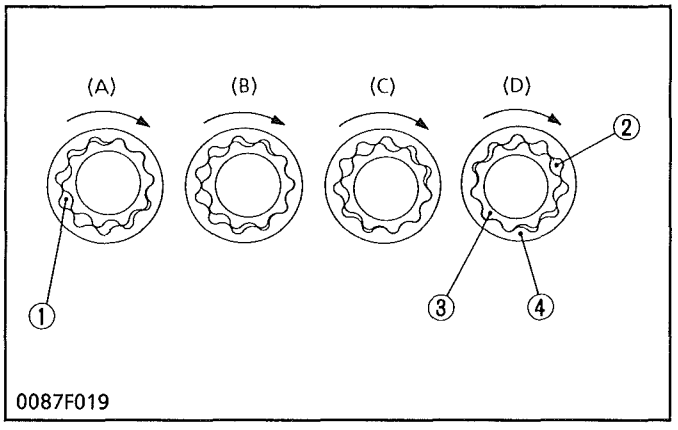

(1) Inlet
(2) Outlet
(3) Inner Rotor
(4) Outer Rotor

The oil pump in this engine is a trochoid pump.

Inside the pump body, the 10 lobe inner rotor (3) is eccentrically engaged with the 11 lobe outer rotor (4). The inner rotor is driven by the crankshaft, which in turn rotate the outer rotor.

When the inner rotor rotates, the outer rotor also rotates in the same direction.

The two rotors have differences in lobe number and center, which generates space between lobes as shown in the figure.

At position (A), there is little space between lobes in the inlet port. As the rotor rotates towards position (B), the space between the lobes becomes larger, creating a negative pressure which sucks in oil.

Outside the inlet port, as shown in position (C), the space between the lobes becomes gradually smaller, and oil pressure increases. At position (D), oil is discharged from the outlet port.

(3) Relief Valve

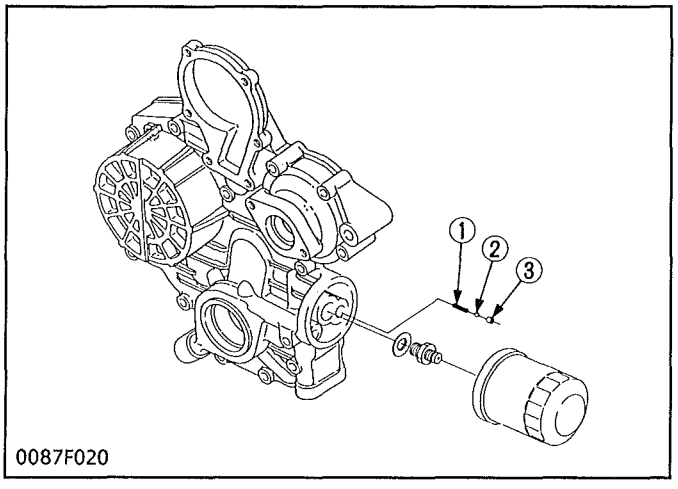

The relief valve prevents the damage of the lubricating system due to high oil pressure. This relief valve is a ball type direct acting relief valve, and is best suited for low pressures.

When oil pressure exceeds the upper limit, the ball (2) is pushed back by the pressure oil and the oil escapes.

(1) Spring
(2) Ball
(3) Valve Seat

https://truckmanualshub.com/

(4) Oil Filter Cartridge

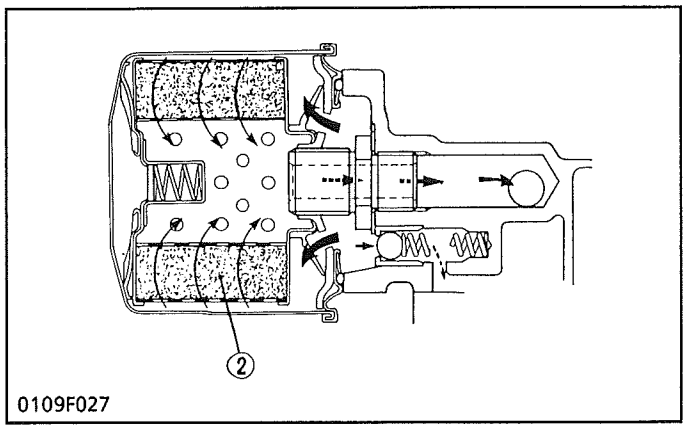

0109F027

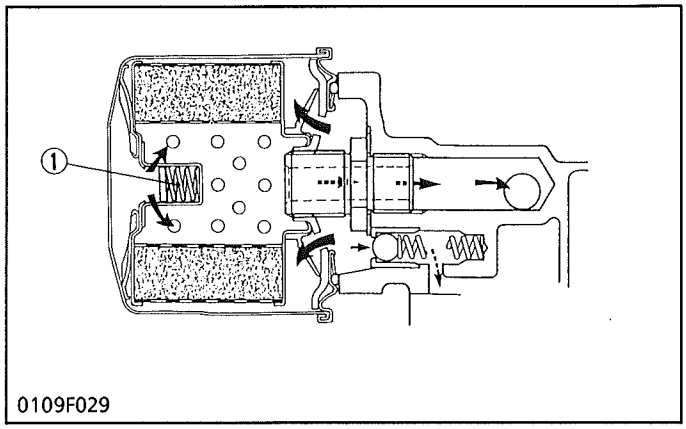

0109F029

Impurities in engine oil can cause to wear and seize components as well as impairing the physical and chemical properties of the oil itself. Impurities contained in force-fed engine oil are absorbed on the filter paper for removal as they pass through the filter element (2).

When the filter element is clogged and the oil pressure in inlet line builds up by 98 kPa (1.0 kgf/cm^2, 14 psi) more than the outlet line, the bypass valve (1) opens and the oil flows from inlet to outlet bypassing the filter element.

(1) Bypass Valve (2) Filter Element

(5) Oil Pressure Switch

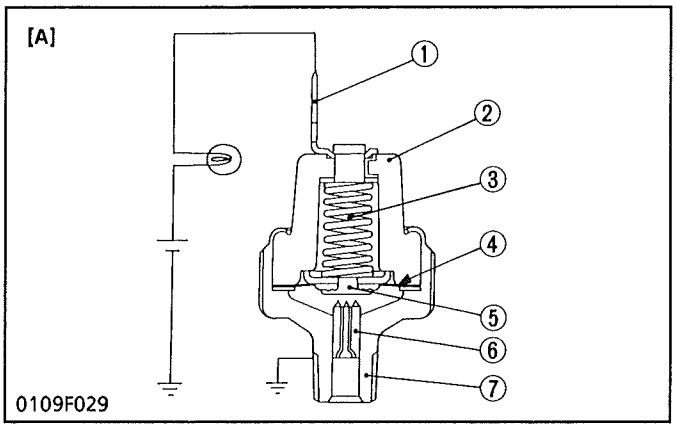

0109F029

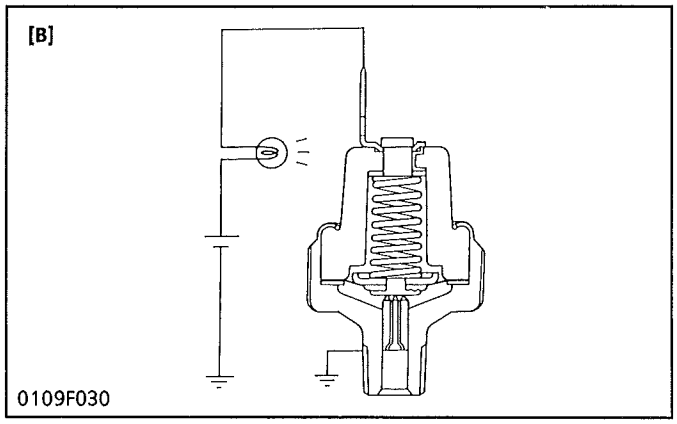

0109F030

The oil pressure switch is mounted on the cylinder-block, to warn the operator that the lubricating oil pressure is poor.

If the oil pressure falls below 49kPa (0.5 kgf/cm^2, 7 psi), the oil warning lamp will light up, warning the operator. In this case, stop the engine immediately and check the cause of pressure drop.

[A] At Proper Oil Pressure
[B] At Oil Pressures of 49 kPa (0.5 kgf/cm^2, 7 psi) or Less

(1) Terminal
(2) Insulator
(3) Spring
(4) Diaphragm
(5) Contact Rivet
(6) Contact
(7) Oil Switch Body

https://truckmanualshub.com/

[4] COOLING SYSTEM

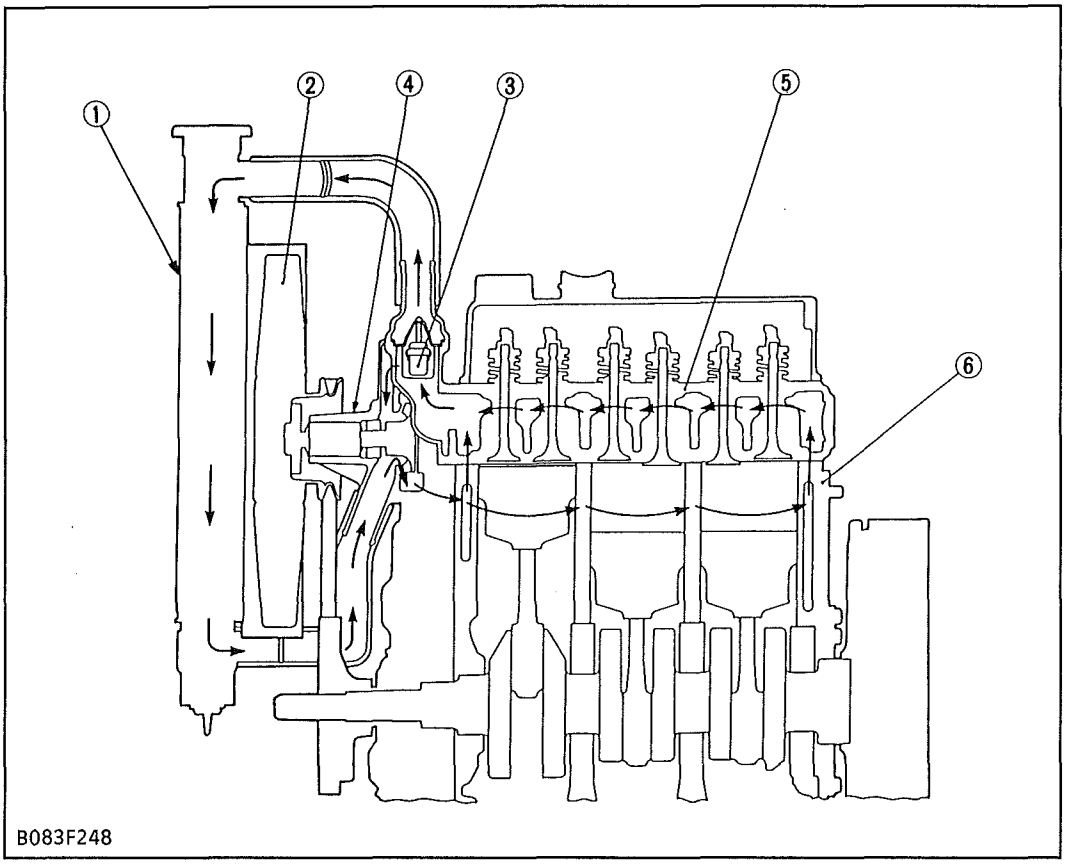

(1) Radiator
(2) Suction Fan
(3) Thermostat
(4) Water Pump
(5) Cylinder Head
(6) Cylinder Block

The cooling system consists of a radiator (1), centrifugal water pump (4), suction fan (2) and thermostat (3).

The water is cooled through the radiator core, and the fan set behind the radiator pulls cooling air through the core to improve cooling.

The water pump sucks the cooled water, forces it into the cylinder block and draws out the hot water. Then the cooling is repeated. Furthermore, to control temperature of water, a thermostat is provided in the system. When the thermostat opens, the water moves directly to radiator, but when it closes, the water moves toward the water pump through the bypass between thermostat and water pump. The opening temperature of thermostat is approx. 82°C (180°F).

(1) Water Pump

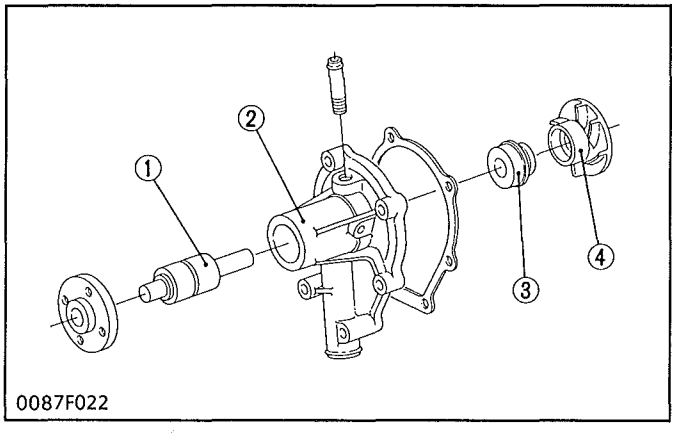

The water pump is driven by the crankshaft via a V-belt. Water cooled in the radiator is sucked into the water pump from its lower portion and is sent from the center of the water pump impeller (4) radially outward into the water jacket in the crankcase.

(1) Bearing Unit
(2) Water Pump Body
(3) Mechanical Seal
(4) Water Pump Impeller

https://truckmanualshub.com/

(2) Thermostat

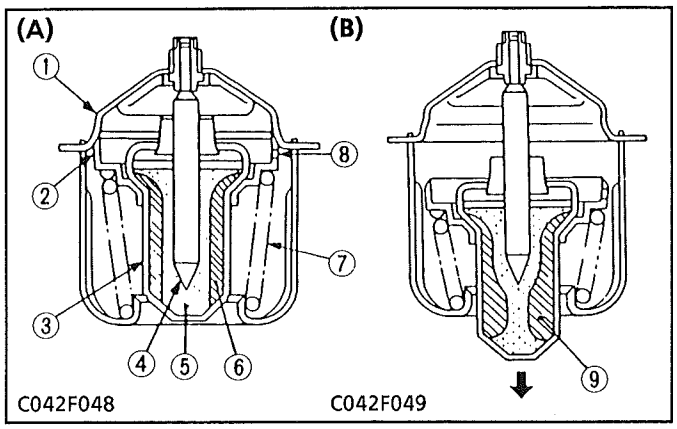

(1) Seat
(2) Valve
(3) Pellet
(4) Spindle
(5) Synthetic Rubber
(6) Wax (solid)
(7) Spring
(8) Leak Hole
(9) Wax (liquid)

The thermostat maintains the cooling water at correct temperature. KUBOTA's engine uses a wax pellet type thermostat. Wax is enclosed in the pellet. The wax is solid at low temperatures, but turns liquid at high temperatures, expands and opens the valve.

(A) At low temperatures (lower than 82°C (180°F)). As the thermostat is closed, cooling water circulates in the engine through the water return pipe without running to the radiator. Air in the water jacket escapes to the radiator side through leak hole (6) of the thermostat.

(B) At high temperatures (higher than 82°C (180°F)). When the temperature of cooling water exceeds 82°C (180°F), wax in the pellet turns liquid and expands. Because the spindle (4) is fixed, the pellet (3) is lowered, the valve (2) is separated from the seat (1), and then cooling water is sent to the radiator.

(3) Radiator

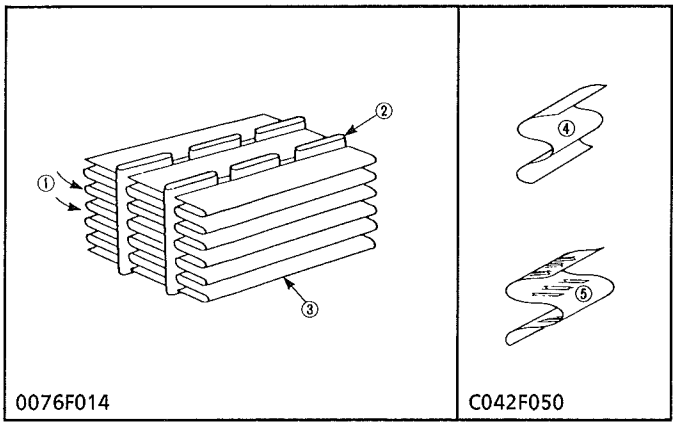

The radiator core consists of water carrying tubes and fins (3) at a right angle to the tubes (2). Heat of hot water in the tubes is radiated from the tube walls and fins. KUBOTA's engine uses corrugated fin type core which has a light weight and high heat transfer rate. Clogging is minimized by the louverless corrugated fins.

(1) Cooling Air
(2) Tube
(3) Fin
(4) Louverless Corrugated Fin
(5) Louvered Corrugated Fin

(4) Radiator Cap

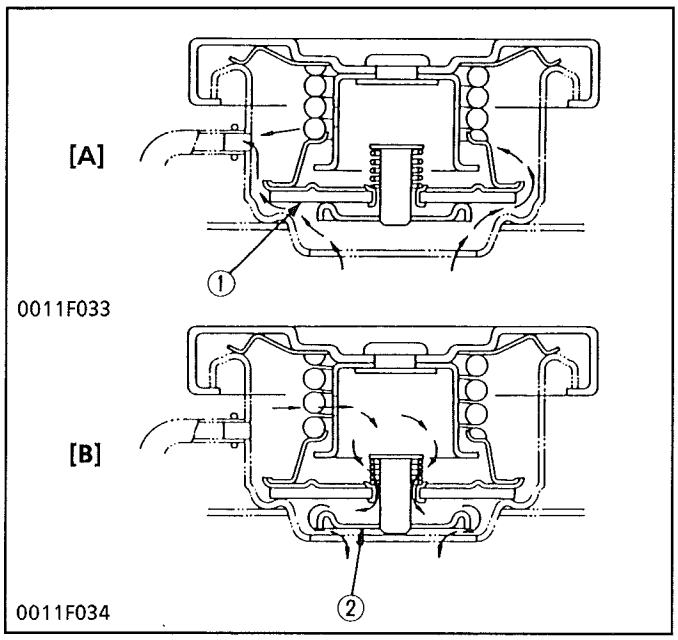

The radiator cap is for sustaining the internal pressure of the cooling system at the specified level 88 kPa (0.9 kgf/cm^2, 13 psi) when the engine is in operation. The cap consists of a pressure valve (1) a vacuum valve (2), valve springs, gasket, etc.

Cooling water is pressurized by thermal expansion of steam, and as its boiling temperature rises, generation of air bubbles will be suppressed. (Air bubbles in cooling water lowers the cooling effect.)

[A] When radiator internal pressure is high
[B] When radiator internal pressure is negative

(1) Pressure Valve
(2) Vacuum Valve

https://truckmanualshub.com/

[5] FUEL SYSTEM

(1) Fuel Line

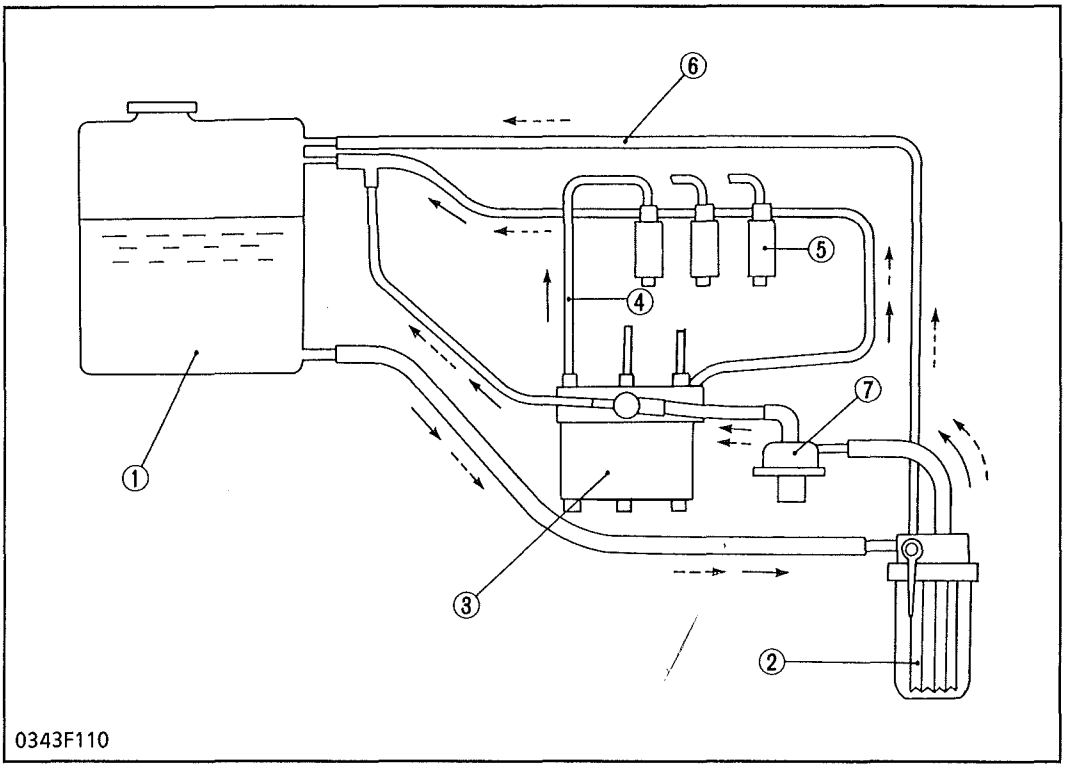

(1) Fuel Tank
(2) Fuel Filter
(3) Injection Pump
(4) Injection Pipe
(5) Injection Nozzle
(6) Fuel Overflow Pipe
(7) Fuel Feed Pump

Fuel from the fuel tank (1) passes through the fuel filter (2), and then enters the injection pump (3) after impurities such as dirt, water, etc. are removed.

The fuel pressurized by the injection pump to the opening pressure (13.73 to 14.71 MPa, 140 to 150 kgf/cm^2, 1991 to 2062 psi), of the injection nozzle (5) is injected into the combustion chamber.

Part of the fuel fed to the injection nozzle (5) lubricates the moving parts of the plunger inside the nozzle, then returns to the fuel tank through the fuel overflow pipe (6) from the upper part of the nozzle holder.

(2) Fuel Filter

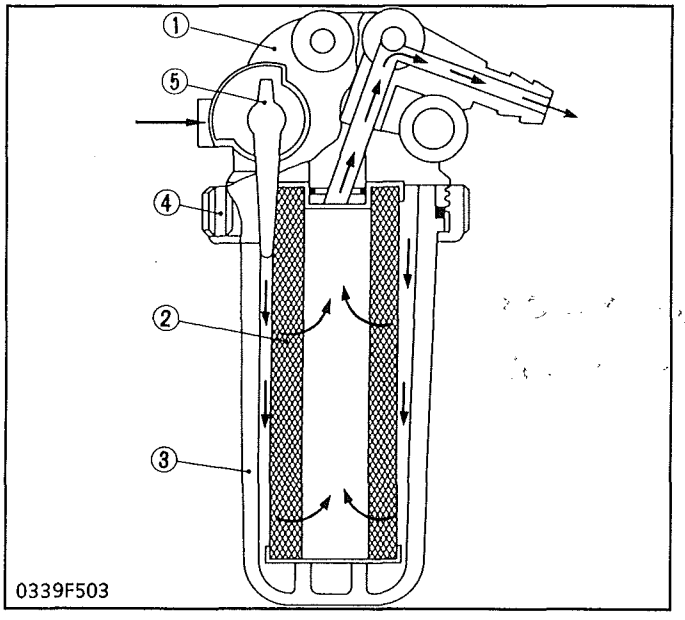

The fuel filter is installed between the fuel tank and fuel lift pump, and serves to remove dirt and impurities from the fuel.

Fuel from the fuel tank enters the outside of the filter element (9) and passes through the filter element under its own pressure. As it passes through, the dirt and impurities in the fuel are filtered out, allowing only clean fuel to enter the interior of the filter element. The fuel exits from the outlet of the cock body (6) and is sent to the fuel lift pump.

Type of filter element	Accodion-pleated paper type
Material of filter element	Cotton fiber
Filter mesh	10 to 20 μm 400 to 800 μin.

(1) Cock Body
(2) Filter Element
(3) Filter Cup
(4) Retaining Ring
(5) Fuel Cock

https://truckmanualshub.com/

(3) Fuel Feed Pump

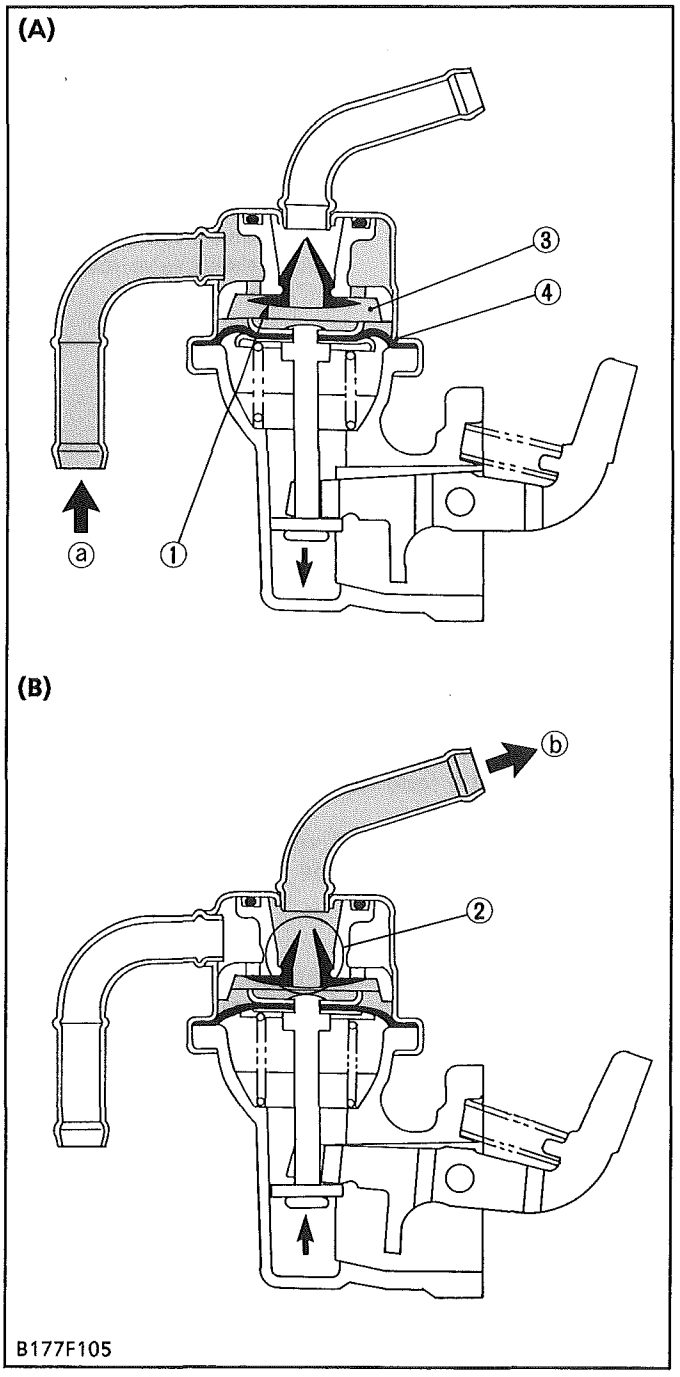

Filtered fuel is fed to the injection pump by the fuel lift pump. The fuel lift pump operates as shown in the figure. Power is applied to the tappet by an eccentric movement on the fuel camshaft. As the fuel camshaft rotates, the eccentric movement causes the tappet to move up and down. The tappet is linked to a flexible diaphragm (4) via the pull rod.

When the diaphragm is pulled down, a low vacuum or low pressure area is created above the diaphragm. This causes atmospheric pressure in the fuel tank to force fuel into the fuel lift pump. The inlet valve (1) opens to admit fuel into the chamber (3).

When the diaphragm is pushed up, pressure is created in the area above the diaphragm. This pressure closes the inlet valve and opens the outlet valve (2), forcing fuel from the pump through the fuel pipe to the injection pump.

[A] Inlet Stroke	**[B] Discharge Stroke**
(a) From Fuel Filter	**(b) To Injection Pump**
(1) Inlet Valve	(3) Chamber
(2) Outlet Valve	(4) Diaphragm

https://truckmanualshub.com/

(4) Injection Pump

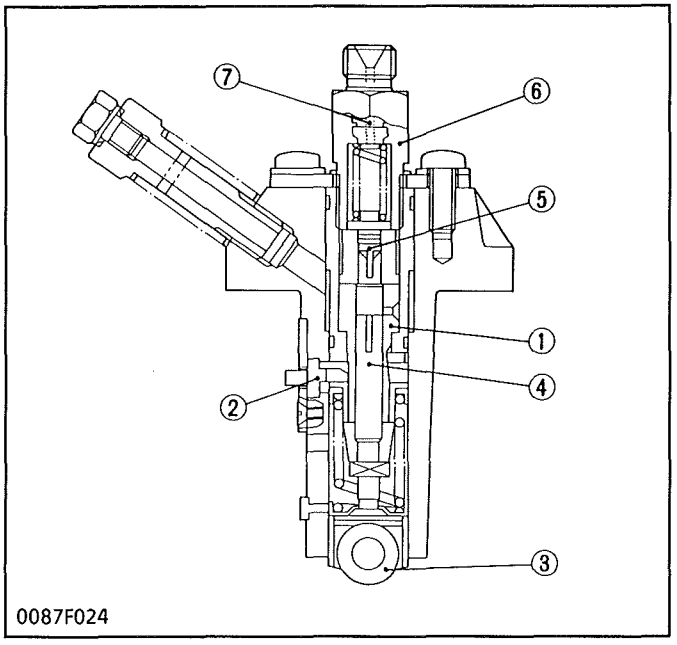

0087F024

A Bosch MD type mini pump is used for the injection pump. It is small, lightweight and easy to handle.

The plunger (4) with a left-hand lead recipro-cates via the tappet roller (3) by means of the camshaft fuel cam, causing the fuel to be delivered into the injection nozzle.

(1) Cylinder
(2) Control Rack
(3) Tappet Roller
(4) Plunger
(5) Delivery Valve
(6) Delivery Valve Holder
(7) Dumping Valve

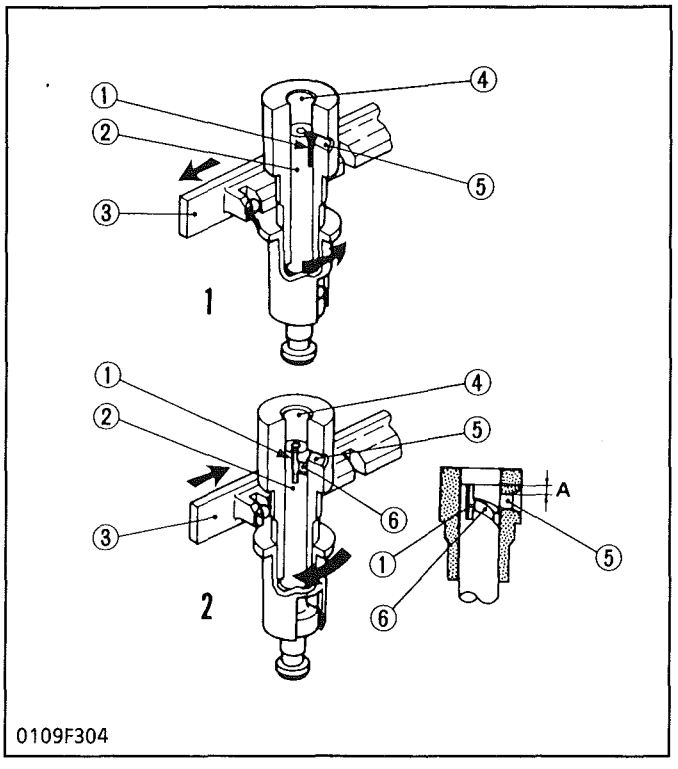

0109F304

1. No fuel delivery

At the engine stop position of the control rack (3), the lengthwise slot (1) on the plunger (2) aligns with the feed hole (5). And the delivery chamber (4) is led to the feed hole during the entire stroke of the plunger.

The pressure in the delivery chamber does not build up and no fuel can be forced to the injection nozzle.

2. Fuel delivery

The plunger (2) is rotated (See figure) by the control rack (3). When the plunger is pushed up, the hole (5) is closed. The pressure in the delivery chamber (4) builds up and forcefeeds the fuel to the injection nozzle until the control groove (6) meets the feed hole (5).

The amount of the fuel corresponds to the distance "A".

(1) Slot
(2) Plunger
(3) Control Rack
(4) Delivery Chamber
(5) Feed Hole
(6) Control Groove

https://truckmanualshub.com/

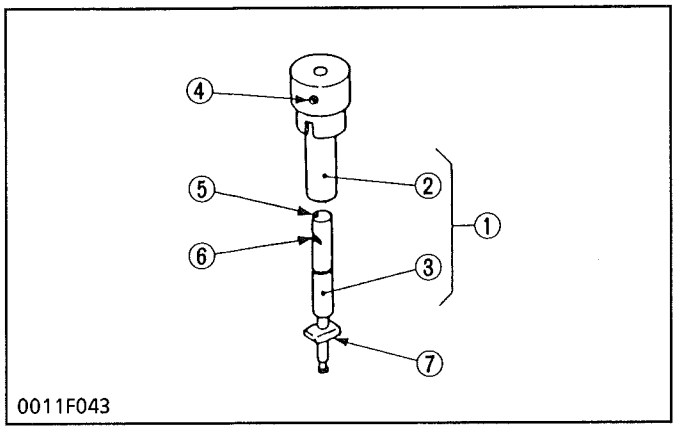

0011F043

Pump Element

The pump element (1) is consist of the plunger (3) and cylinder (2).

The sliding surfaces are super-precision machined to maintain injection pressure at engine low speeds. Since the driving face (7) fits in the control sleeve, the plunger (3) is rotated by the movement of the control rack to increase or decrease of fuel delivery.

As described above, the plunger (3) is machined to have the slot (5) and the control groove (6).

(1) Pump Element
(2) Cylinder
(3) Plunger
(4) Feed Hole
(5) Slot
(6) Control Groove
(7) Driving Face

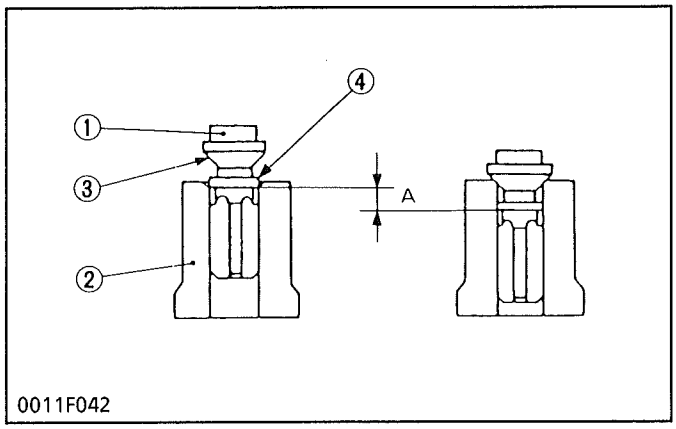

0011F042

(1) Delivery Valve
(2) Delivery Valve Seat
(3) Seat Surface
(4) Relief Plunger

Delivery Valve

The delivery valve consists of the delivery valve (1) and delivery valve seat (2).

The delivery valve performs the following functions.

1. Reverse flow preventing function

If the fuel flow reverse from the injection nozzle side when the plunger lowers, the time lag between the next delivery start and the nozzle injection start increases. To avoid this, the delivery chamber to injection pipe interruption by delivery valve (1) prevents this reverse flow, thus keeping fuel always filled in the nozzle and pipe.

2. Suck-back function

After completing the fuel delivery, the delivery valve lowers, and the relief plunger (4) end contacts the delivery valve seat (2). The valve further lowers until its seat surface (3) seats firmly the delivery valve seat. During this time, the amount of fuel corresponding to (A) is sucked back from inside the injection pipe, the pressure inside the pipe is reduced, thus leading to an improved injection shut off and preventing after leakage dribbling.

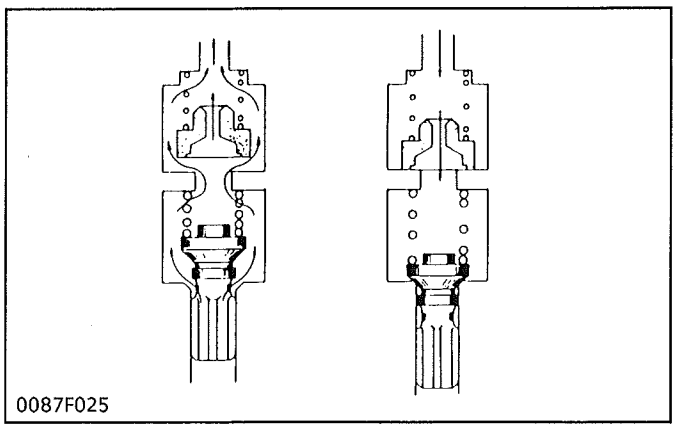

0087F025

Dumping Valve

1. At fuel injection

Since dumping valve is pushed up to press the spring, fuel is pressure-fed to injection nozzle the same as without dumping valve.

2. At suck-back

At suck-back by delivery valve after fuel injection fuel returns through dumping valve orifice Generally second injection is apt to occur by reflex pressure due to reaction of sudden pressure drop when changing into suck-back by delivery valve from high injection pressure. As a result of preventing this second injection perfectly by dumping valve and dissolving nozzle clogging, durability of injection nozzle is improved.

https://truckmanualshub.com/

(5) Injection Nozzle

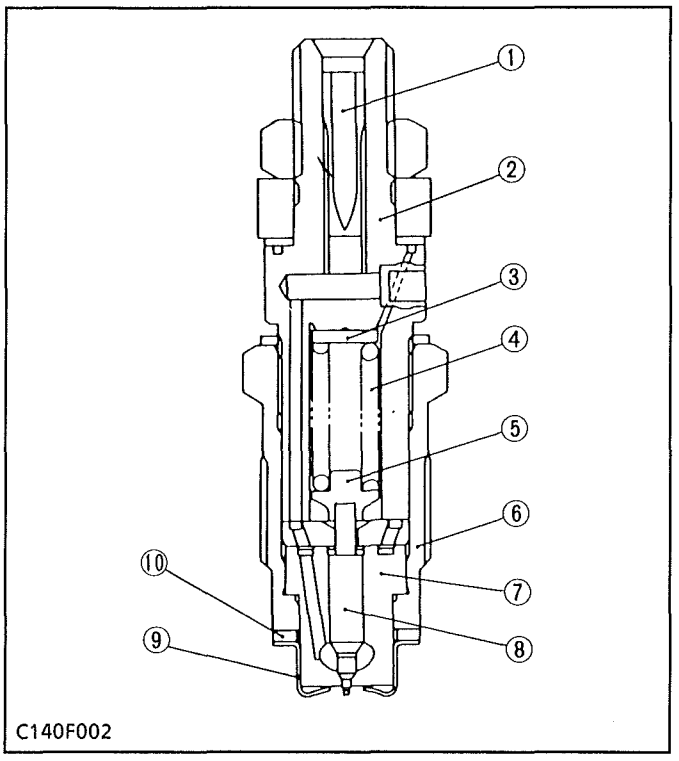

This nozzle is of flat-cut-provided double throttle type. This type of nozzle is designed to control the injection quantity when the lift rate is low at start of the injection quantity when the lift rate is low at start of the injection, and to cut down on the knocking sound caused by excessive fuel injection by giving the needle valve section more taper than before to prevent the rapid increase in the injection quantity when the initial injection turns into the full-force injection.

Also, employed to prevent the injection quantity loss in the throttle section caused by carbon, the flat cut provided at the needle valve section helps the throttle withstand long use and reduce as much knocking sound as when it was new.

The heat seal is employed to improve the durability and reliability of the nozzle.

The injection pressure is 13.73 to 14.71 MPa (140 to 150 kgf/cm^2, 1991 to 2133 psi), and is adjusted with adjusting washers (2).

(1) Bar Filter
(2) Nozzle Holder Body
(3) Adjusting Washer
(4) Nozzle Spring
(5) Push Rod
(6) Retaining Nut
(7) Nozzle Body
(8) Needle Valve
(9) Heat Seal
(10) Packing

(6) Governor

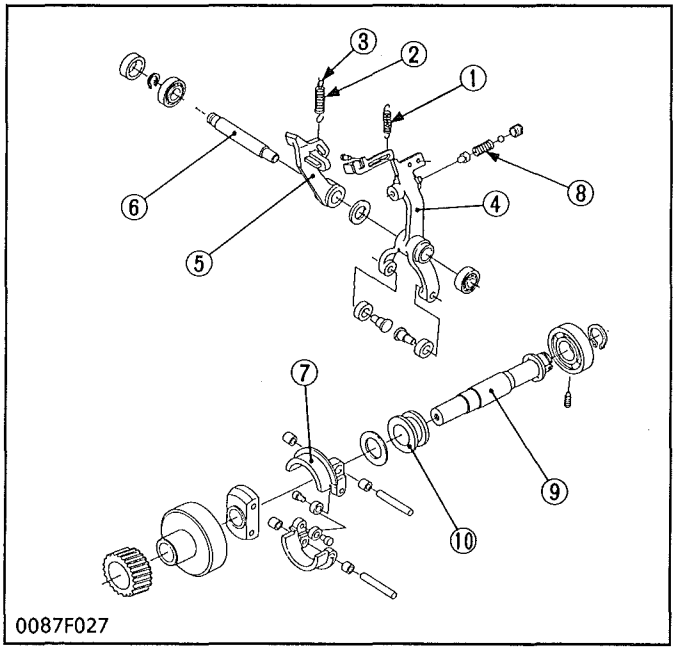

(1) Start Spring
(2) Governor Spring 1
(3) Governor Spring 2
(4) Fork Lever 1
(5) Fork Lever 2
(6) Fork Lever Shaft
(7) Flyweight
(8) Torque Spring
(9) Governor Shaft
(10) Governor Sleeve

This mechanism maintains engine speed at a constant level even under fluctuating loads, provides stable idling and regulates maximum engine speed by controlling the fuel injection rate.

This engine uses a mechanical governor that controls the fuel injection rate at all speed ranges (from idling to maximum speed) by utilizing the balance between the flyweight's centrifugal force and spring tension.

A governor shaft for monitoring engine speed is independent of the injection pump shaft and rotates at twice the speed of conventional types, providing better response to load fluctuation and delivering greater engine output.

https://truckmanualshub.com/

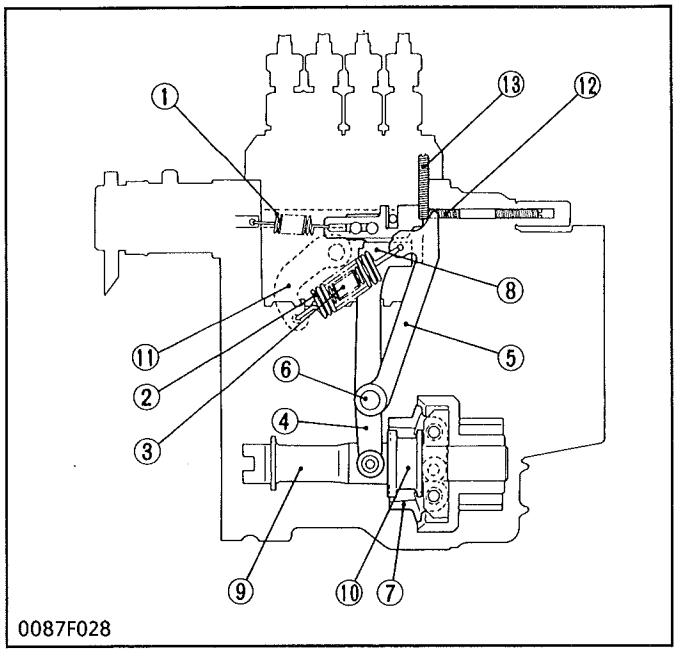

(11) Speed Control Lever
(12) Idle Limit Spring
(13) Fuel Limit Adjust Bolt

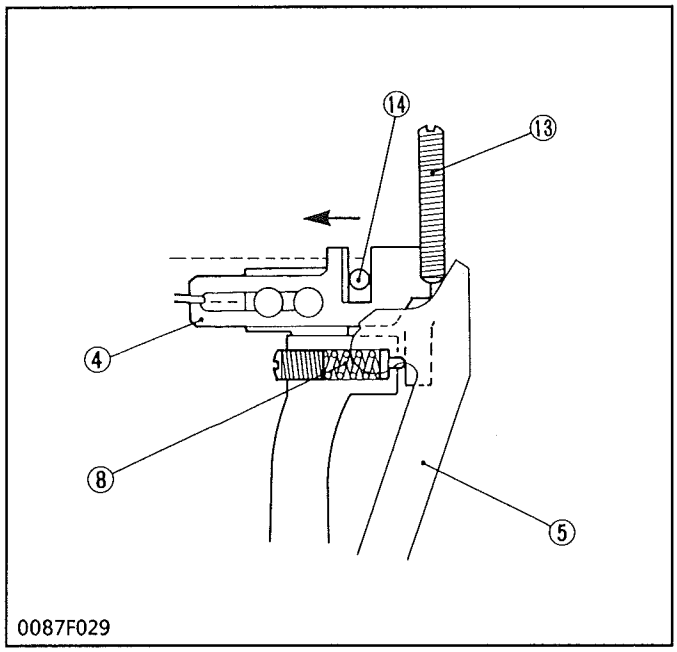

(14) Control Rack Pin

At start

As no centrifugal force is applied to flyweight (7), low tension of start spring (1) permits control rack to move to the starting position, supplying the amount of fuel required to start the engine.

At idling

Setting speed control lever (11) to the idling position during engine rotation permits the low tension of governor spring 2 (3), start spring (1) and idle limit spring (12) to balance the centrifugal force of flyweight (7) without activating high tension governor spring 1 (2). In this way, the fuel injection rate can be controlled to ensure stable idling.

At high speed running with overload

Governor spring 1 (2) and 2 (3) control the fuel injection rate. To maintain the required engine speed, fuel is supplied according to the speed control lever setting and load by balancing the tension of governor springs 1 and 2 with the centrifugal force of flyweight (7).

In addition, idle limit spring (12) provides stable engine rotation.

During overload

At load increases, the engine speed decreases, reducing the flyweight's centrifugal force. Governor springs 1 (2) and 2 (3), therefore, pull fork levers 1 (4) and 2 (5), increasing the fuel injection rate and maintaining engine speed. If engine speed decreases due to a further increase in load, fork lever 2 (5) will come in contact with the fuel limit bolt, stopping a further increase in the fuel injection rate.

Torque spring (8) incorporated in fork lever 1 (4) moves the lever in the direction of fuel injection rate increase, thereby boosting torque and providing greater engine output.

https://truckmanualshub.com/

https://truckmanualshub.com/

SERVICING

CONTENTS

TROUBLESHOOTING 1-S1
SERVICING SPECIFICATIONS 1-S4
TIGHTENING TORQUES 1-S10
CHECKING, DISASSEMBLING AND SERVICING 1-S11
[1] SEPARATING THE ENGINE 1-S11
[2] ENGINE BODY 1-S17
CHECKING AND ADJUSTING 1-S17
DISASSEMBLING AND ASSEMBLING 1-S19
(1) Cylinder Head and Valve 1-S19
(2) Timing Gears and Camshaft 1-S23
(3) Connecting Rod and Piston 1-S27
(4) Crankshaft 1-S28
SERVICING 1-S30
(1) Cylinder Head and Valves 1-S30
(2) Timing Gears and Camshaft 1-S35
(3) Piston and Connecting Rod 1-S37
(4) Crankshaft 1-S39
(5) Cylinder 1-S43
[3] LUBRICATING SYSTEM 1-S44
CHECKING 1-S44
SERVICING 1-S44
(1) Oil Pump 1-S44
[4] COOLING SYSTEM 1-S45
CHECKING AND ADJUSTING 1-S45
(1) Fan Belt 1-S45
(2) Thermostat 1-S45
(3) Radiator 1-S46
DISASSEMBLING AND ASSEMBLING 1-S46
[5] FUEL SYSTEM 1-S47
CHECKING AND ADJUSTING 1-S47
(1) Injection Pump 1-S47
(2) Injection Nozzle 1-S48
DISASSEMBLING AND ASSEMBLING 1-S49
(1) Injection Pump 1-S49
(2) Injection Nozzle 1-S50

https://truckmanualshub.com/

https://truckmanualshub.com/

TROUBLESHOOTING

Symptom	Probable Cause	Solution	Reference Page
Engine Does Not Start	• No fuel	Replenish fuel	–
	• Air in the fuel system	Vent air	G-25
	• Water in the fuel system	Replace fuel and repair or replace fuel system	–
	• Fuel pipe clogged	Clean	–
	• Fuel filter clogged	Clean or replace	G-18, G-22
	• Excessive high viscosity of fuel or engine oil at low temperature	Use the specified fuel or engine oil	–
	• Fuel with low cetane number	Use the specified fuel	–
	• Fuel leak due to loose injection pipe retaining nut	Tighten nut	1-S19
	• Incorrect injection timing	Adjust	1-S47
	• Fuel camshaft worn	Replace	1-S26
	• Injection nozzle clogged	Clean	1-S48
	• Injection pump malfunctioning	Repair or replace	1-S24, 1-S49
	• Fuel lift pump malfunctioning	Replace	1-S23
	• Seizure of crankshaft, camshaft, piston, cylinder or bearing	Repair or replace	1-S24, 1-S26 1-S29, 1-S43
	• Compression leak from cylinder	Check compression pressure	1-S17
	• Improper valve seat alignment, valve spring broken, valve seized	Repair or replace	1-S31
	• Improper valve timing	Correct or replace timing gear	1-S26, 1-S35
	• Piston ring and cylinder worn	Correct or replace	1-S38, 1-S43
	• Excessive valve clearance	Adjust	1-18
Engine Revolution Is Not Smooth	• Fuel filter clogged or dirt	Clean or replace	G-18, G-22
	• Air cleaner clogged	Clean or replace	G-18
	• Fuel leak due to loose injection pipe retaining nut	Tighten nut	1-S19
	• Injection pump malfunctioning	Repair or replace	1-S24, 1-S49
	• Incorrect nozzle opening pressure	Adjust	1-S48
	• Injection nozzle stuck or clogged	Repair or replace	1-S20, 1-S50
	• Fuel over flow pipe clogged	Clean	–
	• Governor malfunctioning	Repair	1-S25
Either White or Blue Exhaust Gas Is Observed	• Excessive engine oil	Reduce to the specified level	1-S11
	• Piston ring and liner worn or stuck	Repair or replace	1-S28, 1-S38
	• Incorrect injection timing	Adjust	1-S47
	• Deficient compression	Check comp-ression pressure	1-S17

https://truckmanualshub.com/

Symptom	Probable Cause	Solution	Reference Page
Either Black or Dark Gray Exhaust Gas Is Observed	• Overload	Lessen the load	–
	• Low grade fuel used	Use the specified fuel	–
	• Fuel filter clogged	Clean or replace	G-18, G-22
	• Air cleaner clogged	Clean or replace	G-18
Deficient Output	• Incorrect injection timing	Adjust	1-S47
	• Engine's moving parts seem to be seizing	Repair or replace	–
	• Uneven fuel injection	Repair or replace injection pump	1-S24, 1-S49
	• Deficient nozzle injection	Repair or replace nozzle	1-S20, 1-S50
	• Compression leak	Check comp-ression pressure	1-S17
Excessive Lubricant Oil Consumption	• Piston ring's gap facing the same direction	Shift ring gap direction	1-S28
	• Oil ring worn or stuck	Replace	1-S28, 1-S38
	• Piston ring groove worn	Replace piston	1-S38
	• Valve stem and guide worn	Replace	1-S22, 1-S32
Fuel Mixed into Lubricant Oil	• Injection pump's plunger worn	Replace pump element or pump	1-S24, 1-S49
	• Fuel lift pump broken	Replace	1-S23
Water Mixed into Lubricant Oil	• Head gasket defective	Replace	1-S21
	• Cylinder block or cylinder head flawed	Replace or repair	1-S21, 1-S30 1-S43
Low Oil Pressure	• Engine oil insufficient	Replenish	1-S11
	• Oil strainer clogged	Clean	1-S26
	• Oil filter cartridge clogged	Replace	G-12
	• Relief valve stuck with dirt	Clean	1-M8
	• Relief valve spring weaken or broken	Replace	1-M8
	• Excessive oil clearance of crankshaft bearing	Replace	1-S40
	• Excessive oil clearance of crank pin bearing	Replace	1-S40
	• Oil passage clogged	Clean	–
	• Different type of oil	Use the specified type of oil	
	• Oil pump defective	Repair or replace	1-S23,1-S44
High Oil Pressure	• Different type of oil	Use the specified type of oil	
	• Relief valve defective	Replace	1-M8

https://truckmanualshub.com/

Symptom	Probable Cause	Solution	Reference Page
Engine Overheated	• Engine oil insufficient	Replenish	1-S11
	• Fan belt broken or tensioned improperly	Replace or adjust	G-19, 1-S45
	• Cooling water insufficient	Replenish	–
	• Radiator net and radiator fin clogged with dust	Clean	–
	• Inside of radiator corroded	Clean or replace	G-23
	• Cooling water flow route corroded	Clean or replace	G-23
	• Radiator cap defective	Replace	1-S46
	• Radiator hose damaged	Replace	G-20, 1-S13
	• Overload running	Loosen the load	–
	• Head gasket defective	Replace	1-S21
	• Incorrect injection timing	Adjust	1-S43
	• Unsuitable fuel used	Use the specified fuel	–

https://truckmanualshub.com/

SERVICING SPECIFICATIONS

ENGINE BODY

Cylinder Head

Item	Factory Specification	Allowable Limit
Cylinder head surface flatness	–	0.05 mm 0.0019 in.
Top clearance	0.55 to 0.70 mm 0.0217 to 0.0276 in.	–
Compression pressure	2.84 to 3.23 MPa 29 to 33 kgf/cm^2 412 to 469 psi	2.25 MPa 23 kgf/cm^2 327 psi
Variance among cylinders		10% or less

Valves

Valve clearance (Cold)		0.145 to 0.185 mm 0.0057 to 0.0072 in.	–
Valve seat width	IN.	2.12 mm 0.0835 in.	–
	EX.	2.12 mm 0.0835 in.	–
Valve seat angle	IN.	1.047 rad. 60°	–
	EX.	0.785 rad. 45°	–
Valve face angle	IN.	1.047 rad. 60°	–
	EX.	0.785 rad. 45°	–
Valve recessing		-0.05 to 0.15 mm 0.002 to 0.006 in.	0.4 mm 0.016 in.
Clearance between valve stem and valve guide		0.035 to 0.065 mm 0.0014 to 0.0025 in.	0.1 mm 0.0039 in.
Valve stem O.D.		6.960 to 6.975 mm 0.2741 to 0.2746 in.	–
Valve guide I.D.		7.010 to 7.025 mm 0.2760 to 0.2765 in.	–

Valve Timing

Intake valve	Open	0.24 rad. (14°) before T.D.C.	–
	Close	0.52 rad. (30°) after B.D.C.	–
Exhaust valve	Open	0.96 rad. (55°) before B.D.C.	–
	Close	0.24 rad. (14°) after T.D.C.	–

https://truckmanualshub.com/

Valve Spring

Item	Factory Specification	Allowable Limit
Free length	37.0 to 37.5 mm 1.457 to 1.476 in.	36.5 mm 1.437 in.
Setting load / setting length	117.4 N/31.0 mm 11.97 kgf/31.0 mm 26.4 lbs/1.22 in.	100.0 N/31.0 mm 10.2 kgf/31.0 mm 22.5 lbs/1.22 in.
Tilt	–	1.0 mm 0.039 in.

Rocker Arm

Clearance between rocker arm shaft and rocker arm	0.016 to 0.045 mm 0.0006 to 0.0018 in.	0.10 mm 0.0039 in.
Rocker arm shaft O.D.	11.973 to 11.984 mm 0.4714 to 0.4718 in.	–
Rocker arm I.D.	12.000 to 12.018 mm 0.4724 to 0.4731 in.	–

Tappet

Clearance between tappet and guide	0.020 to 0.062 mm 0.0008 to 0.0024 in.	0.07 mm 0.0028 in.
Tappet O.D.	19.959 to 19.980 mm 0.7858 to 0.7866 in.	–
Tappet guide I.D.	20.000 to 20.021 mm 0.7874 to 0.7882 in.	–

Camshaft

Camshaft side clearance		0.07 to 0.22 mm 0.0028 to 0.0087 in.	0.3 mm 0.0118 in.
Camshaft alignment		–	0.01 mm 0.0004 in.
Cam height	IN.	28.80 mm 1.1339 in.	28.75 mm 1.1319 in.
	EX.	29.00 mm 1.1417 in.	28.95 mm 1.1398 in.
Oil clearance of camshaft		0.050 to 0.091 mm 0.0020 to 0.0036 in.	0.12 mm 0.0047 in.
Camshaft journal O.D.		35.934 to 35.950 mm 1.4147 to 1.4154 in.	
Camshaft bearing I.D.		36.000 to 36.025 mm 1.4173 to 1.4183 in.	

https://truckmanualshub.com/

Timing Gear

Item	Factory Specification	Allowable Limit
Timing gear backlash		
Crank gear – Idle gear 1	0.032 to 0.115 mm 0.0013 to 0.0045 in.	0.15 mm 0.0059in.
Idle gear 1 – Cam gear	0.036 to 0.114 mm 0.0014 to 0.0045 in.	0.15 mm 0.0059in.
Idle gear 1 – Injection pump gear	0.034 to 0.116 mm 0.0013 to 0.0046 in.	0.15 mm 0.0059in.
Injection pump gear – Governor gear	0.030 to 0.117 mm 0.0012 to 0.0046 in.	0.15 mm 0.0059in.
Clearance between idle gear shaft and idle gear bushing		
Idle gear 1	0.020 to 0.054 mm 0.0008 to 0.0021 in.	0.10 mm 0.0039 in.
Idle gear bushing I.D.	26.000 to 26.021 mm 1.0236 to 1.0244 in.	0.10 mm 0.0039 in.
Idle gear shaft 1 O.D.	25.967 to 25.980 mm 1.0223 to 1.0228 in.	–
Idle gear 2	0.020 to 0.054 mm 0.0008 to 0.0021 in.	0.10 mm 0.0039 in.
Idle gear bushing I.D.	26.000 to 26.021 mm 1.0236 to 1.0244 in.	–
Idle gear shaft 2 O.D.	25.967 to 25.980 mm 1.0223 to 1.0228 in.	–
Idle gear side clearance		
Idle gear 1	0.20 to 0.51 mm 0.0079 to 0.0200 in.	0.8 mm 0.0315 in.
Idle gear 2	0.20 to 0.51 mm 0.0079 to 0.0200 in.	0.8 mm 0.0315 in.

Piston, Piston Ring

Piston Pin Bore		22.000 to 22.013 mm 0.8661 to 0.8687 in.	22.03 mm 0.8673 in.
Clearance between compression ring 2 and ring groove	D905-D10 D1005-D10	0.085 to 0.112 mm 0.0033 to 0.0044 in.	0.20 mm 0.0079 in.
	D1105-D10	0.095 to 0.112 mm 0.0037 to 0.0048 in.	
Clearance between oil ring and ring groove		0.020 to 0.055 mm 0.0008 to 0.0021 in.	0.15 mm 0.0059 in.

https://truckmanualshub.com/

Piston, Piston Ring (Continued)

Item		Factory Specification	Allowable Limit
Ring gap			
Compression ring 1	D905-D10 D1005-D10	0.25 to 0.40 mm 0.0098 to 0.0157 in.	1.25 mm 0.492 in.
	D1105-D10	0.30 to 0.45 mm 0.0118 to 0.0177 in.	
Compression ring 2	D905-D10 D1005-D10	0.25 to 0.40 mm 0.0098 to 0.0157 in.	1.25 mm 0.492 in.
	D1105-D10	0.30 to 0.45 mm 0.0118 to 0.0177 in.	
Oil ring	D905-D10 D1005-D10	0.25 to 0.40 mm 0.0098 to 0.0157 in.	1.25 mm 0.492 in.
	D1105-D10	0.25 to 0.40 mm 0.0098 to 0.0157 in.	

Connecting Rod

Connecting rod alignment	–	0.05 mm 0.0020 in.
Clearance between piston pin and small end bushing	0.014 to 0.038 mm 0.0006 to 0.0015 in.	0.15 mm 0.0059 in.
Piston pin O.D.	22.002 to 22.011 mm 0.8662 to 0.8666 in.	–
Small end bushing I.D.	22.025 to 22.040 mm 0.8671 to 0.8677 in.	–

Crankshaft

Crankshaft alignment	–	0.02 mm 0.0008 in.
Oil clearance between crankshaft and crankshaft bearing 1	0.034 to 0.114 mm 0.0013 to 0.0045 in.	0.2 mm 0.0079 in.
Crankshaft O.D.	47.934 to 47.950 mm 1.8872 to 1.8878 in.	–
Crankshaft bearing 1 I.D.	47.984 to 48.048 mm 1.8891 to 1.8917 in.	–
Oil clearance between crankshaft and crankshaft bearing 2	0.034 to 0.095 mm 0.0013 to 0.0037 in.	0.2 mm 0.0079 in.
Crankshaft O.D.	47.934 to 47.950 mm 1.8872 to 1.8878 in.	–
Crankshaft bearing 2 I.D.	47.984 to 48.029 mm 1.8891 to 1.8909 in.	–
Oil clearance between crankshaft and crank shaft bearing 3	0.034 to 0.098 mm 0.0013 to 0.0039 in.	0.20 mm 0.0079 in.
Crankshaft O.D.	51.921 to 51.940 mm 2.0441 to 2.0449 in.	–
Crank bearing 3 I.D.	51.974 to 52.019 mm 2.0462 to 2.0480 in.	–

https://truckmanualshub.com/

Crankshaft (Continued)

Item	Factory Specification	Allowable Limit
Oil clearance between crank pin and crank pin bearing	0.029 to 0.091 mm 0.0011 to 0.0036 in.	0.2 mm 0.0079 in.
Crank pin O.D.	39.959 to 39.975 mm 1.5732 to 1.5738 in.	–
Crank pin bearing I.D.	40.004 to 40.050 mm 1.5750 to 1.5768 in.	–
Crankshaft side clearance	0.15 to 0.31 mm 0.0059 to 0.0122 in.	0.5 mm 0.0197 in.

Cylinder Liner

Cylinder liner I.D.	D905-D10	72.000 to 72.019 mm 2.8346 to 2.8354 in.	+ 0.15 mm 0.0059 in.
	D1005-D10	76.000 to 76.019 mm 2.9921 to 2.9929 in.	
	D1105-D10	78.000 to 78.019 mm 3.0709 to 3.0716 in.	
Oversized cylinder liner I.D.		+ 0.5 mm 0.0197 in.	

[2] LUBRICATING SYSTEM

Oil Pump

Engine oil pressure	At idle speed	49 kPa 0.5 kgf/cm^2, 7 psi	–
	At rated speed	196 to 441 kPa 2.0 to 4.5 kgf/cm^2 36 to 64 psi	147.1 kPa 1.5 kgf/cm^2 27 psi
Clearance between inner rotor and outer rotor		0.06 to 0.18 mm 0.0024 to 0.0071 in.	–
Clearance between outer rotor and pump body		0.100 to 0.180 mm 0.0039 to 0.0071 in.	–
End clearance between inner rotor and cover		0.025 to 0.075 mm 0.0098 to 0.00295 in.	–

[3] COOLING SYSTEM

Thermostat

Thermostat's valve opening temperature	80.5 to 83.5°C 176.9 to 182.3°F	–
Temperature at which thermostat completely opens	95°C 203°F	–

https://truckmanualshub.com/

Radiator

Item	Factory Specification	Allowable Limit
Radiator water tightness	Water tightness at specified pressure 137 kPa 1.4 kgf/cm^2, 20 psi	–
Radiator cap air leakage	10 seconds or more 0.9 → 0.6 kgf/cm^2 88 → 59 kPa, 13 → 9 psi	–
Fan belt tension	7 to 9 mm/10 kgf 0.28 to 0.35 in./ 10 kgf (22.1 lbs.)	–

[4] FUEL SYSTEM

Injection Pump

Injection timing	0.30 to 0.33 rad. before T.D.C. (17° to 19°)	–
Fuel tightness of pump element	–	14.7 MPa 150 kgf/cm^2, 2133 psi
Fuel tightness of delivery valve	10 seconds or more 14.7 → 13.7 MPa 150 → 140 kgf/cm^2 2133 → 1990 psi	5 seconds 14.7 → 13.7 MPa 150 → 140 kgf/cm^2 2133 → 1990 psi

Injection Nozzle

Fuel injection pressure	13.73 to 14.71 MPa 140 to 150 kgf/cm^2 1991 to 2133 psi	–
Fuel tightness of nozzle valve seat	When the pressure is 12.75 MPa (130 kgf/cm^2, 1849 psi), the valve seat must be fuel tightness.	–

https://truckmanualshub.com/

TIGHTENING TORQUES

Screws, bolts and nuts must be tightened to the specified torque using a torque wrench. Several screws, bolts and nuts such as those used on the cylinder head must be tightened in proper sequence and at the proper torque.
(For general use screws and nuts: See page G-8)

Item	N·m	kgf·m	ft-lbs
Drag link slotted nut	17.7 to 34.5	1.8 to 3.5	13.0 to 25.3
Front axle frame mounting screw	39.2 to 64.7	4.0 to 6.6	28.9 to 47.7
Steering wheel mounting nut	29.4 to 49.0	3.0 to 5.0	21.7 to 36.2
Flare nut (P.S. pipes and 3-point hitch delivery pipe)	29.4 to 39.2	3.0 to 4.0	21.7 to 28.9
Joint bolt of 3-point hitch delivery pipe	34.3 to 44.1	3.5 to 4.5	25.3 to 32.5
Fuel filter bracket mounting screw	17.7 to 20.6	1.8 to 2.1	13.0 to 15.2
Clutch housing and engine mounting screw and nut			
M8 screw	17.7 to 20.6	1.8 to 2.1	13.0 to 15.2
M10 nut	48.1 to 55.8	4.9 to 5.7	35.5 to 41.2
Clutch cover mounting screw	23.5 to 27.5	2.4 to 2.8	17.4 to 20.3
Flow priority valve mounting screw	17.7 to 20.6	1.8 to 2.1	13.0 to 15.2

Item	Size x Pitch	N·m	kgf·m	ft-lbs
* Cylinder head cover cap nuts	M7 x 1.0	6.9 to 8.8	0.7 to 0.9	5.1 to 6.5
Cylinder head bolt	M10 x 1.25	63.7 to 68.6	6.5 to 7.0	47.0 to 50.6
* Bearing case bolt **1**	M8 x 1.25	29.4 to 34.3	3.0 to 3.5	21.7 to 25.3
* Bearing case bolt **2**	M9 x 1.25	49.0 to 53.9	5.0 to 5.5	36.2 to 39.8
* Flywheel bolt	M10 x 1.25	53.9 to 58.8	5.5 to 6.0	39.8 to 43.4
* Connecting rod bolt	M8 x 1.0	41.2 to 46.1	4.2 to 4.7	30.4 to 34.0
* Rocker arm bracket nuts	M7 x 1.0	21.6 to 26.5	2.2 to 2.7	15.9 to 19.5
* Idle gear shaft 1 bolt	M6 x 1.0	9.8 to 11.3	1.00 to 1.15	7.2 to 8.3
* Crankshaft bolt	M14 x 1.5	235.4 to 245.2	24.0 to 25.0	173.6 to 180.8
Glow plugs	M8 x 1.0	7.8 to 14.7	0.8 to 1.5	5.8 to 10.8
Nozzle holder assembly	M20 x 1.5	49.0 to 68.6	5.0 to 7.0	36.2 to 50.6
Overflow pipe retaining nut (nozzle)	M12 x 1.5	19.6 to 24.5	2.0 to 2.5	14.5 to 18.1
Oil switch	PT 1/8	14.7 to 19.6	1.5 to 2.0	10.8 to 14.5
Idle adjust screw cap nut	M6 x 1.0	7.8 to 9.8	0.8 to 1.0	5.8 to 7.2
Fuel limit cap nut	M6 x 1.0	7.8 to 9.8	0.8 to 1.0	5.8 to 7.2
Injection pipe cap nuts	M12 x 1.5	24.5 to 34.3	2.5 to 3.5	18.1 to 25.3

NOTE

- For * marked screws, bolts and nuts on the table, apply engine oil to their threads and seats before tightening.
- The letter "M" in Size x Pitch means that the screw, bolt or nut dimension stands for metric. The size is the nominal outside diameter in mm of the threads. The pitch is the nominal distance in mm between two threads.

https://truckmanualshub.com/

CHECKING, DISASSEMBLING AND SERVICING

[1] SEPARATING THE ENGINE

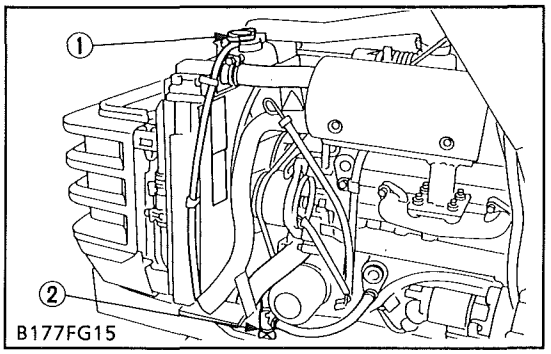

B177FG15

Draining Cooling Water

CAUTION

- **Never open the radiator cap while operating or immediately after stopping. Otherwise, hot water will spout out from the radiator. Wait for more than ten minutes to cool the radiator, before opening the cap.**

1. Loosen the drain cock (2) from the radiator hose to drain cooling water.
2. Remove the radiator cap (1) to drain cooling water completely.

Coolant Capacity	3.4 ℓ 3.6 U.S. qts. 3.0 Imp. qts.

(1) Radiator Cap (2) Drain Cock

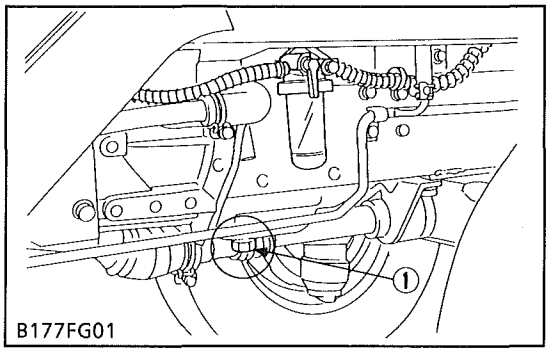

B177FG01

Draining Engine Oil

1. Start and warm up the engine for approx. 5 minutes.
2. Place an oil pan underneath the engine.
3. Remove the drain plug (1) to drain oil.
4. Screw in the drain plug (1).

(When refilling)

- Fill the engine oil up to the upper line on the dipstick (3).

IMPORTANT

- **Never mix two different type of oil.**
- **Use the proper SAE Engine Oil according to ambient temperature.**
  Refer to "LUBRICANTS, FUEL AND COOLING WATER". (See page G-8)

Engine oil capacity	3.0 ℓ 3.2 U.S. qts. 2.6 Imp. qts.

[A] Oil level is acceptable within this range.

(1) Drain Plug (3) Dipstick
(2) Oil Inlet Plug

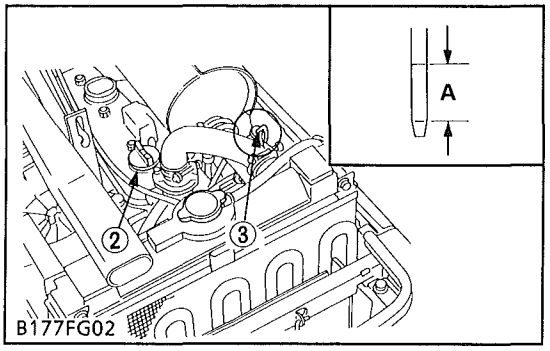

B177FG02

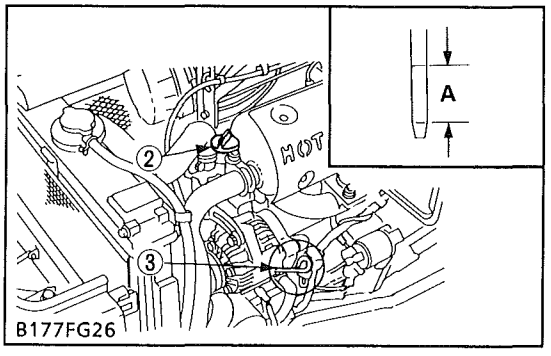

B177FG26

https://truckmanualshub.com/

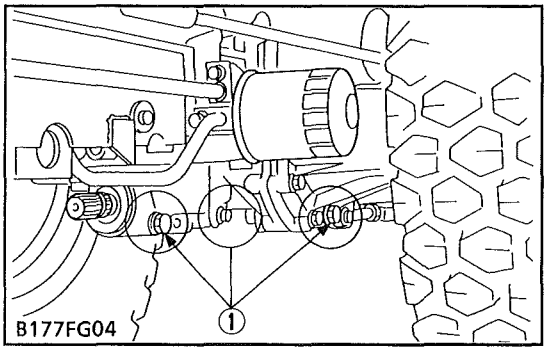

B177FG04

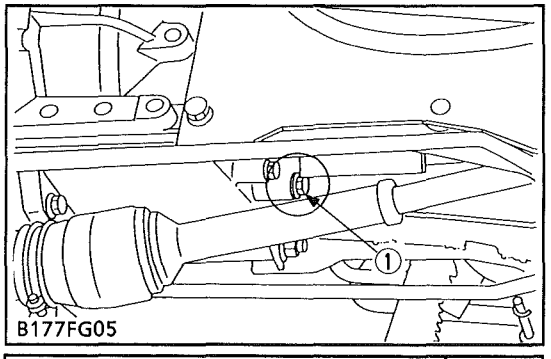

B177FG05

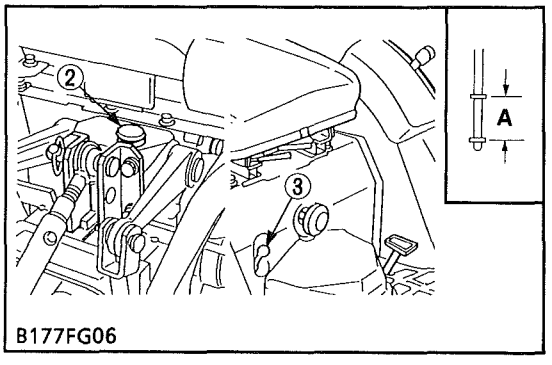

B177FG06

Drain the Transmission Oil

1. Place oil pans underneath the transmission case.
2. Remove the four drain plugs (1) at the bottom of the transmission case.
3. Drain the transmission oil.
4. After draining, screw in the four drain plugs (1).

(When refilling)

- Fill new oil from filling port after removing the filling plug (2) up to the upper notch on the dipstick.
- After running the engine for few minutes, stop it and check the oil level again, if low, add oil prescribed level.

■ IMPORTANT

- **Use only KUBOTA SUPER UDT fluid. Use of other oils may damage the transmission or hydraulic system. Refer to "LUBRICANTS, FUEL AND COOLING WATER". (See page G-8.)**
- **Never work the tractor immediately after changing the transmission oil. Keeping the engine at medium speed for a few minutes to prevents damage to the transmission.**
- **Do not mix different blands oil together.**

Transmission oil capacity	HST type	12.0 ℓ 3.17 U.S.gals. 2.4 Imp.gals
	Manual transmission type	11.0 ℓ 2.90 U.S.gals. 2.6 Imp.gals

[A] Oil level is acceptable within this range.

(1) Drain Plugs
(2) Filling Plug
(3) Dipstick

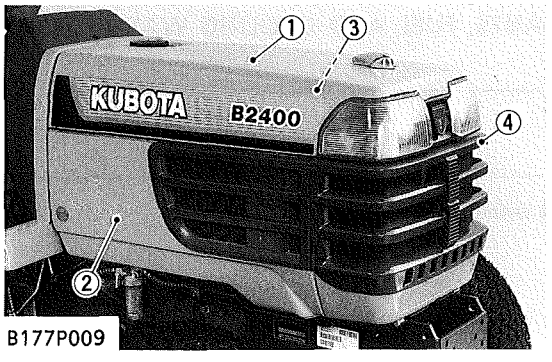

B177P009

Hood and Side Cover

1. Open the hood from front and remove the spling lock pin and remove the food with hood rod for keeping it open.
2. Remove the front grille (4).
3. Remove the right and left side cover (2), (3).

(1) Hood
(2) Right Side Cover
(3) Left Side Cover
(4) Front Grille

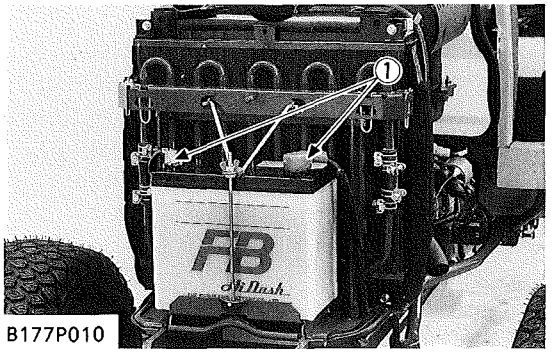

B177P010

Battery

1. Disconnect the battery cords (1).

■ NOTE

- **When disconnecting the battery cords, disconnect the grounding cord first. When connecting the positive cord first.**

(1) Battery Cord

https://truckmanualshub.com/

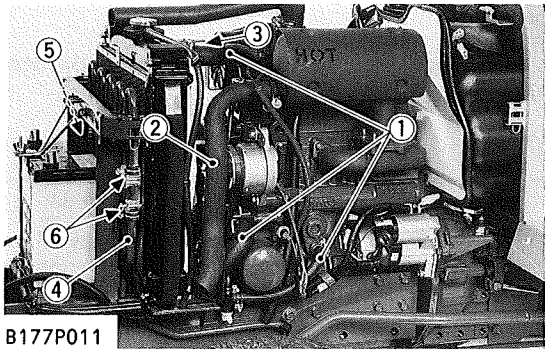

B177P011

Radiator Hoses, Muffler Pipe and Hydraulic Pipes

1. Loosen the clamps and disconnect radiator hoses (1).
2. Remove the muffler pipe (2).
3. Disconnect the radiator stay (3) and then dismount the radiator.
4. Dismount the battery (6).
5. Loosen the clamps of hydraulic hoses and remove the battery stay with oil cooler then remove the delivery pipe (5) (from HST) and return pipe (4) (from oil cooler) (HST type).

(1) Radiator Hose
(2) Muffler Pipe
(3) Radiator Stay
(4) Return Pipe
(5) Delivery Pipe
(6) Clamp

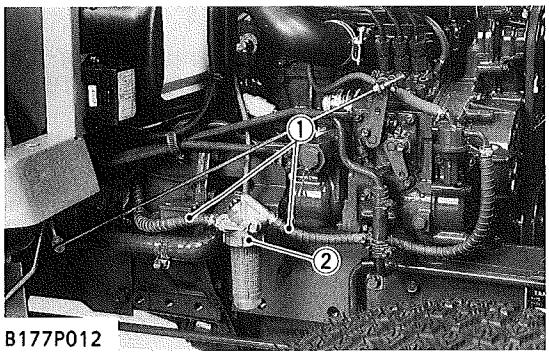
B177P012

Fuel Hoses and Fuel Filter

1. Close the fuel filter cock.
2. Disconnect the fuel hose (1) between fuel pump and fuel filter (2) at the fuel filter side.
3. Remove the fuel filter mounting screw and remove the fuel filter from the bracket.

(1) Fuel Hose
(2) Fuel Filter

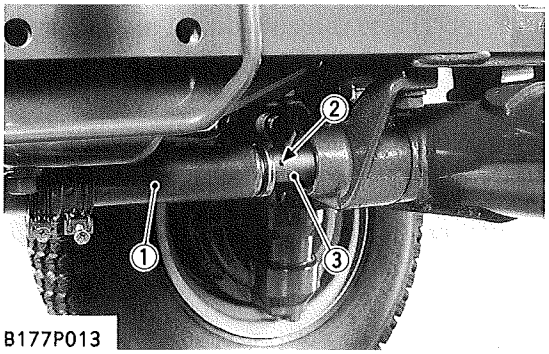
B177P013

Propeller Shaft Cover and Coupling

1. Loosen the clamp and slide the propeller shaft cover (1) to the rear.
2. Tap out the spring pin (2) and then slide the coupling (3) to the rear.

(When reassembling)

- Apply grease to the splines of the propeller shaft and coupling.

(1) Propeller Shaft Cover
(2) Spring Pin
(3) Coupling

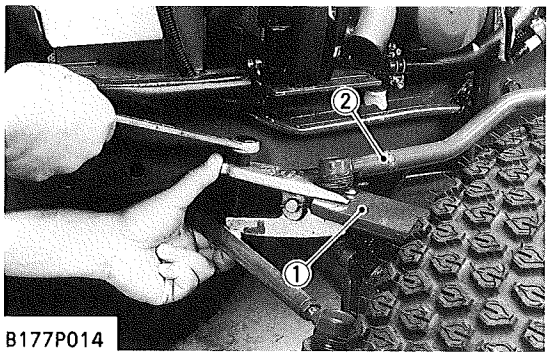
B177P014

Drag Link

1. Steer the front wheels to the left.
2. Remove the slotted nut and disconnect the drag link (2) from the knuckle arm (1).

(When reassembling)

■ IMPORTANT

- **After tightening the slotted nut to the specified torque, install the cotter pin as shown in the figure.**

Tightening torque	Slotted nut	17.7 to 34.5 N·m 1.8 to 3.5 kgf·m 13 to 25.3 ft-lbs

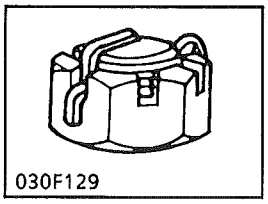
030F129

(1) Knuckle Arm
(2) Drag Link

https://truckmanualshub.com/

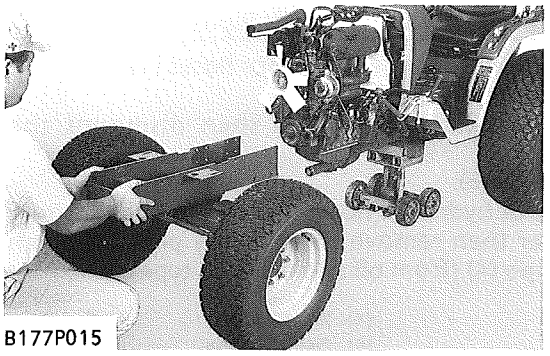
B177P015

Separating Front Axle Assembly

1. Remove the front axle frame mounting screws and separate the front axle assembly from the engine.

(When reassembling)

Tightening torque	Front axle frame mounting screw	39.2 to 64.7 N·m 4.0 to 6.6 kgf·m 28.9 to 47.7 ft-lbs

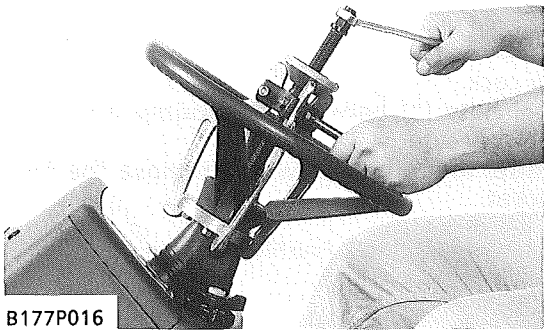
B177P016

Steering Wheel

1. Remove the steering wheel cap.
2. Remove the steering wheel mounting nut and remove the steering wheel with a steering wheel puller (Code No. 07916-51090).

(When reassembling)

Tightening torque	Steering wheel mounting nut	29.4 to 49.0 N·m 3.0 to 5.0 kgf·m 21.7 to 36.2 ft-lbs

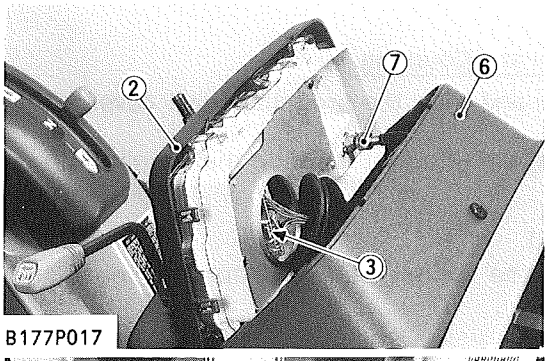

B177P017

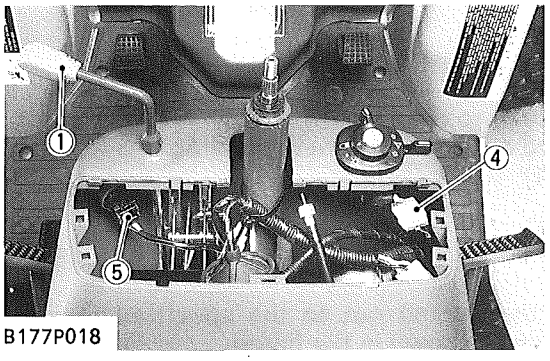

B177P018

Meter Pedal and Panel Under Cover

1. Remove the meter panel (2) and disconnect the meter panel connector (3) and hour-meter cable (7) from the meter panel. Then remove the meter panel.
2. Tap out the spring pin and remove the hand accelerator lever (1).
3. Disconnect the combination switch connector (4) and main switch connector (5).
4. Remove the panel under cover mounting screw, and take off the panel under cover (6).

(1) Hand Accelerator Lever
(2) Meter Panel
(3) Meter Panel Connector
(4) Combination Switch Connector
(5) Main Switch Connector
(6) Panel Under Cover
(7) Hour-meter Cable

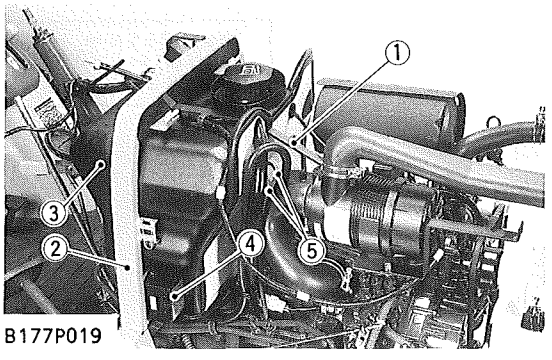

B177P019

Fuel Tank

1. Remove the fuel tank frame stay (1).
2. Disconnect the regulator and hazard unit connectors and remove the lead wire for fuel gauge.
3. Remove the fuse box (4).
4. Disconnect the overflow hoses (5) of fuel line.
5. Remove the tank flame with fuel tank (3).

(1) Fuel Tank Frame Stay
(2) Fuel Tank Flame
(3) Fuel Tank
(4) Fuse Box
(5) Overflow Hose

https://truckmanualshub.com/

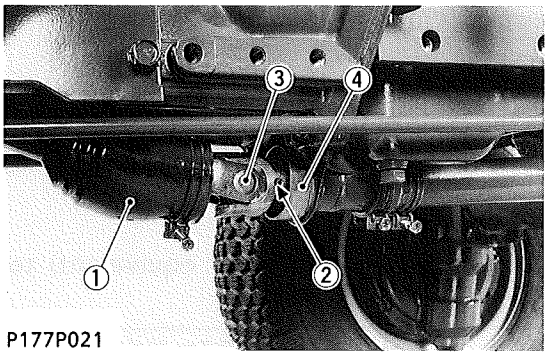

P177P021

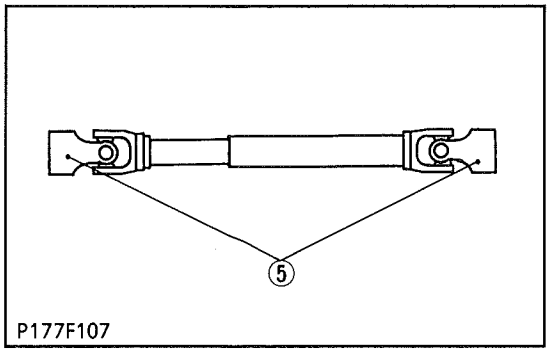

P177F107

Universal Joint and Bearing Holder

1. Loosen the clamp and slide the universal joint cover (1) to the rear.
2. Tap out the spring pins (2) and then slide the universal joint (3) to the rear.
3. Remove the bearing holder (4) and universal joint.

(When reassembling)

- Make sure the yokes (5) of universal joints must always be in the same plane as shown in the figure.
- Apply grease to the splines of the propeller shaft and universal joint.
- When inserting the spring pins (2), face their splits in the direction parallel to the universal joint as shown in the figure.

(1) Universal Joint Cover
(2) Spring Pins
(3) Universal Joint
(4) Bearing Holder
(5) Yoke

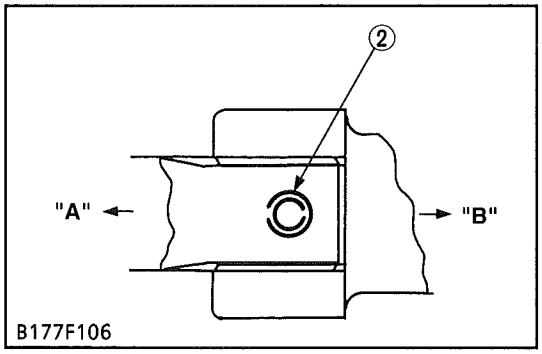

B177F106

[A] Front
[B] Rear

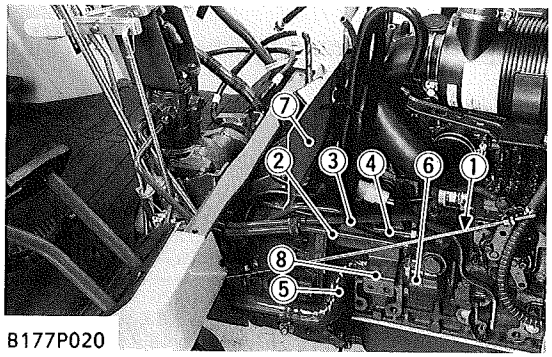

B177P020

Suction Pipe, Delivery Pipe and Power Steering Pipes and Others

1. Remove the foot accelerator rod (1).
2. Remove the power steering delivery pipe (2).
3. Remove the power steering return pipe (3). (HST Type)
4. Loosen the joint bolt of delivery pipe on the hydraulic cylinder and disconnect the flare nut of 3-point hitch delivery pipe (4).
5. Remove the fuel filter bracket (8).
6. Loosen the cramp of suction hose (5) and remove the suction hose from the hydraulic pump (6).
7. Remove the shutter plate (7).

(When reassembling)

Tightening torque	Flare nut (P.S. delivery, return pipes and 3-point hitch delivery pipe)	29.4 to 39.2 N·m 3.0 to 4.0 kgf·m 21.7 to 28.9 ft-lbs
	Joint bolt	34.3 to 44.1 N·m 3.5 to 4.5 kgf·m 25.3 to 32.5 ft-lbs
	Fuel filter bracket mounting screw	17.7 to 20.6 N·m 1.8 to 2.1 kgf·m 13.0 to 15.2 ft-lbs

(1) Foot Accelerator Rod
(2) Power Streering Delivery Pipe
(3) Power Streering Return Pipe
(4) 3-Point Hitch Delivery Pipe
(5) Suction Hose
(6) Hydraulic Pump
(7) Shutter Plate
(8) Fuel Filter Bracket

https://truckmanualshub.com/

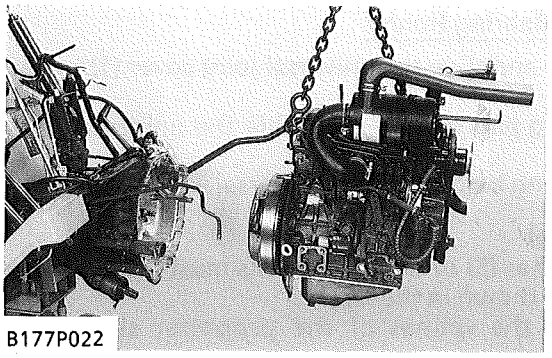

B177P022

Separating the Engine from Clutch Housing

1. Remove the wiring harness.
2. Place the jack under the center frame.
3. Hoist the engine by the chain at the engine hook.
4. Remove the engine mounting screws and separate the engine from the clutch housing.

(When reassembling)

- Apply liquid gasket (Three Bond 1208D or equivalent) to joint face of the engine and clutch housing.

Tightening torque	Engine mounting M8 screw	17.7 to 20.6 N·m 1.8 to 2.1 kgf·m 13.0 to 15.2 ft-lbs
	Engine mounting M10 nut	48.1 to 55.8 N·m 4.9 to 5.7 kgf·m 35.5 to 41.2 ft-lbs

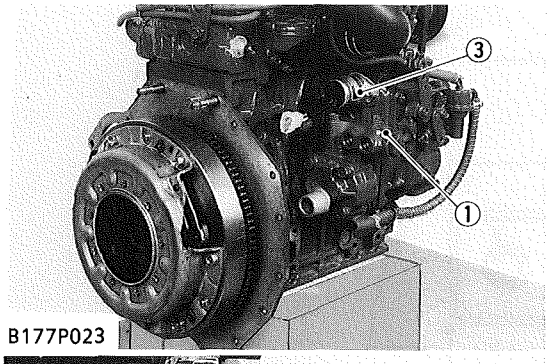

B177P023

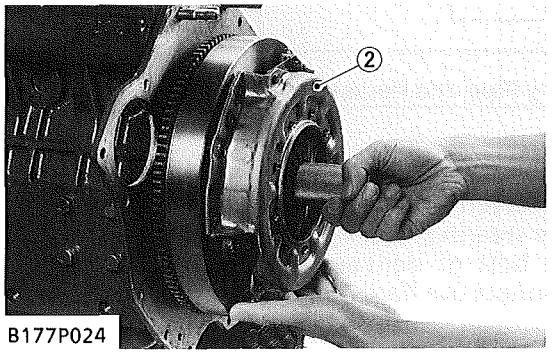

B177P024

(1) Flow Priority Valve
(2) Clutch Assembly
(3) Engine Stop Solenoid

Outer Parts

1. Remove the engine stop solenoid (3).
2. Remove the flow priority valve (1).
3. Remove the clutch assembly (2).

(When reassembling)

- Direct the shorter end of the clutch disc boss toward the flywheel.
- Apply molybdenum disulphide (Three Bond 1901 or equivalent) to the splines of clutch disc boss.
- Insert the pressure plate, noting the position of straight pins.
- Apply a thin coat of liquid gasket (Three Bond 1215 or equivalent) to both surface of the solenoid's cover packing.

■ IMPORTANT

- **Be sure to align the center of disc and flywheel by inserting the clutch center tool.**

■ NOTE

- **Do not allow grease and oil on the clutch disc facing.**

Tightening torque	Clutch cover mounting screw	23.5 to 27.5 N·m 2.4 to 2.8 kgf·m 17.4 to 20.3 ft-lbs
	Flow priority valve mounting screw	17.7 to 20.6 N·m 1.8 to 2.1 kgf·m 13.0 to 15.2 ft-lbs

https://truckmanualshub.com/

[2] ENGINE BODY

CHECKING AND ADJUSTING

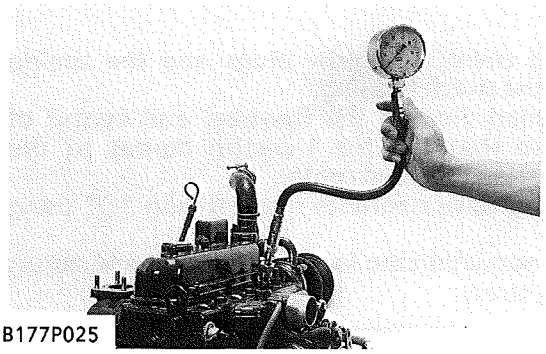

B177P025

Compression Pressure

1. Run the engine until it is warmed up.
2. Stop the engine, and then remove the air cleaner and muffler.
3. Remove the injection nozzles from all cylinders, and set a compression tester (Code No. 07909-30207) with the adaptor to the nozzle hole.
4. Keep the engine stop lever at **"Stop Position"**.
5. While cranking the engine with cell starter, measure the compression pressure.
6. Repeat steps 3 through 5 for each cylinder.
7. If the measurement does not reach the allowable limit, apply a small amount of oil to the cylinder wall through the nozzle hole and measure the compression pressure again.
8. If the compression pressure is still less than the allowable limit, check the top clearance, valve and cylinder head.
9. If the compression pressure increases after applying oil, check the cylinder wall and piston rings.

■ NOTE

- **Check the compression pressure with the specified valve clearance.**
- **Always use a fully charged battery for performing this test.**
- **Variances in cylinder compression values should be under 10 %.**

Compression pressure	Factory spec.	2.84 to 3.24 MPa 29 to 33 kgf/cm^2 412 to 469 psi
	Allowable limit	2.26 MPa 23 kgf/cm^2 327 psi

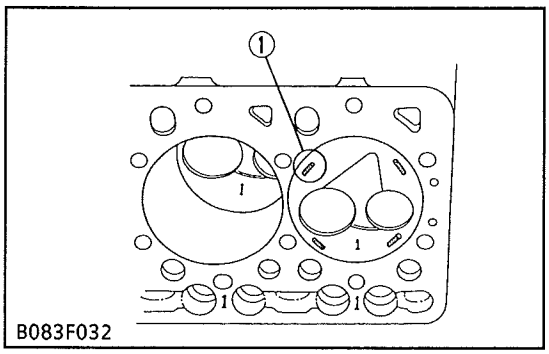

B083F032

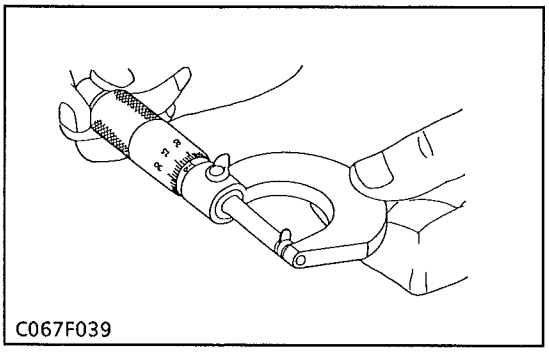

C067F039

Top Clearance

1. Remove the cylinder head, and remove the cylinder head gasket.
2. Move the piston up and stick four strips of fuse [diameter: 1.5 mm (0.059 in.), length: 5 to 10 mm (0.197 to 0.394 in.)] on the piston head (see figure) with grease.
3. Lower the piston, and install the cylinder head with new cylinder head gasket and tighten the cylinder head screws to the specified torque (39.2 to 44.1 N·m, 4.0 to 4.5 kgf·m, 28.9 to 32.5 ft-lbs).
4. Turn the flywheel until the piston is raised and lowered again.
5. Remove the cylinder head and measure the thickness of the fuses.
6. If the measurement is not within the factory specifications, check the oil clearance between the crank pin and crank pin bearing, and the oil clearance between the piston pin and small end bushing.

Top clearance	Factory spec.	0.55 to 0.70 mm 0.0217 to 0.0276 in.

■ NOTE

- **When reassembling the cylinder head, be sure to replace the cylinder head gasket with a new one.**

(1) Fuse

https://truckmanualshub.com/

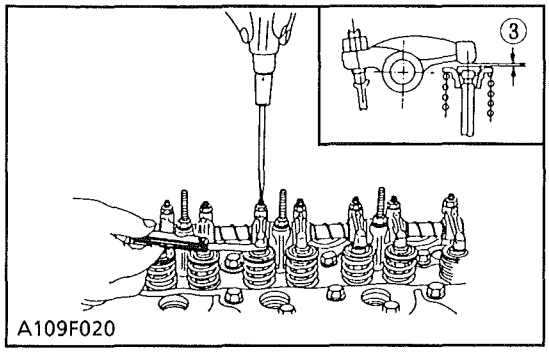

A109F020

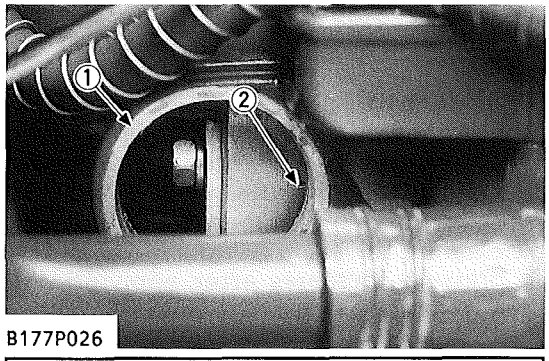

B177P026

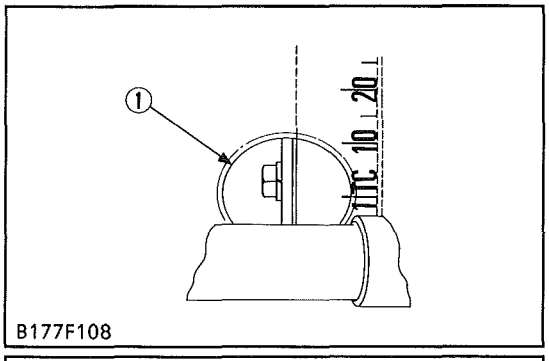

B177F108

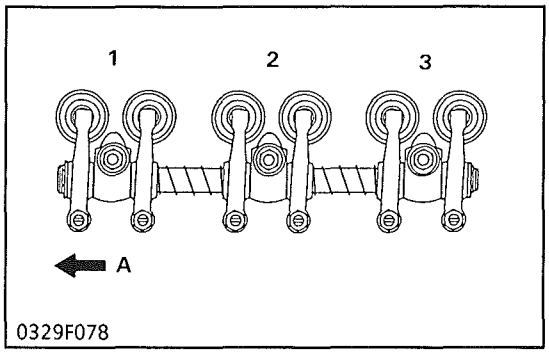

0329F078

[A] Gear Case Side

(1) Timing Window
(2) TC Mark Line
(3) Valve Clearance

Valve Clearance

IMPORTANT

- **Valve clearance must be checked and adjusted when engine is cold.**

1. Remove the head cover, the glow plugs and the timing window cover on the clutch housing.
2. Align the **"1TC"** mark line on the flywheel and center of timing window so that the No. 1 piston comes to the compression or overlap top dead center.
3. Check the following valve clearance marked with "○" using a feeler gauge.
4. If the clearance is not within the factory specifications, adjust with the adjusting screw.

Valve clearance	Factory spec.	0.145 to 0.185 mm 0.0057 to 0.0073 in.

NOTE

- **The "TC" marking line on the flywheel is just for No. 1 cylinder. There is no "TC" marking for the other cylinders.**
- **No. 1 piston comes to the T.D.C. position when the window on clutch-housing. Turn the flywheel 0.26 rad. (15°) clockwise and counterclockwise to see if the piston is at the compression top dead center or the overlap position . Now referring to the table below, readjust the valve clearance. (The piston is at the top dead center when both the IN. and EX valves do not move; it is at the overlap position when both the valves move.)**
- **Finally turn the flywheel 6.28 rad. (360°) and align the "TC" marking line and the center of timing window. Adjust all the other valve clearance as required.**
- **After turning the flywheel counterclockwise twice or three times, recheck the valve clearance, firmly tighten the lock nut of the adjusting screw.**

Engine model / Adjustable cylinder location of piston	Valve arrangement	D905 D1005 D1105 IN.	D905 D1005 D1105 EX.
When No. 1 piston is compression top dead center	1st	○	○
	2nd		○
	3rd	○	
When No. 1 piston is overlap position	1st		
	2nd	○	
	3rd		○

https://truckmanualshub.com/

DISASSEMBLING AND ASSEMBLING

(1) Cylinder Head and Valve

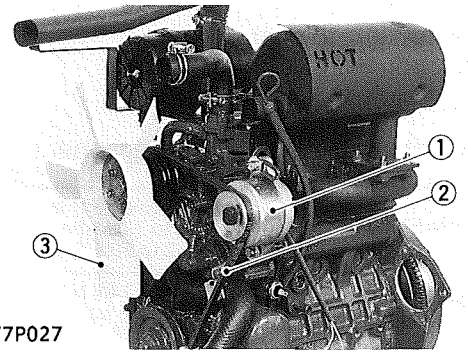

B177P027

Dynamo, Fan Belt and Muffler

1. Remove the dynamo (1) (or alternator) and fan belt (2).
2. Remove the cooling fan (3) and fan pulley.

(When reassembling)

- Check to see that there are no cracks on the belt surface.

■ IMPORTANT

- **After reassembling the fan belt, be sure to adjust the fan belt tension.**

(1) Dynamo
(2) Fan Belt
(3) Cooling Fan

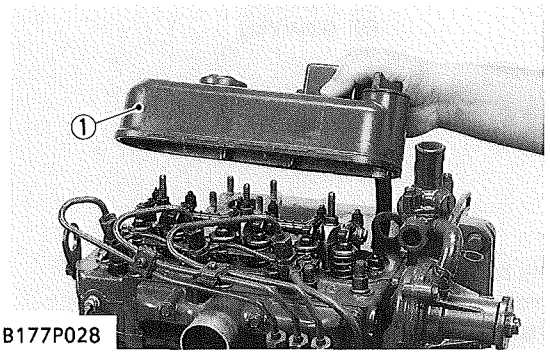

B177P028

Head Cover

1. Remove the head cover (1).

(When reassembling)

- Check to see if the head cover gasket is not defective.

Tightening torque	Head cover cap nut	6.9 to 8.8 N·m 0.7 to 0.9 kgf·m 5.1 to 6.5 ft-lbs

(1) Head Cover

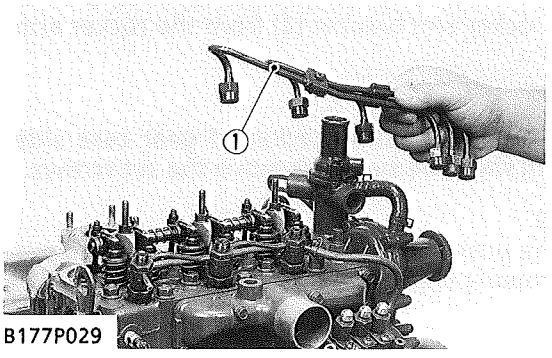

B177P029

(1) Injection Pipes

Injection Pipes

1. Loosen the screws on the pipe clamps.
2. Detach the injection pipes (1).

(When reassembling)

- Send compressed air into the pipes to blow out dust. Then, reassemble the pipes in the reverse order.

Tightening torque	Retaining nuts	24.5 to 34.3 N·m 2.5 to 3.5 kgf·m 18.1 to 25.3 ft-lbs

https://truckmanualshub.com/

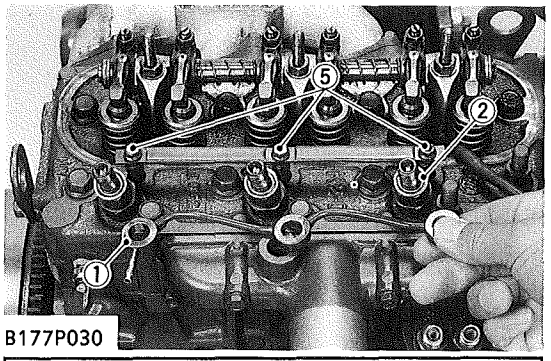

B177P030

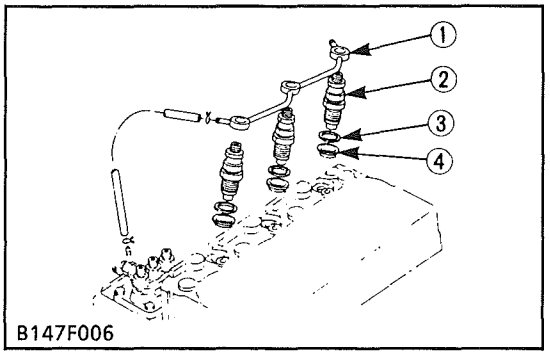

B147F006

Overflow Pipe, Nozzle Holder Assembly and Glow Plug

1. Remove the overflow pipe assembly (1).
2. Detach the nozzle holders using a 21 mm deep socket wrench.
3. Remove the copper gasket (3) and heat seal (4).
4. Remove the glow plug cock and glow plugs.

(When reassembling)

- Replace the copper gasket and heat seal with new one.

Tightening torque	Nozzle holder assembly	49.0 to 68.6 N·m 5.0 to 7.0 kgf·m 36.2 to 50.6 ft-lbs
	Overflow pipe assembly retaining nut	19.6 to 24.5 N·m 2.0 to 2.5 kgf·m 14.5 to 18.1 ft-lbs

(1) Overflow Pipe Assembly
(2) Nozzle Holder
(3) Copper Gasket
(4) Heat Seal
(5) Glow Plug

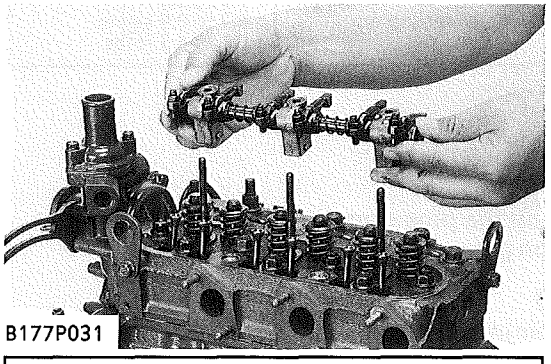
B177P031

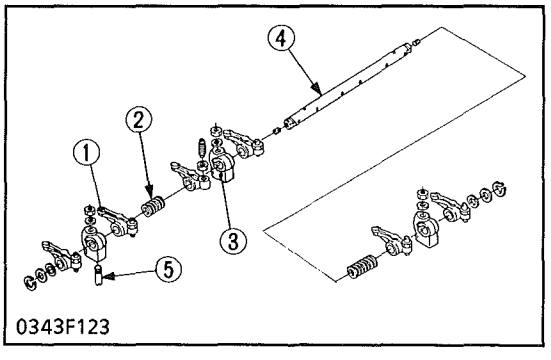

0343F123

Rocker Arm

1. Remove the set nuts for the rocker arm brackets.
2. Detach the whole rocker arm.
3. Remove the push rods.
4. Remove the external snap ring, and detach the rocker arm (1), spring (2) and rocker arm bracket (3) from the rocker arm shaft (4).

■ NOTE

- **Before detaching the rocker arm bracket of gear case side from the rocker arm shaft, be sure to remove the set screws.**

(When reassembling)

- Before inserting the push rods into the tappets, check to see if their ends are properly engaged with the grooves.

■ IMPORTANT

- **After installing the rocker arm, be sure to check the valve clearance.**

Tightening torque	Rocker arm bracket nuts	21.6 to 26.5 N·m 2.2 to 2.7 kgf·m 15.9 to 19.5 ft-lbs

(1) Rocker Arm
(2) Spring
(3) Rocker Arm Bracket
(4) Rocker Arm Shaft
(5) Set Screw

https://truckmanualshub.com/

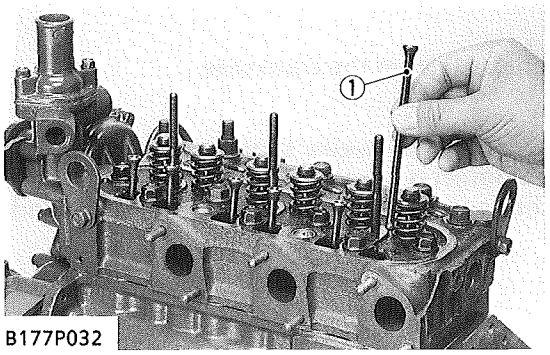

B177P032

Push Rods

1. Remove the push rods (1).

(When reassembling)

- When putting the push rods onto the tappets, check to see if their ends are properly engaged with the grooves.

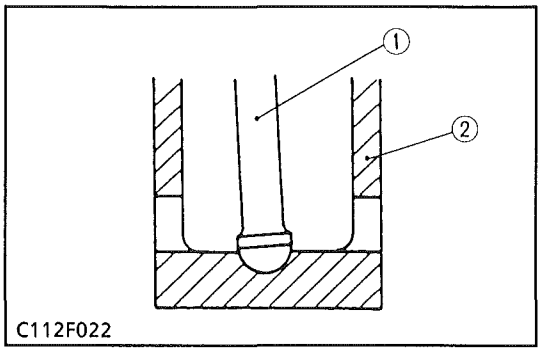

C112F022

(1) Push Rods
(2) Tappet

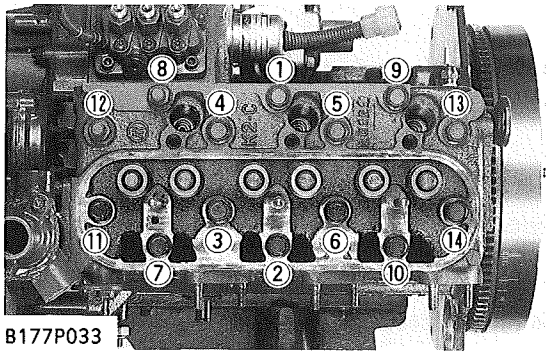

B177P033

(1) → (14) Head Bolt Fastening Procedure

Cylinder Head

1. Remove the cylinder head. Reverse the fastening procedure shown in the photograph to loosen the head bolts.
2. Remove the head gasket.

(When reassembling)

- Completely remove gaskets left in the cylinder head and crank case.
- Replace the head gasket by a new one and fit it with the grommets for the combustion chambers on the side of the cylinder heads.
- Tighten the cylinder head screws after applying sufficient oil.
- Tighten the cylinder head screws in diagonal sequence starting from the center. (Refer to fighre left.)
  Tighten them uniformly, or the head may deform in the long run.

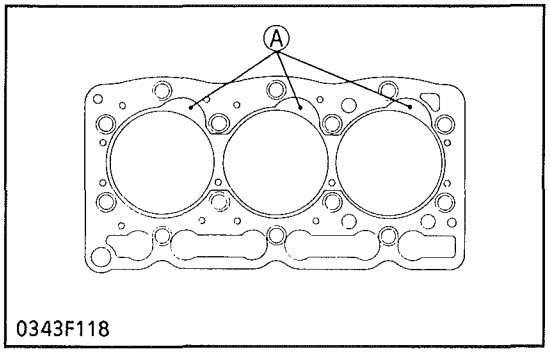

0343F118

[A] Grommet

■ IMPORTANT

- **Securely fit the O-ring to the pipe pin.**
- **Head bolt fastening procedure: Tighten the bolt according to the order show in the photograph, and repeat this procedure 2 or 3 times to the specified torque.**
  Using new bolts: Clean the threads and the undercut surface of the bolts, and fit the bolts without applying engine oil to the parts.
  Re-using the same bolts: Clean the threads and the undercut surface of the bolts, apply engine oil to the parts and fit the bolts.
- **After assembling the engine and operating it for about 30 minutes, further fasten the bolts (loosen the bolts, then fasten them again with a specified torque) to adjust the valve clearance.**

Tightening torque	Head bolt	63.7 to 68.6 N·m 6.5 to 7.0 kgf·m 47.0 to 50.6 ft-lbs

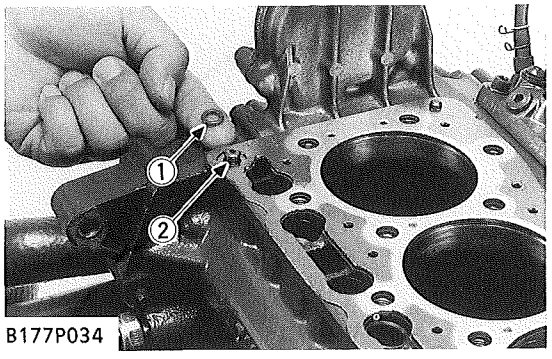

B177P034

O-ring

1. Remove the O-ring from the periphery of the oil pipe on the crankcase.

(1) O-ring (2) Pipe Pin

https://truckmanualshub.com/

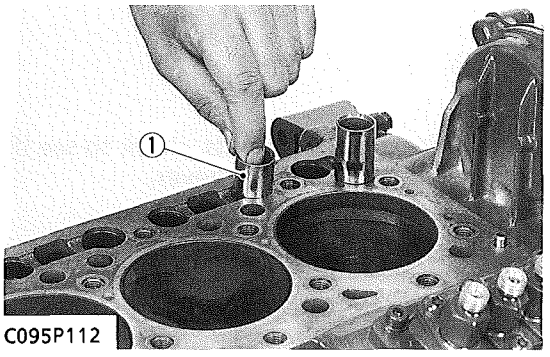

C095P112

Tappets

1. Remove the six tappets (1) from the crankcase.

(When reassembling)

- Visually check the contact between tappets and cams for proper rotation. If a defect is found, replace tappets.
- Before installing the tappets, apply engine oil thinly around them.

(1) Tappet

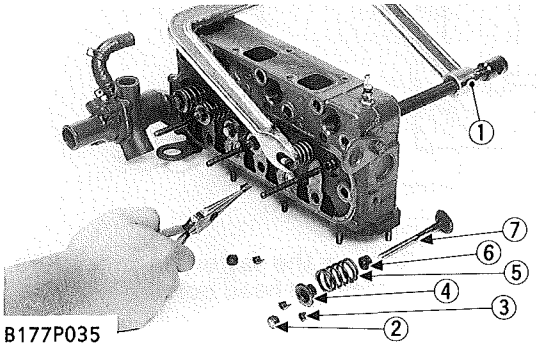

B177P035

Valves

1. Remove the valve caps.
2. Remove the valve spring collet, pushing the valve spring retainer by valve spring replacer.
3. Remove the valve spring retainer, valve spring and valve stem seal.
4. Remove the valve.

■ IMPORTANT

- **Don't change the combination of valve and valve guide.**

(1) Valve Spring Replacer
(2) Valve Cap
(3) Valve Spring Collet
(4) Valve Spring Retainer
(5) Valve Spring
(6) Valve Stem Seal
(7) Valve

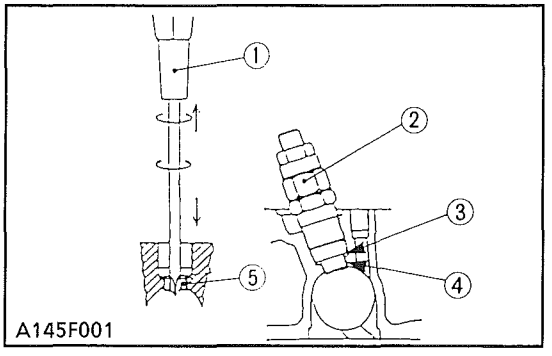

A145F001

(1) Plus Screw Driver
(2) Nozzle Holder
(3) Copper Gasket
(4) Heat Seal

Nozzle Heat Seal Service Removal Procedure

■ IMPORTANT

- **Use a plus (phillips head) screw driver that has a Dia. which is bigger than the heat seal hole (approx. 6 mm) 1/4 in.**

1. Drive screw driver lightly into the heat seal hole.
2. Turn screw driver three or four times each way.
3. While turning the screw driver, slowly pull the heat seal out together with the copper gasket.

   If the heat seal drops, repeat the above procedure. Heat seal and copper gasket must be changed when the injection nozzle is removed for cleaning or for service.

https://truckmanualshub.com/

(2) Timing Gears and Camshaft

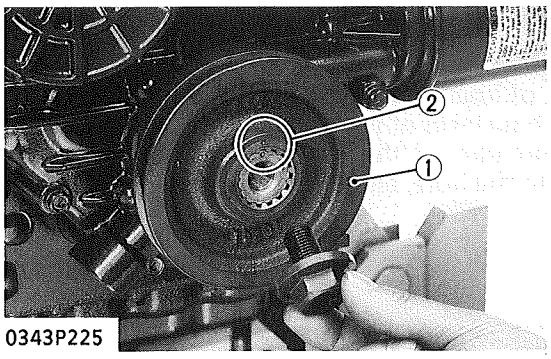

0343P225

Fan Drive Pulley

1. Set the stopper to the flywheel.
2. Remove the screw and detach the fan drive pulley (1).

(When reassembling)

- Check to see the fan drive pulley is aligned with its aligning mark.

Tightening torque	Crankshaft bolt	235.4 to 245.2 N·m 24.0 to 25.0 kgf·m 173.6 to 180.8 ft-lbs

(1) Fan Drive Pulley (2) Aligning Mark

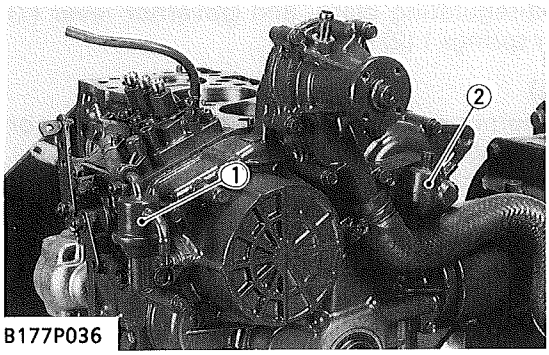

B177P036

Fuel Pump, Hour Meter Gear Case

1. Remove the fuel pump (1).
2. Remove the hour meter gear case (2).

(When reassembling)

- Before installing the hour meter gear case gasket, apply liquid gasket (Three Bond 1215 or equivalent) to the both side.

(1) Fuel Pump (2) Hour Meter Gear Case

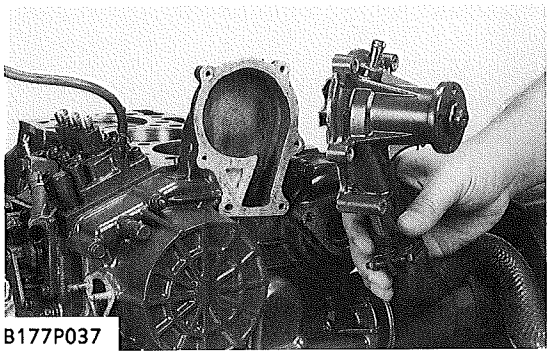
B177P037

Water Pump

1. Remove the water pump flange.

(When reassembling)

- Before installing the water pump flange gasket, apply liquid gasket (Three Bond 1215 or equivalent) to the both side.

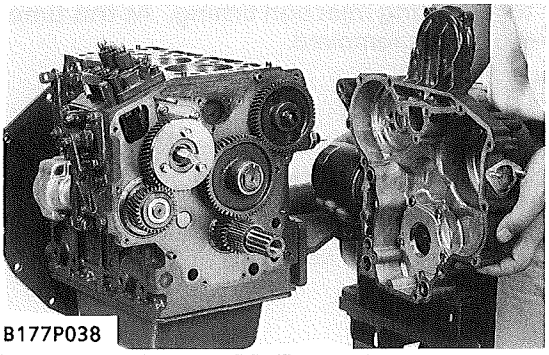
B177P038

Gear Case

1. Remove the gear case.
2. Remove the crankshaft collar and O-rings.

(When reassembling)

- Be sure to set four O-rings inside the gear case and the O-ring on the crankshaft.
- Apply a thin film of engine oil to the oil seal, and install it, noting the lip comes off.
- Length of the screws (refer to the figure)
  - A: 45 mm (1.77 in.)
  - B: 50 mm (1.97 in.)
  - C: 55 mm (2.17 in.)
  - D: 59 mm (2.32 in.)
  - E: 68 mm (2.68 in.)
  - F: 80 mm (3.15 in.)

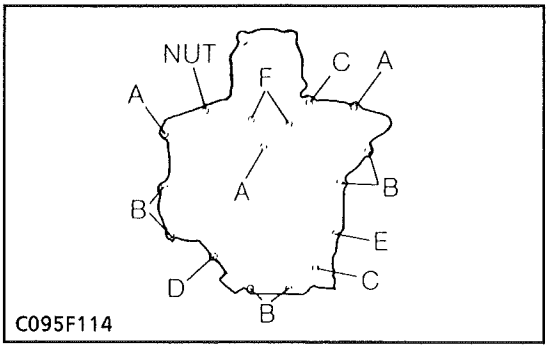

C095F114

Tightening torque	Gear case mounting screw	9.8 to 11.3 N·m 1.0 to 1.15 kgf·m 7.2 to 8.32 ft-lbs

https://truckmanualshub.com/

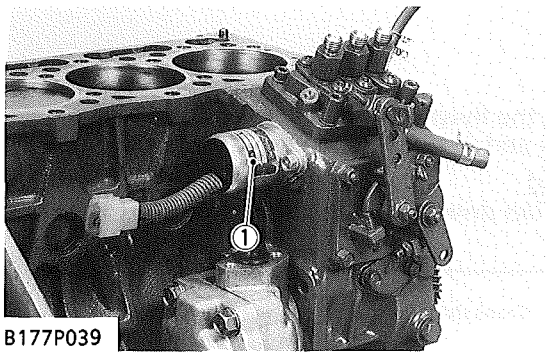

B177P039

Engine Stop Solenoid

1. Remove the engine stop solenoid (1).

(When reassembling)

- Apply a thin coat of liquid-type gasket (Three Bond 1215 or equivalent) to both surfaces of the solenoid's cover packing.
- Confirm the convex part of the flange of the engine stop solenoid has fit into the hole, and then fasten the bolts.

(1) Engine Stop Solenoid

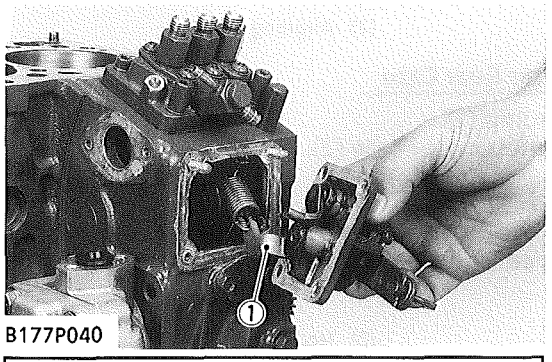

B177P040

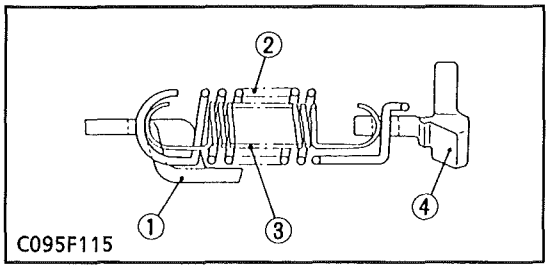

C095F115

Speed Regulating Plate

1. Remove the speed-regulating plate, and governor lever (1) from the governor springs 1 (2) and 2 (3) .

(When reassembling)

- Securely catch governor springs 1 and 2 on the governor lever as shown in the figure.
- Apply a thin coat of liquid-type gasket (Three Bond 1215 or its equivalent) to both surfaces of the packing of the speed-regulating plate.

(1) Governor Lever
(2) Governor Spring 1
(3) Governor Spring 2
(4) Fork Lever 2

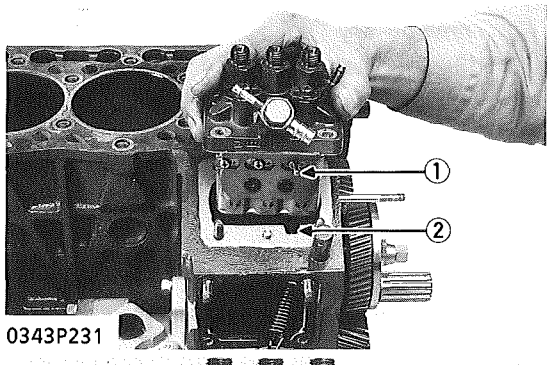

0343P231

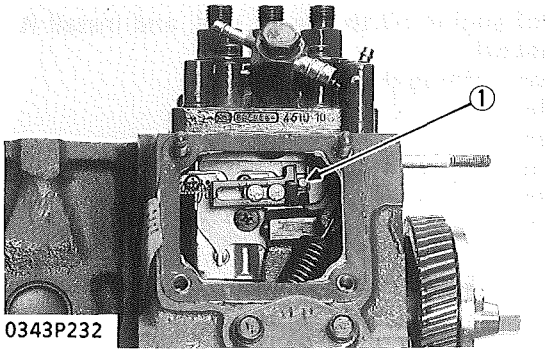

0343P232

Injection Pump

1. Set the control rack pin (1) to the notch (2) of the pump-fitting surface of the crank case to remove the injection pump.
2. Remove the shims for adjusting injection timing. At this time confirm the number of shims removed.

(When reassembling)

■ IMPORTANT

- **Securely fit the control rack pin to the grooves of the fork lever and the thrust lever.**

(1) Control Rack Pin
(2) Notch

https://truckmanualshub.com/

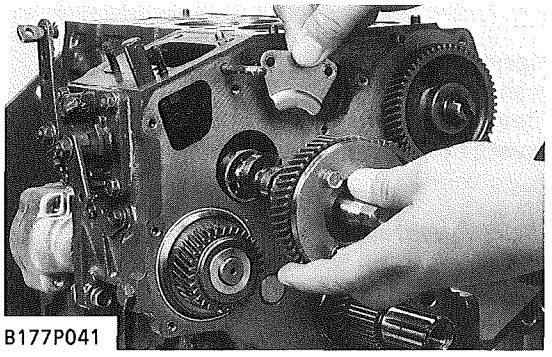
B177P041

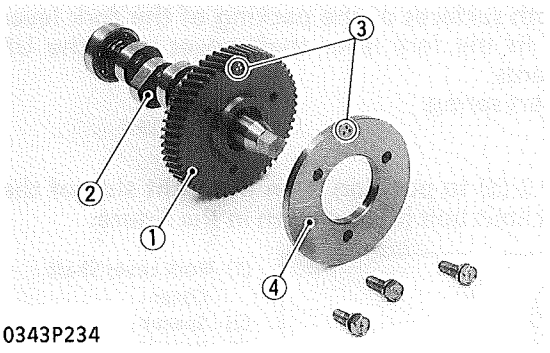

0343P234

Fuel Camshaft

1. Remove the stopper and then the fuel camshaft.

(When reassembling)
- Securely fix the fuel camshaft with the stopper.

2. Remove the fuel feed pump cam (4) from the injection pump gear (1).

(When reassembling)
- Check to see each aligning mark is aligned.

(1) Injection Pump Gear
(2) Fuel Camshaft
(3) Aligning Mark
(4) Fuel Feed Pump Cam

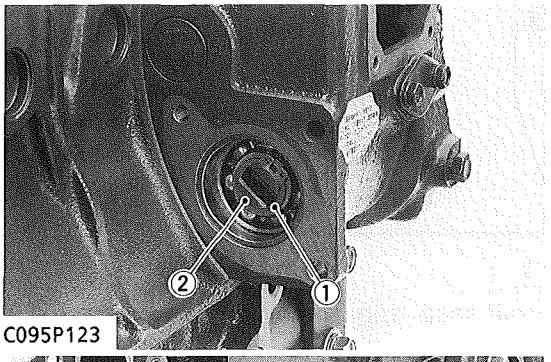

C095P123

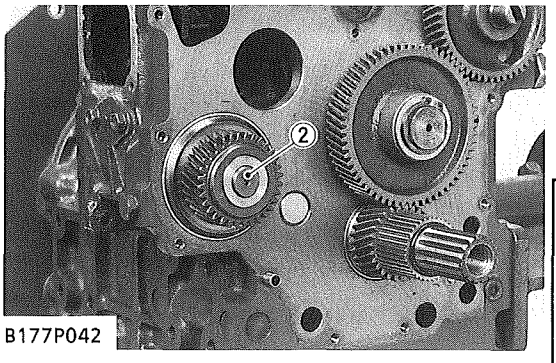

B177P042

Governor Shaft

1. Remove the hydraulic pump.
2. Remove the external snap ring (1) from the governor shaft (2).
3. Pull out the governor shaft.

(When reassembling)
- Securely fit the external snap ring of the governor shaft and idle gear shaft.
- Confirm the governor shaft rotates smoothly.

■ IMPORTANT
- **When replacing the bearing of the governor shaft, securely fit the bearing to the case, apply an adhesive (Three Bond 1324B or equivalent) to the set screw, and fasten the screw until its tapered part contacts the circumferential end of the ball bearing.**

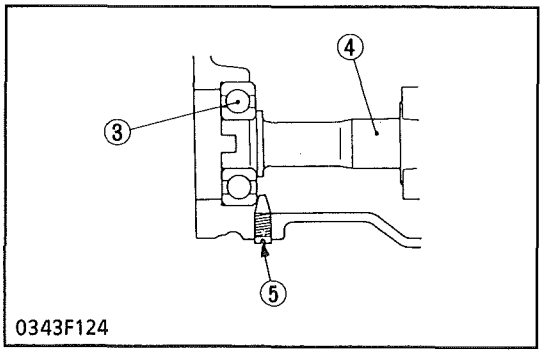

0343F124

(1) External Snap Ring
(2) Governor Shaft
(3) Bearing
(4) Governor Shaft
(5) Set Screw

https://truckmanualshub.com/

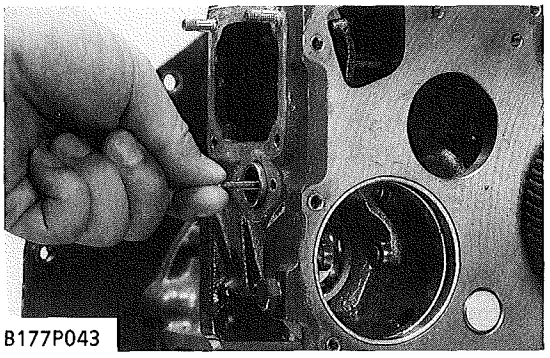
B177P043

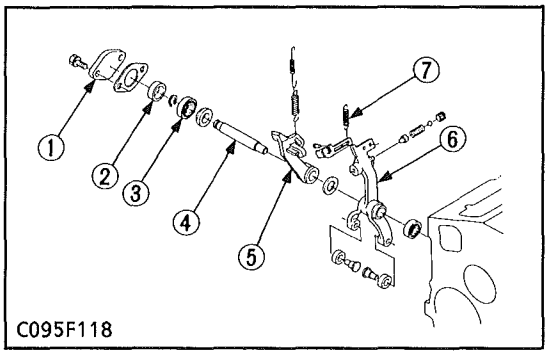

C095F118

Fork Lever

1. Remove the start spring (7).
2. Remove fork lever shaft cover (1).
3. Pull out the fork lever shaft (4), and remove the spacer (2), bearing (3), fork levers 1 (6) and 2 (5), etc.

■ IMPORTANT

- **Be careful in handling the thrust lever since the sintered part will be broken if it's dropped on the floor (or the ground).**

(When reassembling)

- Apply a thin coat of liquid-type gasket (Three Bond 1215 or equivalent) to both surfaces of the packing of the fork lever shaft cover, and fit the fork lever shaft cover with the UP mark facing upwards.
- Securely fit the start spring.

■ IMPORTANT

- **Fit the fork lever 2 (5) to position it on the right side of the maximum output limit bolt (8) as shown in the figure.**

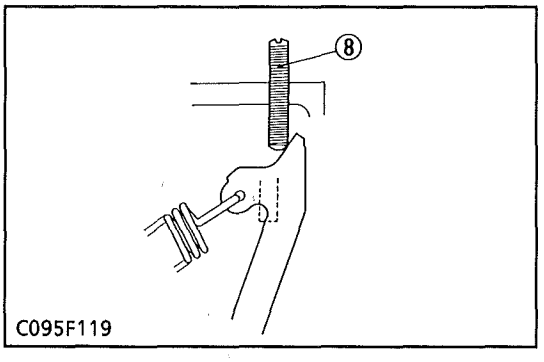

C095F119

(1) Fork Lever Shaft Cover
(2) Spacer
(3) Bearing
(4) Fork Lever Shaft
(5) Fork Lever 2
(6) Fork Lever 1
(7) Start Spring
(8) Maximum Output Limit Bolt

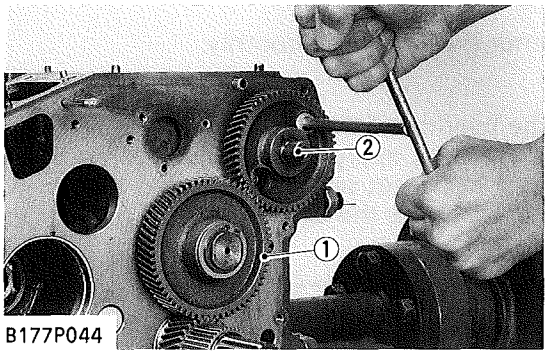

B177P044

Camshaft, Idle Gear 1

1. Remove the external snap ring and then remove the idle gear 1 (1).
2. Remove the stopper bolt and pull out the camshaft (2).

(1) Idle Gear 1
(2) Camshaft

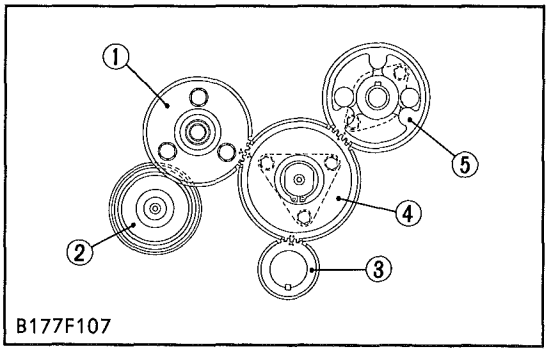

B177F107

(Fitting timing gears)

- Fit them with the marks of each gear set to each other.

1. Fit the camshaft.
2. Fit idle gear 1 (4) with its mark set to the marks of the crank gear (3) and cam gear (5).
3. Fit the injection pump gear (1) with its mark set to the mark of idle gear 1.
4. Fit the injection pump gear (1) and governor shaft.

■ IMPORTANT

- **Securely fit the external snap ring and the stopper.**

(1) Injection Pump Gear
(2) Governor Gear
(3) Crank Gear
(4) Idle Gear 1
(5) Cam Gear

https://truckmanualshub.com/

(3) Connecting Rod and Piston

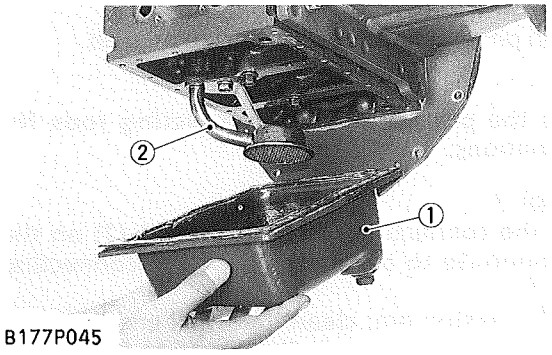

B177P045

Oil Pan, Oil Strainer

1. Remove the oil pan (1).
2. Remove the oil strainer (2).

(When reassembling)

- After cleaning the oil strainer (2), check to see that the filter mesh is clean, and install it.
- Visually check the O-ring, apply engine oil, and install it.
- Securely fit the O-ring to the oil strainer.
- Apply liquid-type gasket (Three Bond 1215 or its equivalent) to the oil pan side of the oil pan packing.

(1) Oil Pan (2) Oil Strainer

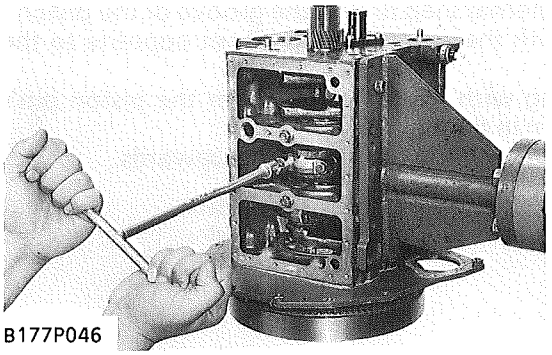
B177P046

Piston and Connecting Rod

1. Remove the connecting rod bolt and the connecting rod cap.
2. Rotate the flywheel to position the piston at the top dead center, and then push out the piston and connecting rod to the side of the cylinder head with a hammer's grip, etc.

■ IMPORTANT

- **Put a number tag to the pistons and connecting rods for their right combinations with the cylinders.**

(When reassembling)

- Apply engine oil to the crank pin bearing and the cylinder.
- Set mark 1 of the crank case (2) to mark 1 of the piston head (1), and use the piston ring compressor to insert the piston into the cylinder. At this time the mark of the connecting rod (3) is positioned on the side of the injection pump.
- Apply engine oil to the crank pin bearing, and fit it with the marks of the connecting rod and the connecting rod cap set to each other.

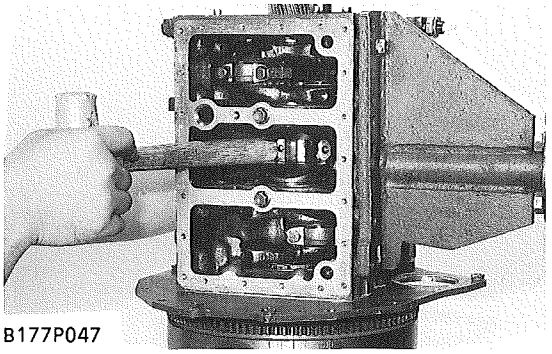
B177P047

■ IMPORTANT

- **Edge surfaces of the piston ring are hard-chromium-plated. When inserting the piston into the cylinder, fully fasten the piston ring with the piston ring compressor so as not to scratch the plated surfaces.**
- **Apply engine oil to the connecting rod bolt and lightly screw it in by hand, then fasten it up with a prescribed torque. If the bolt won't be screwed in smoothly, clean the threads. If the bolt is still hard to screw in, replace it.**

Tightening torque	Connecting rod bolt	41.2 to 46.1 N·m 4.2 to 4.7 kgf·m 30.3 to 33.9 ft-lbs

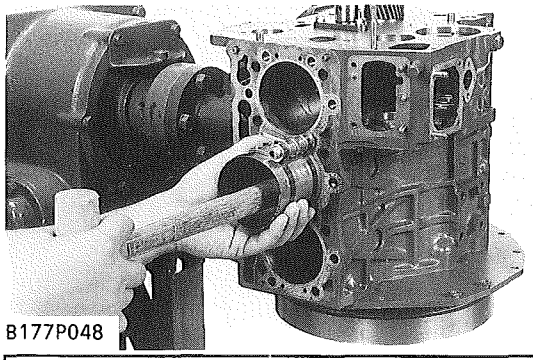
B177P048

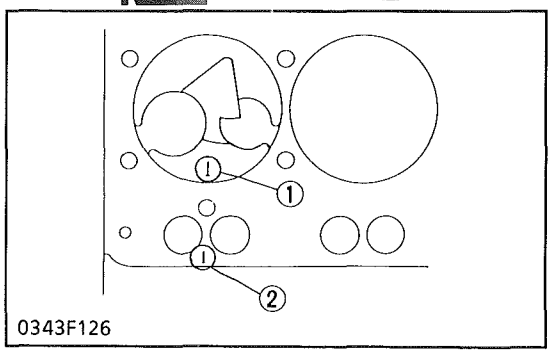

0343F126

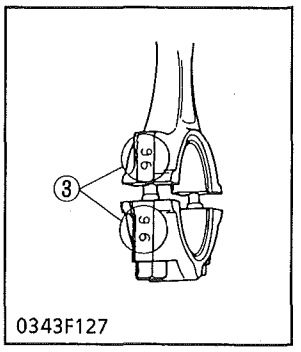

0343F127

(1) Mark 1 of the Piston Head
(2) Mark 1 of the Crank Case
(3) Mark of the Connecting Rod

https://truckmanualshub.com/

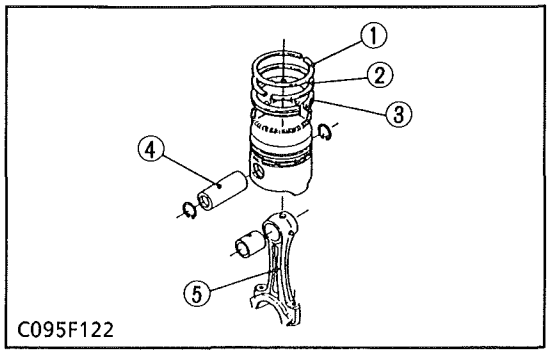

C095F122

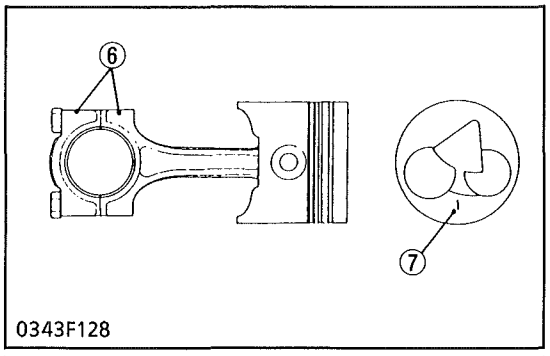

0343F128

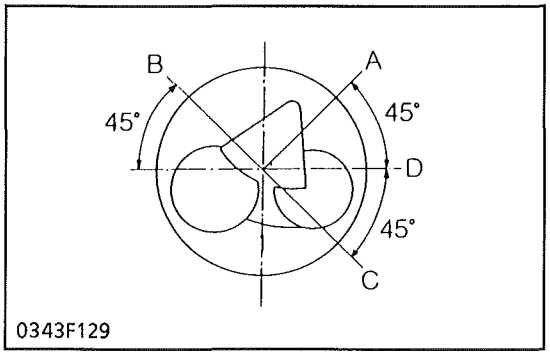

0343F129

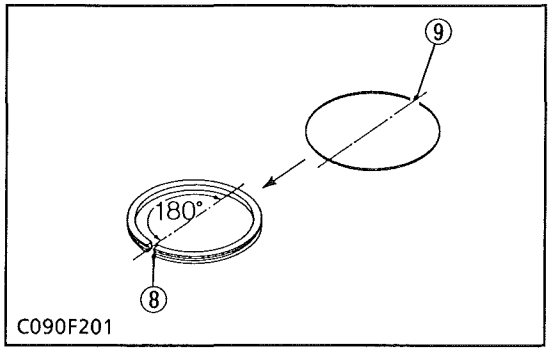

C090F201

Piston Ring, Piston Pin

1. Remove the piston ring with a piston ring tool.
2. Pull out the piston pin and remove the connecting rod.

■ IMPORTANT

- **Properly arrange the pistons and the connecting rods for their right combinations.**

(When reassembling)

- Fit the piston to the connecting rod with mark 1 (7) on the piston head set opposite to the mark (6) of the connecting rod.
- When driving in the piston pin; clean the small end bushing, piston pin and piston pin hole, warm the piston to 80 – 100°C, and apply oil to the pin.
- Securely fit the internal snap ring to the groove of the piston.
- Fit the oil ring with the expander gap (9) set opposite to the ring gap (8).
- Fit the piston ring with its gap at 45° from the piston pin's direction as shown in the figure.
- Fit the piston rings with their marks facing upwards.

(1) Top Ring
(2) Second Ring
(3) Oil Ring
(4) Piston Pin
(5) Connecting Rod
(6) Aligning Mark
(7) Piston Head
(8) Ring Gap
(9) Expander Gap

[A] Top ring Gap
[B] Second Ring Gap
[C] Oil Ring Gap
[D] Piston Pin Hole

(4) Crankshaft

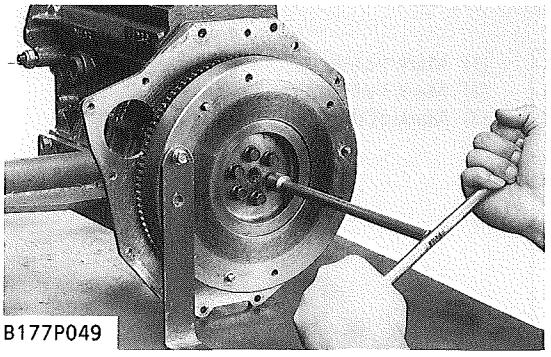
B177P049

Flywheel

1. Fit the stopper to the flywheel.
2. Remove the flywheel bolt and then the flywheel.

(When reassembling)

- Fit the flywheel giving care to the position of the knock pin.
- Apply engine oil to the threads and the undercut surface of the flywheel bolt and fit the bolt.

Tightening torque	Flywheel bolt	53.9 to 58.8 N·m 5.5 to 6.0 kgf·m 39.8 to 43.4 ft-lbs

https://truckmanualshub.com/

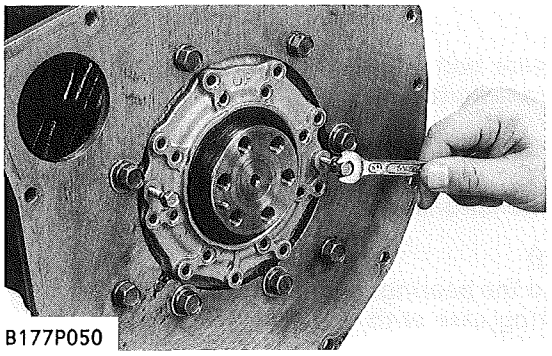
B177P050

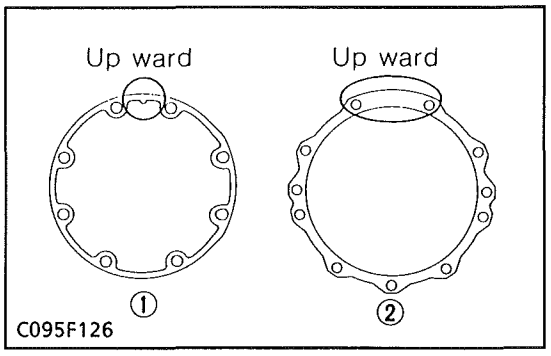

C095F126

Main Bearing Case Cover

1. Remove the bolts fixing the main bearing case cover. First, remove inner bolts and then outer bolts.
2. Screw the newly removed bolts into the outer bolt holes on the main bearing case cover to remove the cover.

(When reassembling)

- Fit the cover giving care to the directions of the bearing case packing and the bearing case cover packing.
- Check the oil seal lip of the main bearing case cover for any scratches or dents, and if none of them are found, apply engine oil to the lip and fit the cover with the lip kept attached.
- Fit the main bearing case cover with the "UP" mark facing upwards.

Tightening torque	Main bearing case cover mounting screw	9.81 to 11.3 N·m 1.00 to 1.15 kgf·m 7.23 to 8.32 ft-lbs

(1) Bearing Case Gasket (2) Bearing Case Cover Gasket

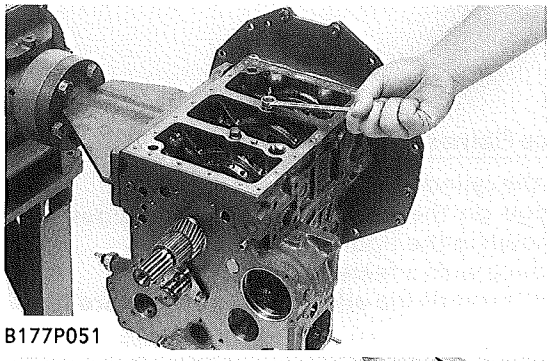
B177P051

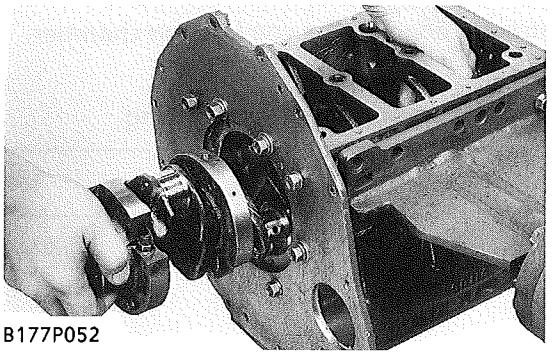
B177P052

Crankshaft

1. Remove bearing case bolt 2.
2. Remove the crankshaft together with the main bearing case.

■ IMPORTANT

- **Take care to protect crankshaft bearing 1 from scratches caused by the crank gear, etc. (Wrap the gear in vinyl tape, etc.)**

(When reassembling)

- Clean the oil passage of the crankshaft with compressed air.
- Set the bolt holes of the crank case to those of the main bearing case.
- Apply engine oil to the threads of bearing case bolt 2, and fit the crankshaft.
- Fit the main bearing case wheel with the "UP" mark facing upwards.
- Clean the main bearing case, apply oil, and fit it to the crank case.

Tightening torque	Bearing case bolt 2	49.0 to 53.9 N·m 5.0 to 5.5 kgf·m 36.2 to 39.8 ft-lbs

https://truckmanualshub.com/

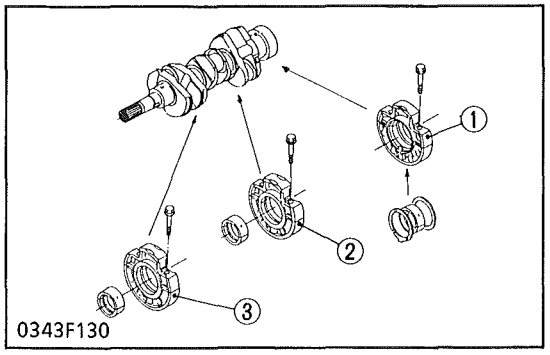

0343F130

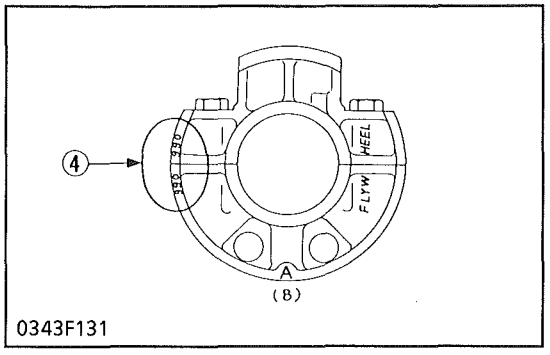

0343F131

Main Bearing Case

1. Remove bearing case bolt 1, and the main bearing case (1), (2), (3) from the crankshaft.

■ IMPORTANT
- **Properly arrange the main bearing cases and the bearings for their right combinations.**

(When reassembling)
- Apply engine oil to the bearings and fit the case.
- Fit the main bearing case with the FLYWHEEL mark set on the side of the flywheel.
- Fit the main bearing case wheel with the bolt holes set on the side of the flywheel and the side metals with the oil groove facing outside.

Tightening torque	Bearing case bolt 1	29.4 to 34.3 N·m 3.0 to 3.5 kgf·m 21.7 to 25.3 ft-lbs

(1) Main Bearing Case Assy.
(2) Main Bearing Case 2 (with mark "B")
(3) Main Bearing Case 1 (with mark "A")
(4) Aligning Mark

SERVICING

(1) Cylinder Head and Valves

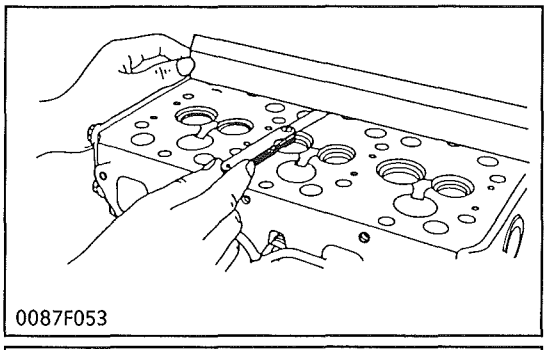
0087F053

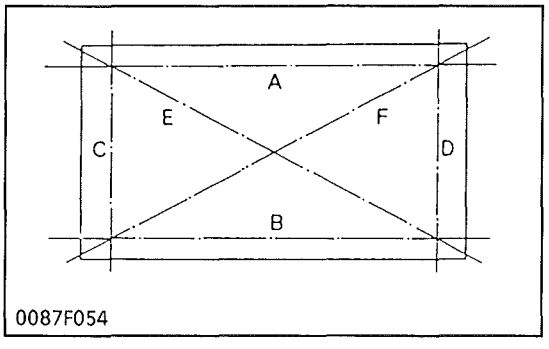

0087F054

Cylinder Head Surface Flatness

1. Thoroughly clean the cylinder head surface.
2. Place a straightedge on the cylinder head's four sides and two diagonal as shown in the figure.
   Measure the clearance with a feeler gauge.
3. If the measurement exceeds the allowable limit, replace it.

■ NOTE
- **Do not place the straight edge on the combustion chamber.**

■ IMPORTANT
- **Be sure to check the valve recessing after correcting.**

Cylinder head surface flatness	Allowable limit	0.05 mm 0.0019 in.

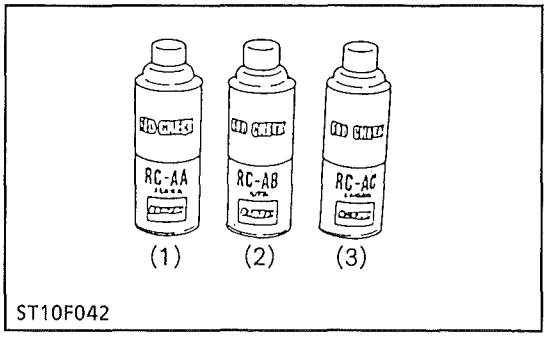

ST10F042

Cylinder Head Flaw

1. Prepare an air spray red check (Code No: 07909-31371).
2. Clean the surface of the cylinder head with detergent (1).
3. Spray the cylinder head surface with the red permeative liquid (2).
   Leave it five to ten minutes after spraying.
4. Wash away the red permeative liquid on the cylinder head surface with the detergent (1).
5. Spray the cylinder head surface with white developer (3). If flawed, it can be identified as red marks.

https://truckmanualshub.com/

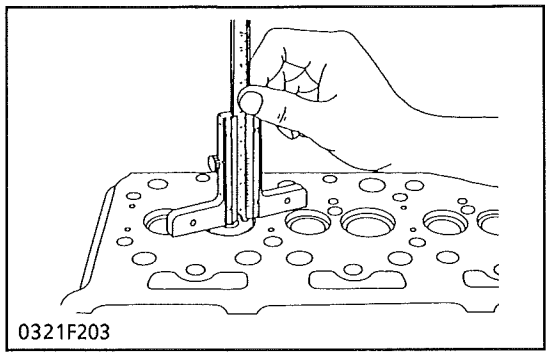
0321F203

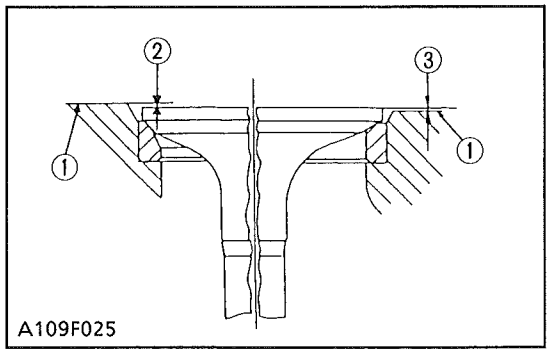

A109F025

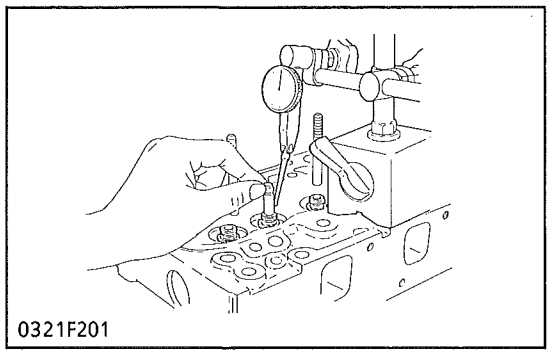
0321F201

Valve Recessing

1. Clean the cylinder head, the valve face and seat.
2. Insert the valve into guide.
3. Measure the valve recessing with a depth gauge.
4. If the measurement exceeds the allowable limit, replace the valve.
   If it still exceeds the allowable limit after replacing the valve, correct the valve seat face of the cylinder head with a valve seat cutter (Code No: 07909-33102) or valve seat grinder. Then, correct the cylinder head surface with a surface grinder. Or, replace the cylinder head.

Valve recessing	Factory spec.	(Protrusion) 0.05 mm (0.0020 in.) to (recessing) 0.15 mm (0.0059 in.)
	Allowable limit	(recessing) 0.4 mm (0.0157 in.)

(1) Cylinder Head Surface
(2) Recessing
(3) Protrusion

Clearance between Valve Stem and guide

1. Remove carbon from the valve guide section.
2. Measure the valve stem O.D. with an outside micrometer.
3. Measure the valve guide I.D. of the cylinder head at the most wear part as shown in the figure below with a small hole gauge. And calculate the clearance.
4. If the clearance exceeds the allowable limit, replace the valves. If it still exceeds the allowable limit, replace the valve guide.

Clearance between Valve Stem and valve guide	Factory spec.	0.035 to 0.065 mm 0.0014 to 0.0025 in.
	Allowable limit	0.1 mm 0.0039 in.

Valve stem O.D.	Factory spec.	6.960 to 6.975 mm 0.2741 to 0.2746 in.
Valve guide I.D.	Factory spec.	7.010 to 7.025 mm 0.2760 to 0.2765 in.

■ IMPORTANT

- **After replacing the valve guide, be sure to ream to the dimensions described in the table.**

https://truckmanualshub.com/

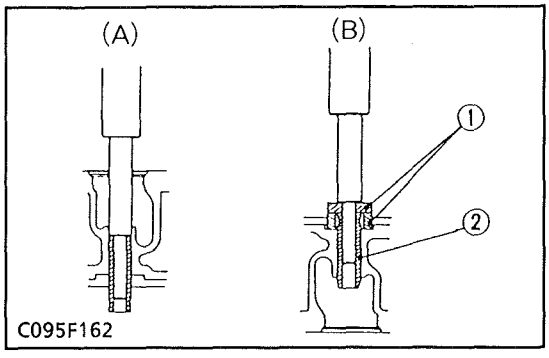

(1) Spacer (2) Valve Guide

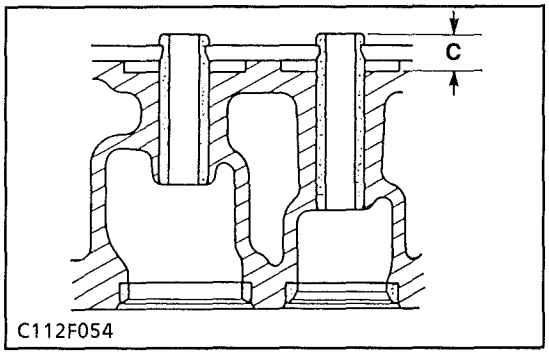

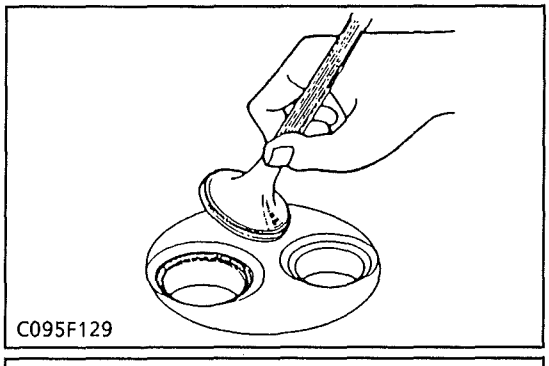

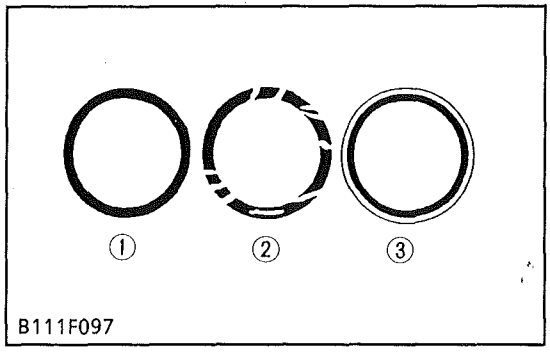

Replacing Valve Guide

1. Remove the spacer (1).
2. Press the used valve guide out from the cylinder head's lower end.
3. Before pressing in, apply oil on the outer surface of the valve guide, place a spacer of the specified protrusion allowance (C) on the cylinder head, and press in the spacer from above.
4. After press-fitting, finish the valve guide by means of reamer machining to specified dimension.

■ NOTE

- **Be careful not to strike valve guide with a hammer, etc. during replacement.**

Valve guide protrusion : C	Factory spec.	10 mm 0.394 in.

[A] Take Out **[B] Insert**

Valve Seating

1. Coat the valve face lightly with red lead and put the valve on its seat to check the contact.
2. If the valve does not seat all the way around the valve seat or the valve contact is less than 70 %, correct the valve seating as follows.
3. If the valve contact does not comply with the reference value, replace the valve or correct the contact of valve seating.

(1) Correct
(2) Incorrect
(3) Incorrect

https://truckmanualshub.com/

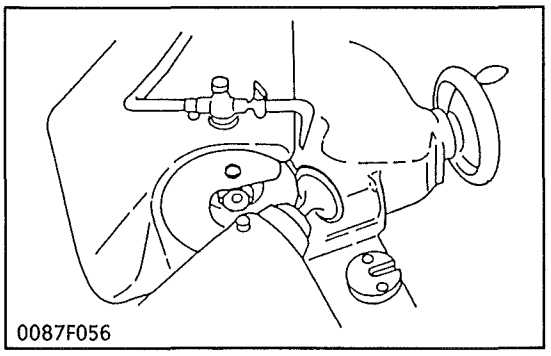
0087F056

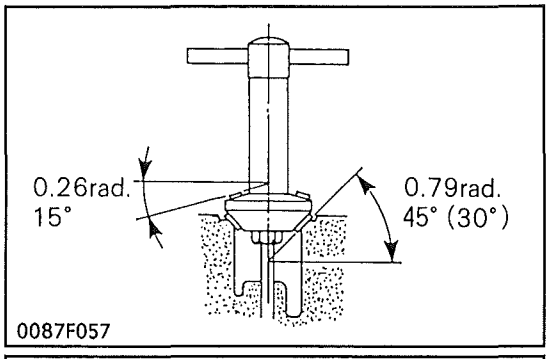

0087F057

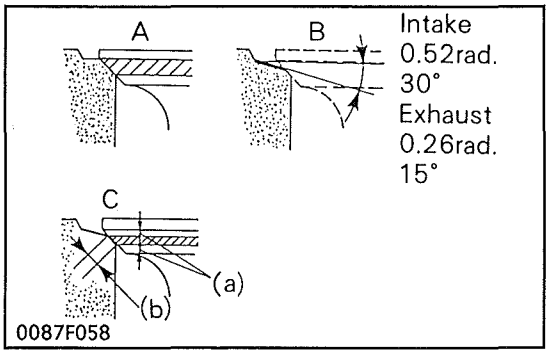

0087F058

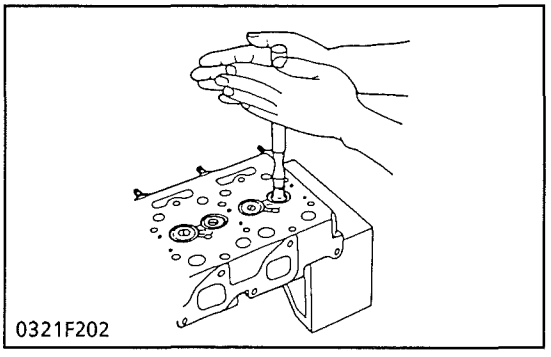
0321F202

Correcting Valve and Valve Seat

NOTE

- **Before correcting the valve and seat, check the valve stem and the I.D. of the valve guide section, and repair them if necessary.**
- **After correcting the valve seat, be sure to check the valve recessing.**

1) Correcting Valve

1. Correct the valve with a valve refacer.

2) Correcting Valve Seat

1. Slightly correct the seat surface with a 60° (Intake valve) or 45° (Exhaust valve) seat cutter (1) (Code No: 07909-33102).
2. Resurface the seat surface with 30° valve seat cutter to intake valve seat and with 15° valve seat cutter to exhaust valve seat so that the width is close to specified valve seat width. (2.12 mm 0.0835 in.)
3. After resurfacing the seat, inspect for even valve seating, apply a thin film of compound between the valve face and the valve seat, and fit them with valve lapping tool.
4. Check valve sealing with prussian blue, the valve seating surface should show good contact all the way around.

[A] Check Contact
[B] Correct Seat Width
[C] Check Contact

(a) Identical Dimensions
(b) Valve Seat Width

Valve Lapping

1. Apply compound on the valve face evenly.
2. Put the valve on its seat hold it with the valve lapper.
3. Turn and flap the valve back and forth on the valve seat to lap.
4. Remove the compound and clean the valve and the seat.
5. Apply oil on the valve face and finish to complete fitting.
6. Repeat lapping until the valve seats correctly, checking the seating.

https://truckmanualshub.com/

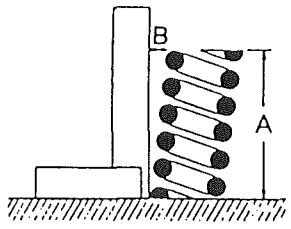

0087F060

Free Length and Tilt of Valve Spring

1. Measure the length **A** with vernier calipers. If the measurement is less than the allowable limit, replace.
2. Put the spring on a surface plate, place a square on the side of the spring, and check to see if the entire side is in contact with the square. Rotate the spring and measure the maximum **B**.
   If the measurement exceeds the allowable limit, replace.
3. Check the entire surface of the spring for scratches. Replace it, if any.

Valve spring free length	Factory spec.	37.0 to 37.5 mm 1.457 to 1.476 in.
	Allowable limit	36.5 mm 1.407 in.
Valve spring tilt	Allowable limit	1.0 mm 0.039 in.

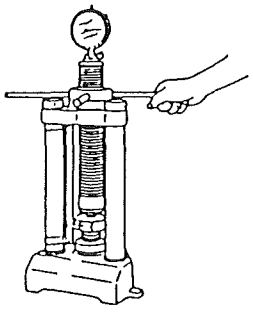

0087F061

Valve Spring Setting Load

1. Place the spring on a tester and compress it to the same length it is actually compressed in the engine.
2. Read the compression load on the gauge.
3. If the measurement exceeds the allowable limit, replace it.

Valve Setting load / Valve Setting length	Factory spec.	11.97 kgf / 31.0 mm 117.4 N·m / 31.0 mm 26.4 lbs. / 1.22 in.
	Allowable limit	10.2 kgf / 31.0 mm 100.0 N·m / 31.0 mm 22.5 lbs. / 1.22 in.

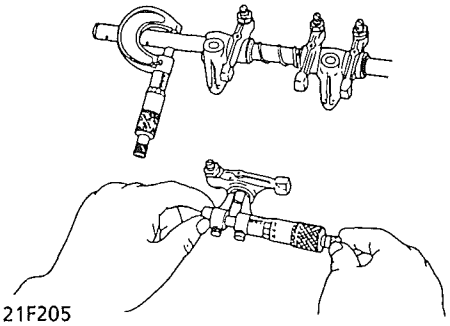

0321F205

Oil Clearance of Rocker Arm Shaft and Bearing

1. Measure the rocker arm bearing I.D. with an inside micrometer.
2. Measure the rocker arm shaft O.D. with an outside micrometer, and then calculate the oil clearance.
3. If the clearance exceeds the allowable limit, replace the rocker arm and measure the oil clearance again. If it still exceeds the allowable limit, replace also the rocker arm shaft.

Clearance between rocker arm shaft and rocker arm	Factory spec.	0.016 to 0.068 mm 0.0007 to 0.0026 in.
	Allowable limit	0.10 mm 0.0039 in.
Rocker arm shaft O.D.	Factory spec.	11.973 to 11984 mm 0.4714 to 0.4731 in.
Rocker arm I.D.	Factory spec.	12.000 to 12.041 mm 0.4724 to 0.4731 in.

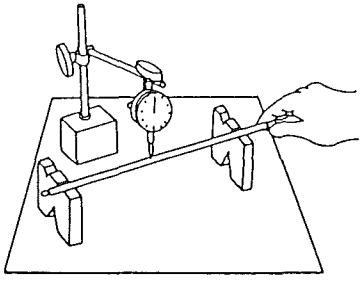

0132F084

Push Rod Alignment

1. Place the V blocks on the surface plate and put the push rod on the V blocks.
2. Place the dial gauge at the center of the push rod, rotate the push rod, and set the dial gauge to "0" when the push rod is at its lowest position.
3. Rotate the push rod and read the maximum value on the dial gauge.
4. If the alignment exceeds the allowable limit, replace the push rod.

Push rod alignment	Allowable limit	0.25 mm 0.0098 in.

https://truckmanualshub.com/

(2) Timing Gears and Camshaft

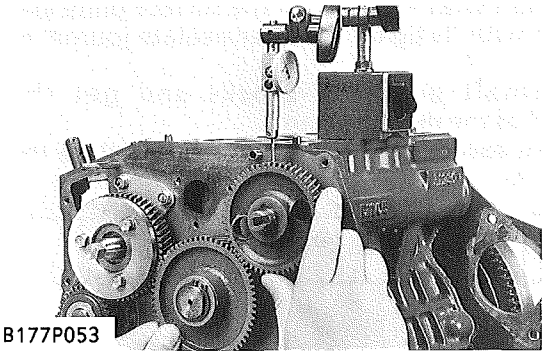

B177P053

Timing Gear Backlash

1. Set a dial indicator (lever type) with its tip on the gear tooth.
2. Move the gear to measure the backlash, holding its mating gear.
3. If the backlash exceeds the allowable limit, check the oil clearance of the shafts and gear.
4. If the oil clearance is proper, replace the gear.

Crank gear / Idle gear	Factory spec.	0.032 to 0.115 mm 0.00120 to 0.00453 in.
	Allowable limit	0.15 mm 0.0059 in.
Idle gear / Cam gear	Factory spec.	0.036 to 0.114 mm 0.00142 to 0.00449 in.
	Allowable limit	0.15 mm 0.0059 in.
Idle gear / Injection pump gear	Factory spec.	0.034 to 0.116 mm 0.00134 to 0.00457 in.
	Allowable limit	0.15 mm 0.0059 in.
Injection pump gear / Governor gear	Factory spec.	0.033 to 0.117 mm 0.00130 to 0.00461 in.
	Allowable limit	0.15 mm 0.0059 in.

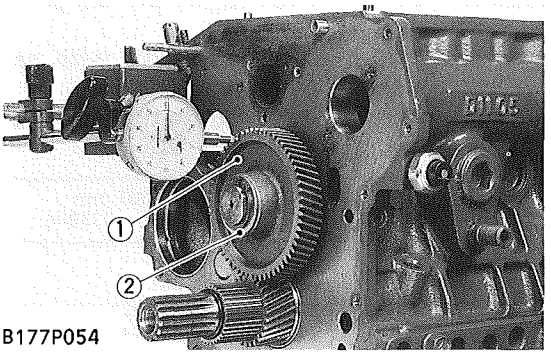

B177P054

(1) Idle Gear (2) Idle Gear Collar

Idle Gear Side Clearance

1. Measure the clearance between the idle gear (1) and the idle gear collar with a dial gauge.
2. If the clearance exceeds the allowable limit, replace the idle gear collar (2).

Side clearance	Factory spec.	0.20 to 0.51 mm 0.0079 to 0.0201 in.
	Allowable limit	0.9 mm 0.0354 in.

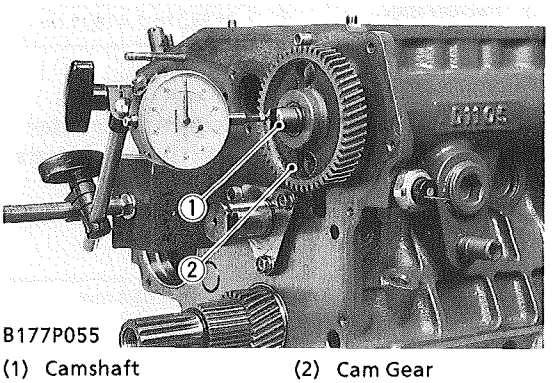

B177P055

(1) Camshaft (2) Cam Gear

Camshaft Side Clearance

1. Pull the cam gear (2) with the camshaft (1) to its end.
2. Measure the clearance between the cam gear (2) and the camshaft stopper.
3. If the clearance exceeds the allowable limit, replace the camshaft stopper.

Side clearance	Factory spec.	0.07 to 0.22 mm 0.0028 to 0.0087 in.
	Allowable limit	0.30 mm 0.0118 in.

https://truckmanualshub.com/

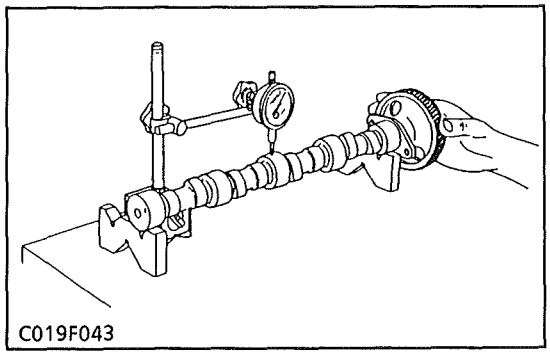
C019F043

Camshaft Alignment

1. Support the camshaft with V-blocks on the surface plate and set a dial indicator with its tip on the intermediate journal at right angle.
2. Rotate the camshaft on the V-blocks and get the misalignment (half of the measurement).
3. If the misalignment exceeds the allowable limit, replace the camshaft.

Camshaft alignment	Allowable limit	0.01 mm 0.0004 in.

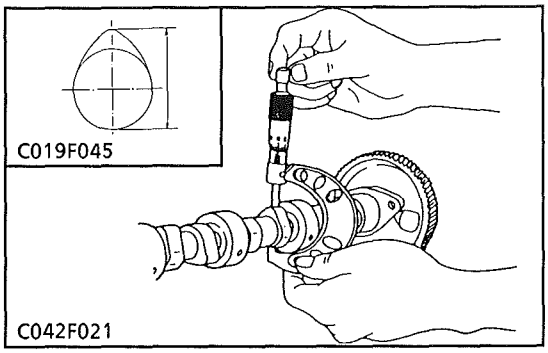
C019F045
C042F021

Intake and Exhaust Cam Height

1. Measure the height of the cam at its highest point with an outside micrometer.
2. If the measurement is less than the allowable limit, replace it.

Cam height of intake and exhaust	Factory spec.	IN	28.80 mm 1.1339 in.
		EX	29.00 mm 1.1417 in.
	Allowable limit	IN	28.75 mm 1.1319 in.
		EX	28.95 mm 1.1398 in.

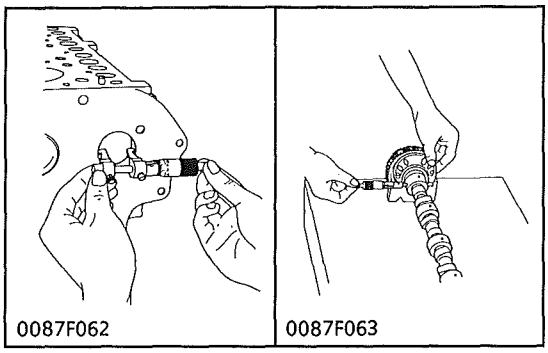
0087F062
0087F063

Oil Clearance of Camshaft Journal

1. Measure the camshaft journal O.D. with an outside micrometer.
2. Measure the cylinder block bore I.D. for camshaft with an inside micrometer. Calculate the oil clearance.
3. If the clearance exceeds the allowable limit, replace the camshaft.

Oil clearance of camshaft	Factory spec.	0.050 to 0.091 mm 0.00197 to 0.00358 in.
	Allowable limit	0.15 mm 0.0059 in.
Camshaft bearing journal O.D.	Factory spec.	35.934 to 35.950 mm 1.41472 to 1.41535 in.
Camshaft bearing I.D.	Factory spec.	36.000 to 36.025 mm 1.41732 to 1.41831 in.

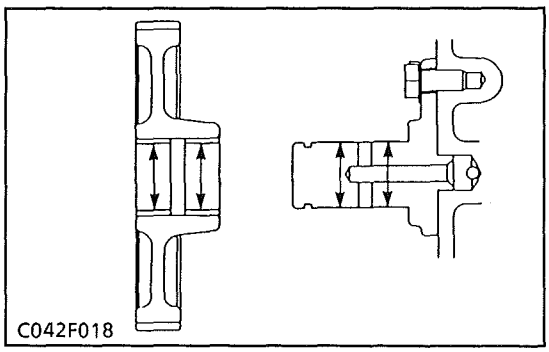
C042F018

Clearance between Idle Gear Shaft and Idle Gear Bushings

1. Measure the idle gear shaft O.D. with an outside micrometer.
2. Measure the idle gear bushings I.D. with an inside micrometer, and calculate the clearance.
3. If the clearance exceeds the allowable limit, replace the bushing.

Clearance between idle gear shaft and idle gear bushings	Factory spec.	0.020 to 0.054 mm 0.00079 to 0.00213 in.
	Allowable limit	0.1 mm 0.0039 in.
Idle gear shaft O.D.	Factory spec.	25.959 to 25.975 mm 1.02200 to 1.02264 in.
Idle gear bushing I.D.	Factory spec.	26.000 to 26.025 mm 1.02362 to 1.02460 in.

https://truckmanualshub.com/

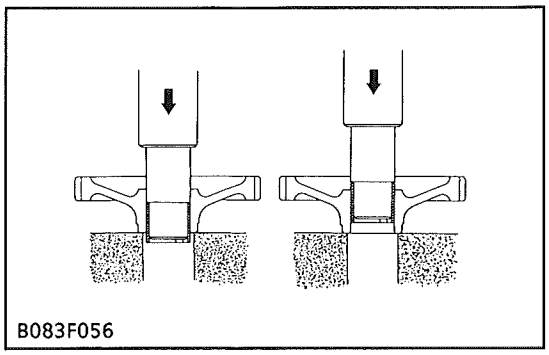
B083F056

Replacing Idle Gear Bushing

1. Press the used bushings out using a idle gear bushing replacing tool.
2. Press fit new bushing.

(3) Piston and Connecting Rod

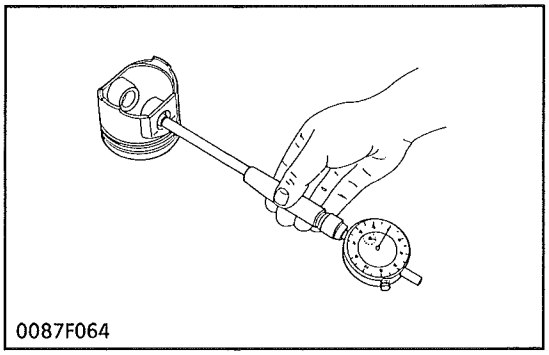
0087F064

Piston Pin-Bore I.D.

1. Measure the I.D. of the piston pin bore in both the horizontal and vertical directions with a cylinder gauge.
2. If the measurement exceeds the allowable limit, replace the piston.

Inside diameter of piston pin bosses	Factory spec.	22.000 to 22.013 mm 0.96614 to 0.86665 in.
	Allowable limit	22.05 mm 0.86811 in.

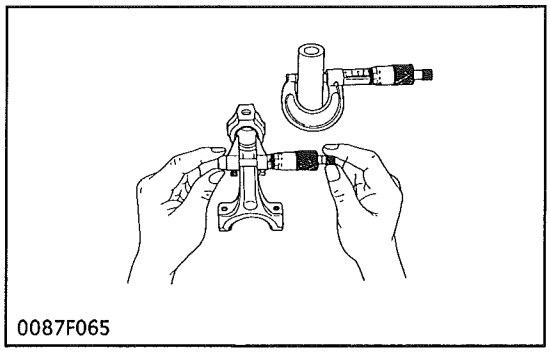
0087F065

Oil Clearance between Piston Pin and Small End Bushing

1. Measure the O.D. of the piston pin where it contacts the bushing with an outside micrometer.
2. Measure the I.D. of the piston pin bushing at the connecting rod small end with a cylinder gauge. Calculate the oil clearance.
3. If the clearance exceeds the allowable limit, replace the bushing. If it still exceeds the allowable limit, replace the piston pin.

Clearance between piston pin and small end bushing	Factory spec.	0.014 to 0.038 mm 0.00055 to 0.00150 in.
	Allowable limit	0.15 mm 0.0059 in.

Piston pin O.D.	Factory spec.	22.002 to 22.011 mm 0.86622 to 0.86657 in.
Small end bushing I.D.	Factory spec.	22.025 to 22.040 mm 0.86713 to 0.86772 in.

https://truckmanualshub.com/

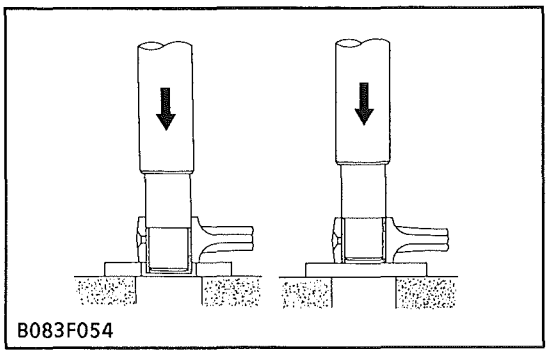
B083F054

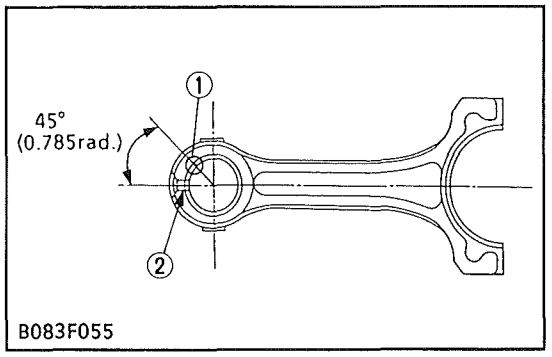

B083F055

Replacing Connecting Rod Small End Bushing

(When removing)

1. Press out the small end bushing with a connecting rod small end bushing replacing tool.

(When installing)

1. Clean a new small end bushing and bore, and apply engine oil to them.
2. Insert a new bushing onto the tool and press-fit it with a press so that the seam (1) of bushing positions as shown in the figure, until it is flash with the connecting rod.
3. Drill a hole to the bushing with aligning the oil hole (2) of connecting rod using 4.0 mm dia. (0.157 in. dia.) drill.

■ NOTE

- **Be sure to chanfer the oil hole circumference with an oil stone.**

(1) Seam (2) Oil Hole

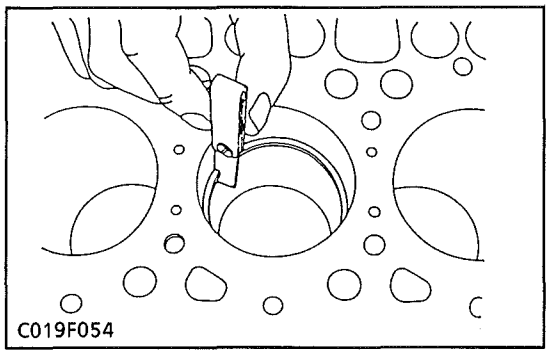
C019F054

Piston Ring Gap

1. Insert the piston ring into the lower part of the liner (the least worn out part) with the piston.
2. Measure the ring gap with a feeler gauge.
3. If the gap exceeds the allowable limit, replace it.

■ IMPORTANT

- **Measure the piston ring gap at the point of the minimum inside diameter of the cylinder.**

Piston ring gap	Top ring Second ring	Factory spec.	(D905, D1005) 0.25 to 0.40 mm 0.0098 to 0.015 in.
			(D1105) 0.30 to 0.45 mm 0.0118 to 0.0177 in.
		Allowable limit	1.25 mm 0.0492 in.
	Oil ring	Factory spec.	0.25 to 0.45 mm 0.0098 to 0.0177 in.
		Allowable limit	1.25 mm 0.0492 in.

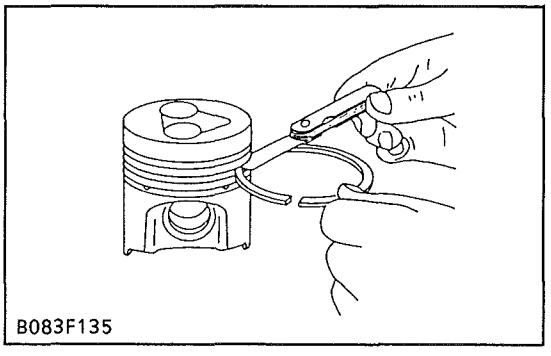
B083F135

Clearance between Piston Ring and Groove

1. Remove carbon from the ring grooves.
2. Measure the clearance between the ring and the groove with a feeler gauge or depth gauge.
3. If the clearance exceed the allowable limit, replace the piston rings.
4. If the clearance still exceeds the allowable limit after replacing the ring, replace the piston.

Piston ring clearance	Second ring	Factory spec.	0.085 to 0.112 mm 0.00335 to 0.00441 in.
		Allowable limit	0.20 mm 0.0079 in.
	Oil ring	Factory spec.	0.020 to 0.055 mm 0.00079 to 0.00217 in.
		Allowable limit	0.15mm 0.0059 in.

https://truckmanualshub.com/

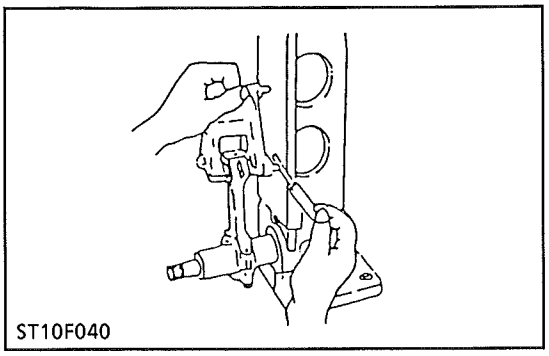
ST10F040

Connecting Rod Alignment

NOTE

- **Since the I.D. of the connecting rod small end bushing is the basis of this check, check the bushing for wear beforehand.**

1. Install the piston pin into the connecting rod.
2. Install the connecting rod on the connecting rod alignment tool (Code No: 07909-31661).
3. Put a gauge over the piston pin and move it against the face plate.
4. If the gauge does not fit squarely against the face plate, measure the space between the pin of the gauge and the face plate.
5. If the measurement exceeds the allowable limit, replace the connecting rod.

Connecting rod alignment	Allowable limit	0.05 mm 0.0020 in.

(4) Crankshaft

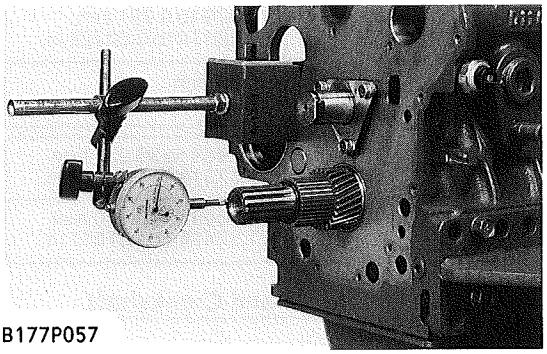
B177P057

End Play of Crankshaft

1. Move the crankshaft to the flywheel side.
2. Set a dial indicator to the crankshaft.
3. Measure the end play by pulling the crankshaft toward the crank gear.
4. If the measurement exceeds the allowable limit, replace the thrust bearing 1 and 2.

End play of crankshaft	Factory spec.	0.15 to 0.31 mm 0.0059 to 0.0122 in.
	Allowable limit	0.5 mm 0.0197 in.

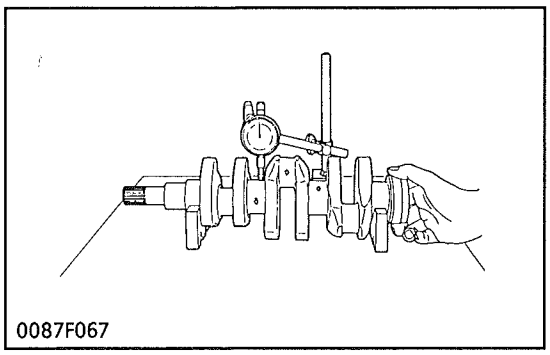
0087F067

Crankshaft Alignment

1. Support the crankshaft with V-blocks on the surface plate and set a dial indicator with its tip on the intermediate journal at right angle.
2. Rotate the crankshaft on the V-blocks and get the misalignment (half of the measurement).
3. If the misalignment exceeds the allowable limit, replace the crankshaft.

Crankshaft alignment	Allowable limit	0.02 mm 0.0008 in.

https://truckmanualshub.com/

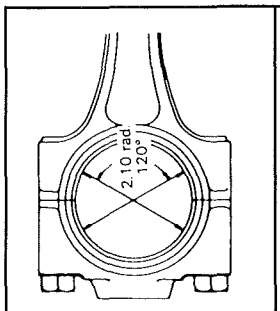

0087F068

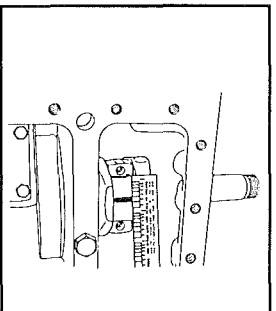
0087F069

Oil Clearance between Crank Pin and Crank Pin Bearing

1. Clean the crank pin and crank pin bearing.
2. Put a strip of press gauge (Code No: 07909-30241) on the center of the crank pin in each direction as shown in the figure.

■ IMPORTANT
- **Never insert the press gauge into the crank pin oil hole.**

3. Install the connecting rod cap and tighten the screws to the specified torque (41.2 to 46.1 N·m, 4.2 to 4.7 kgf·m, 30.4 to 34.0 ft-lbs), and remove the cap again.

■ NOTE
- **Fasten the crankshaft so that it does not turn.**

4. Measure the depression of the press gauge with a sheet of gauge (Paper).
5. If the clearance exceeds the allowable limit, replace the crankpin bearing.
6. If an undersize bearing is to be used, machine the crankshaft.

Oil clearance between crankpin and crankpin bearing	Factory spec.	0.029 to 0.091 mm 0.00114 to 0.00358 in.
	Allowable limit	0.20 mm 0.0079in.
Crankpin O.D.	Factory spec.	39.959 to 39.975 mm 1.57319 to 1.57382 in.
Crankpin bearing I.D.	Factory spec.	40.004 to 40.050 mm 1.57496 to 1.57677 in.

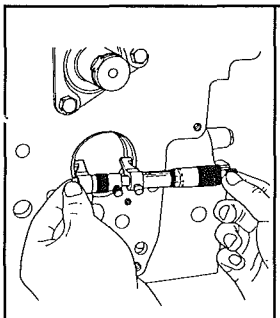
0087F070

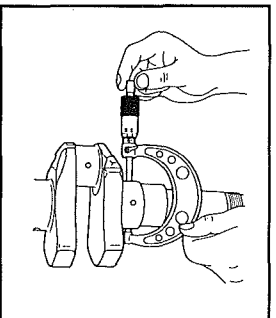
0087F071

Oil Clearance between Crankshaft Journal and Crankshaft Bearing 1

1. Measure the crankshaft journal (on the side of the crankshaft bearing 1) with an outside micrometer.
2. Measure the crankshaft bearing 1 with an inside micrometer, and calculate the clearance.
3. If the clearance exceeds the allowable limit, replace the crankshaft bearing 1.
4. If the crankshaft journal O.D. exceeds the factory specification, machine the crankshaft journal, and use an undersize crankshaft bearing 1.

Oil clearance between crankshaft journal and crankshaft bearing 1	Factory spec.	0.034 to 0.114 mm 0.00157 to 0.00449 in.
	Allowable limit	0.2 mm 0.0079in.
Crankshaft journal O.D.	Factory spec.	47.934 to 47.950 mm 1.88717 to 1.88780 in.
Crankshaft bearing 1 I.D.	Factory spec.	47.984 to 48.048 mm 1.88913 to 1.89165 in.

https://truckmanualshub.com/

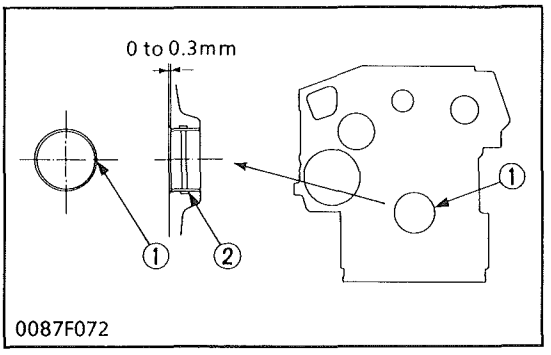

0087F072

Replacing Crankshaft Bearing 1

(When removing)

1. Press out the bearing 1 with crankshaft bearing 1 replacing tool.

(When installing)

1. Clean a new bearing 1 and bore, and apply engine oil to them.
2. Press fit a new bearing 1 using a inserting tool, taking due care to see that the seam of bearing 1 faces the exhaust manifold side.

(1) Seam

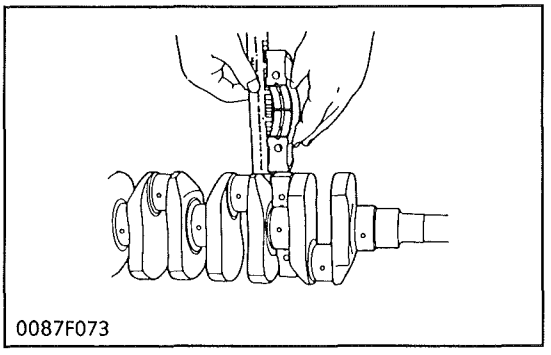
0087F073

Oil Clearance between Crankshaft Journals and Crankshaft Bearings 2

1. Paste a press gauge with grease on the crankshaft bearing.
2. Tighten the crankshaft bearing case onto the crankshaft journal to the specified torque (46.1 to 50.9 N·m, 4.7 to 5.2 kgf·m, 34.0 to 37.6 ft-lbs).
3. Detach the bearing case slowly, and measure the depression of the press gauge with a sheet of gauge (paper).
4. If the measurement exceeds the allowable limit, replace the crankshaft bearing 2.
5. If the crankshaft journal O.D. exceeds the factory specification, machine the crankshaft journal, and use an undersize crankshaft bearing 2.

Oil clearance between crankshaft journal and crankshaft bearing 2	Factory spec.	0.034 to 0.095 mm 0.00134 to 0.00374 in.
	Allowable limit	0.20 mm 0.0079in.
Crankshaft journal O.D.	Factory spec.	47.934 to 47.950 mm 1.88717 to 1.88780 in.
Crankshaft bearing 2 I.D.	Factory spec.	47.984 to 48.029 mm 1.88913 to 1.89091 in.

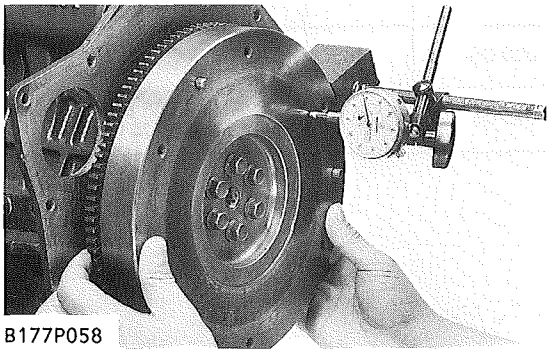
B177P058

Flywheel Sway and Crankshaft Side Clearance

1. Set a dial indicator with its tip on the rear friction face of the flywheel near the edge.
2. Turn the flywheel and measure the sway.
3. If the measurement exceeds the allowable limit, remove the flywheel and check the contact faces of the crankshaft and flywheel.
4. Move the crankshaft with flywheel back and forth to each end and measure the side clearance.
5. If the side clearance exceeds the allowable limit, replace the side bearing.
6. If an oversize bearing is to be used, machine the crankshaft.

Flywheel sway	Allowable limit	0.05 mm 0.0020 in.
Crankshaft side clearance	Factory spec.	0.15 to 0.31 mm 0.0059 to 0.0122 in.
	Allowable limit	0.50 mm 0.0197in.

https://truckmanualshub.com/

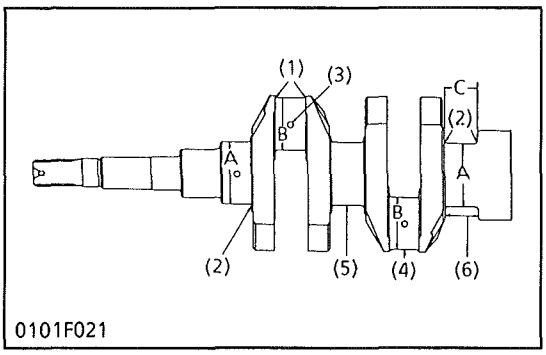

Undersized and Oversized Bearing

If the standardsize bearing cannot be employed due to excessive wear of the crankpin and crank journal, employ undersize or oversize bearings.

For under size or oversize bearing use, follow the precautions noted below.

- **Grind the crankpin and journal with a wheel which has specified round corner and width without shoulder.**

1. 2.8 to 3.2 mm (0.1102 to 0.1260 in.)
2. 2.3 to 2.7 mm (0.0906 to 0.1063 in.)
3. Be sure to chamfer the oil hole circumference to 1 to 1.5 mm (0.04 to 0.06 in.) radius with an oil stone.
4. The crankpin must be fine-finished to higher than (0.8-S).
5. The crank journal must be fine-finished to higher than (0.8-S).
6. The crank journal side surface must be fine-finished to higher than (0.8-S).

Size	Code No.	Name of bearing	Bearing mark	Position	Crankshaft processing dimension
–0.2 mm –0.008 in.	16241-2391-1	Crankshaft bearing 1 (0.2 minus)	020 US	A	**47.734 to 47.750 mm** 1.8793 to 1.8799 in.
–0.2 mm –0.008 in.	16241-2393-1	Crankshaft bearing 2 (0.2 minus)	020 US	C	
–0.2 mm –0.008 in.	16241-2386-1	Crankshaft bearing 3 (0.2 minus)	020 US	D	**51.721 to 51.740 mm** 2.0363 to 2.0370 in.
–0.4 mm –0.016 in.	16241-2392-1	Crankshaft bearing 1 (0.4 minus)	040 US	A	**47.534 to 47.550 mm** 1.8714 to 1.8720 in.
–0.4 mm –0.016 in.	16241-2394-1	Crankshaft bearing 2 (0.4 minus)	040 US	C	
–0.4 mm –0.008 in.	16241-2387-1	Crankshaft bearing 3 (0.4 minus)	040 US	D	**51.521 to 51.540 mm** 2.0284 to 2.0291 in.
–0.2 mm –0.008 in.	16241-2297-1	Crank pin bearing (0.2 minus)	020 US	B	**39.759 to 39.775 mm** 1.5653 to 1.5659 in.
–0.4 mm –0.016 in.	16241-2298-1	Crank pin bearing (0.4 minus)	040 US	B	**39.559 to 39.575 mm** 1.5574 to 1.5581 in.
+ 0.2 mm + 0.008 in.	15521-2395-1	Thrust bearing 1 (0.2 plus)	020 OS	E	**28.20 to 28.25 mm** 1.1102 to 1.1122 in.
	19202-2397-1	Thrust bearing 2 (0.2 plus)			
+ 0.4 mm + 0.016 in.	15521-2396-1	Thrust bearing 1 (0.4 plus)	040 OS	E	**28.40 to 28.45 mm** 1.1181 to 1.1201 in.
	19202-2398-1	Thrust bearing 2 (0.4 plus)			

https://truckmanualshub.com/

(5) Cylinder

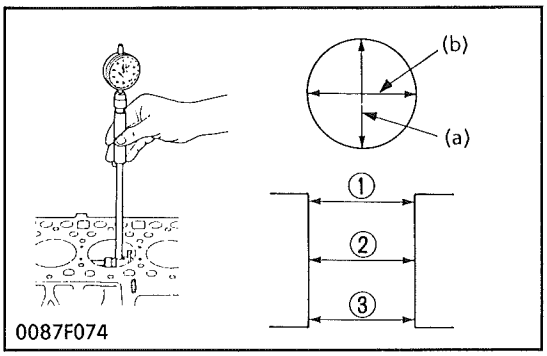

(a) At a right angle to the piston pin
(b) In the direction of the piston pin
(1) Top (About 20 mm (0.787 in.) from the top edge)
(2) Middle (About 40 mm, 1.575 in.)
(3) Bottom (About 100 mm, 3.937 in.)

Wear of Cylinder

1. Measure the cylinder inner diameter using the cylinder gauge at six points shown in the figure (directions (a) and (b) at points (1), (2) and (3)). Calculate difference between the maximum and minimum measured values. In general, maximum wear appears at direction (a) or (b) of point (1) which is about 20 mm (0.787 in.) from the top edge while minimum wear is at direction (a) or (b) of point (3).
2. If the calculated difference exceeds the allowable limit specified in the table below, install the oversized piston and piston ring.

	Model	Factory spec.	Allowable limit
Wear of cylinder I.D.	D905	72.000 to 72.019 mm 2.83465 to 2.83539 in.	72.169 mm 2.84130 in.
	D1005	76.000 to 76.019 mm 2.99213 to 2.99289 in.	76.169 mm 2.99878 in.
	D1105	78.000 to 78.019 mm 3.07087 to 3.07161 in.	78.169 mm 3.07752 in.

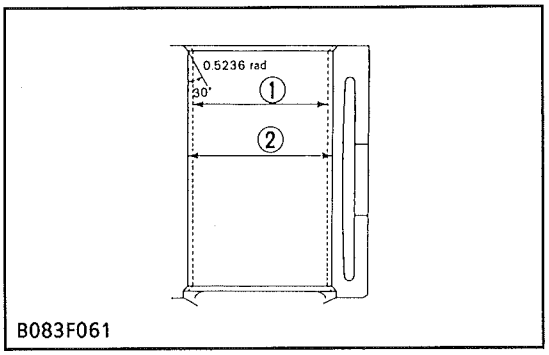

Correcting Cylinder

1. Bore and finish the cylinder inner wall using a hone to a diameter + 0.5 mm (0.0197 in.) larger than the standard. The surface roughness after honing must be 1.2 to 2.0 μRz.

■ NOTE

- **Chamfer the top corner (A) of the cylinder as shown to protect the piston ring from being damaged when inserting the piston into the cylinder.**

	Model	Cylinder I.D.	Finishing
Oversized cylinder	D905	72.500 to 72.519 mm 2.85433 to 2.85508 in.	Hone to 1.2 to 2.0 μRz
	D1005	76.500 to 76.519 mm 3.01181 to 3.01256 in.	
	D1105	78.500 to 78.519 mm 3.09055 to 3.09129 in.	

■ IMPORTANT

- **When the oversized cylinder liner is worn beyond the allowable limit, replace the cylinder liner and bore and hone it.**
- **The cylinder liner which has been oversized should use a piston and a ring assembly of the same oversize.**

		Code No,			Mark
Oversize	Part name	D905	D1005	D1105	
0.5 mm 0.0197 in.	Piston 05	16221-2191-0	16251-2191-0	16281-2191-0	05 OS
	Piston 2 05	–	–	←	
	Piston ring assembly 05	15901-2109-0	16271-2109-0	16261-2109-0	

https://truckmanualshub.com/

[3] LUBRICATING SYSTEM

CHECKING

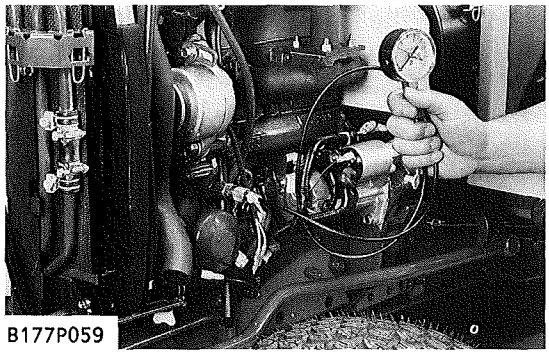

B177P059

Engine Oil Pressure

1. Remove the oil switch and set a pressure tester (Code No: 07916-32031).
2. Start the engine. After warming up, measure the oil pressure of both idling and rated speeds.
3. If the oil pressure is less than the allowable limit, check the following.

- Engine oil insufficient
- Oil pump defective
- Oil strainer clogged
- Oil gallery clogged
- Excessive oil clearance of bearing
- Foreign matter in the relief valve

Oil pressure	At idle speed	Factory spec.	More than 49 kPa 0.5 kgf/cm² 7 psi
		Allowable limit	—
	At rated speed	Factory spec.	196 to 441 kPa 2.0 to 4.5 kgf/cm² 36 to 64 psi
		Allowable limit	147 kPa 1.5 kgf/cm² 27 psi

SERVICING

(1) Oil Pump

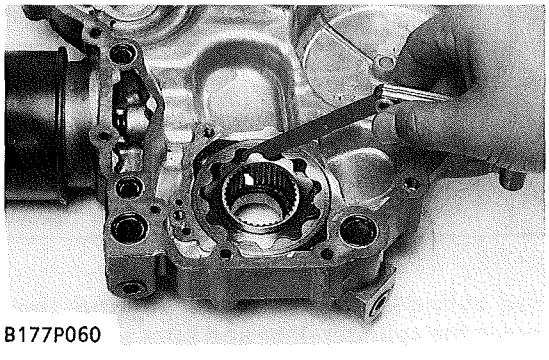

B177P060

Rotor Lobe Clearance

1. Measure the clearance between lobes of the inner rotor and the outer rotor with a feeler gauge.
2. If the clearance exceeds the factory specification, replace the oil pump rotor assembly.

Outer and inner rotor clearance	Factory spec.	0.06 to 0.18 mm 0.00236 to 0.00709 in.

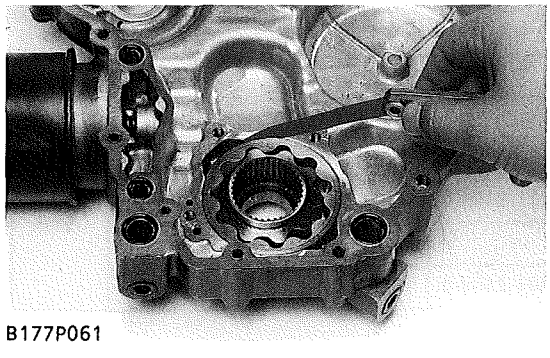

B177P061

Clearance between Outer Rotor and Pump Body

1. Measure the clearance between the outer rotor and the pump body with a feeler gauge.
2. If the clearance exceeds the factory specification, replace the oil pump rotor assembly.

Radial clearance between outer rotor and pump body	Factory spec.	0.10 to 0.18 mm 0.00394 to 0.00709 in.

https://truckmanualshub.com/

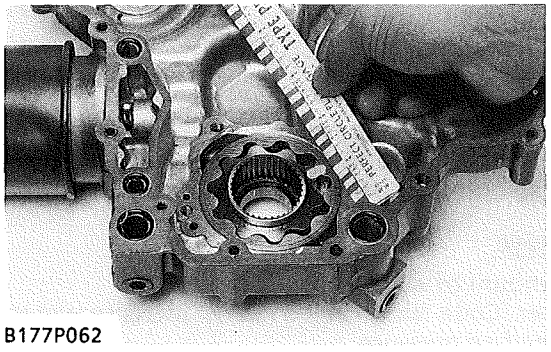
B177P062

Clearance between Rotor and Cover

1. Put a strip of press gauge (Code No: 07909-30241) onto the rotor face with grease.
2. Install the cover and tighten the screws.
3. Remove the cover carefully, and measure the width of the press gauge with a sheet of gauge.
4. If the clearance exceeds the factory specification, replace oil pump rotor assembly.

End clearance between rotor and cover	Factory spec.	0.025 to 0.75 mm 0.00098 to 0.002953 in.

[4] COOLING SYSTEM

CHECKING AND ADJUSTING

(1) Fan Belt

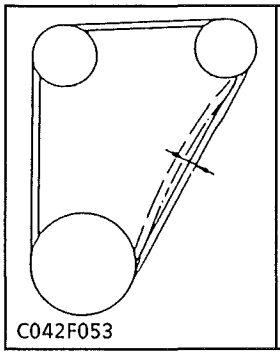
C042F053

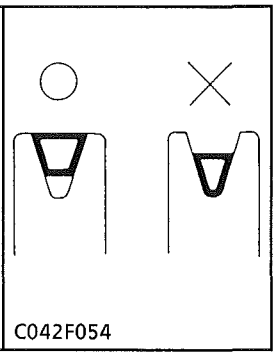
C042F054

Fan Belt Tension

1. Press the fan belt between fan drive pulley and dynamo pulley (or alternator pulley) at 98N (10 kgf, 22 lbs) of force.
2. If the deflection is not within the factory specifications, loosen the bolts, and relocate the dynamo (or alternator) to adjust.
3. If the belt is damaged or worn (see figure), replace the belt.

Belt tension (deflection)	Factory spec.	7 to 9 mm (0.28 to 0.35 in.) at 98 N (10 kgf , 22 lbs) of force

(2) Thermostat

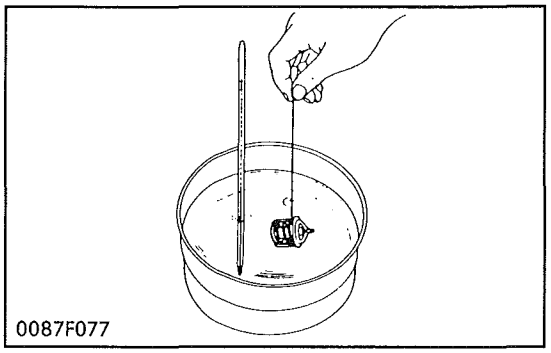
0087F077

Thermostat's Valve Opening Temperature

1. Push down the thermostat valve and insert a string between the valve and the valve seat.
2. Place the thermostat and a thermometer in a container with water and gradually heat the water.
3. Hold the string to suspend the thermostat in the water. When the water temperature rises, the thermostat valve will open, allowing it to fall down from the string.
   Read the temperature at this moment on the thermometer.
4. Continue heating the water and read the temperature when the valve has risen by about 6 mm (0.236 in.).
5. If the measurement is not acceptable, replace the thermostat.

Thermostat's valve opening temperature	Factory spec.	80.5 to 83.5°C 176.9 to 182.3°F
Temperature at which thermostat completely opens	Factory spec.	95°C 203°F

https://truckmanualshub.com/

(3) Radiator

CAUTION

- **When removing the radiator cap, wait at least ten minutes after the engine has stopped and cooled down. Otherwise, hot water may gush out, scalding nearby people.**

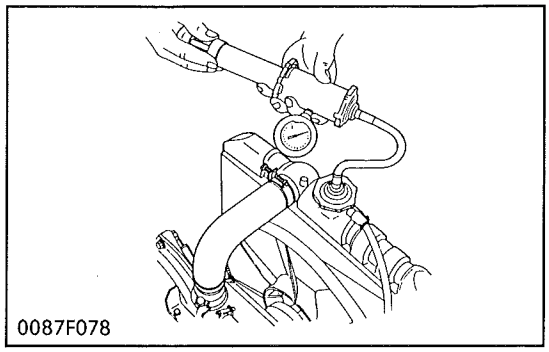
0087F078

Radiator Water Leakage

1. Pour a specified amount of water into the radiator.
2. Set a radiator tester (Code No: 07909-31551). Increase water pressure to the specified pressure.
3. Check each section for water leakage.
4. When water leakage is excessive, replace the radiator. If water leakage is caused by a small pinhole, correct the radiator with radiator cement.

Water tightness	Factory spec.	No leak at 137 kPa 1.4 kgf/cm² 20 psi

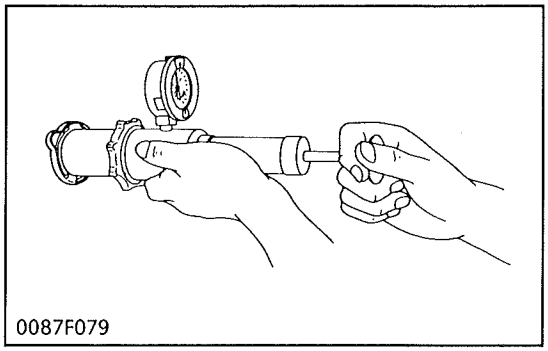
0087F079

Radiator Cap Air Leakage

1. Set a radiator tester (Code No: 07909-31551) to the radiator cap.
2. Apply the specified pressure of 98.1 kPa (0.9 kgf/cm², 12.8 psi).
3. Check if the pressure drop to less than 59 kPa (0.6 kgf/cm², 9 psi) in 10 seconds.
4. If the pressure is less than the factory specification, replace it.

Radiator cap tightness	Factory spec.	more than 10 seconds for pressure fall from 88 to 59 kPa (from 0.9 to 0.6 kgf/cm², from 13 to 9 psi)

DISASSEMBLING AND ASSEMBLING

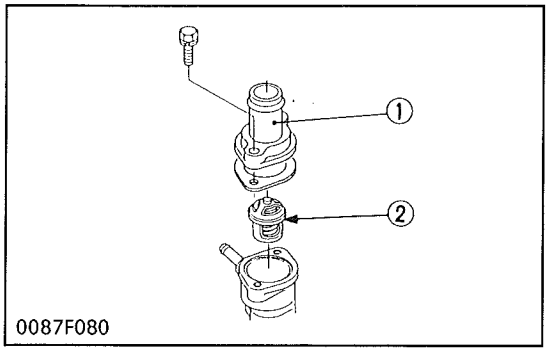

0087F080

Thermostat

1. Remove the thermostat cover (1).
2. Remove the thermostat (2).

(When reassembling)

- Apply a liquid gasket (Three Bond 1215 or equivalent) only at the thermostat cover side of the gasket.

(1) Thermostat Cover
(2) Thermostat

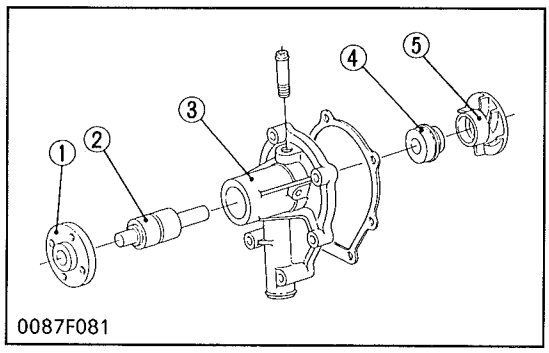

0087F081

Water Pump

1. Remove the fan and fan pulley.
2. Remove the water pump from gear case cover.
3. Remove the water pump flange (1).
4. Press out the water pump shaft (2) with the impeller (5) on it.
5. Remove the impeller from the water pump shaft.
6. Remove the mechanical seal (4).

(When reassembling)

- Replace the mechanical seal with new one.

(1) Water Pump Flange
(2) Water Pump Shaft
(3) Water Pump Body
(4) Mechanical Seal
(5) Impeller

https://truckmanualshub.com/

[5] FUEL SYSTEM

CHECKING AND ADJUSTING

(1) Injection Pump

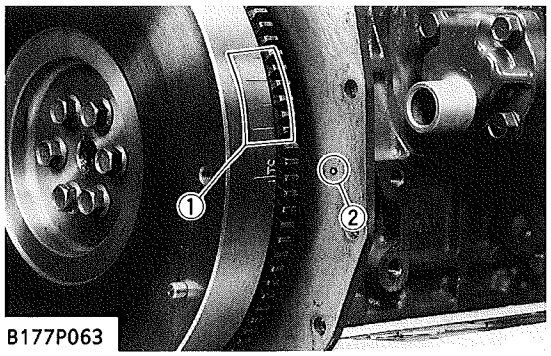

B177P063

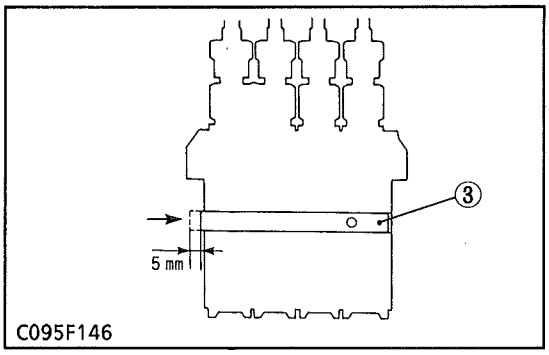

C095F146

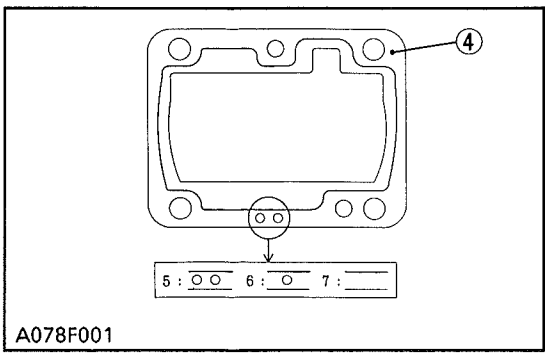

A078F001

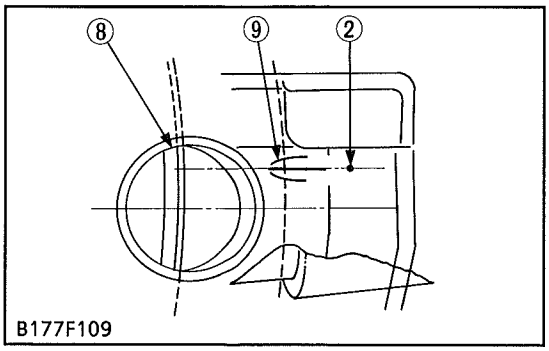

B177F109

Injection Timing

■ IMPORTANT

- **When inspecting the fuel injection timing, the timing control actuates during starting and the correct fuel injection timing cannot be measured.**

1. Remove the injection pipes.
2. Remove the engine stop solenoid, push in the control rack of the injection pump by 5 mm (0.2 in.) and hold it at that position.
3. Turn the flywheel counterclockwise until fuel flows from the delivery valve holder.
4. Continue to turn the flywheel slowly, and stop it as soon as the fuel level at the tip of the delivery valve holder begins to increase.
5. Check to see if the timing angle lines on the flywheel is aligned with the alignment mark (2).
6. If the timing is out of adjustment, readjust the timing with shims.

Injection timing	Factory spec.	0.30 to 0.33 rad. (17° to 19°) before T.D.C.

■ NOTE

- **The sealant is applied to both sides of the soft metal gasket shim. The liquid gasket is not required for assembling.**
- **Shims are available in thickness of 0.20 mm, 0.25 mm and 0.30 mm. Combine these shims for adjustments.**
- **Addition or reduction of shim (0.05 mm, 0.0020 in.) delays or advances the injection timing by approx. 0.0087 rad. (0.5°).**
- **In disassembling and replacing, be sure to use the same number of new gasket shims with the same thickness.**

(Reference)

- The alignment mark (2) of the injection timing (1) is not in alignment with the center of the timing window (8).
- The above mark comes aligned with the center of the clutch housing rib (9).

(1) Timing
(2) Alignment Mark
(3) Control Rack
(4) Shim (Soft Metal Gasket Shim)
(5) 2-hole : 0.20 mm
(6) 1-hole : 0.25 mm
(7) Without hole : 0.30 mm
(8) Timing Window
(9) Rib

https://truckmanualshub.com/

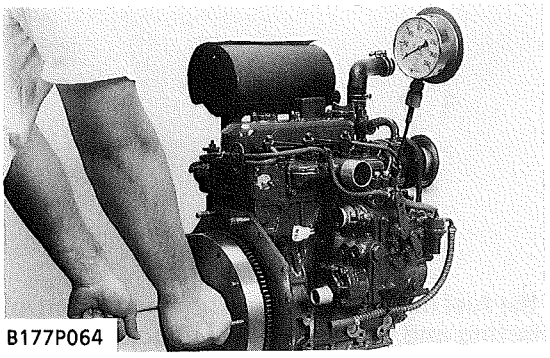
B177P064

Fuel Tightness of Pump Element

1. Remove the injection pipes and glow plugs, and install the pressure tester.
2. With the speed control lever at the full injection position, turn the crankshaft counterclockwise (facing the flywheel).
3. If the pressure does not build up to the fuel injection pressure, replace the delivery valve with new one and test again.
4. If the pressure does not built up more than the fuel injection pressure, replace the injection pump assembly.

■ IMPORTANT

- **After replacing only pump element, the amount of injection should be adjusted on a specified test bench.**

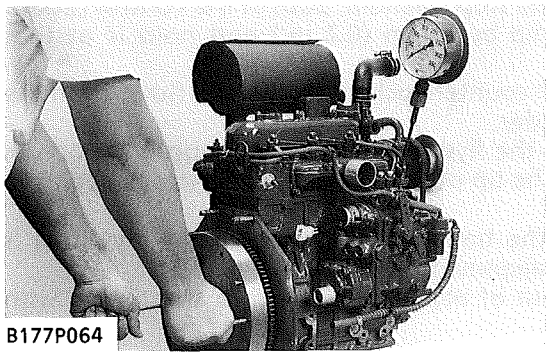
B177P064

Fuel Tightness of Delivery Valve

1. The delivery valve is checked in the same way as the pump element. Turn the flywheel counterclockwise to make the pressure gauge indicate 14.7 MPa (150 kgf/cm^2, 2133 psi).
2. Set the FI mark on the flywheel of the cylinder being checked to the position at 90° clockwise from the punch mark on the rear end plate. (This lowers the pressure inside the delivery chamber)
3. If it takes the pressure five seconds or more to drop from 14.7 MPa (150 kgf/cm^2, 2133 psi) to 13.7 MPa (140 kgf/cm^2, 1991 psi) the delivery valve can be used.
4. If the measured value stays below the allowable limit, replace the pump assembly or the delivery valve.

Fuel tightness of delivery valve	Allowable limit	981 KPa (10 kgf/cm^2, 142 psi) of pressure drop from injection pressure for 5 sec. or more

(2) Injection Nozzle

⚠ CAUTION

- **Check the nozzle injection pressure and condition after confirming that there is nobody standing in the direction the fume goes. If the fume from the nozzle directly contacts the human body, cells may be destroyed and blood poisoning may be caused.**

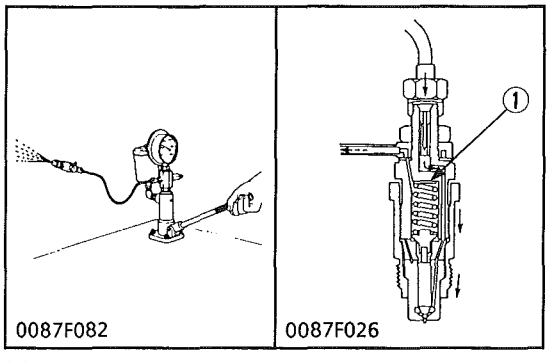

(1) Adjusting Washer

Nozzle Injection Pressure

1. Set the injection nozzle to the nozzle tester.
2. Slowly move the tester handle to measure the pressure at which fuel begins jetting out from the nozzle.
3. If the measurement is not within the factory specifications, disassemble the injection nozzle, and change adjusting washer (1) until the proper injection pressure is obtained.

(Reference)

- Pressure variation with 0.025 mm (0.00098 in.) difference of adjusting washer thickness.
  Approx. 588 kPa (6 kgf/cm^2, 85 psi)

Fuel injection pressire	Factory spec.	13.73 to 14.71 MPa 140 to 150 kgf/cm^2 1991 to 2133 psi

https://truckmanualshub.com/

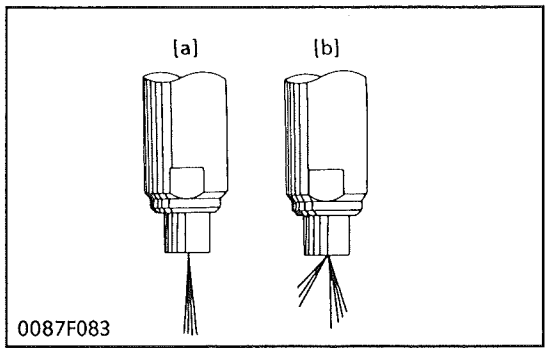

Nozzle Spraying Condition

1. Set the injection nozzle to a nozzle tester and check the nozzle spraying condition.
2. If the spraying condition is defective, replace the nozzle piece.

[a] Good
[b] Bad

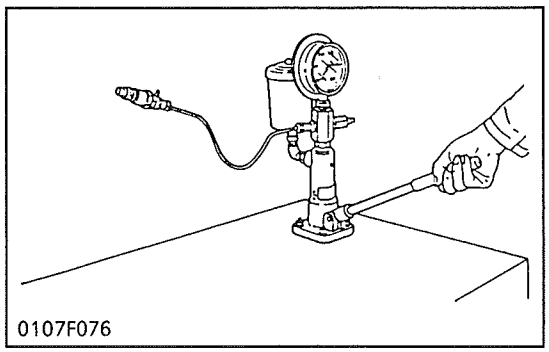

Fuel Tightness of Needle Valve Seat

1. Set the injection nozzle to a nozzle tester.
   Apply a pressure 12.75 MPa (130kgf/cm^2, 1849 psi).
2. After keeping the nozzle under this pressure for 10 seconds, check to see if fuel leaks from the nozzle.
3. If fuel should leak, replace the nozzle piece.

DISASSEMBLING AND ASSEMBLING

(1) Injection Pump

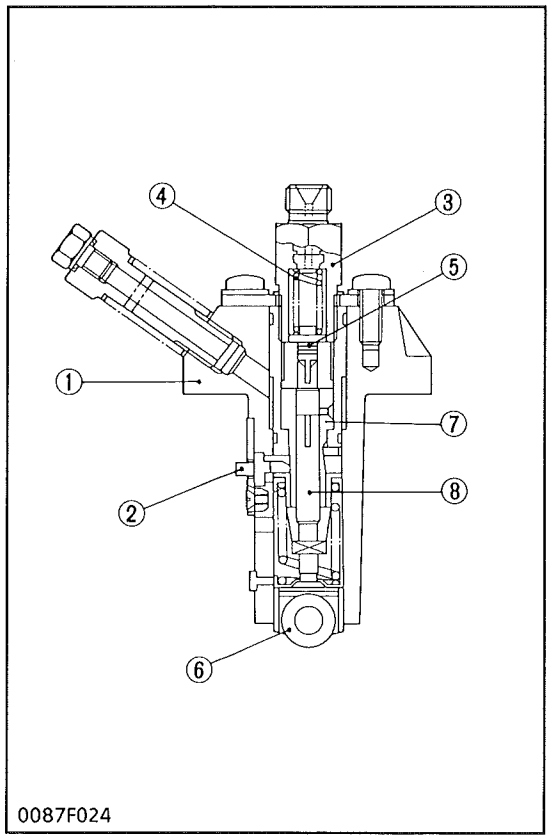

■ IMPORTANT

- **If replacing the pump element, the amount of fuel injection should be adjusted on a specified bench.**

(1) Pump Body
(2) Control Rack
(3) Delivery Valve Holder
(4) Delivery Valve Spring
(5) Delivery Valve
(6) Tappet Roller
(7) Cylinder
(8) Plunger

https://truckmanualshub.com/

(2) Injection Nozzle

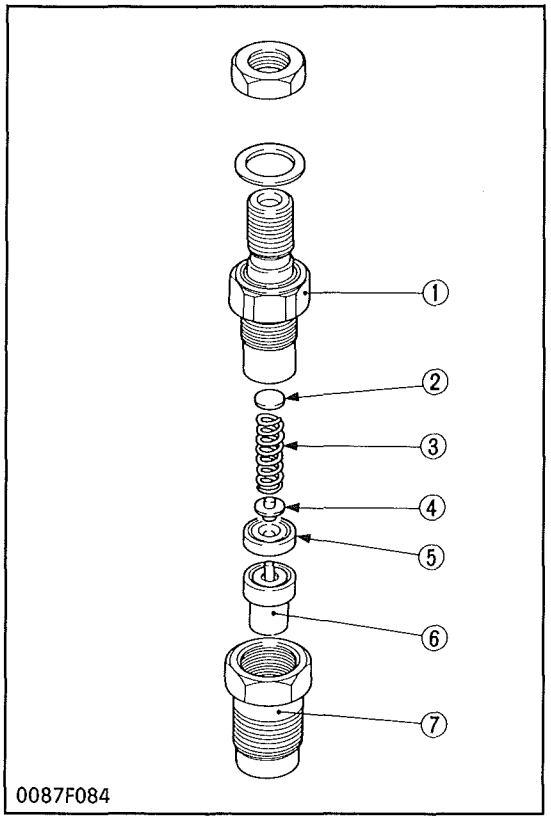

Nozzle Holder

1. Secure the nozzle retaining nut (7) with a vise.
2. Remove the nozzle holder (1), and take out parts inside.

(When reassembling)

- Assemble the nozzle in clean fuel oil.
- Install the push rod (4), noting its direction.
- After assembling the nozzle, be sure to adjust the fuel injection pressure.

Tightening torque	Nozzle holder	34.3 to 39.2 N·m 3.5 to 4.0 kgf·m 25.3 to 28.9 ft-lbs
	Overflow pipe nut	19.6 to 24.5 N·m 2.0 to 2.5 kgf·m 14.5 to 18.1 ft-lbs
	Nozzle holder assembly	49.0 to 68.6 N·m 5.0 to 7.0 kgf·m 36.2 to 50.6 ft-lbs

(1) Nozzle Holder
(2) Adjusting Washer
(3) Nozzle Spring
(4) Push Rod
(5) Distance Piece
(6) Nozzle Piece
(7) Nozzle Retaining Nut

https://truckmanualshub.com/

MECHANISM

CONTENTS

[1] FEATURES 2-M1
[2] LINKAGE MECHANISM 2-M1
[3] OPERATION 2-M2

https://truckmanualshub.com/

https://truckmanualshub.com/

[1] FEATURES

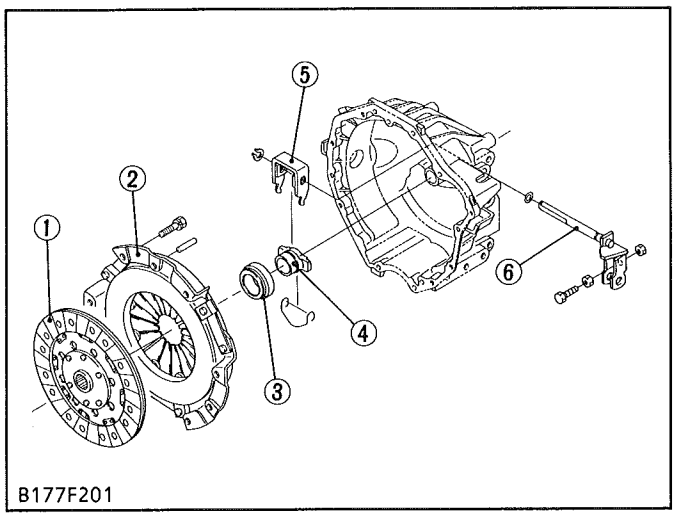

This tractor is used dry single plate type clutch.

The clutch is located between the engine and transmission and is operated by stepping on the clutch pedal.

When the clutch pedal is depressed, the clutch is disengaged and when it is released, the clutch is engaged and power from the engine is transmitted to the transmission.

(1) Clutch Disc
(2) Pressure Plate Assembly
(3) Release Bearing
(4) Release Rod
(5) Release Fork
(6) Clutch Rod

[2] LINKAGE MECHANISM

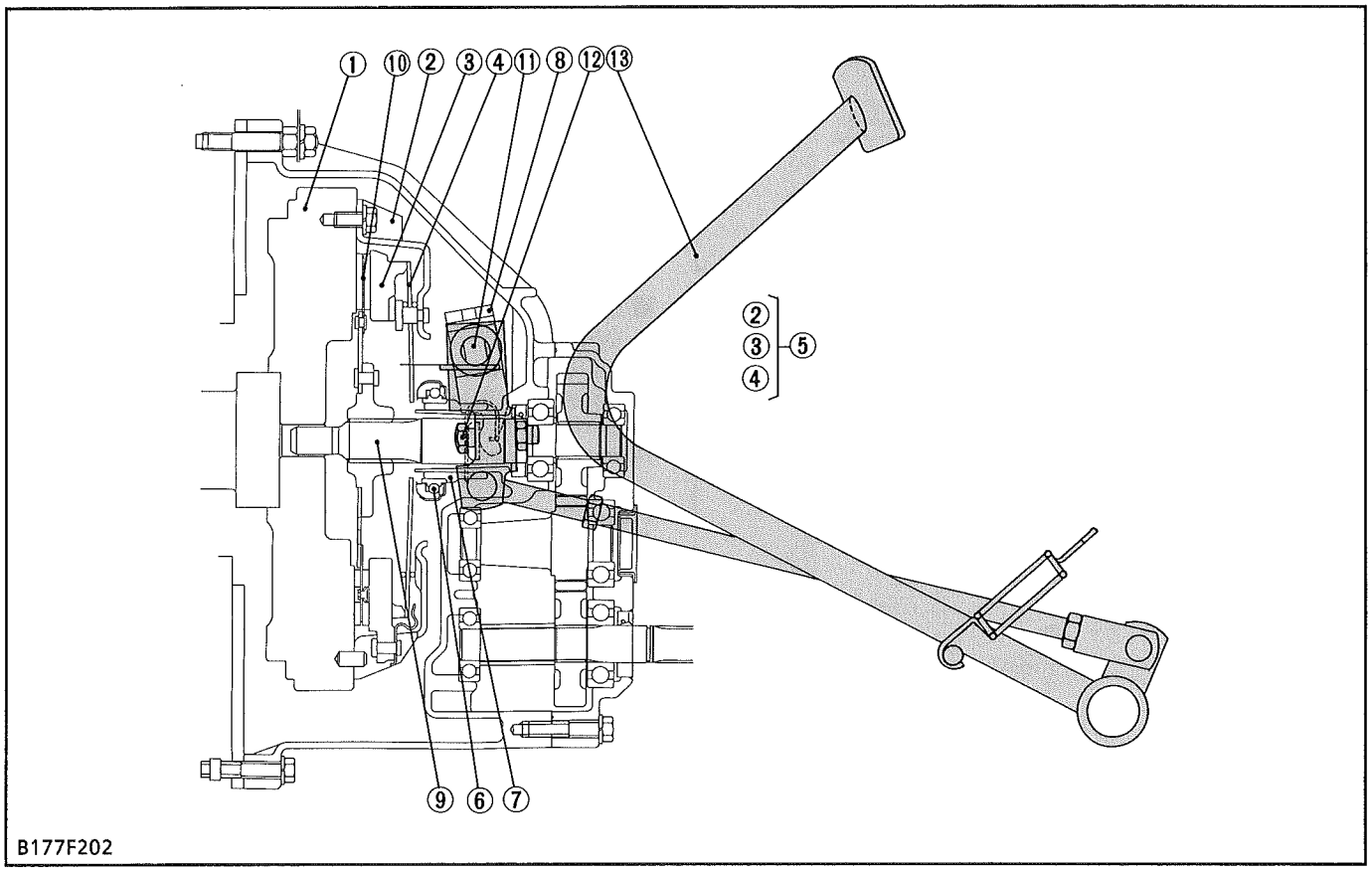

(1) Engine Flywheel
(2) Clutch Cover
(3) Pressure Plate
(4) Diaphragm Spring
(5) Pressure Plate Assembly
(6) Clutch Release Bearing
(7) Clutch Release Hub
(8) Clutch Release Fork
(9) Clutch Shaft
(10) Clutch Disc
(11) Clutch Rod
(12) Clutch Adjusting Bolt
(13) Clutch Pedal

Engine torque is transmitted to the pressure plate assembly (5) via the flywheel (1) which is connected to the engine crankshaft. Therefore, the clutch cover constantly runs with engine. The clutch disc(10) is located between the flywheel (1) and the pressure plate (3) of pressure plate assembly. Torque is transmitted to the clutch disc (10) by the pressure created by diaphragm spring (4) installed in pressure plate assembly. Then, the torque is transmitted to the transmission via the clutch shaft (9).

When the pedal (13) is depressed, the clutch release hub (7) and the clutch release bearing (6) move towards the flywheel and push the fingers of the diaphragm spring (4). In other words, this movement pulls the pressure plate (3) up and disengages the clutch.

https://truckmanualshub.com/

[3] OPERATION

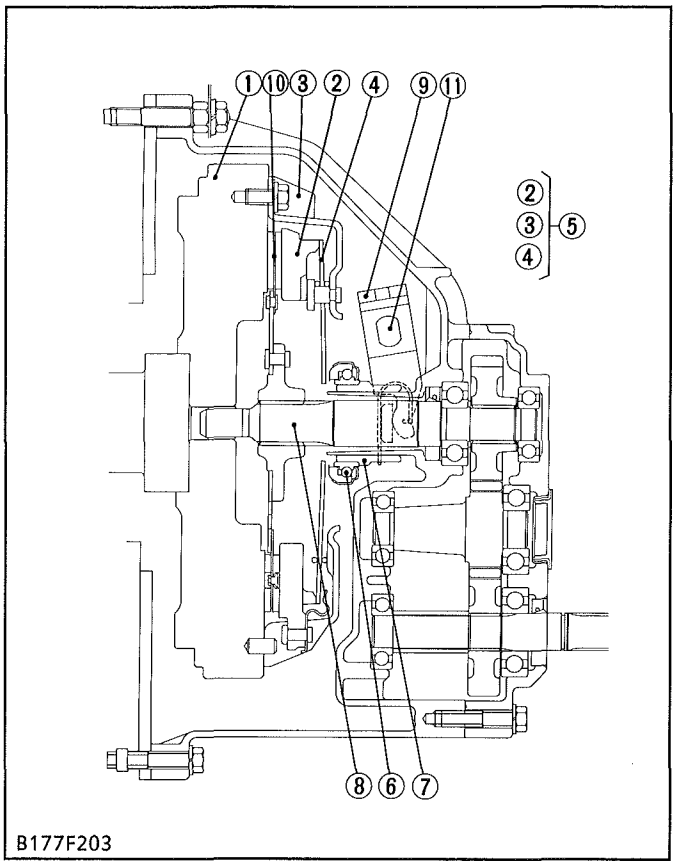

B177F203

■ Clutch "Engaged"

When the clutch pedal is not depressed, the clutch release bearing (6) and the fingers of diaphragm spring (4) are not connected to each other.

Accordingly, the pressure plate (2) is tightly pressed against the flywheel (1) by the diaphragm spring (4). As a result, rotation of the flywheel (1) is transmitted to the transmission through the clutch shaft (8) due to the frictional force among the flywheel (1), clutch disc (10) and pressure plate (2).

(1) Flywheel
(2) Pressure Plate
(3) Clutch Cover
(4) Diaphragm Spring
(5) Pressure Plate Assembly
(6) Release Bearing
(7) Release Hub
(8) Clutch Shaft
(9) Release Fork
(10) Clutch Disc
(11) Clutch Lever

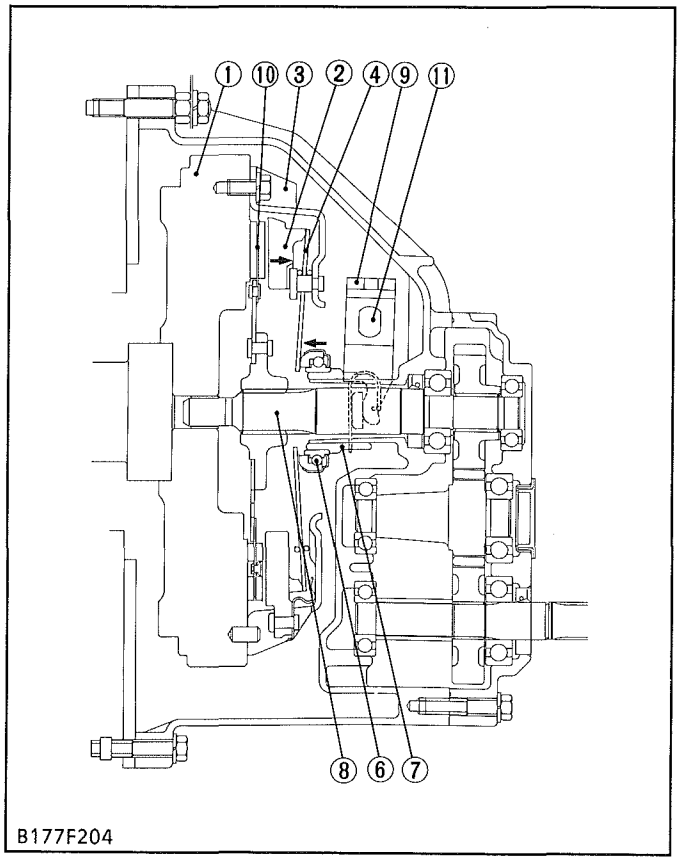

B177F204

■ Clutch "Disengaged"

When the clutch pedal is depressed, the clutch rod is pulled to move the clutch lever (11). Then, the release fork (9) pushes the release hub (7) and release bearing (6) toward the flywheel. Simultaneously, the release bearing (6) pushes the diaphragm spring (4).

As the pressure plate (2) is pulled by the diaphragm spring (4), the frictional force among the flywheel (1), clutch disc (10) and pressure plate (2) disappears.

Therefore, rotation of the flywheel (1) is not transmitted to the clutch disc (10), and then the rotation of the clutch shaft (8) stops.

(1) Flywheel
(2) Pressure Plate
(3) Clutch Cover
(4) Diaphragm Spring
(5) Pressure Plate Assembly
(6) Release Bearing
(7) Release Hub
(8) Clutch Shaft
(9) Release Fork
(10) Clutch Disc
(11) Clutch Lever

https://truckmanualshub.com/

SERVICING

CONTENTS

TROUBLESHOOTING 2-S1
SERVICING SPECIFICATIONS 2-S2
TIGHTENING TORQUES 2-S2
CHECKING, DISASSEMBLING AND SERVICING 2-S3
CHECKING AND ADJUSTING 2-S3
DISASSEMBLING AND ASSEMBLING 2-S4
[1] SEPARATING ENGINE FROM CLUTCH HOUSING 2-S4
[2] SEPARATING CLUTCH ASSEMBLY 2-S8
SERVICING 2-S9

https://truckmanualshub.com/

https://truckmanualshub.com/

TROUBLESHOOTING

Symptom	Probable Cause	Solution	Reference Page
Clutch Drags	• Clutch pedal free play excessive • Dust on clutch disc generated from clutch disc facing • Release fork broken • Clutch disc or pressure plate warped • Wire ring of the pressure plate worn or broken	Adjust Remove rust Replace Replace Replace (Pressure plate assembly)	2-S3 – 2-S9 2-S10 2-S10
Clutch Slips	• Clutch pedal free play too small • Clutch disc excessively worn • Grease or oil on clutch disc facing • Clutch disc or pressure plate warped • Diaphragm spring weaken or broken • Wire ring of the pressure plate worn or broken	Adjust Replace Replace Replace Replace Replace (Pressure plate assembly)	2-S3 2-S10 2-S9 2-S10 2-S10 2-S10
Chattering	• Grease or oil on clutch disc facing • Clutch disc or pressure plate warped • Clutch disc boss spline worn or rusted • Clutch shaft bent • Pressure plate or flywheel face cracked or scored • Clutch disc boss spline and clutch shaft spline worn • Diaphragm spring strength uneven or diaphragm spring broken	Replace Replace Replace or remove rust Replace Replace Replace Replace	2-S9 2-S10 2-S10 3-S17 1-S28 2-S10, 3-S17 2-S10
Rattle During Running	• Clutch disc boss spline worn • Replace bearing worn or sticking	Replace Replace	2-S10 2-S11
Clutch Squeaks	• Replace bearing sticking or dry • Clutch disc excessively worn	Replace Replace	2-S11 2-S9, 2-S10
Vibration	• Clutch shaft bent • Clutch disc rivet worn or broken • Clutch parts broken	Replace Replace Replace	3-S17 2-S10 2-S9,

https://truckmanualshub.com/

SERVICING SPECIFICATIONS

Item		Factory Specification	Allowable Limit
Clutch Pedal	Free play	20 to 30 mm 0.8 to 1.2 in.	–
Clutch Pedal Stopper Bolt	Height	18 to 22 mm 0.70 to 0.87 in.	–
Clutch Disc	Disc Surface to Rivet Top (Depth)	–	0.3 mm 0.012 in.
Clutch Disc Boss to Gear Shaft	Backlash (Displacement Around Disc Edge)	–	2.0 mm 0.079 in.
Pressure Plate	Flatness	–	0.2 mm 0.008 in.
Diaphragm Spring	Mutual Difference	–	0.5 mm 0.020 in.

TIGHTENING TORQUES

Tightening torques of screws and nuts on the table below are especially specified.
(For general use screws and nuts : See page G-9)

Item	N·m	kgf·m	ft-lbs
Clutch mounting screw	23.5 to 27.5	2.4 to 2.8	17.4 to 20.3
Engine and clutch housing mounting screw and nut			
M8 screw	17.7 to 20.6	1.8 to 2.1	13.0 to 15.2
M10 nut	48.1 to 55.8	4.9 to 5.7	35.5 to 41.2
Steering wheel mounting nut	29.4 to 49.0	3.0 to 5.0	21.7 to 36.2
Joint bolt for delivery pipe of three point	58.8 to 78.5	6.0 to 8.0	43.4 to 57.9
Drag link slotted nut	17.7 to 34.3	1.8 to 3.5	13.0 to 25.3
Flare nut for delivery pipe and power steering pipes	29.4 to 39.2	3.0 to 4.0	21.7 to 28.9

https://truckmanualshub.com/

CHECKING, DISASSEMBLING AND SERVICING

CHECKING AND ADJUSTING

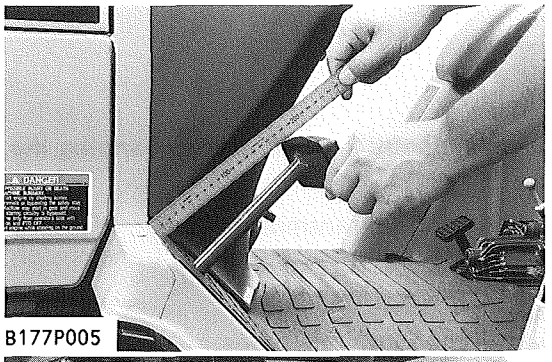

B177P005

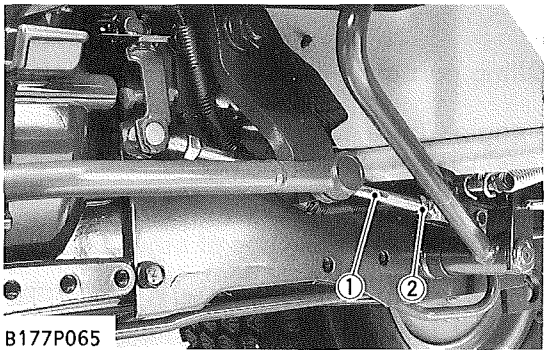

B177P065

Clutch Pedal Free Travel

CAUTION

- **When checking, park the tractor on flat ground, apply the parking brake, stop the engine and remove the key.**

1. Slightly depress the clutch pedal and measure free travel at top of pedal stroke.
2. If the measurement is not within the factory specifications, loosen the lock nut (2) and adjust the clutch rod (1) length.
3. After adjusting it, be sure to keep the distance for stopper bolt.
4. After adjusting them, try to start engine. If no start, check the safety switch setting position.

Clutch pedal free travel	Factory spec.	20 to 30 mm 0.79 to 1.18 in.

(1) Clutch Rod (2) Lock Nut

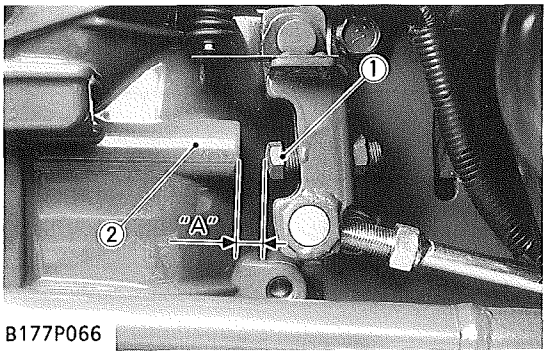

B177P066

Clutch Pedal Stopper Bolt

1. Measure the clearance "A" between stopper bolt (1) and clutch housing (2).
2. If the measurement is not within the factory specifications, adjust it with the clutch clutch pedal stopper bolt (1).

NOTE

- **After adjustment, secure the stopper bolt with the lock nut.**

Clearance : "A"	Factory spec.	8.5 mm 0.33 in.

(1) Clutch Pedal Stopper Bolt (2) Clutch Housing

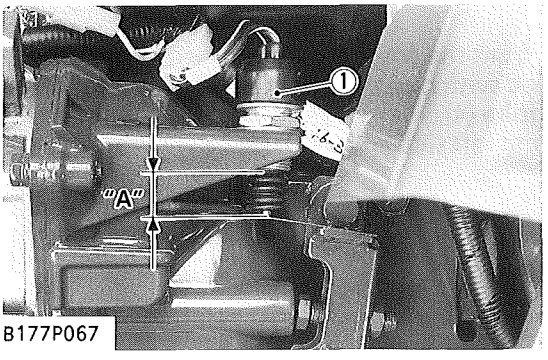

B177P067

Safety Switch Setting Position

1. Measure the distance "A" of safety switch when clutch pedal fully depressed.
2. If the distance "A" is not within the factory specifications, adjust the mounting position of safety switch.

Safety switch distance : "A"	Factory spec.	17 to 21 mm 0.67 to 0.83 in.

(1) Safety Switch

https://truckmanualshub.com/

DISASSEMBLING AND ASSEMBLING

[1] SEPARATING ENGINE FROM CLUTCH HOUSING

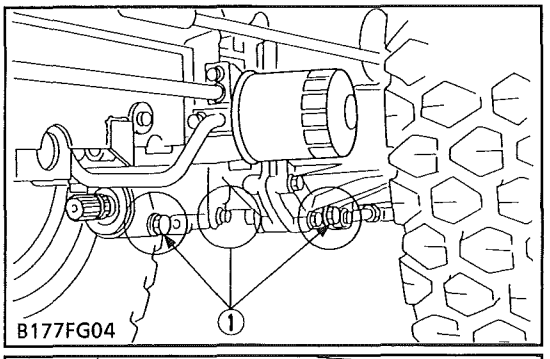

B177FG04

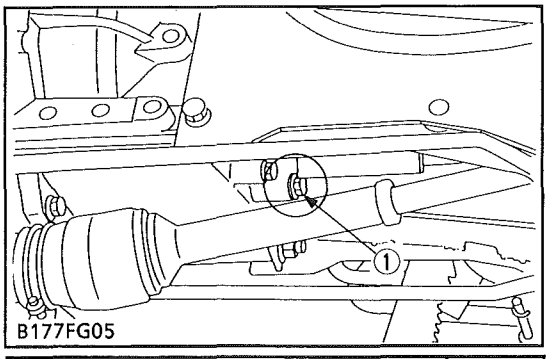

B177FG05

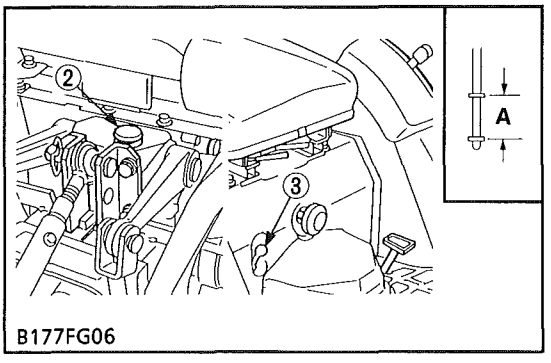

B177FG06

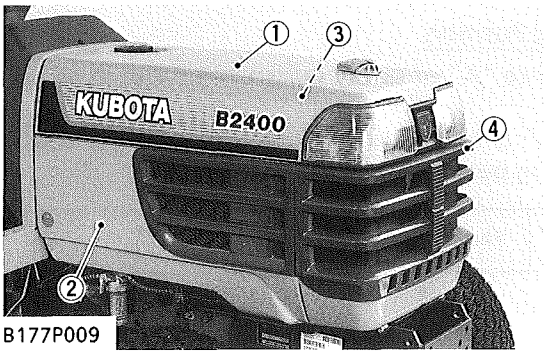

B177P009

Drain Transmission Oil

CAUTION

- **Be sure to stop the engine before checking and changing the transmission oil.**

1. Place an oil pan underneath the transmission case.
2. Remove the drain plugs (1) at the bottom of the transmission case to drain transmission oil.
3. Drain the transmission oil.
4. After draining, screw in the four drain plugs.

(When reassembling)

- Fill new oil from filling port after removing the filling plug (2).
- After running the engine for a few minutes. Stop it and check the oil level again, if low, add oil prescribed level.

IMPORTANT

- **Use only multi-grade transmission oil. Use of other oils may damage the transmission or hydraulic system. Refer to "LUBRICANTS AND FLUID" (See page G-8).**
- **Never work the tractor immediately after changing the transmission oil. Keeping the engine at medium speed for a few minutes to prevents damage to the transmission.**
- **Do not mix different blands oil together.**

Transmission oil capacity	HST type	12.0 ℓ 3.17 U.S.gals. 2.6 Imp.gals
	Manual transmission type	11.0 ℓ 2.90 U.S.gals. 2.4 Imp.gals

[A] Oil level acceptable within this range.

(1) Drain Plug
(2) Filling Plug
(3) Dipstick

Hood and Side Cover

1. Open the hood (1) from the front and remove the spring lock pin and remove hood with hood rod for keeping it open.
2. Remove the front grille (4).
3. Remove the right and left side cover (2), (3).

(1) Hood
(2) Side Cover (RH)
(3) Side Cover (LH)
(4) Front Grille

https://truckmanualshub.com/

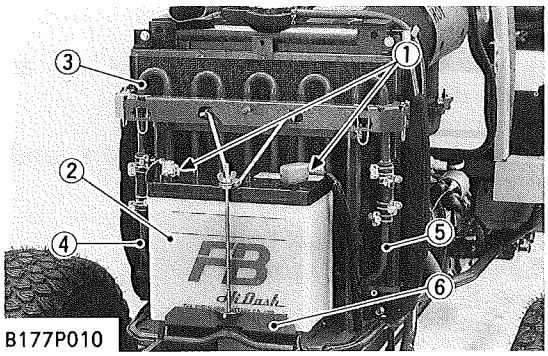

B177P010

Battery, Oil Cooler and Hydraulic Pipes (HST Type)

1. Disconnect the battery cords (1) and dismount the battery (2).
2. Loosen the clamps and remove the battery base (6) with oil cooler (3) then remove the delivery pipe (4) and return pipe (5).

■ **NOTE**

- **When disconnecting the battery cords, disconnect the grounding cord first. When connecting the positive cord first.**

(1) Battery Cord
(2) Battery
(3) Oil Cooler
(4) Delivery Pipe
(5) Return Pipe
(6) Battery Base

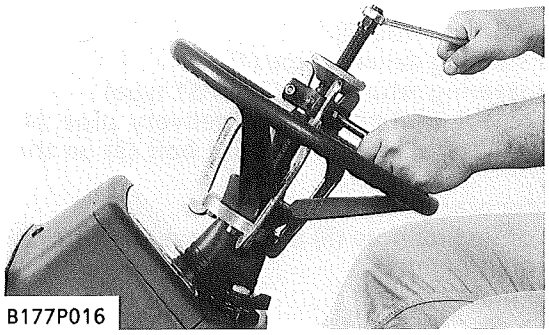
B177P016

Steering Wheel

1. Remove the steering wheel cap.
2. Remove the steering wheel mounting nut and remove the steering wheel with a steering wheel puller. (Code No : 07916-51090)

(When reassembling)

Tightening torque	Steering wheel mounting nut	29.4 to 49.0 N·m 3.0 to 5.0 kgf·m 21.7 to 36.2 ft-lbs

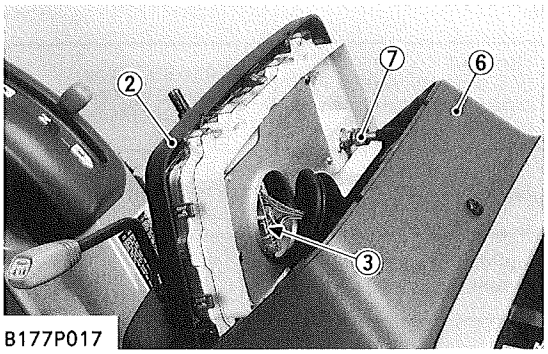

B177P017

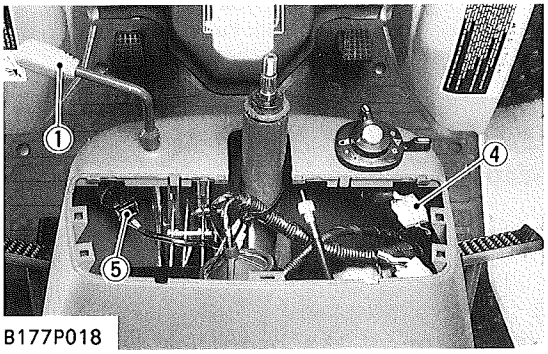

B177P018

Meter Panel and Panel Under Cover

1. Remove the meter panel (2) and disconnect the meter panel connector (3) and hour-meter cable (7) from the meter panel. Then remove the meter panel.
2. Tap out the spring pin and remove the hand accelerator lever (1).
3. Disconnect the combination switch connector (4) and main switch connector (5).
4. Remove the panel under cover mounting screw and remove the panel under cover (6).

(1) Hand Accelerator Lever
(2) Meter Panel
(3) Meter Panel Connector
(4) Combination Switch Connector
(5) Main Switch Connector
(6) Panel Under Cover
(7) Hour-meter Cable

https://truckmanualshub.com/

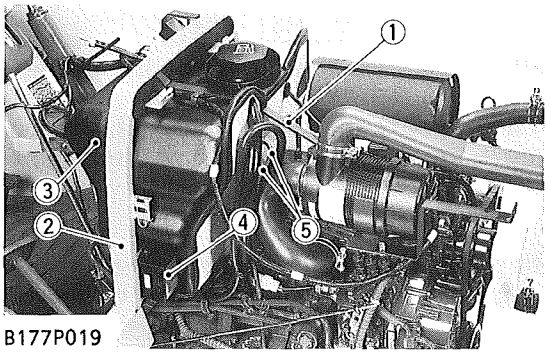

B177P019

Fuel Tank

1. Disconnect the fuel hose between fuel filter and fuel tank at the fuel filter side, then drain fuel completely.
2. Remove the fuel tank frame stay (1).
3. Disconnect the regulator and hazard unit connectors, and remove the lead wire for fuel gauge.
4. Disconnect the fuse box (4).
5. Dismount the overflow hoses (5) of fuel line.
6. Remove the tank flame (2) with fuel tank (3).

(1) Fuel Tank Frame Stay
(2) Fuel Tank Flame
(3) Fuel Tank
(4) Fuse Box
(5) Overflow Hose

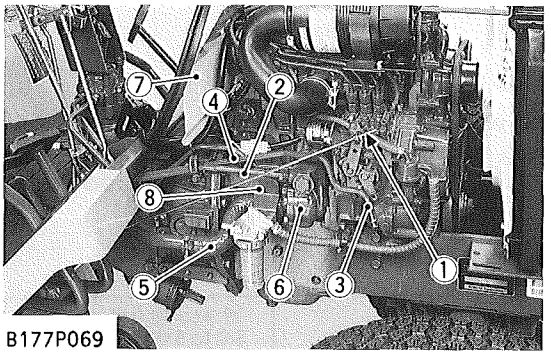

B177P069

Suction Pipe, Delivery Pipe and Power Steering Pipes and Others

1. Remove the foot accelerator rod (2).
2. Remove the power steering delivery pipe (1).
3. Remove the power steering return pipe (3). (HST type)
4. Disconnect the flare nut of 3-point hitch delivery pipe (4) from flow priority valve and loosen the joint bolt (3) on the hydraulic cylinder.
5. Remove the fuel filter bracket (8) with fuel filter.
6. Loosen the clamps of suction hose (5) and remove the suction hose from the hydraulic pump (6).
7. Remove the shutter plate (7).

(When reassembling)

Tightening torque	Flare nut (P.S. delivery, return pipe and 3-point hitch delivery pipe)	29.4 to 39.2 N·m 3.0 to 4.0 kgf·m 21.7 to 28.9 ft-lbs
	Joint bolt	58.8 to 78.5 N·m 6.0 to 8.0 kgf·m 43.4 to 57.9 ft-lbs
	Fuel filter bracket mounting screw	17.7 to 20.6 N·m 1.8 to 2.1 kgf·m 13.0 to 15.2 ft-lbs

(1) Foot Accelerator Rod
(2) Power Steering Delivery Pipe
(3) Power Steering Return Pipe
(4) 3-Point Hitch Delivery Pipe
(5) Suction Hose
(6) Hydraulic Pump
(7) Shutter Plate
(8) Fuel Filter Bracket

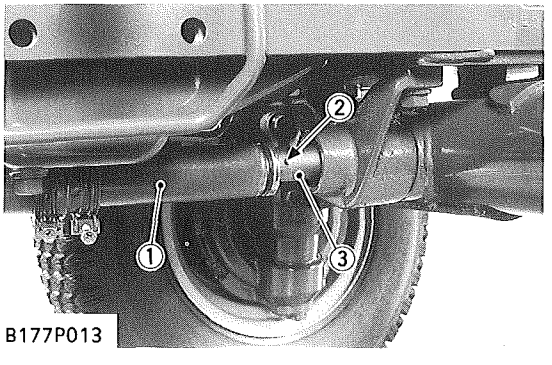

B177P013

Propeller Shaft Cover and Coupling

1. Loosen the clamp and slide the propeller shaft cover (1) to the rear.
2. Tap out the spring pin (2) and then slide the coupling (3) to the rear.

(When reassembling)

- Apply grease to the spline of the propeller shaft and coupling.

(1) Propeller Shaft Cover
(2) Spring Pin
(3) Coupling

https://truckmanualshub.com/

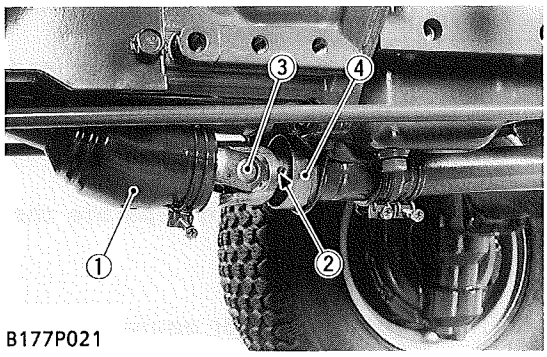

B177P021

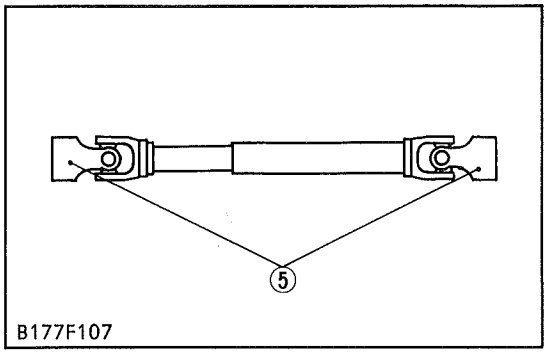

B177F107

Universal Joint and Bearing Holder

1. Loosen the clamp and slide the universal joint cover (1) to the rear.
2. Tap out the spring pin (2) and then slide the universal joint (3) to the rear.
3. Remove the bearing holder (4) and universal joint.

(When reassembling)

- Make sure the yokes (5) of universal joints must always be in the same plane as shown in the figure.
- Apply grease to the spline of the propeller shaft and universal joint.
- When inserting the spring pins (2), face their splits in the direction parallel to the universal joint as shown in the figure.

(1) Universal Joint Cover
(2) Spring Pins
(3) Universal Joint
(4) Bearing Holder
(5) Yoke

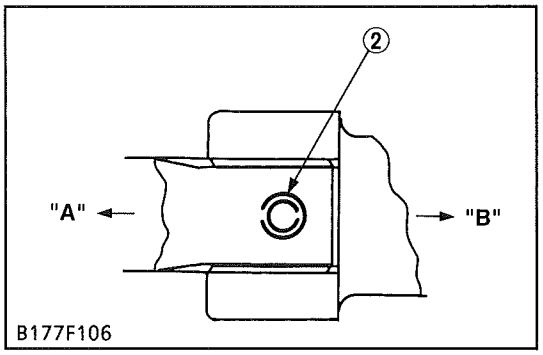

B177F106

[A] Front
[B] Rear

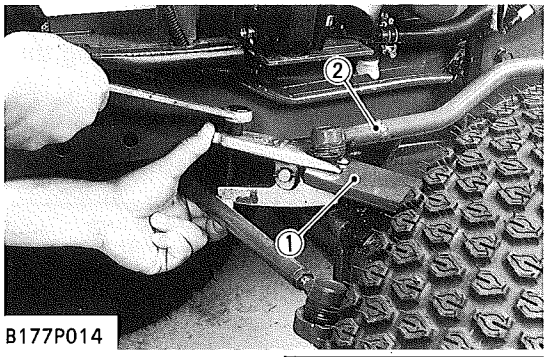

B177P014

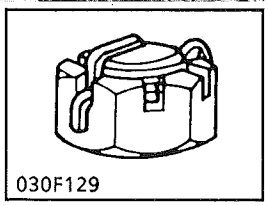
030F129

Drag Link

1. Steer the front wheels to the left.
2. Remove the slotted nut and disconnect the drag link (2) from the knuckle arm (1).

(When reassembling)

■ IMPORTANT

- **After tightening the slotted nut to the specified torque, install the cotter pin as shown in the figure.**

Tightening torque	Slotted nut	17.7 to 34.3 N·m 1.8 to 3.5 kgf·m 13.0 to 25.3 ft-lbs

(1) Knuckle Arm
(2) Drag Link

https://truckmanualshub.com/

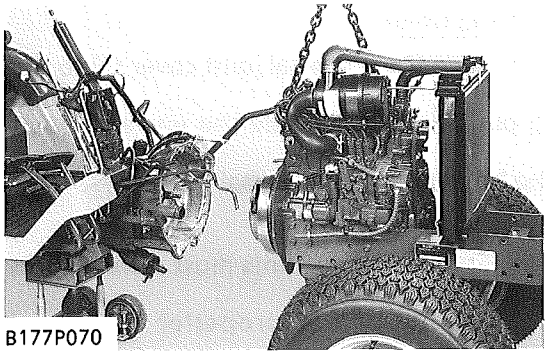
B177P070

Separating the Engine from Clutch Housing

1. Disconnect the glow plug lead wire and tharmo sensor lead wire. And then disconnect the connectors for dynamo or 2P for alternator connector and starter motor lead wire.
2. Place the jack under the center frame.
3. Hoist the engine by the cain at the engine hook.
4. Remove the engine mounting screws and separate the engine from the clutch housing.

(When reassembling)

- Apply liquid gasket (Three Bond 1208D or equivalent) to joint face of the engine and clutch housing.

Tightening torque	Engine mounting M8 screw	17.7 to 20.6 N·m 1.8 to 2.1 kgf·m 13.0 to 15.2 ft-lbs
	Engine mounting M10 nut	48.1 to 55.8 N·m 4.9 to 5.7 kgf·m 35.5 to 41.2 ft-lbs

[2] SEPARATING CLUTCH ASSEMBLY

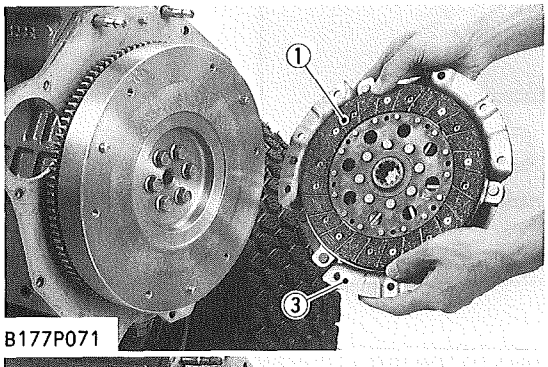

B177P071

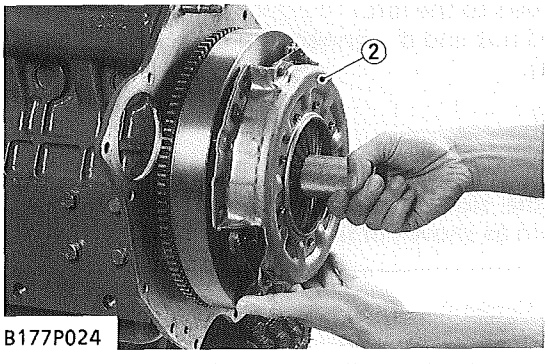

B177P024

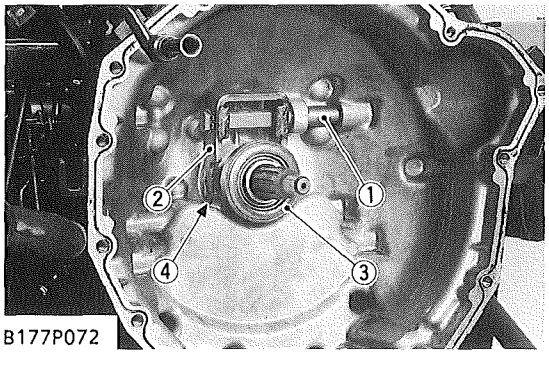

B177P072

Separating the Clutch Assembly

1. Remove the clutch assembly (2) from the flywheel.

(When reassembling)

- Direct the shorter end of the clutch disc boss toward the flywheel.
- Apply molybdenum disulphide (Three Bond 1901 or equivalent) to the splines of clutch disc boss.
- Install the pressure plate, noting the position of straight pins.

■ IMPORTANT

- **Align the center of clutch disc and flywheel by inserting the clutch center tool.**

■ NOTE

- **Do not allow grease and oil on the clutch disc facing.**

Tightening torque	Clutch mounting screw	23.5 to 27.5 N·m 2.4 to 2.8 kgf·m 17.4 to 20.2 ft-lbs

(1) Clutch Disc
(2) Clutch Assembly
(3) Clutch Cover

Clutch Rod and Clutch Release Fork

1. Remove the clutch pedal rod (1).
2. Remove the external snap ring at the end of clutch rod (1) and remove the clutch release fork (2) and release bearing (3) with release hub.

(When reassembling)

■ NOTE

- **Set the clutch release fork and release hub with set spring (4) in the correct direction.**

(1) Clutch Rod
(2) Clutch Release Fork
(3) Release Bearing
(4) Set Spring

https://truckmanualshub.com/

SERVICING

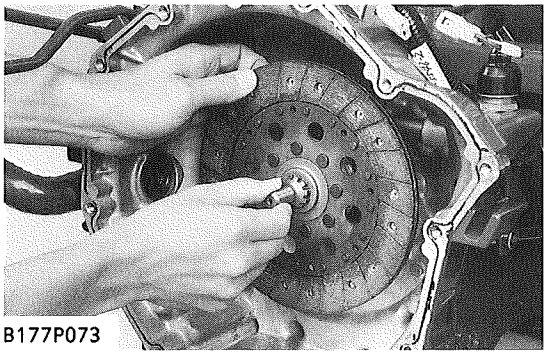

B177P073

Backlash between Clutch Disc and Clutch Shaft

1. Mount the clutch disc onto the propeller shaft.
2. Hold the propeller shaft so that it does not rotate.
3. Slightly move the disc and measure the displacement around disc edge.
4. If the measurement exceeds the allowable limit, replace clutch disc.

Displacement around disc edge	Allowable limit	2.0 mm 0.079 in.

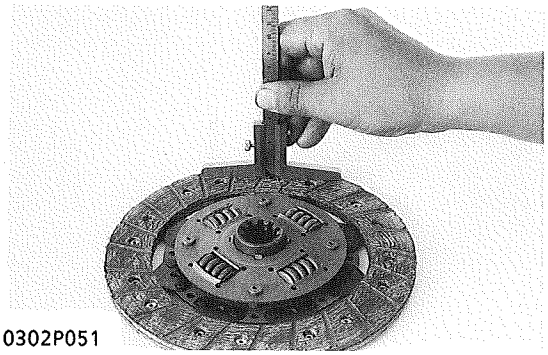

0302P051

Clutch Disc Wear

1. Measure the depth from clutch disc surface to the top of rivet at least 10 points with a depth gauge.
2. If the depth is less than the allowable limit, replace.
3. If oil is sticking to the clutch disc, or disc surface is carbonized, replace clutch disc.

Depth to river top	Allowable limit	0.3 mm 0.012 in.

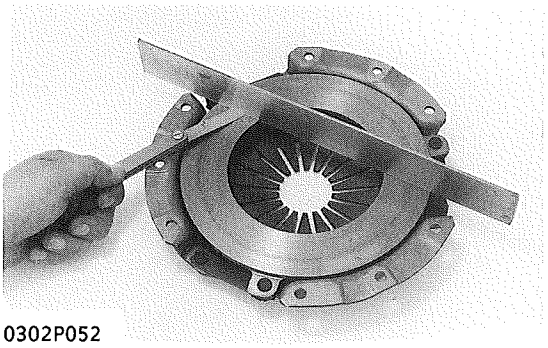

0302P052

Pressure Plate Flatness

1. Place a straightedge on the pressure plate and measure clearance with a feeler gauge at several points.
2. If the clearance exceeds allowable limit, replace pressure plate.
3. When the pressure plate is worn around its outside and its inside surface only is in contact with the straightedge, replace it even if the clearance is within the allowable limit.

Clearance between pressure plate and straightedge	Allowable limit	0.2 mm 0.008 in.

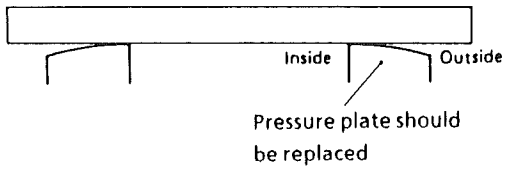

0302F103

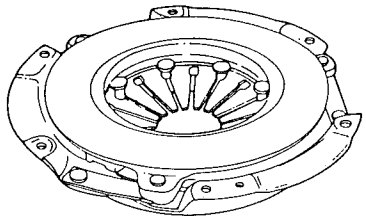

C020F064

Checking Pressure Plate and Diaphragm

1. Check the pressure plate and if scratched on its surface, correct with sandpaper or replace it.
2. Check the diaphragm for cracks and scratches. If defects are found, replace it.

https://truckmanualshub.com/

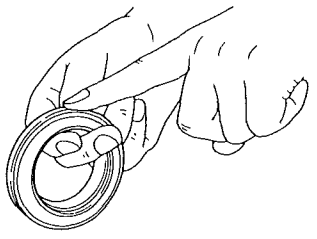

C020F065

Checking Clutch Release Bearing

1. Check the clutch release bearing. If surface is worn excessively, or abnormal sounds occur, replace it.

https://truckmanualshub.com/

MECHANISM

CONTENTS

[1] **STRUCTURE** 3-M1
[2] **POWER TRAIN** 3-M3
(1) Main Gear Shift Section (Manual Transmission Type) 3-M3
(2) Hydrostatic Transmission (HST Type) 3-M4
(2)-1. Structure 3-M4
(2)-2. Pump and Motor 3-M6
(2)-3. Oil Flow and Valves 3-M6
(2)-4. Operation 3-M8
(2)-5. Control Linkage 3-M11
(3) Hi-Lo Gear Shift Section 3-M12
(4) Front Wheel Drive Section 3-M12
[3] **PTO SYSTEM** 3-M13
(1) Rear-PTO Shift Section 3-M13
(2) Mid-PTO Section 3-M14
(3) One-way Clutch Cam Section (Manual Transmission Type) 3-M15
[4] **DIFFERENTIAL GEAR** 3-M16
(1) Differential Function 3-M16
(2) Differential Lock 3-M17

https://truckmanualshub.com/

https://truckmanualshub.com/

[1] STRUCTURE

Manual Transmission Type

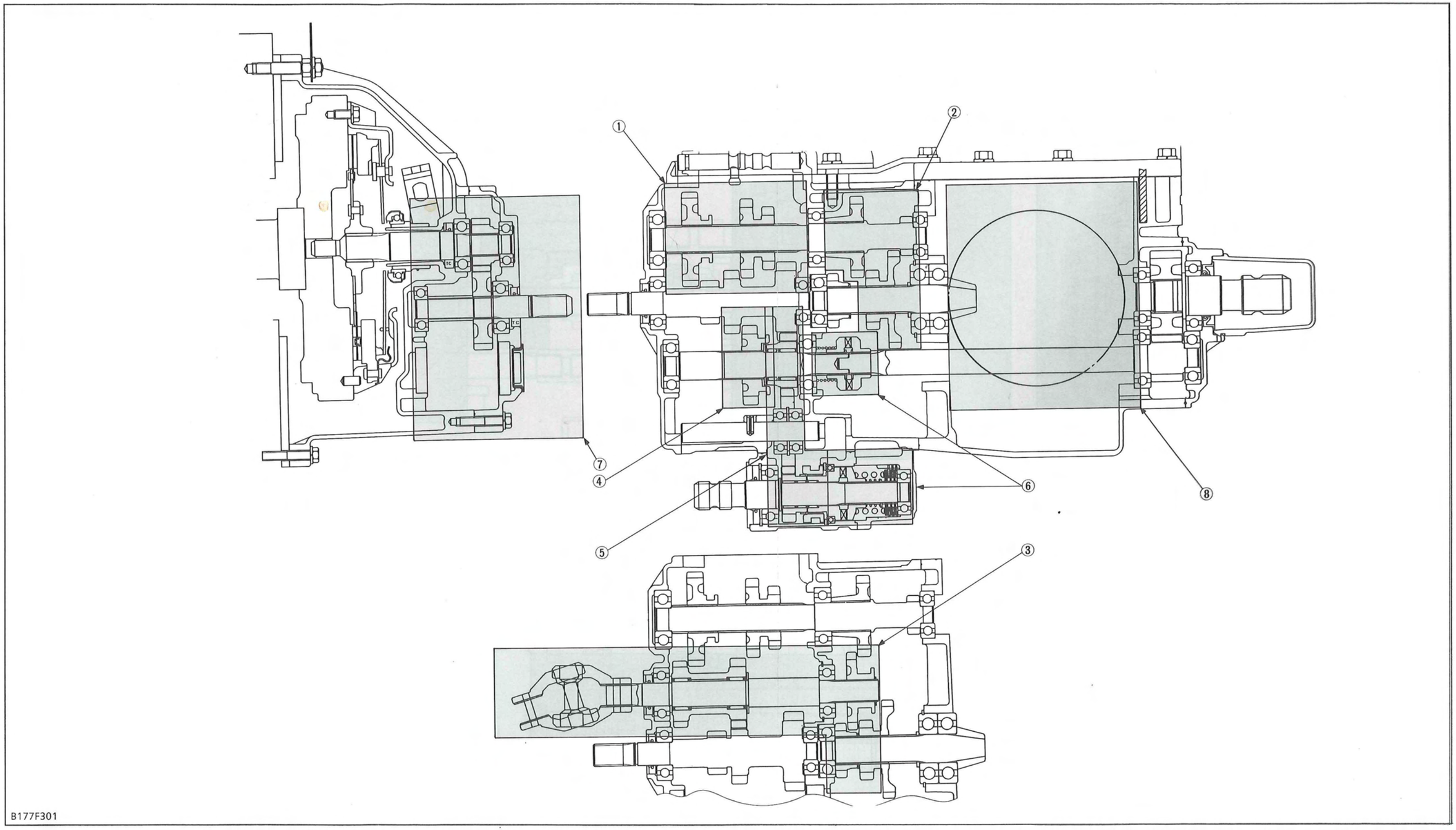

(1) Main Gear Shift Section
(2) Hi-Lo Gear Shift Section
(3) Front Wheel Drive Section
(4) Rear-PTO Shaft Section
(5) Mid-PTO Shift Section
(6) One-way Clutch Section (Mid and Rear-PTO)
(7) Clutch Housing Section
(8) Differential Gear Section

https://truckmanualshub.com/

Hydrostatic Transmission Type

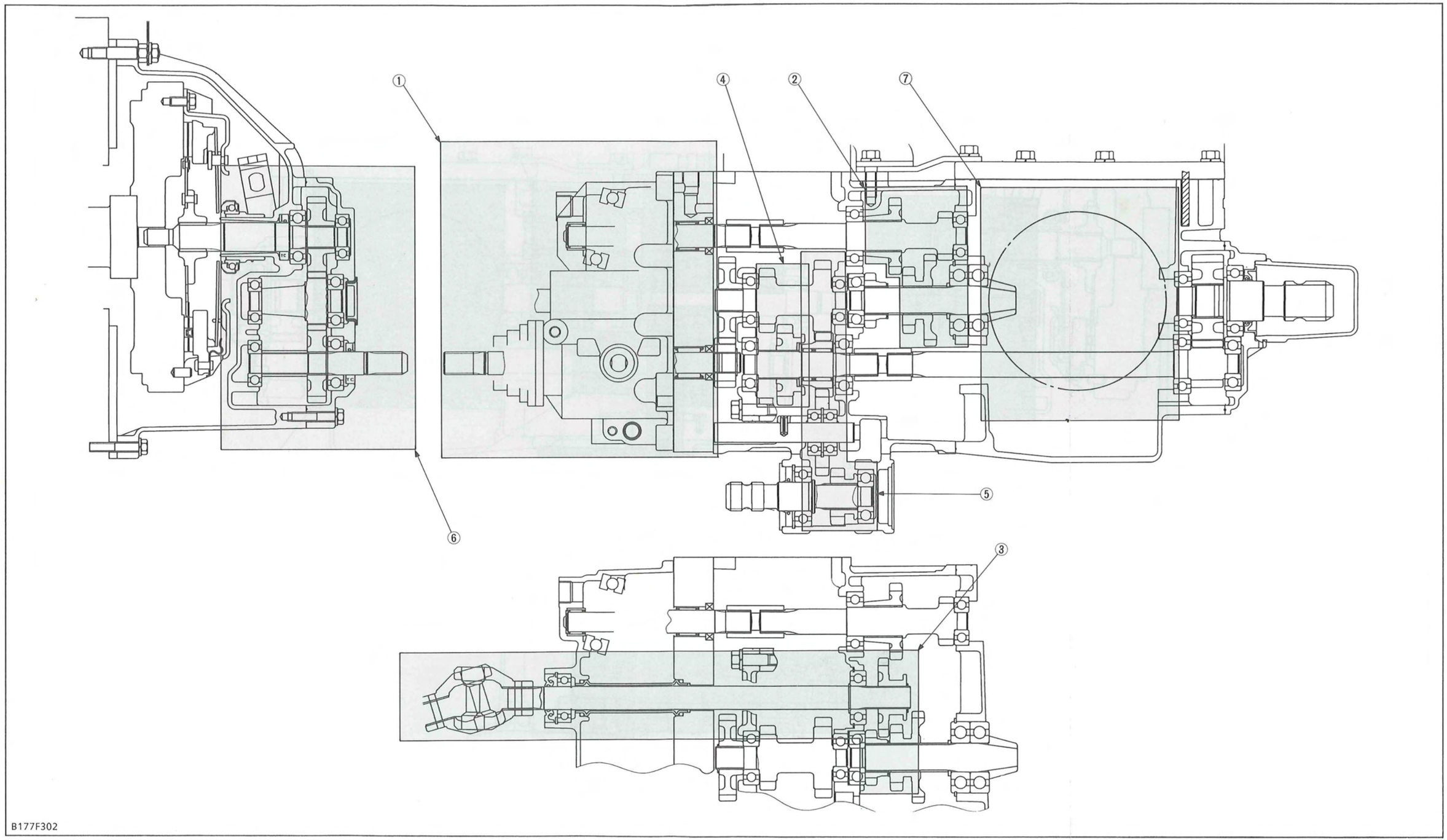

(1) Hydrostatic Transmission Section
(2) Hi-Lo Shift Gear Section
(3) Front Wheel Drive Section
(4) Rear-PTO Shift Section
(5) Mid-PTO Shift Section
(6) Clutch Housing Section
(7) Differential Gear Section

https://truckmanualshub.com/

[2] POWER TRAIN

The transmission consists of a series of gears shown previously. It offers the most suitable speed for travelling and operation by combination of these gears.

It transmits power to the front or rear axles and the PTO shaft, which are classified respectively as the travelling system and PTO system.

(1) Main Gear Shift Section (Manual Transmission Type)

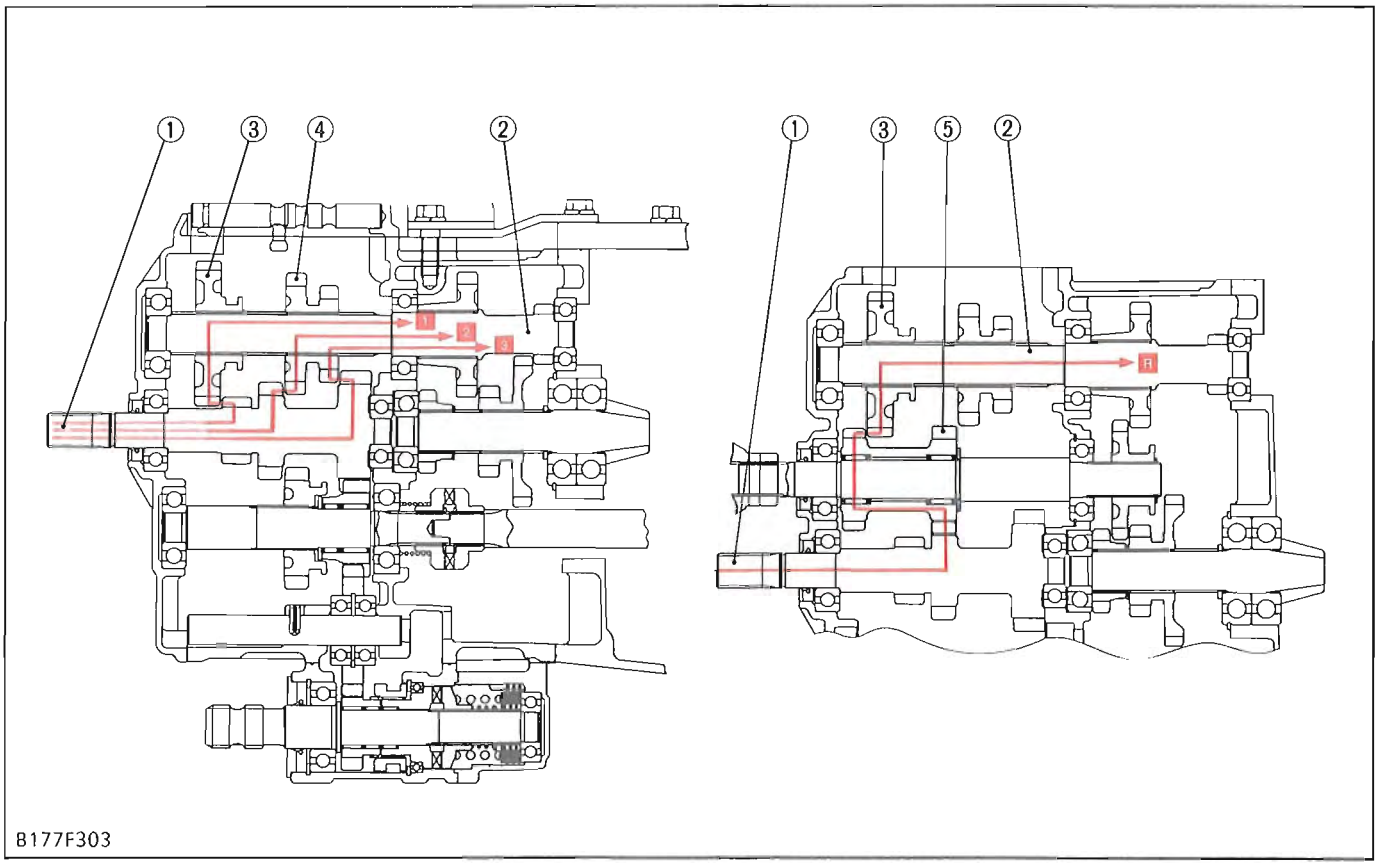

(1) 2nd Gear Shaft with 13T, 13T and 18T Gear
(2) 4th Shaft with 11T Gear
(3) 30T Shifter Gear
(4) 17T-13T Shafter Gear
(5) 16T-20T Gear

Besides neutral, four kinds of power flow (from clutch shaft to 4th shaft) are available by operating the main gear shift lever to shift positions on the 30T shifter gear (3) and 17T -13T shifter gear (4) on the 4th shaft (2).

1st Position

2nd Gear Shaft with 13T Gear (1)→ 30T Shifter Gear (3)→ 4th Shaft (2)

2nd Position

2nd Gear Shaft with 13T Gear (1) → 17T-(13T) Shifter Gear (4)→ 4th Shaft (2)

3rd Position

2nd Gear Shaft with 18T Gear (1) → (17T)-13T Shifter Gear (4) → 4th Shaft (2)

Reverse Position

2nd Gear Shaft with 13T Gear (1) → 16T-20T Gear (5) → 30T Shifter Gear (3) → 4th Shaft (2)

NOTE

- **Refer to the auxiliary gear shift section 3-M11.**

https://truckmanualshub.com/

(2) Hydrostatic Transmission (HST Type)

(2)-1. Structure

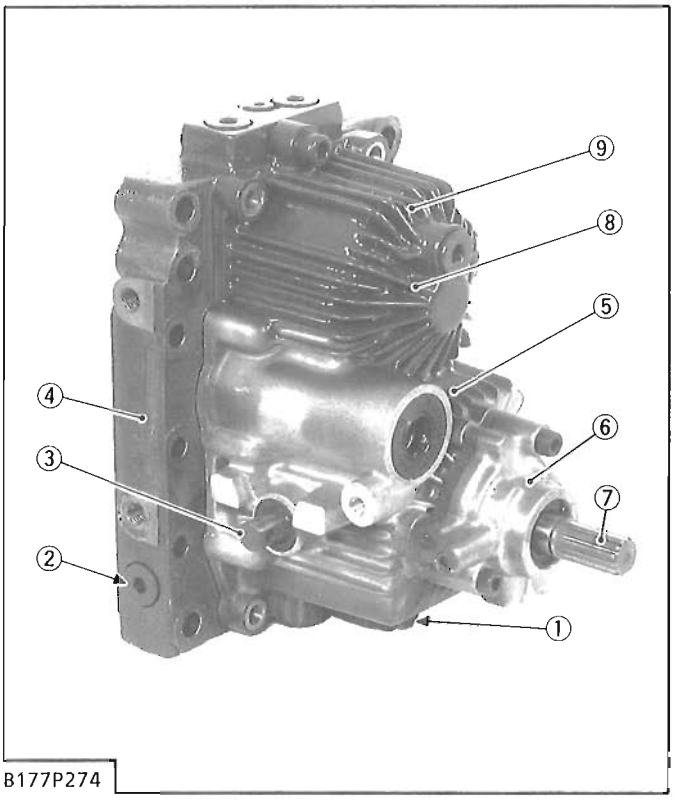

B177P274

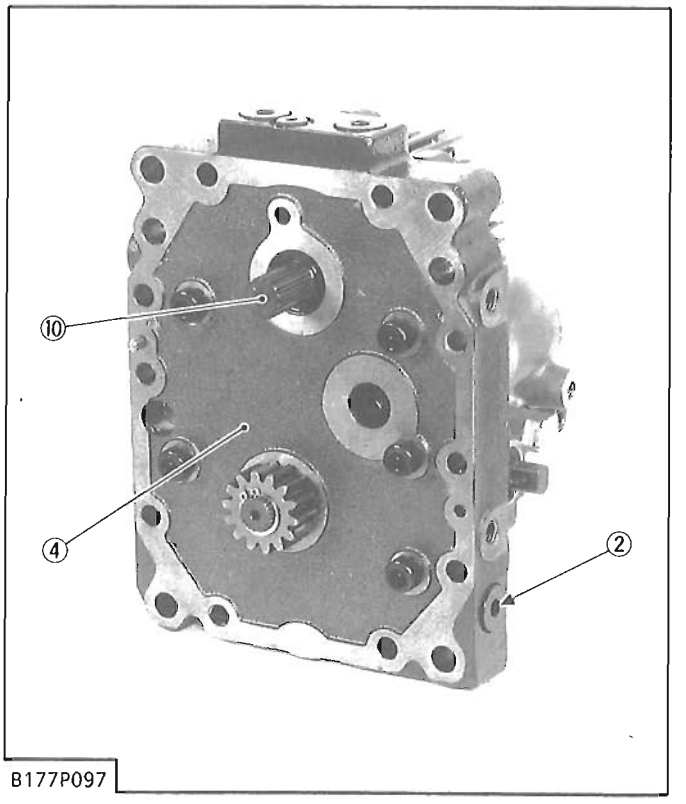

B177P097

(1) Charge Relief Valve
(2) Check and High Pressure Relief Valve
(3) Trunnion Shaft
(4) Center Section
(5) Variable Displacement Piston Pump
(6) Charge Pump
(7) Input Shaft (Pump Shaft)
(8) Housing
(9) Fixed Displacement Piston Motor
(10) Output Shaft

Hydrostatic transmission is composed of variable displacement piston pump, fixed displacement piston motor, charge pump and valve system.

https://truckmanualshub.com/

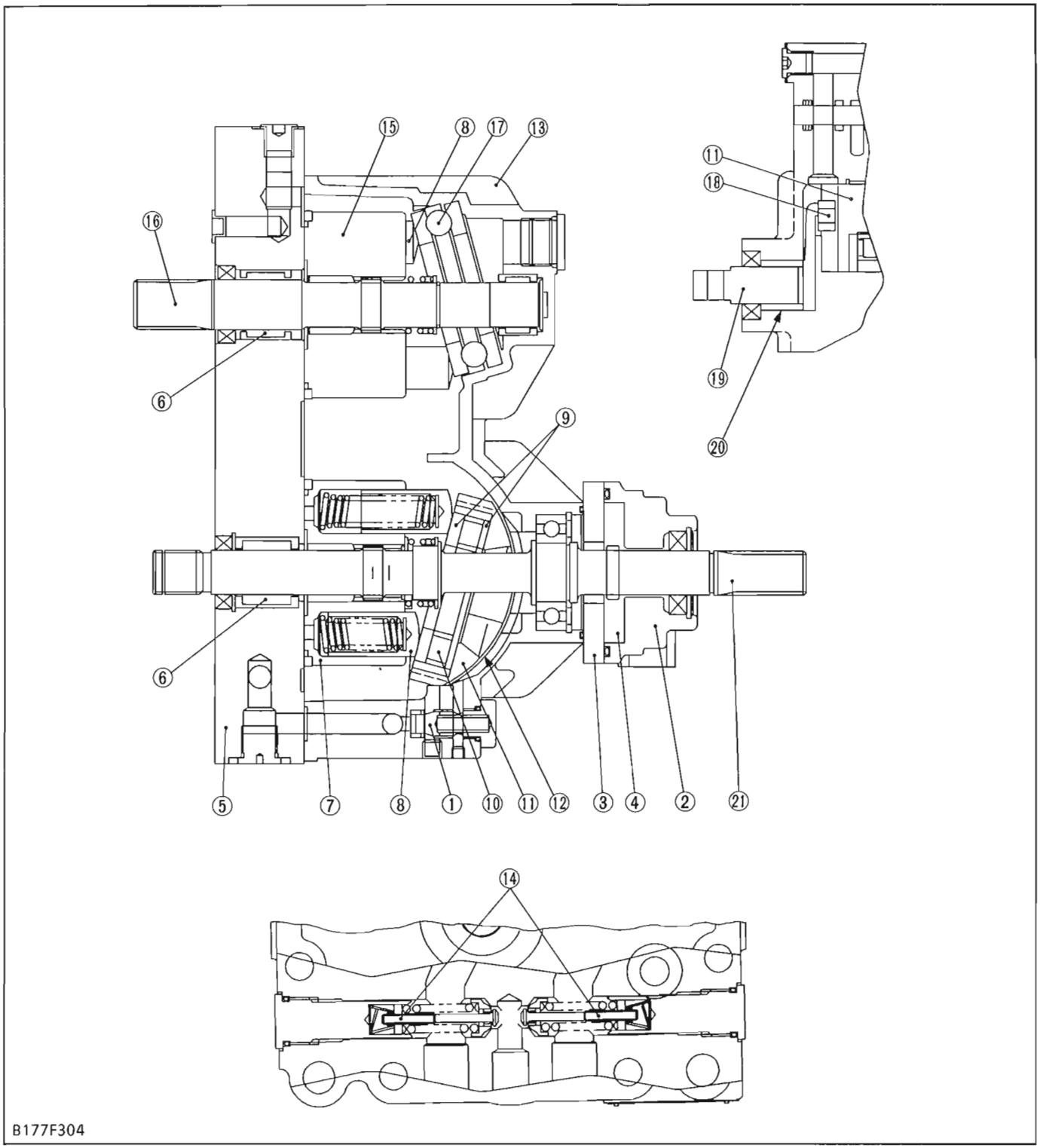

(1) Charge Relief Valve
(2) Charge Pump Housing
(3) Charge Pump Spacer
(4) Gerotor Assembly
(5) Center Section
(6) Needle Bearing
(7) Cylinder Block (Pump)
(8) Piston Assembly
(9) Thrust Plate
(10) Thrust Roller Bearing
(11) Swashplate
(12) Cradle Bearing
(13) Housing
(14) Check and High Pressure Relief Valve
(15) Cylinder Block (Motor)
(16) Motor Shaft
(17) Thrust Ball Bearing
(18) Slot Guide
(19) Trunnion Arm
(20) Journal Bearing
(21) Pump Shaft

The hydrostatic transmission consists of a variable displacement piston pump and a fixed displacement piston motor.

Convenient single lever control permits simple operation of the vehicle, starting, stopping, increasing or decreasing speeds, changing direction of travel, and even going up or down hills.

https://truckmanualshub.com/

(2)-2. Pump and Motor

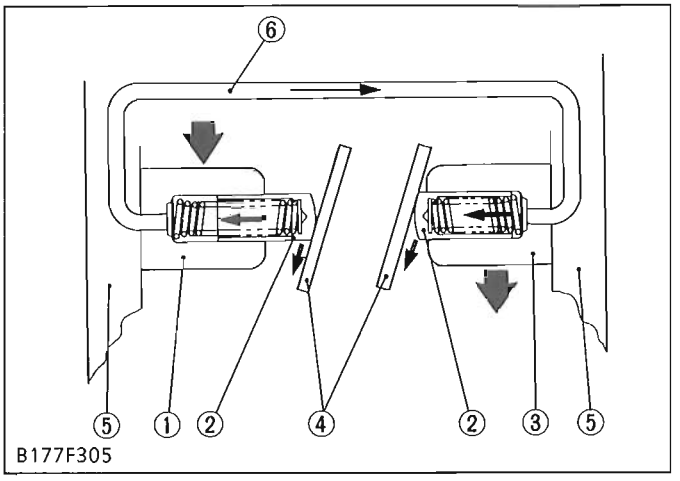

Pump and motor cylinder, each containing pistons, are connected by lines. Cylinders and lines are filled with oil. Pistons ride against swashplates located in pump and motor. In the pump, as the cylinder rotates, pistons move across the sloping face of swashplate and slide in or out of their cylinder bores. The oil, forced out by the pump pistons, causes the motor pistons to slide out of their cylinder bores. In the motor, sliding out of the cylinder and moving across the sloping face of swashplate, the pistons rotate the cylinder.

(1) Cylinder Block (Pump)
(2) Piston
(3) Cylinder Block (Motor)
(4) Swashplate
(5) Center Section
(6) Connecting

(2)-3. Oil Flow and Valves

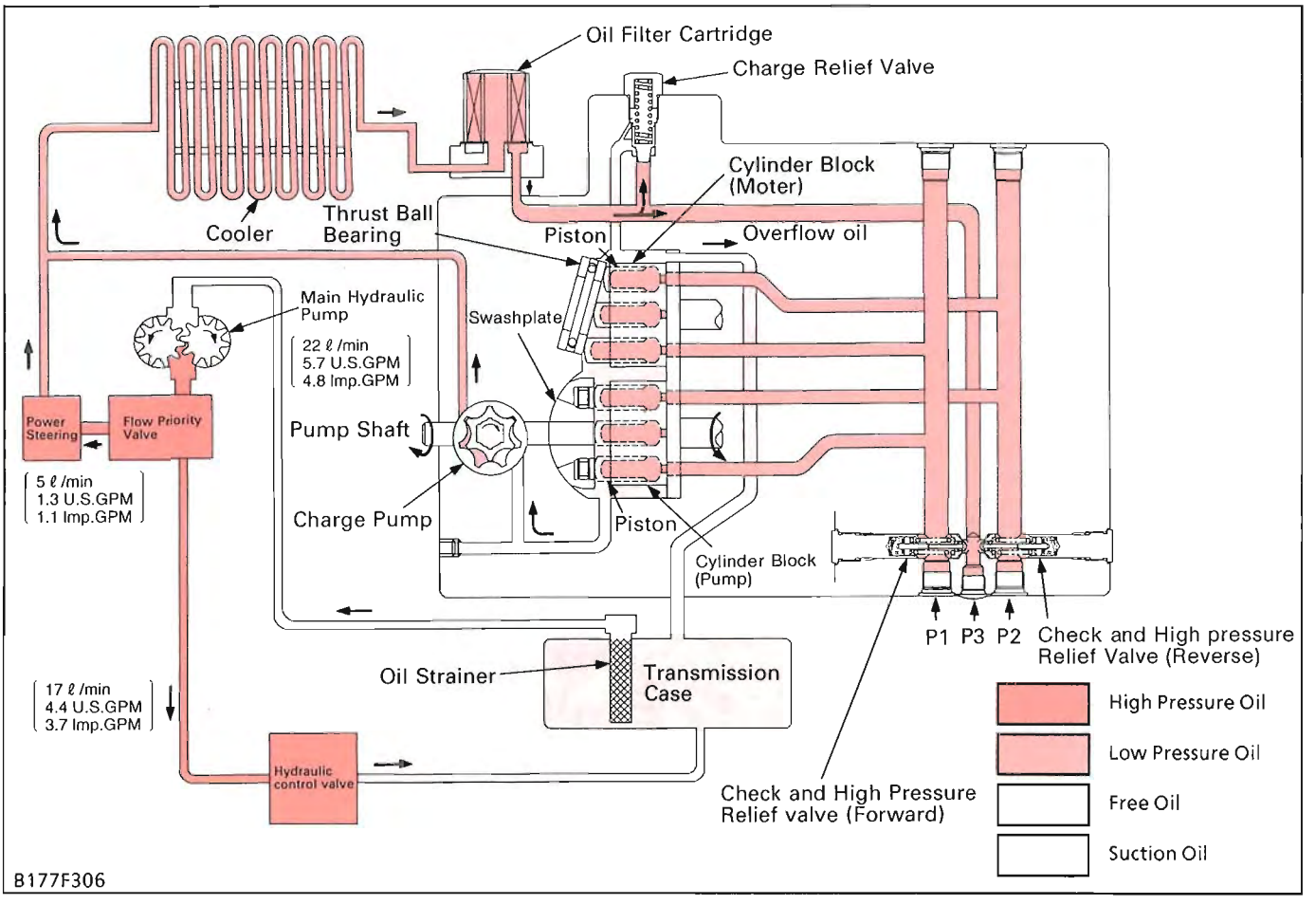

P1 : Port for checking high pressure (forward) P2 : Port for checking high pressure (reverse) P3 : Port for checking charge pressure

The pump and motor are joined in a closed hydraulic loop and most of oil circulates within the main oil circuit. A little oil lubricates and oozes out from the clearance between the moving parts of the case. Then oil in the main oil circuit of the HST needs to be supplied a want.

The combined oil flow from the power steering circuit and HST charge pump are flows into the HST for charging.

The charge oil aids smooth operation of piston pump and motor. The charge oil passes through the oil cooler and transmission oil filter to charge relief valve port. The rest of oil passes through the charge relief valve into the HST housing. Oil from the hydraulic cylinder and overflow oil from HST housing return to the transmission case.

https://truckmanualshub.com/

Charge Relief Valve

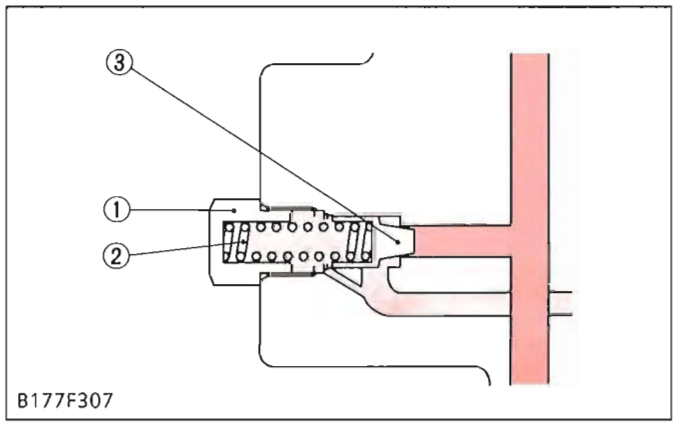

While pumped and filtered oil flows into the main oil circuit through the check valves, excessive oil passes to the case through the charge relief valve.

Oil temperature	Valve operating pressure
50°C (122°F)	294 to 491 kPa 3.0 to 5.0 kgf /cm² 42.7 to 71.1 psi

(1) Plug
(2) Spring
(3) Charge Relief Cone

Check and High Pressure Relief Valve

(In Neutral)

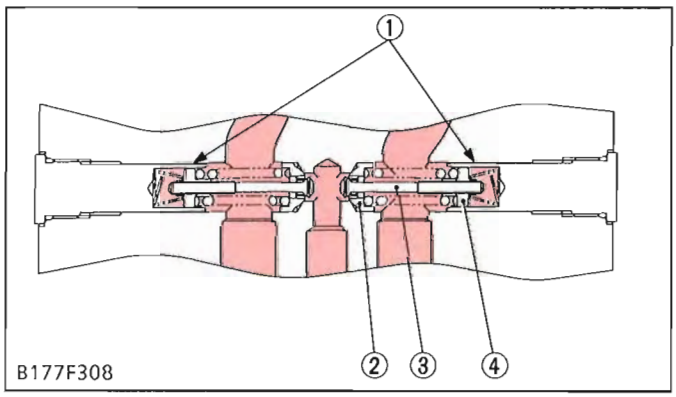

(At normal operation)

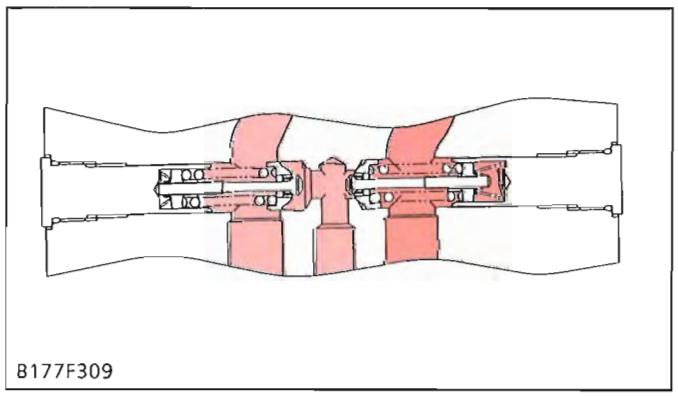

(When high pressure valve activating)

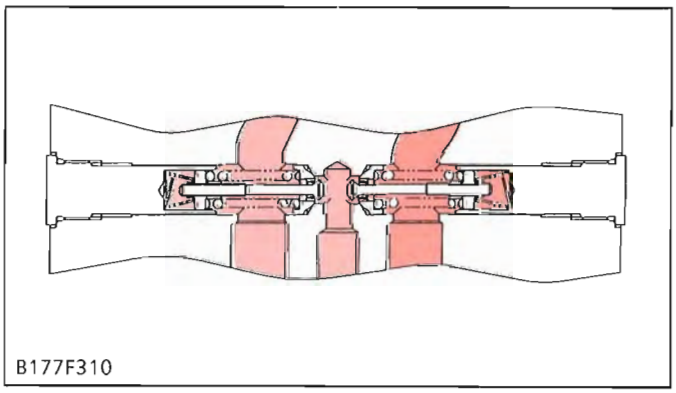

The check and high pressure relief valves monitor the oil pressure in each line of the main oil circuit.

In neutral, both valves are open and charging oil enters into the main oil circuit through the valves.

At normal operation, the check valve in the high pressure side is closed and it pushes and opens the another one.

When excessively high pressure is built up in one line, the high pressure relief valve located in this line is open and the oil flows into another line.

Oil temperature	Valve operating pressure
50°C (122°F)	21.6 MPa 220 kgf /cm2 3131 psi

(1) Check and High Pressure Relief Valve
(2) Seat Washer
(3) Pressure Poppet
(4) Spring Guide

https://truckmanualshub.com/

(2)-4. Operation

Neutral

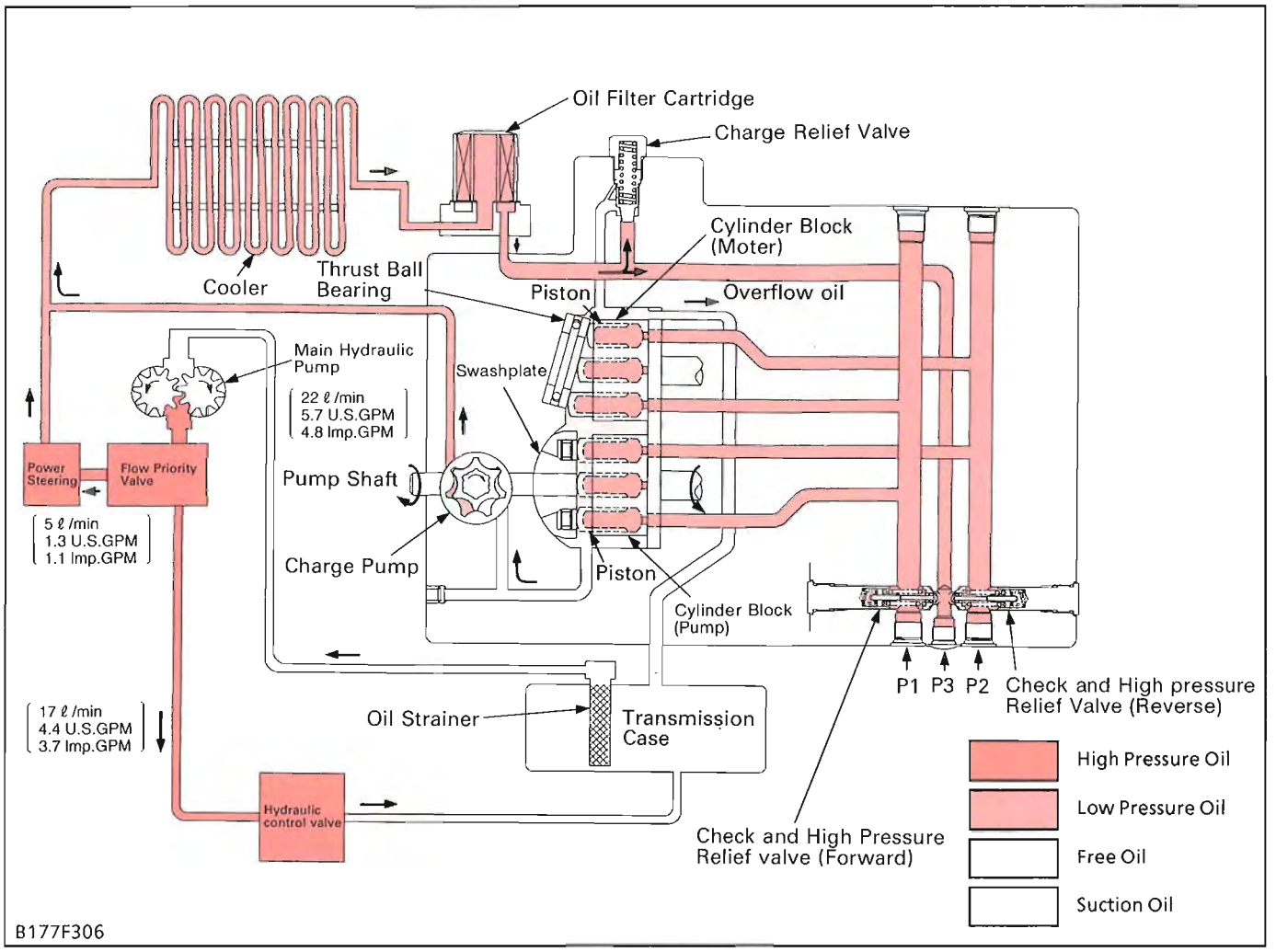

When the speed control pedal is in neutral, the variable swashplate is at right angles to the pump pistons and they only rotate with cylinder block without reciprocating. Since the oil is not being pumped to the motor, the cylinder block in the motor is stationary and the output shaft does not move.

https://truckmanualshub.com/

Forward

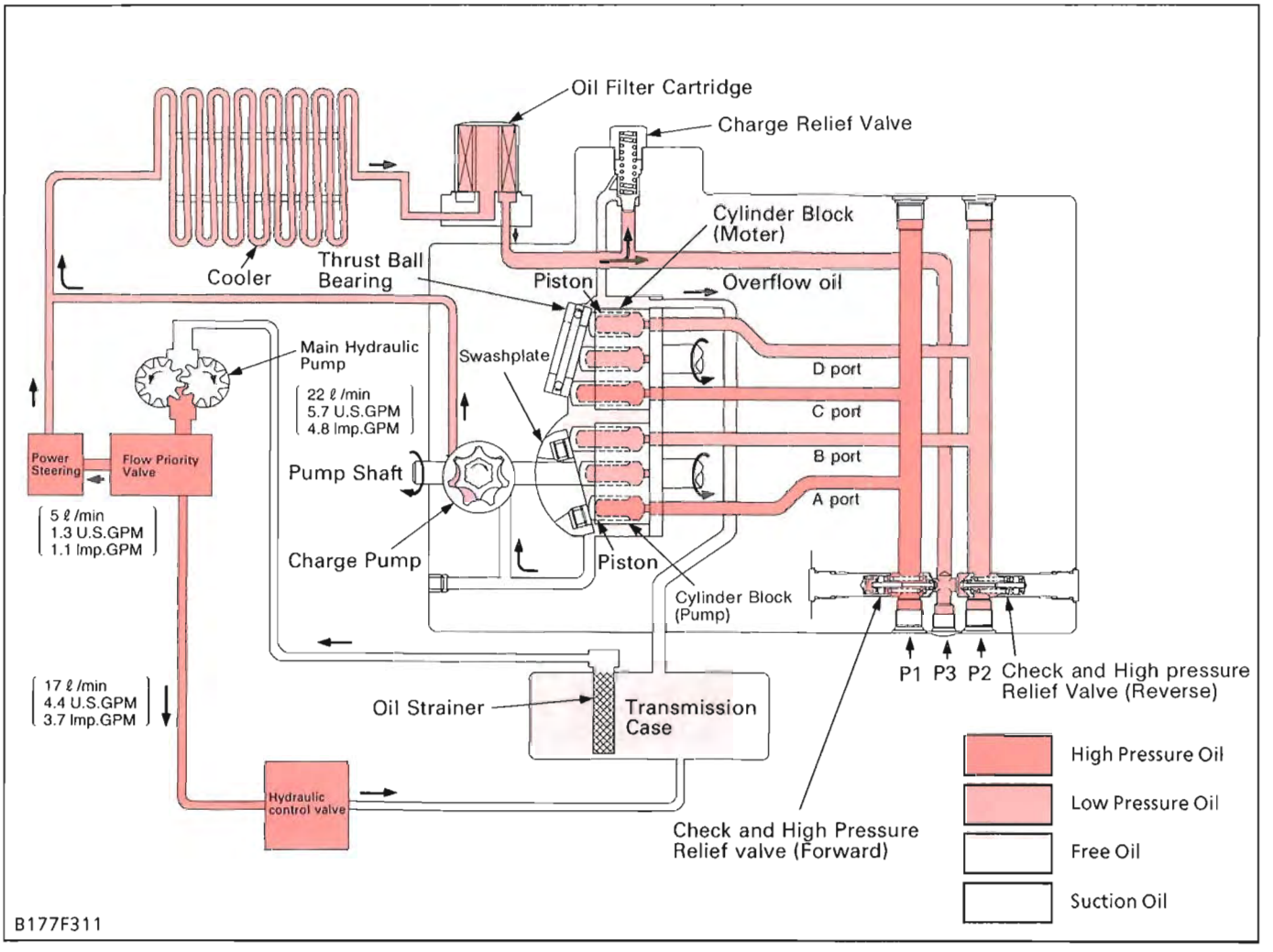

When the speed control pedal is stepped on and in forward, the variable swashplate is tilted as shown in figure above.

As the pump cylinder block rotates with the input shaft, oil is forced out of pump port A at high pressure. As pressure oil enters motor port C, the pistons, which align with port C, are pushed against the swashplate and slide down the inclined surface.

Then the output shaft rotates with the motor cylinder block. This drives the machine forward and the angle of pump swashplate determines the output shaft speed.

As the motor cylinder block continues to rotate, oil is forced out of motor port D at low pressure and returns to the pump.

https://truckmanualshub.com/

Reverse

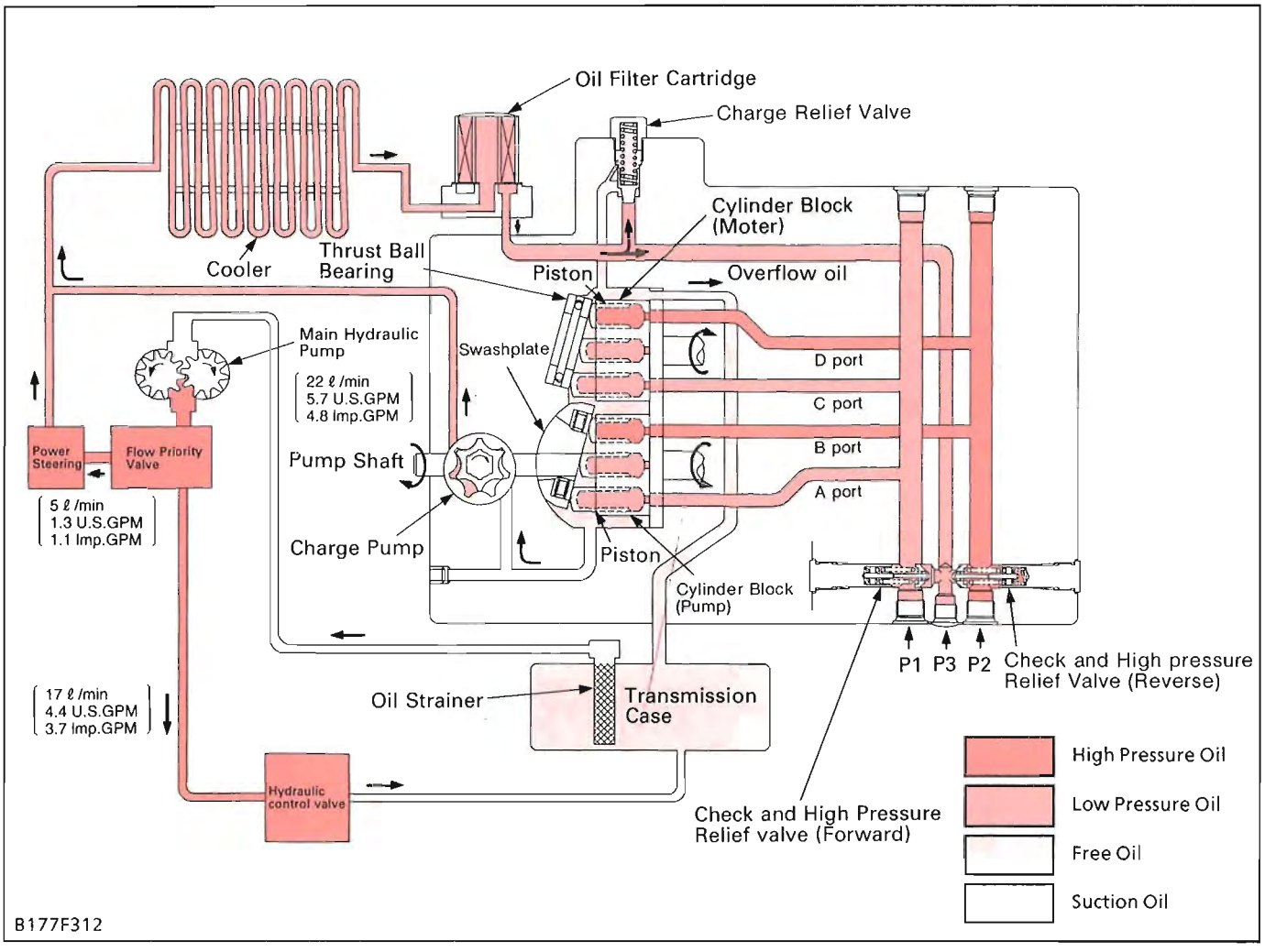

When the speed control pedal is stepped on and in reverse, the variable swashplate is tilted as shown in figure above.

As the pump cylinder block rotates with the input shaft, oil is forced out of pump port B at high pressure. As pressure oil enters motor port D, the pistons, which align with port D, are pushed against the swashplate and slide down the inclined surface.

Then the output shaft rotates with the motor cylinder block. This drives the machine rearward and the angle of pump swashplate determines the output shaft speed.

As the motor cylinder block continues to rotate, oil is forced out of motor port C at low pressure and returns to the pump.

https://truckmanualshub.com/

(2)-5. Control Linkage

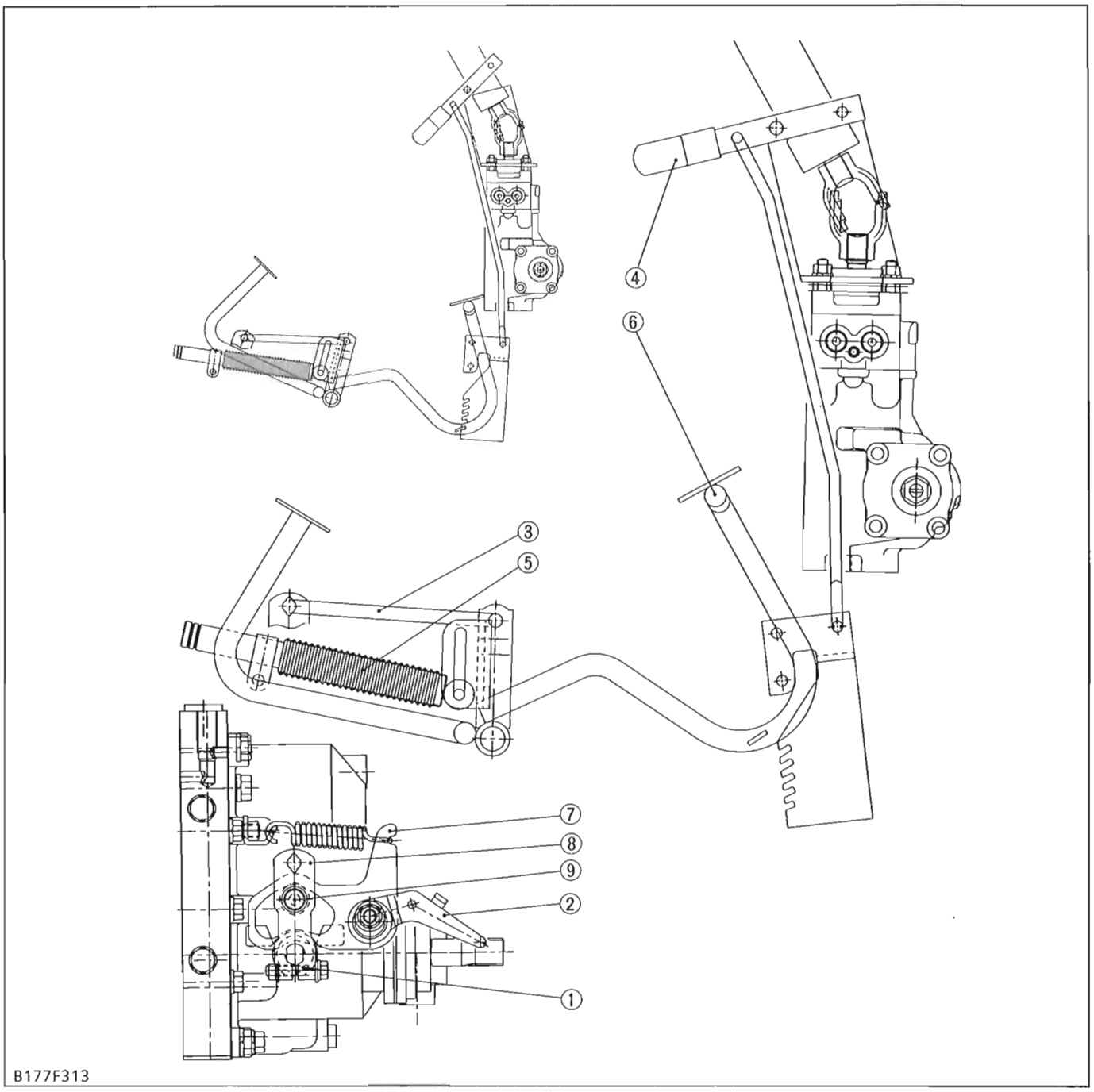

(1) Trunnion Control Lever Assembly
(2) Neutral Adjuster
(3) Speed Control Rod
(4) Speed Set Lever
(5) Damper
(6) Speed Control Pedal (HST Pedal)
(7) Trunnion Arm
(8) Trunnion Lever
(9) Roller

The speed control pedal (6) and the trunnion shaft of variable swashplate are linked with the speed control rod (3) and the trunnion control lever assembly (1). As the front footrest of the pedal is depressed, the swashplate rotates and forward travelling speed increases. Depressing the rear footrest increases reverse speed.

The roller (9) on the trunnion lever (8) holded with spring seats the detent of the trunnion arm (7) so that the trunnion lever returns to neutral. Then, the swashplate is returned to neutral with the trunnion control lever assembly, when the pedal is released. The damper (5) connected to the speed control pedal restricts the movement of the linkage to prevent abrupt operation or reversing.

The speed set lever (4) linked to the speed control pedal enables the linkage not to return to neutral and to keep a certain forward speed while the speed control pedal is released.

https://truckmanualshub.com/

(3) Hi-Lo Gear Shift Section

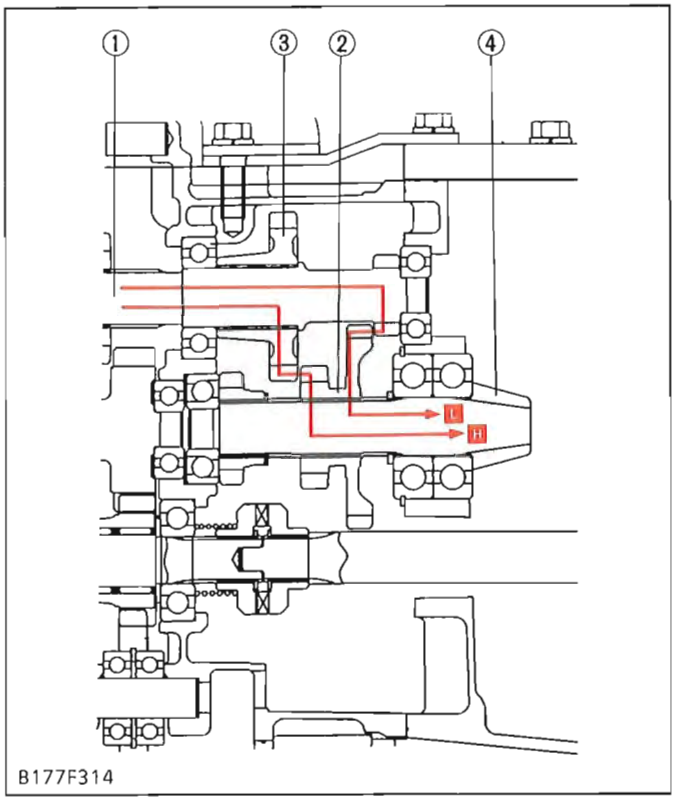

B177F314

Two kinds of power flow (from 4th shaft to spiral bevel pinion shaft) are available by operating the high-low gear shift lever to shift the gear (2) on the spiral bevel pinion shaft (4).

■ Low Position

4th Gear Shaft (1) → Shifter Gear (2) → Spiral Bevel Pinion Shaft (4)

■ High Position

4th Shaft (1) → Gear(3) → Shifter Gear (2) → Bevel Pinion Shaft (4)

[Manual Transmission Type]
(1) 4th Gear Shaft with 11T Gear
(2) 13T-32T Shifter Gear
(3) 19T Gear
(4) Spiral Bevel Pinion Shaft

[HST Type]
(1) 4th Gear Shaft with 14T Gear
(2) 15T-29T Shifter Gear
(3) 18T Gear
(4) Spiral Bevel Pinion Shaft

(4) Front Wheel Drive Section

■ Manual Transmission Type

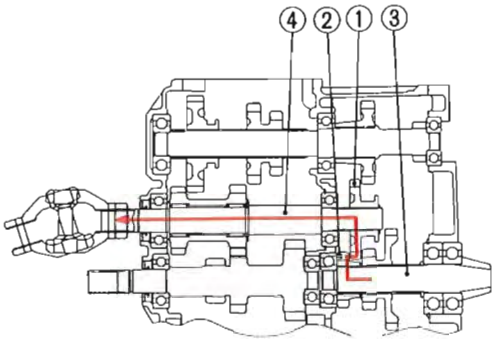

B177F315

■ HST Type

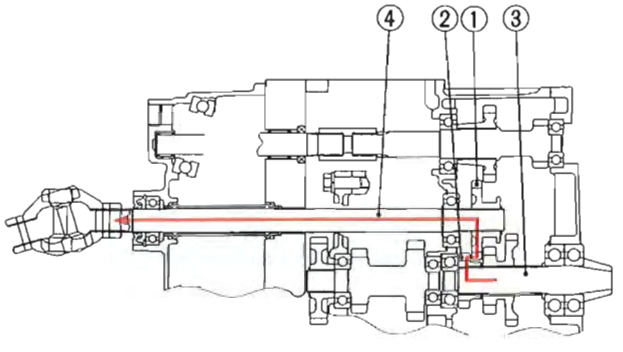

B177F316

2-wheel drive or 4-wheel drive is selected by changing the position of 20T shift gear (1) with the front wheel drive lever. When the front wheel drive lever is set to "Disengaged," the 20T shift gear (1) is neutral and power is not transmitted to the front wheel drive shaft (4).

When the front wheel drive lever is set to "Engaged," the 20T shift gear (1) slides to the right to engage with 13T gear (2) on the spiral bevel pinion shaft (3). Therefore, the front drive shaft is actuated to drive the front wheels.

(1) 20T Shift Gear
(2) 13T Gear
(3) Spiral Bevel Pinion Shaft
(4) Front Wheel Drive Shaft

https://truckmanualshub.com/

[3] PTO SYSTEM

(1) Rear-PTO Shift Section

Besides neutral, one kind of power flow are available by operating the PTO shift lever to shift positions of 17T shifter gear (2) for rear-PTO.

[Manual Transmission Type]

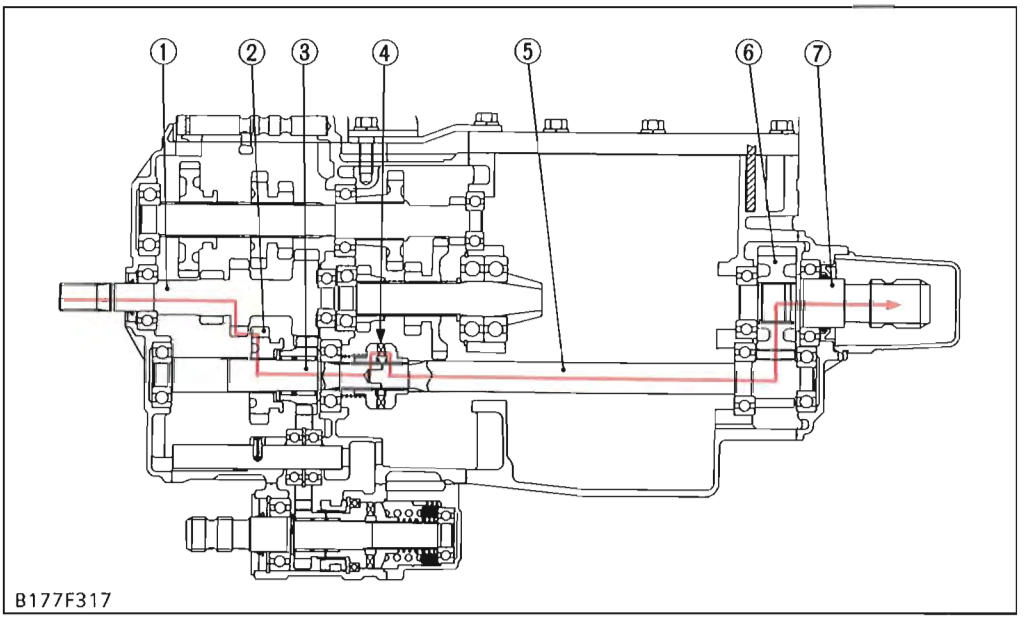

(1) 2nd Gear Shaft with 13T, 13T and 18T Gear
(2) 17T Shifter Gear
(3) 3rd Shaft
(4) One-way Clutch
(5) 5th Gear Shaft with 11T Gear
(6) 24T Gear
(7) Rear-PTO Shaft

■ Rear-PTO Shift Lever ON Position

2nd Gear Shaft with 13T Gear (1) → 17T Shifter Gear (2) → 3rd Shaft (3) → One-way Clutch (4) → 5th Gear Shaft with 11T Gear (5) → 24T Gear (6) → Rear-PTO Shaft (7)

[HST Type]

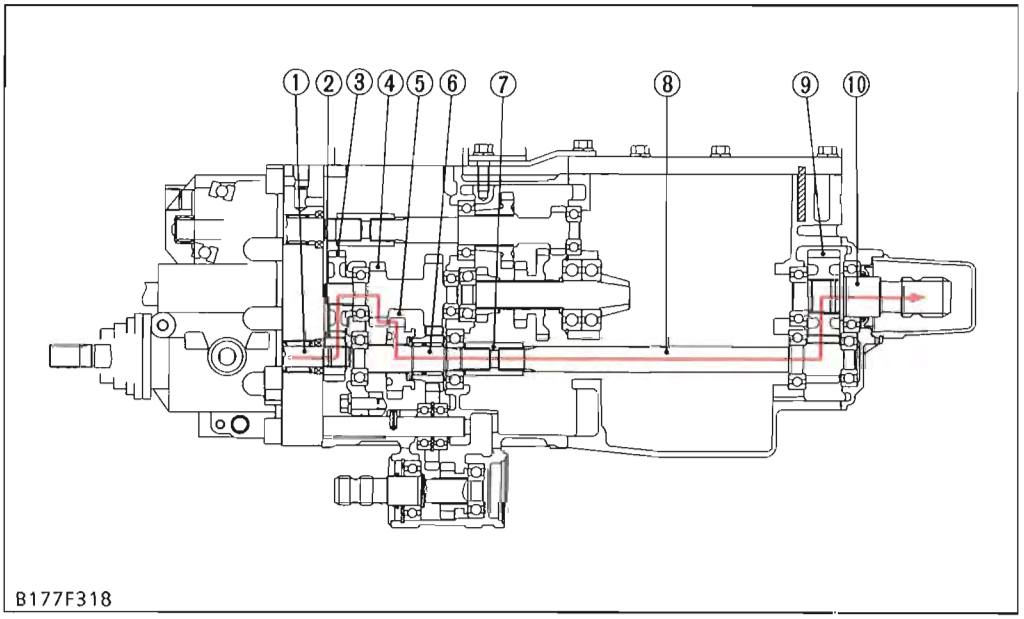

(1) HST Pump Shaft
(2) 14T Gear
(3) 27T Gear
(4) 2nd Gear Shaft with 13T and 18T Gear
(5) 17T Shifter Gear
(6) 3rd Shaft
(7) Coupling
(8) 5th Shaft with 11T Gear
(9) 24T Gear
(10) Rear-PTO Shaft

■ Rear-PTO Shift Lever ON Position

HST Pump Shaft (1) → 14T Gear (2) → 27T Gear (3) → 2nd Gear Shaft with 13T Gear (4) → 17T Shifter Gear (5) → 3rd Shaft (6) → Coupling (7) → 5th Shaft with 11T Gear (8) → 24T Gear (9) → Rear-PTO Shaft (10)

https://truckmanualshub.com/

(2) Mid-PTO Section

Besides neutral, one kind of power flow are available by operating the PTO shift lever to shift positions of shifter (5) or 11T shifter gear (7) for mid-PTO.

[Manual Transmission Type]

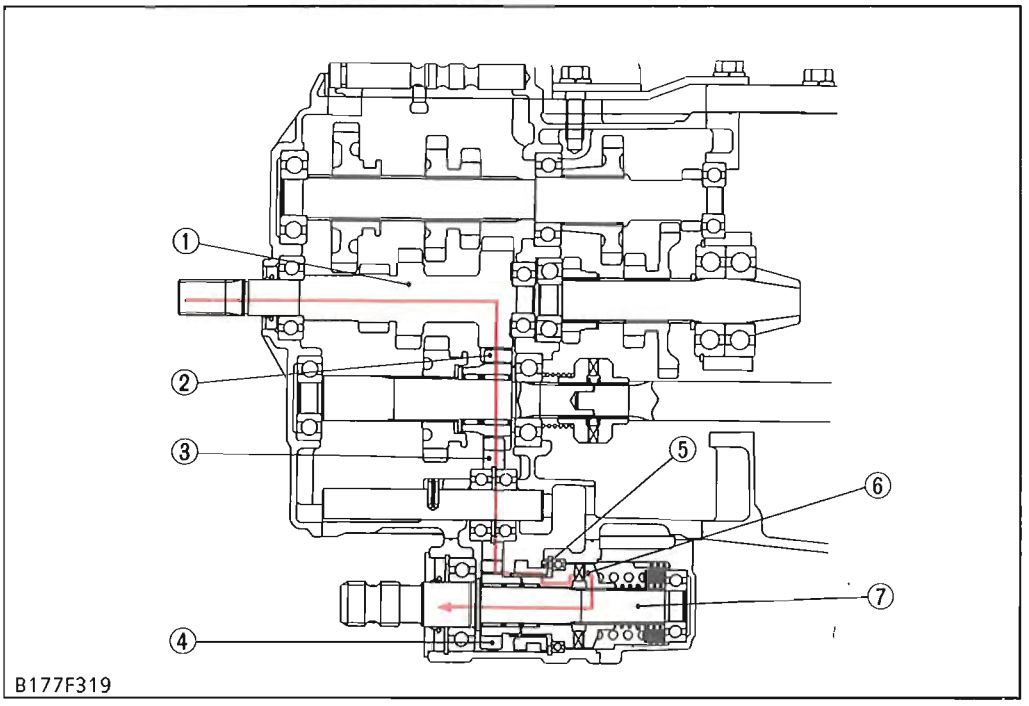

(1) 2nd Gear Shaft with 13T, 13T and 18T Gear
(2) 13T Gear
(3) 19T Gear
(4) 11T Gear
(5) Shifter
(6) One-way Clutch
(7) Mid-PTO Shaft

■ Mid-PTO Shift Lever ON Position

2nd Gear Shaft with 18T Gear (1) → 13T Gear (2) → 19T Gear (3) → 11T Gear (4) → Shifter (5) → One-way Clutch (6) → Mid-PTO Shaft (7)

[HST Type]

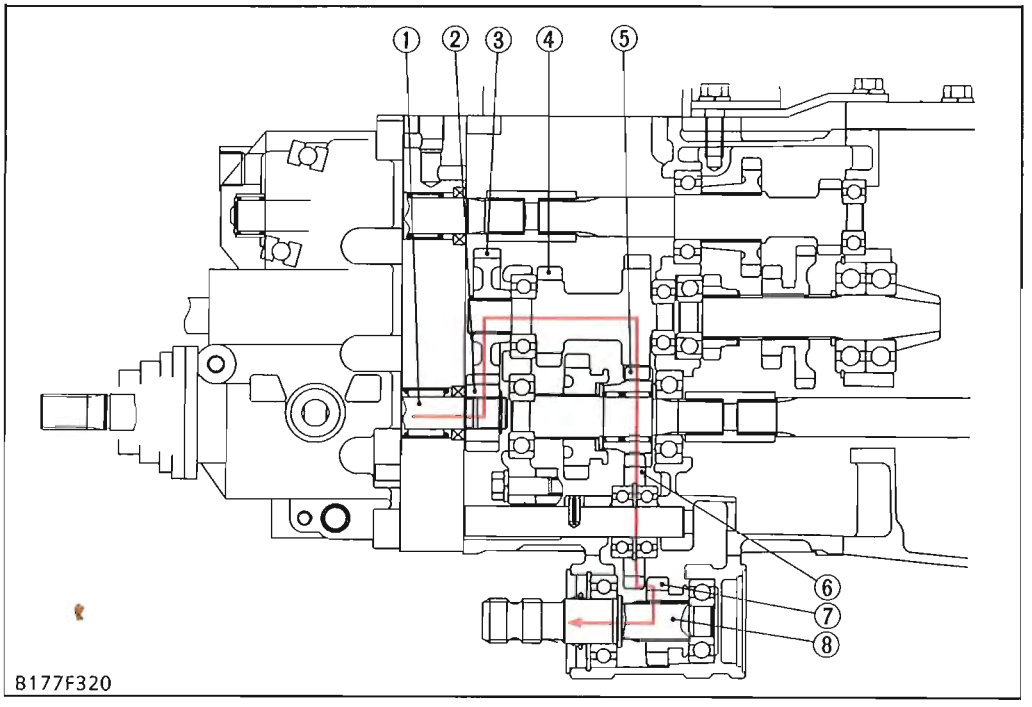

(1) HST Pump Shaft
(2) 14T Gear
(3) 27T Gear
(4) 2nd Gear Shaft with 13T and 18T Gear
(5) 13T Gear
(6) 19T Gear
(7) 11T Shifter Gear
(8) Mid-PTO Shaft

■ Mid-PTO Shift Lever ON Position

HST Pump Shaft (1) → 14T Gear (2) → 27T Gear (3) → 2nd Gear Shaft with 18T Gear (4) → 13T Gear (5) → 19T Gear (6) → 11T Shifter Gear (7) → Mid-PTO Shaft (8)

https://truckmanualshub.com/

(3) One-way Clutch Cam Section (Manual Transmission Type)

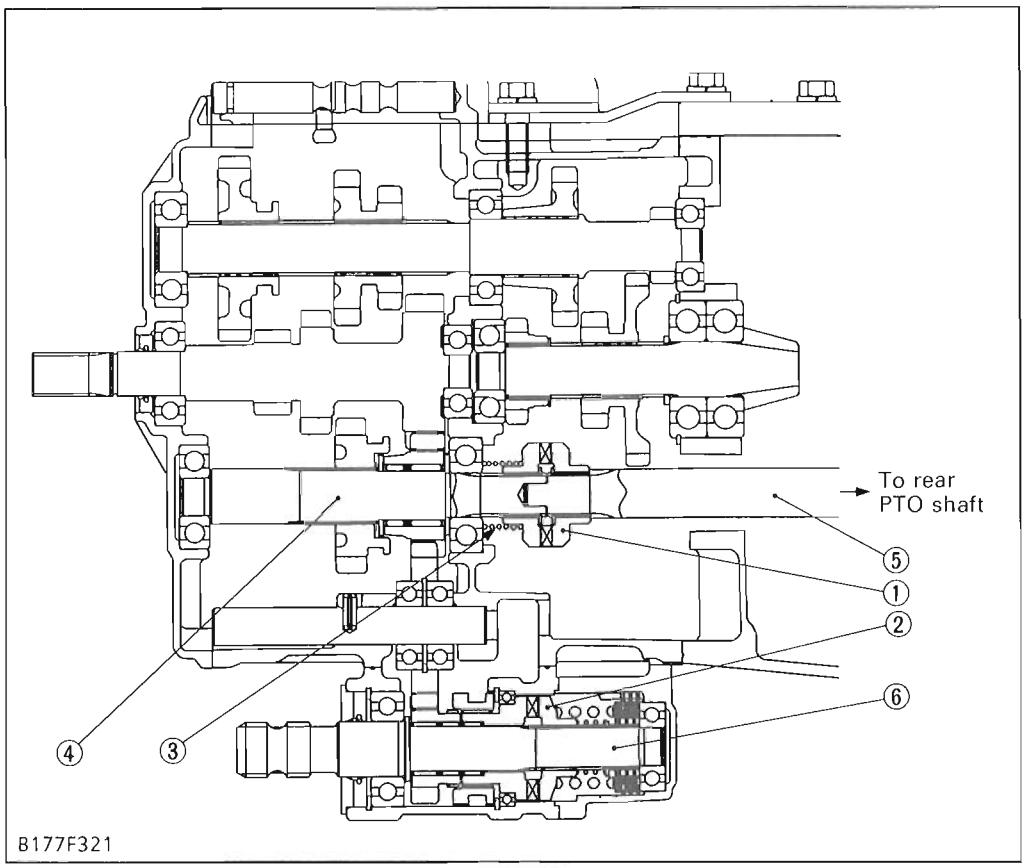

B177F321

(1) Clutch Cam for Rear-PTO
(2) Clutch Cam for Mid-PTO
(3) Clutch Cam Spring
(4) 3rd Shaft
(5) 5th Gear Shaft
(6) Mid-PTO Shaft

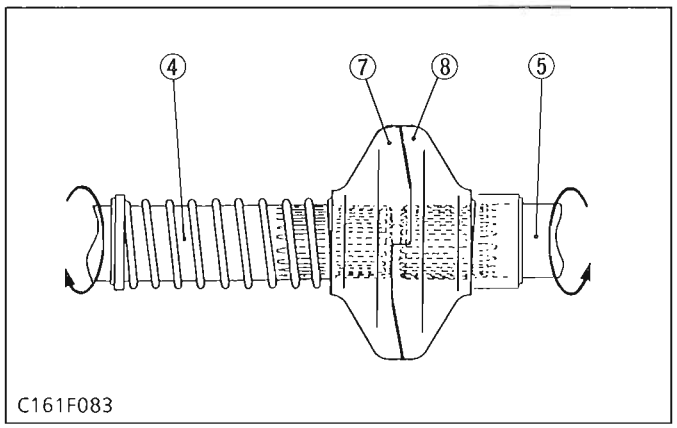

C161F083

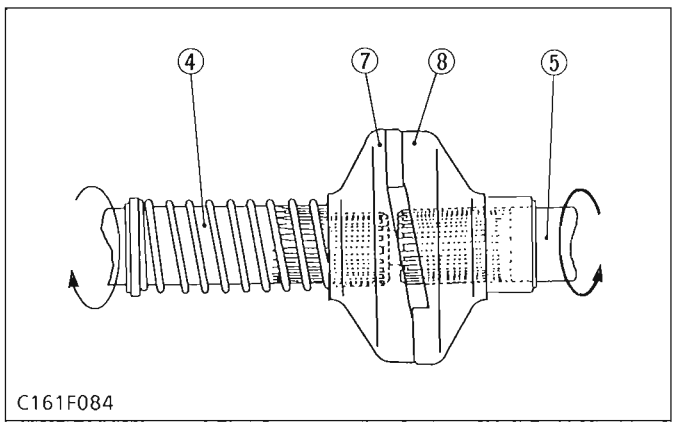

C161F084

The one-way clutch cam is also called an overrunning clutch. It is composed of a pair of clutch cams (7), (8) and a cam spring (3). One of the clutch cam is splined to the shaft (6), and the other is splined to the shaft (5).

These two clutch cams (1), (2) are engaged with each other by the force of the cam spring. As long as the shaft (4) is rotating faster than the shaft (5), (6) these two clutch cams (7), (8) will remain engaged, and the shaft (5), (6) is driven.

But, if the PTO shaft drives a rotary mower as an implement , for example, and the source of power is stopped by pressing the clutch pedal, or if the engine speed is lowered, the clutch cam (7) will overrun as shown in the figure. This overrunning is caused by the inertia of the mower blades. Then, engagement will not take place until the shaft (4) is running faster than the shaft (5), (6).

In this way, the one-way clutch cam protects the transmission and engine power train against damage, by allowing the PTO shaft and the shaft (5), (6) to overrun if PTO shaft overspeeds.

(7) Slant Cam (8) Slant Cam

https://truckmanualshub.com/

[4] DIFFERENTIAL GEAR

(1) Differential Function

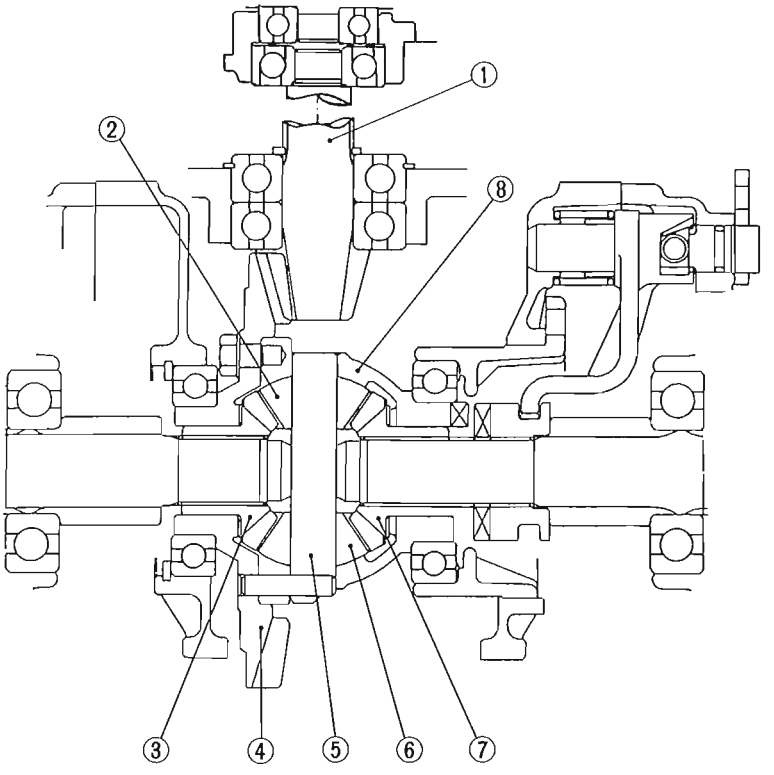

B177F321

(1) Spiral Bevel Pinion
(2) Differential Pinion
(3) Differential Side Gear
(4) Spiral Bevel Gear
(5) Differential Pinion Shaft
(6) Differential Pinion
(7) Differential Side Gear
(8) Differential Case

1. During Straight Running

Rotation of the spiral bevel pinion (1) is transmitted to the spiral bevel gear (4) and differential case (8).

When road resistance to the right and left wheels are equàl, differential pinions (2), (6) and differential side gears (3), (7) are all rotate as a unit. Both rear axles received equal input, and both wheels turn at the same speed, allowing the tractor to go straight ahead.

At this time, differential pinions (2), (6) do not rotate around the differential pinion shaft (5).

2. During Turning

When the tractor turns, the road resistance to the inside tire increases (as if braking is applied to that side only). In other words, if one of tires slows down, revolution difference is generated in the differential side gears (3), (7). When rotation of one differential side gear becomes lower than the other, differential pinions (2), (6) begin rotating around differential increased in speed by the speed increment of differential pinion rotating around differential pinion shaft. This means that rotation of one rear axle is slowed down and that of the other rear axle is increased. Thus, the tractor turn smoothly without power loss.

The combined number of revolutions of the right and left differential side gears is always twice that of the spiral bevel gear (4). When spiral bevel gear revolution is 100 rpm, and if one of the differential side gears stops moving, the revolution of the other differential side gear becomes 200 rpm and if one rotates at 50 rpm, the other rotates at 150 rpm.

https://truckmanualshub.com/

(2) Differential Lock

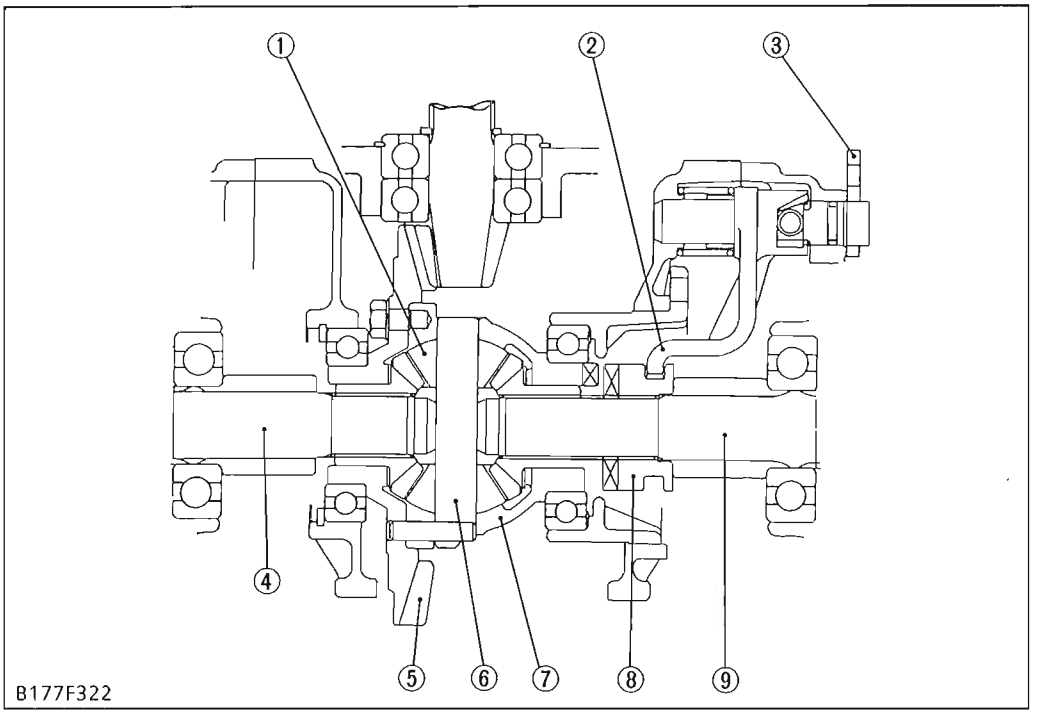

(1) Differential Pinions
(2) Shift Fork
(3) Differential Lock Lever
(4) Differential Gear Shaft
(5) Spiral Bevel Gear
(6) Differential Pinion Shaft
(7) Differential Case
(8) Differential Lock Clutch
(9) Differential Gear Shaft

When resistance to the right and left tires are greatly different due to ground conditions or type of work, the tire with less resistance slips and prevents the tractor from moving ahead. To compensate for this drawback, the differential lock restricts the differential action and causes both rear axles to rotate as a unit.

When the differential lock pedal is stepped on, it causes the differential lock lever (3) to rotate, which will move the shift fork (2) and the differential lock clutch (8) toward the spiral bevel gear (5). The differential lock clutch (8) engaged with the teeth of the differential case (7) to cause the differential case (7) and the differential lock clutch (8) to rotate as a unit.

Therefore, differential pinions (1) are unable to rotate around differential pinion shaft (6) and identical revolutions are transmitted to the right and left differential gear shafts (4), (9).

https://truckmanualshub.com/

https://truckmanualshub.com/

SERVICING

CONTENTS

TROUBLESHOOTING 3-S1
SERVICING SPECIFICATIONS 3-S4
TIGHTENING TORQUES 3-S6
CHECKING AND ADJUSTING 3-S7
DISASSEMBLING AND ASSEMBLING 3-S11
[1] SEPARATING ENGINE FROM CLUTCH HOUSING 3-S11
[2] CLUTCH HOUSING 3-S16
[3] SEPARATING CENTER FRAME AND TRANSMISSION ASSEMBLY 3-S17
[4] TRANSMISSION CASE 3-S23
(1) Hydrostatic Transmission Type 3-S23
(2) Manual Transmission Type 3-S31
[5] DIFFERENTIAL GEAR CASE 3-S35
SERVICING 3-S37
[1] CLUTCH HOUSING 3-S37
[2] TRANSMISSION CASE 3-S37
(1) Hydrostatic Transmission Type 3-S37
(2) Manual Transmission Type 3-S40
[3] DIFFERENTIAL CASE 3-S42

https://truckmanualshub.com/

https://truckmanualshub.com/

TROUBLESHOOTING

HYDROSTATIC TRANSMISSION

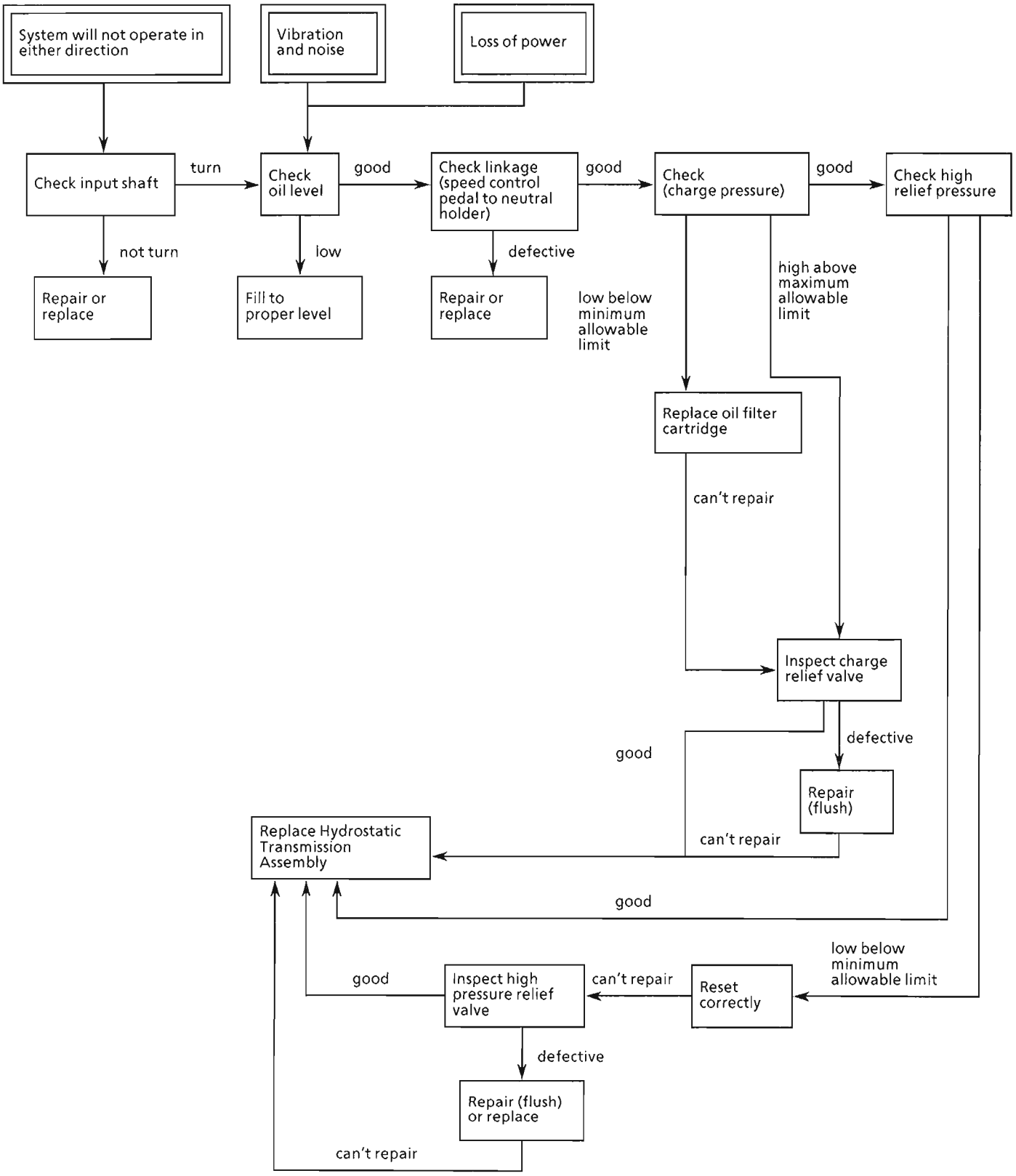

https://truckmanualshub.com/

TROUBLESHOOTING (Continued)

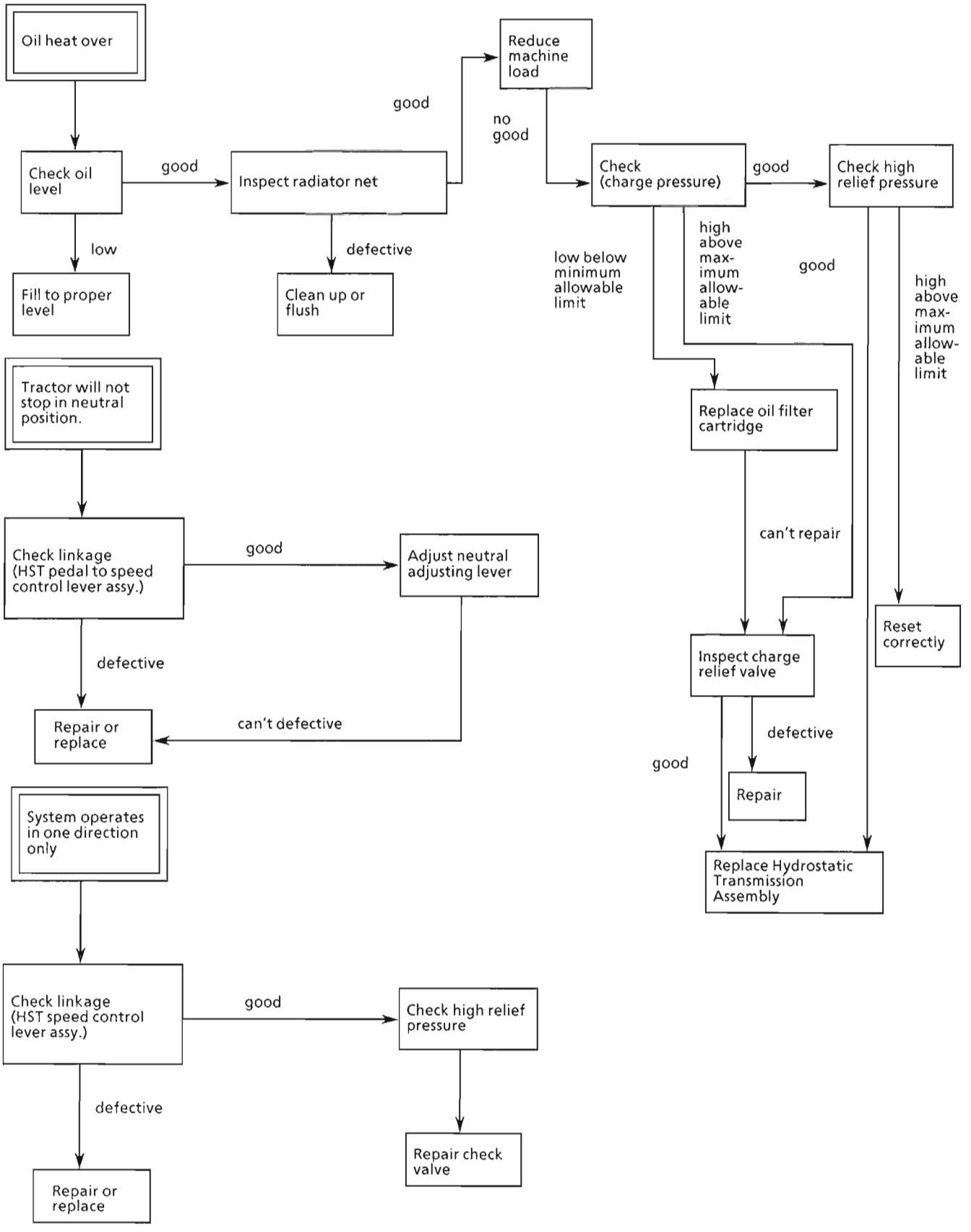

https://truckmanualshub.com/

TROUBLESHOOTING

■ CLUTCH HOUSING

Symptom	Probable Cause	Solution	Reference Page
Noise from Clutch Housing	• Transmission oil insufficient • Gear worn or broken • Bearing worn	Refill Replace Replace	3-S11 3-S16 3-S16

■ TRANSMISSION CASE SECTION

Symptom	Probable Cause	Solution	Reference Page
Noise from Transmission	• Transmission oil insufficient • Gear worn or broken • Improper backlash between 6T spiral bevel pinion and bevel gear • Improper backlash between differential pinion and differential side gear • Bearings worn	Refill Replace Adjust Adjust Replace	3-S11 — 3-S43 3-S42 —
Gear Slip out of Mesh	• Shift fork spring tension insufficient • Shift fork or shifter worn • Shift fork bent	Replace Replace Replace	— 3-S35 3-S35

■ DIFFERENTIAL CASE SECTION

Symptom	Probable Cause	Solution	Reference Page
Excessive or Unusual Noise At All Time	• Improper backlash between 6T spiral bevel pinion and bevel gear • Improper backlash between differential pinion and differential side gear • Bearing worn • Insufficient or improper type of transmission fluid used	Adjust Adjust Replace Replenish or Replace	3-S43 3-S42 3-S36 G-8, 3-S11
Noise while Turning	• Differential pinions or differential side gears worn or damaged • Differential lock binding (does not disengage) • Bearings worn	Replace Replace Replace	3-S30, 3-S33 3-S36 3-S36, 4-S2 3-S36
Differential Lock Can Not Be Set	• Differential lock shift fork damaged • Differential lock shifter mounting pin damaged • Differential lock clutch damaged	Replace Replace Replace	4-S2 4-S2 4-S2
Differential Lock Pedal Does Not Return	• Differential lock pedal return spring weaken or damaged • Differential lock fork shaft rusted	Replace Repair	 4-S2

https://truckmanualshub.com/

SERVICING SPECIFICATIONS

Item		Factory Specification	Allowable Limit
Check and High Pressure Relief Valve	Setting Pressure [Relief Valve]	21.6 MPa 220 kgf/cm^2 3129 psi	—
Charge Relief valve	Setting Pressure	294 to 490 kPa 3.0 to 5.0 kgf/cm^2 43 to 71 psi	—
Gears	Backlash	0.10 to 0.20 mm 0.004 to 0.008 in.	0.4 mm 0.016 in.
Gear to Spline	Clearance	0.03 to 0.08 mm 0.0012 to 0.0031 in.	0.20 mm 0.0079 in.
Sift Fork to Shift Gear Groove	Clearance	0.10 to 0.35 mm 0.004 to 0.014 in.	0.50 mm 0.020 in.
13T Gear to 3rd Shaft	Clearance	0.007 to 0.046 mm 0.0003 to 0.0018 in.	0.10 mm 0.0039 in.
3rd Shaft	O.D.	21.987 to 22.000 mm 0.8656 to 0.8661 in.	—
13T Gear	I.D.	28.007 to 28.021 mm 1.1026 to 1.1032 in.	—
Needle	O.D.	2.994 to 3.000 mm 0.1179 to 0.1181 in.	—
16T-20T Gear to Front wheel Drive Shaft	Clearance	0.027 to 0.067 mm 0.0011 to 0.0025 in.	0.1 mm 0.0039 in.
Front Wheel Drive Shaft	O.D.	21.967 to 21.980 mm 0.8648 to 0.8654 in.	—
16T-20T Gear	I.D.	28.007 to 28.021 mm 1.1024 to 1.1032 in.	—
Needle	O.D.	2.996 to 3.000 mm 0.1179 to 0.1181 in.	—
11T Gear, One-way Clutch to Mid-PTO Shaft	Clearance	0.020 to 0.026 mm 0.0008 to 0.0010 in.	0.10 mm 0.0039 in.
Mid-PTO Shaft	O.D.	19.989 to 20.000 mm 0.7869 to 0.7874 in.	—
11T Gear and One-way Clutch	I.D.	24.007 to 24.020 mm 0.9452 to 0.9457 in.	—
Needle	O.D.	1.997 to 2.000 mm 0.0786 to 0.0787 in.	—
Ring Gear to Spiral Bevel Pinion Shaft	Backlash	0.10 to 0.20 mm 0.004 to 0.008 in.	0.4 mm 0.016 in.
Adjusting Shim	Thickness	0.2 mm, 0.008 in. 0.3 mm, 0,012 in. 0.5 mm, 0.020 in.	— — —

https://truckmanualshub.com/

SERVICING SPECIFICATIONS (Continued)

Item		Factory Specification	Allowable Limit
Differential Pinion to Differential Side Gear	Backlash	0.1 to 0.3 mm 0.004 to 0.012 in.	0.4 mm 0.016 in.
Adjust Shim	Thickness	0.8 mm (0.0315 in.) 1.0 mm (0.0394 in.) 1.2 mm (0.0472 in.)	— — —
Differential Case to Differential Side Gear	Clearance	0.025 to 0.066 mm 0.0016 to 0.0029 in.	0.30 mm 0.0118 in.
Differential Case	I.D.	32.000 to 32.025 mm 1.2598 to 1.2608 in.	—
Spiral Bevel Gear	I.D.	32.000 to 32.025 mm 1.2598 to 1.2608 in.	—
Differential Side Gear	O.D.	31.959 to 31.975 mm 1.2582 to 1.2589 in.	—
Differential Pinion Shaft to Differential Pinion	Clearance	0.016 to 0.045 mm 0.0006 to 0.0018 in.	0.30 mm 0.0118 in.
Differential Pinion Shaft	O.D.	15.973 to 15.984 mm 0.6299 to 0.6293 in.	—
Differential Pinion	I.D.	16.000 to 16.018 mm 0.6299 to 0.6306 in.	—

https://truckmanualshub.com/

TIGHTENING TORQUES

Item	N·m	kgf·m	ft-lbs
Steering wheel mounting nut	29.4 to 49.0	3.0 to 5.0	21.7 to 36.2
Pitman arm mounting nut	147 to 177	15.0 to 18.0	108 to 130
Power steering assembly mounting screw	77.5 to 90.1	7.9 to 9.2	57.2 to 66.5
Clutch housing mounting screw and nut to engine			
M8 screw	17.7 to 20.6	1.8 to 2.1	13.0 to 15.2
M10 nut	48.1 to 55.8	4.9 to 5.7	35.5 to 41.2
Clutch housing rear cover mounting screw	17.7 to 20.6	1.8 to 2.1	13.0 to 15.0
Center frame mounting screw and nut to transmission case	62.8 to 72.5	6.4 to 7.4	46.3 to 53.5
HST mounting screw and nut	39.2 to 44.1	4.0 to 4.5	28.9 to 32.5
Charge pump mounting hex. socket head screw	15.7 to 20.6	1.6 to 2.1	11.6 to 15.2
HST center section mounting hex. socket head screw	40.2 to 44.1	4.0 to 4.5	29.7 to 32.5
Check and high pressure relief valve setting hex. socket head plug	40.70 to 94.93	4.15 to 9.68	30.02 to 70.02
Charge pressure relief valve setting hex. socket head plug	14.22 to 23.54	1.45 to 2.40	10.49 to 17.36
Check port plug (High pressure relief pressure)	40.70 to 94.93	4.15 to 9.68	30.02to 70.02
Check port plug (Charge relief pressure)	21.17 to 47.47	2.77 to 4.84	20.04 to35.01
Trunnion control lever mounting bolt and nut	23.5 to 27.4	2.4 to 2.8	17.4 to 20.2
Main shift cover mounting screw	17.7 to 20.6	1.8 to 2.1	13.0 to 20.2
Mission case front cover mounting screw and nut	39.2 to 44.1	4.0 to 4.5	28.9 to 32.5
Connecting plate mounting screw and nut	39.2 to 44.1	4.0 to 4.5	28.9 to 32.5
Transmission case to differential case mounting screw and nut	39.2 to 44.1	4.0 to 4.5	28.9 to 32.5
Top link bracket mounting screw	77.5 to 90.1	7.9 to 9.2	57.2 to 66.5
Hydraulic cylinder to differential case mounting screw	39.2 to 44.1	4.0 to 4.5	28.9 to 32.5
Mid-PTO case to transmission case mounting screw	39.2 to 44.1	4.0 to 4.5	28.9 to 32.5
Rear-PTO cover mounting screw	39.2 to 44.1	4.0 to 4.5	28.9 to 32.5
Rear axle case mounting screw	39.2 to 44.1	4.0 to 4.5	28.9 to 32.5
3rd shaft, 2nd gear shaft bearing holder mounting screw	39.2 to 44.1	4.0 to 4.5	28.9 to 32.5
Differential bearing holder mounting screw	17.7 to 20.6	1.8 to 2.1	13.0 to 15.2
Spiral bevel gear mounting screw	29.4 to 34.3	3.0 to 3.5	21.7 to 25.3
3-Point hitch shaft setting screw	14.7 to 19.6	1.5 to 2.0	10.8 to 14.5
Drawber frame mounting screw	62.8 to 72.5	6.4 to 7.4	46.3 to 53.5
ROPS frame and frame top connecting bolt and nut	149.1 to 179.5	15.2 to 18.3	109.9 to 132.4
ROPS connecting plate mounting screw	47.1 to 56.9	4.8 to 5.8	34.7 to 42.0
ROPS frame mounting screw	77.5 to 90.1	7.9 to 9.2	57.2 to 66.5
Cotter setting bolt and nut	123 to 147	12.6 to 15.0	91 to 108
Flare nut for hydraulic pipe	29.4 to 39.2	3.0 to 4.0	21.7 to 28.9
Joint bolt for delivery pipe of three point hitch	34.3 to 44.1	3.5 to 4.5	25.3 to 32.5

https://truckmanualshub.com/

To: Dennis Hood

From: Brinston Williams X1923

Date: June 27, 1997

Subject: "CHECKING AND ADJUSTING" HST Neutral WSM Instructions

Dennis, Thanks for bring the incorrect wording of the HST Neutral Adjusting Procedures to our attention. The "NOTE" explanation on page 3-S7 of the new B-Series WSM is incorrect in its wording. I will contact Japan ASAP regarding this issue. Immediately after hearing from Japan I will contact you with the results and solution.

In the B7300 WSM the wording has been corrected in how to properly adjust the HST Neutral. Attached with this FAX is a copy of the B7300 WSM procedures for adjusting the HST Neutral. Dennis, this Service Bulletin is a copy of a Japan Bulletin correcting the current B7300 WSM's HST Neutral Adjustment procedure. I'm currently waiting for B7300 WSM corrections in the from of inserts. Japan, confirmed that the B7300 WSM correction inserts will arrive in late July of this year. You will be given the corrections as soon as they arrive.

Thanks

B. Williams

Brinston

https://truckmanualshub.com/

https://truckmanualshub.com/

(CORRECTED)

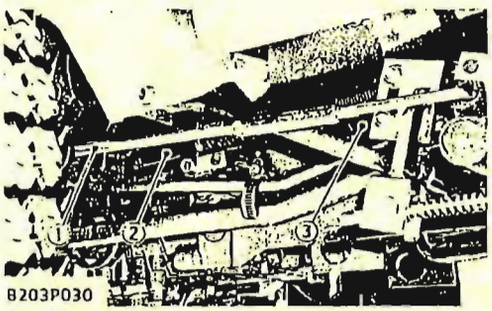

B203P030

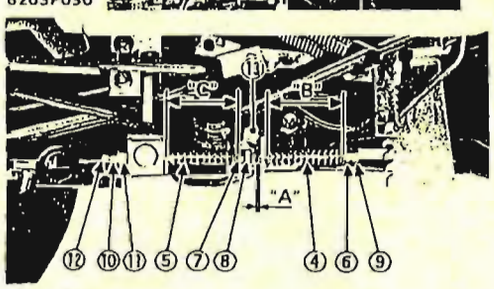

B203P032

(1) Brake Rod (RH)
(2) HST Pedal Damper
(3) Neutral Adjuster
(4) Return Spring (for forward adjustment)
(5) Return Spring (for reverse adjustment)
(6) Adjusting Nut
(7) Adjusting Nut
(8) Lock Nut
(9) Lock Nut
(10) Lock Nut
(11) Neutral Position Adjusting Nut
(12) Rod
(13) Stay

Adjusting Neutral

1. Disconnect the brake rod RH (1).
2. Loosen the lock nut (8) (9) and adjusting nut (6) (7) until springs (4) (5) are freely.
3. Loosen the lock nut (10) and neutral position adjusting nut (11) until washer welded on the rod (12) comes off from stay (13).
4. Remove the HST pedal damper (2).
5. Loosen the neutral adjuster (3) setting screw.

(When rear wheels tend to turn forward)

1. Rotate the neutral adjusting lever clockwise so that the rear wheels turn reverse.
2. Then rotate it counterclockwise until wheels stop completely.

(When rear wheels tend to turn reverse)

1. Rotate the neutral adjusting lever counterclockwise so that the rear wheels turn forward.
2. Then rotate it clockwise until wheels stop completely.

(After adjusting neutral)

1. Make sure the HST control pedal (d) is at the neutral position. (Let the pedal go from the forward to the neutral position, as well as from the rearward to the neutral position. Make sure the pedal returns to just the same neutral position.)
2. Turn the neutral position adjusting nut (11) to move the rod (12) until there is a clearance "A" 0 mm (0 in.) between the welded washer and the stay (13). (Set in position with a slight contact.) Now turn this nut counterclockwise by half a turn. Now lock the nut (10). (Be careful not overtighten the nut (11). Otherwise the HST pedal may get stuck.)
3. Finally lock the double nut (8), (9) so that the spring (4), (5), should be **64 to 66 mm (2.5 to 2.6 in.)** forward and **64 to 66 mm (2.5 to 2.6 in.)** rearward in length B and C.

	Length (B)	Length (C)
Normal compression	**65 mm (2.6 in.)**	**65 mm (2.6 in.)**
Max. compression	42 mm (1.7 in.)	42 mm (1.7 in.)

Tightening torque	Neutral adjuster setting screw	39.2 to 44.1 N·m 4.0 to 4.5 kgf·m 28.9 to 32.5 ft-lbs

https://truckmanualshub.com/

https://truckmanualshub.com/

CHECKING AND ADJUSTING

Neutral

1. Disengage the front wheel drive lever. (Drive only rear wheels.)
2. Lift the rear of the tractor so that the rear wheels are off the ground and run the engine at low idling and drive only rear wheels.
3. Depress the one end of speed control pedal and release, and do the same at the other end.
4. If the rear wheels do not stop turning, adjust as following procedure.

See yellow pages for clarification — A

NOTE

- **Before loosen the neutral adjuster setting screw, be sure to insert the screw driver to hole of neutral adjuster. This mean prevent to comes out neutral adjuster at adjusting window.**

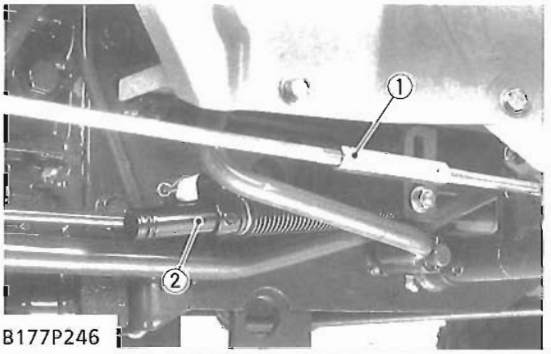

B177P246

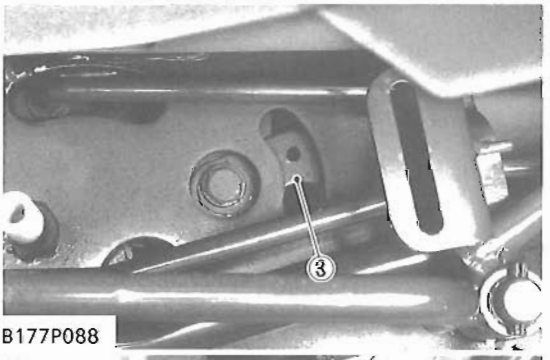

B177P088

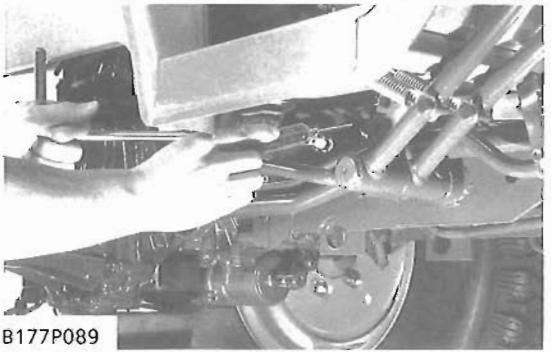
B177P089

Adjusting Neutral

1. Disconnect the brake rod RH (1).
2. Remove the HST pedal damper (2).
3. Loosen the neutral adjuster (3) setting screw.

(When rear wheels tend to turn forward)

1. Rotate the neutral adjusting lever clockwise so that the rear wheels turn reverse.
2. Then rotate it counterclockwise until wheels stop completely.

(When rear wheels tend to turn reverse)

1. Rotate the neutral adjusting lever counterclockwise so that the rear wheels turn forward.
2. Then rotate it clockwise until wheels stop completely.

Tightening torque	Neutral adjuster setting screw	48.1 to 55.8 N·m 4.9 to 5.7 kgf·m 35.5 to 41.2 ft-lbs

(1) Brake Rod (RH)
(2) HST Pedal Damper
(3) Neutral Adjuster

https://truckmanualshub.com/

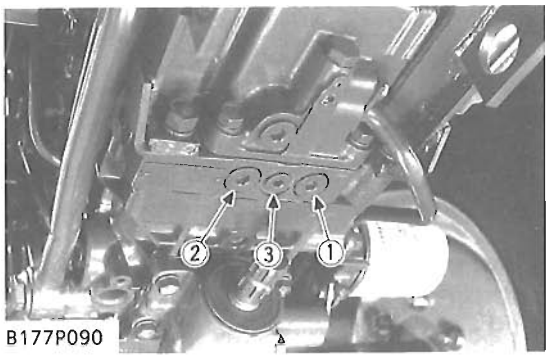

B177P090

Oil Pressure in Hydrostatic Transmission

1. Clean and clear the work area,. and fully engage the parking brake.
2. Measure the following oil pressures using and HST adaptor A and B (refer to G-31) as instructed.

(1) P1 Port (High Relief Pressure for Forward)
(2) P2 Port (High Relief Pressure for Reverse)
(3) P3 Port (Charge Relief Pressure)

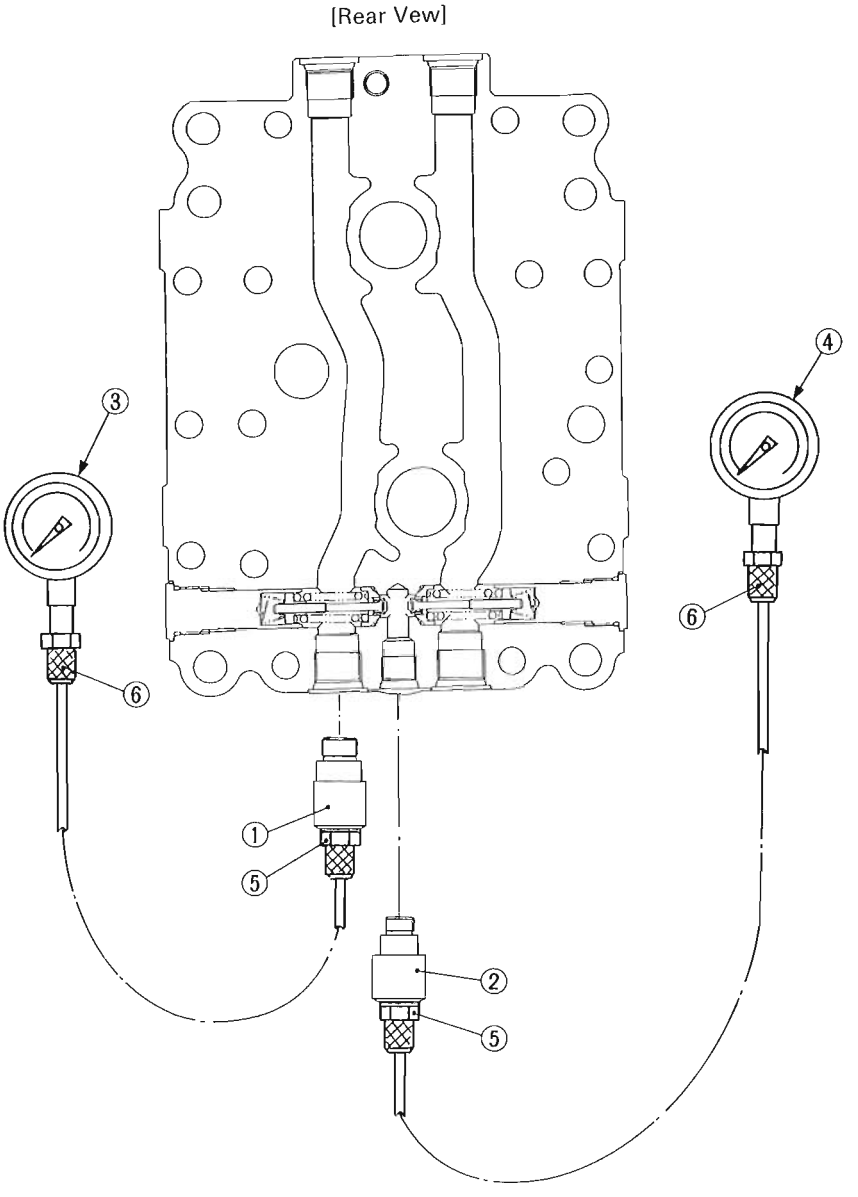

B177F323

(1) HST Adaptor A
(2) HST Adaptor B
(3) Pressure Gauge (High Pressure)
(4) Pressure Gauge (Low Pressure)
(5) Threaded Joint
(6) Cable

https://truckmanualshub.com/

B177P090

B177P091

B177P092

Check and High Relief Pressure

CAUTION

- **When checking, park the tractor on flat ground, apply the parking brake.**

1. Remove the 8 mm (0.31 in.) hex socket head plug from P1 (1) or P2 (2) port (P1 is for forward and P2 is for reverse).
2. Assemble the HST adaptor A and threaded joint with the gasket between them.
3. Install the assembled HST adaptor A and threaded joint to P1 (forward) (1) or P2 (reverse) (2) port.
4. Install the cable threaded joint in relief valve set pressure tester and high pressure gauge to threaded joint in order.
5. Run the engine at 2600 rpm.
6. Place the high-low shift lever in high.
7. Depress the speed control pedal approx. 10 mm (0.39 in.) which rotates the trunnion shaft 0.087 rad (5.0°).

Check and High relief pressure (Oil temperature at 50°C, 122°F)	Factory spec.	21.6 MPa 220 kgf/cm² 3129 psi

IMPORTANT

- **Measure quickly so that the relief valve may not be in operation more than 10 seconds.**

NOTE

- **High pressure gauge is 30 MPa (300 kgf/cm², 4260 psi) full scale.**

(When reassembling)

- Install the 8 mm (0.31 in.) hex. socket head plug to the port with O-ring.

Tightening torque	Plug (P1, P2 port)	40.70 to 94.93 N·m 4.15 to 9.68 kgf·m 30.02 to 70.02 ft-lbs

(1) P1 Port (Forward)
(2) P2 Port (Reverse)
(3) P3 Port (Charge)

https://truckmanualshub.com/

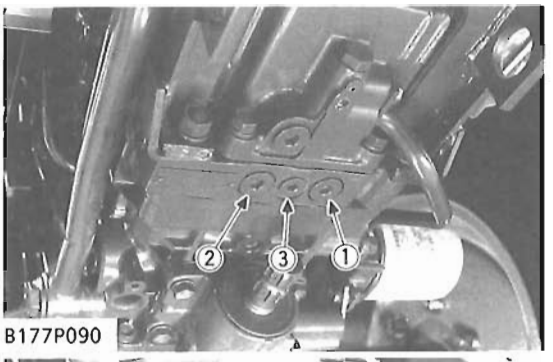

B177P090

B177P093

(1) P1 Port (Forward)
(2) P2 Port (Reverse)
(3) P3 Port (Charge)

Charge Pressure

CAUTION

- **When checking, park the tractor on flat ground, apply the parking brake.**

1. Remove the 6 mm hex. socket head plug from P3 port (3).
2. Assemble the HST adaptor B and thread joint with the gasket between them.
3. Install the assembled HST adaptor B and thread joint to P3 port.
4. Install the cable, thread joint in relief valve set pressure tester and low pressure gauge to threaded joint in order.
5. Run the engine at 2600 rpm.
6. Place the high-low shift lever in neutral.
7. Release the speed control pedal to set in neutral.

Charge pressure (Oil temperature at 50°C, 122°F)	Factory spec.	294 to 490 kPa 3.0 to 5.0 kgf/cm² 43 to 71 psi

NOTE

- **Low pressure gauge is 2 MPa (20 kgf/cm², 284 psi) full scale.**

(When reassembling)

- Install the 6 mm hex. socket head plug to the P3 port with O-ring.

Tightening torque	Plug (P3 port)	21.17 to 47.47 N·m 2.77 to 4.84 kgf·m 20.04 to 35.01 ft-lbs

https://truckmanualshub.com/

DISASSEMBLING AND ASSEMBLING

[1] SEPARATING ENGINE FROM CLUTCH HOUSING

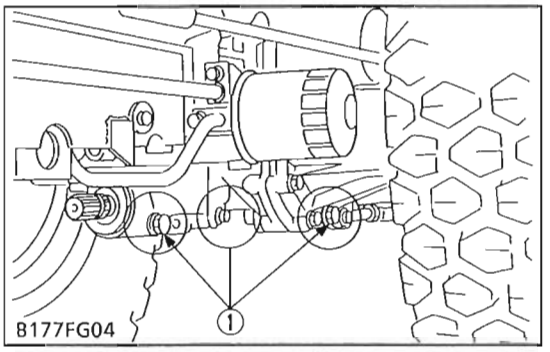

B177FG04

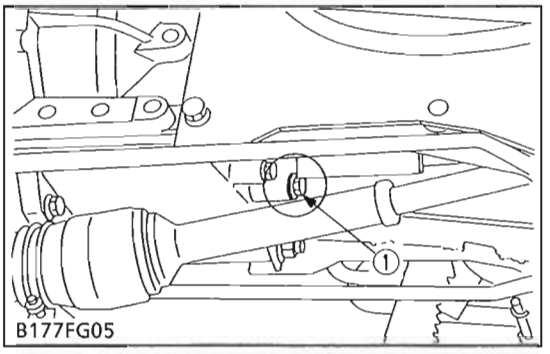

B177FG05

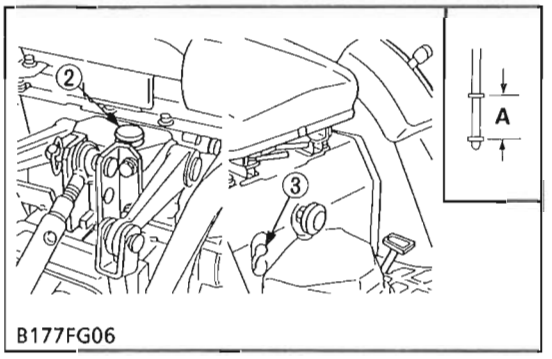

B177FG06

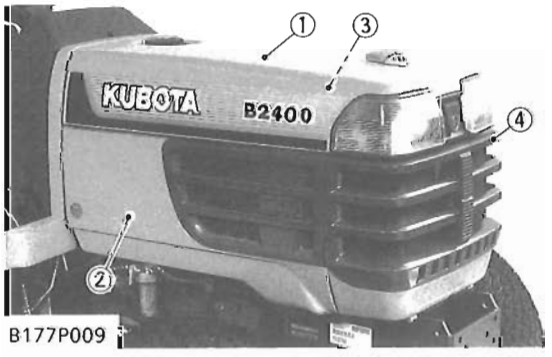

B177P009

Drain Transmission Oil

CAUTION

- **Be sure to stop the engine before checking and changing the transmission oil.**

1. Place an oil pan underneath the transmission case.
2. Remove the drain plugs (1) at the bottom of the transmission case to drain transmission oil.
3. Drain the transmission oil.
4. After draining, screw in the four drain plugs.

(When reassembling)

- Fill new oil from filling port after removing the filling plug (2).
- After running the engine for a few minutes. Stop it and check the oil level again, if low, add oil prescribed level.

IMPORTANT

- **Use only multi-grade transmission oil. Use of other oils may damage the transmission or hydraulic system. Refer to "LUBRICANTS AND FLUID" (See page G-8).**
- **Never work the tractor immediately after changing the transmission oil. Keeping the engine at medium speed for a few minutes to prevents damage to the transmission.**
- **Do not mix different blands oil together.**

Transmission oil capacity	HST type	12.0 ℓ 3.17 U.S.gals. 2.6 Imp.gals
	Manual transmission type	11.0 ℓ 2.90 U.S.gals. 2.4 Imp.gals

[A] Oil level acceptable within this range.

(1) Drain Plug
(2) Filling Plug
(3) Dipstick

Hood and Side Cover

1. Open the hood (1) from the front and remove the spring lock pin and remove hood with hood rod for keeping it open.
2. Remove the front grille (4).
3. Remove the right and left side cover (2), (3).

(1) Hood
(2) Side Cover RH
(3) Side Cover LH
(4) Front Grille

https://truckmanualshub.com/

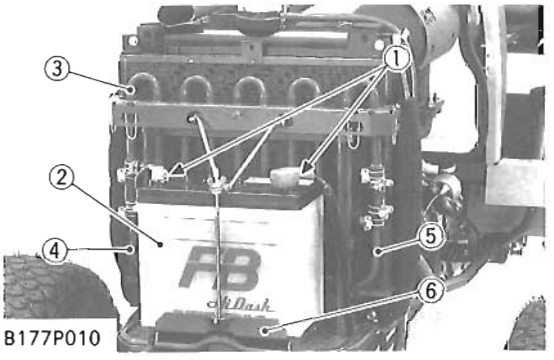

B177P010

Battery, Oil Cooler and Hydraulic Pipes (HST Type)

1. Disconnect the battery cords (1) and dismount the battery (2).
2. Loosen the clamps and remove the battery base (6) with oil cooler (3) then remove the delivery pipe (4) and return pipe (5).

NOTE

- **When disconnecting the battery cords, disconnect the grounding cord first. When connecting the positive cord first.**

(1) Battery Cord
(2) Battery
(3) Oil Cooler
(4) Delivery Pipe
(4) Return Pipe

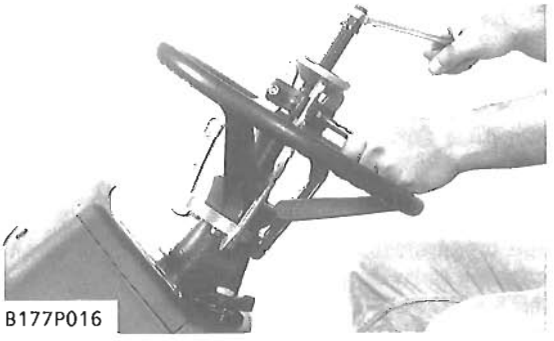
B177P016

Steering Wheel

1. Remove the steering wheel cap.
2. Remove the steering wheel mounting nut and remove the steering wheel with a steering wheel puller. (Code No : 07916-51090)

(When reassembling)

Tightening torque	Steering wheel mounting nut	29.4 to 49.0 N·m 3.0 to 5.0 kgf·m 21.7 to 36.2 ft-lbs

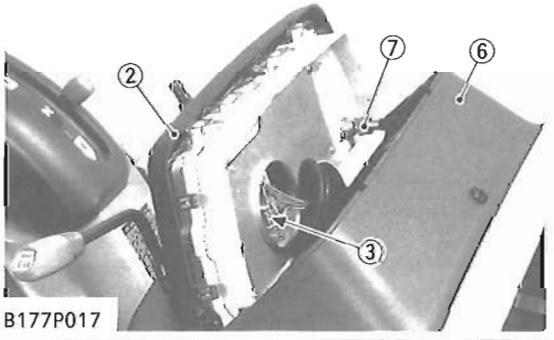

B177P017

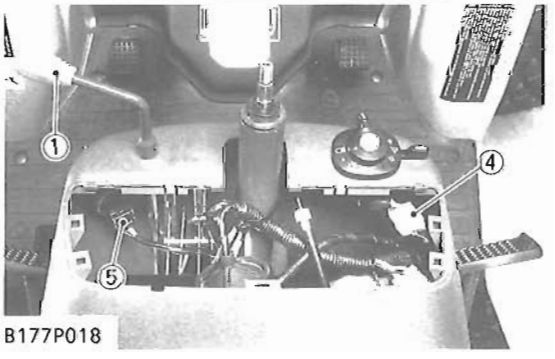

B177P018

Meter Panel and Panel Under Cover

1. Remove the meter panel (2) and disconnect the meter panel connector (3) and hour-meter cable (7) from the meter panel. Then remove the meter panel.
2. Tap out the spring pin and remove the hand accelerator lever (1).
3. Disconnect the combination switch connector (4) and main switch connector (5).
4. Remove the panel under cover mounting screw and remove the panel under cover (6).

(1) Hand Accelerator Lever
(2) Meter Panel
(3) Meter Panel Connector
(4) Combination Switch Connector
(5) Main Switch Connector
(6) Panel Under Cover
(7) Hour-meter Cable

https://truckmanualshub.com/

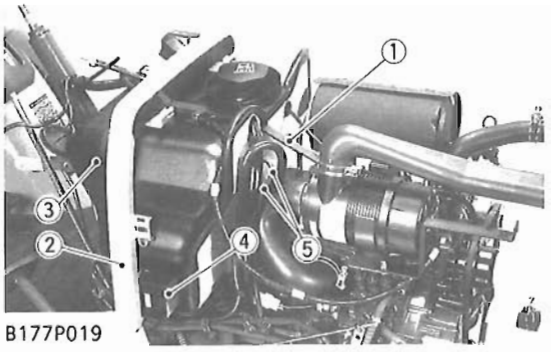

B177P019

Fuel Tank

1. Disconnect the fuel hose between fuel filter and fuel tank at the fuel filter side, then drain fuel completely.
2. Remove the fuel tank frame stay (1).
3. Disconnect the regulator and hazard unit connectors, and remove the lead wire for fuel gauge.
4. Disconnect the fuse box (4).
5. Dismount the overflow hoses (5) of fuel line.
6. Remove the tank flame (2) with fuel tank (3).

(1) Fuel Tank Frame Stay
(2) Fuel Tank Flame
(3) Fuel Tank
(4) Fuse Box
(5) Overflow Hose

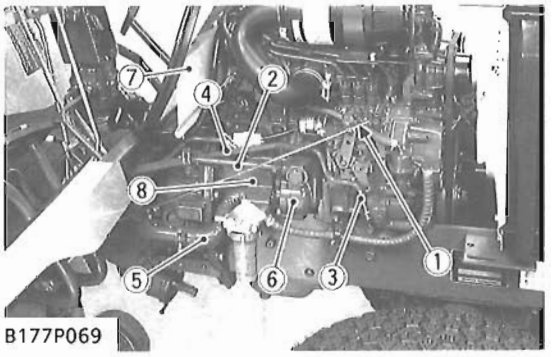

B177P069

Suction Pipe, Delivery Pipe and Power Steering Pipes and Others

1. Remove the foot accelerator rod (2).
2. Remove the power steering delivery pipe (1).
3. Remove the power steering return pipe (3). (HST type)
4. Disconnect the flare nut of 3-point hitch delivery pipe (4) from flow priority valve and loosen the joint bolt (3) on the hydraulic cylinder.
5. Remove the fuel filter bracket (8) with fuel filter.
6. Loosen the clamps of suction hose (5) and remove the suction hose from the hydraulic pump (6).
7. Remove the shutter plate (7).

(When reassembling)

Tightening torque	Flare nut (P.S. delivery, return pipe and 3-point hitch delivery pipe)	29.4 to 39.2 N·m 3.0 to 4.0 kgf·m 21.7 to 28.9 ft-lbs
	Joint bolt	58.8 to 78.5 N·m 6.0 to 8.0 kgf·m 43.4 to 57.9 ft-lbs
	Fuel filter bracket mounting screw	17.7 to 20.6 N·m 1.8 to 2.1 kgf·m 13.0 to 15.2 ft-lbs

(1) Foot Accelerator Rod
(2) Power Steering Delivery Pipe
(3) Power Steering Return Pipe
(4) 3-Point Hitch Delivery Pipe
(5) Suction Hose
(6) Hydraulic Pump
(7) Shutter Plate
(8) Fuel Filter Bracket

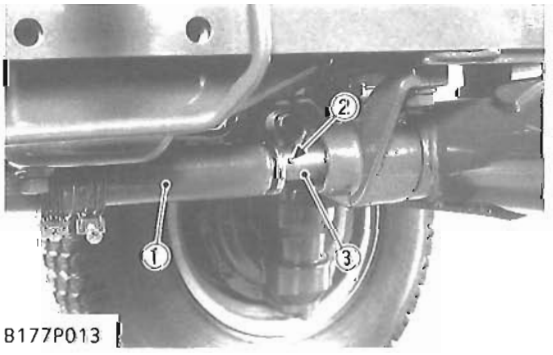

B177P013

Propeller Shaft Cover and Coupling

1. Loosen the clamp and slide the propeller shaft cover (1) to the rear.
2. Tap out the spring pin (2) and then slide the coupling (1) to the rear.

(When reassembling)

- Apply grease to the spline of the propeller shaft and coupling.

(1) Propeller Shaft
(2) Spring Pin
(3) Coupling

https://truckmanualshub.com/

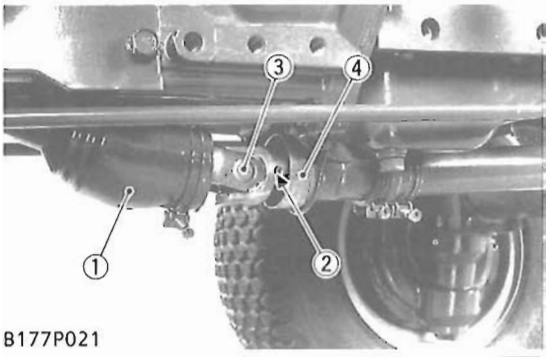

B177P021

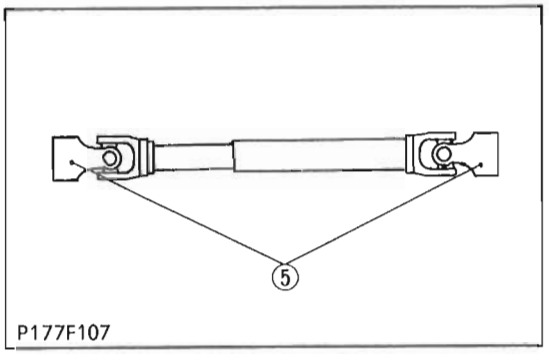

P177F107

Universal Joint and Bearing Holder

1. Loosen the clamp and slide the universal joint cover (1) to the rear.
2. Tap out the spring pin (2) and then slide the universal joint (3) to the rear.
3. Remove the bearing holder (4) and universal joint.

(When reassembling)

- Make sure the yokes (5) of universal joints must always be in the same plane as shown in the figure.
- Apply grease to the spline of the propeller shaft and universal joint.
- When inserting the spring pins (2), face their splits in the direction parallel to the universal joint as shown in the figure.

(1) Universal Joint Cover
(2) Spring Pins
(3) Universal Joint
(4) Bearing Holder
(5) Yoke

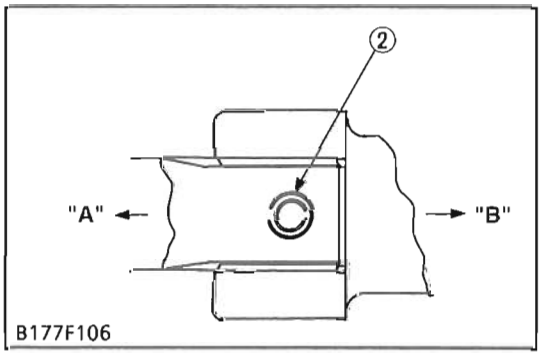

B177F106

[A] Front
[B] Rear

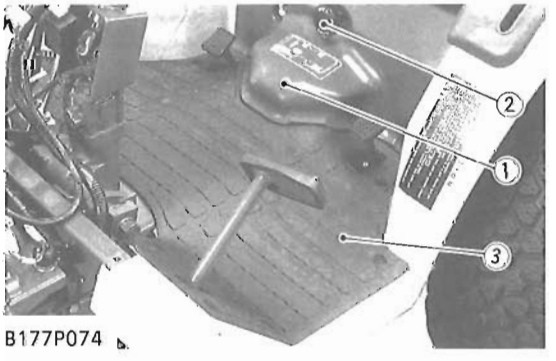

B177P074

Step

1. Remove the lowering speed adjusting knob (2) and the seat under cover (1).
2. Remove the rubber mat (3).
3. Disconnect the speed set rod (HST Type) and the parking brake rod.
4. Remove the clutch springs.
5. Remove the left hand side step.

(1) Seat Under Cover
(2) Lowering Speed Adjusting Knob
(3) Rubber Mat

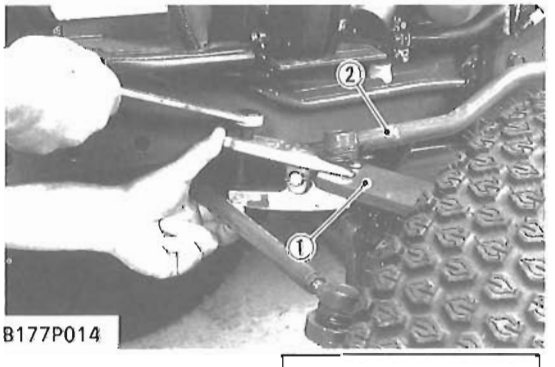

B177P014

Drag Link

1. Steer the front wheels to the left.
2. Remove the slotted nut and disconnect the drag link (2) from the pitman arm (1).

(When reassembling)

IMPORTANT

- **After tightening the slotted nut to the specified torque, install the cotter pin as shown in the figure.**

Tightening torque	Slotted nut	17.7 to 34.3 N·m 1.8 to 3.5 kgf·m 13.0 to 25.3 ft-lbs

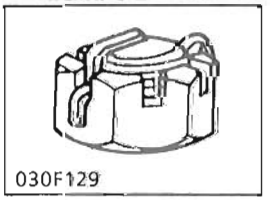
030F129

(1) Pitman Arm
(2) Drag Link

https://truckmanualshub.com/

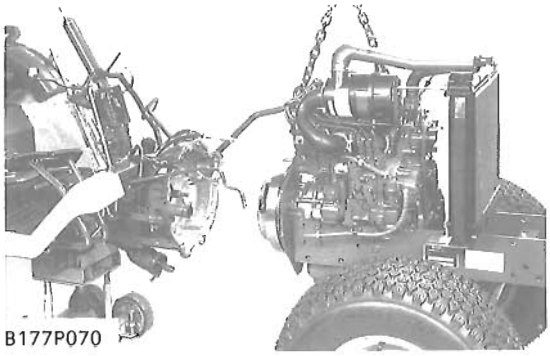
B177P070

Separating the Engine from Clutch Housing

1. Disconnect the glow plug lead wire and tharmo sensor lead wire. And then disconnect the connectors for dynamo or 2P for alternator connector and starter motor lead wire.
2. Place the jack under the center frame.
3. Hoist the engine by the cain at the engine hook.
4. Remove the engine mounting screws and separate the engine from the clutch housing.

(When reassembling)

- Apply liquid gasket (Three Bond 1208D or equivalent) to joint face of the engine and clutch housing.

Tightening torque	Engine mounting screw	17.7 to 20.6 N·m 1.8 to 2.1 kgf·m 13.0 to 15.2 ft-lbs
	Engine mounting nut	48.1 to 55.8 N·m 4.9 to 5.7 kgf·m 35.5 to 41.2 ft-lbs

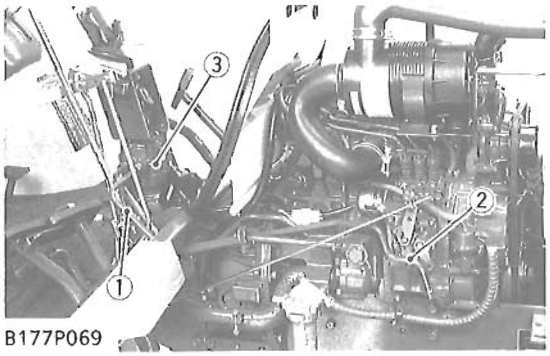

B177P069

(1) Power Steering Delivery Pipe
(2) Power Steering Return Pipe
(3) Power Steering Assembly

Power Steering Assembly

1. Remove the power steering delivery pipe (1) and return pipe (2) (Manual TransmissionType).
2. Disconnect the speed set rod (HST type) and parking brake rod.
3. Remove the power steering assembly (3) from the center frame.

(When reassembling)

Tightening torque	Flare nut (P.S. delivery, return pipe)	29.4 to 39.2 N·m 3.0 to 4.0 kgf·m 21.7 to 28.9 ft-lbs
	Power steering assembly mounting screw	77.5 to 90.1 N·m 7.9 to 9.2 kgf·m 57.2 to 66.5 ft-lbs

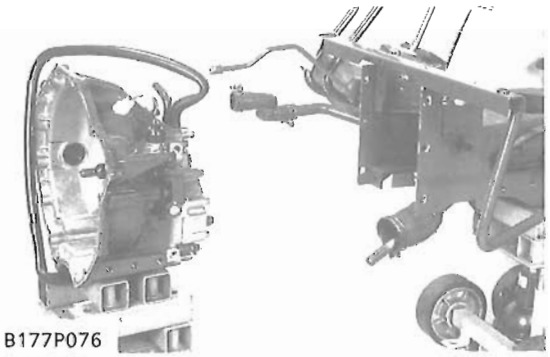
B177P076

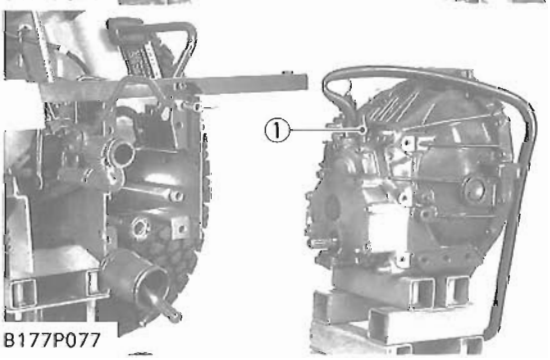

B177P077

Separating Clutch Housing

1. Disconnect the clutch rod.
2. Disconnect the rubber hose (1) of hydraulic pipe (HST Type).
3. Separate the clutch housing from center frame.

(When reassembling)

- Apply grease to the splines of propeller shaft and ball joint.
- Reinstall the connecting pipe and O-rings securely.

Tightening torque	Clutch housing mounting screw and nut	62.8 to 72.6 N·m 6.4 to 7.4 kgf·m 46.3 to 53.5 ft-lbs

(1) Rubber Hose

https://truckmanualshub.com/

[2] CLUTCH HOUSING

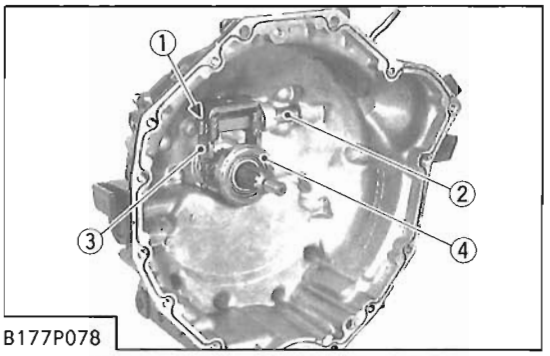

B177P078

Clutch Rod and Release Fork

1. Remove the external snap ring (1).
2. Draw out the clutch rod (2) and remove the clutch release fork (3).
3. Take out the release hub with release bearing (4).

(1) External Snap Ring
(2) Clutch Rod
(3) Clutch Release Fork
(4) Release Bearing

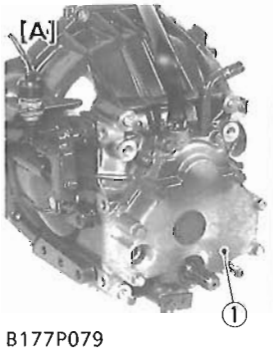

B177P079

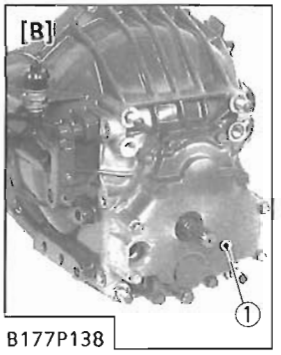

B177P138

Clutch Housing Rear Cover

1. Remove the clutch housing rear cover (1).

(When reassembling)

- Apply liquid gasket (Three Bond 1208D or equivalent) to joint face of clutch housing and rear cover (1).

Tightening torque	Clutch housing rear cover mounting screw	17.7 to 20.6 N·m 1.8 to 2.1 kgf·m 13.0 to 15.2 ft-lbs

(1) Clutch Housing Rear Cover

[A] HST Type
[B] Manual Transmission Type

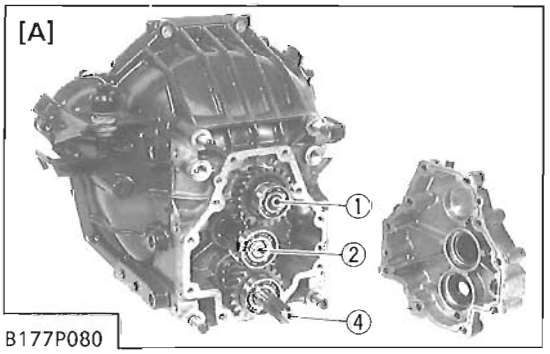

B177P080

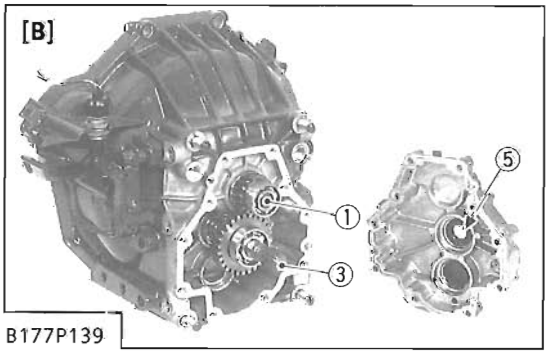

B177P139

Clutch Shaft and Others

1. Pull out the clutch shaft assembly (1).
2. Pull out the 2nd gear shaft, front assembly (2) (HST Type).
3. Pull out the 2nd shaft, front assembly (3) (Manual Transmission Type).
4. Pull out the 3rd shaft, front assembly (4) (HST Type).

(When reassembling)

- Apply small amount of the grease to the oil seal (5).

(1) Clutch Shaft Assembly
(2) 2nd Gear Shaft, Front Assembly
(3) 2nd Shaft, Front Assembly
(4) 3rd Shaft, Front Assembly
(5) Oil Seal

[A] HST Type
[B] Manual Transmission Type

https://truckmanualshub.com/

[3] SEPARATING CENTER FRAME AND TRANSMISSION ASSEMBLY

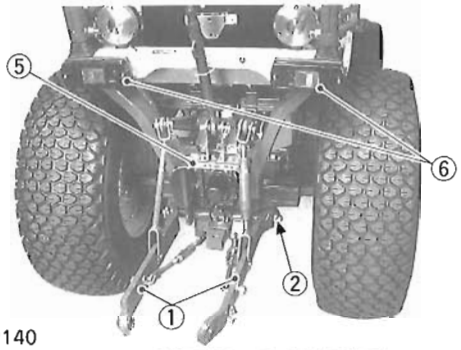

B177P140

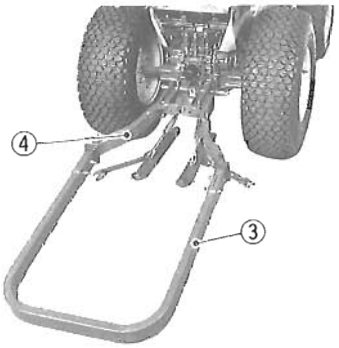

B177P141

Roll-Over Protective Structures (ROPS) and 3 Point Hitch

1. Remove the lower link (1) and the collar from the 3-point hitch shaft (2).
2. Remove the both sides tail lamps (6) with lamp frame.
3. Remove the both sides fender mounting screws.
4. Remove the PTO shaft cover (5) and connecting plate.
5. Remove the ROPS mounting screws and then bring down the ROPS.
6. Remove the ROPS frame top (3) mounting bolts and nuts and pull out the ROPS frame top.
7. Remove the ROPS frames (4) from the 3-point hitch shaft.

(When reassembling)

Tightening torque	Connecting plate mounting screw	47.1 to 56.9 N·m 4.8 to 5.8 kgf·m 34.7 to 42.0 ft-lbs
	ROPS frame and frame top mounting bolt and nut	149.1 to 179.5 N·m 15.2 to 18.3 kgf·m 109.9 to 132.4 ft-lbs
	ROPS frame mounting screw	77.5 to 90.1 N·m 7.9 to 9.2 kgf·m 57.2 to 66.5 ft-lbs
	3-Point hitch shaft setting screw	14.7 to 19.6 N·m 1.5 to 2.0 kgf·m 10.8 to 14.5 ft-lbs

(1) Lower Link
(2) 3-Point Hitch Shaft
(3) ROPS Frame, Top
(4) ROPS Frame
(5) PTO Shaft Cover
(6) Tail Lamp

Draining Transmission Oil

Refer to 3-S11.

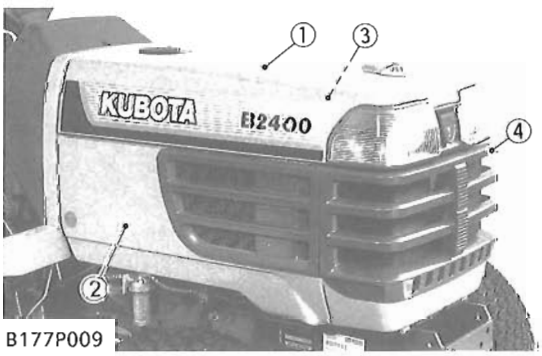

B177P009

Hood and Side Cover

1. Open the hood from front and remove the spling lock pin and remove the food with hood rod for keeping it open.
2. Remove the front grille (4).
3. Remove the right and left side cover (2), (3).

(1) Hood
(2) Right Side Cover
(3) Left Side Cover
(4) Front Grille

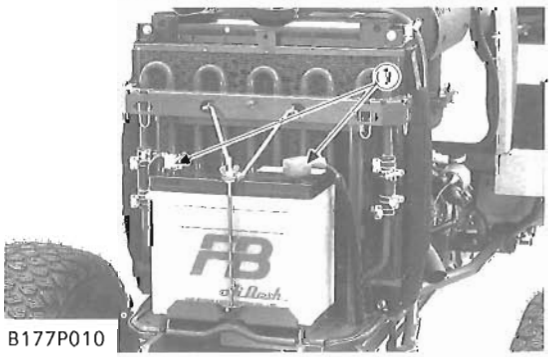

B177P010

Battery

1. Disconnect the battery cords (1).

NOTE

- **When disconnecting the battery cords, disconnect the grounding cord first. When connecting the positive cord first.**

(1) Battery Cord

https://truckmanualshub.com/

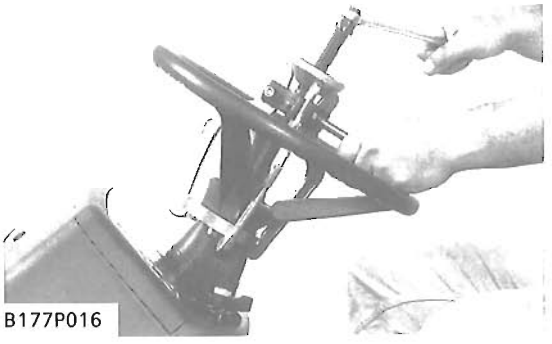
B177P016

Steering Wheel

1. Remove the steering wheel cap.
2. Remove the steering wheel mounting nut and remove the steering wheel with a steering wheel puller. (Code No. 07916-51090)

(When reassembling)

Tightening torque	Steering wheel mounting nut	29.4 to 49.0 N·m 3.0 to 5.0 kgf·m 21.7 to 36.2 ft-lbs

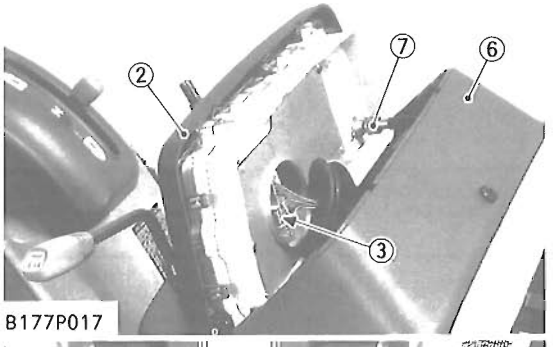

B177P017

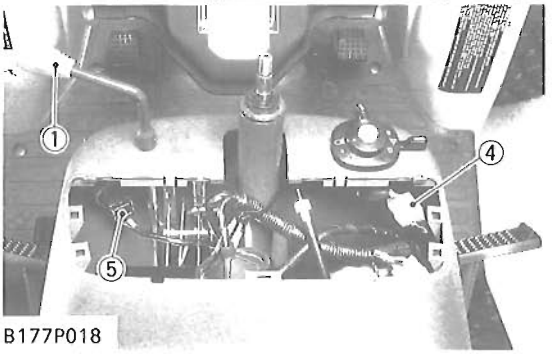

B177P018

Meter Panel and Panel Under Cover

1. Remove the meter panel (2) and disconnect the meter panel connector (3) and hour-meter cable from the meter panel. Then remove the meter panel.
2. Tap out the spring pin and remove the hand accelerator lever (1).
3. Disconnect the combination switch connector (4) and main switch connector (5).
4. Remove the panel under cover mounting screw and remove the panel under cover (6).

(1) Hand Accelerator Lever
(2) Meter Panel
(3) Meter Panel Connector
(4) Combination Switch Connector
(5) Main Switch Connector
(6) Panel Under Cover
(7) Hour-meter Cable

https://truckmanualshub.com/

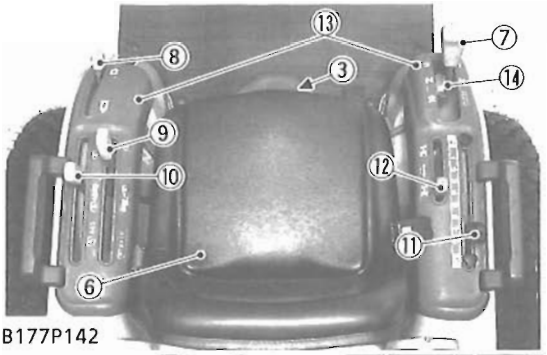

B177P142

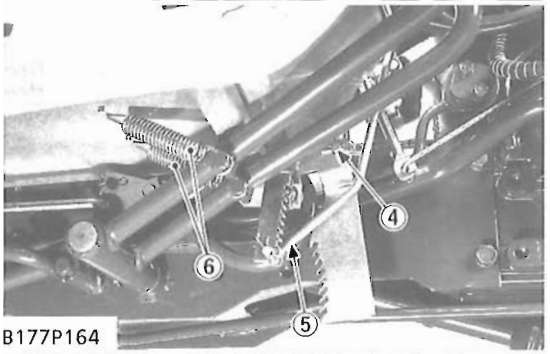

B177P164

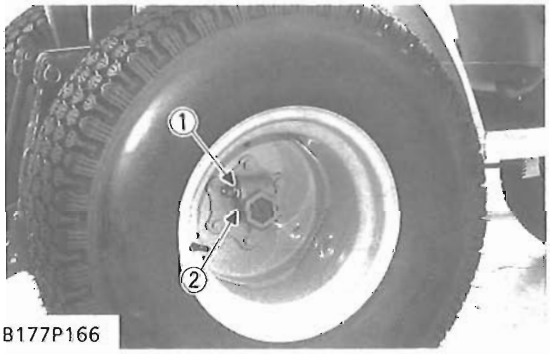

B177P166

Step, Fender, Tire and Seat

1. Remove the lowering speed adjusting knob and seat under cover (3).
2. Remove the rubber mat.
3. Disconnect the speed set rod (4) (HST Type) and parking brake rod (5).
4. Remove the clutch and brake springs.
5. Remove the left and right hand side steps.
6. Remove the cotter (1) setting bolt and nut, then place the jack under the transmission case, and set the rigid rack under the rear axles.
7. Take out the wheel hub pin (2) and remove the rear wheels.
8. Remove the seat (6).
9. Remove the main gear shift lever grip (7) (Manual Transmission Type).
10. Remove the Hi-Lo gear shift lever grip (8), mid and rear-PTO gear shift lever grips (9), (10), position control lever grip (11) and front wheel drive lever grip (12).
11. Remove the left and right hand side lever guide (13).
12. Remove the main gear shift lever (14) (Manual Transmission Type).
13. Disconnect the wire harness and remove the fender stay, left and right hand side fenders.
14. Remove the tool box and seat stay with seat rail.

IMPORTANT

- **When refitting or adjusting a wheel, tighten the bolts to the following torques then recheck after driving the tractor 200 m (200 yards) and there after daily check service.**

(When reassembling)

Tightening torque	Rear wheel cotter setting bolt and nut	123 to 147 N·m 12.6 to 15.0 kgf·m 91 to 108 ft-lbs

(1) Cotter
(2) Wheel Hub Pin
(3) Seat Under Cover
(4) Speed Set Rod
(5) Parking Brake Rod
(6) Seat
(7) Main Gear Shift Lever Grip
(8) Hi-Lo Gear Shift Lever Grip
(9) Mid-PTO Gear Shift Lever Grip
(10) Rear-PTO Gear Shift Lever Grip
(11) Position Control Lever Grip
(12) Front Wheel Drive Lever Grip
(13) Lever Guide
(14) Main Gear Shift Lever

https://truckmanualshub.com/

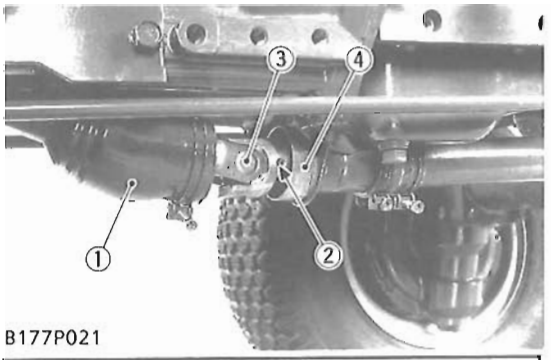

B177P021

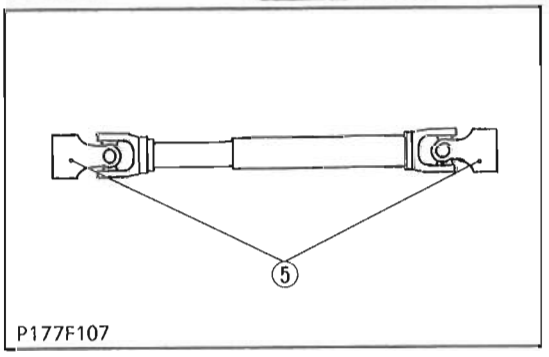

P177F107

Universal Joint and Bearing Holder

1. Loosen the clamp and slide the universal joint cover (1) to the rear.
2. Tap out the spring pins (2) and then slide the universal joint (3) to the rear.
3. Remove the bearing holder (4) with propeller shaft and universal joint.

(When reassembling)

- Make sure the yokes (5) of universal joint must always be in the same plane as shown in the figure.
- Apply grease to the spline of the propeller shaft and universal joint.
- When inserting the spring pins (2) face their splits in the direction at right angle to the universal joint as shown in the figure.

(1) Universal Joint Cover
(2) Spring Pins
(3) Universal Joint
(4) Bearing Holder
(5) Yoke

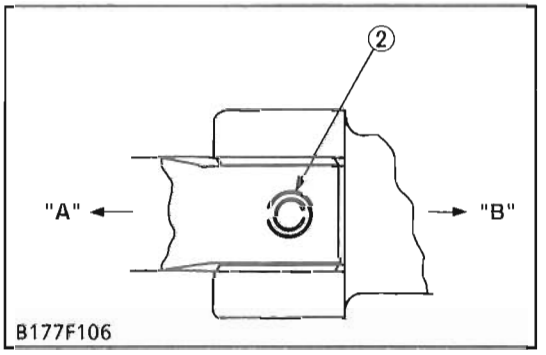

B177F106

[A] Front
[B] Rear

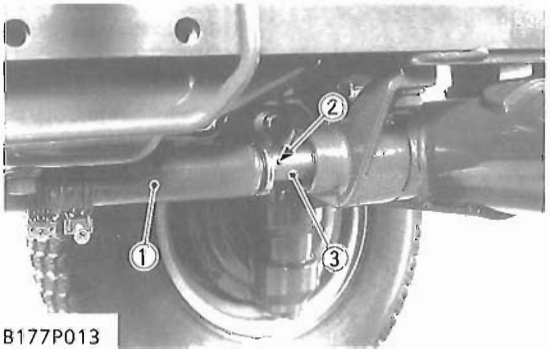

B177P013

Propeller Shaft Cover and Coupling

1. Loosen the clamp and slide the propeller shaft cover (1) to the rear.
2. Tap out the spring pin (2) and then slide the coupling (3) to the rear.

(When reassembling)

- Apply grease to the spline of the propeller shaft and coupling.

(1) Propeller Shaft Cover
(2) Spring Pin
(3) Coupling

https://truckmanualshub.com/

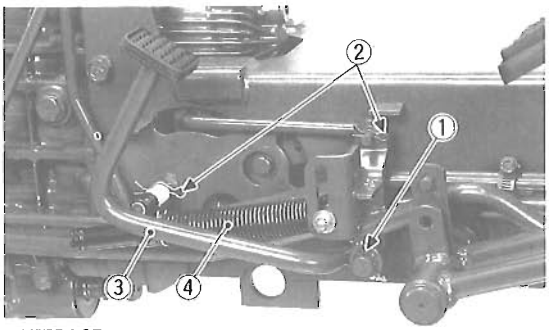

B177P165

HST Pedal (HST Type)

1. Tap out the spring pin (1) and remove the spring lock pins (2), the draw out the HST pedal (3) with damper (4).

(When reassembling)

- Tap in the spring pin (1) as shown in the figure below.

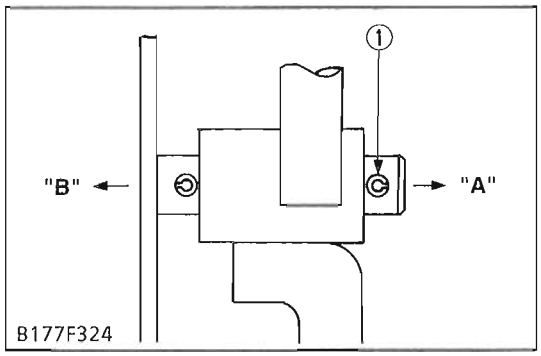

B177F324

(1) Spring Pin
(2) Spring Lock Pin
(3) HST Pedal
(4) Damper

[A] Outside
[B] Inside

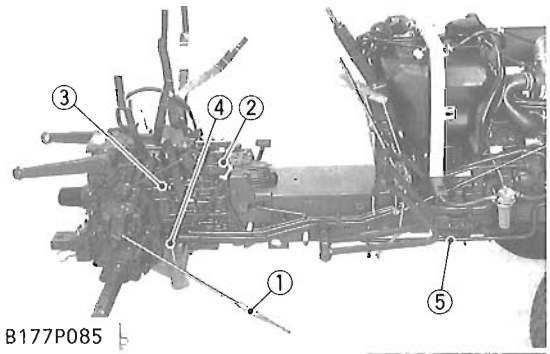

B177P085

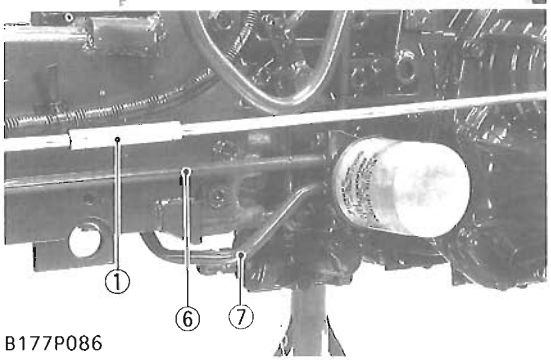

B177P086

Suction Pipe, Delivery Pipe, Hydraulic Pipes and Rods

1. Loosen the clamps and remove the hydraulic pipe (5) from HST charge pump (HST Type).
2. Loosen the clamp and remove the return pipe (6) from oil cooler (HST Type).
3. Remove the hydraulic pipe (7) from transmission oil filter bracket to HST housing (HST Type).
4. Disconnect the left and right brake rods (1).
5. Remove the power steering return pipe (Manual Transmission Type).
6. Remove the return pipe (2) from clutch housing (HST Type).
7. Remove the delivery pipe (3) for 3-point hitch.
8. Remove the transmission oil strainer and disconnect the suction pipe (4).

(When reassembling)

Tightening torque	Delivery pipe frare nut	29.4 to 39.2 N·m 3.0 to 4.0 kgf·m 21.7 to 28.9 ft-lbs
	Joint bolt (Delivery pipe)	34.3 to 44.1 N·m 3.5 to 4.5 kgf·m 25.3 to 32.5 ft-lbs

(1) Brake Rod
(2) Return Pipe (from Clutch Housing)
(3) Delivery Pipe
(4) Suction Pipe
(5) Hydraulic Pipe (from HST)
(6) Return Pipe (from Oil Cooler)
(7) Hydraulic Pipe (from Transmission Oil Filter)

https://truckmanualshub.com/

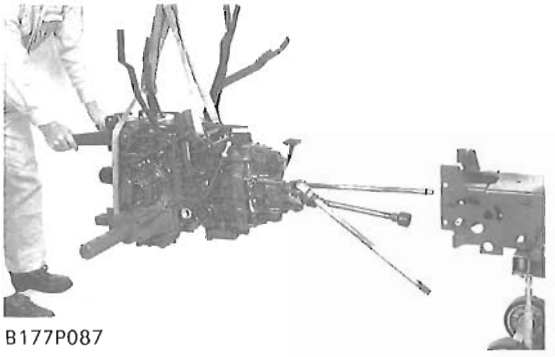

B177P087

Separating Center Frame

1. Place the jacks under the transmission case and center frame.
2. Remove the center frame mounting screws and nuts, and separate the center from transmission case.

(When reassembling)

- Apply grease to the splines of HST pump shaft, 2nd gear shaft and ball coupling.
- Reinstall the connecting pipe and two O-rings securely.

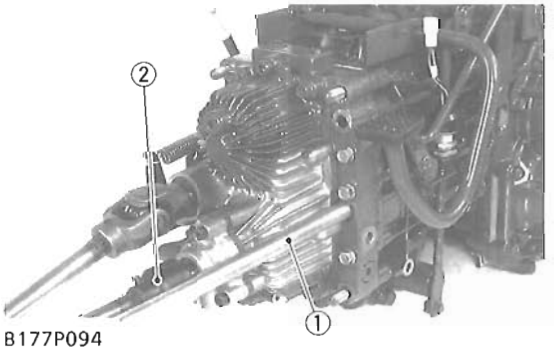

B177P094

Propeller Shaft and Connecting Pipe

1. Remove the connecting pipe (1) and propeller shaft (2) with ball coupling.

(When reassembling)

- Apply grease to the splines of the front wheel drive shaft, universal joint and ball coupling.

(1) Connecting Pipe (2) Propeller Shaft

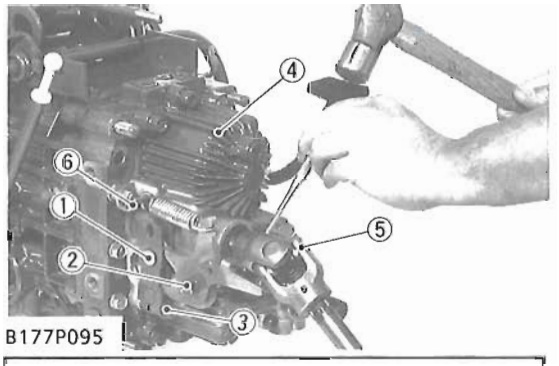

B177P095

Separating Hydrostatic Transmission

1. Tap out the spring pins and remove the universal joint (5) with front wheel propeller shaft.
2. Remove the neutral adjuster setting screw (2) and loosen the trunnion control lever mounting bolt and nut (3). Then remove the trunnion control lever assembly (1).
3. Remove the hydrostatic transmission mounting screws and nuts, and separate the hydrostatic transmission (4) from the transmission case.

(When reassembling)

- When assembling the neutral spring bracket (3), adjust the clearance "A" between nut and bracket shown in the figure.
- Apply liquid gasket (Three Bond 1208D or equivalent) to joint face of the HST and transmission case.
- When inserting the spring pins, face their splits in the direction parallel to the universal joint as shown in the figure below.

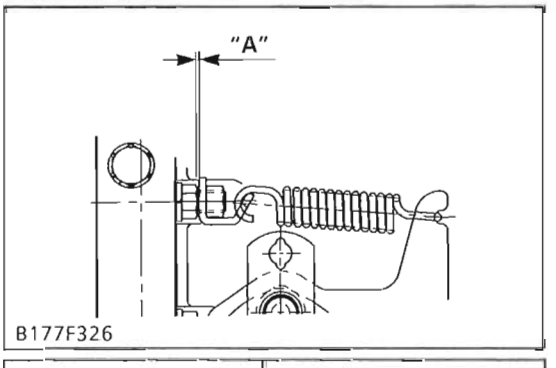

B177F326

Clearance : "A"	Less than 1 mm 0.039 in.

(1) Trunnion Control Lever Assembly
(2) Setting Screw
(3) Trunnion Control Lever Mounting Bolt
(4) Hydrostatic Transmission
(5) Universal Joint
(6) Neutral Spring Bracket

Tightening torque	Trunnion control lever mounting bolt and nut	23.5 to 27.4 N·m 2.4 to 2.8 kgf·m 17.4 to 20.2 ft-lbs
	HST mounting screw and nut	39.2 to 44.1 N·m 4.0 to 4.5 kgf·m 28.9 to 32.5 ft-lbs

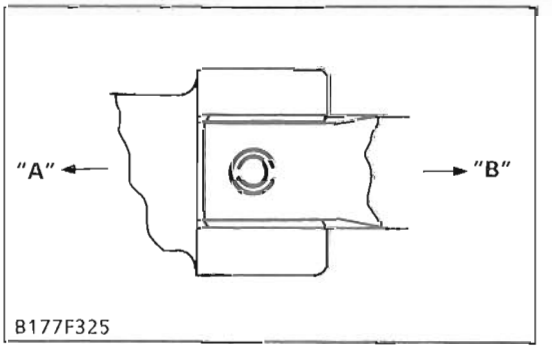

B177F325

[A] Front
[B] Rear

https://truckmanualshub.com/

[4] TRANSMISSION CASE

(1) Hydrostatic Transmission Type

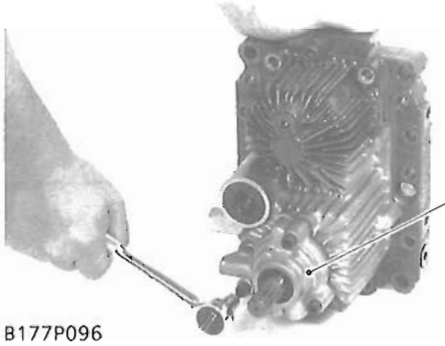

B177P096

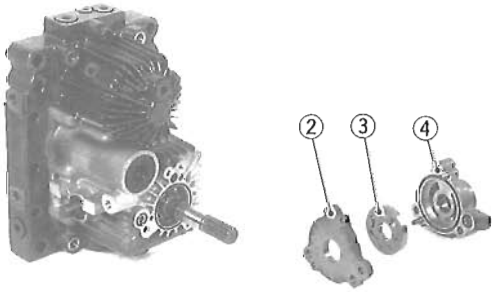

B177P108

Charge Pump Housing and Spacer

1. Remove the charge pump mounting hex. socket head screw, and remove the charge pump assembly (1) from the HST housing.
2. Remove the charge pump spacer (2) from the charge pump assembly.

(When reassembling)

■ NOTE

- **Take care not to damage the O-rings.**

Tightening torque	Charge pump mounting hex. socket head screw	15.7 to 20.6 N·m 1.6 to 2.1 kgf·m 11.6 to 15.2 ft-lbs

(1) Charge Pump Assembly
(2) Spacer
(3) Gerotor Assembly
(4) Charge Pump Housing

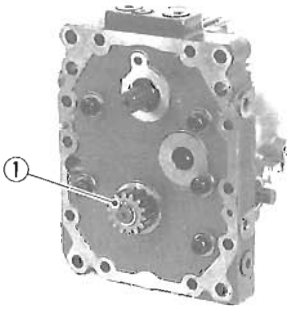

B177P097

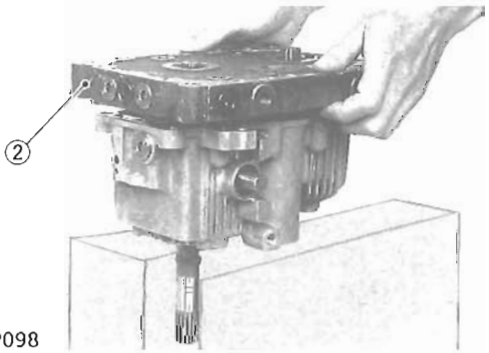

B177P098

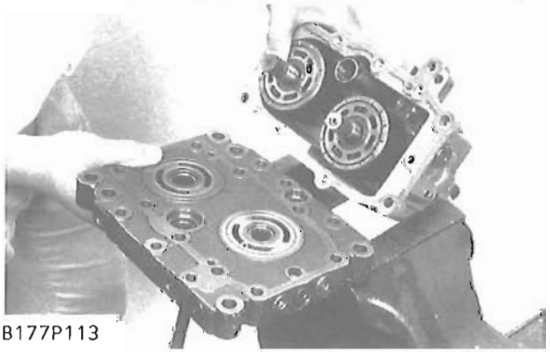

B177P113

Center Section

1. Remove the external snap ring and 14T gear (1).
2. Remove the center section mounting hex. socket head screw.
3. Lift and remove the center section (2) from the HST housing.

(When reassembling)

- Place a new gasket on the housing.
- Press the cylinder block (motor side) by hand then softly reinstall the counter section shown in the photo below. Be careful the pistons for come off from the cylinder block.
- Install the snap ring with its rounded edge facing the gear so that its sharp edge in the groove keep itself in place against the face.

■ NOTE

- **Take care not to damage the surface of cylinder blocks, pistons and surface of center section.**

Tightening torque	Center section mounting hex. socket head screw	40.2 to 44.1 N·m 4.0 to 4.5 kgf·m 29.7 to 32.5 ft-lbs

(1) 14T Gear
(2) Center Section

https://truckmanualshub.com/

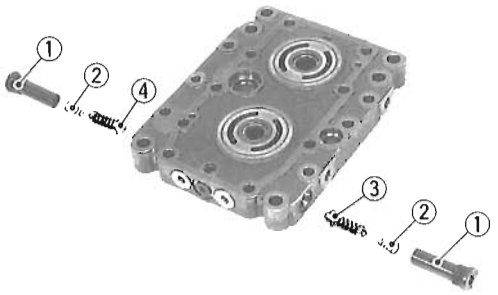

B177P099

Check and High Pressure Relief Valve

1. Remove the hex. socket head plug (1) and remove the spring (2) and relief valve assembly (3), (4).

(When reassembling)

- Take care not to damage the O-ring on the plug.

Tightening torque	Hex. socket head plug	40.70 to 94.93 N·m 4.15 to 9.68 kgf·m 30.02 to 70.02 ft-lbs

(1) Plug
(2) Spring
(3) Check and High Pressure Relief Valve Assembly (Forward)
(4) Check and High Pressure Relief Valve Assembly (Reverse)

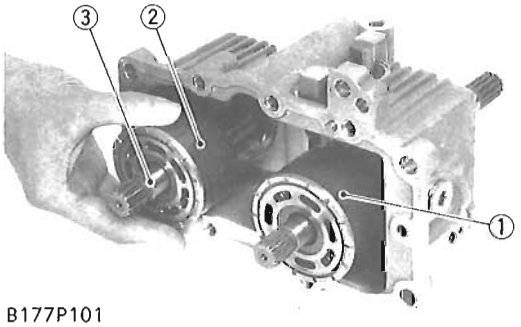

B177P101

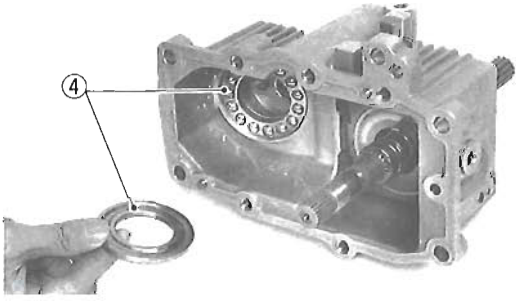

B177P102

Cylinder Block Assembly and Thrust Ball Bearing

1. Lay the housing on its side.
2. Remove the cylinder block assembly (pump side) (1).
3. Remove the cylinder block assembly (motor side) (2) with the motor shaft (3).
4. Remove the thrust ball bearing (4).

(When reassembling)

- Apply clean hydrostatic transmission oil to thrust ball bearing, cylinder block and piston.

NOTE

- **Take care not to damage the surface of cylinder blocks and pistons.**

(1) Cylinder Block Assembly (Pump Side)
(2) Cylinder Block Assembly (Motor Side)
(3) Motor Shaft
(4) Thrust Ball Bearing

https://truckmanualshub.com/

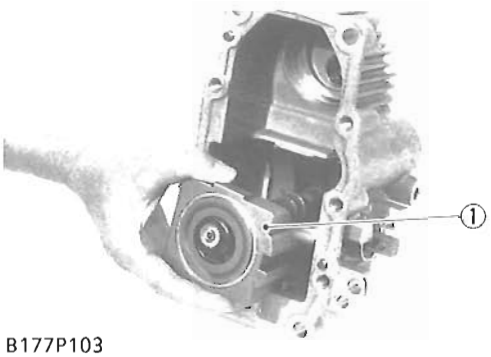

B177P103

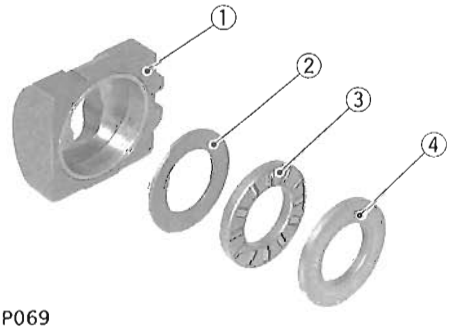

B083P069

Swashplate

1. Remove the swashplate (1) from the housing.
2. Remove the thrust plate (4), thrust roller bearing (3) and thrust washer (2) from the swashplate.

(When reassembling)

- Apply clean hydrostatic transmission oil to the thrust roller bearing.
- Place the swashplate (1) into the housing, align the groove of swashplate and slot guide by keeping the slot guide from moving with a screw driver.

(1) Swashplate
(2) Thrust Washer
(3) Thrust Roller Bearing
(4) Thrust Plate

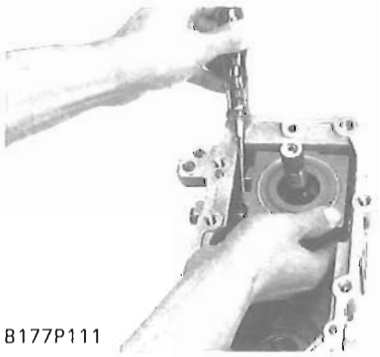

B177P111

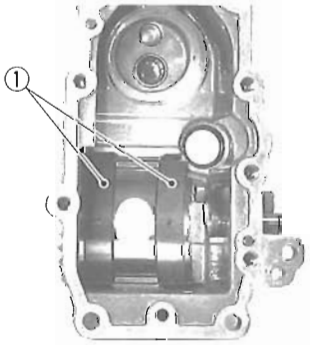

B177P104

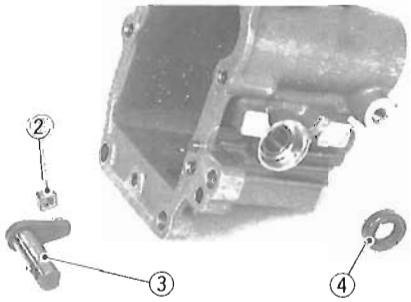

B177P106

Slot Guide, Cradle Bearing and Trunnion Arm

1. Remove the slot guide (2) from the trunnion arm.
2. Remove the cradle bearing (1) from the housing.
3. Remove the trunnion arm (3).
4. Remove the oil seal (4) with a screw driver.

(When reassembling)

- Apply clean hydrostatic transmission oil to journal bearing, trunnion arm and cradle bearing.

NOTE

- **Take care not to damage the housing.**

(1) Cradle Bearing
(2) Slot Guide
(3) Trunnion Arm
(4) Oil Seal

https://truckmanualshub.com/

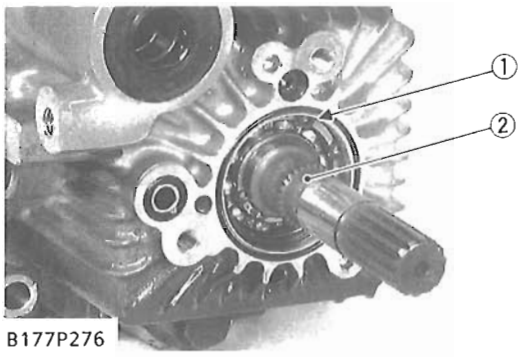

B177P276

Pump Shaft

1. Remove the internal snap ring (1).
2. Tap the pump shaft (2) with a plastic hammer slightly to slide out it from the housing.

(1) Internal Snap Ring (2) Pump Shaft

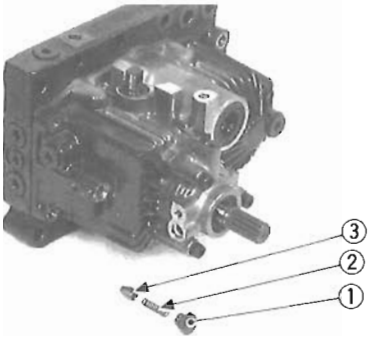

B177P109

Charge Relief Valve

1. Remove the charge relief valve plug (1).
2. remove the spring (2) and charge relief corn (3).

(When reassembling)

NOTE

- **If shims are placed at the bottom of the relief valve plug bore, place them as they are.**
- **Take care not to damage the O-ring on the relief plug.**

Tightening torque	Charge relief valve plug	14.22 to 23.54 N·m 1.45 to 2.40 kgf·m 10.49 to 17.36 ft-lbs

(1) Plug
(2) Spring
(3) Charge Relief Corn

https://truckmanualshub.com/

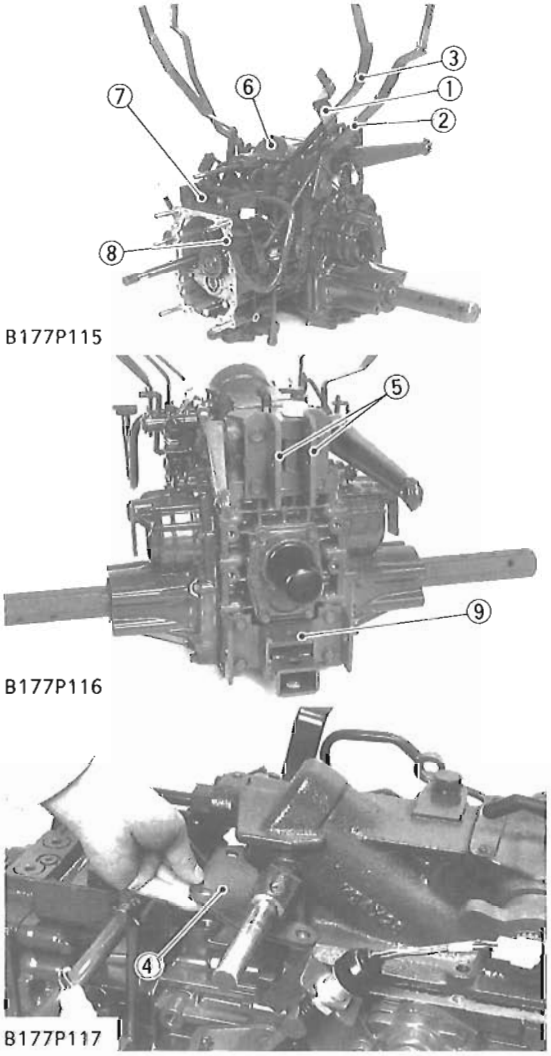

Separating Hydraulic Cylinder and Rear Axle Case

1. Remove the external snap ring and remove the auxiliary speed change lever (1) with rod, rear-PTO shift lever (2) and mid-PTO shift lever (3).
2. Remove the hook and connecting plate (4).
3. Remove the top link bracket (5).
4. Remove the hydraulic cylinder mounting screws and dismount the hydraulic cylinder assembly (6).
5. Disconnect the differential lock rod and remove the differential lock pedal support (7) with differential lock pedal (8).
6. Remove the drawber frame mounting screws and remove the drawber frame (9).

(When reassembling)

- Apply liquid gasket (Three Bond 1208D or equivalent) to joint face of the differential case and the rear axle case, differential case and the hydraulic cylinder.

Tightening torque	Hook and connecting plate mounting screw and nut	39.2 to 44.1 N·m 4.0 to 4.5 kgf·m 28.9 to 32.5 ft-lbs
	Top link bracket mounting screw	77.5 to 90.1 N·m 7.9 to 9.2 kgf·m 57.2 to 66.5 ft-lbs
	Hydraulic cylinder mounting screw	39.2 to 44.1 N·m 4.0 to 4.5 kgf·m 28.9 to 32.5 ft-lbs
	Differential lock pedal support mounting screw	17.7 to 20.6 N·m 1.8 to 2.1 kgf·m 13.0 to 15.2 ft-lbs
	Rear axle case mounting screw	39.2 to 44.1 N·m 4.0 to 4.5 kgf·m 28.9 to 32.5 ft-lbs
	Drawber frame mounting screw	62.8 to 72.5 N·m 6.4 to 7.4 kgf·m 46.3 to 53.5 ft-lbs

(1) Aux. Speed Change Lever
(2) Rear-PTO Shift Lever
(3) Mid-PTO Shift Lever
(4) Connecting Plate
(5) Top Link Bracket
(6) Hydraulic Cylinder Assembly
(7) Differential Lock Pedal Support
(8) Differential Lock Pedal
(9) Drawber Frame

https://truckmanualshub.com/

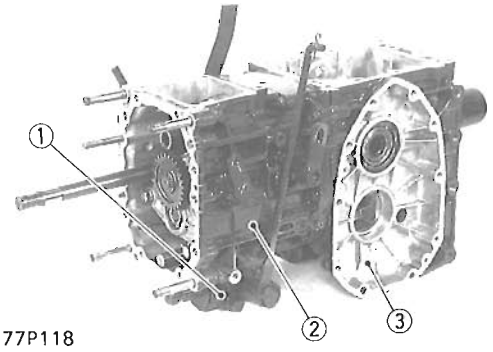

B177P118

Separating Mid-PTO Case and Transmission Case

1. Remove the mid-PTO case mounting screws and separate the mid-PTO case (1) from transmission case.
2. Remove the transmission case mounting screws and nuts and separate the transmission case (2) from the differential case (3).

(When reassembling)

- Apply liquid gasket (three Bond 1208D or equivalent) to joint face of the transmission case, differential case and mid-PTO case.

Tightening torque	Mid-PTO case mounting screw	39.2 to 44.1 N·m 4.0 to 4.5 kgf·m 28.9 to 32.5 ft-lbs
	Transmission case mounting screw and nut	

(1) Mid-PTO Case
(2) Transmission Case
(3) Differential Case

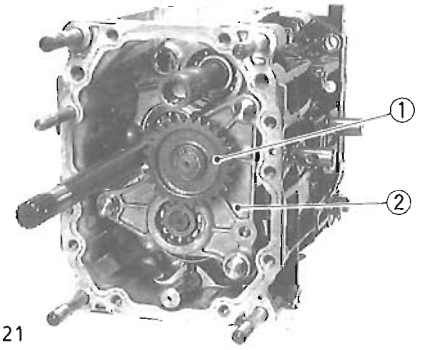

B177P121

Bearing Holder

1. Remove the external snap ring and remove the 27T gear (1).
2. Remove the bearing holder mounting screws and remove the bearing holder (2).

(When reassembling)

Tightening torque	Bearing support mounting screw	39.2 to 44.1 N·m 4.0 to 4.5 kgf·m 28.9 to 32.5 ft-lbs

(1) 27T Gear
(2) Bearing Holder

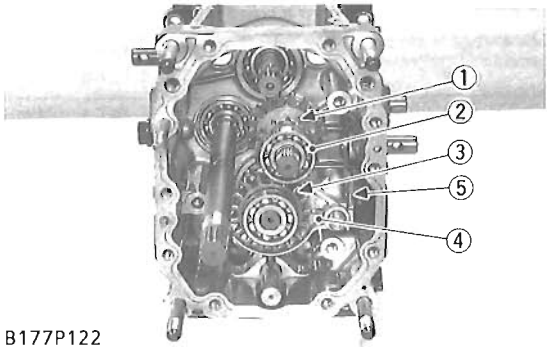

B177P122

2nd Gear Shaft and 17T Shifter Gear

1. remove the 2nd gear shaft (1) with bearings.
2. Remove the bearing (2), 17T shifter gear (3) and shift fork (4) with shift rod.
3. Remove the shift lever (5).

(1) 2nd Gear Shaft
(2) Bearing
(3) 17T Shifter Gear
(4) Shift Fork
(5) Shift Lever

https://truckmanualshub.com/

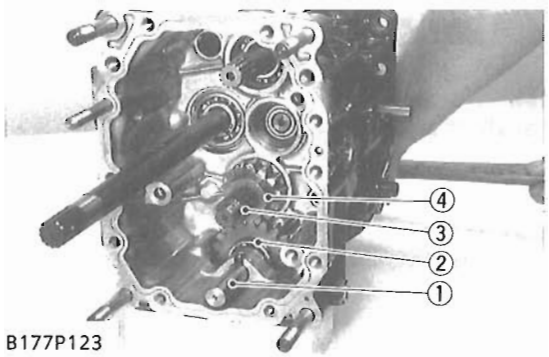

B177P123

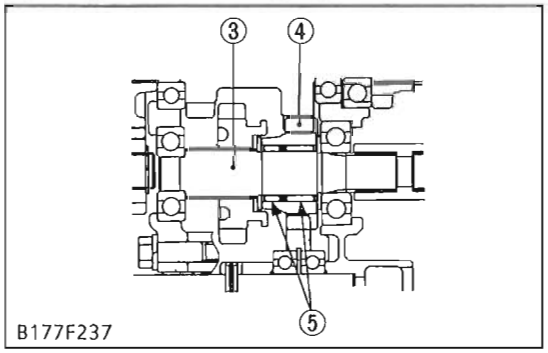

B177F237

Middle Shaft and 3rd Shaft

1. Tap out the middle shaft (1) and remove the 19T gear (2) with bearing.
2. Draw out the 3rd shaft (3) with 13T gear (4).

(When reassembling)

- When assembling the 19T gear (2), face the chamber side to the rear.
- When installing the needle bearings (5) into the 13T gear, apply transmission oil to the needle bearings.

NOTE

- **When installing the needle bearings (5), noting the position of needle bearings in the 13T gear shown in the figure.**

(1) Middle Shaft
(2) 19T Gear
(3) 3rd Shaft
(4) 13T Gear
(5) Needle Bearing

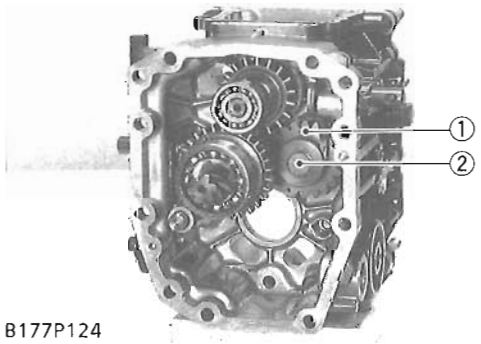

B177P124

Front Wheel Drive Shaft

1. Remove the external snap ring and remove the 20T shifter gear (1).
2. Draw out the front wheel drive shaft (2) to the front.

(1) 20T Shifter Gear
(2) Front Wheel Drive Shaft

https://truckmanualshub.com/

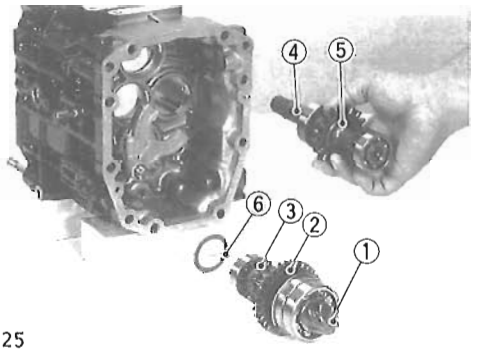

B177P125

4th Gear Shaft and Spiral Bevel Pinion Shaft

1. Remove the spiral bevel pinion shaft (1) with 15T-29T shifter gear (2), 13T gear (3).
2. Remove the 4th gear shaft (4) with 18T gear (5).

(When reassembling)

- When installing the spiral bevel pinion shaft, be sure to install the shim (6).

(1) Spiral Bevel Pinion Shaft
(2) 15T-29T Shifter Gear
(3) 13T Gear
(4) 4th Gear Shaft
(5) 18T Gear
(6) Shim

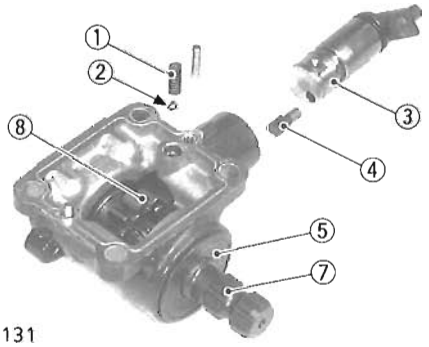

B177P131

Mid-PTO Shaft

1. Remove the spring (1) and ball (2).
2. Draw out the dowel pin and remove the shift arm (3) with shifter (4).
3. Remove the oil seal (5) and internal snap ring (6).
4. Remove the mid-PTO shaft (7) with 11T shifter gear (8) and bearings (9).

(When reassembling)

- Apply grease to lip and outer of oil seal.

(1) Spring
(2) Ball
(3) Shift Arm
(4) Shifter
(5) Oil Seal
(6) Internal Snap Ring
(7) Mid-PTO Shaft
(8) 11T Shifter Gear
(9) Bearing

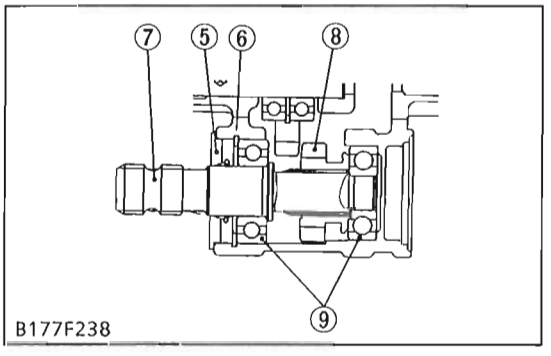

B177F238

https://truckmanualshub.com/

(2) Manual Transmission Type

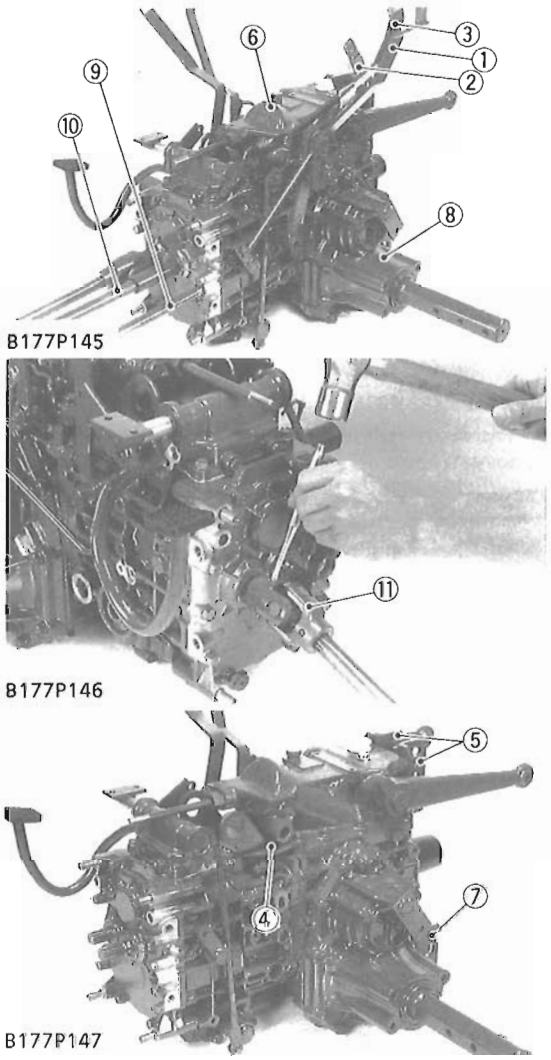

Separating Hydraulic Cylinder and Rear Axle Case

1. Remove the connecting pipe (9) and propeller shaft (10).
2. Tap out the spring pins and remove the universal joint (11) with front wheel propeller shaft.
3. Remove the external snap ring and remove the auxiliary speed change lever (2) with rod, rear-PTO shift lever (1) and mid-PTO shift lever (3).
4. Remove the hook and connecting plate (4).
5. Remove the top link bracket (5).
6. Remove the hydraulic cylinder mounting screws and dismount the hydraulic cylinder assembly (6).
7. Disconnect the differential lock rod.
8. Remove the drawber frame mounting screws and remove the drawber frame (7).
9. Remove the rear axle mounting screws and remove the rear axle case (8) from the differential case.

(When reassembling)

- When inserting the spring pins, face their splits in the direction parallel to the universal joint as shown in the figure below.
- Apply liquid gasket (Three Bond 1208D or equivalent) to joint face of the differential case and the rear axle case, differential case and the hydraulic cylinder.

Tightening torque	Hook and connecting plate mounting screw and nut	39.2 to 44.1 N·m 4.0 to 4.5 kgf·m 28.9 to 32.5 ft-lbs
	Top link bracket mounting screw	77.5 to 90.1 N·m 7.9 to 9.2 kgf·m 57.2 to 66.5 ft-lbs
	Hydraulic cylinder mounting screw	39.2 to 44.1 N·m 4.0 to 4.5 kgf·m 28.9 to 32.5 ft-lbs
	Rear axle case mounting screw	39.2 to 44.1 N·m 4.0 to 4.5 kgf·m 28.9 to 32.5 ft-lbs
	Drawber frame mounting screw	62.8 to 72.5 N·m 6.4 to 7.4 kgf·m 46.3 to 53.5 ft-lbs

(1) Rear-PTO Shift Lever
(2) Aux. Speed Change Lever
(3) Mid-PTO Shift Lever
(4) Connecting Plate
(5) Top Link Bracket
(6) Hydraulic Cylinder Assembly
(7) Drawber Frame
(8) Rear Axle Case
(9) Connecting Pipe
(10) Propeller Shaft
(11) Universal Joint

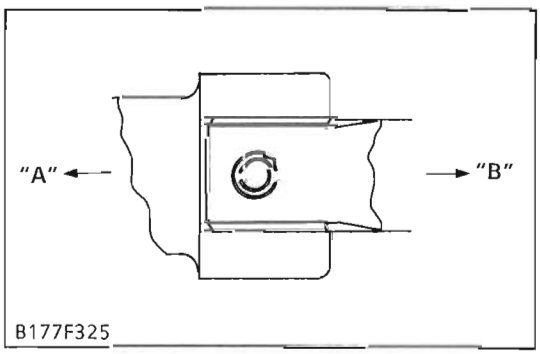

[A] Front
[B] Rear

https://truckmanualshub.com/

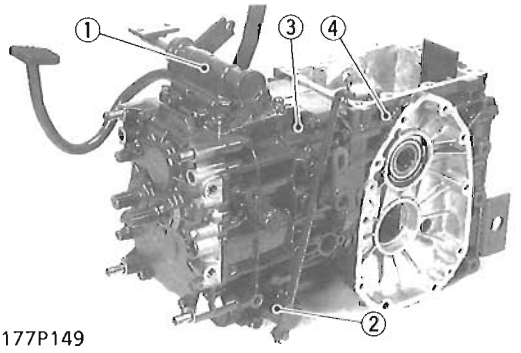

B177P149

Separating Main Shift Cover, Mid-PTO Case and Transmission Case

1. Remove the main shift cover mounting screws and separate the main shift cover (1) with differential lock pedal.
2. Remove the mid-PTO case mounting screws and separate the mid-PTO case (2) from transmission case.
3. Remove the rear-PTO cover mounting screws and separate the rear-PTO cover (couldn't draw out completely).
4. Remove the transmission case mounting screws and nuts and separate the transmission case (3) from differential case (4).

(When reassembling)

- Apply liquid gasket (Three Bond 1208D or equivalent) to joint face of the main shift cover, transmission case, differential case and mid-PTO case.

Tightening torque	Main shift cover mounting screw	17.7 to 20.6 N·m 1.8 to 2.1 kgf·m 13.0 to 15.2 ft-lbs
	Mid-PTO case mounting screw	39.2 to 44.1 N·m 4.0 to 4.5 kgf·m 28.9 to 32.5 ft-lbs
	Transmission case mounting screw and nut	
	Rear-PTO cover mounting screw	

(1) Main Shift Cover
(2) Mid-PTO Case
(3) Transmission Case
(4) Differential Case

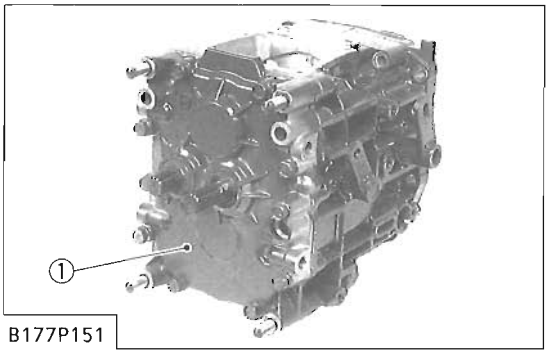

B177P151

Front Cover

1. Remove the front cover mounting screws and remove the front cover (1).

(When reassembling)

- Apply liquid gasket (Three Bond 1208D or equivalent) to joint face of the front cover and transmission case.

Tightening torque	Front case mounting screw	39.2 to 44.1 N·m 4.0 to 4.5 kgf·m 28.9 to 32.5 ft-lbs

(1) Front Cover

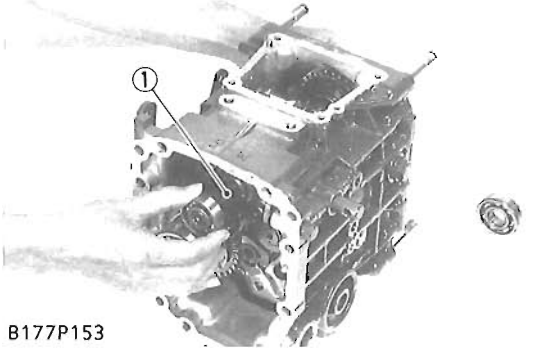

B177P153

4th Gear Shaft

1. Remove the bearing, 30T shifter gear and 13T-17T shifter gear.
2. Draw out the 4th gear shaft (1) with 19T gear rearward.

(1) 4th Gear Shaft

https://truckmanualshub.com/

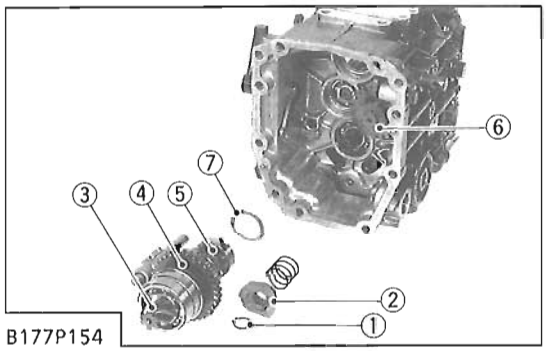

B177P154

Spiral Bevel Pinion Shaft and 20T Shifter Gear

1. Remove the external snap ring (1) and one-way clutch cam (2).
2. Remove the spiral bevel pinion shaft (3) with 13T -32T shifter gear (4), 13T gear (5), and shift fork with shift rod.
3. Remove the external snap ring and remove the 20T shifter gear (6).

(When reassembling)

- When installing the spiral bevel pinion shaft, be sure to install the shim (7).

(1) External Snap Ring
(2) One-way Clutch Cam
(3) Spiral Bevel Pinion Shaft
(4) 13T-32T Shifter Gear
(5) 13T Gear
(6) 20T Shifter Gear
(7) Shim

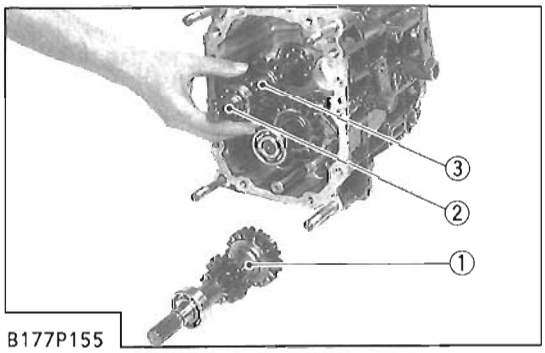

B177P155

2nd Gear Shaft and Front Wheel Drive Shaft

1. Remove the 2nd gear shaft (1) with bearing.
2. Draw out the front wheel drive shaft (2) with 16T-20T gear (3).

(When reassembling)

- When installing the needle bearing into the 16T-20T gear, apply transmission oil to the needle bearings.

(1) 2nd Gear Shaft
(2) Front Wheel Drive Shaft
(3) 16T-20T Gear

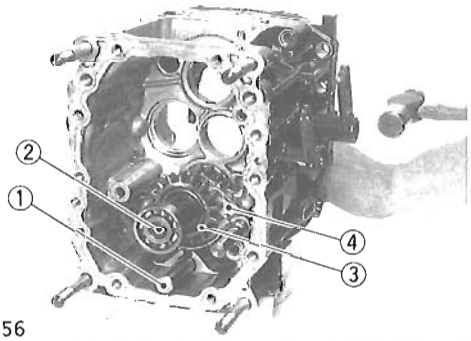

B177P156

Middle Shaft and 3rd Shaft

1. Tap out the middle shaft (1) and remove the 19T gear with bearing.
2. Draw out the 3rd shaft (2) with 17T gear (3), 13T gear and shift fork (4) with shift rod.

(When reassembling)

- When assembling the 19T gear (7), face the chamfer side to the rear.
- When installing the needle bearings (5) into the 13T gear (6), apply transmission oil to the needle bearings.

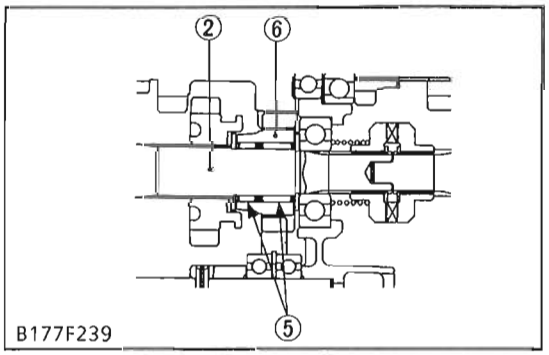

B177F239

NOTE

- **When installing the needle bearing (5), noting the position of needle bearing in the 13T gear (6) shown in the figure.**

(1) Middle Shaft
(2) 3rd Shaft
(3) 17T Gear
(4) Rear-PTO Shift Fork
(5) Needle Bearing
(6) 13T Gear
(7) 19T Gear

https://truckmanualshub.com/

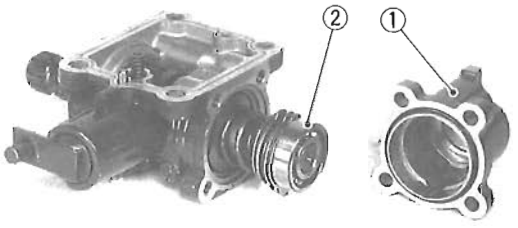

B177P158

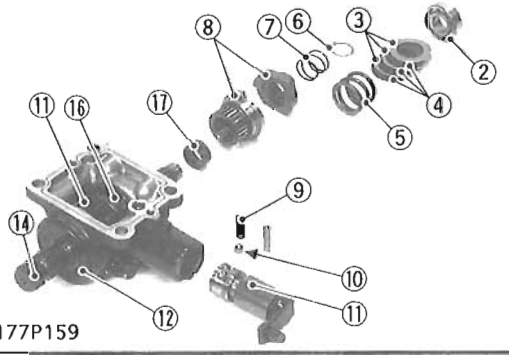

B177P159

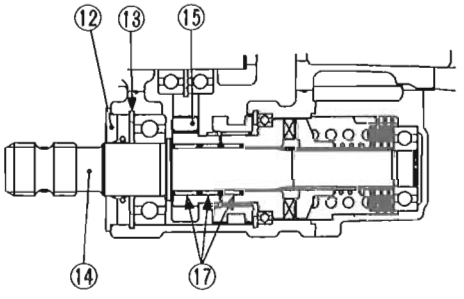

B177F240

Mid-PTO Shaft and One-way Clutch

1. Remove the mid-PTO case rear cover mounting screws and separate the rear cover (1).
2. Remove the bearing (2) and remove the friction plates (3), brake discs (4) and spring (5).
3. Remove the external snap ring (6) and remove the spring (7) and one-way clutch cam (8).
4. Remove the spring (9) and ball (10).
5. Draw out the dowel pin and remove the shift arm (11) with shifter.
6. Remove the oil seal (12) and internal snap ring (13).
7. Remove the mid-PTO shaft (14) with bearing, 11T gear (15) and shifter (16).

(When reassembling)

- Apply grease to lip and outer of oil seal.
- When installing the needle bearings (17) into the 11T gear and one-way clutch cam, apply transmission oil to the needle bearings.

■ NOTE

- **When installing the needle bearings (17), noting the position of needle bearings onto the mid-PTO shaft shown in the figure.**

Tightening torque	Mid-PTO rear cover mounting screw	17.7 to 20.6 N·m 1.8 to 2.1 kgf·m 13.0 to 15.2 ft-lbs

(1) Mid-PTO Case Rear Cover
(2) Bearing
(3) Friction Plate
(4) Brake Disc
(5) Spring
(6) External Snap Ring
(7) Spring
(8) One-way Clutch Cam
(9) Spring
(10) Ball
(11) Shift Arm
(12) Oil Seal
(13) Internal Snap Ring
(14) Mid-PTO Shaft
(15) 11T Gear
(16) Shifter
(17) Needle Bearing

https://truckmanualshub.com/

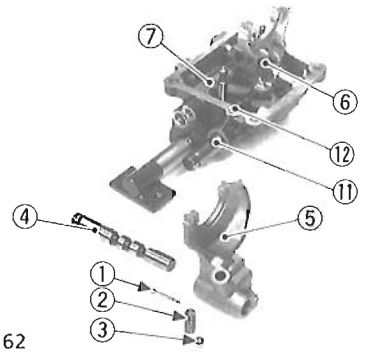

B177P162

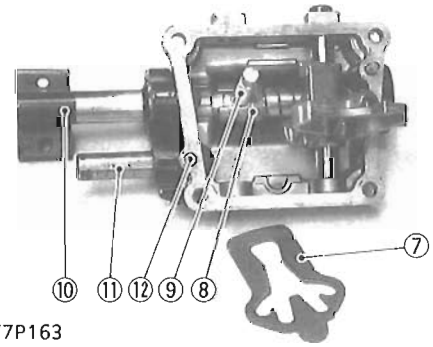

B177P163

Main Gear Shift Fork

1. Remove the cotter pin (1) and remove the spring (2) and ball (3).
2. Draw out the shift rod (4) and remove the 1st-reverse gear shift fork (5).
3. Remove the 2nd-3rd gear shift fork (6), in the same way as the 1st-reverse shift fork removing procedure.
4. Take out the interlocker (7) and slide the shift arm stopper (8) and then remove the shift arm (9).
5. Remove the shift shaft (10).
6. When remove the differential lock pedal shaft (11) draw out the dowel pin (12) first.

(1) Cotter Pin
(2) Spring
(3) Ball
(4) Shift Rod
(5) 1st-Reverse Gear Shift Fork
(6) 2nd-3rd Gear Shift Fork
(7) Interlocker
(8) Shift Arm Stopper
(9) Shift Arm
(10) Shift Shaft
(11) Differential Lock Pedal Shaft
(12) Dowel Pin

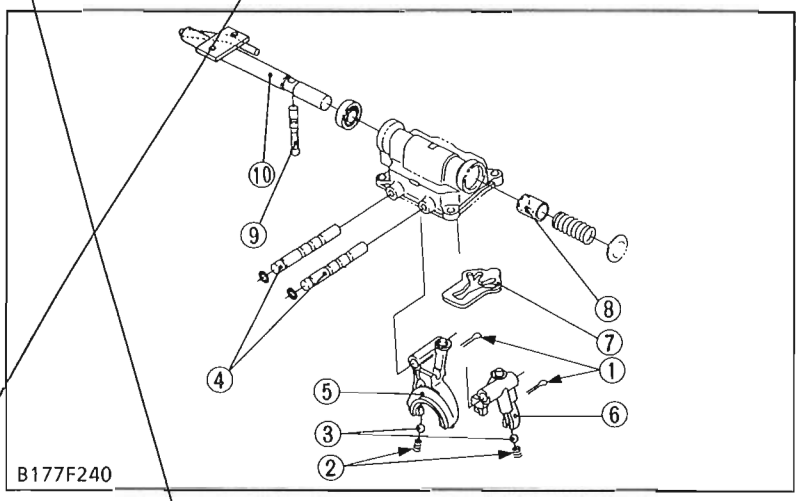

B177F240

[5] DIFFERENTIAL GEAR CASE

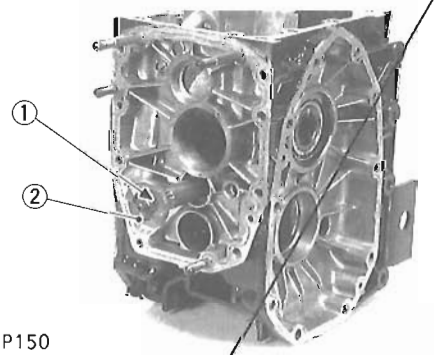

B177P150

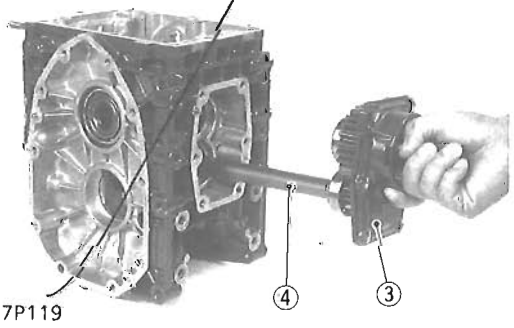

B177P119

5th Gear Shaft and Rear-PTO Shaft

1. Remove the external snap ring (1) and one-way clutch cam (2) (Manual Transmission Type).
2. Remove the rear-PTO cover mounting screw and remove the rear-PTO cover (3) assembly.

(When reassembling)

- Apply liquid gasket (Three Bond 1208D or equivalent) to joint face of differential case and rear-PTO cover.

NOTE

- **Do not tighten the rear-PTO cover mounting screws before reassembling the differential case and transmission case.**

Tightening torque	Rear-PTO cover mounting screw	39.2 to 44.1 N·m 4.0 to 4.5 kgf·m 28.9 to 32.5 ft-lbs

(1) External Snap Ring
(2) One-way Clutch Cam
(3) Rear-PTO Cover Assembly
(4) 5th Gear Shaft

Replaced
2-1-96

https://truckmanualshub.com/

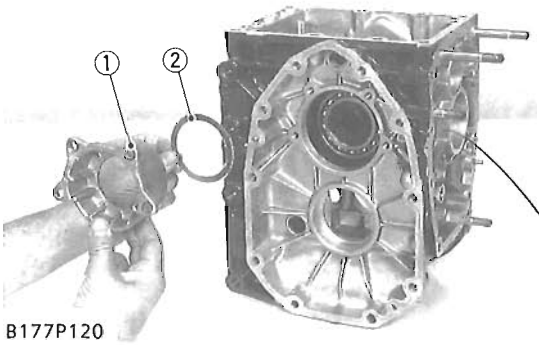

B177P120

Removing Differential

1. Remove the bearing holder mounting screws and remove the differential bearing holder (1).
2. Remove the differential assembly.

(When reassembling)

- Install the differential assembly, noting the number of shims (2) in the differential case left side and differential bearing holder.

Tightening torque	Differential bearing holder mounting screw	17.7 to 20.6 N·m 1.8 to 2.1 kgf·m 13.0 to 15.2 ft-lbs

(1) Differential Bearing Holder (2) Shim

0302P073

Bearings

1. Remove the right and left bearings from the differential case.

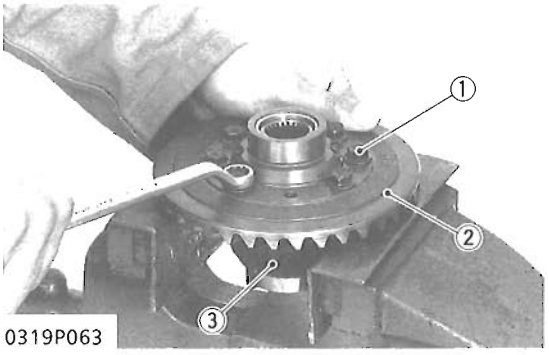

0319P063

Spiral Bevel Gear

1. Remove the bevel gear UBS screws (1).
2. Remove the spiral bevel gear (2) from differential case (3).

(When reassembling)

- Apply liquid lock (Three Bond 1324B or equivalent) to the spiral bevel gear UBS screws.

Tightening torque	Spiral bevel gear UBS screw	29.4 to 34.3 N·m 3.0 to 3.5 kgf·m 21.7 to 25.3 ft-lbs

(1) UBS Screw (3) Differential Case
(2) Spiral Bevel Gear

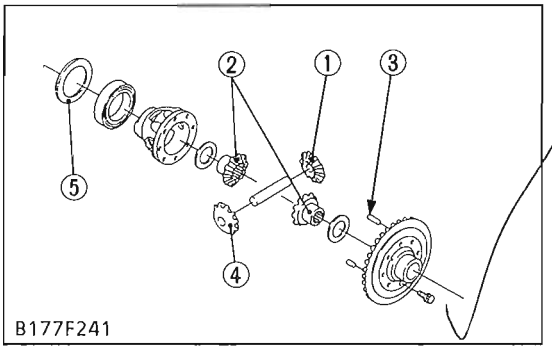

B177F241

Differential Side Gear and Differential Pinion

1. Put parting marks on the differential pinion (1) and the differential side gear (2).
2. Tap out the dowel pin (3).
3. Remove the differential pinion shaft.
4. Remove the differential pinion (4), differential side gear (2) and shim (5).

(When reassembling)

- Install the differential pinion and differential side gear, aligning the parting marks.

(1) Differential Pinion (4) Differential Pinion
(2) Differential Side Gear (5) Shim
(3) Dowel Pin

Replaced
2-1-96

https://truckmanualshub.com/

SERVICING

[1] CLUTCH HOUSING

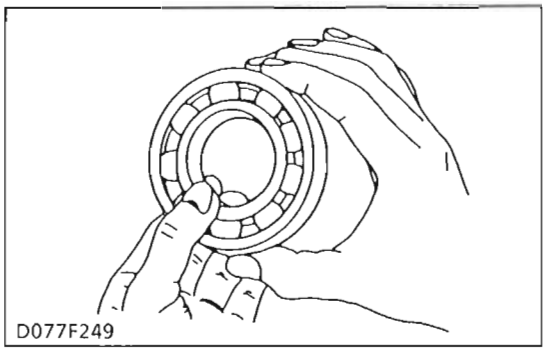
D077F249

Checking Bearing

1. Hold the inner race, and push and pull the outer race in all directions to check for wear and roughness.
2. Apply transmission oil to the bearing, and hold the inner race. Then, turn the outer race to check rotation.
3. If there is any defect, replace it.

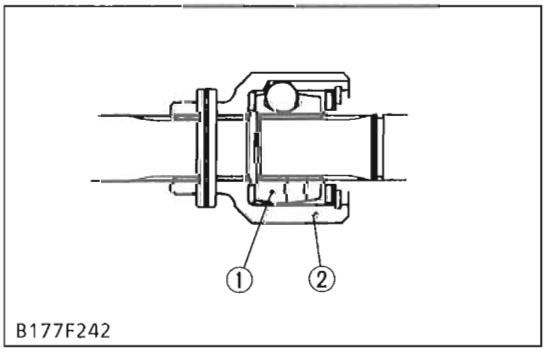

B177F242

Checking Propeller Shaft Ball Coupling

1. Hold the ball coupling outer, and push and pull, and rotate the ball coupling inner in all directions to check for ware and roughness.
2. If there is any defect, replace it.

(When reassembling)

- Apply grease to the inner parts of ball coupling and splines of ball coupling inner.
- When replacing the ball coupling assembly, install the ball coupling inner (1) with balls so that its ball position inside of ball coupling outer (2) as shown in the figure.

(1) Inner, Coupling (2) Outer, Coupling

[2] TRANSMISSION CASE

(1) Hydrostatic Transmission Type

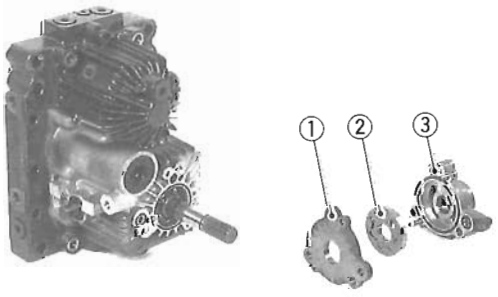

B177P108

Charge Pump

1. Check the charge pump housing (3), spacer (1) and the gerotor assembly (2) for scratches and wear.
2. If scratch or worn, replace the charge pump complete assembly.

(1) Spacer
(2) Gerotor Assembly
(3) Charge Pump Housing

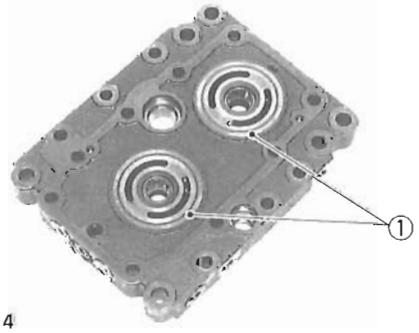

B177P114

Center Section

1. Check the surface (1) of center section for scratches or wear. If deep scratch or excessive wear is found, replace the center section.

(1) Surface of Center Section

https://truckmanualshub.com/

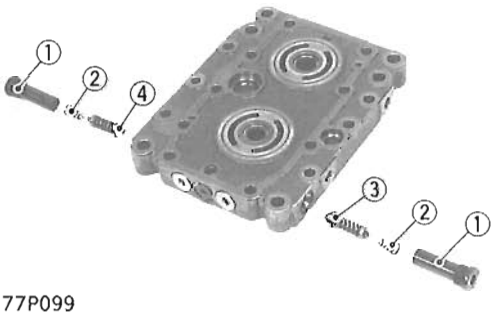

B177P099

Check and High Pressure Relief Valve

1. Check the valve (3), (4) for scratches and damage.
2. Check the valve seat in the center section for damage.
3. Check the spring (2) for breakage and wear.
4. If anything unusual, replace the high pressure relief valve complete assembly.

(1) Plug
(2) Spring
(3) Check and High Pressure Relief Valve Assembly (Forward)
(4) Check and High Pressure Relief Valve Assembly (Reverse)

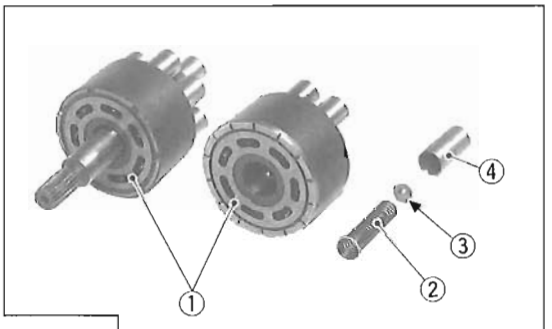

B083P079

B083P080

Cylinder Block Assembly

1. Check cylinder blocks (1) and pistons (4) for scratches and wear. If deep scratch or excessive wear is found, replace the cylinder block assembly.
2. Check that the piston (4), spring (2) and spring seat (3) are in each cylinder bore.
3. Check the pistons for their free movement in the cylinder block bores. If the piston or cylinder block bore is scored, replace the cylinder block assembly.

(1) Cylinder Block
(2) Spring
(3) Spring Seat
(4) Piston

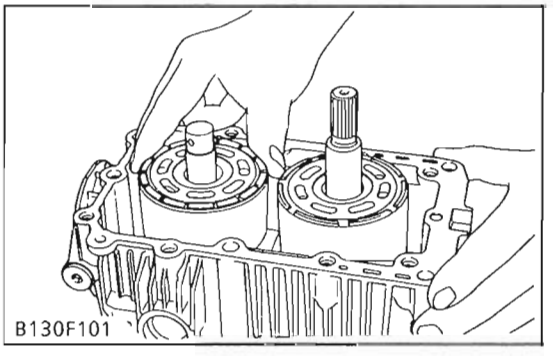

B130F101

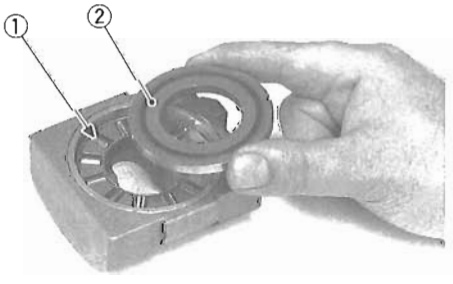

B083P075

Thrust Washer, Thrust Roller Bearing and Thrust Plate

1. Check the thrust roller bearing (1) for scratches and excessive wear.
2. If worn, replace.
3. Check the thrust plate (2) for scratches and excessive wear.
4. If worn or scored, replace.

(1) Thrust Roller Bearing
(2) Thrust Plate

https://truckmanualshub.com/

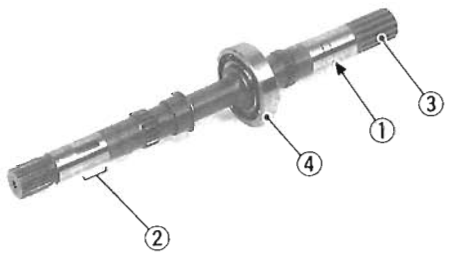

B177P107

Pump Shaft

1. Check the seal surface (1), the bearing surface (2) and the bearing (4).
2. If the shaft is rough or groove, replace.
3. If the bearing is worn, replace.

(1) Seal Surface
(2) Bearing Surface
(3) Pump Shaft
(4) Bearing

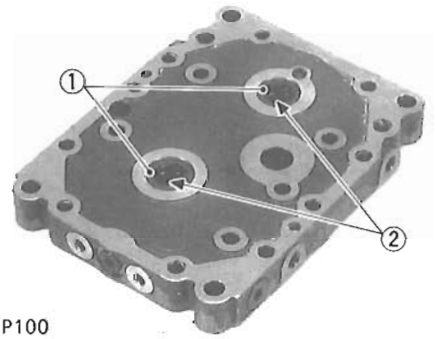

B177P100

Needle Bearing and Oil Seal

1. Check the oil seals (1) for damage.
2. Check the needle bearings (2) for wear.
3. If the oil seals and bearings are worn, replace them.

(1) Oil Seal
(2) Needle Bearing

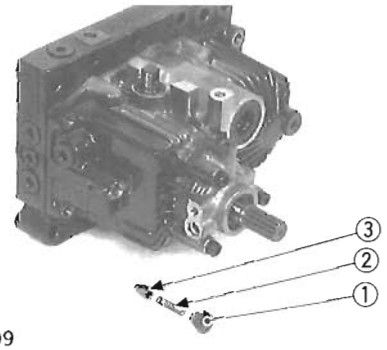

B177P109

Charge Relief Valve

1. Check the charge relief cone (3) and the seat in the housing for damage.
2. If defects are found, replace them.

(1) Plug
(2) Spring
(3) Charge Relief Cone

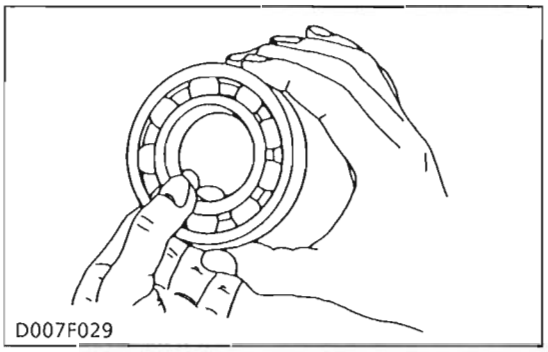

D007F029

Bearing Check

1. While holding the inner race, push and pull the outer race in all directions to check for wear and roughness.
2. Apply transmission oil to the bearing and hold the inner race.
3. For needle bearing, lay the needle rollers to check for any damage and wear.
4. Replace it if defects are found.

B177P127

Clearance between Shift Fork and Shift Gear Groove

1. Insert the fork into the shift gear groove and measure the clearance with a feeler gauge.
2. If the clearance exceeds the allowable limit, replace it.

Clearance between shift fork and shift gear groove	Factory spec.	0.10 to 0.35 mm 0.004 to 0.014 in.
	Allowable limit	0.5 mm 0.020 in.

https://truckmanualshub.com/

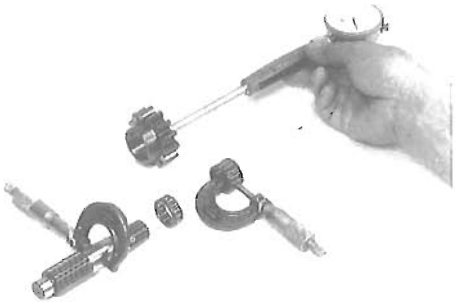

B177P126

Clearance between 13T Gear and 3rd Shaft

1. Measure the 13T gear I.D. with an inside micrometer, and then 3rd shaft O.D. with an outside micrometer.
2. Measure the O.D. of two needles in the needle bearing with an outside micrometer.
3. Clearance is the difference between the gear I.D. and the sum of shaft O.D. and two needle O.D..
4. If the clearance exceeds the allowable limit, replace.

Clearance between 13T gear and 3rd shaft	Factory spec.	0.007 to 0.046 mm 0.0003 to 0.0018 in.
	Allowable limit	0.10 mm 0.0039 in.
3rd shaft O.D.	Factory spec.	21.987 to 22.000 mm 0.8656 to 0.8661 in.
13T gear I.D.	Factory spec.	28.007 to 28.021 mm 1.1026 to 1.1032 in.
Needle O.D.	Factory spec.	2.994 to 3.000 mm 0.1179 to 0.1181 in.

(2) Manual Transmission Type

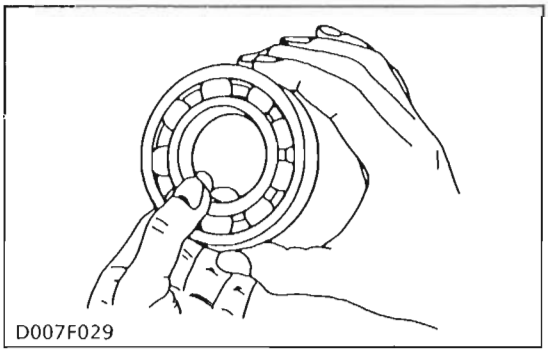

D007F029

Bearing Check

1. While holding the inner race, push and pull the outer race in all directions to check for wear and roughness.
2. Apply transmission oil to the bearing and hold the inner race.
3. For needle bearing, lay the needle rollers to check for any damage and wear.
4. Replace it if defects are found.

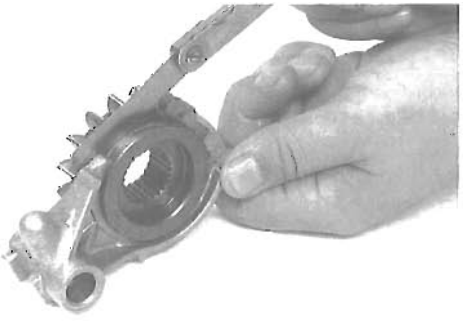

B177P127

Clearance between Shift Fork and Shift Gear Groove

1. Insert the fork into the shift gear groove and measure the clearance with a feeler gauge.
2. If the clearance exceeds the allowable limit, replace it.

Clearance between shift fork and shift gear groove	Factory spec.	0.10 to 0.35 mm 0.004 to 0.014 in.
	Allowable limit	0.5 mm 0.020 in.

https://truckmanualshub.com/

B177P126

Clearance between Gear and Shaft

1. Measure the gear I.D. with a cylinder gauge, and then shaft O.D. with an outside micrometer.
2. Measure the O.D. of two needles in the needle bearing with an outside micrometer.
3. Clearance is the difference between the gear I.D. and the sum of shaft O.D. and two needles O.D..
4. If the clearance exceeds the allowable limit, replace it.

Clearance between F.W.D. shaft and 16T-20T gear	Factory spec.	0.027 to 0.067 mm 0.0011 to 0.0025 in.
	Allowable limit	0.10 mm 0.0039 in.
F.W.D. shaft O.D.	Factory spec.	21.967 to 21.980 mm 0.8648 to 0.8654 in.
16T-20T gear I.D.	Factory spec.	28.007 to 28.021 mm 1.1024 to 1.1032 in.
Needle O.D.	Factory spec.	2.996 to 3.000 mm 0.1179 to 0.1181 in.

Clearance between 13T gear and 3rd shaft	Factory spec.	0.007 to 0.046 mm 0.0003 to 0.0018 in.
	Allowable limit	0.10 mm 0.0039 in.
3rd shaft O.D.	Factory spec.	21.987 to 22.000 mm 0.8656 to 0.8661 in.
13T gear I.D.	Factory spec.	28.007 to 28.021 mm 1.1026 to 1.1032 in.
Needle O.D.	Factory spec.	2.994 to 3.000 mm 0.1179 to 0.1181 in.

Clearance between 11T gear, one-way clutch cam and mid-PTO shaft	Factory spec.	0.020 to 0.026 mm 0.0008 to 0.0010 in.
	Allowable limit	0.10 mm 0.0039 in.
Mid-PTO shaft O.D.	Factory spec.	19.989 to 20.000 mm 0.7869 to 0.7874 in.
11T gear and one-way clutch I.D.	Factory spec.	24.007 to 24.020 mm 0.9452 to 0.9457 in.
Needle O.D.	Factory spec.	1.997 to 2.000 mm 0.0786 to 0.0787 in.

https://truckmanualshub.com/

[3] DIFFERENTIAL CASE

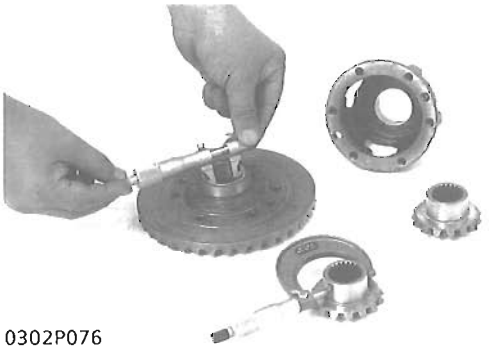

0302P076

Clearance between Differential Case and Differential Side Gear

1. Measure the differential side gear boss O.D. with an outside micrometer.
2. Measure the differential case I.D. and the spiral bevel gear I.D. with an inside micrometer.
3. If the clearance exceeds the allowable limit, replace it.

Clearance between differential case and differential side gear	Factory spec.	0.025 to 0.066 mm 0.0016 to 0.0029 in.
	Allowable limit	0.30 mm 0.0118 in.
Differential case I.D.	Factory spec.	32.000 to 32.025 mm 1.2598 to 1.2608 in.
Differential side gear O.D.	Factory spec.	31.959 to 31.975 mm 1.2582 to 1.2589 in.
Spiral bevel gear I.D.	Factory spec.	32.000 to 32.025 mm 1.2598 to 1.2608 in.

0302P077

Clearance between Differential Pinion Shaft and Differential Pinion

1. Measure the differential pinion shaft O.D. with an outside micrometer.
2. Measure the differential pinion I.D. with an inside micrometer.
3. If the clearance exceeds the allowable limit, replace it.

Clearance between differential pinion shaft and differential pinion	Factory spec.	0.016 to 0.045 mm 0.0006 to 0.0018 in.
	Allowable limit	0.30 mm 0.0118 in.
Differential pinion shaft O.D.	Factory spec.	15.973 to 15.984 mm 0.6289 to 0.6293 in.
Differential pinion I.D.	Factory spec.	16.000 to 16.018 mm 0.6299 to 0.6306 in.

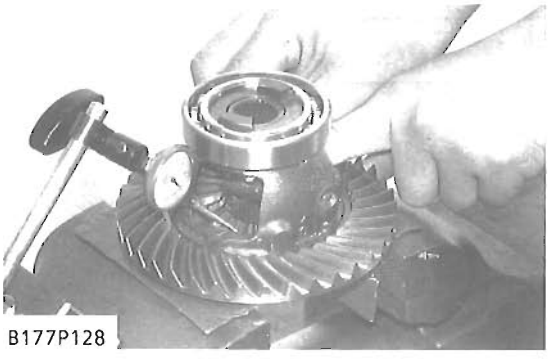

B177P128

Backlash between Differential Pinion and Differential Side Gear

1. Secure the differential case with a vise.
2. Set the dial indicator (lever type) with its finger on the tooth of the differential side gear.
3. Press differential pinion and side gear against the differential case.
4. Hold the differential pinion and move the differential side gear to measure the backlash.
5. If the backlash exceeds the allowable limit, adjust with differential side gear shims.

Backlash between differential pinion and differential side gear	Factory spec.	0.1 to 0.3 mm 0.004 to 0.012 in.
	Allowable limit	0.4 mm 0.016 in.

NOTE

- **Thickness of shims :**
  0.8 mm (0.0315 in.), 1.0 mm (0.0394 in.)
  1.2 mm (0.0472 in.)

https://truckmanualshub.com/

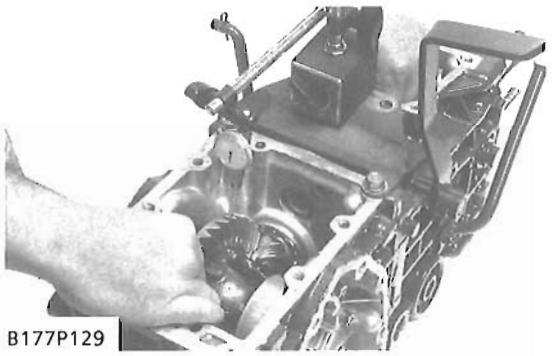
B177P129

Backlash between Spiral Bevel Pinion and Spiral Bevel Gear

1. Set the dial indicator (lever type) with its finger on the end of spiral bevel pinion (4).
2. Move the spiral bevel pinion back and forth to each end and measure the side clearance.
3. If the side clearance exceeds the factory spec., adjust with the shims (3) at front end of spiral bevel pinion.
4. Set the dial indicator (lever type) with its finger on the tooth surface of bevel gear.
5. Measure the backlash by fixing the spiral bevel pinion (4) and moving bevel gear (2) by hand.
6. If the backlash exceeds the factory spec., adjust with the shims (1), (5) at bearing holder (6) and differential case.
7. Adjust the backlash properly by repeating the above procedures.

(When adjusting)

Side clearance of spiral bevel pinion	Factory spec.	Less than 0.15 mm 0.006 in.
Backlash between spiral bevel pinion and spiral bevel gear	Factory spec.	0.10 to 0.20 mm 0.0039 to 0.0080 in.

(Reference)

- Thickness of shims (1), (5) :
  0.2 mm (0.008 in.) 0.5 mm (0.020 in.)
- Thickness of shims (3) :
  0.2 mm (0.008 in.) 1.4 mm (0.055 in.)
  1.8 mm (0.071 in.)

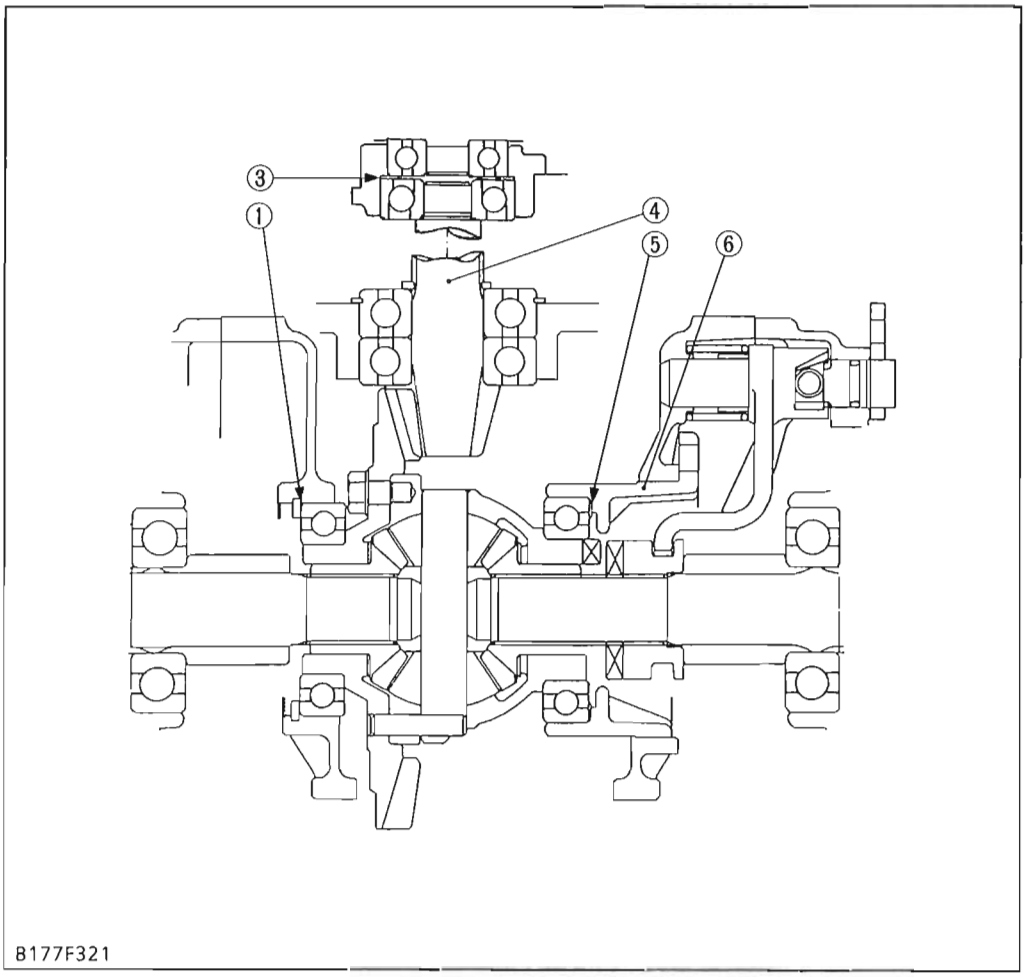

B177F321

(1) Shim
(2) Bevel Gear
(3) Shim
(4) Spiral Bevel Pinion
(5) Shim
(6) Bearing Holder

https://truckmanualshub.com/

https://truckmanualshub.com/

MECHANISM

CONTENTS

[1] FEATURES 4-M1

https://truckmanualshub.com/

https://truckmanualshub.com/

[1] FEATURES

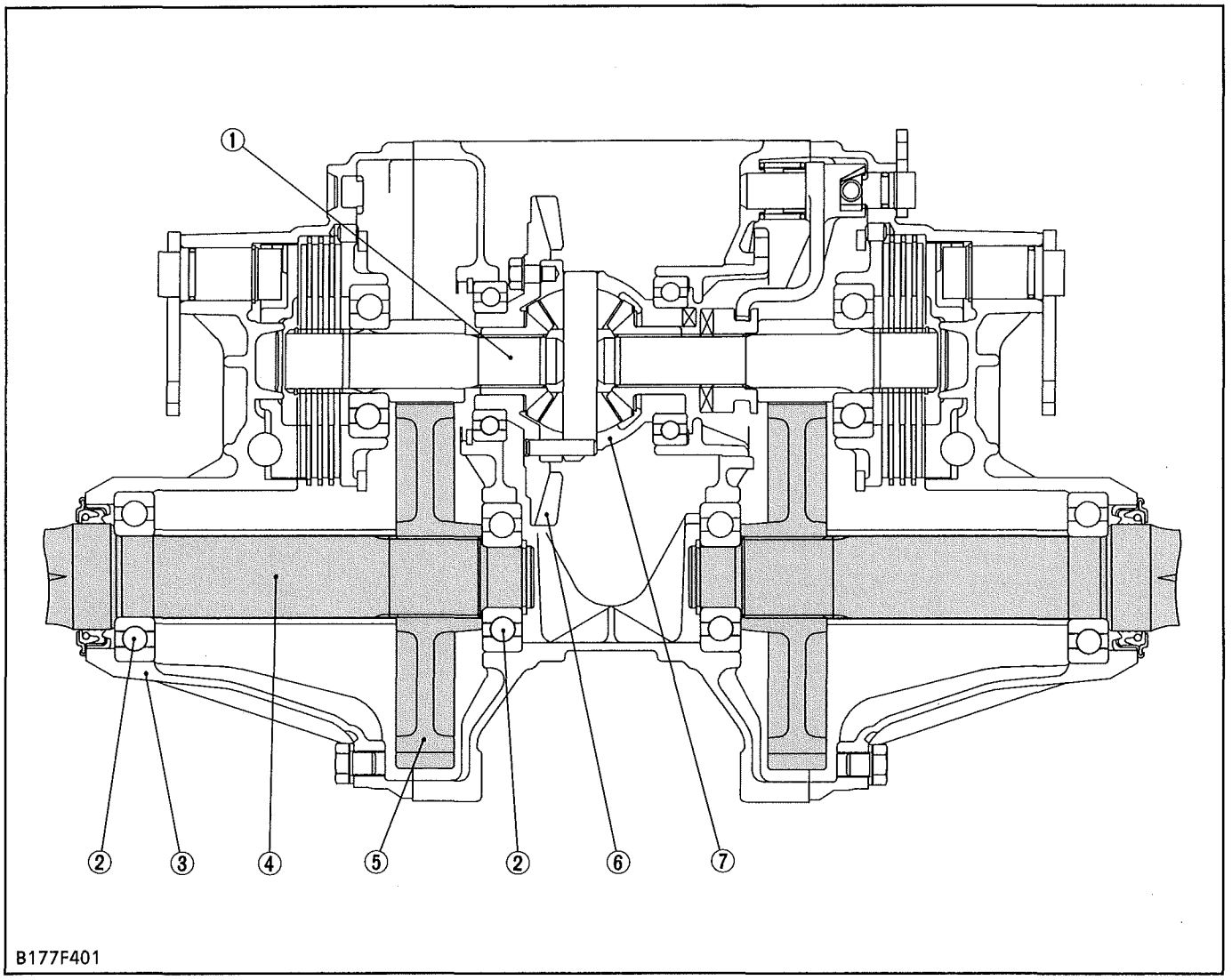

(1) Differential Gear Shaft
(2) Ball Bearing
(3) Rear Axle Case
(4) Rear Axle
(5) Spur Gear
(6) Spiral Bevel Gear
(7) Differential

The rear axles are the semifloating type with ball bearings (2) between the rear axle (4) and the rear axle case (3), which supports the rear wheel load as well as transmitting power to the rear wheels.

The differential (7) automatically controls the revolution of right and left wheels when the rear wheels encounter unequal road resistance during turning.

https://truckmanualshub.com/

https://truckmanualshub.com/

SERVICING

CONTENTS

TIGHTENING TORQUES 4-S1
CHECKING, DISASSEMBLING AND SERVICING 4-S1
DISASSEMBLING AND ASSEMBLING 4-S1
(1) Separating Rear Axle Case from Brake Case 4-S1
(2) Disassembling Rear Axle 4-S2

https://truckmanualshub.com/

https://truckmanualshub.com/

TIGHTENING TORQUES

Tightening torques of screws and nuts on the table below are especially specified.
(For general use screws and nuts: See page G-9)

Item	N·m	kgf·m	ft-lbs
Rear wheel cotter setting bolt and nut	123 to 147	12.6 to 15.0	91 to 108
Rear wheel hub mounting nut	108 to 125	11.0 to 12.8	80 to 93
Rear axle case mounting screw	39 to 44	4.0 to 4.5	29 to 33

CHECKING, DISASSEMBLING AND SERVICING

DISASSEMBLING AND ASSEMBLING

(1) Separating Rear Axle Case from Differential Gear Case

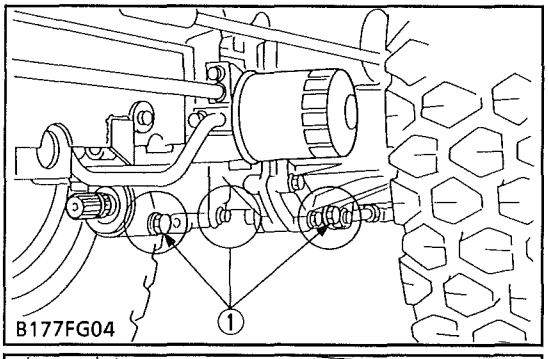

B177FG04

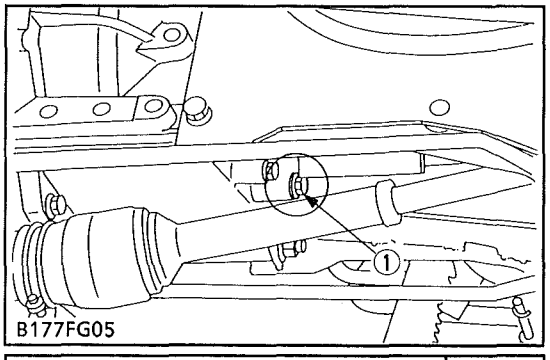

B177FG05

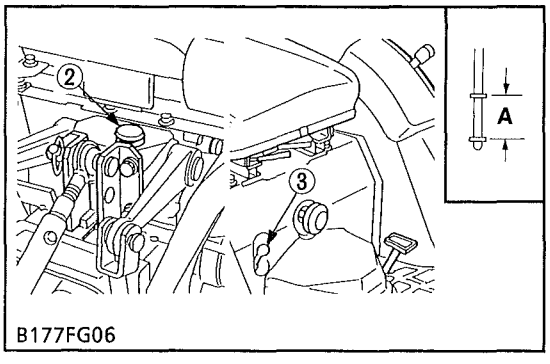

B177FG06

Drain the Transmission Fluid

1. Place oil pans underneath the transmission case.
2. Remove the four drain plugs (1).
3. Drain the transmission oil.
4. Reinstall the four drain plugs (1).

(When refilling)

- Fill up from filling port after removing plug (2) until reaching the gauge (3).
- After running the engine for few minutes, stop it and check the oil level again. Add the oil to prescribed level if it is not correct level.

Transmission oil capacity	HST type	12 ℓ 3.17 U.S.gals 2.6 Imp.gals
	Manual transmission type	11 ℓ 2.9 U.S.gals 2.4 Imp.gals

■ IMPORTANT

- **Use only multi-grade transmission oil. Use of other oils may damage the transmission or hydraulic system.**
  Refer to "LUBRICANTS AND FLUID" (See page G-8).
- **Never work the tractor immediately after changing the transmission oil. Keeping the engine at medium speed for a few minutes to prevents damage to the transmission.**
- **Do not mix different blands oil together.**

(A) Oil level is acceptable within this range.

(1) Drain Plug
(2) Filling Plug
(3) Gauge

https://truckmanualshub.com/

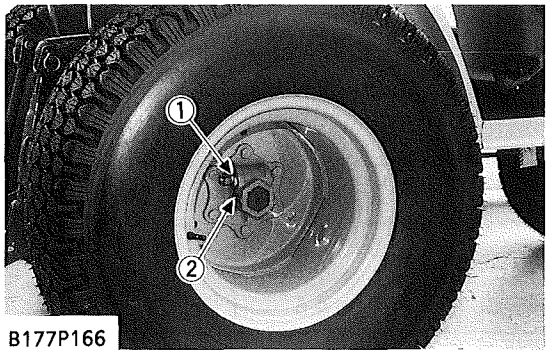

B177P166

(1) Cotter (2) Wheel Hub Pin

Rear Wheel

1. Place a jack under the transmission case.
2. Loosen the rear wheel cotter (1) setting bolt and nut.
3. Take out the wheel hub pin (2).
4. Take out the rear wheel.

■ IMPORTANT

- **When re-fitting or adjusting a wheel, tighten the bolts to the following torques then recheck after driving the tractor 200 m (200 yards) and there after daily check service.**

(When reassembling)

Tightening torque	Rear wheel cotter setting bolt and nut	123 to 147 N·m 12.6 to 15.0 kgf·m 91 to 108 ft-lbs
	Rear wheel hub mounting nut	108 to 125 N·m 11.0 to 12.8 kgf·m 80 to 93 ft-lbs

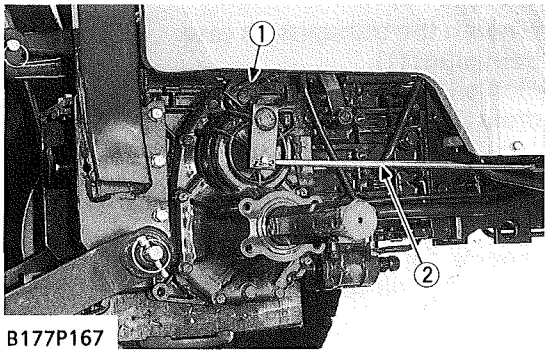

B177P167

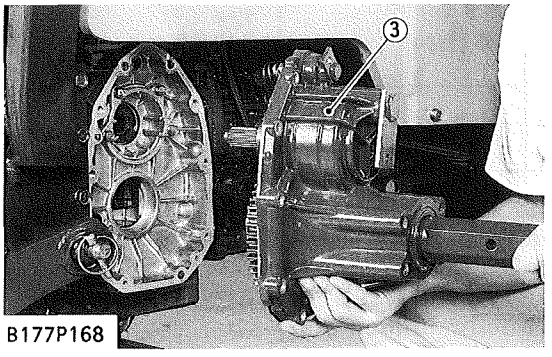

B177P168

(1) Differential Lock Rod (2) Brake Rod
(3) Rear Axle Case

Rear Axle Case

1. Disconnect the differential lock rod (1).
2. Disconnect the brake rod (2).
3. Remove the rear axle case mounting screw.
4. Separate the rear axle case (3) from differential gear case.

(When reassembling)

- Apply liquid gasket (Three Bond 1208D or equivalent) to joint face of the rear axle case and differential gear case after eliminate the water, oil and stuck liquid gasket.

Tightening torque	Rear axle case mounting screws	39 to 44 N·m 4.0 to 4.5 kgf·m 29 to 33 ft-lbs

(2) Disassembling Rear Axle

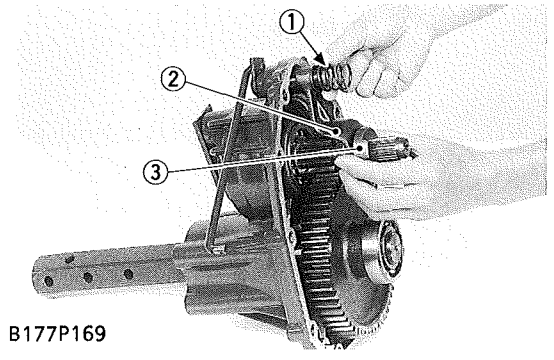

B177P169

Differential Lock Shift Fork and Differential Lock Clutch

1. Remove the spring (1).
2. Draw out the differential lock shift fork (2) and differential lock clutch (3).

(1) Spring
(2) Differential Lock Shift Fork
(3) Differential Lock Clutch

https://truckmanualshub.com/

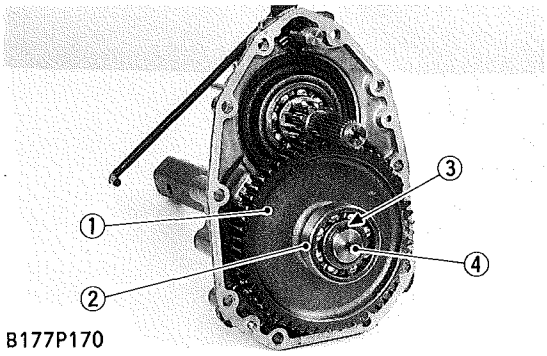

B177P170

57T Gear

1. Remove the external snap ring (3) and remove the bearing (2).
2. Draw out the 57T gear (1) from the rear axle (4).

(1) Gear
(2) Bearing
(3) External Snap Ring
(4) Rear Axle

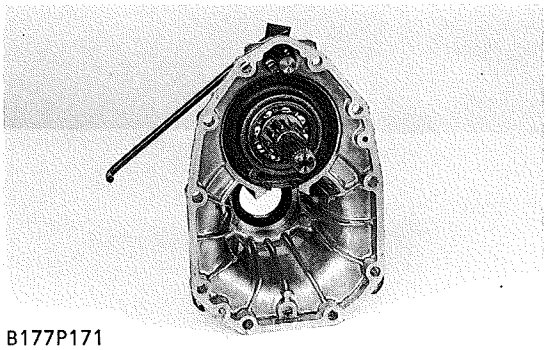
B177P171

Rear Axle

1. Tap out the rear axle to the outside of the rear axle case.

https://truckmanualshub.com/

https://truckmanualshub.com/

MECHANISM

CONTENTS

[1] FEATURES 5-M1
[2] OPERATION 5-M2

https://truckmanualshub.com/

https://truckmanualshub.com/

[1] FEATURES

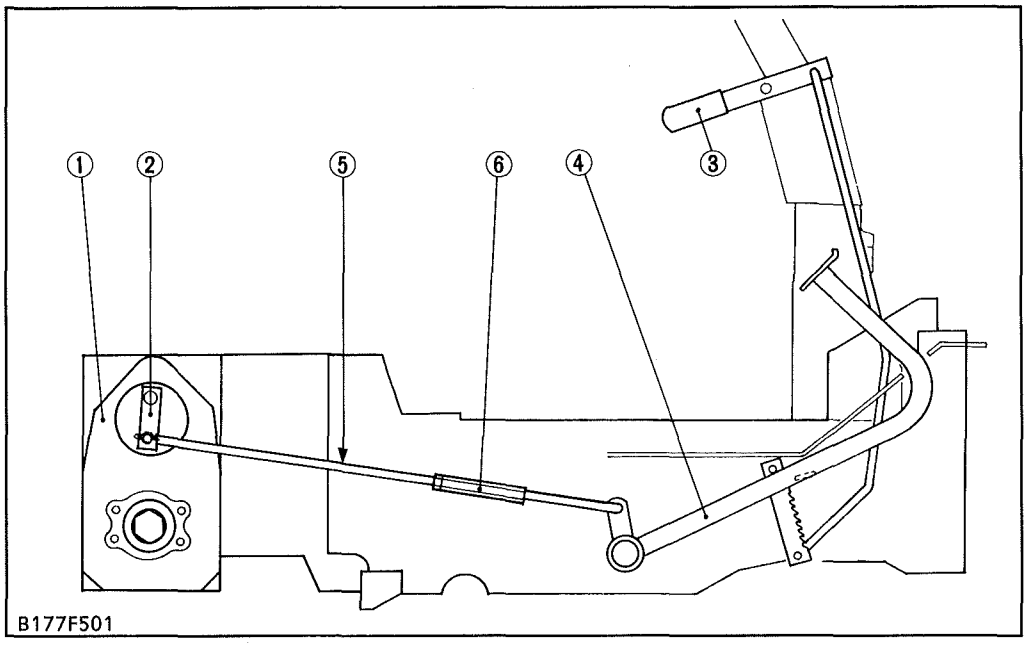

(1) Rear Axle Case
(2) Brake Cam Lever
(3) Parking Brake Lever
(4) Brake Pedal
(5) Brake Rod
(6) Turnbuckle

Independent mechanical wet disc brakes are used for the right and left travelling brakes. They are operated by the brake pedals through the mechanical linkages and provide stable braking and require little adjustment.

■ Features of Wet Disc Brakes

1. Reduced disc wear

Although wet discs are worn by approx. several tens of microns depending on the accuaracy of parts during the initial contact in initial period of 50 hours or so, almost no wear occurs afterwards. This means that very little brake adjustments are required.

2. Stable braking

Since the brake discs are immersed in transmission oil, **Fade*** is rarely caused even after repeated braking and a stable braking force is obtained.

3. Pedal stroke does not change under influence of heat.

Unlike internal expanding type brakes, the drum-to-shoe clearance of the wet disc brake does not increase due to thermal expansion and the increased pedal stroke does not result. Thus, the wet disc brake provides a constant pedal stroke.

The parking brake is a mechanical type which is designed to actuate the travelling brakes through the linkage. Pulling the parking brake lever (3) results in the same state as the obtained when the brake pedals are pressed.

*** Fade**

Fade is a phenomenon of braking force loss caused by the heat generated in repeated braking. Generally, the friction coefficient of brake disc tends to lower and the braking force reduces with the rise of the temperature of the brake disc.

(Reference)

- Relationship between temperature and friction coefficient of brake disc.

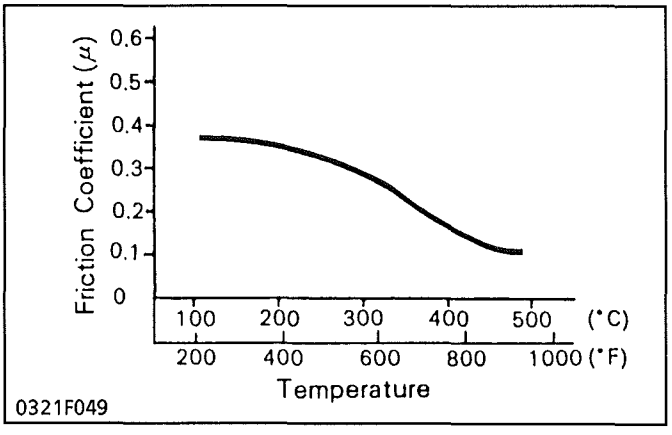

https://truckmanualshub.com/

[2] OPERATION

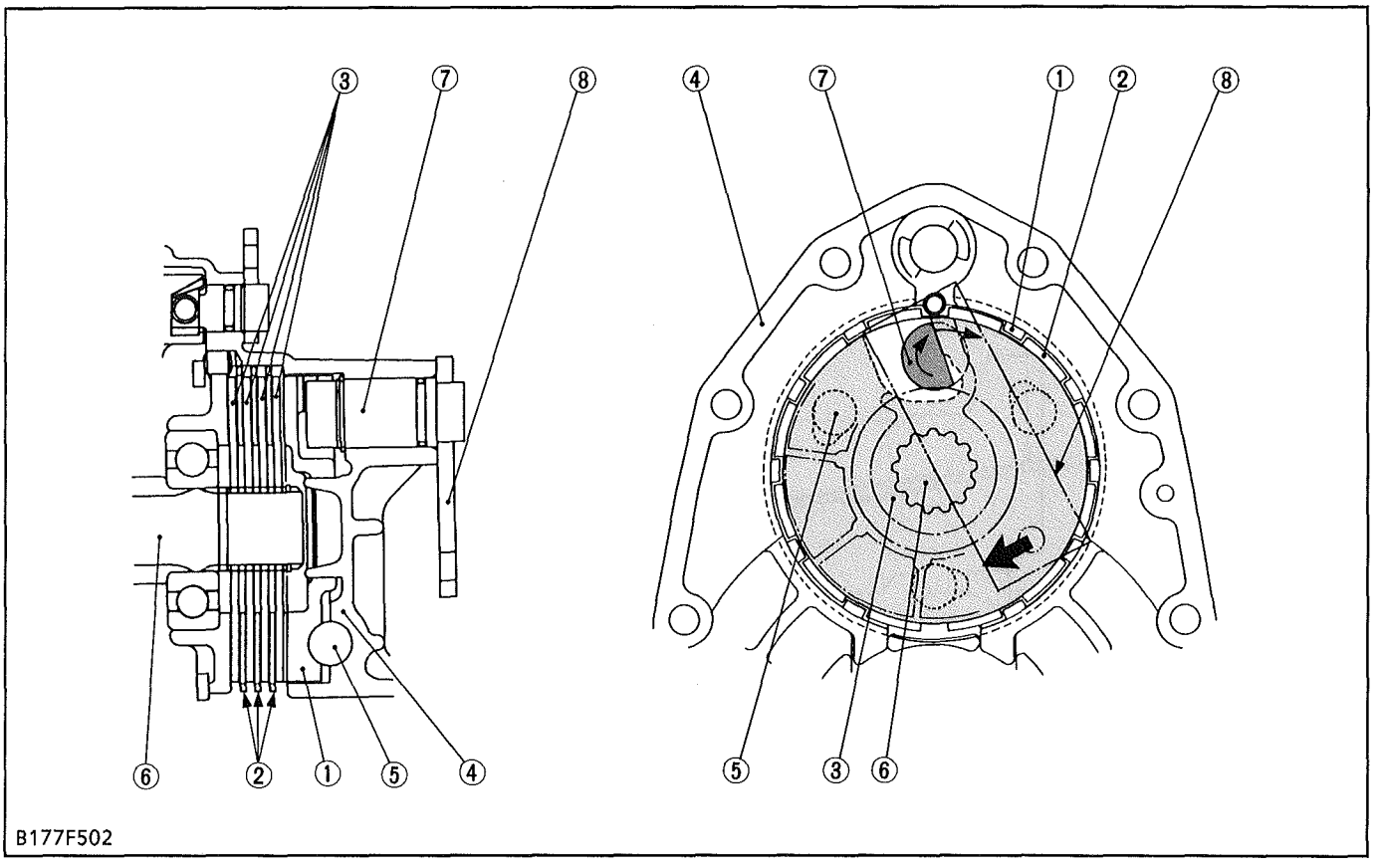

(1) Cam Plate
(2) Friction Plate
(3) Brake Disc
(4) Rear Axle Case
(5) Steel Ball
(6) Brake Shaft (Differential Gear Shaft)
(7) Brake Cam
(8) Brake Cam Lever

The brake body is incorporated in the rear axle case (4) filled with transmission oil and is designed to brake when the brake disc (3) splined with the differential gear shaft (6) is pressed against the cam plate (1) by means of the cam mechanism incorporating steel balls (5).

For greater braking force, four brake discs are provided at the right and left sides respectively, and the friction plate (2) fixed to the rear axle case is arranged between the brake discs.

■ During Braking

When the brake pedal is pressed, the linkage causes the brake cam lever (8) and brake cam (7) to turn into the direction of arrow shown in the above figure.

Therefore, the cam plate (1) also moves the direction of arrow. At this time, since the cam plate (1) rides on the steel balls (5) set in the grooves of the rear axle case to press the brake disc (3), the differential gear shaft (6) is braked by the frictional force generated by the cam plate (1) and brake disc (3).

https://truckmanualshub.com/

SERVICING

CONTENTS

TROUBLESHOOTING 5-S1
SERVICING SPECIFICATIONS 5-S1
TIGHTENING TORQUES 5-S2
CHECKING, DISASSEMBLING AND SERVICING 5-S2
[1] BRAKE PEDAL 5-S2
CHECKING AND ADJUSTING 5-S3
SERVICING 5-S3
[2] BRAKE CASE 5-S4
DISASSEMBLING AND ASSEMBLING 5-S4
(1) Separating Rear Axle Case with Brake Assembly 5-S4
(2) Disassembling Brake Assembly 5-S6
SERVICING 5-S7

https://truckmanualshub.com/

https://truckmanualshub.com/

TROUBLESHOOTING

Symptom	Probable Cause	Solution	Reference Page
Uneven Braking Force	• Brake pedal play unevenly adjusted. • Brake disc worn • Cam plate warped	Adjust Replace Replace	5-S3 5-S7 5-S7
Brake Drags	• Brake pedal play too small • Ball holes of cam plate for uneven wear • Brake pedal return spring weaken or broken • Brake cam rusted	Adjust Replace Replace Repair	5-S3 5-S7 5-S2 5-S7
Poor Braking Force	• Brake pedal play excessive • Brake disc worn • Cam plate warped • Brake cam or lever damaged • Transmission fluid improper	Adjust Replace Replace Replace Change	5-S3 5-S7 5-S7 5-S7 5-S4

SERVICING SPECIFICATIONS

Item		Factory Specification	Allowable Limit
Brake Pedal	Free Travel	20 to 30 mm 0.8 to 1.2 in.	–
Pedal Shaft to Pedal Shaft Bush	Clearance	0 to 0.165 mm 0 to 0.00649 in.	1.0 mm 0.039 in.
Pedal Shaft	O.D.	24.916 to 25.030 mm 0.98094 to 0.98543 in.	–
Bush	I.D.	25.03 to 25.081 mm 0.98543 to 0.98744 in.	–
Cam Plate and Bearing Holder	Flatness	–	0.3 mm 0.012 in.
Cam Plate and Ball	Height	22.89 to 22.99 mm 0.9012 to 0.9051 in.	22.40 mm 0.8819 in.
Brake Disc	Thickness	3.3 to 3.5 mm 0.130 to 0.138 in.	3.0 mm 0.118 in.
Friction Plate	Thickness	1.92 to 2.08 mm 0.0756 to 0.0819 in.	1.52 mm 0.0598 in.

https://truckmanualshub.com/

TIGHTENING TORQUES

Tightening torques of screws and nuts on the table below are especially specified.
(For general use screws and nuts: See page G-9)

Item	N·m	kgf·m	ft-lbs
Rear wheel cotter setting bolt and nut	123 to 147	12.6 to 15.0	91 to 108
Rear axle case mounting screw	39 to 44	4.0 to 4.5	29 to 33

CHECKING, DISASSEMBLING AND SERVICING

[1] BRAKE PEDAL

Removing Brake Pedal

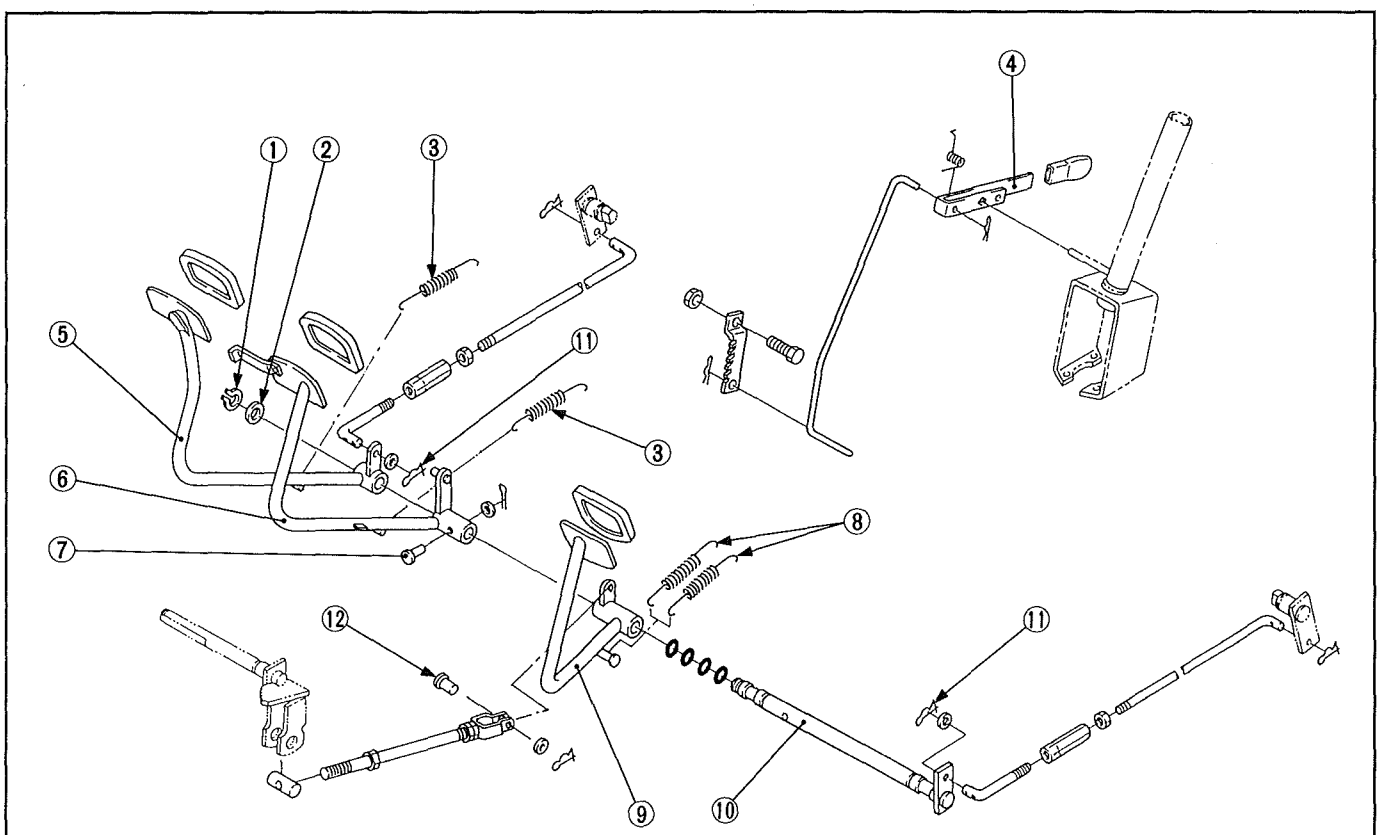

(1) External Snap Ring
(2) Collar
(3) Return Spring
(4) Parking Brake Lever
(5) Brake Pedal RH
(6) Brake Pedal LH
(7) Clevis Pin
(8) Return Spring
(9) Clutch Pedal
(10) Brake Pedal Shaft
(11) Spring Lock Pin
(12) Clevis Pin

1. Remove the spring lock pin (11) of brake rod at pedal side, and pull out the brake rod.
2. Remove the return spring (3), (8).
3. Remove the external snap ring (1) at the end of the brake pedal shaft (10).
4. Remove the clevis pin (7) of the brake pedal LH (6).
5. Remove the clevis pin (12) of the clutch pedal (9).
6. Pull the right and left brake pedals from the brake pedal shaft (10).
7. Tap out the brake pedal shaft (10) to the left, and remove it with the clutch pedal (9).

(When reassembling)

- Apply grease to the brake pedal shaft.

https://truckmanualshub.com/

CHECKING AND ADJUSTING

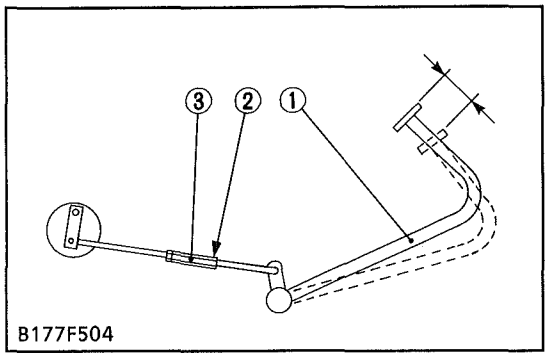

(1) Brake Pedal
(2) Turnbuckle
(3) Lock Nut

Brake Pedal Free Play

1. Press each brake pedal five times with a force of 147 to 294 N (15 to 30 kgf, 33 to 66 lbs.).
2. Press the center of the pedal (1) at a force of 39 to 58 N (4 to 6 kgf, 9 to 13 lbs), and measure the movement at the footrest of pedal.
3. If the measurement is not within the factory specifications, turn the turnbuckle (2) to adjust.
4. After adjustment , tighten the lock nut (3) firmly.

Brake pedal play	Factory spec.	20 to 30 mm 0.79 to 1.18 in.

CAUTION

- **The difference between the right and left pedal plays must be less than 4.0 mm (0.16 in.).**

NOTE

- **After checking brake pedal free play, be sure to engage the parking brake lever fully and check to see that the brake pedals are securely locked.**

SERVICING

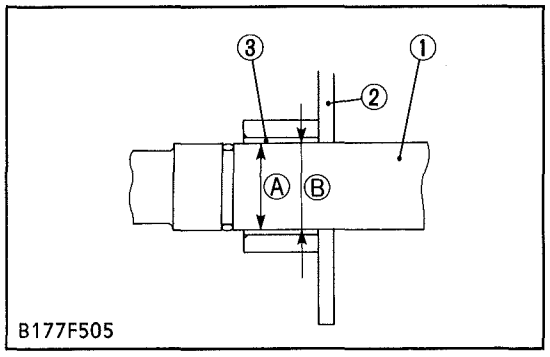

(A) Bush I.D.
(B) Brake Pedal Shaft O.D.

(1) Brake Pedal Shaft
(2) Center Frame
(3) Bush

Clearance between Brake Pedal Shaft and Center Frame Bush

1. Measure the brake pedal shaft O.D. with an outside micrometer.
2. Measure the bush (3) I.D. with a cylinder gauge.
3. If the clearance exceeds the allowable limit, replace it.

Clearance between brake pedal shaft and center frame bush	Factory spec.	0 to 0.165 mm 0 to 0.00649 in.
	Allowable limit	1.0 mm 0.039 in.
Brake pedal shaft O.D.	Factory spec.	24.916 to 25.030 mm 0.98094 to 0.98543 in.
Center frame bush I.D.	Factory spec.	25.030 to 25.081 mm 0.98543 to 0.98744 in.