https://truckmanualshub.com/

SISU AXLES

SPARE PARTS BOOK

Front Axle
SSND-10-S

Book No. 159 (2/2008)

Sisu Axles, Inc.
Autotehtaantie 1
PO Box 189
FIN-13101 Hameenlinna
Finland
Phone +358 204 55 2999
Fax +358 204 55 2900

https://truckmanualshub.com/

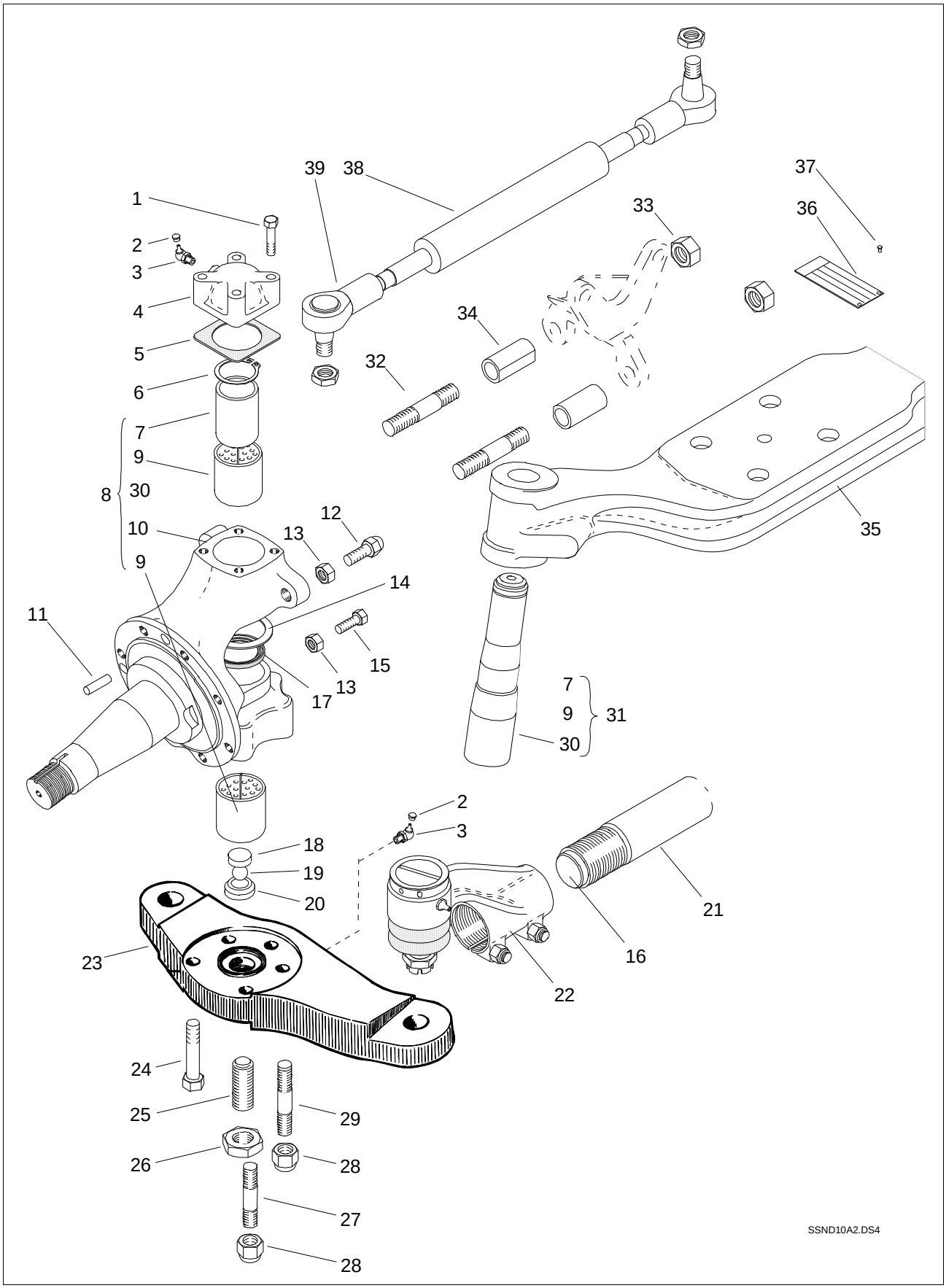

https://truckmanualshub.com/

Item	Qty.	Order no.	Description	Note
1	8	**90303-08403**	Hex Screw	M8x40
2	4	**91421-06060**	Shield hat	
3	4	**591402-10005**	Grease nipple	M10x1, Straight, Stainless Steel, Optional
3	4	**91402-10003**	Grease nipple	M10x1, Straight
4	2	**140-123-0900**	King pin cover	
5	2	**140-124-0300**	Gasket	
6	2	**91711-03800**	Retainer ring	D38x1.75
7	NLA	**099-603-8090**	Bush	Up to ser. No. 73203
7	2	**599-603-8190**	Bush	Not servised separately
8	2	**540-140-1411**	Steering knuckle assy	
9	4	**590-314-8100**	Sleeve	Not servised separately
10	2	**140-141-2110**	Steering knuckle	Not servised separately
11	2	**90602-14323**	Spring cotter	D14x32
12	2	**140-249-1500**	Stop screw	Total L=65mm
13	4	**90502-16243**	Nut	M16
14	2	**090-354-9000**	Thrust washer	D48.5/70x1.5
15	2	**140-249-1210**	Stop screw	Total L=52mm
16	2	**91425-34170**	Plug	BI 55
17	4	**090-500-4840**	Shaft seal	D48/55x4
18	2	**092-861-7010**	Ball seat	D25.4
19	2	**090-000-1600**	Ball	RB 16
20	2	**092-861-7000**	Ball seat	D30.16
21	1	**140-211-3800**	Tie rod	L=1592 mm (for 2006 track)
21	1	**140-211-5010**	Tie rod	L=1642 mm (for 2056 track)
22	1	**140-202-0914**	Ball Joint Assembly	LH, RH Thread, SISU
22	1	**140-203-0914**	Ball Joint Assembly	RH, LH Thread, SISU
22	1	**540-202-0917**	Ball Joint Assembly	LH, RH-thread, TRW
22	1	**540-203-0917**	Ball Joint Assembly	RH, LH-thread, TRW
23	1	**140-241-5200**	Tie rod arm	RH, For hydraulic steering
23	1	**140-241-5210**	Tie rod arm	LH, For hydraulic steering
24	4	**90313-16408**	Allen Screw	M16x40
25	2	**099-124-9010**	Special screw	M24
26	2	**90502-24363**	Nut	M24
27	2	**099-116-0520**	Stud bolt	M16x70 (Total L= 92 mm)
28	6	**90550-16247**	Nut	M16 self locking
29	4	**099-116-0520**	Stud bolt	M16x70 (Total L= 92 mm)
30	2	**540-121-1600**	King pin	Not servised separately
31	ar	**540-120-0031**	King pin kit	For one wheel
32	4	**90177-02001**	Stud bolt	M20x127
33	4	**90550-20307**	Nut	M20 self locking
34	4	**099-602-1320**	Bush	L=40 mm
35	1	**140-111-3600**	Front axle beam	Track 2006 mm,, spring distance 862 mm
35	NLA	**140-111-4010**	Front axle beam	Spring c/c 914, Track 2056, use 540-111-4300
35	1	**140-111-4100**	Front axle beam	Track 2056 mm, spring distance 862 mm
35	1	**540-111-4300**	Front axle beam	Spring c/c 914, Track 2056
36	1	**91600-20811**	Name plate	
37	4	**90111-29054**	Rivet	D2.9x5

https://truckmanualshub.com/

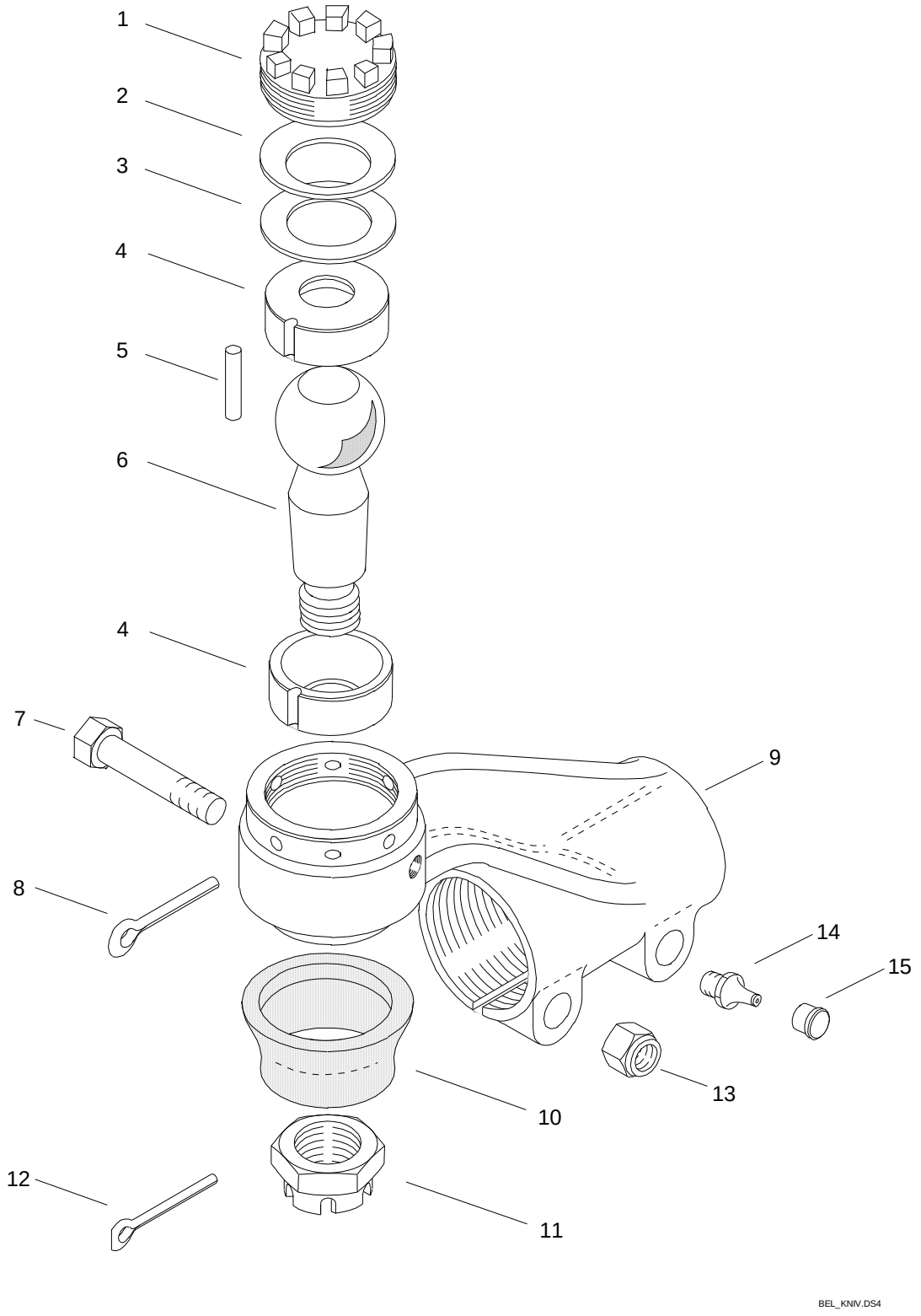

https://truckmanualshub.com/

Item	Qty.	Order no.	Description	Note
1	2	**140-227-0311**	Cover	
2	2	**92055-25460**	Disc spring	D50/25.4x1.5
3	2	**90700-29001**	Spacer plate	D29/50x2
4	4	**140-225-0400**	Ball seat	
5	2	**090-005-0390**	Needle roller	D3x25.4
6	2	**140-229-1310**	Ball stud	D40
7	4	**90303-12603**	Hex Screw	M12x60
8	2	**90621-50323**	Split pin	D5x32
9	1	**140-221-0900**	Balljoint housing	RH Thread
9	1	**140-222-0900**	Balljoint housing	LH Thread
10	2	**090-610-2610**	Dust membrane	
11	2	**90546-24363**	Nut	M24x1.5
12	2	**90621-50453**	Split pin	D5x45
13	4	**90550-12193**	Nut	M12, self locking
14	2	**91402-10003**	Grease nipple	M10x1, Straight
15	2	**91421-06060**	Shield hat	

https://truckmanualshub.com/

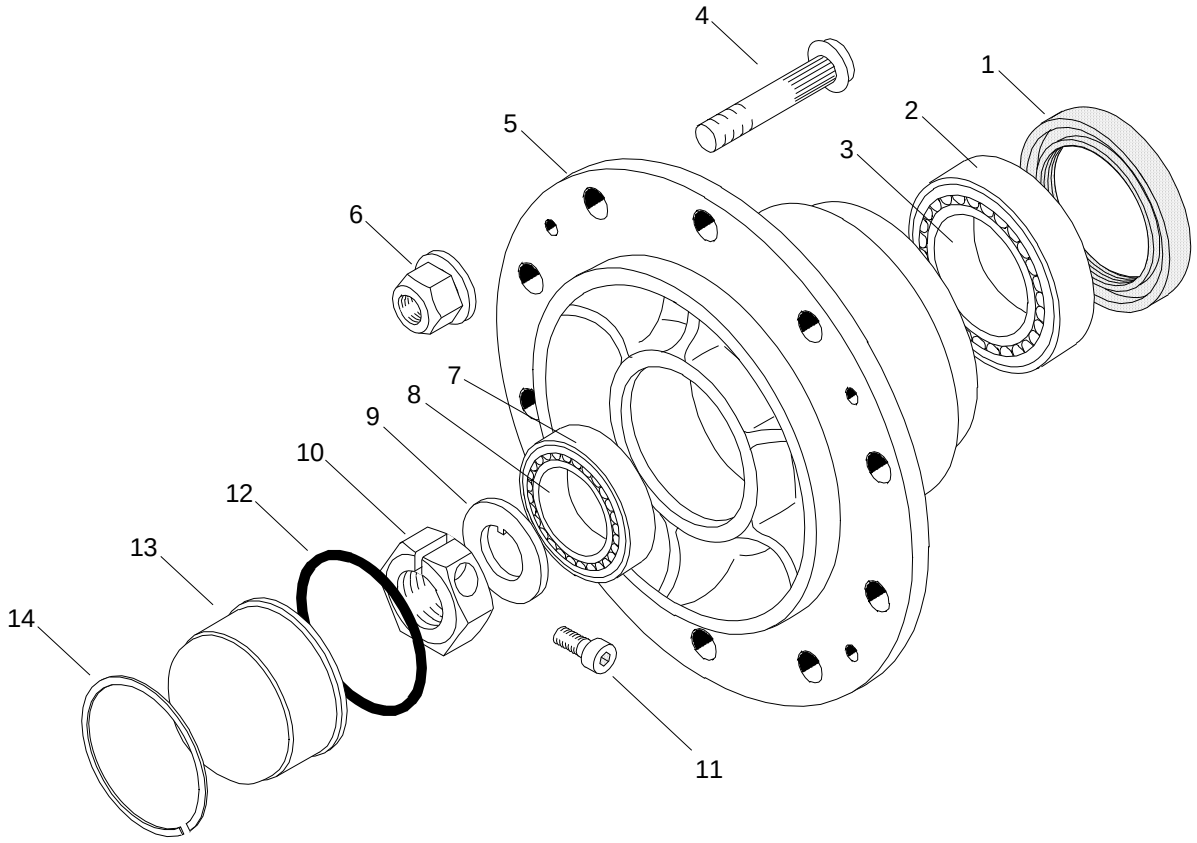

https://truckmanualshub.com/

Item	Qty.	Order no.	Description	Note
1	2	**090-501-0001**	Shaft seal	D100/125x13
2	2	**090-121-2400**	Bearing outer race	
3	2	**090-110-6600**	Bearing inner race	
4	20	**140-911-2500**	Wheel bolt	L=76 mm
4	20	**140-911-2610**	Wheel bolt	L=83 mm
5	2	**140-411-2208**	Wheel hub	
6	20	**540-916-1610**	Wheel nut	M22x1.5
7	2	**090-120-9000**	Bearing outer race	
8	2	**090-110-4600**	Bearing inner race	
9	2	**099-413-9070**	washer	D40/68x6
10	NLA	**099-239-3060**	Lock Nut	M39x2, superceded by 599-239-3061
10	2	**599-239-3061**	Lock Nut	M39x2, Locking screw thread M12x1.25
11	2	**590316-12408**	Allen Screw	M12x1.25x40, for item 599-239-3061
11	ar	**90311-12408**	Allen Screw	M12x40, for item 099-239-3060
12	2	**090-511-0520**	O-ring	105x3
13	2	**140-422-0010**	Protective cup	
14	2	**91720-11003**	Retainer ring	SB 110

https://truckmanualshub.com/

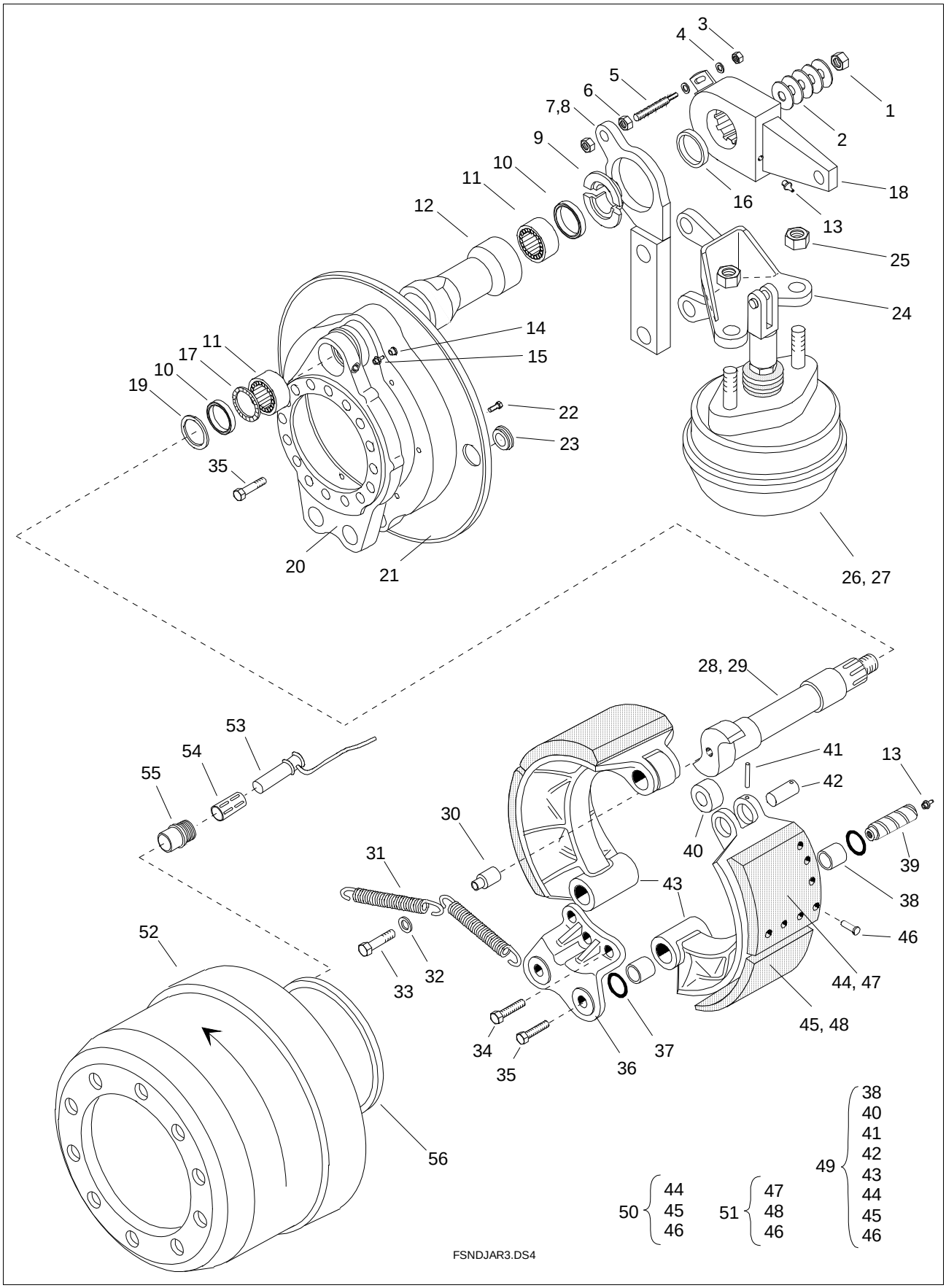

https://truckmanualshub.com/

Item	Qty.	Order no.	Description	Note
1	2	**90550-16247**	Nut	M16 self locking
2	10	**592055-18330**	Disc spring	Supercedes item 92055-18323
2	NLA	**92055-18323**	Disc spring	NLA, superceded by 592055-18330
3	2	**90502-08133**	Nut	M8
4	4	**90705-08423**	washer	D8.4/17x1.6
5	2	**90177-01203**	Stud bolt	M12/M8
6	4	**90502-12193**	Nut	M12
7	1	**146-223-1300**	Supporting bracket	RH
8	1	**146-223-1310**	Supporting bracket	LH
9	4	**146-591-0270**	Retainer sleeve	
10	4	**91122-04201**	Shaft seal	D42/55x8
11	4	**090-060-4220**	Needle bush	D52/42x20
12	2	**146-221-0910**	Bearing housing	
13	6	**591402-10005**	Grease nipple	M10x1, Straight, Stainless Steel, Optional
13	6	**91402-10003**	Grease nipple	M10x1, Straight
14	6	**91421-06060**	Shield hat	
15	2	**591402-10455**	Grease nipple	M10x1, 45º, Stainless Steel, Optional
15	2	**91402-10453**	Grease nipple	M10x1, 45º
16	2	**146-591-0300**	Support ring	Only with automatic slack adjuster
17	2	**91246-42052**	Spacer plate	D42/52
18	2	**146-520-1811**	Slack adjuster	R145, offset 0, manual
18	2	**146-530-0811**	Slack adjuster	R145, offset 0, automatic
19	2	**91726-43065**	Support ring	D43/65x3
20	2	**146-111-2410**	Brake Bracket	
21	2	**146-131-2110**	Dust Shield	180 mm
22	14	**90303-08123**	Hex Screw	M8x12
23	4	**095-553-2000**	Shield plug	
24	2	**146-711-2001**	Chamber bracket	R145/165
25	4	**90556-16247**	Nut	M16x1.5
26	2	**172-101-2171**	Brake chamber	30", L=143, Knorr
26	2	**172-103-3111**	Spring Brake Chamber	24"/24", L=143, Knorr
26	2	**572-101-2172**	Brake chamber	30", L=143, Arfesan
26	2	**572-103-3112**	Spring Brake Chamber	24"/24", Arfesan, Superceded by 172-103-3111
28	1	**146-211-7200**	S-cam shaft	LH, L=325.5
29	1	**146-211-7300**	S-cam shaft	RH, L=325.5
30	6	**599-601-8900**	Bush	
31	4	**92052-30002**	Return spring	
32	6	**90705-13023**	washer	D13/24x2.5
33	6	**90303-12603**	Hex Screw	M12x60
34	20	**90303-14307**	Hex Screw	M14x30
35	4	**90303-10203**	Hex Screw	M10x20
36	2	**146-331-0400**	Anchor support	
37	8	**91106-36212**	O-ring	D36,2x3 Viton
38	8	**590-313-2091**	Sleeve	Sub. for 090-313-2090
39	4	**146-341-1200**	Anchor bolt	With grease nipple
39	4	**146-341-1210**	Anchor bolt	W/o grease nipple
40	4	**146-371-0700**	Roller	
41	4	**90602-05450**	Spring cotter	D5x40
42	4	**146-373-0201**	Pin	
43	4	**146-351-4000**	Brake shoe	180 mm
44	4	**546-361-6012**	Brake lining	180 mm, DB5010, not serviced separately
45	4	**546-361-6112**	Brake lining	180 mm, DB5010, not serviced separately
46	96	**91501-00819**	Rivet	
49	4	**546-306-0052**	Brake shoe assy	180 mm, DB5010
50	ar	**546-360-3012**	Brake lining set	180mm, DB5010, for one wheel
51	ar	**546-360-3022**	Br. lining set(over size)	180 mm, DB5010, for one wheel
52	2	**146-311-7100**	Brake drum	180 mm