https://truckmanualshub.com/

STC1000

STC1000 TRUCK CRANE
100 TONS LIFTING CAPACITY

Quality Changes the World

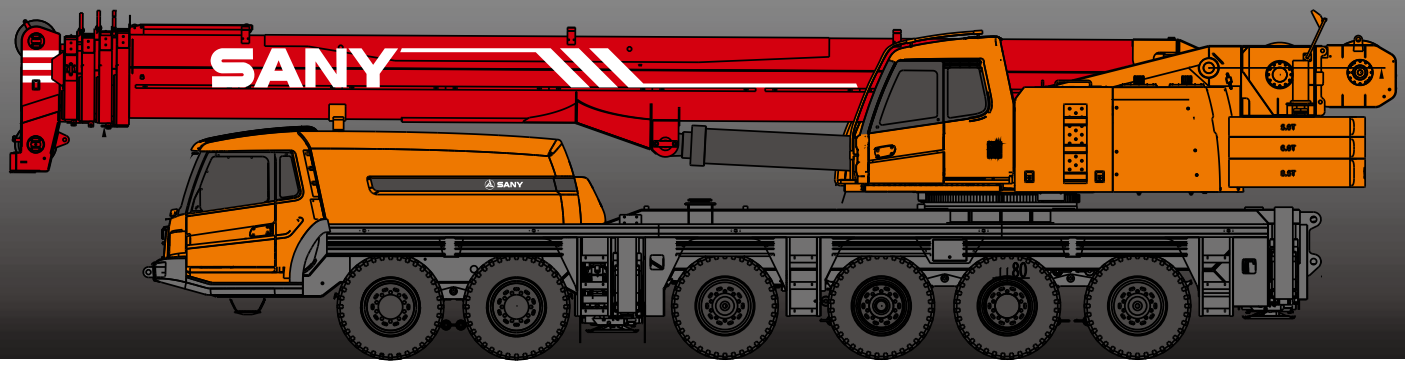

SANY

https://truckmanualshub.com/

SANY Automobile Hoisting Machinery is one of the core business unit of Sany Heavy Industry, mainly engaged in the research and development of high end, mid to large tonnage crane series, including mobile crane, crawler crane, tower crane and loader crane. It has two industrial parks in Ningxiang and Huzhou, since entering the market, the products of Sany Automobile Hoisting Machinery have received worldwide recognition with advanced technology, lean manufacturing, high reliability and excellent service.

https://truckmanualshub.com/

SANY TRUCK CRANE

CONTENT

04 Icon
05 Selling Points
06 Introduction
09 Dimension
10 Technical Parameter
11 Operation Condition
12 Load Chart
18 Counterweight Sketch Map
19 Wheel Crane Family Map

- Cab
- Carrier frame
- Suspension system
- Hydraulic system
- Outriggers
- Telescopic boom
- Control system
- Engine
- Lattice jibs
- Telescopic system
- Transmission system
- Superlift devices
- Luffing system
- Drive/Steer
- Luffing lattice jib
- Slewing
- Axles
- winch mechanism:
- Counterweight
- Tyres
- Safety system
- Brakes system
- Hoist system
- Electrical system

Excellent and stable chassis performance / chassis system

Three-axle drive is used, providing good trafficability and comfortableness under complex road condition with reliable traveling performance. Tipping over early-warning technology provides high stability and safety of the overall operation.

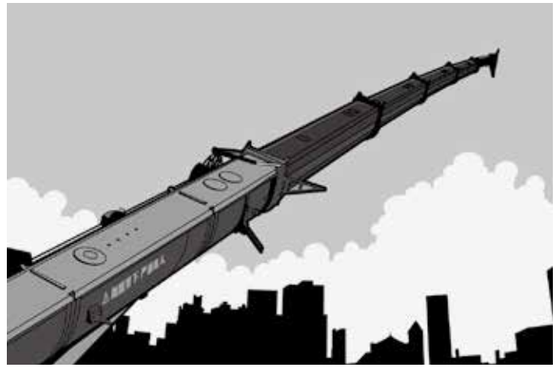

Ultra long, super strong and highly sensitive load lifting capacity

Five-section boom of high strength steel structure and optimized U-shaped section reduces weight significantly and improve safety rates. Jib mounting angles are 0°, 15°and 30°, which ensures fast and convenient change-over between different operating conditions so as to improving working efficiency of the machine.

Highly efficient, stable, energy-saving and adjustable hydraulic system

Newly designed dual-pump converging intelligent speed regulation system: pump controlled speed can ensure a good micro-mobility and stable operation, with patent flow distribution technology, high operation efficiency and Max. single rope speed of over 135m/min can be achieved.

With self-developed dual-pump flow converging / diversion main valve, flow converging efficiency of single-action dual pump is 30% higher than that of single-pump system, and flow diversion controllability of combined-action dual pump is also 30% higher than that of single-pump system. Electric proportional variable displacement piston pump is adopted, featuring high-precision flow control, which is more efficient and energy-saving, with energy consumption reduced by 50% than that of single pump system.

Safe and reliable control system

The adoption of CAN-bus full-digital network control technology ensures stable control signal, simple harness and high reliability. Timely feedback of data information can achieve the monitoring of the overall working status in real-time. The load moment limiter equipped with the comprehensive intelligent protection system is used with accuracy within 3% to provide a comprehensive logic and interlock control, thus ensuring more safe and reliable operation.

https://truckmanualshub.com/

Superstructure

Cab

- It is made of safety glass and anti-corrosion steel plate with ergonomic design such as full-coverage soften interior, panoramic sunroof and adjustable seats etc., and humanized design providing more comfortable and relaxing operation experience. The display of load moment limiter integrates main console and operation display system, which clearly show the data of all operating superstructure conditions for lifting operation.

Engine

- Type: Inline six-cylinder, water cooled, supercharged and inter-cooling diesel engine
- Rated power: 150kw/2200r/min
- Environment-protection: Emission complies with EuroIII standard
- Capacity of fuel tank: 300L

Hydraulic system

- High-quality key hydraulic components such as main oil pump, rotary pump, main valve, winch motor and balancing parts etc. are adopted to achieve stable and reliable operation of the hydraulic system.
- Superior operation performance is guaranteed by accurate parameter matching.
- Through the adoption of Electic proportional variable displacement piston pump, pump displacement can be adjusted in real-time, achieving high-precision flow control with no energy loss during operation.
- Main valve has dual-pump flow converging / diversion function. While single action can be performed effectively with dual pump flow converging, the stability of combined action without interference is guaranteed by dual pump flow diversion.
- Ø Winch adopts the electronically controlled variable motor to ensure high operation efficiency. Max. single line speeds of main and auxiliary winches is up to 135m/min.
- Slewing system is equipped with the closed electric proportional rotary pump with free slipping function to ensure more stable starting and control of the slewing operation and excellent micro-mobility.
- Hydraulic oil tank capacity: 1150L.

Control system

- CAN-bus instrument: CAN-bus instrument with a combined intelligent control electrical system is used for easy reading of the traveling parameters at any time. The engine fault warning function is applied to ensure convenient and fast troubleshooting.
- Automatic outrigger system: Electrically controlled outrigger with automatic leveling and fault diagnosis warning function is adopted, which is flexible and fast to operate.
- With fully security protection system, main and auxiliary winches are equipped with over-roll out limiter and height limiters to prevent over-rolling out and over-hoisting of steel rope, including tip-over and limit angle protection.
- Load moment limiter: The adoption of high intelligent load moment limiter system can comprehensively protect lifting operation, ensuring accurate, stable and comfort operation.
- The fault diagnosis system can detect superstructure electricity, hydraulic action, chassis (for major safety failure), engine and gearbox for fault to ensure reliable operation of the crane.

Luffing system

- Dead-weight luffing provides more stable luffing operation at low energy loss.
- Luffing angle: -2°~ 80°.

Telescopic system

- Five-section boom is applied with basic boom length of 13.5m, full-extended boom length of 52m, jib length of 18 m and fully extended boom lifting height of 52m respectively. Max. lifting height is 70m including jib. It is made of fine grain high-strength steel with U-shaped cross-section and with telescopic operation controlled independently by dual- cylinder rope.

Superstructure

Slewing system

- Slewing system consists of closed pump, constant-displacement plunger motor and reducer, with 360° rotation and with Max. slewing speed of 2r/min applied. The use of electronic controlled proportional speed adjustment speed adjustment ensures stable action and reliable system with unique slewing buffer design, the braking operation is more stable.

Hoisting system

- The adoption of pump and motor double variable speed control ensures high efficiency and excellent energy saving functionality. With perfect combination of winch balance valve and unique anti-slip technology, heavy load can lift and lower smoothly. Closed winch brake and winch balance valve effectively prevent imbalance of the hook.
- Two main hooks: 1270Kg, 580kg, one auxiliary hook: 260Kg. Wire rope of main winch: left-handed wire rope 22×260m-439-ZZ. Wire rope of auxiliary winch: left-handed wire rope22×170m-439-ZZ.

Safety system

- Load moment limiter: Load detection is achieved through the establishment of accurate and concise load model, which significantly increases the overall system precision of load moment limiter. Online empty load marking effectively prevent inaccurate lifting caused by discrepancy in boom structure specification, increasing system accuracy to ±5%.
- Hydraulic system is configured with the balance valve, overflow valve and two-way hydraulic lock etc. components, achieving stable and reliable operation of the hydraulic system.
- Main and auxiliary winches are equipped with over roll-out limiter to prevent over rolling-out of wire rope.
- Boom and jib ends are equipped with height limiters respectively to prevent over-hoisting of wire rope.
- Boom head is equipped with anemometer to detect whether the high-altitude wind speed is within the allowable range.
- Equipped with length sensor, angle sensor and press sensor to indicate the working condition of whole crane in real-time, giving an alarm and cutting off the dangerous action automatically.

Counterweight

- Combined variable counterweights are used with 8.5t,14.5t,19.5t three combinations to meet requirements of different operating conditions and maximize structural parts performance , which can be self-assembled and disassembled remotely with good micro-mobility .

Chassis

Cab

- Cab is made of new steel structure self-developed by SANY, featuring excellent shock absorption and tightness, which is configured with swing-out doors at both sides, pneumatically suspended driver's seat and passenger's seat, adjustable steering wheel, large rearview mirror, comfortable driver's chair with a headrest, anti-fog fan, air conditioner, stereo radio and complete control instruments and meters, providing more comfortable, safe and humanized operation experience.

Carrier frame

- Designed and manufactured by SANY, anti-torsion box structure is welded by fine-grain high-strength steel plate to provide strong load bearing capacity.

https://truckmanualshub.com/

Chassis

Axles
- Drive axles: Axles 3, 5 and 6. Steering axles: Axles 1, 2, 3 and 6. They are all installed with wheel differential lock and axle 5 is installed with axle differential lock.

Engine
- Type: V-type eight-cylinder, water cooled, supercharged and inter-cooling diesel engine
- Rated power: 350kw/1800r/min
- Environment-protection: emission complies with EuroIII standard
- Capacity of fuel tank: 450L

Transmission system
- Gearbox: Manual / Automatic gearbox is adopted with 12-gear and large speed ratio range applied, which meets the requirements of low gradeability speed and high traveling speed.
- Transfer case: Transfer case with a large input torque is used and with differential lock cylinder configured.
- Transmission shaft: With optimized arrangement of the transmission shaft, the transmission is stable and reliable. For most optimized transmission, face-tooth coupling transmission shaft is used with large transmission torque.

Brakes system
- Brakes system includes traveling brake, parking brake, emergency brake and auxiliary brake.
- Parking brake: Force driven by accumulator is applied on the second to sixth axle.
- Traveling brake: All wheels use the air servo brakes and dual-circuit brake system and are equipped with drum brakes.
- Auxiliary brake consists of engine brake and exhaust brake, thus reducing the speed of crane and reduce the abrasion of brake parts and save the cost.

Suspension system
- All axles adopt the plate spring suspension systems with plate spring passed 100,000 fatigue tests and with optimized performance parameters of the front and rear plate springs applied to ensure strength and also to provide comfort ridding.

Steering system
- Single-circuit hydraulic power steering system equipped with mechanical steering limit is used with emergency steering device driven by emergency pump applied.

Outrigger
- Four-point supporting of the H-shaped outriggers ensures easy operation and strong stability with Max. span up to 7.56m×7.6m. They are made of fine-grain high-strength steel sheet with full hydraulic transverse telescopic outriggers adopted for first and second outriggers and with automatic horizontal adjustment applied for outriggers through a vertical cylinder.

Tyres
- 12.00R24 20PR

Electrical system
- With 2*12V maintenance-free batteries, the crane power can be cut off manually via a mechanical master power switch. The use of CAN-bus control system can achieve information interaction between superstructure and undercarriage.

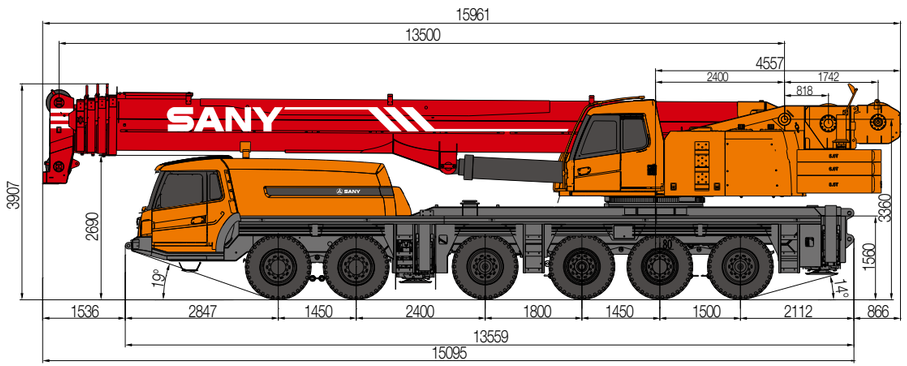

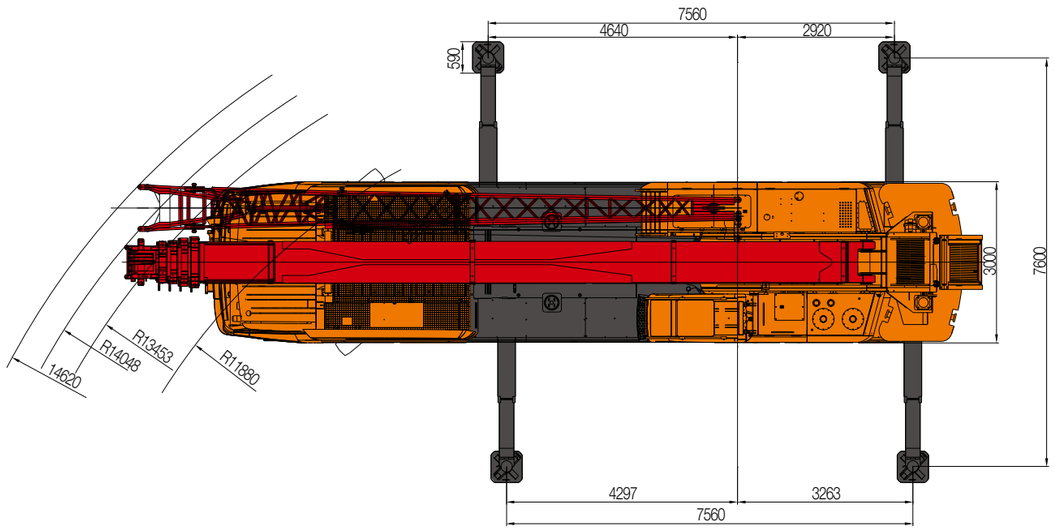

https://truckmanualshub.com/

Type	Item		Parameter
Capacity	Max. lifting capacity		100 t
Dimensions	Overall length		15961 mm
	Overall width		3000 mm
	Overall height		3907 mm
	Axle distance	Axle-1,2	1450 mm
		Axle-2,3	2400 mm
		Axle-3,4	1800 mm
		Axle-4,5	1450 mm
		Axle-5,6	1500 mm
Weight	Overall weight		55000 kg
	Axle load	Axle load-1,2,3	24000 kg
		Axle load-3,4,6	31000 kg
	Rated power		350 kW/ 1800 rpm
	Rated torque		2300 N.m/ 1100 rpm
Traveling	Max.traveling speed		80 km/h
	Turning radius	Min.turning radius	12 m
	Wheel formula		12× 6
	Min.ground clearance		302 mm
	Approach angle		19 °
	Departure angle		14 °
	Max.gradeability		40%
	Fuel consumption per 100km		≤ 60 L
Main Performance Data	Temperature range		– 20 °C ~ +46°C
	Min.rated range		3 m
	Tail slewing radius of swingtable		4.56 m
	Boom section		5
	Boom shape		U-shaped
	Max.lifting moment	Base boom	3600 kN·m
		Full-extend boom	1920 kN·m
		Full-extend boom+jib	1000 kN·m
	Boom length	Base boom	13.5 m
		Full-extend boom	52 m
		Full-extend boom+jib	70 m
	Outrigger span (Longitudinal×Transversal)		7.56 × 7.6 m
	Jib offset		0 °, 15 °, 30 °
Working speed	Max.single rope lifting speed of main winch (no load)		135 m/min
	Max.single rope lifting speed of auxiliary winch (no load)		123 m/min
	Full extension/retraction time of boom		120 / 100 s
	Full lifting/descending time of boom		60 / 90 s
	Slewing speed		2 r/min
Aircondition	Aircondition in up cab		Cooling/Heating
	Aircondition in low cab		Cooling/Heating

STC1000 Working Ranges

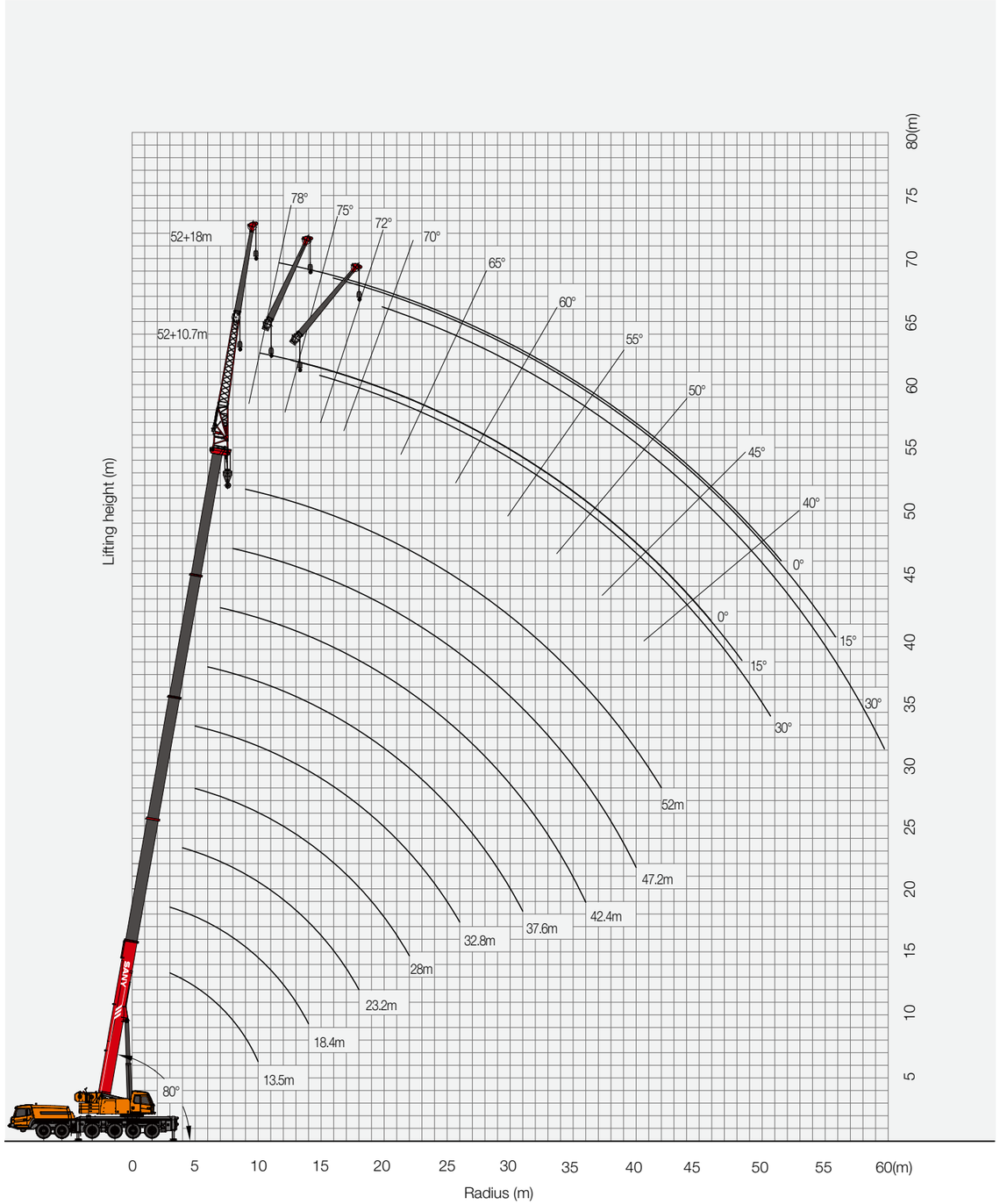

https://truckmanualshub.com/

Prerequisites:
① Boom operating conditions(fully extended boom length),min.length is 13.5m and max.length is 52m
② The span of outriggers is 7.56m×7.6m
③ 360°rotation is applied
④ Counterweight is 0T

Range（m）	Main boom length（m）								
	13.5	18.4	23.2	28	32.8	37.6	42.4	47.2	52
3	100	90							
3.5	100	82	70						
4	91.8	75	65.6						
4.5	81.6	70	61.8	51.8					
5	71.5	64.9	58.4	48.9					
5.5	59.2	54.2	50.4	46.2	40.8				
6	50.1	46.2	43.3	42.5	38.6				
6.5	43.2	40	37.6	37.3	36.5	33.3			
7	37.7	35	33.1	33	32.6	31.8			
7.5	32.9	31	29.3	29.5	29.2	28.7			
8	28.7	27.6	26.2	26.6	26.4	26.1	25.5		
9	22.3	21.7	21.3	21.8	22	21.8	21.5	21.1	
10	17.7	17.2	17	18.2	18.5	18.5	18.3	18.1	
11	14.1	13.8	13.5	15.1	15.8	15.9	15.8	15.7	15.5
12		11.1	10.9	12.4	13.5	13.8	13.8	13.7	13.6
14		6.9	6.7	8.3	9.4	10.2	10.5	10.5	10.5
16		3.9	3.8	5.4	6.4	7.2	7.8	8.2	8.2
18			1.8	3.3	4.3	5.1	5.6	6.1	6.5
20				1.7	2.7	3.4	4	4.4	4.8
22					1.4	2.1	2.7	3.1	3.5
24						1.1	1.6	2.1	2.5
26								1.2	1.6
28									0.9
Number of lines	12	10	8	6	5	4	4	3	2
Min.main boom elevation angle（°）	12.1	5.9	30.9	38.9	43.6	46.9	52.8	54.2	55.3

Prerequisites:
① Boom operating conditions(fully extended boom length),min.length is 13.5m and max.length is 52m
② The span of outriggers is 7.56m×7.6m
③ 360°rotation is applied
④ Counterweight is 8.52T

Range（m）	Main boom length（m）								
	13.5	18.4	23.2	28	32.8	37.6	42.4	47.2	52
3	100	90							
3.5	100	87	70						
4	91.8	75	65.6						
4.5	81.6	70	61.8	51.8					
5	73.4	66	58.4	48.9					
5.5	66.8	62	55.3	46.2	40.8				
6	61.2	57.3	52.6	43.8	38.6				
6.5	53.6	49.8	47	41.6	36.7	33.3			
7	47	43.9	41.5	39.7	35	31.7			
7.5	41.7	39	37.1	37	33.3	30.3			
8	37.4	35	33.3	33.4	31.9	28.9	26.5		
9	30.1	28.7	27.4	27.8	27.7	27.4	24.3	18.6	
10	24.4	23.9	22.9	23.5	23.6	23.5	23.2	17.7	
11	19.9	19.6	19.4	20.1	20.3	20.4	20.2	16.8	14.5
12		16.3	16.1	17.3	17.7	17.8	17.7	15.9	13.7
14		11.4	11.3	12.8	13.7	13.9	14	14	12.7
16		7.9	7.9	9.4	10.4	11.1	11.2	11.3	11.3
18			5.4	6.8	7.8	8.6	9.1	9.2	9.3
20			3.4	4.9	5.9	6.6	7.1	7.6	7.7
22				3.3	4.3	5	5.6	6	6.4
24				2	3	3.7	4.3	4.7	5.1
26					2	2.7	3.2	3.6	4
28					1.1	1.8	2.3	2.7	3.1
30						1	1.5	2	2.3
32							0.9	1.3	1.7
34									1.1
Number of lines	12	10	8	6	5	4	4	3	2
Min.main boom elevation angle（°）	12.1	5.9	17.6	21.5	23.8	32	37.1	44.4	46.6

Prerequisites:
① Boom operating conditions(fully extended boom length+jib length), max.length is 52m+10.7m/18m
② The span of outriggers is 7.56m×7.6m
③ 360°rotation is applied
④ Counterweight is 8.52T

Main boom elevation angle	52m main boom											
	10.7m jib						18m jib					
	Jib0°		Jib15°		Jib30°		Jib0°		Jib15°		Jib30°	
	Lifting weight	Range(m)	Lifting weight	Range(m)	Lifting weight	Range(m)	Lifting weight	Range(m)	Lifting weight	Range(m)	Lifting weight	Range(m)
78°	7	10.1	5.2	12.5	3.7	14.8	3.8	11.6	2.8	15.8	2.2	19.6
75°	6.8	13.2	4.5	15.6	3.6	17.8	3.4	15.1	2.6	19.3	2.1	22.9
72°	6.3	16.2	4.2	18.5	3.4	20.6	3.2	18.5	2.5	22.6	2	26.1
70°	5.4	18.2	4	20.5	3.3	22.6	3	20.7	2.4	24.7	1.9	28.2
65°	4.4	23.1	3.6	25.3	3.1	27.2	2.7	26.2	2.1	30	1.7	33.2
60°	2.7	27.9	2.4	30	2.3	31.8	1.9	31.5	1.6	35.1	1.4	38
55°	1.5	32.4	1.4	34.4	1.3	36	1	36.6	0.8	40	0.7	42.6
50°	0.7	36.7	0.7	38.6	0.6	40	—	—	—	—	—	—

https://truckmanualshub.com/

Prerequisites:
① Boom operating conditions(fully extended boom length),min.length is 13.5m and max.length is 52m
② The span of outriggers is 7.56m×7.6m
③ 360°rotation is applied
④ Counterweight is 14.48T

Range（m）	Main boom length（m）								
	13.5	18.4	23.2	28	32.8	37.6	42.4	47.2	52
3	100	90							
3.5	100	82	70						
4	91.8	75	65.6						
4.5	81.6	70	61.8	51.8					
5	73.4	66	58.4	48.9					
5.5	66.8	62	55.3	46.2	40.8				
6	61.2	58.3	52.6	43.8	38.6				
6.5	56.5	53.8	50	41.6	36.7	33.3			
7	52.5	50	47.2	39.7	35	31.7			
7.5	47.7	44.7	42.5	37.9	33.3	30.3			
8	42.8	40.2	38.3	36.2	31.9	28.9	26.5		
9	35	33.1	31.6	31.9	29.2	26.6	24.3	18.6	
10	28.8	27.8	26.6	27.1	27.1	24.5	22.5	17.7	
11	24	23.7	22.7	23.3	23.5	23.5	20.9	16.8	14.5
12		20.2	19.6	20.3	20.6	20.6	19.4	15.9	13.7
14		14.6	14.5	15.7	16.1	16.3	16.3	14.5	12.7
16		10.6	10.6	12.1	12.9	13.2	13.3	13.3	11.7
18			7.8	9.2	10.2	10.8	10.9	11	10.6
20			5.6	7	8	8.7	9.1	9.2	9.3
22				5.2	6.2	6.9	7.4	7.8	7.9
24				3.8	4.8	5.5	6	6.4	6.7
26					3.6	4.3	4.8	5.2	5.6
28					2.6	3.3	3.8	4.2	4.6
30					1.7	2.4	2.9	3.4	3.7
32						1.7	2.2	2.6	3
34						1.1	1.6	2	2.3
36							1	1.4	1.7
38								0.9	1.2
Number of lines	12	10	8	6	5	4	4	3	2
Min.main boom elevation angle（°）	12.1	5.9	17.6	21.5	10.8	16	26.4	32.3	40.1

Prerequisites:
① Boom operating conditions(fully extended boom length+jib length), max.length is 52m+10.7m/18m
② The span of outriggers is 7.56m×7.6m
③ 360°rotation is applied
④ Counterweight is 14.48T

Main boom elevation angle	52m main boom											
	10.7m jib						18m jib					
	Jib0°		Jib15°		Jib30°		Jib0°		Jib15°		Jib30°	
	Lifting weight	Range(m)	Lifting weight	Range(m)	Lifting weight	Range(m)	Lifting weight	Range(m)	Lifting weight	Range(m)	Lifting weight	Range(m)
78°	7	10.1	5.2	12.5	3.7	14.8	3.8	11.6	2.8	15.8	2.2	19.6
75°	6.8	13.2	4.5	15.6	3.6	17.8	3.4	15.1	2.6	19.3	2.1	22.9
72°	6.3	16.2	4.2	18.5	3.4	20.6	3.2	18.5	2.5	22.6	2	26.1
70°	5.4	18.2	4	20.5	3.3	22.6	3	20.7	2.4	24.7	1.9	28.2
65°	4.5	23.1	3.6	25.3	3.1	27.2	2.7	26.2	2.2	30	1.7	33.2
60°	3.9	27.9	3.3	30	2.9	31.8	2.4	31.5	1.9	35.1	1.5	38
55°	2.6	32.4	2.4	34.4	2.2	36	1.8	36.6	1.6	40	1.4	42.6
50°	1.6	36.7	1.5	38.6	1.6	40	1.1	41.4	0.9	44.5	0.9	46.8
45°	1	40.7	0.9	42.4	0.9	43.6	—	—	—	—	—	—

https://truckmanualshub.com/

Prerequisites:
① Boom operating conditions(fully extended boom length),min.length is 13.5m and max.length is 52m
② The span of outriggers is 7.56m×7.6m
③ 360°rotation is applied
④ Counterweight is 19.46T

Range（m）	Main boom								
	13.5	18.4	23.2	28	32.8	37.6	42.4	47.2	52
3	100	90							
3.5	100	82	70						
4	91.8	75	65.6						
4.5	81.6	70	61.8	51.8					
5	73.4	66	58.4	48.9					
5.5	66.8	62	55.3	46.2	40.8				
6	61.2	58.3	52.6	43.8	38.6				
6.5	56.5	53.8	50	41.6	36.7	33.3			
7	52.5	50	47.2	39.7	35	31.7			
7.5	49	46.6	44.1	37.9	33.3	30.3			
8	45.9	43.7	41.3	36.2	31.9	28.9	26.5		
9	38.8	36.8	35.2	33.2	29.2	26.6	24.3	18.6	
10	32.1	31	29.8	30.2	27	24.5	22.5	17.7	
11	26.9	26.6	25.5	26.1	25	22.7	20.9	16.8	14.5
12		22.9	22.1	22.8	23	21.2	19.4	15.9	13.7
14		17.1	17	17.8	18.1	18.3	17	14.5	12.7
16		13	12.9	14.1	14.6	14.9	15	13.3	11.7
18			9.8	11.2	12	12.3	12.4	12	10.6
20			7.3	8.8	9.8	10.2	10.4	10.5	9.8
22				6.9	7.8	8.5	8.8	9	8.9
24				5.3	6.2	6.9	7.5	7.6	7.8
26					4.9	5.6	6.1	6.5	6.7
28					3.8	4.5	5	5.5	5.8
30					2.9	3.6	4.1	4.5	4.9
32						2.8	3.3	3.7	4
34						2.1	2.6	3	3.3
36							1.9	2.3	2.7
38							1.4	1.8	2.1
40							0.9	1.3	1.6
42								0.9	1.2
Number of lines	12	10	8	6	5	4	4	3	2
Min.main boom elevation angle（°）	12.1	5.9	17.6	21.5	10.8	16	2.6	21	32.4

Prerequisites:
① Boom operating conditions(fully extended boom length+jib length), max.length is 52m+10.7m/18m
② The span of outriggers is 7.56m×7.6m
③ 360°rotation is applied
④ Counterweight is 19.46T

Main boom elevation angle	52m main boom											
	10.7m jib						18m jib					
	0°		15°		30°		0°		15°		30°	
	Lifting weight	Range(m)	Lifting weight	Range(m)	Lifting weight	Range(m)	Lifting weight	Range(m)	Lifting weight	Range(m)	Lifting weight	Range(m)
78°	7	10.1	5.2	12.5	3.7	14.8	3.8	11.6	2.8	15.8	2.2	19.6
75°	6.8	13.2	4.5	15.6	3.6	17.8	3.4	15.1	2.6	19.3	2.1	22.9
72°	6.3	16.2	4.2	18.5	3.4	20.6	3.2	18.5	2.5	22.6	2	26.1
70°	5.4	18.2	4	20.5	3.3	22.6	3	20.7	2.4	24.7	1.9	28.2
65°	4.5	23.1	3.6	25.3	3.1	27.2	2.7	26.2	2.2	30	1.7	33.2
60°	4	27.9	3.3	30	2.9	31.8	2.4	31.5	1.9	35.1	1.5	38
55°	3.4	32.4	2.4	34.4	2.3	36	1.9	36.6	1.6	40	1.4	42.6
50°	2.4	36.7	2.2	38.6	2.1	40	1.7	41.4	1.5	44.5	1.3	46.8
45°	1.7	40.7	1.6	42.4	1.5	43.6	1.1	45.9	1	48.8	0.9	50.7
40°	1.1	44.5	1	46	0.9	47	—	—	—	—	—	—

https://truckmanualshub.com/

COUNTERWEIGHT SKETCH MAP

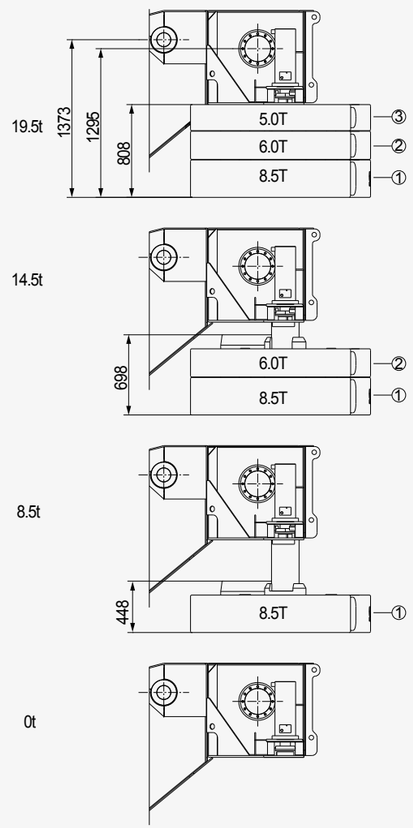

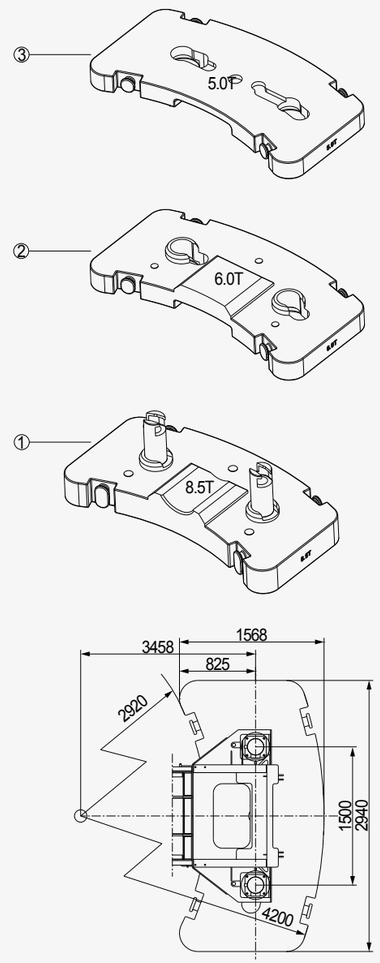

WHEEL CRANE FAMILY MAP

TRUCK CRANE

STC200
Maximum Load Capacity: 20t
Telescopic Boom: 4 Sections, 10.6-33m

STC250
Maximum Load Capacity: 25t
Telescopic Boom: 4 Sections, 10.65-33.5m

STC250H
Maximum Load Capacity: 25t
Telescopic Boom: 5 Sections, 10.5-39.5m

STC300S
Maximum Load Capacity: 30t
Telescopic Boom: 5 Sections, 10.6-40.5m

STC300TH
Maximum Load Capacity: 30t
Telescopic Boom: 4 Sections, 10.6-33.5m

STC300H
Maximum Load Capacity: 30t
Telescopic Boom: 5 Sections, 10.5-39.5m

STC500
Maximum Load Capacity: 50t
Telescopic Boom: 5 Sections, 11.5-43m

STC550
Maximum Load Capacity: 55t
Telescopic Boom: 5 Sections, 11.5-43m

STC600S
Maximum Load Capacity: 60t
Telescopic Boom: 5 Sections, 11.3-43.5m

STC750
Maximum Load Capacity: 75t
Telescopic Boom: 5 Sections, 11.8-45m

STC800S
Maximum Load Capacity: 80t
Telescopic Boom: 5 Sections, 12.2-47m

STC1000
Maximum Load Capacity: 100t
Telescopic Boom: 5 Sections, 13.5-52m

STC1000C
Maximum Load Capacity: 100t
Telescopic Boom: 6 Sections, 13.25-60m

STC1000S
Maximum Load Capacity: 100t
Telescopic Boom: 5 Sections, 12.26-58m

STC1200S
Maximum Load Capacity: 120t
Telescopic Boom: 7 Sections, 12.6-63.5m

STC1300C
Maximum Load Capacity: 130t
Telescopic Boom: 6 Sections, 13.3-60m

STC1600
Maximum Load Capacity: 160t
Telescopic Boom: 6 Sections, 13.4-62m

STC2200
Maximum Load Capacity: 220t
Telescopic Boom: 6 Sections, 14.35-68m

ALL TERRAIN CRANE

SAC1800
Maximum Load Capacity: 180t
Telescopic Boom: 6 Sections, 13.5-62m

SAC2200
Maximum Load Capacity: 220t
Telescopic Boom: 6 Sections, 13.5-62m

SAC2600
Maximum Load Capacity: 260t
Telescopic Boom: 6 Sections, 15.65-73m

SAC3000
Maximum Load Capacity: 300t
Telescopic Boom: 7 Sections, 15.4-83m

SAC3500
Maximum Load Capacity: 350t
Telescopic Boom: 6 Sections, 15.2-70m

SAC6000
Maximum Load Capacity: 600t
Telescopic Boom: 7 Sections, 17.1-90m

ROUGH-TERRAIN CRANE

SRC250
Maximum Load Capacity: 25t
Telescopic Boom: 4 Sections, 9.9-31.5m

SRC350
Maximum Load Capacity: 35t
Telescopic Boom: 4 Sections, 10-31.5m

SRC550
Maximum Load Capacity: 55t
Telescopic Boom: 4 Sections, 11.25-34.5m

SRC550H
Maximum Load Capacity: 55t
Telescopic Boom: 5 Sections, 11.5-43m

SRC750
Maximum Load Capacity: 75t
Telescopic Boom: 5 Sections, 11.8-45m

SRC1200
Maximum Load Capacity: 120t
Telescopic Boom: 5 Sections, 13-49m

https://truckmanualshub.com/

Quality Changes the World

SANY AUTOMOBILE HOISTING MACHINERY

Address: SANY Industrial Park, Jinzhou Development Zone,
Changsha, Hunan, China.
Service Hotline: 4006098318
Email: crd@sany.com.cn
For more information, please visit: www.sanygroup.com

For our consistent improvement in techonology, specifications may change without notice.
The machines illustrated may show optional equipment which can be supplied at additional cost.

Version: 2015.08

Distributed By: