https://truckmanualshub.com/

BODY BUILDER INSTRUCTIONS

Mack Trucks

Bodybuilder; Brakes and Air Systems
PI / CHU, AN / CXU, GR / GU, TD
LR, TE / MRU
Section 5

Introduction

This information provides design and function, specification and procedure details for Brake and Air Systems for MACK vehicles.

Note: We have attempted to cover as much information as possible. However, this information does not cover all the unique variations that a vehicle chassis may present. Note that illustrations are typical but may not reflect all the variations of assembly.

All data provided is based on information that was current at time of release. However, **this information is subject to change without notice**.

Please note that no part of this information may be reproduced, stored, or transmitted by any means without the express written permission of MACK Trucks, Inc.

Contents:

- “Air Brake System”, page 2
- “Air Solenoid Valves”, page 4
- “Liftable Axle Air System Requirements”, page 7
- “Air Lines Joystick Control”, page 15
- “Air Line Hose Installation”, page 16
- “Air Lines Routing”, page 23
- “Air Brake Routing Schematics”, page 34
- “Air Line Numbers and Description”, page 46
- “Air Tank Fittings”, page 52
- “Brake Literature”, page 53

All Rights Reserved

https://truckmanualshub.com/

Air Brake System

Air Brake System MVSS Requirements

MVSS Compliance

As manufactured by MACK Trucks, Inc., the air brake system on MACK chassis (both incomplete and complete) comply with the applicable requirements of U.S. Federal and Canada Motor Vehicle Safety Standards (MVSS) 106, Brake Hoses, and 121, Air Brake Systems. Any change or addition to the system may cause the vehicle to no longer be in compliance with these MVSS.

MVSS 121 requirements cover (but are not limited to) the following:

- Air compressor build-up time
- Air reservoir volume
- Service brake stopping distance
- Brake actuation time
- Brake release time
- Parking brake hold on grades
- Emergency brake stopping distance

For a complete list of certification requirements, refer to U.S. Federal MVSS 121 or Canada MVSS 121. These motor vehicle safety standards can be accessed at the following web addresses:

- **Federal Motor Vehicle Safety Standards** https://www.gpo.gov/
- **Canada Motor Vehicle Safety Standards** http://www.tc.gc.ca/eng/acts-regulations/regulations-crc-c1038.htm

It is the responsibility of the body/equipment installer/alterer to ensure that the MACK vehicle remains in compliance with applicable MVSS. It is also the responsibility of the body/equipment installer/alterer to comply with applicable vehicle certification regulations.

Air Brake System Truck Tractor

There are basic differences between straight truck and truck tractor air systems. On a straight truck, a spring brake control valve is added to the emergency brake air circuit. This gives the driver modulated control of the spring brakes through the treadle valve in the event of a primary system air loss. Additionally, spring brake chambers are installed on both axles of a tandem rear axle unit so that if there is a partial air system pressure loss, the emergency brake system will stop the vehicle within the required stopping distance, and also to meet parking brake system requirements.

A truck air system is designed to be operated as that of a truck, and a truck tractor air system is designed to be operated as that of a truck tractor. When converting chassis for use other than as originally intended (e.g., converting a truck tractor to a truck), the air system must also be changed to ensure that the vehicle remains in compliance with MVSS. Contact MACK Trucks, Inc. Product Support for more information.

All Rights Reserved

https://truckmanualshub.com/

Air-Operated Equipment

Additional air system capacity may be required for air-powered accessories to operate properly without jeopardizing the integrity of the air brake system. Motor Vehicle Safety Standards (MVSS) 121 requires an air capacity 12 times the total volume of all air brake chambers on the vehicle. For additional information on calculating total air volume and brake chamber rated air volumes, refer to Liftable Axle Air System Requirements section in this bulletin.

If additional air capacity is required, an expansion reservoir should be installed. The reservoir and piping must comply with MVSS.

Note: When making any modifications to the vehicle that involves the addition of air springs (i.e., liftable tag or pusher axles having air suspensions), the air springs should be supplied by a pressure protected air source so that the air brake system is protected (to the setting of the pressure protection valve) against air loss should a leak develop in the auxiliary system.

Air Compressor Capacity

If increased air system volume is necessary, it is also necessary to determine if the air compressor has the capacity to supply the air system without having to run in the loaded mode (compressing) for long periods of time. Motor Vehicle Safety Standards (MVSS) 121 requires that the air compressor must be able to increase pressure in the supply and service (primary and secondary) reservoirs from 586 – 690 kPa (85 –100 psi), with the engine running at maximum governed RPM, in a specific amount of time, depending on required and actual reservoir capacity. If the existing compressor cannot accomplish this, a larger compressor must be used. First, however, make sure that an air compressor malfunction or other type of problem with the air system is not causing the slow build-up time.

Build-up time may be calculated as shown.

$$\textbf{Build-up Time} = \frac{\textbf{Actual Reservoir Capacity}}{\textbf{Required Reservoir Capacity}} \times 25$$

Example:

$$\textbf{Build-up Time} = \frac{7500}{6900} \times 25$$

$$\textbf{Build-up Time} = 1.087 \times 25$$

$$\textbf{Build-up Time} = 27.2 \text{ Seconds}$$

585931a

W5032562

Calculating Air System Build-up Time

All Rights Reserved

https://truckmanualshub.com/

Air Solenoid Valves

MACK chassis now incorporate electrically operated air solenoid valves to direct air pressure to the various accessory air circuits such as air suspension control, fifth wheel slide, inter-axle lockout, power takeoff (PTO), etc. Additional air solenoid valves can be added to the air solenoid valve pack which is located on the right-hand frame rail, mounted behind the intermediate crossmember.

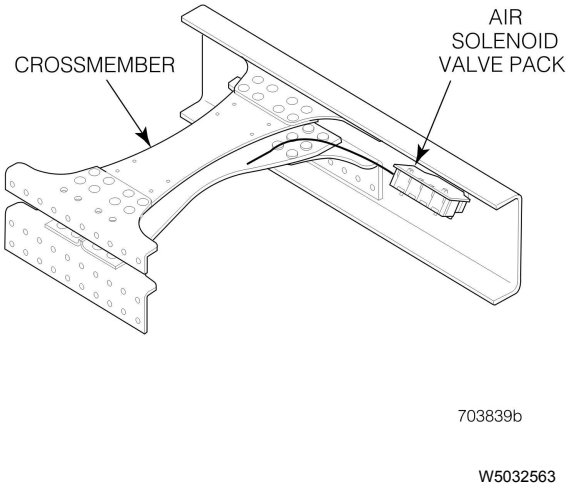

Fig. 1 Air Solenoid Valve Pack Location

To add an air solenoid to the solenoid valve pack, disconnect the valve pack connector from the chassis harness, and then remove the valve pack from the mounting bracket. Remove the end cap from the valve back by twisting the cap counterclockwise. Engage the new solenoid into the locking ring of the last solenoid in the pack, and then twist the solenoid clockwise to lock the solenoids together. Reinstall the end cap in the same manner.

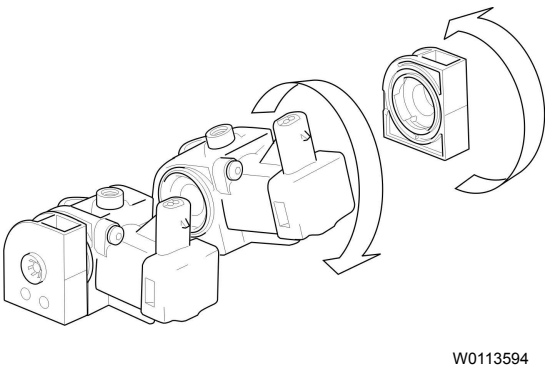

Fig. 2 Assembling Solenoid Valve

All Rights Reserved

https://truckmanualshub.com/

Run the wires for the new solenoid(s) along the existing valve pack harness, and then connect the terminal ends for the solenoid(s) into the appropriate cavities (pins D and S for the PTO control solenoid and pins K and N for neutral control) of the valve pack connector body. The following table lists the solenoid valve pack pin assignments:

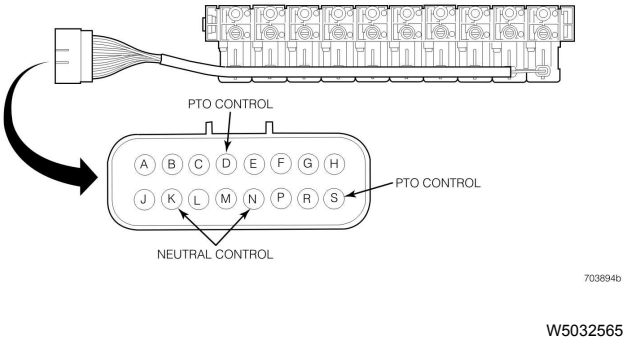

Fig. 3 Air Solenoid Valve Pack Connector Pin Assignments

Pin +	Pin	Description
B	L	Inter-Wheel Lock
C	R	Air Suspension Control (dump valve)
D	R	PTO Control
E	S	Inter-Axle Lock
F	R	Inside/Outside Air
G	M	Fifth Wheel Release
H	A	Fifth Wheel Slide
K	N	Air Horn or Neutral Control
J	R	Auxiliary Axle 1
J	R	First Lift Axle
G	M	Second Lift Axle
J	R	First Lift Axle
G	M	Second Lift Axle
P	M	Third Lift Axle

All Rights Reserved

https://truckmanualshub.com/

Air Solenoid Valve Pack Connector and Pin Part Numbers

Should replacement of the valve pack connector body, pins, seals and plugs be necessary, refer to the following illustration for the applicable part numbers.

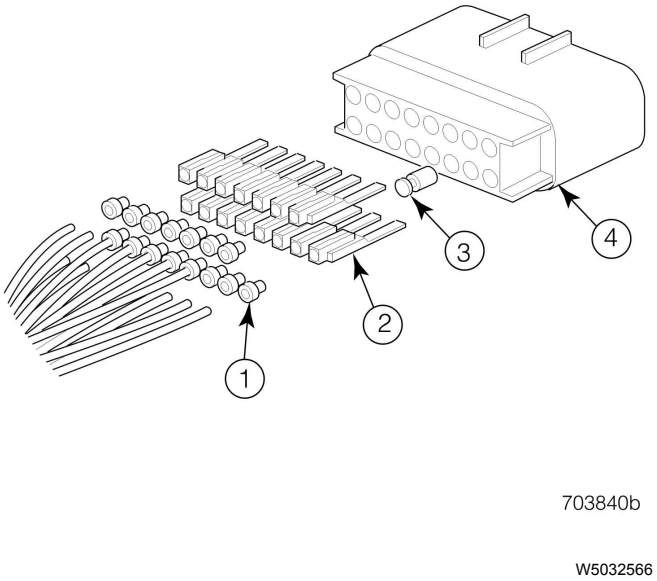

Fig. 4 Connector Component Part Numbers

Key	Part No.	Description
1	20739620	Seal
2	20739618	Terminal
3	20388120	Plug (for unused connector cavities)
4	20387692	Connector body

All Rights Reserved

https://truckmanualshub.com/

Liftable Axle Air System Requirements

Installation of a liftable axle(s) may require additional air capacity for operation of the service brakes, up/down air bags and suspension air bags.

Note: The addition of a liftable axle increases the load carrying capacity of the vehicle, which may affect the ability of the parking brake system to hold the vehicle on a hill. Motor Vehicle Safety Standard (MVSS) 121 requires that the parking brake system be capable of holding the vehicle under specified conditions. To ensure continued compliance with MVSS 121 when a liftable axle is added, it may be necessary for the installer to increase the capacity of the parking brake system to account for the increase in the gross vehicle weight rating (GVWR).

Liftable Axle Air Capacity

U.S. Federal and Canada Motor Vehicle Safety Standard (MVSS) 121 requires that total air capacity for the vehicle must be 12 times the total volume of all air chambers (front and rear chambers and liftable axle air brake chambers). As an example, a standard chassis having four type-30 service brake chambers on the rear axles and two type-24 service brake chambers on the front axle would require a total air system capacity of 5,880 cubic inches, excluding air requirements for the liftable axle brake chambers.

Rear Axle:
Chamber Volume x Number of Chambers x 12

89 cu in. (Type 30) x 4 x 12 = 4272

Front Axle:
67 cu in. (Type 24) x 2 x 12 = 1608

TOTAL AIR SYSTEM CAPACITY 5880 cu in.

585932a

W5032567

Fig. 5 Calculating Air System Capacity

All Rights Reserved

https://truckmanualshub.com/

The addition of two type-24 brake chambers for the liftable axle installation would require an additional 1,608 cubic inches of air system capacity.

LIFTABLE AXLE:
Chamber Volume x Number of Chambers x 12

67 cu in. (Type 24) x 2 x 12 = 1608 cu in.

TOTAL AIR SYSTEM CAPACITY 5880 CU IN.

TOTAL VOLUME FOR AIR SYSTEM WITH ADDITIONAL LIFT AXLE 7488 CU IN.

585933a

W5032570

Fig. 6 Calculating Air System Capacity with Additional Chambers for Liftable Axle

Total air system capacity for the chassis, including the additional capacities for the two type-24 brake chambers, would be 7,488 cubic inches.

The following table from MVSS 121 lists the brake chamber rated volumes at 689.5 kPa (100 psi) for the length of stroke for each chamber type.

Brake Chamber Rated Volumes

Brake Chamber (Nominal Area of Piston or Diaphragm Square in)	Full Stroke (in)	Rated Volume (Cubic in)
Type 9	1.75/2.10	25
Type 12	1.75/2.10	30
Type 14	2.25/2.70	40
Type 16	2.25/2.70	46
Type 18	2.25/2.70	50
Type 20	2.25/2.70	54
Type 24	2.50/3.20	67
Type 30	2.50/3.20	89
Type 36	3.00/3.60	135

All Rights Reserved

https://truckmanualshub.com/

MVSS 121 requires that the combined volume of all service reservoirs and supply reservoirs be at least 12 times the combined volume of all service brake chambers. For each brake chamber type having a full stroke at least as great as the first number in Column 1 of the table above, but no more than the second number in Column 1 of the table above, the volume of each brake chamber for purposes of calculating the required combined service and supply reservoir volume shall be either that specified in Column 2 of the table above or the actual volume of the brake chamber at maximum travel of the brake piston or push rod, whichever is lower. The volume of a brake chamber not listed in the table above, is the volume of the brake chamber at maximum travel of the brake piston or push rod. The reservoirs of the truck portion of an auto transporter need not meet this requirement for reservoir volume.

An expansion reservoir must be added to the air system to supply air pressure for the braking and up/down functions of a liftable axle(s). The expansion reservoir for the liftable axle brake function must be supplied by the primary air system, and supply to the expansion reservoir should include a one-way check valve to protect the liftable axle air system should a leak develop in the primary air system. Additionally, supply to the liftable axle(s) control valves for suspension function should be supplied by the secondary air system and should also include a pressure protection valve. A pressure protection valve prevents a total loss of pressure should a leak develop in any part of the lift axle system.

It must also be determined if the air compressor capacity is sufficient to handle the increase in air volume. For additional information, refer to Air Compressor Capacity section in this bulletin..

Liftable Axle Air Piping

- **Relay Valve**

A liftable axle must have its own service brake relay valve. A standard R-12 relay valve (part No. 8235–RKN28067 or 745-103009N) can be used.

Note: It is the responsibility of the body/equipment installer/alterer to ensure that the chassis remains in compliance with U.S. Federal and Canada Motor Vehicle Safety Standards (MVSS) 106 and 121 when modifications are made to the air brake system. With respect to brake timing, a quick release valve (such as part No. 8235-RKN32011) may be necessary in the control circuit when a liftable axle is added. Do not use a pressure differential-type quick release valve for this type of application.

Note: One relay valve is capable of supplying pressure to four brake chambers. For multiple axle installations, additional relay valves must be installed according to the number of additional brake chambers being added to the system (i.e., one relay valve is required for one or two additional axles [four brake chambers], two relay valves are required for three or four additional axles [eight brake chambers], etc.).

- **Air Line Tubing**

It is recommended that 12.7 mm (1/2 in) plastic air line tubing be used from the expansion air reservoir to the supply port of a lift axle service brake relay valve. On liftable axles equipped with Type 20, 24 or 30 brake chambers, 12.7 mm (1/2 in) air line hose is recommended for the line from the relay valve delivery ports to the brake chambers. A 9.5 mm (3/8 in) air line hose is recommended for Type 12 and 16 brake chambers. If air pressure is being delivered from a liftable axle relay valve to a bulkhead fitting, 12.7 mm (1/2 in) air line hose is recommended for the line to the bulkhead fitting. It is recommended that the guidelines listed above be used for the lines from the bulkhead fitting to the brake chambers.
It is recommended that 9.5 mm (3/8 in) plastic air line tubing be used for control pressure lines. Control pressure for a liftable axle brake circuit must be supplied from the primary side of the brake treadle valve. On chassis NOT equipped with automatic traction control (ATC), a T-fitting should be installed into the control port of the rear axle service brake relay valve to supply control pressure to a liftable axle service brake relay valve. On chassis equipped with ATC, control pressure must be plumbed into the rear axle relay control circuit ahead of the ATC valve.
Air pressure for the liftable axle suspension and lift bags should be supplied from the secondary air system.

The following piping diagrams illustrate the recommended brake, suspension and lift air piping for liftable axles.

All Rights Reserved

https://truckmanualshub.com/

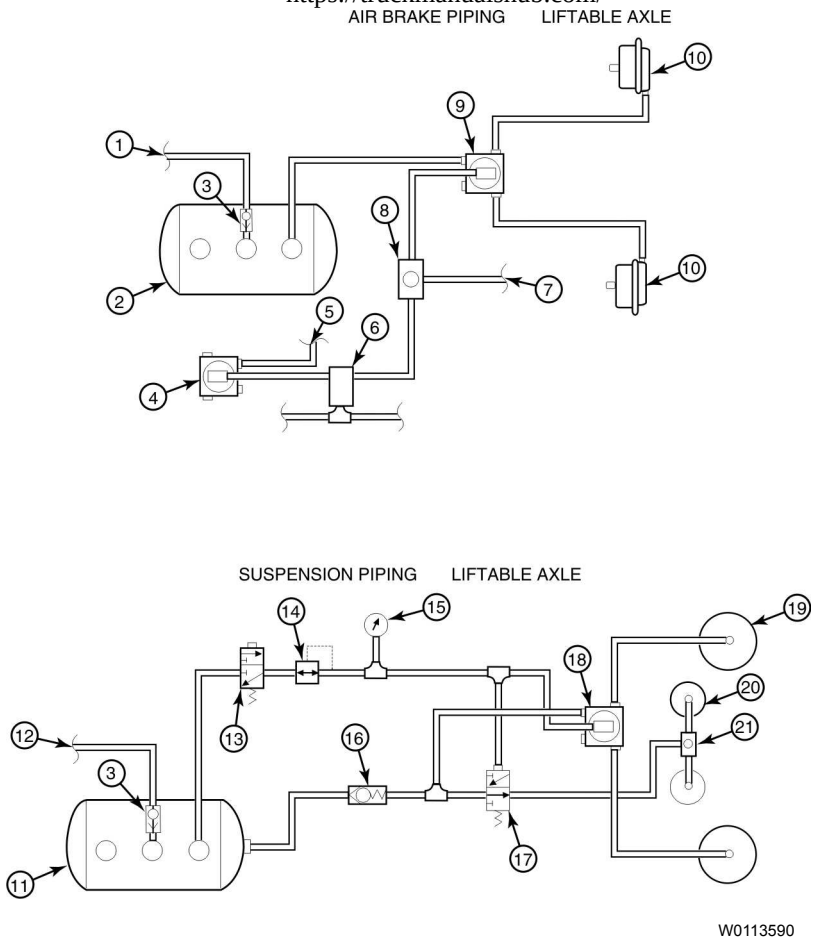

Fig. 7 One Tag Axle or One Pusher Axle

1. Primary Supply Pressure (from Primary Reservoir) 2. Primary Expansion Reservoir 3. One Way Check Valve (MACK Part No. 745–800376) 4. Rear Axle Service Brake Relay Valve 5. Primary Supply Pressure 6. ATC Valve (if Equipped) 7. Primary Control Pressure (from Treadle Valve) 8. Quick Release Valve (if Required) 9. Liftable Axle Service Brake Relay Valve R-12 (Part No. 8235-RKN28067 or 745-103009N) 10. Tag or Pusher Axle Brake Chamber 11. Secondary Reservoir	12. Supply Pressure to Secondary Reservoir (from Supply Reservoir) 13. Up/Down Solenoid Valve 14. Pressure Regulator 15. Pressure Gauge 16. Pressure Protection Valve (MACK Part No. 25168652) 17. Lift Control Valve (Normally Open) 18. Liftable Axle Air Suspension Relay Valve 19. Liftable Axle Suspension Air Bag 20. Liftable Axle Lift Air Bag 21. Quick Release Valve

All Rights Reserved

https://truckmanualshub.com/

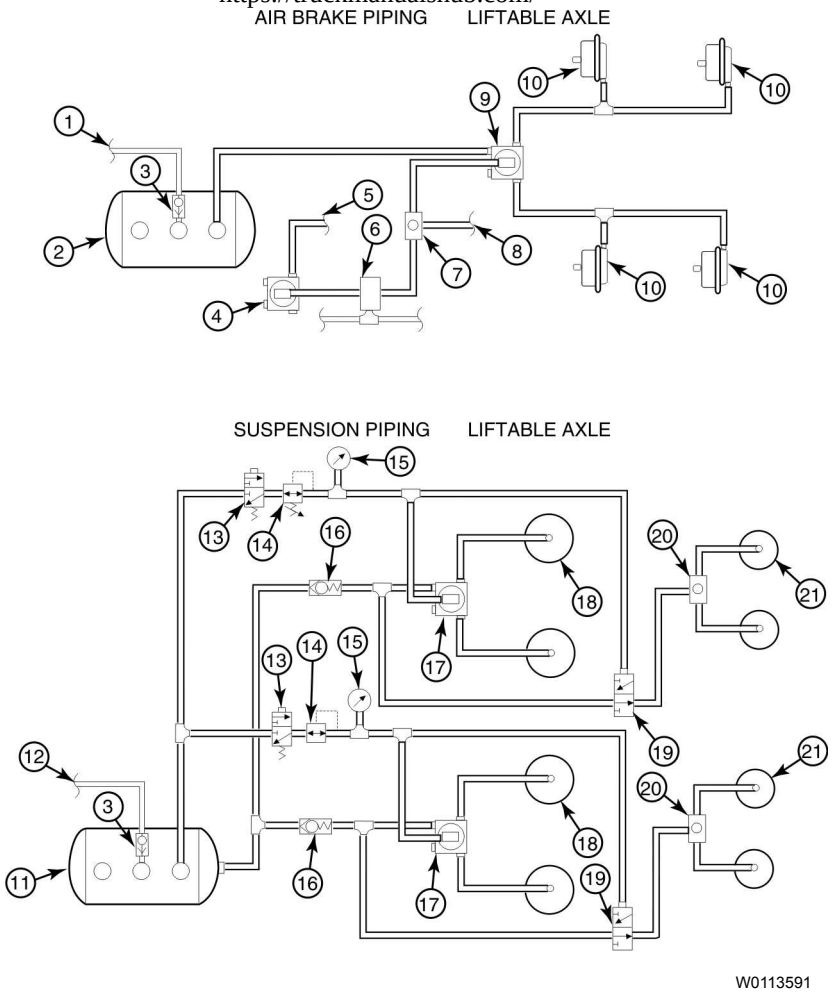

Fig. 8 Two Pusher Axles

1. Primary Supply Pressure (from Primary Reservoir) 2. Primary Expansion Reservoir 3. One Way Check Valve (MACK Part No. 745–800376) 4. Rear Axle Service Brake Relay Valve 5. Primary Supply Pressure 6. ATC Valve (if Equipped) 7. Quick Release Valve (if Required) 8. Primary Control Pressure (from Treadle Valve) 9. Pusher Axle Service Brake Relay Valve R-12 (Part No. 8235-RKN28067 or 745-103009N) 10. Pusher Axle Brake Chamber 11. Secondary Reservoir	12. Supply Pressure to Secondary Reservoir (from Supply Reservoir) 13. Up/Down Solenoid Valve 14. Pressure Regulator 15. Pressure Gauge 16. Pressure Protection Valve (MACK Part No. 25168652) 17. Pusher Axle Air Suspension Relay Valve 18. Pusher Axle Suspension Air Bag 19. Lift Control Valve (Normally Open) 20. Quick Release Valve 21. Pusher Axle Lift Air Bag

All Rights Reserved

https://truckmanualshub.com/

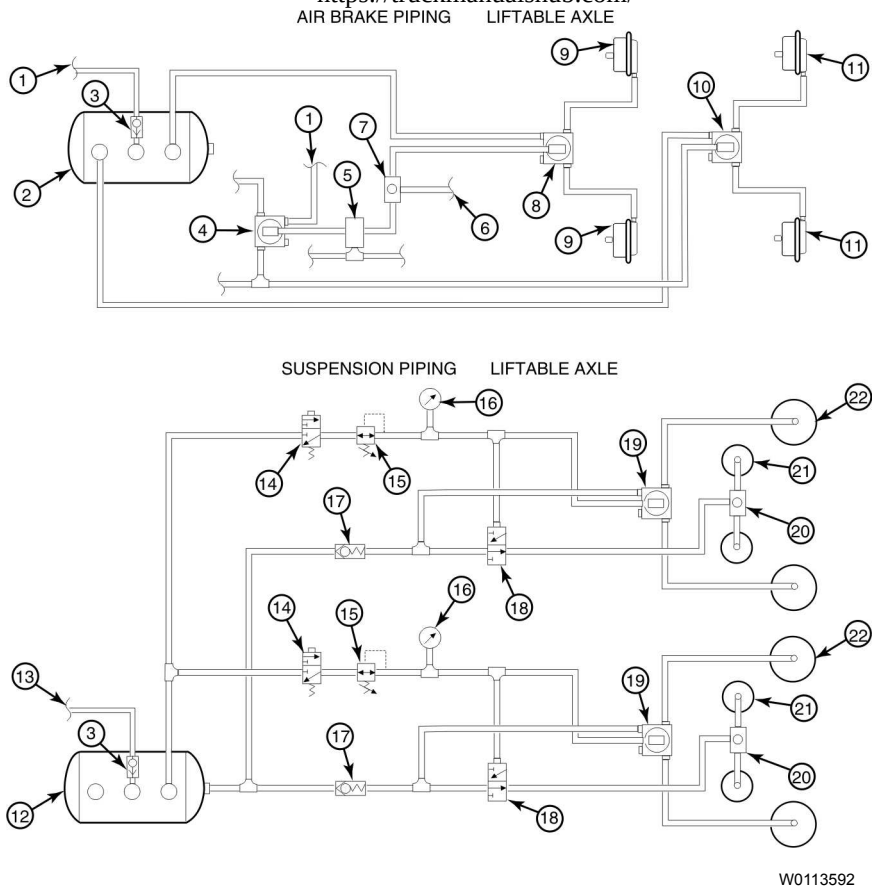

Fig. 9 One Tag Axle and One Pusher Axle

1. Primary Supply Pressure (from Primary Reservoir) 2. Primary Expansion Reservoir 3. One Way Check Valve (MACK Part No. 745–800376) 4. Service Brake Relay Valve 5. ATC Valve (if Equipped) 6. Primary Control Pressure (from Treadle Valve) 7. Quick Release Valve (if Required) 8. Pusher Axle Service Brake Relay Valve R-12 (Part No. 8235-RKN28067 or 745-103009N) 9. Pusher Axle Brake Chamber 10. Tag Axle Service Brake Relay Valve R-12 (Part No. 8235–RKN28067 or 745-103009N) 11. Tag Axle Brake Chamber 12. Secondary Reservoir	13. Supply Pressure to Secondary Reservoir (from Supply Reservoir) 14. Up/Down Solenoid Valve (Tag and Pusher Circuits) 15. Pressure Regulator (Tag and Pusher Circuits) 16. Pressure Gauge (Tag and Pusher Circuits) 17. Pressure Protection Valve for Tag and Pusher Circuits (MACK Part No. 25168652) 18. Lift Control Valve (Normally Open) 19. Tag and Pusher Suspension Air Bag Relay Valve 20. Quick Release Valve 21. Axle Lift Air Bags (Tag and Pusher Axles) 22. Axle Air Suspension Air Bags (Tag and Pusher Axles)

All Rights Reserved

https://truckmanualshub.com/

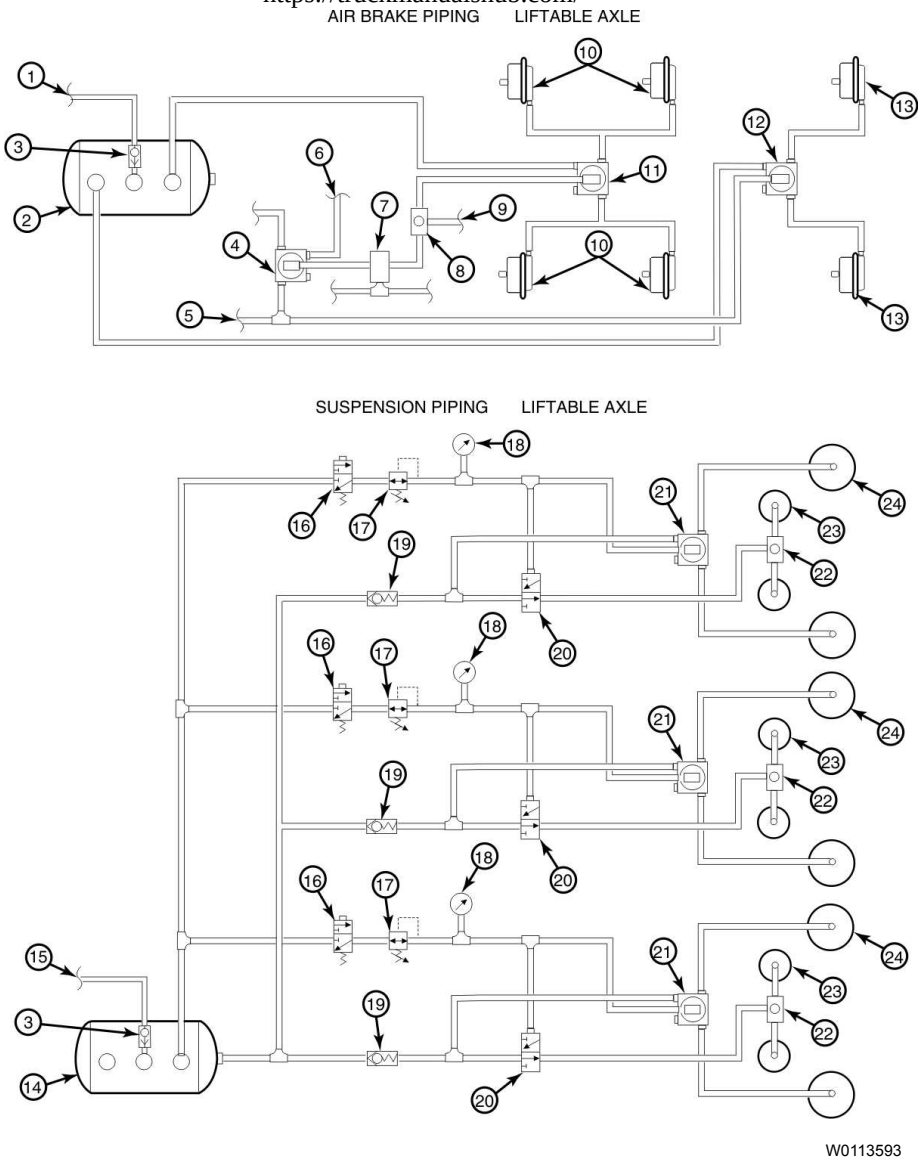

Fig. 10 Two Pusher Axles and One Tag Axle

1. Primary Supply Pressure (from Primary Reservoir) 2. Primary Expansion Reservoir 3. One Way Check Valve (MACK Part No. 745–800376) 4. Rear Axle Service Brake Relay Valve 5. Delivery Pressure to Rear 6. Primary Supply Pressure 7. ATC Valve (if Equipped) 8. Quick Release Valve (if Required) 9. Primary Control Pressure (from Treadle Valve) 10. Pusher Axle Brake Chambers 11. Pusher Axle Service Brake Relay Valve R-12 (Part No. 8235-RKN28067 or 745-103009N) 12. Tag Axle Service Brake Relay Valve R-12 (Part No. 8235-RKN28067 or 745-103009N)	13. Tag Axle Brake Chamber 14. Secondary Reservoir 15. Supply Pressure (from Supply Reservoir) 16. Up/Down Solenoid Valve 17. Pressure Regulator 18. Pressure Gauge 19. Pressure Protection Valve (MACK Part No. 25168652) 20. Lift Control Valve (Normally Open) 21. Liftable Axle Air Suspension Relay Valve 22. Quick Release Valve 23. Liftable Axle Lift Air Bag 24. Liftable Axle Suspension Air Bag

All Rights Reserved

https://truckmanualshub.com/

Liftable Axle Anti-Lock Brakes

CAUTION

If liftable axles (tags or pushers) are being added to a chassis equipped with the MACK Road Stability Advantage (RSA) system, and it is desired to keep the RSA system active, the liftable axle(s) must be self-steer type axles. The self-steer liftable axle(s) service brakes MUST NOT be activated by modulated air pressure from the anti-lock brake system. Currently, the only chassis having the RSA system approved for adding self-steer liftable axles are chassis used in concrete mixer and heavy-haul tractor applications.

Anti-lock brakes are not specifically required for liftable axles. Should anti-lock brakes be desired, however, the following piping diagrams illustrate how liftable axles can be included in the anti-lock brake system.

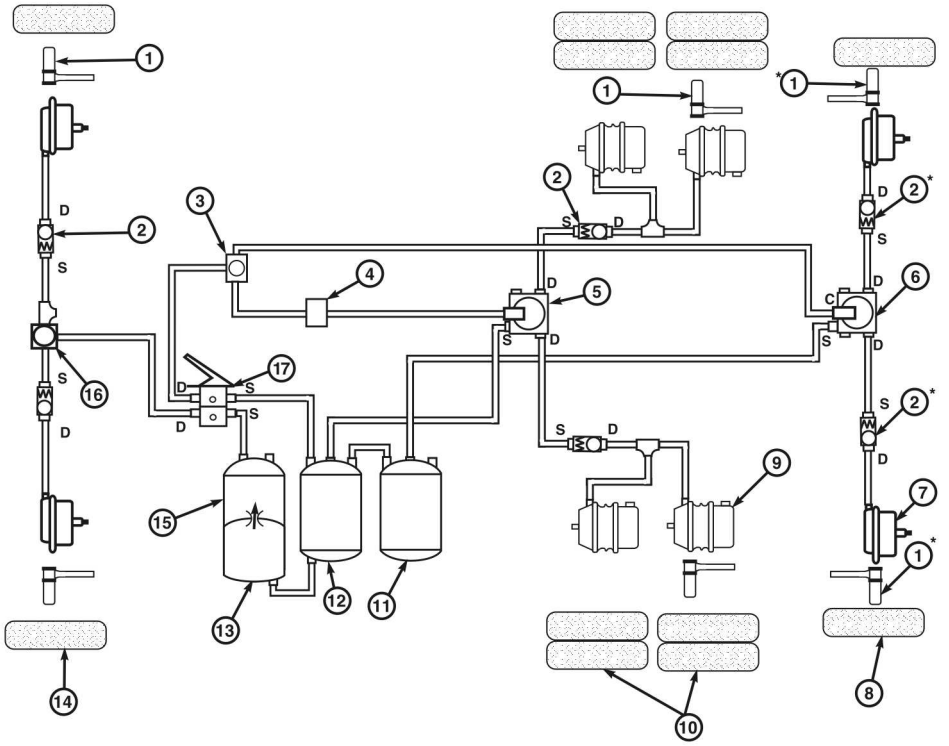

Fig. 11 6S/6M Anti-Lock Brakes with Single Tag and Single Pusher and One Relay Valve for Tag and Pusher Axles

1. ABS Sensor	9. Spring Brake Chamber
2. ABS Modulator Valve	10. Drive Axles
3. T-Fitting or Quick Release Valve (If Required)	11. Expansion Reservoir (Primary Air)
4. Automatic Traction Control (ATC) Valve (If Equipped)	12. Primary Reservoir
5. Service Brake Relay Valve R-14	13. Supply Reservoir
6. Lift Axle Service Brake Relay R-12 (Part No. 8235 – RKN28067 or 745 –103009N)	14. Steer Axle
7. Brake Chamber	15. Secondary Reservoir
8. Tag Axle	16. Front Axle Quick Release Valve
	17. Treadle Valve

All Rights Reserved

https://truckmanualshub.com/

Air Lines Joystick Control

TE / MRU and LR models include a bundle of seven 6.4 mm (1/4 in) air lines routed from the joystick area inside the cab to the outside of the cab. These air lines provide a convenient means of connecting a joystick to the chassis air system and to the different systems that the joystick will control. Refer to the following illustration for the location of the air line bundle.

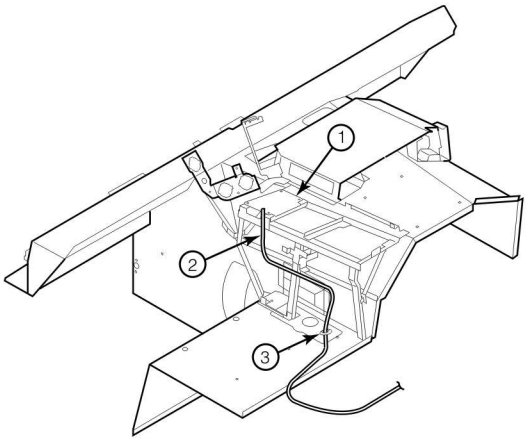

586434a

W5032577

Fig. 12 Joystick Air Line Bundle TE / MRU Models

1. Joystick Air Line Bundle 2. Joystick Mounting Area	3. Air Line Bundle Pass-Through Grommet

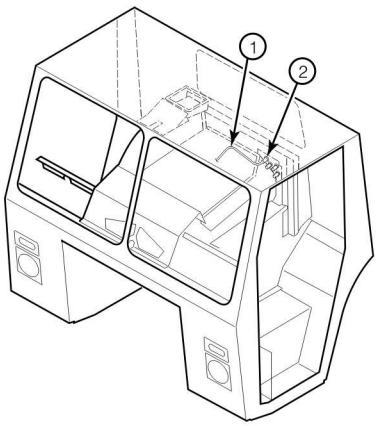

586435a

W5032578

Fig. 13 Joystick Air Line Bundle LR Models

1. Joystick Air Line Bundle	2. Air Line Bundle Pass-Through Grommet

All Rights Reserved

https://truckmanualshub.com/

Air Line Hose Installation

Flexible air line hose may eventually fail. However, by following proper installation, clamping and routing procedures, hose life can be maximized. Also, when selecting an air line hose, make sure that the hose is the same diameter as the hose being replaced. Replacing an air line hose with a different size hose may affect brake timing.

Avoid Twisting Hoses are imprinted with a layline along the length of the hose to help determine if the hose is twisted. The hose is twisted if the layline spirals around the hose. Swivel fittings make it possible to install a hose without a twist. When installing a hose, install one fitting so that the layline is visible when the fitting is tight. While the other fitting is still loose, the hose may be rotated as needed until the layline follows the hose routing without spiraling around the hose. Similarly, elbow fittings can be aligned to avoid hose twist.

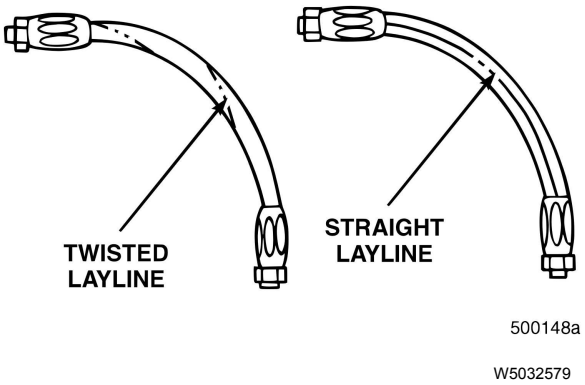

Fig. 14 Twisted and Straight Laylines

Notes

All Rights Reserved

https://truckmanualshub.com/

Avoid Excessive Torque on Fittings Unlike pipe threads, swivel fittings do not depend on thread compression to seal. DO NOT overtighten a swivel fitting, as this will damage the fitting or sealing surfaces.

An air line should be installed as follows:

1 Tighten male pipe ends of hose assemblies first, then tighten the swivel fittings.
2 Whenever possible, install any adapters needed in accessories (as a bench procedure) first.
3 Use an adjustable or open end wrench to install air hose assemblies. DO NOT use pipe wrenches as they will mar the fittings and damage the plating material.
4 DO NOT use pipe thread-sealing compound on swivel-nut hose fittings. Thread sealant should only be used on pipe threads.
5 When installing male-end fittings, use the nipple hex, not the socket hex, to tighten the fitting.

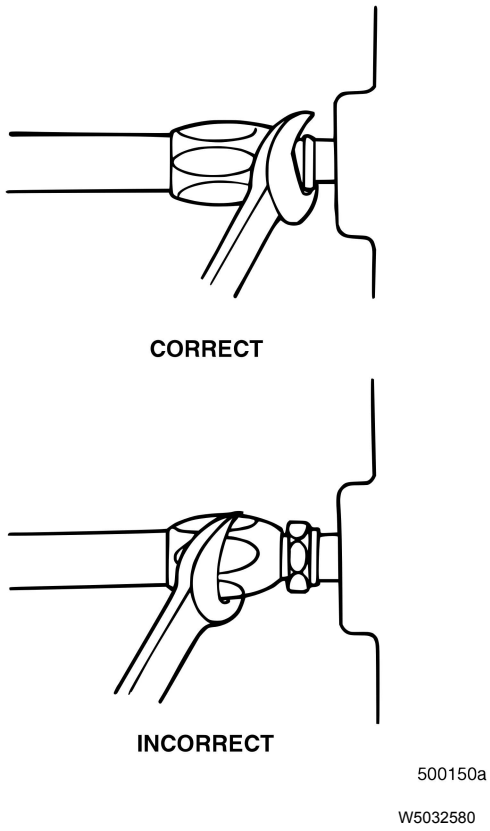

Fig. 15 Tightening Male-End Fittings

All Rights Reserved

https://truckmanualshub.com/

Air Fittings Quick Disconnect

Quick connect style (push-to-connect) air fittings may be used for various applications in the chassis air system. The following guidelines for fitting disassembly and assembly will greatly reduce the possibility of an air leak.

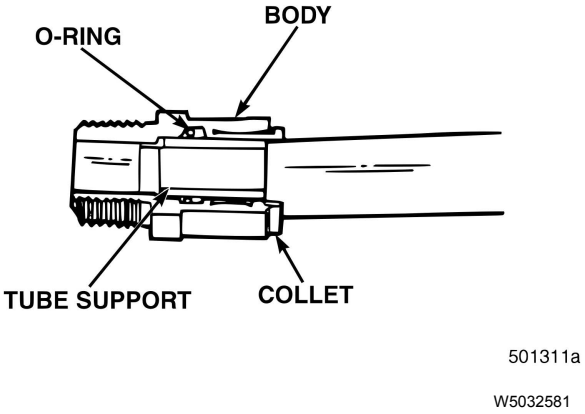

Fig. 16 Push-to-Connect Fitting Cross-Sectional View

Notes

All Rights Reserved

https://truckmanualshub.com/

Fitting Disassembly

1 Ensure that all pressure has been exhausted from the line before disassembling.

2 Using either the tube release tool (Weatherhead part No. 1800TRK or equivalent) or fingers, press the collet head to release the grip on the tubing.

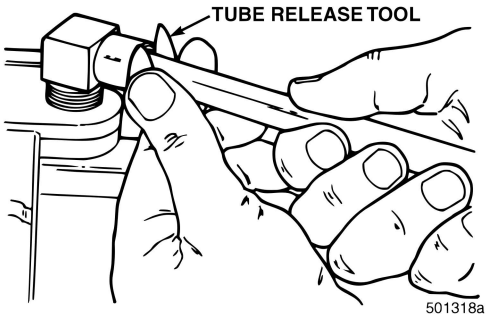

W5032582

3 With the collet pressed, pull the tubing from the fitting.

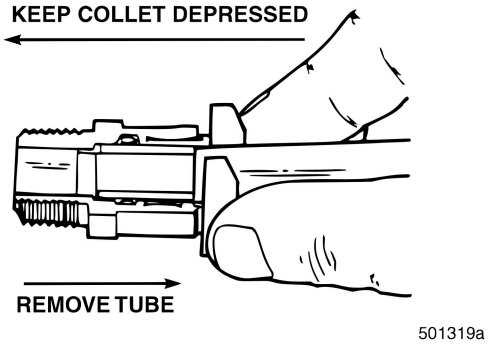

W5032583

Fig. 17 Remove Tube

Notes

All Rights Reserved

https://truckmanualshub.com/

Fitting Assembly Guidelines

1 When installing a fitting, install hand-tight, then make final adjustments with a wrench on the hex or flats of the fitting body. Do not use a wrench near the tubing entry or collet head of the fitting.

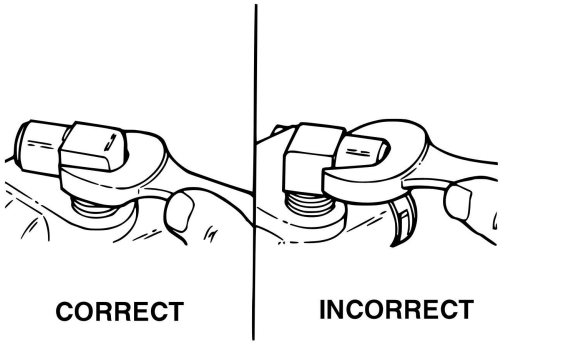

Fig. 18 Proper Fitting Installation

2 When preparing the tube for installation, a square (90-degree°), clean cut edge is recommended. An angled cut up to 15°, however, is acceptable.

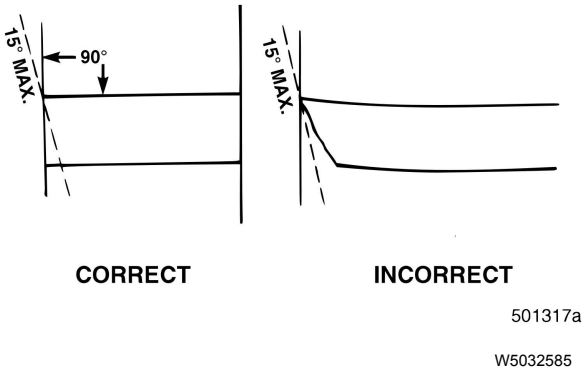

Fig. 19 Clean, Square Cut Tubing Edge

All Rights Reserved

https://truckmanualshub.com/

Use a tubing cutter (Weatherhead part No. T919 or equivalent) to ensure a good clean cut. Dull knives, side-cutters or other types of cutting tools may not ensure a good, clean cut. Burrs, oval tubing and contamination can damage seals and other air system components.

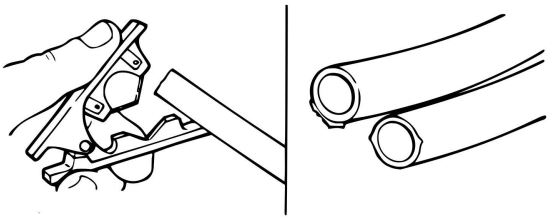

501315a

W5032586

Fig. 20 Use a Tubing Cutter for Proper Cut Edges

3 Install the tubing straight into the fitting until a solid stop is felt. The tubing grip and seal (on the O-ring) is then accomplished. Always protect against contaminants in cartridges and fittings during assembly

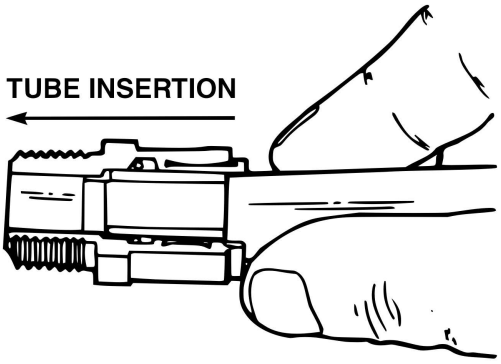

501313a

W5032587

Fig. 21 Insert Tube

Note: DO NOT use detergent, soap and water, or similar types of solutions as a lubricant when installing the tube.

All Rights Reserved

https://truckmanualshub.com/

4 After the tube is fully inserted, gently tug on the tubing to ensure that it is secure in the fitting.

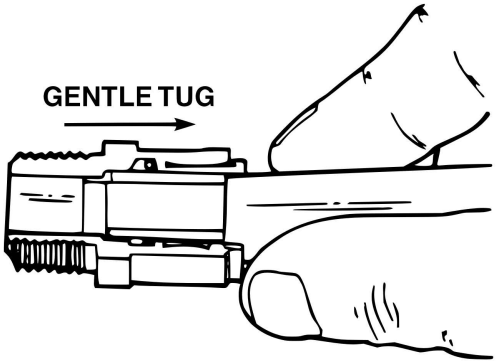

501312a

W5032588

Fig. 22 Ensure Tubing is Secure

5. Check the completed installation. Allow the tube ample room for a gradual bend. Severe bends can collapse the tubing, resulting in line blockage, flow restrictions and an eventual air leak.

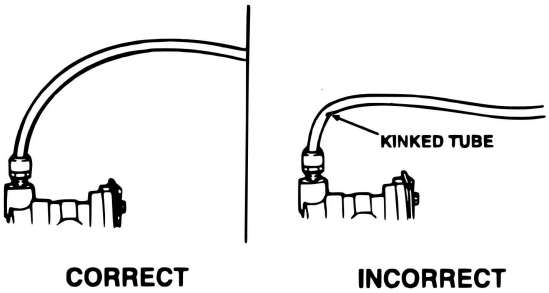

501316b

W5032589

Fig. 23 Inspect Final Installation

6. Start the engine and allow the air system to build pressure to governor cut-out. Stop the engine. Then, using soap and water solution, check the installation for leaks.

All Rights Reserved

https://truckmanualshub.com/

Air Lines Routing

A leading cause of flexible air line leakage is routing. Hoses that are too long, too short, twisted, have sharp bends or that rub against other components will eventually leak.

The following basic rules apply when installing and routing flexible air line:

- A flexible air line should be routed in a straight line or should follow the contours of the equipment to which it is clamped.

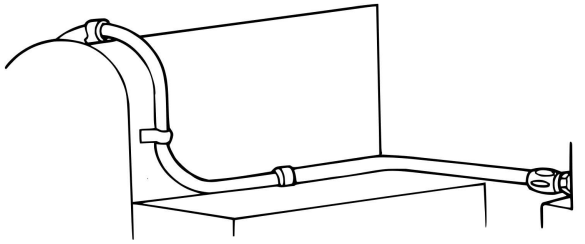

Fig. 24 Flexible Air Line Following Contour of Equipment

- Pairs of flexible air line should be routed together and parallel.

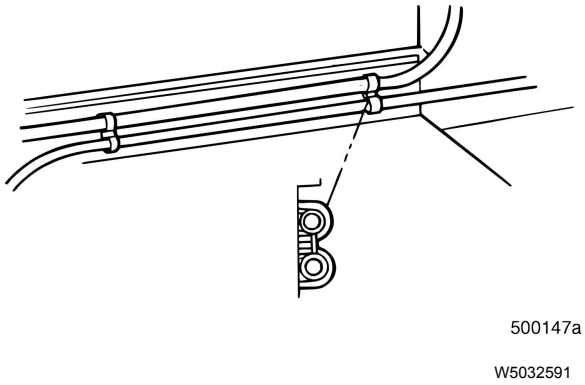

Fig. 25 Air Line Pairs Routed Parallel

All Rights Reserved

https://truckmanualshub.com/

- A flexible air line should be routed and clamped to prevent contact with points of abrasion. When clamping air lines, use clamps that are suitably sized for the diameter of hose. Clamps that are too large allow the hose to move in the clamp, and clamps that are too small may pinch the hose.

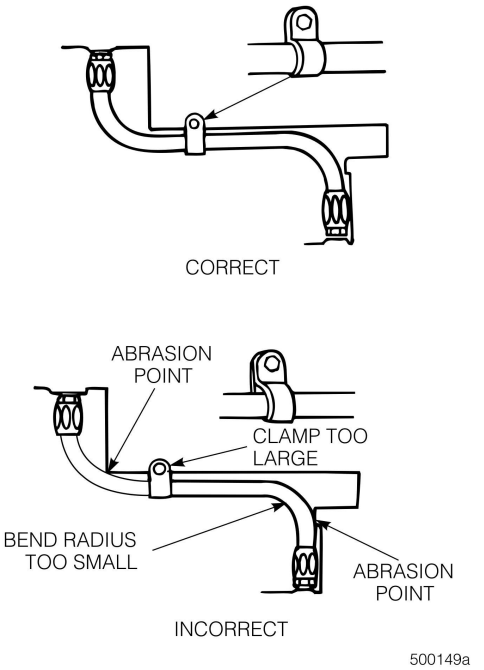

Fig. 26 Route and Clamp Line to Prevent Abrasion

- A flexible air line must be routed and adequately clamped to avoid contact with sharp edges. Clamps should be installed so that the air line is properly supported to prevent drooping and contacting a sharp edge

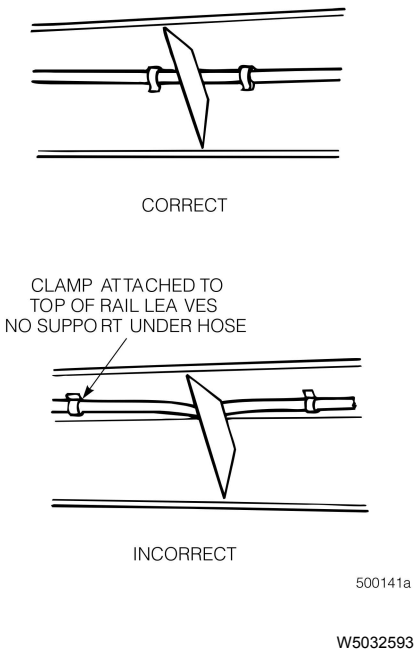

All Rights Reserved

https://truckmanualshub.com/

- Route flexible air line to avoid moving parts. If necessary, use a stand-off bracket to clamp the line away from a moving part.

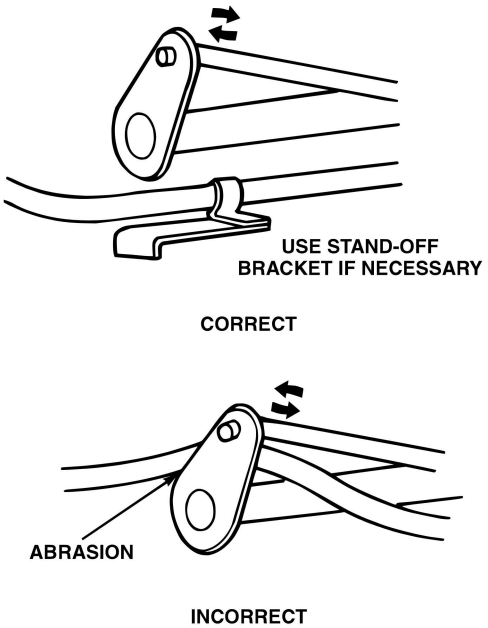

Fig. 27 Route to Avoid Moving Parts

• DO NOT crisscross flexible air lines. The sawing action between crisscrossed hoses eventually causes the line to leak. Use suitable clamps to keep the crisscrossed hoses apart.

Notes

All Rights Reserved

https://truckmanualshub.com/

When routing a flexible air line between components in relative motion, leaks due to abrasion and/or less than optimal bend radius may occur. To minimize possible air leakage, the following guidelines are recommended:

- Sufficient line length must be provided to allow for movement.
- Fittings must not be part of the flexible portion of the hose assembly. To minimize twisting, the hose should bend in the same plane of motion as the boss to which it is connected.

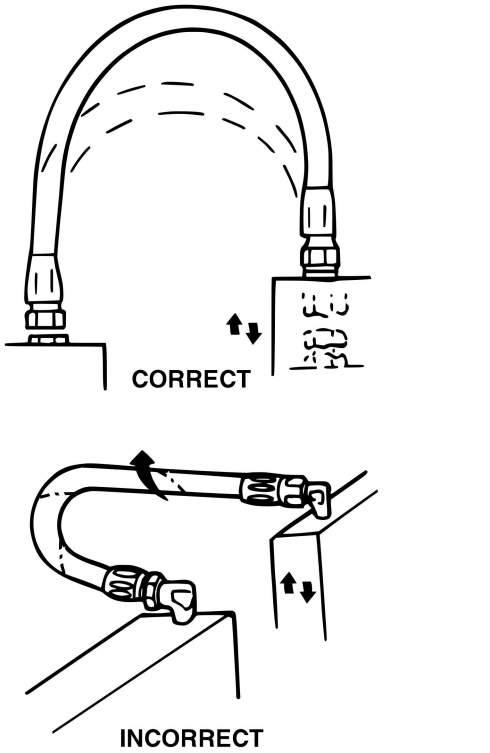

500144a

W5032596

Fig. 28 Properly Clamp Crisscrossed Lines

Notes

All Rights Reserved

https://truckmanualshub.com/

- Flexible air line that is bent in two planes should be clamped at the point where the line changes planes. In effect, this divides the line into two assemblies. DO NOT use nylon tubing in these types of applications

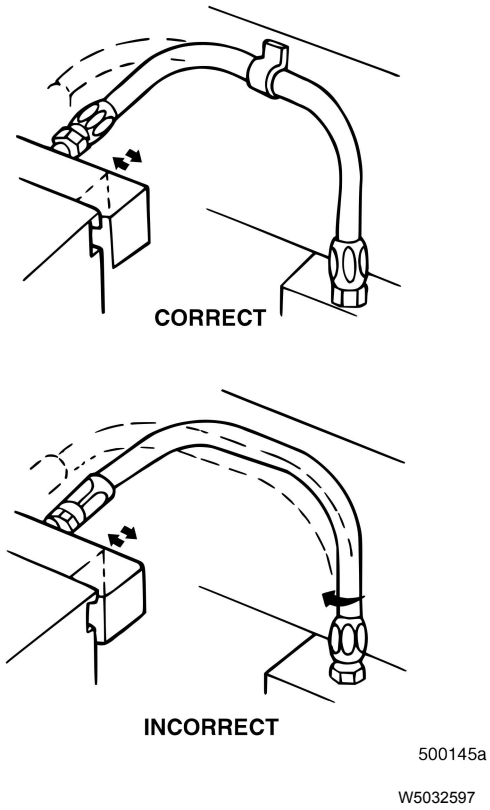

Fig. 29 Clamp Line Where Planes Change

When an air line is routed close to a high heat source (e.g., exhaust pipe, exhaust manifold or radiator), the following minimum clearances must be maintained:

- Braided hose 102 mm (4 in)
- Plastic, nylon or rubber line 152 mm (6 in)

The above clearances may be reduced if an appropriate heat shield is used.

All Rights Reserved

https://truckmanualshub.com/

Air Lines Clamping

To minimize the occurrence of air leakage, the following clamp installation procedures are recommended:

- When installing a clamp, install the fastener parallel to the ground with the clamp suspended from the fastener and the clamp well backed.

- DO NOT install the clamp fastener perpendicular to the ground. The weight of the clamped line may cause the clamp to bend and the line to move.

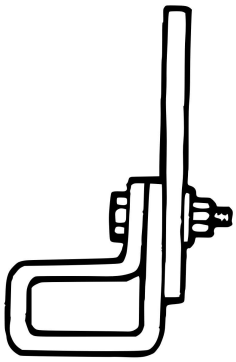

501171a

W5032598

Fig. 30 Preferred Clamp Installation

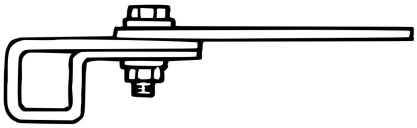

500151a

W5032599

Fig. 31 Avoid Installation Where Fastener is Perpendicular to Ground

- If the clamp fastener must be installed perpendicular to the ground, provide full-length support for the clamp

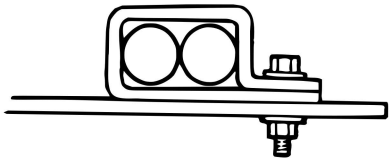

501172a

W5032600

Fig. 32 Provide Proper Clamp Support

All Rights Reserved

https://truckmanualshub.com/

- When installing two clamps on one fastener, install the upper clamp first, then suspend the second clamp.

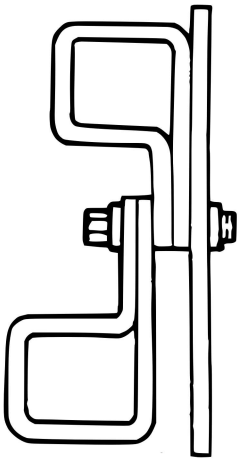

500152a

W5032601

Fig. 33 Installing Two Clamps on One Fastener

Avoid installations where the clamp will not be adequately supported.

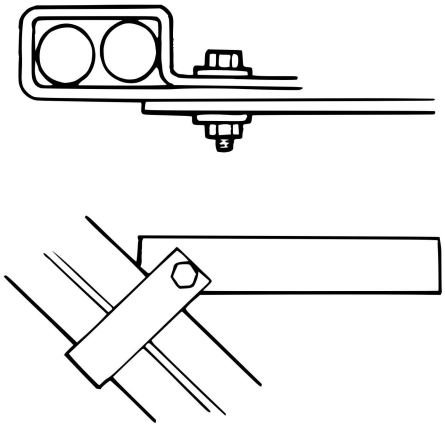

500153a

W5032602

Fig. 34 Avoid Inadequate Clamp Support

All Rights Reserved

https://truckmanualshub.com/

- When clamping multiple hoses, provide a backing of 6.35 mm (0.25 in) minimum past the mounting legs of the clamp

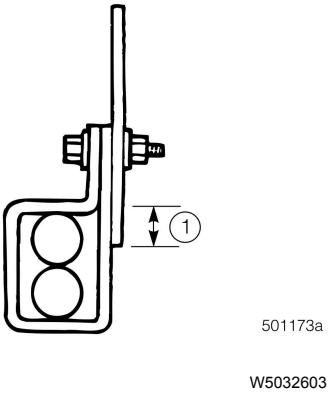

Fig. 35 Proper Backing for Multiple-Hose Clamp Installations

1. 6.35 mm (0.25 in)

- Inverted clamps may be used if the clamp material is of adequate strength to support the load and resist bending.

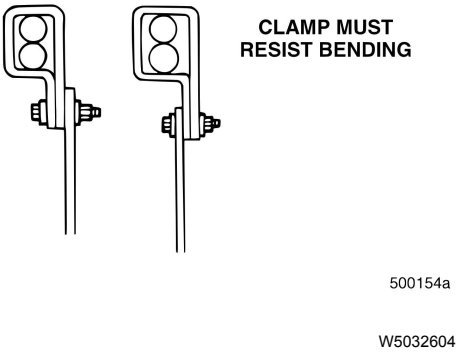

Fig. 36 Inverted Clamp Installation

- If an installation requires that the clamp mounting legs be bent, make sure the clamp material is of adequate strength to support the load and resist further bending.

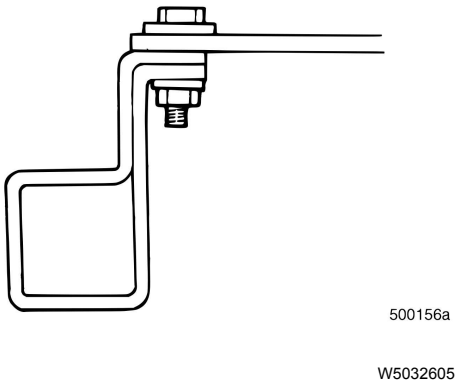

Fig. 37 Bent Clamp Leg Installation

All Rights Reserved

https://truckmanualshub.com/

Clamps

Rubber-covered metal-band clamps of suitable size for the hose being clamped should be used for primary support. DO NOT use a clamp that is too large for the diameter of the hose, because the hose may rub against the clamp and result in an air leak.

Tie Wraps

Nylon tie wraps should be used for bundling air lines together, when necessary, between primary supporting clamps. Do not use tie wraps for primary support of hose lines unless button-head tie wraps are used. Additional information concerning button-head tie wraps can be found in the section.

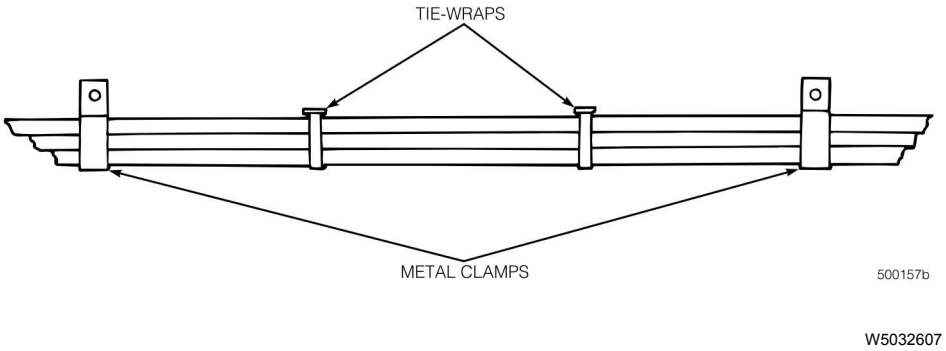

Fig. 38 Metal Clamps for Primary Support, Tie Wraps for Bundling

Nylon tie wraps may be used for primary support when clamping additional hoses to metal clamped hoses as long as the number and size of the additional hose(s) are not greater than the metal clamped hoses. When installing tie wraps, they should be snug, but not so tight as to collapse or cut the hose. Always trim the ends of the tie wraps.

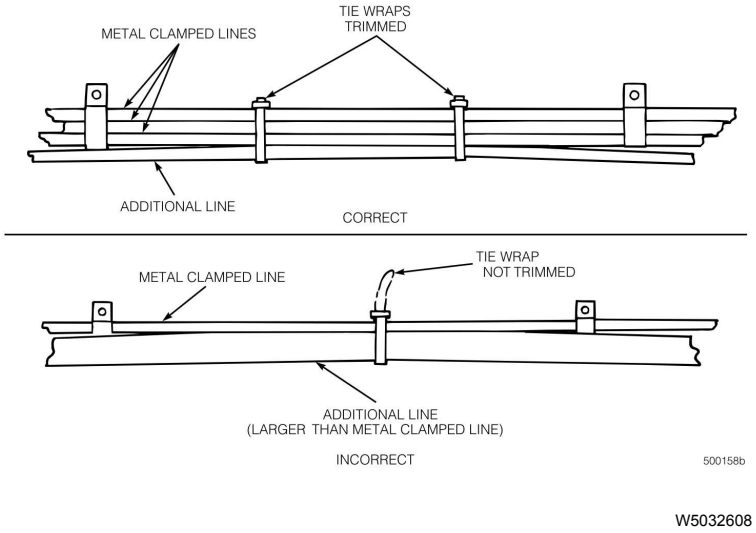

Fig. 39 Use Tie Wraps for Primary Support of Additional Hose(s)

All Rights Reserved

https://truckmanualshub.com/

Button-Head Tie Wraps

Button-head tie wraps were used in certain applications for primary support of air lines at MACK assembly plants. If it becomes necessary to cut this type of tie wrap to install a new air line, install a **new** button-head tie wrap as follows:

- Install the tie wrap through the frame hole and around the air line(s).
- Tighten the wrap by hand until snug, then use Panduit tool No. GS4H or Snap-on tool No. YA317 to properly tension and cut off the excess end of the tie-wrap.
- The cutoff should be flush with the button-head, leaving no burrs or sharp edges. If these special tools are not available, or if the tie wrap was originally installed on a stand-off bracket and clearance for using the tensioning tool is insufficient, tension the tie wrap by hand, then cut off the excess with a diagonal cutter (or similar tool). The tie wrap should be tight, but not so tight that it collapses or pinches the line.
- For bundled air line installations, the lines should be secure within the bundle and without excessive clearance. Refer to the following illustration.

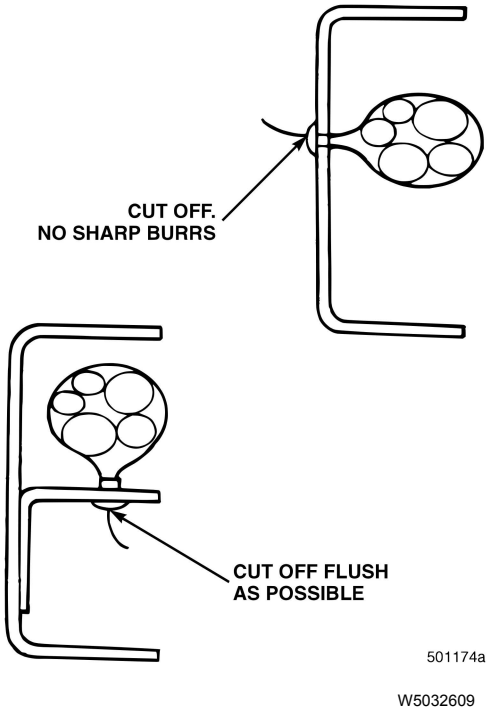

Fig. 40 Installing Button-Head Tie Wraps

All Rights Reserved

https://truckmanualshub.com/

Air Lines Minimum Allowable Radius

For rigid air lines, minimum bending radius recommendations are as follows:

Rigid Airlines		
Tubing OD mm (in)	**Bent by Hand mm (in)**	**Bent with Bending Tool mm (in)**
6.35 (1/4)	25.4 (1)	14.3 (9/16)
9.53 (3/8)	50.8 (2)	25.4 (1)
12.70 (1/2)	76.2 (3)	38.1 (1-1/2)
15.88 (5/8)	101.6 (4)	50.8 (2)
19.05 (3/4)	152.4 (6)	63.5 (2-1/2)

For flexible air lines, minimum bending radius recommendations are as follows:

Flexible Air Lines

Flexible Air Lines			
Hose Size	**Hose ID mm (in)**	**Hose OD mm (in)**	**Minimum Bending Radius mm (in)**
No. 4	4.76 (3/16)	13.21 (0.52)	19.05 (3/4)
No. 6	7.94 (5/16)	17.27 (0.68)	31.75 (1-1/4)
No. 8	10.32 (13/32)	19.56 (0.77)	44.45 (1-3/4)
No. 10	12.70 (1/2)	23.37 (0.92)	57.15 (2-1/4)

Notes

All Rights Reserved

https://truckmanualshub.com/

Air Brake Routing Schematics

Construction Tractor

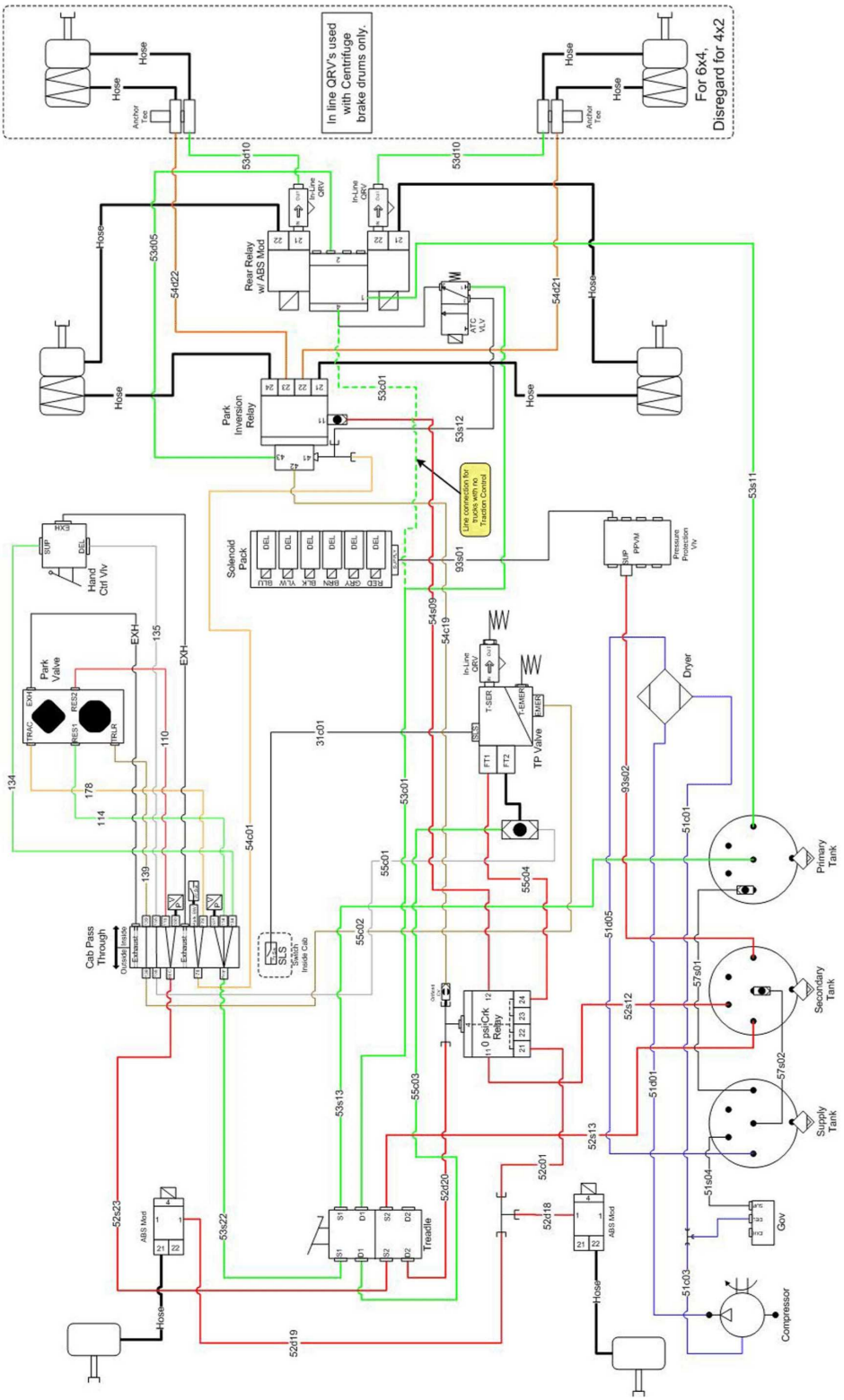

W5059291

All Rights Reserved

https://truckmanualshub.com/

Construction Tractor with RSA

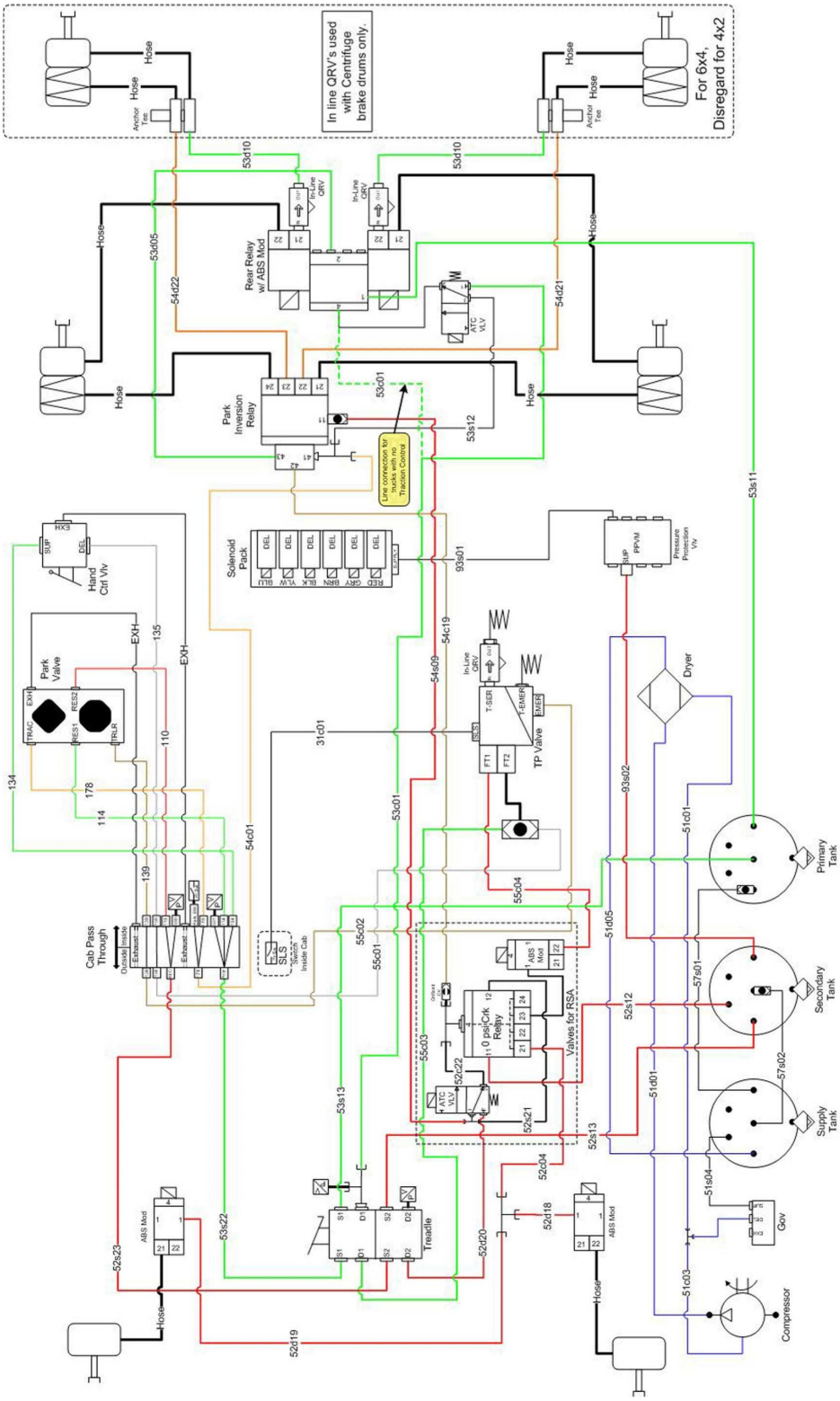

All Rights Reserved

https://truckmanualshub.com/

Rigid with no Options

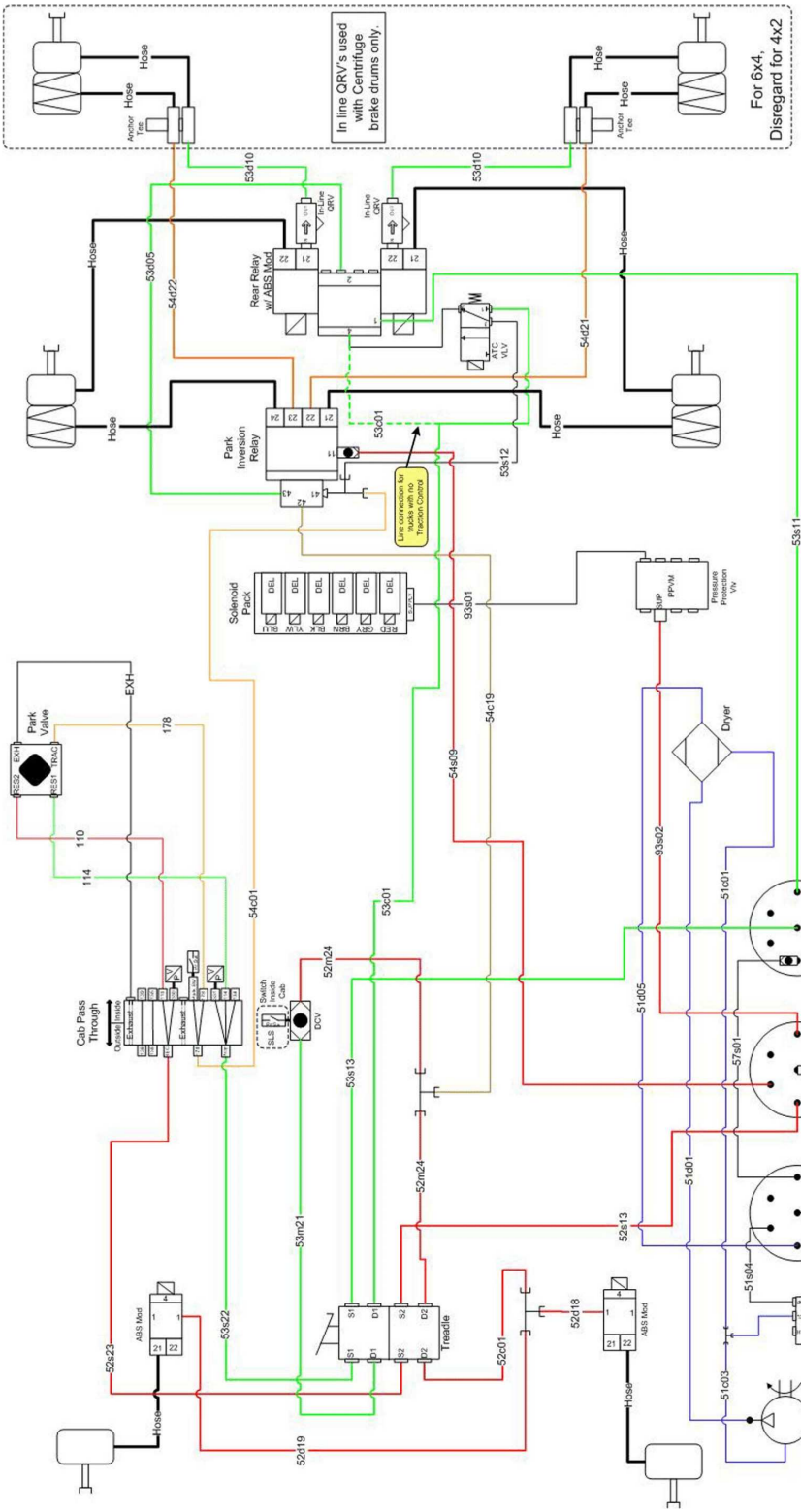

W5059293

All Rights Reserved

https://truckmanualshub.com/

Rigid with RSA

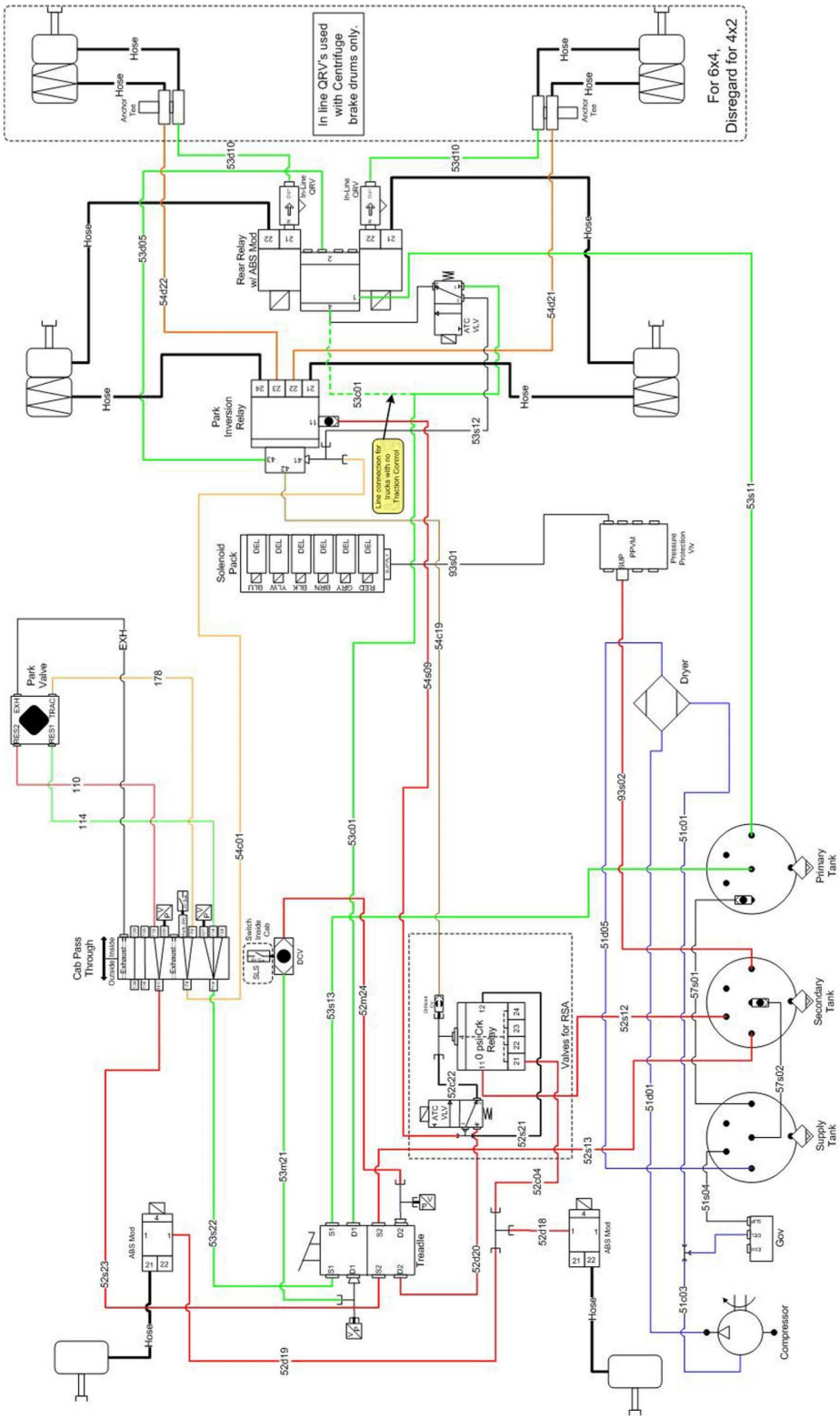

All Rights Reserved

https://truckmanualshub.com/

Rigid with Full Trailer

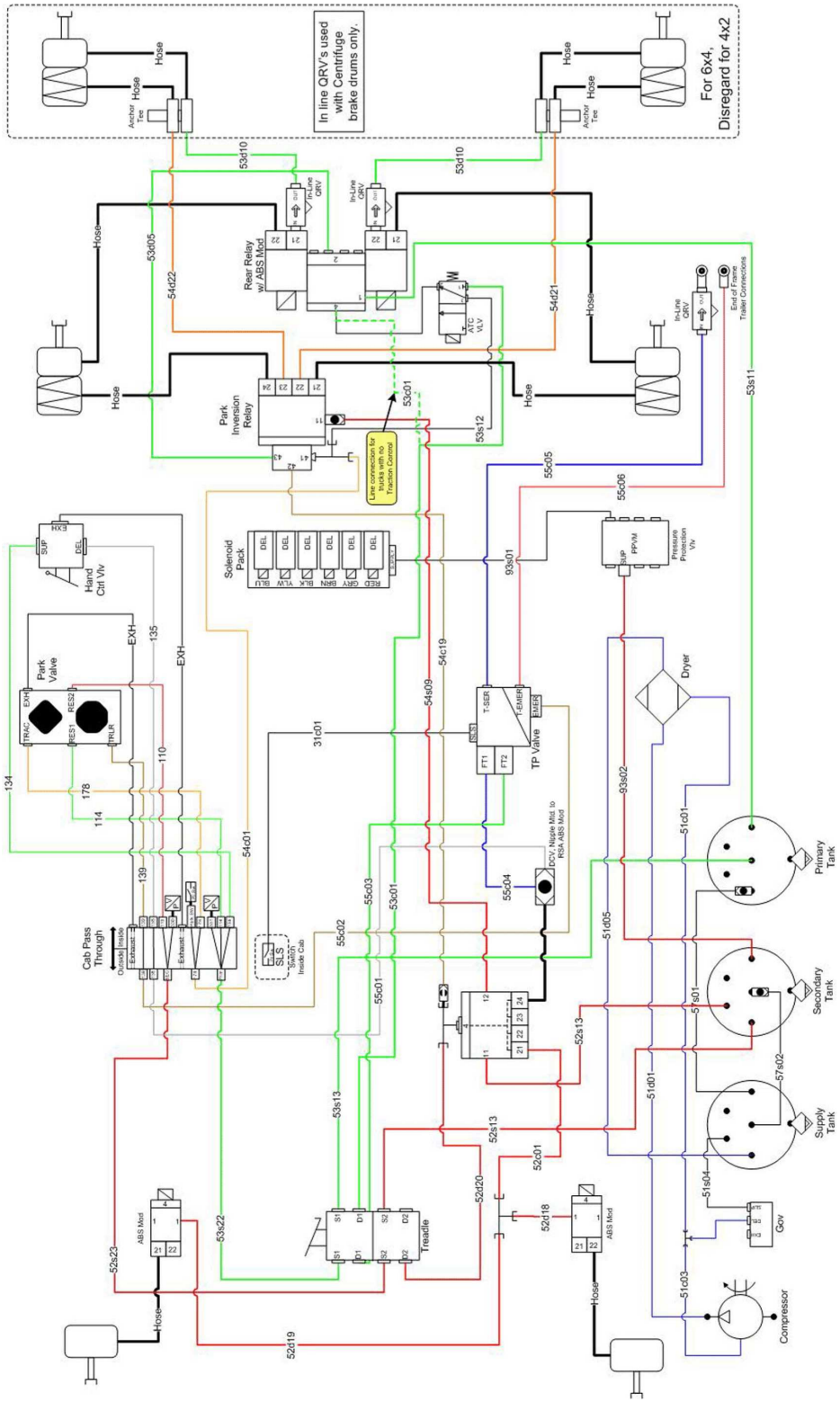

All Rights Reserved

https://truckmanualshub.com/

Rigid with Full Trailer and RSA

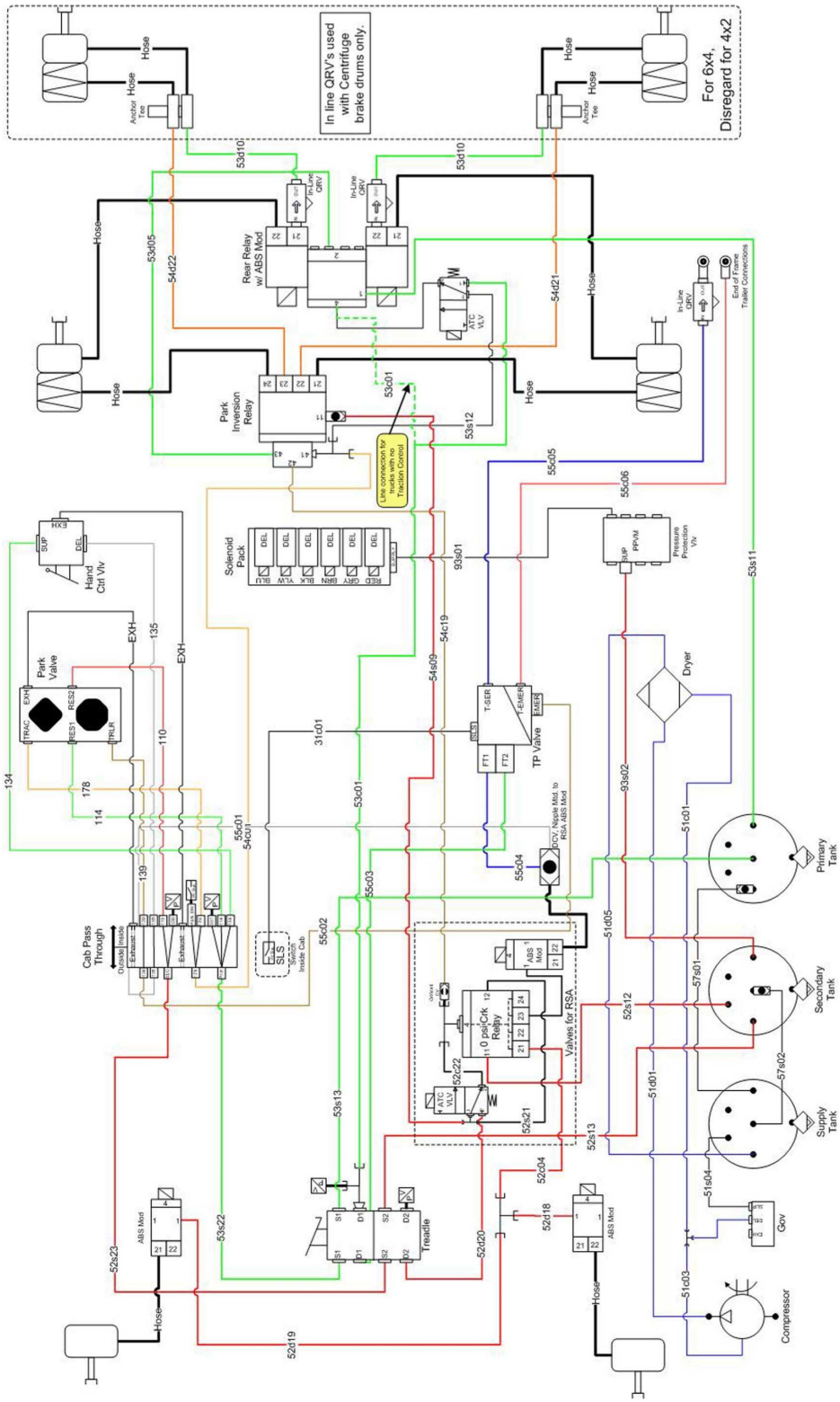

All Rights Reserved

https://truckmanualshub.com/

Rigid with Service Brake Hand Control

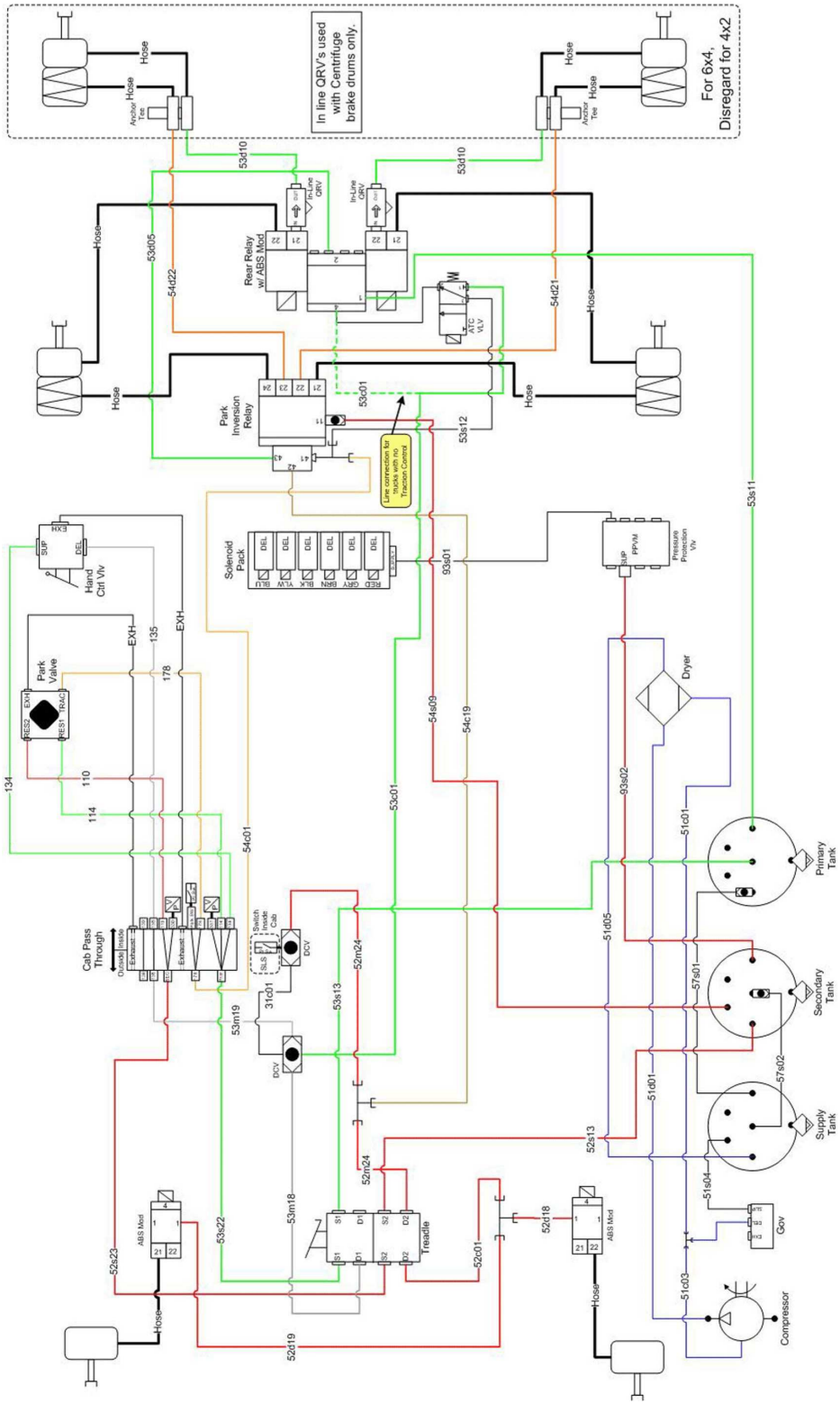

W5059298

All Rights Reserved

https://truckmanualshub.com/

Rigid with Service Brake Control, RSA

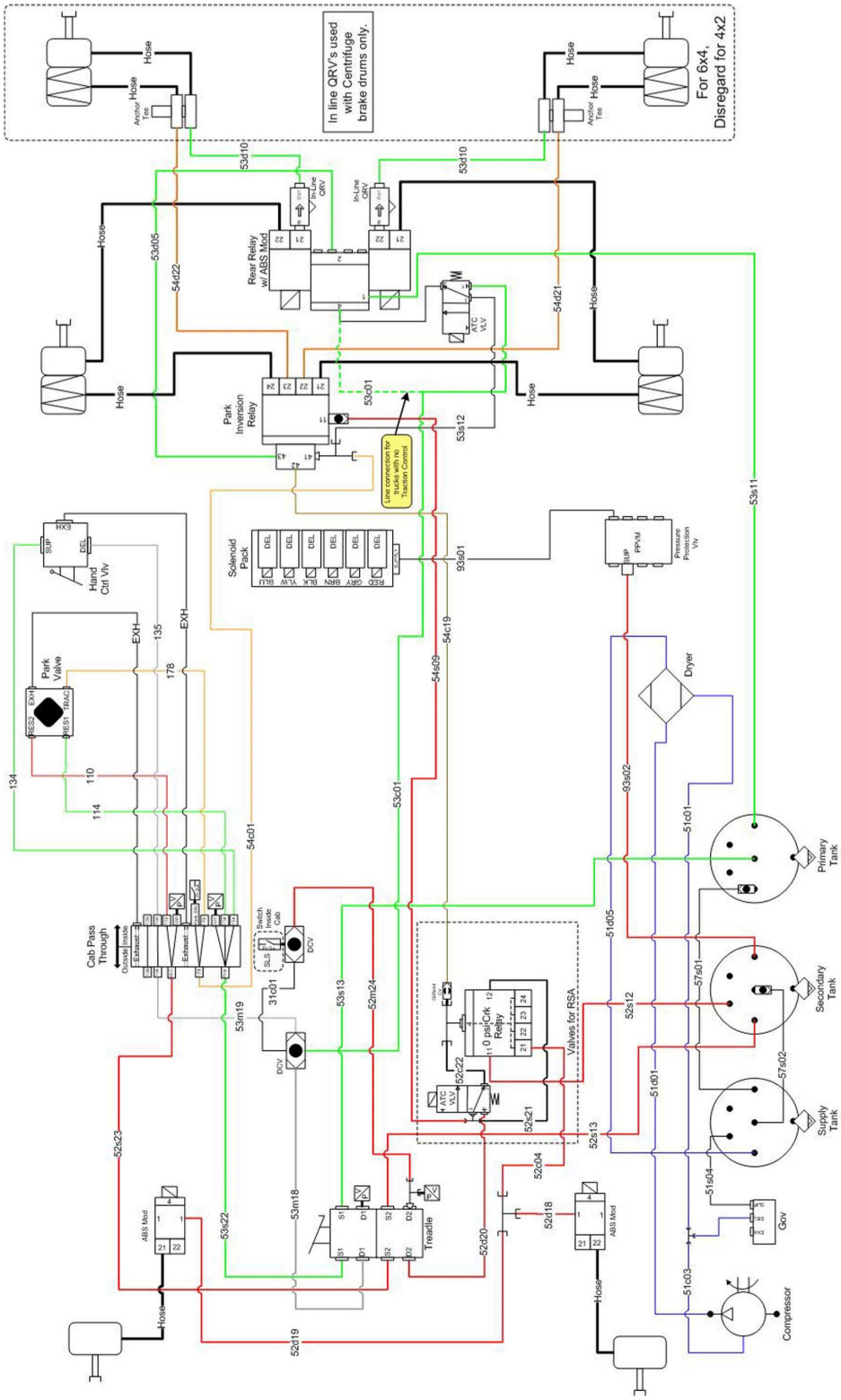

W5059296

All Rights Reserved

https://truckmanualshub.com/

Brake System Options

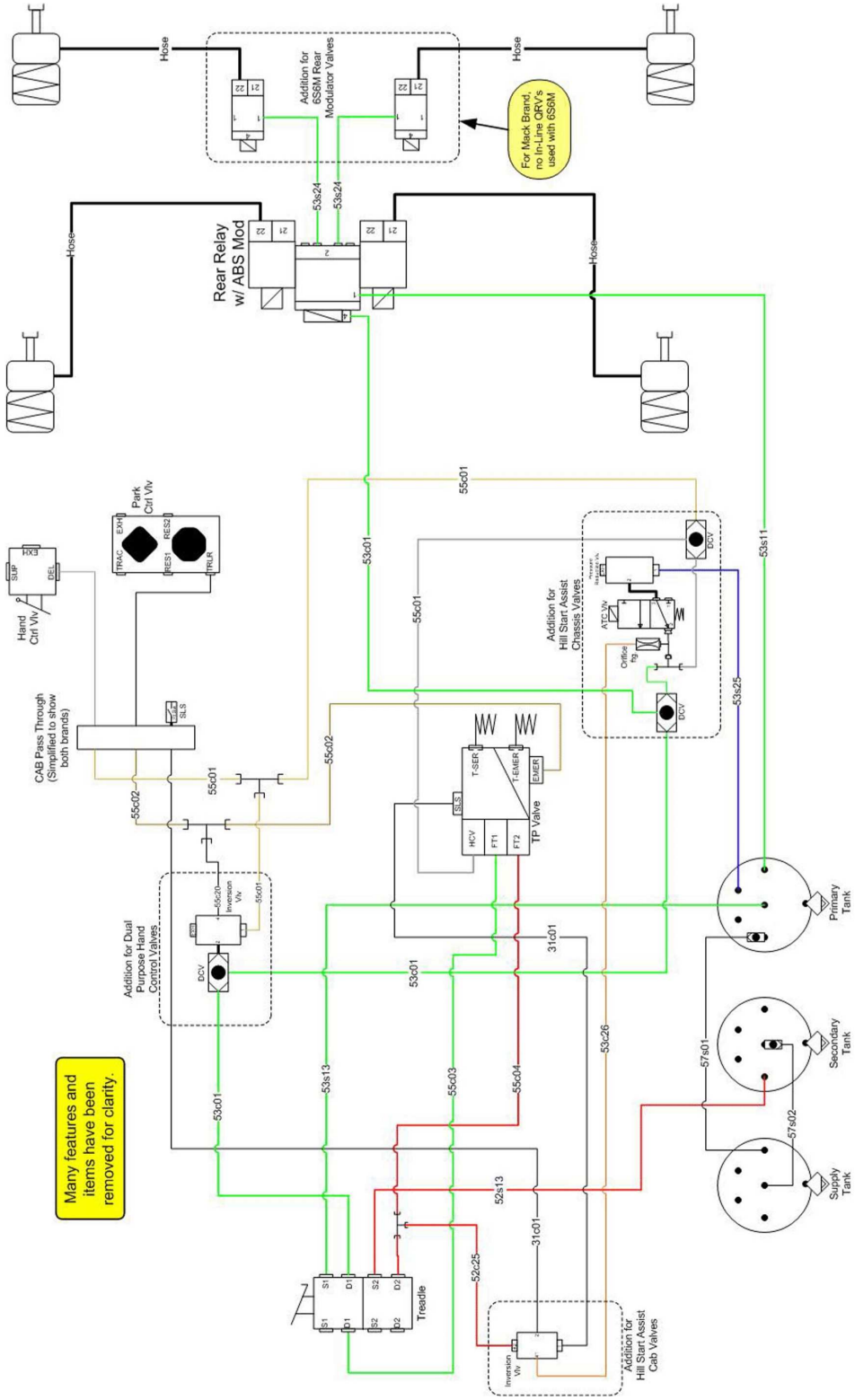

W5059290

All Rights Reserved

https://truckmanualshub.com/

Non-Braking Auxiliary Systems

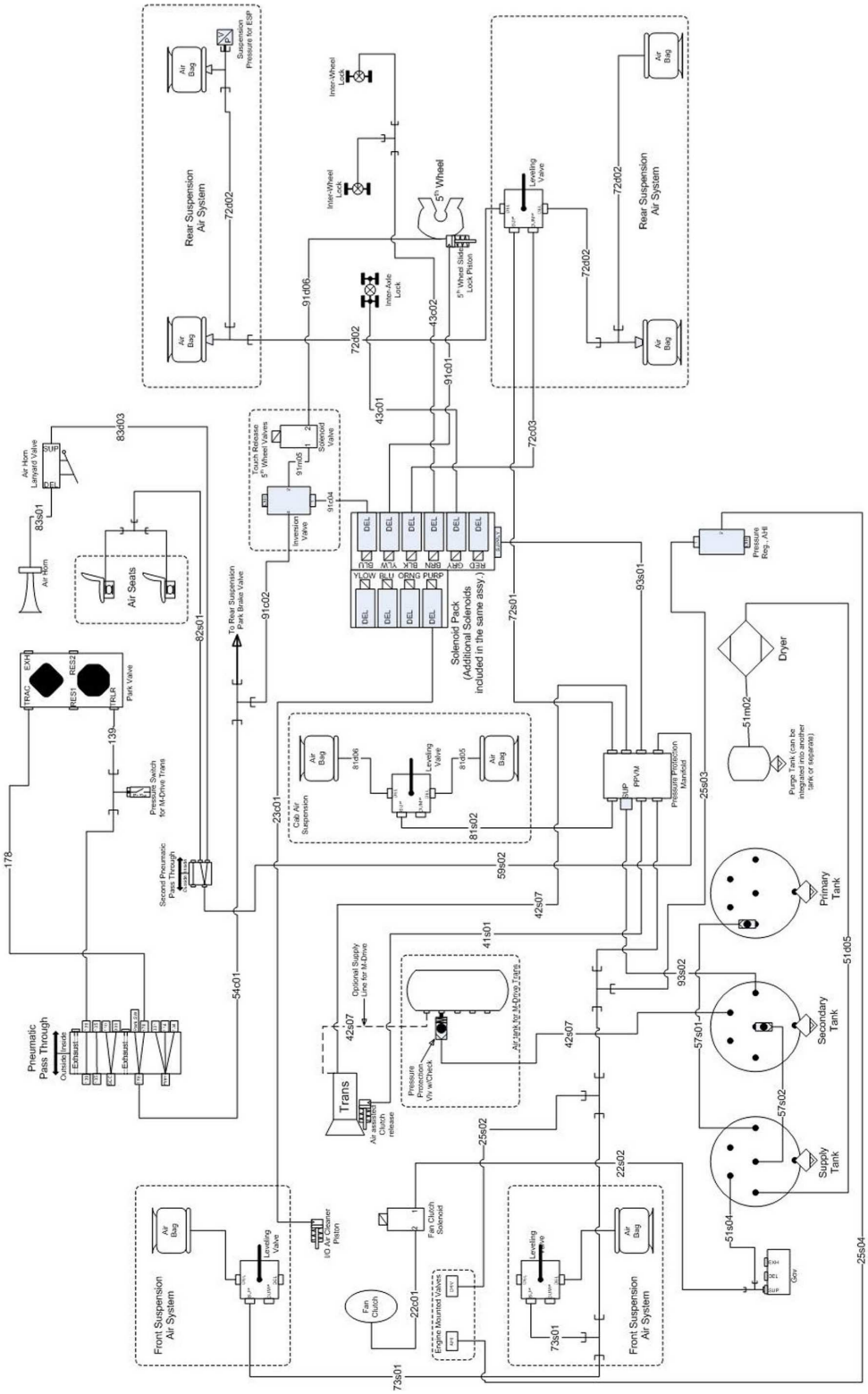

W5059299

All Rights Reserved

https://truckmanualshub.com/

Tri-Drive Brake System

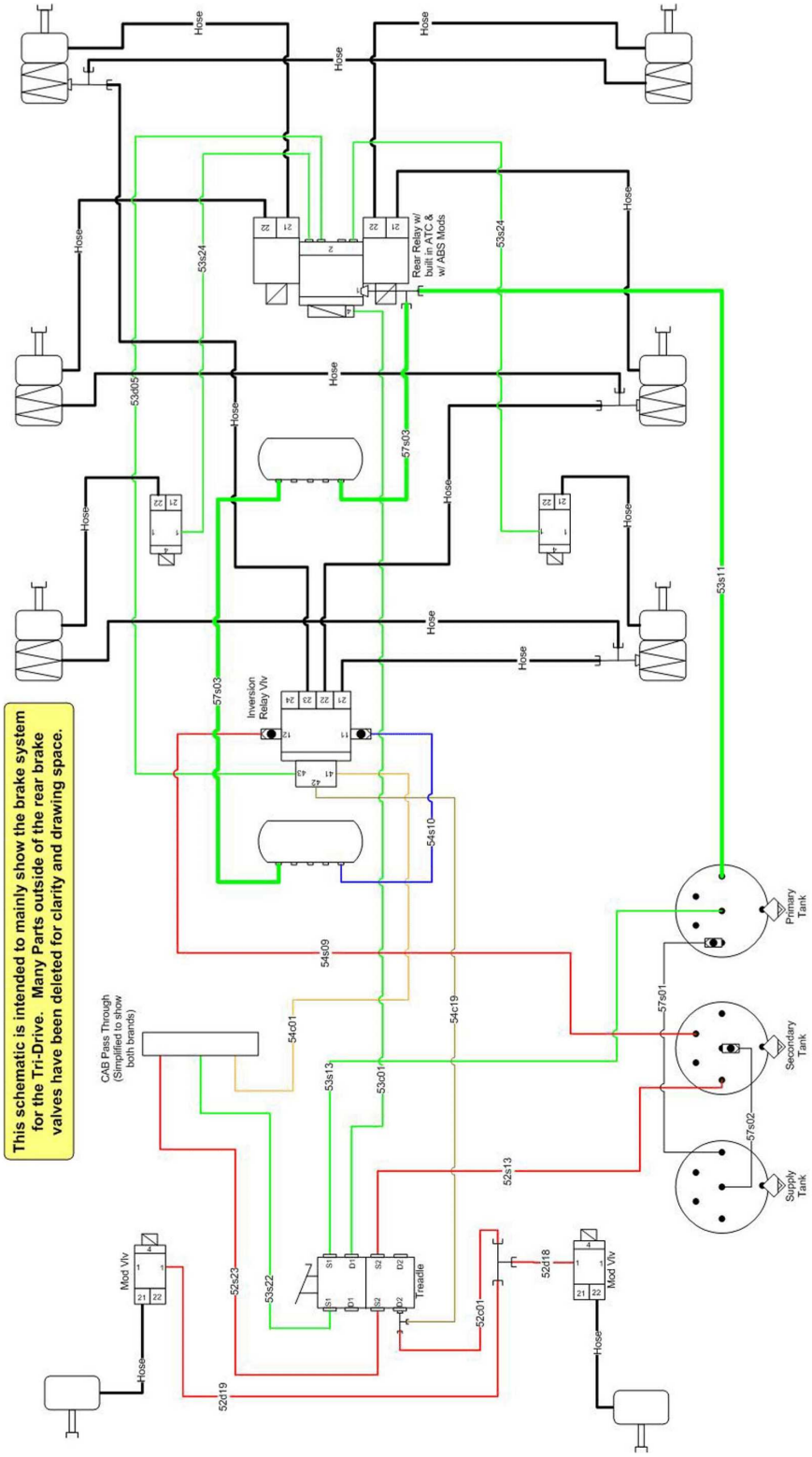

W5059300

All Rights Reserved

https://truckmanualshub.com/

ECS 6 x 2 Suspension Diagram

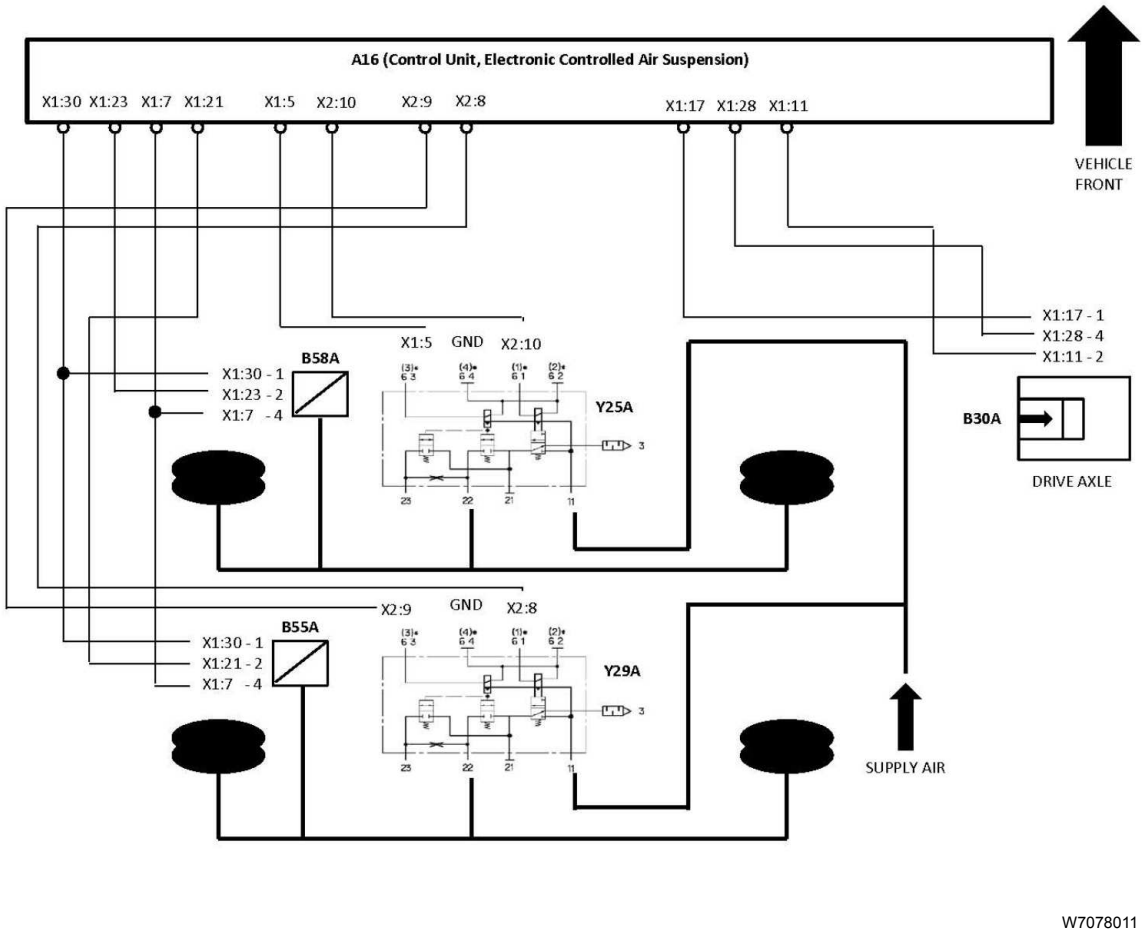

ECS 6 X 2 Suspension Diagram (Electrical and Pneumatic Overview)

Notes

All Rights Reserved

https://truckmanualshub.com/

Air Line Numbers and Description

Engine with Mounting and Equipment		Color	Line size (inches)
Exhaust brake			
21s01	Air Supply to Engine Exhaust Brake	Black	1/4
Fan Clutch			
22c01	Fan Clutch Control, Solenoid to Clutch	Green	1/4
22s02	Fan Clutch Solenoid Supply	Green	1/4
Air Cleaner			
23c01	Air Cleaner Intake Control	Purple	1/4
Emissions control			
25s01	Diesel Particulate Filter Atomizer Block Supply	Red	1/2
25s02	DRV Valve Supply	Black	1/4
25s03	AHI Regulator Valve Supply	Tan	1/4
25s04	AHI Regulator Valve Delivery to Injector Air Pipe	White	1/4

Electrical Lighting the Instruments		Color	Line Size (inches)
Switches			
31c01	Stop Light Switch Control	Black	1/4
31m02	Primary/Secondary Jumper	Grey	3/8
31m03	Hand Control Jumper	Grey	3/8
Gauges			
32m01	Rear Bellows Gauge Pressure	Purple	1/4
32m02	Front Bellows Gauge Pressure	Brown	1/4
32m03	Primary Tank Pressure	Green	1/4
32m04	Secondary Tank Pressure	Red	1/4
32m05	Primary Brake Pressure	Green	1/4
32m06	Secondary Brake Pressure	Red	1/4
32m07	Rear Rear Bellows Pressure	Orange	1/4
32m08	ESP Rear Suspension Pressure	Purple	1/4

All Rights Reserved

https://truckmanualshub.com/

Power Transmission		Color	Line Size (inches)
Switches			
41s01	Clutch Release Air Assist Supply	Black	3/8
41c02	Neutral Switch	Red	1/4
Gearbox			
42s01	Gearbox Air Shift	Black	3/8
42s07	Transmission Supply	Black	3/8
Rear Axle(s)			
43c01	Inter Axle Lock (Diff Axle)	Grey	1/4
43c02	Inner Wheel Lock (Diff Wheel)	Brown	1/4
Power Tale-Off (PTO)			
44d01	PTO Solenoid Delivery		1/4
44s02	PTO Solenoid Supply	Orange	1/4

Notes

All Rights Reserved

https://truckmanualshub.com/

Brake		Color	Line Size (inches)
Compressor, Regulator, Anti-Freeze Unit			
51d01	Delivery from the compressor		
51m02	Air Dryer to Purge Tank	Blue	3/8
51c03	Compressor Unload from Governor	Blue	1/4
51s04	Governor Supply from We Tank	Yellow	3/8
51d05	Air Dryer Delivery to Wet Tank	Blue	5/8
51c01	Air Dryer Purge Control from Governor	Blue	1/4
Front Circuit			
52c01	Foot Brake Valve to QRV/Tee (BSYS-CON)	Red	1/2
52c03	Redundant Rear Control	Brown	3/8
52c04	ESP Relay to ABS Modulator	Black	1/2
52d04	QRV/Relay to ABS Modulator	Red	1/2
52d05	ABS Modulator to Brake Chamber	Rubber Hose	1/2
52s12	Front Circuit/ESP Relay Supply	Red	5/8
52s13	Front Circuit Foot Brake Valve Supply	Red	5/8
52m17	Front Brake Valve to Front Circuit Pressor Sensor	Red	3/8
52d18	Tee to ABS mod LHS	Red	1/2
52d19	Tee to ABS mod RHS	Red	1/2
52d20	Foot Valve to ESP ATC Valve/ESP Relay Control Port	Red	1/2
52s21	ESP ATC Valve Supply	Black	3/8, 1/2
52c22	ESP ATC Valve Control to Relay Control	Black	3/8
52s23	Foot Brake Valve to Pass Through Supply to Park Valve	Red	3/8
52m24	Foot Brake Valve to SLS DCV, Rigid Only	Grey	3/8
52c25	Hill Start Assist Inversion Valve Secondary Control from Treadle	Red	1/4
Rear Circuit			
53c01	Rear Service Relay Control from Treadle Valve	Green	3/8, 1/2
53c02	SBHC Control from Cab to Treadle DCV	Grey	1/4, 3/8
53c03	6S6m QRV Control from Rear Relay	Green	5/8
53d05	Anti-compounding from Rear Relay	Green	3/8
53d06	Relay to ABS Modulators (ABS Solenoid Valve)	Green	5/8
53d09	ABS Solenoid Valve to Brake Chambers (ABS)	Green, Rubber	5/8, Hose
53d10	Service Relay Valve to Brake Chambers (Without ABS)	Green, Rubber	5/9, Hose
53s11	Service Relay Supply from Air Tank (2 for GU and Titan)	Green	3/4, 5/8

All Rights Reserved

https://truckmanualshub.com/

Rear Circuit			
53s12	Traction Control Supply from Park Valve Control	Green	1/4, 3/8
53s13	Treadle Valve Supply for Rear Circuit from Air Tank	Green	5/8
53m18	SBHC Jumper	Grey	3/8
53m19	SBHC Jumper 2	Grey	3/8
53m20	Treadle Valve to Rear Circuit Pressure Sensor		1/4
53m21	Treadle Valve to SLS DCV, Rigid Only		1/4, 3/8
53m22	Treadle Valve to Pass Through Supply to Park Valve		3/8
53s23	Service Brake Hand Control Supply	Green	3/8
53s24	6S6M Rear Axle ABS Modulator Supply	Green	5/8
53s25	Hill Start Assist Supply	Blue	1/4
53s26	Hill Start Assist Control	Green	1/4
Parking Brake			
54c01	Spring Brake Control	Orange	3/8
54d03	QRV/Relay Valve to Rear Spring Brake Chambers	Rubber	Hose
54d07	Joint Fitting at Rear Axle to LH Spring Brake Chamber	Rubber	Hose
54d08	Joint Fitting at Rear Axle to RH Spring Brake Chamber	Rubber	Hose
54s09	Inversion Relay Secondary Supply	Red	1/2
54s10	Inversion Relay Primary Supply	Blue	1/2
54m16	Park Control Exhaust from Dash Valve	Yellow	3/8
54c19	Redundant Control Line from Treadle Valve	Brown	3/8
54m20	Park Chamber Jumper Lines, Chambers Left to Right	Black	1/2
54d21	Park Valve to Joint Fitting, LHS	Black	1/2
54d22	Park Valve to Joint Fitting, RHS	Black	1/2
Trailer Brake			
55c01	Hand Control from Cab	Grey	3/8
55c02	Spring Brake Control from Cab	Brown	3/8
55c03	Primary Control from Treadle Valve	Green	1/4, 1/2
55c04	Secondary Control from Treadle Valve	Red	3/8
55c05	EOFA Trailer Secondary Service Control from Relay	Blue	3/8, 1/2, 5/8
55c06	EOFA Trailer Park Control from Cab	Red	3/8
55m15	Hand Control Exhaust	Yellow	1/4
55c20	Trailer Park Control Tee to DFHC Inversion Control	Brown	3/8

All Rights Reserved

https://truckmanualshub.com/

Trailer Brake			
55s22	Hand Control Tee to DFHC Inversion Supply	Grey	3/8
55c23	Control from ESP Trailer Modulator to Trailer Secondary Control	Red	3/8
55c24	Trailer Relay Control	Blue	3/8
55s25	Trailer Relay Supply	Black	1/2
55d26	Trailer Relay Delivery to TPV	Blue	1/2
Hydraulic Retarder			
56s001	Manifold for Aux Equipment to Retarder	Black	3/8
Air Tanks			
57s01	Primary Tank Supply	Black	1/2
57s02	Secondary Tank Supply	Black	1/2
57s03	Rear Primary Tank Supply	Green	5/8, 3/4
57s04	Auxiliary Axle Tank Supply	Black	1/2
57s05	Auxiliary Axle Tank Jumper	Green	5/8
57s06	Tag Axle Supply	Black	1/2, 5/8
57m07	Wet Tank Jumper	Black	1/2
57s08	Transmission Air Tank Supply	Red	1/2
57s09	Extra Air Tank Supply	Black	1/2
Auxiliary Equipment			
59s02	Auxiliary Manifold to Cab		

Notes

All Rights Reserved

https://truckmanualshub.com/

Frame, Springs, Damping and Wheel		Color	Line Size (inches)
Air Suspension Rear Axle(s)			
72s01	Leveling Valve Supply form PPVM	Black	3/8
72d02	Air Bellow Pressure from Tee to Cab	Purple	3/8
72c03	Rear Suspension Dump from Solenoid Pack	Black	1/4
72d04	Front-Rear Bellows Pressure 6x2 to Cab	Purple	3/8
72d05	Rear-Rear Bellows Pressure 6x2 to Cab	Orange	3/8
72d11	Front Bellows to Rear Bellows	Blue	3/8
Air Suspension Front Axle(s)l			
73s01	Leveling Valve Supply from PPVM	Black	1/4
73d02	Air Bellow Pressure (left) from Leveling Valve	Yellow	1/4
73d08	Air Bellow Pressure (left) from Tee to Cab	Yellow	1/4

Cab		Color	Line Size (inches)
Cab Suspension			
81s02	PPV Manifold to Cab Leveling Valve, Rear	Green	1/4
81d05	Cab Leveling Valve (rear) to Rear Bellows LHS	Black	1/4
81d06	Cab Leveling Valve (rear) to Rear Bellows RHS	Black	1/4
Seat Suspension			
82s01	Seat Suspension Supply from PPVM	Black	1/4
Air Horn			
83s01	Solenoid Valve Pack to Air Horn	Red	1/4
83d03	Auxiliary Manifold to Air Horn Lanyard Valve	Black	1/4

Miscellaneous, Special Functions		Color	Line Size (inches)
Fifth Wheel			
91c01	5th Wheel Slide from Solenoid Pack	Yellow	1/4
91c02	Touch Release Park Signal from Rear Park Control Tee	Orange	1/4
91d03	Touch Release Piston Control from 2nd Solenoid	Grey	3/8
91c04	Inversion Supply from 1st Solenoid	Blue	1/4
91m05	2nd Solenoid Jumper from Inversion Valve	Blue	3/8
Miscellaneous			
93s01	Solenoid Valve Pack Supply from PPVM	Orange	3/8
93s02	PPV Manifold Supply from Secondary Air Tank	Red	1/2

All Rights Reserved

https://truckmanualshub.com/

Air Tank Fittings

Norgren Push-in

Listed below is a list of the straight threaded O-ring fittings, which are used in the MACK tank setup on the the vehicle. The new fittings will not work with older air tanks due to the new fittings and air tanks being straight threaded and the older fittings and air tanks having pipe threads.

The fittings are supplied by Norgren and are referred to as Norgren Fleetfit Vehicle Push-in Fittings with Hobbs connector.

Note: These parts are available from MACK PDC.

Description	Vendor Part No.	Part No.
Male Elbow 3/8” X PIF X M16 X 1.5	94 4138 55	20999390
Male Elbow 3/4” X PIF X M22 X 1.5	94 4138 98	20462691
Male Elbow 1/2” X PIF X M22 X 1.5	94 4138 68	20462690
Male Elbow 5/8” X PIF X M22 X 1.5	94 4138 75	20378449
Male Elbow with Check Valve	95 4036 01	20560349
Male Elbow 5/8” X PIF X M16 X 1.5	94 4138 79	20469783

Torques

The following table lists the torque measurements to insert the Norgren Air Tank Push-In Fittings into MACK Air Tanks. Use these specifications for any Air Tank Service Procedures performed on all vehicles.

Size	Torque
M16	25 – 29 Nm (18.4 – 21 ft-lb.)
M22	30 – 38 Nm (22 – 28 ft-lb.)

Notes

All Rights Reserved

https://truckmanualshub.com/

Brake Literature

Bendix

Copies of service literature for Bendix components can now be accessed directly from the official internet site of the Bendix Corporation.

To review and download Bendix service literature, please visit:

- **http://www.bendix.com**

Eaton

Copies of service literature for Eaton components can now be accessed directly from the official internet site of the Eaton Corporation.

To review and download Eaton service literature, please visit:

- **http://www.roadranger.com/rr/CustomerSupport/Support/LiteratureCenter/index.htm**

Gunite

Copies of service literature for Gunite components can now be accessed directly from the official internet site of the Gunite Corporation.

To review and download Gunite service literature, please visit:

- **http://www.gunite.com/literature/**

Meritor

Copies of service literature for Meritor components can now be accessed directly from the official internet site of the Arvin Meritor Corporation.

To review and download Meritor service literature, please visit:

- **https://www.meritor.com**

Norgren

Copies of service literature for Norgren components can now be accessed directly from the official internet site of the Norgren Corporation.

To review and download Norgren service literature, please visit the following site:

- **www.norgren.com/usa**

All Rights Reserved

https://truckmanualshub.com/

MGM

Copies of service literature for MGM components can now be accessed directly from the official internet site of the Indian Head Industries.

To review and download MGM service literature, please visit the following site:

- **http://mgmbrakes.com/**

Chicago Rawhide

Copies of service literature for Chicago Rawhide components can now be accessed directly from the official internet site of the SKF corporation.

To review and download Chicago Rawhide service literature, please visit the following site:

- **http://www.vsm.skf.com/usa/Heavyduty/index.html**

Notes

All Rights Reserved