https://truckmanualshub.com/

NOBLELIFT

FE4P50-70N

⚠ WARNING

Do not use the pallet truck before reading and understanding these operating instructions.
Keep for future reference.

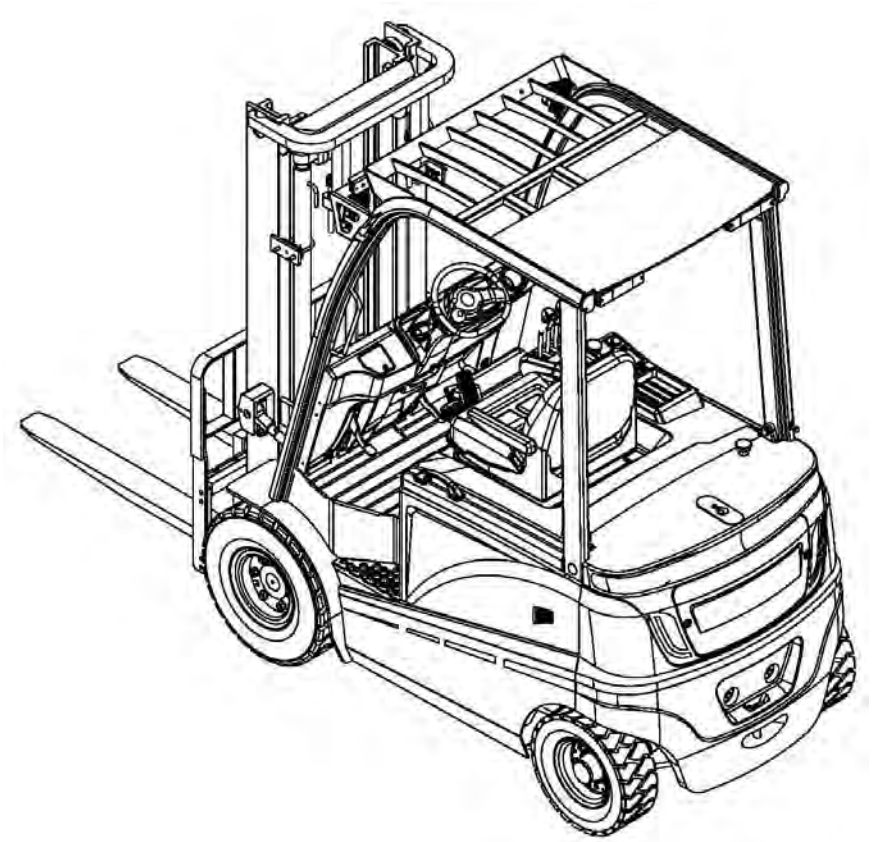

Operation and maintenance manual

FE4P50-70 N series

battery counter balanced forklift truck

Noblelift Equipment Joint Stock Co., Ltd

https://truckmanualshub.com/

Catalogue

Forward …… 4
Chapter one Attention when using the forklift truck …… 5
1、Transportation for forklift…… 5
2、Deposit…… 5
3、Preparation before use…… 5
4、Operation of truck…… 5
5、Battery charging…… 6
Chapter two The main performance parameters of forklift truck …… 7
Ⅰ、The truck's outline dimension and performance parameters …… 7
1.The truck's outline dimension …… 7
2. Technical data …… 8
Ⅱ、The construction，principle and adjustment of the truck's main parts…… 11
1．Drive system …… 11
1.1 Summarize …… 11
1.2 Reducer casing and differential …… 11
1.3 Drive axle …… 12
1.4 Installation of wheel hub …… 14
1.5 Malfunction analysis …… 15
2．Brake system …… 15
2.1 Summarize …… 15
2.2 Brake paddle…… 15
2.3 Brake base pump …… 16
2.4 Brake staff…… 17
2.5 Parking brake operating device …… 19
2.6 Gist of dismantlement and regulating for brake staff …… 19
2.7 Adjusting for Brake pedal …… 22
2.8 Malfunction and cause . …… 23
2.9 Maintenance …… 24
3．Steering system …… 25
3.1 Summary …… 25
3.2 Full Hydraulic cycloid redirector …… 25
3.3 Steering axle …… 26
3.4 Gist for adjustment and maintenance…… 29
3.5 Inspection after rebuilding of steering system …… 29
3.6 Diagnose of steering system …… 30
4．Electrical system …… 31
4.1 Summary …… 31
4.2Electrical system of direct current driving electric forklift truck …… 32
4.3Combination indicator …… 33
4.4 Fault analysis …… 35

5. Battery 40
5.1 Battery safety requirements 40
5.2 Battery use requirements 40
5.3 Battery charging 41
5.4 Installation and replacement of battery..... 43
6. Hydraulic system 43
6.1 Sumarry 43
6.2 Oil pump 43
6.3 Multiway valve 43
6.4 Lift cylinder and lift chains 46
6.5 Tilt cylinder 48
6.6 Hydraulic cylinder 48
6.7 Hydraulic hose 49
6.8Maintenance and adjustment 50
6.9 Fault analysis..... 52
7. Lifting system..... 54
7.1 Summarize..... 54
7.2 Inner and outer mast 54
7.3 Fork carriage 54
7.4 Roller position 55
7.5 Maintenanceandregulation 56
7.6 Instructionsofinstallingaccessaries 58
8. Disassemblingandinstallation..... 58
8.1 Attentions..... 58
8.2Hoistinglocationforpartsdisassembled..... 58
Chapter Three Operation,use and safety for forklift 60
Ⅰ、Driving and operation..... 60
1. Usage of new vehicle..... 60
2. Connection between load and stability 60
3. Load center and load curve 60
4. Forklift stability 60
5. Transportingandloadingforforklift 61
6. Preparation before driving 61
7. Steer..... 61
8. Parking and temporary parking..... 62
9. Usage of battery 63
10. Stacking..... 64
11. Unstacking..... 65
12. Deposit..... 65
Ⅱ、Using instruction ofoperatingdevices..... 66
1. Components,schematicdiagramforoperatingdevices 67
2. Instrument unit 67

https://truckmanualshub.com/

3. Switches 67
4. Control 68
5. Bodywork 70
Ⅲ、Safety issues..... 72
1Operation place and working environment 72
2. Safety rules 72
3. Truck' s transportation 82
4. Howtoavoidoverturning,howtoprotectyourself 83
5. Safety problem in Maintenance 84
6. Safety problem in battery usage 86
7. Plate 87
Chapter four Truck's regular check and maintenance 90
Ⅰ、The check before operation..... 90
1.Checkingpointandcheckingcontent 90
2. Checking procedure 90
Ⅱ、Check after operation..... 95
Ⅲ、Truck cleaning..... 95
1. Truck surface cleaning 95
2. Chains cleaning..... 95
3. Electric system cleaning 95
4. After cleaning 95
Ⅳ、Regular maintenance..... 96
1.Regularmaintenanceschedule 96
2.Regular replacement of key safety parts 101
Ⅴ、Area lubricated and lubricant recommended..... 102
1. Area lubricated 102
2.Lubricant recommended..... 102

https://truckmanualshub.com/

Forward

This manual briefly introduces the technical parameters as well as the construction,working principle and the requirements in operation and the maintenance of each main part of the four-wheel battery counter-balanced forklift truck of our company.Before operation,please read the manual carefully to ensure safe and efficient load portage by correct operation and maintenance,and to help the operator to use the battery forklift truck properly so as to make full use of it.It is hoped that the operator and the facility manager read the manual carefully before operation!Please perform strictly according to the attention matters in this manual,drive coutiously,operate carefully,use meticulously.Always make your forklift truck be in the best situation and make full use of it,When lending or assigning the forklift,please bind this manual with it.

To illuminate particularly,the following titles are used in this manual:

1. ---- Regulations that you need to pay attention and have to comply with before operation,if not do so,it should lead to injury on human or damage on equipments and fire.

2. ⚠ ---- Regulations that you need to pay attention and have to comply with before operation,if not do so,it should lead to damage on equipments or some sort of injury on human.

3. ---- Something that you have to pay attention before operation.

⚠ The majority of materials that consists of the equipment can be completely recycled. During working,repairing,maintenance and cleaning,there are waste materials have to be collecting and disposing in friendly-environment way under the rules of local government.professional experts must be necessary for dealing with these waste materials（such as hydraulic fluid,old battery andelectronic devices）at a specified area,otherwise,the negative effect may harm the environment and human health.

Considering the demands of constantly developing and renewing the products.Manufacturer reserves the right to modify our own products at any moment without notice or incurring in any sanction.It is suggested to get contact with us if users want to know the up to date information of the products.All the information reported herein is based on data at the moment of the publication of the manual.

Chapter one Attentions when using the forklift truck

The operator mast always keep in mind the principle of safety first.Conscientiously and cautiously read the maintenance manual.Undergo safe operate and canonical operate strictly following the demand in this manual

1 Transportation for forklift

Pay attention to the following particulars when using container or automobile to convey forklift truck

(1) Enable parking brake

(2) Fasten mast and counterweight with steel wire in both two sides;Chock with wedge the front and rear wheels at propor site

(3) Hoist Lift the forklift according to indication on lifting plate

2 Deposit

(1) Lower the mast to the lowest position

(2) Switch off power,Push all the operating rod to vacancy;Pull out power plug

(3) Stretch hand brake rod

(4) Chock with wedge front and rear wheels

(5)When truck is in long-term non-use.Wheels should be overhead.And battery should be boost charged once a month

3 Preparation before use

(1) Check up all the meters

(2) Check up tire pressure

(3) Check up the state of each handle and pedal

(4) Check up if the voltage of battery is in operating range;and weather the specific density of electrolyte and the altitude of liquid surface are in order

(5) Check up if the contact of each connector and plug of electrical system is ok

(6) Check up if the hydraulic liquid,electrolyte or brake fluid is leaking

(7) Check up the condition of each main fastener

(8) Check up if the illuminators,signal lamps are in order

(9) Loosen parking brake

(10) Try to lift and lower the mast,tilt forward and backward the mast,turn and brake the truck

(11) Be sure that the polluting level of hydraulic oil is less than 12grade

4 Operation of truck

(1) Only can the person operate the truck who has been trained and got driver’s license

(2) Operator should wear safe protective shoes,cap,costume in his operation

(3) Pay attention to the performance and working conditions of mechanics,hydraulic,electrical and MOSFET governor when operating

(4) Switch on the power,turn on the key,select the position of direction switch,roll the steering wheel to see if the truck is in order,step down the governor pedal slowly,keeping a proper starting acceleration

(5) Check the voltage meter when the truck is in working,if the value stated in the meter is less than 41V,stop working immediately,charge the battery or change another fully charged battery

(6) When conveying,the load should not exceed the rated capacity.The separation and position of forks should be appropriate,insert the forks absolutely downside the load,make the load uniformly distributed on the forks;to prevent load from deviation

(7) When the distance between the load’ gravity center and yoke is equal or less than 500mm.The maximum load capacity should be the rated capacity,and when the distance between the load’ gravity center and yoke is more than 500mm;the maximum load capacity should be less than the rated capacity

(8) When forks is bearing load,tilt backwards mast mostly,the yoke should always contact with load;lift forks upto 200mm high from ground before driving

(9) No standing under forks,no standing on forks when lifting

(10) The starting speed should not be too fast when starting to lift and lower the load

(11) No operation of truck and it’s additions without sitting on the driver’s seat

(12) Push handle immediately to middle position when the mast has tilted forward or backward to the extreme position

(13) No driving or turning when the mast is lifting

(14) When travelling,pay attention to passers by,obstacles,irregular road and the clearance of upper side of forklift

(15) Be careful of travelling on slope,when the angle of slope is more than10%,travel forward upslope and travel backward downslope. no turning on slope,no loading or unloading when travelling downslope

（16）Reduce speed when turning on the damp or slick road,take special care and drive slowly when travelling on dock or on temporary board

(17) Operating high lift range truck of which the lifting height is more than 3m,pay attention to the dropping of the load,and take measures to prevent it when necessary

(18) Don’t convey unfastened or loosely stacked load,be caref when conveying large-size load

(19) When travelling with load,avoid emergency brake

(20) When leaving the truck,lower the forks to ground;push lever to free position,switch off power,when parking on the slope,pull tight the brake apparatus and plug the wheels with wedge if the parking time is long

(21) The protection valves on multiway valve and on steering device are already regulated,so the users shouldn’t regulate randomly when using to prevent that the excessively high oil pressure leads to the damage of the whole hydraulic system and the burnout of the electric motor

(22) Charge the tyres according to the pressure value stated in “tire pressure” indication

(23) Treat the operation of non-load truck with additional apparatus as the operation load truck

5 Battery charging

(1) In the first time of charging or boost charging of battery,act strictly according to the rules stated in battery specification

(2) When the truck is in working,and when the battery voltage drops to 41V or any one of the cells voltage drops to 1.7V or the meter alarms,stop working immediately,charge the battery or change another fully charged battery

(3) Inspect at any moment the density,the level and the temperature of electrolyte when charge the battery

(4) Charge the battery at once after use of the truck,the storage period should be less than 24h;in order not to damage the battery,prevent under charging or over charging of the battery

(5) In order to adjust the density of each cell,make a equalizing charge of the battery in regular service once a month,please refer to the related chapter to get the details of the charging method and usage maintenance

Chapter two The main performance parameters of forklift truck

Ⅰ、The truck's outline dimension and performance parameters

1. The truck's outline dimension see figure 1-1

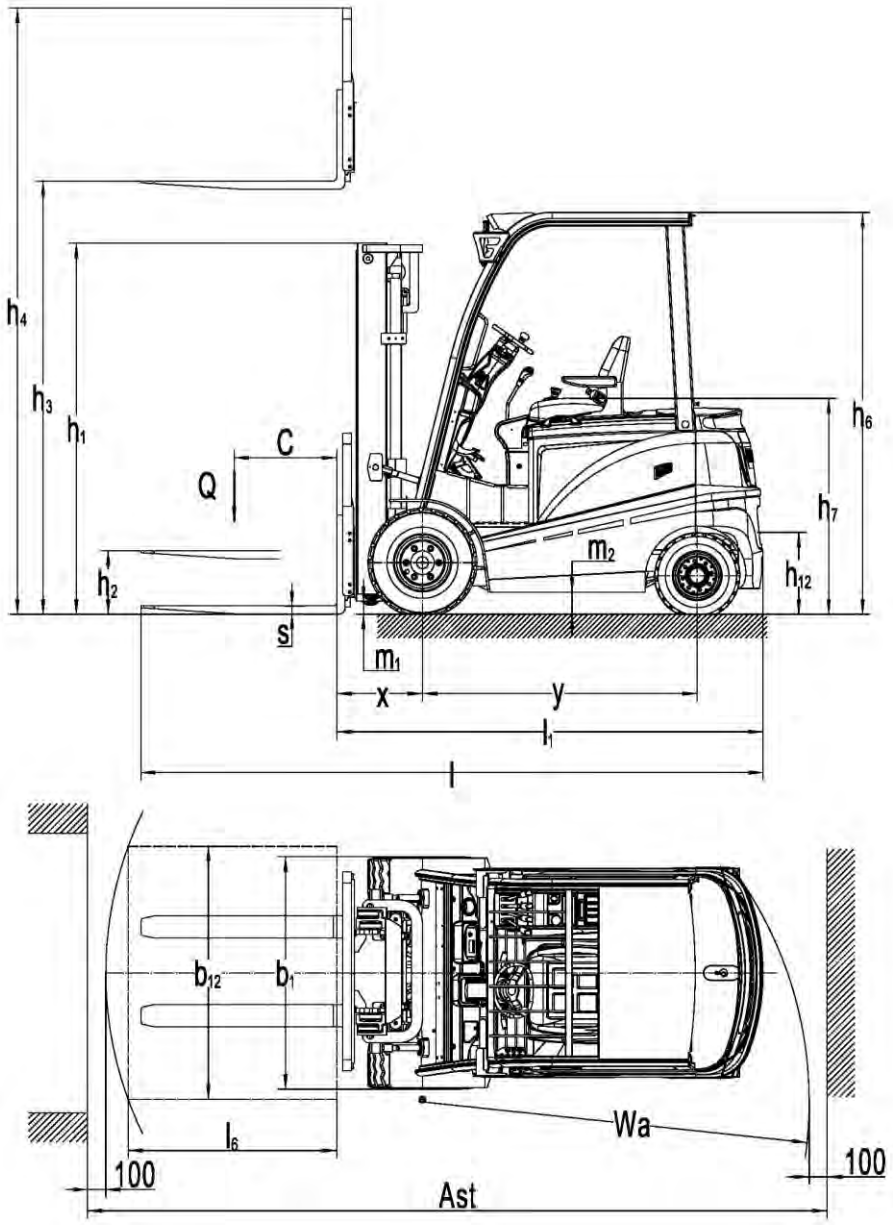

Figure 1-1 outline

https://truckmanualshub.com/

2.2 FE4P50N Technical data（list 1-2）

Model number		FE4P50N
Drive mode:	Electromotion	
Operation mode:	Seat-driving pattern	
Rated capacity Q(kg)		2500
Load center distance C(mm)	609	
Load distance x(mm)		463
Wheelbase y(mm)		1500
Service weight including battery kg		4260
Axle loading,laden front/rear kg		6010/750
Axle loading,unladen front/rear kg		1940/2320
Tyres size,front	23×9-10-18PR	
Tyres size,rear	18×7-8-14PR	
Track width,front b_{10}(mm)	960	
Track width,rear b_{11}(mm)	950	
Mask/fork carriage tilt foreward/backward α/β(°)	6/10	
Lowered mast height h_1(mm)	2045	
Freelift height h_2(mm)	120	
Lift height h_3(mm)	3000	
Extended mast height h_4(mm)	3977	
Overhead load guard height h_6(mm)	2190	
Seat height h_7(mm)	1058	
Traction pin height h_{10}(mm)	295	
Overall length l_1(mm)	3398	
Length to face of forks l_2(mm)	2328	
Overall width b_1(mm)	1260	
Fork dimensions s/e/l(mm)	40/120/1070	
Fork carriage width b_3(mm)	1040	
Ground distance,centre of wheelbase m_2(mm)	110	
Turning radius Wa(mm)	2050	
Travel speed,laden/unladen km/h		13/14
Lift speed,laden/unladen m/s		0.30/0.39
lowering speed,laden/unladen m/s	＜0.6	
Drawbar pull,laden/unladen S_2 5 minute %		13/15
Drive motor rating S_2 60min kw		11
lift motor rating S_3 15% kw		12
battery voltage,nominal capacity K_5 v/A.h	48/600（standard）	
battery weight kg	980	
working pressure of attachments MPa	17.5	
oil volume for attachment l/m	36	

（list 1-2）

2.3FE4P60-70N Technical data（list 1-3）

Model number	FE4P60N	FE4P70N
Drive mode:	Electromotion	
Operation mode:	Seat-driving pattern	
Rated capacity Q(kg)	3000	3500
Load center distance C(mm)	609	
Load distance x(mm)	485	485
Wheelbase y(mm)	1650	1650
Service weight including battery kg	4850	5250
Axle loading,laden front/rear kg	6910/940	7700/1050
Axle loading,unladen front/rear kg	2280/2570	2470/2780
Tyres size,front	23×9-10-18PR	23×10-12-18PR
Tyres size,rear	18×7-8-14PR	200/50-10PR
Track width,front b_{10}(mm)	1040	1068
Track width,rear b_{11}(mm)	950	950
Mask/fork carriage tilt foreward/backward α/β(°)	6/10	6/10
Lowered mast height h_1(mm)	2070	2180
Freelift height h_2(mm)	120	120
Lift height h_3(mm)	3000	3000
Extended mast height h_4(mm)	4080	4075
Overhead load guard height h_6(mm)	2190	2190
Seat height h_7(mm)	1100	1100
Traction pin height h_{10}(mm)	295	295
Overall length l_1(mm)	3605	3645
Length to face of forks l_2(mm)	2535	2575
Overall width b_1(mm)	1260	1300
Fork dimensions s/e/l(mm)	45/125/1070	50/125/1070
Fork carriage width b_3(mm)	1140	1140
Ground distance,centre of wheelbase m_2(mm)	110	110
Turning radius Wa(mm)	2230	2300
Travel speed,laden/unladen km/h	13/14	12/13
Lift speed,laden/unladen m/s	0.28/0.40	0.26/0.39
lowering speed,laden/unladen m/s	＜0.6	
Drawbar pull,laden/unladen S_2 5 minute %	11/14	11/14
Drive motor rating S_2 60min kw	15	15
lift motor rating S_3 15% kw	12	12
battery voltage,nominal capacity K_5 v/A.h	80/500（standard）	
battery weight kg	1530	
working pressure of attachments MPa	17.5	
oil volume for attachment l/m	36	

（list 1-3）

Ⅱ、The construction,principle and adjustment of the truck's main parts

1. Drive system

1.1 Summarize

The drive system consists of gear box assembly, differential mechanism assembly and drive axle, the reducer drive gear connects directly to drive motor.The travel speed increases with the increment of rotational speed of drive motor, And when the rotational direction of the motor changes, the travel direction changes too.

1.2 Reducer casing and differential mechanism

Reducer,of which the two pairs of column screw gear make the rotational speed decline of the output axis of travel motor and make the twist moment rise from travel motor,and then send the twist moment to differential,lies between drive axle and travel motor,see figure 2-1

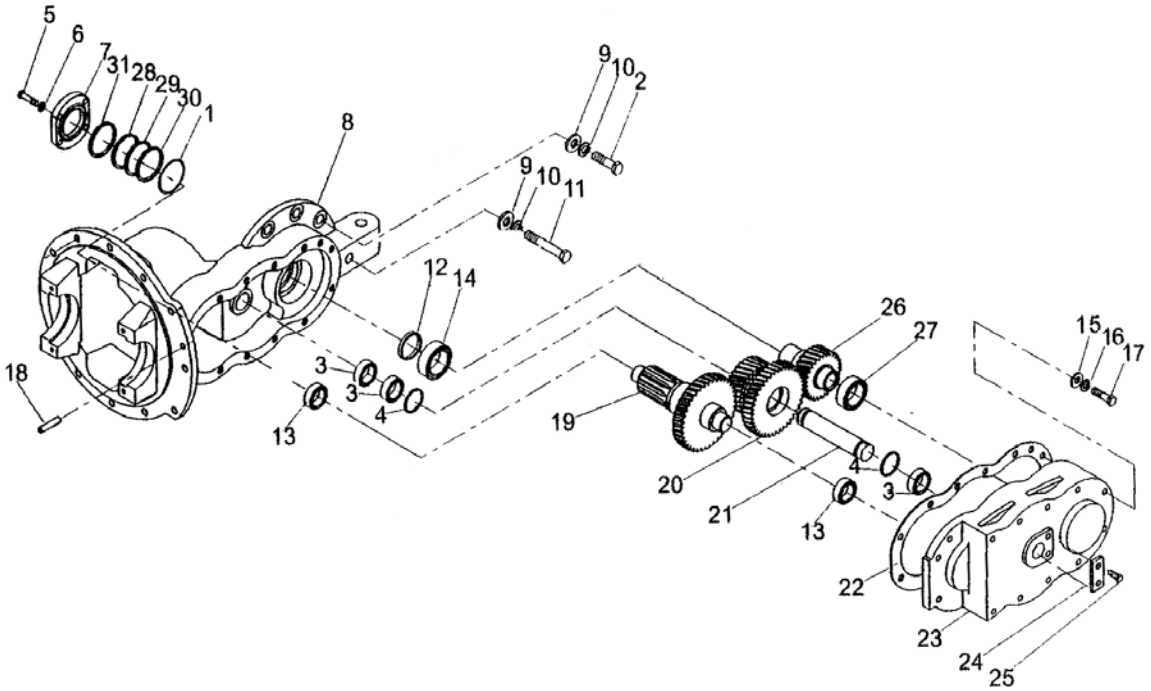

1.O ring	2.bolt	3.bearing	4.O ring	5. bolt
6. washer	7.bearing cover	8.gearbox shell	9. washer	10.washer
11.bolt	12.oil seal	13.bearing	14.bearing	15.washer
16.washer	17.bolt	18.pin	19.gear axle	20.gear
21.axle	22.paper washer	23.box cover	24.lock plate	25.bolt
26.axle	27.bearing	28.spacer	29.spacer	30. spacer
31.spacer				

Figure 2-1 Reducer

Differential mechanism, of which the front connects to axle shell,is installed on the front-half shell by the bearing block in on two sides. The shell of the differential is left-right subdivision in construction,and there are two half axle gears and four planet gears in it.see figure 2-2

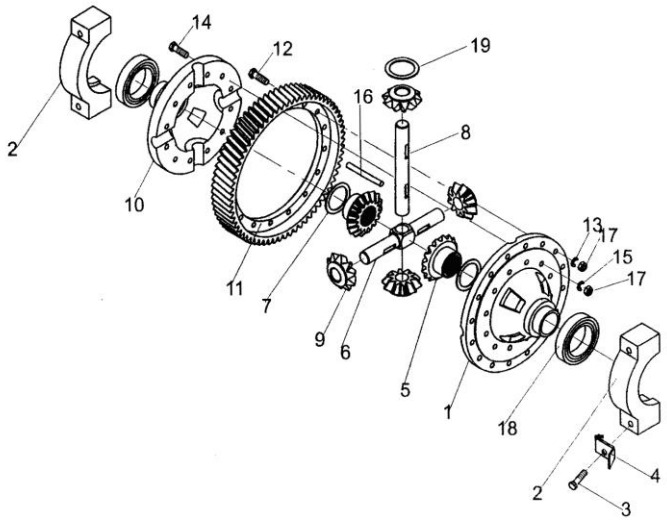

1. differential mechanism hub	2.bearing seat	3.bolt	4.lock plate
5.gear	6.gear axle	7.washer	8.axle
9.gear	10. differential mechanism hub	11.gear ring	12.bolt
13.lock plate	14.bolt	15.lock washer	16.dowel pin 6×30
17.nut M10×1.25	18.bearing 6213	19.washer	

Figure 2-2 Differential mechanism

1.3 Drive axle

The drive axle consists of axle shell,wheel hub and arrester. It is installed in the front of framework

The shell is unit casted in construction,the tyres are fastened on wheel hub with studs and nuts,wheel hub is supported on axle shell by conical roller bearing,power is delivered by differential to differential axle by differential,wheel hub which drives front wheel to rotate is drived by differential axle.Differential shaft only bears the twisted moment delivered to wheel hub.There are seals inside left wheel hub to prevent water and dust or oil leakage installed in wheel hub.
see figure 2-3

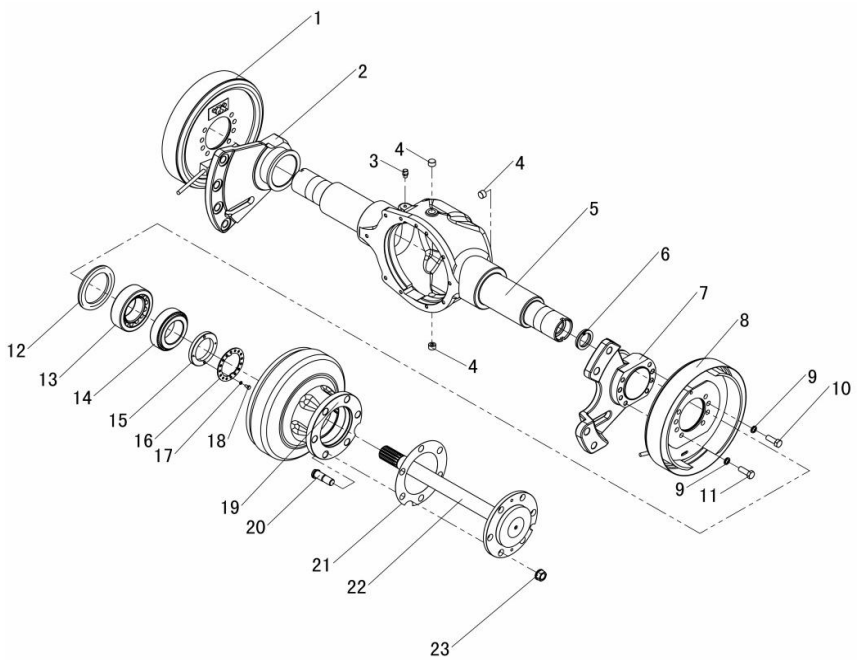

1.brake assembly	2.drive axle leftbaseplate	3.air hole assembly	4.block
5.new drive axle shell	6.oil seal	7.drive axle bearing plate	8.right brake assembly
9.washer	10.bolt	11.bolt	12.oil seal
13.bearing 30615	14.bearing 331151	15.nut seat	16.circlip
17.washer 6	18.bolt	19.hub	20.bolt
21seal washer	22.axle	23.nut	

Figure 2-3 Drive axle

The driver axle is designed reasonable in construction,credible in serviceability,long in service life and so on,the material of axle shell is cast steel which is good in rigidity and bearing capacity,the main technical parameter.（see List 2-1）

List 2-1The main technical parameter

Truck model		FE4P50N	FE4P60N	FE4P70N
Construction pattern of drive axle	front wheel drive,axle body is fixed with truck frame full floating			
Brake pattern	two-front-wheel brake,internal expanding hydraulic hitch			
Installation gap of tyres mm		960	1040	1068
Wearing piece dimension（ length×width×thickness ） mm×mm×mm		348×60×8	348×76×8	
Wearing piece area cm^2		209×4	264×4	
Break drum inner diameter mm		310	314	
Brake staff external diameter mm		348	349	
Subsidiary pump cylinder diameter mm		28.58	28.58	

1.4 Installation of wheel hub

(1) Fill the wheel hub with 100ml grease,and then fix it on the axle.see figure 2-4.

(2) Screw up adjust nuts with 9.8N.m of twist moment,then reverse them 1/2 coil

(3) Hang the weighter on the bolt to measure the starting moment of the wheel hub,when it reachs the defined value,start to screw up the nut.

starting moment:：49N·m－147N·m。（figure 2-5）

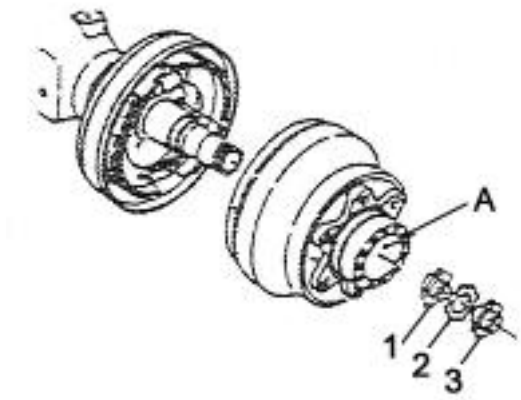

fgure 2-4 injection of grease

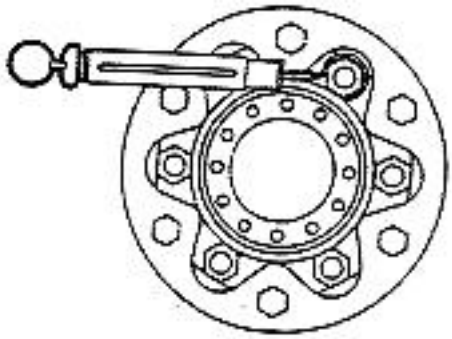

figure 2-5 measurement of starting moment

(4) Install lock plate and lock nut, and cock up lock plate to stop nut

(5) Tyre assembly（figure 2-6）

Fix gas pole and nut cap upon tyre,and assemble wheel rib pay attention to the following items:

Attention:

(a) Gas pole lies in the gap of the wheel rib

(b) Wheel rib bolts should be installed toward outside

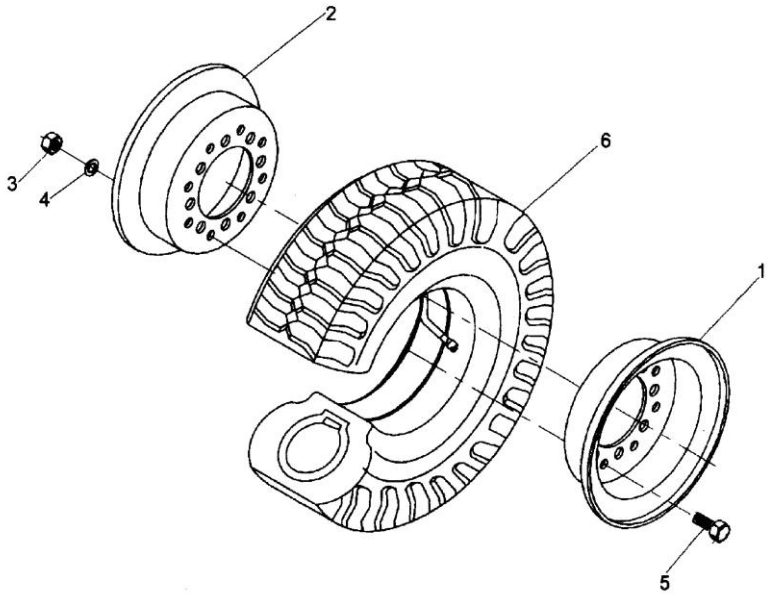

1.rim 2.rim 3.nut M16
4.washer 16 5.bolt 6.轮胎

figure 2-6 tyre assemble

1.5 Malfunction analysis

List 2-2 malfunction diagnose and adjustment

malfunction items	possible reason	adjusting method
shake a lot	the fastening bolts loosen	Tighten
Too high of oil temperature	gear oil deteriorates	replacing
	Un usual Oil level	Supplying or reducing
	Clamping stagnation of moving parts	adjustment
oil leak	Contacting surface bolts loose	tighten
	seal packing rings worn	replacing
noise	gear damages	replacing
	bearing damages	replacing

2. Brake system

2.1 Summarize

Brake system,Being Two-front-wheel internal expansion oil pump type,consists of brake paddle,brake base pump and wheel brake staff

2.2 Brake paddle

The construction of brake paddle is illustrated in figure 2-7.The paddle transfers the stamp force exerted by the pushing rod of brake base pump into the pressure of brake oil

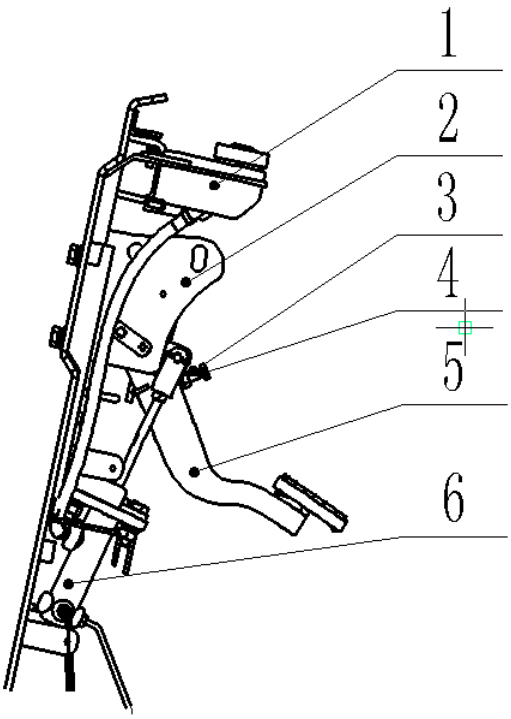

1. brake oil cup 2. brake support 3. brake sensor
4. bolt 5. brake pedal 6. brake pump

figure 2-7 brake paddle assembly

2.3 Brake base pump（figure 2-8）

Base pump consists of a valve support,a one-way-valve,a rebound spring and base leather cup,piston,assistant leather cup.The end of the base pump is fixed with lock washer and lock steel wire,And the outside of it is protected with rubber dust preventing cover.The base pump works under the assistance of pushing rod by operating brake paddle,Step down the brake paddle,the rod pushs the piston,the brake fluid flow back to oilcan through oil return hole until the base leather cup plugs the oil return hole.After the base leather cup push over the oil return hole,the brake fluid of the front cavity of base pump is compressed and open the one way valve and through brake pipeline flow into subsidiary pump.Then,the piston of each subsidiary pump pushes out to make the brake shoe wearing piece get contact with the brake drum,and finally stop the truck or make it slowdown. Now,the back cavity is supplied with the fluid by the brake fluid from oil return hole and oil-in hole.Release the brake paddle,the piston is push backward by the brake shoe rebound spring,at the same time,the brake fluid in each subsidiary brake pump is compressed by the rebound spring.Which makes the brake fluid flow back to base pump through one way valve,the piston returns back to initial position,the brake fluid in base pump flow back to oilcan through oil return hole,one way valve pressure is adjusted in proportion to the residual pressure in brake pipeline and subsidiary brake pump,the leather cups in subsidiary pump should be placed correctly to prevent oil leaking and the case of air resistance which possibly occurs in emergency brake.

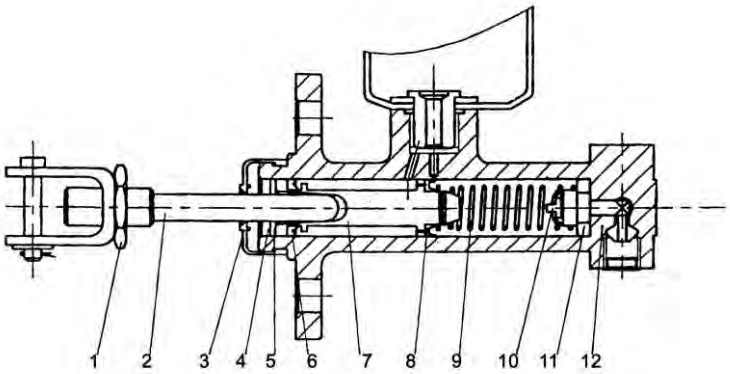

1.latch nut	2.pushing rod	3.antidust cover	4.locking steel wire
5.locking washer	6.assistant leather cup	7.piston	8.base leather cup
9.spring	10.cheak valve	11.valve supporter	12.pump body

figure 2-8 base brake pump

2.4 Brake

The brake staff adopted is two shoe brake installed in the two sides of drive axle.The brake staff consists of two groups of brake shoes,subsidiary brake pumps and regulators,one end of the brake shoe,which holds back the parking brake parts through rebound spring and Pressure spring,contacts with fixing pin and another end of it contacts with regulator,In addition,there are brake packing device and automatic regulating device assembled on brake staff. See figure 2-9

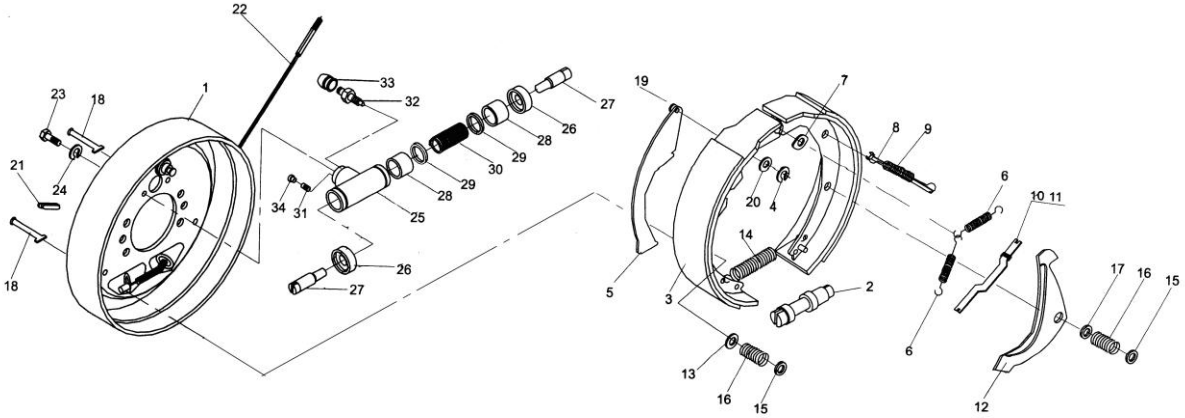

1.brake baseplate assembly	2.clearance adjuster	3.friction plate assembly	4.washer
5.pull rod	6. spring	7.washer	8.push rod
9. spring	10.push rod	11.spring	12.adjusting lever
13. spring seat	14. spring	15. spring cap	16. spring
17. spring seat	18.pull rod	19.pin	20. washer
21.rubber plug	22.brake cable assembly	23.bolt M8×16	24.washer 8
25.cylinder	26. protective cover	27.piston rod	28.piston
29.ceal cup	30.spring	31.oil plug	32.screw
33.protective cover	34.dust cover		

figure 2-9 brake stuff

(1) Motion of brake stuff

The brake drum is pressed by the leading brake shoe and the secondary brake shoe with the same force from subsidiary brake pump,when the top side of the brake shoe is stopped by the fixed pin,the brake shoe will move toward brake drum until being stopped by the fixed pin,then the friction between wearing piece and brake drum will increase. As the pressure the leading brake shoe exerted on the secondary brake shoe is much larger than the subsidiary pump pressure.Tthere will occur a quite large brake force. see figure 2-10

When driving backward,the brake stuff works in reverse to it when drives forward. see figure 2-11

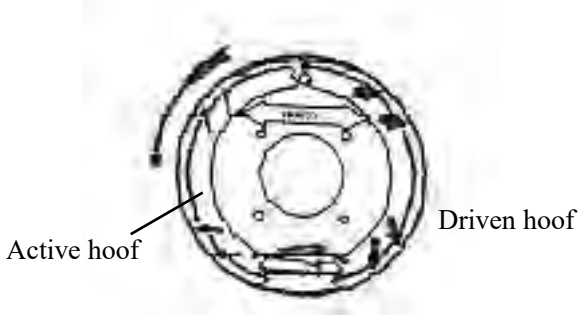

figure 2-10 motion when driving forward

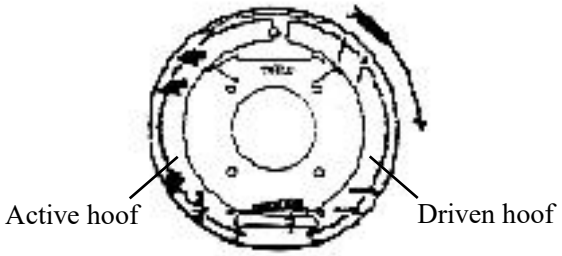

figure 2-11 motion when driving backward

(2) parking brake

The parking brake device which consists of pulling rod and pushing rod is assembled in wheel brake stuff. The pulling rod,of which the action is transported to the side of secondary brake shoe,is installed on the side of leading brake shoe.See figure2-12

(3) gap-self-regulating device

Gap-self-regulating device can keep a proper gap between wearing piece and brake drum,it works only when driving backward.see figure 2-13.

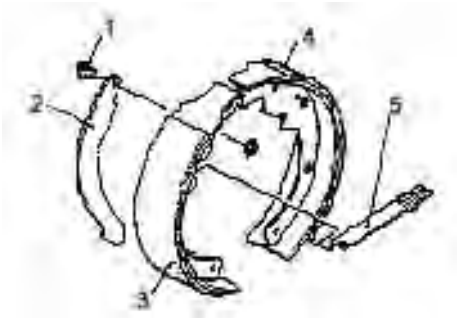

1.pin 2.pull rod 3.active hoof 4.driven hoof 5.jackstay

figure 2-12 parking brake

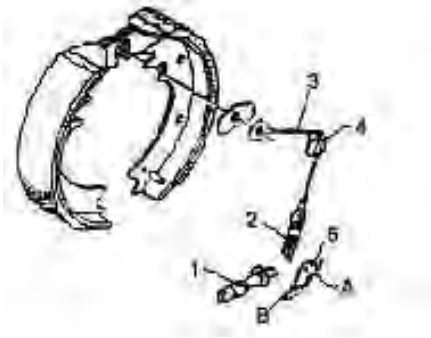

1.adjusting mechanism 2.spring 3.dragline 4.guide alot 5.pull rod

figure 2-13 gap-self-regulating device

(4) Motion of gap-self-regulating device

Brake the truck when driving backward,the secondary brake shoe gets contact to and roll together with the leading brake shoe,making pulling rod rotating rightward around point A,see figure 2-13,and B point rises. After the release of brake,pulling rod turns left under the force of spring,Bpoint descending.with the increasing of the gap between wearing piece and brake drum,the vertical distance of B point rotating grows,and the regulating device moves one tooth space.,then,regulating rod gets longer（see figure 2-14）tthe gap narrows,regulating gap lies between 0.4mm and 0.45mm.

2.5 Parking brake operating device（figure 2-15）

Parking brake handle is cam in pattern.Adjuster lying at the end of handle is available to adjust the brake force.

Turning the adjuster clockwisely,the brake force increases;Turning the adjuster counter clockwisely,the brake force decreases.

Pulling force:196N～294N

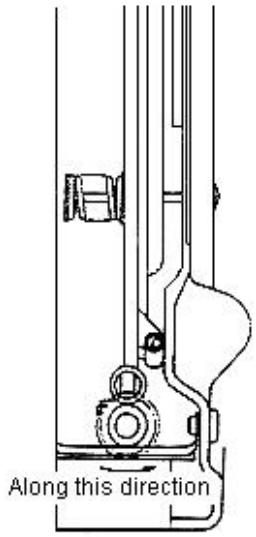

figure 2-14 gap-self-regulating device

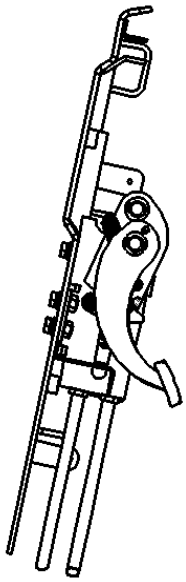

figure 2-15 parking brake handle

2.6 Gist of dismantlement and regulating for brake staff

Instruction of decomposing,assembling,regulating and brake paddle adjusting method when the wheel and hub is disassembled.

2.6.1 The decomposing of brake device

(1) Disassemble supporting pin,adjusting rod,regulating device and spring on the brake shoe.See figure 2-16

(2) Disassemble the the reverse spring on brake shoe. See figure 2-17

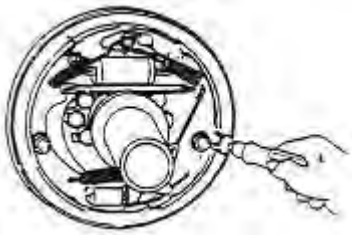

figure 2-16

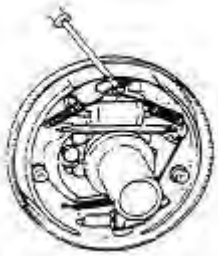

figure 2-17

(3) Disassemble the fixed spring on leading brake shoe.See figure 2-18

(4) Disassemble the leading brake shoe and secondary brake shoe. Then disassemble the

regulator and regulating spring.See figure 2-19

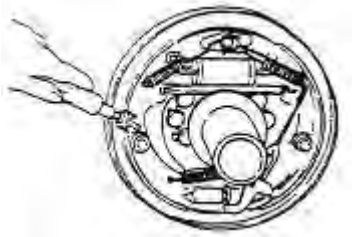

figure 2-18

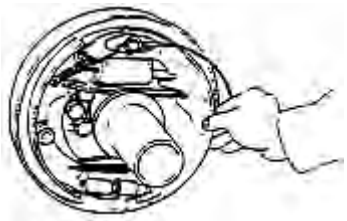

figure 2-19

(5) Disassemble the brake tube from the driven brake pump,and disassemble the assembling bolts on the subsidiary brake pump.Then disassemble the subsidiary brake pump from brake device motherboard.See figure 2-20

(6) Disassemble the E baffle ring to fast the brake dragline from brake device motherboard.Then disassemble brake device motherboard bolts,and disassemble brake device motherboard from drive axle. See figure 2-21

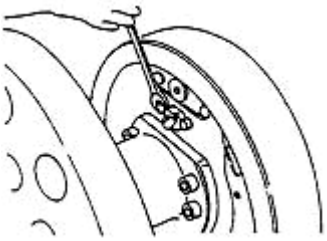

figure 2-20

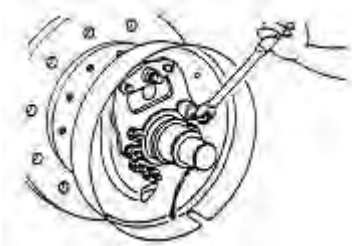

figure 2-21

(7) Analyze subsidiary brake pump:Disassemble scraper seal. Press one terminal piston to push out another terminal one,then push out the rest one with finger.See figure 2-22

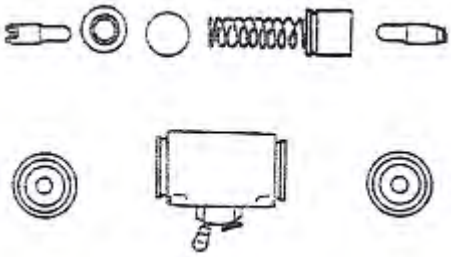

figure 2-22

2.6.2 Brake device inspection

Inspection of parts.Repair and replacement of Damaged parts

(1) Check up if there is any rust of inner surface of sub-pump and outside of piston; then measure the clearance between piston and pump body. Standard size: 0.03mm—0.10mm;limit size: 0.15mm

(2) Visually Check up if there is any damage and deformation of cup leather, please replace if abnormal.

(3) Measure the free length of brake sub-pump, if abnormal, please replace.

(4) Measure the thickness of friction slice, if exceed the limit wear, please replace. Standard: 8.0mm;limit: 2.0mm. See figure 2-23.

(5) Eye-measure if there is any damage on inner surface of brake drum, if abnormal, amend by lapping. If exceed amendment limit, please replace. Standard: 314mm;limit: 316mm. see figure 2-24

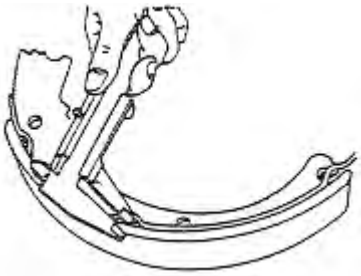

figure 2-23

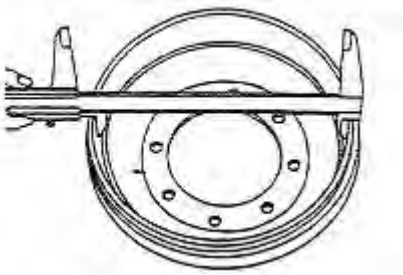

figure 2-24

2.6.3 Assembling brake device

(1) Wipe brake liquid on cup leather and piston of brake sub-pump, assembling spring, piston cup leather, piston and defend ring.

(2) Install brake sub-pump on motherboard.

(3) Mount motherboard on drive axle.

(4) Wipe anti-heat lubricate grease on the region instructed in figure 2-25.

Pay attention not to wipe on wearing piece.

(a) Interface between motherboard and brake hoof

(b) Fasting pin;

(c) Interface between hoof slice and press spring base;

(d) Hand brake pull rod pin;

(e) Adjust bolt and rotating devices.

(5) Block parking brake wire rope by E-shape retainer ring.

(6) Fix brake shoe hoof by fastness spring. See figure 2-26.

(7) Put compress spring on hand brake handspike, hen fix handspike on brake hoof. See figure 2-27

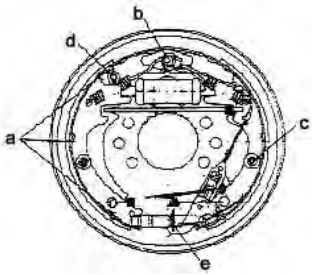

figure 2-25

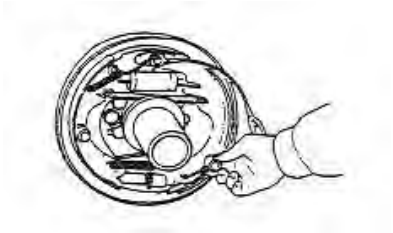

figure 2-26

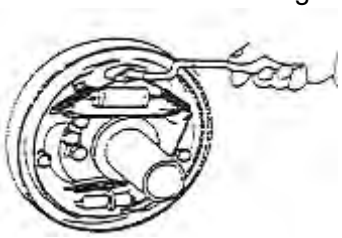

figure 2-27

(8) Fix guide of brake shoe on brace pin, then fix rebound spring of brake hoof. Install main shoe first, then sub-shoe. See figure 2-28

(9) Fit adjustor, spring, ejector pin, rebound spring. Please notice as fellow:

(a) The screw thread direction of regulator and its installation;

(b) The direction of spring of adjustor(no contacting spring with tooth of adjustor)

(c) The direction of rebound spring of ejector pin(spring hook of brace pin shall rivet on side of ejector pin relatively)

(d) The end of adjusting lever must contact with adjustor tooth.

(10) Connect brake oil pipe to sub-pump

(11) Measure inner diameter of brake drum and outer diameter of brake shoe, regulate adjustor, make the difference subtracting inner diameter from outer diameter equals 0.3mm-0.5mm.See figure 2-29

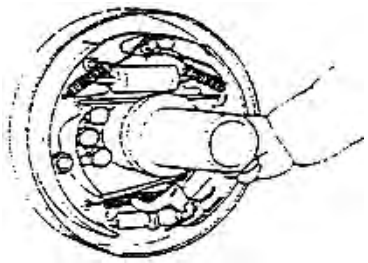

figure 2-28

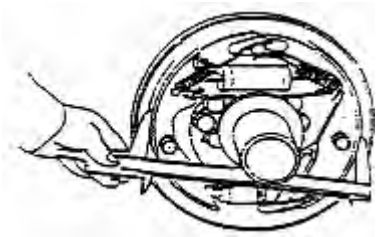

figure 2-29

2.6.4 Operating trial for self-adjustor of clearance See figure 2-30

(1) Adjust diameter of brake hoof close to the regulation size first, rotate adjustor by pulling adjusting bar, when releasing hand, adjusting bar return original place but adjustor gear doesn't rotate.

Notice: Even if when releasing hand, adjustor gear and adjusting bar return together, the adjustor can still work normally.

(2) Please examine as follow if adjustor can't act as introduced when pulling adjusting bar.

(a) Ensure adjusting bar, ejector pin, ejector pin spring and spring are all fixed.

(b) Check rebound spring of ejector pin and spring of adjustor, check adjuster gear for running state and whether there is over wearing in mating surface. check if there is touching between lever and gear. Replace damage parts.

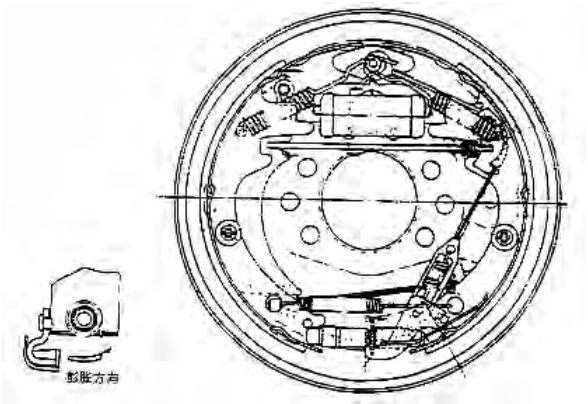

figure 2-30

2.7 Adjusting for Brake pedal See figure 2-31(a)

(1) Shorting handspike

(2) Adjusting limit screw of pedal to make optimum height of pedal. See figure 2-31;

(3) Stretch handspike until the front end of handspike touch the piston ,then, unthread for 1 or 2 circle to make the free journey among 10mm-20mm.

(4) Tighten handspike nut and limit nut of pedal

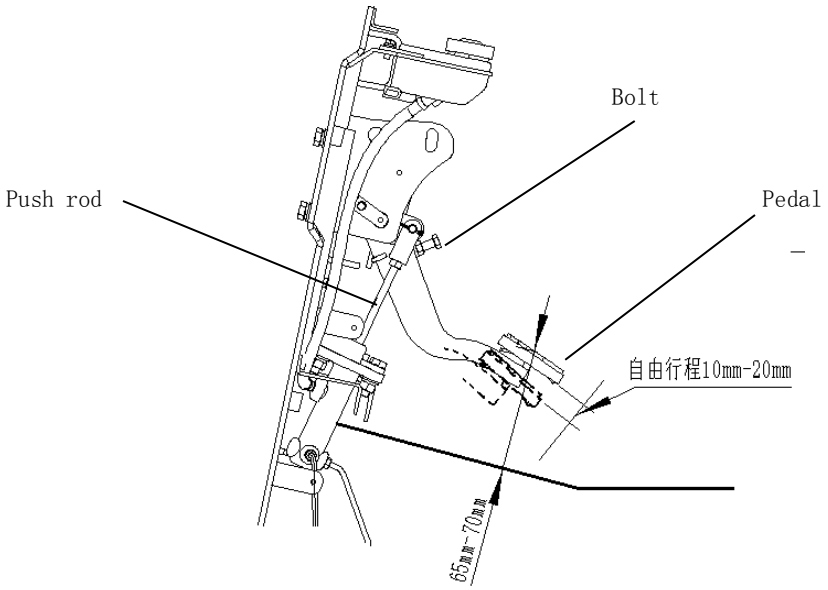

figure 2-31

(5) Adjusting brake switch as figure 2-32
(a) After adjusting brake pedal height,release lock nut of brake switch
(b) Pull off plug to separate wire
(c) Rotate switch to make clearance into A=1mm
(d) To be sure when step pedal down, the light of brake shall be open.
(e) Tighten the nut.

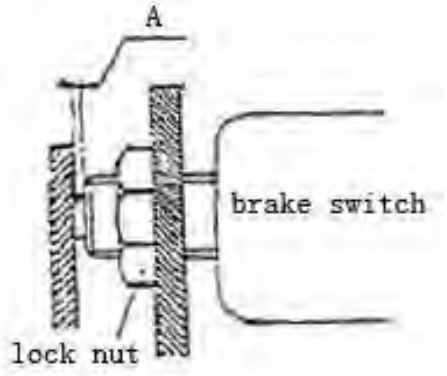

figure 2-32 braking light button

2.8 Malfunction and cause See List 2-3
List 2-3

Malfunction	Cause	Elimination
	1 Brake system leakage	Repair
	2 Clearance of brake hoof is not ok	Regulate adjustor
	3 Brake is too hot	Check if skid

Brake badness	4 Mal-touching between brake drum and friction slice	Adjusting again
	5 Dirt on friction slice	Repair or replace
	6 Impurity is in liquid	Check brake liquid
	7 Bad-regulate for brake pedal(inching valve)	Regulate
Noise of brake	1 Friction slice impurity or case hardening	Repair or replace
	2 Motherboard deformation or bolt loose	Repair or replace
	3 Hoof flake deformation or mal-installation	Repair or replace
	4 Friction slice abrasion	Replace
	5 Wheel bearing loose	Repair or replace
Brake unbalanced	1 Oil dirty on friction slice	Repair or replace
	2 Brake hoof clearance is not very good	Regulate adjustor
	3 Sub-pump lose function	Repair or replace
	4 Brake hoof rebound spring failure	Replace
	5 Brake drum deflexion	Repair or replace
Brake force weak	1 Brake system leakage	Repair or replace
	2 Clearance of brake hoof is not ok	Regulate adjustor
	3 Air in brake system	Deflate air
	4 Brake pedal adjusting is not ok	Adjusting again

2.9 Maintenance

①Before running trial of new axle you have to infuse gear oil. Fill oil into filler well located on top of axle shell until oil spill over fuel level hole located on middle of axle shell.

② The thick of friction slice of brake hoof is 8mm normally, can not be less than 2mm. Check it once a month, if the thickness is less than 2mm, replace it immediately to avoid any accident.

③ Technical maintenance every 50 hours:

(a) After the axle has worked 50h of together with the truck,replace the gear oil,Cleaning axle shell inner cavity thoroughly before replace by new gear oil

(b) Check tightness of bolt and nut,if loose, tighten it immediately.

(c) Check if there is leakage of connection of wheel hub and differential shaft, if necessary, recoat airproof glue again.

④ Technical maintenance every working month:

(a) Check brake drum to see whether there is destructive abrasion.

(b) Check brake shoe for abrasion,if it can not reach the operating requirement,replace the brake shoe at once.

(c) Check whether the axle shell is normal,if the oil level is less than normal,supplement the oil

⑤ Technical maintenance semiannually replace gear oil of axle shell once every a half year

⑥ Technical maintenance yearly Disassembly checkonce a year.

⑦ Check and debug requirement during installation

When renew drive axle wheel hub,becareful for regulating adjustor to make optimum clearance between brake drum and friction slice equals 0.3mm～0.5mm. Infuse 100ml 3# lithium-base lubricate greese into taper roller bearing of wheel hub.

Adjusting for clearance of wheel hub: Tighten lock nut until brake drum of wheel hub can only rotate slightly. Then reverse lock nut 1/8 circle, at this time, the brake drum can rotate freely without seizing-up, also without axial motion and deflexion. Now you can place retainer washer and tighten lock nut.

3. Steering system

3.1 Summary

Steering system（see figure 2-33）consists mainly of steering wheel,steering shaft,steering device,steering oil pump and steering axle and so on. Steering shaft connects to steering device by universal joint. connecting shaft connects,with universal joint,to steering wheel. the steering limp can tilt forward and backward to a proper position. steering axle,installed on the tailbracket of the rear of the framework,has a kunckle on both left and right side. Kunckle is pulled by steering oil cylinder through connecting rod,which makes steering wheel to turn and achieves turning.

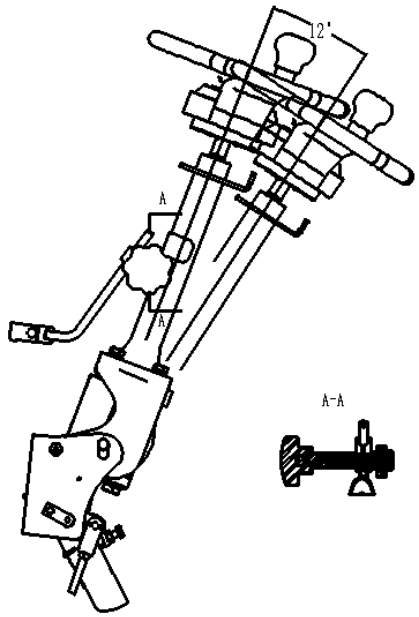

figure 2-33 Steering operation device

3.2 Full Hydraulic cycloid redirector

Full Hydraulic redirector(figure 2-34) can transfer pressure liquid from pump to oil cylinder according to rotatory angle of steering wheel. When hydraulic system failure, steering operation can be done by manpower.

The redirector consists of a normal redirector and a assembled valve, there is a safety valve which located in the hole of top cover of assembled valve, also there is a two-way overloading

valve in valve body to be used to prevent damage on equipment when hydraulic pressure is too high produced by impact of outside force which is from ground to wheels during travelling. Both safety valve and two-way overloading valve are regulated in optimum by manufacturer, so, users shall not regulate it randomly.

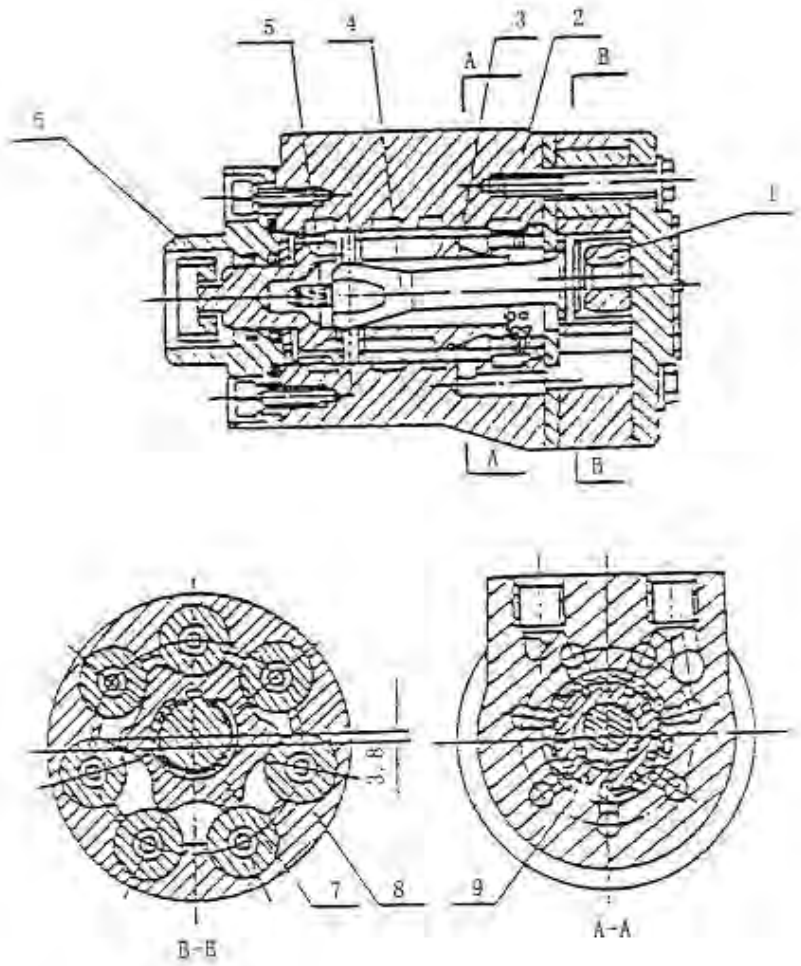

1 Limit pin	4 Universal driving shaft	7 Rotor
2 Valve body	5 Spring slice	8 Stator
3 valve core	6 Joint piece	9 Valve pocket

figure 2-34 Hydraulic cycloid redirector

3.3 Steering axle

Steering axle is box-cross-section welding in pattern. It consists of the parts as steering axle body,steering cylinder,connecting rod,steering knob,steering wheel and so on. Steering trapezium is crank block in construction that the cylinder piston rod,by connecting rod,makes the kunckle steer,further,steering wheel deviate to achieve turning. steering axle located,by rear and front pin,upon fixing board which is fasted by bolts on the tail bracket of rear part of framework,which makes it possible for the axle body to sway around the pin rod. there are kunckles on each side of steering axle. Rear wheel hub is assembled by two conical roller bearings on steering knob axes. wheels are fastened on wheel hub by wheel frame. there are oil seals installed inside of the bearings to make the lubricating grease stay in the cavity of kunckle.

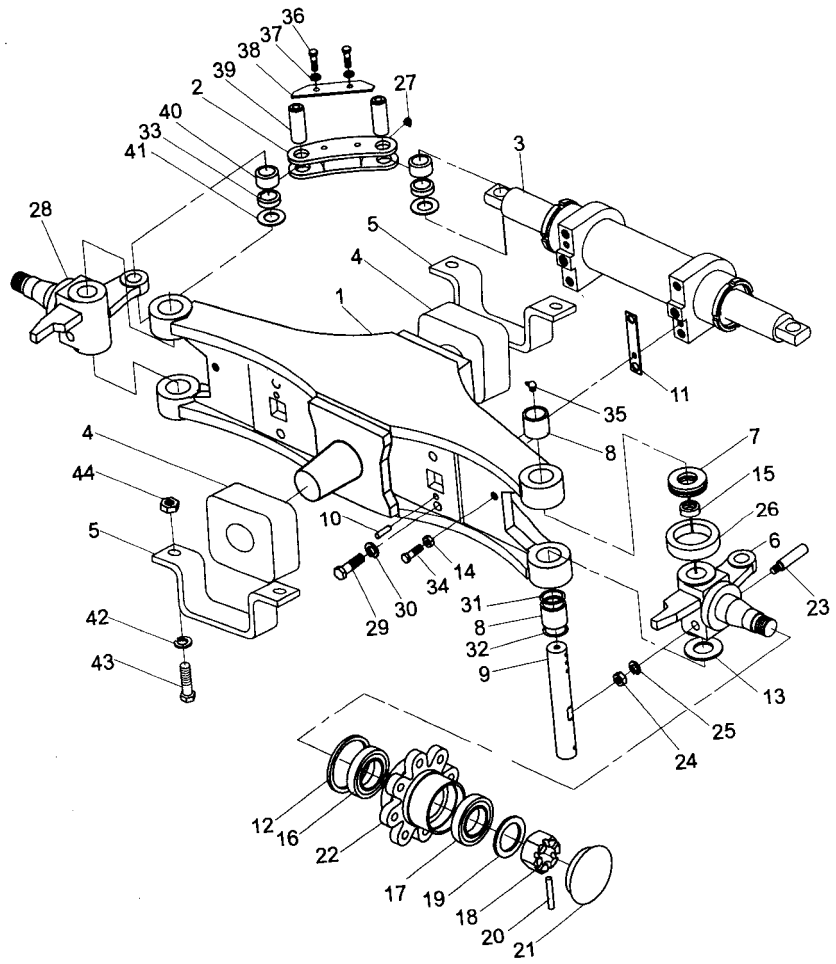

1.steering axle assembly	2.connecting rod	3.steering cylinder	4.anti vibration pad
5.steering axle fixing plate	6. right knuckle assembly	7. bearing 51208	8.bearing 943/32
9.kingpin	10.dowel pin 10×20	11.adjusting pad	12.oil seal
13.kunckle adjusting pad	14.nut M12	15.dust cover	16. bearing
17. bearing	18. nut M30×2	19.washer 30	20.dowel pin 6.3×55
21.wheel hub cover	22.hub	23.pin	24.nut M10×1.25
25.washer 10	26.bushing	27.grease nipple M6	28. left knuckle assembly
29.bolt M14×45	30. washer 14	31.O ring	32.oil seal
33.bushing	34.bolt M12×35	35.grease nipple ZG1/8	36.bolt M8×18
37. washer 8	38.baffle	39.pin	40.bearing
41. washer	42. washer 16	43. bolt M16×45	44.nut M16

figure 2-35 steering axle

(1) Kunckle

Kunckle,combined by kunckle king pin,conical roller bearing,anti-dust cover,O ring,locates between upper and down side of the steering axle body terminals. the upper end of king pin is fastened on axle body by stop pin,and the lower end of it is fasten on axle body by forelock. The supporter is supported by conical roller bearing which is pressed-in the axle body.（see figure 2-36）

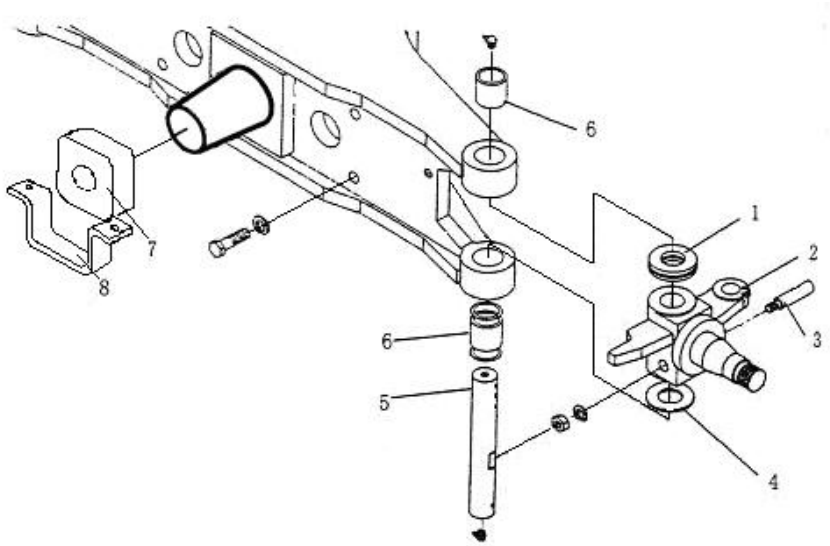

1. Thrust bearing 2. knokle 3. fast pin 4. Adjust washer
5. Pin roll 6. Needle bearing 7. Rubber mat 8. Underbed

figure 2-36

(2) Steering cylinder

Steering cylinder designed as a double-acting piston in pattern,that is,the piston rod connects on each end to kunckle with connecting rod,and the pressure from fully hydraulic steering device makes,by steering cylinder,piston rod move left and right to achieve left and right turning. the piston seal adops the combination of supporting ring and O ring. there is Yx ring locates between cylincer cover and piston rod to keep their leak-proofness. The oil cylinder is fixed upon steering axle by cylinder covers on two sides.（see figure 2-37）

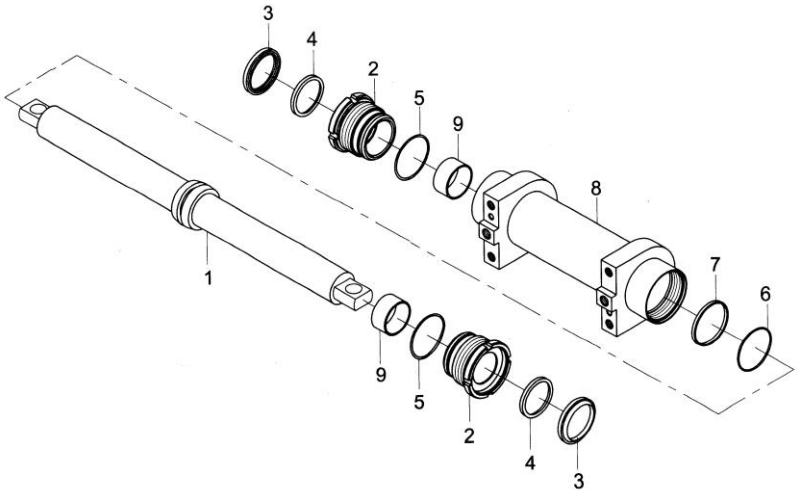

1.piston rod assembly 2.cylinder cap 3.dust ring 50×72
4.U ring 50×60×8 5.O ring 63×3.55 6.O ring 60×3.55
7.support ring 8.cylinder assembly 9.bearing

figure 2-37 steering cylinder

(3) Wheel hub

Wheel Hub is fitted on kunckle by taper bearing, wheel is fitted on wheel hub by wheel rim, there is oil seal inside of bearing to keep lubricate greese in cavity of wheel hub and kunckle. There is nut to adjust bearing for elasticity.

3.4 Gist for adjustment and maintenance

(1) See figure 2-38, lubricate inner cavity of wheel hub, inside or outside bearing and cover of wheel hub, meanwhile, lubricate oil seal

(2) Fit bearing outer ring on wheel hub and fit wheel hub on kunckle shaft.

(3) Fit washer and tighten castle nut, its tightening torque is 206-235N.m(21-24kgm),then loose castle nut, tightening nut again, at this time, the torque is 9.8N.m(1kgm)

(4) Tap wheel hub gently by wood hammer and rotate wheel hub 3-4 circle to ensure there is no loose of wheel hub.

(5) Tighten castle nut and make slot aim at split pin hole of kunckle

(6) Tap wheel hub gently by wood hammer again, rotate wheel hub 3-4 circle by hand to ensure rotation stability, and measure rotation torque to ensure it between 2.94-7.8N．m(0.3-0.8kgm)

(7)；If rotation torque is more than standard value, you can untread 1／6 circle and then measure rotation torque again.

(8) After rotation torque is regulated at its standard value, lock castle nut by split pin

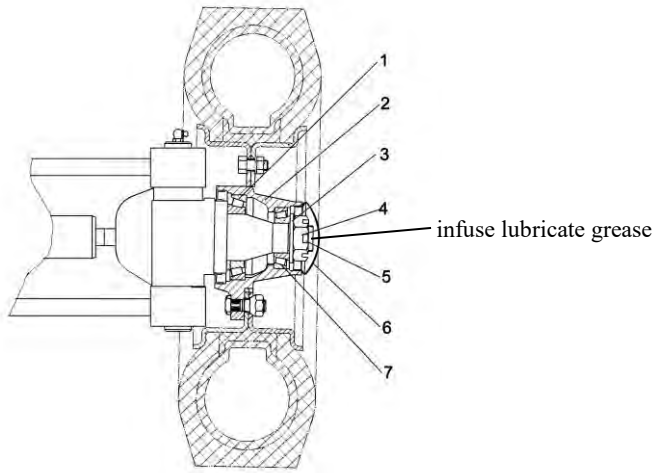

figure 2-38 Adjustment for pretightening force

3.5 Inspection after rebuilding of steering system

(1) Run steering wheel right and left to its end to check if its running is uniformity and stability

(2) Check up laying out of hydraulic pipeline and direction changing for mislaying

Jack rear wheel up, running steering wheel right and left slowly, repeating several times, exhaust air out of hydraulic pipeline and oil cylinder

3.6 Diagnose of steering system（list2-4）
List 2-4

problem	cause	elimation
steering wheel can not move	damage or malfunction of oil pump	replace
	hose connector is damaged or plug of pipeline	replace or cleaning
steering wheel dullness	safety valve pressure is too low	adjust pressure
	air in oil circuit	exhaust air
	failure of steering reset. Rivet spring slice broken or elasticity is not enough.	replace spring slice
	too big inside leakage of steering cylinder	check piston seal
Forklift S-route travel or sway	broken of spring or no elasticity	replace
too big noise	oil level in oil box is low	fuel
	plug of inhale pipe or filter	cleaning or replacing
oil leakage	damage of guide bush seal for steering cylinder or damage of pipeline or damage of connector	replace

https://truckmanualshub.com/

4. Electrical system

4.1 Summary

Electrical system of FE4P50N is powered by 48V battery set, Electrical system of FE4P60-70N is powered by 80V battery set .traction power of the truck is powered by AC motor，lifting power is produced when AC motor is driving the oil pump to produce oil pressure. Lighting system is powered by battery 48V(80V) to 24V voltage.

4.1.1 Schematic Diagram

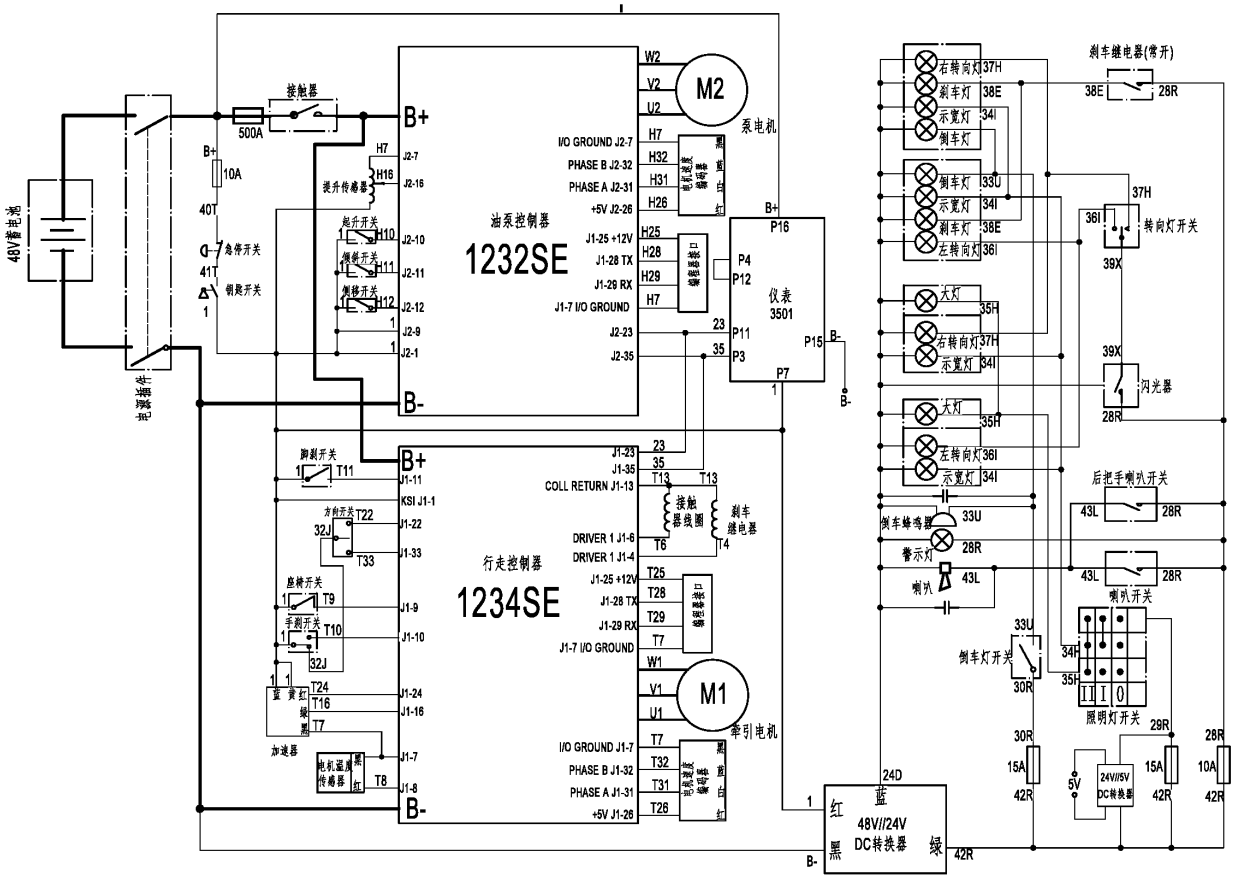

(Figure 2-41)

https://truckmanualshub.com/

4.2 Electrical system of direct current driving electric forklift truck (Fig.2-42)

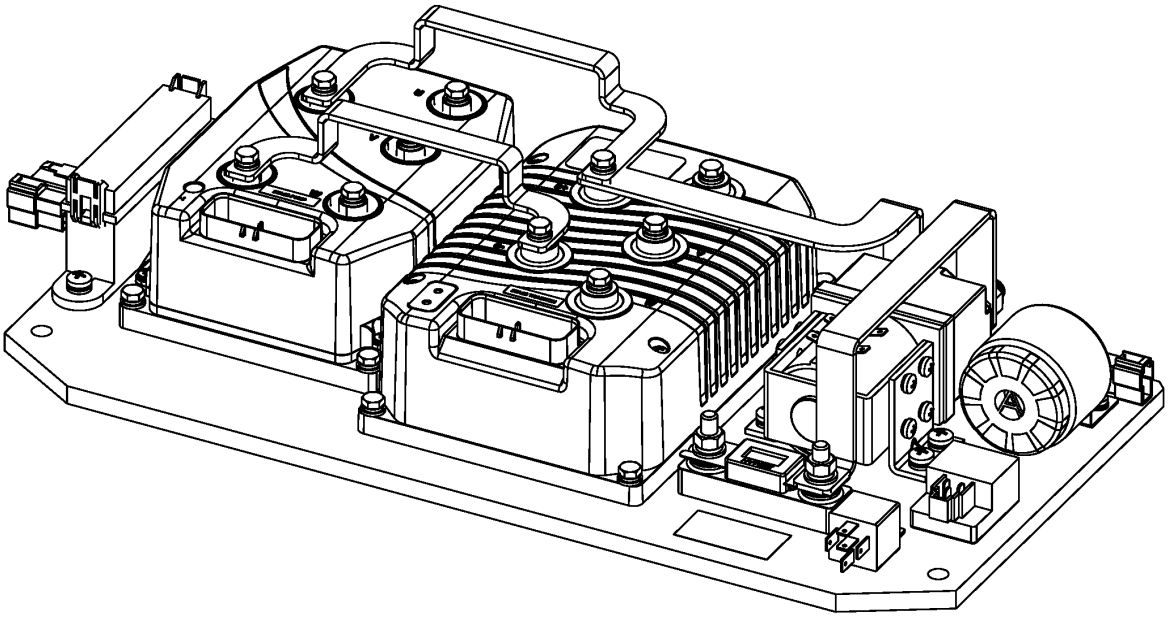

(Fig.2-42)

4.2.1 Forklift traction is AC variable-frequency motor, steering is AC variable-frequency motor controller, the dashboard display screen and AC drives adopes products from Curtis, the world's leading supplier of electric vehicle system in the United States. The adopted AC variable-frequency motor is high efficient, durable and maintenance free, basically because it has no DC motor commutator (commutator can limit the acceleration performance of truck, especially in high speed situation, it will limit braking torque), so its accelerating ability is faster. Controller is used for ecectric truck which use CANopen protocol controller for communication, through its analog and digital I/O and communications devices, it is very suitable for management of forklift movement, I/O operation, control and information display, it can discharge of battery monitoring, with all kinds of protection function. Dashboard display can show many data, undertake factory or user setting, can input multiple functions such as user commands.

4.1.2 Main functions and settings

Safe and high efficient working performance and complete operating performance of electric forklift can be achieved by setting correctly each motor technique data and control technique data and function value of controller.

1. The creeping speed of electric forklift can be set,the electric forklift work for a long time under a low speed,through creeping speed seting function of controller.

2、Acceleration can be set. Acceleration is the sense of softness or hardness of accelerating padal when operating electric forklift. By setting rate of rate,forklift can meet the need of accelerating operation under different working condition.

3、Plug braking and regenerative braking. In the course of travelling,there appears,when reversing direction rod,plug brake signal which,through the controlling of motor driver to pulling motor,presents a brake moment so as to brake the vehicle.The amount of brake power can be controlled by accelerating pedal. A proper setting of maximum brake power can ensure to brake electric forklift smoothly under different speed.Regenerative brake is,under the condition that the vehicle speed is higher than the rated value of accelerating pedal,generated by the controlling of controller. The brake power can transfer to electric power and present back to battery.Especially when the vehicle is coasting downwards slop,in order to properly reduce the speed,regenerative

brake can be achieved by properly releasing the accelerating pedal.The presenting back of electric power to battery prolongs the one-charge-travelling distance of it.

4、Function of backward slip preventation on slope,when the vehicle is stopped on slope,it will slip downward the slop acceleratedly if hand brake or food brake pedal is released. The function of backward slip preventation can prevent the phenomenon of slipping downward acceleratedly and ensure that electric forklift slips downward uniformly with a low speed.

5、The maximum travelling speed can be set.The setting of the maximum travelling speed of electric forklift can prevent pulling motor from overloading caused by excessive vehicle speed.

6、Shut down static recovery,controlling device will be shut down if seat swith or ignition key is off..Only when the direction controlling rod is switched to neutral position can the vehicle be restarted.That is to say,if the driver leaves vehicle at any time and returns back to it,it is necessary to switch the direction controlling rod to neutral position to restart. This function can prevent unexpected insecurity. There is two seconds of time delay at the input end of seat switch,which allows seat switch can be off in trashing.

7、Safety protection function.When the power element in controller is damaged in vehicle travelling,the controller will cut off main contactor as quickly as possible.When the temperature ascending speed of controller is too high,the controller will automatically limit the armature current of motor. And when the battery voltage is too low,the controller will stop working to keep safe.

8、There is self-diagnose function in pulling motor controller and oil pump motor controller.Once malfunction occurs in the working of controller,there will display malfunction code in indicating instrument,which will stop the controller from working to ensure the safety of operating system.

9、Display instrument will show battery power and the cumulative working hours.

4.2.4、Maintenance of circuit system

(1)、Check the contact wear condition; replace the contact if it’s worn and the contact should be checked every three months.

(2)、Check the pedal and tiller micro switch; Measuring the voltage drop at the ends of the micro switch, there is no resistance when the micro switch micro open closure should be without resistance, when released should have a clear voice.Check once every three months.

(3)、 Check the main circuit: battery- controller- connecting cable of the motor. To ensure that the cable insulation is good, the clamp circuit connection is fixed. Check once every three months.

(4)、Check the pedal mechanical movement to see whether the spring will deform, whether potentiometer spring can stretch out or draw back to the maximum level or setted levels.Check once every three months.

(5)、Check the contactor mechanical movement, the contactor should move freely without adhesion, mechanical movements of the contactor shall be inspected once every 3 months.

4.3 Combination instrument

Using new combination instrument, the main function is to realize auxiliary control and provide the vehicle display interface to the driver. It is composed of control circuit, the cumulative time counter (liquid crystal display), battery meter, fault code display and other circuit. Based on the current electric car demand, this instrument have new design in the control circuit and display form, which can provide drivers intuitive vehicle state information. This instrument has many advantages, such as compact structure, beautiful outline, high automatic degree and reliable quality.

Figure：

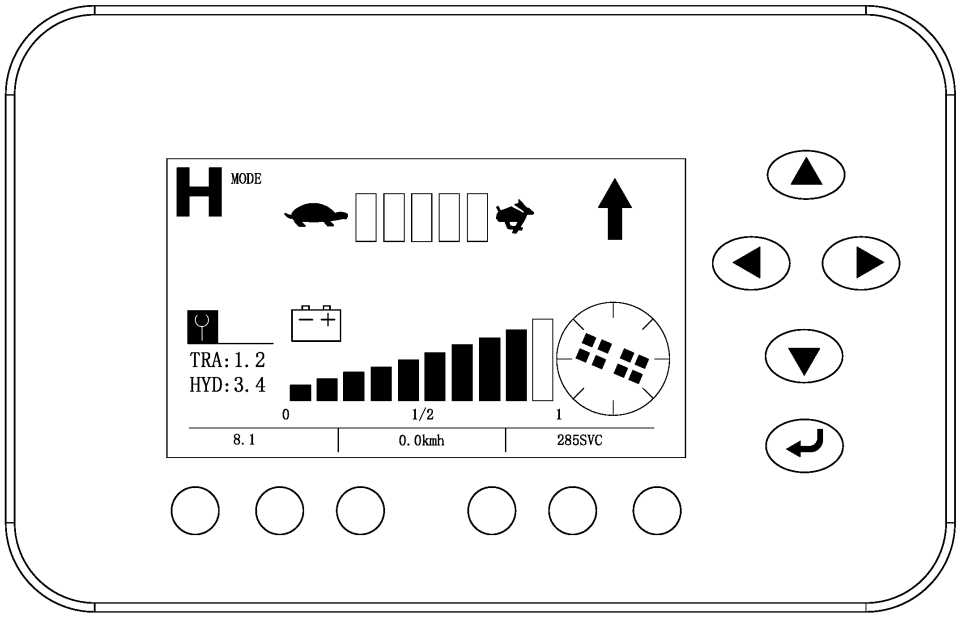

Figure 2-44 CURTIS instrument

1）、“TRVAL”means the situation of traction controller, digital code indicates controller failure, specific code please refer to 4.4 failure analysis.

2）、“HYD”means situation of pump controller, digital code indicates controller failure, specific code please refer to 4.4 failure analysis.

3）、the letter on the upper left means truck operating mode:“H”means high efficiency mode；“S”means normal mode；“E”means economic mode，press button to switch mode.

4）、Adjustment of instrument internal parameter is finished before leaving the factory, contact the after-sales department if someone wants to change it.

4.4 Failure analysis

1232SE/1234SE Controller fault table and diagnostics guide

Code display on the programmer	Code display on the instrument	Troubleshoot	Fault cause
Controller Overcurrent	1.2	controllercurrentoverload	1、motor outside U,V or Wconnection shour current 2、motor parameter mismatching 3、controller failure
Current Sensor Fault	1.3	Current sensor failure	1，motor U、V、W truck circuit，lead to current leakage 2，controller failure
Precharge Failed	1.4	Precharge failure	1，battery can't chagge
Controller Severe Undertemp	1.5	Controller temperature too low	1，The controller working environment is too harsh
Controller Severe Overtemp	1.6	Controller temperature too high	1，The controller working environment is too harsh 2，truck overloaded 3，the controller is wrongly assembled
Severe Undervoltage	1.7	Voltage too low	1， battery parameter is wrongly setted 2， non controller system power consumption 3， The battery impedance is too large 4， battery connection is disconnected 5，the fuse is disconnected, or main contactor is not connected
Severe Overvoltage	1.8	Voltage too high	1，Battery parameter is wrongly setted 2，The battery impedance is too large 3，Regenerative braking when the battery connection is disconnected
Controller Overtemp Cutback	2.2	Controller temperature too high, as a result the performance is not good	1, The controller working environment is too harsh 2，truck overloaded 3，the controller is wrongly assembled
Undervoltage Cutback	2.3	Voltage too low, as a result the performance is not good	1， battery power is insufficient 2， Battery parameter is wrongly setted 3， non controller system power consumption 4， The battery impedance is too

			large 5， battery connection is disconnected 6， the fuse is disconnected, or main contactor is not connected
Overvoltage Cutback	2.4	Voltage too high, as a result the performance is not good	1， during the process of regenerative braking, regenerative braking current lead the battery voltage to rise 2， Battery parameter is wrongly setted 3， The battery impedance is too large 4， when regenerative braking
+5V Supply Failure	2.5	Controller output 5v, poer supply failre	1， external load impedance is too low
Digital Out 6 Failure	2.6	Drive 6 output overcurrent	1， external load impedance is too low
Digital Out 7 Overcurrent	2.7	Drive 7 output overcurrent	1， external load impedance is too low
Motor Temp Hot Cutback	2.8	The motor is too hot, as a result the performance is not good	1，The motor temperature reach or above the setted program alert temperature, lead the current output to reduce 2，motor temperature parameter is wrongly setted 3， If the motor has not used the temperature sensor, programming parameters “Tempcompensation”and“Temp cutback”must be setted“OFF”。
Motor Temp Sensor Fault2.9	2.9	Motor temperature sensor failure	1， Motor temperature sensor is wrongly connecttedly 2， If the motor has not used the temperature sensor, parameter programming“MotorTemp Sensor Enable”must be setted“OFF”
Coil 1 Driver Open/Short	3.1	Drive 1 output linkng coil is open circuit or short circuit	1， connected load is open circuit or short circuit 2， connecting pin is stained 3， wrong wiring
Main Open/Short	3.1	Main contactor coil is open circuit or short circuit	1， connected load is open circuit or short circuit 2， connecting pin is stained 3， wrong wiring

Coil2 Driver Open/Short3.3	3.2	Drive 2 output linkng coil is open circuit or short circuit	1. connected load is open circuit or short circuit 2. connecting pin is stained 3. wrong wiring
EMBrake Open/Short	3.2	Electromagnetic brake coil is open circuit or short circuit	1， connected load is open circuit or short circuit 2， connecting pin is stained 3， wrong wiring
Coil3 Driver Open/Short	3.3	Drive 3 output linkng coil is open circuit or short circuit	1，connected load is open circuit or short circuit 2， connecting pin is stained 3， wrong wiring
Coil4 Driver Open/Short	3.4	Drive 4 output linkng coil is open circuit or short circuit	1，connected load is open circuit or short circuit 2， connecting pin is stained 3，wrong wiring
PD Open/Short	3.5	Proportional driving is open circuit or short circuit	1， connected load is open circuit or short circuit 2， connecting pin is stained 3， wrong wiring
Encoder Fault	3.6	Encoder failure	1，motor encoder is failure 2， wrong wiring
Motor Open	3.7	Motor is open corcuit	1， motor phase 2， wrong wiring
Main Contactor Welded	3.8	Main contactor adhesions	1， Main contactor contact welding 2， motor U or V disconnected or default phase 3，circuit that connecting B+ terminal will electricize the battery
Main Contactor Did Not Close	3.9	Main contactor is not closed	1， main contactor is not closed 2，Main contactor pin is oxydic, melted, or not stable when connected 3， external device electricize the battery 4， fuse is disconnected
Throttle Wiper High	4.1	Accelerator output is high	1，accelerator and potentiometer output voltage is too high
Throttle Wiper Low	4.2	Accelerator output is low	1，accelerator and potentiometer output voltage is too low
Pot2 Wiper High	4.3	potentiometer 2 output is too high	1，potentiometer 2 output voltage is too high
Pot2 Wiper Low	4.4	potentiometer 2 output is too low	1，potentiometer 2 output voltage is too low
Pot Low Overcurrent	4.5	potentiometer current is too low	1，potentiometer impedance is too low
EEPROM Failure	4.6	EEPROM failure	1，EEPROM storage failure

HPD/Sequencing Fault	4.7	High pedal protection /operation order failure	1，The key start, interlock, direction, and the accelerator input order is wrongly setted. 2， Wiring, switch key, interlock, direction, or accelerator input failure
Emer Rev HPD	4.7	Emergenvy reverse high pedal protection	1，Emergency reverse operation is over, but the forward, reverse input and interlock of the accelerator are not resetted
Parameter Change Fault	4.9	Parameter change failure/wrong	1，In order to ensure the safety of the truck, some specific parameter changes must come into force after the key switch is restarted
OEM Faults	5.1-6.7	OEM failure（custom failure	1，The user can define by themself the fault, use VCL code to note.
VCL Run Time Error	6.8	VCL running time is wrong	1，VCL code running time is overtime
External Supply Out of Range	6.9	External battery output is out og range	1， external loading is between 5V and 12V , battery current is too big or too small 2， in the“inspection menu (CheckingMenu)”, parameter is wrong, such as “ExtSupply Max”,“Ext Supply Min”
OS General	7.1	Operation system failure	1，internial controller failure
PDO Timeout	7.2	PDO overtime	1，CAN PDO information reception time exceeds PDOtime limition
Stall Detected	7.3	Motor stalling	1， Motor stalling 2， motor encoder failure 3， wrong connection 4， input motor encoder battery failure
Motor Characterization Fault	8.7	Motor matching failure	1， In the process of motor matching, code contrast：0=normal 1= The controller receives the encoder signal, but impulse quantity is undefined.Please manually set pulse value 2=motor temperature sensor failure 3= motor high temperature response failure 4=motor overheating response failure 5= motor low temperature sensor failure 6=low voltage response failure 7=high pressure response failure

			8= Controller cannot detect the encoder signal, channel signals disappears 9= Motor parameter settings exceed the scope
Motor Type Fault	8.9	Motor type failure	1，motor type（Motor_Type）parameters exceed the scope
VLC/OS Mismatch	9.1	VCL/OS not matched	1，VCL and OS of the controller program are not matching
EM Brake Failed to Set	9.2	Electromagnetic setting failure	1， the truck still not move after the electromagnetic brake command is setted. 2， Electromagnetic brake braking force is too small
Encoder LOS (Limited Operating Strategy)	9.3	Encoder operation is limited	1，Because motor blocked or encoder failure, the limited operating state is activated 2， wrong wiring 3， truck stall
Emer Rev Timeout	9.4	Emergency reverse response time is overtime	1， because EMR Timer expires, so the emergency switch is actiated overtime 2， emergent reverse switch has been on the “on” position all the time
Illegal Model Number	9.5	Controller type is wrong	1， controller moder can recognize 2，software and hardware type are not matching 3， controller is damaged

5．Battery

Battery framework see figure 2-45.

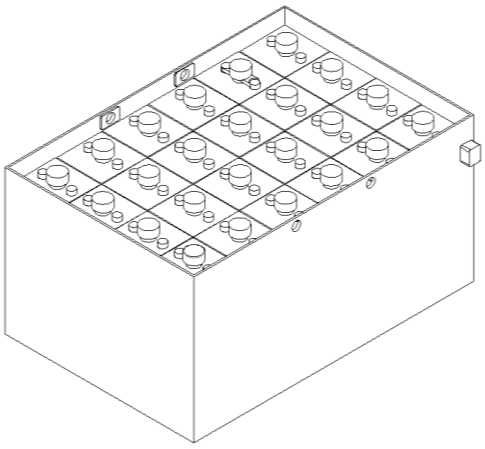

figure2-45 battery

5.1 Battery safety requirements

△ Good ventilation is necessary. Because hydrogen and oxygen take place at the later period of charging battery, so, sparks will lead to explosion.

△ There is acid mist taking place during charging,please exhaust it and cleaning battery and workplace immediately after charging.

△ The man who operate the battery should be performed in overall and protection goggles.In case that acid solution touches clothes, wash it immediately with plenty of water. If the skin or eye touch the electrolyte（acid solution）, you should be not only washing with plenty water but also going to hospital immediately. The acid extravasations should be eliminated through neutralization treatment.

△ For the avoidance from the injury of acid fluid,Do not operate battery if you are unfamiliar to its usage and risk

△ Do not place any metal object or tool on battery to avoid short-circuit.

△ Only after cutting off power entirely can you disconnect the connection of battery to power source.no plugging or unplugging of linker with power.

△ Before installation,please read operation instruction manual carefully.keep the manual with you after reading,so as to get convenience of it at any time.

5.2 Battery use requirements

The lifespan of battery is between 2~3 years.if use and maintenance are proper,its lifespan can be more than 4 years.it will be damaged within several monthes under unsuitable usage.

Check electrolyte level regularly, recharge and inspect battery in time. It is easy for battery maintenance but you should be patient and careful. Enough and standard density of electrolyte, keeping battery and its terminals cleanliness are necessary for longevity of battery.

Check if there is standing water in battery box,once find it,absorb it immediately.

In addition,Do not keep battery with electrolyte. When storing used battery with full capacity in short time, please charge it once per month to compensate self-discharging and to prevent or eliminate pole piece of battery sulfuration.

If battery can not be fully charged then fully discharged during working time,do it once a month,which can keep battery normal capacity and prevent its polar plate from sulfating.

keep battery exterior clean

Check battery and its fasting state of outgoing traverse clips.

Check battery shell for traverse craking and damage,check pole and outgoing traverse clips for burning out.

Rub-up dust of battery by cloth, if there is electrolyte stains, rub-up or cleanse by hot water, then dry it by cloth. Clean dirt and oxide of pole, rub-up lead and lead clip. Dredge venthole of oil inlet. Apply a thin industrial Vaseline on pole and lead clip.

Check battery for liquid level.

Insert a glass pipe which is 6～8mm inner dia.and 150mm length into oil inlet vertically until touching top surface of pole piece,then cover top mouth of pipe by thumb and nip pipe out of oil inlet by index finger,middle finger and ring finger, the liquid level of the glass pipe equals the liquid level of battery which is higher than pole slice, it is about 15-25mm.Finally, put electrolyte of pipe into case where it was.

Supply electrolyte

If liquid level is too low, you shall complement distill water, no tap water, no river water or well water to prevent impurity from the failure of self-discharging; Do not complement electrolyte, otherwise the concentration of electrolyte will increase to shorten the life of battery. The liquid level can not be too high in order to prevent liquid to overflow to cause short circuit. After adjust liquid level, to charge the battery more than half an hour to mix both electrolyte and distill water equally, otherwise there is possible to freeze in battery in winter.

Check electrolyte for density

The density of electrolyte vary with the level of charging or discharging of battery. Decrease of density of electrolyte means that battery had discharged. To know the level of discharging of battery,you should measure the density of electrolyte of each cell.

（1）Screw off each cover of cell, sip liquid up by densimeter until floater float up. Read scale by your eye parallel with density and let floater locate central position and not to touch with pipe wall,to avoid influencing reading accuracy.

If temperature is lower than 25℃ or upper than 25℃,measure actual electrolyte temperature with thermometer to modify the density value of it.

（2）Modification of electrolyte density. There is some error of electrolyte density among different temperature,so it is necessary to modify the measured density value.Normal density refers to the value of 25℃.When measuring,if the temperature is upper or lower than 25℃,each 1℃ higher,add 0.0007 to measured value.on the contrary,each 1℃ lower,subject 0.0007 from measured value.

25℃ electrolyte density calculated as following formula:

$D25 = Dt + 0.0007(t - 25)$

D25——25℃ electrolyte density

Dt ——t℃ measured electrolyte density

t——electrolyte temperature when measuring density

5.3 Battery charging

（1）Initial charge（our products has been initially charged normally,users could not do this work）

The result of initial charge has a rather important influence to battery,a certain of experience is necessary for operator to do this job.

Unused battery should be initially charged before use.

.Wipe battery exterior clean to check damage before initial charge.

Open cover of oil inlet to ensure vent hole to open.

Under the condition that the charger can work normally,infuse battery with vitriol electrolyte,of which the density is 1.26±0.005(25℃) and the temperature is under 30℃,and the fluid level must be 15～25mm higher than guard board.

Put battery standstill for 3～4 hours not exceed 8 hours. After temperature is lower than 35℃,initial charge can be made.if the electrolyte level descends after put standstill,it is necessary to be complemented.

Only electrolyte and distill water which accord with EN standard can be adopted to make up sulphuric acid electrolyte (Do not use industrial sulphuric acid and tap water).

⚠Warning: Slowly infuse strong sulphuric acid into distill water and stir liquid by a glass rod or lead cover wood stick, do not infuse distill water into sulphuric acid absolutely, otherwise, there will be liquid boiling and splashing to injure people.

To be sure the polarity of connection between charger and battery is correct, that is anode to anode and cathode to cathode,a reliable connection is necessary.

The first stage of initial charge use 0.5I_5A (D-600 battery is 60A) until voltage of single cell is up to 2.4V, then begin the second stage;

The second stage of initial charge use 0.25I_5A (D-600 battery is 30A)；

The temperature shall not surpass 45℃ for electrolyte during charging, have charging current or stop charging when the temperature almost reach 45℃, wait until temperature is below 35℃,then charge again. But the charging time needs to be prolonged.

Indication of enough charging:voltage is 2.6V in second stage of initial charging meanwhile voltage change is less than 0.005V; density is up to 1.28±0.005(25℃), there is no evident change within 2 hours and a lot of fine and closely bubble occurs. The Charging capacity is 4 ～ 5 times of rated capacity and the charging time is 70 hours.

To check density of electrolyte of each cell during charging last stage to control percentage of sulphuric acid in electrolyte. If necessary, to regulate by distill water or 1.40 dencsity sulphuric acid to manage electrolyte density and liquid level to normal value.

After finishing initial charge, clean battery surface and cover oil inlet.

（2）Normal charge

Do not use uncharged battery. Please watch out for discharge during battery charging. If discharge exceed standard value, charge it please. Excessive discharge (voltage is less than 1.7V/cell) is prohibited absulotely. Stop discharging when electrolyte density decreased to 1.17 and recharge it in time. Do not stop charge randomly during charging course.

In normal charging,Open cover of oil inlet,check if the electrolyte level is in normal height,otherwise regulate it to the normal height by distill water.

Connect charger to battery correctly,anode to anode, cathode to cathode,absolutely no error.

Charger is special to suit battery, it can regulate charging current automatically according to battery capacity until full of charging.(consult to charger manual instructions)

Suggest to build record of charge/discharge for each battery to favour knowing battery in time. During charging, to record current, total voltage, ench cell voltage (with code), electrolyte density and temperature (with 0～100℃ mercury thermometer) every 1-2 hours.

It tells you full of charging when there are lot of fine and closely bubble in electrolyte and voltage of cell is stable between 2.5-2.7V and there is no increase
for density for terminal voltage within 2-3 hours. If one or two cell emit bubble weakly or no bubble, please find out and record it.

Do not exceed 45℃ for electrolyte temperature during charging. If temperature close to 45℃, stop to charge until temperature is below 35℃.

During charging ending, check and regulate density of electrolyte. If density is abnormal, draw out some electrolyte, then infuse some to regulate: if original liquid density is too low, regulate by density 1.40 electrolyte; if too high, regulate by distill. Difference of electrolyte density of each cell is less than 0.01,liquid level shall also be normal.after adjust density,charge battery 0.5 hour with low current to mix electrolyte equality,then check electrolyte density again and adjust it if necessary.

（3）Blance charging

Under normal situation although each cell of the battery runs under the same condition,there are still reasons lead to that their capacity can not be exactly the same,so , balance charging is necessary to eliminate difference among cells. It’s easy to do the balance charge according to charge manual instruction.

Normally, battery need balance charge every 2～3 months. Balance charging is also necessary for battery which is out of work for long time.

https://truckmanualshub.com/

5.4 Installation and replacement of battery

Battery installation shall fix fastened, prohibit to overturn; Prohibit to hammer terminal and leading clips; Avoid impact during transporting.

6. Hydraulic system

6.1 Sumarry

Hydraulic system consists of pump, multiway valve, lift cylinder, tilt cylinder and pipeline ect. See figure 2-46,Hyduaulic liquid supplied by pump and multiway valve distribute liquid to each cylinder.

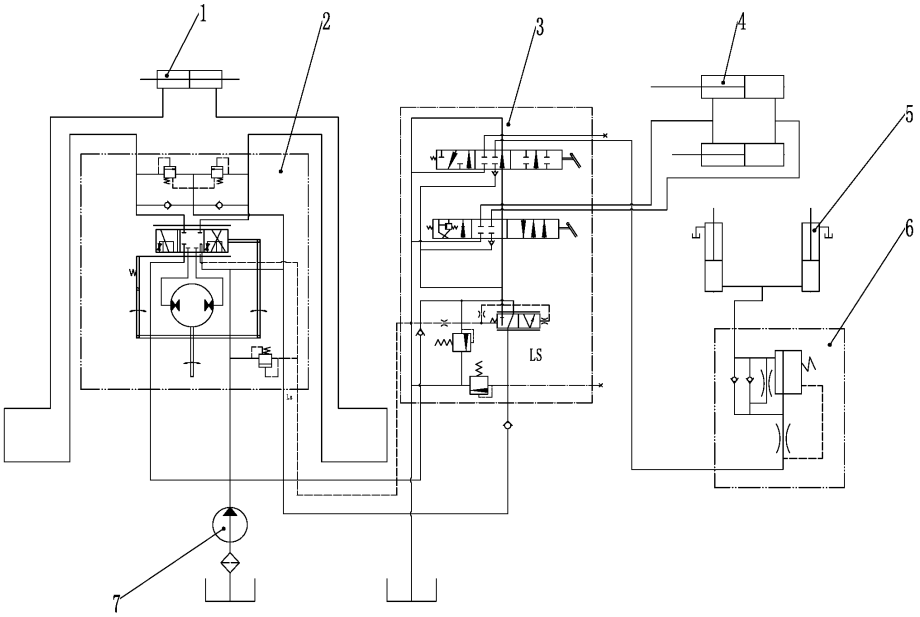

1、steering cylinder 2、diverter 3、multiway valve 4、tilt cylinder
5、lifting cylinder 6、speed limit valve 7、gear pump

figure2-48 Hydraulic system diagram

6.2 Oil pump

Oil pump is gear pump

6.3 Multiway valve

The multiway valve is two piece four body in pattern,the high pressure oil from working pump is distributed,by multiway valve rod,to lifting cylinder or tilting cylinder.The safety valve,which can control the pressure of the system,is set on the upper side of multiway oil-in mouse.The self-locking valve, main function is to prevent the terrible result caused by mishandling the controlling rod when there is no pressure source for tilting cylinder,is set on tilting valve piece.@ there are one way valves fitted between inlet and oil suction inlet of lifting valve slice and between inlet of lifting valve slice and inlet of tilting valve slice.

Multiway valve outline Figure 2-49。

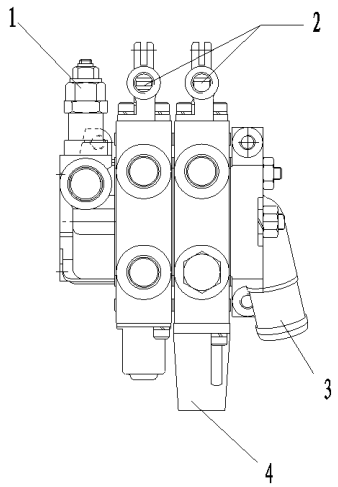

1. Safety valve 2. Inching switch support 3. Spill pore 4. Lift timing sensor cover

figure 2-47 Multiway valve outline

(1) Operation of Slide valve (To tilting slide valve,for example)

(a) Neutral (figure 2-50)

In this case,high pressure liquid out of pump to tank through neutral

(b) Push slide valve in (figure 2-51)

Then, neutral chunnel is closed, liquid from oil inlet to open one-way valve flow to cylinder joint B, liquid from cylinder joint A flow to tank through low pressure chunnel, supported by rebound spring, slide valve can return to nertral.

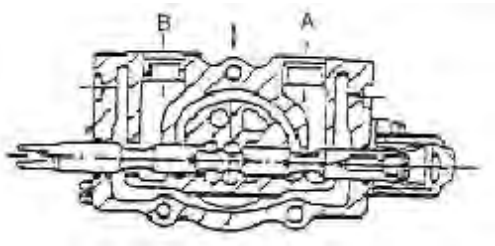

figure 2-50

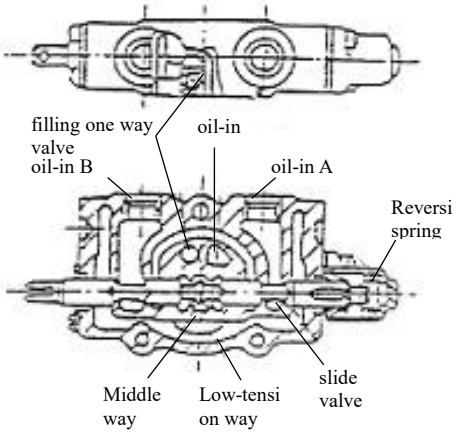

figure 2-51

(c) Draw slide valve out (figure 2-51)

Here close neutral, liquid from oil inlet to open one-way valve to flow to cylinder joint A, liquid from cylinder B to flow to tank through low pressure chunnel, supported by rebound spring, slide valve can return on neutral.

(2) Motion of safety flooding valve

There is a flooding valve between pump HP and low pressure chunnel “LP”. Pressure liquid from lifting valve“c” play on piston A and piston B,witch is different area, to push both one-way valve piston K and flooding lift valve piston D to locate on their valve seating respectively. Pressure liquid of HP chunnel of pump play on spring of guide valve, one-way valve E can be opened. Liquid flow into low pressure “LP” through holes around valve circumference.

If open guide valve E, inner pressure of valve C decrease, both piston of valve E and valve C locate on their valve seating respectively. Inner pressure decrease because liquid which flow to rear of valve D will be cut off.oil pump“HP”passageway is inbalance to inside pressure,under the effect of differential pressure,valve“D”opens,and the oil flow directly to low tension loop.

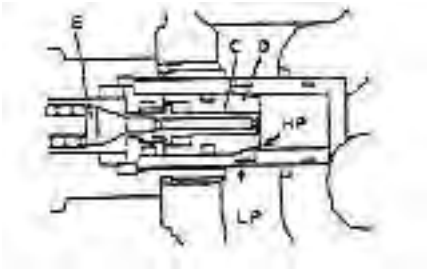

Figure 2-52

(3) Motion of tilting self-locked valve

There is tilting self-locked valve in tilting cylinder valve slice to prevent mast fall down suddenly when cylinder cavity take place negative pressure and danger when mal-operating tilting valve stick. Because this self-locked valve, if even thrusting joy stick, mast cannot be tilted when forklift motor stop work. Direction of flow liquid is the same as figure 2-52, here, mast is in tilting backward. When valve core is pushed in.

(a) When pump is working, push valve core into, liquid from main pump flow into tilting cylinder through joint B, liquid returned from cylinder play on piston through oil pore A. Liquid return to tank through pore A or B of valve core. See figure 2-53.

(b) When pump is not working, push valve core into,there is no liquid into joint of cylinder B, so, pressure of point P cannot be up. So, piston cannot move, liquid of cylinder joint A cannot return to tank, cylinder cannot move. See figure 2-54.

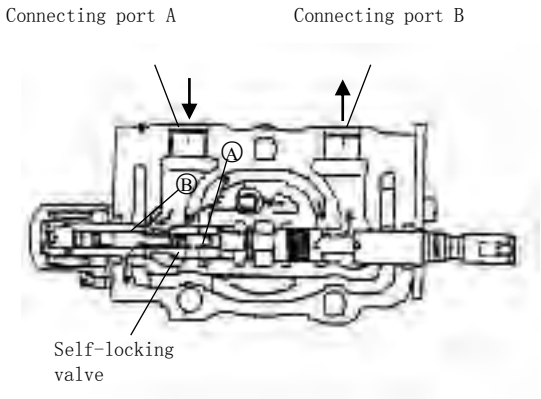

figure 2-53

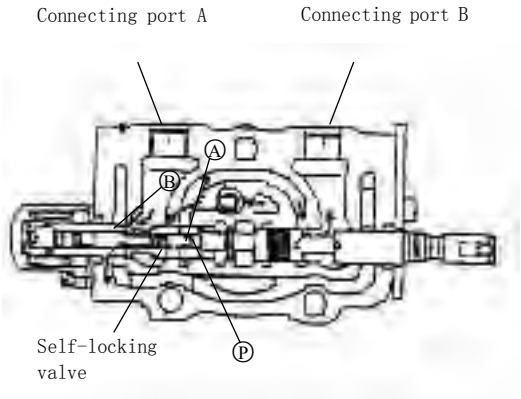

figure 2-54

(4) Multiway valve operation figure 2-55

Multiway valve operated by joy stick, all of joy stick installed on a support shaft, shaft fit on panel by bracket, joy stick steer slide valve by connecter rod.

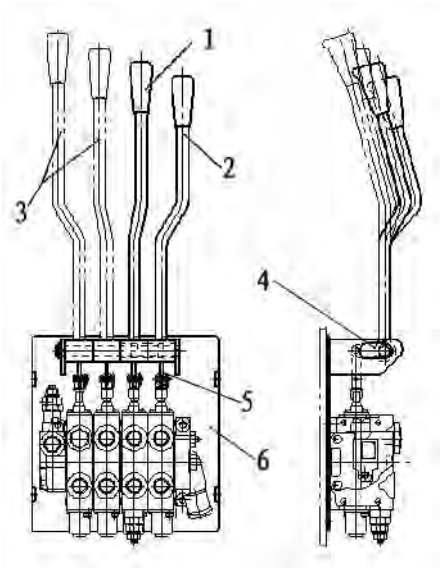

1. tilting rod operation 2. lifting rod operation 3. accessary rod operation
4. connecting shaft 5. connecting rod 6. bracket

figure2-55 multiway operation

(5) adjust safety valve pressure
Adjusted pressure for safety is 13.5/16.8MPa

⚠ **Safety pressure had been set it up by manufacturer, user shall not be setup by themself.**

6.4 Lift cylinder and lift chains.see figure2-56

Lift cylinder piston played on by one-way pressure, consist of cylinder shell, piston rod,piston, cylinder head etc. Two lift cylinders located on rear of outer mast,its bottom fitted on seat of lift cylinder of outer mast by pins and bolts, the top of cylinder(i.e. top of piston rod) connect with beam of outer mast.and there is speed restricting valve layed inside of the right lifting cylinder.

Piston fitted on piston rod by rebound steel wire, piston outer ring is fitted by seal and brace ring.

There is a stop valve on bottom of cylinder, when mast is up, if high pressure pipe burst suddenly, this valve can provide safety protection.

There are steel-backed bearing and seal on cylinder head to brace piston and prevent dust.

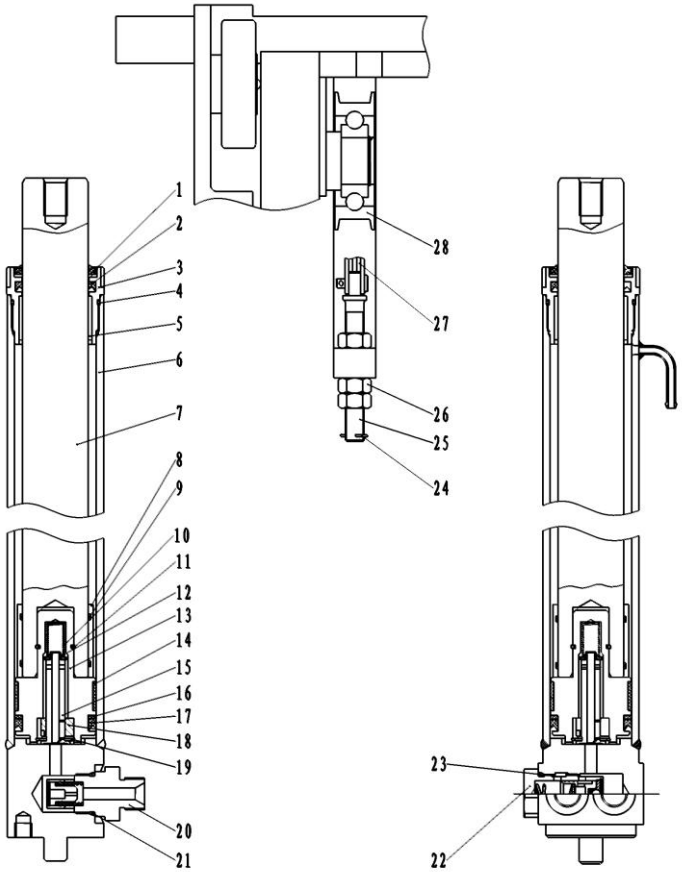

left lifting cylinder right lifting cylinder

1. anti-dust ring	2. axes seal	3.steel cap	1. O-ring	5.bearing
6.cylinder	7.piston rod	8.adjusting bushing	9.O ring	10.spring
11. circlip	12.spring seat	13.piston	14.support ring	15.valve core
16.circlip	17.hole seal	18.check valve	19.circlip	20.valve
21.O ring	22.speed limit valve	23. O ring	24.pin	25.chain joinr
26.nut	27.chain	28.chain wheel		

figure 2-56 lifting cylinder and chain

■Stop valve motion principle

There is a stop valve on bottom of cylinder(figure 2-57),if high pressure pipe burst suddenly, this valve can prevent load lowering sharply. Liquid from lift cylinder flow through stop valve slide valve, between two cavities ,there is difference of pressure produced by oil pores around slide valve; when pressure difference is less than spring force, slide valve has no motion; if high pressure pipe burst, there is a big pressure difference to push slide valve plug up oil pores around itself, only allow a little oil to flow through the pore of end of slide valve to make fork lowering down slowly.

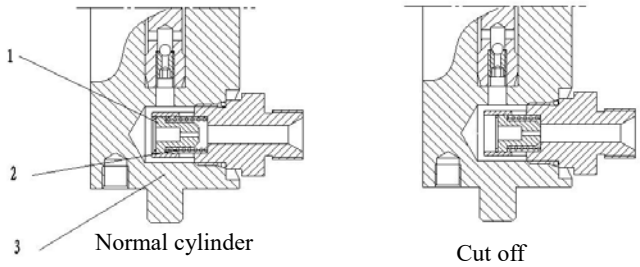

1.lifting cylinder body 2.pressure spring 3.valve core

figure 2-57 isolating valve

6.5 tilt cylinder

Ttilting cylinder,whose piston rod connects to mast through earbob,is double-acting in pattern. The bottom of tilting cylinder connects to framework with pin. There are two tilting cylinders on each side of forklift.

Tilting cylinder consist of piston, piston rod, cylinder body, cylinder bottom, guide sleeve and seal, piston and piston rod constructed by welding, there is a bearing and two **h** seals fitted on piston outside end, there are shaft sleeve, Yx seal, retainer ring and dust-ring in guide sleeve, this shaft sleeve support piston rod, seal ring, retainer ring and dust-ring to prevent leakage and dust, it is screwed onto cylinder body with O ring. See figure 2-59

Skid valve pushing forward,high pressure oil comes in from bottom of cylinder,so as to push pistion forward to make mast tilt forward.Pulling backward skid valve,high pressure oil enters from front of cylinder body,pushing piston backward to make mast tilt backward.

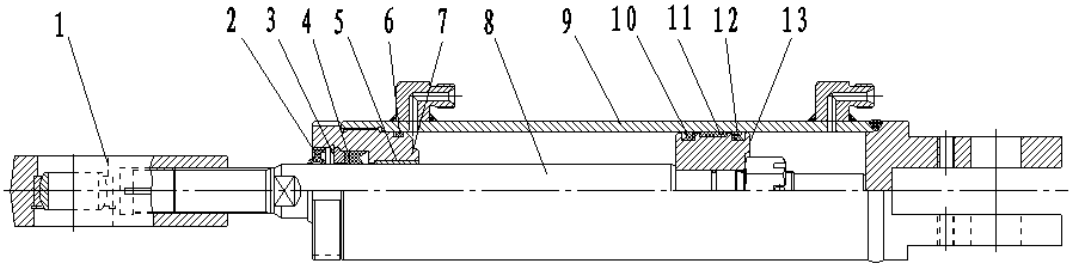

1.earrings	2.dust ring	3.baffle ring	4.Yx seal ring	5.bearing
6.O ring	7.guide bushing	8.piston rod	9.cylinder barrel	10.Yx seal ring
11.bearing	12.Yx seal ring	13.piston		

figure2-59 tilting cylinder

8.6 Hudraulic oil cylinder

Hydraulic oil tank is installed in rear right of framework. There are net filter in oil tank and breather on oil tank cover .see figure 2-60

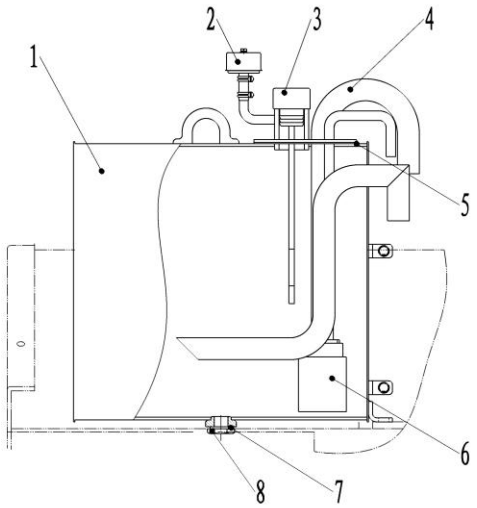

1.cylinder	2.respirator	3.cylinder cap	4.cylinder flap
5.seal pad	6.filter	7.washer	8.drain plug

Figure 2-60

6.7 Hydraulic oil pipeline

Hydraulic system hydraulic oil pipelice. See figure 2-61。

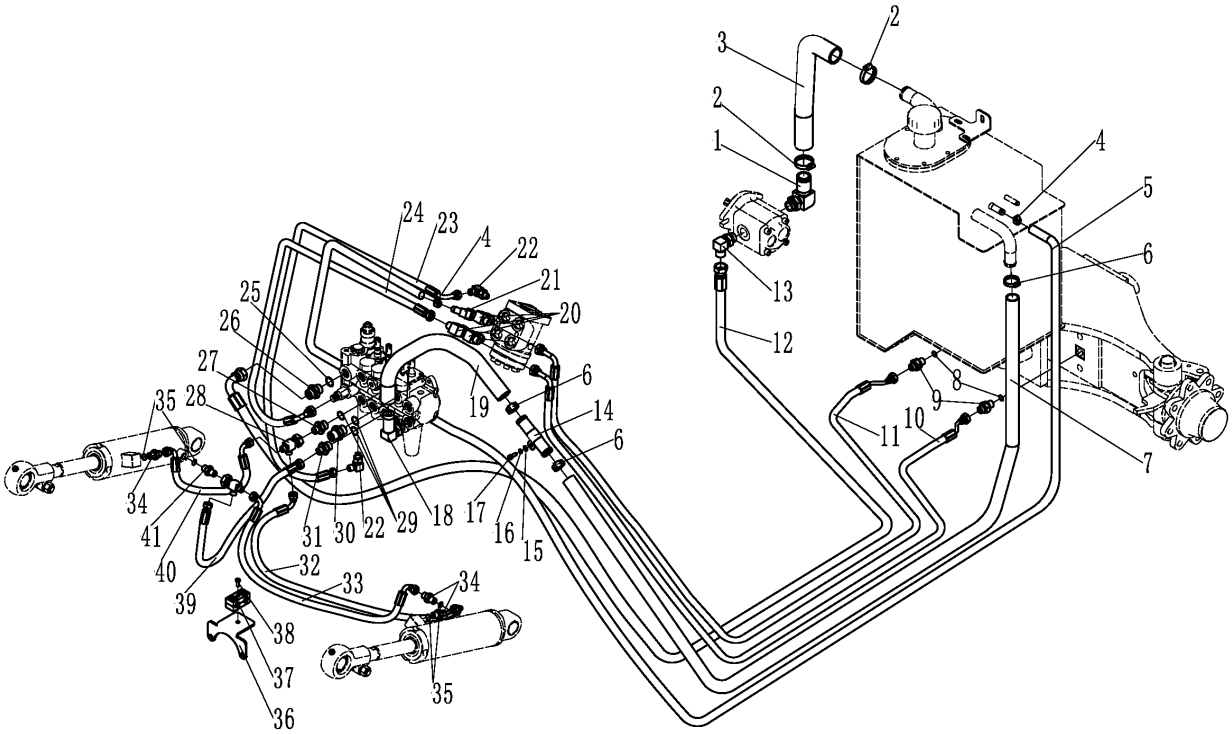

1. joint 25-G1-Φ32
2. rubber hose (oil suction)
3. Hose clamp QC/T390-(40-45)
4. Hose clamp QC/T390-(22-26)
5. oil reture pipe Φ23xΦ13x3600
6. hose clamp QC/T390-(34-38)
7. oil return pipeΦ35xΦ25x1900
8. O ring 13.2x2.65

9. joint 8-2xM16x1.5-60°
10. hydraulic hose assembly 8-L2700-1SC-60°
11. hydraulic hose assembly 8-L3000-1SC-60°
12. hydraulic hose assembly (90°)13-L2750-2SC-60°
13. joint 12-G1/2-M22x1.5-60°
14. transition pipe welding
15. washer GB97.1-6-200HV
16. washer GB93-6
17. screw GB70.1-M6x20-8.8
18. joint 16-M22x1.5-%c25
19. rubber hose
20. joint 8-M18x1.5-M16x1.5-60°
21. joint 11-M18x1.5-0
22. joint 6-M12x1.5-M14x1.5-60°
23. hydraulic hose assembly 8-L2700-1SC-60°
24. hydraulic hose assembly 8-L3000-1SC-60°
25. O ring 19x2.65
26. joint 12-2xM22x1.5-60°
27. joint 8-M20x1.5-M16x1.5-60°
28. joint 7-2xM14x1.5-M16x1.5-60°
29. O ring 17x2.65
30. joint 12-M20x1.5-M22x1.5-60°
31. joint 6-M20x1.5-M14x1.5-60°
32. hydraulic hose assembly 6-L1000-1SC-60°
33. hydraulic hose assembly 6-L1100-1SC-60°
34. joint 6-G1/4-M14x1.5-60°
35. O ring 11.2x2.65
36. rubber hose fixing plate
37. rubber hose fixing plate
38. screw GB70.1-M8x35-8.8
39. hydraulic hose assembly (90°)8-L1420-1SC-60°
40. joint 7-2xM14x1.5-M16x1.5-60°
41. hydraulic hose assembly 6-L600-1SC-60°

figure2-61 hydraulic pipeline

6.8 Maintenance and adjustment

Working cylinder maintenance

(1) Disassemble

Cleaning thoroughly before assembling. Dismantled parts shall be on clean paper or cloth and don't contaminate or damage parts.

(a) Clamp flange shell of pump by bench vice

(b) Screw off bolt 11, rear end cover 5 and pump body 1.

(c) Dismantle lining slice 6, drive gear 2 and driven gear 3.

(d) Dismantle seal 7 and retainer ring 8 from front and rear end cover.

Notice: if don't renew seal, please do not remove it from front end.

(2) Inspection

Use gasoline to clean parts (except rubber parts).

(a) Pump body inspection

If contact length between pump body and gear is more than 1/2 circumference, please replace pump body.

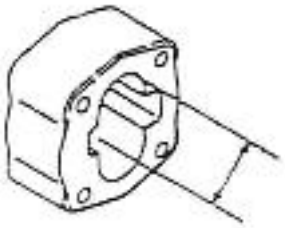

Figure 2-62

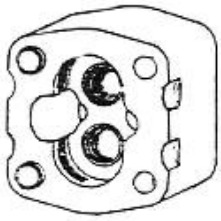

figure 2-63

(b) Lining slice inspection

Check interface of lining slice, if surface damage or thickness of lining slice is less than normal value：4.94mm, please replace it.

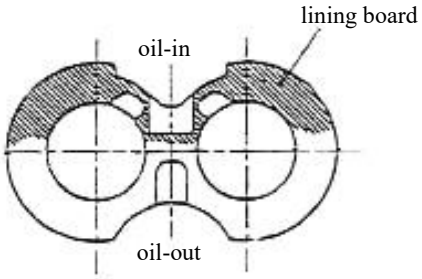

Figure 2-64

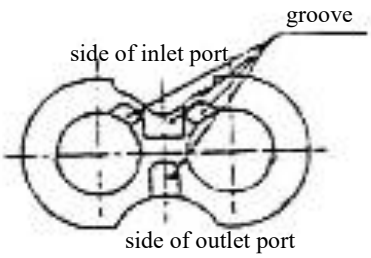

Figure 2-65

(c) Front and behind pupm cover

If colour changing(brown)extent of inner surface lining sleeve is more than 150°, please replace it.

(d) Check drive wheel and driven gears

If abrasion badly, to replace a pair. If D is less than normal, replace two pair.

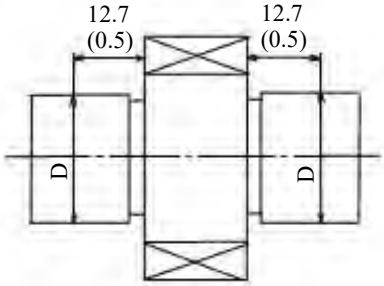

Figure 2-66

(e) If necessary, renew seals, lining sleeve seals, retainer ring, oil seal, clip ring.

(3) Assembling

(a) Fit a new seal and a new spacer ring.

(b) Fit lining slice on groove of front end cover.

(c) Fit a drive wheel and a driven wheel on front end cover.

(d) Fit lining slice on gear side to make groove aim at gear point. Be careful not to mistake oil inlet side and oil outlet side.

(e) Fit a new seal and a new spacer ring on rear end cover groove. See figure 2-60

(f) Fit rear end cover on pump body and be careful not to mistake oil inlet and oil outlet.

(g) According to standard torque 9～10kg.m to tighten bolts.

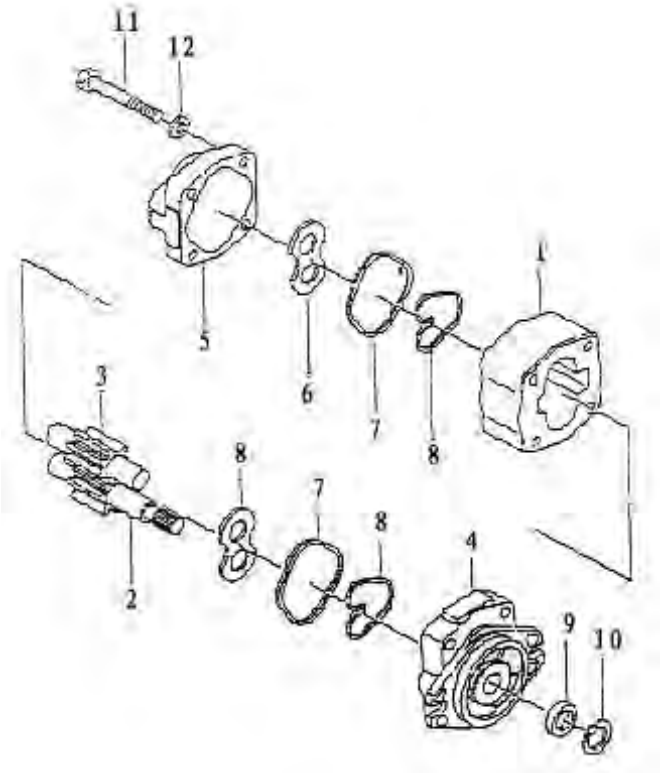

1. pump body	2. drive gear	3. driven gear	4. front end cover
5. rear end cover	6. lining slice	7. seal	8.spacer ring
9. oil seal	10. elastic collar	11. bolt	12. washer

Figure 2-67 gear pump

(4) Commissioning

Commissioning includes running in pump by commissioning, checking running for normal, it is better to test pump on test-bed, but testing at forklift also to be available as follows:

(if pump abrasion badly or locking attributed to hydraulic liquid and being disassembled, you shall renew hydraulic liquid and filter before commissioning)

(a) Fit pump on forklift and fit manometer on pressure testing mouth of multiway valve.

(b) Release adjusting bolt of flooding valve to make pump run about 10 minutes by 500—1000rpm to ensure that hydraulic pressure is less than 10kg/cm².

(c) Increase rev of pump up to 1500—2000rpm about 10 minutes.

(d) Keep rev of pump between 1500—2000rpm to make pressure increase 20—30kg/cm² once every 5 minutes until up to 175kg/cm², then, make each liquid pipeline work about 5 minutes respectively, replace return filter.

Pay attention to temperature of liquid, of surface of pump and noise of running. If temperature of liquid or pump surface increase too much, please reduce load to decrease temperature of liquid,then,test again.

(e) Flooding pressure shall be 175kg/cm² after testing. Measuring flux through lift speed.

6.9 Malfunction analysis

When hydraulic system has some failure, please consult table as below to find out cause and repair it.

Multiway valve fault diagnosis (List 2-11）

Figure 2-11

Fault	Cause	Elimination
Lift pressure too low	Slide valve get stuck	Break up, cleaning
	Oil pore jam	Break up, cleaning
Vibration Pressure up too slowly	Slide valve get stuck	Break up, cleaning
	Exhaust not enough	Exhaust enough
Vibration Pressure up too slowly	Slide valve get stuck	Break up, cleaning
	Exhaust not enough	Break up, cleaning
Liquid level less than normal	Flooding valve poor regulated	Fine-tune
Noise	Flooding valve poor regulated	Fine-tune
	Glide face abrasion	Replace flooding valve
Leak (Outside)	O ring old or damage	Replace O ring
Enactment pressure too low	Spring bad	Replace spring
	Valve base bad	Adjust or replace flooding valve
Leak (inside)	Valve base bad	Amend valve base surface
Enactment pressure too high	Valve get stuck	Break up, cleaning

（2） Hydraulic pump fault diagnosis (See List 2-12）

List 2-12

Fault	Cause	Elimination
Liquid displacement too small	Liquid level too low	Infuse liquid to normal
	Pipe or filter jam	Clean or replace
Pump pressure too low	● Lining slice bad ● Brace bad ● Seal, lining sleeve seal or spacer ring badness	Replace
	Flooding valve regulated abnormal	Regulate to normal by manometer
	Air in system	● Retighten pipe beside oil inle ● Infuse liquid ● Replace pump seal
Running noise	Suction pipe bad or filter jam	Check pipe or repair filter
	Oil inlet side loose or air leakage	Tighten loose connecting
	Oil viscidity too high	Replace normal viscidity oil to adapt running tempdrature
	Bubble in liquid	Exhaust air and prevent air
Oil leakage of pump	Pump seal or other airproof ring bad	Replace
	Pump failure	Replace

7. Lifting system

7.1 Summarize

Lift system consist of dual mast (inner and outer mast respectively), roller lift and lower vertically, and fork.

7.2 Inner and outer mast (figure 2-68)

inner and outer mast constructed by welding. Bottom of outer mast fit on drive axle by brace.

Middle of outer mast connect with frame through tilting cylinder and it can tilt forward and backward actuated by tilting cylinder.

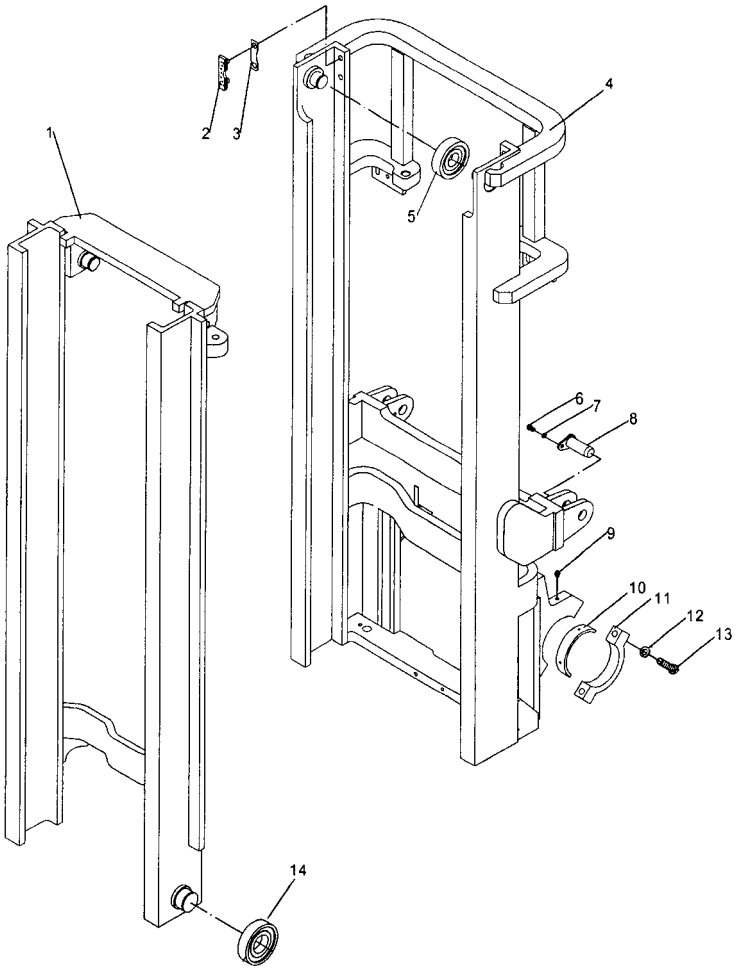

1. inner mast	2. guide board	3. adjusting pillow	4. out mast	5. plain roller wheel for outer mast
6. pin roll for tilting cylinder	7. spring washer	8. bolt	9. oil cup	10. bearing bush
11. supportor cover	12. Spring washer	13. bolt	14. roller wheel	

Figure 2-68 inner/outer mast

7.3 Fork carriage (figure 2-69)

Fork carriage move inside inner mast by main roller, main roller fitted on shaft locked by clip ring, main roller shaft also welded on fork carriage, side roller fixed on fork carriage by bolts, rolling along outside of wing board of inner mast, it can be regulated by adjust shim. In order to prevent rolling clearance, there are two fastness side roller rolling along outside of wing board of outer mast. Longitudinal load borne by main roller, when fork lift on top,upper roller appear from top of mast. Transverse load borne side roller.

https://truckmanualshub.com/

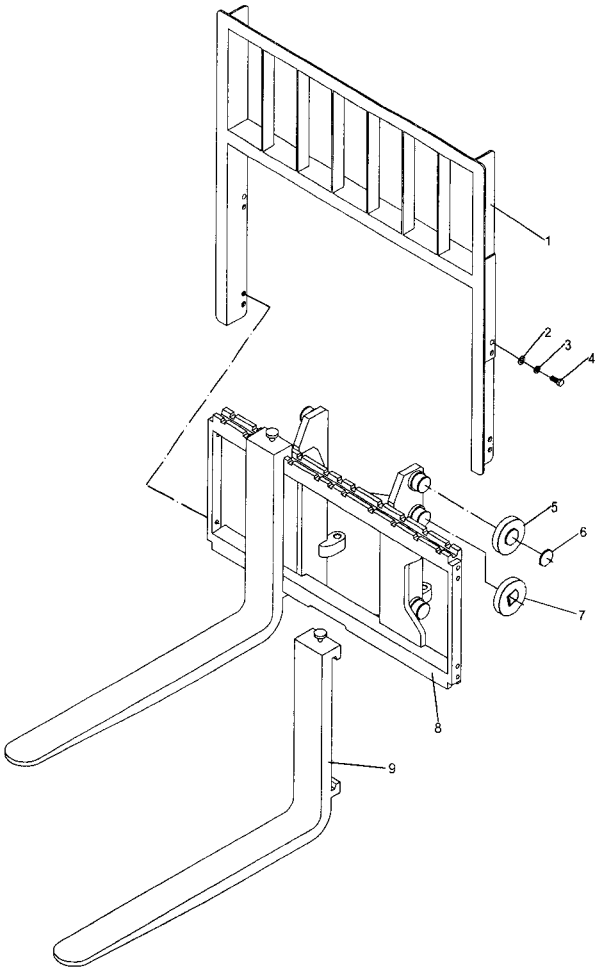

1. load guard	2. plain washer	3. spring washer
4. bolt	5. roller	6. elastic collar for axes
7. combination roller	8. fork carriage	9. fork assembly

Figure 2-69 fork carrier

7.4 Roller position (figure 2-70)

There are two rollers: outer frame roller unit as well as inner frame and fork carriage roller unit, witch is fitted on outer mast as well as inner mast and fork carriage respectively. Each roller unit consist of main roller and side roller, main roller bear load witch direction are forward and backward, side roller bear side load, both sort of rollers make inner mast and fork carriage move freely.

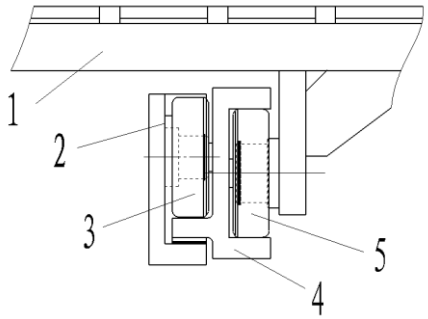

1. Fork carriage 2. Outer mast 3. Outer frame roller unit 4. Inner mast
5. Inner frame and fork carriage roller unit

figure 2-70 Roller position

Notice: (a) Adjust clearance of side roller for 0.5mm;
(b) Lubricate grease on main roller surface and working surface of mast.

7.5 Maintenance and regulation

7.5.1 Adjustment of lift cylinder See figure 2-71

It is needed to readjust journey of lift cylinder after dismantle or replace lift cylinder, inner mast or outer mast.do it as below:

(1) Without regulate shim to fit head of piston into upper beam of inner mast.

(2) Lift mast slowly to its maximum journey to check both of cylinder to move simultaneously.

(3) Put adjusting shim into between head of piston and upper beam of mast.Shim thickness between 0.2mm and 0.5mm.

(4) Regulating tension of chain

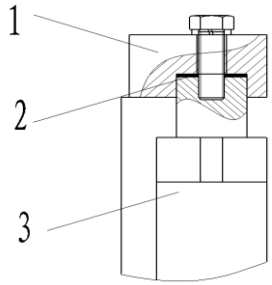

1. Upper beam of inner mast 2. Lift cylinder adjusting shim 3. Lift cylinder

figure 2-71 Adjusting for lift cylinder

7.5.2 Height adjusting for fork carriage(figure2-72)

(1) Park forklift on level ground and keep mast vertically.

(2) Keep fork bottom touching ground, make a distance A between main roller and bottom end of inner mast by regulating nut which locate upper end of adjust chain.A(A=24~29)

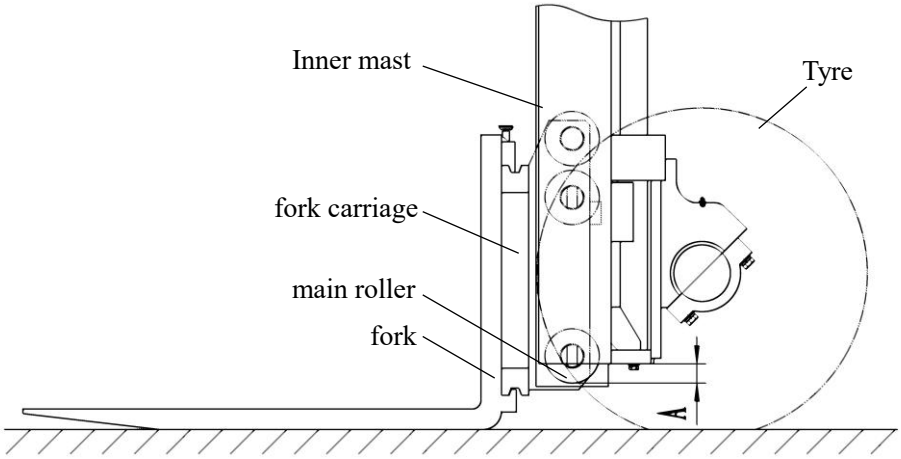

Figure 2-72

(3) Lowering fork on ground and tilting it backward at max. angle. Keep both of two chains be same tension by adjusting nut which locate upper end of adjust chain.

7.5.3 Replacement of fork carriage roller

(1) Place a pallet on fork and park forklift on level ground.

(2) Lowering fork and pallet on ground.

(3) Dismantle the top side connector of chain,and take of the chain from chain wheel

(4) Lift inner mast(refer to① of figure 2-73)

(5) Dismantle joint of upper end of chain and take off chain from chain wheel. (refer to② of figure 2-73)

(6) Replace main roller.

(a) Dismantle all of clip rings and drag main roller out by three-jaw puller, be careful to keep adjust shim safe.

(b) To be sure new roller is normal and fit it on its position and lock it by clip ring.

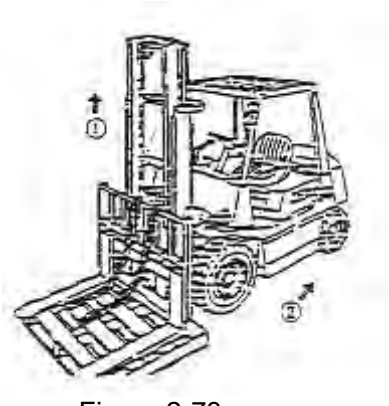

Figure 2-73

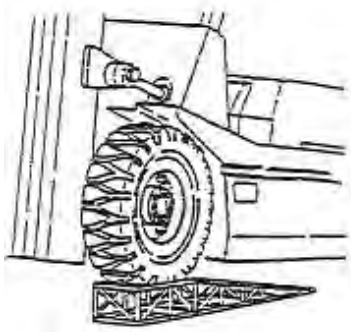

Figure 2-74

7.5.4 Replace mast roller see figure 2-74

(1) Dismantle the fork carriage from inner mast with the same method of replacing fork carriage roller stated in 9.5.3

(3) Tighten the hand brake,back up the rear wheels with wedge block.

(4) Dismantle the bolts for fasting cylinder and inner mast, Sling inner mast,pay attention not to lost the adjusting pillow on the top of piston rod

(5) Dismantle the connecting bolt between lifting cylinder and inner mast,dismantle the lifting cylinders and the oil pipe between them,not to loose the oil connector .

(6) Lay down the inner master,dismantle the main roller on the bottom of inner mast.then,the main roller on the upper side of outer mast will also show out from the top of inner mast.

(7) Replace main roller

(a) Dismantle the upper side main roller with drawing tools, Not to lost the adjusting pillow

(b) Install the new roller together with the djusting pillow dismantled in step(a)

(8) Sling the inner mast until all of the engaged in it.

(9) Install the lifting cylinder and fork carriage adverse to the steps as dismantled.

7.6 Instructions of installing accessaries

If user need to assemble accessaries on truck, please inform our company, do not assemble them by yourself.

8 Disassembling and installation

8.1 Attentions

(1) Only qualified person can maintain or dismantle forklift.

(2) Before dismantling and inspecting, park truck level and wedge truck to prevent moving suddenly, meanwhile, turn main switch off and cut battery off.

(3) Before dismantling and inspecting,remove matel ring ,watch and other metal item from you to prevent suddenness short circuit.

(4) During disassembling, please use normal tools, use special appointed tools when requested.

(5) Choose optimum elevating equipment to hoist parts dismantled to prevent danger.

(6) Check slings for safety. Keep slings tension during lifting.

(7) Be careful to prevent falldown of heavy parts attributing to unbalance during disassembling operating.

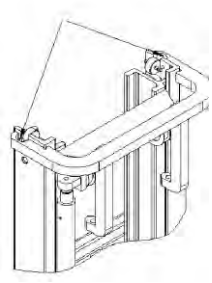

figure 2-75

8.2 Hoisting location for parts disassembled

(1) Hoisting directions for lifting system see figure 2-75

Type	outline dimension length×width×height（mm）	Weight（kg）
FE4P50N	2000×1080×463	720
FE4P60-70N	2050×1180×485	830

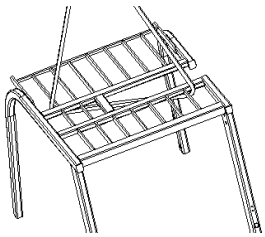

figure 2-76

(2) Roof guard hoisting directions see figure 2-76

Type	outline dimension length×width×height（mm）	Weight（kg）
FE4P50N	1538×1048×1375	90
FE4P60-70N	1688×1048×1375	100

figure 2-77

(3) Hoisting directions for Counterweight see figure 2-77

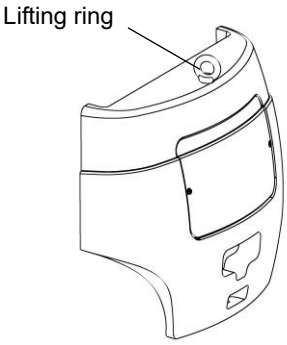

The hoisting ring on counterweight can only be used to hoist counterweightnot to hoist entire vehicle.

Type	outline dimension length×width×height（mm）	Weight（kg）

FE4P50N	480×1135×1000	900
FE4P60N	520×1135×1000	1250
FE4P70N	560×1135×1000	1650

(4) Hoisting for battery box See figure 2-78

Type	outline dimension length×width×height（mm）	Weight （kg）
FE4P50N	980×538×760	970
FE4P60-70N	980×688×760	1530

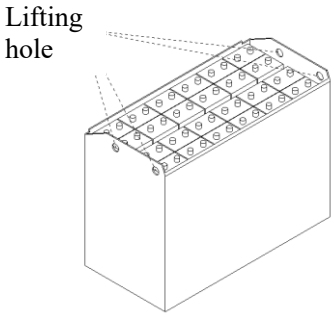

Battery has the function of counterweight,so users can not replace it at will otherwise it will affect the balance of entire vehicle and other performances.

(5) Hoisting directions of travel motor see figure 2-79

Type	outline dimension length×width×height（mm）	Weight （kg）
FE4P50N	455×325×Φ270	106
FE4P60-70N	455×375×Φ320	126

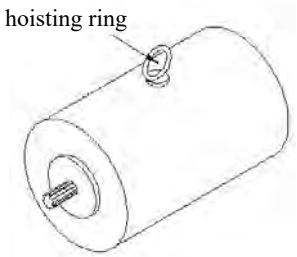

figure 2-79

(6) Hoisting directions for working motor see figure 2-80

Type	outline dimension length×width×height（mm）	Weight （kg）
FE4P50N	455×325×Φ270	50
FE4P60-70N	460×345×Φ290	67

figure 2-80

https://truckmanualshub.com/

Chapter three Operation,use and safety for forklift

Ⅰ、 Driving and operation

There are some information for operating normally as below and it favor you about good running performance, using safely, running economically.

1. Usage of new vehicle

⚠ **·All of the parking parts from the new vehicle should be reclaimed according to the establishment of local government.**

·In order to insure the new vehicle can work normally, Make a trial run of it before use it.

The life-span of vehicle depends on how you begin to use your new forklift. At initial 200 hours running, please to notice as follow.

⚠ **·Whatever season, you have to run machine warmly before operating.**

·Do maintenance better in normally.

·Do not abuse machine and unreason using.

2. Connection between load and stability

Under load curve, forklift take front wheel for pivot to keep balance of vehicle and load on fork, please pay attention to load centre and load capacity to keep vehicle stable.

· If exceed load curve, rear wheel should be uplifted and be in danger, forklift should be overturned to lead severe injury. Saying as below figure, load close to fork prong is the same effect as increase weight. As in such condition, load shall be decrease.

3. Load center and load curve

Load centre means the distance between front end surface of fork and cargo cg. Said figure of load curve show you relation of 2t forklift load centre and permitted load. figure of load curve is adhibited on vehicle, if figure damaged, to renew it in time.

·If forklift is equipped disposal accessaries such as side-move device, scraper bucket or rotating fork, its permited load is less than normal truck(no any accessaries), the reason as follow:

(1) Subtract load from rated load, its weight equal to weight of accessaries.

(2)由 Because accessaries length lead load centre to move forward, rated load is also decrease.

Accessaries equipped lead load centre moving forward, this phenomena is called "Load centre loss".

Do not load exceeding the rated load shown by figure of load curve pasted on vehicle or accessaries.

4. Forklift stability

There are regulations in ISO or other standard about forklift stability, but said regulation is not applicable for all of running condition, forklift stability vary on different running condition.

Maximum stability is assured under below condition:

(1) Level and firm ground.

(2) Running under standard load or unloaded condition.

Standard no-load state: Fork or other bearing accessaries lie 30cm upto ground,tilting mast backward enough without load.

Standard load condition:Fork or other loading accessaries lift up about 30cm from ground,rated load on standard load centre, mast tilting backward to max.angle.

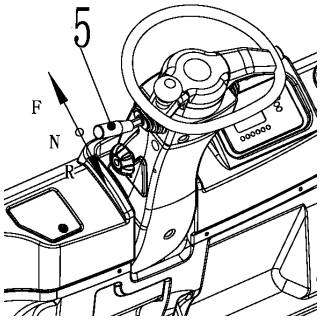

·When loading,keep min.tilting angle forward or backward as can as possible, do not tilting forward unless load fixed on load

backrest or rigidity loading goods frame, or low lift height.

5. Transporting and loading for forklift

(1) Transportation of forklift

·Transporting with truck,Wedge forklift wheel or tighten forklift by rope to prevent it moving during transportation.

·Pay attention to obey regulation of full-length, full-width, full-height of forklift during transportation on traffic road.

(2) Loading and unloading for forklift

·Please use gangplank with enough length, width and intensity.

·Brake lorry firmly and wedge wheel.

·Gangplank shall be fixed on middle of carriage firmly, no greese on gangplank.

·Both height of left and right gangplank shall be same.

·Do not turn or transverse move during operating on gangplank.

·When loading on lorry, in order to let forklift board on simultaneously, please backing lorry slowly.

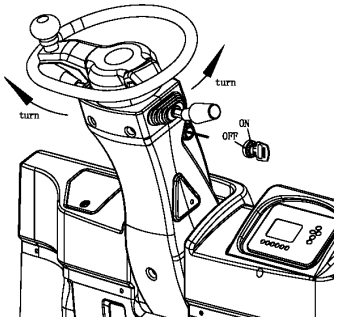

6. Preparation before driving

(1) Check position of direction switch handle⑤,and push it to neutral position(N).

(2) Turn on ignition key

Catch hold of handle of steering wheel,then turn on ignition key and keep it at “ON”position.

·Even after ignition key is turned to “ON”position,1 second is needed between brake circuit starting to work and starting to move.

·If gear shift lever is in forwardposition“F” or backwardposition“R”,before turn ignition key to“on”position,push gear shift lever to neutral position“N”

·Do notice that if step down accelerating paddle suddenly,vehicle will probably accelerate suddenly.

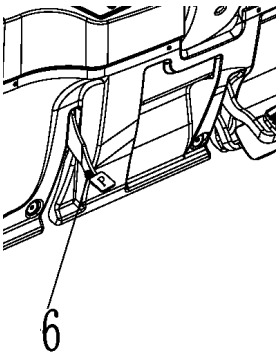

(3) Tilting backward of mast

Pull backward lifting handle to lift fork 150-200mm upto ground,and pull backward tilting handle to tilt mast backward.

(4) Operation of direction switch handle⑤

Direction switch handle decide travelling direction（forward-backward）

Forward F:push forward direction switch handle

Backward R:pull backward direction switch handle

(5) Loosen parking brake handle

Step down brake paddle

Let go parking brake handle forward entirely,catch hold of steering wheel with left hand,put right hand lightly on steering wheel too.

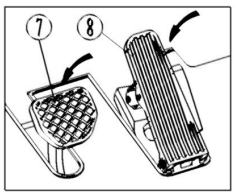

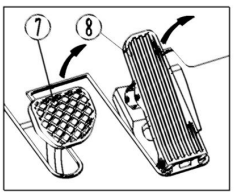

7. Steer

(1) Starting up

Move food away from brake paddle and step down accelerating paddle slowly,then,the vehicle will start to move.

Acceleration rate is decided by how much accelerating paddle is stepped down.

⚠ **·Do not startup or brake suddenly to prevent cargo falling down .**

(2) Speed slow down

Release accelerator slowly. If necessary, step brake pedal down. Except emergency brake, release accelerator to make slow down slowly until parking. If even release accelerator suddenly, emergency brake is also impossible. When emergency situation, step brake pedal down to make emergency brake.

⚠ **·Please slow down if situation as follow:**

(a) urning at crossing.
(b) Closing to cargo or pallet.
(c) Closing to goods pile.
(d) Traviling through narrow chunnel.
(e) Ground/Road surface is bad.

· When backing forklift you have to look at rear direction to be sure condition is safe. It is dangerous when backing forklift depending only on rearview mirrow.

(3) Turning

It is not same as car, forklift depend on rear wheel to turn. When turning you shall be slow down and be careful for tail swing of forklift when operating steering wheel.

⚠ **·During turning, when turning radius is small, the fast speed the forklift is, the more possibility the forklift overturn. Be careful for this situation.**

(4) Traveling and lifting simultaneously (Inching operation)

(a) Traveling first, let fork prong be close to goods about 3—5m distance.
(b) Step brake pedal down perfectly.(standstill)
(c) Step accelerator down to be in optimum speed.
(d) Operating lift and lowering handle to operate fork to be lifting operation.

⚠ **· Traveling and lifting simultaneously (Inching operation) is a professional work to ask forskilled operator. Be definite to know well the shape and cg of goods to identify the vehicle stability, make a slow lifting and lowering performance of the vehicle,and please be careful in operation.**

·Tilting fork to operate when fork is at a much height is very dangerous , except for fork's in and out operation , please do not operate the vehicle on the load stage.

·In order to reduce the danger of tilting fork to operate when fork is at a much height,make lifting operation when the vehicle is very close to load stage.

8. Parking and temporary parking

⚠ **·Parking safely**

·Parking place shall be broad and level as much as possible.

·When unladed forklift have to park on ramp, please make mast face downward and block wheel by wedge.

·Parking vehicle outside workplace or qualified place.

·If necessary, to use signs or signal light.

·Parking on firm and level ground.

·If fork can not lower because of fault, hang

cloth on fork prong forward dead corner.

·Pay attention for road surface slide or cave in.

·To lower fork after parking perfectly, it is very dangerous to lower fork during traveling.

·Do not jump off vehicle.

·When get off forklift, you have to face vehicle and take favour of footboard.

·Slow down first and step brake pedal down and standstill and put gearshift on "N".

·Parking vehicle at place where is convenient to other vehicle and operating as follow:

(a) Pull backward the parking brake handle enough to its position,actuate the parking brake.

(b) Let fork lower to make it touch ground.

(c) Turn ignition key to"off"position.

(d) Take off key and keep it carefully.

(e) Be careful to get on or get off vehicle.

(f) Parking forklift

·When get off forklift, pull brake handle up and to tilt mast forward. Lower fork on ground. When parking on ramp, block forklift by wedge.

·When leaving forklift, take ignition key

9. Usage of battery

(1) Charging battery

To choose right charger according to instruction of operating manual.

(a) Keep liquid on normal level.

⚠ **·Keep liquid level on normal situation to prevent battery from being over-hot or being burn out.**

·If electrolyte is not enough, the life-span of battery will be shorten

(b) Infuse distill water.

(c) Do not overcharge.

(d) Charging place shall be ventilated enough.

⚠ **·Battery charging shall be at ventilated and dry place.**

(e) Open bettery cover.

⚠ **·There is hydrogen to be geverated when charging,so and please open bettery cover.**

(f) Check terminal, cable and connector.

⚠ **·Before charging, check connector and cable to ensure there is no injury**

·Not charging under the situations as follow:

—Connector terminal has been injuried.

—There are rust and abrasion in Turminal and cable.

These situations will lead spark to burn and to explode.

(g) Charge after turning off ignition key.

(h) Check proportion

Before charging, check each cell for electrolyte proportion to detect for abnormal condition to prevent certain accident happen.

(i) When pulling out or insert power connector, hold connector or handle not the cable.

⚠ **·Do not pull out cable.**

·If cable and connector failure, please inform manufacturer to replace by new one.

(j) Break up charging procedure

·According to 《operation and maintenance manual》of the used charger to break charging procedure.

·Do not pull out charger plug during charging, otherwise there will be spark take place to lead to danger.

(2) Replace bettery

When forklift has been used continuously for a working period and the battery has entirely excharged,replace the battery with another fully charged one and charge the battery been replaced.

·In replacing, to be sure that new battery mates with forklift well, otherwise there will be dangerous to shorten lifespan of forklift or overturn during traveling.

·Replacement of battery shall be done on level table.

According to the steps as below to replace battery:

·When using another forklift as hoisting equipment to lift battery, you shall choose a proper lifting tool(accessary).

·Only qualified person can operate battery.

(a) Pull out plug of battery.

(b) Open upper cover of battery.

Use gas spring or other methods to ensure block upper cover of battery to avoid cover fall down to injure human or bodywork.

(c) When hoisting battery out forklift, be careful for touching steering wheel or other forklift parts.

(d) After finish installation of battery, connect and fasten the battery pin.

(e) Close upper cover of battery.

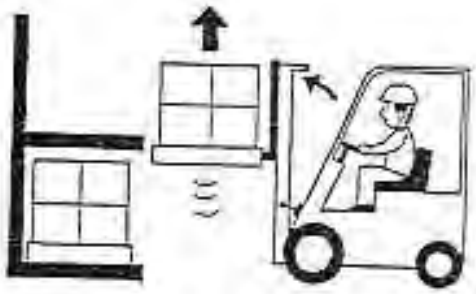

· When close upper cover of battery, be careful to injure your finger.

·During hoisting battery, be careful to prevent swing of battery box to injure bodywork.

10. Stacking

·Check the following items before operation:

(a) Be sure that there are no falling of load and damaging of load in loading region.

(b) Be sure that there is no goods or pile possible leading to unsafety

Stack as follows:

(1) Slow down when getting close to goods.

(2) Parking in front of goods.

(3) Check the safety of goods area.

(4) Adjust the position of vehicle until it lies in front of goods

(5) Make Mast vertically ,lift fork up more than the height of goods.

(6) Check goods'location and park the vehicle to optimum position.

(7) Ensure that the load higher than the stacked goods and lower fork slowly and place load correctly and safely.

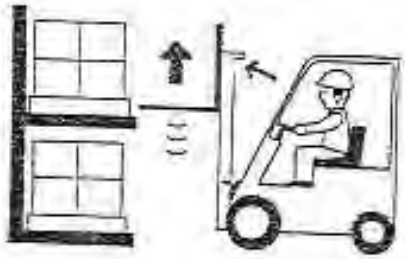

·Before load placed on shelves or bracket:

(a) Lower load until fork no longer carry any load.

(b) Backing forklift for distance of 1 / 4 length of fork.

(c) Lift fork 50—100mm up and drive forklift forward for stacking to be optimum.

(8) Look at rear space, backing forklift in order to avoid impact between fork and pallet or goods.

(9) Ensure fork prong to be off goods or pallet, lower fork to avail driving.(from ground 150—200mm)

11. Unstacking

Unstack referring to the procedure as below

(1) Slow down when close to goods.

(2) Park in front of goods(30cm between goods and fork prong)

(3) Adjust the vehicle position in front of goods

(4) Be sure that there is no overloading.

(5) Adjust the Mast upright to ground.

(6) Observe the vehicle position and move it forward until the fork inserts the pallet completely

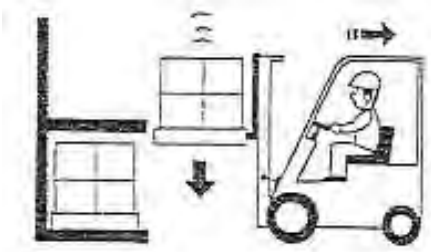

·When it is difficult to insert the fork completely into pallet:

(a) Inserting 3 / 4 length of fork and lift pallet little more (50－100mm), then pull fork out pallet 100-200mm, then lower pallet.

(b) Insert fork into pallet completely.

(7) After fork insert pallet, lift pallet (50-100mm) up.

(8) Look at ambient spacy to move forklift backward to lower load.

(9) Lower load at the height of 150-200mm from ground.

(10) Tilt backward the mast to ensure the stability of goods.

(11) Transport the goods to destination

12 Deposit

(1) Before diposit

Before forklift deposits,clean it thoroughly, check up as following:

(a) If necessary, clean grease and oil of bodywork by cloth and water.

(b) When cleaning, check the vehicle entirely especially for hollow or damage of bodywork, if tires punctured, and if there is any nail or stone in tire surface groove.

(c) Check for leakage.

(d) If necessary, infuse greese.

(e) Check wheel hub nut and joint face between piston rod and piston for loose, check piston rod surface for injury.

(f) Check mast roller for rotation stability.

(g) Actuate lift cylinder to its max. height to let cylinder be full of liquid.

·As long as there is any failure or malfunction or unsafe factor of forklift to be known,report to related person and stop using forklift until repaired.

(2) Daily deposite

(a) Parking forklift on appointed place and block wheel by wedge.

(b) Put shift gear on neutral and actuate parking brake.

(c) Take off ignition key and keep it in safe area.

(3) Long time deposite.

Based on daily deposit,please make check and maintenance according to the follow items.

(a) Considering the raining season, park the vehicle on high and rigid ground.

(b) Unload battery from forklift.even indoor parking,if the place is muggy,dry and shade-cool are necessary fo the battery depositing. Charge the battery once a month.

(c) Rub anticonosive oil on bared surface of piston rod and shaft ect.

(d) Cover parts prevent raining and wet.

(e) Startup vehicle at least once a month, install battery, clean the grease on piston and shaft, startup engine and preheating, make vehicle move forward and backward slowly, meanwhile operating hydraulic control for several times.

(f) In summer, do not park forklift on floppy furface such as asphalt ground.

(4) Operation after long time deposit.

(a) Take off dampproof cover.

(b) Cleaning pickling oil from bared parts.

(c) Cleaning impurity and water of hydraulic tank.

(d) Install full charged battery on forklift andconnect it.

(e) Check carefully before startup.

Ⅱ、Using instruction of operating devices

1. Components,schematic diagram for operating devices（see following figure）

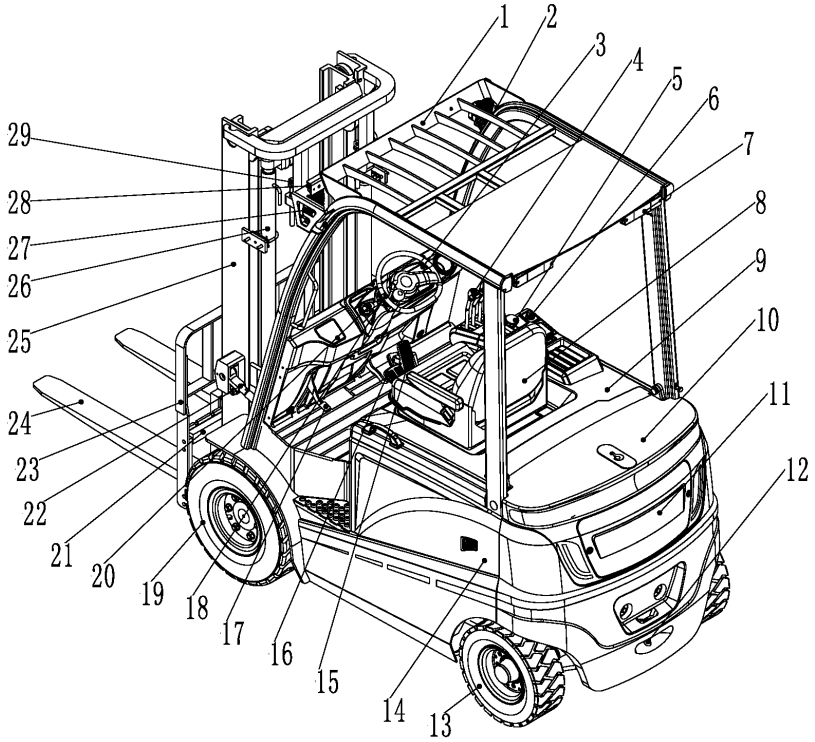

1.overhead guard	2.rearview mirror	3.indicator	4.multiway valve lever	5.emergency button
6.USB interface	7.three color tail light	8.chair	9.battery box cover	10.counter weight
11.electronic control cover plate	12.traction pin	13.rear wheel	14.side plate	15.accelerator pedal
16．Foot brake pedal	17.parking brake pedal	18.steering wheel	19.front wheel	20.combination wheel
21.carriage	22.tilt cylinder	23.load backrest	24.fork	25.mast
26.lifting cylinder	27.head light	28.steering light	29.chain assembly	

2. Instrument unit

see figure 2.4 Electrical system（ page 30）。

3. Switches

（1）Emergency stop button

When emergency, press red mushroom-head button down to cut off power to stop function of traveling, turning, lifting. To resume the function,rotate the botton according to the arrowhead indication.

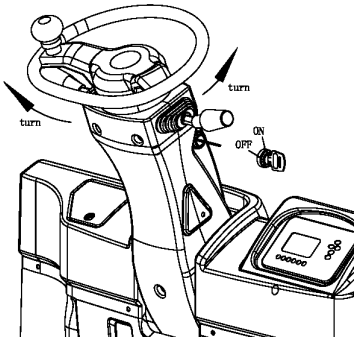

Emergency switch

(2)Key switch

key can turn on or turn off controlling power

Turn off (0FF): In this position,power is cut off and key can be inserted and pulled out

Turn on (0N): Turn forward from off position,switch is turned on,forklift starts up.

⚠ **·Do not turn on ignition key and step accelerator down simultaneously.**

·Take off key to prevent unqualified operating when get off forklift.

·Take off key when charging or parking to prevent unqualified operating.

（3）Switch unit

Switch unit is combined by direction switch,steering switch and big and small light switch.

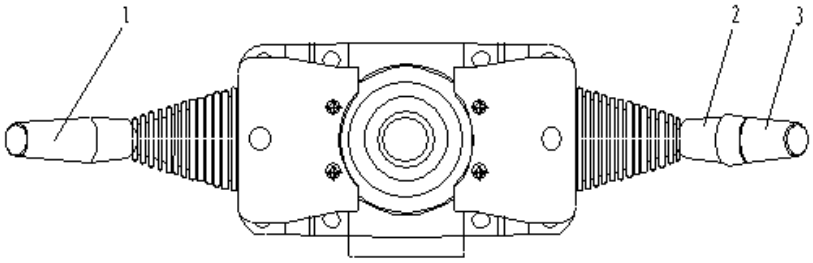

1- direction switch 2- steering switch 3- big and small light switch

Direction switch controls travelling direction and delivers signal to instrument to display. Push handle forward,vehicle travel forward,and pull handle backward,vehicle travel backward. Neutral position is vacancy. When handle is on backward,back-up light and caution light will open,back buzzer has sound.

Steering lisht shows rotation direction of forklift,when handle is on turning position,steering light will blink.

push forward	left steering light is bright
middle	neutral
pull backward	right steering light is bright

Big and small lights switch control relevant lights. Small light will open when rotate to the first gear,both big and small lights will open when rotate to the second gear.

gear / light	OFF	first gear	second gear
width light	×	○	○
tail light	×	○	○
fore light	×	×	○

○: lightening ×: blanking

（4）Rear big light switch

Tail light switch is a single gear which controls on&off of the light. Pull switch up, light open; push down, light off.

4. Control

(1) Ssteering wheel①and steering wheel handlebar②

Steering wheel operation is traditional: steering wheel turn right, vehicle move right; steering wheel turn left,vehicle move left.There is steering wheel at backside of forklift to make backside of forklift swing toward outside when turning.

When turning, catch steering wheel by left hand and right hand on steering wheel or control handle of multiway valve.

Both hydraulic steering system and steering wheel tilting device are standard equipment of forklift.

·According to driver seat to adjust steering wheel to optimum angle.

·Lock steering pipe by tilting handle after adjusting steering wheel tilting angle.

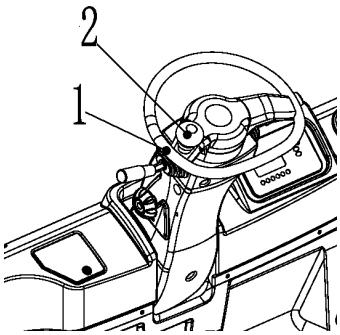

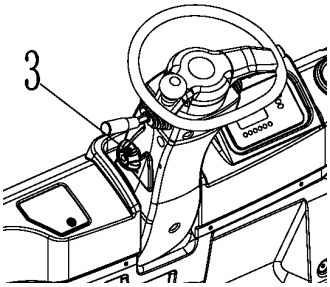

(2) Horn button④

Push down rubber cover located in the center of steering wheel to make a buzzing sound. Even when ignition key is turned off,the horn can also sound.

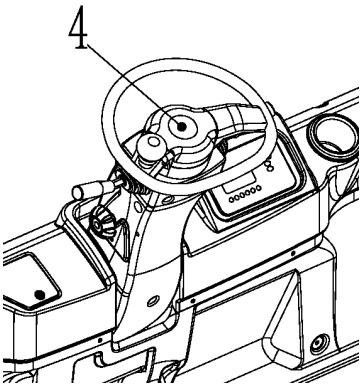

(3) Direction switch handle⑤

Indicate travelling direction

Travel forward (F): Push forward handle and step down accelerating paddle

Travel backward (R): Pull backward handle and step down accelerating paddle

When parking forklift,direction switch handle should be put in neutral position(N).

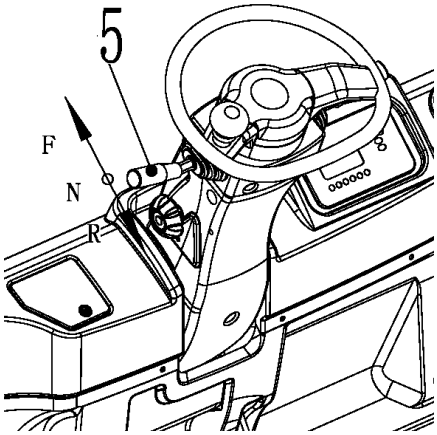

(4) Parking brake handle⑥

In order to prevent forklift from moving,when park forklift,pull up entirely parking brake handle. It is necessary to push parking brake handle to end before driving.

⚠ **·When operating the parking barke handle,step down the parking paddle.**

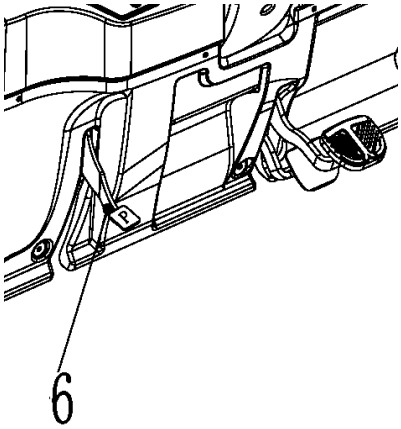

(5) Brake paddle⑦and accelerating paddle⑧

⚠ **·Do not step accelerator pedal suddenly to prevent the vehicle from starting or accelerating suddenly.**

·Ensure your foot remove from accelerator pedal when step brake pedal down.

From left to right,there are brake paddle⑦ and accelerating paddle⑧ in turn.

Step down accelerating paddle slowly,forklift speed is decided by stepped angle of accelerating paddle.

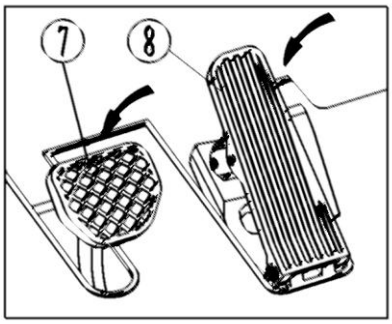

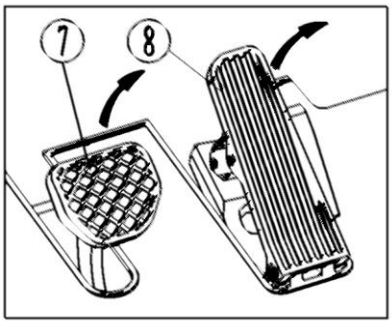

(6) Lifting handle⑨

Pull backward lifting handle,fork lifts,and push forward lifting handle,fork lowers.lifting and lowering speed depend on tilting angle of handle,the larger the angle,the faster the speed is.

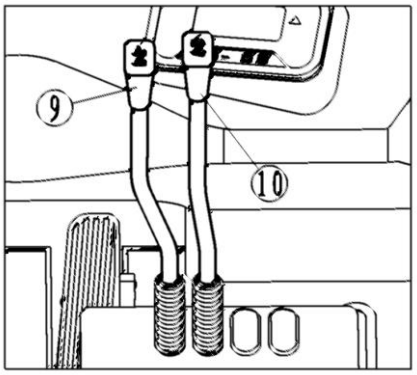

⚠ **·Lifting operation cann't be made,if push or pull lifting handle when turn on ignition key.**

·Don't lower fork suddenly or stop suddenly when lowering fork.

(7) Tilting handle⑩

Pull backward tilting handle,mast tilts backward; push forward tilting handle,mast tilts forward.Tilting speed is decided by tilting angle of hande,the larger the angle is,the faster the speed is

⚠ **·When turn ignition key on, push or pull tilting handle, you can not tilt mast.**

5. Truck body

(1) Seat

Make you fit to drive seat by adjust operating handle.

Lock will be released after pull the handle up. you can move seat to and fro gently. To be sure seat locked after adjusting.

Seat adjusting range To and fro is 120mm. When traveling on dry cement road, driver is given a perpendicular acceleration is 2.130m/s2-2.237m/s, integrative acceleration is 2.252m/s-2.356m/s.

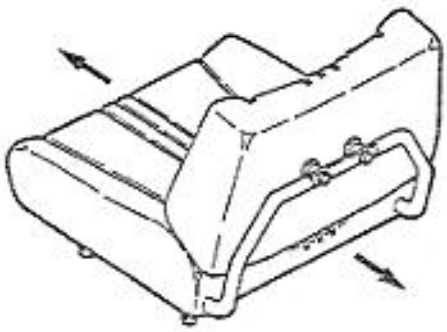

(2) Roof guard

⚠ **·Roof guard protect you from falling down of goods. Its top is a fence-type shape, the space between two bars is 150mm, so, if goods size is less than 150×150mm, you have to adopt another measure to protect youself from danger of falling down of weights. Abnormal installation of roof grard or no roof guard or changing roof guard shall lead terrible accident.**

(3) Goods rest

⚠ **·Goods rest is an important device to protect operator from being impacted when cargo slides toward operator. Loose installation,usage after dismantling and usage after modification are all dangerous.**

(4) Traction rod

Only in the following situation shall be possible to use traction rod.

·To escape from the trouble of being not able to travel(for example wheel trapped in ditch)

·Forklift need to be loaded on or be unloaded from lorry.

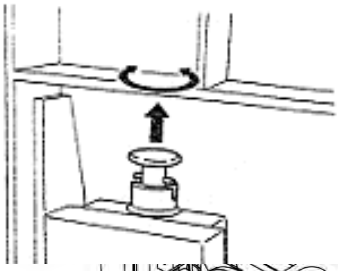

⚠·No using for towing or to be towed operation absolutely.

(5) Fitting pin for fork

Fork fitting pin lock fork on certain position. When need to regulate clearance of fork, pull pin out up, rotate pin l / 4 circle to make fork at position required. Regulation of clearance of fork depend on goods need to be loaded .

⚠·According to principle of goods gravity centre shall be on centre of vehicle, we have to regulate space of forks for equal distance either left and right.after regulated, to fixup fork by fitting pin firmly.

· When adjust space of fork, lean against your body on goods rest, after standing stably,push fork by your foot. Do not regulate by your hands absolutely.

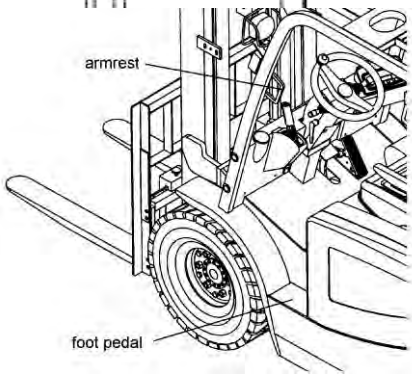

(6) Foot pedal and armrest

There are foot pedal on each side of forklift, armrest located on left front brace of roof grard, when get on or get off,please use foot pedal and armrest to ensure your safety.

(7) Lamps

There are head light and front light assembled on the head of vehicle direction indicator lamp, parking light, width light). Also there are back light assembled on backside of vehicle which consists of tail light, turning light, brake light, parking light, back light and flasher.

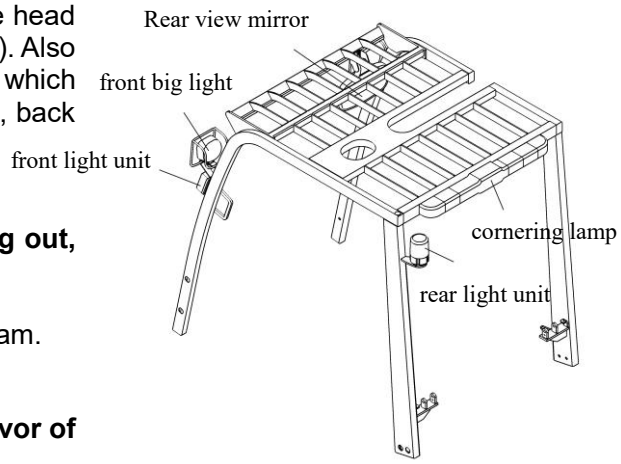

⚠·Identify the working status of lamps,
Replace and repair lamps immediately if lamp burning out, lamp shield injury or dirty.

(8) Rear view mirror

Rear view mirror locates in right of roofguard front beam.

⚠·Keep rearview mirror surface cleanness.

·Regulate rearview mirror for good position in favor of good sight of driver.

(9) Battery plug

Battery plug is used to join or cut off power, in normal situation, it should always be connected.

⚠·If checking electrical parts of inside location, please cut off power to prevent danger.

·Even if ignition key on “0FF”, main circuit Still has voltage.if you want to switch off power,it is necessary to pull out this connector.

·Do not pull out plug of battery during Driving unless emergency, because it can lead steering malfunction.

Ⅲ、Safety issues

Safety is your business and responsibility. This section describes the typical forklift often used in the basic safety regulations and warnings, but also applies to the door frame with special specifications.

1 Operation place and working environment

(1) Ground conditions

The operation place of forklift should be ground with flat and firm surface,a good ventilation is needed.

Forklift's performance depends on the situation of the ground; running speed should be adjusted appropriately in ramps or rough pavement to be especially careful when driving. Driving on a ramp or rough roads will speed up the forklift tire wear and increased noise.

(2) Work environment

Forklift use ambient temperature should be -20 ° C ~ 40 ° C, the ambient humidity should less than 80%.

(3) Weather condition

When it’s rainy,snowy,foggy or windy,to assess the safety before use forklift,the best is not to use for out door work,if must,driving and operation should be more carefully.

2. Safety rules

Only qualified people who has been trained and has driver license can operate the forklift!

Forbid to drive on the highway!

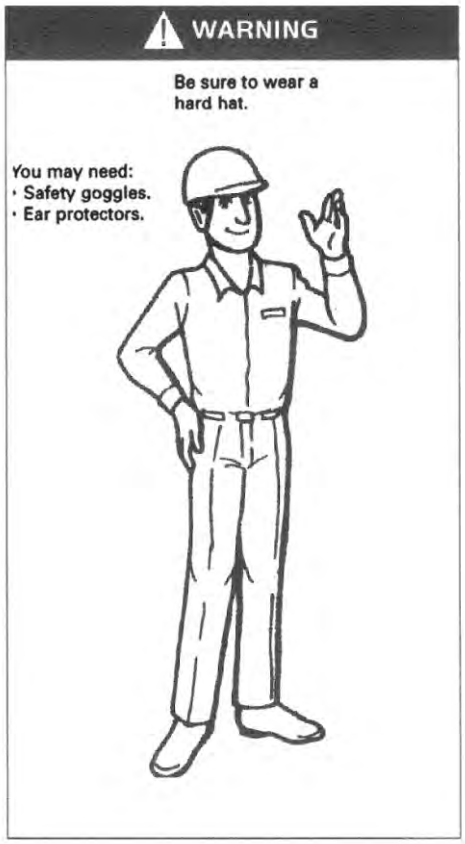

Put fatigue dress on before driving!

Vigilant: injuries, the ambulance!

Do not change parts on forklift arbitrary without permission.

Read the instruction manual carefully before driving!

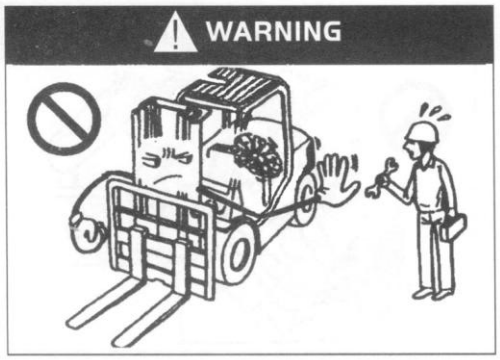

Turn off the engine before maintenance!

Understand traffic regulations

Before use, please check on the truck!

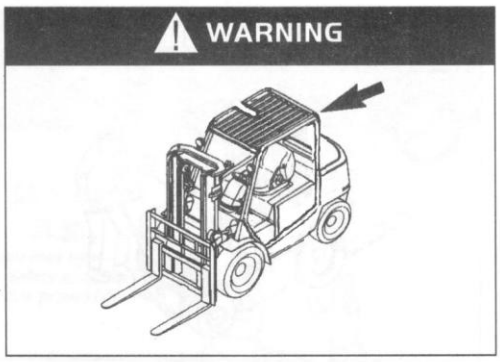

Do not move the overhead guard!

To keep driver's cap clean!

Do not drive an unsafe forklift!

Drivers should have a healthy body!

Be sure your truck is safe!

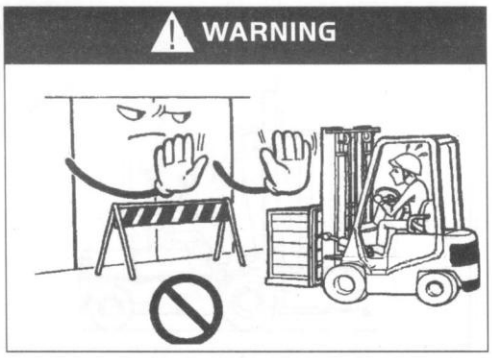

Work in specified area

Do not drive a damaged truck!

Hold tightly when get on the truck!

Start forklift correctly!

Adjust seat before driving!

Make sure your forklift is in safe operating condition!

Appropriate fasten seat belts!

Always pay attention to the height of work place!

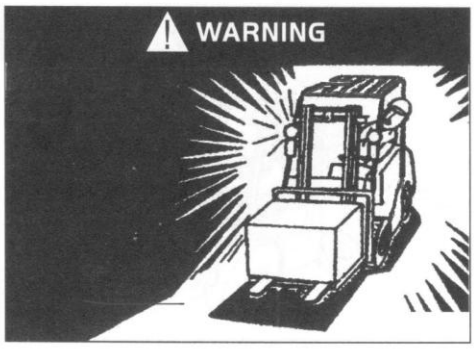

Turn on lights in dark area!

Do not put arm and body outside of the overhead guard during work!

Avoid driving on soft ground, only allowed to run on solid and flat ground.

Keep body under the guards!

Avoid eccentric loading!

Pay attention to encounter item by front fork when loading!

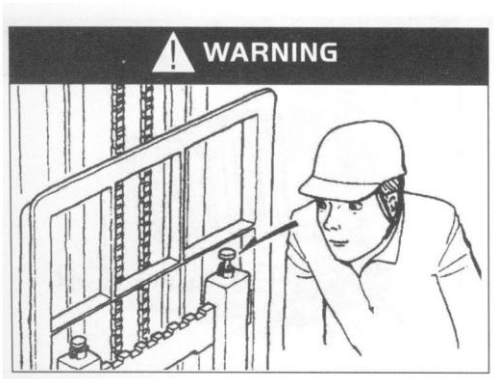

Check fork pin position!

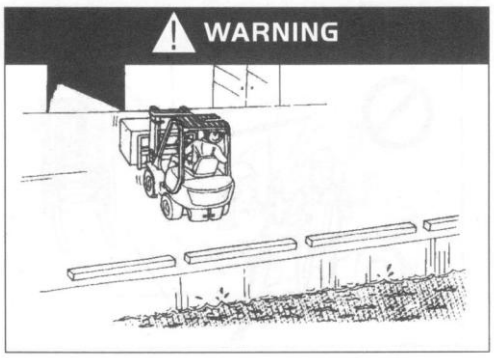

Note the security of the work region!

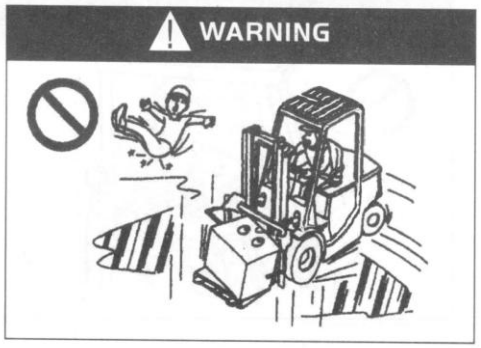

Do not run on smooth or slippery ground!

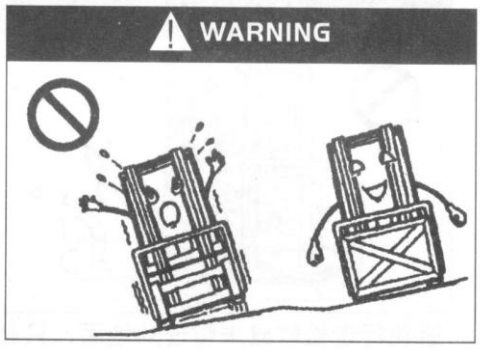

Note the horizontal driving stability of the truck when it is un-load!

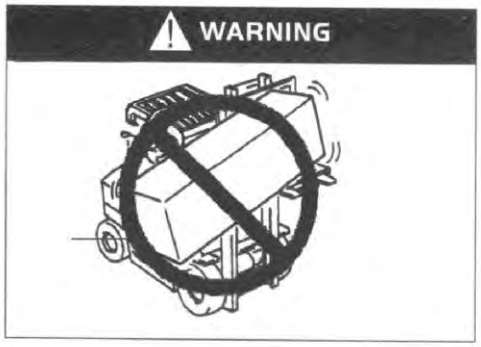

Be especially careful when handling long

Forbid handling people!

or wide cargo!

If can not see the front when turning, please whistle and drive slowly.

Use appropriate pallets or sleeper when handling small objects!

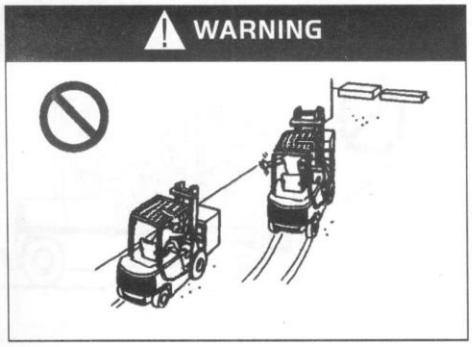

Do not chase each other through the traffic!

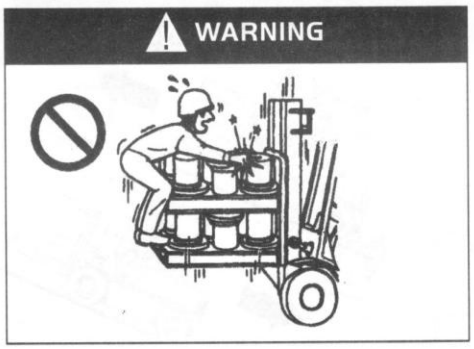

Not allowed to stand on the goods!

Not allowed to gaze around while driving!

Do not use the forklift to do stunt!

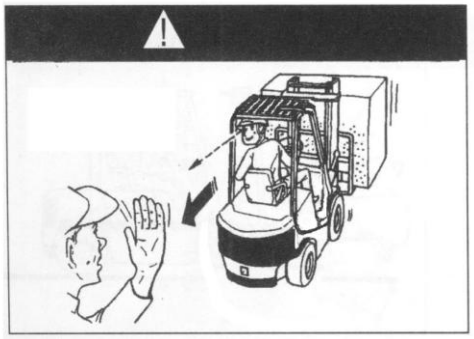

when goods is so high to keep out line of sight,drive backward or forward under

Should obey the traffic rules and all warnings and signs!

direction of others

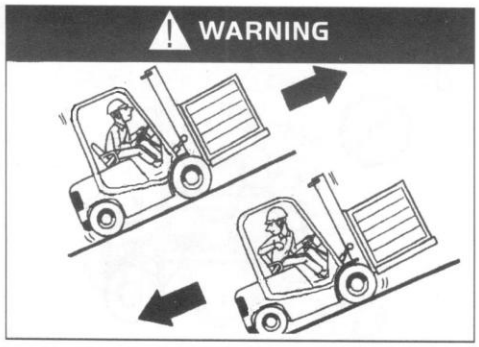

when loading,travel forward in upgrade and backward in downgrade

Pay attention to the steep uphill slopes and goods lifting height!

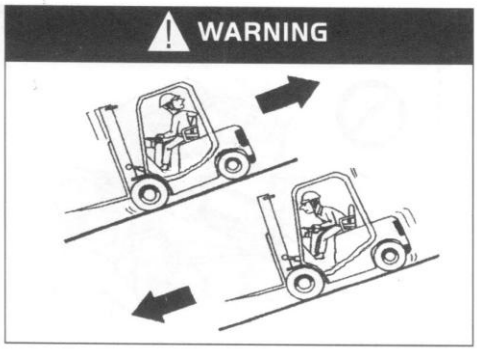

When no-load,travel backward in upgrade and travel forward in downgrade!

Note using brake when start truck on the slopes!

Not turn when driving on a slope!

People or things moving on road should be warned by whistle!

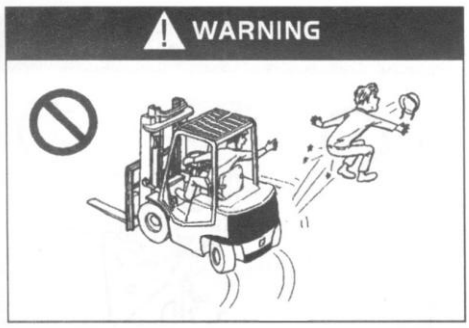

Be careful to crush people or goods when turning!

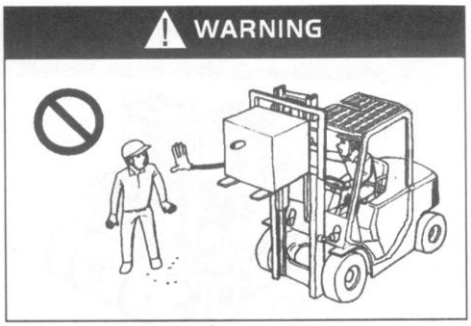

Operators are not allowed to close when the truck is working!

While turning a high speed can cause accident because of unstable center of gravity!

People are not allowed to start in work place!

Notice the change of rated load weight before use forklift.

Pay attention to the area where forklift is driven!

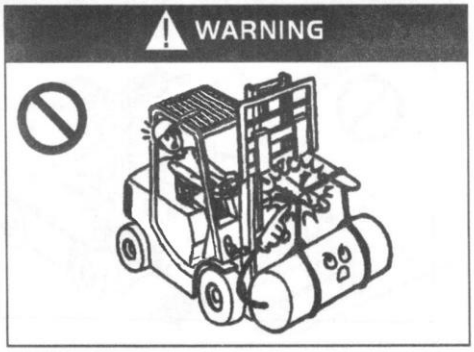

Use the fork correctly when loading!

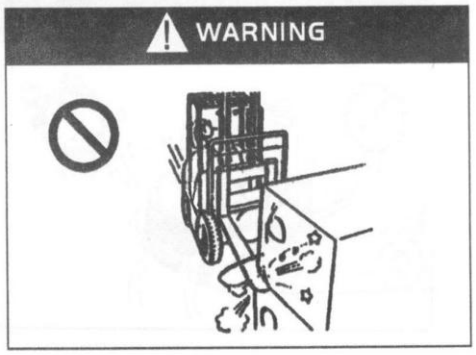

Slow down when loading!

Do not move the truck when there is

It is forbidden to stand or walk under

someone in front of the truck!

Do not load the goods which is higher than the goods rest.

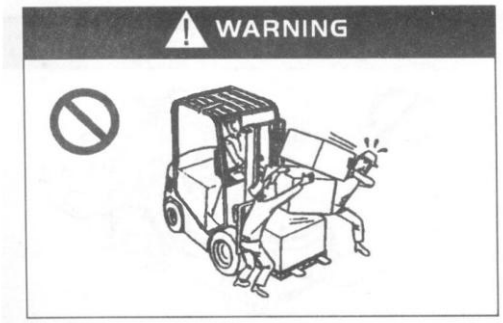

Do not carry the goods from forklift by manpower!

Do not misuse the fork!

Do not pick up people!

the elevatory fork!

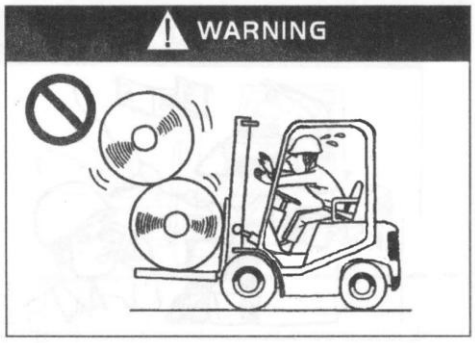

Please bind the goods which is difficult to fix before load!

Do not let people to carry the goods have been damaged!

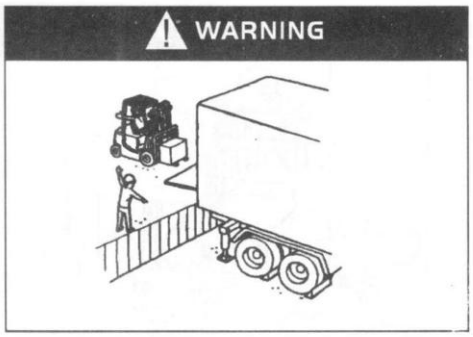

Be careful when load the container!

Do not misuse forklift!

Do not extend any part of body outside when driving!

Drive the truck smoothly to avoid sudden acceleration and deceleration!

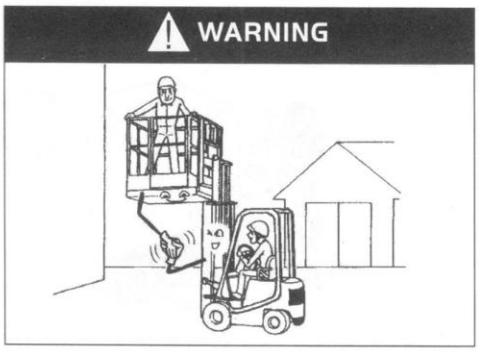

Must use special equipment to lift people safely to lift people safely to work at height!

Do not overload!

Do not lift when there is excessive wind!

Not allowed to work in explosive environments!

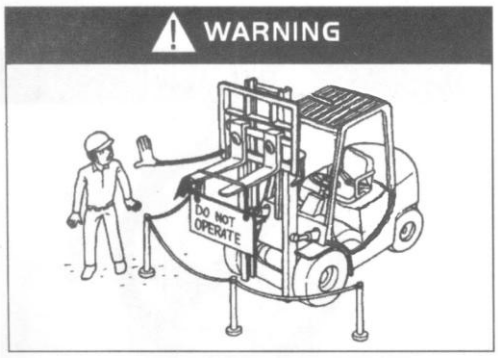

The faulty trucks should be put into the indicated area!

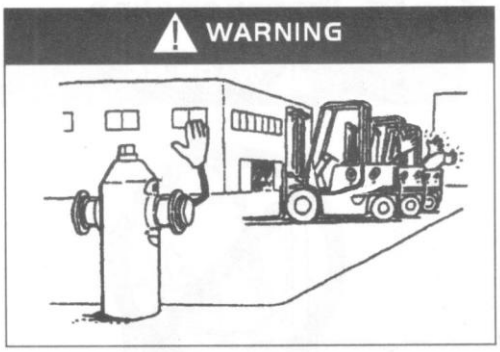

park the forklift to the indicated area!

Do not park the forklift on the slope!

When the forklift is not in use,please do the follow.
— Brake
— Put direction pole in neutral position.
— Lower the fork to the ground
— Frame forward tilt.
— Take off the key

3. Move the truck

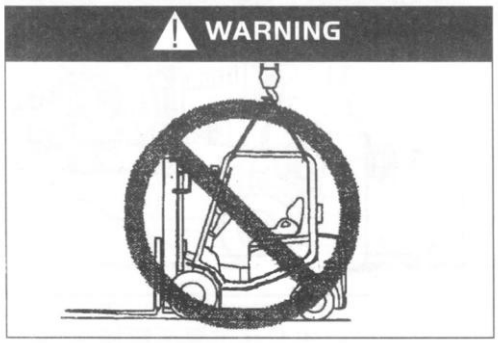

Forbid hoisting from the top!

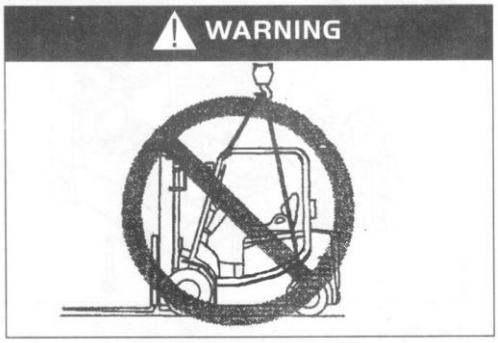

Forbid hoisting on the frame!

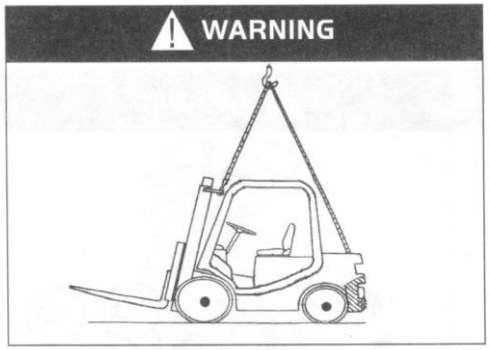

Hoisting the forklift correctly!

Hoisting the forklift

·Tie firmly steel cable on two terminal holes of outer mast beam and on counterweight hoisting hook,then,hoist forklift with hoisting device.the side of steel cable connecting to counterweight should go through notch of roofguard without exerting pressure on roofguard.

⚠ **·When lifting the truck, be sure not to wire rope and overhead guard around together.**

·Wire rope and lifting equipment to be very strong, enough to secure bearing fork lift, because the truck is extremely heavy.

·Do not use the cab (overhead guard) to hoist the forklift.

·Forklift upgrade, do not enter the truck underneath.

4. How to avoid overturning,how to protect yourself

Prohibit forward tilt to enhance loading, so as to avoid tipping!

Prohibit lifting goods tipsily!

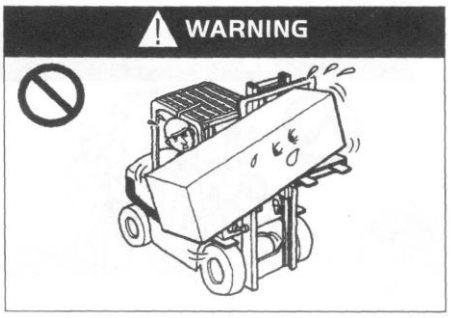

Prohibit eccentric loading of goods!

To avoid driving on slippery roads!

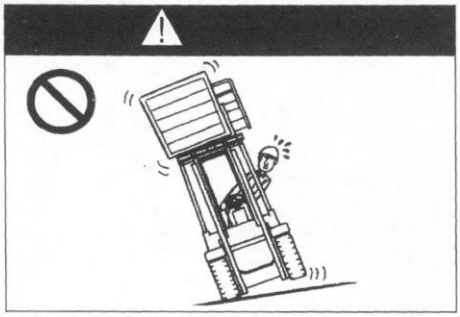

When the truck is not in the horizontal position, do not load or unload!

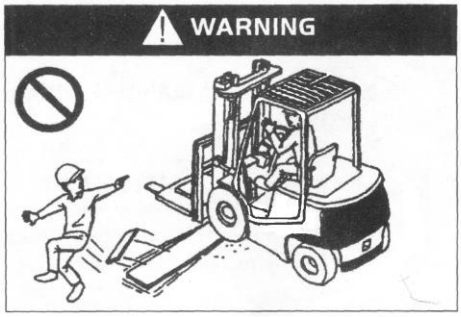

Prohibit crossing the obstacle such astrench, mound and railway!

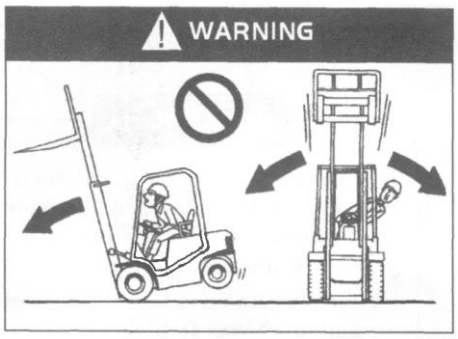

When moving, the distance between fork and ground should less than 150mm to 200mm!

whether load or no-load,don't turn in a high speed or in a large radian !

when no-load fork is lifted,please turn with a narrow range.

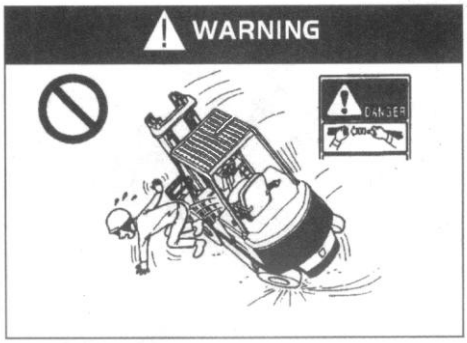

Be sure to fasten seat belts!

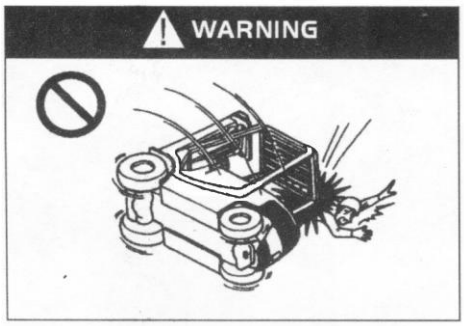

Do not jump in the event of forklift rollover!

Please wear helmets when driving!

⚠ **·It is more safe to stay under the protection of seat belt than jump down the truck. If the forklift began to tip over:**

1. Tap foot and clench the steering wheel tightly.
2. Do not jump.
3. The body bend to the opposite direction of the rollover.
4. Forward the body.

5. Safety problem in Maintenance

(1) Maintenance location

⚠ **·Designated areas should be available to service providers and adequate equipment and security facilities.**

·The site should be level ground.
·The site should be well ventilated.
·The site should have fire-fighting equipment.

(2) Precautions before maintenance

·No smoking

·Wear all protective equipment (helmets, shoes, glasses, gloves and boots), and suitable clothing.

·Wipe out the oil in time.

·When add lubricating oil, you should clean out dirty oil or dust with a brush or cloth, then add oil.

·In addition to the needs of some cases, should turn off the key switch and pull the battery plug out.

·Lower the fork to ground when maintaining.

·Clean the electrical components with compressed air.

(3) Matters need attention.

·You should be careful not to put your feet under the decensive fork, do not be tripped over by fork.

·When fork is lifted,place cushion block or other object under inner mast to prevent fork and mast from falling down suddenly.

·You should be careful when you open and close the noseplate and cover plate of battery.

·When you can not finish your work in one time,please make mark and go on next time.

·Use the right tools, do not use makeshift tools.

·Because of high pressure hydraulic circuit, do not carry out maintenance work before reducing the internal pressure oil-way.

·When shocked by high-voltage,search for medical treatment immediately.

·Do not use the door frame assembly as a ladder.

·Strictly forbidden to put your hands,feet and body between frame and door frame assembly.

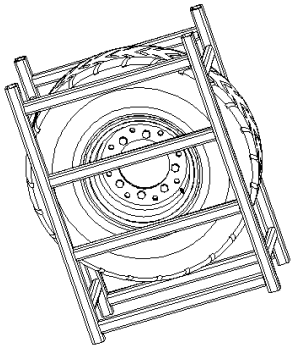

(4) Inspect and replace tires.

·Assembly and disassembly of tires must be operated by professionals.

·High-pressure air should be carried by professional.

·Wear goggles when using the compressed air.

·When disassemble tires, do not loose rim junction bolts and nuts, there is high-pressure gas inside the tire, bolts, nuts and rims loose cause very dangerous situation.

·Junction disassembly rim bolts and nuts, the tire must be exhausted within the high pressure gas, and carried out special tools.

(5) Use jack (replacement of tyres)

·When lift the forklift truck with a jack, do not bore into the botton of forklift.

· Before lift the forklift truck with a jack, ensure there is no person or load on the truck.

·When forklift is of ground,stop using jack and put pad under it to prevent it from falling down

·Before lift forklift with jack,affirm there is nobody and no load on it

(6) Emission (electrolytic liquid, oil, etc.) requirement.

·Forklift scrapped parts (plastic parts, electrical components, etc.), liquid (hydraulic oil, brake fluid, etc.) should be recycled according to local government stipulation,do not dispose them at will.

6. Safety problem in battery usage

(1) No smoking

⚠ **·Batteries produce hydrogen gas. Short circuit will produce sparks when lit cigarette near the battery, it will cause an explosion and fire.**

(2) Avoid electrical attack

⚠ **·Battery with high voltage, when the installation and maintenance, do not touch the battery conductor, which can cause serious burns.**

(3) Correct link

⚠ **·When the battery charging, the positive and negative can not be reversed, otherwise it will cause heat, fire, smoke or explosion.**

(4) Do not put metal objects on the battery

⚠ **·Do not let positive and negative contacts cause a short circuit by bolts or tools, which will result in injuries and explosions.**

(5) Against excessive discharge

⚠ **·Do not use forklift until it can not move, otherwise the battery life will be shortened. The batteries need charging up when the battery capacity warning light flashes continuously.**

(6) Keep clean

⚠ **·Keep the battery surface clean.**

·Do not use dry cloth, chemical fiber cloth to clean the battery surface. Do not use polyethylene film covered battery.

·Static electricity can cause an explosion.

·Clean the top of the battery not covered with a moist cloth.

(7) Wear protective clothing

⚠ **·When maintain the batteries, you should wear goggles, rubber gloves and rubber boots.**

(8) Battery electrolyte is harmful

⚠ **·Battery electrolyte is made of diluted sulfuric acid, be careful when handling.**

·When electrolyte adhesion conglytination on eyes, skin and clothing, it will result in vision loss and burns.

(9) Emergency dealing methods

⚠ **·When the accident occurred, deal according to the following methods of emergency treatment and contact a doctor immediately.**

·Splash on the skin: wash with water for 10-15 minutes.

·Splash into the eyes: wash with water for 10-15 minutes.

·Contaminated for a large area：counteract(baking soda)electrolyte with dry soda or clean it out with water

·Swallowed: to drink plenty of water or milk.

·Spilled on clothing, immediately take off clothes.

(10) Close battery cover tightly.

⚠ **·Cloth battery upper cover tightly to prevent electrolyte from leaking.**

·Do not add too much electrolyte, electrolyte overflow will cause leakage.

(11) Waterproof

⚠ **·Batteries can not be wet with rain or sea water, this will damage the battery or cause fire.**

(12) Battery anomaly

⚠ **·When the battery has the following situations, please contact our sales department:**

·Battery stinks.

·Dirty of electrolyte.

·Electrolyte temperature becomes higher.

·Electrolyte reduces too quickly.

(13) Prohibit disassemble

⚠ **·Do not drain the electrolyte from the battery.**

·Do not split the battery.

·Do not repair the battery.

(14) Stored

⚠ **·When the battery is not in use for a long time, it should be stored in well-ventilated place and difficult to fire.**

(15) **Disposal of waste batteries**

⚠ **·Disposal of waste batteries should contact our sales department.**

7. Plate

Signs sticked on vehicle are to illustrate using method and attention matters of vehicle,which not only takes consideration of you but also of the vehicle.stick the signs plate on again if they fall off.

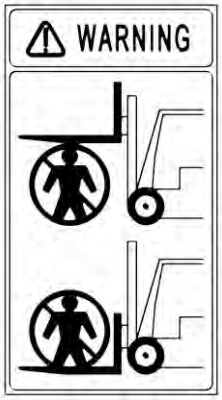

Left safety mark

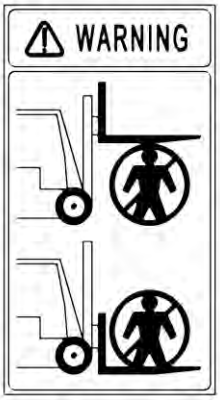

Right safety mark

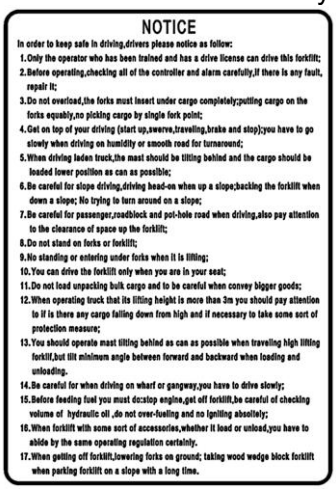

NOTICE

In order to keep safe in driving,drivers please notice as follow:

1. Only the operator who has been trained and has a drive license can drive this forklift;
2. Before operating,checking all of the controller and alarm carefully,if there is any fault, repair it;
3. Do not overload,the forks must insert under cargo completely;putting cargo on the forks equably,no picking cargo by single fork point;
4. Get on top of your driving (start up,swerve,traveling,brake and stop);you have to go slowly when driving on humidity or smooth road for turnaround;
5. When driving laden truck,the mast should be tilting behind and the cargo should be loaded lower position as can as possible;
6. Be careful for slope driving,driving head-on when up a slope;backing the forklift when down a slope; No trying to turn around on a slope;
7. Be careful for passenger,roadblock and pot-hole road when driving,also pay attention to the clearance of space up the forklift;
8. Do not stand on forks or forklift;
9. No standing or entering under forks when it is lifting;
10. You can drive the forklift only when you are in your seat;
11. Do not load unpacking bulk cargo and to be careful when convey bigger goods;
12. When operating truck that its lifting height is more than 3m you should pay attention to if is there any cargo falling down from high and if necessary to take some sort of protection measure;
13. You should operate mast tilting behind as can as possible when traveling high lifting forklif,but tilt minimum angle between forward and backward when loading and unloading.
14. Be careful for when driving on wharf or gangway,you have to drive slowly;
15. Before feeding fuel you must dcstop engine,get off forklift,be careful of checking volume of hydraulic oil ,do not over-fueling and no igniting absolutely;
16. When forklift with some sort of accessories,whether it load or unload,you have to abide by the same operating regulation certainly.
17. When getting off forklift,lowering forks on ground; taking wood wedge block forklift when parking forklift on a slope with a long time.

Usage of forklift

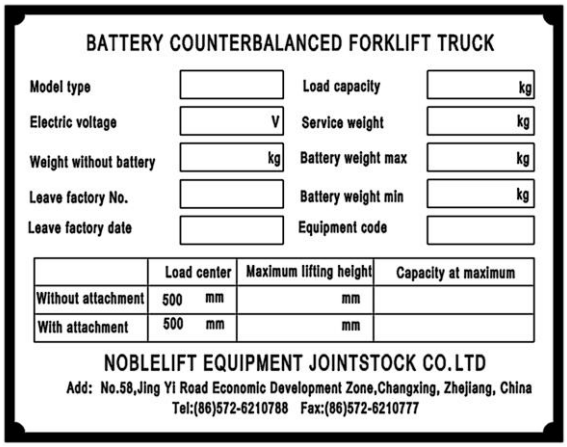

BATTERY COUNTERBALANCED FORKLIFT TRUCK

Model type		Load capacity	kg
Electric voltage	V	Service weight	kg
Weight without battery	kg	Battery weight max	kg
Leave factory No.		Battery weight min	kg
Leave factory date		Equipment code	

	Load center	Maximum lifting height	Capacity at maximum
Without attachment	500 mm	mm	
With attachment	500 mm	mm	

NOBLELIFT EQUIPMENT JOINTSTOCK CO.LTD

Add: No.58,Jing Yi Road Economic Development Zone,Changxing, Zhejiang, China

Tel:(86)572-6210788 Fax:(86)572-6210777

Forklift nameplate

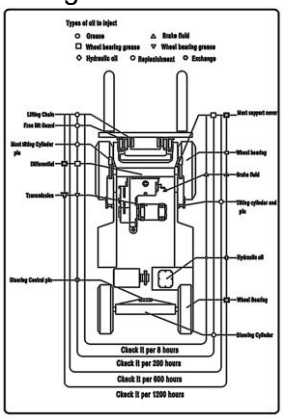

Lubrication system signs

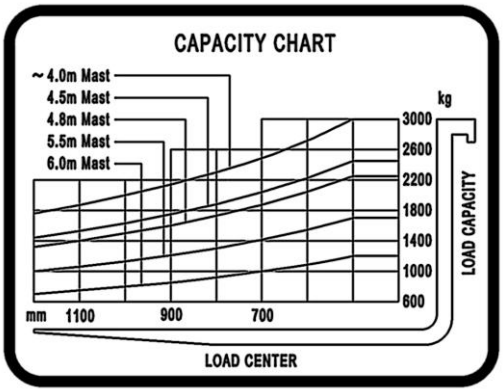

Load graph signs

Add hydraulic oil signs

hoisting signs

prohibiting hoisting signs

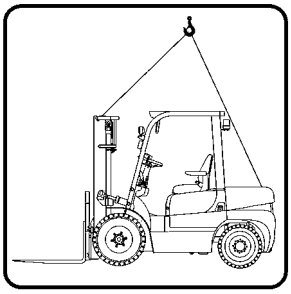

Truck hoisting signs

Prohibiting climbing signs

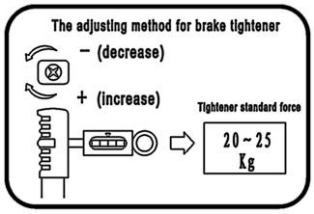

Handbrake signs

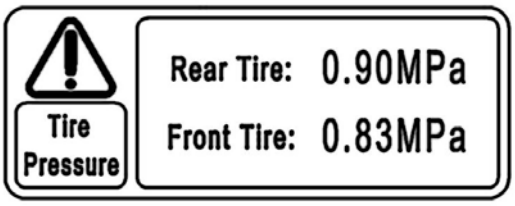

Tyre pressure signs

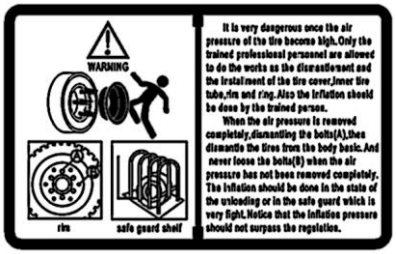

Tyre removal signs

Note signs of injury

Chapter four Truck's regular check and maintenance

Conduct a comprehensive pre-inspection of forklift trucks and forklifts to avoid failure and fail to produce the life it deserves. Maintenance program is based on the number of hours listed in forklift work 8 hours a day, working 200 hours a month the case may be, in order to maintain safe operation and maintenance procedures should be maintained on the forklift.

Routine maintenance and repair work carried out by the truck drivers, and other inspection and maintenance by professional maintenance personnel.

Ⅰ、The check before operation

For safe operation and to make sure the truck in good condition, a comprehensive inspection of truck should be conduct before operation, which is a statutory duty. If find problems you should contact our sales department.

⚠ **·A small mistake will cause a major accident, do not operate or move the forklift truck before the completion of repair work and inspections.**

·The forklift should be checked on the platform.

·When checking on electrical system of the truck, the key switch should be switched off and the battery plug should be unplug before the test.

·Replacement of inappropriate handling of waste oil down (into the water pipe under the soil, burning, etc.) will pollute the water, soil, atmosphere, etc., which is prohibited by law.

1. Checking point and checking content

	No.	Checking points	Checking contents
Brake system	1	Brake pedal	Foot brake pedal travel and braking force
	2	Brake oil	Quantity and cleanliness
	3	Parking brake	Parking brake handle travel and the size of operation force
Steering system	4	Steering wheel control	Elastic, rotation and movement before and after
	5	Hydraulic steering operation	Operation of all components
Hydraulic system and the frame	6	Function	Function, it has cracks, lubrication condition
	7	Pipe	Whether the pipe is leakage
	8	Hydraulic fuel	The appropriate fuel
	9	Lifting chain	Left and right should be consistent with two chain tightness
Tyre	10	Tyre	Pressure size, whether abnormal breakage.
	11	Wheel nut	Tighten firmly
Battery	12	Charging	Determine the battery capacity display status, the proportion of the plug should be firmly connected.
Lights, horn and switch	13	Headlights, taillights, reversing lights, horn turn signals, and emergency power off switch	To see if the light off, listening to speakers if sound, emergency power off switch is abnormal.
Detection and display	14	Function	When connected to key switch should display "test state normal"
Others	15	Owerhead guard, load backrest	Bolts, nuts are tightened
	16	Nameplate and marks	Integrity
	16	Other parts	Normal or not

2. Checking procedure

(1) Check the brake pedal

Check brake condition and to ensure a fully depresses the brake pedal when the plane from the floor counting down the brake pedal travel should be more than 50mm, no-load forklift truck braking distance about 2.5m.

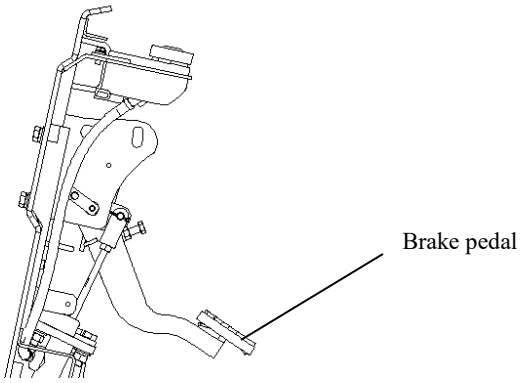

(2) Check the brake oil

⚠ **·Open the lid and check the brake oil and other conditions.**

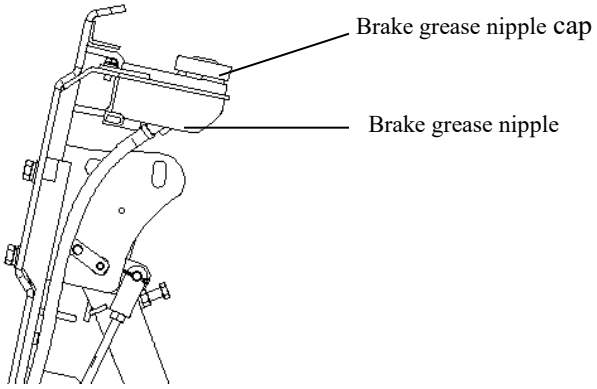

(3) Check parking brake handle

- Push forward parking brake handle and observe following status.
- If there is proper pull jurney
- Brake force value
- Damaged parts or not
- Handle operating force value is suitable to operator or not
- Operator may adjust by the screw installed on the top of handle.

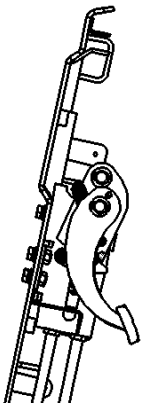

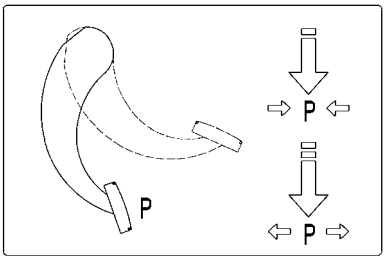

(4) Check the steering wheel rotation case

The steering wheel clockwise and counterclockwise rotating gently, check whether there is rebound phenomenon, a suitable spring trip to 50-100mm. Steering wheel before and after the trips

of about 7 °, if the above situation, turn the steering wheel shall be normal.

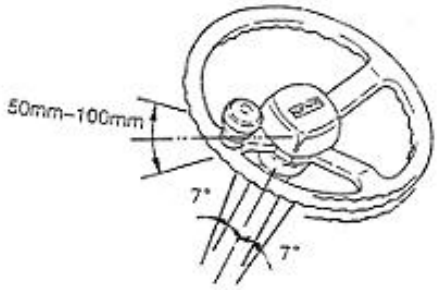

(5) Check the function of steering system

The steering wheel clockwise and counterclockwise rotation, check the power steering work.

(6) Check hydraulic system and frame function

Check the upgrade and after dumping the normal operation is smooth

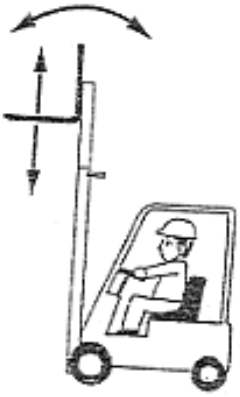

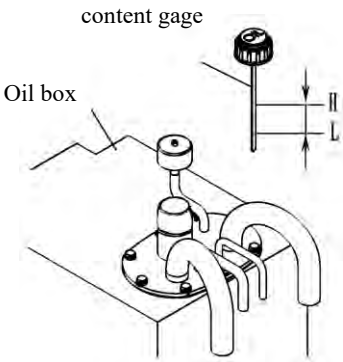

(7) Check pipeline

Check lift cylinder, tilt cylinder, and all pipeline whether oil leak.

(8) Check the hydraulic oil

Land the fork to the ground, check oil level gauge hydraulic oily bits, when the oil level in the H to the L range, the volume of hydraulic point oil suitable range.

model	H	L
FE4P150-70	36L	30L

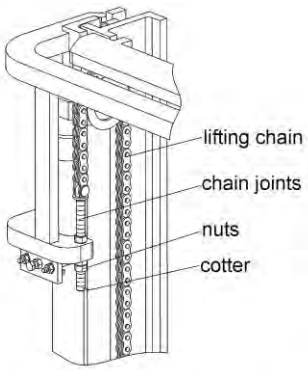

(9) Check the lifting chain

Bring fork to the ground 200-300mm high, to ensure the tightness around the same chain. Check finger stick is in the middle, if different tightness can be adjusted through the chain joints.

⚠ **·After adjustment, should be double nuts tighten.**

(10) Check tires (pneumatic tires)

Unplug the nozzle cap, measuring tire pressure with a tire air pressure. After check air pressure, nozzle mouth should ensure that gas will not leak before installed the cap.

⚠ **·Forklift tire pressure is higher than the car's; it should not exceed the prescribed pressure value.**

	model	tyre pressure
fore tyre	6.50-10-10PR	1.0MPa
	23×9-10-18PR	1.03MPa
	23×10-12-18PR	1.03MPa
rear tyre	5.00-8-10PR	0.9MPa
	18×7-8-14PR	0.9MPa
	200/50-10PR	0.9MPa

Check tyre（solid tyre）

Check if there is dilapidation or leakage on tyre and its sides,and if there is deformation or damage in wheel rib and locking collar

(11) Check wheel nut

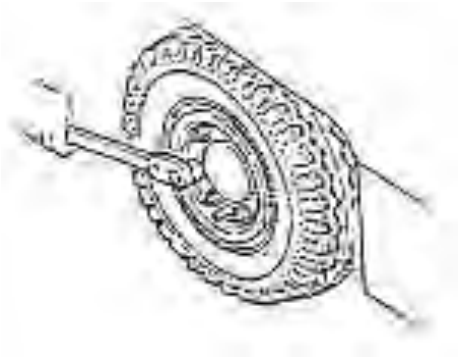

⚠ **·Wheel nut loosening is very dangerous, if loose, the wheels may fall off, resulting in vehicle flip. Check the availability of loose wheel nut, it is very dangerous even one of them is loose, so be screwed to the provisions of pre-torque value.**

Wheel nut tightening torque

Front wheel：6.50-10-10PR 130-150N.m
23X9-10-18PR 280-320N.m
23X10-12-18PR 280-320N.m
Rear wheel： 5.00-8-10PR 130-150N.m
18X7-8-14PR 130-150N.m
200/50-10PR 130-150N.m

(12) Check charge condition

Measuring the proportion of battery, when converted to 30 ℃, the battery proportion from 1.275 to 1.285, indicating the battery is fully charged, and check whether the terminal block is loose, and whether the cable is damage.

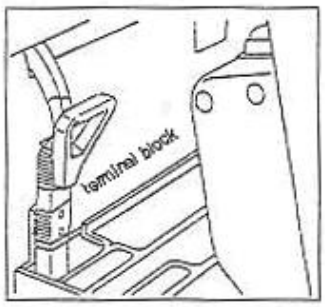

(13) Check headlights, turn signals and horn

Check whether the normal bright lights, speakers is normal (when pressing the horn button, horn ring)

Check whether the emergency stop is normal.

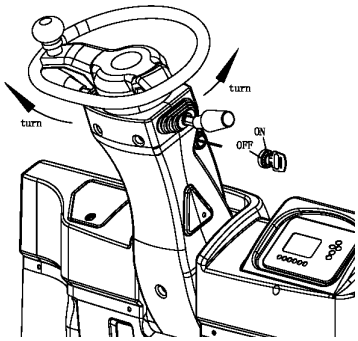

L	left steering light is bright
N	neutral
R	right steering light is bright

(14) Check instrument panel features

Normally, after a few seconds turn the key switch, the dashboard will be the following graph shows

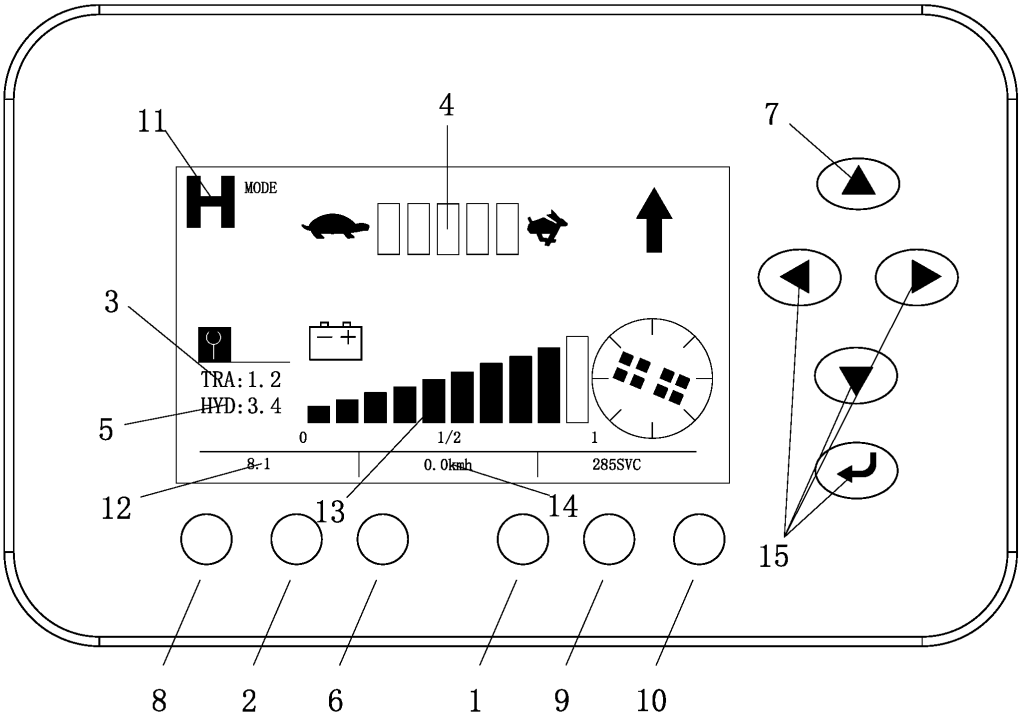

1. Tips locking instructions
2.parking brake insdicator
3.traction controller fault code
4.speed mode
5.oil pump controllerfault code
6.it's tome for maintanance
7.mode selection
8.slow speed mode
9.seat switch indication
10.electric quantity alarm indication
11.gear neutral indication
12.timing indication
13. electric quantity indication
14.speed indication
15.Model transformation and the parameter value adjustment buttons

（15）Check the overhead guard and load backrest

Check whether there are loose bolts or nuts

(16) Check the integrity of vehicle identification

(17）Others

Check whether abnormalities other parts

⚠ **In addition to checking lights and operating conditions, the key switch must be turned off and disconnect the battery plug before check the electrical system.**

Ⅱ、Check after operation

After the completion of the work remove the dirt on forklift and check the forklift according to the follow items：

(1) Check all the parts if there is damage or leakage.

(2) If there is deformation, distortion, damage or breakage?

(3) Add lubricating grease according to the situation.

(4) Let fork upgrade to the max hight for several times after work. (When the daily work is not up to the fork with the arrival of the maximum height of the situation, it would allow oil flow through the tanks of the entire journey, to prevent rust.)

(5) Replace the faulty component which caused malfunction during work.

⚠ **· A small mistake will cause a major accident. Do not operate or move the forklift truck before completion of repair work and inspections.**

Ⅲ、Truck cleaning

⚠ **·Stop the truck at the specified location.**
·Pull the parking brake handle.
·Press the emergency stop switch.
·Turn off the key switch and remove the key.
·Disconnect the battery plug.

1. Truck surface cleaning .

⚠ **·Do not use flammable liquid to clean trucks, take safety measures to prevent short circuit.**

·Use water and soluble detergent to clean the truck.

·Clean the oil filler and periphery of grease tap carefully.

If regular cleaning truck, please lubricate timely.

2. Chains cleaning

⚠ **·Do not use chemical detergent, acids or other corrosive liquid to clean the chain.**

·Place a tank in the bottom of the frame.

·Use gasoline or other petrochemical derivatives to clean the chain.

·Do not add any additive when use the steam nozzle cleaning.

·Dry immediately after cleaning of the chain pin and the water stain on chain surface.

3. Electric system cleaning

⚠ **·Do not use water to clean the pump control and a variety of connectors, so as not to cause damage to electrical systems.**

Use non-metallic brush or low-power hair dryer, according to the manufacturer instructions to clean the electrical system; do not move the protective cover.

4. After cleaning

·Thoroughly dry water stains on the truck (use compressed air as a example).

·Start the forklift according to the procedures.

·If moisture penetration into the motor, you must first remove the moisture, to prevent short circuits

Moisture will reduce brake performance, brake truck briefly to drying the brake.

Ⅳ、After cleaning

·Thoroughly dry water stains on the truck (use compressed air as a example).

·Start the forklift according to the procedures.

·If moisture penetration into the motor, you must first remove the moisture, to prevent short circuits

Moisture will reduce brake performance, brake truck briefly to drying the brake.

1. Regular maintenance schedule

√—Check , calibration, adjustment ×—Change

(1) Battery

Maintena-nce item	Maintenance item	Tools	Every-day (8h)	Every week (50h)	Every month (200h)	Three months (600h)	Six months (1200h)
Battery	Electrolyte levels	Eye survey		√	√	√	√
	Electrolyte specific gravity	Gravi-meter		√	√	√	√
	Quantity of electricity		√	√	√	√	√
	Terminals are loose		√	√	√	√	√
	The cable is loose		√	√	√	√	√
	Surface cleaness of the battery		√	√	√	√	√
	Battery surface has placed Tools		√	√	√	√	√
	Ventilation cover is tightened, vent is unimpeded			√	√	√	√
	Away from the fireworks		√	√	√	√	√

（2）Controller

Maintena-nce item	Maintenance item	Tools	Every-day (8h)	Every week (50h)	Every month (200h)	Three months (600h)	Six months (1200h)
Controller	Check the wear condition of contactors					√	√
	Check if contactor mechanical movement is good					√	√
	Check micro switch operation of the pedal is normal					√	√
	Check if the motor, battery and power unit is a good connection					√	√

	Check if the malfunction analysis system is normal						At the begin-ning of 2 years

（3）Motor

Maintena-nce item	Maintenance item	Tools	Every-day (8h)	Every week (50h)	Every month (200h)	Three months (600h)	Six months (1200h)
Motor	Remove the eyewinker from the motor shell				√	√	√
	Clean or change bearing						√
	IfCarbon brushes, commutator is worn, the spring force is normal				√	√	√
	If Wiring is correct, reliable				√	√	√
	Clearing brush and commutator surface for the film end on toner					√	√

（4）Transmission system

Maintena-nce item	Maintenance item	Tools	Every day (8h)	Every week (50h)	Every month (200h)	Three months (600h)	Six months (1200h)
Gearbox and Wheel Reducer	Noises		√	√	√	√	√
	Check leakage		√	√	√	√	√
	Change oil						×
	Check the working condition of brake		√	√	√	√	√
	Check the moving of qear wheel					√	√
	Check the junction with the frame bolts loose situation				√	√	√
	Check wheel bolt tightening torque	Torque wrench	√	√	√	√	√

（5）Wheel(forward, backward wheel)

Maintena-nce item	Maintenance item	Tools	Every-day (8h)	Every week (50h)	Every month (200h)	Three months (600h)	Six months (1200h)
Tyre	Wear, cracks or damage		√	√	√	√	√
	If there is nails,stone or other foregn items on tire matter				√	√	√
	Wheel damage		√	√	√	√	√

（6）Steering system

Maintena-nce item	Maintenance item	Tools	Every-day (8h)	Every week (50h)	Every month (200h)	Three months (600h)	Six months (1200h)
Steering wheel	Check clearance		√	√	√	√	√
	Check axis loose		√	√	√	√	√
	Check radial losse		√	√	√	√	√
	Check operation condition		√	√	√	√	√
Steering gear and valve block	Check if mounting bolts are loose				√	√	√
	Check valve block interface with steering leak case		√	√	√	√	√
	Check seal of connectors		√	√	√	√	√
Rear-axle	Check whether the rear axle mounting bolts loose				√	√	√
	Check if there is bending, deformation, cracks or damage				√	√	√
	Check or replace the lubrication of bridge bearing.					√	√
	Check or replace lubrication of bridge bearing					√	√
	Check steering cylinder operating conditions		√	√	√	√	√
	Check whether steering cylinder is leaking		√	√	√	√	√
	Check rack and pinion gear case					√	√
	wiring and working condition of sensor					√	√

（7）Brake system

Mainten-ance item	Maintenance item	Tools	Every-day (8h)	Every week (50h)	Every month (200h)	Three months (600h)	Six months (1200h)
Brake pedal	Empty run	Gradu-ated scale	√	√	√	√	√
	Pedal travel		√	√	√	√	√
	Operation condition		√	√	√	√	√
	Whether there is air in the brake pipe		√	√	√	√	√
Stop, brake and control	Whether the brake is safe and has enough travel		√	√	√	√	√
	Operation condition		√	√	√	√	√
Pole and cable	Operating performance				√	√	√
	Whether the connection is lossen				√	√	√

	Wear of reduction gearbox connectors					√	√
pipe	Damage, leakage, rupture				√	√	√
	Loose situation of connection and clamping parts				√	√	√
Brake pump	Leakage situation		√	√	√	√	√
	Check oil level, oil changing.		√	√	√		×
	Pump situation					√	√
	Pump leakage, damage					√	√
	Pump piston cups, one-way valve wear damage, replace						×

（8）Hydraulic system

Maintena-nce item	Maintenance item	Tools	Every-day (8h)	Every week (50h)	Every month (200h)	Three months (600h)	Six months (1200h)
Hydraulic oil tank	Check the oil, oil change		√	√	√	√	×
	Suction filter cleaning						√
	Exclude eyewinker						√
Control lever	Whether the connection is lossen		√	√	√	√	√
	Operation condition		√	√	√	√	√
Multitandem valve	Leakage		√	√	√	√	√
	Safety valve and self-locking tilt valve operation condition				√	√	√
	Measuring the pressure of the safety valve	Oil gauge					√
Pipeline joint	Leakage, loosening, fracture, deformation, damage				√	√	√
	Change the tube						× 1～2years
Hydraulic pump	Hydraulic pump is leaking or there is noise		√	√	√	√	√
	Hydraulic pump gear wear				√	√	√

（9）Lifting system

Maintena-nce item	Maintenance item	Tools	Every-day (8h)	Every week (50h)	Every month (200h)	Three months (600h)	Six months (1200h)

Chain and chain wheel	Check the chain tension state, whether deformation, corrosion damage		√	√	√	√	√
	Fuel chain				√	√	√
	Rivet pin and loose conditions				√	√	√
	Chain wheel deformation, damage				√	√	√
	If Bearings of chain wheel loosen				√	√	√
Attachment	Check whether in normal state				√	√	√
Lifting and tilt cylinder	Whether Piston rod, piston rod thread and the connection is loose, deformation, damage		√	√	√	√	√
	Operating conditions		√	√	√	√	√
	Leakage		√	√	√	√	√
	abrading and damaging status of pin and oil cylinder				√	√	√
Fork	Damage,deformation,wear of fork				√	√	√
	Damage,deformation,wear of allocation pin					√	√
	cracking and abrading status in hooker welding of fork root				√	√	√
Mast fork frame	welding between inner mast,outer mast and beam is cracking or damaged or not				√	√	√
	Tilt cylinder bracket and the door frame weld whether cracking, damage				√	√	√
	Inner frame, outer frame weld whether cracking, damage				√	√	√
	Fork frame weld whether cracking, damage				√	√	√
	wheel loosen				√	√	√
	Mast bearing wear, damage						√
	Mast bearing cap bolts whether loose				√		√
	Whether Lift cylinder rod bolt head, bending plate bolts loose				√		√
	cracking,damaging status of welding of roller and roller shaft				√	√	√

（10）Else

Maintena-nce item	Maintenance item	Tools	Every-day	Every week	Every month	Three months	Six months

			(8h)	(50h)	(200h)	(600h)	(1200h)
Overhead guard and load backrest	Installation is firmly	Measur-ing hammer	√	√	√	√	√
	Check the deformation, cracking, damage		√	√	√	√	√
Indicator light for steering	Work and installations		√	√	√	√	√
Horn	Work and installations		√	√	√	√	√
Lamps and bulbs	Work and installations		√	√	√	√	√
Reversing Buzzer	Work and installations		√	√	√	√	√
Instrument	Working condition		√	√	√	√	√
Wire	Harness injury, loosening			√	√	√	√
	Electrical connection loose				√	√	√

2. Regular replacement of key safety parts

Periodic replacement of critical safety components

When some parts difficult to find through regular maintenance of injury or damage, in order to further improve security, the user should replace the parts given in the following table for regular.

If the parts appeared abnormal before the time comes to replace, it should be replaced immediately.

Name of critical safety components	Useful life
Brake tube or hard pipe	I～2
Hydraulic hose for lifting system	I～2
Lifting chain	2～4
High pressure hose/tube for hydraulic system	2
Oil cup of brake fluid	2～4
Cylinder cover and dust cover of brake pump	1
Internal hydraulic system seals, rubber parts	2

Ⅴ、Area lubricated and lubricant recommended

1. Area lubricated

○：Change　　FO：Hydraulic oil

○：reinforce　　GO：Gear oil

□：Check and adjust　　CG：Grease

BO：Brake fluid　　W：Distilled water

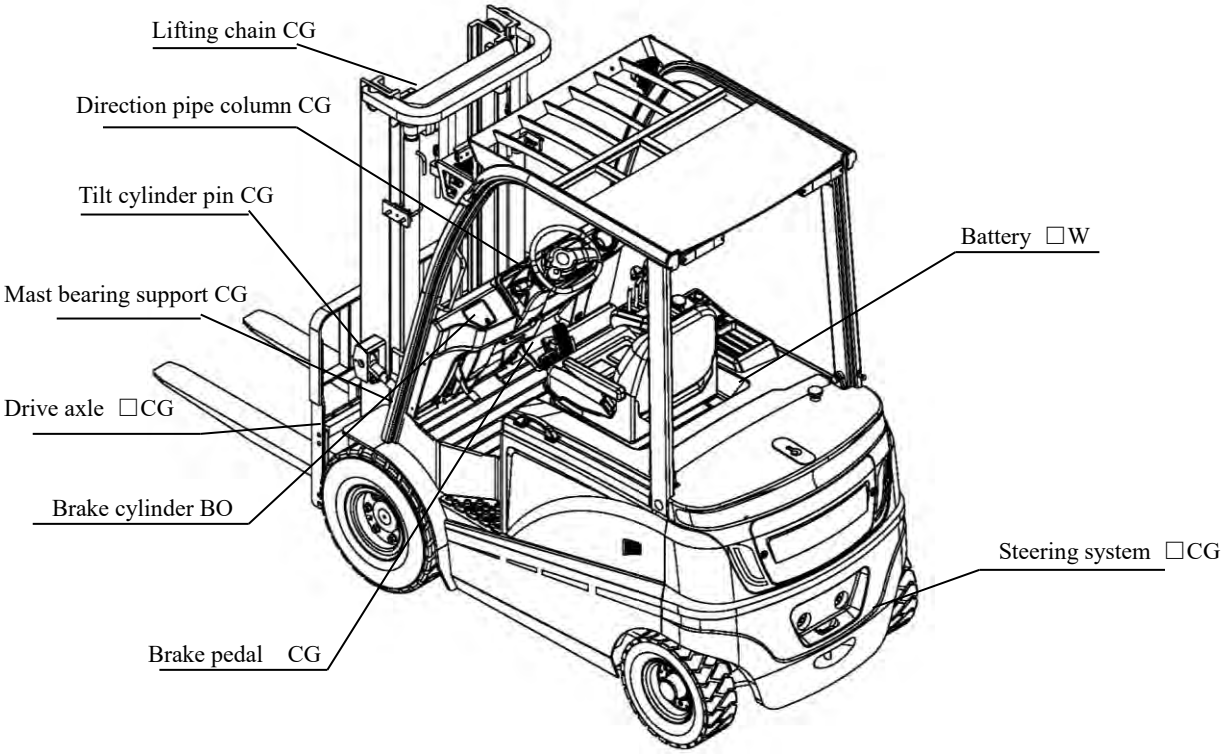

2. Lubricant recommended

Name	Trademark	Capability(L)	Remark
Hydraulic oil	L-HM32	40	Winter
	L-HM46		Summer
Gear oil	AFT DEXRONⅡ	4.5	
Brake fluid	Caltex DOT3	0.2	
Industrial Vaseline	2#		Battery electrode column
Grease	Automotive Lithium Grease		

Maintenance record

No.	Date	Maintenance content	Noter

https://truckmanualshub.com/

Noblelift North America
2461 S. Wolf Road
Des Plaines, IL 60018
T: 847-595-7100 F: 847-595-7200
parts@nobleliftna.com
www.nobleliftna.com