https://truckmanualshub.com/

SHIBAURA

FRONT MOWER

CM284
CM364

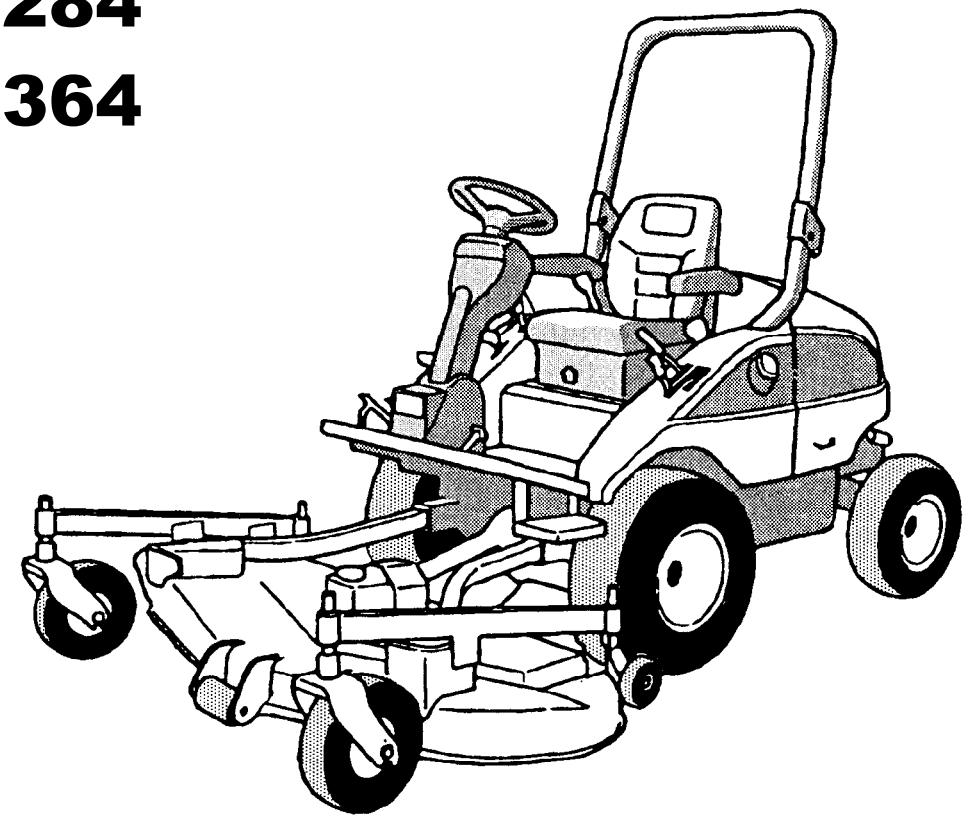

WORKSHOP MANUAL

Downloaded from www.Manualslib.com manuals search engine

https://truckmanualshub.com/

Introduction

Shibaura developed a front mower incorporating new technology for more improved passenger mowing garden tractor.
This manual describes the structure, functions, maintenance and service of models CM284 and CM364 so that their functions are fully exhibited in actual operation.
Please read this carefully to promote sales and service, to improve the service techniques and guide users for proper operation of Shibaura tractors.

Figures or other conditions in this manual may be changed without notice in order to improve the performance or for other objects.

Ishikawajima-Shibaura Machinery Co., Ltd.
Tractor Division
Quality Assurance Department

Downloaded from www.Manualslib.com manuals search engine

https://truckmanualshub.com/

INDEX

Chapter 1. GENERAL ····· 3
1-1 Specifications & Performances ····· 4
1-2 Precautions Before Servicing ····· 5
1-3 Basic Understanding on Servicing ····· 5

Chapter 2. ENGINE ····· 7
2-1 Engine Removal ····· 8
2-2 Disassembly, Inspection and Reassembly ····· 9
1. Disassembly ····· 9
2. Disassembly, Inspection and Reassembly of Engine Main Parts ····· 13
3. Engine Reassembly ····· 36
2-3 Electrical Units ····· 46
1. Alternator ····· 46
2. Starting Motor ····· 53
3. Glow Plug ····· 68
4. Thermometer and Thermosensor ····· 69
5. Buzzer Alarm Warning System ····· 70
6. Oil Pressure Switch ····· 71
7. Engine Stop Solenoid ····· 72
8. Fusible Link ····· 72
9. Wiring Harness ····· 72
2-4 Trouble Shooting ····· 73
2-5 Engine Maintenance Standard Table ····· 75

Chapter 3. TRANSMISSION AND BRAKE ····· 83
1. DESCRIPTION AND OPERATION ····· 84
2. TRANSMISSION UNIT ····· 88
1) Removal ····· 88
2) Front Transmission Unit ····· 93
3) Rear Transmission Unit ····· 101
4) PTO Clutch Unit ····· 105
5) Front Wheel Shaft and Brake Unit ····· 108
6) Two Way Clutch Unit ····· 110
7) Differential Gear Unit ····· 111

Chapter 4. HST SYSTEM ····· 117
1. OIL FLOW ····· 118
2. HST UNIT REMOVAL ····· 121
3. PRECAUTIONS BEFORE DISASSEMBLY ····· 124
4. DISASSEMBLY ····· 124
5. INSPECTION ····· 125
6. REASSEMBLY ····· 126
7. ASSEMBLY ····· 126
8. ADJUSTMENT ····· 128
9. TROUBLE SHOOTING AND SPECIFICATIONS ····· 132

Chapter 5. POWER STEERING ····· 135
1. OIL FLOW ····· 136
2. CONTROL VALVE ASSEMBLY ····· 141
3. POWER STEERING CYLINDER ····· 145
4. PIPING ····· 146
5. TROUBLE SHOOTING ····· 147

Chapter 6. REAR AXLE ASSEMBLY ····· 149
1. DESCRIPTION AND OPERATION ····· 150
2. REAR AXLE REMOVAL ····· 151
3. INSTALLATION ····· 151
4. DISASSEMBLY ····· 152
5. INSPECTION ····· 154
6. ASSEMBLY ····· 155
7. INSTALLATION ····· 156

Chapter 7. HYDRAULIC LIFT SYSTEM ····· 157
1. DESCRIPTION AND OPERATION ····· 158
2. OIL FLOW ····· 159
3. OVERHAUL ····· 162

Chapter 8. IMPLEMENT DRIVE ····· 167
1. DESCRIPTION AND OPERATION ····· 168
2. POWER FLOW ····· 169
3. AUTOMATICALLY PTO DISENGAGE SYSTEM ····· 171
4. ADJUSTMENT AND SPECIFICATION ····· 172

Chapter 9. MAINTENANCE STANDARDS TABLE ····· 173
Maintenance Standards Table ····· 174

Chapter 10. ELECTRICAL SYSTEM ····· 177
1. DESCRIPTION ····· 178
2. COMPONENT LOCATION AND FUNCTION ····· 178
3. FUNCTION INSPECTION AND ADJUSTMENT ····· 181

Chapter 11. MOWER ····· 207
11-1 Sectional Vier: FM60SD ····· 208
11-2 Specifications ····· 209
11-3 Disassembly ····· 210
11-4 Reassembly and Adjustment ····· 216

Downloaded from www.Manualslib.com manuals search engine

https://truckmanualshub.com/

Chapter 1. GENERAL

Downloaded from www.Manualslib.com manuals search engine

1-1 Specifications & Performances

	Model		CM284	CM364
Engine	Model		J843	N843L
	Type		Water-Cooled 4-Cycle Vertical Diesel Engine	
	Number of Cylinders		3	
	Total Stroke Volume		1330 cc	1662 cc
	Maximum Output		20.8 kW (28 HP)/2700 rpm	26 kW (35 PS)/2700 rpm
	Compression Ratio		22.5 : 1	
	Fuel		Diesel Fuel Oil	
	Starting Method		By Starting Motor	
Maine Body	Overall Length		2415 mm	
	Overall Height		1390 mm	
	Overall Width		1220 mm (narrow), 1370 mm (wide)	
	Weight		730 kg	750 kg
	Tire	Front Wheel	23 × 10.5 – 12	
		Rear Wheel	20 × 8.00 – 10	
	No. of Running Speeds		2 Forward Speeds, 2 Reverse Speeds (Continuously variable speed)	
	Transmission System		L/H Switching, All Hydraulic Continuously Variable Speed (HST)	
	Brake		Wet Disc Brake	
	Lift Control Valve Relief Set Pressure		9.8 MPa {100 kgf/cm^2}	
	Relief Set Pressure/ Steering		5.88 – 6.56 MPa {60 – 67 kgf/cm^2}/ Full Hydraulic Power Steering	
	Running Speed	Forward: L	0 – 10.0 km/h	
		Forward: H	0 – 17.2 km/h	
		Reverse: L	60 – 70 % of Forward Speed	
		Reverse: H	60 – 70 % of Forward Speed	
Capacity	Fuel Tank		50.5 ℓ	
	Engine Oil		4.6 ℓ (Including oil filter)	5.6 ℓ (Including oil filter)
	Transmission Gear Oil		Front 20 ℓ, Rear 2.3 ℓ	
	Cooling Water		5.1 ℓ	5.3 ℓ
Electric Units	Battery		75 D 26 L	
	Starting Motor		12 V – 1.7 kW	12 V – 2.0 kW
	Alternator		12 V – 40 A	
	Head Light		23 W	
	Monitor Lamp		3 W	
	Dash Panel Lamp		2 W	
	Light Switch Lamp		1.4 W	

Downloaded from www.Manualslib.com manuals search engine

https://truckmanualshub.com/

1-2 Precautions Before Servicing

1. Have the tractor washed clean and have the oil, fuel, and cooling water drained out as would be required by the work to be performed.
2. Service shop should always be kept clean to prevent dust from rising and should be well lighted.
3. The disassembled parts shall have the oil and grease washed off and arranged on a stand separated by groups.
4. Clothing, service tools and equipments shall be checked to ensure safety in performing the operations.

1-3 Basic Understanding on Servicing

1. Engine, transmission, and hydraulic apparatus have been specially manufactured to high accuracy so that care shall be exercised to maintain them in clean state and not to do any unnecessary disassembly.
2. Defective parts due to wear and other causes shall be discarded and new parts ordered with the tractor model, serial No., code No., and part name clearly defined. (Keep the defective parts on hand to enable showing it to the customer.)
3. When assembling, it is essential to have oil applied to all moving parts so that they will be provided with initial oil film until normal lubrication takes place.
4. Unless specially instructed, bolts and nuts shall be tightened by proper tools to the proper tightening torque.

Downloaded from www.Manualslib.com manuals search engine

GENERAL METRIC BOLT TORQUE SPECIFICATION TABLE

USE THE FOLLOWING TORQUES WHEN SPECIAL TORQUES ARE NOT GIVEN

NOTE : These values apply to fasteners as received from supplier, dry, or when lubricated with normal engine oil. They do not apply if special graphited or molly disulphide grasses or other extreme pressure lubricants are used.

		Coarse Thread		Fine Thread	
Bolt Size	Grade No.	Pitch (mm)	Newton Meters	Pitch (mm)	Newton-Meters
M6	4T 4T 4.8	1.0	4.9 – 6.9	–	–
	7T 7T 8T 8.8		8.3 – 11.3		
	10T 10T 11T		11.7 – 15.7		
M8	4T	1.25	12.7 – 16.7	1.0	15.2 – 20.1
	7T		22.6 – 28.4		26.5 – 34.3
	10T		28.5 – 36.3		30.4 – 40.2
M10	4T	1.5	25.5 – 33.3	1.25	28.4 – 36.2
	7T		44.1 – 55.9		49.0 – 62.8
	10T		54.0 – 69.6		57.9 – 73.5
M12	4T	1.75	37.3 – 47.1	1.25	43.1 – 54.9
	7T		65.7 – 83.4		74.5 – 94.1
	10T		92.2 – 116		99.0 – 127
M14	4T	2.0	62.8 – 80.4	1.5	69.6 – 87.3
	7T		104 – 131		117 – 148
	11T		139 – 175		147 – 186
M16	4T	2.0	86.3 – 110	1.5	91.2 – 115
	7T		149 – 184		157 – 192
	11T		206 – 255		221 – 270
M18	4T	2.0	114 – 141	1.5	131 – 163
	7T		196 – 235		230 – 279
	11T		275 – 333		299 – 368
M20	4T	2.5	144 – 179	1.5	172 – 211
	7T		240 – 289		275 – 333
	11T		363 – 441		397 – 485

Downloaded from www.Manualslib.com manuals search engine

https://truckmanualshub.com/

Chapter 2. ENGINE

NOTE:
Due to Pollutant Regulations, some of parts relating to Engine exhaust are not available for spares as an individual part.

Engine Model	Tractor Model
J843	CM284
N843L	CM364

Downloaded from www.Manualslib.com manuals search engine

https://truckmanualshub.com/

2-1 Engine Removal

1) If necessary, remove bolts and nuts and the bonnet.
2) Remove the muffler and stay from the engine.
3) Disconnect the wiring from the air cleaner clogging sensor.
4) Disconnect the wiring from the water temperature sensor and water temperature switch.
5) Remove the radiator hoses from the engine.
6) Disconnect the wiring from the alternator.
7) Disconnect the wiring from the starting motor.
8) Remove the bolt and ground wire from the cylinder head.
9) Disconnect the fuel return hose from the fuel return pipe.

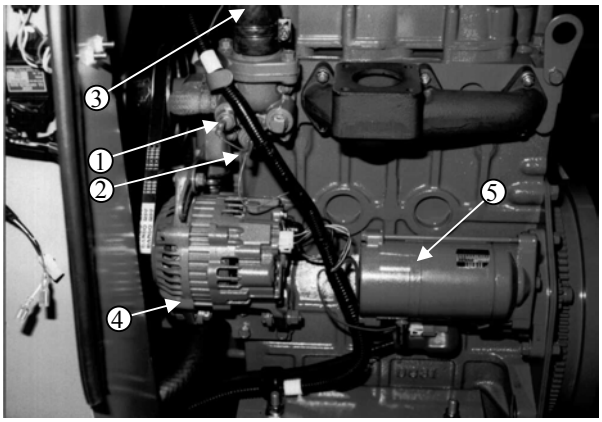

002X

① Water temperature switch
② Water temperature sensor
③ Radiator hose
④ Alternator
⑤ Starting motor

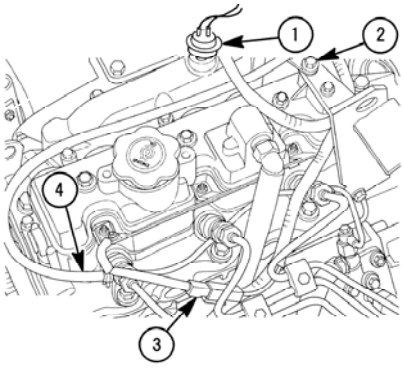

003X

① Air cleaner clogging sensor
② Ground wire
③ Glow plug connector
④ Fuel return hose

10) Disconnect the wiring from the engine oil pressure switch.
11) Disconnect the wiring from the glow plug connector.
12) Disconnect the wiring from the engine stop solenoid.
13) Disconnect the fuel pipe from the injection pump.
14) Remove the accelerator wire from the engine.
15) Disconnect the drain hose from the drain cock.
16) Disconnect the oil hoses from the hydraulic oil pump.
17) Remove the engine attaching nuts and hoist the engine from the flame.

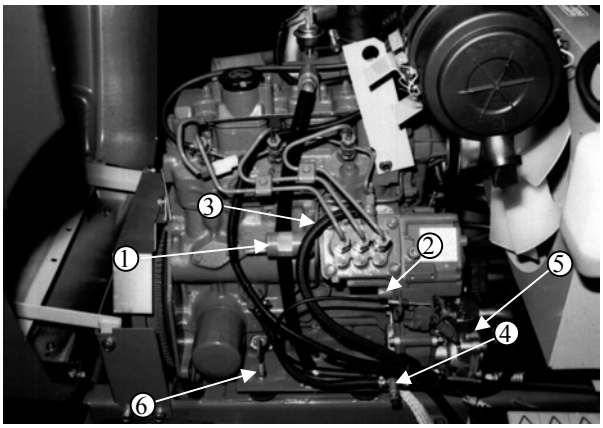

004X

① Engine stop solenoid
② Accelerator wire
③ Fuel hose
④ Drain cock
⑤ Hydraulic oil pump
⑥ Engine attaching nut

Downloaded from www.Manualslib.com manuals search engine

https://truckmanualshub.com/

2-2 Disassembly, Inspection and Reassembly

1. Disassembly

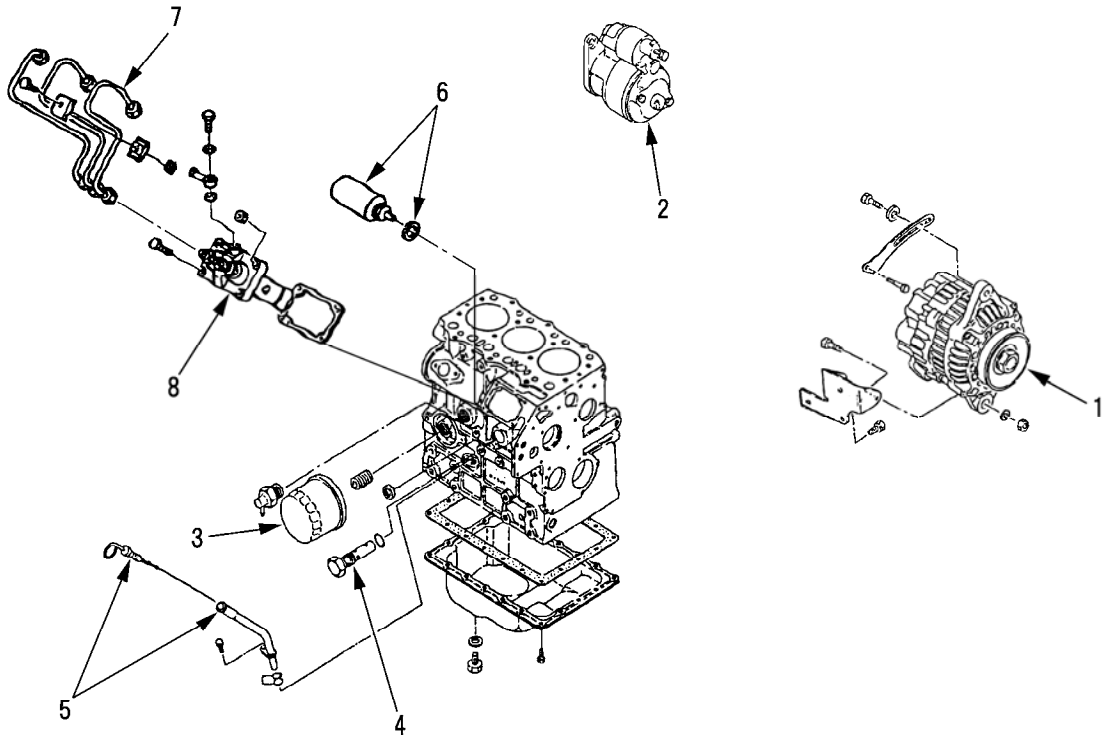

005X

Order	Disassemble Parts Name
1	Alternator
2	Starting motor
3	Oil filter
4	Relief valve
5	Oil level gauge · Gauge guide
6	Engine stop solenoid · Seal washer
7	Injection pipe
8	Injection pump **NOTE:** **1. Remove the injection pipes and engine stop solenoid before remove the injection pump.** **2. Raise the injection pump and disconnect the governor link from the control rack by remove the snap pin.** **3. Injection timing has been adjusted by the shims between injection pump and cylinder block. Take note of their thickness and number when removing the injection pump.**

Downloaded from www.Manualslib.com manuals search engine

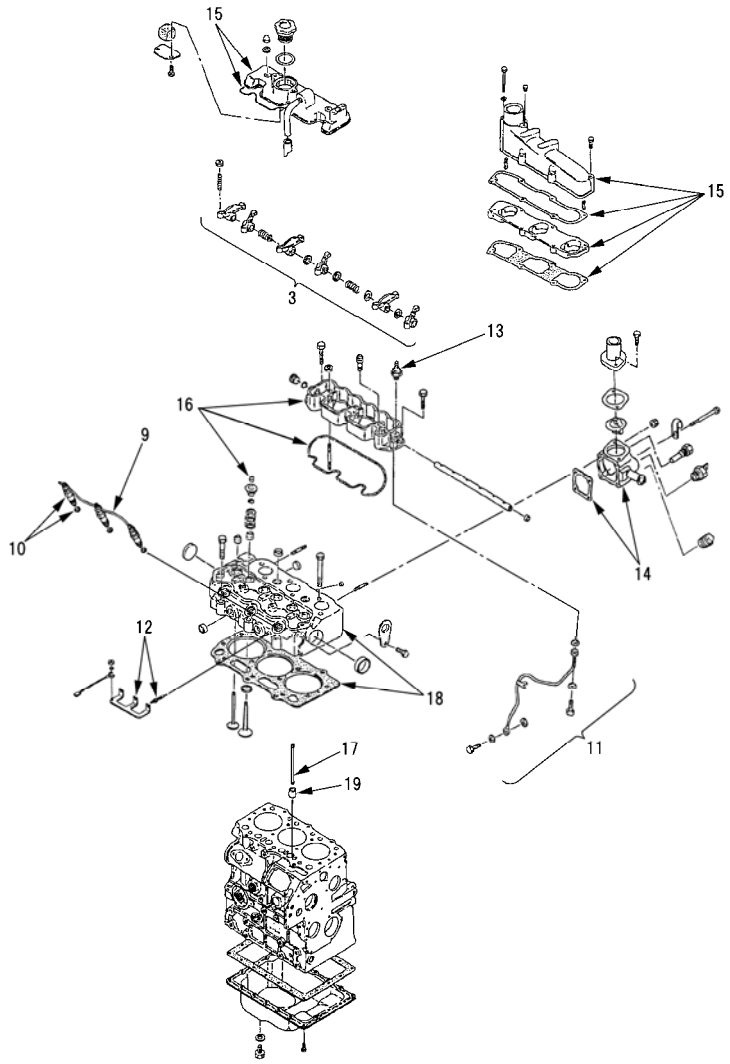

006X

Order	Disassemble Parts Name
9	Return pipe
10	Injection nozzle · Gasket
11	Oil transfer pipe · Eye bolt · Seal washer
12	Connector · Glow plug
13	Oil pressure switch
14	Thermostat case · Gasket
15	Head cover · O-Ring · Intake manifold · Spacer
16	Rocker arm assembly · O-Ring · Cap **NOTE: Remove the caps from intake valves and exhaust valves.**
17	Push rod
18	Cylinder head assembly · Head gasket **NOTE:** **1. Untighten the cylinder head bolts in several steps and remove the cylinder head assembly.**
19	Tappet

Downloaded from www.Manualslib.com manuals search engine

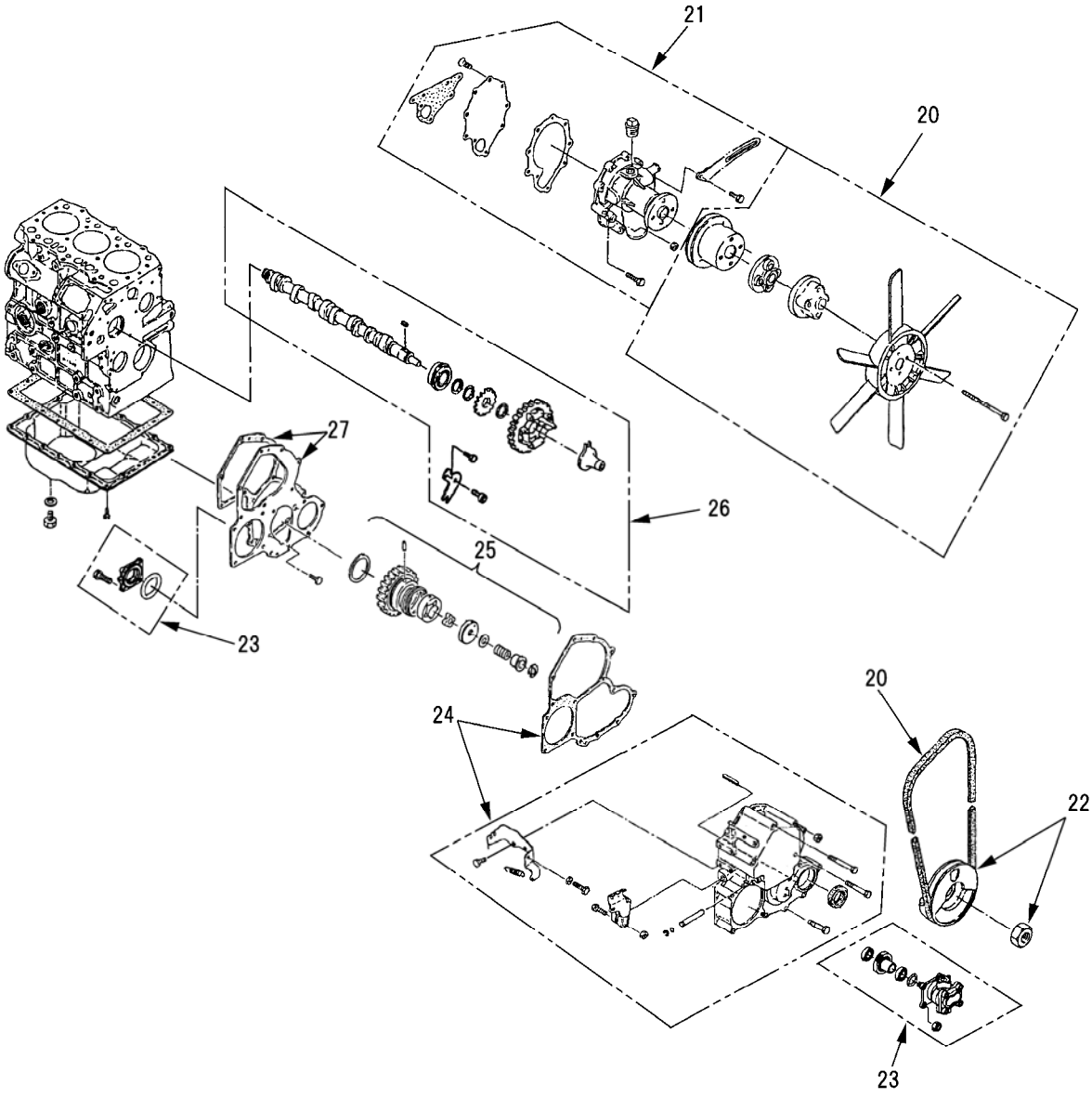

007X

Order	Disassemble Pats Name
20	V-belt · Cooling fan · Fan holder · Fan pulley
21	Water pump assembly · Gasket
22	Crankshaft pulley
23	Hydraulic oil pump, Cover, Drain cock.
24	Timing gear case assembly · Gasket **NOTE: Remove the engine stop solenoid and injection pump assembly at first.**
25	Idle gear · Oil pump assembly
26	Cam shaft assembly · Plate **NOTE: Remove the bolts and plate at first, and draw out the cam shaft assembly.**
27	Front plate · Gasket

Downloaded from www.Manualslib.com manuals search engine

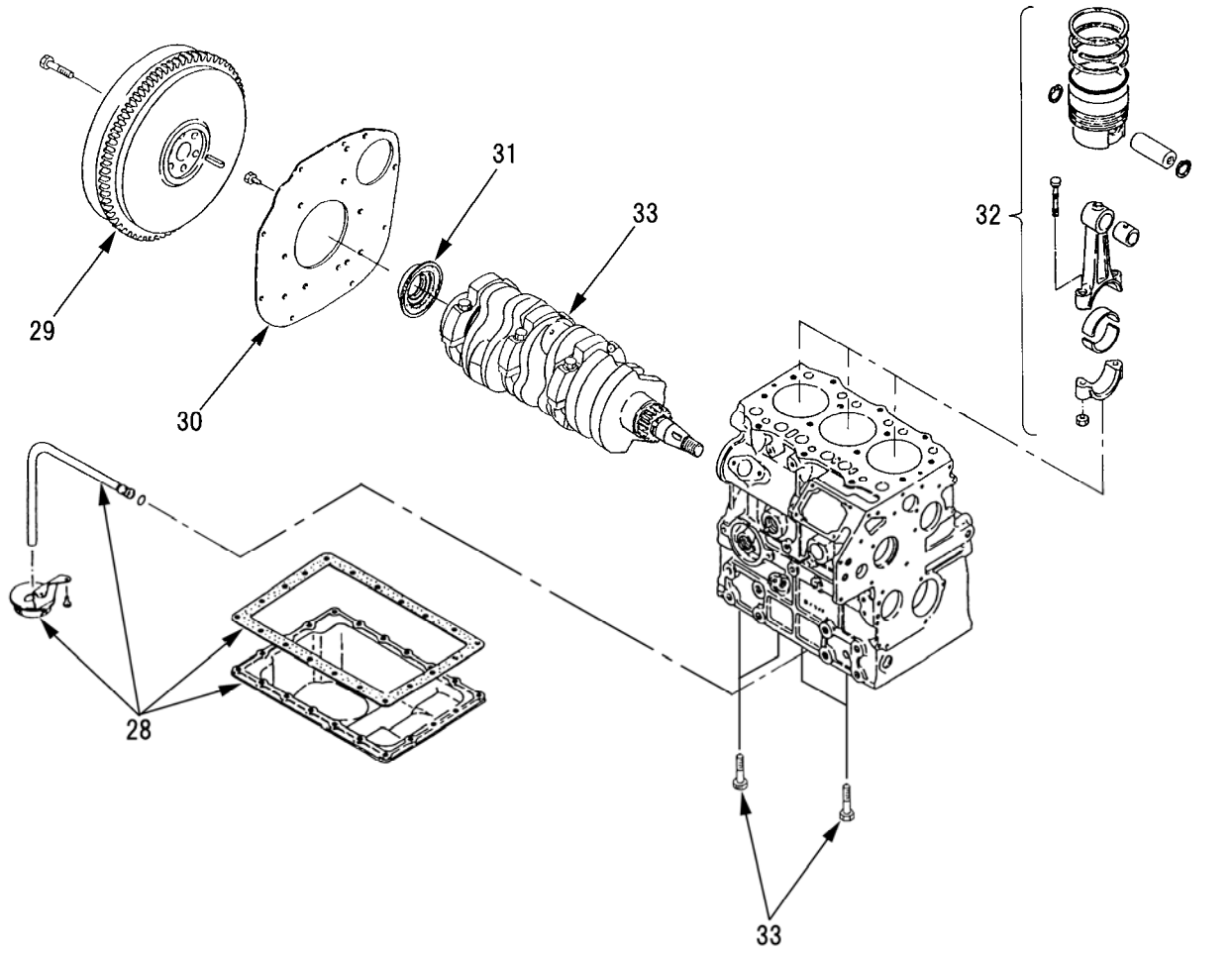

008X

Order	Disassemble Parts Name
28	Oil pan · Gasket · Suction filter · Suction pipe
29	Fly wheel
30	Rear plate
31	Oil seal
32	Piston and connecting rod assembly **NOTE:** **1. Before extracting piston, remove the carbon deposit from the TDC in the cylinder.** **2. Place the connecting rod, cap and bearing removed in order of the cylinders.**
33	Crank shaft and bearing holder assembly **NOTE: Remove the four bolts, and draw out the crank shaft and bearing holder assembly as a set.**

Downloaded from www.Manualslib.com manuals search engine

2. Disassembly, Inspection and Reassembly of Engine Main Parts

★ Cautions before start

1) **Check the cylinder block and cylinder head for wear, leakage and damage.**
2) **Remove deposit in oil holes of each part with air and check for clogging.**
3) **Wash each part well to remove dust, contaminated oil, carbon, and other foreign matter.**
4) **Remove carbon deposite on the piston, cylinder head, valves, etc. carefully not to damage parts. (Great care is necessary specifically for aluminum alloy parts.)**
5) **Valves, pistons, connecting rods, metals and other parts which are to be combined as specified should be attached match marks beforehand to prevent confusion.**

1) Rocker arm ass'y

Disassembly

(1) Extract the screw from the rocker arm bracket.
(2) Screw in a M8 bolt from the front side of the rocker arm bracket and extract the rocker arm shaft.
(3) Take out the spring and rocker arm from the rocker arm bracket.

1. Screw
2. Rocker arm shaft
3. Rocker arm
4. Spring
5. Shim

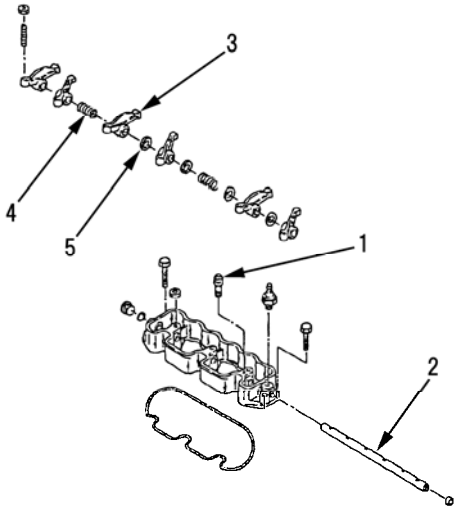

009X

Inspection and service

(1) Rocker arm shaft

Measure the outside diameter of the rocker arm shaft with a micrometer and replace if the result is bellow the service limit.

Rocker arm shaft diameter (ø)		
Standard assembling value		Service limit
J843	**11.65 – 11.67**	**11.57**
N843L	**14.95 – 14.97**	**14.87**

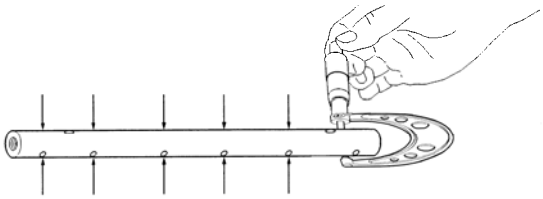

010X

Downloaded from www.Manualslib.com manuals search engine

(2) Clearance between rocker arm and rocker arm shaft

a. Measure the rocker arm bore.
b. Measure the clearance between the rocker arm and rocker arm shaft, and replace if the service limit is exceeded.

Clearance between rocker arm and rocker arm shaft (mm)	
Standard assembling value	Service limit
0.032 – 0.068	**0.2**

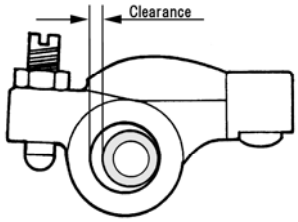

011X

(3) Inspection of rocker arm

Check the valve cap-contact surface for uneven wear and streaks. Correct the curved surface with an oil stone or grinder correctly if insignificant.

Reassembly

Reassembly parts reversely to disassembly.

2) Cylinder head ass'y

Disassembly

(1) Compress the valve spring with a valve spring replacer and remove the valve cotter, retainer, spring and valve.
(2) Remove the valve guide seal, if required.

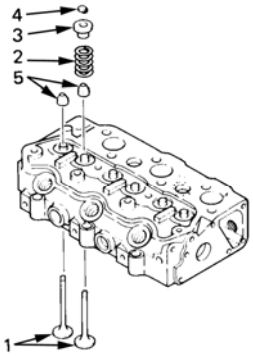

013X

1. Valve
2. Spring
3. Retainer
4. Valve cotter
5. Valve guide seal

Inspection and service

(1) Distortion of cylinder head bottom surface.

Apply a straight edge to the bottom surface of the cylinder head, and insert a thickness gauge at 6 points from A to F in the right figure and measure distortion. If the distortion exceeds the repair value, correct with surface grinder or the like.

Distortion at cylinder head bottom surface (mm)	
Standard assembling value	Repair value
Less than 0.05	**0.12**

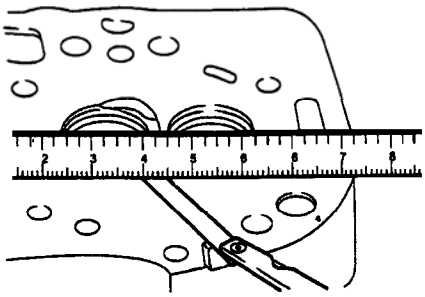

014X

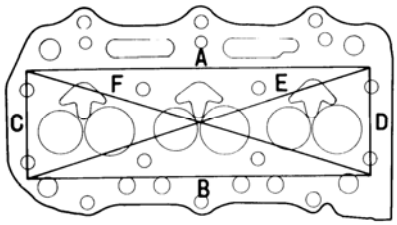

015X

Downloaded from www.Manualslib.com manuals search engine

(2) Intake and exhaust valves and valve guide

a. Check the head and stem of each valve and replace if burnout, wear or deformation is remarkable.
b. Measure the outside diameter at the position I, II, and III on the valve stem with a micrometer and replace if the result is less than the service limit.

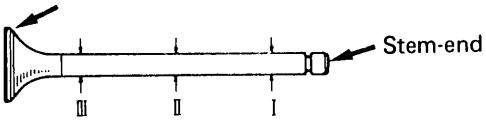

016X

Valve stem diameter (mm)			
Intake valve		Exhaust valve	
Standard assembling value	Service limit	Standard assembling value	Service limit
6.955 – 6.97	**6.89**	**6.94 – 6.95**	**6.84**

c. Replace a valve if its head thickness is less than service limit.

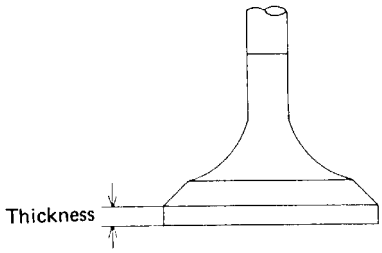

017X

Valve head thickness (mm)	
Standard assembling value	Service limit
0.775 – 1.075	**0.5**

d. Replace the valve if the clearance between the stem and guide exceeds the service limit.

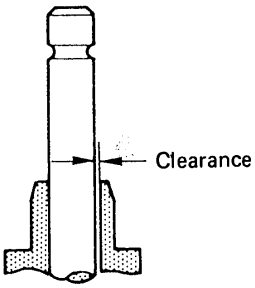

018X

Clearance between valve stem and valve guide (mm)			
Intake valve		Exhaust valve	
Standard assembling value	Service limit	Standard assembling value	Service limit
0.03 – 0.06	**0.2**	**0.045 – 0.075**	**0.25**

Downloaded from www.Manualslib.com manuals search engine

(3) Valve seat

a. Since the valve seat is corrected according to the valve guide, be sure to check the valve guide for wear condition first before correcting the seat.

b. Correct the seat using a seat cutter of 15°, 45° and 75° so that the contact width is the standard assembling value.

Valve seat contact width (mm)		
Standard assembling value		Repair value
Intake	**1.66 – 1.87**	**2.5**
Exhaust	**1.66 – 1.73**	

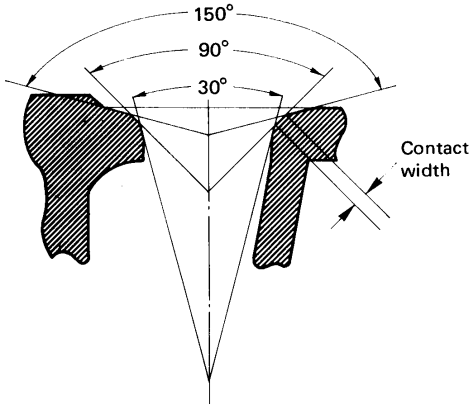

019X

c. When the seat recess exceeds the service limit, replace the valve seat or valve.

Valve seat recess (mm)	
Standard assembling value	Service limit
0.85 – 1.15	**1.8**

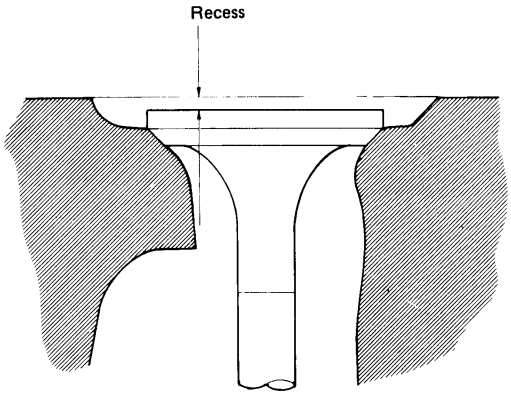

020X

d. Coat the valve seat surface with compound and lap the contact surface turning the valve.
e. Check that the valve contact surface is within the standard value and the contact position is even.

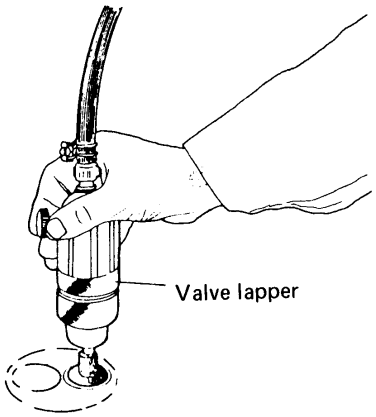

021X

Downloaded from www.Manualslib.com manuals search engine

(4) Valve spring

a. Check the valve spring visually for damage.
b. Measure the squareness of the spring using a square on a surface plate and replace if the service limit is exceeded.
c. Check the free length and spring force with a spring tester and replace if the service limit is exceeded.

	Standard assembling value	Service limit
Squareness (mm)	**1.2**	**2**
Free length (mm)	**35**	**33.5**
Spring force (when compressed to 30.4 mm)	**8.1**	**7**

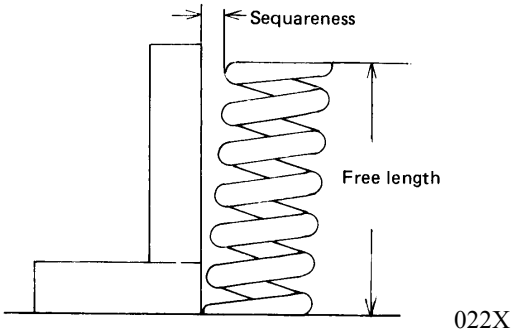

(5) Inspection of combustion chamber

Check and clean the inside of the combustion chamber.

Reassembly

Reassemble parts in the order reverse to disassembly taking care for the following points.
(1) When assembling the valve, spring, retainer and cotter, be careful not to damage the valve guide seal.
(2) Tighten the glow plug with the tightening torque of 14.7 – 19.6 N·m {1.5 – 2.0 kgf·m}.

Downloaded from www.Manualslib.com manuals search engine

3) Cylinder block

Inspection and service

(1) Check for crack, damage and distortion on the top of the block in the same way as in the cylinder head.

(2) Measurement of cylinder bore

a. There should be apparent scratches, rust, corrosion, etc. on the cylinder bore.
b. Measure the cylinder bore at the top, center and bottom respectively in the crankshaft direction (A) and the direction at right angle to it (B). If the repair value is exceeded, replace engine long block assembly.

Distortion on cylinder block top surface (mm)	
Standard assembling value	Repair value
Less than 0.05	**More than 0.12**

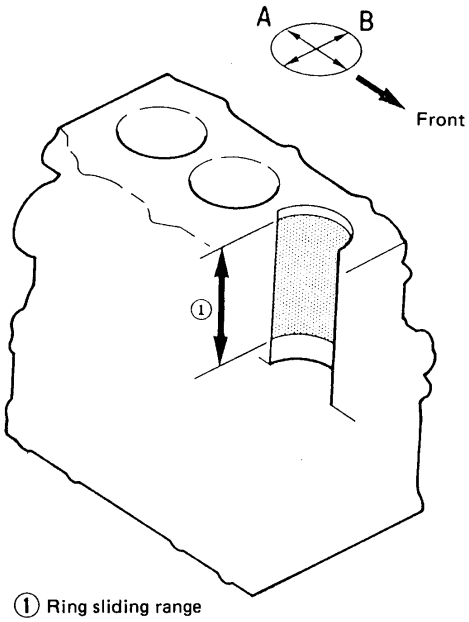

122V

Model	Standard assembling value	Repair value
J843 · N843L	**ϕ 84 – ϕ 84.019**	**More than ϕ 84.2**

Replace engine long block assembly.

Downloaded from www.Manualslib.com manuals search engine

4) Piston and piston ring

Disassembly

(1) Remove the piston ring using a piston ring tool.
(2) Remove the snap ring and extract the piston pin.

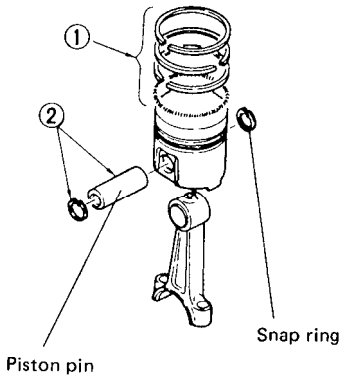

024X

Inspection

(1) Piston

a. Check the piston for crack, streak and burnout on the outside surface and replace if remarkable.
b. Measure the longer diameter at 10 mm above the lower end of the piston skirt and bore of the cylinder in the thrust direction, calculate the clearance, and replace if the repair value is exceeded.

Clearance between cylinder and piston (mm)		
Model	Standard assembling value	Service limit
J843·N843L	**0.0375 – 0.0715**	**0.25**

Piston skirt bottom longer dia. (mm)		
Model	Standard assembling value	Service limit
J843·N843L	**ϕ 83.9475 – 83.96**	**ϕ 83.7**

Model	Piston size	Skirt bottom longer dia.
J843	S.T.D	**83.9475 – 83.9625**
N843L	S.T.D	**83.9475 – 83.9625**

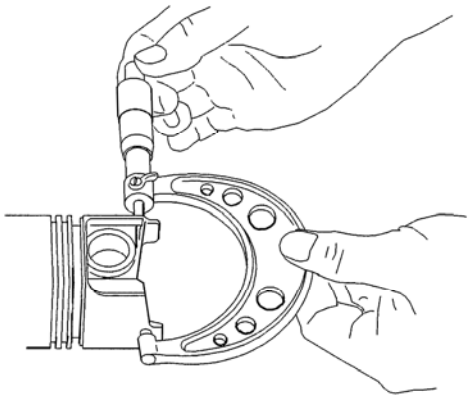

025X

d. Measure the piston pin hole diameter and piston pin outside diameter and replace if the clearance exceeds the service limit.

Clearance between piston pin hole and piston pin (mm)	
Standard assembling value	Service limit
-0.001 – +0.007	**0.02**

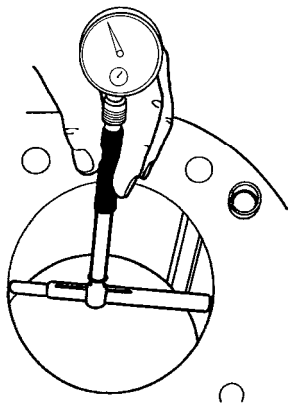

026X

Downloaded from www.Manualslib.com manuals search engine

(2) Piston ring

a. Replace worn out or damaged piston ring, if any.
b. Insert a ring at a right angle to the least worn out skirt of a cylinder, measure the clearance of ring end gap with a thickness gauge and replace if the end gap exceeds the service limit.

Piston ring end gap (mm)		
	Standard assembling value	Service limit
Top ring	**0.2 – 0.35**	**1.0**
Second ring	**0.2 – 0.4**	**1.0**
Oil ring	**0.2 – 0.8**	**1.2**

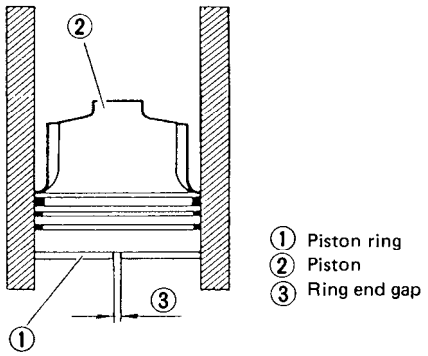

027X

c. Measure the clearance between the piston ring groove and ring and replace if the service limit is exceeded.

Clearance between piston ring groove and ring (mm)		
	Standard assembling value	Service limit
Top ring	**0.07 – 0.11**	**More than 0.25**
Second ring	**0.04 – 0.08**	**More than 0.25**
Oil ring	**0.03 – 0.13**	**More than 0.25**

d. Piston and piston ring kits of the following part No. is available.

Piston/piston ring kit		
Model	Size	Part code No.
J843	S.T.D.	**115017390**
N843L	S.T.D.	**115017310**

Model	Piston ring size	Part code No.
J843	S.T.D.	**115107840**
N843L	S.T.D.	**115107290**

e. Piston ring installing procedure
Install the piston ring to the piston as shown in the right figure.

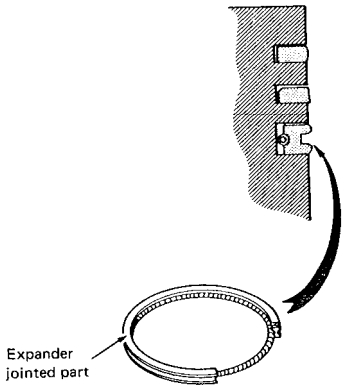

028X

(3) Piston pin

Measure the outside diameter of the piston pin and replace if the service limit is exceeded.

Piston pin outside dia. (ϕ)		
Model	Standard assembling value	Service limit
J843	**24.996 – 25.0**	**24.98**
N843L	**27.996 – 28.0**	**27.98**

Downloaded from www.Manualslib.com manuals search engine

5) Connecting rod

Inspection

(1) Check for torsion, parallelism and damage.
Measure the torsion and parallelism using a connecting rod aligner and correct or replace if the repair value is exceeded.

1. Gauge
2. Piston pin
3. Torsion
4. Flat part of aligner
5. Pin

(2) Measure the bore of the connecting rod small end bush and replace if the clearance to the piston pin exceeds the service limit.

(3) Install the connecting rod to the crankshaft, measure the axial play and replace the connecting rod if the service limit is exceeded.

Torsion and parallelism of connecting rod (mm)		
	Standard assembling value	Repair value
Torsion (per 100 mm)	**Less than 0.08**	**More than 0.2**
Parallelism (per 100 mm)	**Less than 0.05**	**More than 0.15**

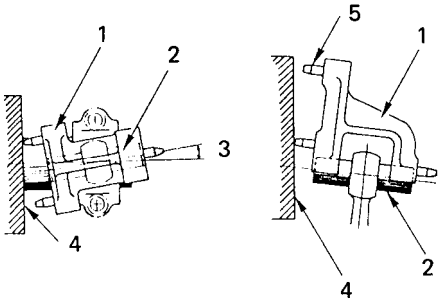

029X

Clearance between bush and piston pin (mm)	
Standard assembling value	Service limit
0.010 – 0.025	**More than 0.08**

Axial play of connecting rod and crank pin (mm)	
Standard assembling value	Service limit
0.1 – 0.3	**More than 0.7**

6) Connecting rod metal

Inspection

(1) Check the metal and if peeling, melting, uneven wear, improper contact or other damage is noticed, replace the metal.
(2) Measure the oil clearance of the crank pin and metal using plasti-gauge.
   a. Remove oil dust or other foreign matter stuck to the metal and crank pin.
   b. Cut plasti-gauge to the length same as the metal width and place it on the crank pin in parallel with the crankshaft avoiding the oil hole.
   c. Install the connecting rod metal and connecting rod cap and tighten with the specified tightening torque.

Tightening torque	**49 – 53.9 N· m {5.0 – 5.5 kgf· m}**

NOTE: Never turn the connecting rod at this time.

Clearance between crank pin and connecting rod metal (oil clearance) (mm)		
Standard assembling value		Service limit
J843	**0.035 – 0.083**	**0.2**
N843L	**0.035 – 0.085**	**0.2**

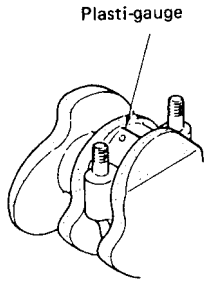

Set a plasti-gauge.

030X

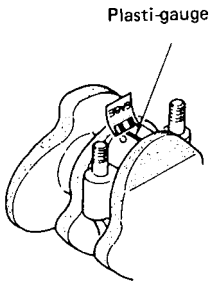

Measure the oil clearance

031X

Downloaded from www.Manualslib.com manuals search engine

d. Remove the connecting rod cap and measure the plasti-gauge width with the scale printed on the gauge envelope.

NOTE: Measure the widest part of the plasti-gauge.

(3) If the oil clearance exceeds the service limit according to the result of the measurement, replace the metal.

Models	Metal size	Metal code No.	Crankshaft pin outside dia. Finishing dimension (ϕ)
J843	S.T.D.	**198517180**	**43.964 – 43.975**
N843L	S.T.D.	**198517250**	**51.964 – 51.975**

Reassembly (piston and connecting rod)

(1) Heat the piston to about 100°C with a piston heater or the like and install it aligning the SHIBAURA mark in the piston and match mark at Ⓐ of the connecting rod.
(2) Care should be taken to the figure match mark at Ⓐ of the connecting rod.
(3) Install the piston ring to the piston facing the stamp at the end surface of the ring end gap upward.
(4) When the connecting rod or piston and piston pin are replaced, weight variation among cylinders with the rod, piston and piston ring installed should be within 10 g.

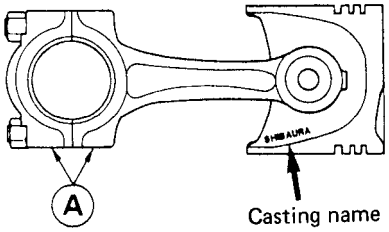

032X

Downloaded from www.Manualslib.com manuals search engine

7) Bearing holder

Disassembly and inspection

Center bearing (metal)

(1) Remove the bearing holder, and replace the metal if peeling, melting, uneven wear, or improper contact is noticed.
(2) Measure the oil clearance of the crankshaft center journal and metal using a plasti-gauge.
(3) If the oil clearance exceeds the service limit according to the result of the measurement, replace the metal or/and crank shaft.

Clearance between crankshaft center journal and metal (oil clearance) (mm)			
Models	Standard assembling value		Service limit
J843 · N843L	**No2, 3 and 4**	**0.044 – 0.116**	**0.2**

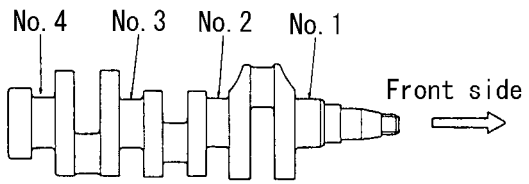

033X

Metal size	Metal code No.	
	J843	N843L
S.T.D.	**198517210** (Upper)	**198517230** (Upper)
	198517200 (Lower)	**198517240** (Lower)

Journal size	Finished dimensions of crankshaft journal (ϕ)	
	J843	N843L
S.T.D.	**57.957 – 57.970**	**67.957 – 67.970**

Thrust washer

Check the thrust washer and replace if wear, improper contact, seizure, or other damage is noticed, or thickness exceeds the service limit.

Thrust washer thickness (mm)	
Standard assembling value	Service limit
2.95 – 3.0	**Less than 2.8**

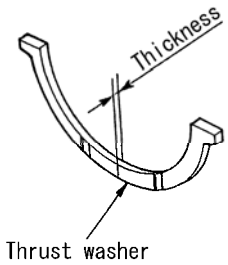

034X

Downloaded from www.Manualslib.com manuals search engine

https://truckmanualshub.com/

Reassembly

(1) Install the metal with oil groove to the upper bearing holder and the metal without oil groove to the lower bearing holder
(2) With the stepped area of the bearing holder facing the front side, install the bearing holder to be fitted with thrust washer on the flywheel side and the bearing holder with identification cutting mark at the center.

Bearing holder tightening torque	**49 – 53.9 N· m {5 – 5.5 kgf· m}**

(3) Install the thrust washer facing the oil groove towards the crankshaft thrust surface.

NOTE: Be sure to confirm that the oil hole of the bearing holder and that of the cylinder block are in the same direction.

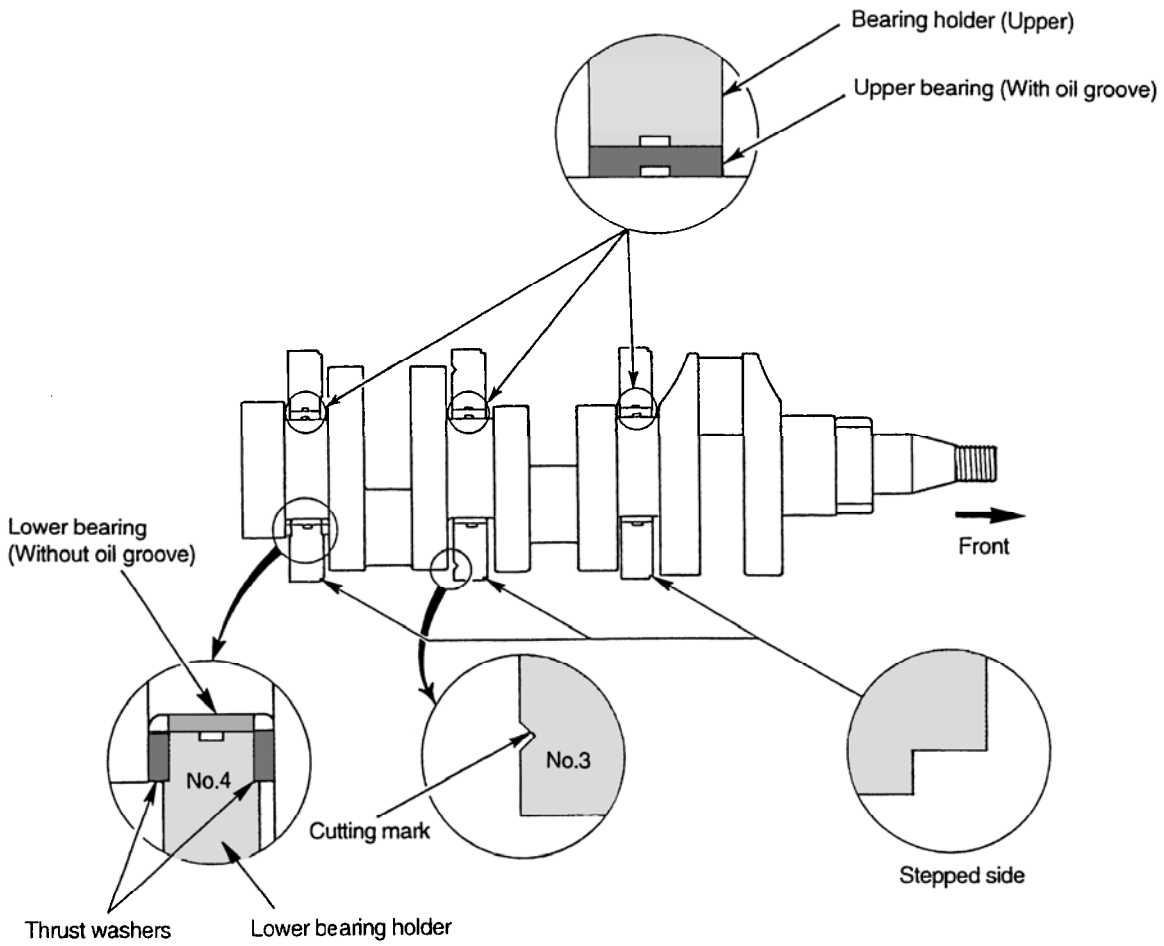

035X

Downloaded from www.Manualslib.com manuals search engine

8) Crankshaft bearing (bush)

Inspection

(1) Check the bearing (bush) and replace if peeling, melting, uneven wear, improper contact, or other damage is notice.
(2) Measure the oil clearance of the bearing (bush) and crankshaft journal using a cylinder gauge and micrometer.
(3) If the oil clearance exceeds the service limit according to the result of measurement, replace the bearing (bush) or/and crank shaft.

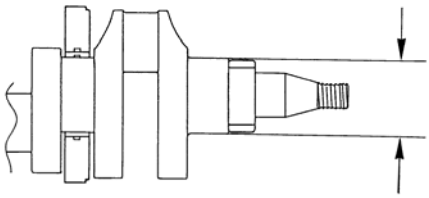

036X

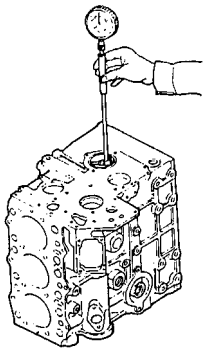

037X

Clearance between crankshaft journal and bearing (bush) (oil clearance) (mm)	
Standard assembling value	Service limit
0.044 – 0.116	**0.2**

Bush size	Bush code No.	
S.T.D.	**J843**	**N843L**
	198517190	**198517220**

Bush size	Crankshaft journal outside dia. Finishing dimension (ϕ)	
S.T.D.	**J843**	**N843L**
	57.957 – 57.970	**67.957 – 67.970**

NOTE:

1. **Measure the dimensions in the A and B directions at the position 1 and 2 in the right figure avoiding the oil hole of the bearing (bush) and calculate difference from the maximum value of the crankshaft journal (oil clearance).**
2. **When replacing the bush, push it up using a press or the like. At this time, align the oil holes and push it up until the bush end surface becomes level with the outside machined surface of the cylinder block (see the arrow mark in the right figure).**

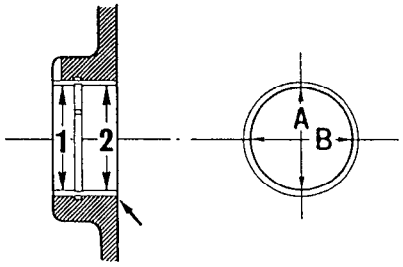

038X

Downloaded from www.Manualslib.com manuals search engine

9) Crankshaft

Inspection

(1) To measure run-out of the crankshaft, support the crankshaft using a V block as shown in the right figure, apply a dial gauge to the crankshaft center journal, read the indication on the dial gauge rotating the shaft one turn gently. If the service value is exceeded, correct or replace.
(2) Check the crankshaft oil seal for damage or wear on the contact surface and oil hole clogging.

Crankshaft run-out (mm)	
Standard assembling value	Service limit
Less than 0.03	**0.06**

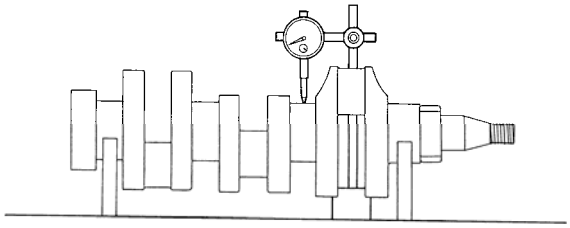

039X

(3) Check the crankshaft journal and pin for damage, irregular wear (ellipticity, conicalness) and shaft diameter. If the service limit is exceeded, replace the bearing (bush) and/or crankshaft. Measure the dimensions of the journal and pin in the AA and BB directions at the position 1 and 2 avoiding the oil holes.

Irregular wear limit of crankshaft journal and pin
0.05 mm

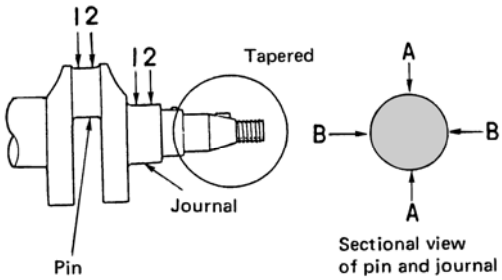

040X

Model J843				
Journal and pin size	Shaft dia. at crankshaft journal (ϕ)		Shaft dia. at crankshaft pin (ϕ)	
S.T.D.	Outside dia. finishing dimension	Repair value	Outside dia. finishing dimension	Repair value
	57.957 – 67.970	**Less than 57.90**	**43.964 – 43.975**	**43.90**

Model N843L				
Journal and pin size	Shaft dia. at crankshaft journal (ϕ)		Shaft dia. at crankshaft pin (ϕ)	
S.T.D.	Outside dia. finishing dimension	Repair value	Outside dia. finishing dimension	Repair value
	67.957 – 67.970	**Less than 67.90**	**51.964 – 51.975**	**Less than 51.90**

* Replace the crankshaft if diameter is below the repair value.

Downloaded from www.Manualslib.com manuals search engine

10) Flywheel and ring gear

Inspection

Check the ring gear and replace if damage or remarkable wear is noticed.
When the wear is limited to a small area, remove the, ring gear, turn it about 90 degrees and shrinkage-fit to reuse it. To shrinkage-fit the ring gear, heat it to 120 – 150°C to allow it to expand.

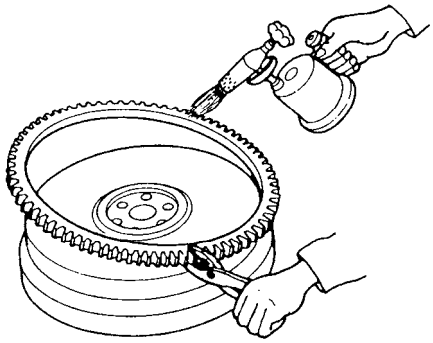

042X

11) Cam shaft ass'y

Inspection

(1) Check the journal and cam for wear and damage and replace if the service limit is exceeded.
(2) Correct insignificant uneven wear or scars on the cam surface using oil stone or the like.

A. Height of intake/exhaust valve cams (mm)	
Standard assembling value	Service limit
34.441 – 34.5076	**34.1**
B. Height of injection pump cams (mm)	
Standard assembling value	Service limit
42.99 – 43.01	**42.8**

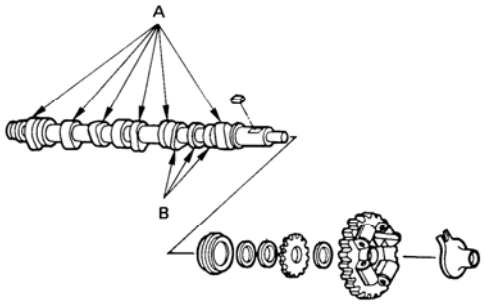

043X

12) Timing gear

Inspection

(1) If pitting or remarkable wear is observed on the tooth face of gears, replace the gear.
(2) Measure the backlash of gears and replace if the service limit is exceeded.

Timing gear backlash (mm)	
Standard assembling value	Service limit
0.08	**More than 0.25**

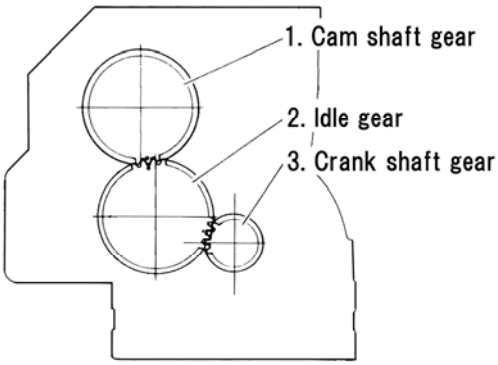

044X

Downloaded from www.Manualslib.com manuals search engine

13) Oil flow

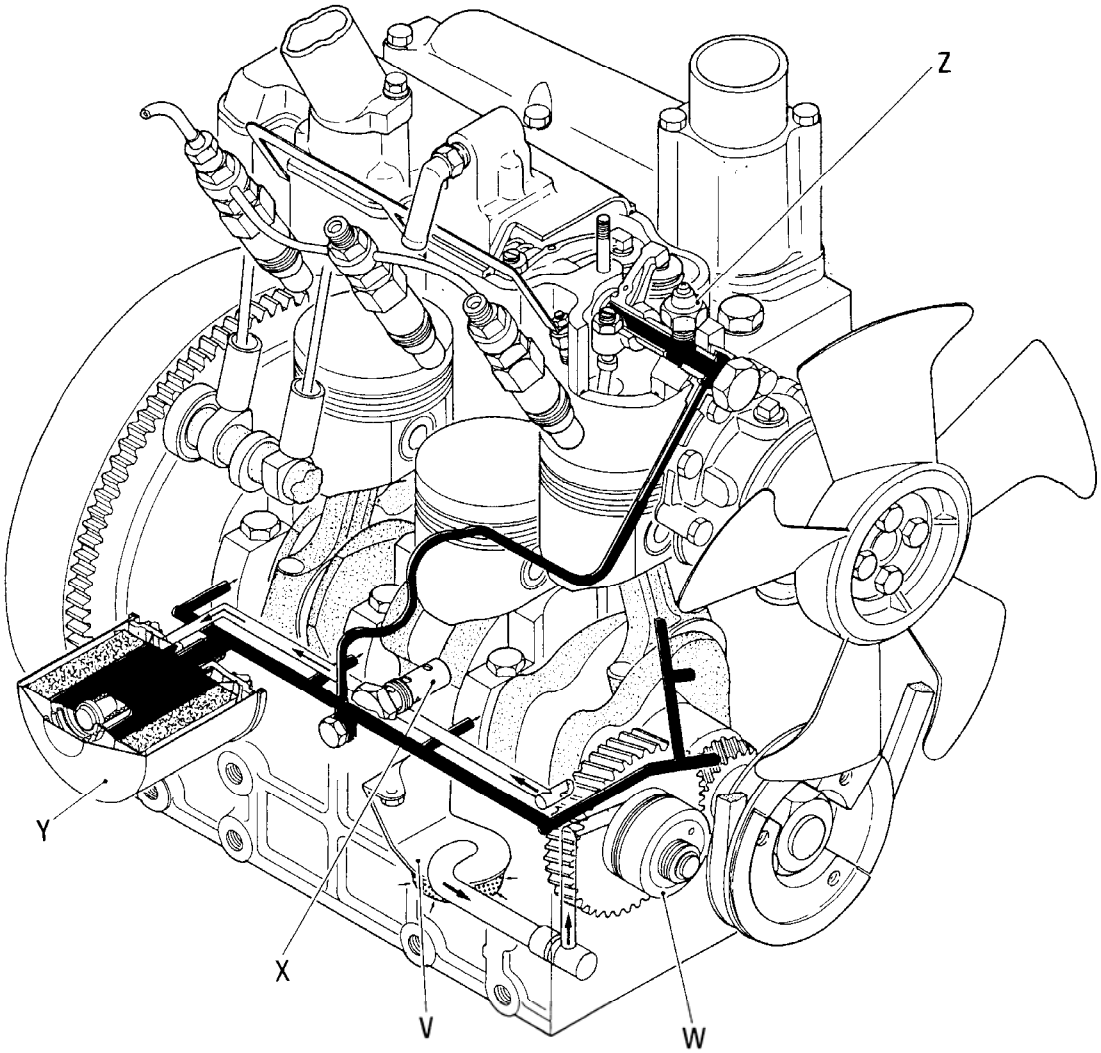

V :Suction filter
W:Oil pump
X :Relief valve
Y :Oil filter
Z :Oil pressure switch

045X

Downloaded from www.Manualslib.com manuals search engine

14) Oil pump

Disassembly

Removal from engine

(1) Remove the snap ring.
(2) Take out the collar, spring and shim.
(3) Take out the idle gear, vane, and oil pump cover together.
(4) Extract the rotor and thrust washer.
(5) Extract the oil pump cover from the idle gear.

1. Colar
2. Shim
3. Rotor
4. Thrust washer
5. Idle gear ass'y
6. Oil pump cover
7. Spring
8. Snap ring

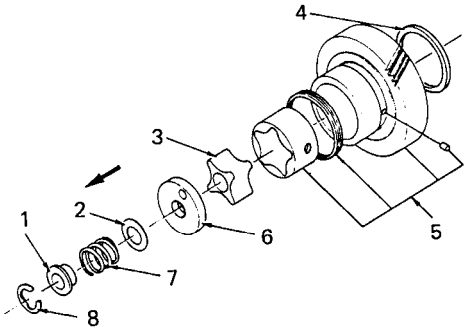

046X

Inspection and reassembly

(1) Check the oil pump cover, rotor and vane and replace if worn out or damaged remarkably.
(2) Check the clearance between the rotor and vane and replace if the service limit (0.25 mm) is exceeded.
(3) Reassemble in the order reverse to disassembly.
   a. Install the crankshaft gear and idle gear aligning the match mark.
   b. Adjust the side clearance of the rotor and vane to **0.1 – 0.15 mm**. (Refer to Fig. 071X.)

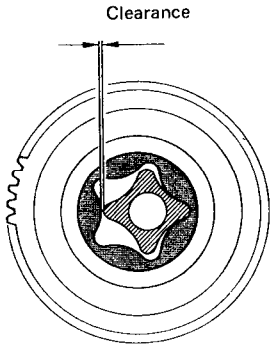

047X

15) Oil filter

Structure and Functions

(1) The cartridge type oil filter is excellent in filtering performance.
(2) Since it is of the full-flow type, when the filter is clogged, the safety valve is opened to allow the oil to flow, preventing seizure or other troubles.
(3) The oil fed under pressure with the oil pump enters Ⓐ, is filtered by the element, and supplied to each part from Ⓑ.
When the element is clogged, the oil is supplied to each part without passing through the element.

Replacement

(1) Replace the oil filter every 200 hours of operation.
(2) Coat the filter mounting surface with oil and tighten the filter by hand.
(3) Do not reuse the filter if it is removed once.

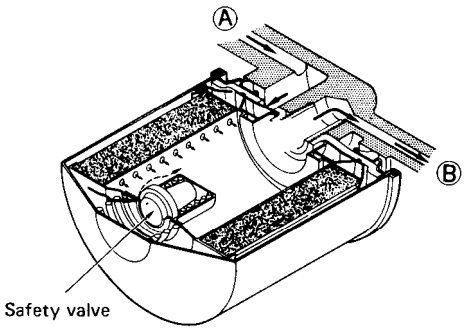

048X

Downloaded from www.Manualslib.com manuals search engine

16) Water pump ass'y

Disassembly

(1) Remove the set plate gasket.

NOTE: The pump main body is aluminum die cast and should be replaced as ass'y if subjected to water leakage or other troubles.

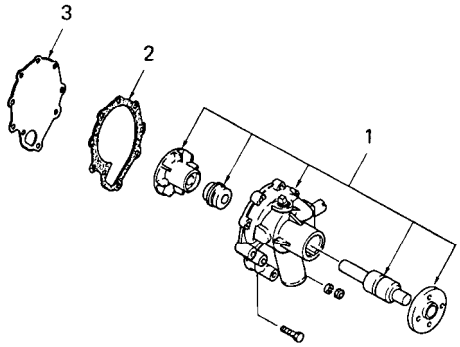

049X

1. Water pump ass'y
2. Gasket
3. Set plate

17) Radiator and reserve tank

Specifications and structure

Structure

Radiator cap of the pressure type (closing-up type) is employed for better cooling efficiency. When the cooling water temperature in the radiator rises (pressure also increases), the pressure valve is pushed open to release excessive pressure (cooling water) from the overflow pipe (white arrow) and the water is stored in the reserve tank.
When the cooling water temperature in the radiator decrease and the internal pressure becomes negative, the cooling water in the reserve tank is returned into the radiator. (black arrow)

Specifications	
Fin type	Corrugated
Cooling water volume	**5.1 ℓ (J843), 5.3 ℓ (N843L)**
Pressure valve starting pressure	**0.75 – 1.05 kgf/cm^2**
Negative pressure valve starting pressure	**Less than 0.05 kgf/cm^2**
Heat radiation volume	**28,400 kcal/h**

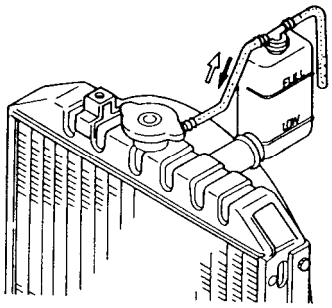

050X

Inspection

a. Check the radiator, pipe, and reserve tank for water leakage and repair or correct if any.
b. Check the radiator fin and remove dust, mud, or other foreign matter clogging in the air passage, if any.
c. Check the pressure valve and negative pressure valve of the radiator cap for valve opening pressure and sealing condition. Replace of defective.
d. Check the radiator hose and replace if damaged or aged.
e. If the net is clogged, remove and clean.
f. The cooling water level in the reserve tank should be always between FULL and LOW.

Downloaded from www.Manualslib.com manuals search engine

18) Fuel filter

Fuel passage

The fuel flows as shown in the figure from the tank, pressurized by the injection pump to high pressure, and fed to the nozzle and injected to the combustion chamber.
The fuel after lubricating the nozzle needle is returned to the tank through the overflow pipe.

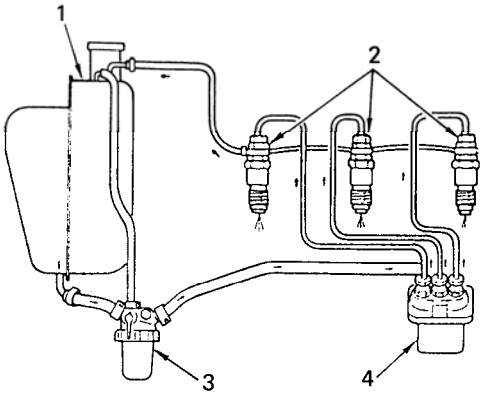

051X

1. Tank
2. Nozzle and holder
3. Fuel filter
4. Injection pump
5. Fuel pump

Inspection

If water, dust, or other foreign matter is observed in the transparent plastic case, clean and replace the filter if necessary.

Disassembly and reassembly

(1) Remove the filter turning the filter ring nut.

NOTE: Take care to the O-Ring fitted between the ring nut and filter body, coat with grease before tightening.

(2) Apply the grease to the element attaching place of the filter body, and install the element by hand.

19) Governor

Structure and functions

Governor

This governor is a mechanical all-speed governor. It is installed in the gear case. The fly weight ass'y is installed to the cam shaft and its movement is transmitted to the control rack of the injection pump through the slider control lever link. The spring which controls the movement of the fly weight is hitched to the arm COMPL and tension lever. The spring tension is changed by changing the governor lever so as to control the engine speed.

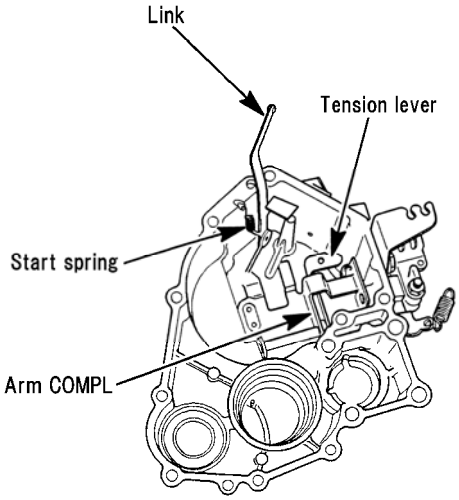

052X

Downloaded from www.Manualslib.com manuals search engine

20) Injection pump

Specification

Engine Model	Part Code No.	Manufacturer and Injection Pump Type
J843	**131017700**	**BOSCH AUTOMOTIVE SYSTEM CORPORATION 104134 – 3050**
N843L	**131017770**	**BOSCH AUTOMOTIVE SYSTEM CORPORATION 104135 – 3050**

Disassembly, Inspection and Reassembly

(1) Disassembly, inspection, and reassembly of injection pump. If the trouble has been verified to be in the injection pump, do not disassemble other than at shop specializing in this operation.

Trouble-shooting

Trouble	Possible Cause	Check or Remedy
1. Engine does start.	(1) Fuel Shortage or air mixed in. (2) Defective engine stop solenoid.	(1) Replenish fuel, check air entering part, bleed air (2) Check and replace the electric system
2. Engine starts but will not stop at once.	(1) Filter or pipes clogged. (2) Air mixed in. (3) Fuel tank filter cap air breathe clogged. (4) Short-circuit or disconnected wire of electric system of engine stop solenoid.	(1) Replace or clean out. (2) Check fuel pipe and connections. (3) Wash (4) Inspect and repair.
3. Engine output unstable	(1) Air mixed in. (2) Water mixed in fuel.	(1) Check fuel pipe and connections. (2) Replace fuel, replace filter.
NOTE: Due to possibilities of other troubles, refer to 2 – 5 Trouble Shooting		

Downloaded from www.Manualslib.com manuals search engine

21) Nozzle and holder

Specifications

Model	J843 (CM284)	N843L (CM364)	Model	J843 (CM284)	N843 (CM364)
Part code No.	131406440	131406360	Needle valve dia.	ϕ 4	
Ass'y No.	105148 – 1210	105148 - 1170	Pintle dia.	ϕ 1	
			Valve opening	11.76 MPa {120 kgf/cm^2}	14.7 MPa {150 kgf/cm^2}
Nozzle holder	105078 - 0100		Injection angle	4°	
Nozzle	105007 – 1170 (NP-DN4PDN117)		Nozzle type	Throttle type	

Structure and functions

The nozzle is finished super-precisely to inject the fuel which is fed from the injection pump under pressure to the combustion room in good condition. Components as shown in the right figure are incorporated.
The fuel is fed under pressure from the oil hole of the nozzle holder main body to the nozzle body. When the pressure exceeds the specified value, it pushes the spring, injected from the nozzle, and at the same time lubricates and cools the nozzle and nozzle body.
The oil leaking at this time is returned to the tank by the return pipe.

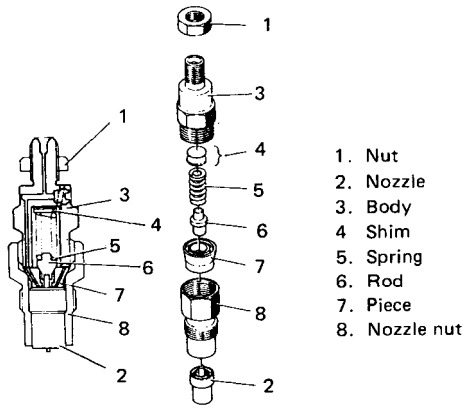

053X

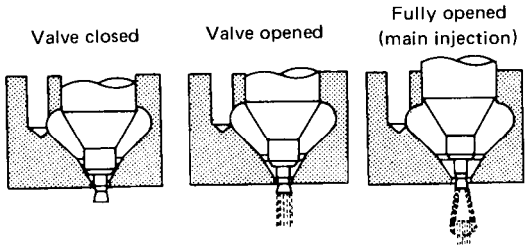

054X

Disassembly and inspection

(1) Place the nozzle holder (body) in a vice and disassemble turning the nozzle nut.

NOTE: Take care not to allow the needle valve to drop when removing the nozzle.

(2) Wash the nozzle and needle valve and check for seizure and sticking of the nozzle and fuel leakage on the seat surface. Correct fuel leakage of the seat by lapping.
(3) Check the distance piece upper and lower contact areas and correct to be stuck closely.
(4) Check the push rod for wear on the nozzle needle valve contact surface and check the spring seat for crack.

Downloaded from www.Manualslib.com manuals search engine

Reassembly and adjustment

(1) When assembling a new nozzle ass'y, heat light oil to 50 – 60°C and remove the rust preventive oil in it. Slide the body and needle valve to ensure that they slide lightly.
(2) Invert the body, place the shim, spring, rod, piece and nozzle on it in this order, cover the nozzle nut and tighten.
(3) After assembly, check for the nozzle injection pressure.
   a. Adjust by the adjusting washer (shim) so that the injection is started at 11.76 MPa {120 kgf/cm^2} on Model J843 and 14.7 Mpa {150 kgf/cm^2} on Model N843L using a nozzle tester.
   b. The pressure increases or decreases about 0.98 MPa {10 kgf/cm^2} by a washer of 0.1 mm.
(4) Injection condition
   a. Small drops should not be mixed in the spray.
   b. The oil should be injected describing a cone by straight lines toward the center line of the nozzle.
   c. Place white paper at about 30 cm from the nozzle and confirm that the spray is approximately circular when injected.
   d. Keep the oil pressure lower by 1.96 MPa {20 kgf/cm^2} than the specified value 11.76 MPa {120 kgf/cm^2} on Model J843 and 14.7 Mpa {150 kgf/cm^2} on Model N843L and check that the test oil does not drop form the nozzle end.

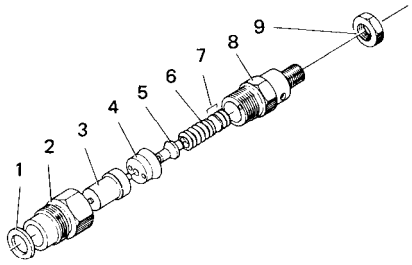

1. Gasket
2. Nozzle nut
   Tightening torque: **3 ~ 5 kgf·m**
3. Nozzle
4. Piece
5. Rod
6. Spring
7. Shim
8. Body
9. Nut
   Tightening torque: **3 ~ 4 kgf·m**

055X

22) Air Cleaner

Structure and functions

(1) The air cleaner is connected to the cylinder with the air cleaner hose.
(2) The air cleaner is of the cyclone type incorporating filter element and removes dust from the intake air.

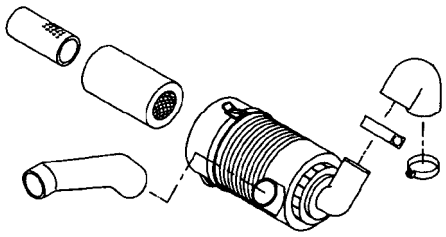

035X

Inspection and replacement

(1) Take out the element every **100 – 200 hours** and blow compressed air (less than **7kgf/cm^2**) from the inside and clean. (Clean the dust deposit on the dust pan also.)
(2) If soot or oil has sticked to the element, immerse it in neutral detergent for about **15** minutes and then wash by shaking several times. Rinse in clean water sufficiently and dry naturally.
(3) When the air cleaner is used in dust place, clean it earlier.
(4) After cleaning 6 times or once every year, replace the element with new one.
(5) After completion of cleaning, apply light from the inside of the element. It should be replaced with new one if puncture, pin hole, and especially thinner part is observed or if the gasket is broken.
(6) Do not use the element before drying completely.

Downloaded from www.Manualslib.com manuals search engine

23) Thermostat

Disassembly

(1) Remove the bolt fixing the thermostat cover from the thermostat case.
(2) Remove the thermostat and gasket from the thermostat case.

1. Thermostat cover
2. Gasket
3. Thermostat
4. Thermostat case

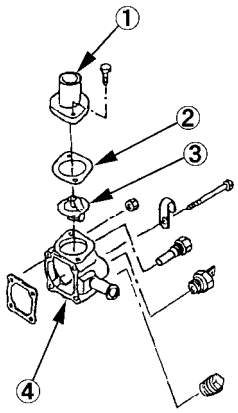

057X

Specifications and inspection

Thermostat

Replace if the valve is opened even only slightly at normal temperature.
Immerse the thermostat in water, increase the water temperature gradually and check the valve opening temperature and valve lift.

Specifications

Type	Wax pellet
Opening temperature	80º – 84ºC
Full-opening temperature	95ºC
Valve lift (at water temperature 95ºC)	8.0 mm

NOTE: 3 to 5 minutes are required until the valve is operated.

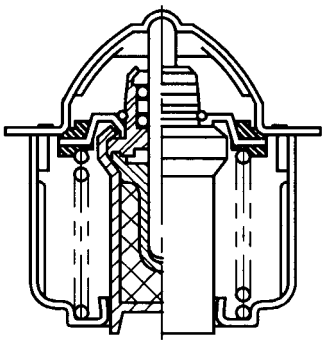

058X

Downloaded from www.Manualslib.com manuals search engine

3. Engine Reassembly

★ Cautions before assembly

1) **Wash parts to be installed. (Especially wash oil passage, bearing, piston and cylinder bore carefully.)**
2) **Coat the sliding and rotating parts of the cylinder bore, piston, bearing and other parts with new oil before installing.**
3) **Replace the gaskets with new ones. If necessary, use liquid packing to prevent oil leakage.**
4) **Do not tighten bolts and nuts for aluminum alloy parts excessively. Tighten them with specified torque.**

Reassembly

1. **Relief valve assembly with O-Ring.**
   Relief valve tightening torque.

Relief valve tightening torque
59 – 69 N·m {6.0 – 7.0 kgf·m}

2. **Crank shaft and bearing holder assembly**

   Cylinder block to bearing holder tightening torque

	Bolts fixing bearing holder	
A	Hexagon socket head blot	**25 – 29 N·m {2.5 – 3.0 kgf·m}**
B	Hexagon bolt	**49 – 54 N·m {5.0 – 5.5 kgf·m}**

NOTE:
1. **Take care not to damage the bush in the cylinder block by the crank shaft gear when install the crank shaft and bearing holder assembly.**
2. **Install the two hexagon socket head bolts for the fly wheel side bearing holder.**

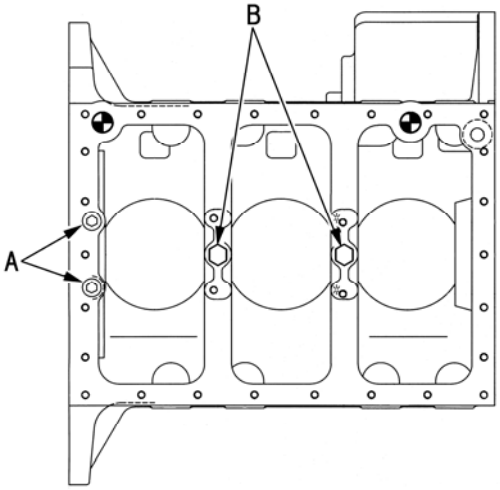

059X

3. **Measure the end play of crank shaft.**

Crankshaft end play	
Standard value	**0.1 – 0.4 mm**
Service limit	**0.5 mm**

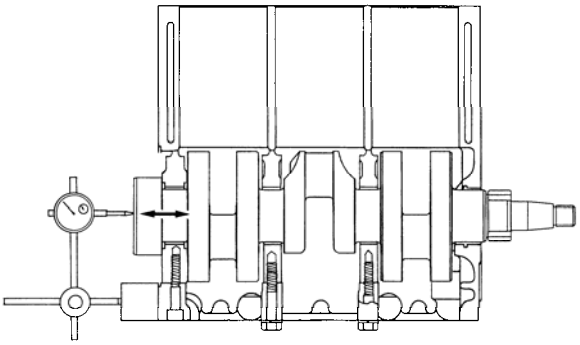

060X

Downloaded from www.Manualslib.com manuals search engine

3. Oil seal

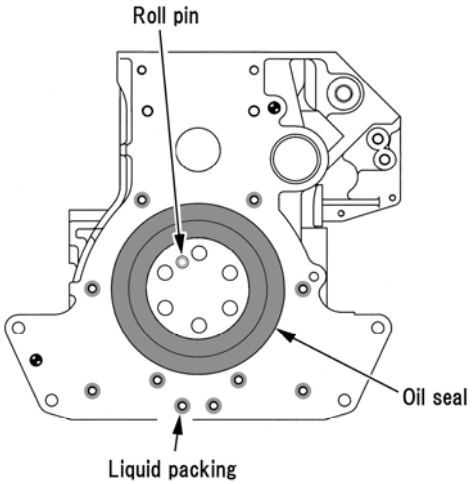

061X

4. Rear plate

NOTE: Apply the liquid gasket to around the M8 screw holes for rear plate.

Rear plate tightening torque:
22.6 – 28.4 N·m {2.3 – 2.9 kgf·m}

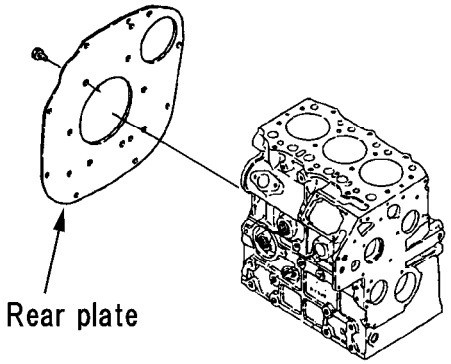

062X

5. Fly wheel

Align the hole to the roll pin on the crankshaft.

Fly wheel tightening torque
69 – 78 N·m {7.0 – 8.0 kgf·m}

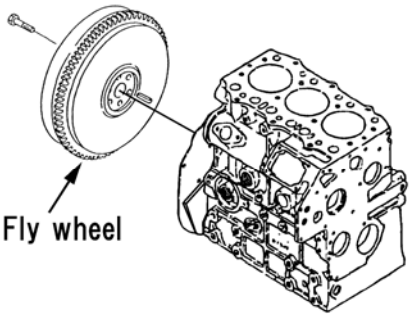

063X

6. Piston and connecting rod assembly

① Coat the metal surface, piston and piston ring with engine oil.

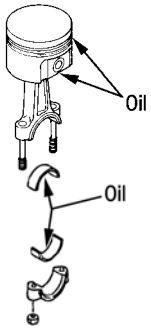

064X

Downloaded from www.Manualslib.com manuals search engine

② Turn the ring to allow the oil to ensure the ring groove sufficiently, and set the ring end gaps at 90° respectively avoiding piston pin direction and the direction at a right angle to the piston pin.
③ Insert the ring facing the connecting rod figure match mark toward the injection pump side, using ring pliers.

NOTE: Place the smallest connecting rod figure match mark to the front side so that the figures increase gradually.

④ Tighten the connecting rod cap with the specified torque and check for the axial play.

Connecting rod tightening torque
49 – 54 N·m {5.0 – 5.5 kgf·m}

NOTE:
1. **After tightening, confirm that the crankshaft moves lightly.**
2. **The connecting rod should move 0.1 – 0.3 mm in the axial direction.**

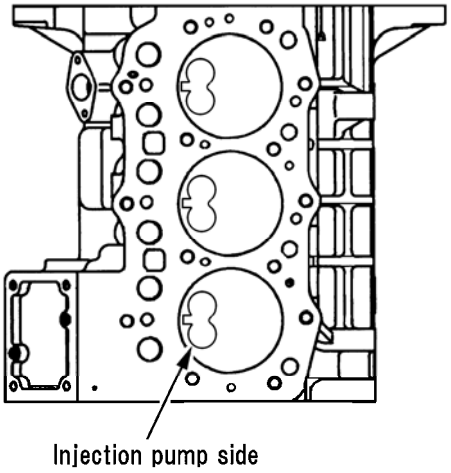

065X

7. Suction pipe · Suction filter

① Fit an O-Ring to the suction pipe and insert the suction pipe to the cylinder block.
② Place the suction pipe end into the suction filter and fix the suction filter.

Suction filter tightening torque
9 – 13 N·m {0.9 – 1.3 kgf·m}

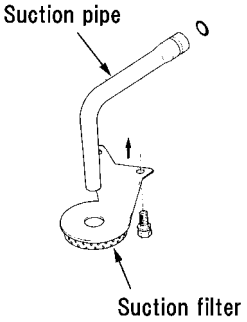

066X

Downloaded from www.Manualslib.com manuals search engine

8. Oil pan

Start tightening the bolts of the oil pan from the center, then tighten the opposing bolt on opposite side on the diagonal and specified torque.

Bolt tightening torque
10 – 12.7 N·m {1.0 – 1.3 kgf·m}

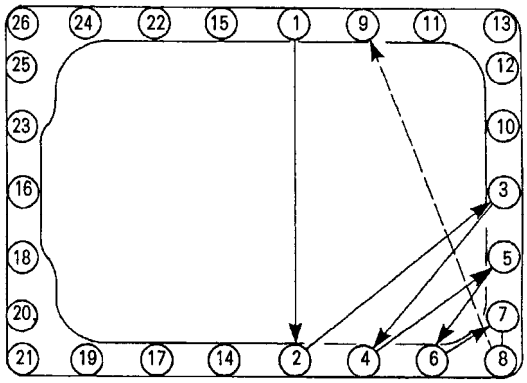

Tightening Order

067X

9. Oil level gauge · Gauge guide

Install the oil level gauge and gauge guide using 2 O-Rings.

10. Front plate

Install the front plate together with the gasket.

11. Cam shaft ass'y · Tachometer shaft · Plate

① Install the tachometer shaft.
② Install the cam shaft ass'y (taking care to the bearing).
③ Fix the tachometer shaft and cam shaft ass'y with the plate.

Plate tightening torque
9 – 13 N·m {0.9 – 1.3 kgf·m}

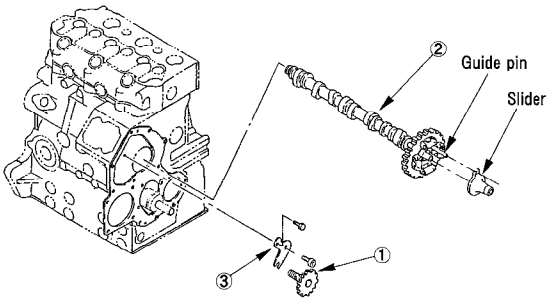

068X

NOTE: Install the timing gear case taking care so that the slider is not dislocated from the guide pin.

Downloaded from www.Manualslib.com manuals search engine

12. Idle gear · Oil pump ass'y

① Install a thrust washer to the idle gear shaft.
② Install the idle gear ass'y.
③ Align the match marks of the idle gear, crankshaft gear and cam shaft gear and install it to the idle gear shaft.
④ Install the rotor.
⑤ Install the oil pump cover, shim, spring and collar and fix with a snap ring.

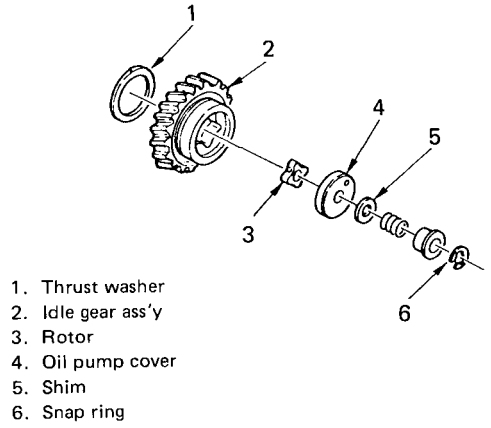

069X

NOTE:

1. **Coat the rotor and vane both sides with grease before installing them.**
2. **Never turn the crankshaft until the timing gear case is installed.**
3. **Turn the oil pump cover clockwise and counterclockwise, fix the hole at the center of the spring pin inserting hole moving distance, and then install the gear case.**

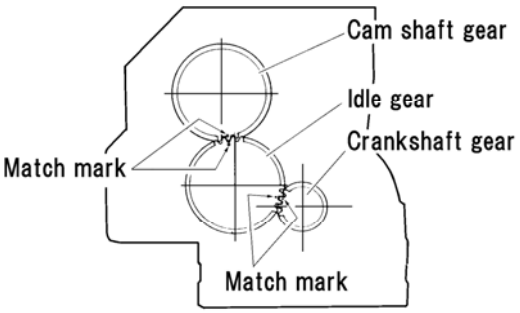

070X

⑥ Adjust the shims so that the oil pump, rotor and vane side clearance is **0.1 – 0.15 mm.**

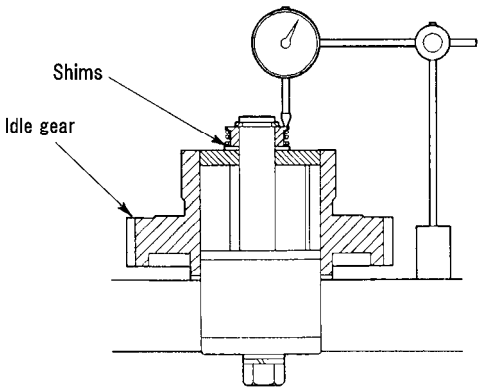

071X

13. Timing gear case · Cover

① Untighten the lock nut and remove the low idle set bolt.
② Install the start spring between the timing gear case and governor link.
③ Inserting the link into the cylinder block hole while turn the governor lever to clockwise and hold it, and then install the timing gear case.
④ Reinstall the low idle set bolt and secure the lock nut.
⑤ Install the covers.

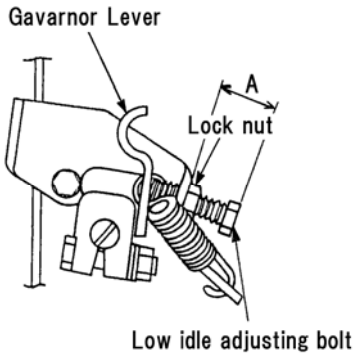

072X

Downloaded from www.Manualslib.com manuals search engine

14. Crankshaft pulley

Fit the key to the crankshaft, install the crankshaft pulley, and tighten with the nut.

Crankshaft pulley tightening torque
274 – 333 N·m {28 – 34 kgf·m}

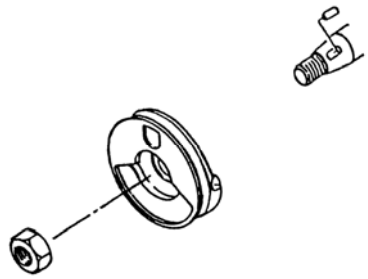

073X

15. Injection pump assembly

① Fit the shim which has been removed at the time of disassembly, connect the control rack of the injection pump and link, and fix with the snap pin.
② Tighten the injection pump with bolts and nut.

Injection pump tightening torque
13 – 17 N·m {1.3 – 1.7 kgf·m}

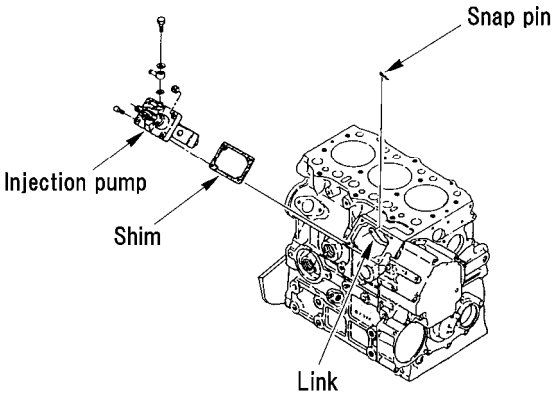

074X

16. Injection timing adjustment

Usually the injection timing is adjusted properly by the step of the order 15.
When the injection pump, cam shaft assembly or cylinder block is replaced, adjust the injection timing in the following procedure.

① Install the injection pump inserting a shim of 0.5 mm in thickness according to the procedure of order 15.
② Remove the delivery valve holder on the injection pump front side (radiator side).
③ Extract the delivery valve (IN) and install the spring and delivery holder.

NOTE: When installing the delivery holder, adjust the delivery valve (OUT) to the correct position with a wire.

④ Move the governor lever in the fuel increasing direction and flow the fuel near 25° before compression TDC of the No. 1 piston (front side) and then the fuel flows out of the delivery valve holder.
⑤ Turn the crankshaft gently clockwise from the condition of above ④, and then the fuel flowing out of the delivery holder stops. Read the piston position before TDC at this time. If it is late more than 18° decrease the shim thickness and if earlier more than 20° increase the shim thickness.

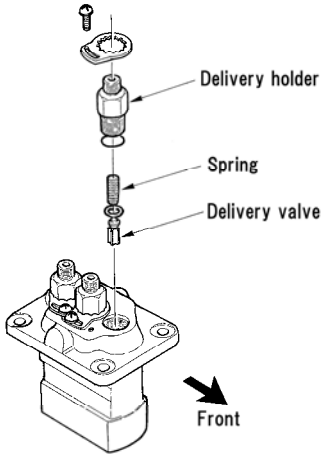

075X

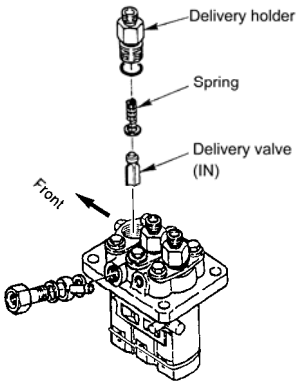

076X

Downloaded from www.Manualslib.com manuals search engine

Injection timing adjusting shim	
Thickness (mm)	Part code
	J843·N843L
0.2	131437540
0.3	131437550
0.4	131437560
0.5	131437570
0.5	*131437580
* Without beading	

NOTE:
1. **When shim is not required, coat liquid parking before installing.**
2. **The injection timing varies about 2º with 0.3 mm of shims.**
3. **Mix assemble a shim (0.5 mm) with beading and a shim (0.5 mm) without beading when you need adjusting shims more than 1.0 mm.**

⑥ Install the delivery valve (IN)

Delivery holder tightening torque
39.2 – 44.1 N·m {4.0 – 4.5 kgf·m}

Injection timing (before TDC)	**18 – 20°**
Piston displacement (before TDC)	
J843	**2.594 – 3.187 mm**
N843L	**3.195 – 3.932 mm**

Crankshaft angle	Model	
	J843	N843L
17º	**2.320**	**2.854**
18º	**2.594**	**3.195**
19º	**2.884**	**3.554**
20º	**3.187**	**3.932**
21º	**3.505**	**4.328**
22º	**3.837**	**4.741**

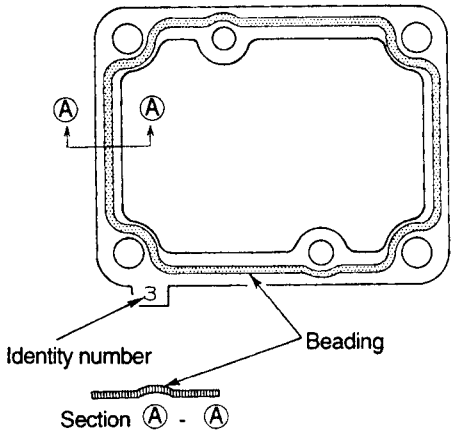

077X

17. Drive gear ass'y (for hydraulic pump) · Hydraulic pump ass'y

Install the drive gear ass'y to the hydraulic pump and then install it to the gear case..

18. Oil filter

Coat the mounting surface with a small quantity of oil and tighten by hand.

19. Engine stop solenoid

Tighten the engine stop solenoid lightly with pliers.

Downloaded from www.Manualslib.com manuals search engine

20. Cylinder head ass'y

① Set the piston at the TDC and measure the injection beyond the cylinder block with a depth gauge or dial gauge.

NOTE:
1. **Measure holding the piston lightly by hand.**
2. **Use the cylinder with the largest projection distance among the 3 cylinders as the reference. The variation of the projection should be within 0.1 mm.**

② Select a head gasket according to the measured value.

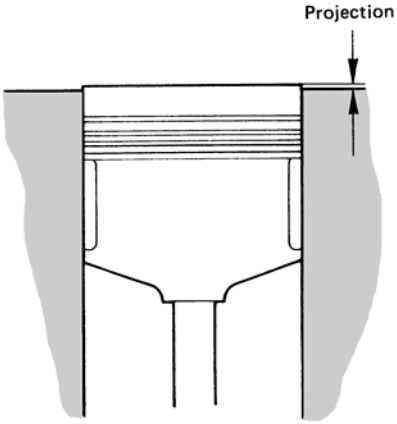

078X

Measured value (mm)	Head gasket part code No.	Thickness when tightened
More than 0.6 – under 0.7	**111147490**	**t = 1.3**
More than 0.7 – less than 0.8	**111147500**	**t = 1.4**

NOTE: Four smallest digits of the part code No. are stamped on the top surface of the head gasket.

③ Tighten the cylinder head in several steps in the order as shown in the right figure and tighten with the specified torque finally.

Cylinder head tightening torque
98 – 103 N·m {10 – 10.5 kgf·m}

NOTE:
1. **Take care to the spring pin which positions the cylinder head ass'y.**
2. **Coat the thread with grease containing disulfide molybdenum.**

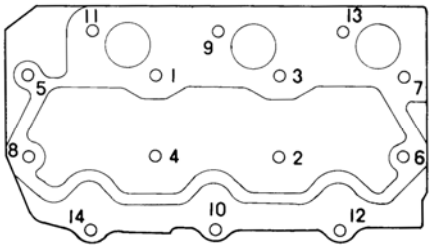

079X

21. Cap · Push rod · Rocker arm ass'y

① Install the cap to the valve steam end.
② Install the push rod and rocker arm ass'y.

Rocker arm ass'y tightening torque	
J843	**20 – 25 N·m {2.0 – 2.5 kgf·m}**
N843L	**27 – 39 N·m {2.8 – 4.0 kgf·m}**

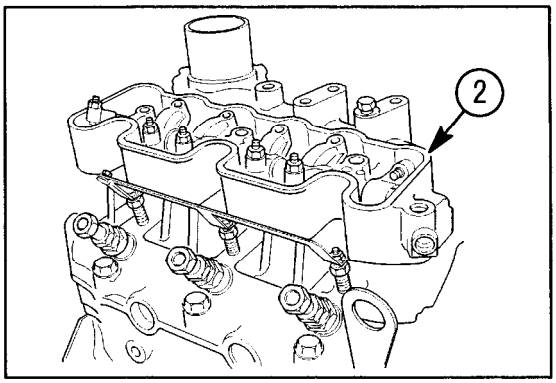

080X

Downloaded from www.Manualslib.com manuals search engine

https://truckmanualshub.com/

22. Valve clearance adjustment

Untighten the nut of the intake and exhaust valves and adjust the clearance to 0.2 mm.

NOTE:

1. **Adjust the valve clearance while cold.**
2. **Set the No. 1 cylinder at the compression TDC, adjust the valve clearance of the No. 1 intake and exhaust valves, and No. 2 exhaust valve, turn the crankshaft 240° counterclockwise when viewed from the front side, and adjust the No. 2 intake, and No. 3 intake and exhaust valves.**

Lock nut tightening torque
11.8 – 15.7 N·m {1.2 – 1.6 kgf·m}

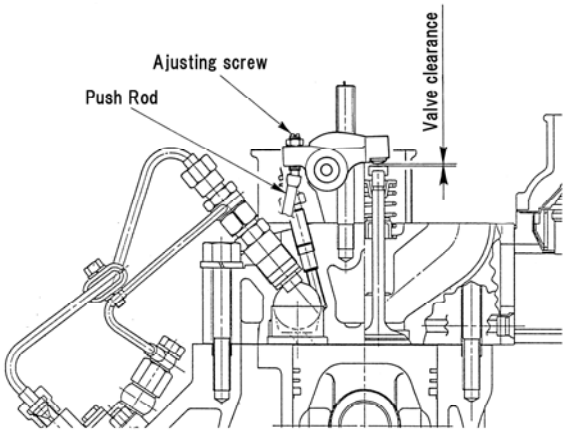

081X

23. Oil pressure switch

Oil pressure switch tightening torque
15 – 20 N·m {1.5 – 2.0 kgf·m}

24. Oil pipe

Eye bolt tightening torque	
M8	**10 – 13 N·m {1.0 – 1.3 kgf·m}**

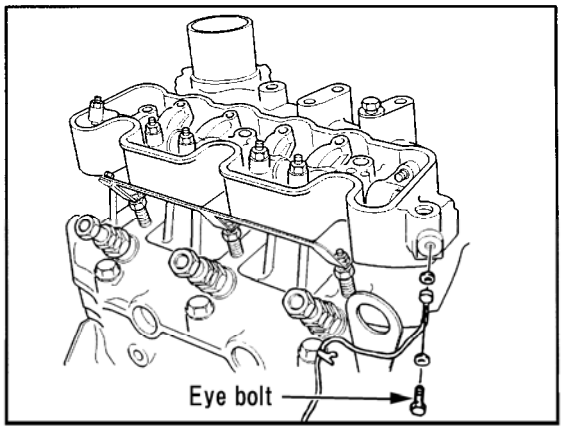

082X

25. Water pump ass'y · Bypass hose

① Install and tighten the gasket and water pump ass'y.
② Connect the thermostat case and water pump case with bypass hose.
③ Install the radiator hose.

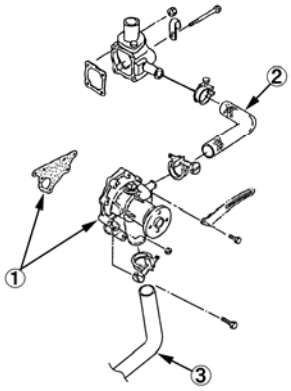

083X

26. Connector

Downloaded from www.Manualslib.com manuals search engine

27. Head cover · Filler pipe

Tighten the head cover and filler pipe evenly taking care to the O-ring.

Head cover tightening torque	
J843	**8 – 12 N·m {0.8 – 1.2 kgf·m}**
N843L	**12 – 16 N·m {1.2 – 1.6 kgf·m}**

28. Nozzle and holder ass'y

Tighten the nozzle and holder ass'y with specified torque using a nozzle holder socket.

Nozzle and holder tightening torque
59 – 69 N·m {6 – 7 kgf·m}

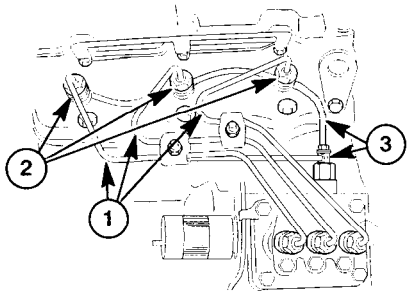

1. Injection pipe
2. Nozzle and holder
3. Retern pipe

085X

29. Return pipe COMPL · Injection pipe

Install the return pipe and then injection pipe.

Injection pipe tightening torque
15 – 25 N·m {1.5 – 2.5 kgf·m}

30. Intake manifold · Spacer · Exhaust manifold

① Install the gasket, spacer, gasket, and intake manifold in this order.
② Install the exhaust manifold.

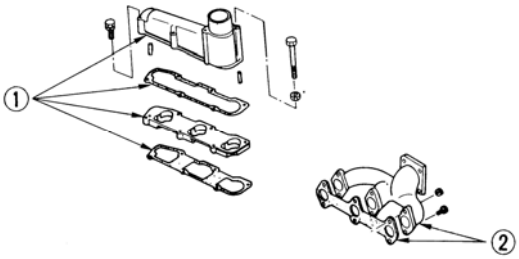

086X

31. Alternator

Install the alternator taking care to the direction of the adjusting plate.

32. V belt · Fan pulley · Cooling fan

① Install the fan pulley and cooling fan and then V belt.
② Adjust the belt tension with the alternator so that it is deflected 5 – 10 mm at the middle point between the crankshaft pulley and alternator pulley when depressed by a finger (about 5 kgf) and tighten.

Cooling fan tightening torque
9 – 13 N·m {0.9 – 1.3 kgf·m}

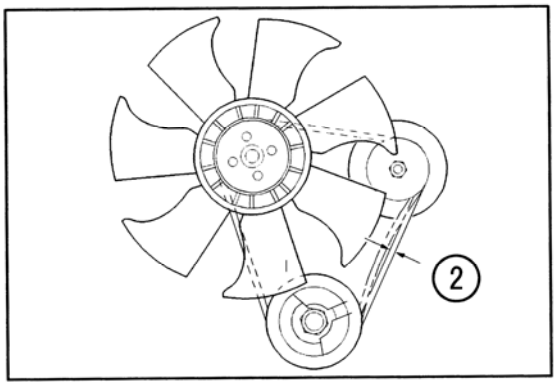

087X

Downloaded from www.Manualslib.com manuals search engine

https://truckmanualshub.com/

2-3 Electrical Units

1. Alternator (No. 185046320 – A007T03877)

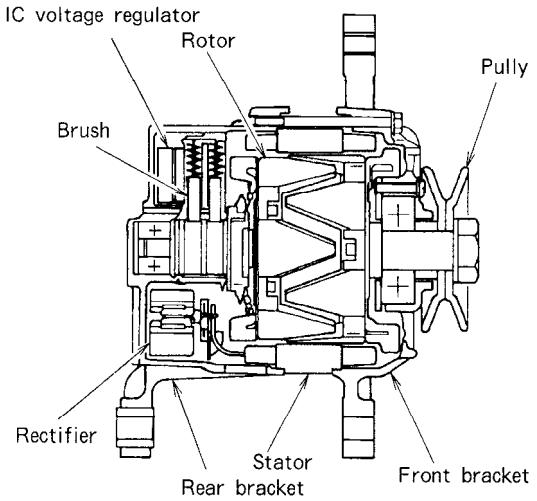

088X

1) Disassembly

① Make both brackets and the stator with a scribe mark for assembly.
② Remove the four through bolts. Pry between the stator and front bracket with blade of a screw driver. Carefully separate the front bracket, pulley and rotor assembly away from the stator and rear bracket assembly.
③ Place the rotor in a vice with soft jaws and remove the pulley nut, washer, pulley spacer and front bracket from the rotor.

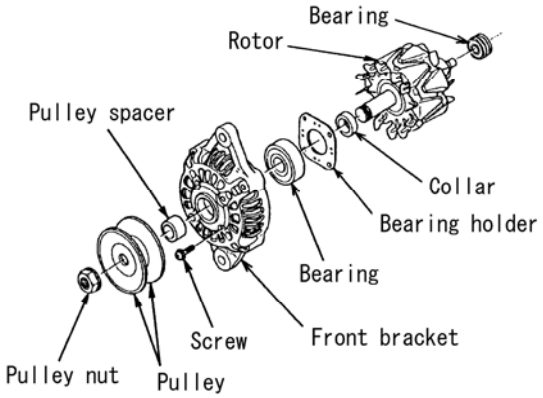

089X

④ Unsolder three stator leads and remove the stator.
⑤ Remove the voltage regulator assembly and rectifier assembly as a set.

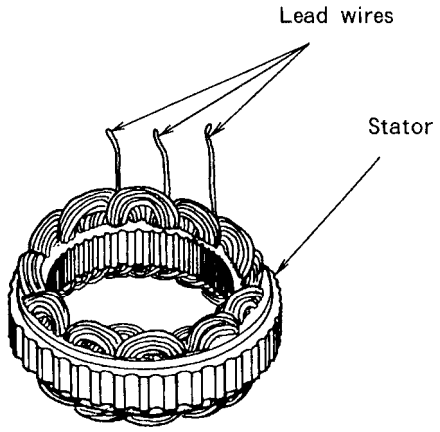

090X

Downloaded from www.Manualslib.com manuals search engine

https://truckmanualshub.com/

2) Inspection of parts

(1) Rotor

① Inspection of slip ring surface.
Correct stain or scratches on the slip ring surface with a sand paper of about 400 – 600 #.
A badly roughened slip ring or a slip ring worn down beyond the service limit should be replaced.

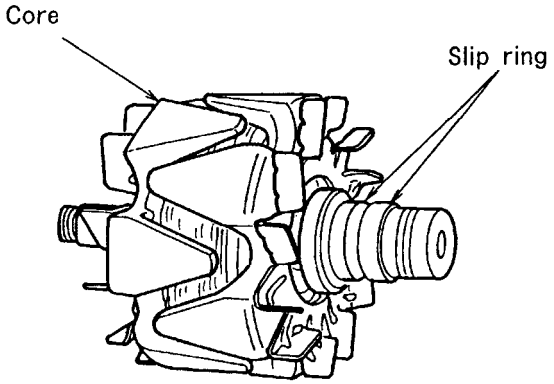

091X

② Check for continuity between both the slip rings. If there is no continuity, the field coil is defective.
Replace the rotor assembly.

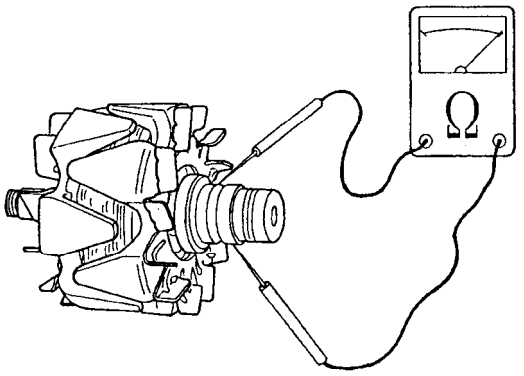

092X

③ Check for continuity between the slip ring and shaft (or core).
If there is continuity, it means that the coil or slip ring is grounded.
Replace the rotor assembly.

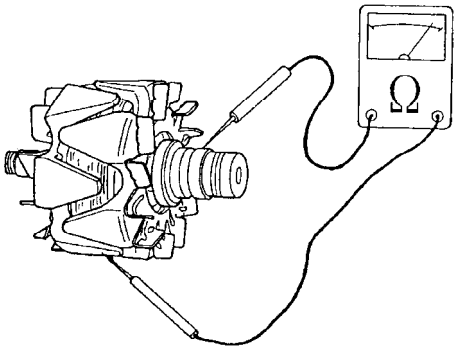

093X

(2) Stator

① Check for continuity between the leads of the stator coil.
If there is no continuity, the stator coil is defective.
Replace the stator assembly.

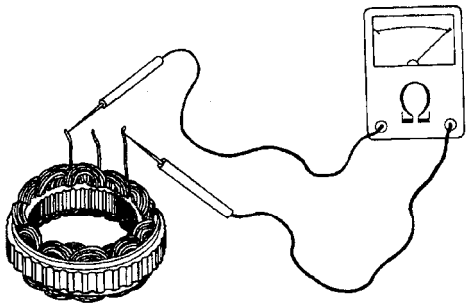

094X

Downloaded from www.Manualslib.com manuals search engine

② Check for continuity between any stator lead and stator core.
If there is continuity, it means that the coil is grounded.
Replace the stator assembly.

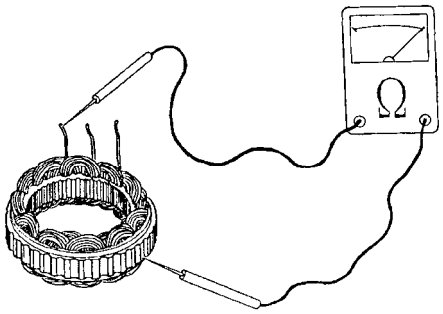

095X

(3) Rectifier Assembly

① Positive Heatsink
Check for continuity between the positive (+) heat sink and stator coil lead connection terminal with a circuit tester.
If there is continuity in both directions, the diode is short-circuited.
Replace the rectifier assembly.

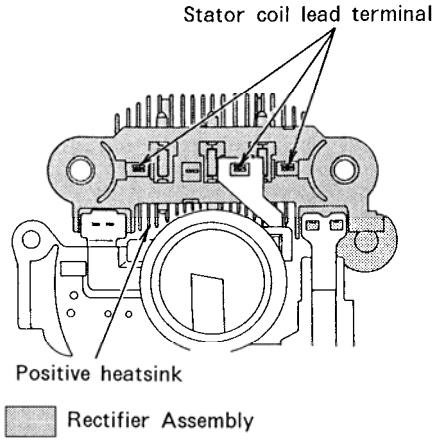

096X

② Negative Heatsink
Check for continuity between the negative (-) heat sink and stator coil lead connection terminal with a circuit tester.
If there is continuity in both directions, the diode is short-circuited.
Replace the rectifier assembly.

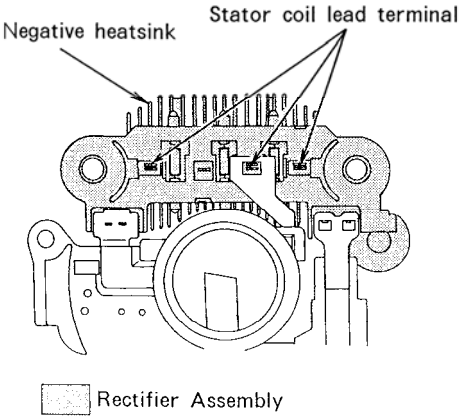

097X

③ Diode Trio
Using a circuit tester, check the three small diodes for continuity in both directions.
If there is either continuity or an open circuit in both directions, the diode is defective.
Replace the rectifier assembly.

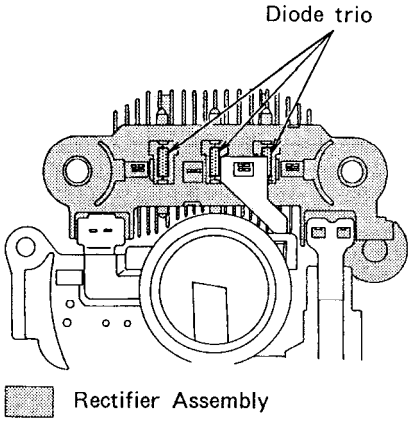

098X

Downloaded from www.Manualslib.com manuals search engine

④ Brush and Brush spring

a. Check the length of the brush.
A brush worn down to the wear limit line should be replaced.
b. Check the brush spring pressure and make sure the brush moves smoothly in the brush holder.

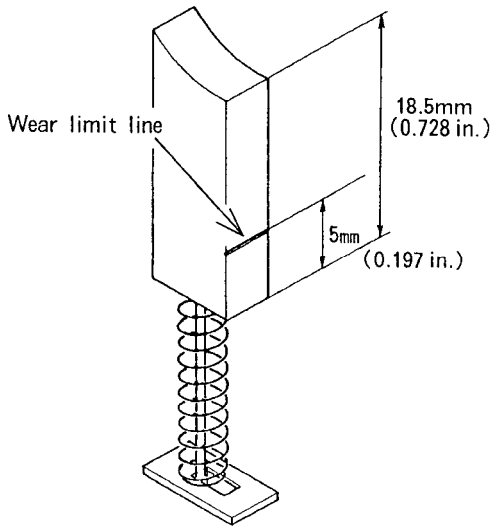

099X

3) Reassembly

Reverse the disassembly procedure except for the following:

(1) Installing rotor.
Push brushes into brush holder, insert a wire to hold them in raised position before install the rectifier and regulator assembly.
Install rotor and remove wire.

NOTE: Since rear bearing and rear bracket fitting is tight, heat the bearing box in the rear bracket to 50 – 60ºC {122 – 140ºF} before installing rotor.

(2) Lubrication to bearing box for bearing with resin band, grease should not be applied.
Remove oils completely if found on the bearing box in the rear bracket.

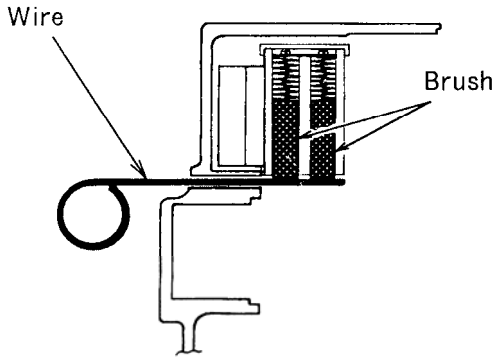

100X

Downloaded from www.Manualslib.com manuals search engine

4) Bench Check

To check the alternator on a test bench, proceed as follows:

(1) Make connection as shown in the Figure 101X except leave the load resistor disconnected.
(2) Slowly increase the alternator speed and observe the voltage.
(3) If the voltage is uncontrolled with speed and increases above 15.5 V, check the alternator.
(4) If voltage is below 15.5 V, connect the load resistor as shown in the Figure 101X.
(5) Operate the alternator at 2500 rpm and adjust the load resistor as required to obtain maximum output.
(6) Measure the output current. The output must be within the limits shown in the section on “Service Specifications”. If the output is less than specified value the alternator should be disassembled and checked.

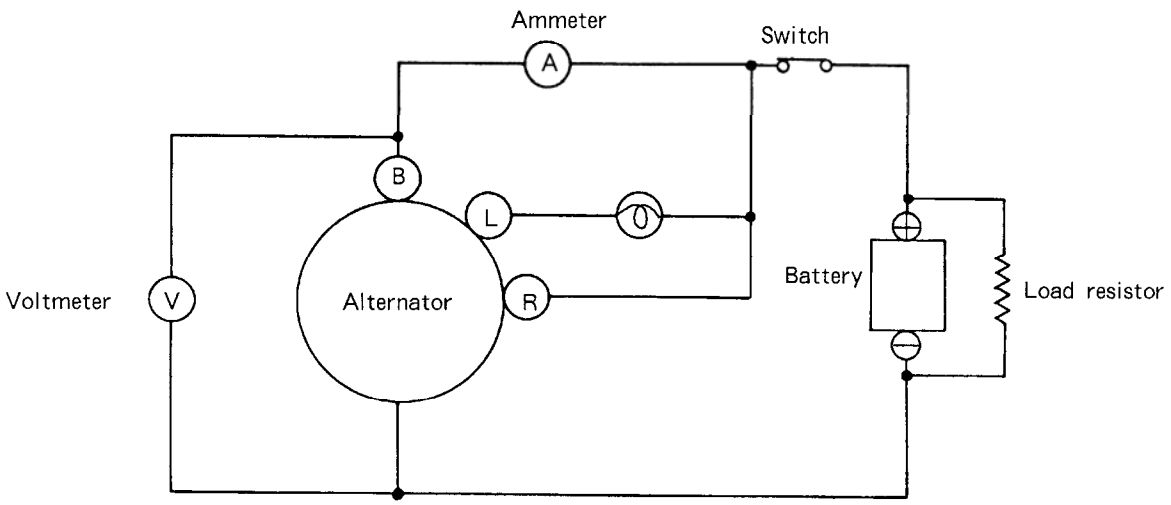

101X

5) Precautions

(1) Reversed battery connections will damage the alternator and/or wiring.
(2) When connecting a booster battery, make certain to connect negative battery terminals together and positive battery terminals together.
(3) When a fast charger is used to charge the battery, the equipment battery cables should be disconnected.
(4) Grounding of the alternator output terminal will damage the alternator and/or circuit.
(5) Do not connect a load of over 1A to the terminal “L”.
(6) If the alternator is operated with the terminal L and B short-circuited, if may damage the diode trio.

Downloaded from www.Manualslib.com manuals search engine

6) Service Specifications

Item / Model Name			A007T03877 (MITSUBISHI)
Nominal output		(V-A)	12 – 40
Polarity			Negative ground
Weight		(kg)	Approx. 3.7 {8.2 lb}
Rotational direction (Viewed from the pulley)			Clockwise
Load characteristics (cold)	Terminal voltage	(V)	13.5
	Current	(A)	Min. 30
	Revolution number	(rpm)	2500
Brush length	Original	(mm)	18.5
	Limit	(mm)	5.0
Brush spring tension	Original	(N)	4.6 – 5.8 {470 – 590 gf}
	Limit	(N)	2.6 {270gf}
Bearing	Rear side		ECSC8
	Front side		6303DDG
Slip ring diameter	Original	(mm)	22.7
	Limit	(mm)	22.1
Slip ring diameter eccentric wear	To be repaired	(mm)	0.05
	Allowable limit	(mm)	0.2
Slip rings surface condition			If dirty or damaged correct with emery cloth.
Rotor shaft bending	To be repaired	(mm)	0.07
Field coil resistance		(Ω/at 20ºC)	2.8
Adjusting voltage		(V)(at 5000 rpm)	14.4 – 15.0

Downloaded from www.Manualslib.com manuals search engine

7) Fault Finding

Trouble	Parts	Cause	Remedy
No charging	Wiring, ammeter	Disconnection, short circuit, loosened connection	Correct
	Alternator	Disconnection of coils, earth, short circuit	Replace
		Defective rectifier	Replace
		Disconnection of RF resistor	Replace
	Regulator	Defective regulator	Replace
Insufficient charging	Wring	Disconnection, short circuit, loosened connection	Correct
	Alternator	Loosened alternator bolt	Correct
		Layer short of rotor coil	Replace
		Layer short of stator coil	Replace
		Defective rectifier	Replace
		Insufficient contact of brush, stained slip ring	Correct
	Regulator	Defective regulator	Replace
	Battery	Defective battery	Replace
Over charge	Battery	Internal short circuit	Replace
	Regulator	Defective regulator	Replace
Unstable charging current	Wiring	Disconnection or breakage of wire	Replace
	Alternator	Slackened alternator drive belt	Replace
		Short of rotor coil, breakage of wire	Replace
		Shortage of stator coil, breakage of wire	Replace
		Insufficient contact of brush, stained brush and slip ring	Correct
		Broken brush and spring	Replace
		Insufficient contact of terminals	Correct
	Regulator	Defective regulator	Replace
Abnormal noise of alternator	Alternator	Incorrect installation of alternator	Correct
		Defective bearing.	Replace
		Rotor core and stator core in contact	Correct
		Defective diode	Replace
		Short of stator coil	Replace

Downloaded from www.Manualslib.com manuals search engine

2. Starting Motor (For Engine Model J843:CM284) (No. 185086551 1.7kW)

1) Strauctu re

This starter features a reduction mechanism of planetary gearing system and permanent magnets for magnetic field induction.
Its reduction mechanism comprises internal gear, three planetary gears, gear shafts (with overrunning clutch fitted by spline) and armature shaft gear.
The structure is different from that of direct drive type, but the electrical wiring is the same between two types.
The magnetic field is produced by six permanent magnets. The magnets are mounted in the yoke and positioned according to polarity. They are permanently attached to the yoke and are not removable.

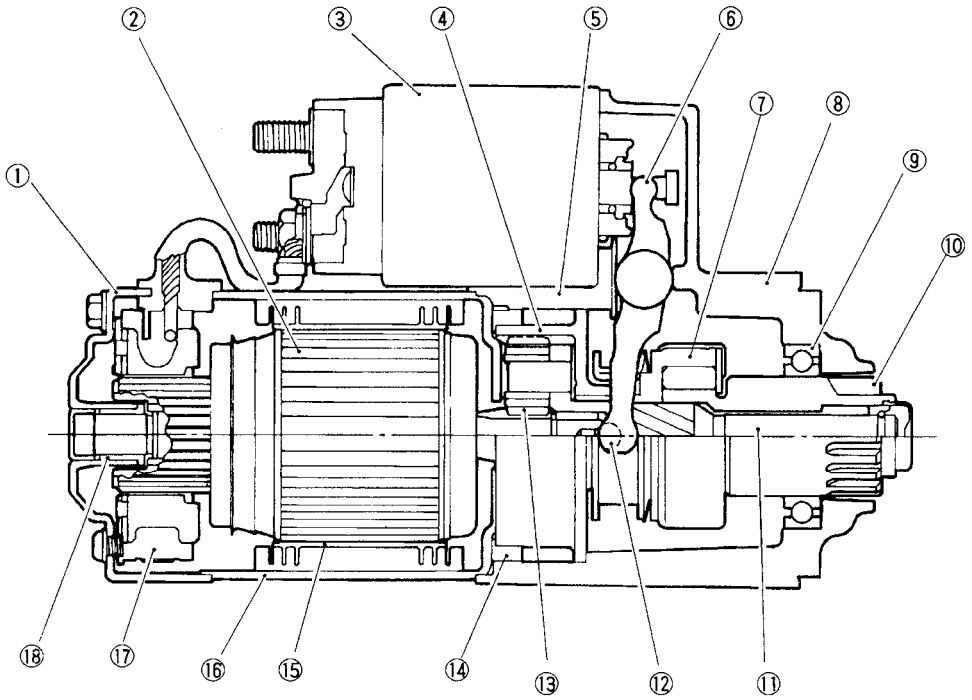

①	Rear Bracket	⑦	Overrunning Clutch	⑬	Planetary Gears
②	Armature	⑧	Front Bracket	⑭	Rubber Cover
③	Switch	⑨	Bearing	⑮	Magnets
④	Internal Gear	⑩	Pinion	⑯	Yoke
⑤	Lever Packing	⑪	Gear Shaft	⑰	Brushes
⑥	Lever	⑫	Ball	⑱	Sleeve Bearing

102X

Downloaded from www.Manualslib.com manuals search engine

2) Disassembly
Reference Figure 104X

NOTE:
1. **Before disassembling starter, be sure to put match marks at two locations (switch and yoke) so that any possible mistake can be avoided.**
2. **Do not clamp yoke in a vise or strike it with a hammer during repair operations. Permanent magnets attached to yoke could be broken and yoke dented or deformed if mishandled.**

① Remove switch terminal nut (1) and disconnect connecting wire (2).
Remove screws (3) securing switch and remove switch and plunger (4).

② Remove brush holder securing screws (5) and through bolts (6).
Remove rear bracket (7) but do not remove brush holder (8).

③ Install a socket (outer diameter 30mm) on the armature commutator, see Figure 103X.
Then slide the brush holder (8) onto the socket. Leave the socket in position in the brush holder for inspection and reassembly.

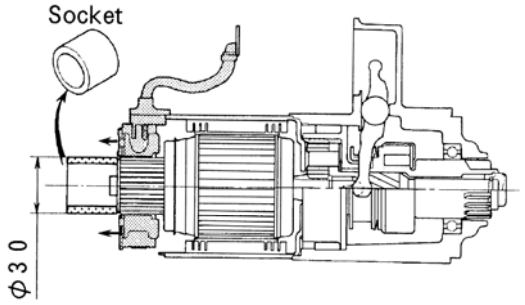

103X

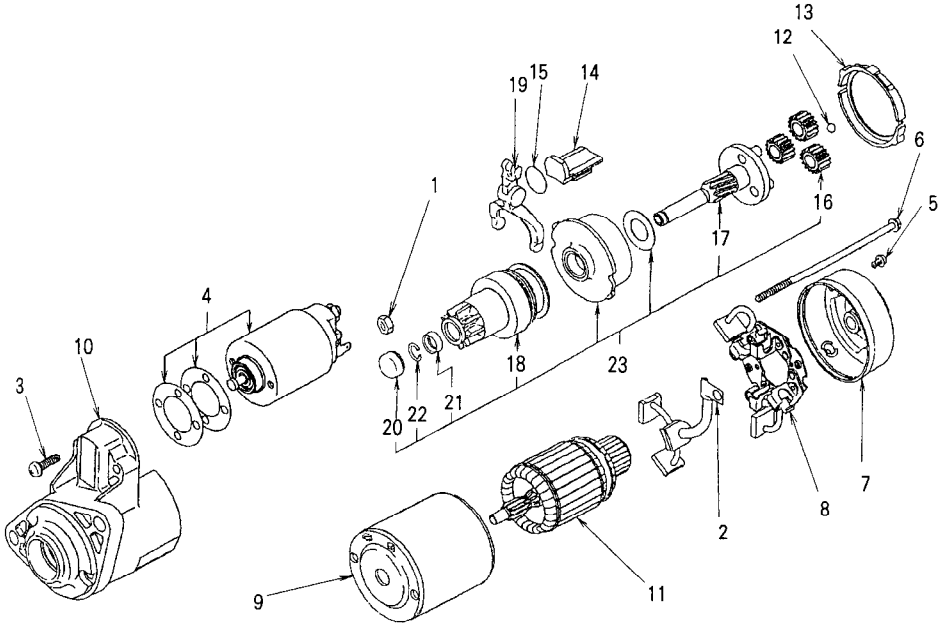

1. Nut
2. Connecting Wire
3. Screw
4. Switch and Plunger
5. Screw
6. Through Bolt
7. Rear Bracket
8. Brush Holder
9. Yoke
10. Front Bracket
11. Armature
12. Ball
13. Rubber Cover
14. Lever Packing
15. Plate
16. Planetary Gears
17. Gear Shaft
18. Overrunning Clutch
19. Lever
20. Plastic Cap
21. Stop Ring
22. Snap Ring
23. Planetary Gear Assembly

104X

Downloaded from www.Manualslib.com manuals search engine

https://truckmanualshub.com/

④ Slide yoke (9) away from front bracket (10).
⑤ Remove armature (11) and ball (12).
Do not lose ball when removing the armature.
⑥ Remove rubber cover (13) from planetary gear assembly (23) and remove lever packing (14) and plate (15).
⑦ Remove planetary gears (16).
Remove gear shaft/overrunning clutch assembly (18) and lever (19) as a unit from front bracket (10).
⑧ To remove overrunning clutch (18).
a. Remove plastic cap (20). If the cap is too badly distorted or cracked, it will be necessary to use a new one on reassembly.
b. Slide a piece of pipe of suitable size over shaft against stop ring (21).
Then tap the pipe with a hammer to remove the stop ring and expose snap ring (22).
Remove the pipe from the shaft.
c. Remove the snap ring and the stop ring and separate the over running clutch (18) from the gear shaft (17).
If the snap ring is distorted, it will be necessary to use a new one on reassembly.

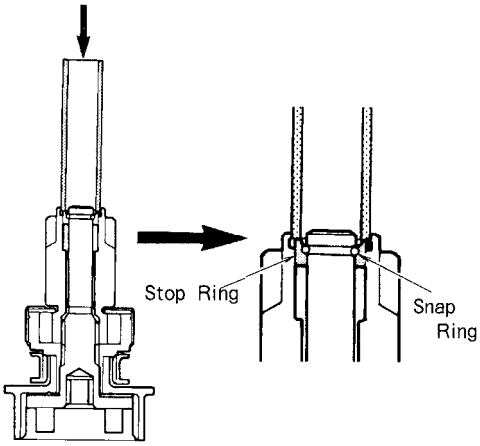

105X

3) Inspections

(1) Armature

① Inspect the armature coil for short-circuit with a growler tester.
Replace armature if shorted.
② Inspect armature coil for ground with a circuit tester.
Replace grounded armature.

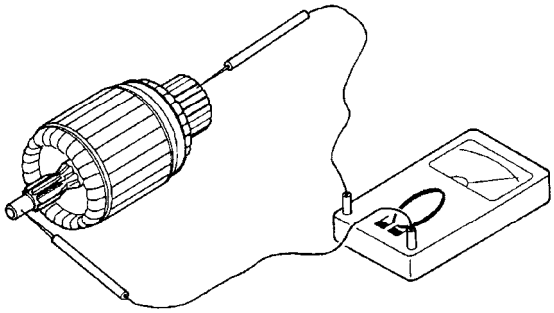

106X

③ Inspect commutator for wear. If below the limit, replace armature.
④ Inspect commutator for insulator depth.
Correct if below the limit.
⑤ Check gear teeth for wear or damage, and replace armature as necessary.

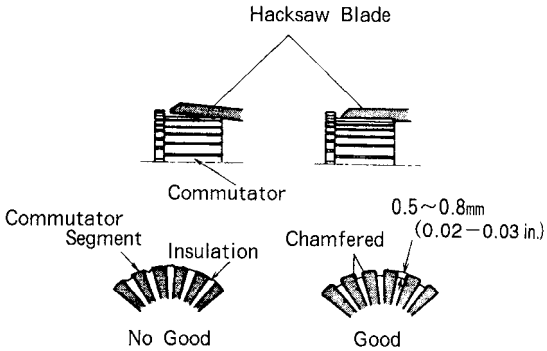

107X

Downloaded from www.Manualslib.com manuals search engine

(2) Permanent magnets

Check permanent magnets for crack, damage and looseness, replace yoke assembly as necessary.

(3) Brushes

① Check brushes for wear. Replace brushes if below the limit.
② Check brush spring pressure to make sure brush moves smoothly in brush holder.
③ To check brush holder assembly for grounds, touch one probe of a circuit tester to holder plate and the other probe to each of insulated holders. Replace brush holder assembly if any continuity is noted.

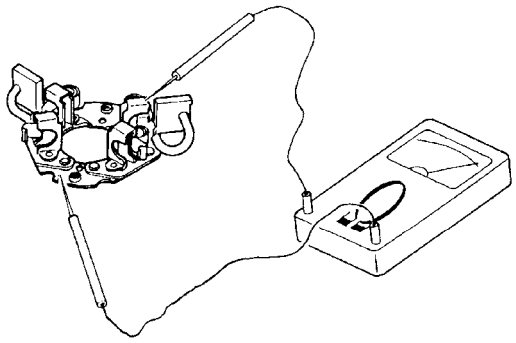

108X

(4) Over running clutch and pinion gear.

While holding clutch housing, rotate pinion.
Pinion should rotate smoothly in one direction (not necessarily easily), but should not rotate in opposite direction.
If the clutch does not function properly, replace it. If pinion gear is worn or burred, replace it.

NOTE: Overrunning clutch should not be cleaned with grease dissolving solvents, since these would dissolve the lubricant in the clutch mechanism.

(5) Front bracket

Replace front bracket as an assembly including ball bearing if the bearing fails to rotate smoothly or it is noisy.

(6) Rear bracket

Replace rear bracket as an assembly including sleeve bearing if the hearing is badly worn.

(7) Internal gear and planetary gears

Replace the gears if their teeth are badly.

(8) Switch

Check continuity between M terminal and body (ground).
Replace the switch if no continuity is noted.

Downloaded from www.Manualslib.com manuals search engine

4) Reassembly and Adjustment

To reassemble the starter, follow the reverse of disassembling procedure, and observe the following precautions:

(1) Apply grease to the following parts during assembly.

① Sleeve bearing and ball.
② Sleeve bearing in internal gear.
③ Sleeve bearing in rear bracket.
④ Gear shaft.
⑤ Sliding surface of lever and overrunning clutch.
⑥ Armature shaft gear, internal gear and planetary gears.
⑦ Sliding surfaces of pinion and front bearing.

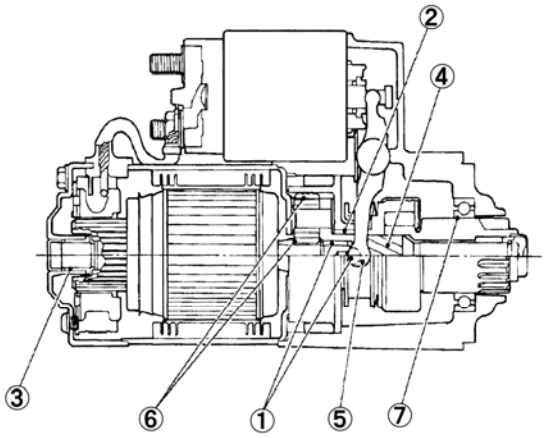

109X

(2) Armature shaft end play

No adjustment.

(3) Pinion position adjustment.

After completing reassembly, check pinion position to be sure that it is between 0.5 and 2.0 mm.
To adjust, proceed as follows:

① Connect the starter to a battery, as shown in Fig. 110X.
Close switch. This will shift pinion into cranking position.

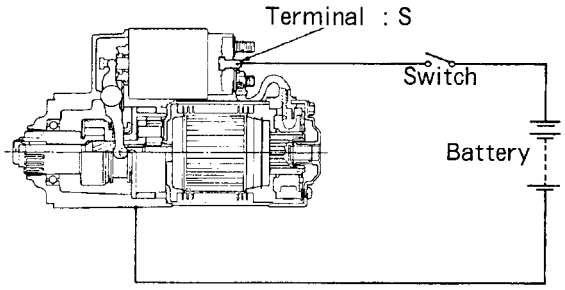

110X

② Push pinion back by hand and measure the amount of the pinion movement as shown in Fig. 111X.
If the amount does not fall within limit, adjust it by adding or removing shims which are located between switch and front bracket.
Adding shims decreases the amount of the movement.

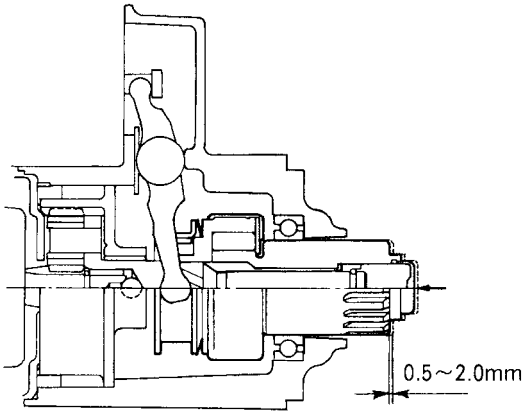

111X

Downloaded from www.Manualslib.com manuals search engine

5) Non-Load Test

① After adjusting pinion position, from a test circuit with a volt meter and an ammeter, as shown in Figure 112X.

NOTE: Use wires as thick as possible and tighten each terminal fully.

① Close the switch and compare the R.P.M., current and voltage readings with the Service Specifications.

② If any abnormality is noted, check it according to the inspections.

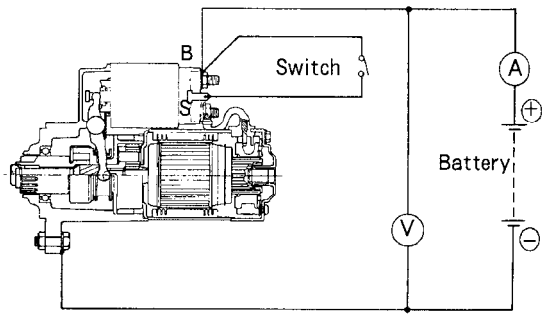

112X

6) Service Specifications

Item		Standard Value or Service Limit
No-load Characteristic	Volts	11
	Amps.	110 Max.
	RPM	2400/min.
Commutator	Outer Dia.	29.4 mm
	Service Limit	28.8 mm
Brush	Length	17.5 mm
	Service Limit	10 mm
Brush spring	Tention	22.5 – 32.5 N {2.3 – 3.3 kgf}
	Service Limit	10 N {1.02 kgf}
Pinion Movement (Pinion Gap)		0.5 – 2.0 mm
Part No.		185086551 (MITSUBISHI 1.7 kW)

Downloaded from www.Manualslib.com manuals search engine

7) Troubleshooting

(1) Pinion does not advance even though the key switch is turned ON.		
Unit	Cause	Remedy
Wiring	Disconnected wire, untightened battery and switch terminals, or improper contact of the inserting part.	Correct and retighten
Key switch	Improper contact preventing flow of current.	Correct or replace the contact part
Starting motor	Helical spline of the pinion shaft is scored and prevents the pinion from moving.	Replace or correct
Magnet switch	Improper movement of the plunger of the magnet switch or disconnected wire or short circuit of the coil.	Correct or replace

(2) Though the pinion is engaged and the motor rotates, the rotation is not transmitted to the engine.		
Unit	Cause	Remedy
Starting motor	Defective clutch. Broken reduction gear.	Replace Replace

(3) Though the pinion is engaged with the ring, the starting motor does not start.		
Unit	Cause	Remedy
Wiring	Disconnected wire, connecting the battery and magnet switch. Insufficient tightening of the lead wire connecting the magnet switch and motor.	Repair, retightening, or replace the wire.
Starting motor	Locked ball bearing. Improper installation. Worn out brush, improper contact of brush spring. Stained commutator. Defective armature or field coil. Insufficient tightening of connections of the field coil and brush.	Replace Install properly. Replace Correct Correct or replace Retighten
Magnet switch	Broken holding coil Improper contact of contact Roughened contact surface of contact	Replace Replace Replace
Battery	Discharged	Charge

(4) Motor starts rotating before the pinion is engaged with the ring gear.		
Unit	Cause	Remedy
Starting motor	Improper sliding of pinion shaft Worn out pinion tooth top Improper pinion pushing position	Replace Correct Replace
Engine	Worn out ring gear	Replace
Magnet switch	Defective magnet switch	Replace

Downloaded from www.Manualslib.com manuals search engine

Starting Motor (For Engine Model N843L:CM364)

1) Specifications and Performance

Part code No.	185086530	Pinion ejecting voltage (V)		Less than 8
Type	RA (228000-5121)	Unloaded	Terminal voltage (V)	11.5
Continuous operation (second)	30		Current (A)	Less than 100
Output (V-kW)	12 – 2.0		Speed (rpm)	More than 4000
Rotating direction (viewed from pinion)	Clockwise	Loaded	Terminal voltage (V)	7.6
			Current (A)	Less than 400
Clutch type	Overrunning		Torque N·m {kgf·m}	More than 16.7 {1.7}
Engaging type	Magnetic shift			

2) General Description

The newly developed reduction starter is a positive shift type starter and consists of the motor, reduction gear, overrunning clutch and pinion magnetic switch.
The magnetic switch and sliding pinion mechanism are arranged on the same axis as shown below.

3) Structure

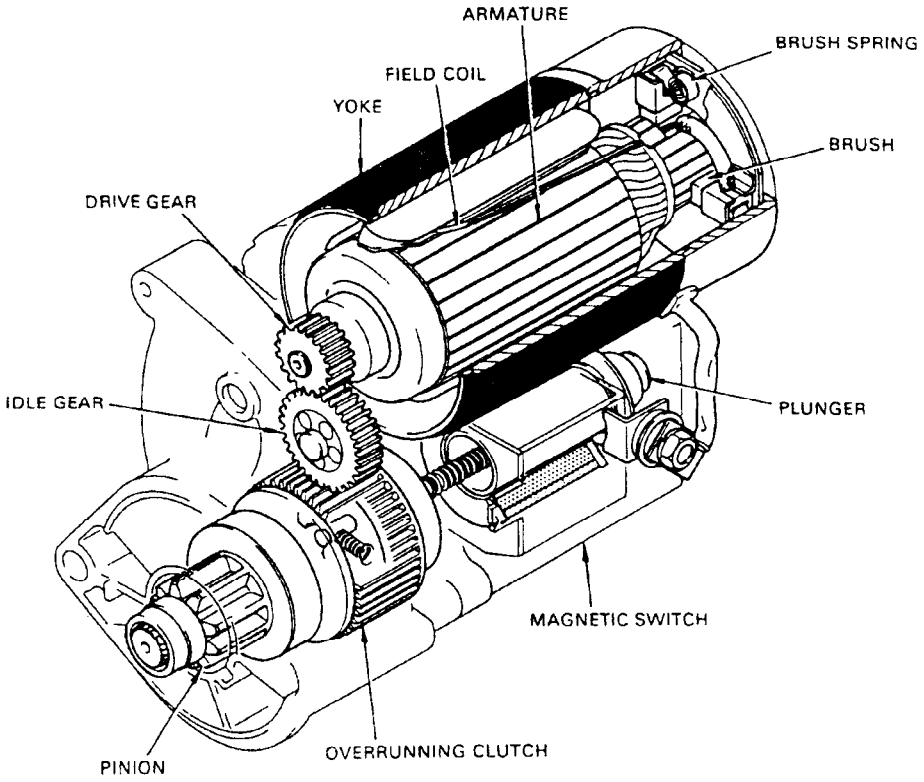

113X

Downloaded from www.Manualslib.com manuals search engine

4) Disassembly

Disassembly of yoke O.D. 76 mm type

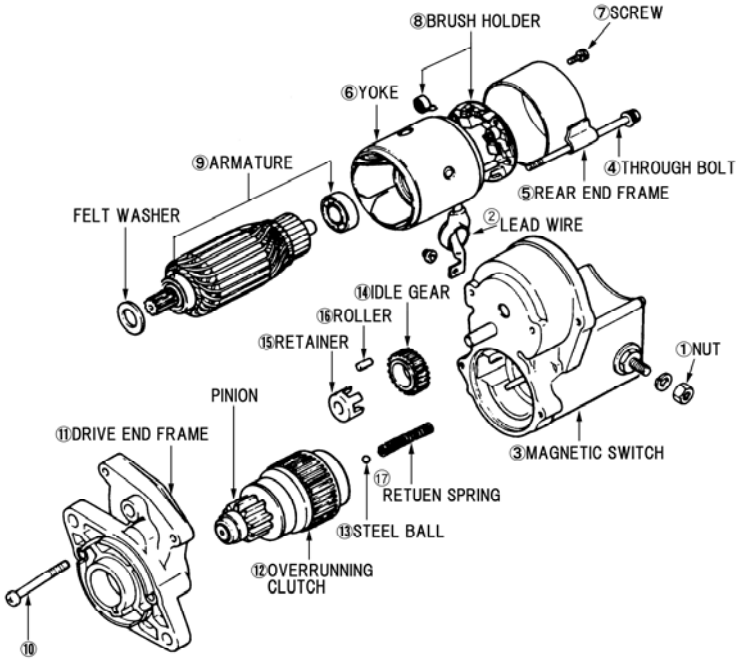

114X

(1) Remove the nut ① and disconnect the lead wire ② from the magnetic switch ③.

(2) Remove the through bolts ④ from the rear end frame⑤.

(3) Remove the yoke ⑥ from the magnetic switch ③.

(4) Remove the screw ⑦ from the rear end frame ⑤.

(5) Remove the rear end frame ⑤ from the yoke ⑥.

(6) Using the long-nose pliers, take off the brushes and pull out the brush holder ⑧.

(7) Remove the armature ⑨ from the yoke ⑥.

(8) Remove the screws ⑩ from the drive end frame ⑪.

(9) Remove the drive end frame ⑪ from the magnetic switch ③.

(10) Remove the over running clutch ⑫ from the drive end frame ⑪.

NOTE: If the pinion is installed on the drive end frame (externally attached to overrunning clutch shaft), it will be necessary to remove pinion prior to removing overrunning clutch.

(11) Remove the steel ball from the overrunning clutch ⑫.

(12) Remove the idle gear ⑭ from the drive end frame ⑪.

(13) Remove the retainer ⑮ and rollers ⑯ from the drive end frame ⑪.

(14) Remove the return spring ⑰ from the magnetic switch ③.

Downloaded from www.Manualslib.com manuals search engine

5) Inspection and Repair

Inspect the following items and repair or replace if necessary. Test method is as same as the conventional type.

- **Armature**

a) Armature short circuit test
b) Armature winding ground test
c) Commutator run-out test
d) Measurement of segment mica depth

- **Yoke**

a) Field windings ground test
b) Measurement of brush length

- **Brush holder**

a) Check brush spring
b) Brush holder insulation test

- **Overrunning clutch test**

6) Reassembly

Reverse the order of disassembly to reassemble the starter. However attention should be paid to the following operations.

(1) Lubrication

Before reassembling, apply the recommended grease as follows:

Nippondenso No. 50 grease or equivalent (Esso beacon 325)	● Retainer and rollers ● Overrunning clutch ● Steel ball ● Return spring ● Armature bearing ● Felt washer

(2) Fixing torque

Item	Torque N·m {kg-m}
Throught blot	8.82 – 11.76 {0.9 – 1.2}
Drive end flame fixing screw	8.82 – 11.76 {0.9 – 1.2}
C-terminal nut	9.8 – 13.72 {1.0 – 1.4}

(3) Cautions for installation

- Do not forget to assemble the steel ball and return spring

- Install the negative brush (brush holder side) to the brush holder negative hole (not insulated), and the positive brush (yoke side) to the brush holder positive hole (separated from plate with insulator). Then make sure that the positive brush lead wires are not grounded.

- When assembling the brush holder to the yoke, take care not to damage and get oil on it.

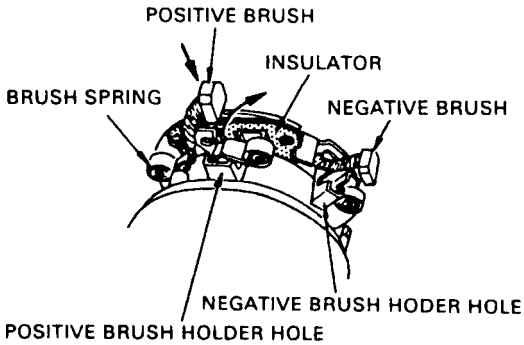

Installing the brush

115X

Downloaded from www.Manualslib.com manuals search engine

https://truckmanualshub.com/

- When installing the rear end frame to the yoke, engage the tab on the rear end frame with the lead wire grommet.
- When installing the yoke to the magnetic switch, engage the tab on the yoke with the notch in the magnetic switch.
- Securely put the rubber boot over the C-terminal.

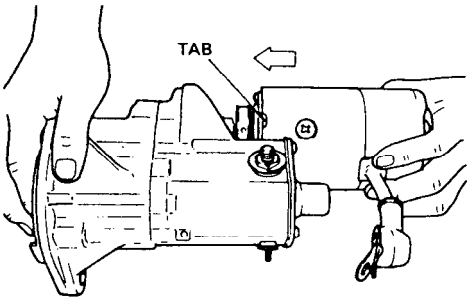

Installing the yoke

116X

(4) Magnetic switch test

The following tests should be performed without the armature assembly.

NOTE: Each test should be performed a short time (3 to 5 sec.) to prevent the magnetic switch winding from burning.
Each test should be performed with specified voltage is applied.

- **Pull-in test**
  Connect the test leads as shown in Figure.
  When connecting terminal C and M. T are closed, the pinion should jump out.

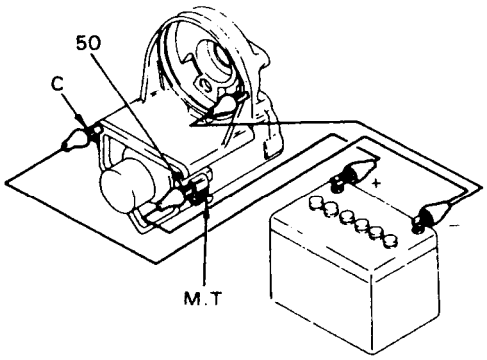

Puil-in test

117X

- **Hold-in test**
  With the same condition as in the pull-in test, open the connecting terminal C. The pinion should remain in jumped out position.

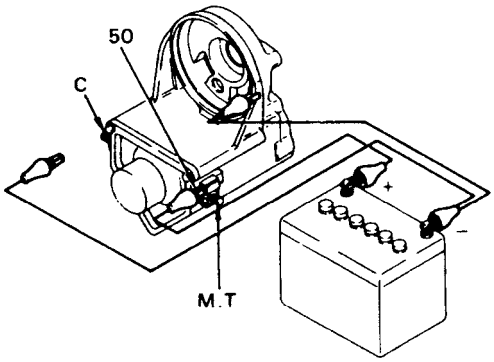

Hold-in test

118X

- **Return test**
  With the same condition as in the hold in test, open the connecting terminal 50. The pinion should return immediately.

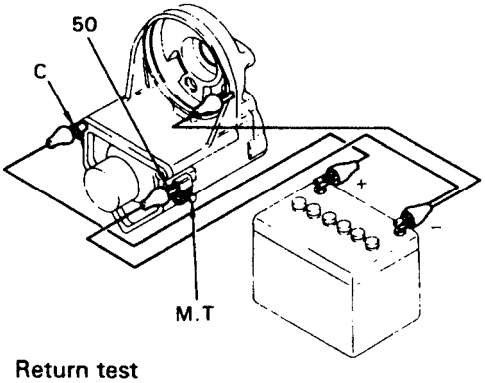

Return test

119X

Downloaded from www.Manualslib.com manuals search engine

7) Performance test

The following test should be carried out after reassembling the starter. If suitable equipment is not available, at least the No-load test should be carried out.

(1) No-load test

With the starter securely clamped in a vice, and using a battery and suitable ammeter, connect the positive lead of the battery, and the ammeter to the "50" terminal.
Connect the negative lead to the starter body.
The starter should show smooth and steady rotation immediately after jumping out of the pinion and should draw less than the specified current.

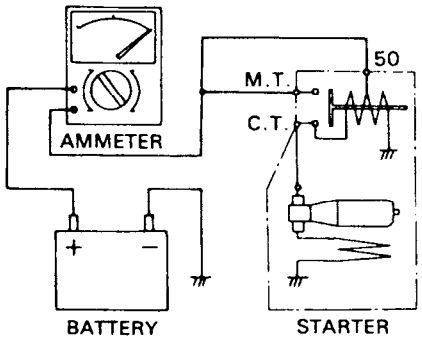

No-load test

120X

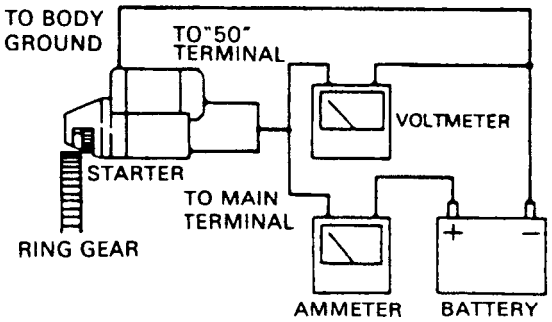

Lock and lock torque test

121X

(2) Load test

Read the ammeter and voltmeter when the specified torque is applied. The ammeter should indicate less than the specified current, and the tachometer should indicate more than the specified speed.

(3) Lock torque test

Read the torque meter and ammeter when the tachometer reading becomes 0 rpm after applying the load. The torque meter should indicate more than the specified torque and the ammeter should indicate less than the specified current.

8) Diagnosis and test for starting system

Use the diagnostic charts as a guide when you are repairing the starting system. Before diagnosis, be certain the battery is fully charged and inspect the starter and battery cables for clean and tight connections.

Precaution:
- Do not operate the starter longer than 30 seconds.
- Do not disconnect or short any lead wire while starter is operating.

(Continue)

Downloaded from www.Manualslib.com manuals search engine

Diagnostic chart

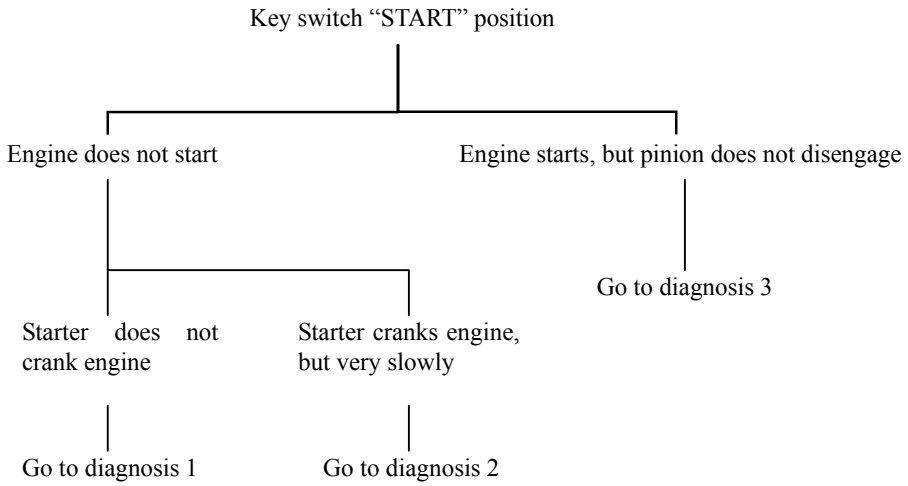

Diagnosis 1

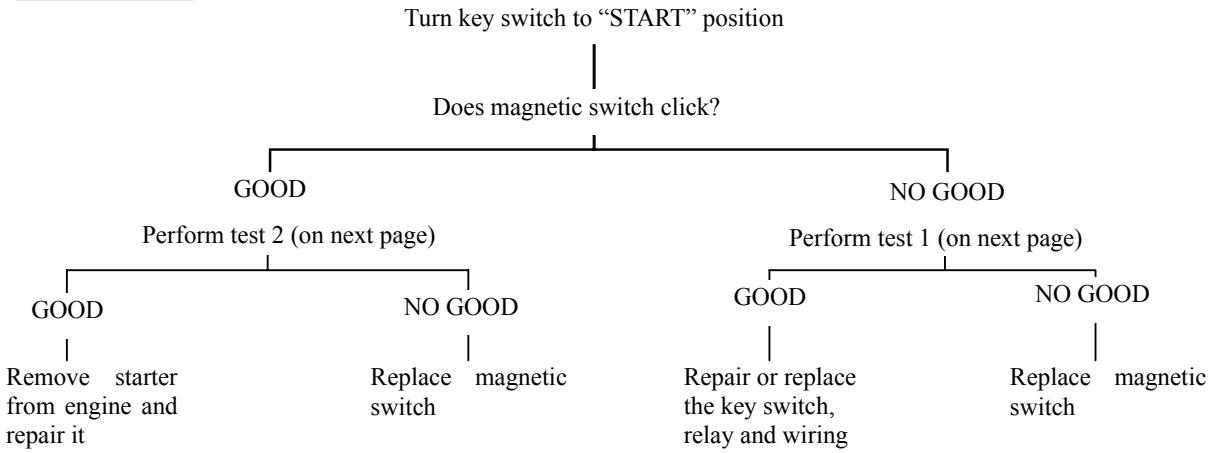

Diagnosis 2

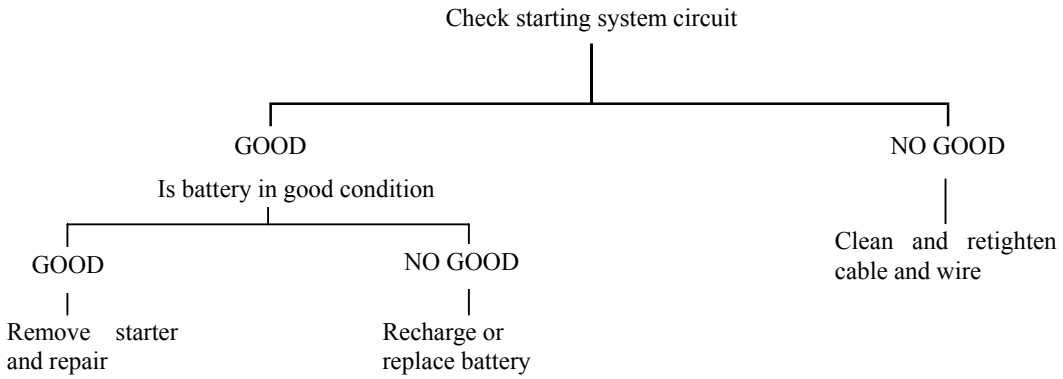

Downloaded from www.Manualslib.com manuals search engine

Diagnosis 3

Check the operation of starting switch and relay

GOOD → Remove starter and repair

NO GOOD → Repair or replace if necessary

TEST 1

(1) Disconnect the cable from "C" terminal.

(2) Connect a jumper wire to positive terminal of battery.

(3) Briefly touch jumper wire to "50" terminal of magnetic switch.
If the magnetic switch operates, probable cause of starter failure is in the wiring, starting switch or relay.

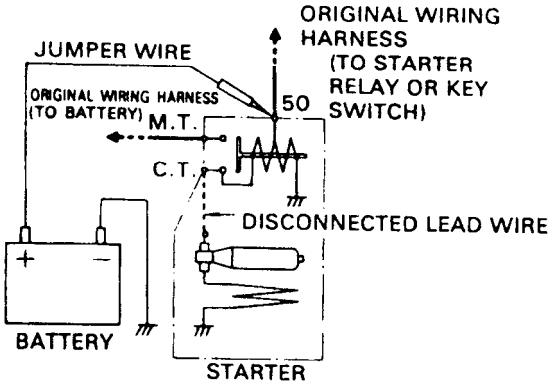

Test 1

122X

TEST 2

(1) Disconnect the cables from C.T., M.T. and 50 terminal.

(2) Using an ohmmeter, touch one probe to the "50" terminal and the other to the starter body.
There should be continuity.
If there is no continuity, the hold-in winding is open-circuited.
Replace the magnetic switch if open circuited.

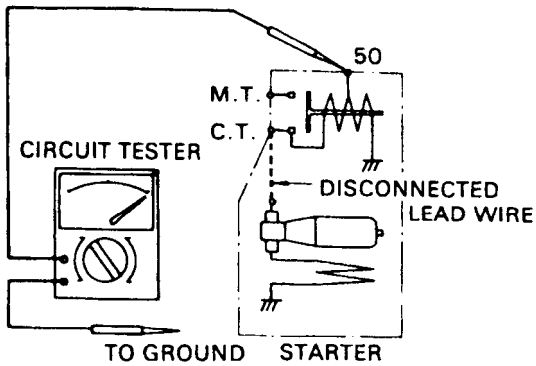

Test 2

123X

[Discrimination of starter terminals]

Each terminal can be discriminated as follows:
M.T. ····· Main terminal to which the main cable from battery is connected.
C.T. ····· C-terminal to which the lead wire from the yoke is connected.
50· ····· 50-terminal to which the lead wire from the starting switch or starter relay is connected.

Downloaded from www.Manualslib.com manuals search engine

9) Service Specification

Part code No.			185086530
Type			RA (228000-5121)
Output (V-kW)			12 – 2.0
Yoke outside diameter			Ø78
Commutator outside diameter	Standard value	mm	35.0
	Repair value	mm	34.0
Commutator insulation depth	Standard value	mm	0.55 – 0.85
	Repair value	mm	0.2
Commutator irregular wear	Standard value	mm	0.02
	Repair value	mm	0.05
Brush length	Standard value	mm	15.0
	Repair value	mm	12.0
Tightening torque N·m {kgf·cm}	① End frame bolt		2.94 – 4.7 {30 – 48}
	② Through bolt		8.82 – 11.76 {90 – 120}
	③ Magnetic switch cover bolt		3.63 – 4.6 {37 – 47}
	④ M terminal nut (Inside)		13.7 – 19.6 {140 – 200}
	⑤ M terminal nut (Outside)		5.88 – 9.8 {60 – 100}
	⑥ C terminal nut		9.8 – 13.7 {100 – 140}
	⑦ Housing bolt		8.82 – 11.76 {90 – 120}

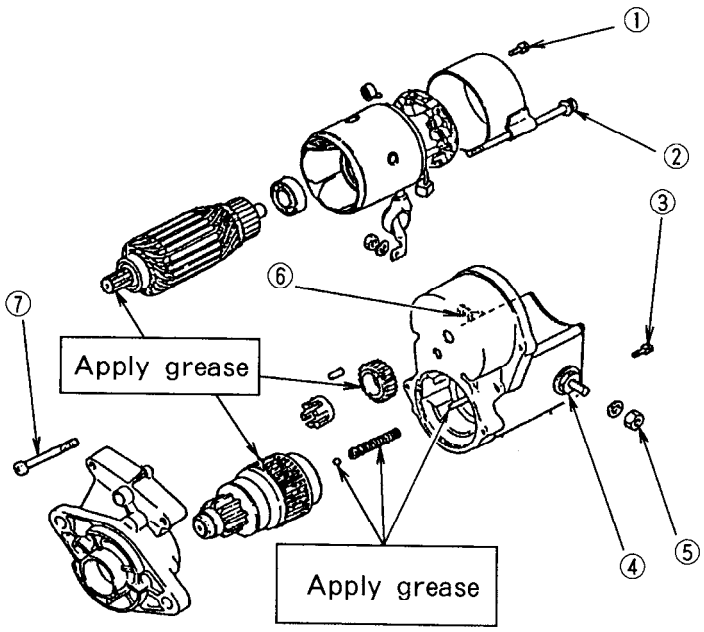

124X

Downloaded from www.Manualslib.com manuals search engine

3. Glow Plug

IQS super-high speed heating type glow plug is used for this tractor. Refer to paragraph 3-8, Electrical parts and accessories for the IQS system.

1) Specifications and structure

Part code No.	185366190	Rated voltage	12 V (DC)
Model	Y-701RS	Standard resistance	0.8 Ω (At normal temperature)

The heat wire (heating unit) is enhoused in the stainless steel sheath. Coiled thin heat wire is placed in sintered magnesium oxide powder.
One end of this heat wire is welded to the sheath end and another end is welded to the center electrode. By setting the key switch at the heat (H) and start (START) positions, power is supplied, heats the air in the combustion chamber and preheats the heat wire.

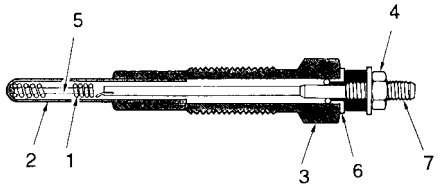

1. Heat wire
2. Sheath
3. Body
4. Nut
5. Magnesium oxide power
6. Insulating bush
7. Center electrode

125X

2) Circuit diagram

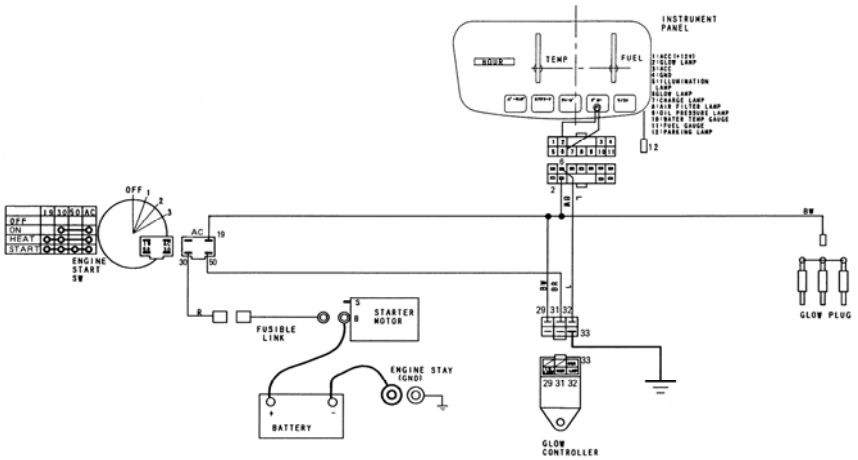

GLOW INDICATOR LAMP CIRCUIT

126X

3) Inspection

(1) Disconnect the connector.

(2) Connect the circuit tester to the center electrode of the glow plug and cylinder head and measure the resistance.

Measured value	Judgment
At 0 Ω	Short-circuit
At ∞	Disconnected wire

Downloaded from www.Manualslib.com manuals search engine

4. Thermometer and Thermosensor

1) Specifications (thermosensor) and structure

Part code No.	385720011
Operating range	**50°C – 120°C**
Standard resistance value (Ω) (The resistance rating is measure on the special circuit.)	**35°C → 670±80** **80°C → 118±6** **105°C → 54.5±2.7** **115°C → 4.2±2.5**

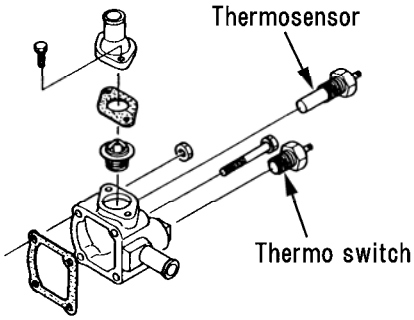

127X

Electric thermosensor composed of a receiver and transmitter is used for this tractor.
The receiver employs a thermister in which electric resistance varies according to temperature to increase the current flowing the circuit when the cooling water temperature rises and indicator of the receiver indicates the corresponding position.

2) Inspection

(1) Thermosensor

a. Remove the thermosensor from the thermostat case.
b. Connect a circuit tester to the thermosensor.
c. Measure the resistance value at each temperature while heating with a heater.

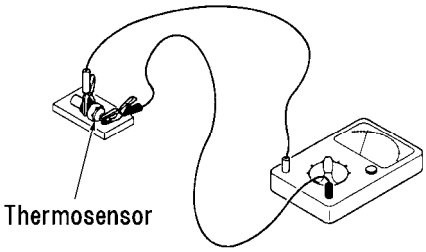

128X

(2) Thermometer

a. Disconnect the wiring from the themosensor.
b. Turn the key switch to “ON” position. (No start the engine).
c. Connect the wiring for thermosensor to ground.
d. If the pointer for the thermometer moves to “C” to “H” after a while, the thermometer is normal. If the pointer does not move, the wiring or the thermometer is defective.

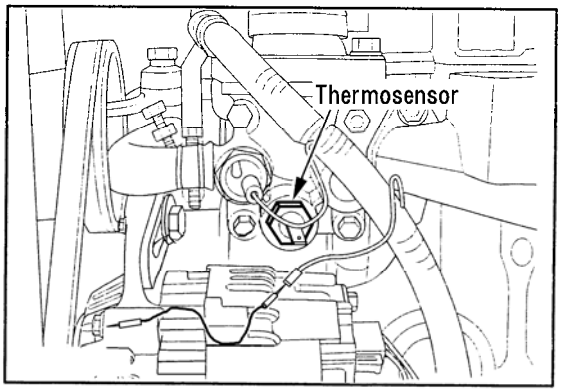

129X

Downloaded from www.Manualslib.com manuals search engine

5. Buzzer Alarm Warning System

The buzzer is alarmed when the engine is over heated and/or engine oil pressure is too lowered.

1) Over heat warning alarm system

The thermos-switch is located on the themostat case. Relay and buzzer are located on the fire wall compartment. The buzzer is alarmed with the thermos-switch and relay.

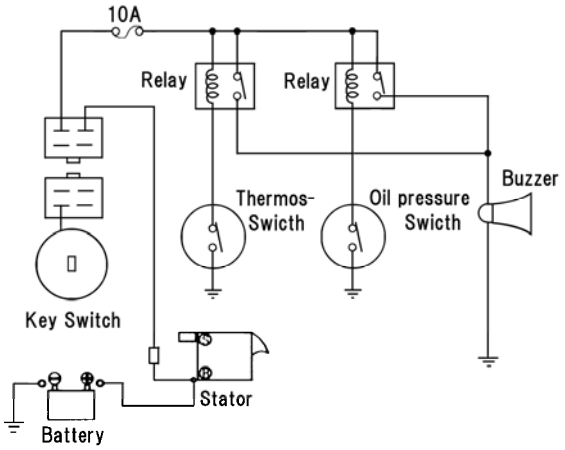

130X

The thermos switch is closed at 107ºC to 113ºC, and is opened at 103ºC.
If buzzer is alarmed, clean the radiator front screen and radiator screen, and inspect the coolant quantity after coolant temperature become cold.

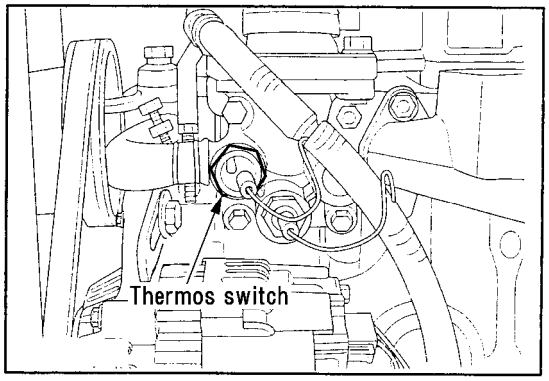

131X

(2) Engine oil pressure warning alarm system

The oil pressure switch is located on the cylinder head. Relay and buzzer are located on the fire wall compartment. The buzzer is alarmed with the oil pressure switch and relay. The switch is closed when oil pressure is low 0.29 MPa {0.3 kgf/cm^2}.

If buzzer is alarmed, stop the engine and inspect the engine oil level.

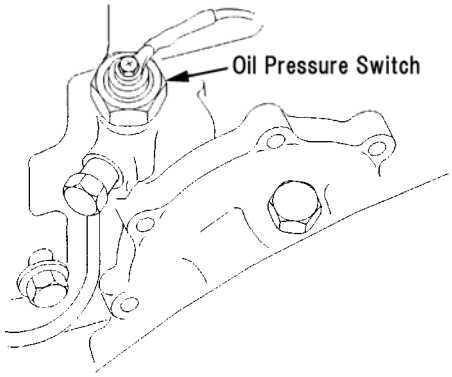

132X

Downloaded from www.Manualslib.com manuals search engine

6. Oil Pressure Switch

Structure

This oil pressure switch is used to warn engine oil pressure. When the pressure increases more than specified, the oil pressure lamp lights up warning the trouble, Diaphragm and contact points are combined in the oil pressure switch.

a. Oil pressure switch lamp lights up at pressure less than **0.2 – 0.4 kgf/cm^2**.

7. Battery

1) Specifications

Model	CM284	75D26L	Electrolyte specific gravity (at 20ºC)	1.28/When charged fully
	CM364			
Capacity		75 AH	Charging current	7A When charged normally

2) Specific gravity of electrolyte and charging condition

The specific gravity of electrolyte decreases approximately lineally in proportion to the discharged electricity of battery. By measuring the specific gravity of the electrolyte using a hydrometer, residual capacity of the battery can be known.
The specific gravity value measured by the hydrometer should be compensated with respect to temperature. The specific gravity of battery electrolyte is based on the temperature of 20°C. As the temperature varies 1°C, the specific gravity value increases or decreases 0.0007. Therefore measured values can be compensated by the following equation.

S20 = St + 0.0007 (t – 20)

- t: Electrolyte temperature in measured value
- St: Measured specific gravity
- S20: Specific gravity converted to the value at 20°C

The right figure shows how to read the hydrometer and the table indicates relation between the specific gravity values and battery residual capacity.

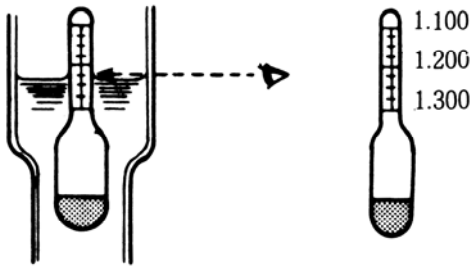

133X

Specific gravity (20°C)	Discharged electricity (%)	Residual capacity (%)
1.280	**0**	**100**
1.225	**25**	**75**
1.170	**50**	**50**
1.116	**75**	**25**
1.060	**100**	**0**

Downloaded from www.Manualslib.com manuals search engine

7. Engine Stop Solenoid

Inspection

Connect (+) side of the battery to the terminal of the engine stop solenoid and (-) side to the main body. If the plunger is sucked into the main body, the engine stop solenoid is normal.

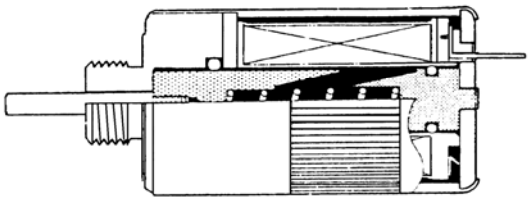

134X

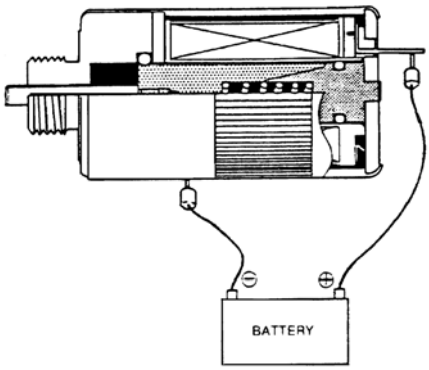

135X

8. Fusible Link

Inspection

The fusible link is installed between the battery and fuse box to protect such parts that could not be protected by fuses or a circuit (starter circuit) to which large current flows instantaneously. Check the continuity with a circuit tester.

NOTE:

1. **If a fusible link is burnt out again immediately after it is replaced, short circuit of the wiring can be considered as the reason. Check the wiring harness in such a case.**
2. **Never use a substitute wire or the like when the fusible link is burnt out.**

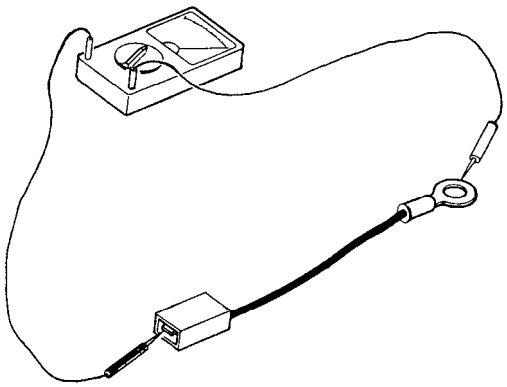

136X

9. Wiring Harness

Inspection and service

(1) Disconnect the negative cord of the battery when inspecting or servicing the wiring harness.
(2) Check each wiring for damage of sheathing due to wiring or for some other reason, or looseness at the connecting parts at the time of its inspection or service. If there is some defective point, repair the insulation or replace the wiring harness. (The band becomes breakable when becoming old. Be sure to substitute in such a case.)
(3) After completion of service for the tractor, etc., protect wiring at the plugging parts with vinyl tube, use clamping fixtures with vinyl cover, and check that the figures are not in direct contact with wiring. (Replace uncovered fixtures.) Especially check carefully where wiring may be caught between something.
(4) Check very carefully where positive current flows constantly and confirm sheathing is free form troubles.
  1) Starting motor
  2) Alternator
  3) Key switch
(5) After check, protect the wiring with corrugated tube or the like.

Downloaded from www.Manualslib.com manuals search engine

2-4 Trouble Shooting

Condition	Cause	Remedy
Engine does not start.	Defective key switch Insufficient charging or completely discharged battery. No fuel. Air mixed in the fuel system. Clogged fuel filter. Irregular of improper fuel supply. Defective glow plug. Improper viscosity of lubricating oil. Clogged air cleaner. Not compressed. Defective engine stop solenoid.	Connect or correct contact points properly. Charge. Replenish the fuel. Correct points allowing the air to enter the fuel. Replace the fuel filter. Trouble of injection pump. Have corrected in work specified by Nippon Denso. Replace. Check and change. Clean the air cleaner. Check and correct each part. Check or replace wiring.
Irregular engine speed	Air mixed in the fuel system. Uneven fuel injection. Clogged fuel filter. Trouble of speed governor. Improper function of engine main body.	Discharge air from the fuel. Trouble of injection pump. Have corrected or replaced in a work specified by Nippon Denso. Replace the fuel filter. Check and adjust. Overhaul, check and correct each part.
Engine stops during operation	No fuel in fuel tank. Clogged fuel filter. Air mixed in the fuel system. Improper functions of engine main body.	Replenish fuel. Replace the filter. Correct points to allow the air to enter the fuel system. Check and correct each part.
Engine overheat	Insufficient cooling water. Loosened or slipping fan belt. Failure of fan belt. Clogged radiator. Clogged radiator fin. Cooling water passage clogged with dust, fur, etc. Improper function of thermostat. Insufficient lubricating oil. Overload.	Replenish the cooling water, and check and repair water leaking points. Clean oil dust, etc. and retighten. Replace. Clean the radiator. Clean. Wash. Check and replace Replenish. Decrease the load.

Downloaded from www.Manualslib.com manuals search engine

Condition	Cause	Remedy
Improper color of engine exhaust	Too much engine oil. Too low viscosity of engine oil. Improper injection timing.	Check and adjust the quantity. Check and change. Too late. Correct.
Improper engine exhaust (black or dark gray)	Improper fuel. Excessive fuel injection. Improper function of engine main body. Overload. Clogged air cleaner.	Check and change. Check and adjust. Check a correct each part. Reduce the load. Clean the element.
Improper charging.	Loosened fan belt. Trouble in wiring of each part. Defective battery. Defective alternator.	Correct belt tension. Check and repair. Replace. Replace.
Starting motor does not operate.	Loosened or disconnected wiring of each part. Dropped battery voltage. Defective safety switch. Trouble in starting motor. Disconnected wire of fusible link.	Check and install or tighten. Charge the battery. Replace. Check and correct the starting motor. Replace.
Oil pressure lamp does not go out.	Insufficient engine oil. Trouble in oil pressure switch. Oil leakage from lubricating system. Clogged oil filter. Short circuit wiring between oil pressure lamp and mano contact.	Replenish to specified gauge level. Replace the switch. Check and retighten. Replace with new one. Repair.
Oil pressure lamp does not light up with the key switch turned ON. (While engine stops.)	Burnt out lamp. Disconnected wire between battery and oil pressure lamp.	Replace the lamp. Repair.

Downloaded from www.Manualslib.com manuals search engine

https://truckmanualshub.com/

2-5 Engine Maintenance Standard Table

1. J843

* Unit for values without unit in the column of inspection item is mm.

Part	Inspection Items		Standard Dimension	Standard Assembling Value	Repair Value	Service Limit	Remarks
Cylinder head	Cylinder compression pressure MPa {kgf/cm^2}			More than 2.94 {30}	2.45 {25}		Engine speed at 200 rpm
	Cylinder head tightening torque N·m {kgf·m}			98 – 103 {10.0 – 10.5}			Coat Molycoat grease.
	Distortion of cylinder head bottom surface (mounting surface)			Less than 0.05	0.12		
	Valve seat recess (intake/exhaust) 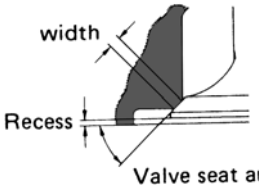 137X			0.85 – 1.15		1.8	Valve sheet angle 45°
	Valve seat contact width	Intake		1.66 – 1.87	2.5		
		Exhaust		1.66 – 1.73	2.5		
Cylinder block							
	Bore		ϕ 84	ϕ 84 – 84.019	ϕ 84.2	ϕ 84.2	
	Distortion on cylinder block top surface			Less than 0.05	0.12		
Piston	Longer dia. at skirt		ϕ 83.955	ϕ 83.9475 – 83.96		ϕ 83.7	
	Clearance to cylinder			0.0375 – 0.0715		0.25	At 20°C
	Clearance between piston pin hole and pin			-0.010 – +0.007		0.02	
Piston pin	Pin outside dia.		ϕ 25	ϕ 24.996 – 25.0		ϕ 24.98	
	Clearance between rod small end bush and pin.			0.010 – 0.025		0.08	Oil clearance
Piston ring	Clearance between piston ring groove and ring	Top ring		0.07 – 0.11		0.25	
		2nd ring		0.04 – 0.08			
		Oil ring		0.03 – 0.13		0.25	
	Ring width	Top ring	2				
		2nd ring	1.5				
		Oil ring	4				
	Piston ring end gap	Top ring		0.20 – 0.35		1.0	
		2nd ring		0.20 – 0.40		1.0	
		Oil ring		0.20 – 0.80		1.2	

Downloaded from www.Manualslib.com manuals search engine

Part	Inspection Items		Standard Dimension	Standard Assembling Value	Repair Value	Service Limit	Remarks
Connecting rod	Torsion of large end and small end holes (per 100 mm)			Less than 0.08	More than 0.2		
	Parallelism of large end and small end holes (per 100 mm)			Less than 0.05	More than 0.15		
	Longitudinal play of connecting rod and crank pin			0.1 – 0.3		0.7	
	Clearance between connecting rod bearing and crank pin			0.035 – 0.083		0.2	Oil clearance
	Connecting rod bearing (bore x width)		ϕ 44×19.8				
	Connecting rod tightening torque N·m {kgf·m}			49.0 – 53.9 {5.0–5.5}			
	Weight variation of piston after assembly (g)		Less than 10				
Crank shaft	Journal dia.		ϕ 58	ϕ 57.957 – 57.97	ϕ 57.90		
	Crank pin dia.		ϕ 44	ϕ 43.964 – 43.975	ϕ 43.90		
	Journal and pin finishing accuracy		1.6Z				
	Run-out of crankshaft			Less than 0.03	0.06		
	Axial play of crankshaft			0.1 – 0.4	0.5		
	Thrust washer thickness		3	2.95 – 3.00		2.8	
	Bush (journal metal) bore × outside dia.		ϕ 58× ϕ 62				
	Clearance between crank journal and bush (journal metal)			0.044 – 0.116		0.2	Oil clearance
	Center bearing (bore × outside dia.)		ϕ 58× ϕ 62				
	Clearance between crank journal and center bearing			0.044 – 0.116		0.2	Oil clearance
	Bearing holder (upper and lower) tightening torque N·m {kgf·m}			49 – 53.9 {5.0 – 5.5}			
Camshaft	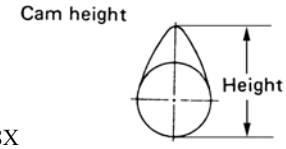 138X	For intake and exhaust valves		34.441 – 34.5076		34.1	
		For injection pump		42.99 – 43.01		42.8	
	Cam shaft runt			0.03	0.1		
	Cam gear backlash			0.08		0.25	
Valve	Intake valve stem		6.97	6.955 – 6.97		6.89	
	Exhaust valve stem		6.95	6.94 – 6.95		6.84	
	Clearance between valve stem and valve guide	Intake		0.03 – 0.06		0.2	at cold
		Exhaust		0.045 – 0.075		0.25	
	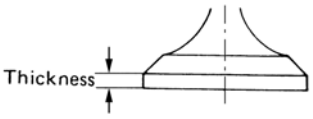 139X		1.0	0.775 – 1.075		0.5	

Downloaded from www.Manualslib.com manuals search engine

Part	Inspection Items		Standard Dimension	Standard Assembling Value	Repair Value	Service Limit	Remarks
Valve	Valve clearance (both intake and exhaust)			0.2	0.5		When cold
	Valve spring	Spring force (when installing length is compressed to 30.4 mm)		8.1		7	
		High		35		33.5	
		Squareness 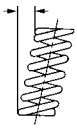 140X		1.2		2.0	
	Intake valve	Opening angle before TDC	13°				
		Closing angle after BDC	43°				
	Exhaust valve	Opening angle before BDC	43°				
		Closing angle after TDC	13°				
Push rod	Overall length		174.3	174.1 – 174.5			
	Outer diameter		ϕ 6.3				
Rocker arm	Wear of rocker arm shaft		ϕ 11.66	ϕ 11.65 – 11.67		ϕ 11.57	
	Clearance between rocker arm and shaft			0.032 – 0.068		0.2	Oil clearance
Oil pump							
	Oil pressure switch working pressure kPa {kgf/cm^2}		29.4 {0.3}	19.6 – 39.2 {0.2 – 0.4}			
	Relief valve opening pressure kPa {kgf/cm^2}			24.5 – 34.3 {2.5 – 3.5}			
	Lubrication oil volume (ℓ)		4.6				At replacing filter
	Tip clearance (between rotor and vane)			0.01 – 0.15		0.25	
	Side clearance (between rotor and cover)			0.1 – 0.15		0.2	
Injection pump	Type		104134 - 3050				BOSCH
	Pump plunger dia.						
	Pump plunger stroke						
	Injection timing	Before T.D.C.		18° – 20°			
		Piston displacement (before T.D.C.)		2.59 – 3.187			

Downloaded from www.Manualslib.com manuals search engine

Part	Inspection Item	Standard Dimensions	Standard Assembling Vlue	Repair Vlue	Service Limit	Remarks
Injection nozzle	Type	(Nozzle) 105007 - 1170 (NP-DN4PDN117)				BOSCH
	Injection pressure MPa {kgf/cm^2}		12.25 – 13.23 {125 – 135}			
	Injection angle	4°				
	Nozzle and holder tightening torque N·m {kgf·m}		58.8 – 68.6 {6 – 7}			
Cooling conditions						
	Cooling water amount (ℓ)	5.1				Reserve tank 0.6 ℓ
	Thermostat operating temperature (°C)	82	80 – 84			
	Thermostat full open temperature (°C)	95				
	V belt (fan) looseness (load at center 49 N {5 kgf })		5 – 10			Dimension A 36.5
	Start to open pressure of radiator cap pressure valve kPa{kgf/cm^2}	73.5 {0.75}	88.2 {0.9}			
	Start to open pressure of radiator cap negative pressure valve kPa{kgf/cm^2}	4.9 {0.05}	Less than 4.9 {0.05}			
Starting motor	Model	M001T66081				
	No. of teeth of pinion gear	9				
	Pinion gear shifting method	Magnetic shifting				
	Wear of commutator dia.	ϕ 29.4			ϕ 28.8	
	Brush length	17.5			10	
	Brush spring pressure N {kgf}		22.5 – 32.5 {2.3 – 3.3}		10 {1.0}	
Alternator	Type	A007T03877				12 V – 40 A
	Slip ring: Diameter	ϕ 22.7			22.1	
	Slip ring: Surface condition			Correct with cloth file if stained or damaged		
	Brush length	18.5			5	
	Brush spring pressure N (gf)		4.6 – 5.8 {470 – 590}		2.6 {270}	

Downloaded from www.Manualslib.com manuals search engine

2. N843L

* Unit for values without unit in the column of inspection item is mm.

Part	Inspection Items		Standard Dimension	Standard Assembling Value	Repair Value	Service Limit	Remarks
Cylinder head	Cylinder compression pressure MPa {kgf/cm^2}			More than 2.94 {30}	2.45 {25}		Engine speed at 200 rpm
	Cylinder head tightening torque N·m {kgf·m}			98 – 103 {10.0 – 10.5}			Coat Molycoat grease.
	Distortion of cylinder head bottom surface (mounting surface)			Less than 0.05	0.12		
	Valve seat recess (intake/exhaust) 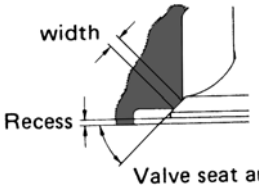 141X			0.85 – 1.15		1.8	Valve sheet angle 45°
	Valve seat contact width	Intake		1.66 – 1.87	2.5		
		Exhaust		1.66 – 1.73	2.5		
Cylinder block							
	Bore		ϕ 84	ϕ 84 – 84.019	ϕ 84.2	ϕ 84.2	
	Distortion on cylinder block top surface			Less than 0.05	0.12		
Piston	Longer dia. at skirt		ϕ 83.955	ϕ 83.948 – 83.963		ϕ 83.7	
	Clearance to cylinder			0.0375 – 0.0715		0.25	At 20°C
	Clearance between piston pin hole and pin			-0.010 – +0.007		0.02	
Piston pin	Pin outside dia.		ϕ 28	ϕ 27.996 – 28.0		ϕ 27.98	
	Clearance between rod small end bush and pin.			0.010 – 0.025		0.08	Oil clearance
Piston ring	Clearance between piston ring groove and ring	Top ring		0.07 – 0.11		0.25	
		2nd ring		0.04 – 0.08			
		Oil ring		0.03 – 0.13			
	Ring width	Top ring	2				
		2nd ring	1.5				
		Oil ring	4				
	Piston ring end gap	Top ring		0.20 – 0.35		1.0	
		2nd ring		0.20 – 0.40		1.0	
		Oil ring		0.20 – 0.80		1.2	

Downloaded from www.Manualslib.com manuals search engine

Part	Inspection Items		Standard Dimension	Standard Assembling Value	Repair Value	Service Limit	Remarks
Connecting rod	Torsion of large end and small end holes (per 100 mm)			Less than 0.08	0.2		
	Parallelism of large end and small end holes (per 100 mm)			Less than 0.05	0.15		
	Longitudinal play of connecting rod and crank pin			0.1 – 0.3		0.7	
	Clearance between connecting rod bearing and crank pin			0.035 – 0.083		0.2	Oil clearance
	Connecting rod bearing (bore x width)		ϕ 44×19.8				
	Connecting rod tightening torque N·m {kgf·m}			49.0 – 53.9 {5.0–5.5}			
	Weight variation of piston after assembly (g)		Less than 10				
Crank shaft	Journal dia.		ϕ 68	ϕ 67.957 – 67.97	ϕ 67.90	ϕ 67.9	
	Crank pin dia.		ϕ 52	ϕ 51.964 – 51.975	ϕ 51.90	ϕ 51.9	
	Run-out of crankshaft			Less than 0.03	0.06		
	Axial play of crankshaft			0.1 – 0.4	0.5		
	Thrust washer thickness		3	2.95 – 3.00		2.8	
	Bush (journal metal) bore × outside dia.		ϕ 58× ϕ 62				
	Clearance between crank journal and bush (journal metal)			0.044 – 0.116		0.2	Oil clearance
	Center bearing (bore × outside dia.)		ϕ 58× ϕ 62				
	Clearance between crank journal and center bearing			0.044 – 0.102		0.2	Oil clearance
	Bearing holder (upper and lower) tightening torque N·m {kgf·m}			49 – 53.9 {5.0 – 5.5}			
Camshaft	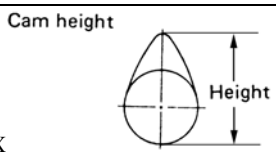 142X	For intake and exhaust valves		34.441 – 34.5076		34.1	
		For injection pump		42.99 – 43.01		42.8	
	Cam shaft runt			Less than 0.03	0.1		
	Cam gear backlash			0.08		0.25	
Valve	Intake valve stem		6.97	6.955 – 6.97		6.89	
	Exhaust valve stem		6.95	6.94 – 6.95		6.84	
	Clearance between valve stem and valve guide	Intake		0.03 – 0.06		0.2	
		Exhaust		0.045 – 0.075		0.25	
	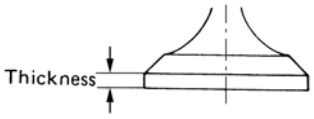 143X		1.0	0.775 – 1.075		0.5	

Downloaded from www.Manualslib.com manuals search engine

Part	Inspection Items		Standard Dimension	Standard Assembling Value	Repair Value	Service Limit	Remarks
Valve	Valve clearance (both intake and exhaust)			0.2	0.5		When cold
	Valve spring	Spring force (when installing length is compressed to 30.4 mm)		8.1		7	
		Free height		35		33.5	
		Squareness 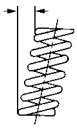 144X		Less than 1.2		2.0	
	Intake valve	Opening angle before TDC	13°				
		Closing angle after BDC	43°				
	Exhaust valve	Opening angle before BDC	43°				
		Closing angle after TDC	13°				
Push rod	Overall length		174.3	174.1 – 174.5			
	Outer diameter		ϕ 6.3				
Rocker arm	Wear of rocker arm shaft			ϕ 14.95 – 14.97		ϕ 14.87	
	Clearance between rocker arm and shaft			0.032 – 0.068		0.2	Oil clearance
Oil pump							
	Oil pressure switch working pressure kPa {kgf/cm^2}		29.4 {0.3}	19.6 – 39.2 {0.2 – 0.4}			
	Relief valve opening pressure kPa {kgf/cm^2}			24.5 – 34.3 {2.5 – 3.5}			
	Lubrication oil volume (ℓ)		5.6				At replacing filter 5.0 ℓ
	Tip clearance (between rotor and vane)			0.01 – 0.15		0.25	
	Side clearance (between rotor and cover)			0.1 – 0.15		0.2	
Injection pump	Type		104134 – 3050				BOSCH
	Pump plunger dia.						
	Pump plunger stroke						
	Injection timing	Before T.D.C.		18° – 20°			
		Piston displacement (before T.D.C.)		3.195 – 3.932			

Downloaded from www.Manualslib.com manuals search engine

Part	Inspection Item	Standard Dimensions	Standard Assembling Vlue	Repair Vlue	Service Limit	Remarks
Injection nozzle	Type	(Nozzle) 105007 - 1170 (NP-DN4PDN117)				BOSCH
	Injection pressure MPa {kgf/cm^2}		15.20 – 16.18 {155 – 165}			
	Injection angle	4°				
	Nozzle and holder tightening torque N·m {kgf·m}		58.8 – 68.6 {6 – 7}			
Cooling conditions						
	Cooling water amount (ℓ)	5.3				Reserve tank 0.6 ℓ
	Thermostat operating temperature (°C)	82	80 – 84			
	Thermostat full open temperature (°C)	95				
	V belt (fan) looseness (load at center 49 N {5 kgf })		5			Dimension A 36.5
	Start to open pressure of radiator cap pressure valve kPa{kgf/cm^2}	73.5 {0.75}	88.2 {0.9}			
	Start to open pressure of radiator cap negative pressure valve kPa{kgf/cm^2}	4.9 {0.05}	Less than 4.9 {0.05}			
Starting motor	Model	RA(228000 – 5121)				
	No. of teeth of pinion gear	9				
	Pinion gear shifting method	Magnetic shifting				
	Wear of commutator dia.	ϕ 35.0			ϕ 34.0	
	Brush length	15			12	
Alternator	Type	A007T03877				12 V – 40 A
	Slip ring: Diameter	ϕ 22.7			22.1	
	Slip ring: Surface condition			Correct with cloth file if stained or damaged		
	Brush length	18.5			5	
	Brush spring pressure N (gf)		4.6 – 5.8 {470 – 590}		2.6 {270}	

Downloaded from www.Manualslib.com manuals search engine

https://truckmanualshub.com/

Chapter 3. TRANSMISSION AND BRAKE

Downloaded from www.Manualslib.com manuals search engine

https://truckmanualshub.com/

1. DESCRIPTION AND OPERATION

1) Removal

The transaxle assembly consists of a two-speed gearbox, a differential assembly, PTO clutch assembly, PTO shaft and inboard brake.

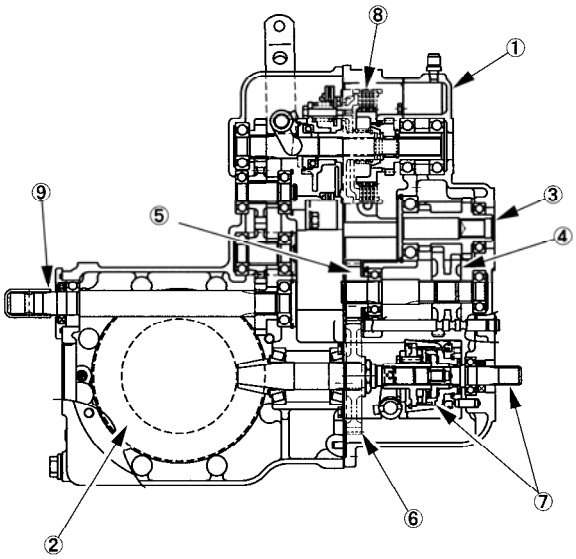

300X

Transaxle Assembly

1. Transmission Gearbox (2-Speed)
2. Differential Assembly
3. Input Gear Cluster
4. Sliding Gears
5. Fixed Gears
6. Pinion Drive Gear
7. Rear Wheel Drive Output Shaft and Two Way Clutch
8. PTO Clutch Assembly
9. PTO Shaft

The front axle, consists of differential lock linkage, axles, and brakes.

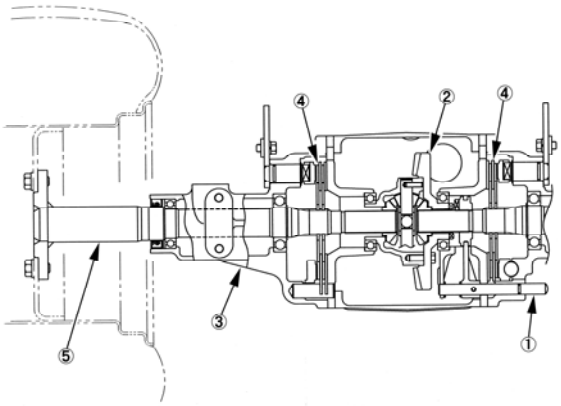

301X

Transaxle Assembly

1. Differential Lock Lever
2. Differential Assembly
3. Axle Housing
4. Inboard Brake
5. Drive Axle

Downloaded from www.Manualslib.com manuals search engine

The range gearbox housing also supports the differential assembly, Figure 301X. The two-speed transmission gearbox consists of constant mesh spur gears and sliding gears. The range gearbox also contains a four wheel drive output shaft and two way clutch.

The range selector lever is located on the left-hand panel adjacent to the operator's seat. The range selector lever can be shifted when the HST pedals are in neutral. The range selector lever and Four-Wheel-Drive (FWD) selector lever are activated by the same lever.

The range selector lever has three positions; forward (high range) mid-position (neutral) and rear ward (Low range). In high range "H" forward speed ranges from 0 – 16.6 km/h and low range from 0 – 9.7 km/h. In reverse the high speed ranges from 0 – 10.7 km/h and in low range from 0 – 6.3 km/h.

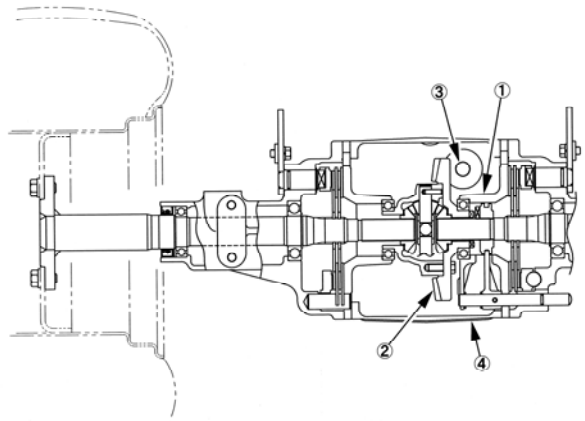

302X

Range Gear and Differential Housing

1. Differential Lock Coupler
2. Differential
3. PTO Shaft
4. Gearbox Housing

The differential assembly consists of a differential lock coupler, pinion differential and two bevel side gears splined directly to the axle shafts.

2) Brakes

The brakes are located in the front axle housing. The brakes are wet type disc brakes and consists of stator, disc, steel ball, spring, actuate plate and brake lever. The brakes are mechanically applied by individual pedals located on the left side of the steering column (Dealer option).

A master brake pedal, located on the right side, applies both brakes evenly.

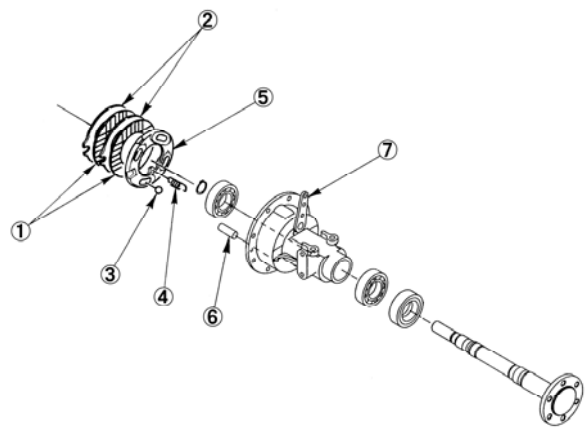

303X

Brakes

1. Brake Disc
2. Stator
3. Steel Ball
4. Spring
5. Actuator Plate
6. Pin
7. Brake Lever

3) Differential Lock

A differential lock is provided to lock the differential so that both front wheels rotate when power is provided by the transmission even though one wheel may lose traction. The differential lock control pedal is foot operated and is located on the left side of the steering column.

Downloaded from www.Manualslib.com manuals search engine

4) Power Flow (Range gear)

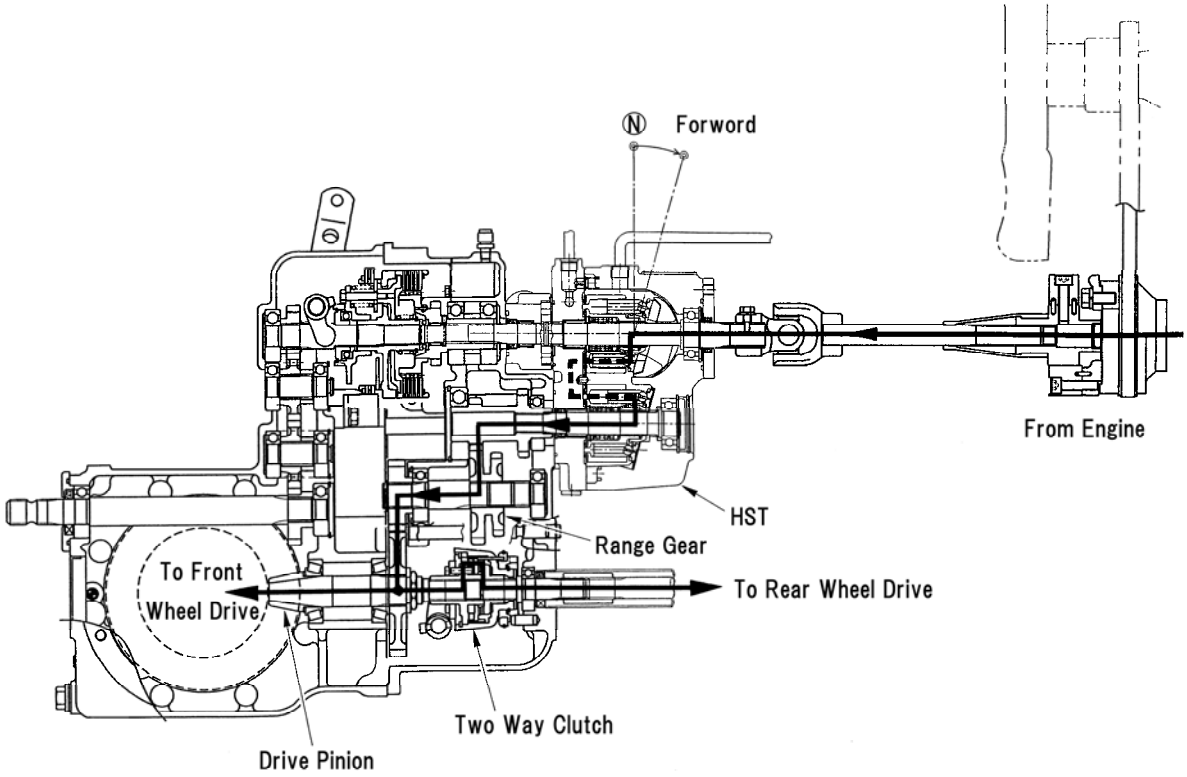

Range Change Lever : L Position

304X

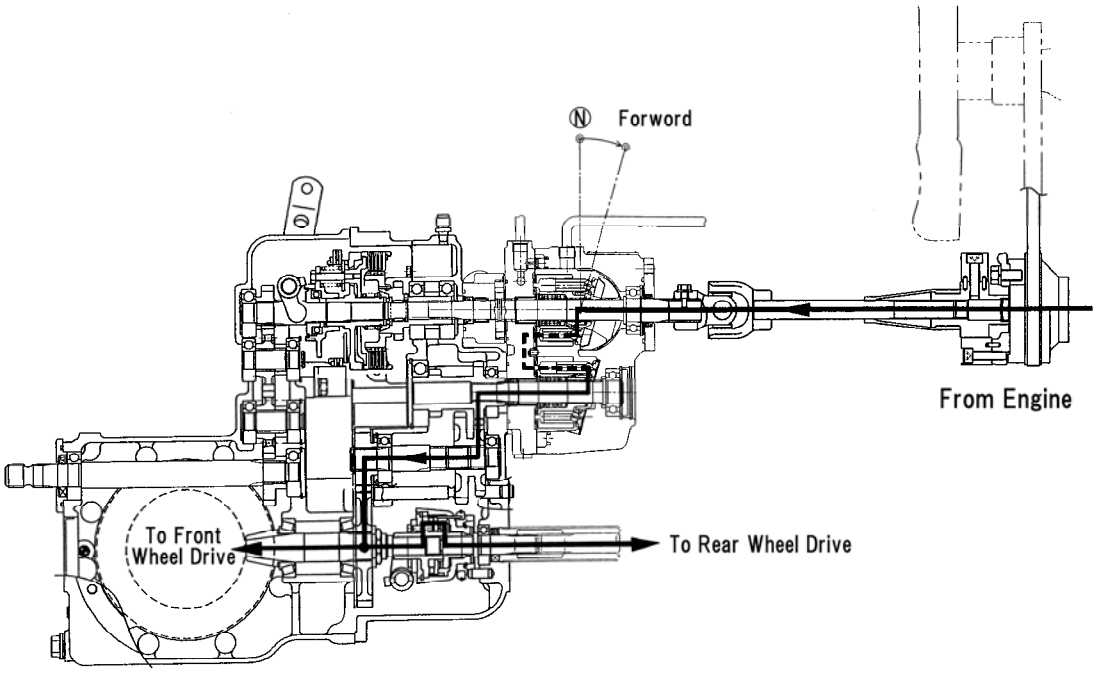

Range Change Lever : H Position

305X

Downloaded from www.Manualslib.com manuals search engine

5) Power Flow (PTO)

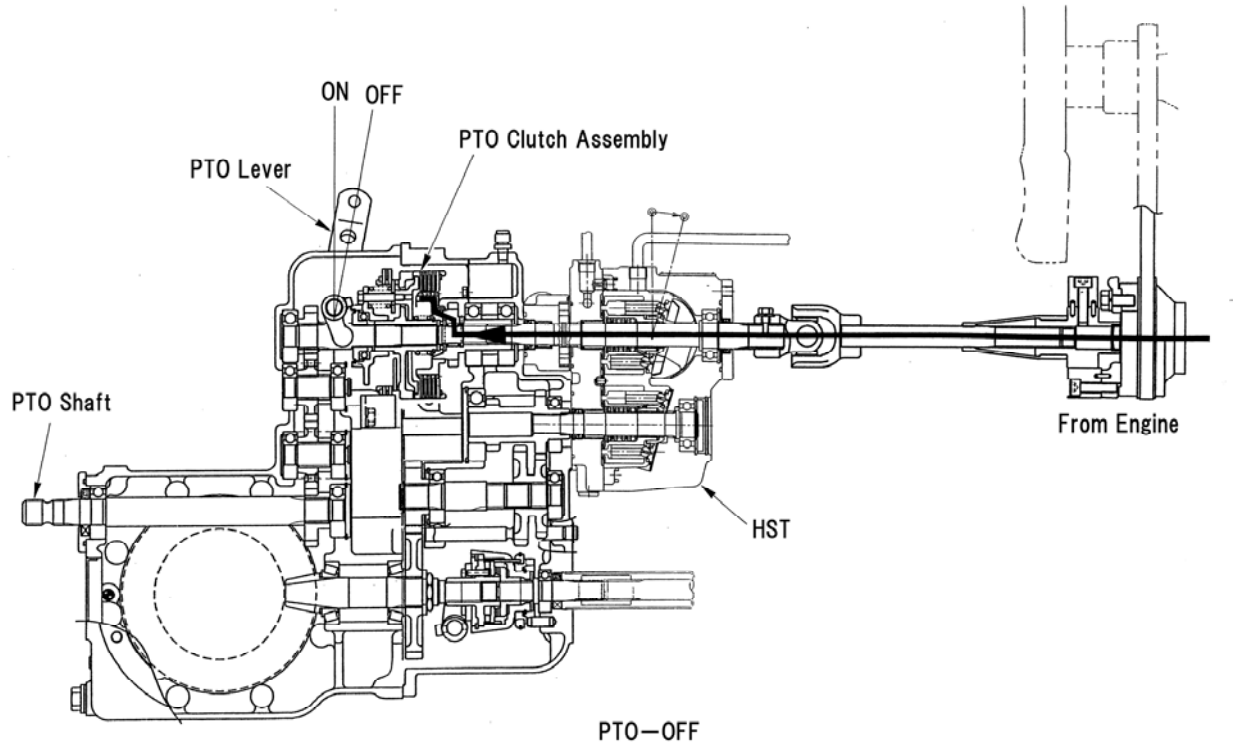

306X

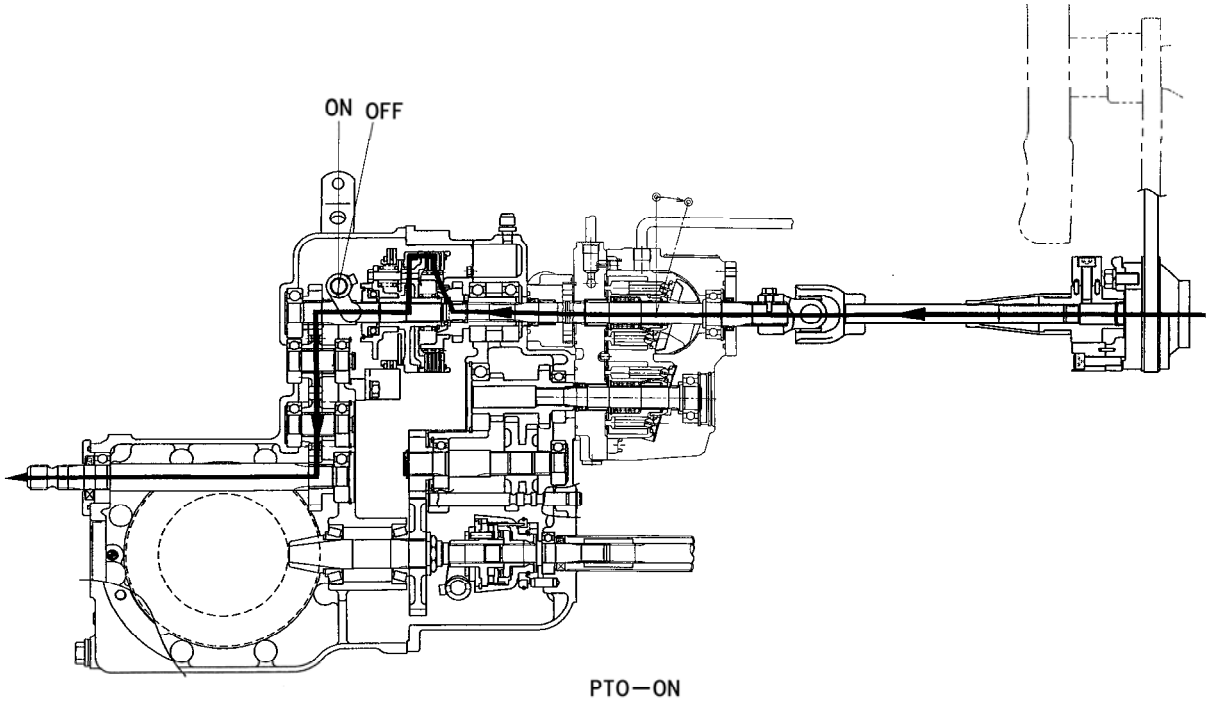

307X

Downloaded from www.Manualslib.com manuals search engine

2. TRANSMISSION UNIT

The transaxle assembly must be separated from the commercial mower to perform service work on the HST, transmission gearbox, four wheel drive output shaft differential.

1) Removal

1. Disconnect the negative battery cable.
2. Remove the grip, ①, side cover ②, and fender ③.
3. Disconnect the seat safety switch connectors under the seat floor and remove the seat assembly, ④, from the seat floor.

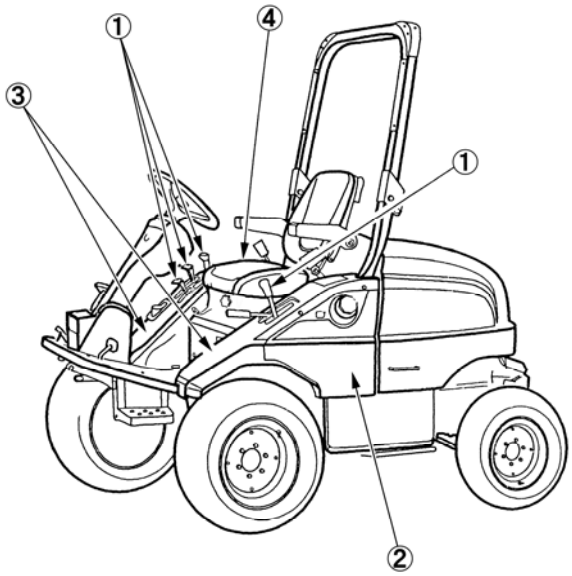

308X

4. Pull up the lever and open the floor, and remove the split pin ①, and separate the damper ② from the frame.
5. Remove the floor and floor bracket from the upper frame.

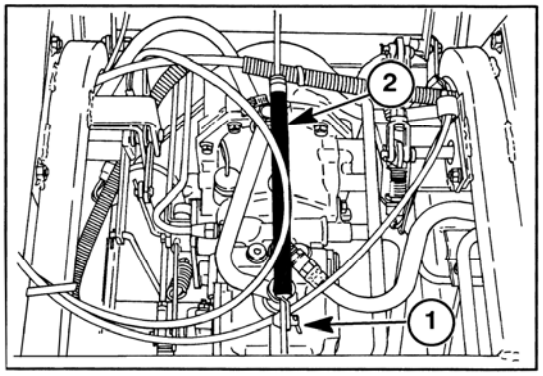

309X

6. Disconnect the parking brake wire ④ from the both brake levers.
7. Remove the split pin, washer and pin, and disconnect the brake rod ①, from the both brake levers.
8. Remove the split pin and pin, and disconnect the differential lock control rod ②, from the differential lock lever.

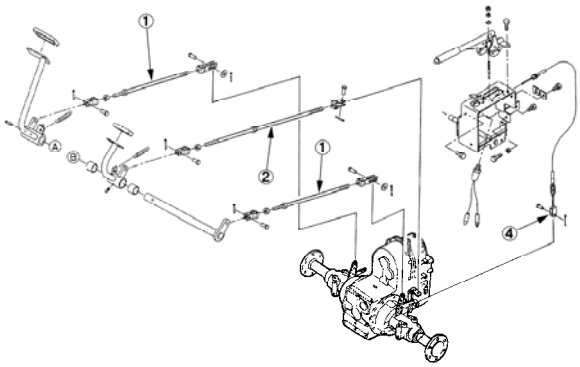

310X

Downloaded from www.Manualslib.com manuals search engine

9. Disconnect the power steering oil pipes ①, from the power steering cylinder.
10. Place the safety stands under the main frame.
11. Remove the rear axle bearing holders ②, from the frame and remove the rear axle assembly ③, pipe, drive shaft and coupling from the tractor.

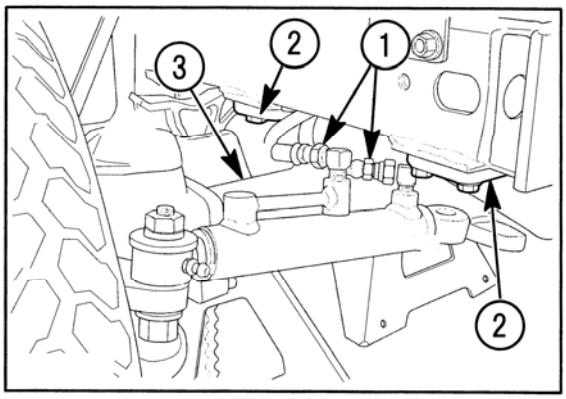

311X

12. Remove the fire wall sealed from under the radiator.
13. Remove the bolt ①, from the universal joint ②, and disconnect the joint from the HST input shaft by slide the joint to rearward.

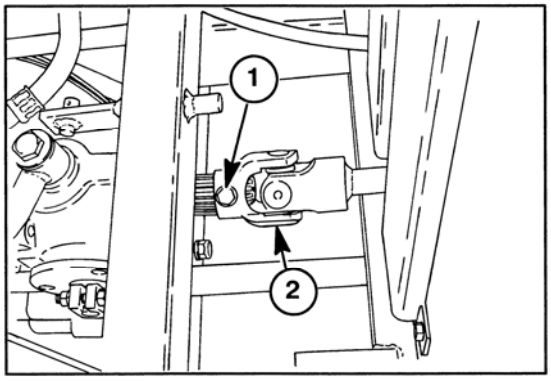

312X

14. Disconnect the wire connector from the HST neutral switch ①.

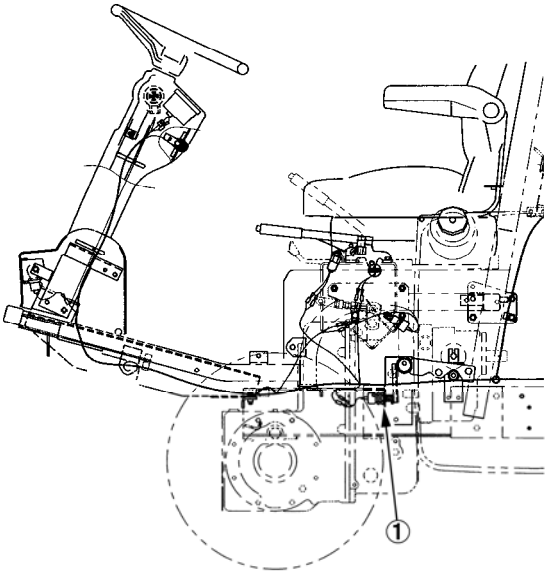

313X

Downloaded from www.Manualslib.com manuals search engine

15. Remove the split pin ①, and washer and disconnect the lift arm feed back (PTO safety stop) wire ②, from the R.H. lift arm.
16. Remove the bolt ③, and pin ④, and separate the hydraulic cylinder ⑤, from the lift arm.

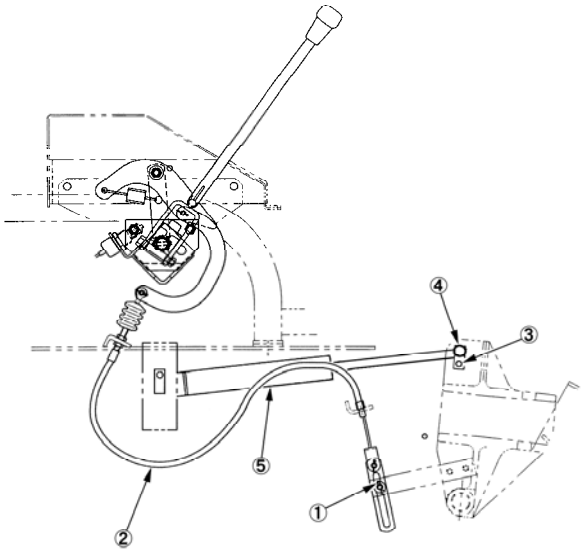

314X

17. Untighten the hose bands ①, and disconnect the return hose ②, from the vent hose on the transmission housing.
18. Disconnect the fork joint ③, by remove the split pin and pin for the PTO clutch control lever ④.
19. Remove the spring ⑤, from the PTO clutch control lever ④.

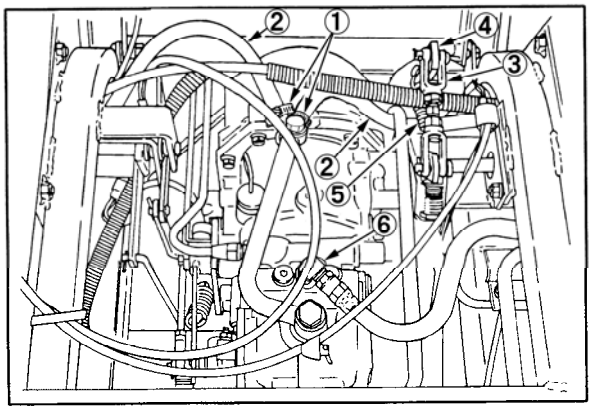

315X

20 Disconnect the oil pipe ①, from HST charge pump to power steering control valve.

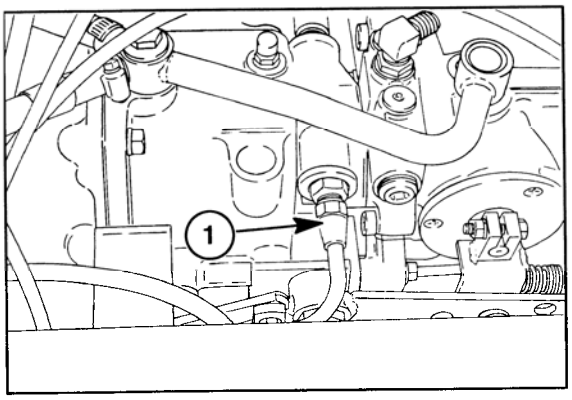

316X

Downloaded from www.Manualslib.com manuals search engine

21. Untighten the hose band ①, and disconnect the suction hose ②, for the hydraulic oil pump.

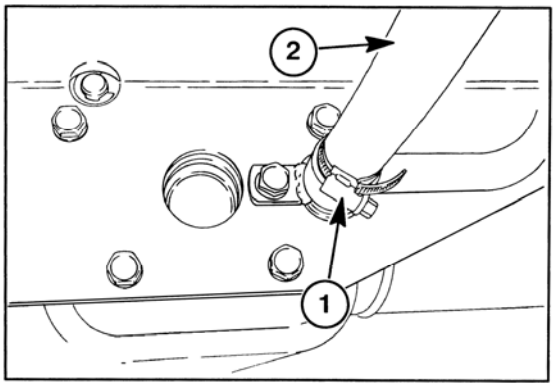

317X

22. Remove the split pin, washer and disconnect the HST speed control rood ①, from the HST control lever.
23. Remove the U-nut, and remove the damper ②, from the HST control lever.
24. Unhook the spring ③, from under the HST speed control lever.

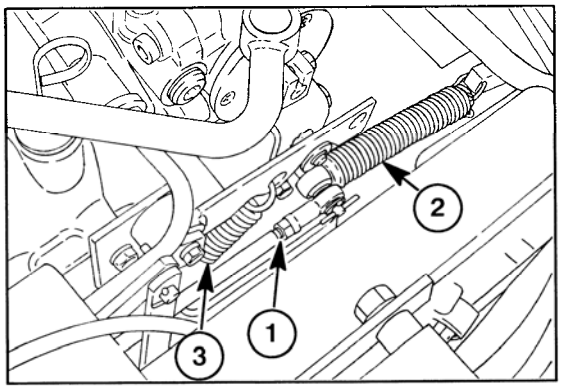

318X

25. Remove the splits pin, washer and disconnect the four-wheel drive control rod ①, and range gear control rod ②, from the change lever.

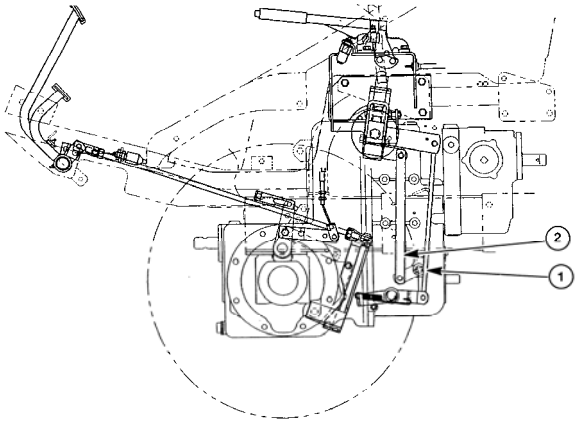

319X

26. Remove the banjo bolt and clamp ①, for the oil cooler return pipe, and disconnect the return pipe ②, from the oil cooler.
27. Use the two wrenches, and disconnect the feed pipe ⑥, for the HST on the top of the HST unit, Fig. 315X.

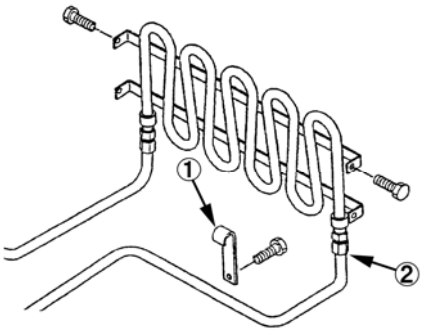

320X

Downloaded from www.Manualslib.com manuals search engine

28. Hold the front flame, with the chain block.
29. Remove the rear frame ①, attaching bolts ②, and nuts ③.

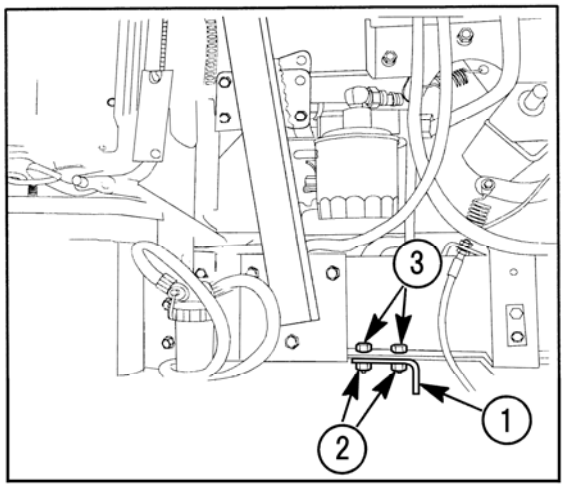

321X

30. Remove the bolts ①, for attached front axle housing.
31. Remove the front axle and transmission housing assembly ②, from the main frame.

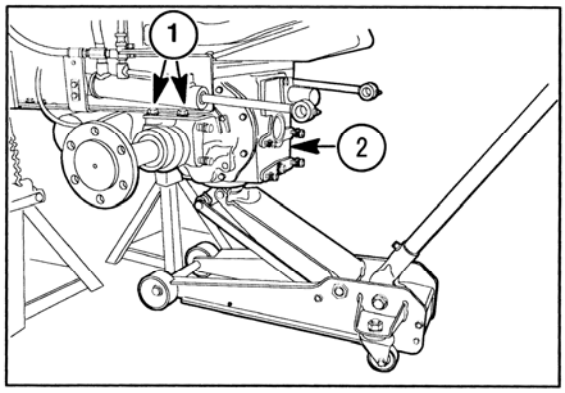

322X

32. Remove the rear frame ①, from the rear transmission housing.

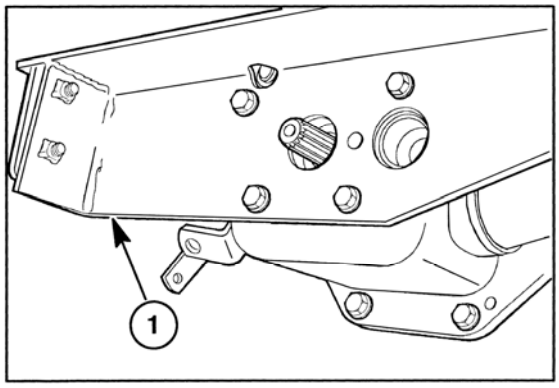

323X

33. Un hook the spring ④, remove the shift arm ①, and shift guide ②, as a set from the transmission. If necessary, remove the control lever ③, from the HST unit.

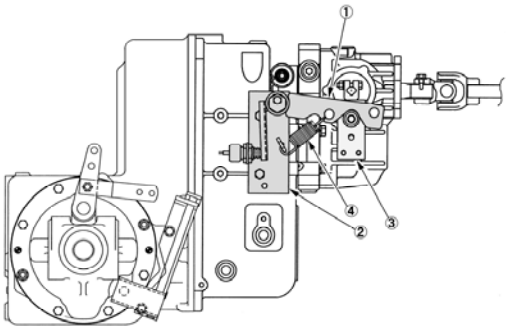

324X

Downloaded from www.Manualslib.com manuals search engine

2) Front Transmission Unit

(1) Disassembly

1. Remove the side PTO unit from the transmission housing and HST unit.

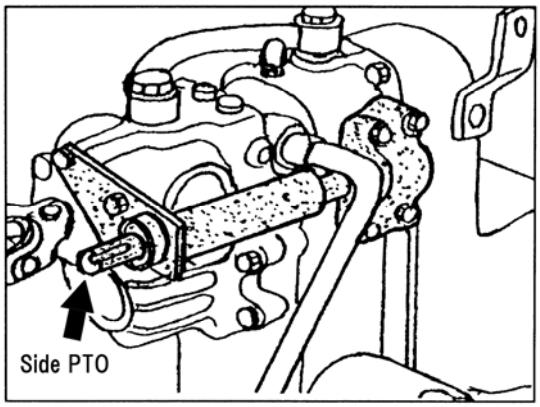

325X

2. Remove the HST unit ①, from the transmission assembly.

① HST Unit
② O-Ring
③ O-Ring
④ Bolt

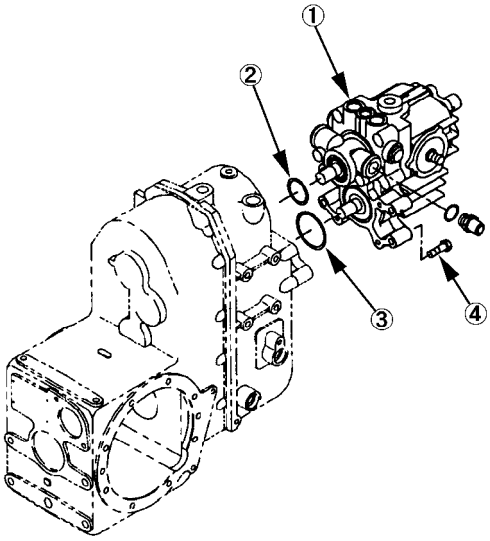

326X

3. Remove the L.H. wheel shaft housing ①, and bearing holder ②.

NOTE: Note the total amount of shims and thickness used between differential bearing and bearing holder.

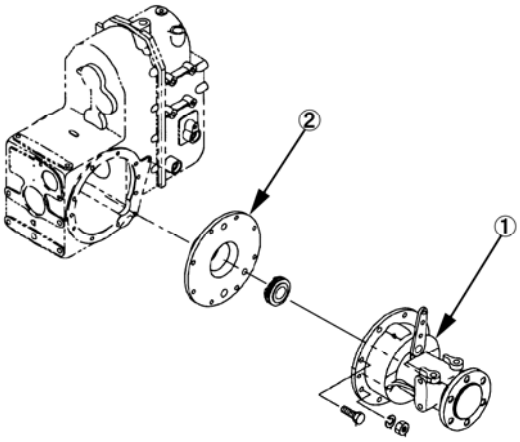

327X

Downloaded from www.Manualslib.com manuals search engine

4. Remove the L.H. wheel shaft housing ②, the bearing holder ③, and differential assembly ①.

   NOTE: Note the total amount of shims and thickness used between differential bearing and bearing holder.

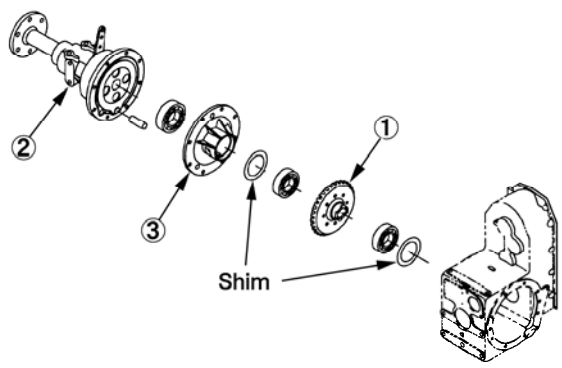

328X

5. Separate the rear transmission housing ①, from the front transmission housing ②.

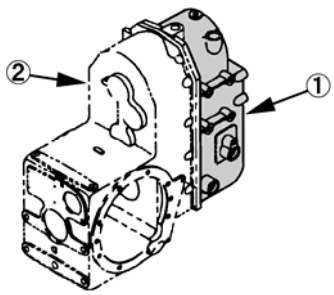

329X

6. Remove the seal cover ①, with oil seal ②, and O-Ring ⑧, from the transmission housing.
7. Drive out the PTO shaft ③, and remove the fixed gear ④, snap ring ⑤, bearings ⑥ and ⑦, from the transmission housing.

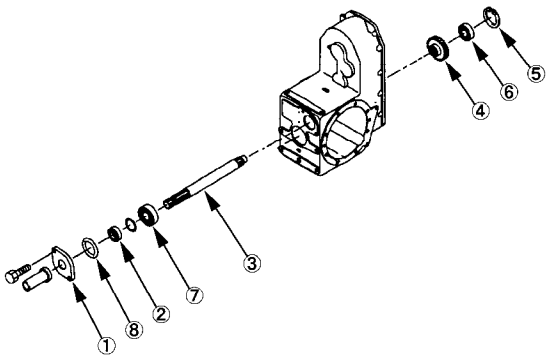

330X

Downloaded from www.Manualslib.com manuals search engine

8. Remove the PTO clutch assembly ①, and thrust bearing ②.
9. If necessary, remove the plate ③, from the transmission housing.

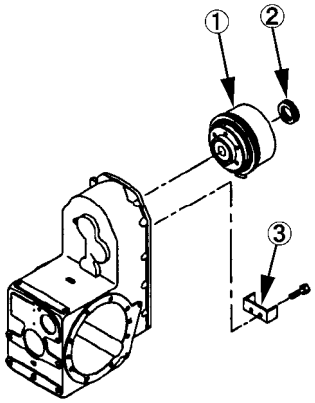

331X

10. Untighten the lock nut ①, on the drive pinion shaft ②.
11. Remove the washer ⑤, and fixed gear ④, from on the drive pinion shaft ②.

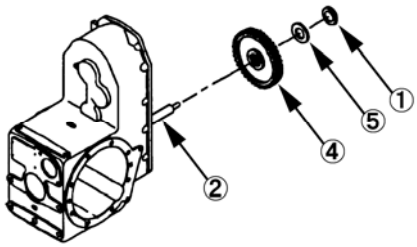

332X

12. Pull out the drive pinion shaft ①, thrust washer ④, and shims ⑤, to the front of the transmission housing.
13. Remove the bearings ② and ③ from the housing.
14. If necessary, drive out the seal cover ⑥, for inspect the ring gear backlash.

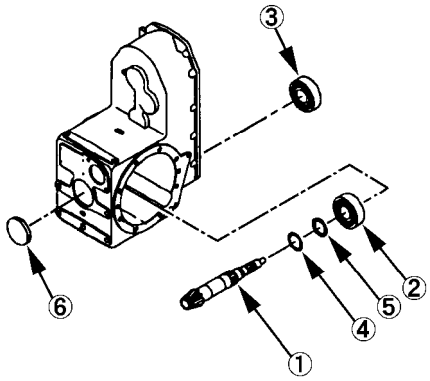

333X

15. Remove the snap ring ①, and pull out the counter shaft ②, with bearing ③, and collar 4.
16. Take out the fixed gear ⑤, and bearing, ⑥, from the housing.

NOTE: Put the identity make on the fixed gear by paint.

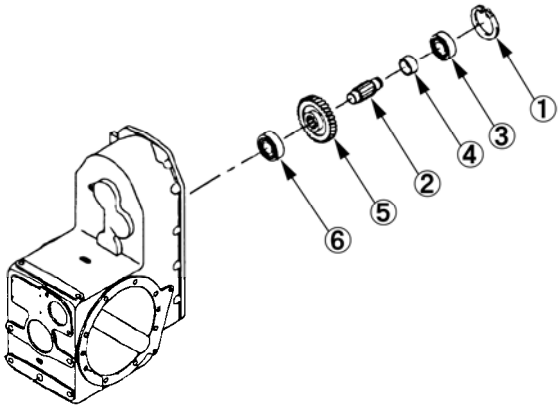

334X

Downloaded from www.Manualslib.com manuals search engine

17. Remove the snap ring ①, and pull out the counter shaft ②, with bearing ③.
18. Take out the collar ④, fixed gear ⑤, and bearing ⑥, from the housing.

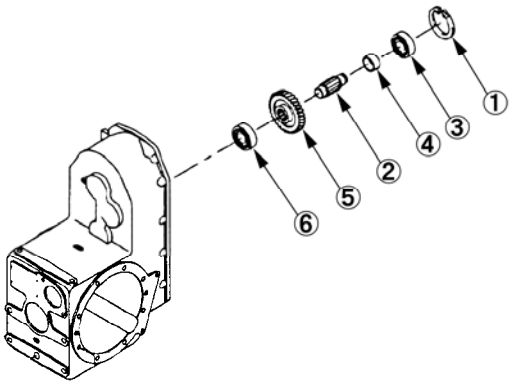

335X

19. Heat the two bolts ①, by burner and remove them, and pull out the PTO clutch shaft ②.
20. Take out the clutch fork ③, from the housing.
21. Remove the drive shaft ④, with snap ring ⑤.
22. Take out the fixed gear ⑥, and bearing ⑦.

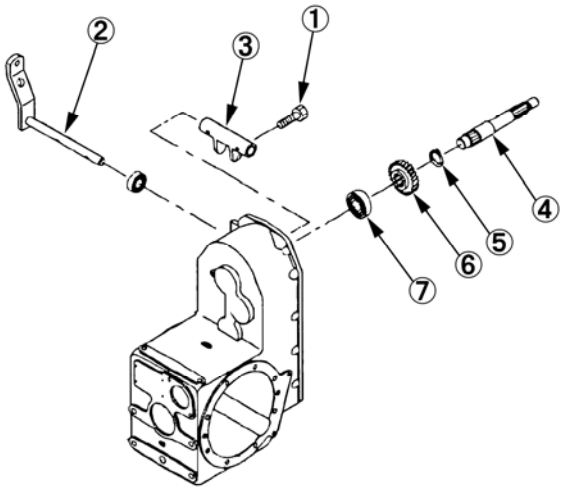

336X

(2) Inspection

1. Wash all components with a suitable cleaning solvent and air dry.
2. Inspect all bearings for excess wear, score marks, discoloration from overheating, or other damage. Rotate the bearings by hand and check for roughness while slowly rotating the inner and outer races.
3. Lubricate all bearings with a clean lubricant before installation.
4. Inspect the transmission case for cracks, worn bearing bores or other damage.
5. Inspect all for excess wear, chipped teeth, or other damage.
6. Inspect the shift forks for excess wear, bends or other damage.

Downloaded from www.Manualslib.com manuals search engine

(3) Assembly

Reassembly generally follows the disassembly procedure in reverse.

Be sure all components are free of dirt and foreign matter and lubricate all components with clean hydraulic oil on assembly.

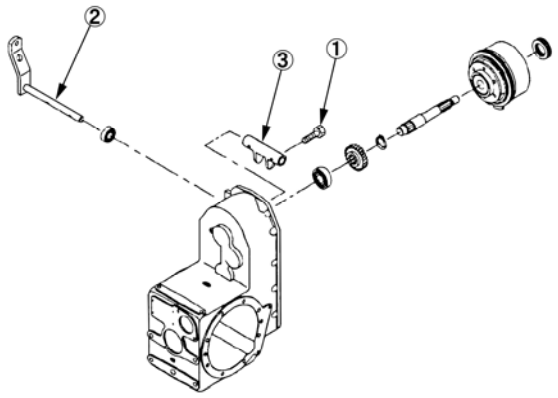

337X

During assembly observe the followings:

1. Remove the oil stained from the bolts ①, thread and thread holes of clutch shaft ②, with the solvent, and then apply the thread sealant to threads when install the clutch fork ③.

2. Position the lever ①, of clutch shaft as shown figure before install the PTO clutch assembly.

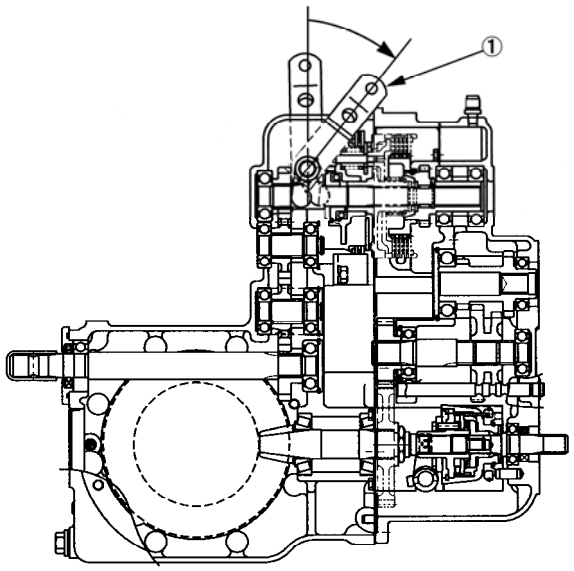

338X

Downloaded from www.Manualslib.com manuals search engine

3. The identity mark fixed gear ①, when removed is installed position A.

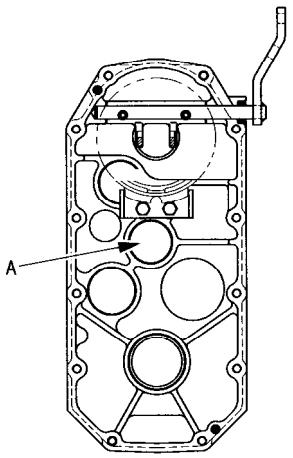

339X

4. The shims ①, are installed between thrust washer ②, and bearing ③, on the drive pinion ④.
5. Adjust the pinion bearing pre-load using a strong cord wrapped around the pinion shaft spline and a pull scale. Tighten the pinion nut to obtain the specified pounds of constant pull to rotate the pinion assembly.

   Pinion Bearing Pre-Load Constant Pull 196 N {20 kgf}

   NOTE: Turn drive pinion several times by hand before performing pull scale test.

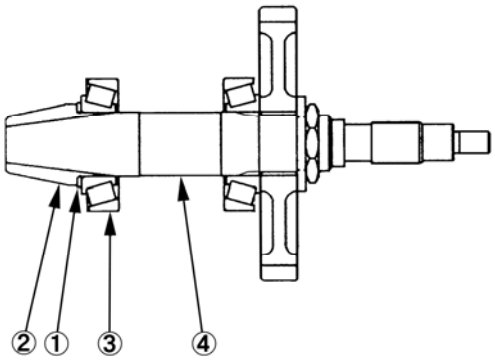

340X

6. Bend the lock nut flange by the chisel at the ditch of the pinion shaft after adjust the pre-load.

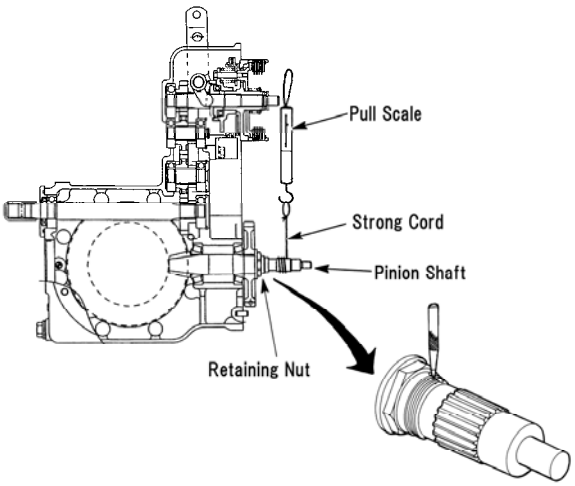

341X

Downloaded from www.Manualslib.com manuals search engine

7. If removed, use care the plate ①, direction for brake disc of PTO clutch assembly.
8. Align the brake disc projection ②, of PTO clutch in the plate ①.

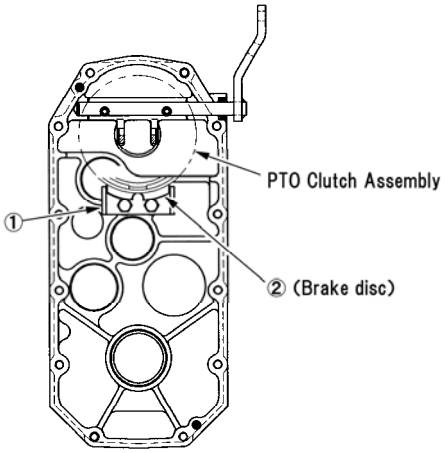

342X

9. Apply the grease to the 18 mm inside diameter of bearing race ①, and ball bearings ②, and install them on the PTO clutch drive shaft.
   The 17 mm inside diameter of bearing race ③, is installed to the coupling with apply the grease in the rear transmission housing.

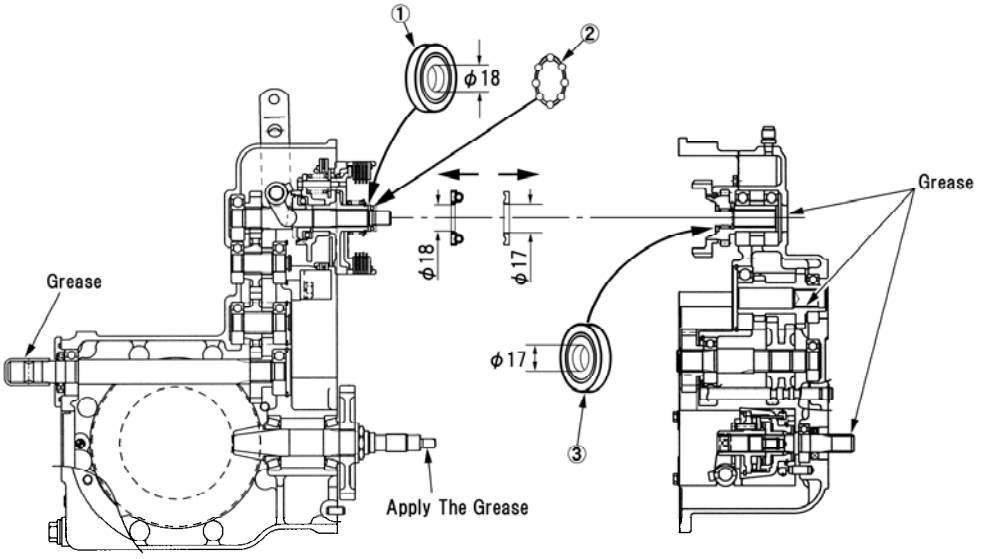

342-1X

10. Apply requid gasket to the matching surfaces of both transmission housing.
11. PTO cluch separater plates tooth are lined up before install rear transmission housing.

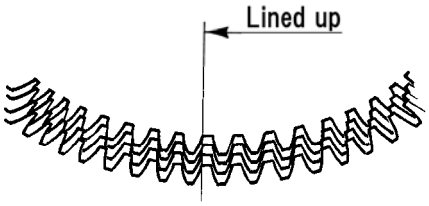

343X

Downloaded from www.Manualslib.com manuals search engine

12. Install the guide stick (special tool) to the transmission housing, and align the each part as follows while sliding the rear transmission housing.

    - Align the drive pinion shaft and center to 4WD one way clutch center.
    - Align the PTO clutch sepatater plates with coupling of rear transmission housing.
    - Align the fixed gear on the drive pinion shaft and fixed gear on the range counter shaft while rotating the mainshaft.

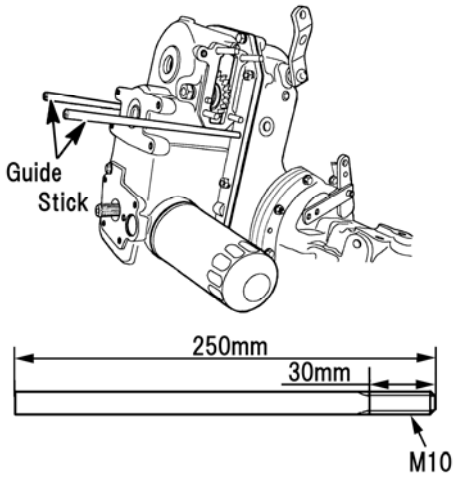

344X

Downloaded from www.Manualslib.com manuals search engine

3) Rear Transmission Unit

(1) Disassembly

1. Heat the two bolts ①, by burner and remove them and pull out the shaft ②, from the rear transmission housing, on 4WD model.
2. Take out the shifter fork ③, with tips ⑨, from the housing on 4WD model.
3. Remove the thrust washer (thick) ④, two way clutch assembly ⑤, thrust washer (thin) ⑥, drive shaft ⑦, with bearing ⑧, from the rear transmission housing, on 4WD model.

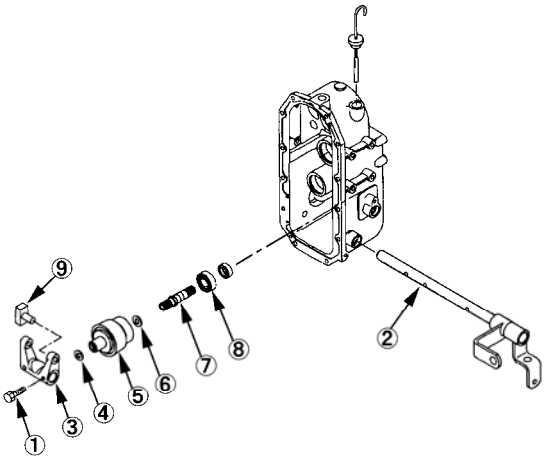

346X

4. Remove the snap ring ①, shifter rod ②, steel ball ③, spring ④, and range shifter fork ⑤.

   WARNING:
   Hold a shop towel over the top of the shift fork to restrain the detent ball when the rail is removed from the fork. The detent ball will be expelled with considerable force when it is released.

5. Drive out the roll pin ⑥, and remove the change lever ⑦.
6. Remove the bolt ⑧, and plate ⑨, and pull out the shift arm ⑩, in the transmission.

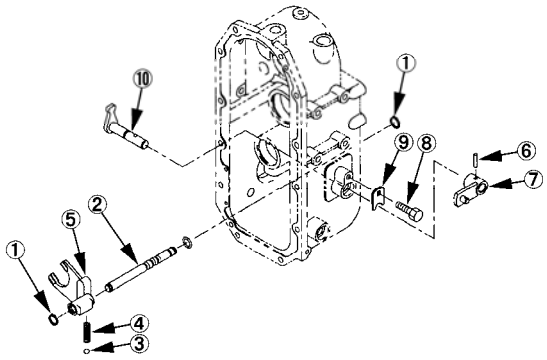

347X

7. Remove the snap ring ①, and fixed gear ② from range gear counter shaft ③.
8. Remove the snap ring ④, and pull out the range gear counter shaft ③, with bearing ⑤.
   Take out the range slide gear ⑥, and bearing ⑦.
9. Remove the plate ⑧, with magnets ⑨.
10. Remove the snap ring ⑩, and drive out the main shaft (gears) ⑫, with bearings ⑪ and ⑬.

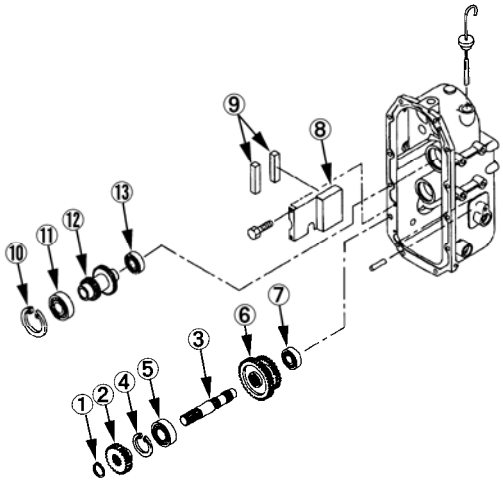

348X

Downloaded from www.Manualslib.com manuals search engine

11. Remove the nut ①, and washer ⑧, drive out the countershaft ②, with O-Ring ③, from the housing.
12. Take out the collar ⑦, and the counter gear ④, with bearing ⑤, and snap ring ⑥.

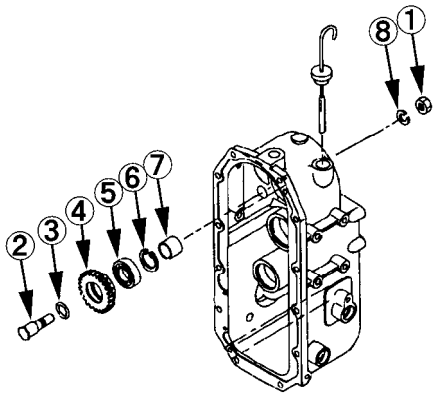

349X

13. Remove the thrust bearing ⑤, and drive out the coupling ①, with needle bearing ⑥.
14 Take out the collar ④, bearings ② and ③, from the transmission housing.
15. If necessary, remove the plate ⑦, from the housing.

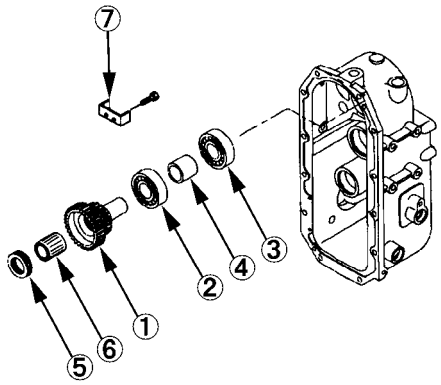

350X

(2) Inspection

1. Wash all components with a suitable cleaning solvent and air dry.

2. Inspect all bearings for excess wear, score marks, discoloration from overheating, or other damage. Rotate the bearings by hand and check for roughness while slowly rotating the inner and outer races.

3. Lubricate all bearings with a clean lubricant before installation.

4. Inspect the transmission case for cracks, worn bearing bores or other damage.

5. Check the detent springs for wear, chipped or weak spring extension.

6. Inspect the detent balls for excess wear or damage.

7. Inspect the shift rail detent grooves for excess wear.

8. Inspect all gears for excess wear, chipped teeth, or other damage.

9. Inspect the shift forks for excess wear, bends or other damage. See “Wear Specifications,” this Chapter.

Downloaded from www.Manualslib.com manuals search engine

(3) Assembly

Reassembly generally follows the disassembly procedure in reverse.

Be sure all components are free of dirt and foreign matter and lubricate all components with clean hydraulic oil on assembly.

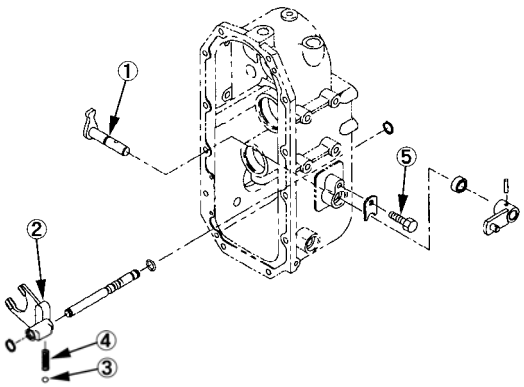

351X

During assembly observe the followings:

1. Install the range shift arm ①, in the rear transmission housing at first.

2. Install the range slide gear shifter fork ②, as follows:

- Install the spring ④, and steel ball ③, in the shifter fork ②, and press them.
- Assemble the stick (out side diameter is Ø14 – Ø14.5, length is 45 – 50 mm) ⑤, in the hole of shifter fork.
- Place the assembled shifter fork ②, on the range sliding gear in the rear transmission housing.
- Install the shifter rod ⑥, through the housing and shifter fork ②, and secure with snap ring ⑦.
- Take out the stick ⑤.

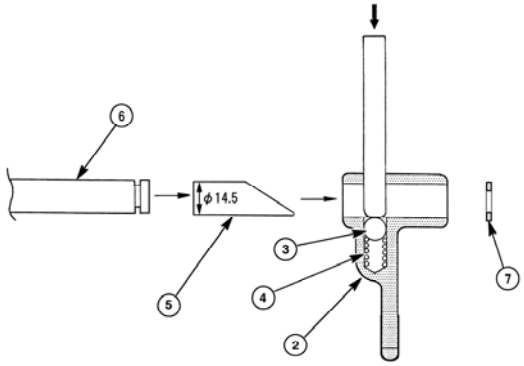

352X

Downloaded from www.Manualslib.com manuals search engine

3. Install the two way clutch assembly (4WD only) as follows:

- Install the oil seal ①, and bearing ②, in the housing.
- Install the 4WD drive shaft ③, in the housing.
- Install the small thrust washer ④, on the 4WD drive shaft with the oil ditch toward the two way clutch assembly ⑤.

- Install the two way clutch assembly ⑤, on the drive shaft.

NOTE: Align the notch of the two way clutch assembly to pin in the housing.

- Install the large thrust washer ⑥, on the two way clutch assembly with the oil ditch toward the two way clutch assembly.

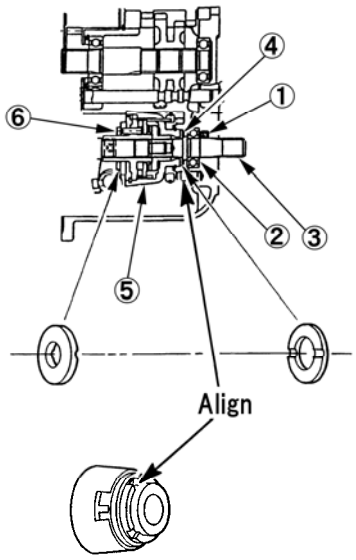

353X

- Remove the oil stained from the bolt thread ⑦, and thread holes of shaft ⑧, with the solvent, and then apply the thread sealant to threads when install the shifter fork ⑨.

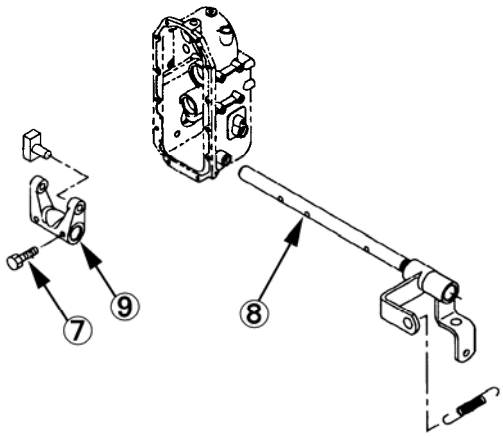

354X

NOTE: Take care the direction of the tips on the shifter fork as shown Figure 354-1X.

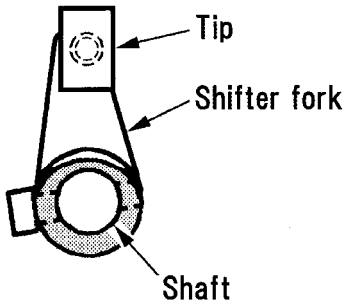

354-1X

4. Installation of the rear transmission housing to the front transmission housing generally follows the “Front Trans Mission Assembly”.

Downloaded from www.Manualslib.com manuals search engine

4) PTO Clutch Unit

(1) Disassembly

Remove the PTO clutch assembly. See in this chapter 3.

1. Remove the snap ring ①, back plate ②, disc plates ③, and separator plates ④.

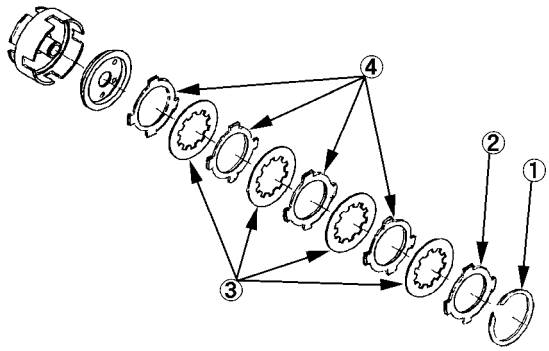

355X

2. Press the washer ⑤, by jig and remove the snap ring ⑥.
3. Release the washer ⑤, and remove the jig, washer and spring ⑦.

NOTE: The spring is installed under the washer. Use care when removing the snap ring as the spring will be expelled with considerable force when released. Cover the PTO clutch with a shop towel to contain the spring while removing the snap ring.

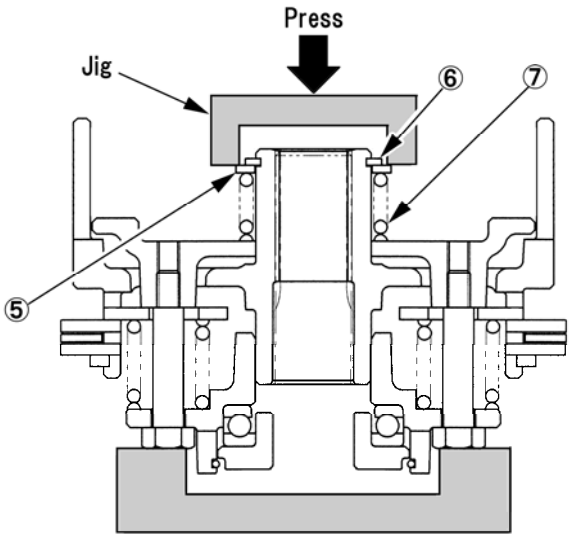

356X

4. Press the clutch lifter ⑧, and remove the snap ring ⑪.

NOTE: Never remove the six bolts ⑯ Figure 358X, because they will be broken by fixed them thread sealant.

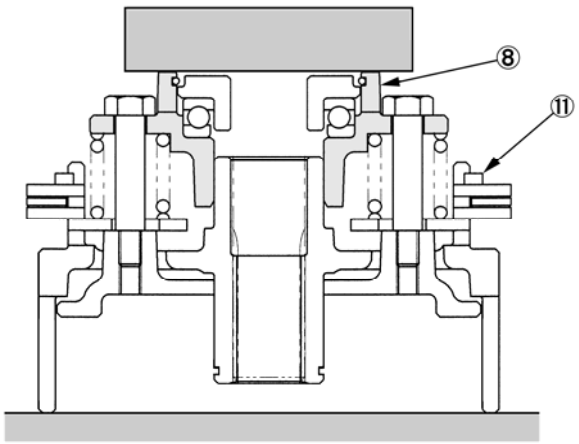

357X

Downloaded from www.Manualslib.com manuals search engine

5. Remove the pressure plates ⑫, and ⑬, and brake disc ⑭, from the housing.

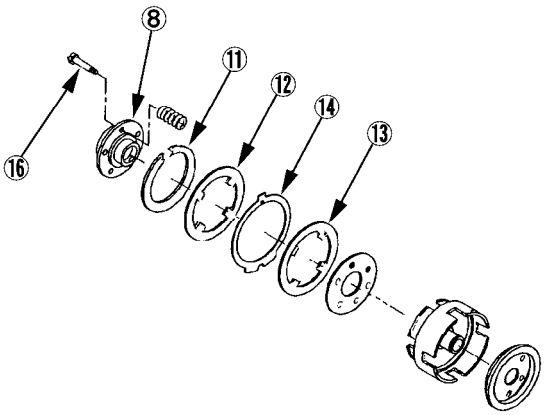

358X

6. Remove the stop ring ⑯, release hub ⑰, and release bearing ⑱, from the clutch lifter ⑧.

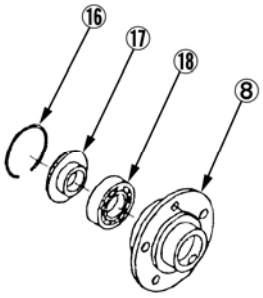

359X

(2) Inspection

1. Wash all parts in a suitable solvent and air dry.
2. Inspect the separator plates, disc plates and brake disc thickness and any damage. If either is defective, replace the PTO clutch assembly.

	Standard	Wear Limit
Disc Plate Thickness	**2.0 mm**	**1.4 mm**
Brake Disc Thickness	**3.0 mm**	**2.2 mm**

(3) Assembly

Prior to assembly coat the clean hydraulic oil to each parts. Assembly of the PTO clutch generally follows disassembly procedures in reverse, however, the following must be observed:

- When install the snap ring, it's gap avoid from the groove of the housing.

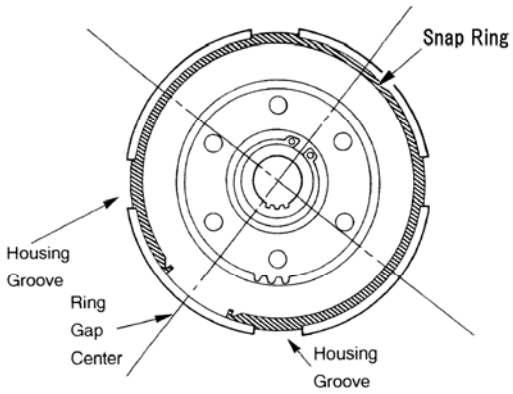

360X

Downloaded from www.Manualslib.com manuals search engine

- When install the snap ring ⑪, for brake disc, it's gap position as shown illustration.

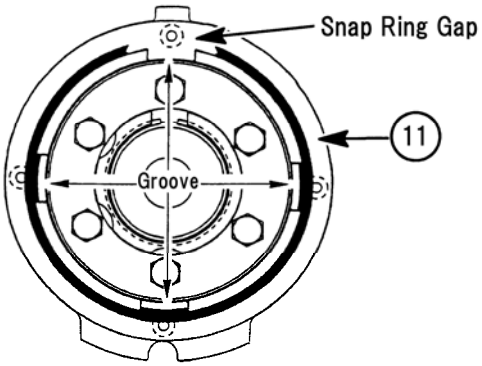

361X

- Use care the thrust bearing order when install it. The small inside diameter race is installed on the release hub ⑰, and the large inside diameter race is installed in the clutch lifter ⑧.

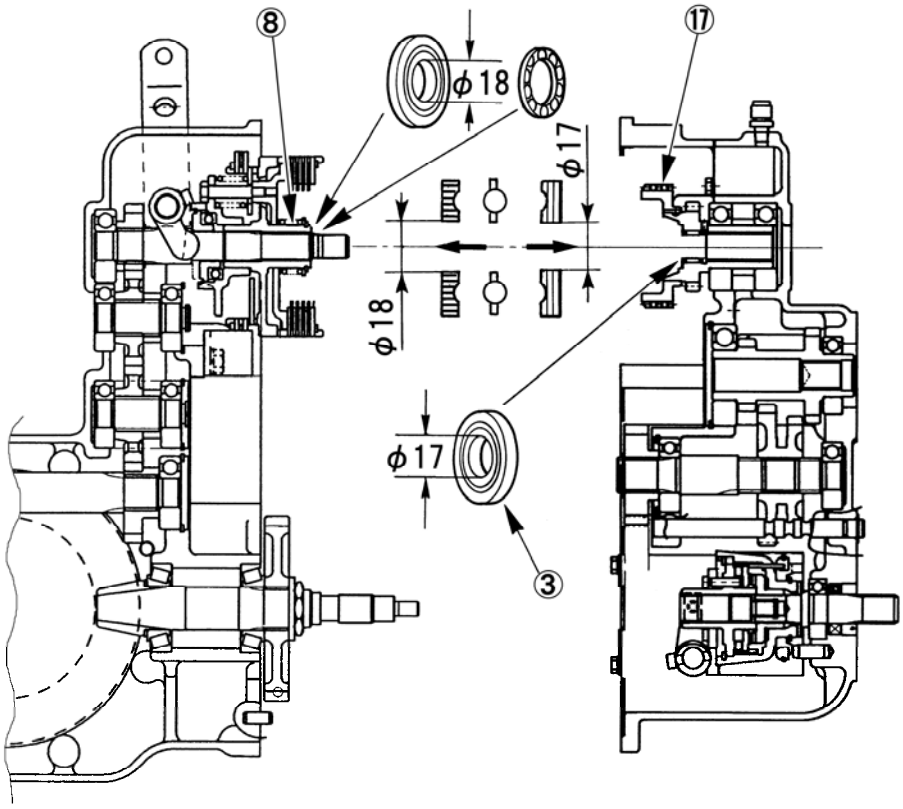

362X

Downloaded from www.Manualslib.com manuals search engine

5) Front Wheel Shaft and Brake Unit

(1) Disassembly

1. Remove the brake discs ①, stators ②, and the anchor pin ⑥ from in the housing.
2. Remove the springs ③, and brake disc ④, take out the steel balls ⑤.
3. Remove the snap ring ⑦, and pull out the brake cam ⑧, from the housing.

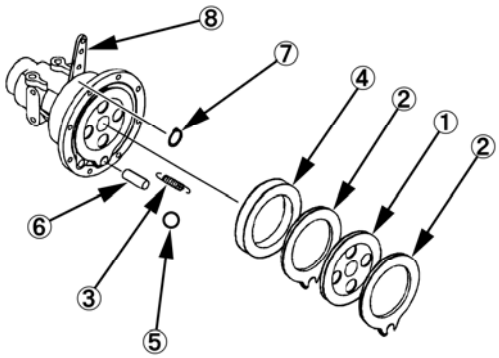

363X

4. Remove the snap ring ①, and drive out the wheel shaft ②, from the wheel shaft housing.
5. Remove the bearings ③ and ④, and oil seal ⑤, from wheel shaft housing.

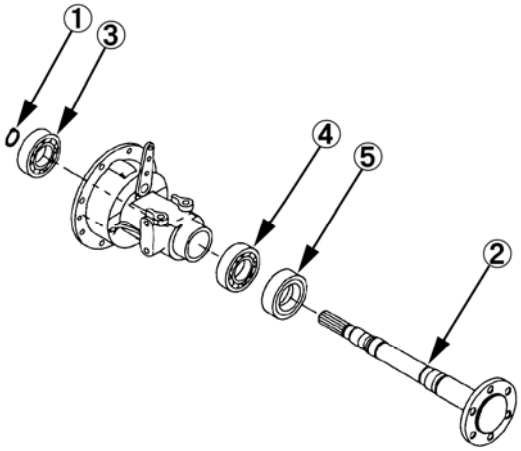

364X

6. Drive out the roll pin ①, and draw out the diff-lock shaft ②, from the bearing holder (L.H.) ③.
7. Remove the spring ④, diff-lock fork ⑤, and diff-lock clutch ⑥, from the bearing holder.

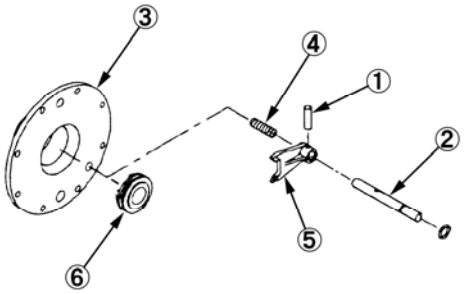

365X

Downloaded from www.Manualslib.com manuals search engine

(2) Inspection

1. Inspect the brake discs for excess wear or damage.

   Using a micrometer, measure the brake disc lining groove depth. Replace the brake disc if the lining groove depth is less than 0.1 mm.

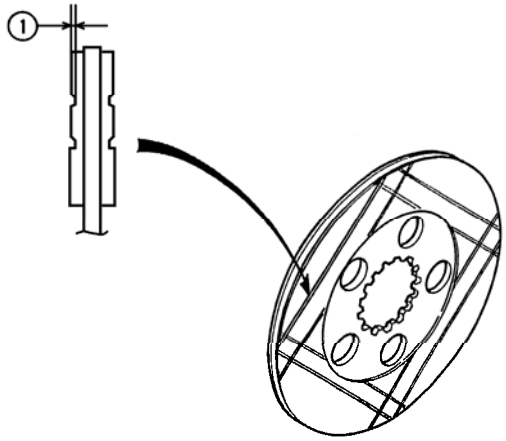

Brake Disc Wear Check
① Minimum Groove Depth – 0.1 mm

366X

2. Inspect the stators for excess wear or damage.

   Replace the stator if contact surfaces are scored or worn by the brake disc.

   Using a micrometer, measure the level difference of the stator, and replace it if the level difference is more than 0.1 mm.

3. Component Wear:

   Check the brake cover, steel balls, actuating cam and springs, and replace any found abnormal.

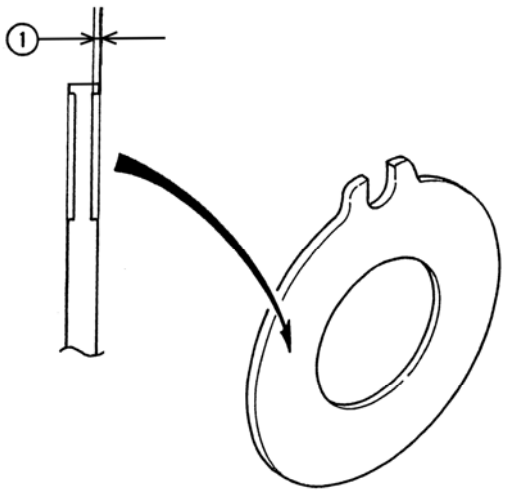

Brake Stator Wear Check
① Level Difference – 0.1 mm

367X

(3) Assembly

Reassembly generally follows the disassembly procedure in reverse.

During assembly observe the following:

1. Be sure all components are free of dirt and foreign matter and lubricate all components with clean hydraulic oil on assembly.
2. Install the oil seal at the steel face to outward.

(4) Brake Adjustment

1. Check the brake pedal free travel and if necessary adjust the brake control rod to obtain 35 – 45 mm free travel at the pedal.

   NOTE: Be sure to test drive the tractor to make sure the braking action on both wheels is equal. If necessary, adjust the outer brake rod to equalize the free-play travel.

2. Tighten the clevis locknuts securely.

Downloaded from www.Manualslib.com manuals search engine

6) Two Way Clutch Unit (SENSITRACK DISASSEMBLY)

(1) Disassembly
Reference – Figure 368X

1. If installed remove the thrust washers ① and ②.
2. Remove the sleeve ③.
3. Remove the snap ring ④, and remove the drive cam ⑤, keeper pins ⑥, center cam ⑦, compression spring ⑧, driven cam ⑨, and thrust washer ⑩, from the two-way clutch ⑪.

(2) Inspection and Repair

1. Inspect the shifter fork blocks. The blocks should be smooth and free of any nicks or scratches. Minor nicks or scratches can be removed using fine emory cloth on a flat surface.
2. Inspect the drive cam, center cam, and driven cam mating areas for excessive wear. Replace if found defective.
3. Inspect all thrust washers for excessive wear and replace if necessary.
4. Inspect the compression spring for distortion. Replace as required.

(3) Assembly
Reference – Figure 368X

1. Install thrust washer ⑩, driven cam ⑨, compression spring ⑧, and center cam ⑦, in the one-way clutch assembly housing ⑪.
2. Install the keeper pins ⑥, in their recess on both sides of the housing and insert the drive cam ⑤, in position.
3. Install the snap ring ④, so that the snap ring end gap is 90º from the keeper pins ⑥, as shown in Figure 369X.

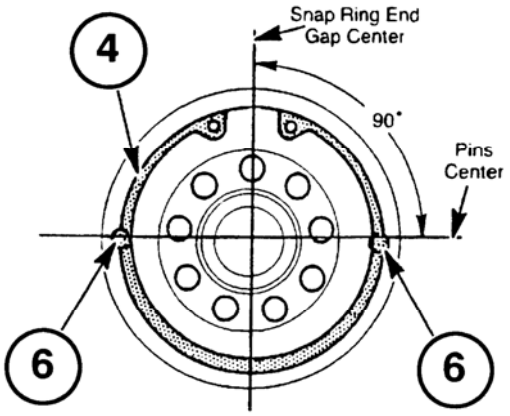

369X

4. Install the sleeve ③, and thrust washers ① and ②.

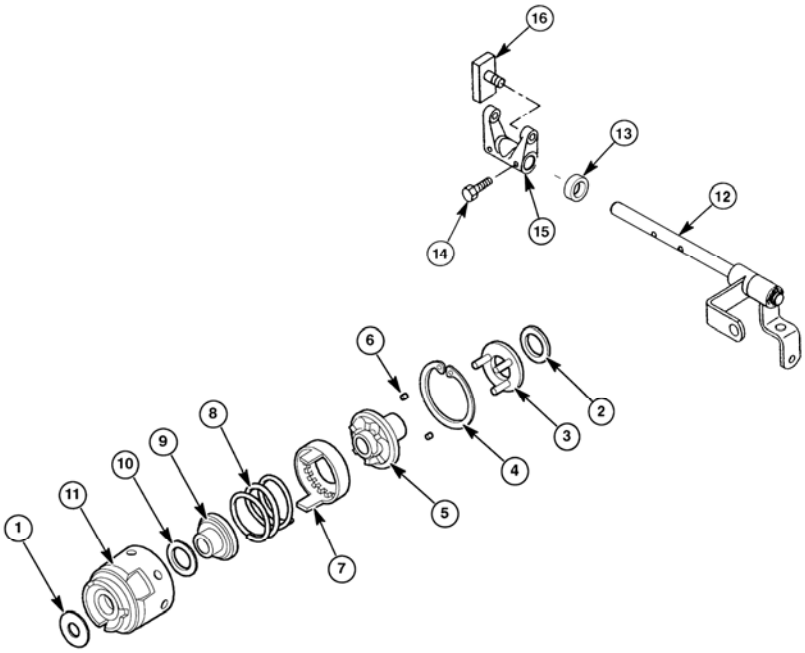

368X

Downloaded from www.Manualslib.com manuals search engine

7) Differential Gear Unit

(1) Disassembly
Reference – Figure 370X

1. Remove the bearing ①, and shims ②.
2. Remove the ring gear tightening bolts ⑭, and ring gear ⑫.
3. Take out the thrust washer ④, and differential gear ⑤.
4. Remove the dowel pins ⑩, pinion shafts ⑦ and ⑨.
5. Take out the pinion gears ⑥, thrust washers ⑧, joint ⑪, differential gear ⑤, and thrust washer ④.

(2) Inspection

1. Inspect gear teeth for excessive wear or damage.
2. Measure the thickness of the differential gear thrust washers. Replace washers that exceed the minimum thickness. See "Specifications".
3. Inspect the differential pinion shaft and gears for excessive wear. See "Specifications".
4. Inspect the drive pinion to ring gear tooth wear pattern. See Figure 377X, for wear indications and shimming adjustments.
5. Inspect the bearings for excessive wear or binding when rotated by hand.

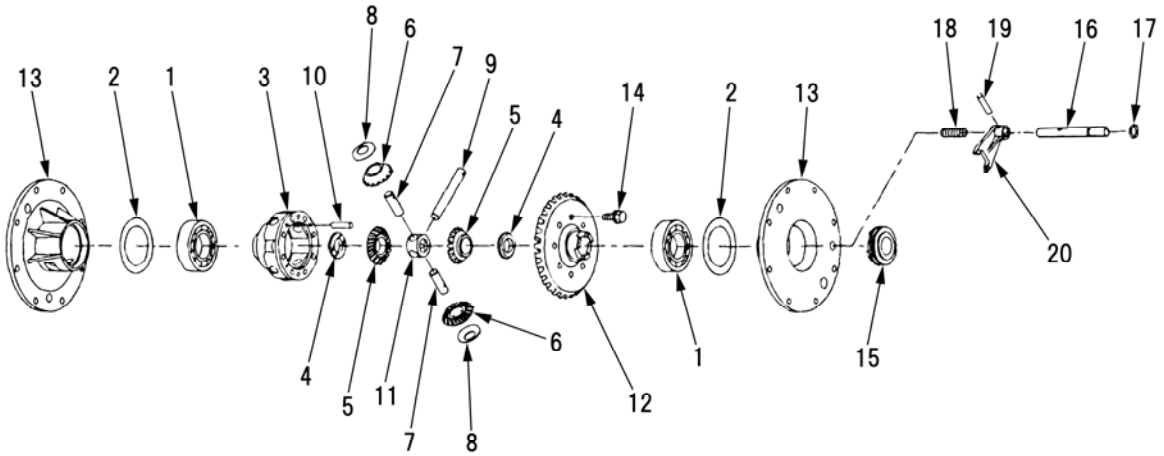

370X

Differential Gear Case Disassembly

1. Ball bearing
2. Shim
3. Differential Housing
4. Thrust Washer
5. Differential Gear (Side Gear)
6. Gear
7. Pinion Shaft
8. Thrust Washer
9. Pinion Shaft
10. Dowel Pin
11. Joint
12. Ring Gear
13. Bearing Holder
14. Bolt
15. Differential Lock Clutch
16. Diff-Lock Shaft
17. O-Ring
18. Spring
19. Roll Pin
20. Shifer Fork

Downloaded from www.Manualslib.com manuals search engine

(3) Assembly

NOTE: When the drive pinion and ring gear are reused, assemble using the same shims as removed. When the drive pinion and ring gear are replaced, adjust the shims as described below. The ring gear and pinion are serviced only as a matched set and must be replaced together.

If the drive pinion and ring gear are replaced:

The drive pinion and ring gear are identified by an assembly number which is stamped into the end of the drive pinion gear and on the circumference of the ring gear. In addition, a "Value of Error" number is also stamped into the end of the pinion gear.
The tolerance value is no stamped when the tolerance is zero. This number is prefixed with a (+) or (-) to indicate the amount of error from zero adjustment. If the value of error is greater on the new pinion than on the old pinion, additional shims will be required. If the value of error is less on the new pinion than on the old pinion, the number of shims must be decreased.

Example:

Replaced pinion····· -0.2 mm
New pinion·····±0.0 mm
-0.2 + 0.0 = -0.2
Decrease the shims by 0.2 mm

(4) Differential ring Gear and Pinion Assembly

1. Assemble the differential pinion shaft, pinion gears, thrust washers dowel pins and side gears as shown, Figure 370X.
2. Install the ring gear on the case and tighten new bolts and additional lock washers to the specified torque.
3. Bend the tabs to secure the bolts.
4. If removed, install the two drive pinion bearings in the housing.
5. Assemble the thrust washer, shims and pinion shaft front bearing on the shaft. Insert the pinion shaft into the housing from the front while installing the rear bearing, fixed gear, washer and lock nut as shown.

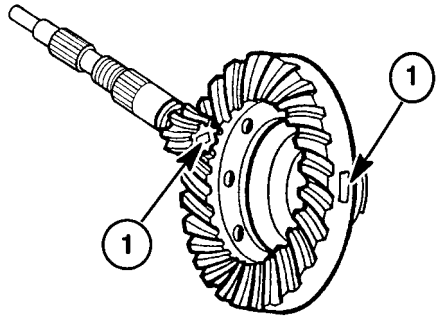

371X

Ring Gear and Pinion Tolerance Identification

1. Assembly Number and Tolerance "Value of Error" Number

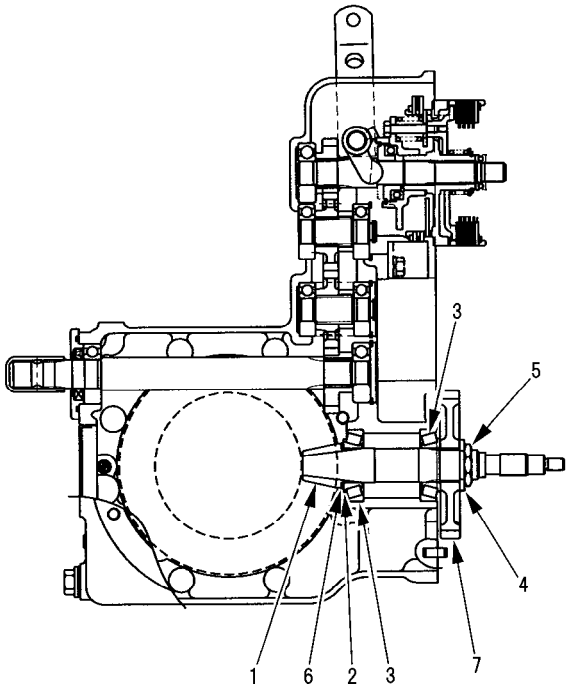

372X

Differential Pinion Assembly
(Four Wheel Drive Shown)

1. Pinion Gear
2. Shims
3. Bearings
4. Washer
5. Locknut
6. Thrust Washer
7. Fixed Gear

Downloaded from www.Manualslib.com manuals search engine

6. Adjust the pinion bearing pre-load using a strong cord wrapped around the pinion shaft and a pull scale. Tighten the pinion nut to obtain the specified pounds of constant pull to rotate the pinion assembly.

   Tighten the locknut and crimp it at the ditch of the pinion shaft.

Pinion bearing Pre-Load Constant Pull
196 N {20 kgf}

NOTE: Turn drive pinion several times by hand before performing pull scale test.

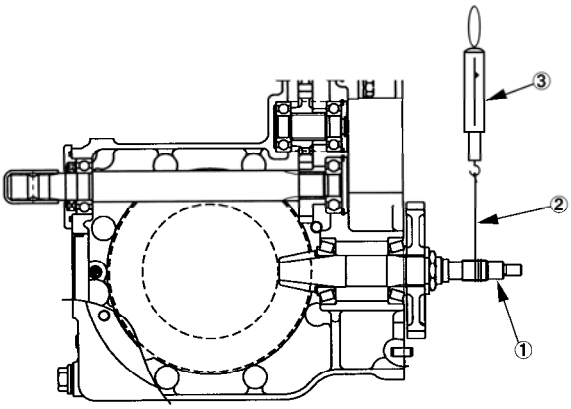

373X

Pinion Pre-Load Adjustment

1. Pinion Shaft
2. String
3. Pull Scale

7. Install the right hand bearing carrier ①, and wheel shaft assembly ②, to the front transmission housing.
8. Position the differential assembly ③, in the housing.

NOTE: When installing the original components, use the same quantity and thickness shims on each side as removed during disassembly.

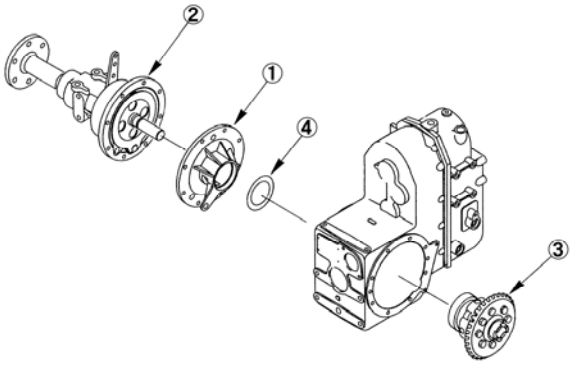

374X

1. Bearing Carrier
2. Wheel Shaft Assembly
3. Differential Assembly
4. Shims

9. Install the bearing ①, fixed gear ②, PTO shaft ③, and bearing ④, in the housing.
10. Install the seal cover ⑤, with oil seal ⑥, and O-Ring ⑦, to the housing.

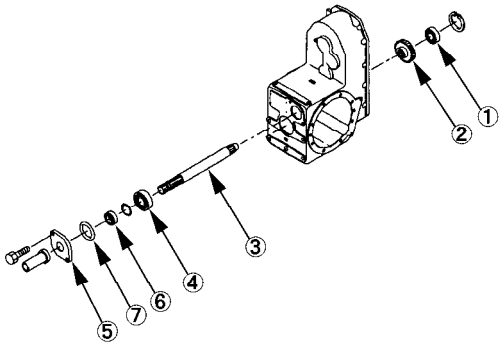

375X

1. Bearing
2. Fixed Gear
3. PTO shaft
4. Bearing
5. Seal Cover
6. Oil Seal
7. O-Ring

Downloaded from www.Manualslib.com manuals search engine

11. Install the left hand bearing carrier ①, differential clutch ②, and fork ③, as a set.
12. Install the wheel shaft assembly.

NOTE: Use care the brake stater is easy fall in the housing.

If new differential components are used, adjust the backlash and ring gear contact pattern as follows:

Place a dial indicator gauge at a right angle to the top of the ring gear teeth, Figure 376X from the hole of the seal cover.
Rock the ring gear back and forth and observe the dial indicator reading.

Adjust the shims to obtain the correct backlash.
See "Specifications."

Using Prussian blue on the pinion gear teeth, rotate the pinion gear and check the gear tooth pattern. Adjust the differential and pinion shims to obtain the correct tooth contact.

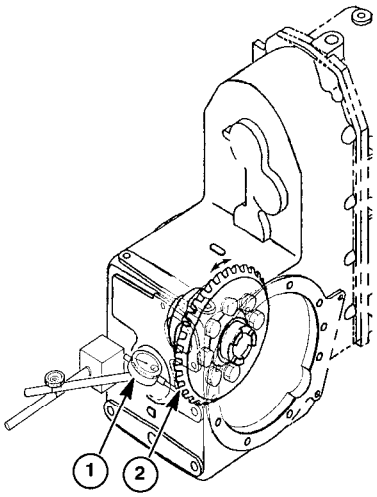

376X

Ring Gear and Pinion Backlash Check

1. Dial Indicator 2. Ring Gear

13. Install the seal cover in the housing after inspect the ring gear back lash.
14. Complete the assembly and installation following the disassembly and removal procedure in reverse.

RING GEAR AND PINION GEAR PATTERN SPECIFICATION AND ADJUSTMENT

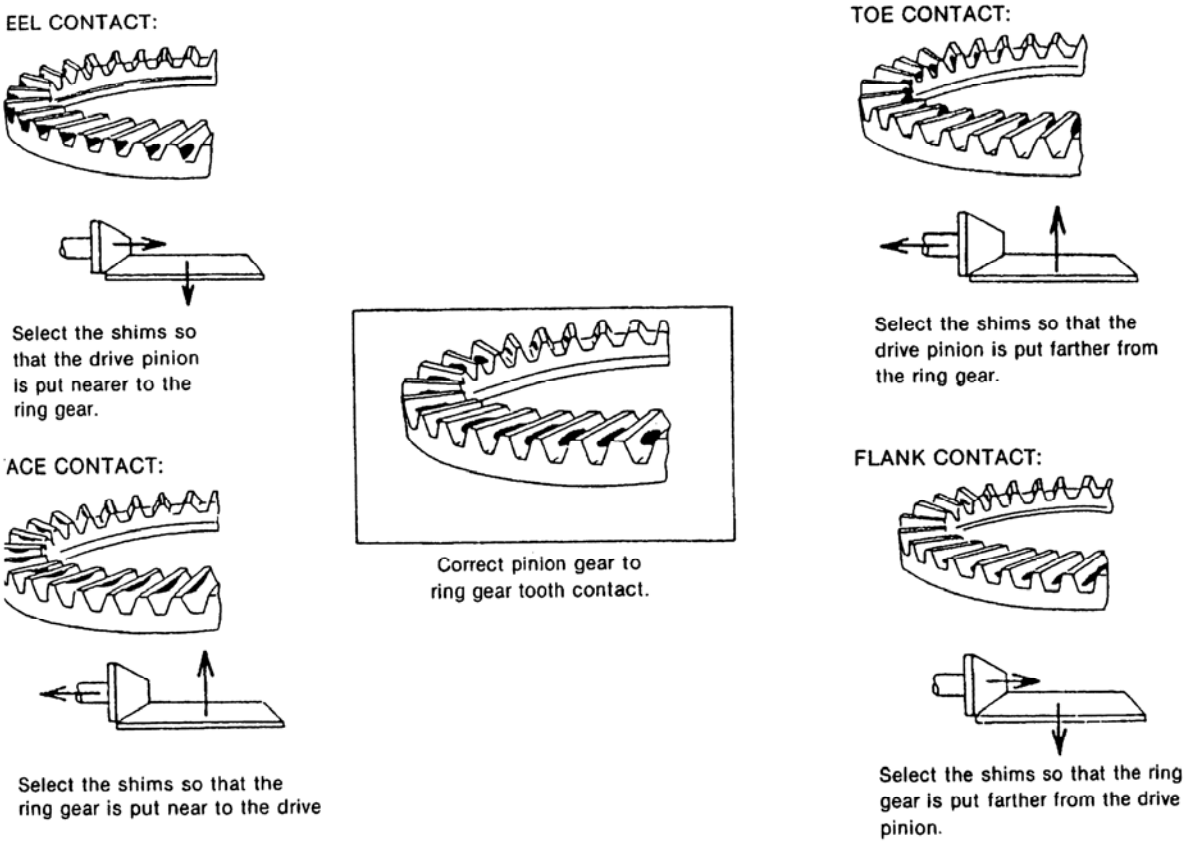

377X

Downloaded from www.Manualslib.com manuals search engine

(5) 4WD Control Spring

If removed spring from the 4WD change lever, use care to hook the spring at correct direction and position as shown Figure 378X.
If not correct hooking the spring, it will not be properly working the two way clutch assembly.

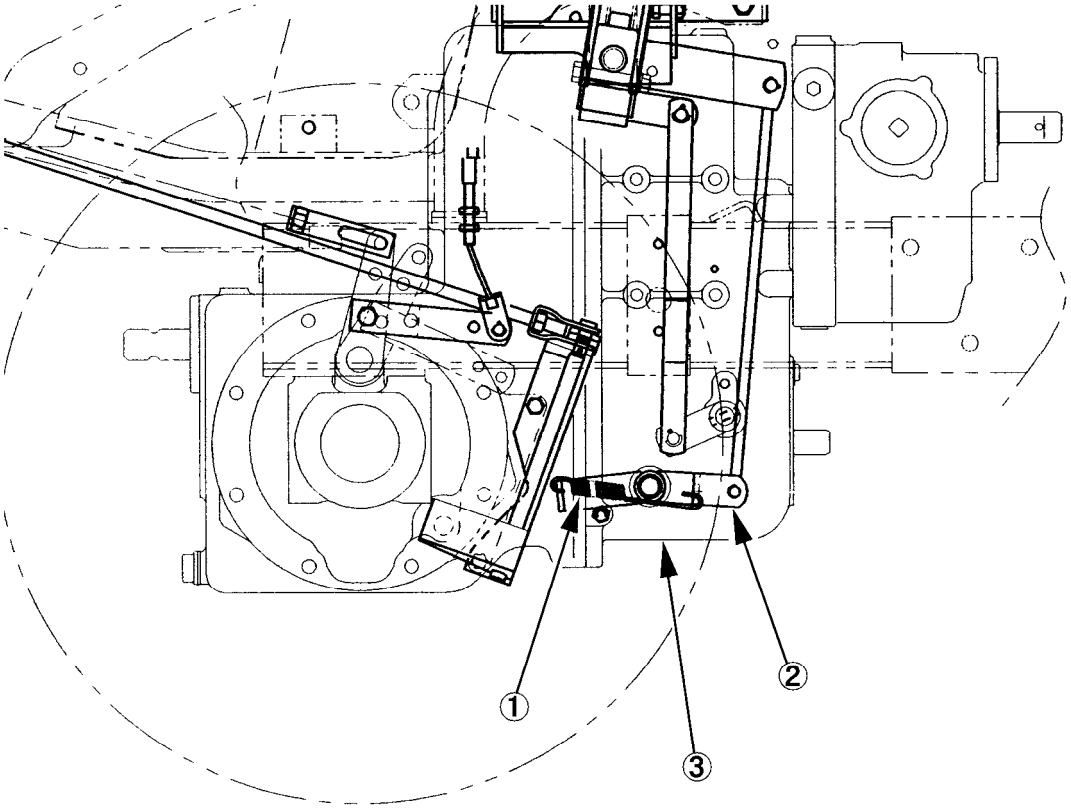

378X

1. Spring
2. 4WD Change Lever
3. Transmission Assembly

Downloaded from www.Manualslib.com manuals search engine

https://truckmanualshub.com/

Downloaded from www.Manualslib.com manuals search engine

https://truckmanualshub.com/

Chapter 4.
HST SYSTEM

Downloaded from www.Manualslib.com manuals search engine

1. OIL FLOW

1) Neutral Position

Fluid drawn from the transmission reservoir ⑪ is pressurized by the rotor type charge pump ①. The fluid flows from the charge pump via the power steering control valve ④ and filter ③ to the feed(check) valve ⑨ and ⑤, and returns to the sump via the charge pump relief valve⑦. The charge pump relief valve maintains 0.49 MPa {5 kgf/c m²} pressure to the feed (check) valves 5 and 9, at all times. Fluid flow past the feed (check) valves pressurizes the passages "A" and "B" and the pump ⑩ and motor ⑥ cylinder blocks. Because of equal pressures in passages "A" and "B" the motor does not rotate.

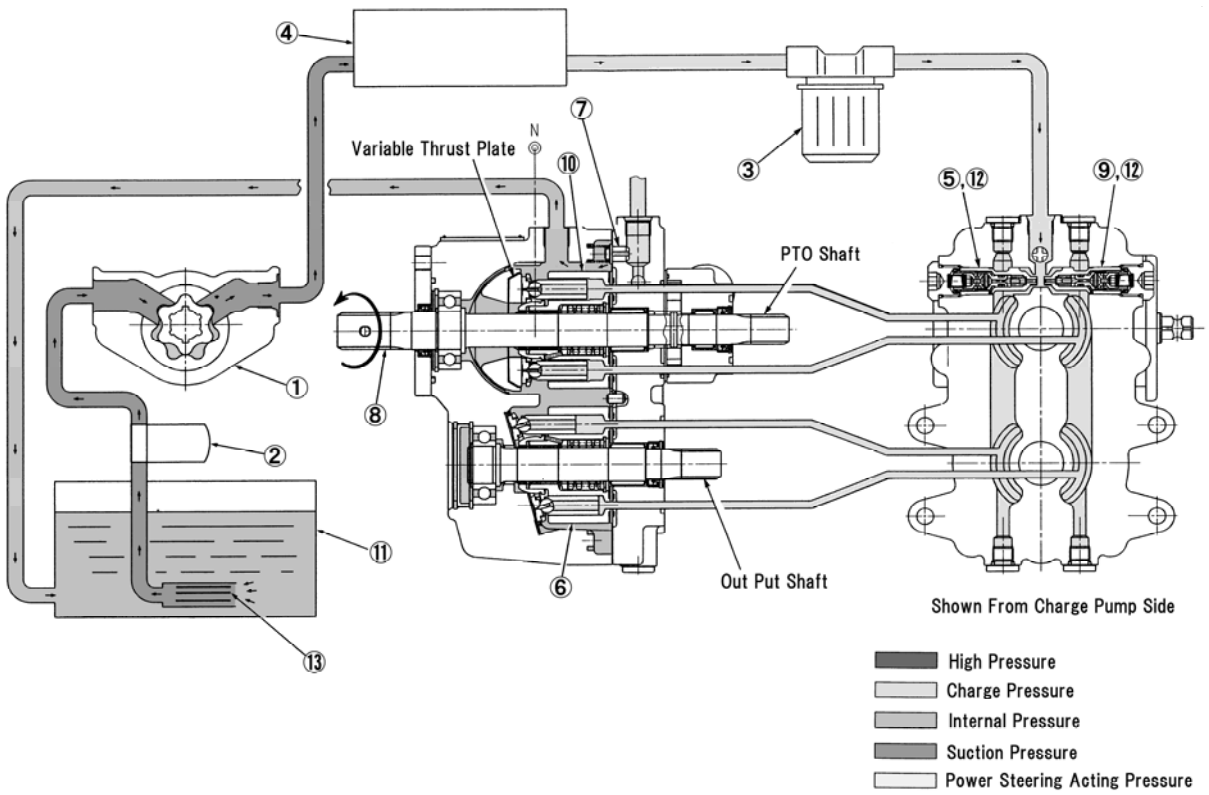

400X

1. Charge Pump
2. Filter
3. Filter
4. Power Steering Control Valve
5. Feed (Check) Valve "B"
6. Hydrostatic Motor
7. Charge Pump Relief Valve
8. Input Shaft
9. Feed (Check) Valve "A"
10. Hydrostatic Pump
11. Reservoir
12. High Pressure Relief Valve
13. Magnet

Downloaded from www.Manualslib.com manuals search engine

2) Forward Position

When the foot pedal is shifted forward, the pump swash plate is tilted and a quantity of fluid is discharged from the piston pump ⑩ into passage “A”. When the foot pedal is shifted further forward, increased fluid flows from piston pump ⑩ through passage “A”. Pump pressure on the back of feed (check) valve ⑨ closes the feed (check) valve and all fluid flow from passage ”A” flows to the hydrostatic motor ⑥ causing the motor to rotate. Fluid is discharged from the hydrostatic motor ⑥ at “A2” into passage “B2” flows back to the hydrostatic pump ⑩ to complete the cycle. When fluid leakage in the system causes a drop in pressure on the suction passage “B” and the feed (check) valve ⑤ opens and provides make-up fluid from the charge pump ①. Excess fluid from the charge pump ① is returned to the sump via the charge relief valve ⑦ when above 0.49 MPa {5kgf/c m²}.

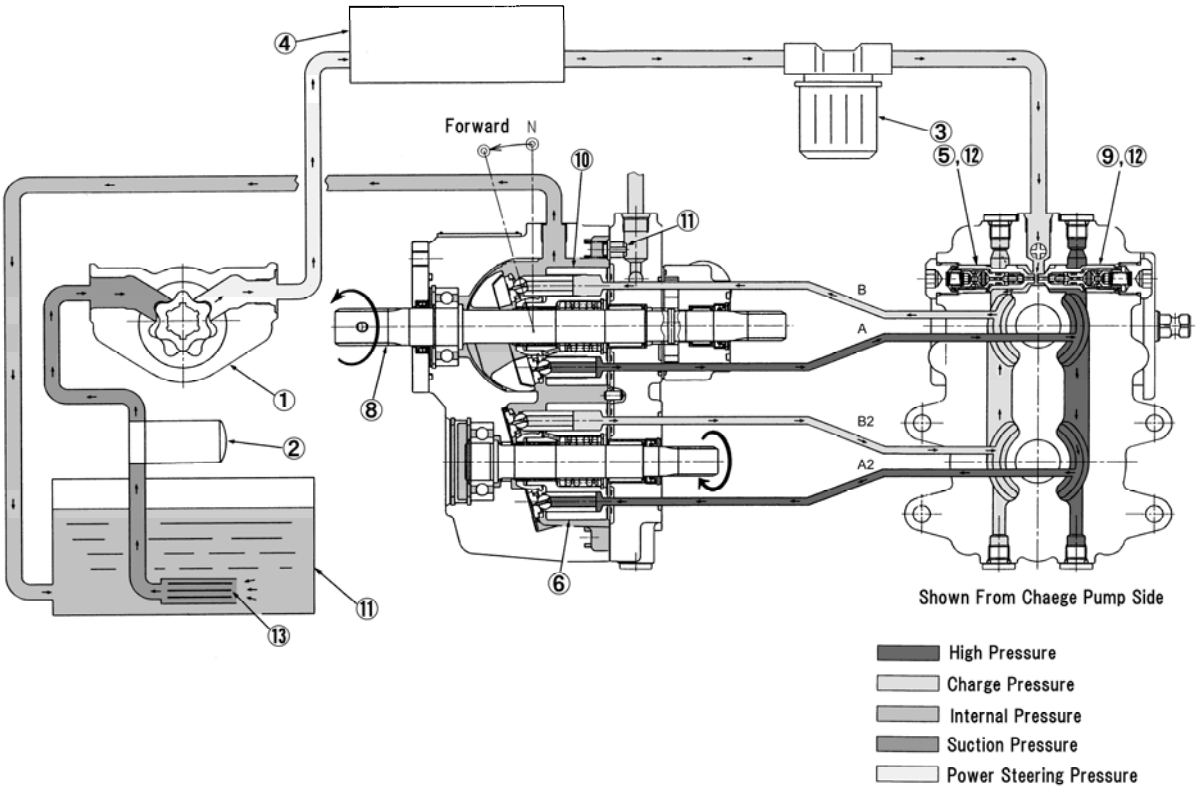

401X

1. Charge Pump
2. Filter
3. Filter
4. Power Steering Control Valve
5. Feed (Check) Valve “B”
6. Hydrostatic Motor
7. Charge Pump Relief Valve
8. Input Shaft
9. Feed(Check) Valve “A”
10. Hydrostatic Pump
11. Reservoir
12. High Pressure Relief Valve
13. Magnet

Downloaded from www.Manualslib.com manuals search engine

3) Reverse Position

When the foot pedal is shifted rearward, the pump swash plate is tilted in the opposite direction and a quantity of fluid is discharged from the piston pump ⑩ into passage "B". When the foot pedal is shifted further rearward, increase fluid flows from the piston pump through passage "B". Pump pressure on the back of feed (check) valve ⑤, close the feed (check) valve and all fluid flow from passage "B" flows to the hydrostatic motor ⑥ causing the motor to rotate in the reverse direction. Fluid is discharged from the hydrostatic motor ⑥ at "A2" into passage "A" flows back to the hydrostatic pump ⑩ to complete the cycle.
When fluid leakage in the system causes a drop in pressure on the suction passage "A" and feed (check) valve ⑨ opens and provides make-up fluid from the charge pump ①.
Excess fluid from the charge pump ① is returned to the sump ⑪ via the charge relief valve when above 0.49 MPa {5 kgf/c m²}.

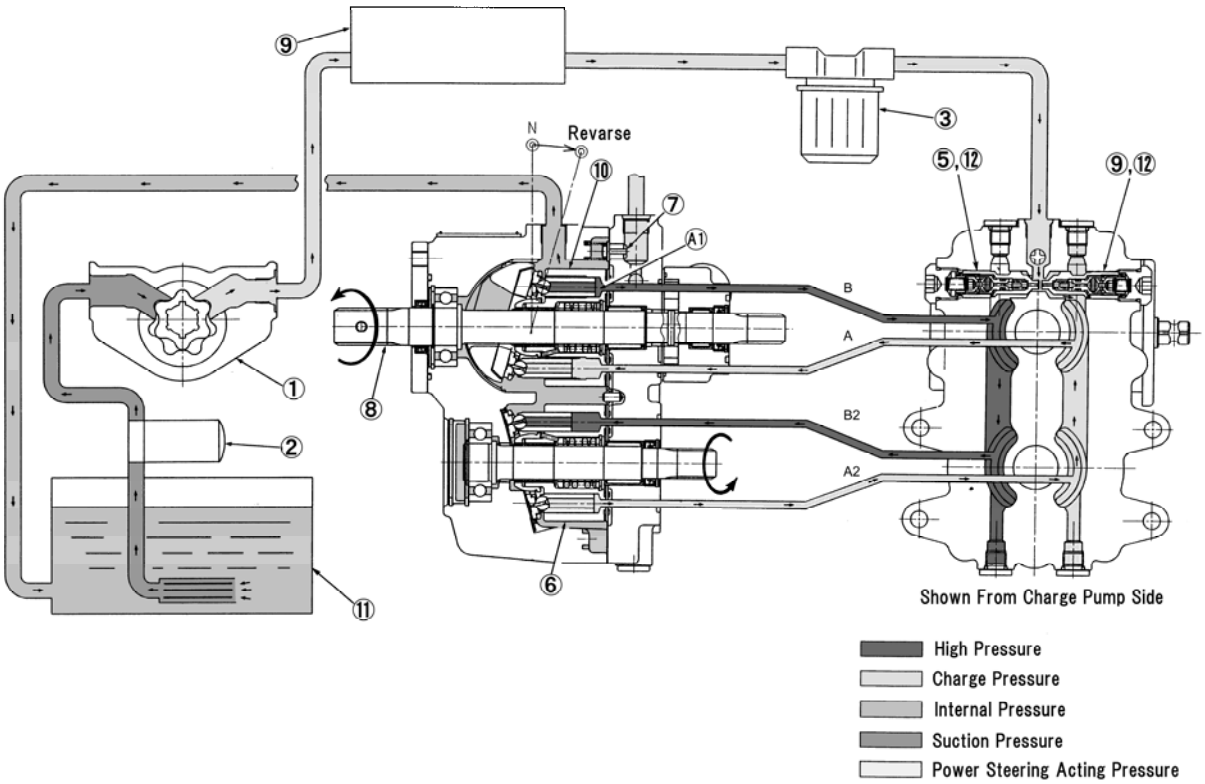

402X

1. Charge Pump
2. Filter
3. Filter
4. Power Steering Control Valve
5. Feed (Check) Valve "A"
6. Hydrostatic Motor
7. Charge Pump Relief Valve
8. Input Shaft
9. Feed (Check) Valve "B"
10. Hydrostatic Pump
11. Reservoir
12. High Pressure Relief Valve

Downloaded from www.Manualslib.com manuals search engine

https://truckmanualshub.com/

2. HST UNIT REMOVAL

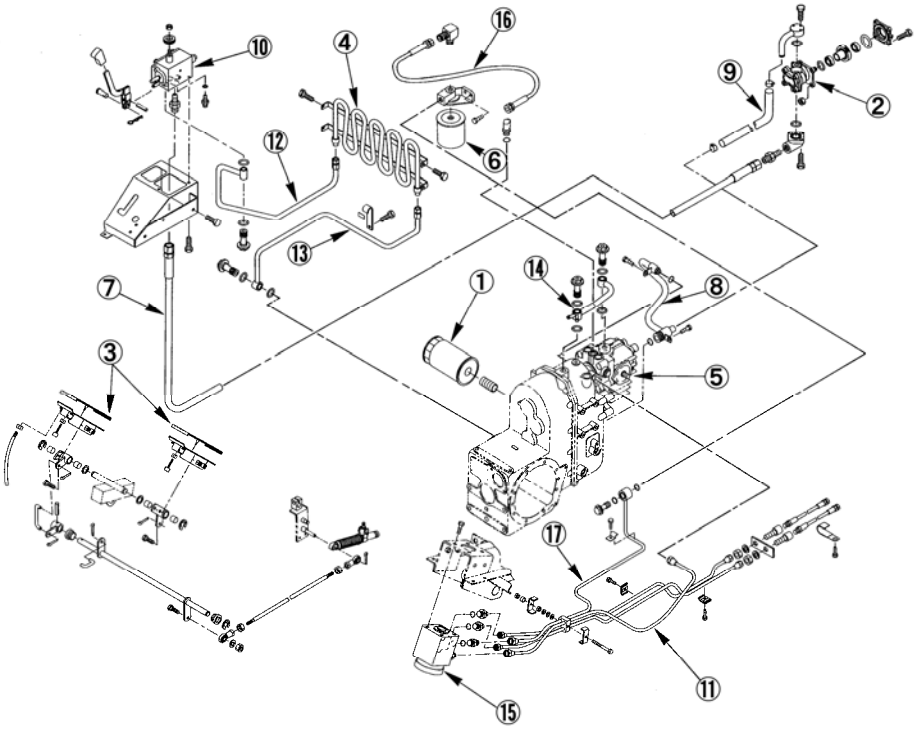

403X

1. Suction Filter
2. Hydraulic Pump
3. Foot Control Pedal
4. Oil Cooler
5. HST Unit
6. HST Filter
7. HPL Supply Line
8. Charge Pump Suction Line
9. Hyd. Pump Supply Line
10. Hyd. Control Valve
11. Power Steering Supply Line
12. Cooler Supply Line
13. Cooler Return Line
14. HST Return to Sump
15. Power Steering Control Valve
16. HST Supply Line (Hose)
17. Power Steering Return Line

Separate the HST unit from the transmission housing after separate the transmission assembly. See the “Chapter 3” , 2. TRANSMISSION UNIT, 1) Removal.

NOTE: When separating the HST unit ① from the transmission housing, be careful not to lose the O-Rings ② and ③.

① HST Unit
② O-Ring
③ O-Ring

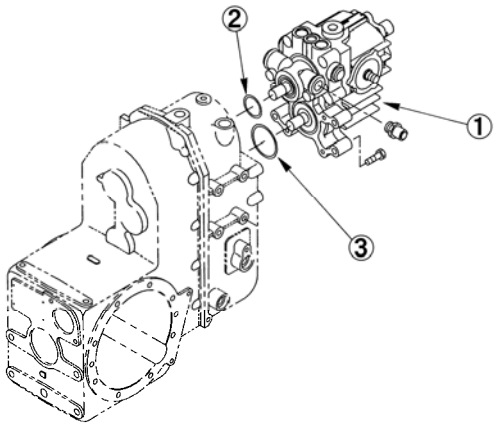

404X

Downloaded from www.Manualslib.com manuals search engine

If remove the HST unit only from the tractor, refer to as follows:

1. Remove the eye bolt and return oil pipe ① from the top of the HST unit.

2. Untighten the flare nut and disconnect the oil pipe ② from the charge pump to power steering control valve.

3 Use the two wrenches, and disconnect the feed hose ③ from top of the HST unit.

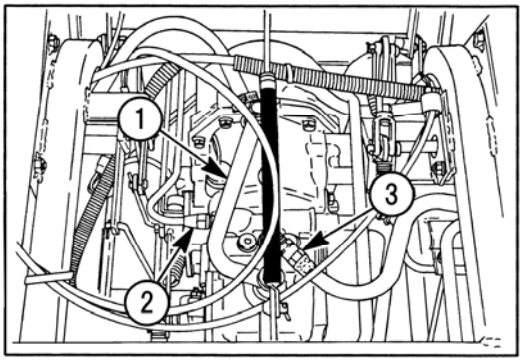

405X

4. Remove the split pin, washer and disconnect the HST speed control rod ① from the HST control lever.

5. Remove the U-nut, and remove the damper ② from the HST control lever.

6. Unhook the spring ③ from under the HST speed control lever.

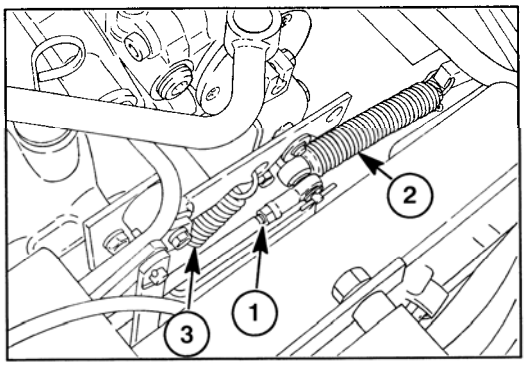

406X

7. Disconnect the wire connector from the HST neutral switch ①.

8. Remove the two bolts ② and remove the HST shift guide ③ and shift arm ④ as a set.

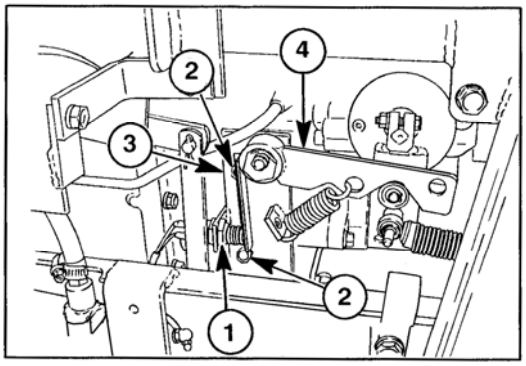

407X

9. Remove the bolt ① from the universal joint ② and disconnect the joint from the HST input shaft by slide the joint to rear ward.

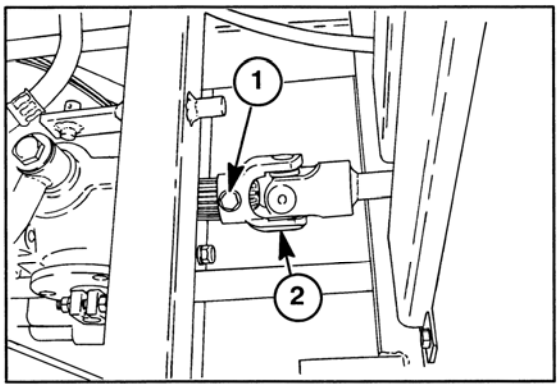

408X

Downloaded from www.Manualslib.com manuals search engine

10. Remove the eye bolt and clamp ① for the oil cooler return pipe ② from the oil cooler.

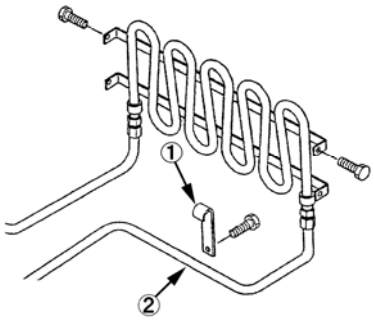

409X

11. Untighten the hose band ③ and disconnect the suction hose ④ for the hydraulic oil pump.

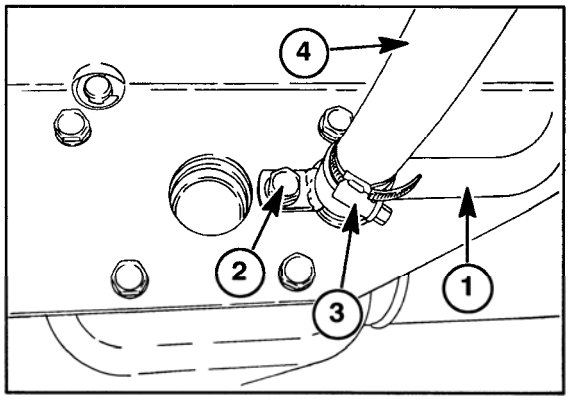

410X

12. Remove the bolts ② and suction pipe ① from the HST unit and rear transmission housing.

13. Remove rear axle assembly, pipe and rear drive shaft, see “REAR AXLE ASSEMBLY” of chapter 6.

14. Remove the rear frame from main frame and rear of transmission, see “TRANSMISSION AND BRAKE” of CHAPTER 3.

15. Install the special tool to HST return pipe attaching hole with hoist.

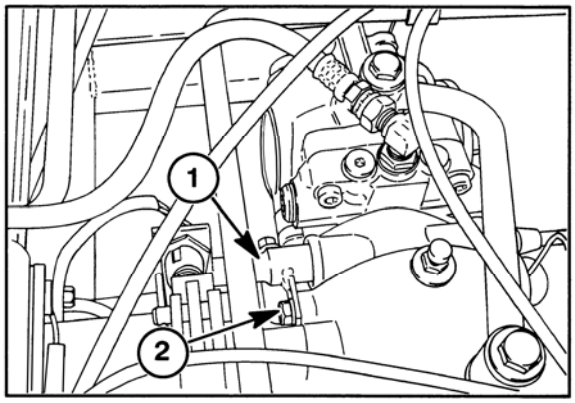

410-1X

16. Remove the four bolts ① and remove the HST unit ② to slide the rearward and downward from the transmission housing.

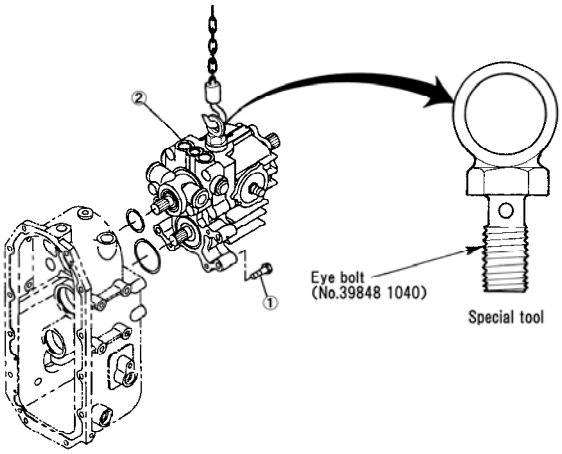

411X

Downloaded from www.Manualslib.com manuals search engine

3. PRECAUTIONS BEFORE DISASSEMBLY

1) Thoroughly clean the HST unit and plug all openings to prevent contamination from foreign particles.
2) Maintain a clean work area so as not to contaminate or damage any of the HST components.
3) Handle the HST components with care so as to not scratch or otherwise cause damage to the parts.
4) Drain the oil from the HST unit before disassembly.

4. DISASSEMBLY

Reference – Figure 412X

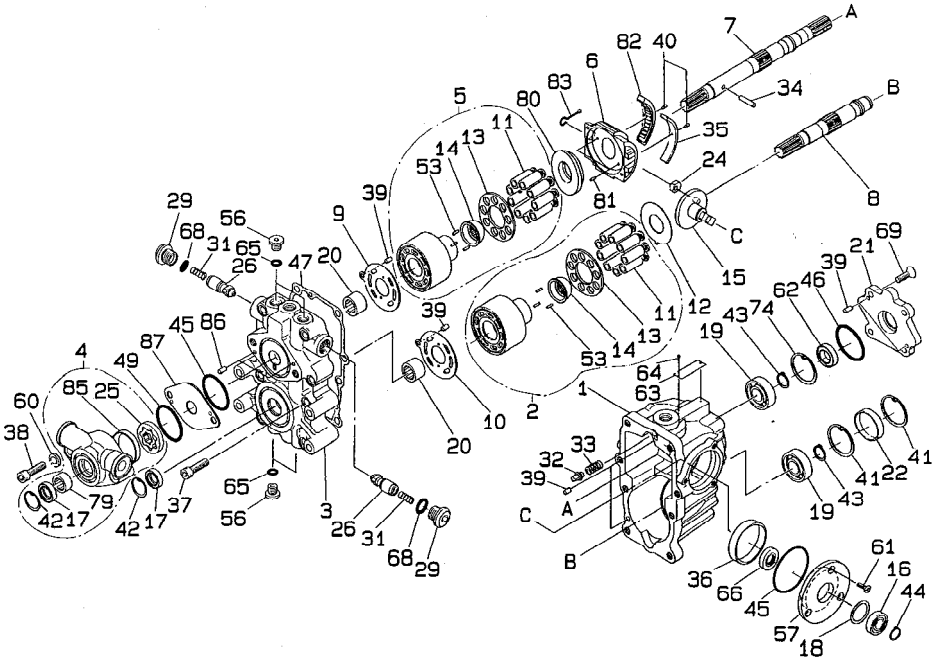

412X

1. Remove the socket head bolts (38), charge pump case (4) and O-Ring (49).
2. Remove the trochoid rotor assembly (25).
3. Remove the pin (34) from the drive shaft (7).
4. Remove the plate (87), O-Ring (45), and pin (86), from the port block (3).
5. Remove the socket head bolts (37), port block (3), and gasket (47).

NOTE: Take care do not fall down the valve plates (9 and 10) .

6. Remove the valve plates (9 and 10) from the port block.
7. Remove the cylinder block assembly (5) for the pump.
8. Remove the cylinder block assembly (2) for the motor.
9. Remove the swash plate (6) and take out the roller bearing (82), bush (35) and slide metal (24).
10. Remove the thrust plate (80) from the pump swash plate (6).
11. Remove the thrust plate (12) for the motor in the housing.
12. Remove the screws (61) and trunnion cover (57) from the housing.
13. Remove the snap ring (44) and trunnion shaft (15) from the trunnion cover (57).
14. Remove the screws (69), cover (21), O-Ring (46), and pins (39) from the housing.
15. Drive out the drive shaft (input shaft) (7), by soft jawed hammer.
16. Remove the snap ring (41), from the housing.
17. Drive the screw driver to the seal cover (22), and remove the cover by lever. Discard the seal cover (22).
18. Remove the snap ring (41), from in the housing.
19. Drive out the transmission drive shaft (input shaft) (8), by soft jawed hammer.
20. Remove the plugs (29), springs (31), and check and relief valve assembles (26), from the port block.

Downloaded from www.Manualslib.com manuals search engine

5. INSPECTION

1. Piston assembly

- Replace the piston assembly if the play at the caulked are as of the piston and shoe exceeds the service limit.

Standard assembling value	Service limit
0.03 mm	**0.1 mm**

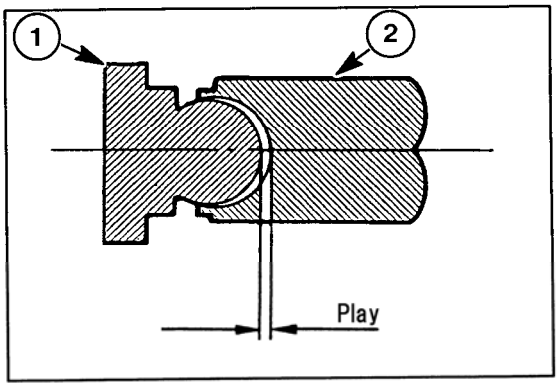

413X

- Replace the piston assembly if the clearance between the piston and cylinder block exceeds the service limit.

Standard assembling value	Service limit
0.02 mm	**0.03 mm**

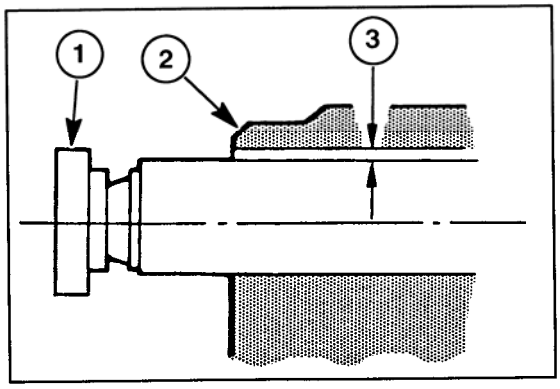

414X

- Replace the piston assembly if the shoe thickness is below the service limit.

Standard assembling value	Service limit
3.00 mm	**2.9 mm**

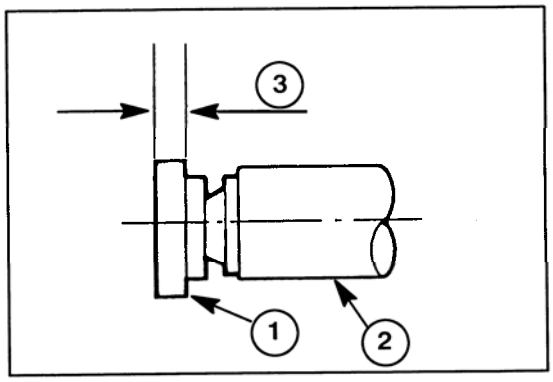

415X

2. Charge pump assembly

- Measure the side clearance of the trochoid rotor and replace if the service limit is exceeded.

Standard assembling value	Service limit
0.025 mm	**0.055 mm**

3. Lapping distance should be less than 0.005 mm, if each sliding surface is damaged, correct by lapping. If the fault cannot correct by lapping, replace the parts.

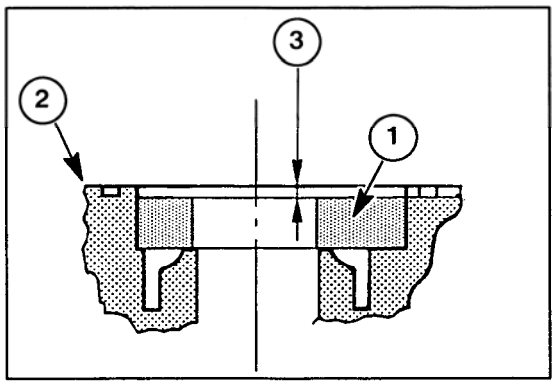

416X

Downloaded from www.Manualslib.com manuals search engine

6. REASSEMBLY

Before assembly refer to as follows:

1. Be sure all components are thoroughly cleaned and well coated with clean transmission fluid.
2. Replace the oil seal, O-Ring, gasket and seal cover with new one.
3. Apply the lithium grease to O-Ring and seal lip of oil seal.
4. Tighten the screw and bolt to specified torque.

7. ASSEMBLY

Reference – Figure 412X

1. If removed, install the bush (36) in the housing (1), and it depth 10.7 mm from the trunnion cover matching surface.

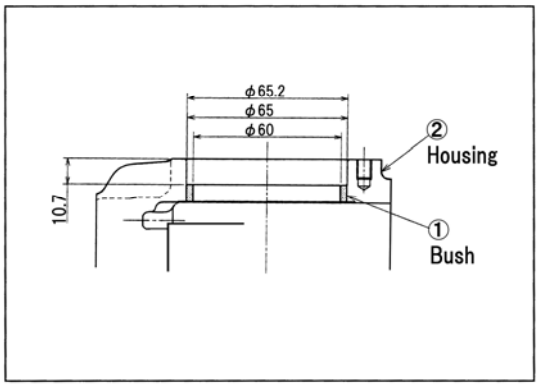

417X

2. Install the input shaft as follows:
   - Install the bearing (19), on the shaft (8), and secure with snap ring (43).
   - Install the shaft (7), in the housing and secure with snap ring (74).

3. Install the output shaft as follows:
   - Install the bearing (19) on the output shaft (8) and secure with snap ring (43).
   - Install the shaft (8) in the housing and secure with snap ring (41).
   - Install the new case cover (22) in the housing (1) and secure with snap ring (41).

4. Install the cover as follows:
   - Install the O-ring (46) and pins (39) on the housing.
   - Install the oil seal (62) in the cover (21) and install them on the housing and tighten the bolt (69) to 17.2 N.m.

5. Install the thrust plate as follows:
   - Align the thrust plate's projection (12) for motor to housing's ditch.

6. Install the swash plate as follows:
   - Install the pins (40) and bush (35) and roller bearing (82) in the housing.
   - Install the swash plate sub-assembly (consist of swash plate (6), guide assembly (83), pin (81) and thrust plate (80)) in the housing.
   - Inspect the swash plate sub-assembly is moved to smoothly. If not smoothly moved it, check the roller bearing position.

7. Install the cylinder block sub-assemblies (2 and 5) in the housing as follows:
   - Apply the transmission oil to the thrust plate contact surface.
   - The cylinder block for pump (2), is brass color of the cylinder block end and the cylinder block for motor (5) is a gray color of the cylinder block end.

Downloaded from www.Manualslib.com manuals search engine

8. Install the port block sub-assembly as follows:
   - Install the check and relief valve assemblies (26) and springs (31) in the port block (3) and tighten the plugs (29) to 63.7 N·m.
   - Install the high pressure relief valve check port's plug (56) tighten to 29.4 N·m.
   - Press in the oil seal (17) to 3mm depth from the surface in the port block (3) and secure with snap ring (42).
   - Install the needle bearings (20) in the port block with the marking surface to outside, and protrude 2.5 mm from the matching surface.
   - If removed, install the dowel pins on the housing.
   - Apply the grease to the spring and install it in the housing.
   - Install the gasket (47) on the housing.
   - Apply the grease to the valve plates (9 and 10) and low pressure relief valve (32) for prevent fall down and install them to the port block.
   - The notch side (V shape ditch) of the pump valve plate (10), to against the cylinder block assembly.
   - The brass color surface of the motor valve plate (9) to against the cylinder block assembly.
   - Apply the mission oil to the cylinder block contact surfaces and install the port block assembly (3) to the housing and tighten the bolts to 49.0 ± 5 N·m.

9. Install the trunnion cover to the housing as follows:
   - Install the slide metal (24) and position the pin hole against the port block direction in the swash plate sub assembly (6).
   - Install the bearing (16) in the trunnion cover (57).
   - Install the washer (18) in the trunnion cover.
   - Install the oil seal (66) in the housing to 1 mm depth from the cover surface.
   - Install the trunnion shaft (15) in the cover and secure with snap ring (44).
   - Install the trunnion cover sub-assembly with align the slide metal's hole to trunnion shaft's pin, and tighten the screw to 6.9±0.7 N·m.

10. Install the charge pump as follows:
    - Install the O-Ring and pins to the port block.
    - Install the plate (87) with the brass color surface to against the charge pump.
    - Position the pin (34) into the input shaft (7), and install the trochoid rotor sub-assembly (25), on the input shaft with align the punch marks (1) and pin center (2).
    - Install the new oil seal in the charge pump case and secure with snap ring.
    - Install the charge pump case sub assembly (4) with align the pins, and tighten the bolts to 49.0 ± 5 N·m.

11. Inspect the both shafts (7 and 8) are rotated smoothly by adjustable wrench after assembled.

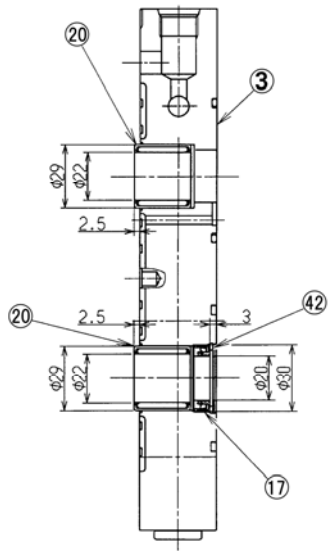

418X

3. Port Block
17. Oil seal
20. Needle Bearing
42. Snap Ring

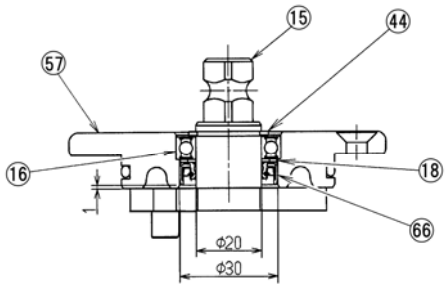

419X

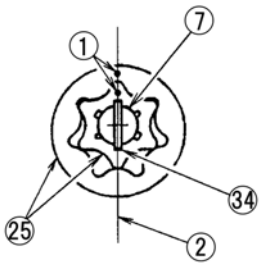

420X

Downloaded from www.Manualslib.com manuals search engine

https://truckmanualshub.com/

8. ADJUSTMENT

1) Link Adjustments

(1) Neutral Position Adjustment

1. Jack up the front and rear wheels off of the ground and place jack stands under the axles.
   Make sure all four wheels are clear of the ground and the commercial mower is properly supported.

2. Disconnect the wires from the seat neutral start switch and connect a jumper wire between the two harness leads. Apply the master brake pedal and start the engine, release the brake pedal.

3. Set the throttle at low speed and place the range shift lever in the low range position.

4. If the wheels rotate at this time, loosen the bolt (1) and rotate the eccentric sleeve (2) until the wheels stop and tighten the bolt, Figure 421X.

NOTE: Turning the control lever (3) clockwise will cause wheels to rotate in forward and turning counterclockwise the wheels will rotate in the reverse direction.

5. Stop the engine and remove the jack stands.
   Lower the wheels to the ground.

6. Re-connect the seat neutral start switch wires.

7. While seated in the operators seat, start the engine with the range lever in low range, and increase the engine speed to full throttle. The commercial mower should not move in either direction.

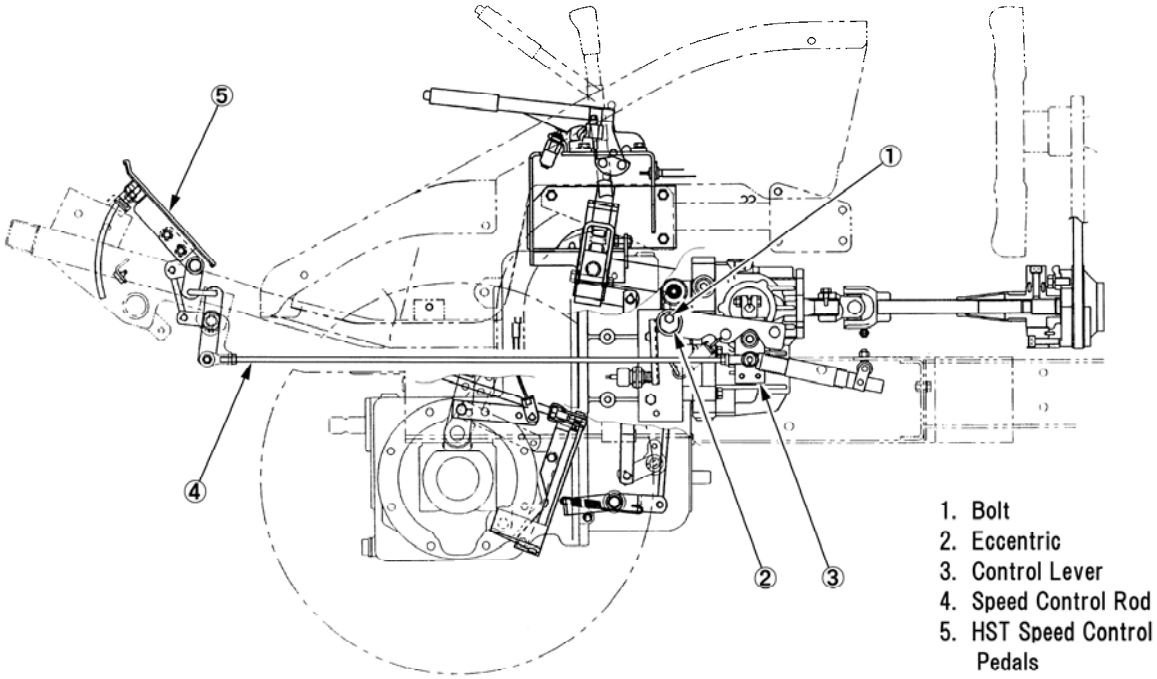

421X

Downloaded from www.Manualslib.com manuals search engine

(2) HST NEUTRAL SWITCH ADJUSTMENT

1. Adjust the HST neutral switch (1) after adjusted the neutral position. Untighten the lock nuts (2). Disconnect the switch wires at the connector and connect the ohmmeter (3) leads across switch, and turn the switch (1) until the switch become "ON" (continuity) position. Tighten the two lock nuts (2) and recheck the continuity test after move the speed control rod (4) to forward and reverse several times.

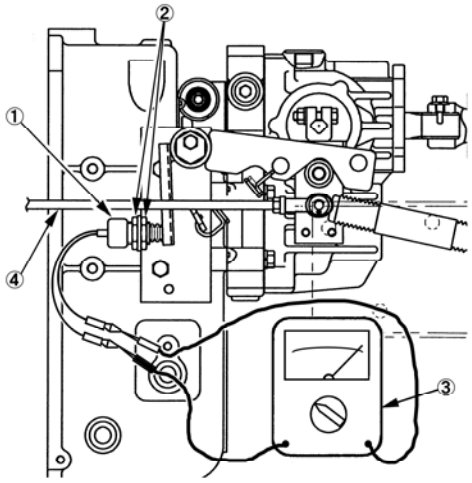

1. HST Neutral Switch
2. Lock Nuts
3. Ohm Meter
4. Speed Control Rod

422X

(3) HST SPEED CONTROL PEDAL POSITION ADJUSTMENT

1. Adjust the pedal height by lengthening or shortening the speed control rod (1). Untighten the two lock nuts (2), and turn the rod (1) by wrench until the forward speed control pedal and reverse speed control pedal (3) are at the same flat level (same angle from the floor). Tighten two lock nuts (2).

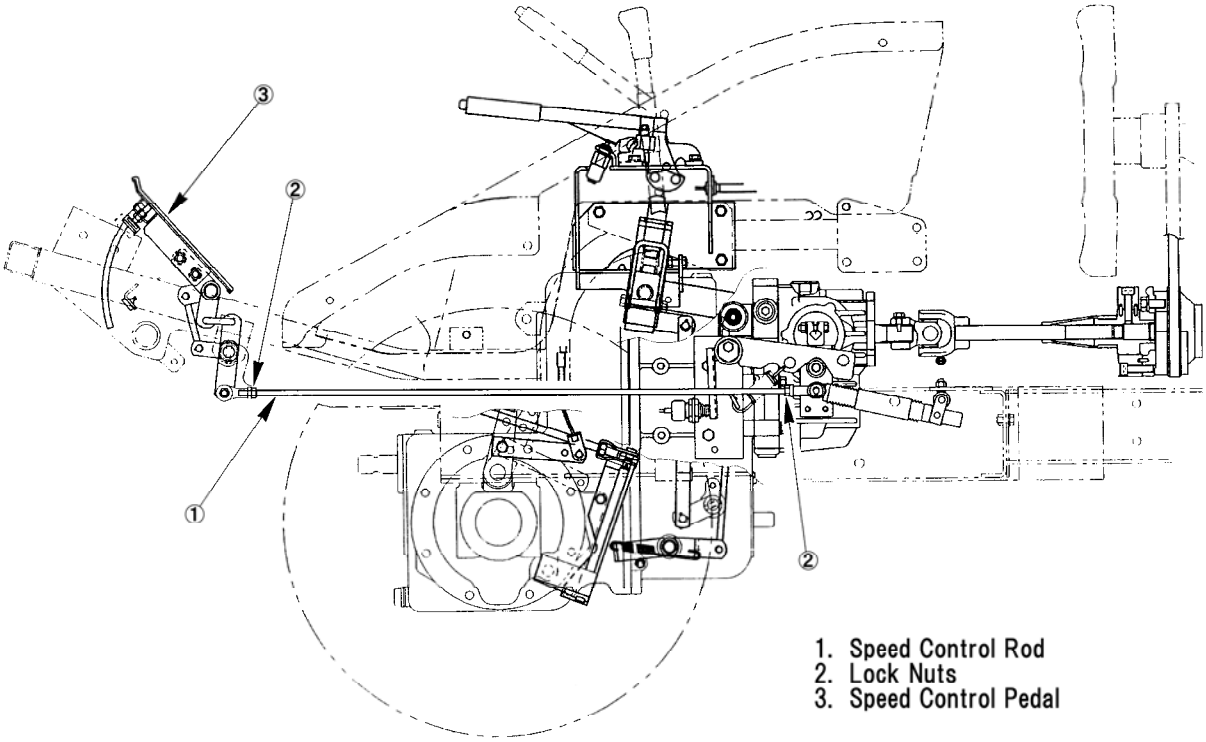

1. Speed Control Rod
2. Lock Nuts
3. Speed Control Pedal

423X

Downloaded from www.Manualslib.com manuals search engine

2. Adjust the reverse speed control pedal stroke to 60 – 70% of the forward speed control pedal stroke. Untighten the lock nuts and adjust the stopper length by turn them as shown illustration.
   Forward speed control pedal stopper length is about 20 mm.
   Reverse speed control pedal stopper length is about 30 mm.

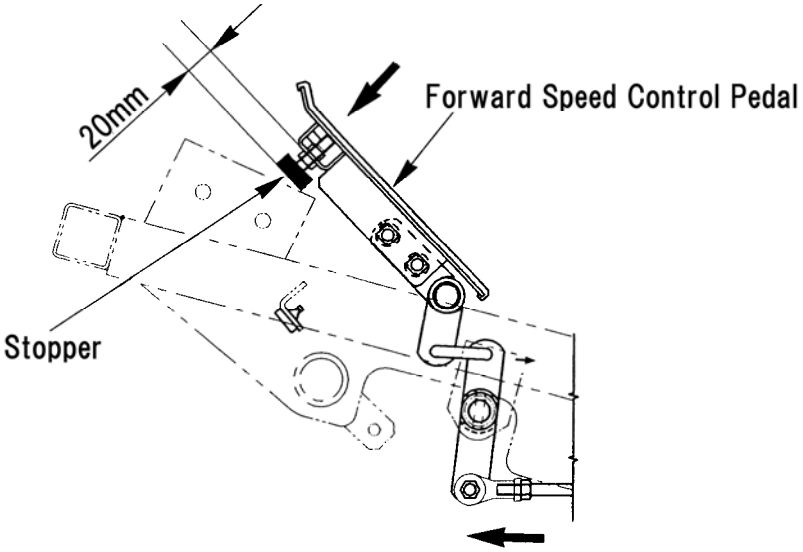

424X

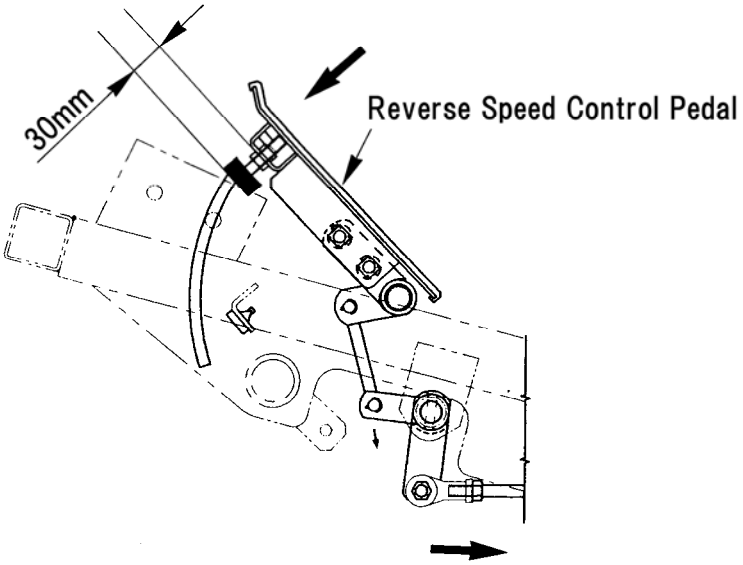

425X

Downloaded from www.Manualslib.com manuals search engine

2) Pressure Checks

(1) HIGH PRESSURE RELIEF VALVE

1. Raise the front and rear wheels of the unit off of the ground and support the axles with jack stands making sure the wheels are clear of the ground.

2. Remove the plug from port "A", Figure 426X and install a 0 – 49 MPa {500 kgf/cm^2} gauge and hose.

   NOTE: Port "A" will check the high pressure relief valve for forward travel and port "B" for reverse.

3. Start the engine and place the range shift lever in high range.

4. Depress the forward pedal a third of the way down.

5. Increase the engine speed to full throttle.

6. Apply the master brake pedal and read the pressure on the gauge.

   NOTE: Measure the pressure reading in 2 – 3 seconds. The pressure reading must be 34.3 MPa {350 kgf/cm^2}. If the pressure is not within specifications replace the high pressure relief valve.

7. Stop the engine and install the pressure gauge and hose into "B" port, Figure 426X.

8. Install the plug to port "A".

9. Depress the reverse pedal and master break pedal and read the pressure. The pressure reading must be 49 MPa {500 kgf/cm^2}. If pressure is not within specifications replace the valve assembly.

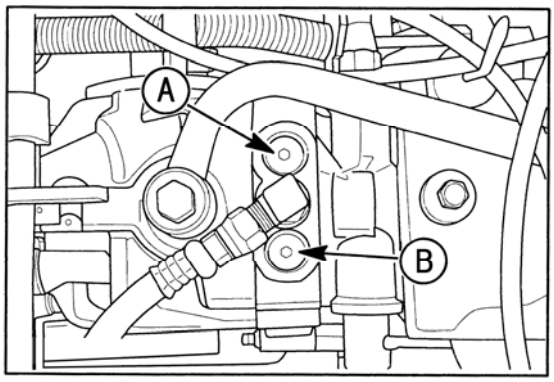

426X

(2) LOW PRESSURE RELIEF VALVE

1. Disconnect the oil hose ①, from the adapter.

2. Install the adapter ② and ③, and if necessary install the adapter ④, to the adapter ②.

3. To check the low pressure relief valve, install a 0 – 3.0 MPa {0 – 30 kgf/cm^2} pressure gauge to the adapter.

4. Place the range lever and forward foot pedal in neutral and start the engine.

5. Increase the engine speed to full throttle and read the pressure. The low pressure relief setting is 71 psi. (4.9 bar). If the pressure is low replace the valve (32), and spring (33), Figure 412X.

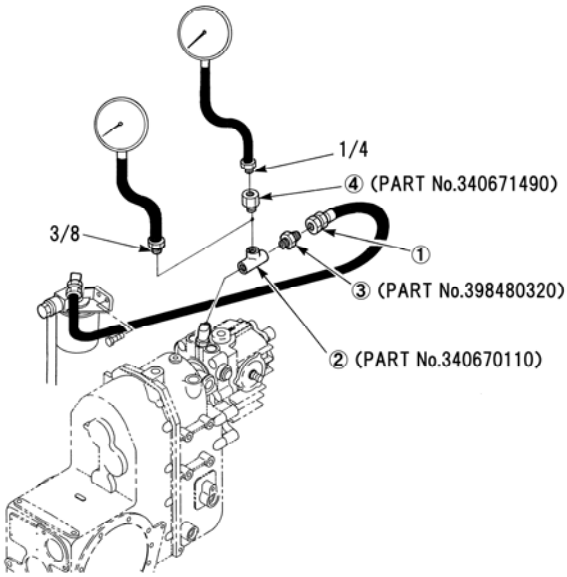

427X

Downloaded from www.Manualslib.com manuals search engine

9. TROUBLE SHOOTING AND SPECIFICATIONS

1) Trouble Shooting

CONDITION	POSSIBLE CAUSE	REMEDY
1. Output shaft fails to rotate when the HST pedal is set position.	1. Improper operation of HST pump or motor. 2. Damaged charge pump 3. Charge pump pressure low. 4. High pressure relief valve set too low. 5. Defective HST check valve. 6. Low pressure relief valve set too low. 7. Air is mixture in the HST oil.	Check the trunnion shaft movement and replace the assembly. Measure the charge pressure and replace the assembly. Check the low pressure circuit relief valve and replace defective parts. Check the high pressure circuit relief pressure. Replace valve if necessary. Replace check valve and spring. Check the low pressure circuit relief valve. Check the suction piping connection and transmission oil level.
2. Output shaft fails to stop rotating with the HST pedal in the neutral position.	1. Defective check and high pressure relief valve. 2. Linkage out of adjustment. 3. Defective the seat of check and high pressure relief valve.	Disassembly and clean. If condition still exists, replace valve. Adjust linkage. Replace the defective parts.
3. Low power and rpm of output shaft	1. Lack of oil in the HST circuit by clogged oil filter. 2. Air is mixture in the HST oil circuit. 3. Lack of charge pump capacity by abnormal oil temperature. 4. High pressure oil leakage due to wear of the pump and motor assembly.	Replace the oil filter. Check the suction piping connection and transmission oil level. Warm up the tractor when too low oil temperature. Stop the engine until the oil temperature become low when too high oil temperature. Wash oil circuit and replace the HST pump and motor assembly.
4. Abnormal sound from the HST	1. Sucked air in the HST circuit. 2. Lack of oil in the HST circuit by clogged oil filter. 3. Lack of charge pump capacity by abnormal oil temperature. 4. High pressure oil leakage due to wear of the pump and motor assembly. 5. Linkage out of adjustment.	Check the suction piping connection and transmission oil level. Replace the oil filter. Warm up the tractor when too low oil temperature. Stop the engine until the oil temperature become low when too high oil temperature. Wash oil circuit and replace the HST pump and motor assembly. Adjust linkage.
5. Oil leaks at shaft and seal.	1. Oil leakage due to damaged oil seal or O-ring. 2. HST case internal pressure too high. 3. HST case oil return tube to front case plugged.	Replace damaged seal or O-ring. Check for worn piston pump or motor and replace if necessary. Case pressure should not exceed 1 MPa {1.0 kgf/cm^2}. Remove and check tube for restrictions.

Downloaded from www.Manualslib.com manuals search engine

2) Specifications

MODEL CM284 and 364

HST TRANSMISSION

Type	HVFD-18A18-M
Input Speed	0 – 3200 rpm
Output Speed	0 – 3000 rpm
Swash Plate Tilt Angle	0 – 16º
High Pressure Relief Valve	34.3 MPa {350 kgf/cm^2}
Charge Pump Pressure	0.49 MPa {5 kgf/cm^2}
Case Pressure	0.096 MPa {0.98 kgf/cm^2} Max.
Pump Capacity – Variable Type	0 – 18.2 cc/rev.
Motor Capacity	0 – 18.2 cc/rev.
Charge Pump Capacity	4.9 cc/rev.

BOLT TORQUES

Swash Plate Covers	6.2 – 7.6 N·m {0.63 – 0.76 kgf·m}
Charge Pump Case Screws	44 – 54 N·m {4.5 – 5.5 kgf·m}
Relief Valve (High Pressure) Check Plug	29.4 N·m {3.0 kgf·m}
Check and High Pressure Relief Valve's Plug	63.7 N·m {6.5 kgf·m}
Port Block Screws	44 – 54 N·m {4.5 – 5.5 kgf·m}

Downloaded from www.Manualslib.com manuals search engine

https://truckmanualshub.com/

Downloaded from www.Manualslib.com manuals search engine

https://truckmanualshub.com/

Chapter 5.
POWER STEERING

Downloaded from www.Manualslib.com manuals search engine

1. OIL FLOW

Pressurized oil from the HST charge pump flows to the power steering motor and HST transmission. During a turning cycle, pressurized oil is directed to the steering cylinder for right or left turns.
Return oil from the power steering cylinder is directed by the steering control valve to the HST transmission. The relief valve in the steering motor protects the system from over loading.

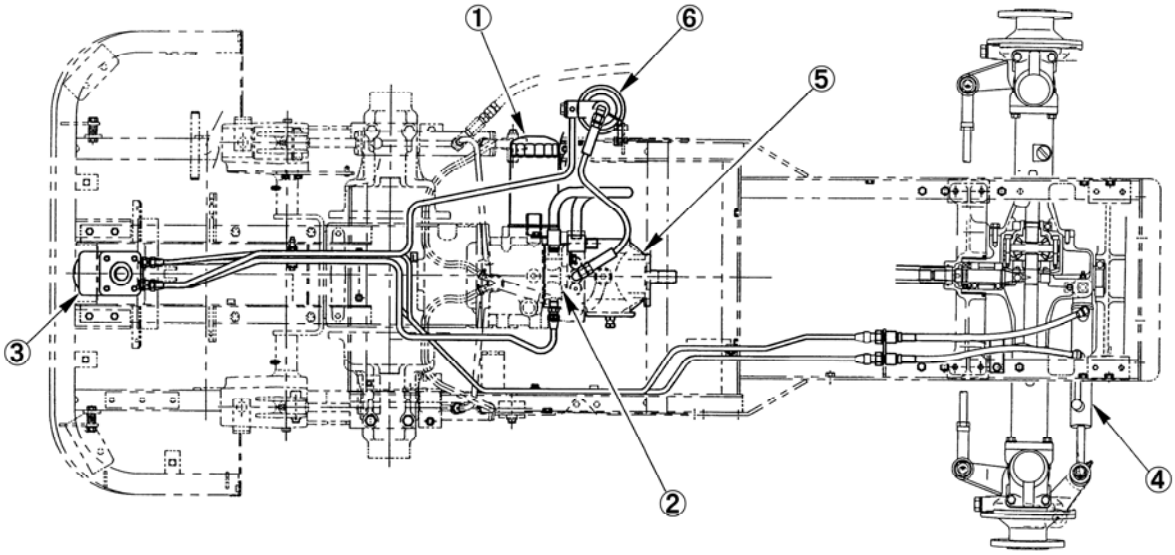

500X

1. Filter
2. Charge Pump
3. Steering Motor
4. Cylinder
5. HST Unit
6. Oil Filter

Downloaded from www.Manualslib.com manuals search engine

1) Neutral Operation

Pressurized oil from the HST charge pump enters the valve body at port “P” . The oil flows through the check valve (7) past the relief valve (3) and through the radial holes in the valve spool (1). In the neutral position, the oil flows through the hollow spool and returns to the HST unit via port “T”.
Passage to ports “L” and ”R” leading to the cylinder are blocked by the spool and sleeve. Oil contained in the tubes and cylinder is trapped and the cylinder remains in a fixed position. In this position the front wheels hold at a same condition. The system is fully hydraulic and as such there is no road feel or front wheel reaction transmitted to the steering wheel.

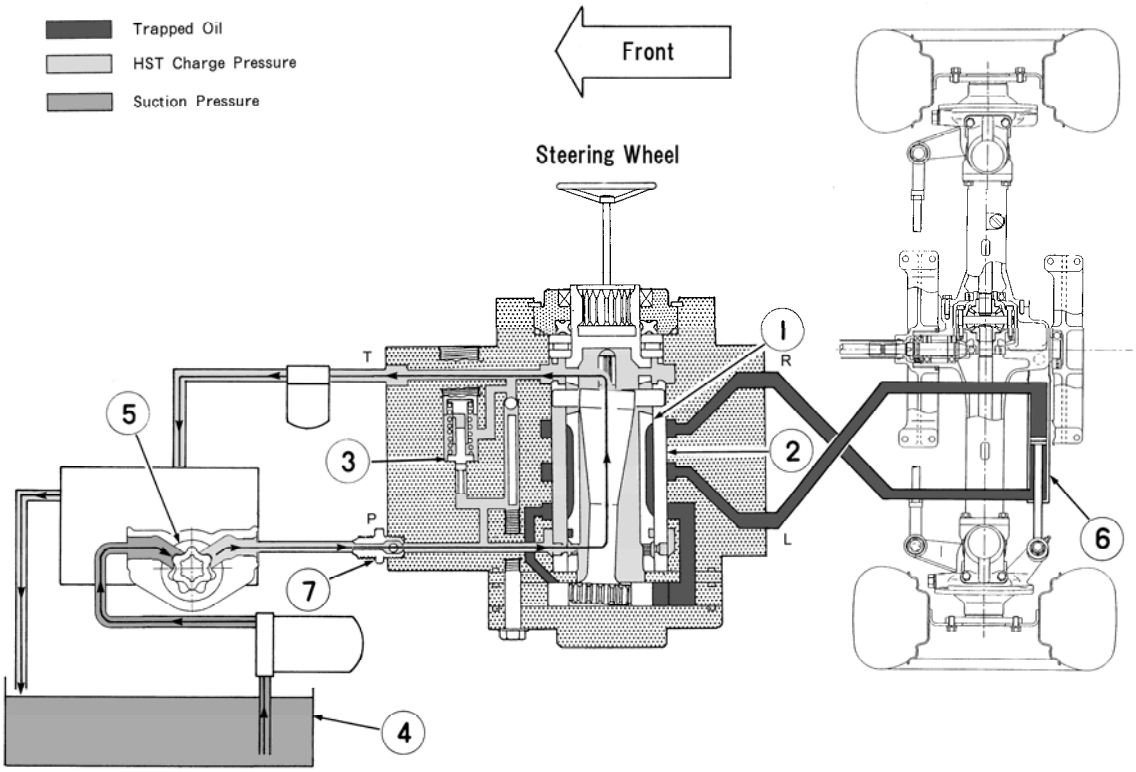

501X

1. Spool
2. Sleeve
3. Relief Valve
4. Oil Tank
5. Oil Pump
6. Steering Cylinder
7. Check Valve – Kick Back

Downloaded from www.Manualslib.com manuals search engine

2) Left Turning

Turning the steering wheel to the left rotates the valve spool and indexes the grooves in the spool with holes in the sleeve so that oil from the pump flows through the spool and sleeve and enters the Gerotor gear pump . Since the Gerotor pump is being turned counterclockwise , the oil flows through the valve body to the port “L”. From port “L” the pressurized oil flows to the piston side of the power steering cylinder and causes the front wheels to turn left.

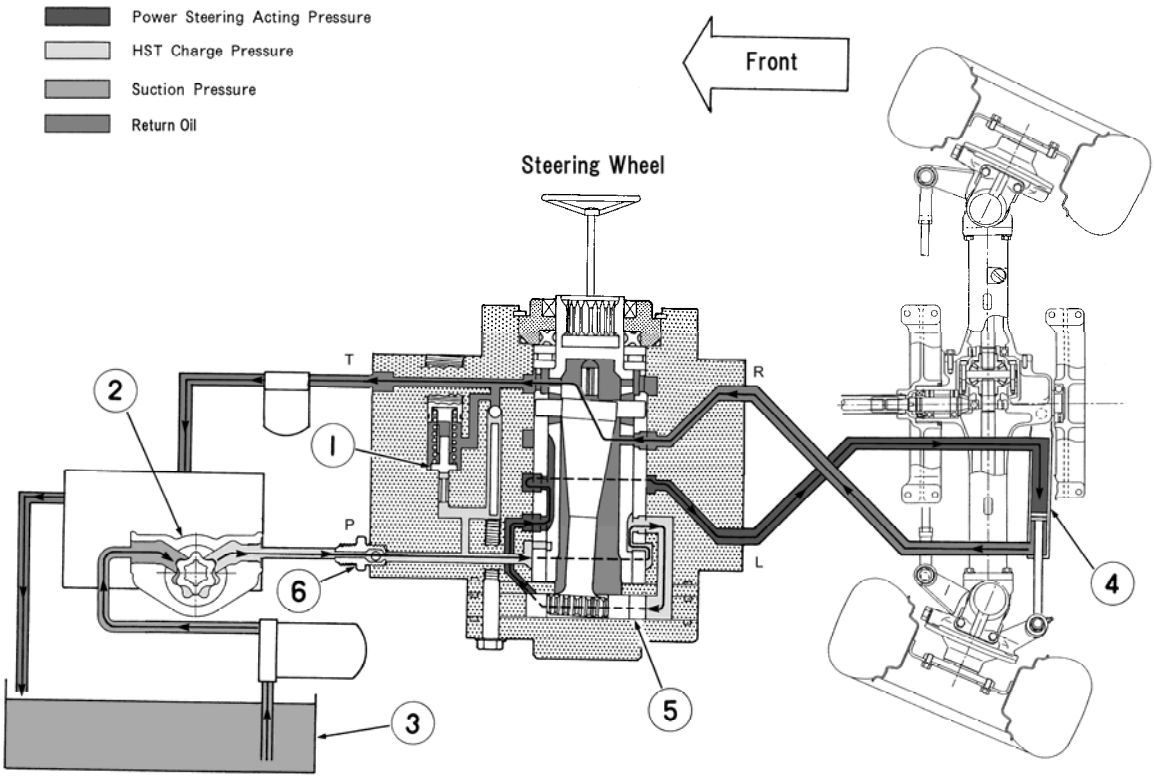

502X

1. Relief Valve
2. Oil Pump
3. Oil Tank
4. Steering Cylinder
5. Gear Pump (Gerotor pump)
6. Check Valve – Kick Back

Downloaded from www.Manualslib.com manuals search engine

3) Right Turning

Turning the steering wheel to the right rotates the valve spool and indexes the grooves in the spool with holes in the sleeve so that oil from the pump flows through the spool and sleeve and enters the Gerotor gear pump . Since the Gerotor pump is being turned clockwise , the oil flows through the valve body to the port “R”. From port “R” the pressurized oil flows to the rod side of the power steering cylinder and causes the front wheels to turn right. The oil contained in the piston side of the cylinder is forced out and returns to the control valve “L” port and is directed back to the reservoir through port “T”.

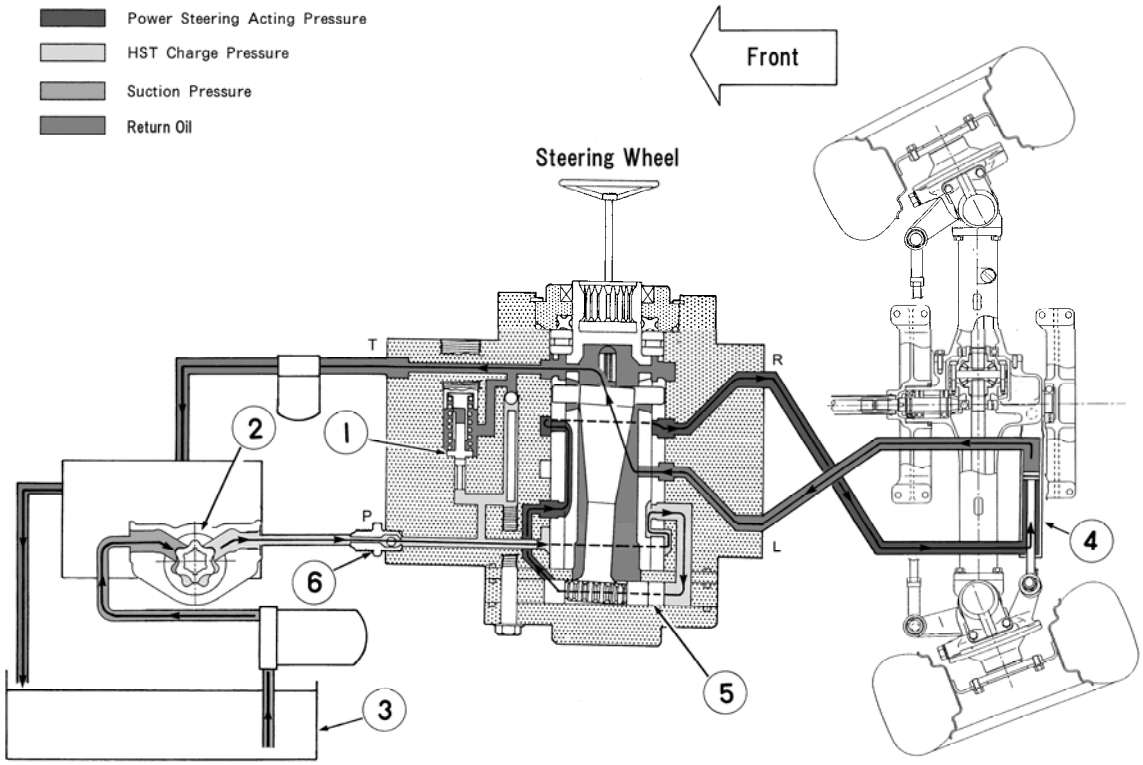

503X

1. Relief Valve
2. Oil Pump
3. Oil Tank
4. Steering Cylinder
5. Gear Pump (Gerotor pump)
6. Check Valve – Kick Back

Downloaded from www.Manualslib.com manuals search engine

4) Manual Operation

In the event of a power steering pump failure or loss of oil pressure, the power steering system can be operated manually. In this case, turning the steering wheel drive the Gerotor gear pump to force oil into the power steering cylinder to whichever side of the cylinder required as directed by the rotation of the steering wheel. On the suction side of the Gerotor pump, return oil flows from the cylinder and is drawn through the check valve (7) to feed the Gerotor. When additional oil supply is required, as in making a left turn, make-up oil from the valve (7) to feed the Gerotor pump.

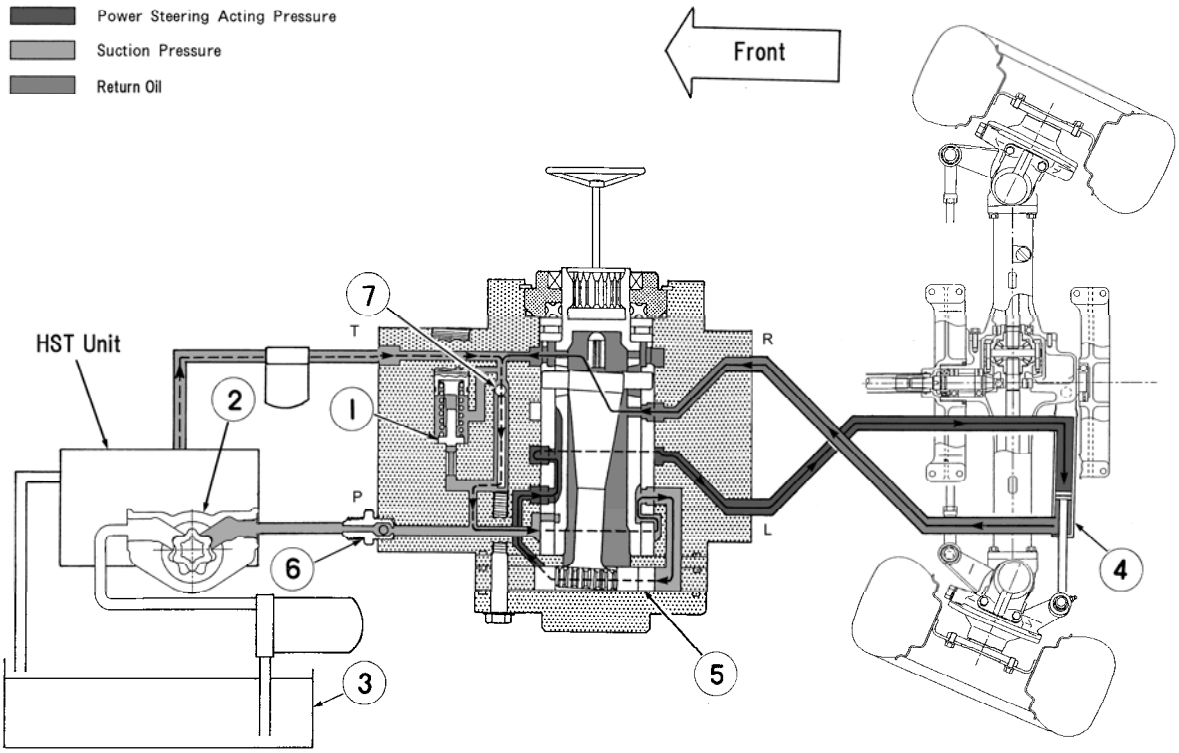

504X

1. Relief Valve
2. Oil Pump
3. Oil Tank
4. Steering Cylinder
5. Gear Pump (Gerotor Pump)
6. Check Valve - Kick-Back
7. Check Valve

Downloaded from www.Manualslib.com manuals search engine

2. CONTROL VALVE ASSEMBLY

1) Removal

1. Disconnect the negative battery cable from the battery post.
2. Pull the light musk ① to front ward and remove the bolts ⑥ and lower cover ② from the floor.
3. Disconnect the four oil pipes ③ from the control valve.
4. Remove the four bolts ④ and control valve ⑤ from the frame.

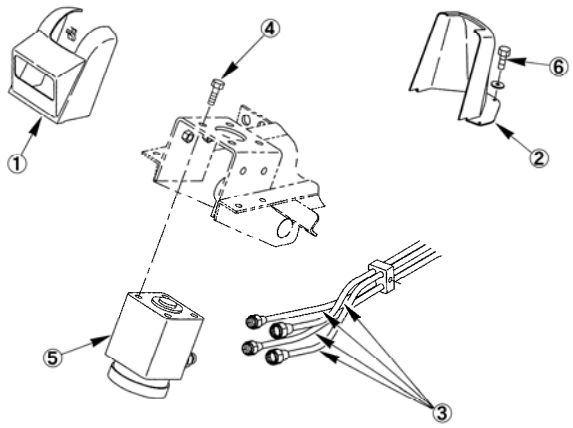

505X

2) Disassembly

Reference – Figure 507X.

1. Place the control valve upside down in a vise, and remove the retaining bolts (22) and check valve retainer bolt (23).

NOTE: Use soft metal jaws on the vise and apply only enough pressure to support the valve assembly. Do not over tighten or the valve body may become distorted and permanently damaged.

2. Remove the end cap (21), seals (20) and O-Ring (16).
3. Remove the Gerotor gear pump (19) and O-Ring (16).

NOTE: The inner rotor separates easily from the outer pump body rotor. Use care in handling to prevent damage to these components.

4. Remove the second large O-Ring (16).
5. Remove the drive shaft (18), spacer plate (17) and third large O-Ring (16).
6. Remove the check ball (24).
7. Remove the retaining ring (2).

NOTE: Remove the valve from the vise and place on a clean lint-free shop towel. Use care in handling the valve parts so as not to mar or damage the precision finishes.

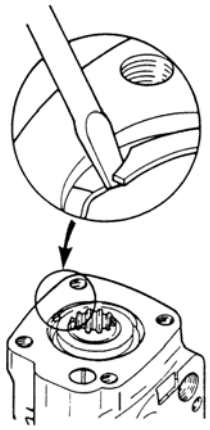

506X

8. Rotate the spool and sleeve to position the pin horizontally. Gently push on the bottom end of the spool and sleeve forcing the gland (3) out of the valve body.
9. Separate the seals (1) and (5) from the gland (3).
10. Remove the thrust bearing (7) and two bearing races (6).
11. Remove the spool and sleeve as an assembly (13), (14) and (15).
12. Remove the pin (14).

Downloaded from www.Manualslib.com manuals search engine

13. Push the spool upward out of the sleeve slightly and remove the centering springs (11) and (12).
14. Remove the spool from the bottom side of the sleeve.

NOTE: rotate the spool while pushing it out of the sleeve to prevent binding.

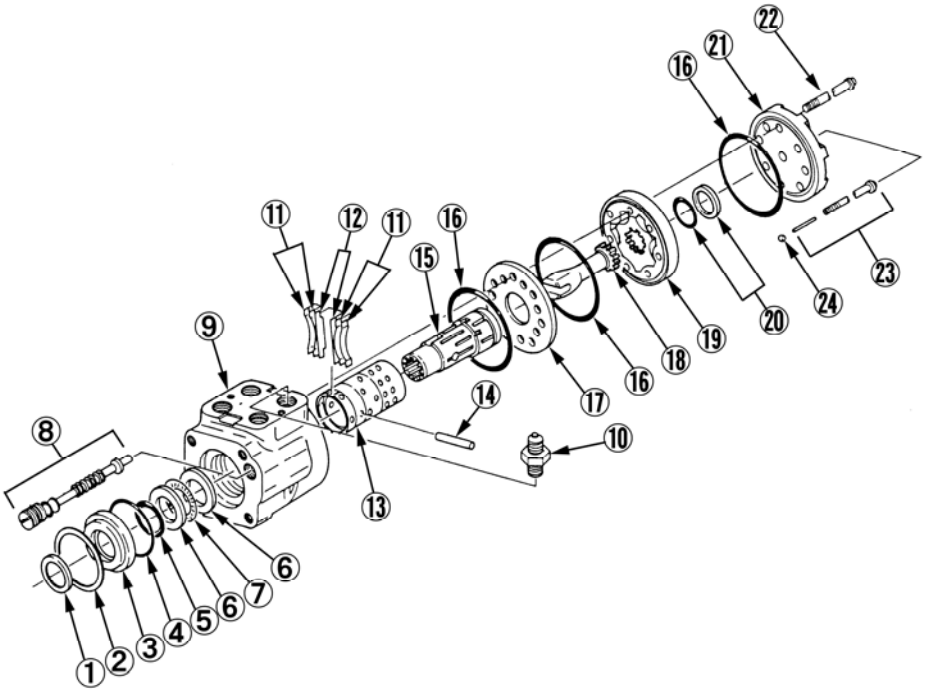

507X

1. Seal-Dust	8. Relief Valve Assembly	13. Sleeve	20. Seal Assembly
2. Retaining Ring	9. Body	14. Pin	21. End Cap
3. Seal Gland	10. Connector	15. Spool	22. Bolts
4. O-Ring	11. Centering Spring (Curved)	16. O-Rings	23. Check Ball and Retaining Bolt
5. Oil Seal	12. Spring (Flat)	17. Spacer Plate	24. Ball (Check)
6. Bearing Race		18. Shaft	
7. Bearing		19. Gerotor Pump	

3) Inspection

1. Inspect the spool and sleeve for evidence of sticking, scuff marks and any damage. If defective, replace the spool and sleeve as a matched set.
2. Upon disassembly, replace all seals and O-Rings with new.

4) Assembly

1. Insert the spool in to the sleeve while slowly rotate the spool.

   NOTE: Bring the matching marks into register to align the centering spring slots.
   Check to be sure the spool rotates freely within the sleeve.

2. With the spring slots lined up insert the special tool in the slots.

Downloaded from www.Manualslib.com manuals search engine

3. Position the combination of centering springs into the groove of the installer.

   NOTE: The springs are arranged with 2 flat springs in the center and 2 curved spring on each side with the convened side facing the flat spring. Be sure the notched edges of the spring face downward.

4. While gripping the outer end of the spring combination and maintaining pressure against the tool, slide the tool out of the assembly leaving the springs positioned in the slots.

   NOTE: Positioning the spool in a slightly higher than normal position in the sleeve will facilitate this assembly operation.

5. position the spool and sleeve so that their ends are flush.
6. Install the pin (14) marking its end flush with the sleeve surface.
7. Insert the spool and sleeve assembly into the valve body for the bottom. Position the assembly so that the end is flush with the valve body.
   Check the sleeve rotation to be sure it rotates freely in the housing bore.
8. Install the O-Ring (4) into the valve body.
9. Position the thrust bearing assembly in the bore making sure it seats firmly on the sleeve and spool.
10. Install the dust seal (1) to the gland (3) bushing.
11. Install the oil seal (5) to the gland . Be sure the seal is not cocked in any way.
12. Position the gland assembly in the bore being sure its outer end face is parallel with the valve body end face.
13. Install the retaining ring in the valve body groove.
14. Position the valve body in a soft jawed vise to support the assembly. Do not over grip the valve body as it will distort the valve body and cause permanent damage to the unit.
15. Position the check ball (24) in to the retainer bolt bore.
16. Position the spool and sleeve assembly so that it is slightly below the bottom face of the valve body.

    NOTE: Be sure the matching surface of the components are clean and free of dart and lint.

17. Install the O-Ring (16) and position the spacer plate (17) on the valve body being sure to match the bolt holes and ports to that of the valve body.

18. Rotate the spool and sleeve to position the pin slots parallel with the valve body port face.
19. Scribe a reference mark on the splined end of the drive shaft parallel to the pin slot as shown.
20. Position the drive shaft in the valve body engaging the slot with the pin.

    1. Reference Scribe Mark
    2. Pin
    3. Drive Shaft

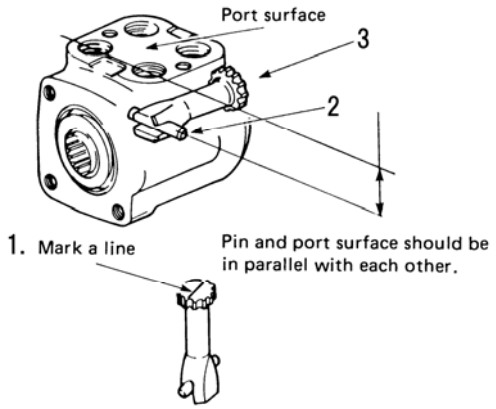

508X

Downloaded from www.Manualslib.com manuals search engine

21. Install the O-Ring and seal (20) on the rotor (19).

    NOTE: Apply a grease type lubricant to the face of the rotor to make the O-ring and seal adhere to the rotor surface.

22. Position the rotor in the pump ring and install the O-ring (16) in the pump groove.
23. Position the gerotor pump assembly onto the valve body with the seal side up. Align the drive shaft reference line with a diametrical line running through the center of the pump gear valleys as shown.

    NOTE: It is important that the pump drive shaft , gear lobes and valve ports are in the correct relationship for proper valve timing as described above and reference in the parallel lines A, B,C and D.

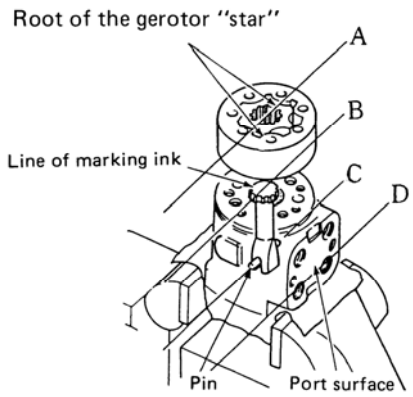

509X

A. Gear Lobe Reference
B. Drive Shaft Reference Mark
C. Drive shaft Pin Location
D. Port Face Reference

24. Install the O-ring (16) onto the end cap (21) and position the assembly on the valve body.
    Align the bolt holes and install the retaining bolts (22).

    NOTE: Lubricate the bolt threads and tighten to specified torque in two steps to maintain equal pressure on the valve body. Tighten the bolts in the sequence as shown.

    Tightening torque-----20 N·m {2kgf·m}

    Recheck the valve spool to be sure it rotates smoothly without binding.

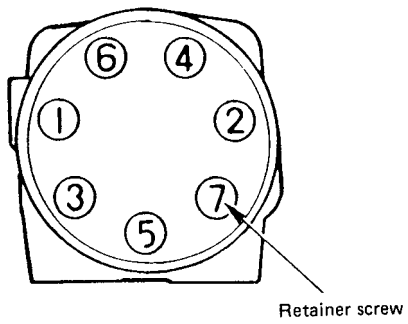

510X

25. Install the connector fitting (10) in the valve pressure port and tighten to the specified torque.

    Tightening torque-----69±9 N·m {7±0.9 kgf·m}

26. Install the control valve assembly on the tractor and complete the assembly following the removal procedures in reverse.

Downloaded from www.Manualslib.com manuals search engine

5) Pressure Testing

1. With the tractor engine stopped, disconnect one of the hydraulic lines which run to the steering cylinder.
2. Connect the pressure gauge to the end of the line from the steering control unit and cap the line leading to the steering cylinder.
3. Start the tractor engine, and allow it to idle. Observe the gauge, is should read at 0 or near 0 MPa {0 kgf/c ㎡}.
4. Turn the steering wheel so that the line which the gauge is connected to receives pump oil intended for the steering cylinder. For instance, if the gauge is connected to the left side of the cylinder (as viewed from the operator's seat) , turn the steering wheel to the clockwise. Observe the gauge reading. (Engine speed at approx. 3200 rpm)

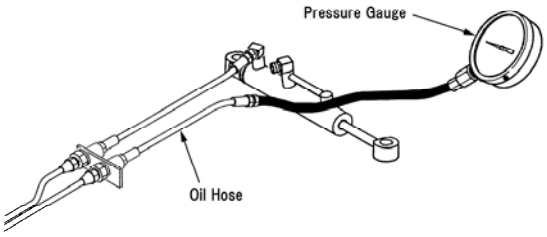

511X

● **Test results**

1. If the pressure gauge reading rises before the steering wheel is turned, it indicates that steering control valve timing is off and the steering unit will have to be disassembled and inspect.
2. If the pressure gauge reading rises to the relief valve setting 5.9 – 6.6 MPa {60 – 67 kgf/c ㎡} when the steering wheel is turned, it indicates the pump and relief valve are working properly.

3. POWER STEERING CYLINDER

1) Removal

1. Disconnect the steering hoses to the power steering cylinder and cap all openings.
2. Remove the cylinder from the tractor.

NOTE: Do not disassemble the power steering cylinder assembly. If oil leaking and /or trouble is evident from cylinder assembly, replace the cylinder assembly.

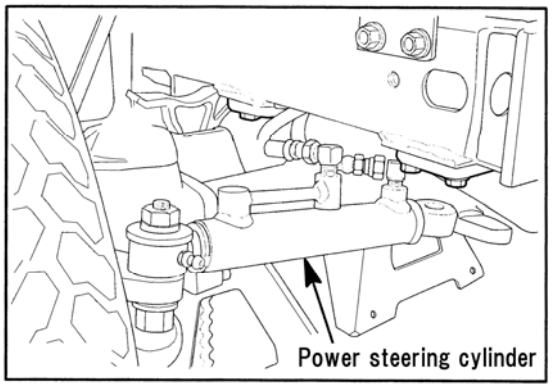

513X

2) Inspection

1. Inspect the anchor pins and bushings for excess wear and excessive clearance. Replace cylinder assembly and/or pins if the clearance is over 0.5 mm.

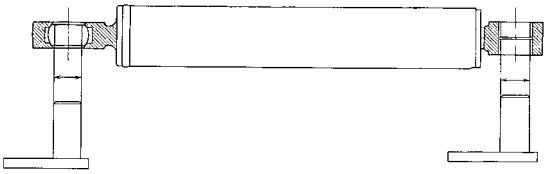

517X

Downloaded from www.Manualslib.com manuals search engine

3) Installation

1. Install the cylinder on the tractor.
2. Connect the power steering hoses to the adapter and tighten to 19.6 – 29.4 N·m {2 – 3 kgf·m}.
3. Start the tractor, operate the steering system, and check for any leaks.

4. PIPING

Replace the oil hoses and pipes if cracks, oil leakage, or other damages are noticed.
Any time a seal is broken, always use sealing tape on the tube fittings to ensure a tight non-leak fit, and torque the fitting to the specified torque. Don't taping at the flare nut fitting.

NOTE: When winding seal tape on the thread, be careful not to allow the tape to flow into the hydraulic piping. Be careful to keep oil hoses and oil pipes off other part. Fix clamps securely.

1) Tightening Torque of Piping

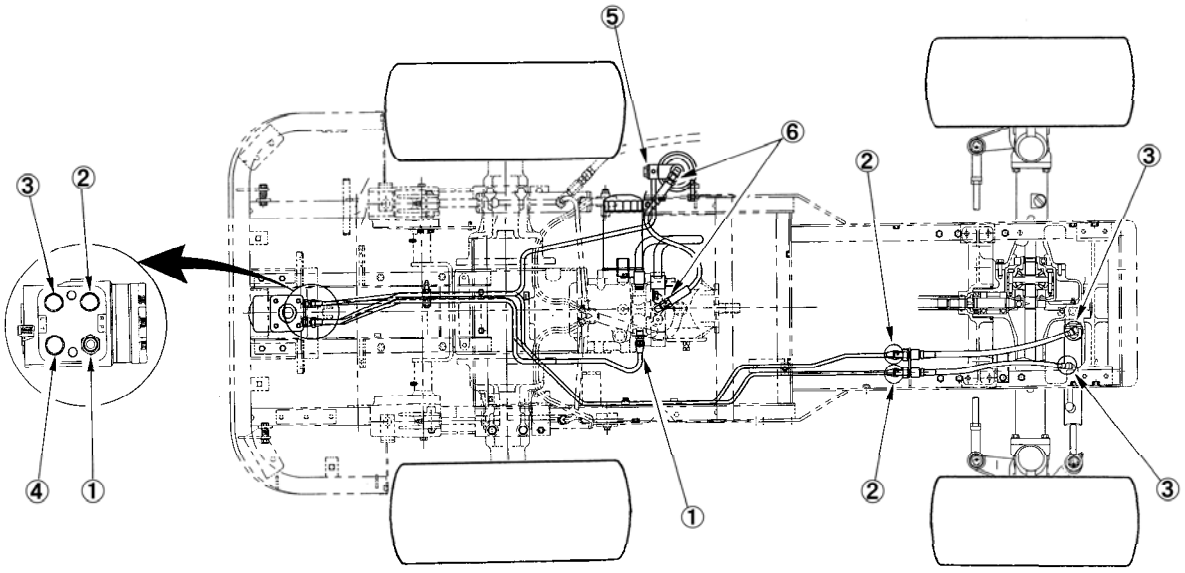

520X

1. Flare nuts of oil pipe for charge pump to steering motor : 29.4 – 39.2 N·m {3 – 4 kgf·m}
2. Flare nuts of oil pipes for steering motor to power steering cylinder "L" and "R" port : 29.4 – 39.2 N·m {3 – 4 kgf·m}
3. Nuts for oil hose to power steering cylinder "L" and "R" port : 19.6 – 29.4 N·m {2 – 3 kgf·m}
4. Flare nuts of oil pipes for steering motor to HST oil filter : 39.2 – 49.0 N·m {4 – 5 kgf·m}
5. Banjo bolt of oil pipe for steering motor to HST oil filter : 44.1 – 53.9 N·m {4.5 – 5.5 kgf·m}
6. Nuts of oil hose for HST oil filter to HST unit : 29.4 – 39.6 N·m {3 – 4 kgf·m}

Downloaded from www.Manualslib.com manuals search engine

5. TROUBLE SHOOTING

Most malfunctions in the steering system can usually be traced to dirt or foreign matter in the system. Dirt can cause such things as stickiness, erratic operation, or hard steering.

Before considering the procedures below, follow these suggested steps:

1. Check the pump for proper relief valve action. See "Pressure Testing", discussed in this section.
2. Jack the rear end of the tractor off the ground and cycle the steering from stop to stop to check for rear axle binding.
3. Be sure the hydraulic hoses from the pump-to-control valve and from the control valve-to-cylinder are hooked up correctly.

NOTE: If the steering system oil continues to overheat above 200º (93ºC), seals in the system can shrink, harden or crack thus losing steering ability.

CONDITION	POSSIBLE CAUSE	CORRECTION
Clicking noise	1. Steering components loose and shifting under load.	Check and correct.
Steering wander	1. Tire pressure incorrect. 2. Worn tie rod ends. 3. Steering column shaft binding.	Check tire pressure. Replace. Remove and correct.
High steering effort	1. Low pressure. 2. Steering motor binding.	Check pressure. Check and repair.
Excessive heat	1. Kinked hose. 2. Bent tubes. 3. Restricted re-centering of steering motor.	Check hose routing. Check tubes. Repair as necessary.
Hard Steering	1. Lack of transmission oil.	Fill the transmission oil.
	2. ORBITROL (control valve unit) (1) ORTITROL not aligned to steering column.	Reposition ORBITROL. (If loosening its mounting bolts lightens the handwheel, it means that ORBITROL was in misalignment).
	(2) Spool-and-sleeve combination is seized because of foreign matter.	Replace.
	(3) Over tightening of the end cap bolts.	Re-tighten to the specified torque limit.
	3. Oil pump (HST Charge Pump) (1) The pump is stuck and will not work.	Replace oil pump. (HST Charge Pump)
	(2) The pump is worn down.	Replace oil pump. (HST Charge Pump)
	(3) Pumping performance inadequate.	Test pump performance and, if necessary, remove the pump. Disassemble the pump and replace the internal seals.
	4. Relief valve (1) The valve is damaged because of internal deterioration.	Replace control valve assembly.
	(2) Pressure setting is too low.	Replace control valve assembly.

Downloaded from www.Manualslib.com manuals search engine

CONDITION	POSSIBLE CAUSE	REMEDY
Steering wheel will not return to neutral or will turn by itself.	1. ORBITROL	
	(1) Spool and sleeve combination is stuck and will not rotate.	Replace control valve assembly.
	(2) ORBITROL not aligned to steering column.	Re-align.
Cylinder will not follow steering wheel rotation or will respond sluggishly.	1. ORBITROL	
	(1) ORBITROL has been improperly rebuilt, resulting in valve mistiming.	Repair.
	2. Steering cylinder	
	(1) Air is trapped in the cylinder.	Bleed air out.
	(2) Internal oil leakage because of damaged piston seal.	Replace the seal.
Steering wheel will “kick back"	1. ORBITROL	
	(1) ORBITROL has been improperly rebuilt, resulting in valve mistiming.	Repair.
	2. Piping	
	(1) Pipes are improperly connected to the four ports of ORBITROL.	Correct the pipe connections.
Oil leakage		
1. From the splined connection of column to spool.	1. Leaky oil seal	Replace the seal.
	(1) Dirty hydraulic oil.	Change the oil.
2. From mated face joints (valve body, spacer plate, ORBITROL, end cap).	2. Damaged O-Ring.	Replace.
Stiff or Jerky Steering Action	1. Worn or damaged bearings	Inspect and repair.

Downloaded from www.Manualslib.com manuals search engine

https://truckmanualshub.com/

Chapter 6.
REAR AXLE ASSEMBLY

Downloaded from www.Manualslib.com manuals search engine

https://truckmanualshub.com/

1. DESCRIPTION AND OPERATION

The four -wheel drive rear axle is supported by an axle pivot pin at the rear of the frame.

Range Selector Lever and Four-Wheel Drive (FWD) Selector Lever are activated by the same lever.
The range selector lever is on the left side of the seat, can be shifted when the HST foot pedal is in the Neutral position to select, High range, Low range or Neutral.

- When the lever is located in the position of Range Selector Lever, the tractor will run in Automatic mode.
- When the lever is brought to the outer slot, the tractor will run in Permanent FWD mode.

NOTE: When tractor is in Permanent FWD mode, only low range is engaged.

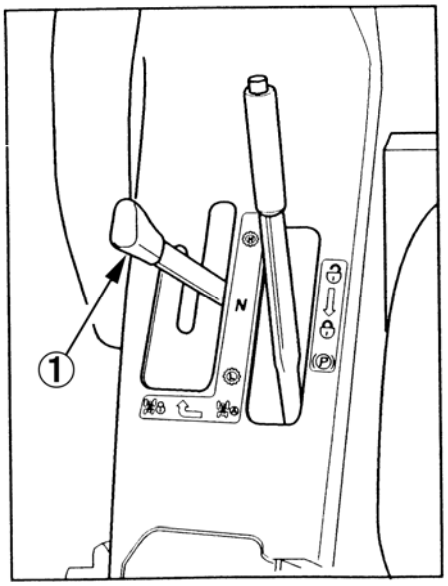

600X

1. Ranger Selector Lever

The four-wheel drive output shaft (1) in the range gear box is contained in a two way clutch assembly (4).
The two way clutch assembly (4) is installed on the front wheel drive pinion (2). During operation, placing the lever into the Automatic four wheel drive position will automatically give the operator full four-wheel drive when the front wheels lose traction.
Since the rear wheel drive axle gears rotate slightly faster than the range gears in the transmission, the four-wheel drive output shaft (1) is free to rotate within the two way clutch (4).
When one of the front drive wheels starts to spin, the two-way clutch applies and sends power to the rear wheels thus giving the operator automatic four-wheel drive.

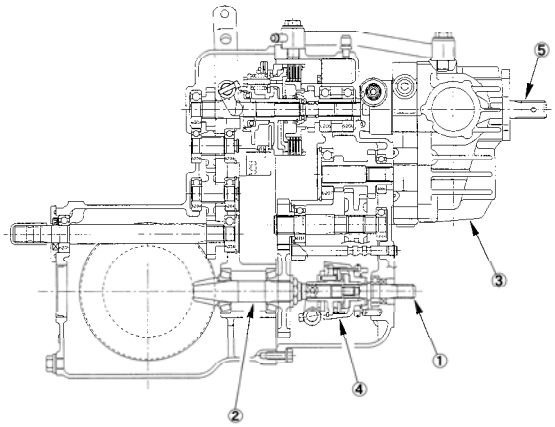

601X

1. Four-Wheel Drive Out put Shaft
2. Drive Pinion Shaft
3. HST Unit
4. Two-Way Clutch Assembly
5. Input Shaft

Downloaded from www.Manualslib.com manuals search engine

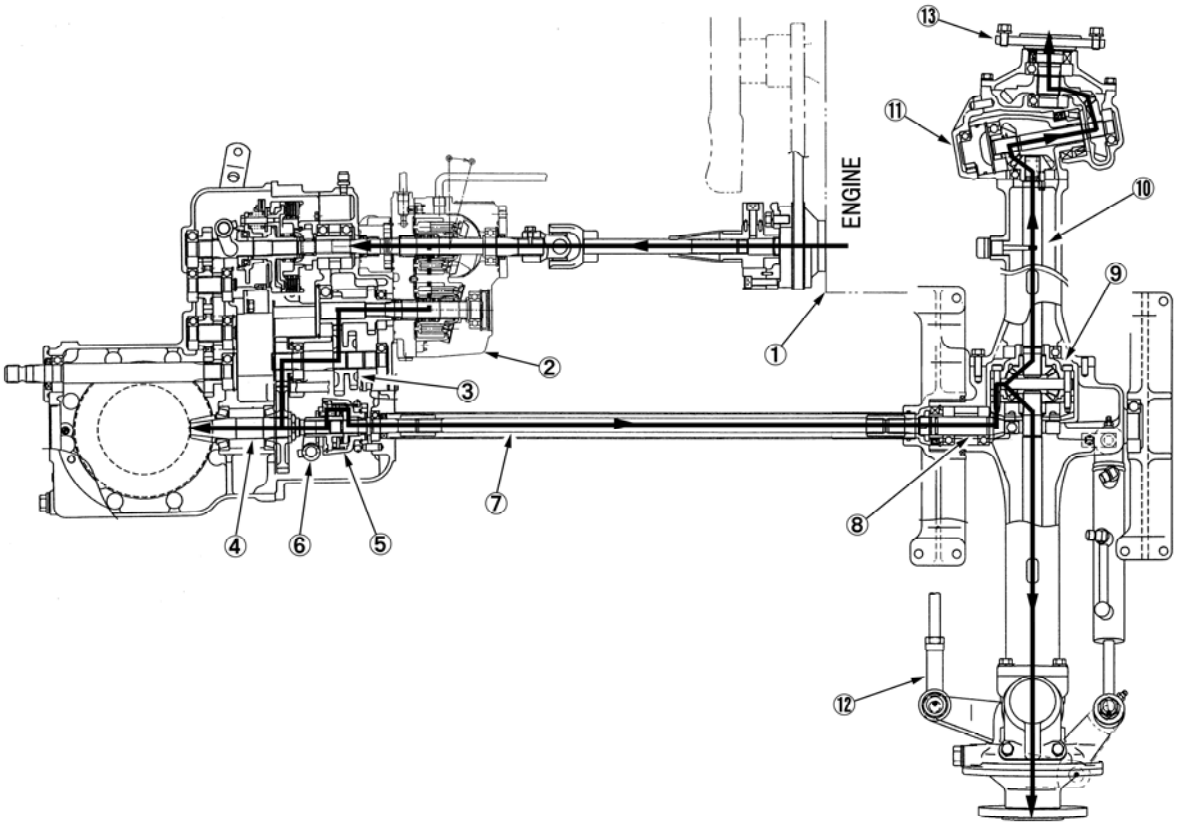

602X

1. Engine
2. HST Unit
3. Range Slide Gear
4. Drive Pinion
5. Two-Way Clutch
6. Permanent FWD Shifter Fork
7. Rear Wheel Drive Shaft
8. Drive Pinion
9. Differential Gear Assembly
10. Drive shaft
11. Reduction Case
12. Tie Rod
13. Wheel Shaft

2. REAR AXLE REMOVAL

1. Disconnect the power steering oil pipes from the power steering cylinder.
2. Place the safety stands under the main frame.
3. Remove the rear axle bearing holders from the frame ,and remove the rear axle assembly.
4. If necessary ,remove the pipe, drive shaft and coupling from the transmission.

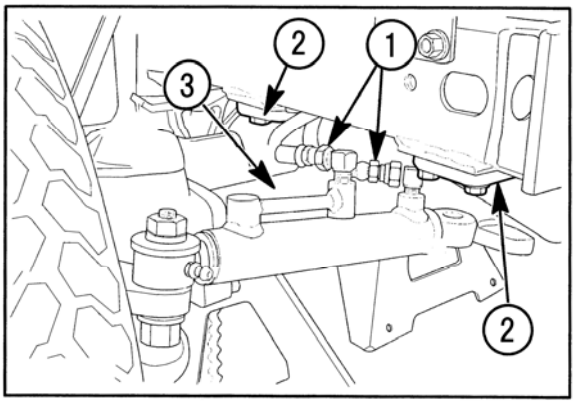

603X

1. Oil Pipe
2. Bearing Holder
3. Rear Axle Assembly

3. INSTALLATION

Installation generally follows removal procedure in reverse, however the following must be observed:

1. Replace cracked or damaged hoses.

Downloaded from www.Manualslib.com manuals search engine

4. DISASSEMBLY

Reference Figure 604X.

1. Remove the rear axle as outlined above and then remove the power steering cylinder (1), wheels (2) and tie rod (3) from the rear axle assembly.
2. Remove the outer case cover (4) and bevel gear (5) as an assembly.
3. Remove the bolts (6), arm (7) and king pin (8).
4. Remove the final case (9), final pinion (10) and drive shaft (11) to downward.

NOTE: If necessary, remove the seal (12) and bearing (13) from the case.

5. Remove the bolts (14) and remove the idler gear case (15) assembly.
6. Remove the snap ring (16), bearings (17) and idler bevel gears (18) from the idler gear case (15).

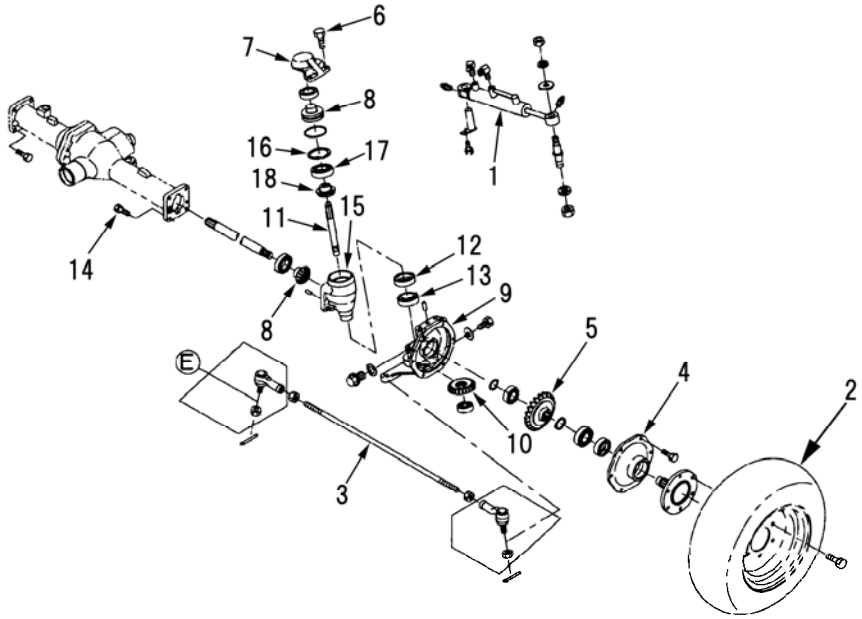

1. Power steering cylinder	6. Bolt	11. Drive shaft	16. Snap ring
2. Rear wheel	7. Arm	12. Seal	17. Bevel gear
3. Tie rod	8. King pin	13. Bearing	
4. Outer case cover	9. Final case	14. Bolt	
5. Bevel gear	10. Final pinion	15. Idler gear case	

604X

Downloaded from www.Manualslib.com manuals search engine

Reference – Figure 605X.

7. Remove the bolts (1) on the right side housing and remove the housing (2) and drive shaft (3) as an assembly.

NOTE: Note the total amount of the shims (3) and thickness used between differential bearing (4) and right axle housing (2).

8. Remove the differential assembly (5) from the left axle housing (6).
9. Remove the bearing holder (7). Remove the lock nut (8) and pry the oil seal (9) and discard.
10. Remove the snap ring (10) and draw out the drive pinion (11), collars (12 and 13) and bearings (14 and 15) as a set.

NOTE: If necessary, remove the bearings (14 and 15), collars (12 and 13), O-ring (17) and spacer (16) from the pinion shaft (11).

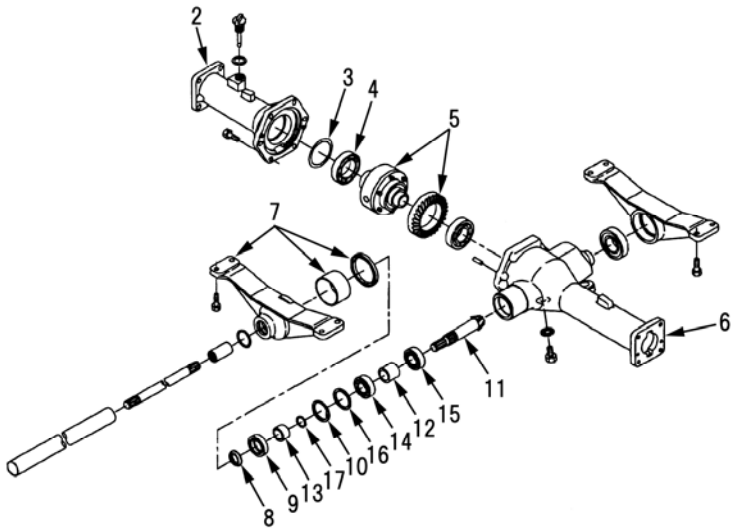

1. Bolt
2. Right Axle Housing
3. Shims
4. Bearing
5. Differential Assembly
6. Left Axle Housing
7. Bearing Holder
8. Lock Nut
9. Oil Seal
10. Snap Ring
11. Pinion Shaft
12. Collar
13. Collar
14. Bearing
15. Bearing
16. Spacer
17. O-Ring

605X

Reference – Figure 606X.

11. Remove the bearing (1) and final gear (2) .
12. Remove the snap ring (3) and drive out the wheel shaft (4) from the case cover (5).
13. If necessary, remove the oil seal (6) and bearing (7) from the case cover (5).

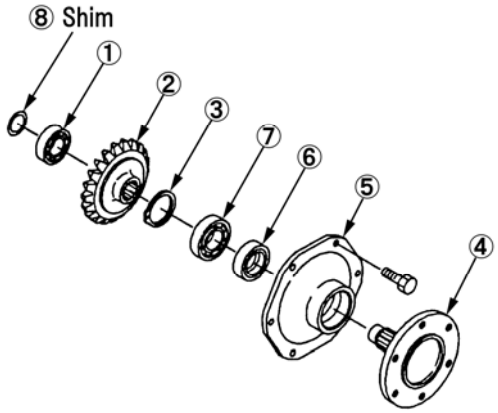

606X

Downloaded from www.Manualslib.com manuals search engine

14. Remove the bolts (11) from the ring gear (2), and remove the gear, side cover (3), thrust washer (7) and side gear (5).
15. Remove the pinion shaft (8), pinions (6), thrust washer (7) and the opposite side gear and thrust washer.

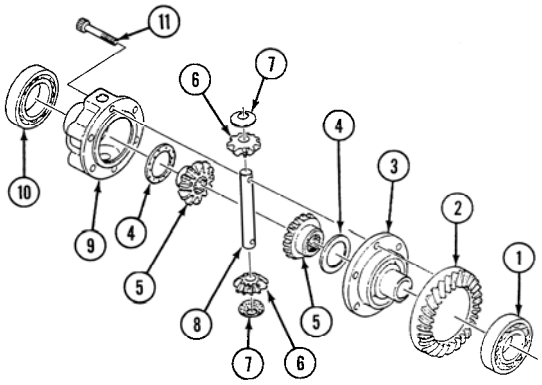

608X

1.	Bearing (6207)	7.	Thrust Washer
2.	Ring Gear	8.	Shaft
3.	Side Cover	9.	Case
4.	Thrust Washer	10.	Bearing (6009)
5.	Side Gear	11.	Bolt
6.	Pinion		

5. INSPECTION

1. Wash all parts in a suitable solvent and air dry.
2. Check the bearings for discoloration and wear.
3. Discard all seals and O-rings.
4. Check all gears for wear, chips or broken teeth.
5. Measure the thickness of the thrust washers (4). Replace the thrust washers if thickness is less than 0.9 mm.
6. Measure the thickness of the thrust washers (7). Replace the thrust washers if thickness is less than 0.9 mm.
7. Measure the outside diameter of the pinion shaft (8) and inside diameter of the pinion gears (6). Replace the pinion or gear if clearance is more than 0.5 mm.
8. Measure the outside diameter of the pivot shaft (1) and inside diameter of the bushings (2).
   Replace the pivot shaft or bushing if clearance is more than 0.3 mm.

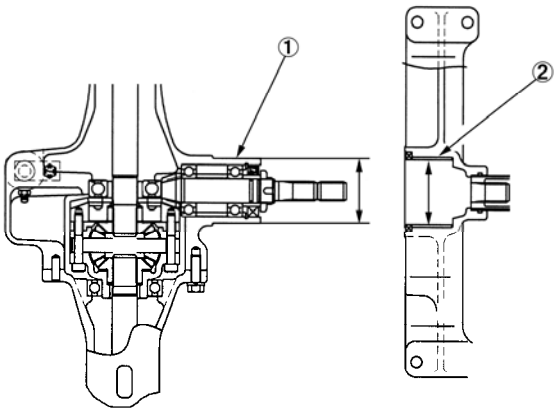

609X

1.	Pivot Shaft	2.	Bush

Downloaded from www.Manualslib.com manuals search engine

6. ASSEMBLY

Assembly generally follows disassembly procedures in reverse however the following must be observed:

1. Remove the oil completely from the ring gear thread and ring gear bolts before reassemble.
2. Coat all ring gear to differential housing bolts with Locktite sealant and torque to 24 – 30 N·m {2.5 – 3.0 kgf·m}.
3. Install the bearings (2 and 3) and collar (4) on the pinion shaft (1), and install a new O-ring (5).

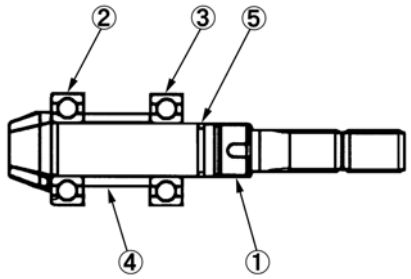

610X

1.	Drive Pinion Shaft	4.	Collar
2.	Bearing	5.	O-ring
3.	Bearing		

4. Install the drive pinion (1) as a set and spacer (2) secure with snap ring (3) in the left axle housing (4).
5. Install the new oil seal (5) in the left axle housing.
6. Install the collar (6) on the drive pinion shaft.
7. Install the lock nut (7) and tighten to 65.7 – 83.3N·m {6.7 – 8.5 kgf·m}. Stake the nut to the pinion shaft groove.

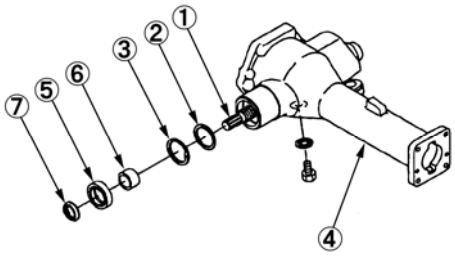

611X

1.	Drive Pinion Shaft	5.	Oil Seal
2.	Spacer	6.	Collar
3.	Snap Ring	7.	Lock Nut
4.	Left Axle Housing		

Downloaded from www.Manualslib.com manuals search engine

8. Adjust the ring gear to pinion backlash as follows:

- With the drive pinion and left axle installed, place the differential assembly into the housing.
  Measure the distance “A” from bearing to the housing.
- Measure the depth of the right hand axle housing “B” from the housing to the bottom of the bearing bore.

- Select shims so that measurement “A” equals measurement “B”.

  For example: If measurement “B” is 20.5 mm. and measurement “A” is 20.0 mm, the difference is 0.5 mm.
  Place the selected shim(s) into the right axle housing (1) prior to assembly. This procedure will give you the collect ring gear to pinion backlash.

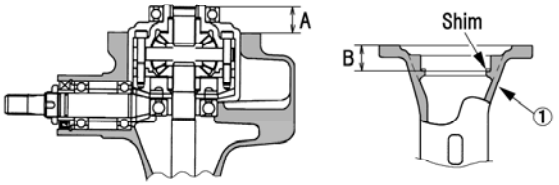

612X

7. INSTALLATION

Installation generally follows removal procedure in reverse however, the following must be observed:
Adjust the toe-in (A - B) with the tie rod to 5 mm.
Fill the rear axle to the level plug with gear oil.

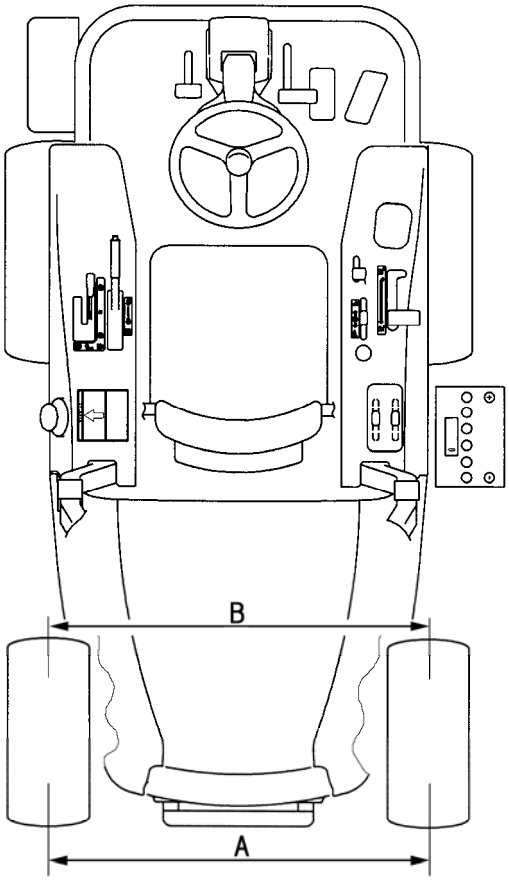

613X

Downloaded from www.Manualslib.com manuals search engine

https://truckmanualshub.com/

Chapter 7. HYDRAULIC LIFT SYSTEM

Downloaded from www.Manualslib.com manuals search engine

1. DESCRIPTION AND OPERATION

The hydraulic system consists of a filter, hydraulic pump, oil cooler, control valve, weight transfer valve, lift cylinders, tubing, restriction valve and lift arms.
The oil pump is a gear type which is installed on the engine timing gear case.
The control valve consists of a body, valve spool, weight transfer valve, relief valve and float detent assembly.

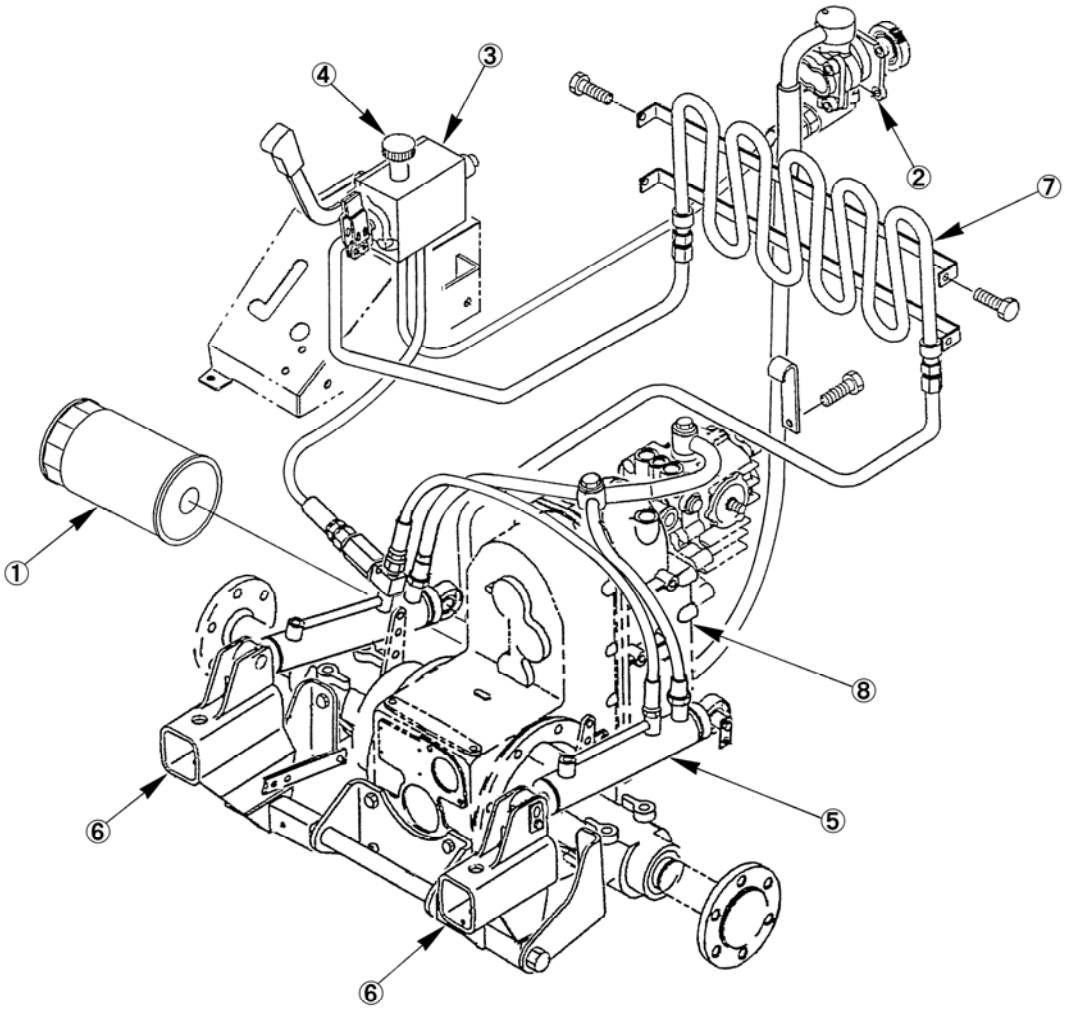

700X

1. Oil Filter
2. Oil Pump
3. Control Valve
4. Weight Transfer Valve Grip
5. Lift Cylinders
6. Lift Arms
7. Cooler
8. Transmission Reservoir

Downloaded from www.Manualslib.com manuals search engine

2. OIL FLOW

1) Neutral Position

Pressurized oil flows to enters the “P” port of the control valve. The oil flows through a passage in the spool and is directed to the “T” port and then to the cooler and transmission. The oil in the lift cylinders port “A” is trapped by the spool and holds the lift arms in a constant position.

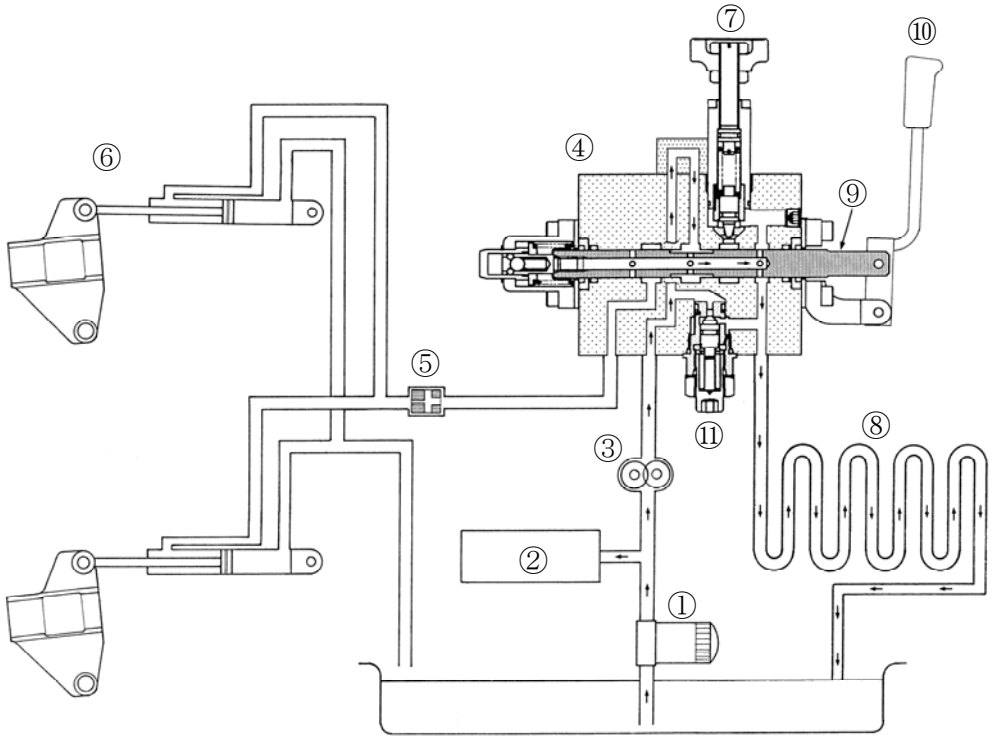

701X

1. Oil Filter
2. HST Unit
3. Oil Pump
4. Control Valve
5. Restriction Valve
6. Lift Cylinder
7. Weight Transfer Valve
8. Oil Cooler
9. Spool
10. Control Lever
11. Relief Valve

Downloaded from www.Manualslib.com manuals search engine

2) Raising Position

When the control valve lever is moved to the raise position (in), the pressurized oil from “P” port flows to A1 and is directed to the lift cylinder rods side “A” and raises the lift arms. Oil on the piston side “B” is directed to the transmission. Holding the lift lever in the raised position, with the lift arms fully raised, will cause the relief valve in the control valve to open and direct the oil to the cooler circuit.

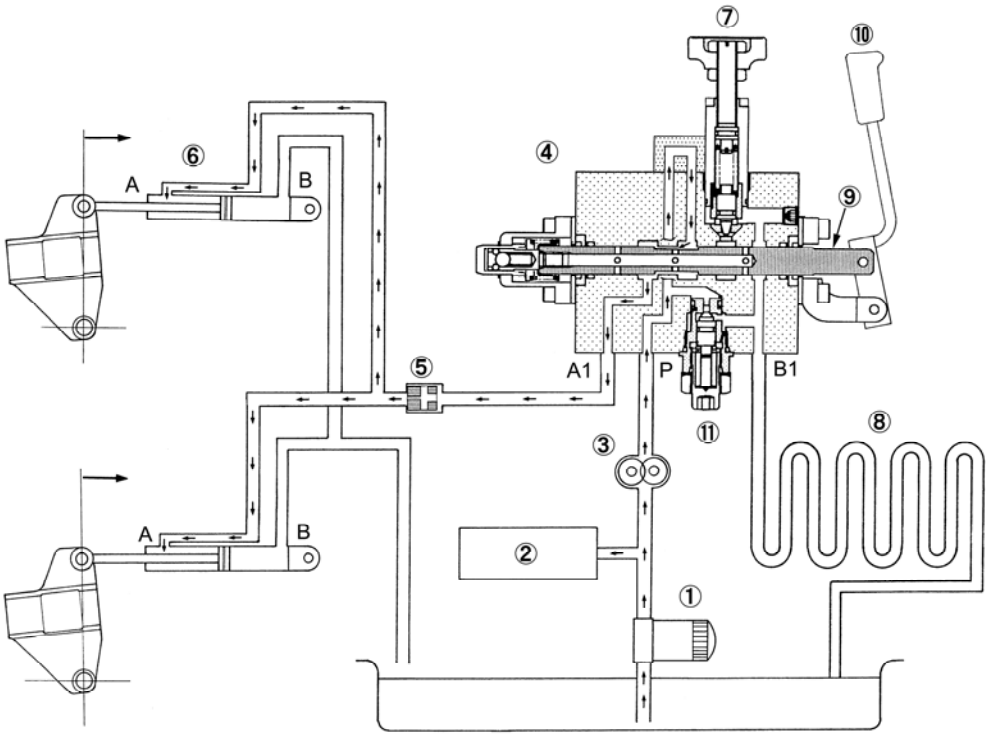

702X

1. Oil Filter
2. HST Unit
3. Oil Pump
4. Control Valve
5. Restriction Valve
6. Lift Cylinder
7. Weight Transfer Valve
8. Oil Cooler
9. Spool
10. Control Lever
11. Relief Valve

Downloaded from www.Manualslib.com manuals search engine

3) Lowering(Float) Position

When the control lever is moved to the lowering position pressurized oil enters port “P” and is directed to “B1” port. Oil from “B1” port flows to the weight transfer valve and via the cooler to the transmission.
At the same time oil in port “P” is fed oil from the rod side of the lift cylinders port “A” by the weight of the implement. The oil then flows through a passage to “B1” port and through the weight transfer valve to the transmission and the implement lowers.
Turning the adjuster in on the weight transfer valve will reduce the flow rate, and the pressure in the lift cylinder ”A” side can be changed to reduce the weight of the implement on the gauge wheels. The weight transfer valve contains a drilled passage to allow oil to flow if the knob is fully closed.

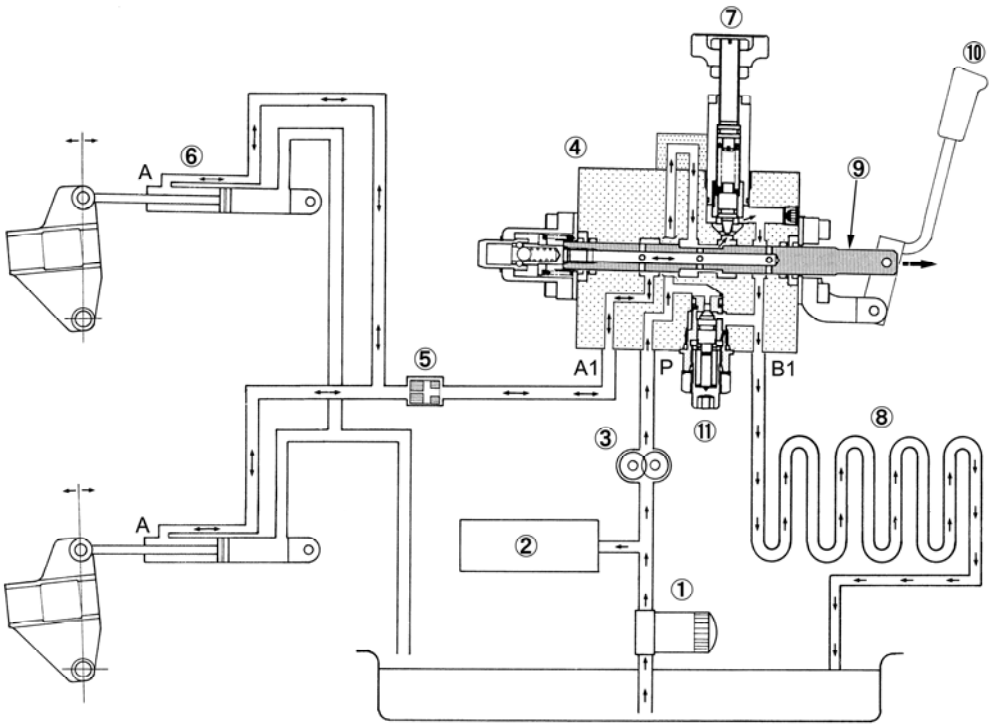

703X

1.	Oil Filter	5.	Restriction Valve	9.	Spool
2.	HST Unit	6.	Lift Cylinder	10.	Control Lever
3.	Oil Pump	7.	Weight Transfer Valve	11.	Relief Valve
4.	Control Valve	8.	Oil Cooler		

Downloaded from www.Manualslib.com manuals search engine

3. OVERHAUL

1) Control Valve

(1) Removal

1. Remove the R.H. side cover.
2. Remove the weight transfer valve grip.
3. Remove the eye bolt (1) from bottom of the control valve (4).
4. Disconnect the oil hoses (2 and 3) from under the control valve.
5. Drive out the roll pin (5) from the spool.
6. Remove the snap pin and pin (6) and separate the control lever (7) from the control valve.

(2) Disassembly
Reference – Figure 705X

Repair of hydraulic control valve is limited to seal replacement only.

1. Remove the bolts (1) and pull the cap (3) and spool (2) with plate (11) as an assembly.
2. Place the control end of the spool in a vice and remove the snap ring (4).

NOTE: Do not expand the snap ring to far. The snap ring will become deformed and will not hold during assembly.

3. Using care not to lose balls (7 and 8), remove the holders (6) and spring (9) from the spool.

NOTE: Do not remove the stopper (15), spring and seat from the spool.

4. Remove the sealing plate (11), wiper (12), spacer (13) and O-ring (14) from the valve body.

(3) Inspection

1. Wash all parts in a suitable solvent and air dry.
2. Discard all O-rings and seals.
3. Inspect the control valve spool and valve body bore for any damage. If either is defective , replace the control valve assembly.

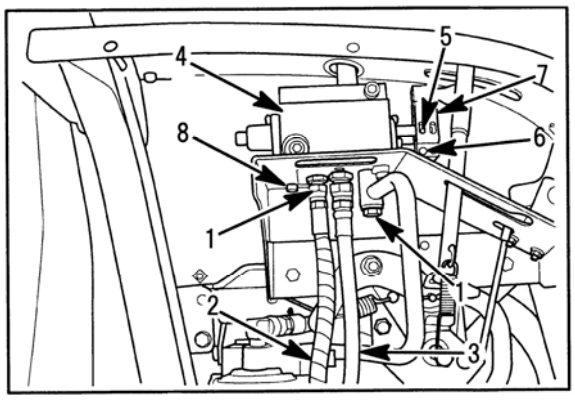

704X

1.	Eye bolt	5.	Roll Pin
2.	Oil; Hose	6.	Pin
3.	Oil Hose	7.	Control Lever
4.	Control Valve	8.	Bolt

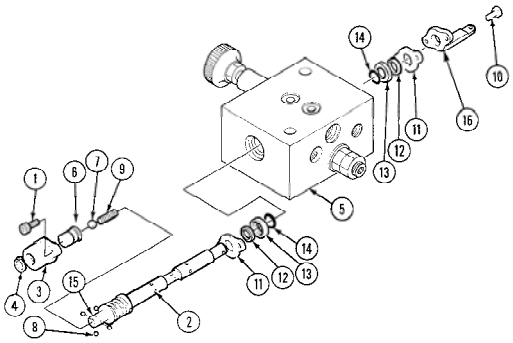

705X

1.	Bolt	9.	Spring
2.	Spool	10.	Bolt
3.	Cap	11.	Plate
4.	Snap Ring	12.	Wiper
5.	Valve Body	13.	Spacer
6.	Holder	14.	O-Ring
7.	Ball	15.	Stopper
8.	Ball	16.	Lever Support

Downloaded from www.Manualslib.com manuals search engine

5. If necessary, remove the relief valve assembly (1) as a set.

   NOTE: Do not disassemble the relief valve assembly.

6. If necessary, remove the weight transfer valve assembly (2) as a set.

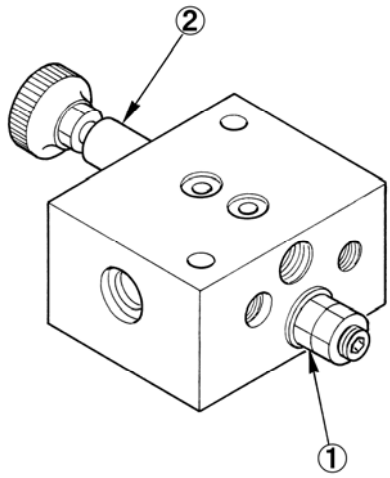

706X

1. Relief Valve Assembly
2. Weight Transfer Valve

(4) Assembly

Prior to assembly coat the valve body bore and spool with clean hydraulic oil. Assembly of the control valve generally follows disassembly procedures in reverse, however the following must be observed:

- Coat all steel balls during grease.
- Install the snap ring (1) with the rounded edge facing the cap.
- Tighten the sealing plate bolts (10) to 5.5 N·m (0.55 kgf·m) and check the spool for smooth operation, Figure 705X.

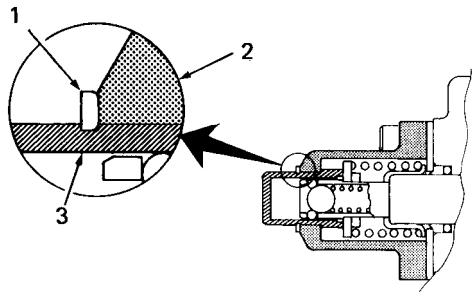

1. Snap ring
2. Cap
3. Holder

707X

2) Remote Valve

On units equipped with a remote valve the repair procedure are the same as the control valve.
The remote valve does not utilize a detent (float) position and it is not equipped relief valve assembly and weight transfer valve assembly. The single action changeover control valve is equipped on the remote valve.

Downloaded from www.Manualslib.com manuals search engine

3) Lift Cylinder

(1) Removal

1. Remove the both side panels.
2. Place the stands under the tractor and remove the front wheels.
3. Disconnect the high pressure oil hose (1) from the adapter.
4. If necessary, remove the adapter (3) from the cylinder (4) and un-tighten the hose band, and disconnect the breeze hose (5) from the adapter.
5. Remove the bolts (6) and pins (7), and remove the cylinder (4) from the frame while supporting the lift arms.

NOTE: Do not disassemble the lift cylinder assembly. If oil leaking and/or trouble is evident from cylinder assembly , replace the cylinder assembly.

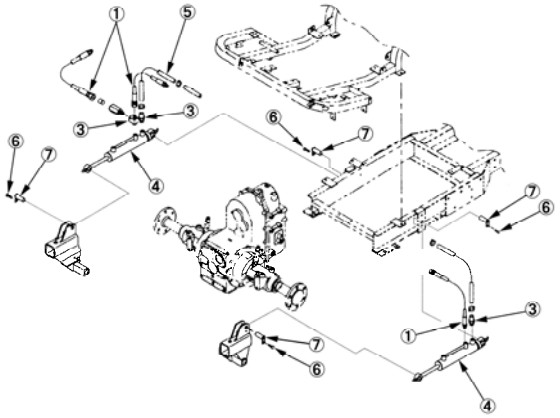

708X

(2) Inspection

1. Inspect the anchor pins and bushings for excess wear and excessive clearance. Replace cylinder assembly and/or pins if the clearance is over 0.5 mm.

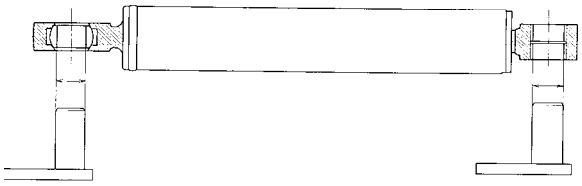

709X

Downloaded from www.Manualslib.com manuals search engine

(3) Pressure Test

1. Remove the side cover and front R.H. wheel.
2. Disconnect the high pressure hose from the adapter.

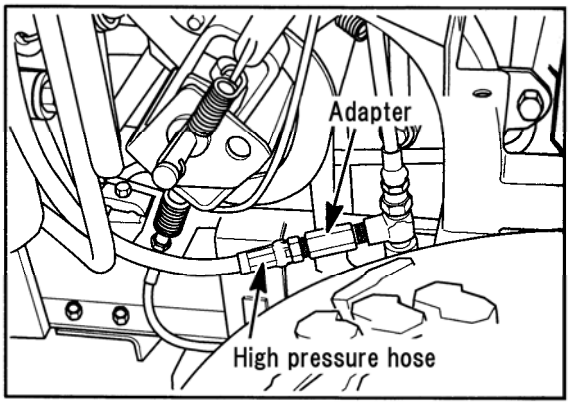

712X

3. Install the fitting (ISM Part No. 340630260) and 0 – 19.6 MPa {0 – 200 kgf/cm^2} pressure gauge to the high pressure oil hose to the cylinder.
4. Start the engine, and allow it to idle.
   Observe the pressure gauge, it should indicate 0 MPa {0 kgf/cm^2}.
5. Push the hand throttle lever to forward and keep the engine high idle speed.
6. Pull the lift control lever to rearward and read the pressure gauge immediately.
7. Stop the engine.

TEST RESULT
If pressure rises to the relief valve setting to 9.8 MPa {100 kgf/cm^2}, it indicates that the system is operating properly.

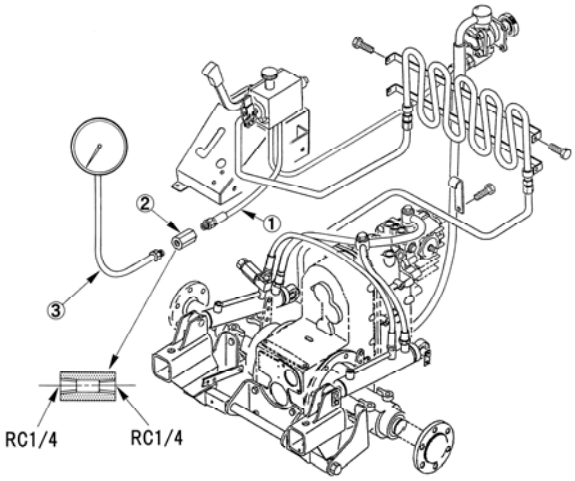

713X

1. High Pressure Oil hose
2. fitting (340630260)
3. Oil Pressure Gauge

NOTE: If removed restriction valve, use care at the direction of it.
The orifice toward the cylinder.

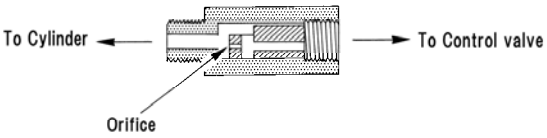

714X

Downloaded from www.Manualslib.com manuals search engine

https://truckmanualshub.com/

Downloaded from www.Manualslib.com manuals search engine

https://truckmanualshub.com/

Chapter 8.
IMPLEMENT DRIVE

Downloaded from www.Manualslib.com manuals search engine

1. DESCRIPTION AND OPERATION

The implement drive is helical gear driven and wet disc clutch is engaged by a PTO lever on the right side adjacent to the operator's seat.
When the PTO lever (1) is moved to the engaged position. It contacts shaft (2) , fork joint assembly (3) and turn the lever (4) of PTO clutch shaft.
The clutch fork (5) on the PTO clutch shaft is turned, and push the release bearing (6) to rearward, and then the pressure plate is pressed and engages the clutch disc and plate assembly (7) by spring load, however, if the implement is raise before highest position of the lift arm (8), the PTO will automatically disengaged.
A cable (9) on the lift arm pulls the bell crank (10) to downward and then shift plate cam (11) is unhooked from the PTO lever (1) and moved to rearward by spring in the PTO clutch assembly.

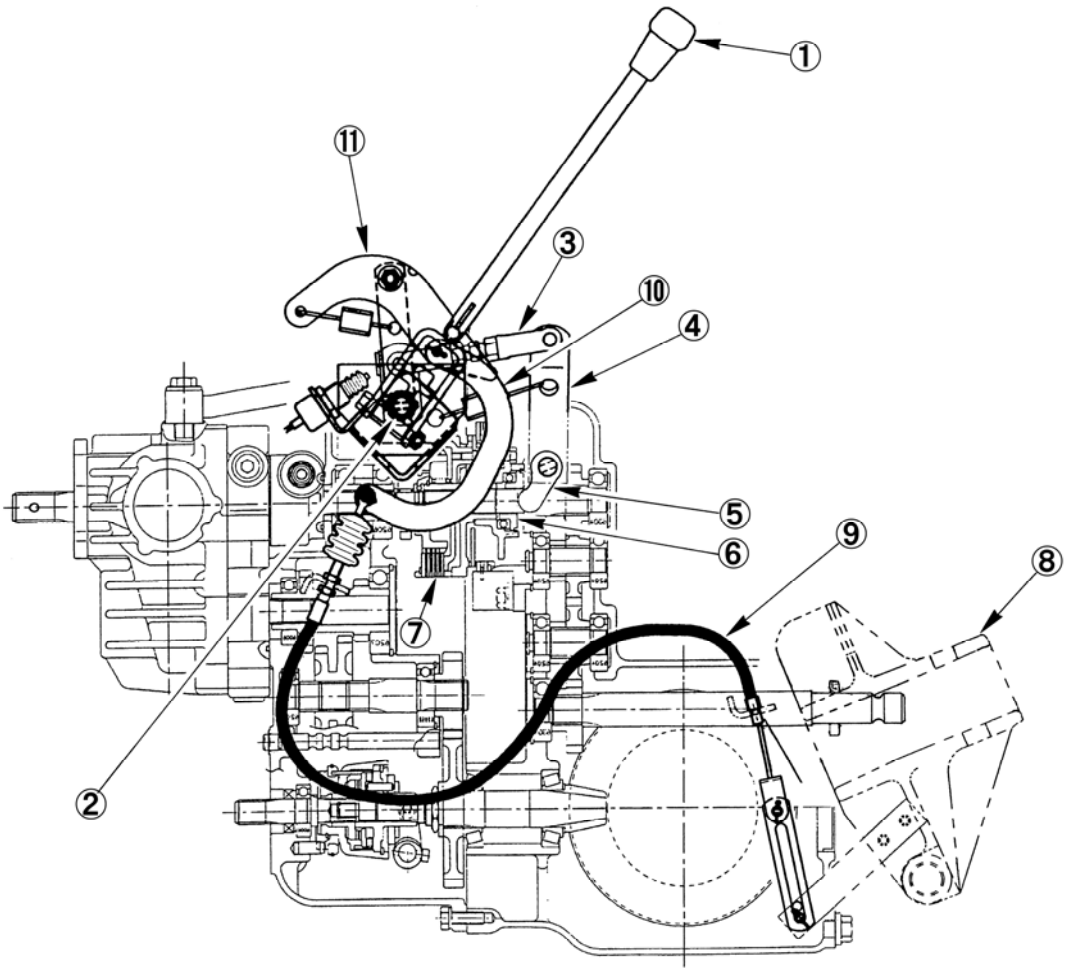

800X

1. PTO lever
2. Shaft
3. Fork joint assembly
4. Lever
5. Clutch fork
6. Release bearing
7. Clutch disc and plate assembly
8. Lift arm
9. Cable
10. Bell crank
11. Shift plate cam

Downloaded from www.Manualslib.com manuals search engine

2. POWER FLOW

1) Front PTO

Power flow from the engine through the HST transmission in put shaft (1) and coupled to the PTO clutch coupling (2).
The PTO lever (3) is in the “OFF” position, the clutch discs and plates (4) are slipped , and then the power flows is disengaged to the PTO shaft (5).
The PTO lever (3) is in the “ON” position, the clutch fork (6) is turned and push the release bearing (7) then the pressure plate pressed by the clutch spring (8), and then the clutch discs and plates (4) are engaged and the power flows to PTO shaft (5) via the helical gears (9).

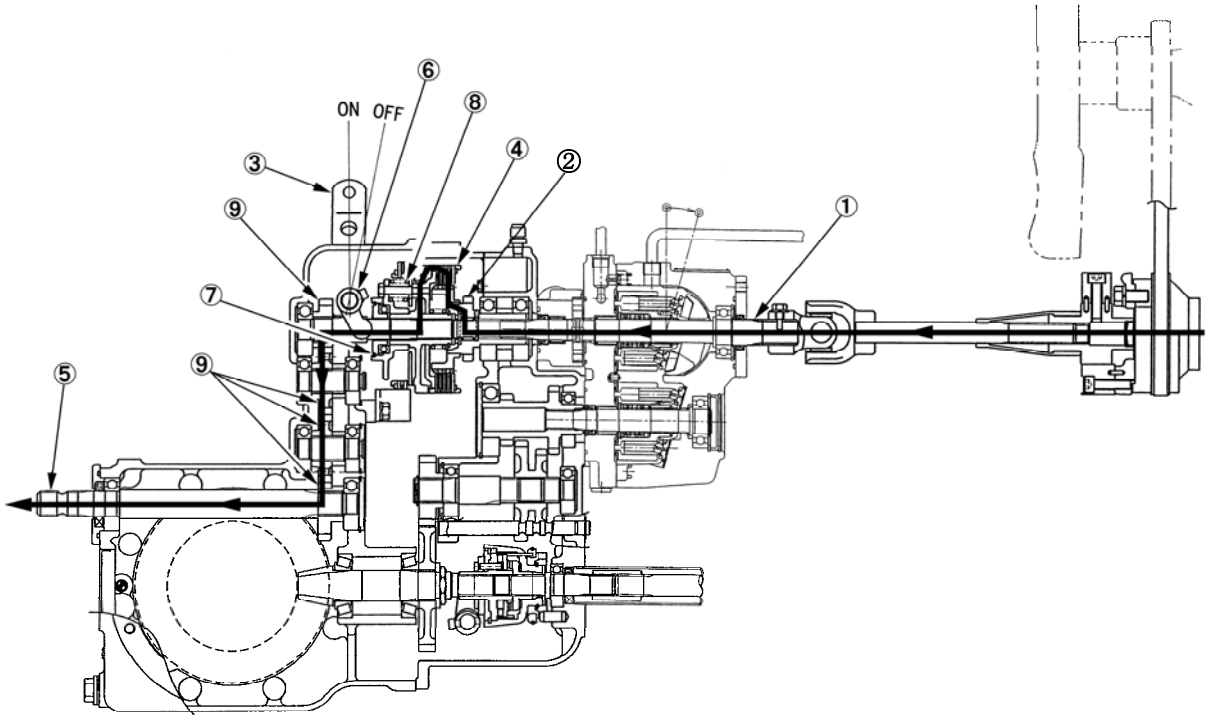

801X

1. Input Shaft
2. PTO clutch Coupling
3. PTO Lever
4. Clutch Disc and Plate
5. PTO Shaft
6. Clutch Fork
7. Release Bearing
8. Clutch Spring
9. Helical Gear

Downloaded from www.Manualslib.com manuals search engine

2) SIDE PTO

Power flows from the engine through the HST transmission input shaft (1) and coupled to the PTO clutch coupling (2) and through the idler gear (3) to fixed gear (4), and then to the PTO counter shaft (5) . The side PTO is live PTO type, then the side PTO shaft is rotated while engine is running.

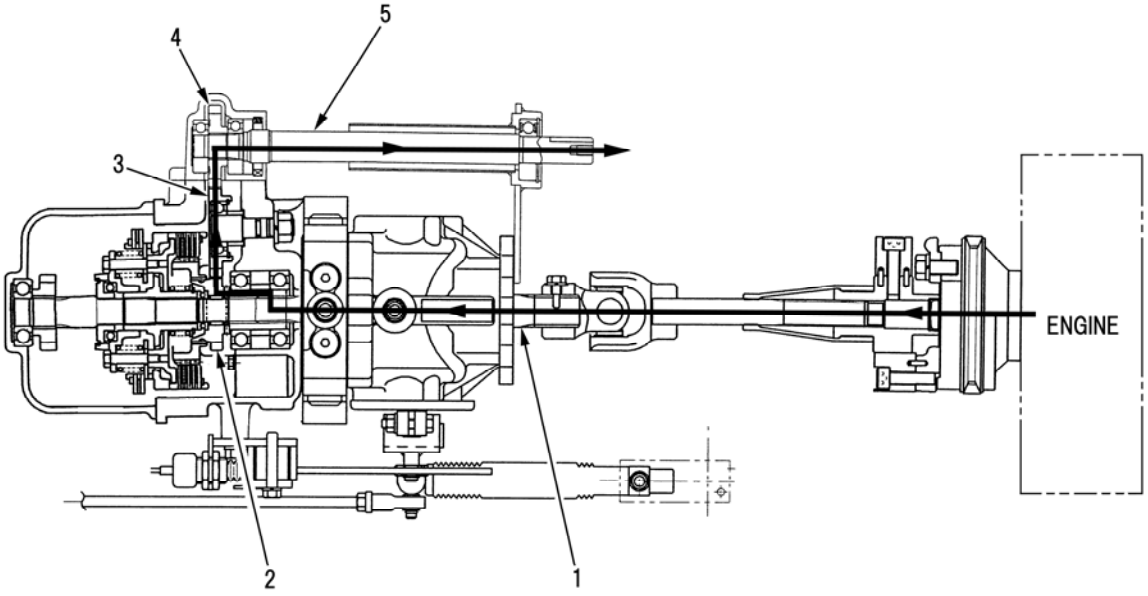

802X

1. HST Input Shaft
2. PTO Clutch Coupling
3. Idler Gear
4. Fixed Gear
5. Side PTO Counter Shaft

Downloaded from www.Manualslib.com manuals search engine

3. AUTOMATICALLY PTO DISENGAGE SYSTEM

The lift arm is lower position and PTO lever is “ON” position.
The sift plate cam (1) and PTO lever (2) are hooked at the position “A”, then the PTO shaft can be rotating.

1. Shift Plate Cam
2. PTO Lever

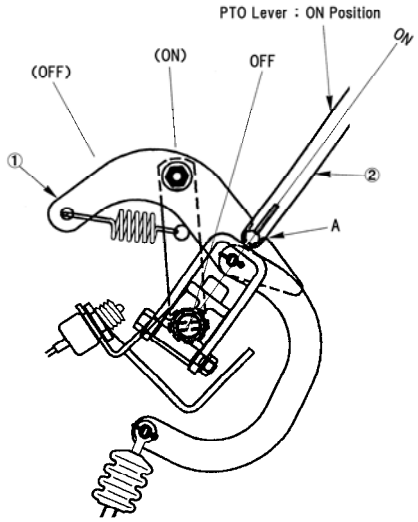

803X

When the lift arm raised near highest position, the pin (3) of bell crank is pulled bottom ward by the cable (4) and also pin (5) with fulcrum the pin (6) until unhook the shift plate cam’s groove (8) from the pin (7) of the PTO lever.

3. Pin
4. Cable
5. Pin
6. Pin
7. Pin
8. Groove

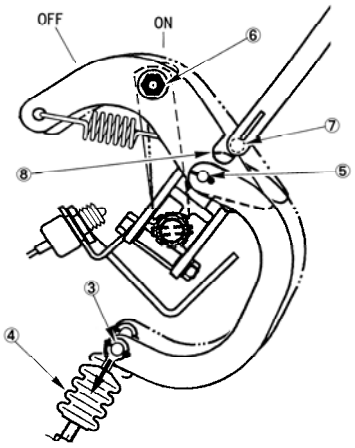

804X

When the lift arm raised highest position, the pin (3) of bell crank is pulled more bottom ward by the cable (4), the shift plate cam’s groove (8) is unhooked from the pin (7), and then the shift plate cam (1) and lever (9) are moved to “OFF” position by the springs are in the PTO clutch assembly.
The power flows to PTO shaft is disengaged at the PTO clutch assembly at the same time.

1.	Shift Plate Cam	7.	Pin
3.	Pin	8.	Groove
4.	Cable	9.	Lever

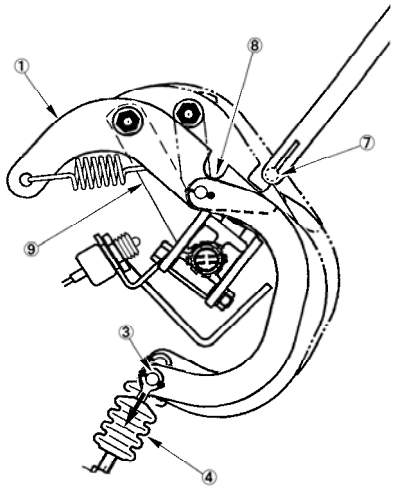

805X

Downloaded from www.Manualslib.com manuals search engine

4. ADJUSTMENT AND SPECIFICATION

1) PTO Lever Link System

Inspect the PTO lever moving force is changed position from soft to hard at first.
If the changed position is not in the 50 % of the PTO lever stroke, adjust as follows:

1. If necessary, disconnect the seat safety switch wire, and remove the seat and floor from the tractor.
2. Untighten the lock nuts (1) and (2) on the rod (3).
3. Turn the rod (3) and inspect the PTO lever moving force is changed position from the soft to hard is in the 50% of the PTO stroke.
4. Tighten the lock nuts (1 and 2), and recheck the position.

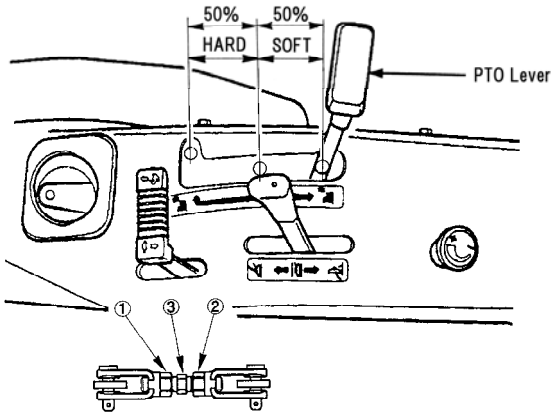

806X

1. Lock Nut
2. Lock Nut
3. Rod

2) PTO Release Cable

1. Place the hydraulic lift control lever into the down position and manually push down the lift arms.
2. If necessary, remove the side cover.
3. Untighten the lock nuts (1 and 2) , and release the wire cable (3).
4. Start the engine, and raise the lift arms to the highest position.
5. Move the PTO lever (5) to the locking position.
6. Turn the lock nut (1) until the cable is stretched and the shift plate cam (6) is disengaged position.
7. More additional two turns the lock nut (1) and secure tighten the lock nut (2).
8. If removed , install the side cover.

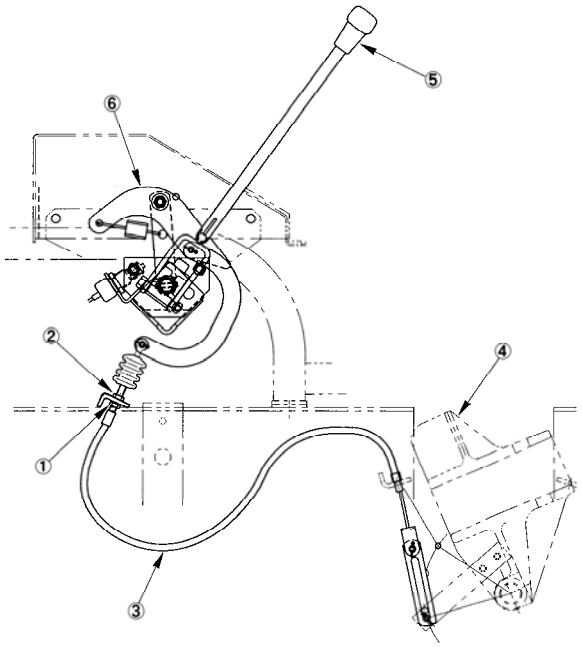

807X

1. Lock Nut
2. Lock Nut
3. Cable
4. Lift Arm
5. PTO Lever
6. Shift Plate Cam

Downloaded from www.Manualslib.com manuals search engine

https://truckmanualshub.com/

Chapter 9. MAINTENANCE STANDARDS TABLE

Downloaded from www.Manualslib.com manuals search engine

Maintenance Standards Table

* Unit for values without unit in the column of inspection item is mm

Unit	Part	Inspection Item	Standard Dimensions	Standard Assembling Value	Repair Value	Service Limit	Remarks
Tractor main body	Transmission	Gear backlash		0.04 – 0.16		0.6	
		Slide gear-shifter fork clearance		0.2 – 0.4		1.0	
	Differential/PTO	Differential pinion – pinion shaft clearance		0.1		0.5	
		Differential pinion-thrust washer thickness	1.2	1.2		0.9	
		Differential gear-thrust washer thickness		2.0		1.7	
		Differential gear/differential pinion backlash		0.1 – 0.2		0.4	
		Ring gear tightening torque N·m {kgf·m}		46.1 – 57.9 {4.7 – 5.9}			
		Drive pinion preload N {kgf}		196 {20}			Load when pulled with string wound on spline
		Drive pinion/ring gear backlash		0.1 – 0.2	0.4		
		PTO shaft end run-out		Less than 0.1		0.3	
		Gear oil quantity ℓ	20				
	Front wheel	Rim run-out		3		5	
		Wheel rug height					
		Tire size	23 × 10.50 – 12 4PR				
	Brake	Brake lining groove depth		0.1		0	
		Level difference to stator (on lining contact surface)	0			0.1	
		Pedal shaft-bush clearance		0.05 – 0.35		1.0	
		Pedal play		35 – 45	More than 50		
		Pedal shaft bush bore		Ø25		Ø25.8	
	Hydraulic lift	Relief valve working pressure MPa {kgf/cm^2}		9.8 {100}			
		Arm shaft-bush clearance		0.025 – 0.1		0.5	
		Hydraulic oil natural settlement (lower link end) mm/min		30/5	100/5		Engine stop. Load 350 kg. Hydraulic oil 60 – 70ºC
		Hydraulic cylinder – piston clearance				0.7	
		Piston rod – Cylinder head clearance				0.3	

Downloaded from www.Manualslib.com manuals search engine

Unit	Part	Inspection Item		Standard Dimensions	Standard Assembling Value	Repair Value	Service Limit	Remarks
Tractor main body	4WD rear axle	Differential pinion – pinion shaft clearance			0.03 – 0.1		0.4	
		Differential pinion thrust washer thickness		1.2	1.1 – 1.2		0.9	
		Differential gear thrust washer thickness					0.9	
		Differential gear/differential pinion backlash			0.2 – 0.3		0.4	
		Ring gear tightening torque N·m {kgf·m}			24 - 30 {2.5 – 3.0}			
		Drive pinion/ring gear backlash			0.10 – 0.2	0.3		
		Pivot shaft bush clearance	Front		0.02 – 0.15		0.3	
		Toe in			-5 - +5	-10 - +10		
		Rim run-out			3.0		5.0	
		Wheel rug height						
		Tire size		20 × 8.00 – 10 4PR				
		Gear oil (ℓ)	Differential chamber	1.3				
			Gear chamber	0.5 on one side				
	Power Steering	Relief valve working pressure MPa {kgf/cm^2}			5.88 – 6.56 {60 – 67}			At 16 ℓ/min
		Oil quantity ℓ		20				Common use HST oil
		Oil type			ISO VG32			Hydraulic oil
		Hydraulic cylinder – piston clearance					0.7	
		Cylinder head bush – piston rod clearance					0.3	
		Pin – bush (piston rod cylinder tube) clearance					0.5	
		Steering wheel peripheral play		20 – 40			50	
	HST	Model		HVFD-18A18-M				
		High pressure relief valve MPa {kgf/cm^2}		34.3 {350}				
		Low pressure relief valve MPa {kgf/cm^2}		0.49 {5}				
		Charge pump capacity {cc/rev.}		4.9				

Downloaded from www.Manualslib.com manuals search engine

https://truckmanualshub.com/

Downloaded from www.Manualslib.com manuals search engine

https://truckmanualshub.com/

Chapter 10.
ELECTRICAL SYSTEM

Downloaded from www.Manualslib.com manuals search engine

1. DESCRIPTION

The electrical system is a 12-volt negative (–) ground system consisting of wiring harness.

2. COMPONENT LOCATION AND FUNCTION

Reference – Figure 1000X

1. Battery
   Battery is located on right side of the frame.

2. Fusible Link
   Fusible link is located on left side of engine, near the starting motor. It controls current flow for the entire tractor.

3. Parking Brake Switch
   Parking brake switch is located under the parking brake lever, and actuates with the parking brake is engaged.

4. Alternator
   Alternator provides current flow to the battery.

5. Safety Start Switches
   5A. HST Neutral Switch is located on the left side of the HST unit. It is "ON" position when the HST hoot pedals are released.
   5B. PTO Neutral Switch is located on the PTO control linkage. It is "ON" position when the PTO lever is in the "OFF" position.
   5C. Brake Switch is located right side under the floor. It is "ON" position when the master brake pedal is depressed .
   5D Seat Switch is located under the seat. It is "ON" position when operator is seated. The tractor can be started when the above all switches are "ON" position.

NOTE: The tractor can be started without seated and/or master brake pedal is not depressed when the parking brake lever is locked.

6. Fuel Level Sending Unit
   Fuel level sending unit is located inside the fuel tank, it sends a signal indicating fuel level to the instrument panel.

7. Engine Coolant Temperature Sensor
   Engine coolant temperature sensor is located in the thermostat housing of front left side of the engine cylinder head. This sender regulates a variable resistance to ground with translates into the movement of the temperature gauge.

8. Engine Coolant Temperature Switch
   Engine coolant temperature switch is located in the thermostat housing of front left side of the engine cylinder head. This switch is open under normal operating temperatures and closes when operating temperatures reach higher than normal limits 107 – 113℃.

9. Starter
   Starter is located to the left side of the engine. It rotates the engine for starting.

10. Head Light Switch
    Head light switch is located under the instrument panel. It controls current to head lamp.

11. Key Switch
    Key switch is located on the right side of the instrument panel.

12. Engine Oil Pressure Sending Unit
    Engine oil pressure sending unit is located in front of the cylinder head. It provides waning of low engine oil pressure with indicates the oil pressure lamp and alarms the buzzer.

13. Head Light
    Head light is located front under of the instrument panel and it is controlled by head light switch.

14. Instrument Panel
    Instrument panel is located in the center of the dash. It monitors tractor functions.

Downloaded from www.Manualslib.com manuals search engine

15. Fuel Shutoff Solenoid
    Fuel shutoff solenoid is located on the right side of the engine. It shuts off fuel flow to the injection pump to stop the engine.

16. Glow Plug
    Glow plug is located on the right side of the cylinder head adjacent to the fuel injectors. It aid in engine startup by warming the air in the combustion chamber.

17. Fuse Blocks
    Fuse blocks are located on the left side of the compartment fire wall. They control current flow for individual circuit.

18. Relays
    Five relays are standard installed and one optional relay installed on the left side of the compartment fire wall. Four relays (for starter, for engine stop solenoid, for over heat warning buzzer, for engine oil pressure warning buzzer) and one optional relay (for cruise control) are interchangeable. The relays each connector‘s color are different for discrimination.

19. Alarm Buzzer
    Buzzer is located on the left side of the compartment fire wall. The buzzer is alarmed when the engine oil pressure is lower and/or engine is over heated.

20 Air Cleaner Restriction Sending Unit
    Air cleaner restriction sending unit is located on the top of the engine. It warns when the air cleaner element is clogged.

21. Electric Fuel Pump
    Electric fuel pump is located on right side of the battery stand. It supplies fuel under pressure to the fuel injection pump.

22. Cellular Phone Socket
    Cellular phone socket is located on the plate of the left side of the screen.

23. Cruise Control Switch (optional)
    Cruise control switch is located on the right side of the dash board. It controls current to the speed control magnet.

24. Cruise Control Magnet (optional)
    Cruise control magnet is located on the control lever of the left side of the HST unit.
    It locks the HST linkage in place to set constant speed.

Downloaded from www.Manualslib.com manuals search engine

https://truckmanualshub.com/

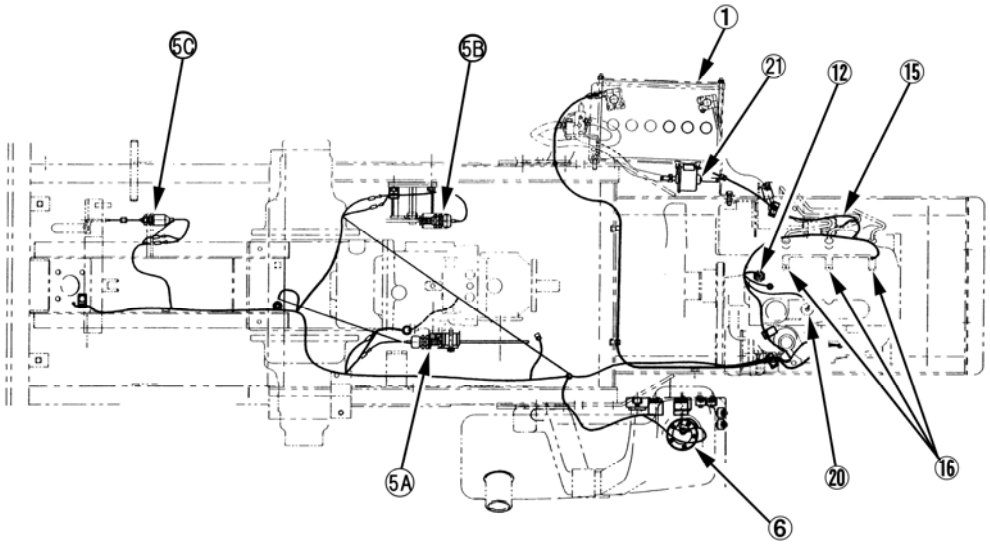

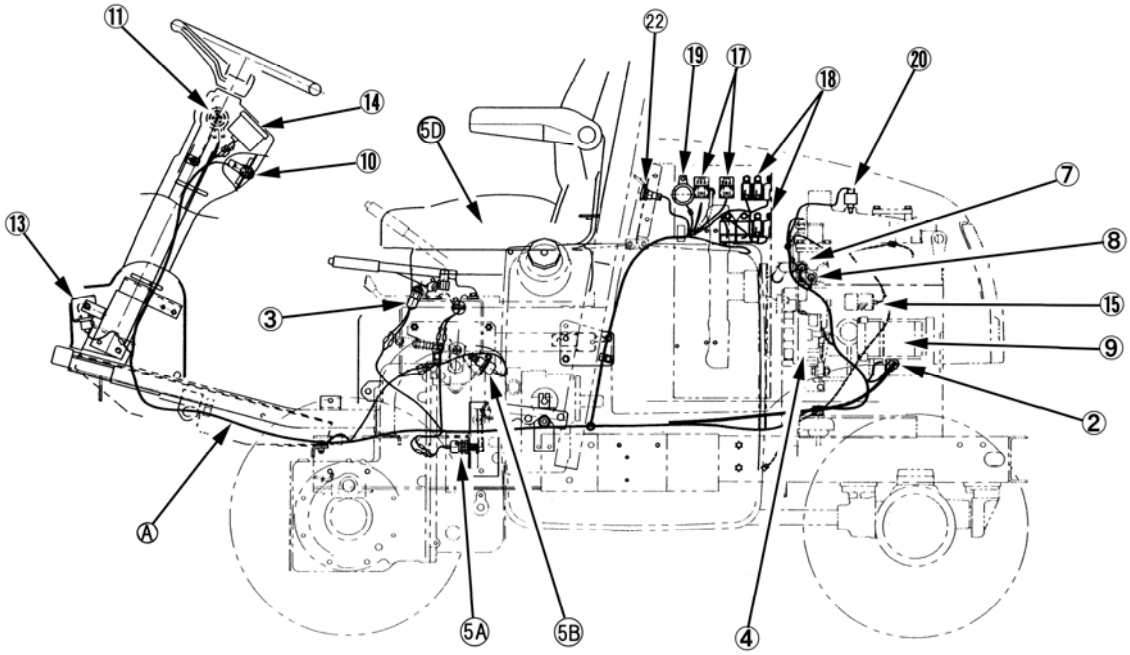

1000X

Downloaded from www.Manualslib.com manuals search engine

3. FUNCTION INSPECTION AND ADJUSTMENT

1. Battery

Disconnect the negative (–) battery cable at first and disconnect the positive (＋) battery cable.

WARNING: ALWAYS CHECK THE ELECTROLYTE LEVEL WITH THE TRACTOR ENGINE OFF, AS AN EXPLOSIVE GAS IS PRODUCED INSIDE THE BATTERY WHEN THE ALTERNATOR IS CHARGING. DO NOT USE AN EXPOSED FLAME AND DO NOT SMOKE WHEN CHECKING THE BATTERY ELECTROLYTE LEVEL.

2. Fusible Link

A fusible link wire is used to protect the tractor's entire electrical system. If too much amperage passes through this wire it will melt down so that it will no longer allow current to pass (similar to the way a fuse works). The fusible link wire is a red wire that goes to a connector that links into the main wiring harness.

3. Parking Brake Switch

The switch is normally close. The switch is closed at the parking brake lever is locked position and is opened the lever is released position.

a. Inspection
Use an ohmmeter to test the parking brake switch.
- With the button at the "OUT" position, there will be continuity across the terminal leads.
- With the button at the "IN" position, there will be no continuity across the terminal leads.
If test result are not outlined above, replace the parking brake switch.

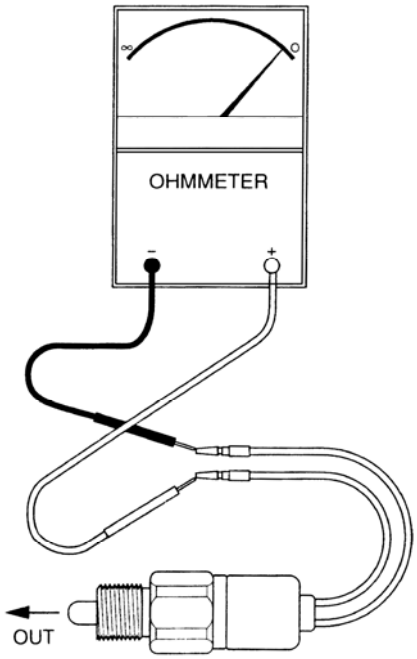

1001X

b. Adjustment
Using an ohmmeter and check to be sure the contacts open when the parking brake is released position, and closes when the parking brake lever is the raised up position.

4. Alternator

Alternator provides current flow to the battery. See "CHAPTER 2 ELECTRICAL UNIT".

Downloaded from www.Manualslib.com manuals search engine

5. Safety Start Switches

5-A. HST Neutral Switch

HST Neutral Switch is “ON” position when the HST hoot pedals are released. HST Neutral Switch and PTO Neutral Switch are interchangeable.

a. Inspection
Use an ohmmeter to test the HST neutral switch.
- With the button at the “IN” position, there will be continuity across the terminal leads.
- With the button at the “OUT” position, there will be no continuity across the terminal leads.
  If test result are not outlined above, replace the HST neutral switch.

b. Adjustment
Using an ohmmeter and check to be sure the contacts open when the HST pedal is pushed position, and closes when the HST pedal is the released position, adjust by turn the switch position.

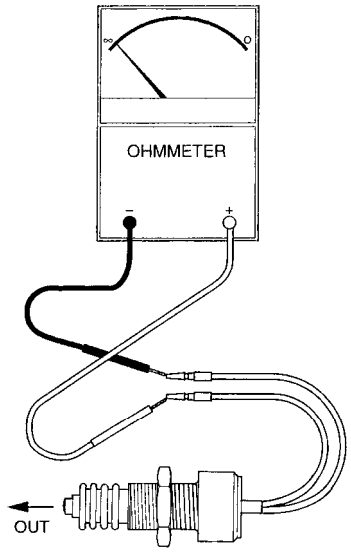

1002X

5-B. PTO Neutral Switch

PTO Neutral Switch is “ON” position when the PTO lever is in the “OFF” position.

a. Inspection
Use an ohmmeter to test the PTO neutral switch.
- With the button at the “IN” position, there will be continuity across the terminal leads.
- With the button at the “OUT” position, there will be no continuity across the terminal leads.
  If test result are not outlined above, replace the PTO neutral switch.

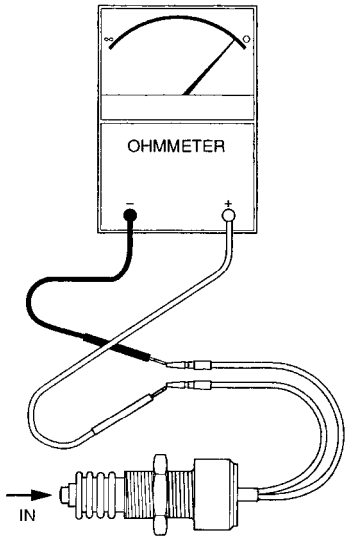

1003X

b. Adjustment
Using an ohmmeter and check to be sure the contacts open when the PTO control lever is pushed “ON” position, and closes when the PTO lever is the “OFF” position , adjust by turn the switch position.

Downloaded from www.Manualslib.com manuals search engine

5-C. Brake Switch

Brake Switch is “ON” position when the master brake pedal is depressed.

a. Inspection
Use an ohmmeter to test the brake switch.
- With the button at the “OUT” position, there will be continuity across the terminal leads.
- With the button at the “IN” position, there will be no continuity across the terminal leads.

If test result are not outlined above, replace the brake switch.

b. Adjustment
Using an ohmmeter and check to be sure the contacts open when the brake pedal is “Released position”, and closes when the brake pedal is the “Depressed position”, adjust by turn the switch position.

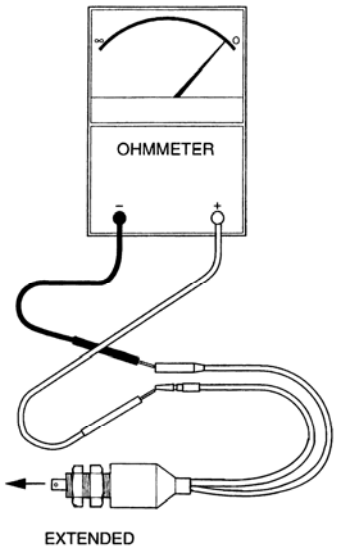

1004X

5-D Seat Switch

Seat Switch is closed when operator is seated.
The tractor can be started when the above all switches are “closed”.

NOTE: The tractor can be started without seated and/or master brake pedal is not depressed when the parking brake lever is locked.

a. Inspection
Use an ohmmeter to test the seat switch.
- With the seated, there will be continuity across the terminal leads.
- With the unseated, there will be no continuity across the terminal leads.

If test result are not outlined above, replace the seat switch.

b. Adjustment
The seat switch is non-adjustable.

6. Fuel Level Sending Unit (sensor) and Fuel Gauge

Fuel level sending unit sends a signal indicating fuel level to the fuel gauge in the instrument panel.

a. Inspection
Use an ohmmeter to test the resistance of the fuel level sending unit at the fuel tank empty and full.
Attach one of the meter leads to the center terminal A of the sensor.
Attach the other meter lead to post B.

Test result
- 103 – 117 ohms at the empty in the fuel tank
- 1 – 5 ohms at the full in the fuel tank

If test results do not in the above replace the fuel level sensor.

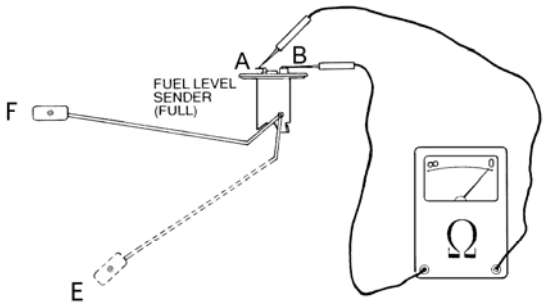

1005X

Downloaded from www.Manualslib.com manuals search engine

7. Engine Coolant Temperature Sensor

Engine coolant temperature sensor is regulates a variable resistance to ground with translates into the movement of the temperature gauge.

8. Engine Coolant Temperature Switch

Engine coolant temperature sending switch is opened under normal operating temperatures and is closed reach higher than normal limits 107 – 113℃.
If test results is not in the above, replace the sensor.

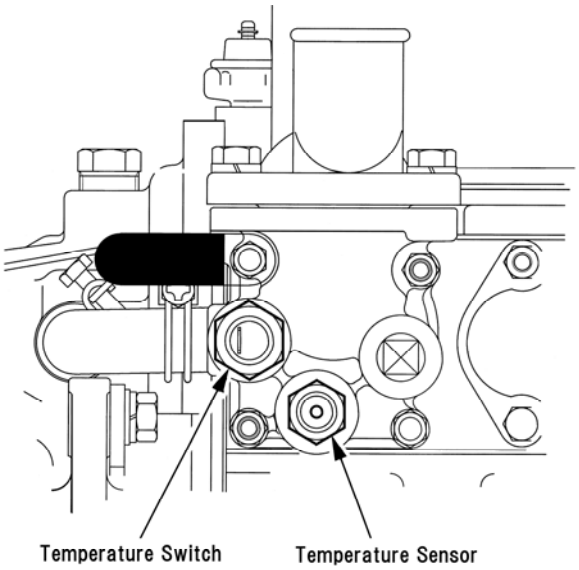

1006X

9. Starter

Starter rotates the engine for starting. See ”CHAPTER 2 ELECTRICAL UNIT”.

10. Head Light Switch

Head light switch controls current to head lamp.

a. Inspection
Use an ohmmeter to test the continuity of the head light switch connector terminals.

- With the switch in the “OFF” (released) position, there will be continuity between the terminals B and C, and D and E.
- With the switch in the “ON” (pushed) position, there will be continuity between the terminals A and C, and D and E.

If test results are not outline above, replace the light switch.

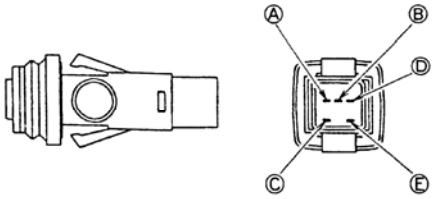

Wiring Circuit

	A	B	C	D	E
FREE		○	○	○	○
PUSH	○		○	○	○

1007X

Downloaded from www.Manualslib.com manuals search engine

11. Key Switch

The starter switch has four key operated positions are : OFF, ON, HEAT, and START.
Turning the key from OFF to one of the three positions will aligned, the circuit is closed and battery current will flow through the circuit.

Use an ohmmeter to test the continuity of the key switch connector terminals.

Key Position	Terminal			
	19	30	50	AC
OFF				
ON		●		●
HEAT	●	●		●
START	●	●	●	●

1008X

Conduct continuity test between terminal and the other terminals (●—●) at each position of the key switch.

Test results

- A low resistance reading means, the switch is operating properly.
- A high resistance reading indicates an open circuit, the start switch need to be replaced.

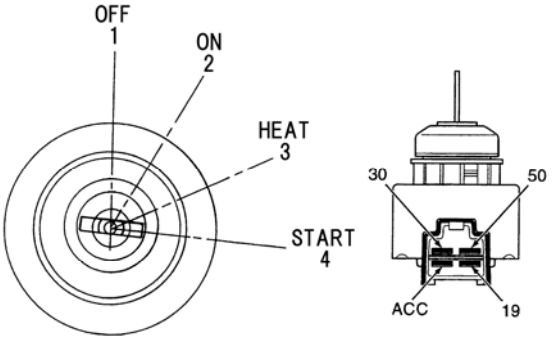

1009X

12. Engine Oil Pressure Sending Unit

Engine oil pressure sending unit provides waning of low engine oil pressure and indicates the oil pressure lamp go on and alarms buzzer.

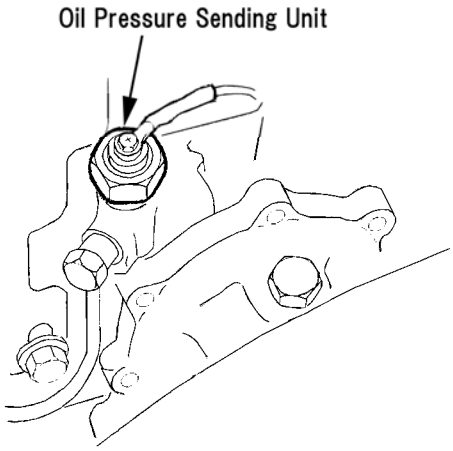

1010X

13. Head Light

Head light is controlled by head light switch.

14. Instrument Panel

Instrument panel is monitors tractor functions.
Instrument panel is consists proof meter (1), engine coolant temperature gauge (2), fuel gauge (3), glow plug indicator lamp (4), engine oil pressure warning lamp (5), charge lamp (6), air cleaner restriction warning lamp (7), and parking brake warning lamp (8), Figure 1011X.

Downloaded from www.Manualslib.com manuals search engine

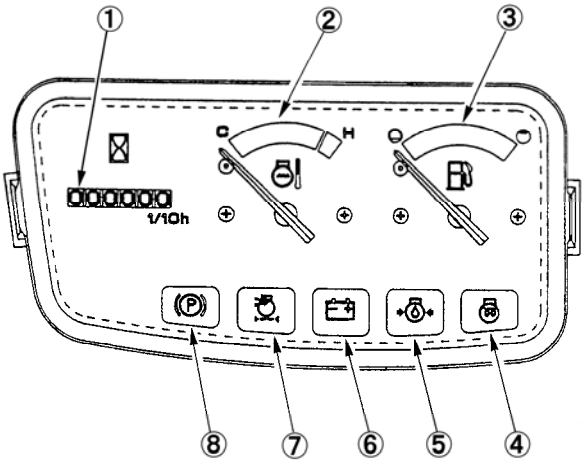

1011X

1. Proof meter
2. Engine coolant temperature gauge
3. Fuel gauge
4. Glow plug indicator lamp
5. Engine oil pressure warning lamp
6. Charge lamp
7. Air cleaner restriction warning lamp
8. Parking brake warning lamp

Instrument panel wiring

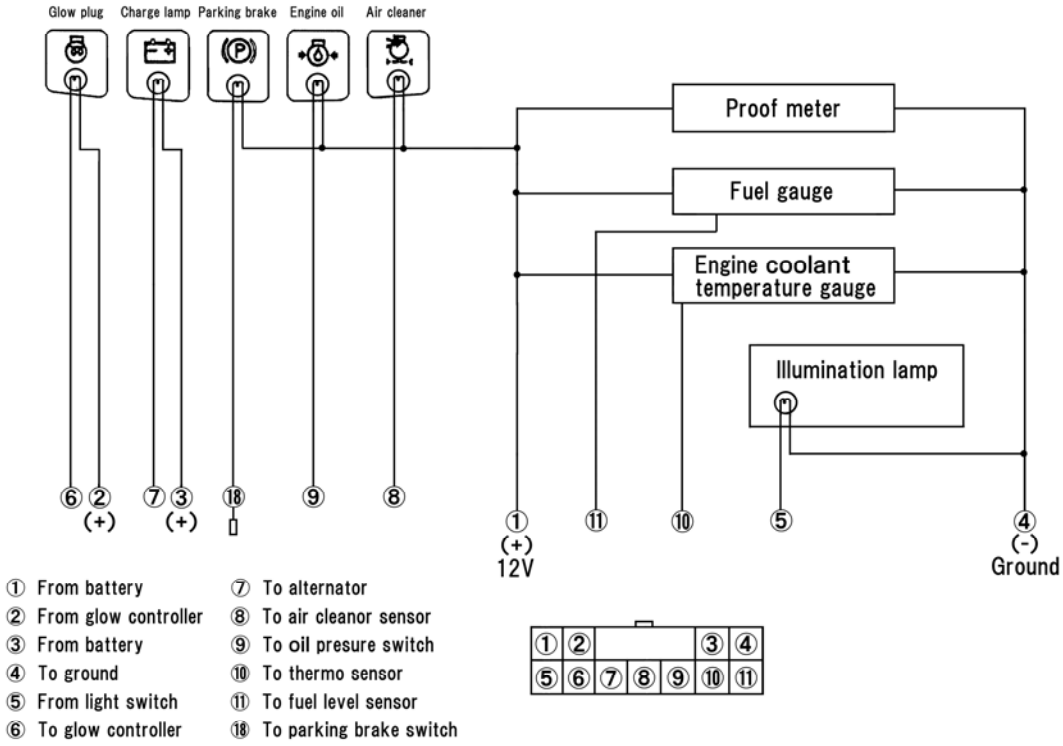

1012X

NOTE: Do not keep the instrument panel turned upside down while removed, the silicone oil in the gauge will leak out and the gauges will not move smoothly.

Downloaded from www.Manualslib.com manuals search engine

Inspection

- Engine coolant temperature gauge
  Use an ohmmeter to test the resistance of the engine coolant temperature gauge. Attach one of the meter lead to the terminal No. ① or ④ of the connector. Attach the other meter lead to the terminal No. ⑩ of the connector.
  The measure resistance should be 110 ± 2 ohms.

If the resistance measured is outside the specification, or an open circuit is measured, the instrument panel should be replaced.

- Fuel gauge
  Use an ohmmeter to test the resistance of the fuel gauge. Attach one of the meter lead to the terminal No. ① or ④ of the connector.
  Attach the other meter lead to the terminal No. ⑪ of the connector.
  The measure resistance should be 110 ± 2 ohms.

If the resistance measured is outside the specification, or an open circuit is measured, the instrument panel should be replaced.

15. Fuel Shut Off Solenoid

Fuel shut off solenoid is shuts off fuel flow to the injection pump to stop the engine.
When the solenoid is energized, as when the key switch is turned to the "ON" and "START" positions, the solenoid plunger is retracted and the governor linkage moves the pump control rack rearward into operating position.

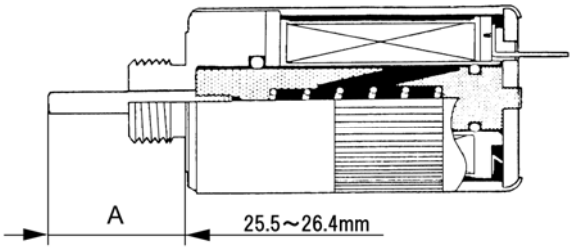

1013X

Testing

a. With the solenoid de-energized, measure the protrusion distance "A" of the plunger. In the shut-off position, the plunger protrusion distance should measure, 25.5 – 26.4 mm.

b. Connect a jumper wire from the solenoid terminal to the battery positive terminal. Connect a second jumper wire from the battery negative terminal to the solenoid body. The solenoid plunger will retract. Measure the protrusion distance "B" of the plunger. In the retracted position, the plunger protrusion distance should measure 11.5 – 14.5 mm.

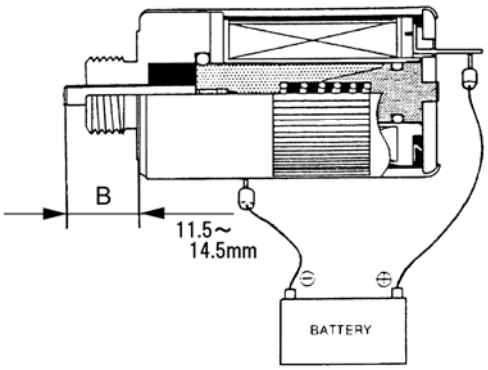

1014X

Downloaded from www.Manualslib.com manuals search engine

16. Glow Plug

Glow plug is aid in engine startup by warming the air in the combustion chamber.
Use an ohmmeter to test the glow plugs.
Touch one lead to the center electrode.
Place the other lead against the glow plug body.
A meter reading of 0.8 ohms maximum is normal. If test results are as outlined above, replace the faulty glow plug.

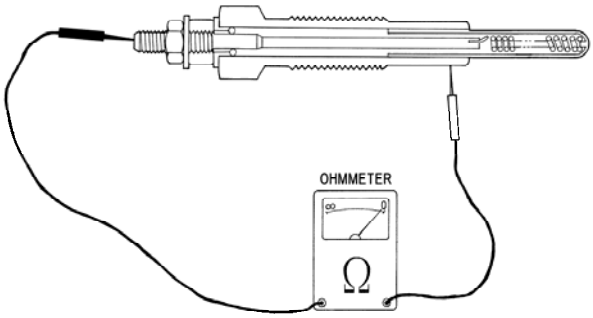

1015X

17. Fuse Blocks

Fuse blocks are control current flow for individual circuit.

18. Relays

Five relays (for starter, for engine stop solenoid, for over heat warning buzzer, for engine oil pressure warning buzzer and cruise control) are interchangeable.
The relays each connector‘s color are different for discrimination and as follows:

- Connector color “BLUE” is for safety start relay.
- Connector color “RED” is for engine stop solenoid relay.
- Connector color “GREEN” is for engine over heat warning buzzer relay.
- Connector color “BLACK” is for engine oil pressure warning buzzer relay.
- Connector color “WHITE” is for cruise control relay.

a. Four terminals relay
A relay consists of two parts which work together a coil and an SPST switch. Terminals “A” and “B” are connected to a coil. Applying 12 bolts to “A” terminal energized the coil, turning it into an electromagnet.
Terminals “C” and “D” are actually part of a single pole, single throw switch.
When the coil is energized, the switch is thrown, and terminals C and D are connected.

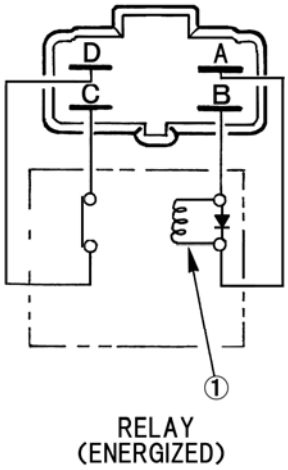

1016X

Downloaded from www.Manualslib.com manuals search engine

The SPST switch is spring loaded so terminals C and D are opened when the coil is not energized.

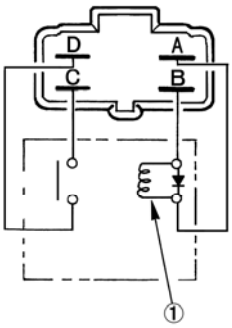

RELAY
(NOT ENERGIZED)

1017X

b. Five terminal relay
The brake relay is different with four terminal relays. It has five terminals and connector color is "BLACK".
A relay consists of two parts which work together a coil and an SPDT switch.
Terminals "A" and "B" are connected to a coil. Applying 12 bolts to "A" terminal energized the coil, turning it into an electromagnet.
Terminals "C", "D" and "E" are actually part of a single pole, double throw switch.

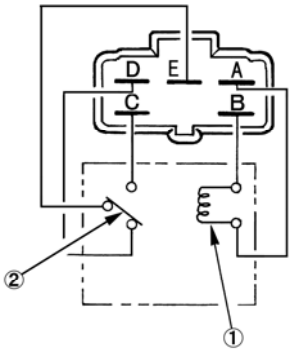

RELAY
(NOT ENERGIZED)

1018X

The SPDT switch is spring loaded so terminals D and E are opened when the coil is not energized.

When the coil is energized, the switch is thrown, and terminals C and E are connected.

1. Coil
2. Switch

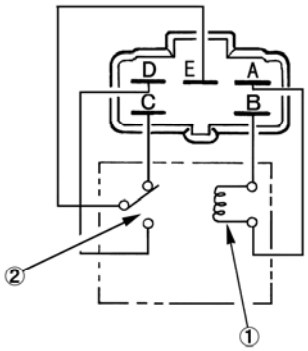

RELAY
(ENERGIZED)

1019X

INSPECTION

a. Four terminals relay
To test a relay, disconnect it from the circuit.
1. Connect the ohmmeter leads to terminals C and D.
2. There is no continuity between terminals C and D if the relay is working properly.

Next use the ohmmeter to verify energized conditions.

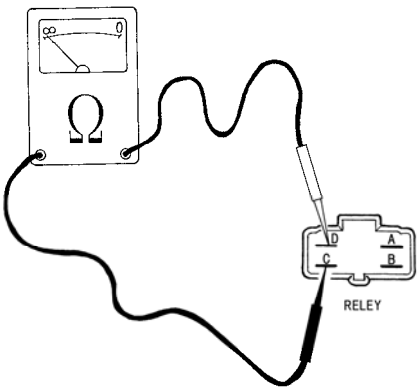

1020X

Downloaded from www.Manualslib.com manuals search engine

1. Energized the coil by applying 12 volts of current across terminals A and B.
2. Connect the ohmmeter leads to terminals C and D.
3. There is continuity between terminals C and D if the relay is working properly.

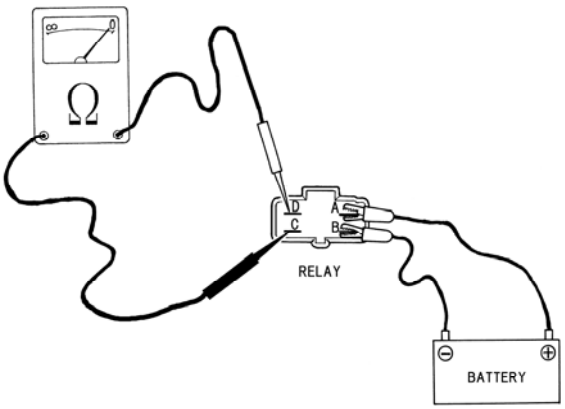

1021X

b. Brake relay (Five terminals relay)
To test a relay, disconnect it from the circuit. Use the ohmmeter to verify non-energized conditions.
1. Connect the ohmmeter leads to terminals D and E.
2. There is no continuity between terminals E and D if the relay is working properly.
3. Connect the ohmmeter leads to terminals C and E.
4. There is continuity between terminals C and E if the relay is working properly

Next use the ohmmeter to verify energized conditions.

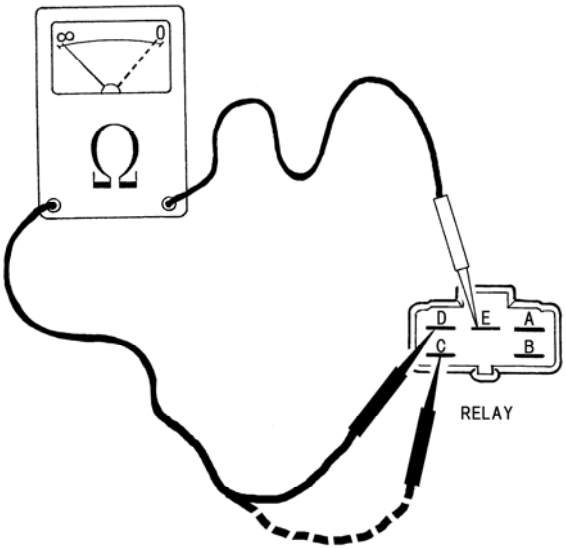

1022X

1. Energized the coil by applying 12 volts of current across terminals A and B.
2. Connect the ohmmeter leads to terminals D and E.
3. There is continuity between terminals D and E if the relay is working properly.
4. Connect the ohmmeter leads to terminals C and E.
5. There is no continuity between terminals C and E if the relay is working properly.

If continuity readings do not match those stated in the above test procedures, replace the relay.

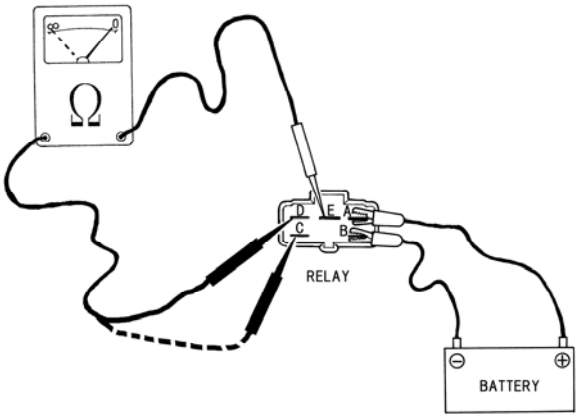

1023X

Downloaded from www.Manualslib.com manuals search engine

19. Alarm Buzzer

Buzzer is alarmed when the engine oil pressure is lower and/or engine is over heated.

INSPECTION
To test a buzzer, disconnect it from the circuit. Energized the buzzer by applying 12 volts of current across terminals A and B.

If buzzer is alarmed, it is working properly.

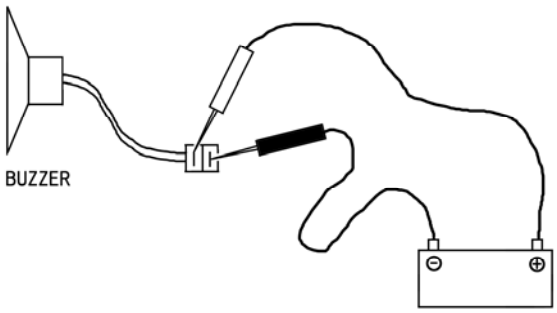

1024X

20. Air Cleaner Restriction Switch

Air cleaner restriction sending unit is warns when the air cleaner element is clogged.

INSPECTION

To test an air cleaner restriction switch, disconnect it from the circuit and remove it.
Use an ohmmeter to test the switch. Touch leads to the both terminals.

- With normally, there will be no continuity.
- With the hole sucked by mouth, there will be continuity.

If test result are not outlined above, replace the switch.

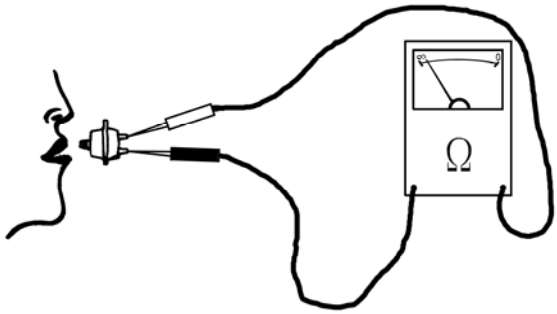

1025X

21. Electric Fuel Pump

Electric fuel pump is supplies fuel under pressure to the fuel injection pump.

INSPECTION

If a fuel system malfunction indicates a faulty fuel pump, a simple shop test of the fuel pump can be performed using water as the liquid for testing.
To test a fuel pump, remove it from the tractor.

a. Set up the fuel pump, rubber hoses, switch, jumper cables and clean containers and battery as an illustration.
b. Place 3.5 liters of water in a container.
c. Operate the fuel pump using the switch and run the fuel pump for 15 seconds to charge the system. Empty the water back into the inlet filled container.
d. Operate the pump for five minutes. Measure the water in the outlet side container.

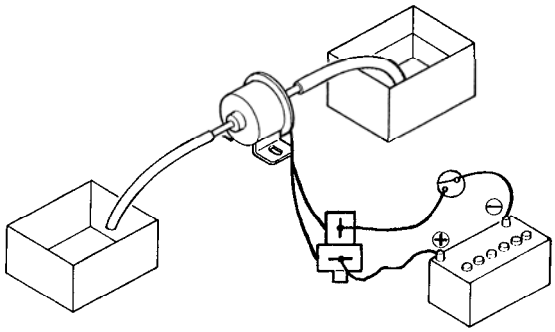

1026X

Downloaded from www.Manualslib.com manuals search engine

Test Results
If the pump delivered 2 liters or more the pump is normal.

IMPORTANT:
Before installing water tested fuel pump back on the tractor, place the inlet hose in a small container filled with clean diesel fuel. Operate the pump until the test water is purged from the pump.

22. Cellular Phone Socket

23. Cruise Control Switch (optional)

Cruise control switch is controls current to the speed control magnet.

INSPECTION
Remove the switch from the wiring harness.

NOTE: The switch terminals are identified on the back of the switch. Number 1 and 4 are blank.

SWITCH TERMINALS IDENTIFICATION

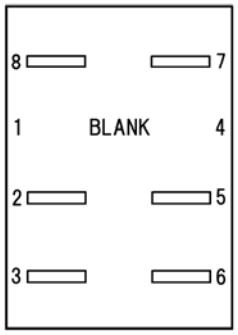

VIEWED FROM TERMINAL END OF SWITCH

1027X

a. Use an ohmmeter, depress the switch to the "ON" position and connect the ohmmeter leads across terminals 5 and 6, then across terminals 2 and 3.
If continuity exists across these terminals, the switch is operating properly.

"ON" POSITION

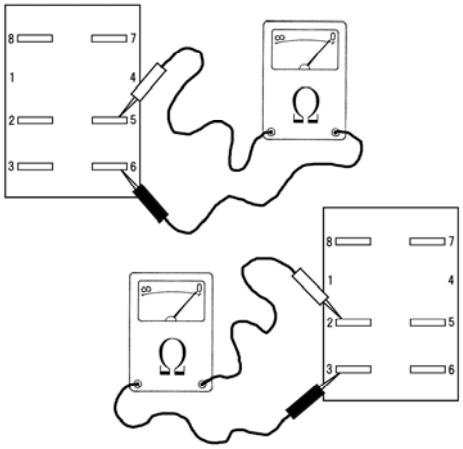

1028X

b. Next place the switch in the "STAND BY" (middle) position and connect the ohmmeter leads across terminals 2 and 3. If there is continuity, the switch is good.

STAND BY POSITION

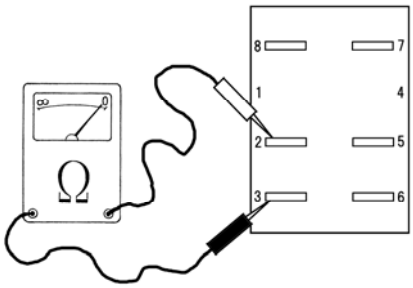

1029X

Downloaded from www.Manualslib.com manuals search engine

c. To test the internal light bulb, connect the ohmmeter leads across terminals 7 and 8 (the switch may be placed in any of its three positions). The reading should be between 55 and 60 ohms.

NOTE: The light is not serviced separately. If it does not illuminate, replace the switch. Replace the switch if the correct readings are not obtained during testing.

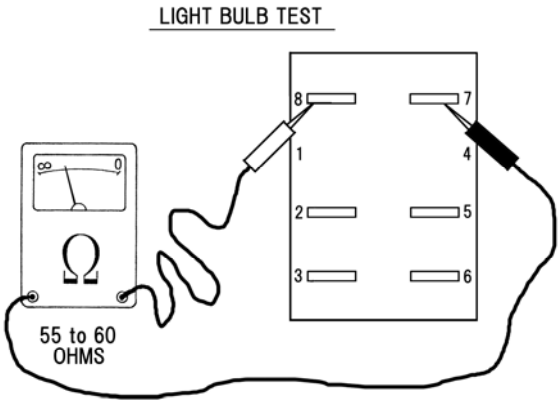

1030X

24. Cruise Control Magnet (optional)

Cruise control magnet is locks the HST linkage in place by switch to set constant speed.

INSPECTION

Use the ohmmeter to test the cruise control magnet.

a. Disconnect the magnet from the tractor wiring harness and connect the ohmmeter leads to the two leads coming from the magnet.
b. A meter reading of 11 – 12 ohms is normal.

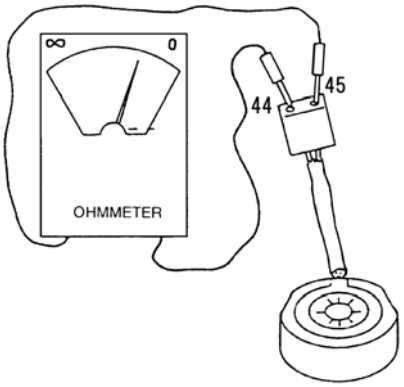

1031X

c. Disconnect the ohmmeter from the magnet and apply 12 volts across the magnet leads.
d. The surface will become magnetized and attract any ferrous object if the cruise control magnet is working properly.

If the test results are not as outlined above, replace the cruise control magnet.

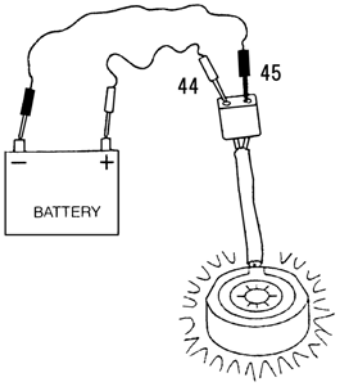

1032X

Downloaded from www.Manualslib.com manuals search engine

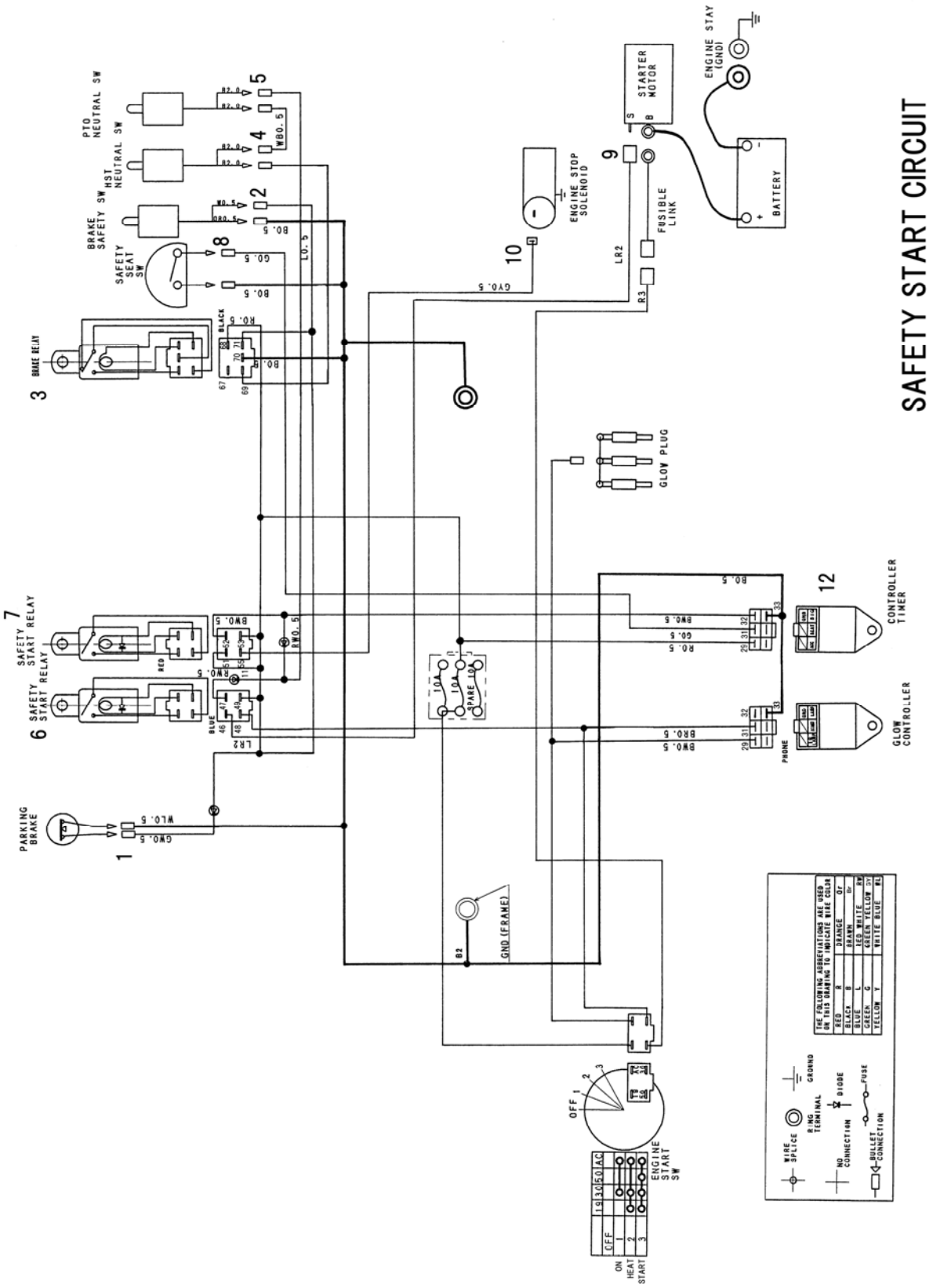

1033X

Downloaded from www.Manualslib.com manuals search engine

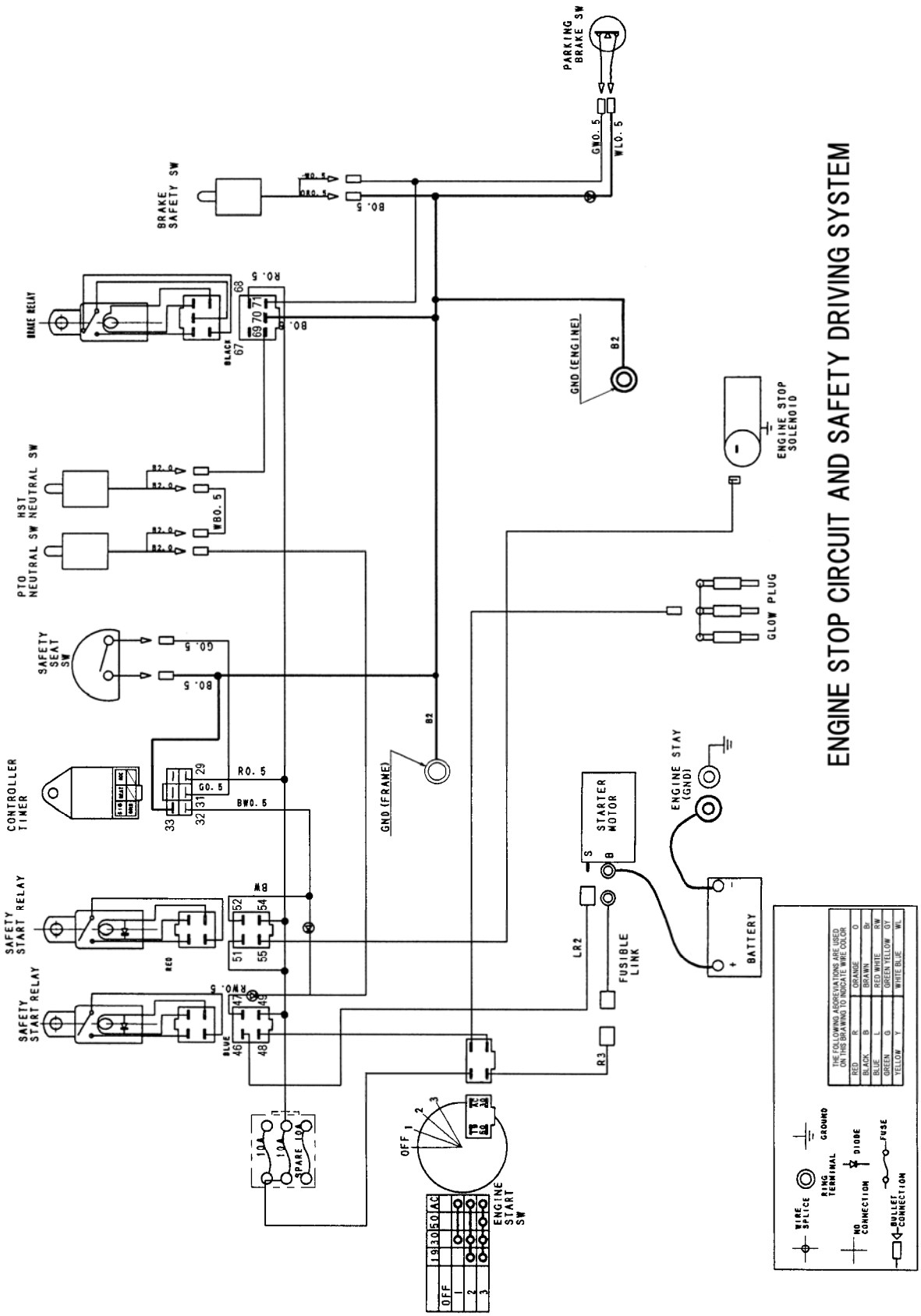

1034X

Downloaded from www.Manualslib.com manuals search engine

https://truckmanualshub.com/

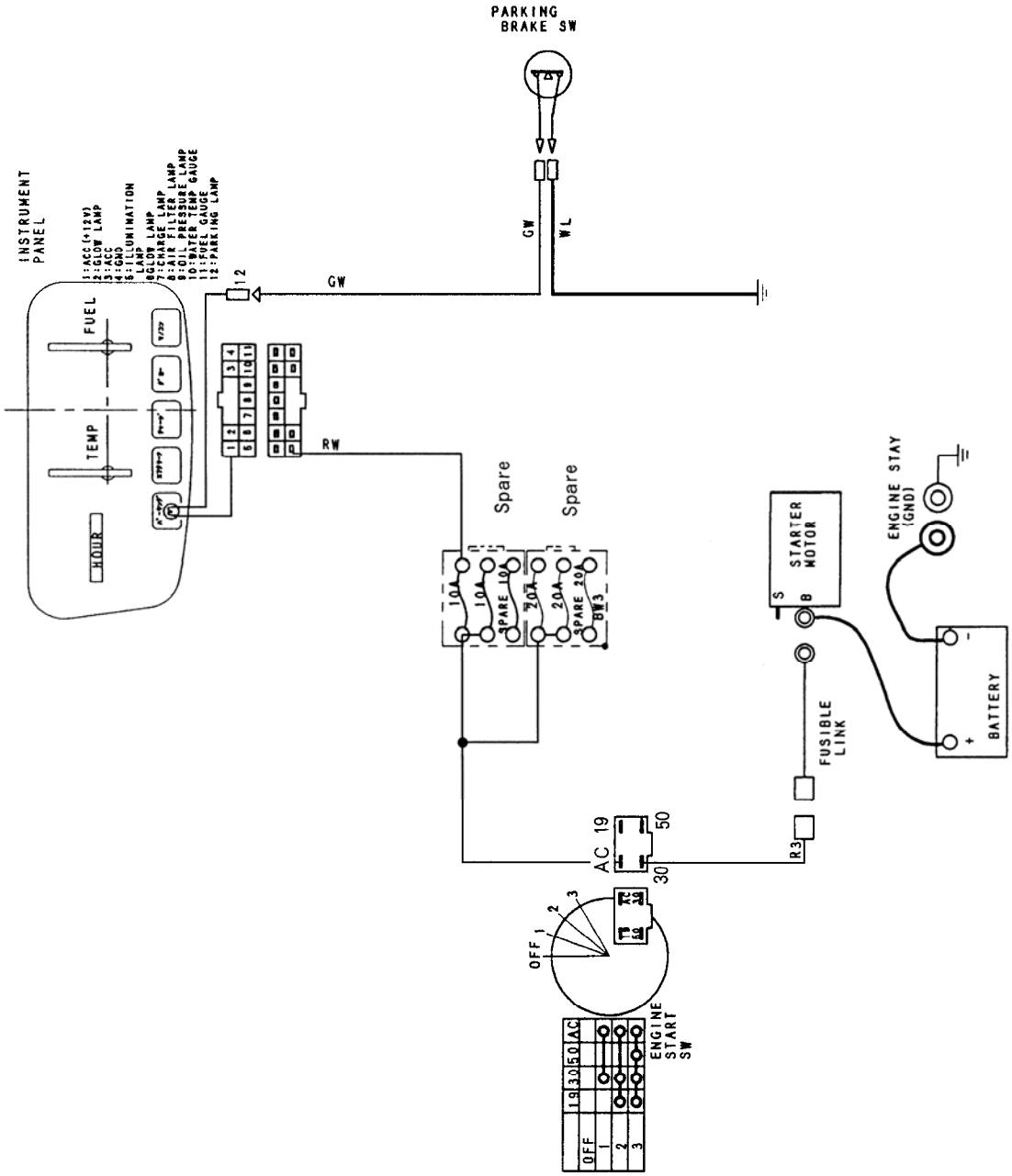

PARKING BRAKE CIRCUIT

1035X

Downloaded from www.Manualslib.com manuals search engine

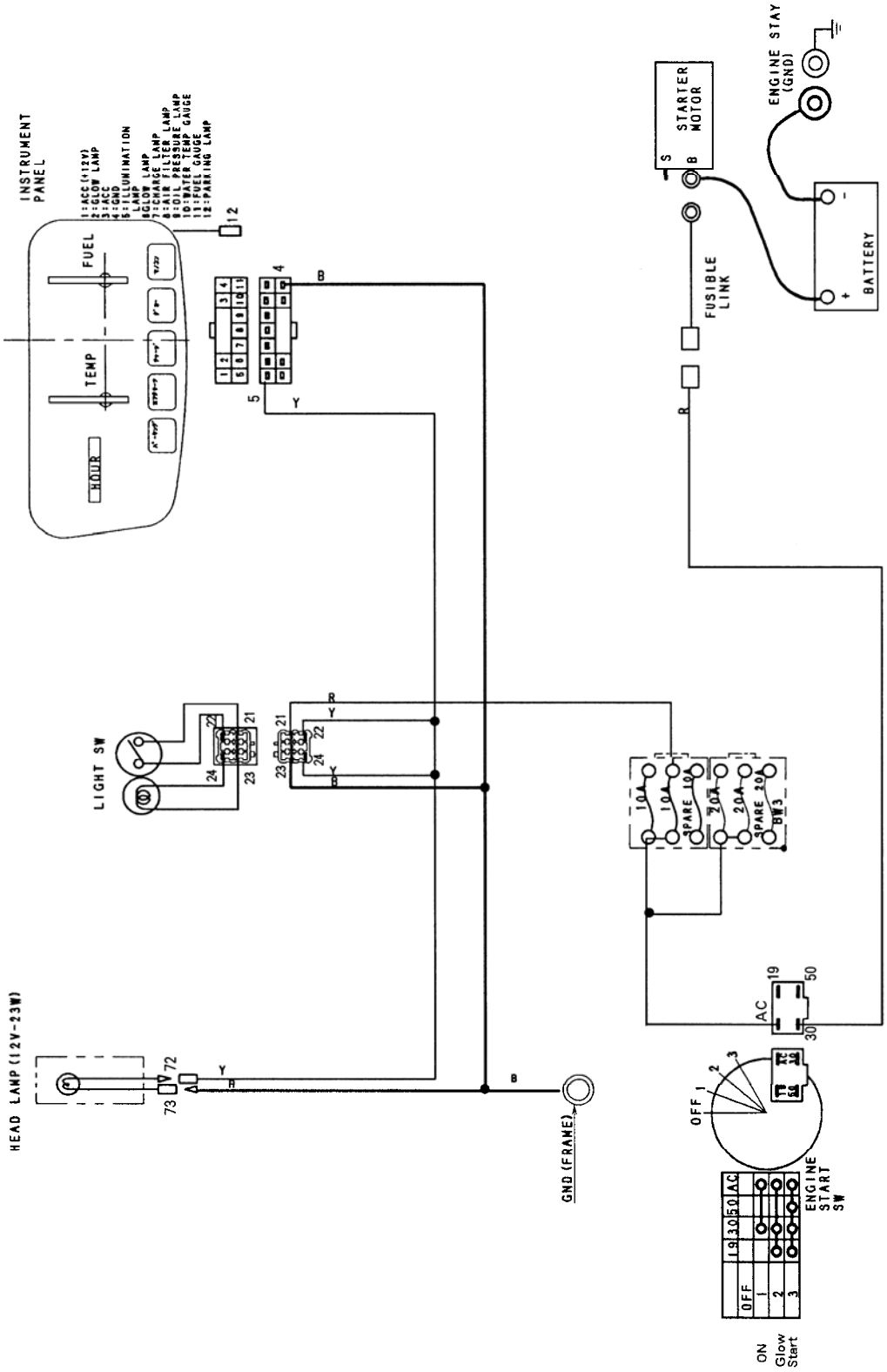

LIGHTING CIRCUIT

1036X

Downloaded from www.Manualslib.com manuals search engine

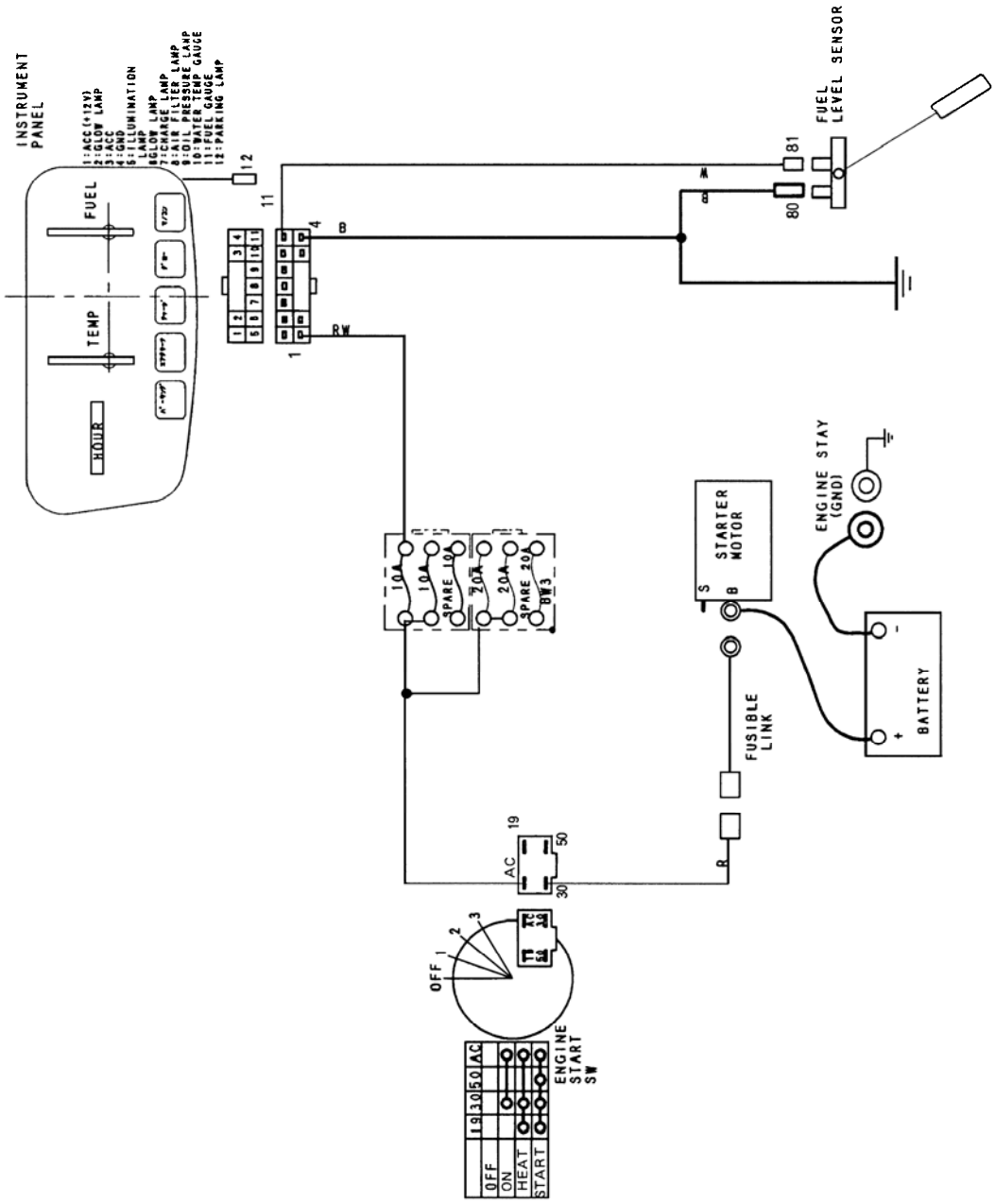

FUEL LEVEL CIRCUIT

1037X

Downloaded from www.Manualslib.com manuals search engine

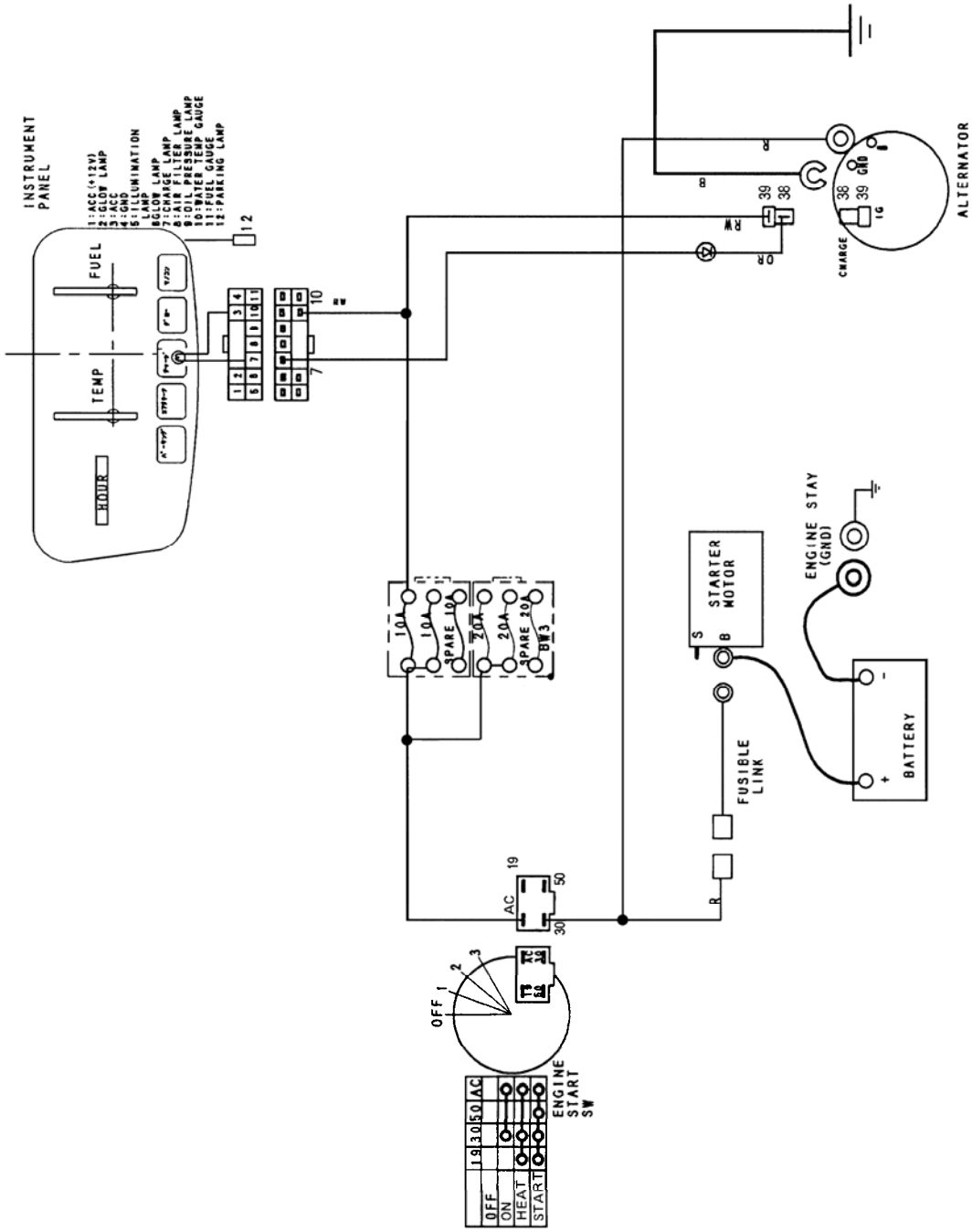

CHARGE CIRCUIT

1038X

Downloaded from www.Manualslib.com manuals search engine

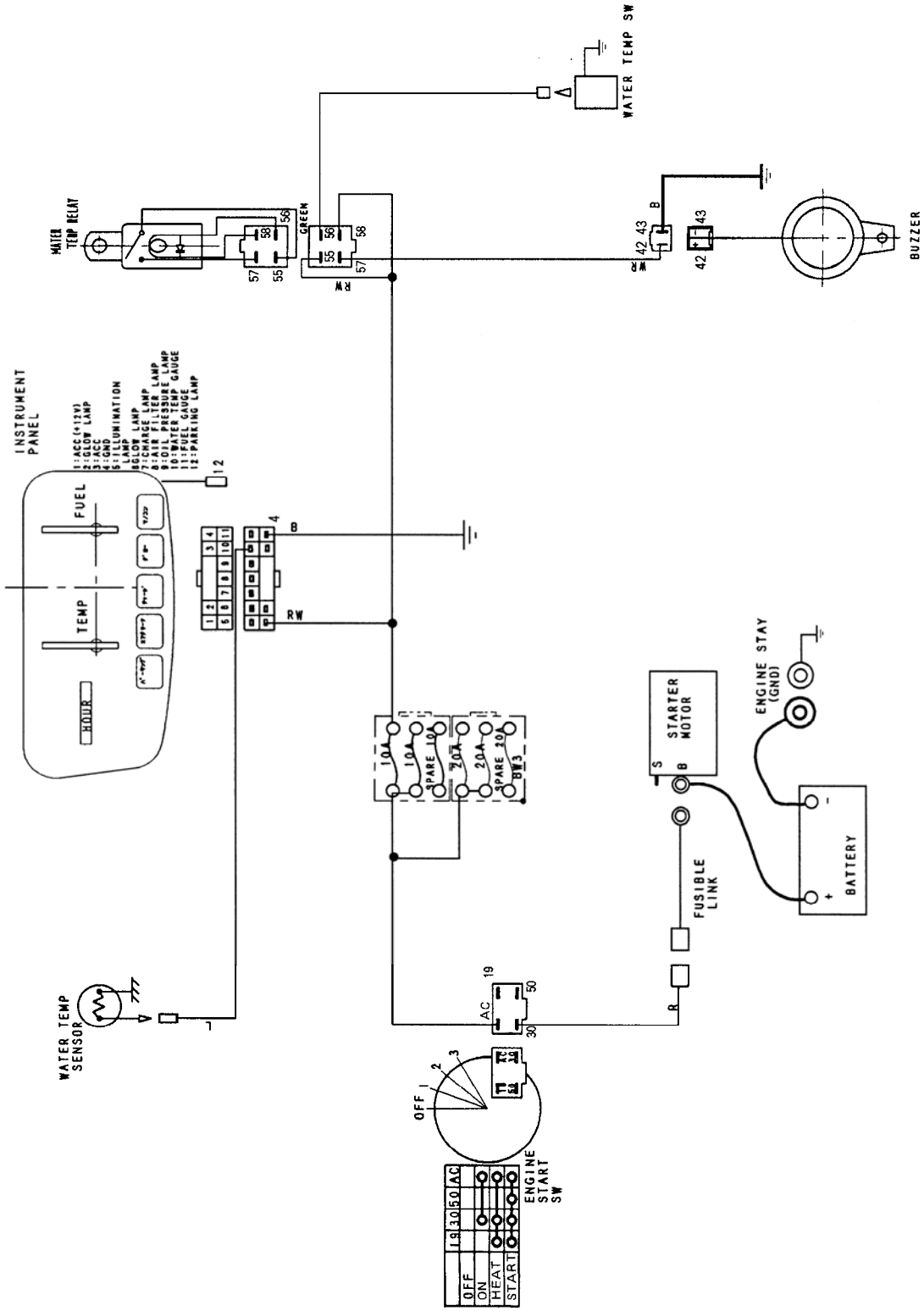

COOLANT OVERHEAT WARNING ALARM AND TEMPERATURE CIRCUIT

1039X

Downloaded from www.Manualslib.com manuals search engine

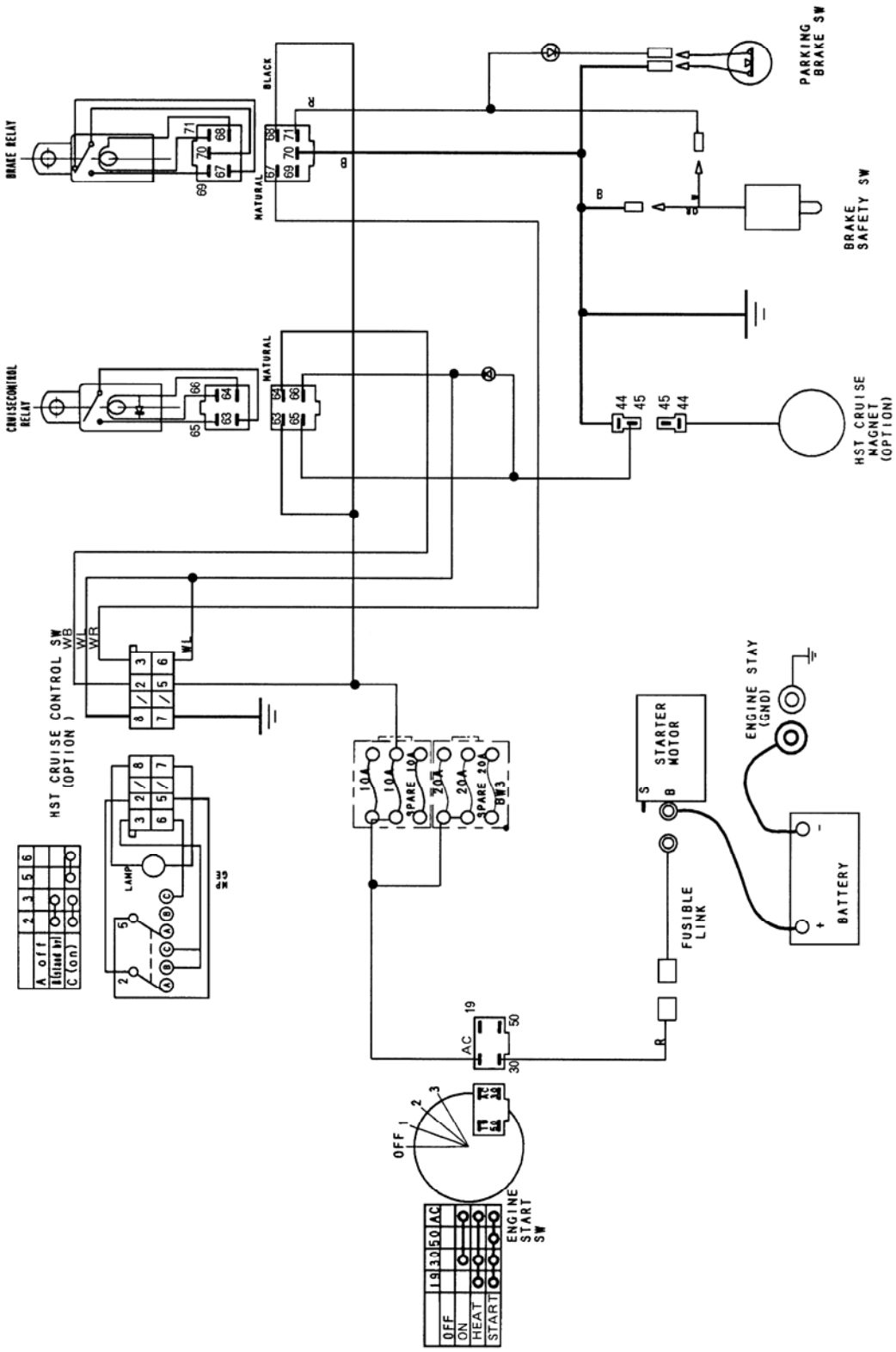

CRUIZE CONTROL CIRCUIT (OPTION)

1040X

Downloaded from www.Manualslib.com manuals search engine

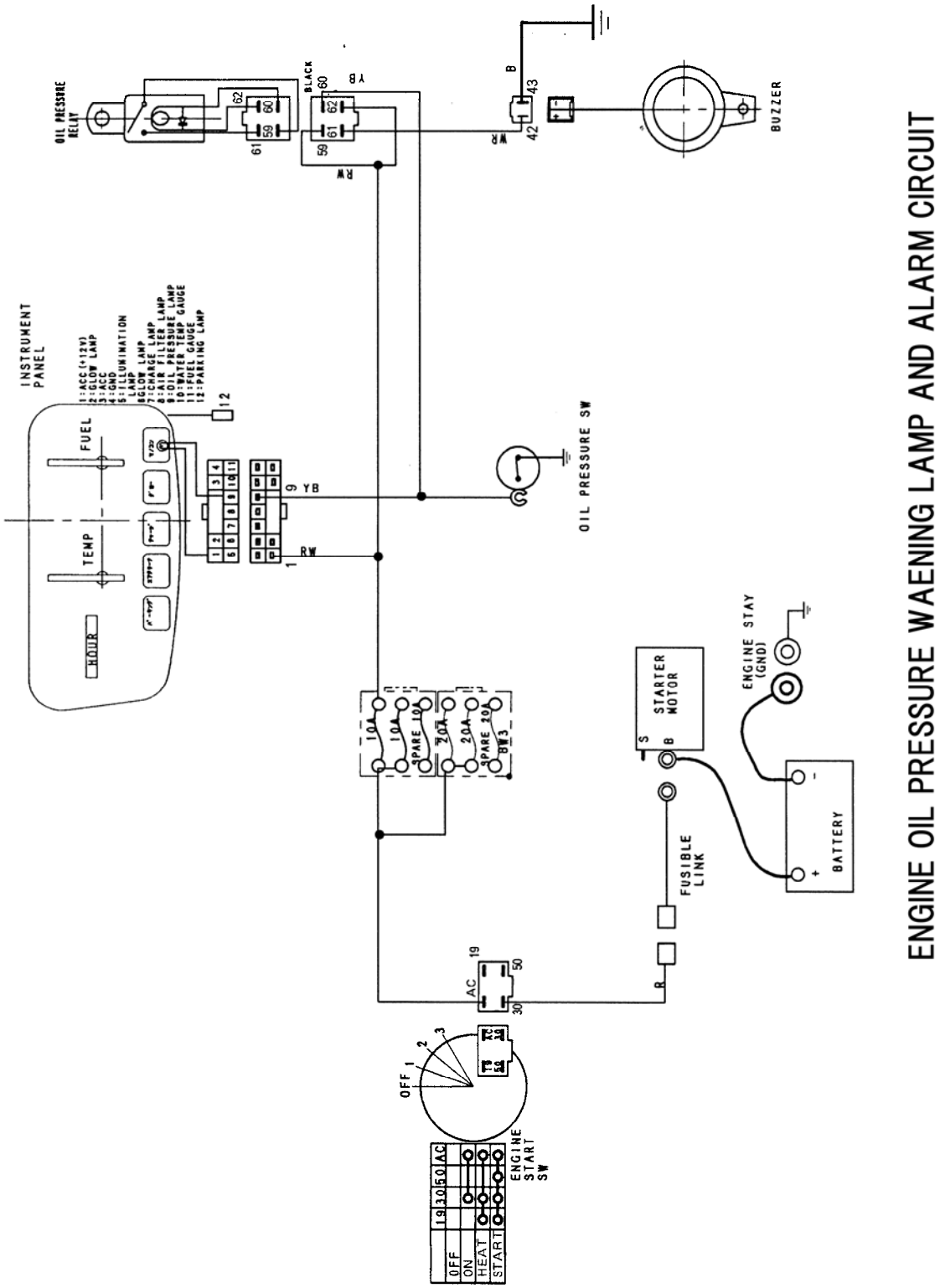

ENGINE OIL PRESSURE WAENING LAMP AND ALARM CIRCUIT

1041X

Downloaded from www.Manualslib.com manuals search engine

https://truckmanualshub.com/

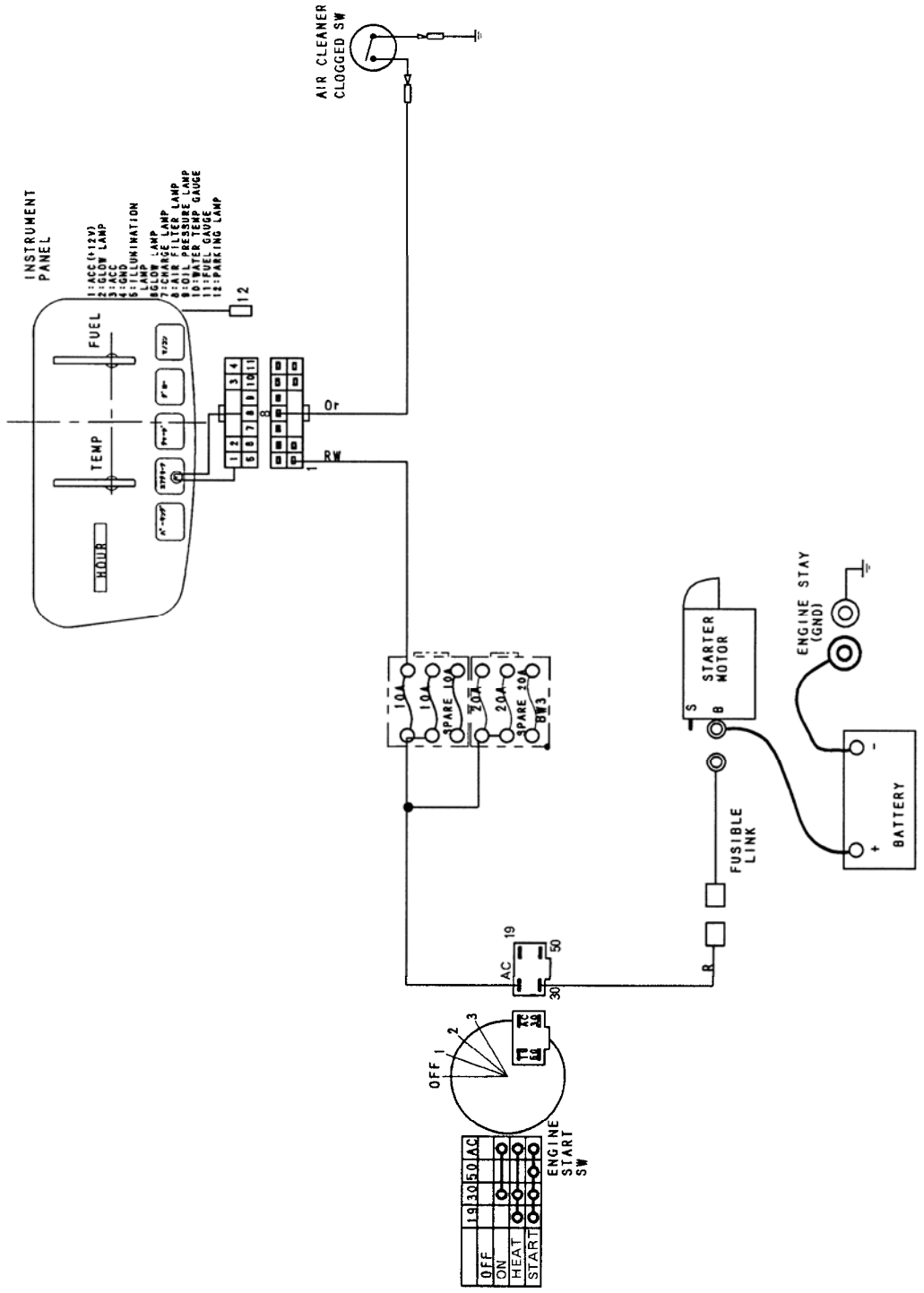

AIR CLEANER WARNING INDICATOR CIRCUIT

1042X

Downloaded from www.Manualslib.com manuals search engine

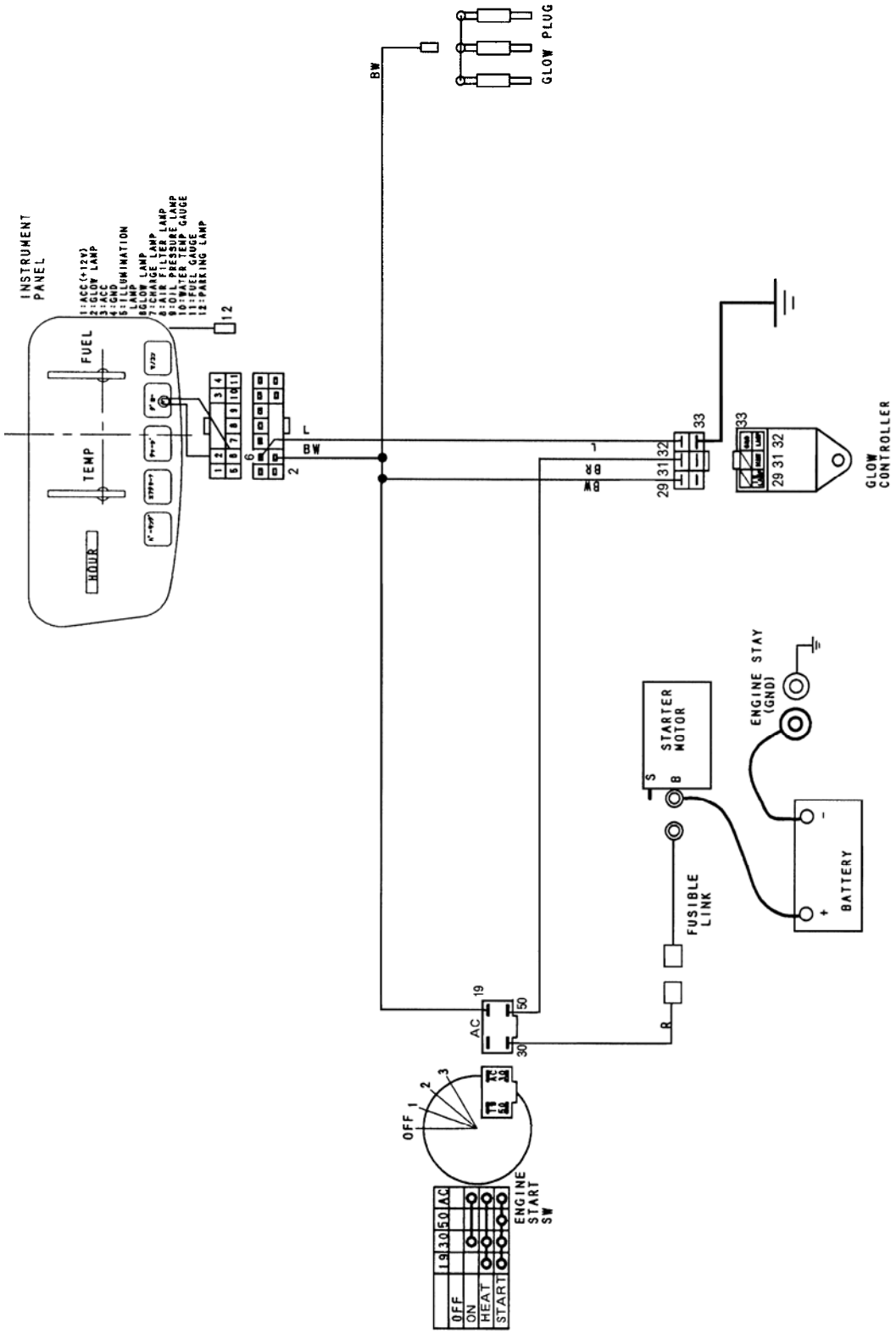

GLOW INDICATOR LAMP CIRCUIT

1043X

Downloaded from www.Manualslib.com manuals search engine

https://truckmanualshub.com/

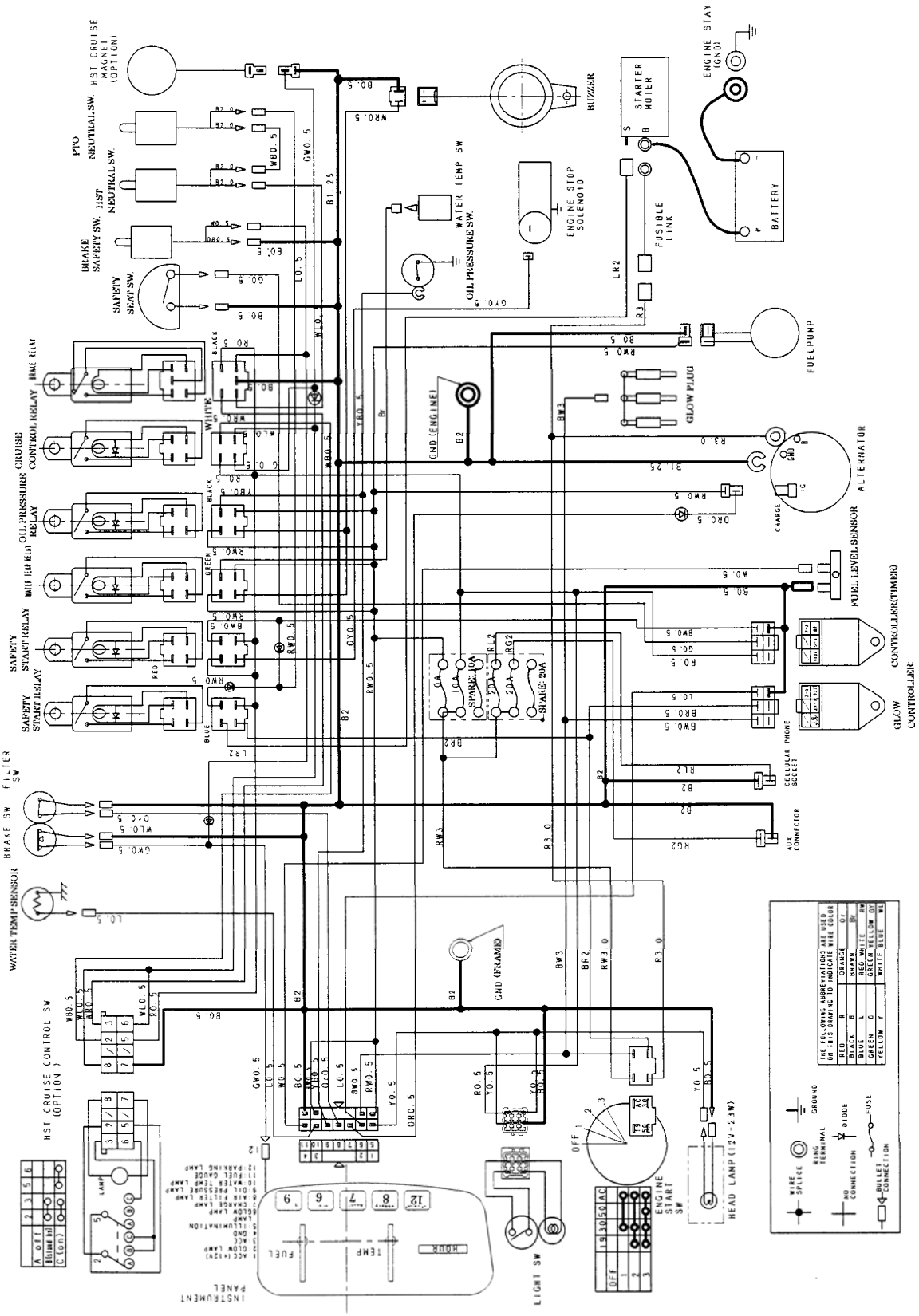

1044X

Downloaded from www.Manualslib.com manuals search engine

https://truckmanualshub.com/

Downloaded from www.Manualslib.com manuals search engine

https://truckmanualshub.com/

Chapter 11.
MOWER

Downloaded from www.Manualslib.com manuals search engine

https://truckmanualshub.com/

11-1 Sectional View : FM60SD

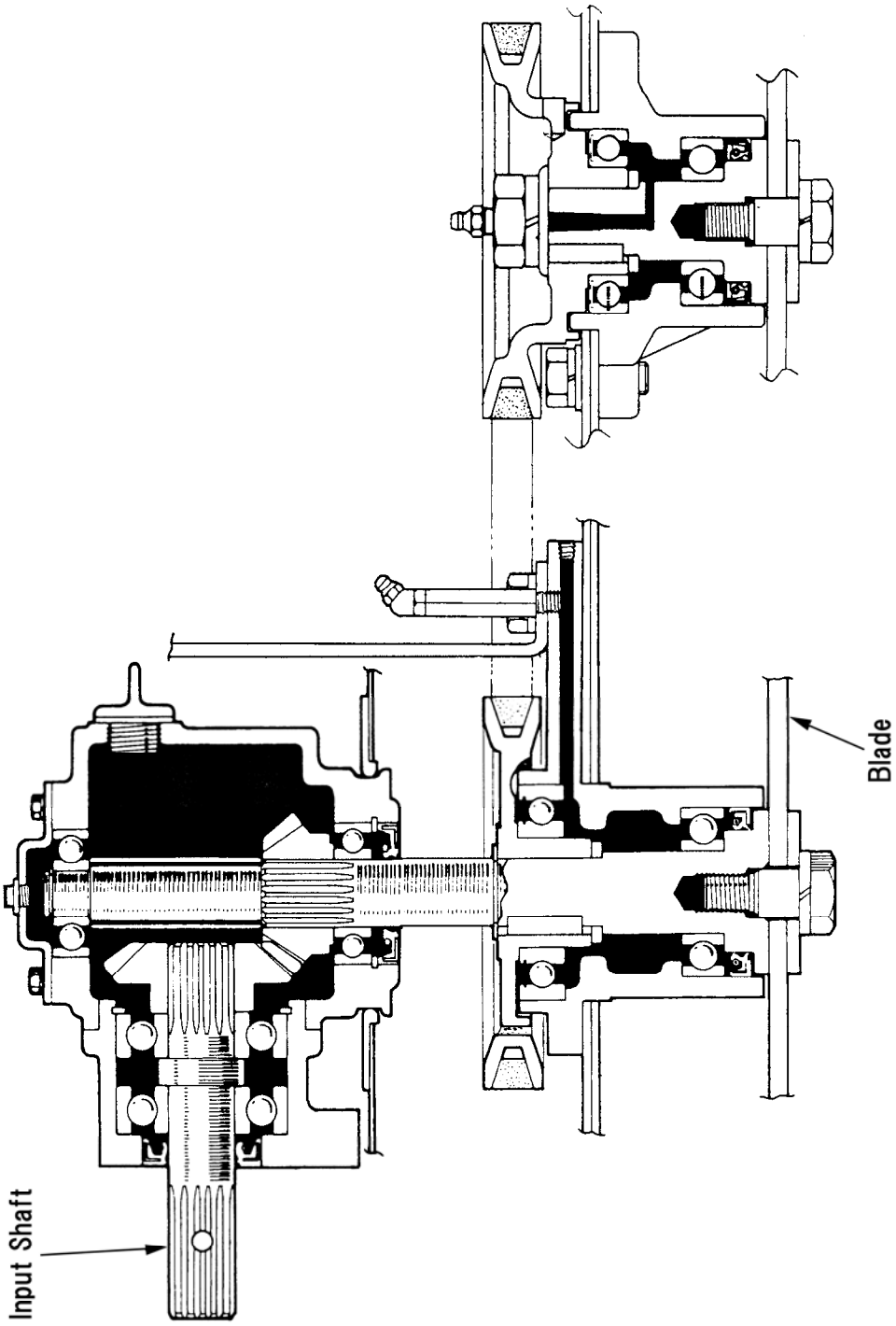

1101X

Downloaded from www.Manualslib.com manuals search engine

11-2 Specifications

Model	EM60 SD
Lifting link	2-point link
Adjustment of mowing height	Gauge wheel
Mowing width (mm)	1520
Mowing height (mm)	38 – 115 {7 steps}
Mowing blade speed (rpm)	2899
Mowing blade end speed (m/sec.)	79
No. of mowing blades	3
Standard mowing blade dimensions (T × W × L, mm)	7 × 50 × 518
Gear oil (ℓ)	0.6
Total weight (kg)	175
Applicable models	CM284·364

Power flow

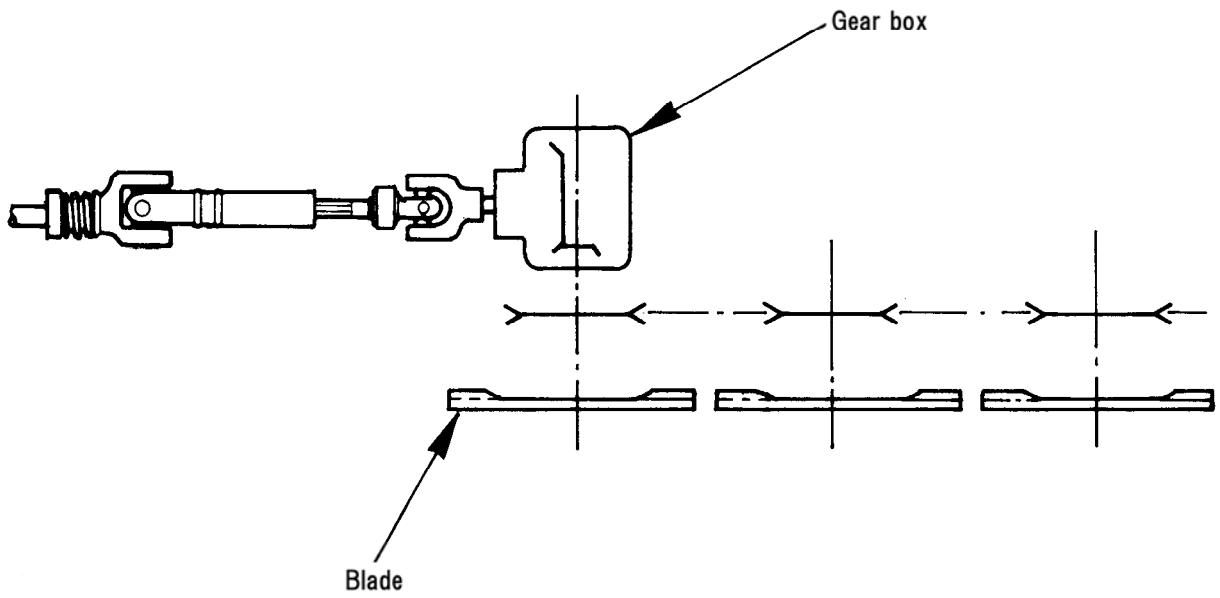

1102X

Downloaded from www.Manualslib.com manuals search engine

https://truckmanualshub.com/

11-3 Disassembly

Order	Unit	Disassembling procedure	
1	Belt cover	Remove the right and left belt covers.	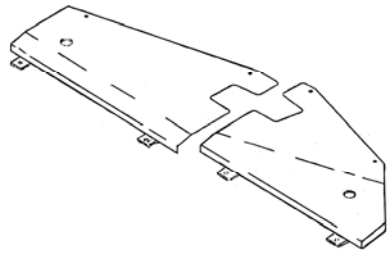 1103X
2	Belt Blade	① Before removing the belt, untighten the bolts and nuts of the blade and pulley. **NOTE:** **The pulley nut is threaded reversely and should be disassembled carefully.** ② Untighten the tension lock reduce the belt tension, and remove the belt and blade.	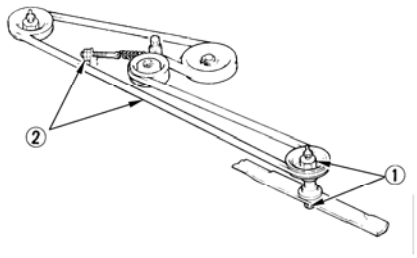 1104X
3	Bearing case (left and right)	① Remove the nut and take off the pulley. ② Remove the key from the shaft.	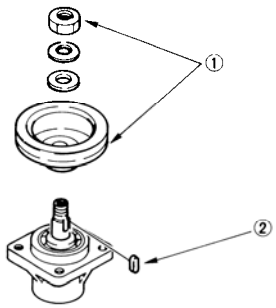 1105X
		③ Remove the bearing case from the mower deck (cover).	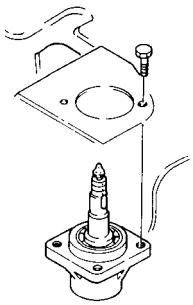 1106X

Downloaded from www.Manualslib.com manuals search engine

Order	Unit	Disassembling procedure	
		④ Remove the grease nipple and drive out the rotor shaft downwards. ⑤ Remove the oil seal, bearing and collar from the case.	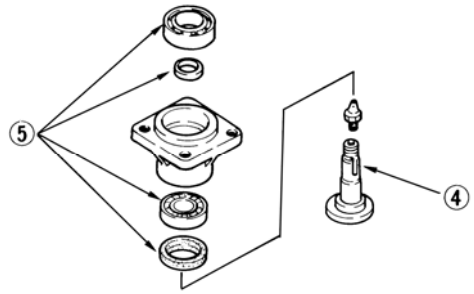 1107X
		<u>Components (bearing case)</u> 1. Grease nipple 2. Nut 3. Spring washer (M20) 4. Washer 5. Pulley (B) 6. Bearing (6008Z) 7. Collar 8. Bolt (M 12 × 30) 9. Bearing case 10. Bearing (6206) 11. Oil seal (UE45629) 12. Rotary shaft (B) 13. Key 14. Blade 15. Spacer 16. Spring washer (M18) 17. Bolt	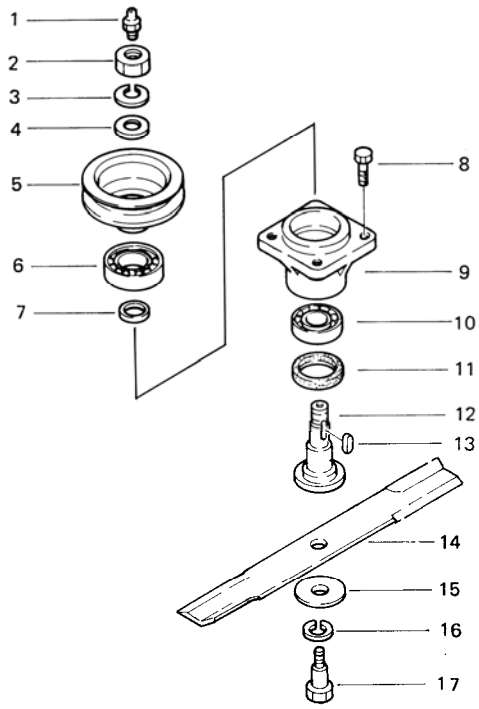 1108X
4	Gear box ass'y Bearing case ass'y	① Remove the gear box and bearing case together from the mower deck. ② Drain the gear oil from the gear box.	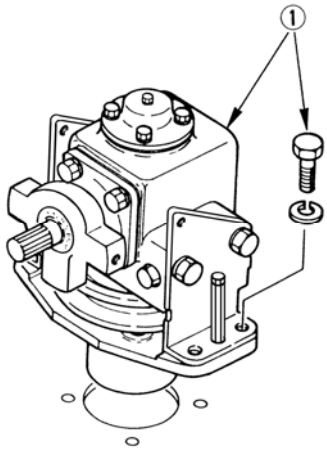 1109X

Downloaded from www.Manualslib.com manuals search engine

https://truckmanualshub.com/

Order	Unit	Disassembling procedure	
5	Gear box.	① Remove the cover: joint. ② Remove the grease nipple with fitting, the right and left stays.	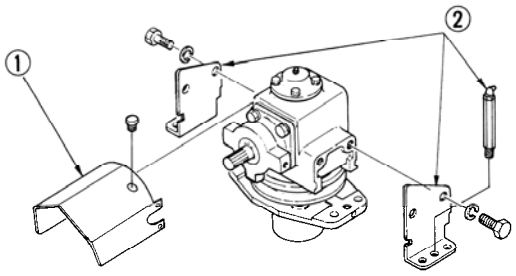 1110X
		③ Remove the bolt and take off the case, shaft, bearing and bevel gear together. **NOTE:** **Note the number of gaskets (packings) between the gear box and case.**	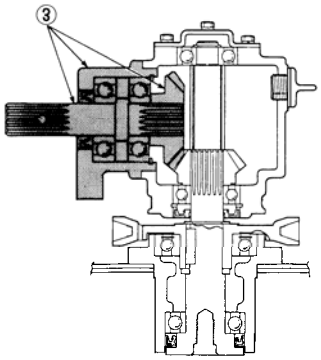 1111X
		④ Remove the bevel gear. **NOTE:** **Note the thickness and number of shims between the bevel gear and bearing, if any.** ⑤ Remove the Ø62 snap ring. ⑥ Drive out the shaft and bearing in the arrow mark direction. ⑦ Drive out the oil seal.	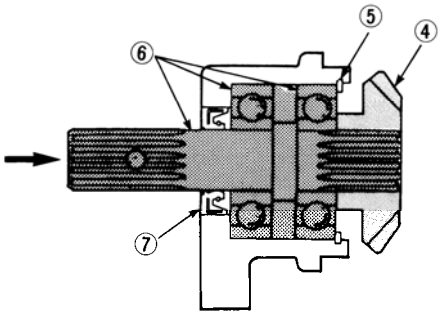 1112X
		⑧ Remove the box cover. ⑨ Remove the Ø17 snap ring. ⑩ Drive out the shaft downwards and detach the gear box and bearing case.	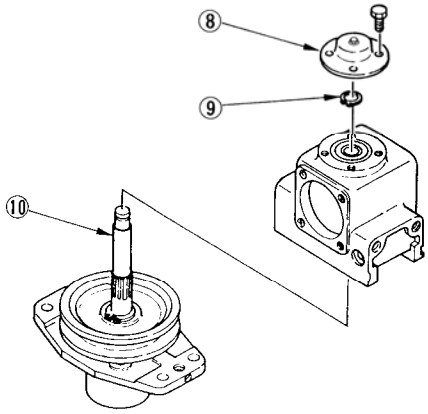 1113X

Downloaded from www.Manualslib.com manuals search engine

Order	Unit	Disassembling procedure
		⑪ Remove the oil seal by like a screw driver. ⑫ Remove the Ø52 snap ring, and remove the bearings (2 pcs.), bevel gear and collar from the gear case.

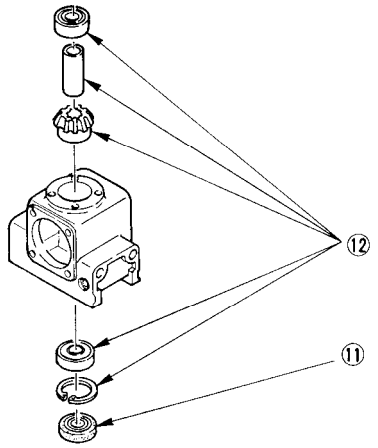

1114X

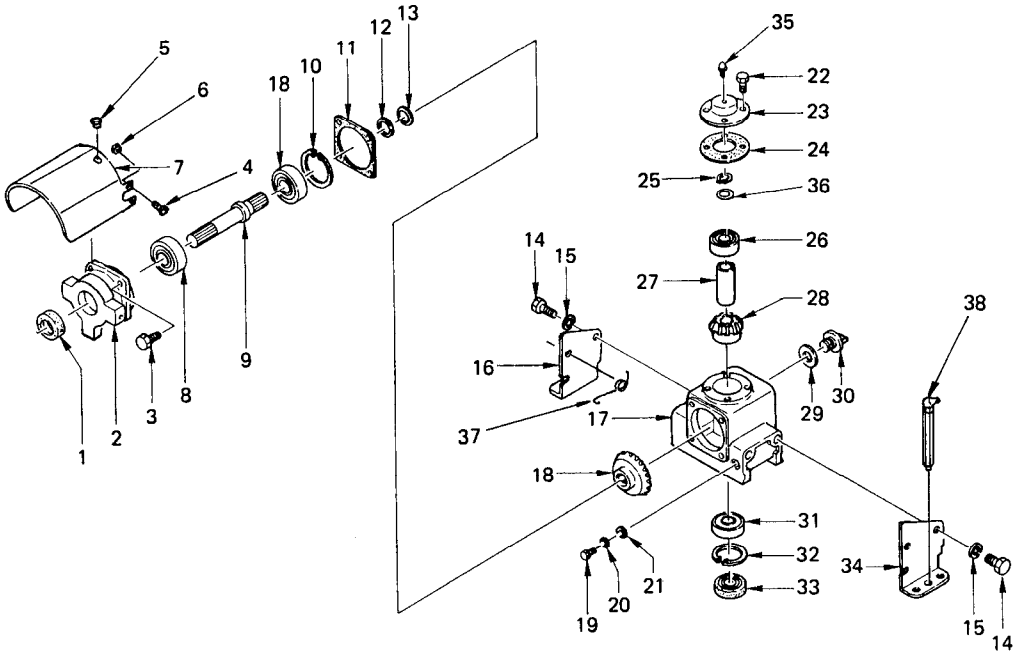

1115X

Components (gear case)

1. Oil seal (UE2545511)	10. Snap ring (Ø62)	19. Bolt (M8 × 12)	28. Bevel gear
2. Case	11. Gasket	20. Washer	29. Gasket
3. Bolt (M8 × 20)	12. Shim: 0.1 mm	21. Packing	30. Plug
4. Bolt (M8 × 25)	13. Shim: 0.2 mm	22. Bolt (M6 × 16)	31. Bearing (6205)
5. Rubber	14. Bolt (M12 × 20)	23. Box cover	32. Snap ring (Ø52)
6. U – nut	15. Spring washer	24. Packing	33. Oil seal (UE25528)
7. Cover; Joint	16. Stay	25. Snap ring (Ø17)	34. Stay
8. Bearing (6305)	17. Gear box	26. Bearing (6303)	35. Vent
9. Shaft	18. Bevel gear	27. Collar	36. Shim
			37. Spring
			38. Grease nipple

Downloaded from www.Manualslib.com manuals search engine

Order	Unit	Disassembling procedure	
6	Bearing case (center)	① Remove the Ø25 snap ring. ② Drive out the shaft downwards.	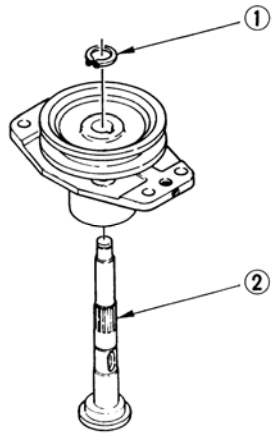 1116X
		③ Remove the pulley and bearing together and detach if necessary. ④ Remove the collar and drive out the bearing and oil seal.	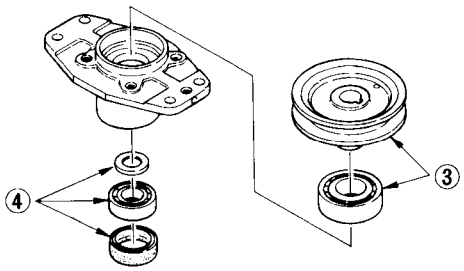 1117X
		<u>Components (bearing case)</u> 1. Bearing case 2. Bearing (6206) 3. Oil seal (UE45629) 4. Shaft 5. Key 6. Collar 7. Bearing (6208Z) 8. Pulley (A) 9. Snap ring (Ø25) 10. Grease nipple 11. Screw pipe 12. Bolt (M6 × 10)	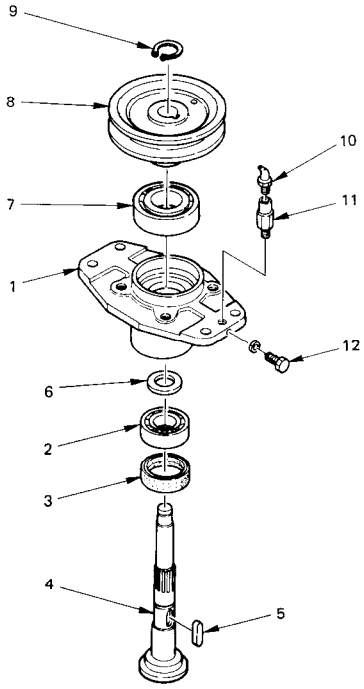 1118X

Downloaded from www.Manualslib.com manuals search engine

Order	Unit	Disassembling procedure	
7	Tension arm Idler pulley	Components 1. Tension arm ass'y 2. Idler pulley 3. Bearing (6203ZZ or 6203UU) 4. Snap ring (Ø40) 5. Snap ring (Ø17) 6. Grease nipple 7. Snap ring 8. Spacer 9. Bush 10. Spring 11. Rod 12. Nut (M10)	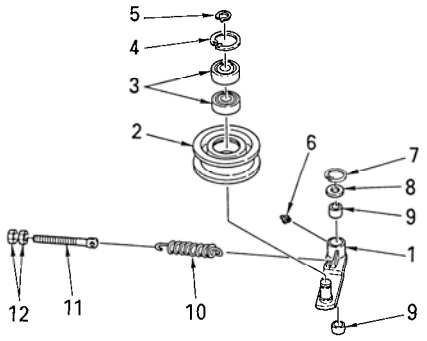 1119X
8	Tail wheel	Components 1. Castor arm 2. Washer 3. Gauge wheel ass'y 4. Spacer 5. Bolt (M8 × 14) 6. Grease nipple	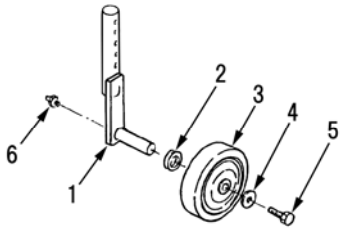 1120X
9	Front wheel	Components 1. Wheel ass'y 2. Bushing 3. Shaft 4. Washer 5. Snap ring 6. Shaft 7. Spring washer 8. Bolt 9. Spacer 10. Collar 11. Boss 12. Ball bearing 13. Cover 14. Tire 15. Disc wheel 16. Valve ass'y 17. Grease nipple	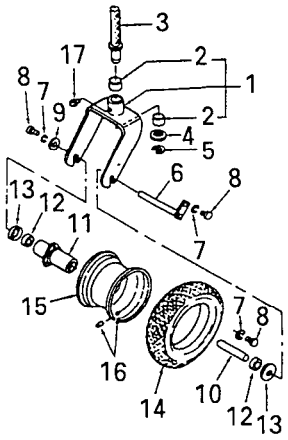 1121X
10	Roller	Components 1. Roller 2. Bolt 3. Shaft 4. Spring washer 5. Cap nut (M10) 6. Washer	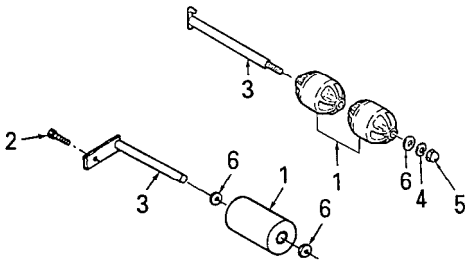 1122X

Downloaded from www.Manualslib.com manuals search engine

https://truckmanualshub.com/

11-4 Reassembly and Adjustment

NOTE: Reassemble components in the reverse order to disassembly except for main units, which shall be reassembled in the following procedure.

Reassembly and adjustment

1. Bearing case (center)

① A single-side shield bearing is used for the pulley. When installing the bearing to the pulley, care should be taken not to mistake its direction. (See the right figure.) (Position the shield surface on the pulley side.)

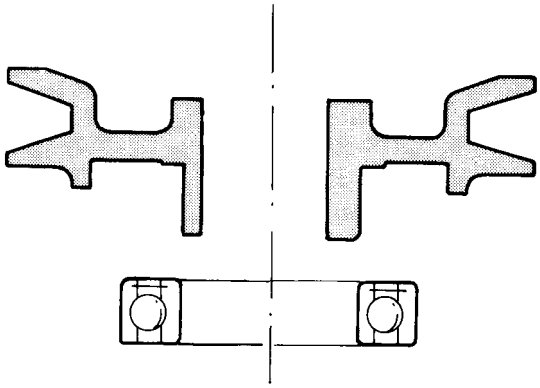

1123X

② Put in the oil seal from the case end surface and install. (Coat the lip with grease.)

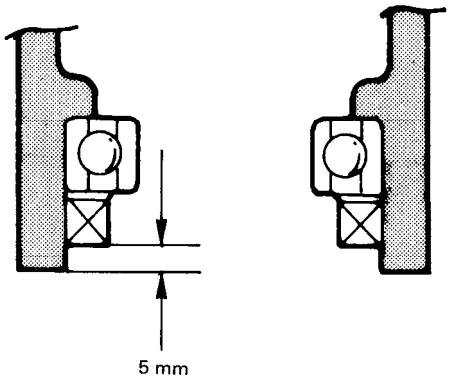

1124X

2. Gear box

Adjust the backlash by increasing or decreasing the shims or gaskets in the following procedure:

① Select shims so that the backlash is 0 (zero).
② Remove shims corresponding to thickness of **0.4 – 0.6 mm** from those of above item ① and install them.

NOTE:
In above item ①, if the shim thickness is below 0.4 mm, add the gasket (t=0.2) and adjust properly.

Specified value (0.2 – 0.3 mm) can be obtained by the above adjustment.

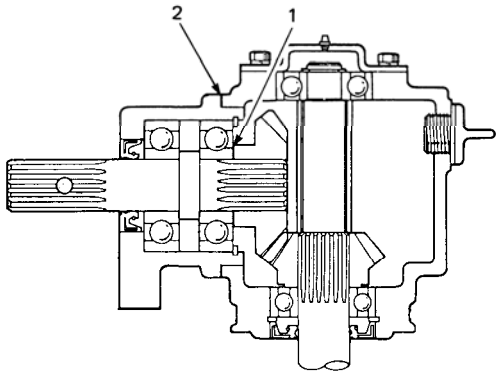

1125X

Downloaded from www.Manualslib.com manuals search engine

3. Adjustment of V-belt tension

Adjust the V-belt tension with the adjusting nut so that the spring length is 90 mm.

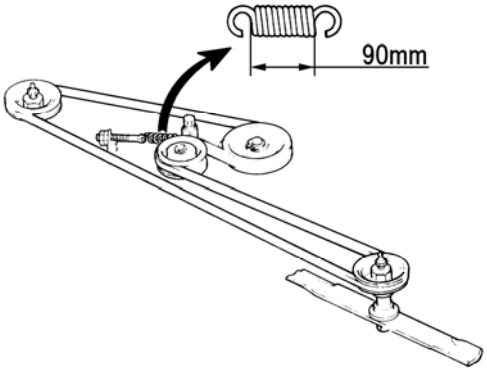

1126X

4. Blade

① Replace the blades if clearance between them exceeds the specified value. If the clearance is excessive, mowing operation may not be taken place.

Clearance between blades (mm)	
Standard assembling value (when new)	Service limit
1.61	**10.0**

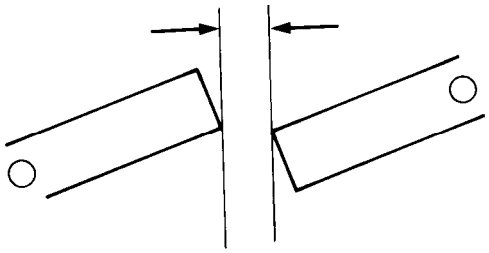

1127X

② Replace the blade with new one if its bend exceeds the specified value.

Bend of blade (at end)	**0 – 3 mm**

1128X

③ Sharpening of blade
Sharpen the blade edge to 45º and the blade end dimension to 0.4 mm as shown in the right figure.

NOTE:
1. **When sharpening the blade, put on protection glasses and gloves.**
2. **After completion of sharpening, be sure to adjust the balance of the blade before installing it.**

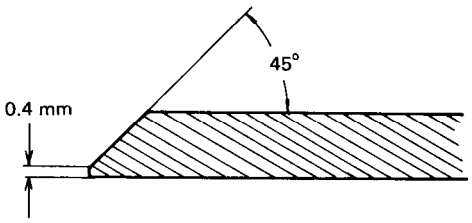

1129X

Downloaded from www.Manualslib.com manuals search engine

Reassembly and adjustment

④ Balancing of blade
Fix some suitable bar (below Ø16) to the vice, install the blade as shown in the right figure and check that the blade is level. If not, sharpen the heavier side to balance.

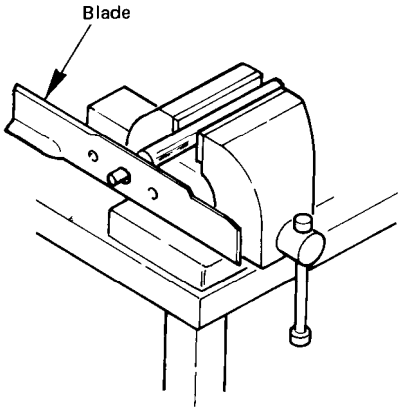

1130X

⑤ Installation of blade
Install the blade, leaf spring, and spring washer in this order and tighten the bolt with the specified torque.

Tightening torque	**132 – 147 N·m {13.5 – 15 kfg·m}**

NOTE: Install the leaf spring with the recess positioned on the blade side.

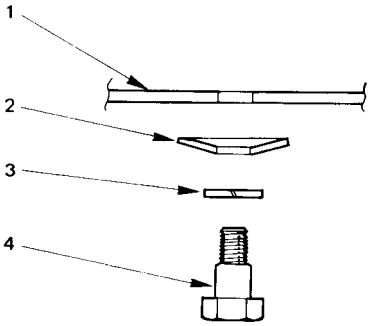

1. Blade
2. Leaf spring
3. Spring washer
4. Bolt

1131X

Downloaded from www.Manualslib.com manuals search engine