https://truckmanualshub.com/

INSTRUCTION HANDBOOK

Electric Stackers

PSE12BD / PSE12ND

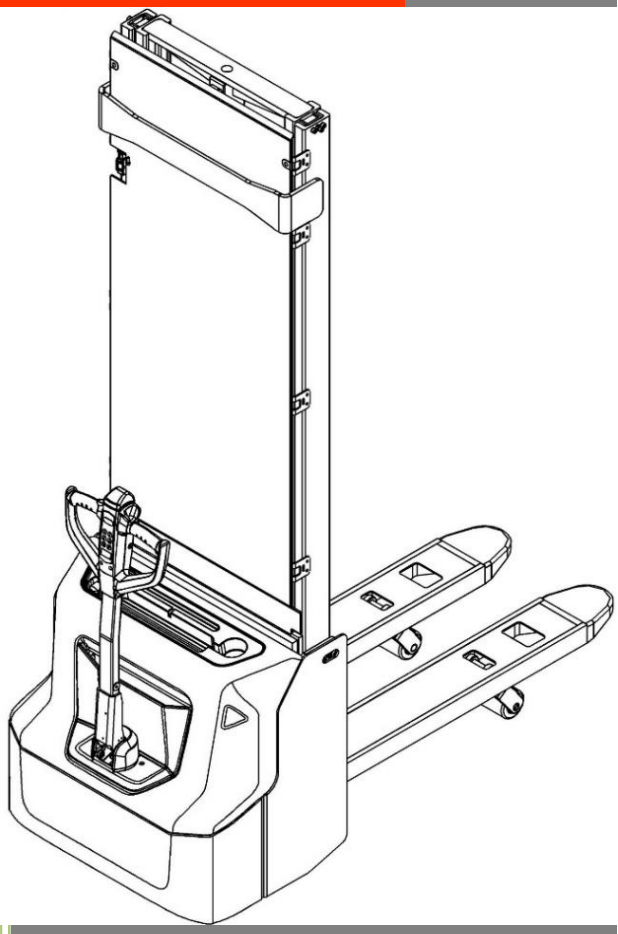

WARNING

Do not use the electric truck before reading and understanding these operating instructions.

NOTE:

- **Please check the designation of your present type at the last page of this document as well as on the ID-plate.**
- **Keep for future reference.**

Version 05/2021

PSE12BD/PSE12ND-SMS-003-EN

https://truckmanualshub.com/

FOREWARD

Before operating the electric stacker, read this ORIGINAL INSTRUCTION HANDBOOK carefully and understand the usage of the truck completely. Improper operation of the truck may create a danger situation. This handbook describes the usage of different electric stackers. When operating and servicing the truck, make sure, that it applies to your type.

Keep this handbook for future reference. If this or the warning/caution labels are damaged or got lost, please contact your local dealer for replacement.

This truck complies with the requirements according to EN 3691-1 (Industrial trucks - safety requirements and verification, part 1), EN 12895 (Industrial trucks - electromagnetic compatibility), EN 12053 (Safety of industrial trucks- test methods for measuring noise emissions), EN 1175-1 (Industrial truck safety – electrical requirements), assumed the truck is used according to the described purpose.
The noise level for this machine is < 70 dB(A) according to EN 12053.

ATTENTION:

- Environmentally hazardous waste, such as batteries, oil and electronics, will have a negative effect on the environment or health, if handled incorrectly.
- The waste packages should be sorted and put into solid dustbins according to the materials and be collected disposal by local special environment protection bureau. To avoid pollution, it’s forbidden to throw away the wastes randomly.
- To avoid leaking during the use of the products, the user should prepare some absorbable materials (scraps of wooden or dry duster cloth) to absorb the leaking oil in time. To avoid second pollution to the environment, the used absorbable materials should be handed in to special departments in terms of local authorities.
- Our products are subject to ongoing developments. The information written in this handbook is provided as reference for operating and servicing the stacker and may vary in terms of description of particular features of the truck.

NOTE: On this manual, the left sign means warning and danger, which can lead to death or serious injury if not followed.

Copyright

The copyright remains with the company, mentioned on the CE- certificate at the end of this document or, if sold within the USA, with the company, mentioned on the company sticker.

https://truckmanualshub.com/

TABLE OF CONTENTS

1. CORRECT APPLICATION 3
2. DESCRIPTION OF THE STACKER 4
   a. Overview of the main components 4
   b. Main technical data 6
   c. Description of the safety devices and warning labels (Europe and other, except USA) 8
   d. Identification plate 9
3. WARNINGS, RESIDUAL RISK AND SAFETY INSTRUCTIONS 10
4. COMMISSIONING, TRANSPORTING, DECOMMISSIONING 11
   a. Commissioning 11
   b. Lifting/ transportation 11
   c. Decommissioning 12
5. DAILY INSPECTION 13
6. OPERATION INSTRUCTIONS 14
   a. Parking 14
   b. Residual lift diagram 15
   c. Lifting 15
   d. Lowering 15
   e. Travelling 16
   f. Steering 17
   g. Braking 17
   h. Malfunctions 17
   i. Emergency 17
7. PIN-CODE PANEL 18
   a. Introduction 18
   b. Main parameters 18
   c. Main functions 18
8. BATTERY CHARGING AND REPLACEMENT 19
   a. Safety Instructions (lithium battery) 19
   b. Matters requiring attention (lithium battery) 20
   c. Replacement 21
   d. Battery Indicator 21
   e. Charging 22
9. REGULAR MAINTENANCE 23
   a. Maintenance checklist 23
   b. Lubricating points 24
   c. Check and refill hydraulic oil 24
   d. Checking electrical fuses 25
   e. Removing, reattaching guarding 25
10. TROUBLE SHOOTING 26
11. WIRING/ CIRCUIT DIAGRAM 28
   a. Electrical circuit diagram 28
   b. Hydraulic circuit 30
12. DECLARATION OF CONFORMITY (valid, if sold within the EU) 31

https://truckmanualshub.com/

1. CORRECT APPLICATION

It is only allowed to use this electric stacker according to this instruction handbook.

The trucks described in this handbook are self-propelled pedestrian controlled electric power stackers, with electrically powered lifting function. The trucks are designed for stacking operations in dedicated racking by lifting and lowering the palletized loads up to the desired lifting heights.

A wrong usage can cause human injuries or can damage equipment.
The operator/ the operating company has to ensure the correct usage and has to ensure, that this truck is used only by staff, which is trained and authorized to use this truck.

The truck has to be used on substantially firm, smooth, prepared, level and adequate surfaces. The truck is intended to be used for indoor applications with ambient temperatures between +5°C and + 40°C and for various transportation applications without crossing permanent obstacles or potholes. The work on ramps is allowed if ramp is not exceeding the allowed angle. While operating, the load must be placed approximately on the longitudinal centre plane of the truck.
Lifting or transporting people is forbidden.

If used on tail lifts or loading ramps, please ensure that these are used correctly according to the operating instructions.

The capacity is marked on capacity sticker as well on the Identification plate. The operator has to consider the warnings and safety instructions.
Operating lighting must be minimum 50 Lux.

<u>Modification</u>
No modifications or alterations to this stacker which may affect, for example, capacity, stability or safety requirements of the truck, shall be made without the prior written approval of the original truck manufacturer, its authorized representative, or a successor thereof. This includes changes affecting, for example braking, steering, visibility and the addition of removable attachments. When the manufacturer or its successor approve a modification or alteration, they shall also make and approve appropriate changes to capacity plate, decals, tags and operation and maintenance handbooks.

Only in the event that the truck manufacturer is no longer in business and there is no successor in the interest to the business, may the user arrange for a modification or alteration to a powered industrial truck, provided, however, that the user:
a) arranges for the modification or alteration to be designed, tested and implemented by an engineer(s) expert in industrial trucks and their safety,
b) maintains a permanent record of the design, test(s) and implementation of the modification or alteration,
c) approves and makes appropriate changes to the capacity plate(s), decals, tags and instruction handbook, and
d) affixes a permanent and readily visible label to the truck stating the manner in which the truck has been modified or altered, together with the date of the modification or alteration and the name and address of the organization that accomplished those tasks.

By not observing these instructions, the warranty becomes void.

https://truckmanualshub.com/

2. DESCRIPTION OF THE STACKER

a. Overview of the main components

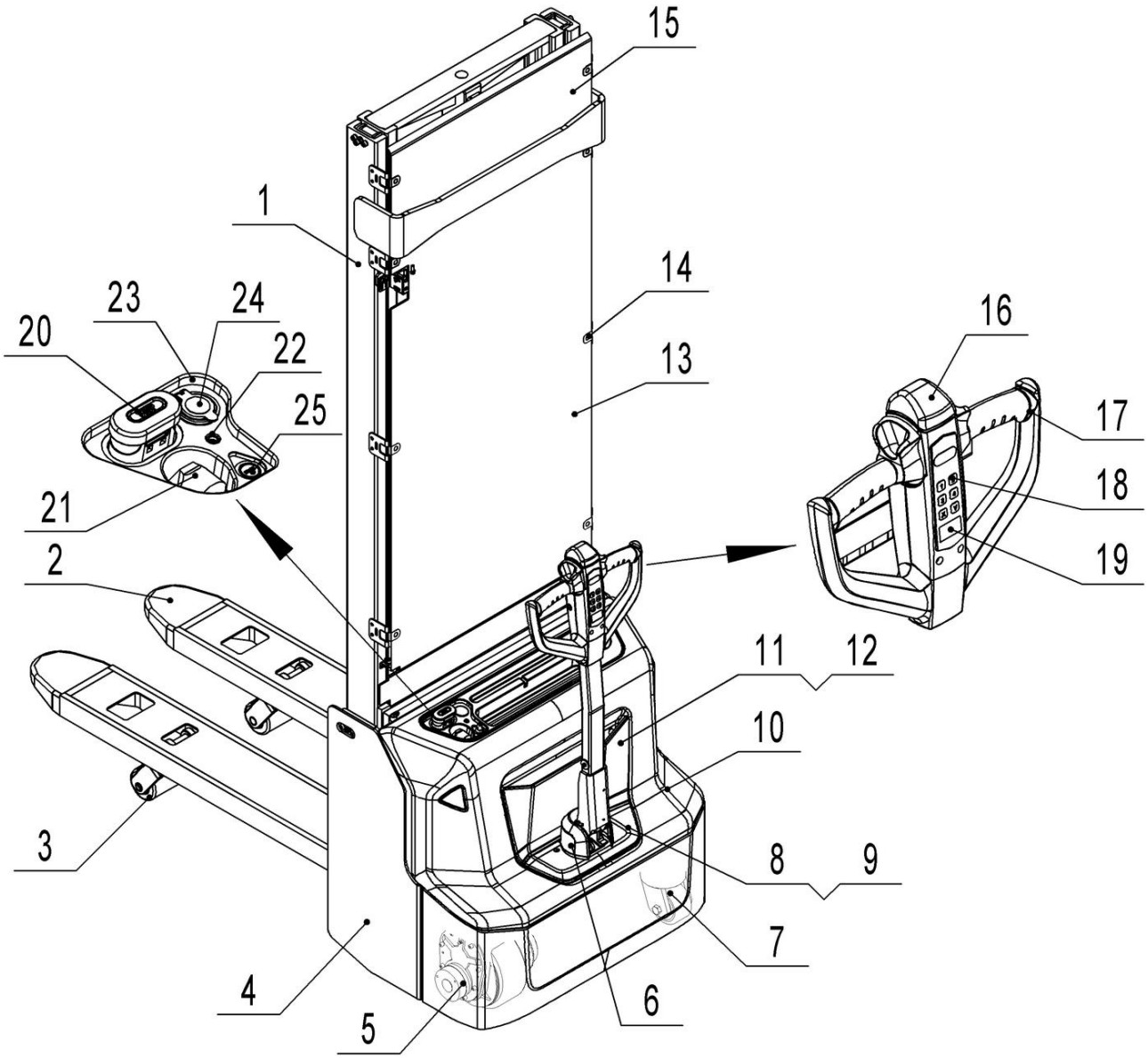

1. Mast
2. Fork carriage
3. Load roller assembly
4. Chassis
5. Driving wheel assembly
6. Protective cover (tiller)
7. Steering roller assembly
8. Cover
9. Cover
10. Main cover
11. Cover
12. Cover
13. Protective board
14. Buckle
15. Protective board
16. Belly button
17. Tiller
18. Pin-code panel
19. LCD
20. Emergency button
21. Spring cord
22. Charging LED
23. Panel
24. USB port (PSE12ND)
25. Button switch (PSE12ND)

https://truckmanualshub.com/

b. Main technical data

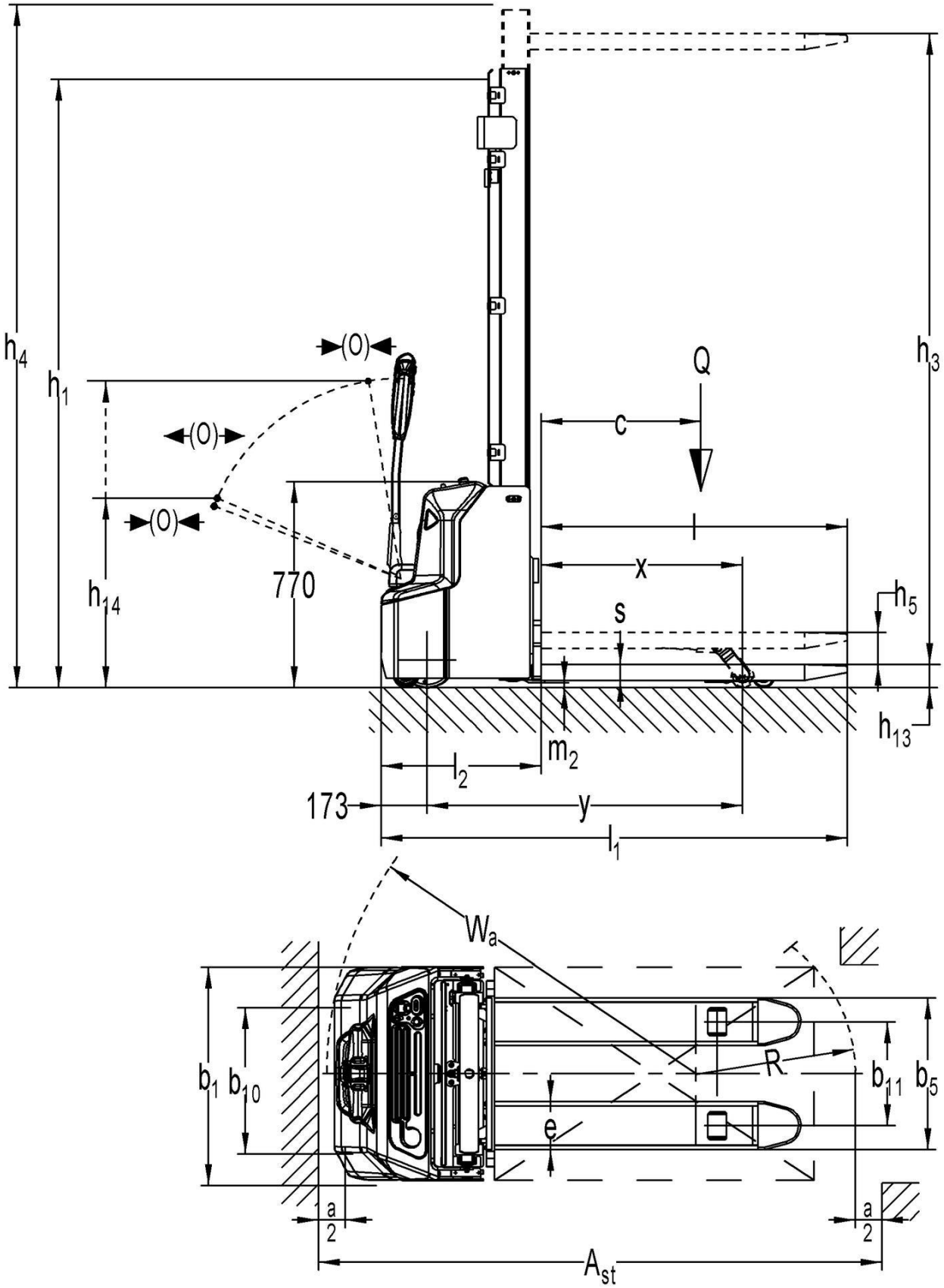

Fig. 2: Technical data

https://truckmanualshub.com/

Table1: Main technical data for standard version

Type sheet for industrial truck acc. to VDI 2198					
General data	1.2	Manufacturer`s type designation		PSE12BD	PSE12ND
	1.3	Power (battery ,diesel, petrol, gas, manual)		Battery	
	1.4	Operator type		Pedestrian	
	1.5	Load Capacity / rated load	Q(t)	1.2	
		Load Capacity / rated load (mast lift)		1.2[3)]	
		Load Capacity / rated load (support arm lift)		1.2[3)]	
	1.6	Load centre distance	c(mm)	600	
	1.8	Load distance ,centre of drive axle to fork	x(mm)	835 / 752[4)]	
	1.9	Wheelbase	Y(mm)	1264 / 1181[4)]	
Weight	2.1	Service weight	kg	700	670
	2.2	Axle loading, laden front/rear	kg	505 / 195	485 / 185
	2.3	Axle loading, unladen front/rear	kg	680 / 1220	670 / 1200
Tires, chassis	3.1	Tires		Polyurethane (PU)	
	3.2	Tire size, front	∅ x w (mm)	Φ210 x 70	
	3.3	Tire size, rear	∅ x w (mm)	Φ84 x 93	
	3.4	Additional wheels(dimensions)	∅ x w (mm)	Φ100 x 50	
	3.5	Wheels, number front/rear(x=driven		1x + 1 / 2	
	3.6	Track, front	b_{10} (mm)	550	
	3.7	Track, rear	b_{11} (mm)	400 / 515	
Dimensions	4.2	Lowered mast height	h_1 (mm)	2320	
	4.3	Free Lift height	h_2 (mm)	-	
	4.4	Lift height	h_3 (mm)	3514	
	4.5	Extended mast height	h_4 (mm)	4077	
	4.6	Initial lift	h_5(mm)	120	
	4.9	Height of tiller in drive position min./ max.	h_{14} (mm)	710 / 1150	
	4.15	Height, lowered	h_{13} (mm)	86	
	4.19	Overall length	l_1 (mm)	1752	
	4.20	Length to face of forks	l_2 (mm)	602	
	4.21	Overall width	b_1 (mm)	800	
	4.22	Fork dimensions	s/e/l (mm)	60 / 180 / 1150	
	4.25	Width across forks	b_5 (mm)	570 / 685	
	4.32	Ground clearance, centre of wheelbase	m_2 (mm)	26	
	4.33	Aisle width for pallets 1000X1200	Ast (mm)	2290 / 2234[4)]	
	4.34	Aisle width for pallets 800X1200	Ast (mm)	2209 / 2185[4)]	
	4.35	Turning radius	Wa (mm)	1467 / 1384[4)]	
Performance	5.1	Travel speed, laden/ unladen	Km/h	4.2 / 4.5	
	5.2	Lift speed, laden/ unladen	m/s	0.11 / 0.16	
	5.3	Lowering speed, laden/ unladen	m/s	0.13 / 0.11	

https://truckmanualshub.com/

	5.8	Max. gradeability, laden/ unladen	%	5 / 10	
	5.10	Service brake		Electromagnetic	
Electric	6.1	Drive motor rating S2 60min	kW	0.65	
	6.2	Lift motor rating at S3 7.5%	kW	2.2	
	6.3	Battery acc. to DIN 43531/35/36 A, B, C, no		no	
	6.4	Battery voltage, nominal capacity K5	V/Ah	2 x 12 / 85[1)]	24 / 60
	6.5	Battery weight	kg	2 x 27[2)]	19
	6.6	Energy consumption acc: to VDI cycle	Kwh/h	0.66	
Other	8.1	Type of drive control		DC	
	8.4	Sound level at driver's ear acc. to EN 12053	dB(A)	<70	

1) Option：2x12V/106Ah
2) 2x12V/106Ah : 2 x 34kg
3) when operate the fork and pallet at the same time: Load Capacity / rated load (mast lift) < Load Capacity / rated load (support arm lift)
4) Load section lowered / Load section raised

Type	Lowered mast height h1(mm)	Free Lift height h2(mm)	Lift height h3(mm)	Extended mast height h4(mm)
One stage mast	1970	1514	1514	1970
	2370	1914	1914	2370
Two stage mast	1970	-	2814	3377
	2120	-	3114	3677
	2320	-	3514	4077

c. Description of the safety devices and warning labels (Europe and other, except USA)

A Crane hook label
B Warning decal: Do not step under or on the forks
C Residual lift capacity sticker
D Never reach through
E Identification plate (ID-plate)
F Sticker to read and follow these instructions
G Sign of filling point
H "No passengers" decal

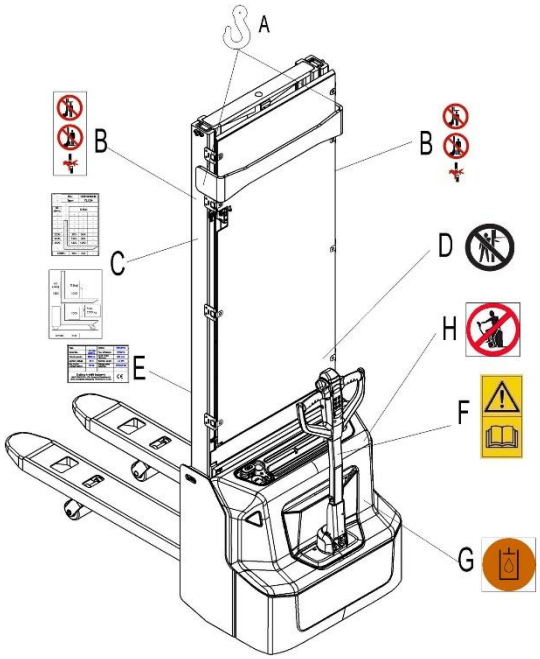

Fig. 3: Safety and warning labels

The truck is equipped with an emergency switch (20) which stops all lifting-, lowering-, driving- functions and engages the failsafe electromagnetic brake when it is pressed. By pull this button out; the truck can be operated after the controller checked the functions. Before operating, type the password on pin-code panel and press the √ button. To prevent against unauthorized access, press emergency switch (20) or press the X button of pin-code panel.
The truck is equipped with a safety (belly) button (16)

https://truckmanualshub.com/

which switches the driving function away from the operator, if the truck travels towards the operator and the tiller is activated in the tillers operating zone. Follow also the instructions given on the decals. Replace the decals if they are damaged or missing.

d. Identification plate

1	Designation, type	6	Name and address of manufacturer)
2	Serial number	7	Battery weight minimum/ maximum
3	Rated capacity in kg	8	Nominal power in kW
4	Supply voltage in V	9	Load center distance
5	Own mass (self weight) in kg without battery	10	Manufacturing date
		11	Option

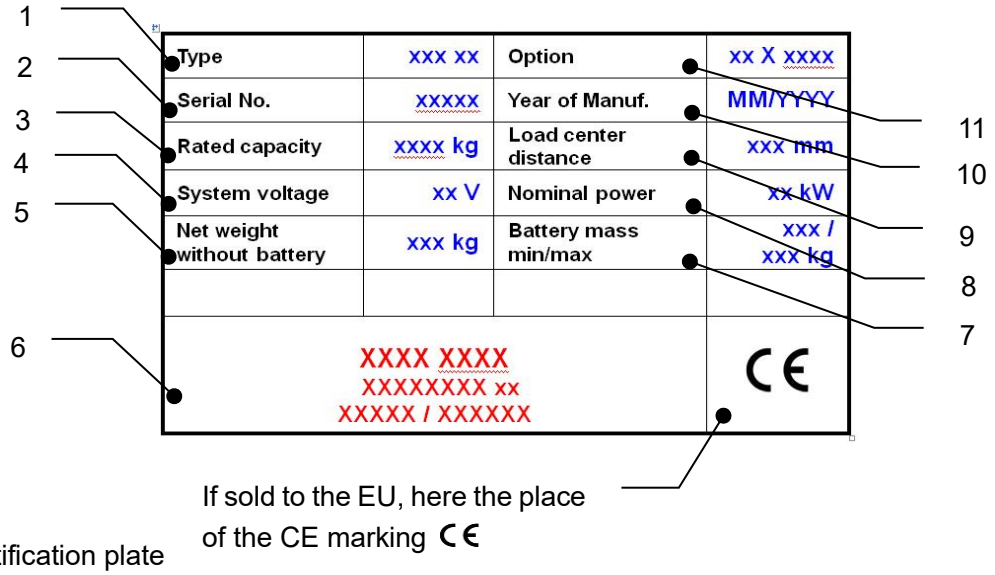

If sold to the EU, here the place of the CE marking CE

Fig. 4: Identification plate

https://truckmanualshub.com/

3. WARNINGS, RESIDUAL RISK AND SAFETY INSTRUCTIONS

DO NOT

- Put foot or hand under or into the lifting mechanism.
- Allow other person than the operator to stand in front of or behind the truck when it is moving or lifting/lowering.
- Overload the truck.
- Put foot in front of the wheels, injury could result.
- Lift people. People could fall down and suffer severe injury.
- Push or pull loads; use drawbar
- Side or end load. Load must be distributed evenly on the forks.
- Use the truck with unstable, unbalanced not stable load.
- Use the truck without following the instructions.
- Lifted loads could become unstable at wind forces. In the case of wind forces do not lift the load if there is any influence to the stability
- Do not use the truck without help if load is causing insufficient visibility. Operation without help of additional people may result in crushes or injuries. Always make sure the transportation of load is safe.
- Do not operate the truck with removed covers or the apron.

Watch difference in floor levels when driving. Load could fall down or the truck could get uncontrollable.

Keep watching the condition of load. Stop operating the truck if load becomes unstable.

Brake the truck and activate the emergency button (20) by pushing when sliding load on or off the truck. If the truck has any malfunctions, follow chapter 10.

Practice maintenance work according to regular inspection. This truck is not designed to be water resistant. Use the truck under dry condition. Prolonged continuous operation might cause damage of the power pack. Stop operation if temperature of hydraulic oil is too high.

- When operating the electric stacker, the operator has to wear safety shoes.
- The truck is intended to be used for indoor applications with ambient temperatures between +5°C and + 40°C.
- The operating lighting must be minimum 50 Lux.
- To prevent unintended sudden movements when not operating the truck (i.e. from another person, etc.), press emergency switch (5) or press the X button of pin-code panel.

https://truckmanualshub.com/

4. COMMISSIONING, TRANSPORTING, DECOMMISSIONING

a. Commissioning

Table 2: Commissioning data

Type	PSE12BD/ 3600	PSE12ND/ 3600
Commissioning weight [kg]	725	695
Dimensions [mm]	3600	3600

After receiving our new stacker or for re-commissioning you have to do following before (firstly) operating the truck:

- Check if are all parts included and not damaged
- Make sure the tiller is assembled correctly (electrical socket is connected and fixed with two plastic clamps, circlip of the axle is installed)
- Check that battery is charged (follow chapter 8)
- Do the work according to the daily inspections as well as functional checks.

b. Lifting/ transportation

For transporting, remove the load, lower the forks to the lowest position and fix the truck safe with dedicated lifting gear according to the following figures.

Lifting

USE DEDICATED CRANE AND LIFTING EQUIPMENT
DO NOT STAND UNDER THE SWAYING LOAD
DO NOT WALK INTO THE HAZARDOUS AREA DURING LIFTING

Park the truck securely and lash the truck according to the points identified in Fig. 5. Lift the truck to its destination and place the truck securely before removing the lifting gear. The lashing points are according to the Fig. 5.

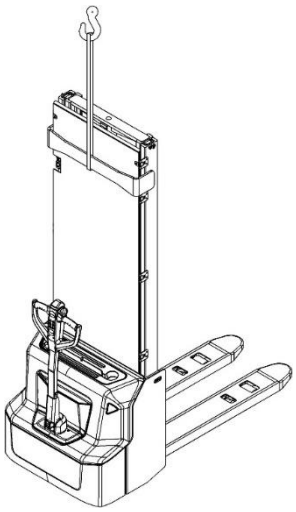

Fig. 5: Lifting with a crane

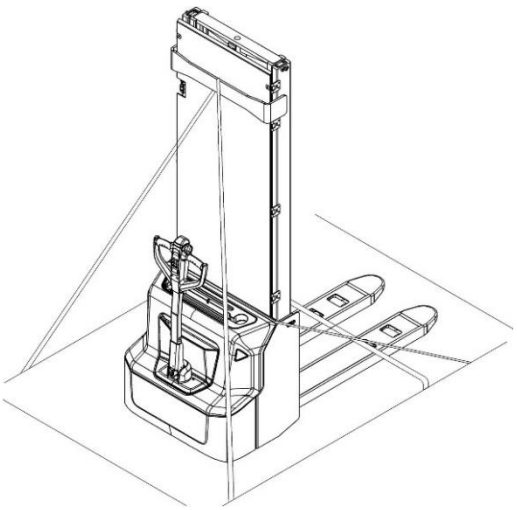

Fig. 6: Fixing points

https://truckmanualshub.com/

Transportation

DURING TRANSPORTATION ON A LORRY OR TRUCK ALWAYS FASTEN THE TRUCK SECURELY

Lower the forks and park the truck securely.
Fasten the truck according to Fig. 6 by fixing dedicated lashing belts to chassis, Fork carriage and mast, and fasten the other side at the transporting truck.

c. Decommissioning

For storage, remove the load, lower the truck to the lowest position, grease all in this handbook mentioned greasing points (regular inspection), and eventually protect the truck against corrosion and dust. Remove the batteries and jack the truck safely, so that there will be no flattening after storage.
For final decommissioning hand the truck to a designated recycling company. Oil, batteries and electric components must be recycled due to legal regulations.

https://truckmanualshub.com/

5. DAILY INSPECTION

This chapter describes pre-shift checks before putting the truck into operation.
Daily inspection is effective to find the malfunction or fault on this truck. Check the truck on the following points before operation.
Remove load from truck and lower the forks.

DO NOT USE THE TRUCK IF ANY MALFUNCTION IS FOUND.

- Check for scratches, deformation or cracks.
- Check if there is any oil leakage from the cylinder.
- Check the smooth movement of the wheels.
- Check the function of driving in both directions (section 6e).
- Check the functions of braking by activation of tiller arm sensor, reversing of driving buttons, release of driving buttons and of the safety (belly) button (section 6g).
- Check the function of driving with tiller in its vertical position (section 6e).
- Check the function of the emergency brake by activating the emergency button.
- Check the lifting and lowering functions by operating the buttons (section 6c and 6d).
- Check the function of steering by turning the tiller from one end position to the other one. The steering should be smooth, without jerks or abnormal sound.
- Check if all bolts and nuts are tightened firmly.
- Visual check if there are any broken electric wires.
- If supplied with a backrest extension, check it for damages and correct assembling.
- Check the presence of warning stickers and signs (section 2c)

If supplied with a backrest extension, check it for damages and correct assembling

https://truckmanualshub.com/

6. OPERATION INSTRUCTIONS

BEFORE OPERATING THIS TRUCK, PLEASE FOLLOW THE WARNINGS AND SAFETY INSTRUCTIONS (CHAPTER 3).

Make sure, that the load is palletized and stable and that the daily inspection is carried out.

PSE12BD

Pull out the emergency button (Fig.1, 20), type the password on pin-code panel and press √ button to start the truck.

Press the horn button (Fig.7, 27) to activate the audible warning signal.

PSE12ND

Pull out the emergency button (Fig.1, 20), Press the button switch, and a green light will appear on the switch (Fig.8), type the password on pin-code panel and press √ button to start the truck. Truck can also be activated with RFID access card.

Press the horn button (Fig.7, 27) to activate the audible warning signal.

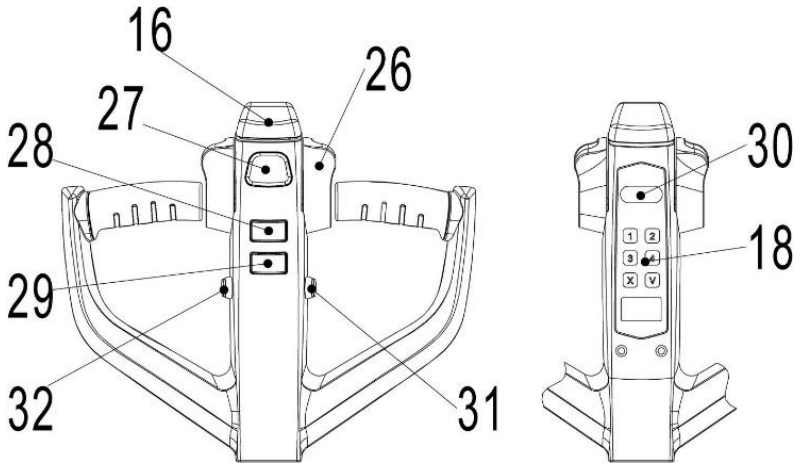

Fig.7: Tiller operating controls

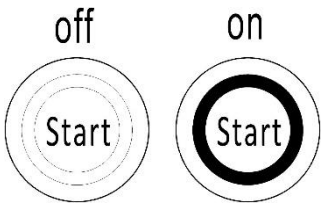

Fig.8: Button switch

a. Parking

DO NOT PARK THE TRUCK ON INCLINED SURFACES

The truck is equipped with an electromagnetic failsafe stopping and parking brake.

PSE12BD: Always lower the forks fully. Press the emergency switch (20).

PSE12ND: Always lower the forks fully. Press the button, green LED ring is off (Fig.8), and press the emergency switch (20).

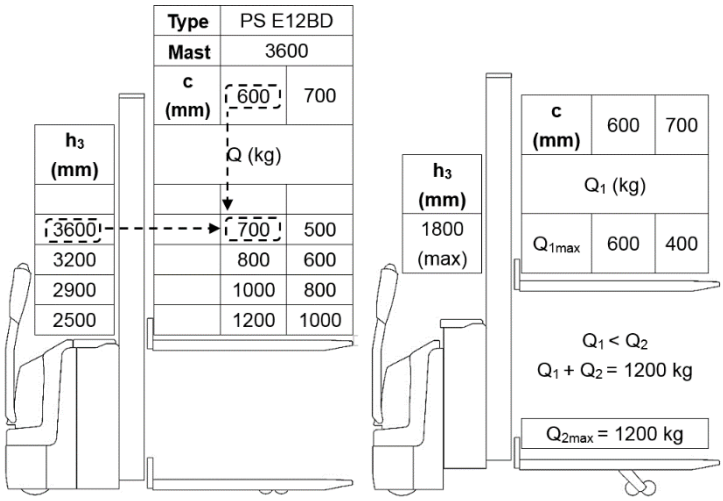

Fig. 9: Residual lift diagram

https://truckmanualshub.com/

b. Residual lift diagram

The residual lift diagram indicates the maximum capacity Q [kg] for a given load centre c [mm] and the corresponding lift height H [mm] for the truck with horizontal load.
The white markings on the mast indicate if the specific lifting limits reached. For instance (Fig.9. left) with a load centre of gravity distance c of 600 mm and a maximum lift height H of 3600 mm, the max. Capacity Q is 700 kg. Fig. 9. right shows when the truck is used as pallet truck and stacker at the same time, the load capacity of fork and pallet is both 600kg, so the total load capacity is 1200kg. When the fork lift height is within 120mm, the maximum stack height is 1800mm.

c. Lifting

DO NOT OVERLOAD THE TRUCK! THE MAXIMUM CAPACITY IS 1200kg.
LIFT ONLY CAPACITIES ACCORDING TO THE RESIDUAL LIFT DIAGRAM.

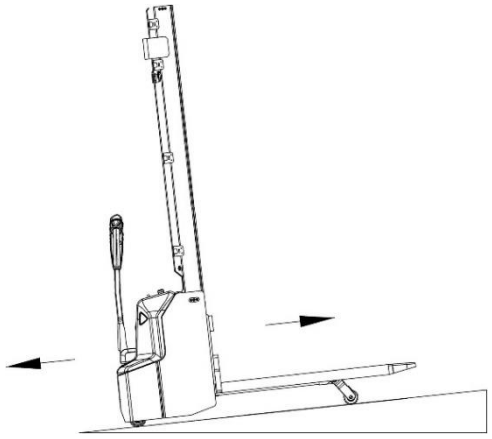

Fig.10: Load facing uphill

Travel with the lowered forks fully underneath the pallet and press the lifting button (Fig. 7, 31) until you reached the desired lifting height.
This truck can be used as pallet truck and stacker.
When press the fork lift button (Fig. 7, 31), the fork and pallet lift together, the maximum lift height is 120 mm, maximum load is 1200 kg.
When the fork lifts to the height within 120 mm, press the pallet lift button (Fig. 7, 28), the pallet lifts for stacking, the maximum stack height is 1800 mm (the truck is used as pallet truck and stacker at the same time).
When stack height is more than 1800 mm, the fork can't lift (the truck is only used as stacker).

d. Lowering

If the forks are in the racking, firstly travel out of the racking carefully with or without the pallet. By travelling out of the racking, take care that the forks are not touching the racking.
Press the lowering button (Fig. 7, 29) carefully.
Lower the load until the forks are clear of the pallet, then drive the truck carefully out of the load unit.

https://truckmanualshub.com/

e. Travelling

TRAVEL ON INCLINES ONLY WITH THE LOAD FACING UPHILL.
DO NOT TRAVEL ON INCLINES MORE THAN SPECIFIED WITH THE TECHNICAL DATA.
TRAVELLING IS ONLY ALLOWED IF THE FORKS ARE LOWERED DOWN TO THE LIFTING POINT (<300MM).

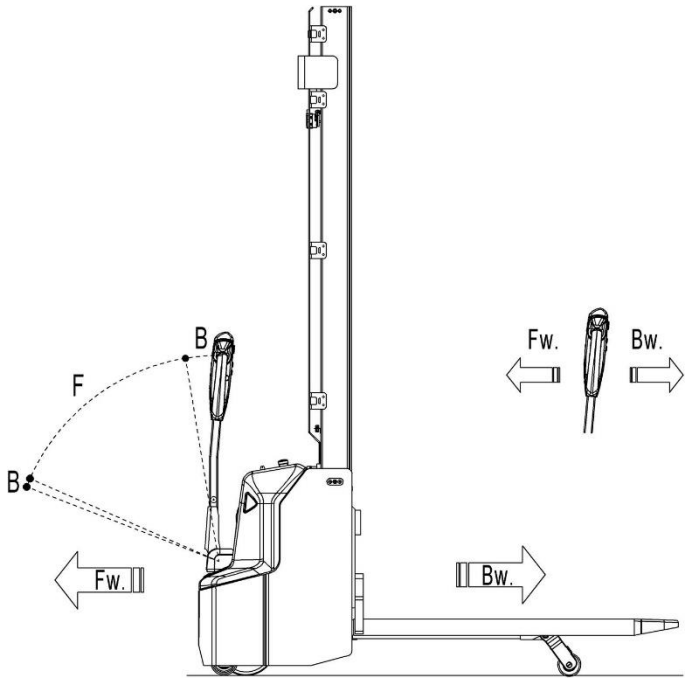

Fig.11: Operating direction

After starting the truck by activation from Pin-code panel carefully move the tiller to the operating zone (‘F’, fig.11).
Turn the accelerator button to the desired direction forward ‘Fw.’ Or backwards ‘Bw.’(fig. 11).
Control the travelling speed by moving the accelerator button (Fig.7, 26) carefully until you reached the desired speed. If you move the accelerator button back to the neutral position, the controller decelerates the truck until the truck stops. If the truck stopped, the parking brake will be engaged.
Drive carefully the truck to the destination. Watch the route conditions and adjust the travelling speed with the accelerator- button.
Press turtle button (Fig.7, 30) to enter into slow speed mode, travel slowly by moving the accelerator button (Fig.7, 26) , press turtle button again to return back to regular mode.

Press turtle button and hold for 2 seconds to activate driving function with tiller in its vertical position when operating in confined areas. The driving function is active only when turtle button is pressed (the speed is reduced); the release of turtle button will cause immediate stop. The activation of accelerator button in time gap shorter than two seconds after the turtle button is pressed will not activate the driving function, the activation cycle has to be repeated from the beginning. Accelerator button should remain in neutral position till two seconds passed.

https://truckmanualshub.com/

f. Steering

You steer the truck by moving the tiller to the left or right side. When travel in front direction (opposite to direction of forks) the turning of tiller bar to right side will cause the truck turning clockwise.

g. Braking

PLEASE CHECK THE BRAKING DISTANCE WITH TRUCK BEFORE OPERATION THE BRAKING PERFORMANCE DEPENDS ON THE TRACK CONDITIONS AND THE LOAD CONDITIONS OF THE TRUCK

The braking function can be activated on several ways:

- By moving the accelerator button (26) back to the initial ‘0’ position or by releasing the button, the regenerative braking is activated. The truck brakes until it stops.
- By moving the accelerator button (26) from one driving direction directly to the opposite direction, the truck brakes regenerative until it starts traveling into the opposite direction.
- The truck brakes, if the tiller is moved up or down to the braking zones (‘B’). If the tiller is released, the tiller moves automatically up to the upper baking zone (‘B’).The truck brakes until it stops.
- The safety (belly) button (16) prevents the operator from being crushed. If this button is activated, the truck decelerates and/ or starts traveling into the backwards direction (‘Bw.’) for a short distance and stops. Please consider, that this button also operates, if the truckis not traveling and the tiller is in the operating zone.

h. Malfunctions

If there are any malfunctions or the truck is inoperative, please stop using the truck and activate the emergency button (20) by pushing it. If possible, park the truck on a safe area and press the X button of pin-code panel. Inform immediately the manager and, or call your service. If necessary, move the truck out of the operating area by using dedicated lifting equipment. Do not tow the truck.

i. Emergency

In emergencies or in the event of tip over (or off dock), keep safe distance immediately. If possible push the emergency button (20). All electrical functions will be stopped.

https://truckmanualshub.com/

7. PIN-CODE PANEL

PSE12BD is equipped optional with a pin-code panel.
PSE12ND is equipped standard with a pin-code panel and three ID cards.

a. Introduction

Pin-code panel is an electronic system which is similar with an electronic alarm system. Truck will not able to operate before typing a correct password, the main function is to prevent unauthorized operation.

b. Main parameters

Working voltage：12V-60V
Ambient temperature：-40℃ to +90℃
IP grade：IP65

c. Main functions

For PSE12BD,it can be operated only when correct password is typed.
For PSE12ND, it can be operated only when correct password is typed or valid ID card is used.

There are two passwords of pin-code panel, one is the default user password 1234, and you can use it immediately. The other one is the administrator password 3232; with this you can set a new user password according to the following steps:

- Type “3232”, click “√”.
- Type previous user password, click “√”.
- Type new password, and click “√”, previous password will be replaced.

In case you need to reset the password, please follow the procedure under:

- Type “123”, click “√”.
- Type “123” again, click “√”. Password will be “1234”.

In case you need to add additional ID card (only for PS E12N), please follow the procedure under:

- Type “3434”, click “√”.
- Swipe the new ID card within 5 seconds.
- This pin-code panel supports Max. five cards.

https://truckmanualshub.com/

8. BATTERY CHARGING AND REPLACEMENT

- Only qualified personnel are allowed to service or charge the batteries. The instructions of this handbook must be observed.
- PSE12BD is lead acid battery, PSE12ND is lithium battery
- Recycling of batteries undergoes national regulations. Please follow these regulations.
- By handling batteries, open fire is prohibited!
- In the area of battery charging neither burning materials nor burning liquids are allowed. Smoking is prohibited and the area must be ventilated.
- Park the truck securely before starting charging or installing/changing the batteries
- Before finishing the maintenance work, make sure, that all cables are connected correctly and that there are no disturbing towards other components of the truck.

PSE12BD is equipped with the following lead-acid battery:
2x12V / 85Ah, 2x27kg; option: 2x12V / 106Ah，2x34kg
PSE12ND is equipped with the following lithium battery:
24V / 60Ah, 19kg

IT IS ONLY ALLOWED TO USE LEAD ACID BATTERY FOR PSE12BD. IT IS ONLY ALLOWED TO USE LITHIUM BATTERY FOR PSE12ND.
PLEASE CONSIDER THE MAXIMUM OPERATING TEMPERATURE OF THE BATTERIES.

a. Safety Instructions (lithium battery)

Failure to follow the below requirements may cause damage to your property, cause injuries or death.

Measures to prevent ignition

- It is forbidden to work at temperatures over 60 ℃.
- It is forbidden to place it beside heat sources, such as stoves, fireplaces, etc.
- Direct sunlight must be avoided.
- It is forbidden to place batteries near inflammable and explosive substances.

Measures to prevent explosion

- Do not hit the battery, no impacts are allowed.
- Exclude penetration of objects through battery case or damages to battery case
- DO not throw products into the fire or water.

Measures to prevent electric leakage

- Do not disassemble.
- Do not contact by wet hands.
- Do not expose it to moisture or liquids.
- Do not place batteries in a place of easy access by children or animals.

Measures to preventing damage to battery systems

- It is forbidden to contact liquids or corrosive chemicals.
- Do not expose batteries to high temperature and/or high pressure.
- No trampling, disassembly or smashing.
- Do not attempt charging from discharge terminals and discharging from charging terminals.

https://truckmanualshub.com/

Installation environment

In order to ensure the best operating performance, the battery need to be kept under normal working conditions: between 0 and 40 degrees Celsius and normal humidity. Avoid excessive temperature difference on both sides of the battery (more than 5℃)

Emergency management

Below are examples of several ways to deal with possible emergencies:

- In case of Smoke or Ignition: stop to use equipment immediately, take appropriate actions according to working instructions and stay away from the scene.
- In case battery is immersed in water: stop to use equipment immediately, take appropriate actions according to working instructions and stay away from the scene.
- Products produce smell: stop to use equipment immediately, remove the battery and take appropriate actions according to working instructions and stay away from the scene. Avoid contact with any leaking liquids or gases out of the battery (in case of contact clean immediately).

Necessary safety equipment

- Self-contained breathing apparatus and personal protective equipment.
- Sevofluoropropane fire extinguishing system.

b. Matters requiring attention (lithium battery)

- The charging function of batteries may be blocked by Battery Management System if temperature of cells inside the battery case is lower than +5℃. Make sure the own temperature of battery is above this value and the temperature of the battery is even.
- Batteries are forbidden to charge at low temperatures, but they can be used in occasional low temperature environment (please refer to normal working conditions allowed for the truck), but their efficient capacity will be lower, which is a normal phenomenon.

Ambient temperature	Remaining discharge capacity of battery pack
25℃	100%
0℃	90%
-20℃	70%
-30℃	40%

Note: Although the battery can be discharged at very low temperature, it is easy to generate condensate during the charging process, which will damage the internal electronic devices of the battery and create unpredictable hidden dangers. Batteries cannot be charged until they are slowly warmed up to minimum allowed temperature for activation of charging function (may take up to 4 hours in normal temperature conditions). Forced warming up (e.g., using of heaters, vents etc.) is forbidden.

The dependence of actual capacity from environmental temperature is shown for reference only and can not be used as a commitment/allowance for low temperature operation, please refer to the Chapter 1 for correct application conditions

- The battery protection level is IP40, so please do not wash the battery directly with water.

https://truckmanualshub.com/

- When the lithium battery pack is not in use for a long time store it with 30-50% level of charge to extend its life-time.

c. Replacement

Park the truck securely and press emergency switch (20). Remove four screws firstly, take out the main cover. Secondly, remove the screw on negative pole of the battery and then remove the screw on positive pole. Thirdly, unloosen and remove the battery fixing frame.

For PSE12BD, remove the second battery on bottom following the same way of disassembly of the first battery.

The installation is in the reverse order.

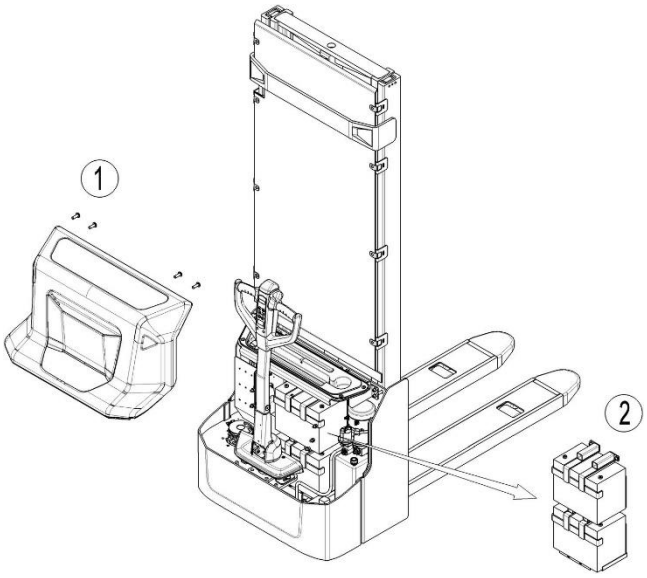

Fig. 12: Battery replacement

d. Battery Indicator

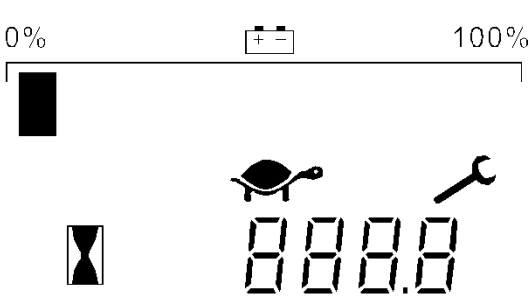

Battery discharged

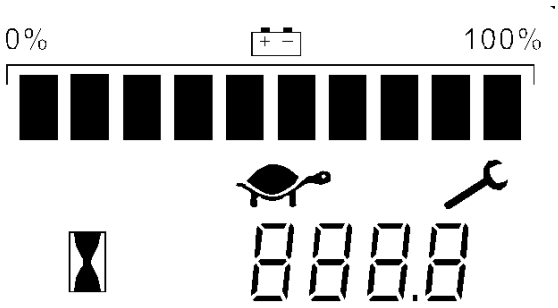

Battery charged

Fig. 13: Battery discharge indicator

Display

An alpha-numeric liquid crystal display is fitted in the centre of the unit that shows the hours worked. The display is backlight (the backlight is normally lighted).

Alarms

The same display can also indicate the alarm state, showing a code corresponding to the type of alarm.

Battery State of charge

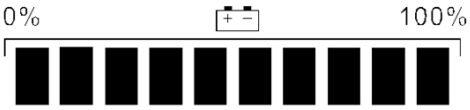

The battery's state of charge indication is integrated in the LCD display; it is shown by ten notches. Each notch represent the 10% of the battery charge. As the battery becomes discharged, the notches turn off progressively, one after the other, in proportion to the value of the residual battery charge. This value, sent to the display by the controller via CAN-BUS.

Turtle Symbol:

https://truckmanualshub.com/

It is normally off, when it appears (fixed) it shows activation of the “soft” mode of the truck, in which maximum speed and acceleration are reduced.

Monkey Wrench Symbol:

It is normally off, when it appears (fixed) it shows the request of programmed maintenance or the alarm state. In this case the relative code will be displayed. The information supplied by the MDI-CAN can be extremely useful. Failures can be quickly identified by the operator or service technician thereby finding the fastest solution to the problem.

Hourglass Symbol:

It blinks when the hour meter is working.

e. Charging

- Before using the charger, please fully understand the instructions of the charger instructions.
- Always follow these instructions.
- The room, where you are charging must be ventilated.
- The exactly charge status can be only checked from the discharge indicator. To control the status, the charging must be interrupted and the truck must be started.

Park the truck at a dedicated secured area with a dedicated power supply.
Lower the forks and remove the load;
Switch the truck off, the charger starts charging the battery if the charger plug (21) is connected to the main power supply.
When charging is finished, disconnect the plug (21) from the power supply and place it in the designated area.

Table 3: LED-Status

LED- signal	Function
Red	Battery discharged
Orange	Charging
Green	Fully charged

https://truckmanualshub.com/

9. REGULAR MAINTENANCE

- Only qualified and trained personnel are allowed to do maintenance on this truck.
- Before maintaining, remove the load and lower the forks to the lowest position.
- If you need to lift the truck, follow chapter 4 b by using designated lashing or jacking equipment. Before working, put safety devices (for instance designated lift jacks, wedges or wooden blocks) under the truck to protect against accidental lowering, movement or slipping.
- Please pay attention by maintain the tiller arm. The gas pressure springs are pre-loaded by compression. Carelessness can cause injury.
- Use approved and from your dealer released original spare parts.
- Please consider that oil leakage of hydraulic fluid can cause failures and accidents.
- It is allowed to adjust the pressure valve only from trained service technicians.

Check the items emphasized in maintenance checklist.

a. Maintenance checklist

Table 4: Maintenance checklist

		Interval (Month)			
		1	3	6	12
	Hydraulic				
1	Check the hydraulic cylinder, piston for damage noise and leakage		•		
2	Check the hydraulic joints and hose for damage and leakage		•		
3	Inspect the hydraulic oil level, refill if necessary		•		
4	Refill the hydraulic oil (12 month or 1500 working hours)				•
5	Check and adjust the function of the pressure valve (1200kg +0/ +10%)				•
	Mechanical system				
6	Inspect the forks for deformation and cracks		•		
7	Check the chassis for deformation and cracks		•		
8	Check if all screws are fixed		•		
9	Check mast and chain for corrosion, deformation or damages, replace if necessary	•			
10	Check the gearbox for noise and leakage		•		
11	Check the wheels for deformation and damages, replace if necessary		•		
12	Lubricate the steering bearing				•
13	Inspect and lubricate the pivot points		•		
14	Lubricate the grease nipples	•			
15	Replace the guarding and/or protective screen if it is damaged	•			
	Electric system				
16	Inspect the electric wiring for damage		•		
17	Check the electric connections and terminals		•		
18	Test the Emergency switch function		•		
19	Check the electric drive motor for noise and damages		•		
20	Test the display		•		

https://truckmanualshub.com/

21	Check if correct fuses are used, if necessary replace.		•		
22	Test the audio warning signal		•		
23	Check the contactors		•		
24	Check the frame leakage (insulation test)		•		
25	Check function and wear of the accelerator		•		
26	Check the electrical system of the drive motor		•		

b. Lubricating points

Lubricate the marked points according to the maintenance checklist. The required grease specification is: DIN 51825, standard grease.

1 Load roller bearing
2 Mast
3 Chain
4 Steering bearing
5 Gear box
6 Steering roller bearing

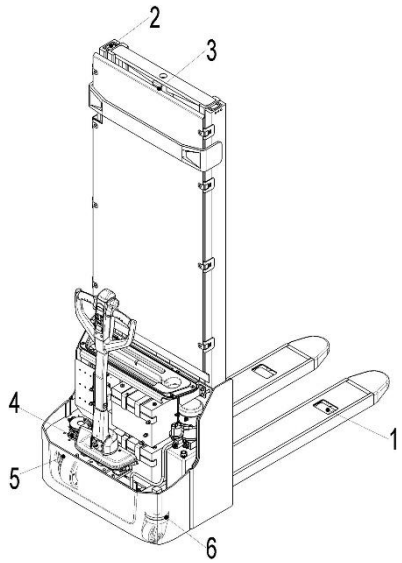

Fig. 14: Lubricating points

c. Check and refill hydraulic oil

It is recommended to use hydraulic oil in connection with average temperature:

Environment temperature	–5℃~25℃	>25℃
Type	HVLP 32，DIN 51524	HLP 46，DIN 51524
Viscosity	28.8-35.2	41.4 - 47
Amount	5L (depends on specific model)	

Waste material like oil, used batteries or other must be probably disposed and recycled according to the national regulations and if necessary brought to a recycling company.
The oil level in the oil tank should be between min and max marks with fully lowered forks.
If necessary add oil at the filling point.

https://truckmanualshub.com/

d. Checking electrical fuses

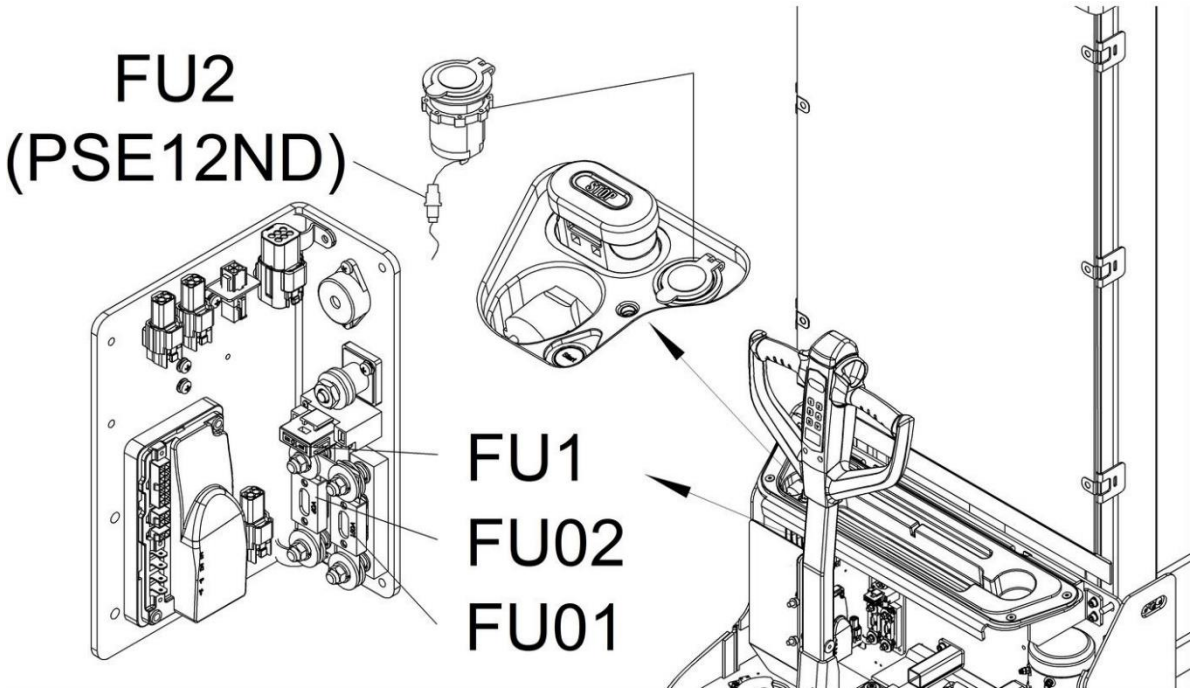

Fig. 15: Location of fuses

Table 5: Size of the fuses

	Rate
FU01	150A
FU02	60A
FU1	10A
FU2 (PSE12ND)	1.5A

e. Removing, reattaching guarding

DO NOT USE THIS TRUCK, IF THE GUARDING IS DAMAGED OR NOT CORRECTLY ASSEMBLED!

If the guarding needs to be removed - de-attach holding clamps carefully. For reattaching place the screen to its correct position and place holding clamps back to their original position. If you need to replace parts, please call your service partner. Please make sure that the screen is fixed correctly and that the fixing elements are not damaged.

https://truckmanualshub.com/

10. TROUBLE SHOOTING

- If the truck has malfunctions follow the instructions, mentioned in chapter 6.

Table 6: Trouble shooting

TROUBLE	CAUSE	REPAIR
Load can't be lifted	Load weight too high	Lift only the max. capacity, mentioned on the ID-plate
	Battery discharged	Charge the battery
	Lifting fuse faulty	Check and eventually replace the lifting fuse
	Hydraulic oil level too low	Check and eventually refill hydraulic oil
	Oil leakage	Repair the hoses and/or the sealing of the cylinder
	Lifting stops at ~1800mm	Move the protective arms into the downside position
	Lifting stops at ~1800mm	Check the sensor for the protective arm
Oil leakage from air breathing	Excessive quantity of oil.	Reduce oil quantity.
Stacker not starts operating	Battery is charging	Charge the battery completely and then remove the main power plug form the electrical socket.
	Battery not connected	Connect the battery correctly
	The fuse is faulty	Check and eventually replace fuses
	Battery discharged	Charge the battery
	Combined emergency switch is activated	De-activate the combined emergency switch by insert and pull the knob.
	Tiller in the operating zone	Move the tiller firstly to the braking zone.
	Protective arms in the upright position, platform folded upright	Move the protective arms into the downside position
	Foldable platform or protective arms in one of the allowed positions	Check the proximate sensors for the arms and platform
Only travelling in one direction	The accelerator and the connections are damaged.	Check the accelerator and the connections.
The stacker only travels very slowly	The battery is discharged.	Check the battery status at the discharge indicator
	The electromagnetic brake is engaged.	Check the electromagnetic brake
	The relating tiller cables are disconnected or damaged	Check the tiller cables and connections.
	Defective height sensor for reduced speed at ~300mm height	Check the sensor

https://truckmanualshub.com/

	Electric system overheated	Stop using and cool down the truck
	Defective heat sensor	Check and if necessary replace the heat sensor
The stacker starts up suddenly	The controller is damaged.	Replace the controller.
	The accelerator not moves back to its neutral position.	Repair or replace the accelerator.

If the truck has malfunctions and can’t be operated out of the working zone, jack the truck up and go with a load handler under the truck and safe the truck securely. Then move the truck out of the aisle.

https://truckmanualshub.com/

11. WIRING/ CIRCUIT DIAGRAM

a. Electrical circuit diagram

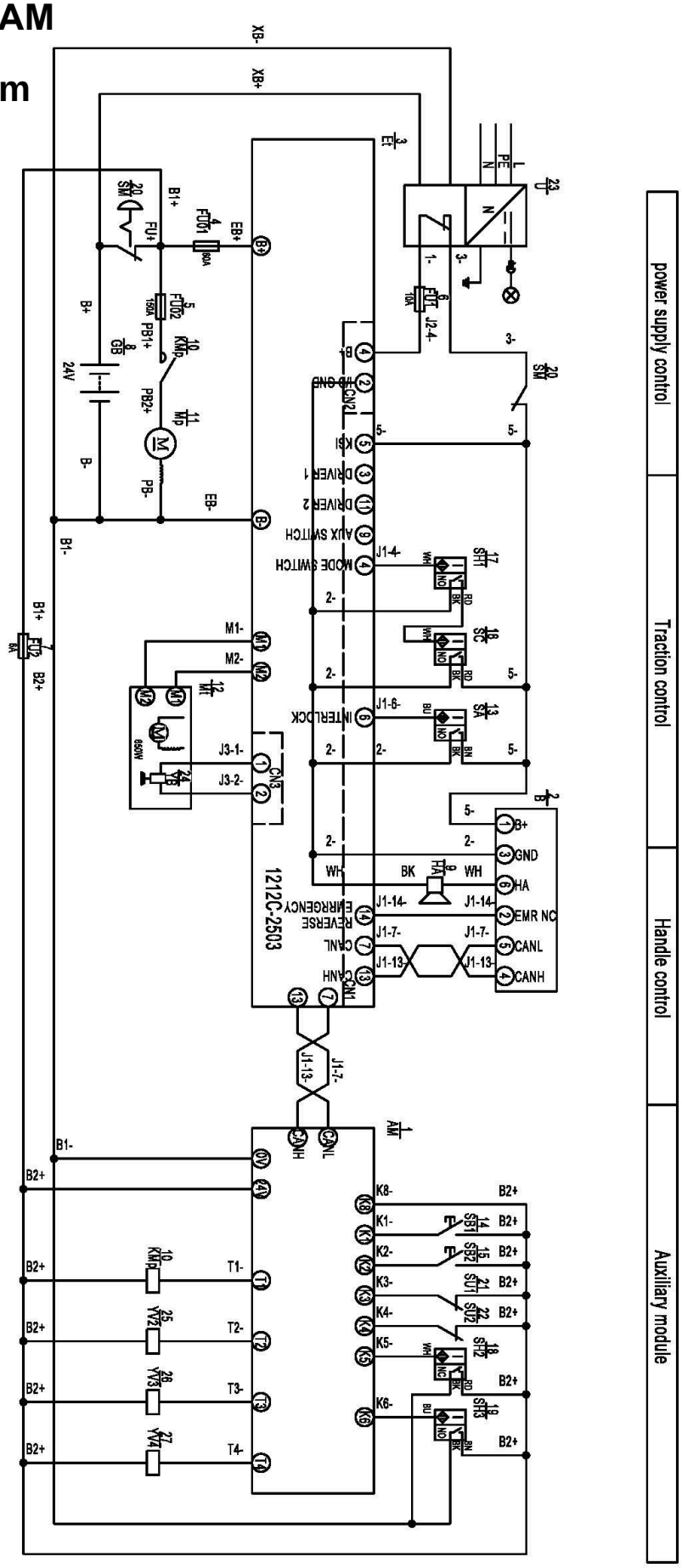

Fig. 16: Electrical diagram manual steering PSE12BD

https://truckmanualshub.com/

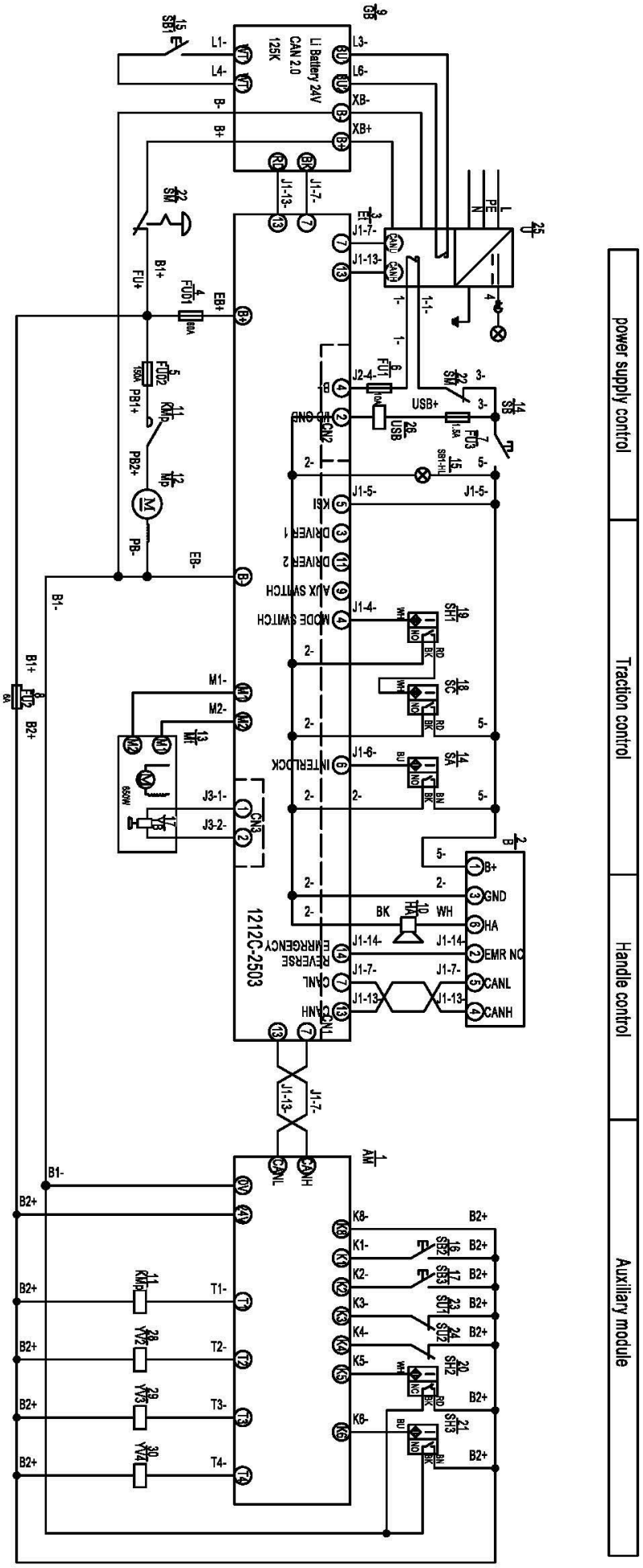

FU1 : 10 A
FU2 : 6 A
FU3 : 1.5 A
FU01 : 150 A
FU02 : 60 A

Fig. 17: Electrical diagram manual steering PSE12ND

https://truckmanualshub.com/

Table 7: Description of electrical diagram

Code	Item	Code	Item	Code	Item
AM	Auxiliary module	KMp	Contactor	SH3	Height detection switch 3
B	Tiller	Mp	Pump motor	SM	DC power switch
Et	Controller	Mt	Driving motor	SU1	Fork height limit micro switch 1
FU01	Fuse 150A	SA	Inter-lock switch	SU2	Mast height limit micro switch 2
FU02	Fuse 60A	SB1	Button switch 1	U	Charger
FU1	Fuse 10A	SB2	Button switch 2	USB	Charger
FU2	Fuse 6A	SB3	Button switch 3	YB	Brake
FU3	Fuse 1.5A	SC	Sensor of speed reduction on curve	YV2	Lowering valve
GB	battery	SH1	Height detection switch 1	YV3	Fork valve
HA	Horn	SH2	Height detection switch 2	YV4	Mast valve

b. Hydraulic circuit

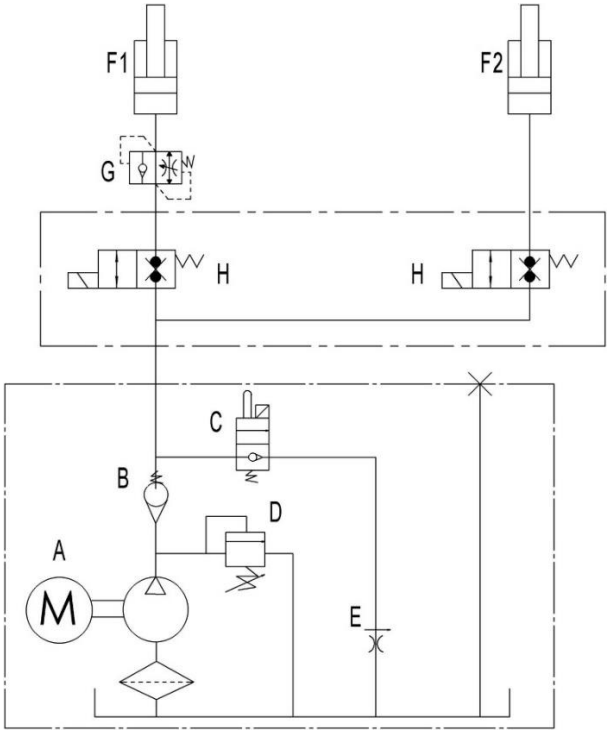

Fig. 18: Hydraulic circuit

Table 8: Description of hydraulic circuit

Code	Item	Code	Item
A	Hydraulic power unit	F1	Cylinder (Mast)
B	Check valve	F2	Cylinder (Chassis)
C	Electromagnetic valve	G	Safety valve
D	Overflow valve	H	Magnet valve
E	Throttle valve		

https://truckmanualshub.com/

12. DECLARATION OF CONFORMITY (valid, if sold within the EU)

[GB] CE Declaration of Conformity

The signatory hereby declares that the specified machine conforms to the EU Directive 2006/42/EC (Machine Directive) and 2014/30/EU (Electro-Magnetic Compatibility, EMC) including their amendments as translated into national legislation of the member countries. The signatory is individually authorized to compile the technical documents.

[D] EG-KONFORMITÄTSERKLÄRUNG

Der Unterzeichner bescheinigt hiermit, dass die im Einzelnen bezeichnete Maschine den Europäischen Richtlinien 2006/42/EG (Maschinenrichtlinie) und 2014/30/EU (Elektromagnetische Verträglichkeit - EMV) einschließlich deren Änderungen sowie dem entsprechenden Rechtserlaß zur Umsetzung der Richtlinien in nationales Recht entspricht. Der Unterzeichner ist bevollmächtigt, die technischen Unterlagen zusammenzustellen.

[E] DECLARACIóN DE CONFORMIDAD CE

El signatario certifico por medio de la presente que la máquina especificada cumple con las Normas Europeas 2006/42/CE (Normativa para maquinarias) y 2014/30/EU (Compatibilidad electromagnética), incluyendo sus respectivas odificaciones, así como con el decreto-ley para la adaptación de las normas al derecho nacional. El signatario dispone de una autorización individual que le permitecompilar la documentacióntécnica.

[F] DECLARATION DE CONFORMITE CE

Par la présente déclaration, les soussignés certifient que le machines spécifié ci-dessus est conforme à la loi et aux directives européennes 2006/42/CE (directive sur les machines) et 2014/30/EU (compatibilité électromagnétique - CEM), y compris aux modifications qui y sont apportées et à l'arrêté autorisant sa transposition en droit national. Chaquesignataireesthabilité à établirindividuellement la documentation technique.

[NL] EG-CONFORMITEITSVERKLARING

Ondergetekenden verklaren hierbij dat - volgens de nationale wetgeving van de Lidstaten - de hierboven vermelde opgegeven machina beantwoordt aan de bepalingen qua veiligheid bij machines (EG richtlijn 2006/42/EC) en electro-magnetische compatibilteit (EG richtlijn 2014/30/EU). Ondergetekenden zijn ieder individueel gemachtigd het technisch dossier samen te stellen.

[P] DECLARAÇÃO DE CONFORMIDADE CE

Pela presente, os signatários certificam que o máquina especificado está conforme às Directivas Europeias 2006/42/CE („Máquinas") e 2014/30/EU („Inocuidade Electromagnética - IEM"), incluindo as alterações das mesmas e o respectivo decreto-lei para a transposição em lei nacional. Cada um dos signatáriosestáautorizado a proceder à elaboração da documentaçãotécnica.

[I] DICHIARAZIONE DI CONFORMITÀ CE

I sottoscrittidichiaranocheilveicolo per trasportiinterniamacchinaspecificatosoddisfa le DirettiveEuropee 2006/42/EC (DirettivaMacchine) e 2014/30/EU (Compatibilitàelettromagnetica - EMV) comprese le relative modifiche, come pure ilrispettivodecretolegislativo per la conversionedelledirettive in dirittonazionale. I sottoscrittisonosingolarmenteautorizzatiallacreazionedelladocumentazionetecnica.

[BG] ЕВРОПЕЙСКА ОБЩНОСТ - ДЕКЛАРАЦИЯ ЗА СЪОТВЕТСТВИЕ

Подписаните удостоверяват с настоящето, че подробнооописанотомашина средствоотговаря на европейския норматив 2006/42/EG (норматив за машини) и на2014/30/EU (електро-магнетична съвместимост), включително с техните промени, както и на съответния указ за прилагане на нормативите в националното право. Подписаните при това са упълномощении поотделно да съставят техническата документация.

[CZ] EG - PROHLÁŠENÍ OSHODĚ

Nížepodepsaný tímtopotvrzuje, žepodrobný popisuvedené strojeodpovídáEvropskýmsměrnicím 2006/42/EC (směrniceprostroje) a 2014/30/EU (elektromagnetická interference - EMV) včetně jejichpozdějších úprav, jakož ipříslušnýmprávnímvýnosůmprouplatnění příslušné směrnicevrámcinárodníhopráva. Každý zpodepsanýchjsoujednotlivě zplnomocněnikvytvoření technickýchpodkladů.

[DK] EF-OVERENSSTEMMELSESERKLÆRING

Undertegnede attesterer hermed, at det specificerede maskine stemmer overens med de Europæiske Direktiver 2006/42/EU (maskindirektiv) og 2014/30/EU (elektromagnetisk kompatibilitet - EMC) samt med den modsvarende lovvedtagelse til implementering af direktiver i den nationale lovgivning. De undertegnede er hver for sig beføjet til at sammenstille de tekniske dokumenter.

[EST] EL vastavusavaldus

Allakirjutanud tõendavad käesolevaga, et üksikasjaliseltkirjeldatudtäpsustatud masin vastab Euroopa direktiividele 2006/42/EÜ (Direktiiv masinate kohta) ja 2014/30/EU (Elektromagnetiline sobivus - EMS) kaasa arvatud nende muudatused ja nendele vastavatele õigusmäärustele direktiivide muutmiseks siseriiklikuks õiguseks. Iga allakirjutanu üksikult on volitatud koostama tehnilist dokumentatsiooni.

[FIN] EU-YHDENMUKAISUUSSELOSTUS

Allekirjoittaneet todistavat täten, että kukin erikseen mainittu omalla voimanlähteellä varustettutehdaskone vastaa EU-direktiivien 2006/42/EC (koneenrakennusdirektiivi) ja 2014/30/EU (sähkömagneettinen yhteensopivuus – EMC) määräyksiä sekä niiden muutoksia ja niiden kansalliseen lainsäädäntöön soveltamista koskevaa oikeussääntöä. Jokaisella allekirjoittaneista on oikeus itsenäisesti laatia asiaankuuluvia teknisiä asiakirjoja.

[GR] ΔΗΛΩΣΗΣΥΜΜΟΡΦΩΣΗΣΕΟΚ

ΟιυπογράφοντεςβεβαιώνουνδιάτηςπαρούσηςότιτοσυγκεκριμένομηχάνημασυμμορφώνεταιπροςτηνΚοινοτικήΟδηγία 2006/42/ΕΚ («Μηχανήματα») και 2014/30/ΕU (ΗλεκτρομαγνητικήςΣυμβατότητας, ΗΜΣ), καθώςκαιοιτροποποιήσειςτους, όπωςμεταφράστηκεστηνεθνικήνομοθεσίατωνχωρώνμελών. Οιυπογράφοντεςείναισεκάθεπερίπτωσηεξουσιοδοτημένοιατομικάνακαταρτίσουντατεχνικάέγγραφα.

[H] EU KONFORMITÁSI NYILATKOZAT

Alulírottak ezennel igazolják, hogy a részletesen leírt a megadott gép megfelel a 2006/42/EC (Gép-Irányelv) és a 2014/30/EU (Elektromágneses összeférhetőség - EMV) Európai Irányelveknek, beleértve azok módosításait, valamint az irányelvek nemzeti jogba történő átültetésére irányuló megfelelő jogi rendelkezést. Továbbá az alulírottak mindegyike rendelkezik meghatalmazással arra nézve, hogy összeállíthatja a műszaki dokumentációt.

[LT] ES atitikimo deklaracija

Žemiau pasirašę asmenys patvirtina,kad atskirai aprašytasnurodyta mašina atitinka Europos Sąjungos direktyvas 2006/42/EB (Mašinų direktyva) ir 2014/30/EU (Elektromagnetinis suderinamumas – EMS) įskaitant jų pakeitimus, o taip pat ir atitinkamą teisės aktą dėl direktyvų įgyvendinimo nacionalinėje teisėje. Kiekvienas iš pasirašiusių asmenų turi teisę ruošti techninę dokumentaciją.

[LV] ES atbilstības deklarācija

Ar zemāk redzamajiem parakstiem tiek apliecināts, kanorādīts mašīna atbilstEiropas Savienības normatīvām 2006/42/EG (Mašīnu normatīvas) un 2014/30/EU (Elektromagnētiskā atbilstība – EMV), ieskaitot to izmaiņas, kā arī atbilstošos tiesiskos rīkojumus normatīvu pielāgošanai

https://truckmanualshub.com/

nacionālajai likumdošanai. Parakstu īpašnieki ir atsevišķi pilnvaroti sastādīt tehniskās dokumentācijas.

[N] EU-KONFORMITETSERKLÆRING

Undertegnede bekrefter hermed at de enkelte betegnede maskin med kraftdrift tilsvarer de europeiske retningslinjene 2006/42/EC (maskinretningslinje) og 2014/30/EU (elektromagnetisk fordraglighet - EMV) inklusiv disses endringer og den tilsvarende rettsforordning til omsetning av nasjonal rett. Hver undertegnede er fullmektig til å sette sammen de tekniske dokumentene.

[PL] DEKLARACJA ZGODNOŚCI WE

Niżej podpisani deklarują, że poniżej opisana maszyna spełnia wymagania określone w dyrektywach Europejskich 2006/42/EC (Dyrektywa Maszynowa) i 2014/30/EU (Kompatybilności elektromagnetycznej - EMC) wraz z ich późniejszymi zmianami oraz odpowiednimi rozporządzeniami mającymi na celu przeniesienie tych dyrektyw do prawa krajów członkowskich. Sygnatariusz jest indywidualnieupoważniony do zestawianiadokumentacjitechnicznej.

[RO] DECLARAŢIE DE CONFORMITATE CE

Subsemnaţiiadeverescprinprezentacăvehiculul despecificatmaşinădescris individual corespundedirectiveloreuropene 2006/42/CE (Directivaprivindmaşinile) şi 2014/30/EU (Compatibilitateaelectromagnetică - CEM) inclusivmodificărilorlor precum şiactuluilegislativcorespunzătorprentrutranspunereadirectivelorîndreptnaţional. Subsemnaţii sunt fiecareînparteîmputerniciţisăîntocmeascădocumentaţiatehnică.

[RUS] Декларация соответствия стандартам ЕС

Настоящим лица, подписавшие документ, удостоверяют, что машина с указанной спецификацией соответствует европейским стандартам 2006/42/EG (Транспортная директива) и 2014/30/EU (Электромагнитная совместимость - EMC), включая изменения в них, а также соответствующим национальным стандартам и нормам. Каждое по отдельности лицо, подписавшее документ, имеет полномочия для составления технической документации.

[S] EG-KONFORMITETSFÖRKLARING

Undertecknarna intygar härmed att det i detalj betecknade maskin uppfyller de Europeiska direktiven 2006/42/EG (Maskindirektiv) och 2014/30/EU (Elektromagnetisk tålighet - EMV), inklusive ändringarna i detta och den motsvarande rättsförordningen för att omsätta direktiven i nationell rätt. Undertecknarna har var för sig fullmakt att sammanställa den tekniska dokumentationen.

[SK] vyhlásenie o zhode

Dolu podpísaní týmto potvrdzujeme, že podrobný popis uvedené stroje Zodpovedá Európskym smerniciam 2006/42/EC (ernica pre stroje) a 2014/30/EU (elektromagnetická tolerancia – EMV) vrátane jeho neskorších úprav, rovnako zodpovedá aj príslušným právnym nariadeniam na uplatnenie smerníc v rámci národného práva. Každý z podpísaných je jednotlivo splnomocnený na vytvorenie technických podkladov.

[SLO] EU IZJAVA O SKLADNOSTI

Podpisani s tem potrjujemo, da posamično označeno določeno stroj vozilo odgovarja Evropski direktivi 2006/42/EC (Direktiva o strojih) in 2014/30/EU (Elektromagnetna skladnost - EMV) vključno z njihovimi spremembami ter ustrezno pravno uredbo o prevzemu smernic v nacionalno pravo. Podpisniki so vsakokrat posamezno pooblaščeni za izdajanje tehnične dokumentacije.

[TR] AB Uygunluk Açıklaması

İmza sahibi şahıslar, ayrıntıları belirtilen makine aracının, 2006/42/EC (Makine Yönergesi) ve 2014/30/EU (Elektromanyetik Uyumluluk – EMC) no'lu Avrupa Yönergelerine ve bunların değişiklik sonucu oluşan metinlerine ve yönergelerin milli hukuk hükümlerine dönüştürülmesine dair ilgili hukuk kararnamesine uygun olduğunu tasdik ederler. İmza sahibi şahıslar teknik dosyaları bir araya getirmek için münferiden vekil tayin edildi.

(1) Type/ Typ/ Tipo/ Modello/ Tyyppi/ Tipo / ΤΥΠΟΣ/ Típus/ Tip/ Тип/ Tips/ Tipas/ Tüüp:
(2) Serial No./ Serien-Nr./ N°. de série/ Serienummer/ Nº de serie/ Numero di serie/ Serienr./ Sarjanro/ αυξάνωναριθμός/ Seriové číslo/ Sériaszám/ Nr.Seryjny/ Serijska številka/ Výrobné číslo/ Серийныйномер/ Seri No./ Seerianr./ Sērijas Nr./ Serijos numeris:
(3) Year of constr./ Baujahr/ Année de constr./ Bouwjaar/ Año de constr./ Anno di costruzione/ Produktionsår/ Byggeår/ Tillverkningsår/ Valmistusvuosi / Ano de fabrico / έτοςκατασκευής/ Rokvýroby/ Gyártásév/ Rokprodukcji / Letnik / Годизготовления / Üretimyılı / Väljalaskeaasta / Izgatavošanas gads / Gamybosmetai
(4) Manufacturer or his authorized representative in Community/ Herstelleroder in der Gemeinschaft ansässigerVertreter/ Fabricant ou son mandataireétabli dans la Communauté/ Fabrikant of zijn in de Gemeenschapgevestigdegemachtigde/ Fabricante o representanteestablecidoen la Comunidad/ ConstrutorouRepresentanteestabelecidonaComunidade/ Costruttoreoppureilsuorappresentantenella Comunità/ Fabrikant ellerdennesiFællesskabetetableredebefuldmægtigede/ Produsenteller agent innenfelleskapet/ Tillverkareeller representant inom EU/ Valmistaja tai yhteisömaassaolevaedustaja / V˘robcenebojehozastoupení/ Gyártó / producent albojegoprzedstawiciel w EG (WspólnotaEuropejska)/ Καηαζθεπαζηήο ή όκηινοηνπηθώλ αληηπξνζώπσλ/ Üreticiya da BölgedekiYetkiliTemsilci/ Proizvajalecalipooblaščenizastopnik s sedežem v EU/ Výrobcaalebozástupca so stálymbydliskom v EÚ / Изготовительилиегопредставитель, зарегистрированный в страненСодружества/ Tootjavõiorganisatsioonispaiknevesindaja/ Ražotājsvaivietējaisuzņēmumapārstāvis / Gamintojasarbašalyjereziduojantisatstovas:
(5) Date/ Datum/ Data/ Fecha/ datum/ Dato/ päiväys/ Kuupäev/ Datums/дата/ Dátum/ dátum/ tarih/ ημερομηνία
(6) Authorised signatory/ ImAuftrag/ pour ordre/ Incaricato/ Por orden de/ por procuração/ op last van/ påvegneaf/ påuppdrag/ Etteroppdrag/ psta./ Ülesandel / pavedus / v.i. / Попоручению / megbízásából /длъжностнолице / z pověření / z poverenia / po nalogu / napolecenie / din sarcina / adına / θαη' ελληνή

(1) Type: **XX XX--Self propelled industrial truck**
(2) Serial No: **XXXXXXXX**
(3) Year of constr.: **YYYY**
(4) Manufacturer or his authorized representative in Community:
Company name/ Street / Postal code Town/ Country
(5) Date: **YYYY.MM.DD**
(6) Authorized signatory: **Mr. Sample**

Sample
if you can read
this text,
your declaration
is not complete.
In this case
ase ask for a
opy