https://truckmanualshub.com/ 1

TECHNICAL MANUAL

UNIT, DIRECT SUPPORT, AND GENERAL SUPPORT MAINTENANCE REPAIR PARTS AND SPECIAL TOOLS LIST

TRUCK, LIFT, FORK, CLEAN BURN DIESEL, FRONT/SIDE LOADING 6,000 LB CAPACITY

MODEL R60SL-DC

NSN 3930-01-378-7497

Approved for public release; distribution is unlimited.

HEADQUARTERS, DEPARTMENT OF THE ARMY

JANUARY 1997

https://truckmanualshub.com/ 2

TECHNICAL MANUAL

HEADQUARTERS
DEPARTMENT OF THE ARMY

No. 10-3930-669-24P

Washington, DC *21 JANUARY 1997*

UNIT, DIRECT SUPPORT AND GENERAL SUPPORT MAINTENANCE REPAIR PARTS AND SPECIAL TOOLS LIST

FOR

TRUCK, LIFT, FORK, CLEAN BURN DIESEL FRONT/SIDE LOADING 6,000 LB CAPACITY

MODEL R60SL-DC
NSN 3930-01-378-7497

REPORTING OF ERRORS AND RECOMMENDING IMPROVEMENTS
You can help improve this manual. If you find any mistakes or if you know of a way to improve the procedures, please let us know. Mail your letter, DA Form 2028 (Recommended Changes to Publications and Blank Forms), or DA Form 2028-2 located at the back of this manual direct to: Commander, US Army Tank-automotive and Armament Command, ATTN: AMSTA-IM-OPIT, Warren, MI 48397-5000. A reply will be furnished to you. You may also provide DA Form 2028-2 information to TACOM via datafax or e-mail. TACOM's datafax number for AMSTA-IM-OPIT is (810) 574-6323 and the e-mail address is: amsta-im-opit@cc.tacom.army.mil.

TABLE OF CONTENTS

		Page	Illus/ Figure
Section I	INTRODUCTION	1	
Section II	REPAIR PARTS LIST		
Group 01	Engine System		
	0100 Engine Installation	1-1	1
	0100 Engine Mountings Installation	2-1	2
	0101 Crankcase Assembly	3-1	3
	0101 Cylinder Installation	4-1	4
	0101 Cylinder Head Assembly	5-1	5
	0102 Crankshaft Assembly	6-1	6
	0103 Flywheel Assembly	7-1	7
	0103 Flywheel Housing	8-1	8
	0104 Piston and Connecting Rod	9-1	9
	0105 Engine Front Cover Installation	10-1	10
	0105 Idler Gear	11-1	11
	0105 Valves and Valve Cover	12-1	12
	0105 Rocker Arms and Pushrods	13-1	13
	0105 Camshaft Assembly	14-1	14

https://truckmanualshub.com/ 3

TABLE OF CONTENTS (CONT)

		Page	Illus/ Figure
Group 01	0106 Breather Valve Installation	15-1	15
	0106 Oil Pan	16-1	16
	0106 Oil Pump and Pipes	17-1	17
	0106 Engine Oil Cooler	18-1	18
	0106 Oil Spray Nozzle	19-1	19
	0106 Engine Oil Filter	20-1	20
	0106 Remote Oil Filter Adapter	21-1	21
	0106 Oil Filler Cap and Dipstick	22-1	22
	0106 AOAP Valve	23-1	23
Group 03	Fuel System		
	0301 Fuel Injector	24-1	24
	0301 Fuel Injector Lines	25-1	25
	0302 Fuel Injection Pump	26-1	26
	0302 Injection Pump Timing Gear	27-1	27
	0304 Air Cleaner Assembly	28-1	28
	0305 Intake Manifold	29-1	29
	0306 Fuel Lines	30-1	30
	0306 Fuel Tank Installation	31-1	31
	0309 Fuel Filter	32-1	32
	0309 Fuel Filter Head	33-1	33
	0309 Fuel Water Separator	34-1	34
	0312 Throttle Pedal and Linkage Assembly	35-1	35
	0312 Oil Filter Tray	36-1	36
Group 04	Exhaust System		
	0401 Exhaust Manifold	37-1	37
	0401 Muffler and Exhaust Stack	38-1	38
Group 05	Cooling System		
	0502 Engine Ducts and Shrouds	39-1	39
	0502 Engine Ventilation Panel	40-1	40
	0505 Air Blower Installation	41-1	41
	0505 V Belt Tensioning Pulley	42-1	42
Group 06	Electrical System		
	0601 Alternator Mounting and Belt	43-1	43
	0601 Alternator Assembly	44-1	44
	0602 Voltage Regulator Installation	45-1	45
	0603 Starter Assembly	46-1	46
	0605 Glow Plug	47-1	47
	0606 Engine Shutdown Solenoid	48-1	48
	0606 Throttle and Engine Shutdown Solenoid Levers	49-1	49
	0607 Broken Fan Belt Warning Switch and Cable	50-1	50
	0607 Starter Switch	51-1	51
	0607 Master Disconnect Switch	52-1	52
	0607 Switches	53-1	53
	0607 Instrument Panel	54-1	54
	0607 Warning Lights and Alarms	55-1	55
	0607 Instrument Panel Gauges	56-1	56
	0607 Instrument Panel Switches	57-1	57
	0608 Transmission Shift Lever	58-1	58
	0608 NATO Plug	59-1	59

https://truckmanualshub.com/ 4

TABLE OF CONTENTS (CONT)

		Page	Illus/ Figure
Group 06	0608 Transmission Inching Valve	60-1	60
	0609 Brake Tail Light Installation	61-1	61
	0609 Flood Lights	62-1	62
	0609 Cab Interior Light	63-1	63
	0609 Shunt Assembly	64-1	64
	0609 Fuse Panel	65-1	65
	0609 Relay Panel	66-1	66
	0610 Transmission Fluid Temperature Switch	67-1	67
	0610 Oil Senders	68-1	68
	0610 Axle Cooling Fan	69-1	69
	0610 Tachometer Adapter	70-1	70
	0610 Fuel Level Sensor	71-1	71
	0611 Horn Installation	72-1	72
	0611 Horn Button	73-1	73
	0612 Battery Installation	74-1	74
	0612 Battery Cable Installation	75-1	75
	0613 Wire Harnesses, Cab and Chassis	76-1	76
	0613 Wire Harnesses, Steering and Instrument Panel	77-1	77
Group 07	Transmission		
	0710 Transmission Installation	78-1	78
	0710 Transmission Oil Filter	79-1	79
	0710 Transmission Oil Filter Adapter and Lines	80-1	80
	0710 Torque Converter	81-1	81
	0710 Transmission Case and Output Shaft	82-1	82
	0710 Input Shaft Assembly	83-1	83
	0710 Forward Shaft Assembly	84-1	84
	0710 Auxiliary Pump Drive	85-1	85
	0714 Transmission Valve Body	86-1	86
	0721 Transmission Oil Cooler	87-1	87
Group 08	Transfer and Final Drive Assemblies		
	0801 Axle Cooling Pump	88-1	88
	0802 Axle Oil Cooler	89-1	89
	0802 Axle Oil Cooler Hoses	90-1	90
Group 09	Propeller, Shafts, Universal Joints		
	0900 Driveshaft Assembly	91-1	91
Group 10	Front Axle		
	1000 Drive Axle Assembly	92-1	92
	1000 Front Axle Housing	93-1	93
	1000 Drive Axle Guard	94-1	94
	1002 Differential	95-1	95
	1003 Planetary Reduction Drive	96-1	96
Group 11	Rear Axle		
	1100 Rear Axle Installation	97-1	97
	1100 Rear Axle Housing	98-1	98
	1104 Steering Cylinder	99-1	99
	1104 Steering Knuckles and Tie Rods	100-1	100
Group 12	Brakes		
	1201 Parking Brake Levers	101-1	101
	1201 Brake Linkage	102-1	102

TABLE OF CONTENTS (CONT)

		Page	Illus/ Figure
Group 12	1201 Parking Brake Installation	103-1	103
	1202 Brake Piston and Discs	104-1	104
	1204 Brake Lines	105-1	105
	1204 Master Cylinder Installation	106-1	106
	1206 Brake Pedal Installation	107-1	107
Group 13	Wheels and Tracks		
	1311 Drive Wheel Assemblies	108-1	108
	1311 Rear Wheel and Hub	109-1	109
Group 14	Steering		
	1401 Steering Column and Steering Wheel	110-1	110
	1410 Power Steering Unit	111-1	111
	1411 Steering Lines	112-1	112
Group 15	Frame, Towing Attachments, Drawbars and Articulation Systems		
	1501 Frame	113-1	113
	1502 Rear Counterweights	114-1	114
	1502 Frame Counterweights	115-1	115
Group 18	Body, Cab, Hood and Hull		
	1801 Cab Installation	116-1	116
	1801 Side Covers Installation	117-1	117
	1801 Rear Engine Access Covers	118-1	118
	1801 Cab Miscellaneous Items	119-1	119
	1801 Cab Door Assembly	120-1	120
	1802 Cab Windshield and Glass	121-1	121
	1806 Seat Assembly	122-1	122
Group 22	Body, Chassis, and Hull Accessory Items		
	2202 Fan Installation	123-1	123
	2202 Windshield Wipers (Front/Rear)	124-1	124
	2202 Top Window Wiper	125-1	125
	2202 Heater Control	126-1	126
	2202 Oil to Air Heater	127-1	127
	2202 Oil to Air Heater Lines	128-1	128
	2210 Data Plates and Decals	129-1	129
Group 24	Hydraulic Lift Components		
	2401 Transmission Hydraulic Pump	130-1	130
	2402 Changeover Valve	131-1	131
	2402 Priority Valve	132-1	132
	2402 Stack Valve	133-1	133
	2402 Stack Valve Fittings	134-1	134
	2403 Joystick Controls	135-1	135
	2404 Mast Tilt Cylinder	136-1	136
	2405 Pivot Cylinder	137-1	137
	2405 Shift Cylinder	138-1	138
	2405 Carriage and Forks	139-1	139
	2405 Mast Secondary Cylinder	140-1	140
	2405 Mast Primary Cylinder	141-1	141
	2405 Mast Rail Assembly	142-1	142
	2405 Mast Primary Chain	143-1	143
	2405 Mast Secondary Chain	144-1	144
	2405 Bearing Assembly	145-1	145

https://truckmanualshub.com/ 6

TABLE OF CONTENTS (CONT)

		Page	Illus/ Figure
Group 24	2405 Tandem Pump	146-1	146
	2405 Pivot Arm Assembly	147-1	147
	2405 Pivot and Shift Assembly	148-1	148
	2406 Mast Lines	149-1	149
	2406 Mast Hoses, Tubes, and Fittings	150-1	150
	2406 Umbilical Assembly	151-1	151
	2406 Hydraulic Hoses	152-1	152
	2406 Hydraulic Oil Filter Head	153-1	153
	2406 Stack Valve Lines	154-1	154
	2408 Hydraulic Reservoir	155-1	155
Group 94	Repair Kits		
	9401 Repair Kits	KITS-1	
Group 95	General Use Standardized Parts		
	9501 Hardware Supplies and Bulk Materiels	BULK-1	
Section III	SPECIAL TOOLS LIST		
	2604 Unit Maintenance Special Tools	156-1	156
	2604 Direct Support Maintenance Special Tools	157-1	157
	2604 General Support Maintenance Special Tools	158-1	158
Section IV	CROSS-REFERENCE INDEX		
	National Stock Number Index	I-1	
	Part Number Index	I-14	

https://truckmanualshub.com/ 7

UNIT, DIRECT/GENERAL SUPPORT MAINTENANCE MANUAL (INCLUDING REPAIR PARTS AND SPECIAL TOOLS LIST FOR:

TRUCK, LIFT, FORK, CLEAN BURN DIESEL, FRONT/SIDE LOADING, 6,000 LB CAPACITY

SECTION I - INTRODUCTION

1. SCOPE

This RPSTL lists and authorizes spares and repair parts; special tools; special test, measurement, and diagnostic equipment (TMDE); and other special support equipment required for performance of Unit, Direct Support, and General Support Maintenance of the FORKLIFT. It authorizes the requisitioning, issue, and disposition of spares, repair parts and special tools as indicated by the source, maintenance, and recoverability (SMR) codes.

2. GENERAL

In addition to Section I, Introduction, this repair parts and special tools list is divided into the following sections:

a. Section II. Repair Parts List. A list of spares and repair parts authorized by this RPSTL for use in the performance of maintenance. The list also includes parts which must be removed for replacement of the authorized parts. Parts lists are composed of functional groups in ascending alphanumeric sequence, with the parts in each group listed in ascending figure and item number sequence. Bulk materials are listed in item name sequence. Repair parts kits are listed separately in their own functional group within Section II. Repair parts for repairable special tools are also listed in the section. Items listed are shown on the associated illustration(s)/figure(s).

b. Section III. Special Tools List. A list of special tools, special TMDE, and other special support equipment authorized by this RPSTL (as indicated by Basis of Issue (BOI) information in DESCRIPTION AND USABLE ON CODE column) for the performance of maintenance.

c. Section IV. National Stock Number and Part Number Cross-Reference Indexes. A list, in National Item Identification Number (NIIN) sequence, of all national stock numbered items appearing in the listing, followed by a list in alphanumeric sequence of all part numbers appearing in the listings. National stock numbers and part numbers are cross-referenced to each illustration, figure and item number appearance.

3. EXPLANATION OF COLUMNS (SECTION II AND III)

a. ITEM NO. (Column (1)). Indicates the number used to identify items called out in the illustration.

b. SMR CODE (Column (2)). The source, maintenance, and recoverability (SMR) code is a 5-position code containing supply/requisitioning information, maintenance category authorization criteria, and disposition instructions, as shown in the following breakout:

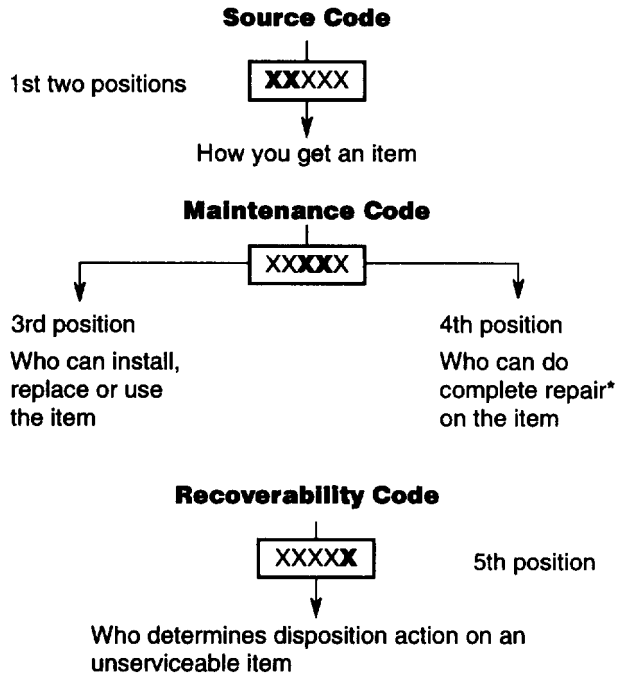

*Complete Repair. Maintenance capacity, capability, and authority to perform all corrective maintenance tasks of the “Repair” function in a use/user environment in order to restore serviceability to a failed item.

(1) Source Code. The source code tells you how to get an item needed for maintenance, repair or overhaul of an end item/equipment. Explanations of source codes follow:

Code	Explanation
PA PB PC** PD PE PF PG	Stocked items; use the applicable NSN to request/ requisition items with these source codes. They are authorized to the category indicated by the code entered in the 3d position of the SMR code. **Items coded PC are subject to deterioration.
KD KF	Items with these codes are not to be requested/ requisitioned individually. They are part of a kit which is authorized to the maintenance level indicated in the 3d position of the SMR code. The complete kit must be requisitioned and applied.
MO (Made at UM AVUM Level) MF (Made at DS/ AVUM level) MH (Made at GS level) ML (Made at Specialized Repair Act (SRA))	Items with these codes are not to be requested/ requisitioned individually. They must be made from bulk material which is identified by the part number in the DESCRIPTION AND USABLE ON CODE (UOC) column and listed in the bulk material group of the repair parts list in this RPSTL. If the item is authorized to you by the 3d position of the SMR code, but if the MD (Made at source code indicates it is made at Depot) is at a higher level, order the item from the higher level of maintenance.

Code	Explanation
AO - (Assembled by UM/AVUM Level) AF - (Assembled by DS/AVUM Level) AH - (Assembled by GS Category) AL - (Assembled by SRA) AD - (Assembled by Depot)	Items with these codes are not to be requested/ requisitioned individually. The parts that make up the assembled item must be requisitioned or fabricated and assembled at the level of maintenance indicated by the source code. If the 3d position code of the SMR code authorizes you to replace the item, but the source code indicates it is assembled at a higher level, order the item from the higher level of maintenance.
XA	Do not requisition an "XA"-coded item. Order its next higher assembly. (Also, refer to the NOTE below.)
XB	If an item is not available from salvage, order it using the CAGE and part number given.
XC	Installation drawing, diagram, instruction sheet, field service drawing, that is identified by manufacturer's part number.
XD	Item is not stocked. Order an "XD"-coded item through normal supply channels using the CAGE and part number given, if no NSN is available.

NOTE

Cannibalization or controlled exchange, when authorized, may be used as a source of supply for items with the above source codes, except for those coded "XA" or those aircraft support items restricted by requirements of AR 700-42.

(2) Maintenance Code. Maintenance codes tell you the level(s) of maintenance authorized to USE and REPAIR support items. The maintenance codes are entered in the third and fourth positions of the SMR Code as follows:

(a) The maintenance code entered in the third position tells you the lowest maintenance level authorized to remove, replace, and use an item. The maintenance code entered in the third position will indicate authorization to one of the following levels of maintenance:

Code	Application/Explanation
C	Crew or operator maintenance done within unit or aviation unit maintenance.
0	Unit maintenance or aviation unit category can remove, replace, and use the item.
F	Direct support or aviation intermediate level can remove, replace, and use the item.
H	General support level can remove, replace, and use the item.
D	Depot Level can remove, replace, and use item.
L	Specialized repair activity can remove, replace, and use item.

(b) The maintenance code entered in the fourth position tells you whether or not the item is to be repaired and identifies the lowest maintenance level with the capability to do complete repair (i.e., perform all authorized maintenance functions).

NOTE

Some limited repair may be done on the item at a lower level of maintenance, if authorized by the Maintenance Allocation Chart (MAC) and SMR codes.

This position will contain one of the following maintenance codes:

Code	Application/Explanation
O	Unit maintenance or Aviation unit is the lowest level that can do complete repair of the item.
F	Direct support or aviation intermediate is the lowest level that can do complete repair of the item.
H	General support is the lowest level that can do complete repair of the item.
D	Depot is the lowest level that can do complete repair of the item.
L	Specialized repair activity is the lowest level that can do complete repair of the item.
Z	Nonreparable. No repair is authorized.
B	No repair is authorized. (No parts or special tools are authorized for the maintenance of a "B" coded item.) However, the item may be reconditioned by adjusting, lubrication, etc., at the user level.

(3) Recoverability Code. Recoverability codes are assigned to items to indicate the disposition action on unserviceable items. The recoverability code is entered in the fifth position of the SMR code as follows:

Code	Application/Explanation
Z	Nonreparable item. When unserviceable, condemn and dispose of the item at the level of maintenance shown in the 3d position of the SMR code.
O	Reparable item. When uneconomical to repair, condemn and dispose of the item at unit maintenance or aviation unit level.
F	Reparable item. When uneconomically reparable, condemn and dispose of the item at the direct support or aviation intermediate level.
H	Reparable item. When uneconomically reparable, condemn and dispose of the item at the general support level.
D	Reparable item. When beyond lower level repair capability, return to depot. Condemnation and disposal of item are not authorized at below depot level.

Code	Application/Explanation
L	Reparable item. Condemnation and disposal not authorized below specialized repair activity (SRA).
A	Item requires special handling or condemnation procedures because of specific reasons (such as precious metal content, high dollar value, critical material or hazardous materiel). Refer to appropriate manuals/directives for specific instructions.

c. NATIONAL STOCK NUMBER (Column (3)). This column lists the NSN assigned to the item. Use NSN for requests/requisitions.

d. CAGEC (Column (4)). The Commercial and Government Entity (CAGE) Code (C) is a 5-digit alphanumeric code which is used to identify the manufacturer, distributor, or Government agency, etc., that supplies the item.

e. PART NUMBER (Column (5)). Indicates the primary number used by the manufacturer (individual, company, firm, corporation, or Government activity), which controls the design and characteristics of the item by means of its engineering drawings, specifications standards, and inspection requirements to identify an item or range of items.

NOTE

When you use a NSN to requisition an item, the item you receive may have a different part number from the part ordered.

f. DESCRIPTION AND USABLE ON CODE (UOC) (Column (6)). This column includes the following information:

(1) The Federal item name and, when required, a minimum description to identify the item.

(2) The physical security classification is indicated by the parenthetical entry (insert applicable physical security classification, e.g., PhySec C1 (C) - Confidential, Phy Sec C1 (S) - Secret, Phy Sec C1 (T) Top Secret).

(3) Items that are included in kits and sets are listed below the name of the kit or set on Figure KIT.

(4) Spare/repair parts that make up an assembled item are listed immediately following the assembled item line entry.

(5) Part number for bulk materials are referenced in this column in the line item entry to be manufactured/fabricated.

(6) When the item is not used with all serial numbers of the same model, the effective serial numbers are shown on the last line(s) of the description (before UOC). Not applicable.

(7) The usable on code, when applicable (see paragraph 5, Special Information).

(8) In the Special Tools List section, the basis of issue (BOI) appears as the last line(s) in the entry for each special tool, special TMDE and other special support equipment. When density of equipments supported exceeds density spread indicated in the basis of issue, the total authorization is increased proportionately.

(9) The statement "END OF FIGURE" appears just below the last item description in column 6 for a given figure in both Section II and Section III.

g. QTY (Column (7)). The QTY (quantity per figure) column indicates the quantity of the item used in the breakout shown on the illustration/figure, which is prepared for a functional group, subfunctional group, or an assembly. A "'V appearing in this column instead of a quantity indicates that the quantity is variable and the quantity may vary from application to application.

4. EXPLANATION OF INDEX FORMAT AND COLUMNS (SECTION IV)

a. National Stock Number (NSN) Index.

(1) STOCK NUMBER column. This column lists the NSN by national item identification number (NIIN) sequence. The NIIN consists of the last nine digits of the NSN.

When using this column to locate an item, ignore the first 4 digits of the NSN. However, the complete NSN should be used when ordering items by stock number.

(2) FIG. Column. This column lists the number of the Figure where the item is identified/ located. The figures are in numerical order in Section II and Section III.

(3) ITEM Column. The item number identifies the item associated with the figure listed in the adjacent FIG. column. This item is also identified by the NSN listed on the same line.

b. Part Number Index. Part numbers in this index are listed by part number in ascending alphanumeric sequence (i.e., vertical arrangement of letters and number combination which places the first letter or digit of each group in order A through Z, followed by the numbers 0 through 9 and each following letter or digit in like order).

(1) CAGEC column. The Commercial And Government Entity (CAGE) Code (C) is a 5 digit alphanumeric code used to identify the manufacturer, distributor, or Government agency, etc., that supplies the item.

(2) PART NUMBER column. Indicates the part number used by the manufacturer (individual, firm, corporation or Government activity), which controls the design and characteristics of the item by means of its engineering drawings, specifications standards, and inspection requirements to identify an item or range of items.

(3) STOCK NUMBER Column. This column lists the NSN for the associated part number and manufacturer identified in the PART NUMBER and CAGEC columns to the left.

(4) FIG. Column. This column lists the number of the figure where the item is identified/ located in Section II or III.

(5) ITEM Column. The item number is the number assigned to the item as it appears in the figure referenced in the adjacent figure number column.

5. SPECIAL INFORMATION

Use the following subparagraphs as applicable:

a. Usable on Code. The usable on code appears in the lower left corner of the Description column heading. Usable on codes are shown as "UOC..." in the Description Column (justified left) on the first line applicable item/nomenclature. Uncoded items are applicable to all models. Identification of the usable code used in this RPSTL is:

Code	Used On
JJV	Model R60SL-DC

b. Fabrication Instructions. Bulk materials required to manufacture items are listed in the bulk material functional group of this RPSTL. Part numbers for bulk materials are also referenced in the Description Column of the line item entry for the item to be manufactured/fabricated. Detailed fabrication instructions for items source coded to be manufactured or fabricated are found in the applicable maintenance level manual.

c. Assembly Instructions. Detailed assembly instructions for items source coded to be assembled from component spare/repair parts are found in the applicable maintenance level manual. Items that make up the assembly are listed immediately following the assembly item entry or reference is made to an applicable figure.

d. Kits. Line item entries for repair parts kits appear in group 9401 in Section II.

e. Associated Publications. The publications listed below pertain to the TRUCK, LIFT, FORK, CLEAN BURN DIESEL, FRONT/SIDE LOADING, 6,000 LB. CAPACITY - MODEL R60SL-DC:

Publication	Short Title
TM 10-3930-669-10	Operator's Manual
LO 10-3930-669-12	Lubrication Order
TM 10-3930-669-24P	RPSTL
TM 10-3930-669-20	Unit Maintenance Manual
TM 10-3930-669-34	Direct and General Support Maintenance Manual

https://truckmanualshub.com/ 12

6. HOW TO LOCATE REPAIR PARTS

a. When National Stock Number or Part Number Is Not Known.

(1) First. Using the table of contents, determine the assembly group or subassembly group to which the item belongs. This is necessary since figures are prepared for assembly groups and subassembly groups, and listings are divided into the same groups.

(2) Second. Find the figure covering the assembly group or subassembly group to which the item belongs.

(3) Third. Identify the item on the figure and use the Figure and Item Number Index to find the NSN.

b. When National Stock Number or Part Number Is Known.

(1) First. Using the National Stock Number or the Part Number Index, find the pertinent National Stock Number or Part Number. The NSN index is in National Item Identification Number NIIN sequence (see 4a(1)). The part numbers in the Part Number index are listed in ascending alphanumeric sequence see 4b). Both indexes cross-reference you to the illustration/figure and item number of the item you are looking for.

(2) Second. Turn to the figure and item number, verify that the item is the one you are looking for, then locate the item number in the repair parts list for the figure.

7. ABBREVIATIONS

For standard abbreviations see MIL-STD-12D, Military Standard Abbreviations For Use On Drawings, Specifications, Standards and in Technical Documents.

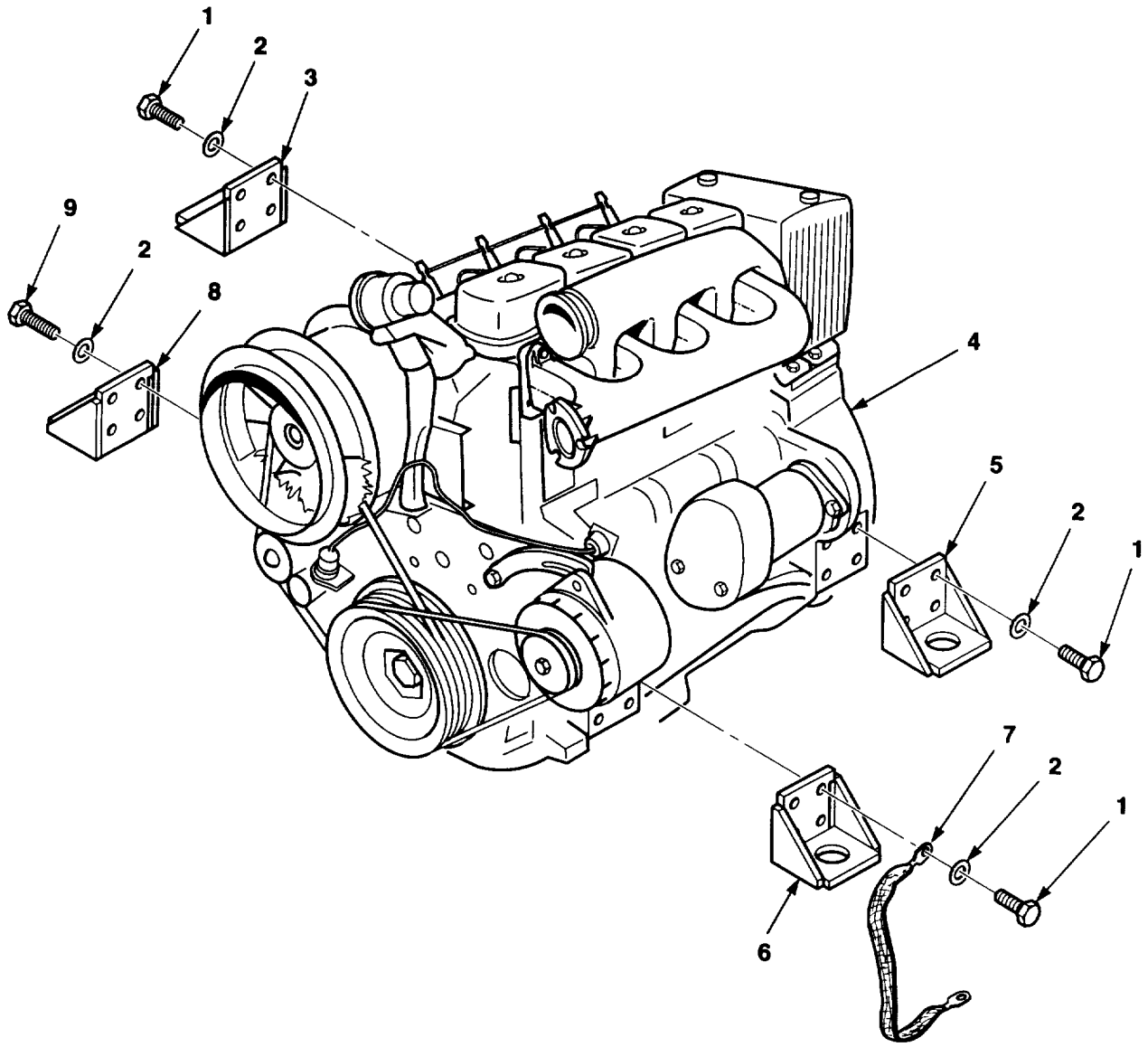

Figure 1. Engine Installation

https://truckmanualshub.com/ 14

(1) ITEM NO.	(2) SMR CODE	(3) NSN	(4) CAGEC	(5) PART NUMBER	(6) DESCRIPTION AND USABLE ON CODES (UOC)	(7) QTY
					GROUP 01 ENGINE GROUP 0100 ENGINE ASSEMBLY FIG. 1 ENGINE INSTALLATION	
1	XBFZZ		12603	1CM1230	SCREW,CAP,HEX HD M12X30	12
2	PAFZZ	5310012719602	34914	991 4137	WASHER,FLAT	16
3	XBFZZ		07443	1407658	MOUNT,ENGINE,RIGHT	1
4	PAFHH	2815013964990	62445	W492-034/8.000/2	ENGINE,DIESEL	1
5	XBFZZ		07443	1407659	MOUNT,ENGINE,LEFT	1
6	XBFZZ		07443	1401083	BASE MOUNTING,LT FR	1
7	PAOZZ	6150013969505	07443	36571	LEAD,ELECTRICAL	1
8	XBFZZ		07443	1401081	BASE MOUNTING,RT FR	1
9	PAFZZ	5305012683656	15526	DIN933-M6X16-8.8 -A4C	SCREW,CAP,HEXAGON H M6X16	4

END OF FIGURE

https://truckmanualshub.com/ 15

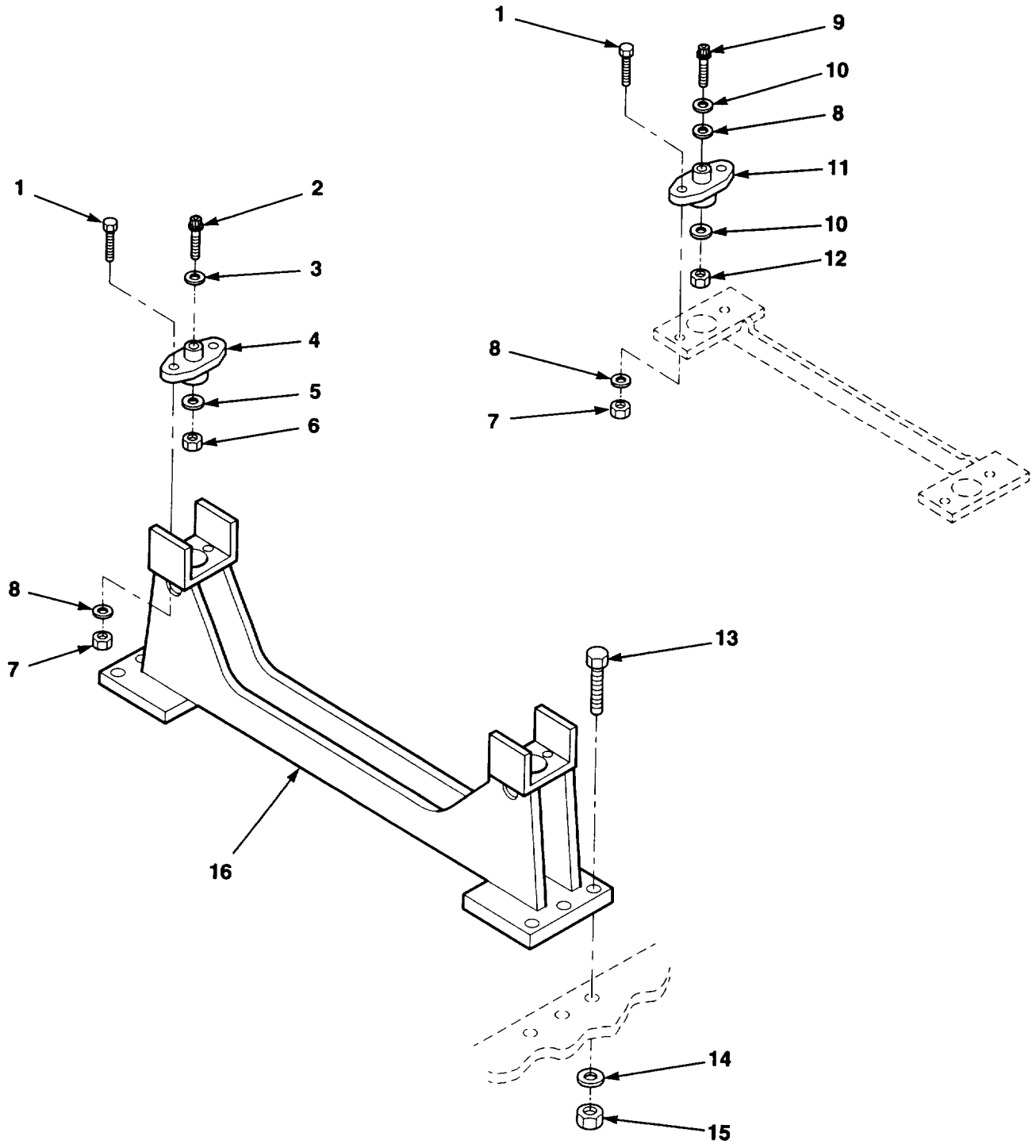

Figure 2. Engine Mountings Installation

https://truckmanualshub.com/ 16

(1) ITEM NO.	(2) SMR CODE	(3) NSN	(4) CAGEC	(5) PART NUMBER	(6) DESCRIPTION AND USABLE ON CODES (UOC)	(7) QTY
					GROUP 0100 ENGINE ASSEMBLY FIG. 2 ENGINE MOUNTINGS INSTALLATION	
1	PAFZZ	5305013980347	12603	7CM1030	SCREW,CAP,HEXAGON H M10X30	8
2	PAFZZ	5305013811215	77237	3GM1080	SCREW,CAP,HEXAGON H M10X80	2
3	PAFZZ	5310013981728	12603	18EM1632	WASHER,FLAT M16X32	2
4	PAFZZ	5340014244606	13636	510-3NS	MOUNT,RESILIENT	2
5	PAFZZ	5310011605720	81860	R18733-3	WASHER,FLAT	2
6	PAFZZ	5310014249561	07443	1401147	NUT,PLAIN,HEXAGON	2
7	PAFZZ	5310013964293	12603	40DM10	NUT,SELF-LOCKING,HE M10	8
8	PAFZZ	5310013962871	12603	18EM1019	WASHER,FLAT M10X19	10
9	PAFZZ		12603	3GM1690	SCREW,CAP,SOCKET H M16X90	2
10	PAFZZ	5310013231606	81860	R18733-1	WASHER,FLAT	4
11	PAFZZ		13636	507-2NS	MOUNT,MOTOR	2
12	PAFZZ	5310014249560	07443	1401148	NUT,PLAIN,HEXAGON	2
13	PAFZZ	5305013980346	12603	1CM1245	SCREW,CAP,HEXAGON H M12X45	6
14	PAFZZ	5310012719602	34914	991 4137	WASHER,FLAT M12X24	6
15	PAFZZ	5310013527374	11083	8T4244	NUT,PLAIN,HEXAGON M12	6
16	PAFZZ		07443	1407870	BRACKET,ENGINE MOUN	1

END OF FIGURE

https://truckmanualshub.com/ 17

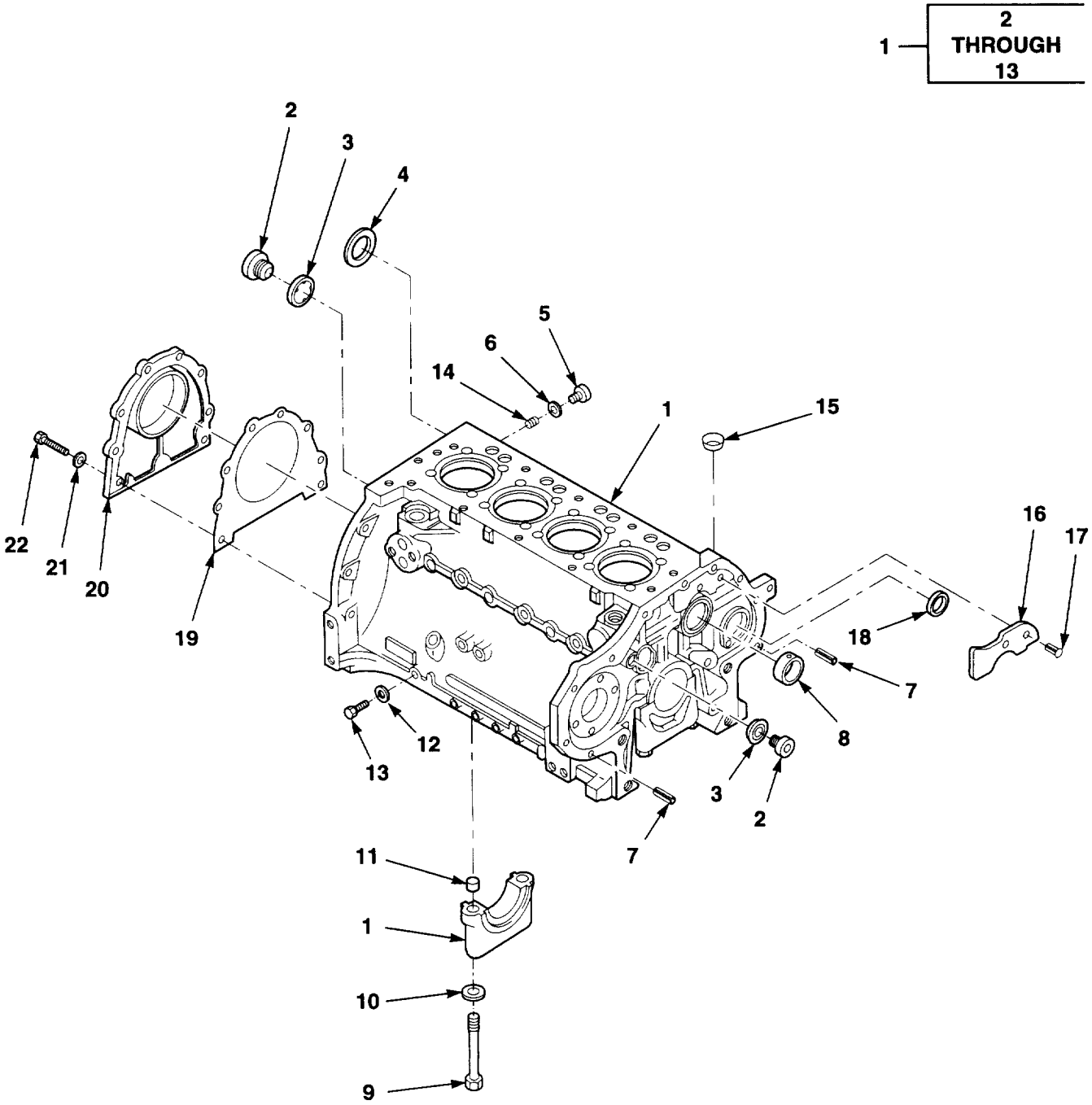

Figure 3. Crankcase Assembly

https://truckmanualshub.com/ 18

(1) ITEM NO.	(2) SMR CODE	(3) NSN	(4) CAGEC	(5) PART NUMBER	(6) DESCRIPTION AND USABLE ON CODES (UOC)	(7) QTY
					GROUP 0101 CRANKCASE, BLOCK, CYLINDER HEAD FIG. 3 CRANKCASE ASSEMBLY	
1	PFHHH	2815123370033	62445	0415 6243	CRANKCASE	1
2	PAHZZ	5365011939336	62445	111-8998	.PLUG,MACHINE THREAD	2
3	PAFZZ	5330010159617	36719	1118659	.GASKET	2
4	PAHZZ	5340011971502	62445	1216240	.PLUG,EXPANSION	1
5	PAHZZ	5365011971503	62445	111-0422	.PLUG,MACHINE THREAD	5
6	PAHZZ	5330012388390	76558	6.0492.01.0.1215	.GASKET	5
7	XDHZZ		62445	1167266	.BUSHING,SLEEVE	2
8	PAHZZ		62445	0213-9737	.BEARING,SLEEVE	5
9	PAHZZ	5305013957700	62445	0415 6058	.SCREW,MACHINE	10
10	XDHZZ		62445	121-6107	.WASHER	10
11	PAHZZ	5365013954737	62445	0416 0764	.BUSHING,TAPERED	10
12	PAHZZ	5310013962857	62445	0415 9935	.WASHER,SEAL	1
13	PAHZZ		62445	04159934	PLUG,MACHINE THREAD	5
14	PAHZZ		62445	0121 5235	PLUG,MACHINE THREAD	2
15	PAHZZ	5340013956282	62445	0117 6197	PLUG,LEAKPROOF	1
16	PAHZZ	5340013957693	62445	0415 6862	PLATE,MOUNTING	1
17	PAHZZ	5315011971478	62445	111-5333	PIN,NOTCHED	2
18	PAFZZ	5340012747403	62445	116 5839	PLUG,EXPANSION	1
19	PAFZZ	5330012104983	62445	3362337	GASKET	1
20	XDFZZ		62445	2234870	COVER,END,CRANKCASE	1
21	PAFZZ	5310010135463	62445	110-7101	WASHER,FLAT M8	8
22	PAFZZ	5305012392282	62445	111-2322	SCREW,CAP,HEXAGON H M8X20	8

END OF FIGURE

https://truckmanualshub.com/ 19

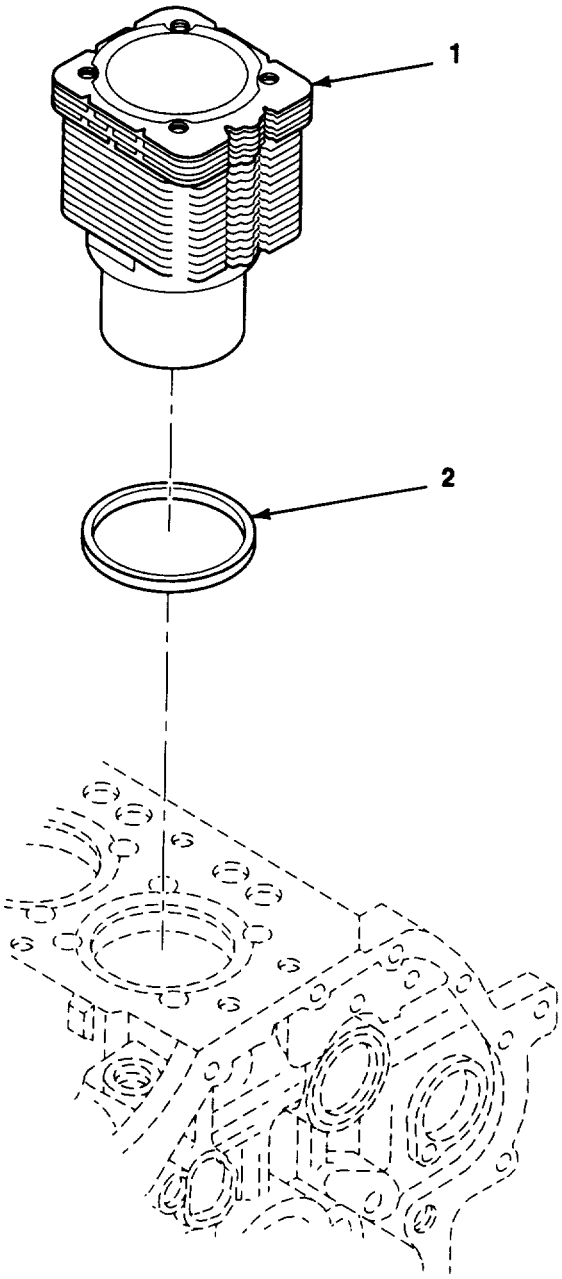

Figure 4. Cylinder Installation

https://truckmanualshub.com/ 20

(1) ITEM NO.	(2) SMR CODE	(3) NSN	(4) CAGEC	(5) PART NUMBER	(6) DESCRIPTION AND USABLE ON CODES (UOC)	(7) QTY
					GROUP 0101 CRANKCASE, BLOCK, CYLINDER HEAD	
					FIG. 4 CYLINDER INSTALLATION	
1	PAFZZ	2815011877163	62445	415-7756	CYLINDER HEAD,DIESE	4
2	PAFZZ	5365010135649	62445	2137256	SHIM 0.2MM	V
2	PAFZZ	5365011881089	62445	2232963	SPACER,RING 0.5MM	V
2	PAFZZ	5365012747435	62445	415 0264	SHIM 0.8MM	V
2	PAFZZ	5365012747436	62445	223 9331	SHIM 1.0MM	V

END OF FIGURE

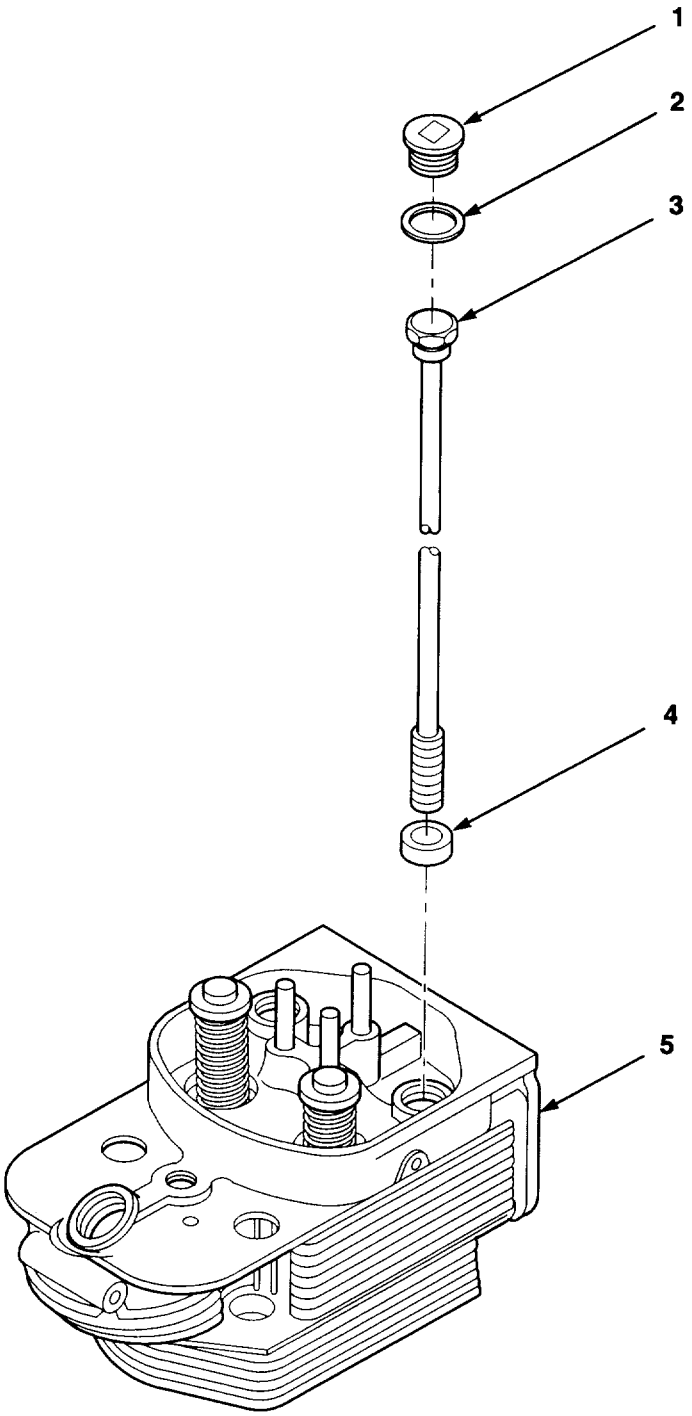

Figure 5. Cylinder Head Assembly

https://truckmanualshub.com/ 22

(1) ITEM NO.	(2) SMR CODE	(3) NSN	(4) CAGEC	(5) PART NUMBER	(6) DESCRIPTION AND USABLE ON CODES (UOC)	(7) QTY
					GROUP 0101 CRANKCASE, BLOCK, CYLINDER HEAD	
					FIG. 5 CYLINDER HEAD ASSEMBLY	
1	PAFZZ	5365012012008	62445	2136596	PLUG,MACHINE THREAD	8
2	PAFZZ	5310012077206	62445	1118760	WASHER M26	8
3	PAFZZ	5306010127251	62445	2101681	BOLT,EXTERNALLY REL	16
4	PAFZZ	5310010135473	62445	337-1666	WASHER	16
5	PAFHH	2815121959008	62445	0223 3043	CYLINDER HEAD,DIESE	4

END OF FIGURE

https://truckmanualshub.com/ 23

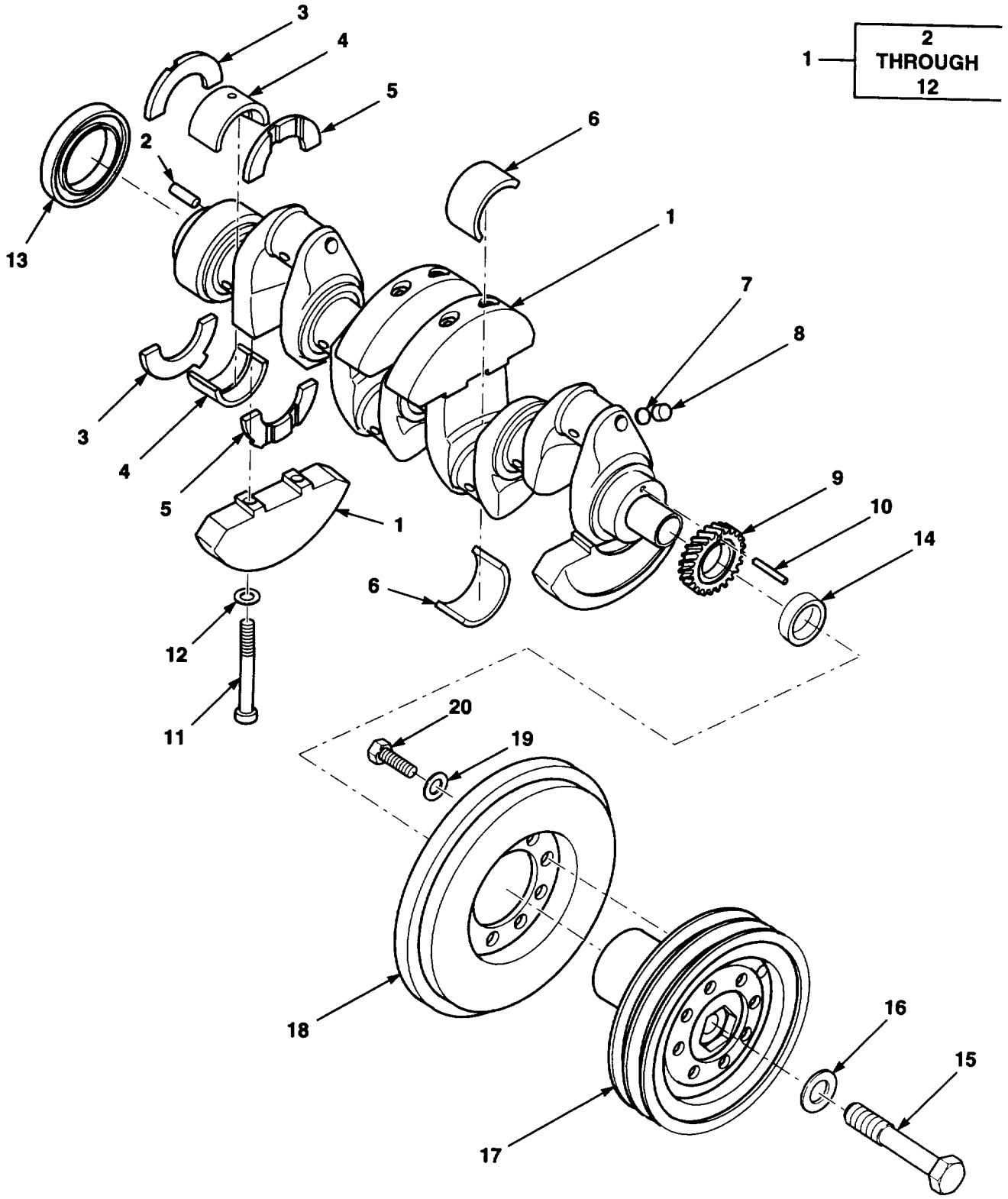

Figure 6. Crankshaft Assembly

https://truckmanualshub.com/ 24

(1) ITEM NO.	(2) SMR CODE	(3) NSN	(4) CAGEC	(5) PART NUMBER	(6) DESCRIPTION AND USABLE ON CODES (UOC)	(7) QTY
					GROUP 0102 CRANKSHAFT FIG. 6 CRANKSHAFT ASSEMBLY	
1	PAHHH	2815123370034	62445	0292 9340	CRANKSHAFT,ENGINE	1
2	PAHZZ	3120011944817	62445	1115464	.BUSHING,SLEEVE M8X18	1
3	PAHZZ	5365013954656	62445	0223 0171	.RING,RETAINING TWO HALVES	1
4	PAHZZ	3120011925794	62445	336-2379	.BEARING,SLEEVE TWO HALVES	5
5	PAHZZ	5365012023642	62445	2230181	.RING,RETAINING TWO HALVES	1
6	PAHZZ	3120002408053	62445	2137750	.BEARING,SLEEVE TWO HALVES	4
7	PAHZZ	5310012086603	62445	116-7010	.WASHER M7.5	4
8	PAHZZ	5340012366391	62445	117-0580	.PLUG,EXPANSION M8X8	4
9	PAHZZ	3020013424887	62445	04156890	.GEAR,HELICAL	1
10	PAHZZ	5315013962214	62445	0113 7239	.PIN,STRAIGHT,HEADLE M8X45	1
11	PAHZZ	5305011945929	62445	1137280	.SCREW M12X60	8
12	PAHZZ	5310012099395	62445	1216119	.WASHER,FLAT M13	8
13	PAFZZ	5330013955113	62445	0423 0193	SEAL,PLAIN	1
14	PAFZZ	5330014347270	62445	04154144	SEAL,PLAIN ENCASED	1
15	PAFZZ	5306011939689	62445	1166951	BOLT,MACHINE M24X110	1
16	PAFZZ	5310012101673	62445	1216128	WASHER,FLAT M24	1
17	PAFZZ	3020011918669	62445	223-0774	PULLEY,GROOVE	1
18	PAFZZ	5365011972332	62445	3372269	BUSHING,NONMETALLIC	1
19	XDFZZ		62445	1172303	WASHER,FLAT M8	8
20	PAFZZ	5305012478572	62445	111 2307	SCREW,CAP,HEXAGON H M8X16	8

END OF FIGURE

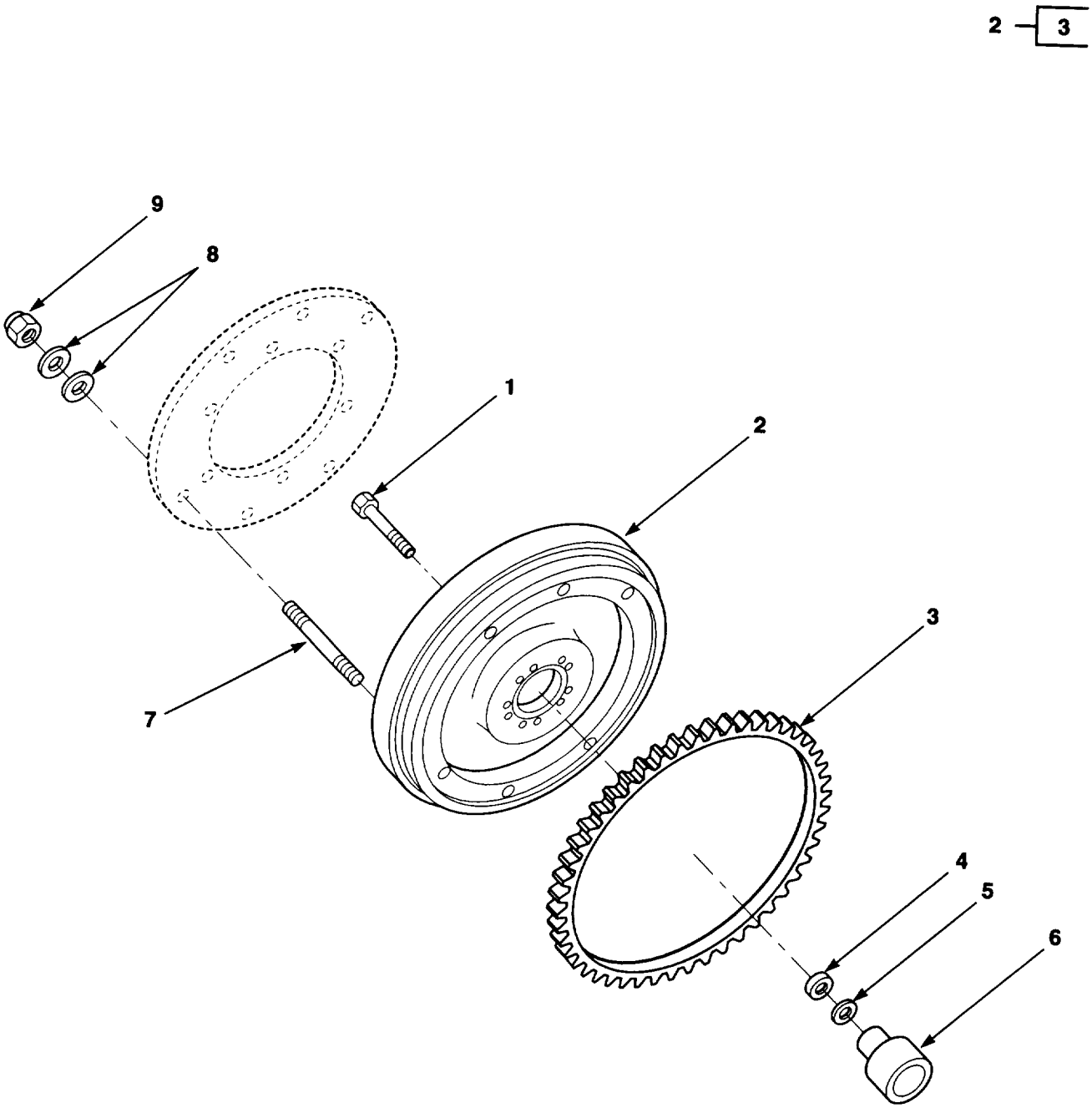

Figure 7. Flywheel Assembly

https://truckmanualshub.com/ 26

(1) ITEM NO.	(2) SMR CODE	(3) NSN	(4) CAGEC	(5) PART NUMBER	(6) DESCRIPTION AND USABLE ON CODES (UOC)	(7) QTY
					GROUP 0103 FLYWHEEL ASSEMBLY FIG. 7 FLYWHEEL ASSEMBLY	
1	PAFZZ		62445	0110 4845	BOLT,MACHINE M10X35	10
2	PAFFZ	2815123370094	62445	0224 9052	FLYWHEEL,ENGINE	1
3	PAFZZ	3020010223663	62445	2131081	.GEAR SECTOR,BEVEL	1
4	PAFZZ	5310013962861	62445	0224 9990	WASHER,FLAT	1
5	PAFZZ		62445	0117 2303	WASHER,PLAIN	1
6	PAFZZ	3120013969835	62445	0224 5837	BEARING,SLEEVE	1
7	PAFZZ	5307013987394	62445	0112 6209	STUD,PLAIN M8X50	6
8	XDFZZ		62445	1172303	WASHER,FLAT M8	12
9	PAFZZ	5310121701310	62445	0113 6452	NUT,PLAIN,HEXAGON M8	6

END OF FIGURE

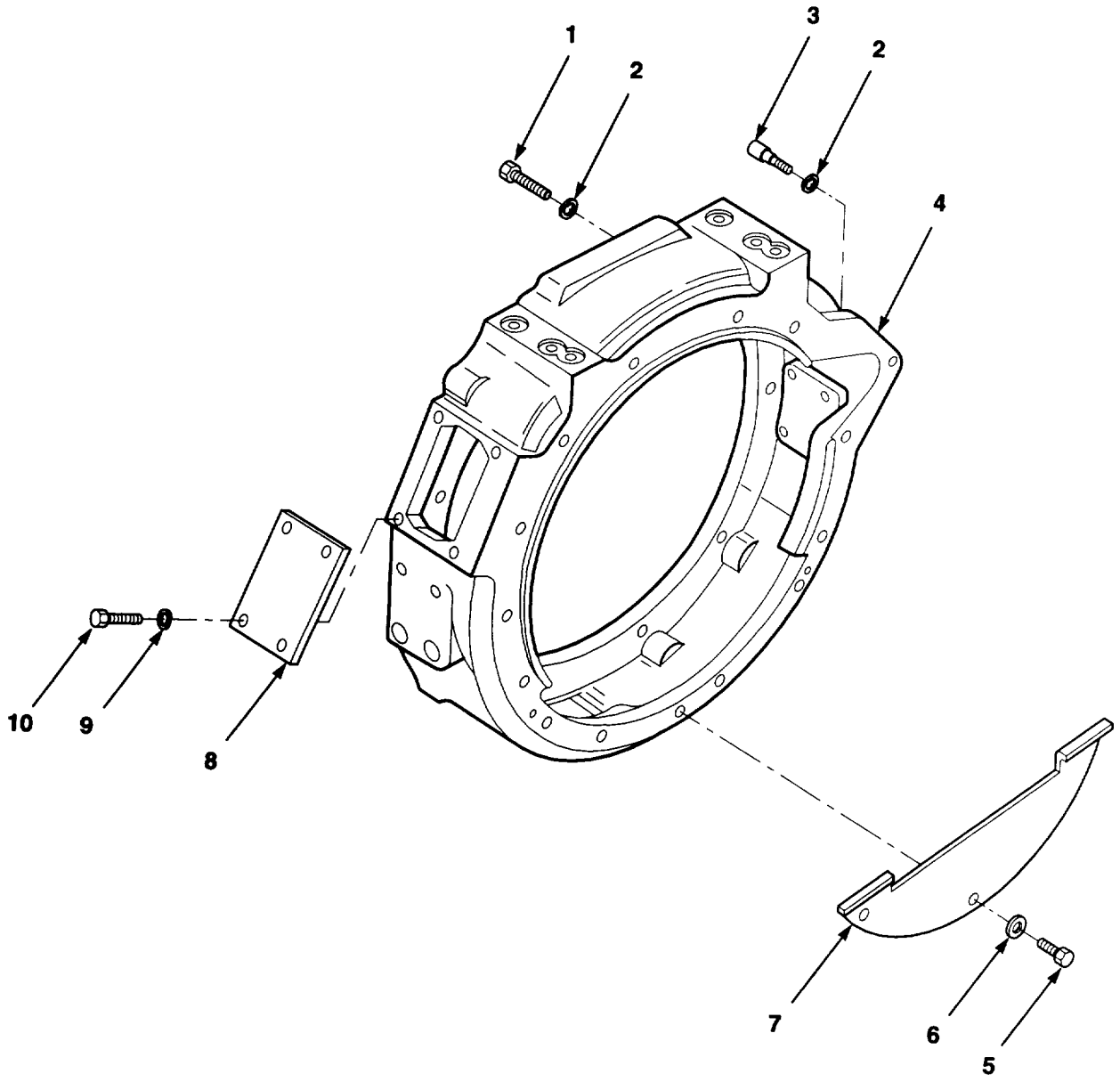

Figure 8. Flywheel Housing

https://truckmanualshub.com/ 28

(1) ITEM NO.	(2) SMR CODE	(3) NSN	(4) CAGEC	(5) PART NUMBER	(6) DESCRIPTION AND USABLE ON CODES (UOC)	(7) QTY
					GROUP 0103 FLYWHEEL ASSEMBLY FIG. 8 FLYWHEEL HOUSING	
1	PAFZZ	5306011939282	62445	111-2429	BOLT,MACHINE	13
2	PAFZZ		62445	0110 2800	WASHER,LOCK N10	14
3	PAFZZ	5305012747424	62445	111 0664	SCREW,CAP,SOCKET HE M10X30	1
4	XBFZZ		62445	2242050	HOUSING,ADAPTER	1
5	PAFZZ		89749	4CM610	SCREW,CAP,HEXAGON H M8SX20	3
6	PAFZZ	5310013587977	77237	6EM60	WASHER,LOCK M6	3
7	XDFZZ		62445	3364077	PLATE,COVER	1
8	PAFZZ	5340013956288	62445	0210 2313	COVER,ACCESS	1
9	PAFZZ	5310010135630	36719	1102799	WASHER,LOCK M8	4
10	PAFZZ	5305012464430	36719	111 2295	SCREW,CAP,HEXAGON H M8X10	4

END OF FIGURE

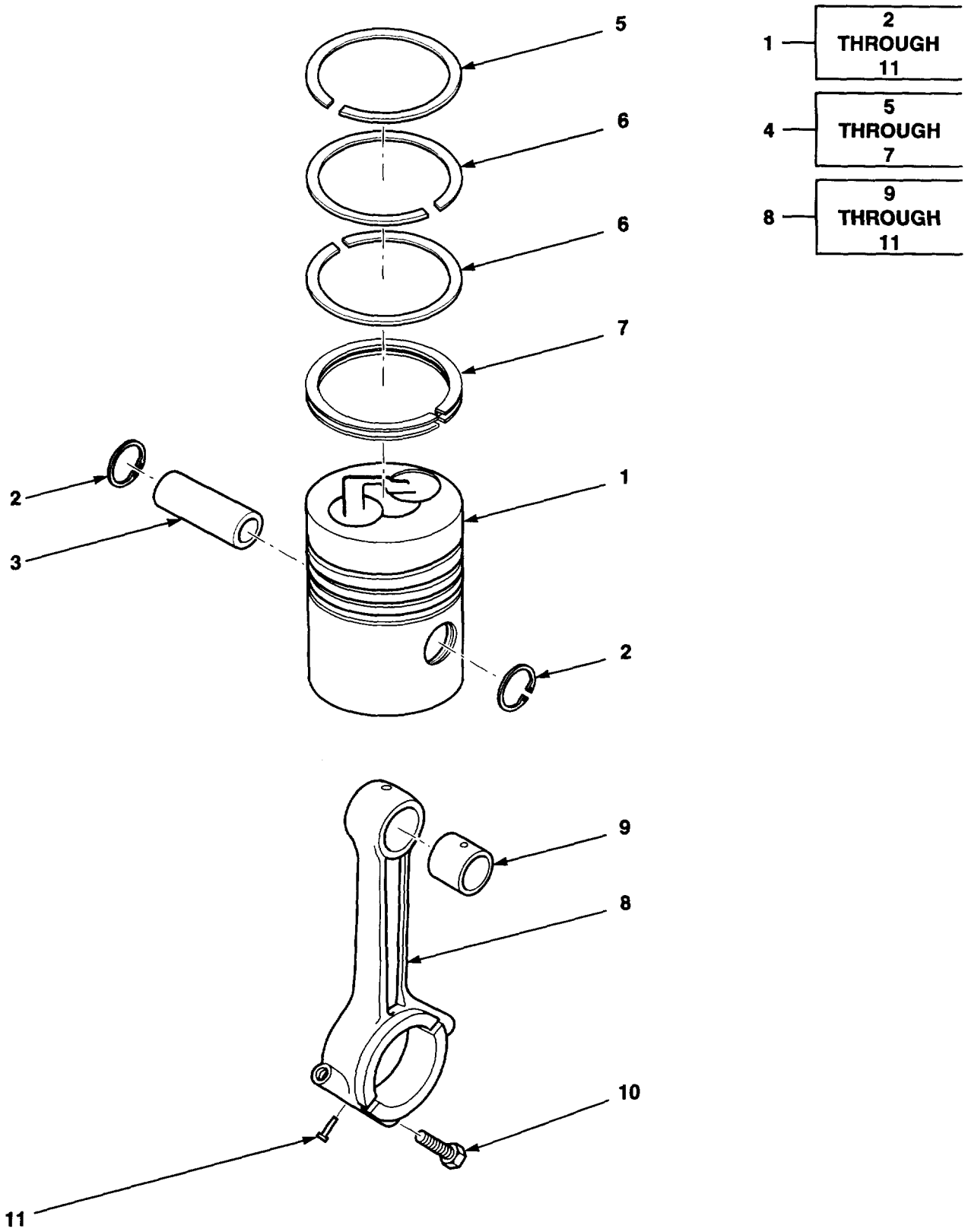

Figure 9. Piston and Connecting Rod

https://truckmanualshub.com/ 30

(1) ITEM NO.	(2) SMR CODE	(3) NSN	(4) CAGEC	(5) PART NUMBER	(6) DESCRIPTION AND USABLE ON CODES (UOC)	(7) QTY
					GROUP 0104 PISTONS, CONNECTING RODS FIG. 9 PISTON AND CONNECTING ROD	
1	XDHHH		62445	0223 3072	PISTON,INTERNAL COM 100MM	4
2	PAHZZ	5365011966635	62445	110-7821	.RING,RETAINING M35X1.5	2
3	XDHZZ		62445	3371660	.PIN,PISTON	1
4	PAHZZ	2815012047958	62445	223 3074	.RING SET,PISTON	1
5	PAHZZ	2815011925872	62445	1171718	..RING,PISTON TRAPEZOIDAL	1
6	XDHZZ		62445	1171722	..RING,PISTON TAPER FACE	2
7	XDHZZ		62445	1161089	..RING,PISTON OIL CONTROL	1
8	PAHHH	4310013700247	62445	0415-0450	.CONNECTING ROD,PIST	1
9	PAHZZ	3120011976657	62445	3371612	..BUSHING,SLEEVE	1
10	PAHZZ	5306011960433	62445	2235520	..BOLT,MACHINE	1
11	PAHZZ	5315011955439	62445	3371587	..PIN	1

END OF FIGURE

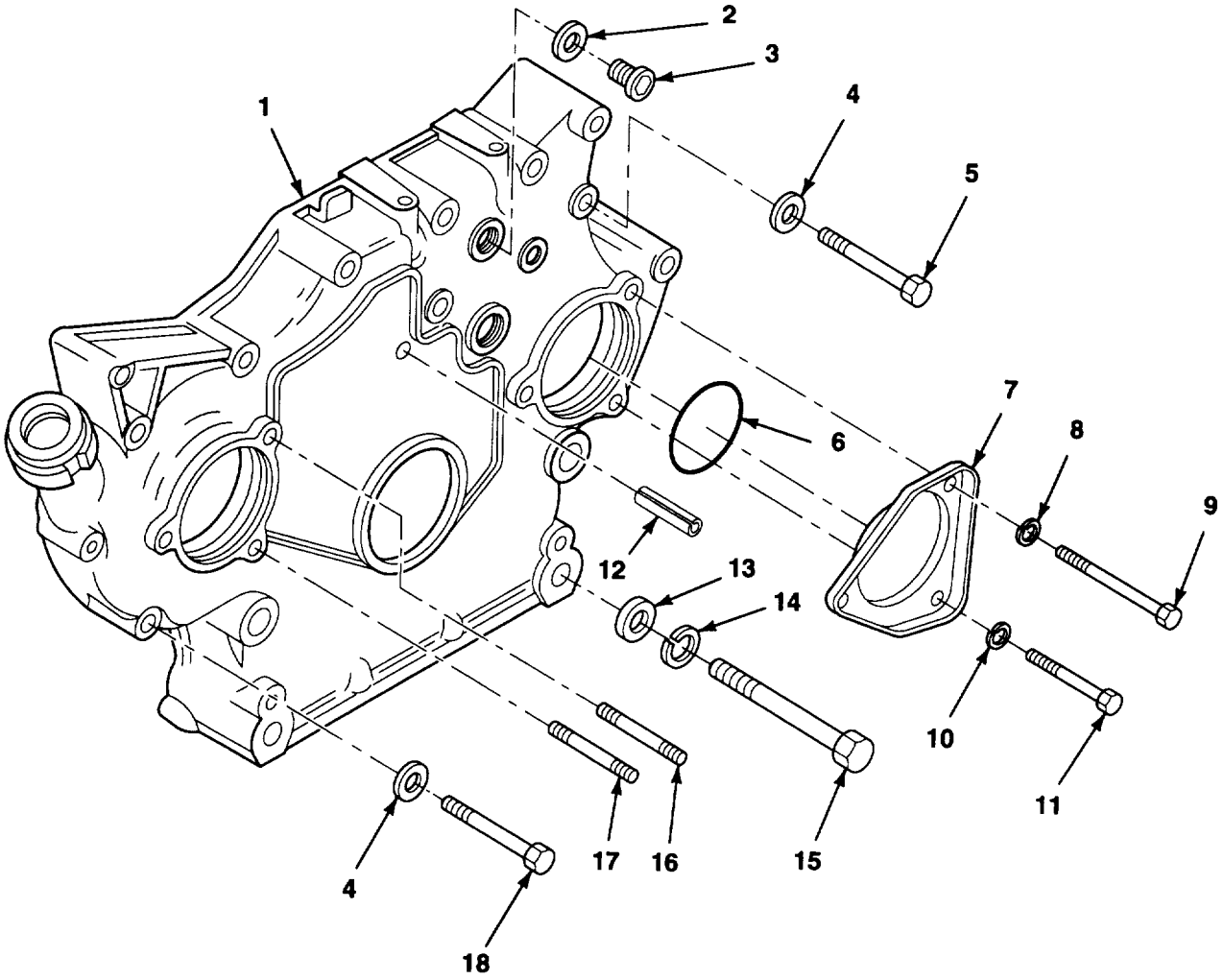

Figure 10. Engine Front Cover Installation

https://truckmanualshub.com/ 32

(1) ITEM NO.	(2) SMR CODE	(3) NSN	(4) CAGEC	(5) PART NUMBER	(6) DESCRIPTION AND USABLE ON CODES (UOC)	(7) QTY
					GROUP 0105 VALVES, CAMSHAFTS AND TIMING SYSTEM FIG. 10 ENGINE FRONT COVER INSTALLATION	
1	XDFZZ		62445	0415 8412	COVER,TRANSMISSION	1
2	PAFZZ	5330013958016	62445	0111 8716	SEAL RING,METAL	1
3	PAFZZ	5365013955118	62445	0115 1441	PLUG,MACHINE THREAD	1
4	PAFZZ	5310010135463	62445	110-7101	WASHER,FLAT M8	3
5	PAFZZ	5306011939285	62445	1111179	BOLT,MACHINE M8X70	3
6	PAFZZ	5330011949950	62445	1166111	O-RING	1
7	PAFZZ	5340013954658	62445	0415 2404	COVER,ACCESS	1
8	PAFZZ	5310010135631	36719	1102800	WASHER,LOCK M10	1
9	PAFZZ	5305012742097	62445	111 1336	SCREW,CAP,HEXAGON H M10X75	5
10	PAFZZ	5310010135630	36719	1102799	WASHER,LOCK M8	1
11	XDFZZ		08286	DIN933M8X8-8.8A2 P	SCREW,CAP,HEXAGON H M8X8	1
12	PAFZZ	3120011957984	62445	1115459	BUSHING,SLEEVE M6X45	1
13	PAFZZ	5365011940758	62445	1107556	SPACER,SLEEVE M15	16
14	PAFZZ	5310012353084	62445	110-2802	WASHER,LOCK M14	4
15	PAFZZ	5306013955877	62445	0111 1770	BOLT,MACHINE M14X100	4
16	PAFZZ	5307011963329	62445	1174191	STUD,PLAIN M8X25	1
17	PAFZZ	5307011963330	62445	1174192	STUD,PLAIN M8X40	1
18	PAFZZ	5305121419877	D8286	DIN933-M8X60-8.8 -A2P	SCREW,CAP,HEXAGON H M8X60	1

END OF FIGURE

https://truckmanualshub.com/ 33

3 — 4

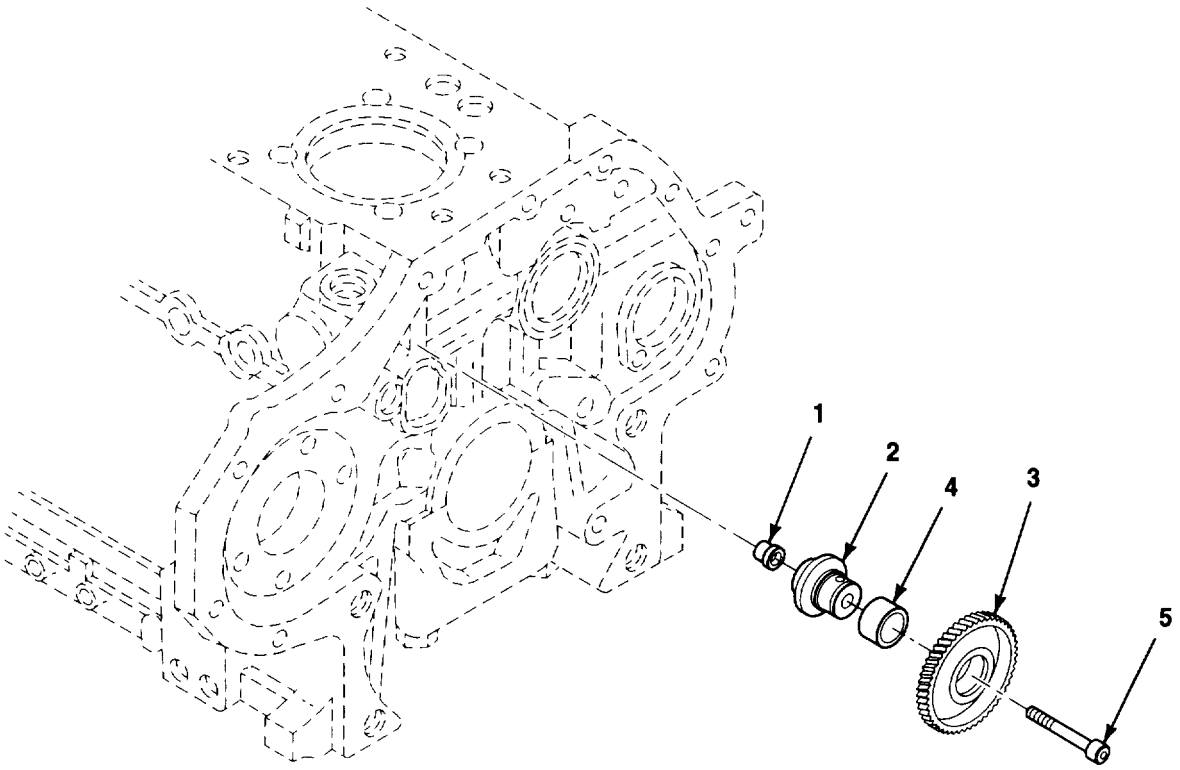

Figure 11. Idler Gear

https://truckmanualshub.com/ 34

(1) ITEM NO.	(2) SMR CODE	(3) NSN	(4) CAGEC	(5) PART NUMBER	(6) DESCRIPTION AND USABLE ON CODES (UOC)	(7) QTY
					GROUP 0105 VALVES, CAMSHAFTS AND TIMING SYSTEM	
					FIG. 11 IDLER GEAR	
1	PAFZZ	5310013962856	62445	0415 6283	NUT,PLAIN,HEXAGON	1
2	PAFZZ	3110013971630	62445	0415 6284	BEARING,WASHER,THRU	1
3	XDFFF		62445	0415 3996	GEAR,SPUR	1
4	PAFZZ	3120011957985	62445	3362538	.BUSHING,SLEEVE	1
5	PAFZZ	5305011945926	62445	1110688	SCREW M10X60	1

END OF FIGURE

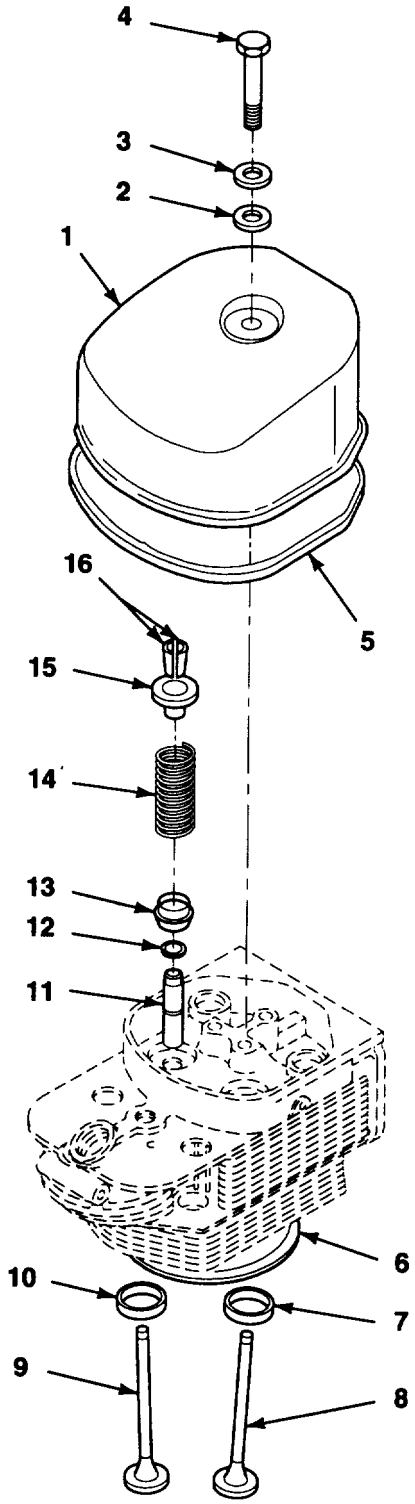

Figure 12. Valve and Valve Cover

https://truckmanualshub.com/ 36

(1) ITEM NO.	(2) SMR CODE	(3) NSN	(4) CAGEC	(5) PART NUMBER	(6) DESCRIPTION AND USABLE ON CODES (UOC)	(7) QTY
					GROUP 0105 VALVES, CAMSHAFTS AND TIMING SYSTEM	
					FIG. 12 VALVES AND VALVE COVER	
1	PAOZZ	2815011957143	62445	2234784	COVER,ENGINE POPPET	4
2	XBOZZ		62445	0223 4263	WASHER M8	4
3	PAFZZ	310010135463	62445	110-7101	WASHER,FLAT M8	4
4	PAOZZ	5305012685796	15526	D1N933-M8-1.25X30-8.8-A4C	SCREW,CAP,HEXAGON H M8X30	4
5	PAOZZ	5330013644893	62445	4157234	GASKET	4
6	PAFZZ	5365014347401	62445	0415 7654	SPACER,RING	4
7	PAHZZ	2815010219093	62445	213-7306	INSERT,ENGINE VALVE	4
8	XDFZZ		62445	54153697	VALVE,POPPET,ENGINE	4
9	PAFZZ	2815012941587	62445	4153631	VALVE,POPPET,ENGINE	4
10	PAHZZ	2815010219092	36719	2137302	INSERT,ENGINE VALVE	4
11	PAHZZ	2815011858298	62445	223-2528	GUIDE,VALVE STEM	8
12	PAFZZ	5365010493976	36719	1215500	RING,RETAINING	8
13	PAFZZ	2815012347390	62445	213-1029	RETAINER,HELICAL CO	8
14	PAFZZ	5360010123590	62445	336 9305	SPRING	8
15	PAFZZ	5340010291194	62445	3371748	SPRING RETAINER	8
16	PAFZZ	2815000030021	62445	116-8817	LOCK,VALVE SPRING R	16

END OF FIGURE

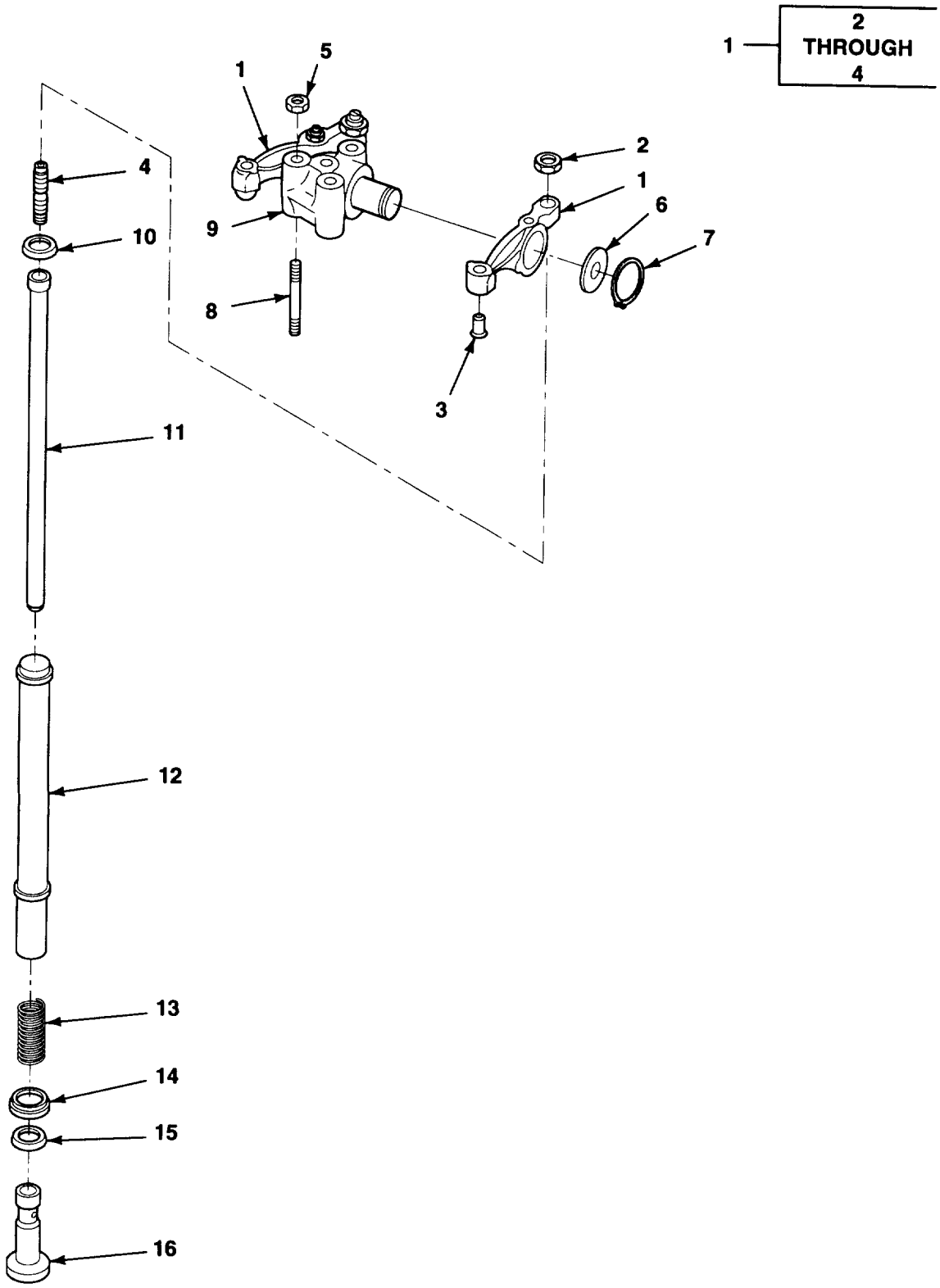

Figure 13. Rocker Arms and Pushrods

https://truckmanualshub.com/ 38

(1) ITEM NO.	(2) SMR CODE	(3) NSN	(4) CAGEC	(5) PART NUMBER	(6) DESCRIPTION AND USABLE ON CODES (UOC)	(7) QTY
					GROUP 0105 VALVES, CAMSHAFTS AND TIMING SYSTEM	
					FIG. 13 ROCKER ARMS AND PUSHRODS	
1	PAOFZ	2815013428730	62445	415 2752	ROCKER ARM,ENGINE P	8
2	PAOZZ	5310012097212	62445	1113148	.NUT,PLAIN,HEXAGON	1
3	PAFZZ	5310013962859	62445	0223 6578	.WASHER,FLAT	1
4	PAOZZ	5305011945930	62445	3365861	SCREW	1
5	PAFZZ	5310012351857	62445	111-2824	NUT,PLAIN,HEXAGON	12
6	PAFZZ	5310012742086	62445	121 6105	WASHER,FLAT	8
7	PAOZZ	5310011510041	62445	110-7731	CIRCLIP	8
8	PAFZZ	5307012070170	62445	112-4753	STUD,PLAIN	12
9	PAFZZ		62445	415 2750	BRACKET,ROCKER ARM	4
10	PAFZZ	5310011907468	62445	2232840	WASHER,FLAT	8
11	PAFZA	2815013243705	62445	213 3985	PUSH ROD,ENGINE POP	8
12	PAFZZ	5340011949143	62445	3371888	COVER,ACCESS	8
13	PAFZZ	5360011918019	62445	337-1876	SPRING,HELICAL,COMP	8
14	PAFZZ	2815010220094	36719	3371887	RETAINER,HELICAL CO	8
15	PAFZZ	5310011907468	62445	2232840	WASHER,FLAT	8
16	PAFZZ	2815011929801	62445	3371885	TAPPET,ENGINE POPPE	8

END OF FIGURE

https://truckmanualshub.com/ 39

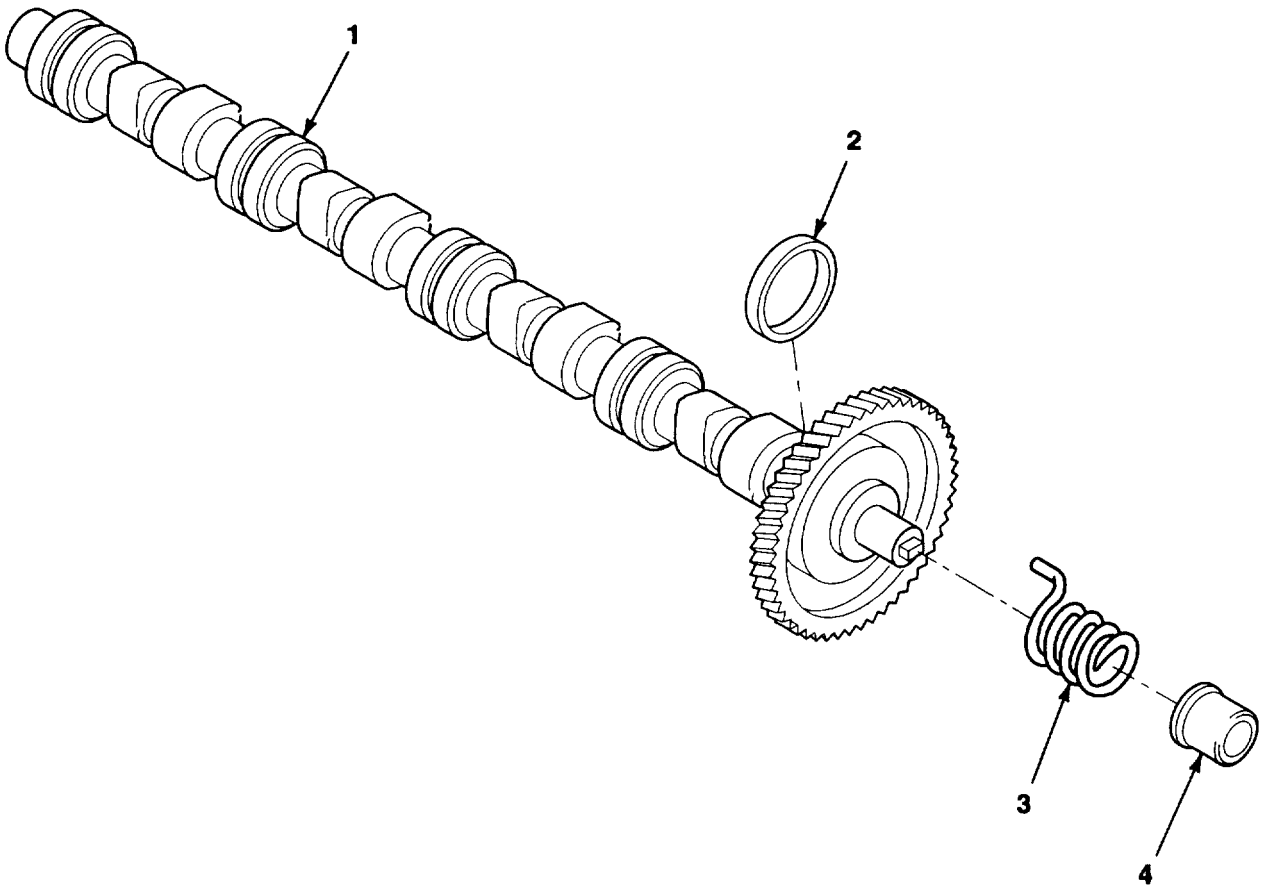

Figure 14. Camshaft Assembly

https://truckmanualshub.com/ 40

(1) ITEM NO.	(2) SMR CODE	(3) NSN	(4) CAGEC	(5) PART NUMBER	(6) DESCRIPTION AND USABLE ON CODES (UOC)	(7) QTY
					GROUP 0105 VALVES, CAMSHAFTS AND TIMING SYSTEM FIG. 14 CAMSHAFT ASSEMBLY	
1	PAHHZ	2815011919418	62445	2101223	CAMSHAFT, ENGINE	1
2	PAHZZ	3120011946285	62445	336-7789	BEARING, WASHER, THRU	1
3	XBHZZ	5360013176255	62445	3469625	SPRING, HELICAL, COMP	1
4	XBHZZ	5340013954660	62445	0130 1337	CAP SET, PROTECTIVE,	1
					END OF FIGURE	

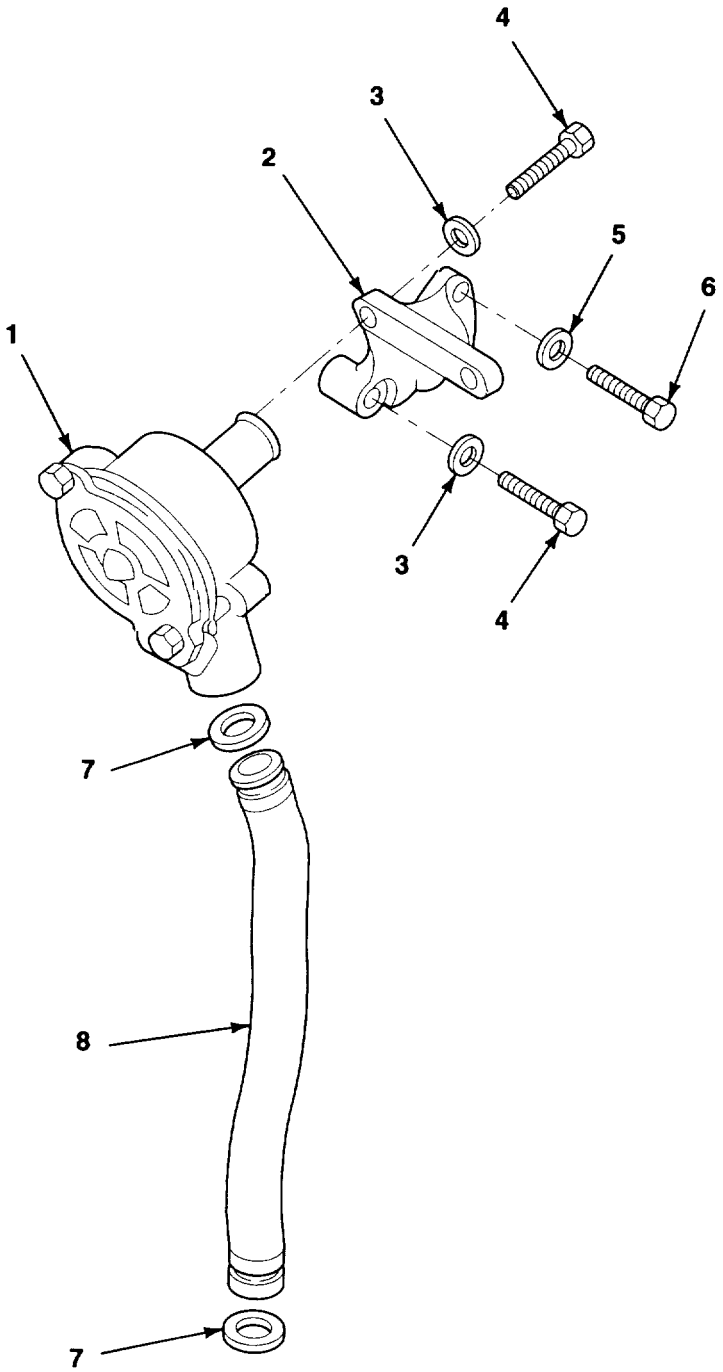

Figure 15. Breather Valve Installation

https://truckmanualshub.com/ 42

(1) ITEM NO.	(2) SMR CODE	(3) NSN	(4) CAGEC	(5) PART NUMBER	(6) DESCRIPTION AND USABLE ON CODES (UOC)	(7) QTY
					GROUP 0106 ENGINE LUBRICATION SYSTEM FIG. 15 BREATHER VALVE INSTALLATION	
1	PAOZZ	4820013967742	62445	0223 9279	VALVE, CHECK	1
2	PAOZZ	4820123212533	62445	0415 2424	BRACKET, VEHICULAR	1
3	PAOZZ	5310012443775	62445	223-4263	WASHER, FLAT M8	3
4	PAOZZ	5305012391322	62445	111-2341	SCREW, CAP, SOCKET HE M8X30	3
5	PAOZZ	5310012372050	62445	331-2840	WASHER, FLAT M6	1
6	PAOZZ	5305121419848	D8286	DIN933-M6X30-8.8 -A2P	SCREW, CAP, HEXAGON H M6X30	1
7	PAOZZ	5330013960443	62445	0116 0480	SEAL, NONMETALLIC	2
8	PAOZZ	4710123208233	62445	0415 0820	PIPE, BENT, METALLIC	1
					END OF FIGURE	

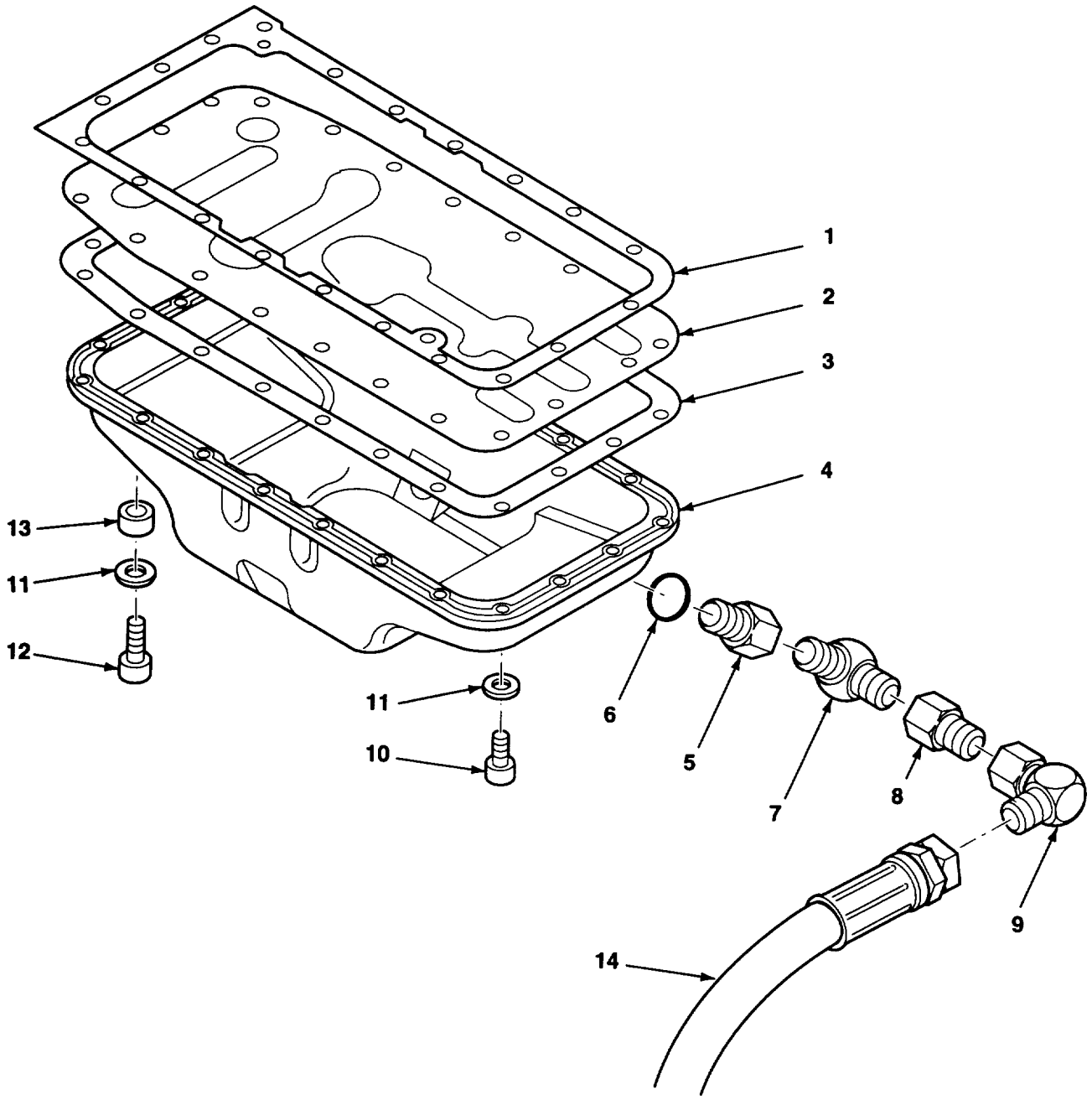

Figure 16. Oil Pan

https://truckmanualshub.com/ 44

(1) ITEM NO.	(2) SMR CODE	(3) NSN	(4) CAGEC	(5) PART NUMBER	(6) DESCRIPTION AND USABLE ON CODES (UOC)	(7) QTY
					GROUP 0106 ENGINE LUBRICATION SYSTEM	
					FIG. 16 OIL PAN	
1	PAFZZ	5330013644892	62445	3362574	GASKET	1
2	XDFZZ		62445	0415 4138	BAFFLE, FLUID COOLER	1
3	PAFZZ	5330011880903	62445	0415 7236	GASKET	1
4	PAFZZ	2815123370386	62445	0415 3143	OIL PAN	1
5	PAOZZ		13174	883-FS-12X08	REDUCER, TUBE	1
6	PAFZZ	5365013893470	62445	0111 8784	RING, RETAINING	1
7	PAOZZ	4730012616561	13174	63UC-08X08	ELBOW, TUBE	1
8	PAOZZ		53790	848-FSO-08X16	NIPPLE, TUBE	1
9	PAFZZ		93061	8-FF50X-S	CONNECTOR, MULTIPLE,	1
10	PAFZZ	5305011945927	62445	1102193	SCREW	20
11	PAFZZ	5310012372051	62445	110-7548	WASHER, FLAT	21
12	PAFZZ	5305011945928	62445	1110577	SCREW	1
13	PAFZZ	3120011962583	62445	1216151	BUSHING, SLEEVE	1
14	PAOZZ		24161	10C5E-8-8MBX45-8 -8FJX-32-10SG	HOSE ASSEMBLY, NONME	1
					END OF FIGURE	

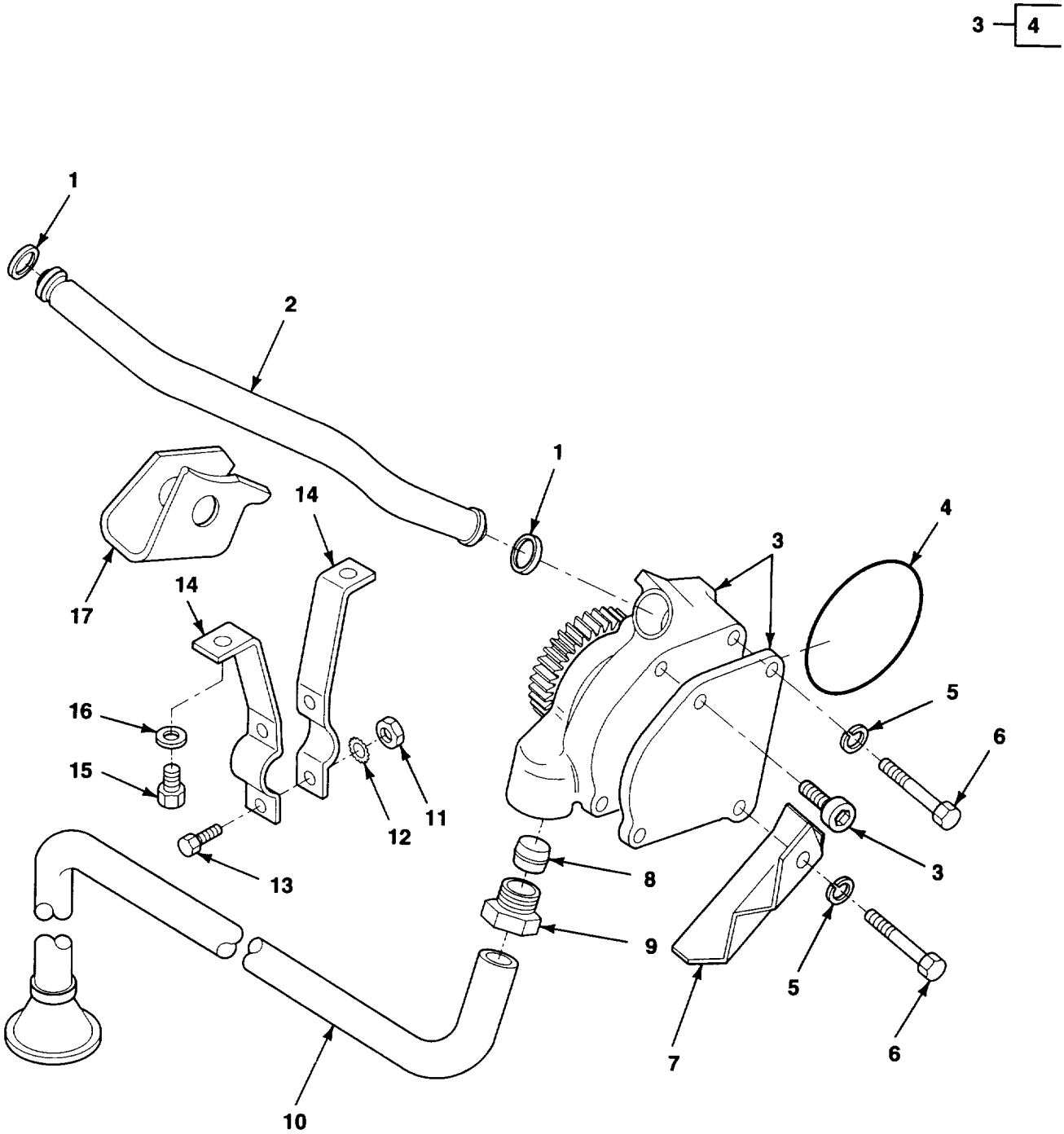

Figure 17. Oil Pump and Pipes

https://truckmanualshub.com/ 46

(1) ITEM NO.	(2) SMR CODE	(3) NSN	(4) CAGEC	(5) PART NUMBER	(6) DESCRIPTION AND USABLE ON CODES (UOC)	(7) QTY
					GROUP 0106 ENGINE LUBRICATION SYSTEM FIG. 17 OIL PUMP AND PIPES	
1	PAFZZ	5330012097304	62445	1174605	GASKET	2
2	PAFZZ	4710012081313	62445	2239984	TUBE, BENT, METALLIC	1
3	PAFZZ	2815123370095	62445	0415 9964	OIL PUMP ASSEMBLY, E	1
4	PAFZZ	5330013960442	62445	0347 7881	.SEAL, NONMETALLIC RO	1
5	PAFZZ	5310012527222	62445	1169689	WASHER, LOCK	2
6	PAFZZ	5305121416606	D8286	DIN931-M8X60-8.8 -A2P	SCREW, CAP, HEXAGON H	2
7	PAFZZ	2815123370096	62445	0415 9697	BAFFLE, AIRFLOW, ENGI	1
8	XDFZZ		62445	1216512	SLEEVE, TUBE COUPLI	1
9	PAFZZ	5310012001095	62445	1216500	NUT, FERRULE	1
10	PAFZZ		62445	0415 3138	PIPE, BENT, METALLIC	1
11	PAFZZ	5310121564991	62445	0111 2813	NUT, PLAIN, HEXAGON M6	2
12	PAFZZ	5310121564913	62445	0111 7863	WASHER, LOCK	2
13	PAFZZ	5305011870531	62445	1103316	SCREW, CAP, HEXAGON H M6X16	2
14	PAFZZ	5340012047153	62445	336 3064	BRACKET, PIPE	2
15	PAFZZ	5306012542361	62445	1112299	BOLT, MACHINE M8X12	2
16	PAFZZ	5310014347274	62445	0110 7548	WASHER, FLAT M8	2
17	PAFZZ	5340013978132	62445	0213 8201	BRACKET, ANGLE	1
					END OF FIGURE	

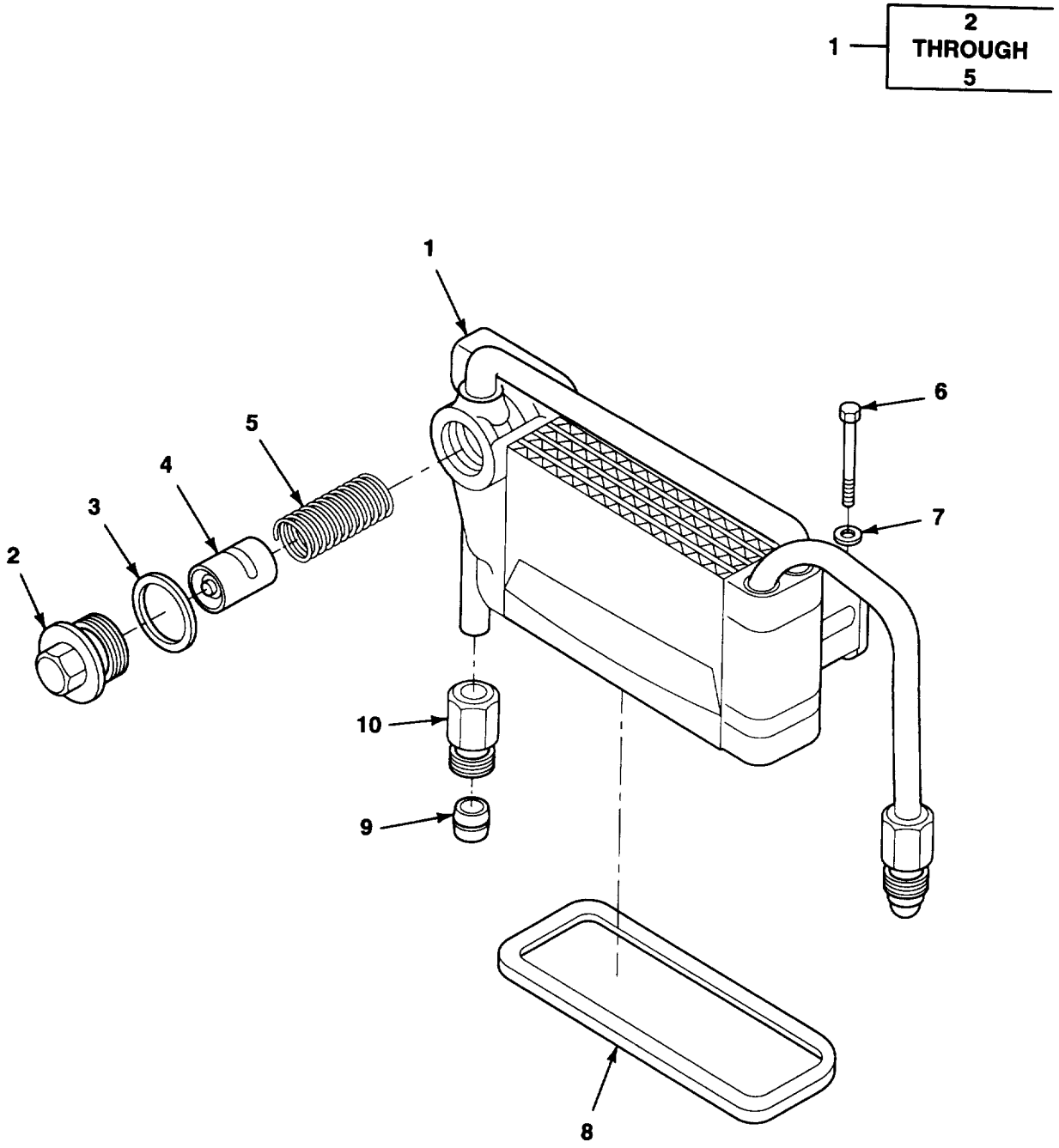

Figure 18. Engine Oil Cooler

https://truckmanualshub.com/ 48

(1) ITEM NO.	(2) SMR CODE	(3) NSN	(4) CAGEC	(5) PART NUMBER	(6) DESCRIPTION AND USABLE ON CODES (UOC)	(7) QTY
					GROUP 0106 ENGINE LUBRICATION SYSTEM FIG. 18 ENGINE OIL COOLER	
1	PAOOZ	2935011926067	33968	36734952	COOLER, LUBRICATING	1
2	PAOZZ		62445	0223 0921	.PLUG	1
3	PAOZZ		62445	0111 8835	.WASHER, FLAT	1
4	PAOZZ		62445	0223 3216	.VALVE	1
5	PAOZZ		62445	0223 3217	.SPRING	1
6	PAOZZ	5306012527113	62445	1111193	BOLT, MACHINE M8X80	2
7	PAOZZ	5310012834552	62445	121 6127	WASHER, FLAT M8	2
8	PAOZZ	5330011880904	62445	2100132	GASKET	1
9	PAOZZ	4730011954244	62445	1216511	SLEEVE, COMPRESSION,	2
10	PAOZZ	4730013965511	62445	0415 7445	NUT, UNION	2
					END OF FIGURE	

https://truckmanualshub.com/ 49

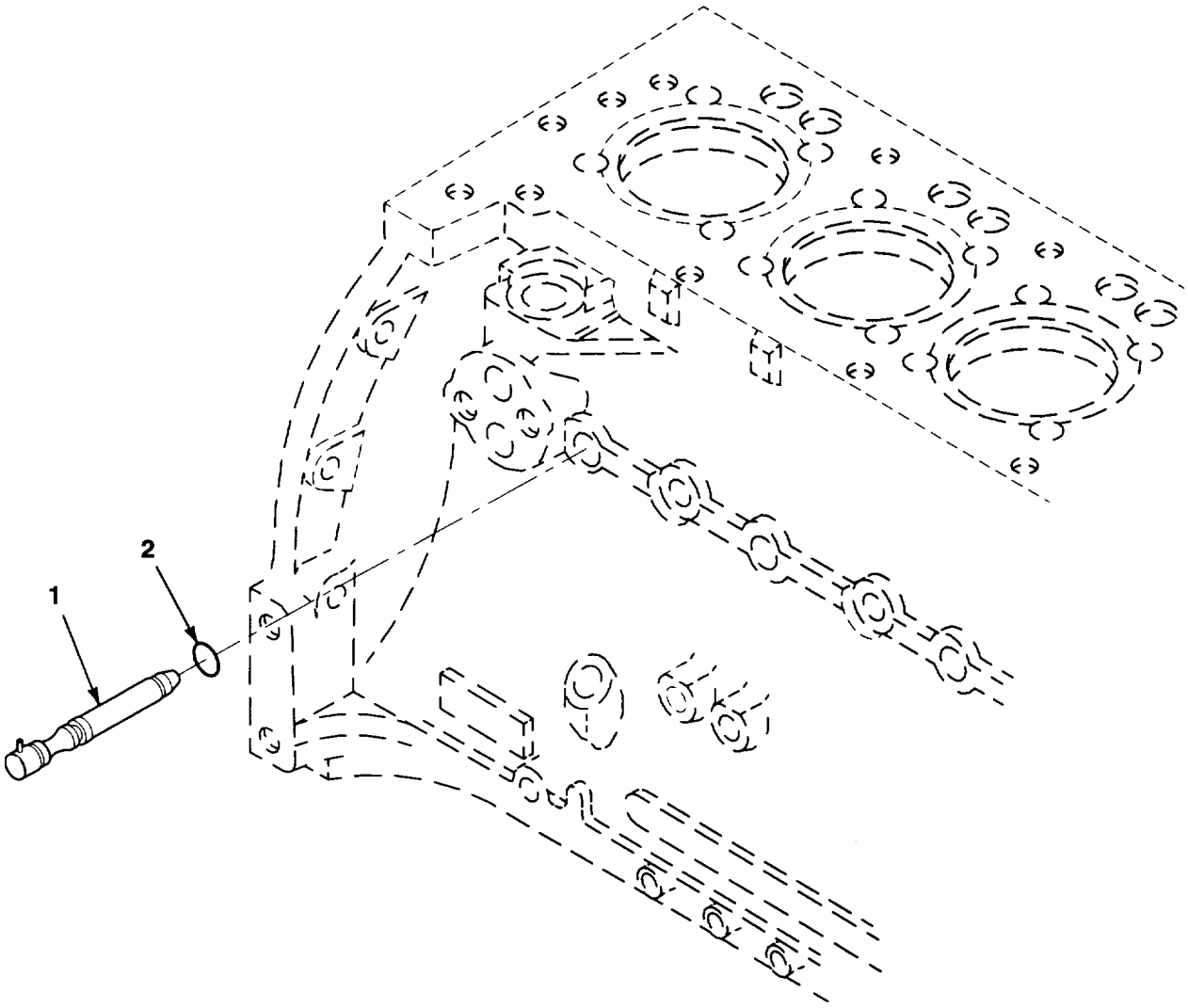

Figure 19. Oil Spray Nozzle

https://truckmanualshub.com/ 50

(1) ITEM NO.	(2) SMR CODE	(3) NSN	(4) CAGEC	(5) PART NUMBER	(6) DESCRIPTION AND USABLE ON CODES (UOC)	(7) QTY
					GROUP 0106 ENGINE LUBRICATION SYSTEM FIG. 19 OIL SPRAY NOZZLE	
1	PAHZZ	2910011910684	62445	2239589	NOZZLE, OIL SPRAY, CY	4
2	PAHZZ	5330011880851	62445	1173838	O-RING	4
					END OF FIGURE	

https://truckmanualshub.com/ 51

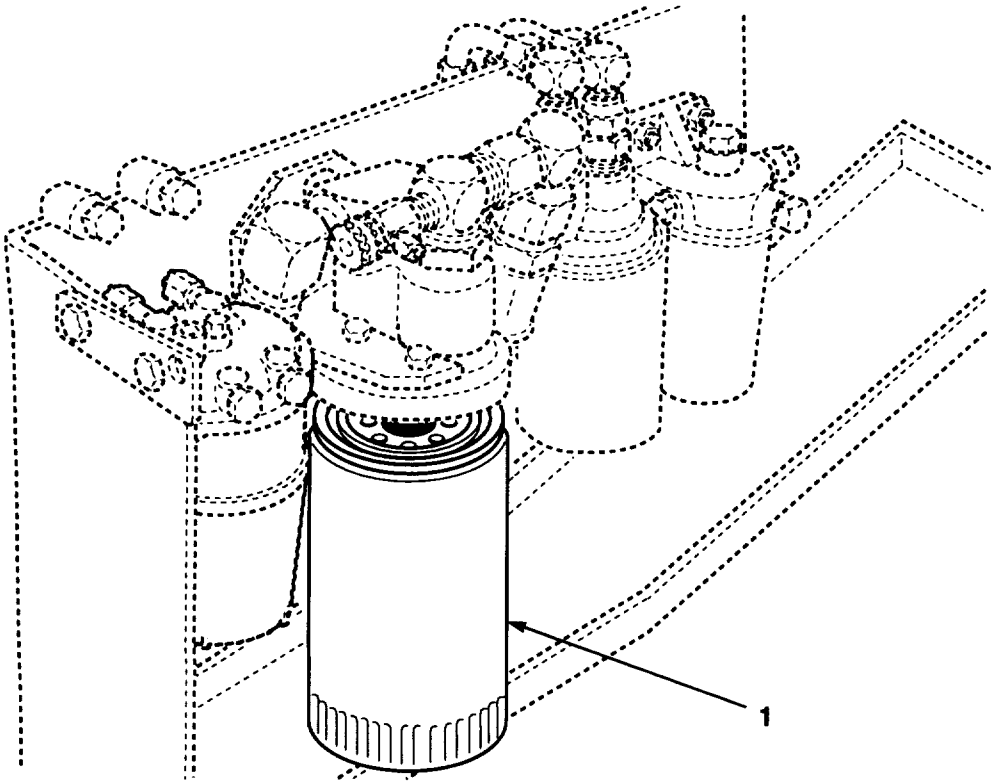

Figure 20. Engine Oil Filter

https://truckmanualshub.com/ 52

(1) ITEM NO.	(2) SMR CODE	(3) NSN	(4) CAGEC	(5) PART NUMBER	(6) DESCRIPTION AND USABLE ON CODES (UOC)	(7) QTY
					GROUP 0106 ENGINE LUBRICATION SYSTEM FIG. 20 ENGINE OIL FILTER	
1	PAOZZ	2940004057377	62445	1174418	FILTER ELEMENT, FLUI	1
					END OF FIGURE	

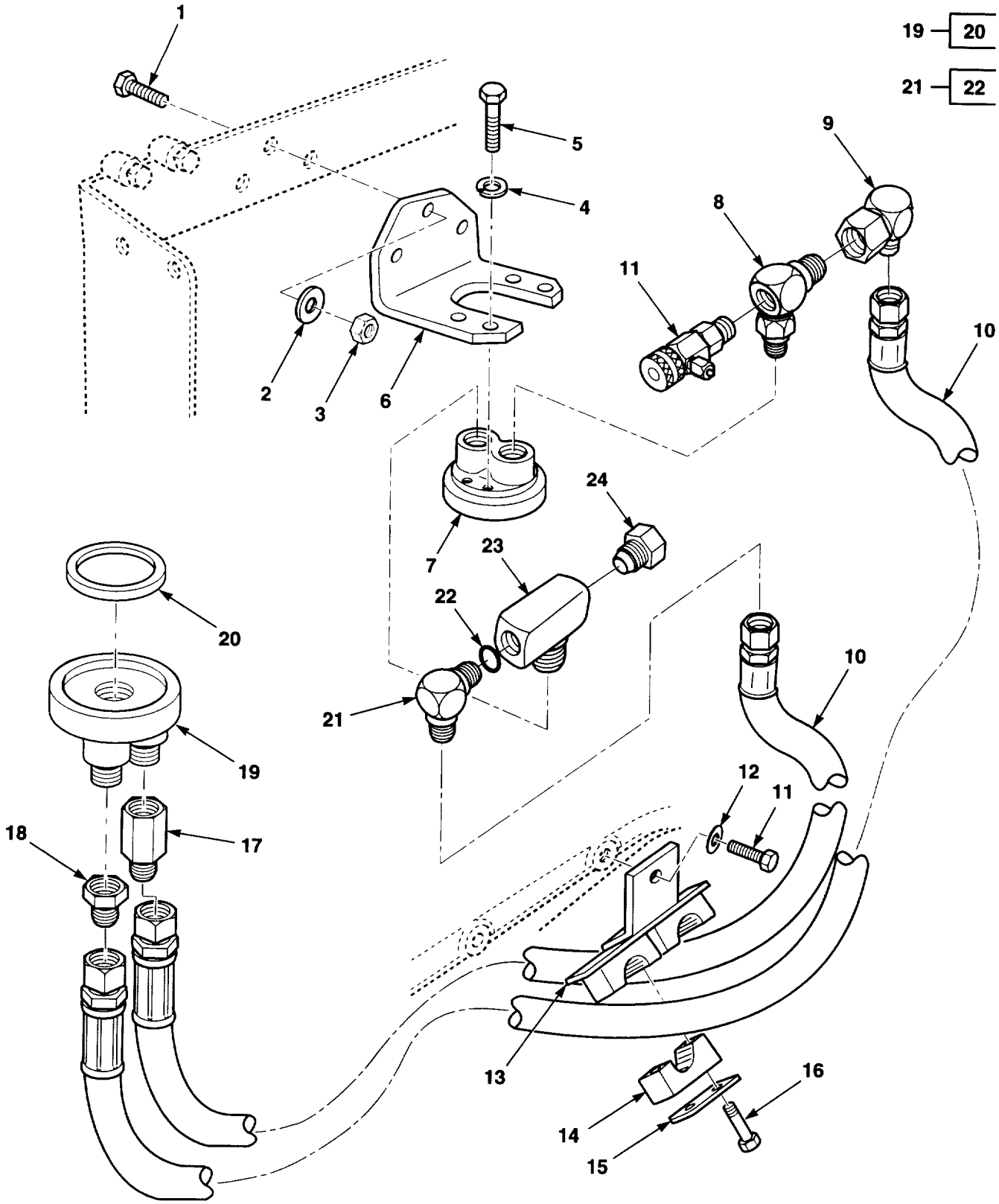

Figure 21. Remote Oil Filter Adapter

https://truckmanualshub.com/ 54

(1) ITEM NO.	(2) SMR CODE	(3) NSN	(4) CAGEC	(5) PART NUMBER	(6) DESCRIPTION AND USABLE ON CODES (UOC)	(7) QTY
					GROUP 0106 ENGINE LUBRICATION SYSTEM FIG. 21 REMOTE OIL FILTER ADAPTER	
1	PAOZZ		07443	1CM830	SCREW, CAP, HEXAGON H	3
2	PAOZZ		07443	18EM824	WASHER, FLAT	3
3	PAOZZ		62445	01112824	NUT, HEX HD	3
4	PAOZZ	5310013588280	77237	4E5	WASHER, LOCK	4
5	PAOZZ	5305000076338	12603	1C512	SCREW	4
6	XBOZZ		07443	1410282	ANGLE, MODIFICATION	1
7	XBOZZ		OU9P2	7111-740	FILTER, HEAD	1
8	PAOZZ		OS1H5	2501-S-12-12-OE-2	ADAPTER, MODIFIED	1
9	PAOZZ		59257	12-SW-6	ELBOW, TUBE TO BOSS	1
10	PAOZZ		07443	1407839	HOSE ASSEMBLY, NONME	2
11	PAOZZ	5305121250321	89749	1CM820	SCREW, CAP, HEXAGON H M8X20	1
12	PAOZZ	5310013962874	89749	18EM816	WASHER, FLAT M8X16	1
13	XBOZZ		07443	1407797	BRACKET	1
14	PAOZZ		53790	4280PP	CLAMP, HALF	2
15	PAOZZ		53790	DP4	COVER, ACCESS	2
15	XBOZZ	5340012313916	53790	DP-3	COVER, ACCESS	1
16	PAOZZ	5306013032815	96906	MS90725-13	BOLT, MACHINE	4
17	XBOZZ		30327	848L-FS-12X12	ADAPTER, FLARE	1
18	PAOZZ	4730002028469	96906	MS51500A12	ADAPTER, STRAIGHT, PI	1
19	PAOZZ	4730013958794	62445	030-3032	CONNECTOR, MULTIPLE,	1
20	PAOZZ		07443	1411024	.GASKET	1
21	PAOZZ	4730002313017	59257	12-37-6	ELBOW, PIPE TO TUBE	1
22	PAOZZ		07443	1411024	.GASKET	1
23	PAOZZ		59257	12-PC-22	TEE, PIPE	1
24	PAOZZ		59257	12-8-HB	REDUCER, PIPE	1
					END OF FIGURE	

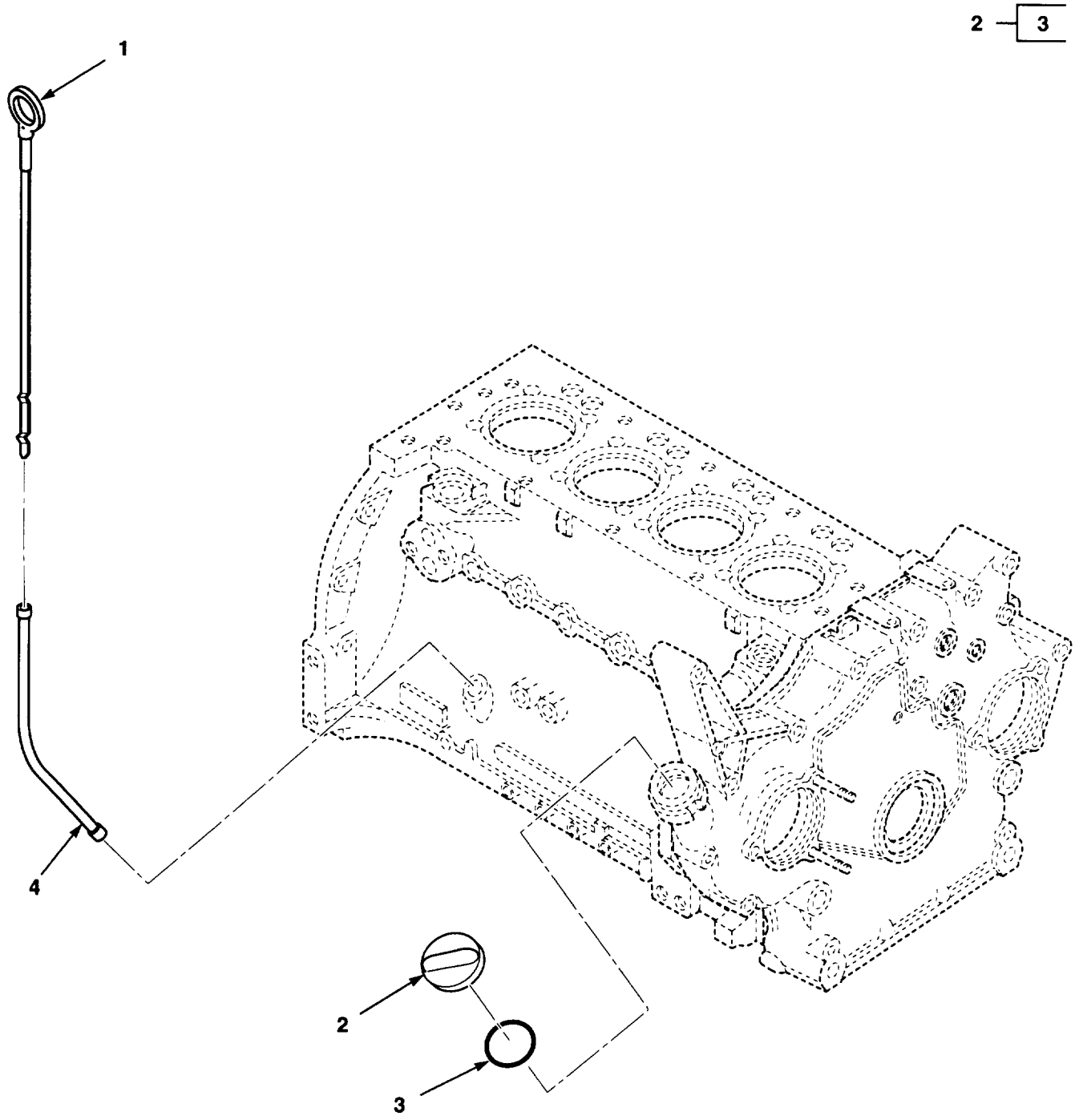

Figure 22. Oil Filler Cap and Dipstick

https://truckmanualshub.com/ 56

(1) ITEM NO.	(2) SMR CODE	(3) NSN	(4) CAGEC	(5) PART NUMBER	(6) DESCRIPTION AND USABLE ON CODES (UOC)	(7) QTY
					GROUP 0106 ENGINE LUBRICATION SYSTEM FIG. 22 OIL FILLER CAP AND DIPSTICK	
1	PAOZZ		07443	1408002	GAGE ROD, LIQUID LEV	1
2	PAOZZ		62445	01-0500 3320	CAP, FILLER, OPENING	1
3	PAOZZ	5365011937160	36719	123 6290	.SPACER, RING	1
4	PAOZZ		62445	0216 9403	FILLER NECK	1
					END OF FIGURE	

https://truckmanualshub.com/ 57

1 — 2

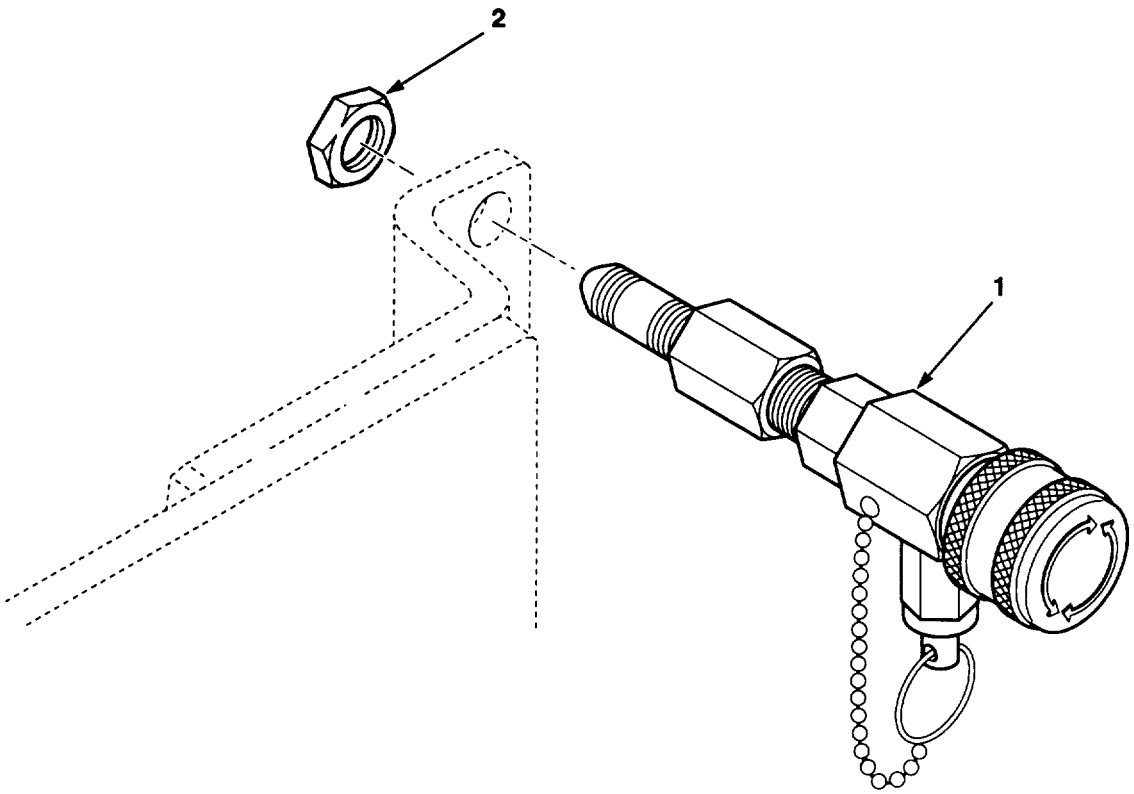

Figure 23. AOAP Valve

https://truckmanualshub.com/ 58

(1) ITEM NO.	(2) SMR CODE	(3) NSN	(4) CAGEC	(5) PART NUMBER	(6) DESCRIPTION AND USABLE ON CODES (UOC)	(7) QTY
					GROUP 0106 ENGINE LUBRICATION SYSTEM FIG. 23 AOAP VALVE	
1	PAFZZ	4820013935272	01276	FD15-1026-04	VALVE, BLEEDER, HYDRA	1
2	XAOZZ		01276	FD15-0126-04-XA	.NUT	1
					END OF FIGURE	

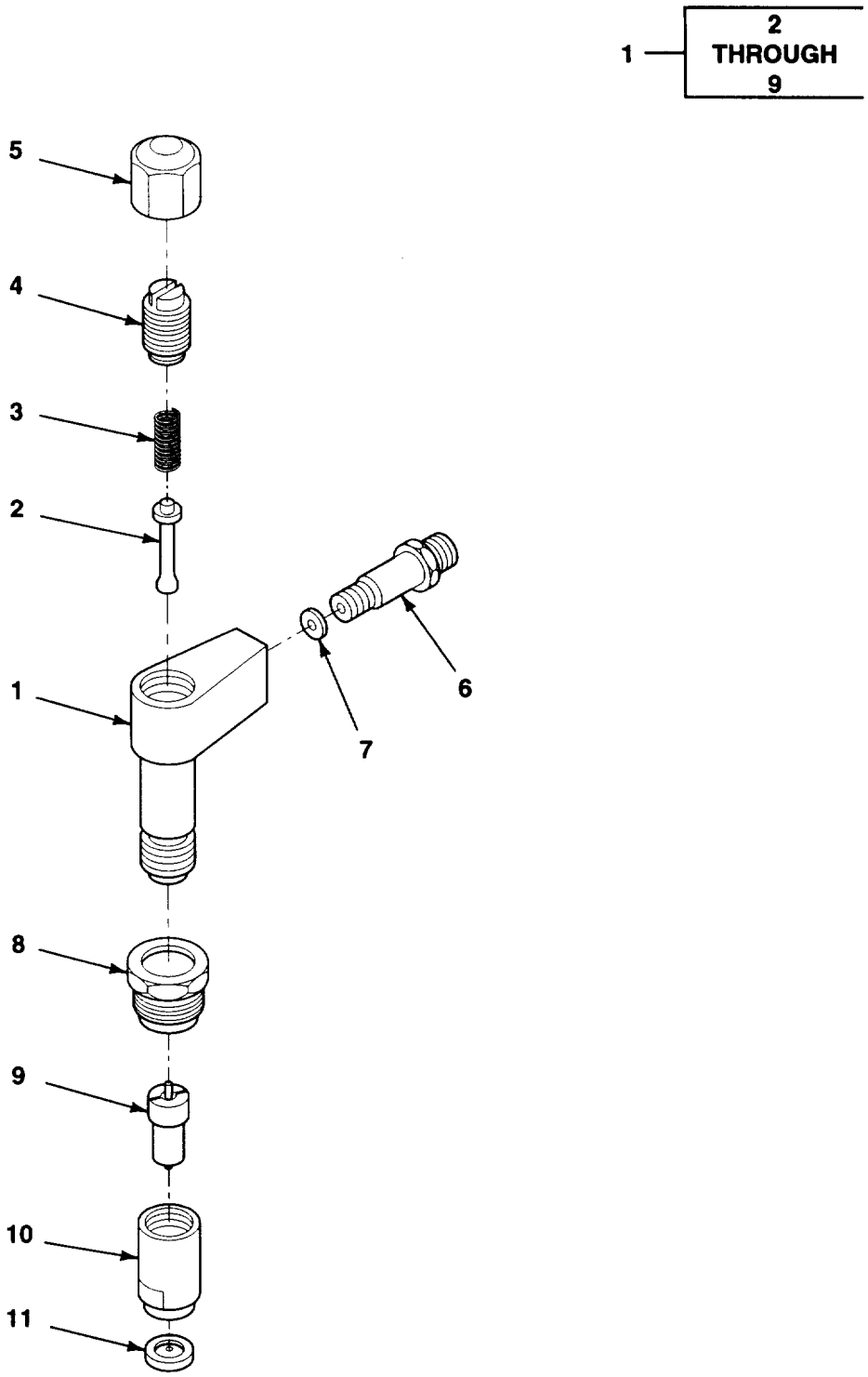

Figure 24. Fuel Injector

https://truckmanualshub.com/ 60

(1) ITEM NO.	(2) SMR CODE	(3) NSN	(4) CAGEC	(5) PART NUMBER	(6) DESCRIPTION AND USABLE ON CODES (UOC)	(7) QTY
					GROUP 03 FUEL SYSTEM	
					GROUP 0301 CARBURETOR, FUEL INJECTOR	
					FIG. 24 FUEL INJECTOR	
1	PAOZZ	2910123013452	D8015	0432227022	INJECTOR ASSEMBLY, F	4
2	XAOZZ		62445	129 0502	.BOLT, THRUST	1
3	XAOZZ		62445	129 0540	.SPRING, HELICAL	1
4	XAOZZ		62445	129 0528	.SCREW, BOLT	1
5	XAOZZ		62445	129 0513	.NUT, ACORN	1
6	PAOZZ	4730013965512	62445	0129 0522	.ADAPTER, STRAIGHT, TU	1
7	PAOZZ	5310013963869	62445	0130 9916	.WASHER, FLAT	1
8	XAOZZ		62445	213 1906	.SCREW, UNION	1
9	XAOZZ		62445	129 0531	.SCREW, BOLT	1
10	PAOZZ	2910121952896	D8015	0434250037	NOZZLE, FUEL INJECTI	4
11	PAOZZ	5330012786912	62445	337 2153	GASKET	4
					END OF FIGURE	

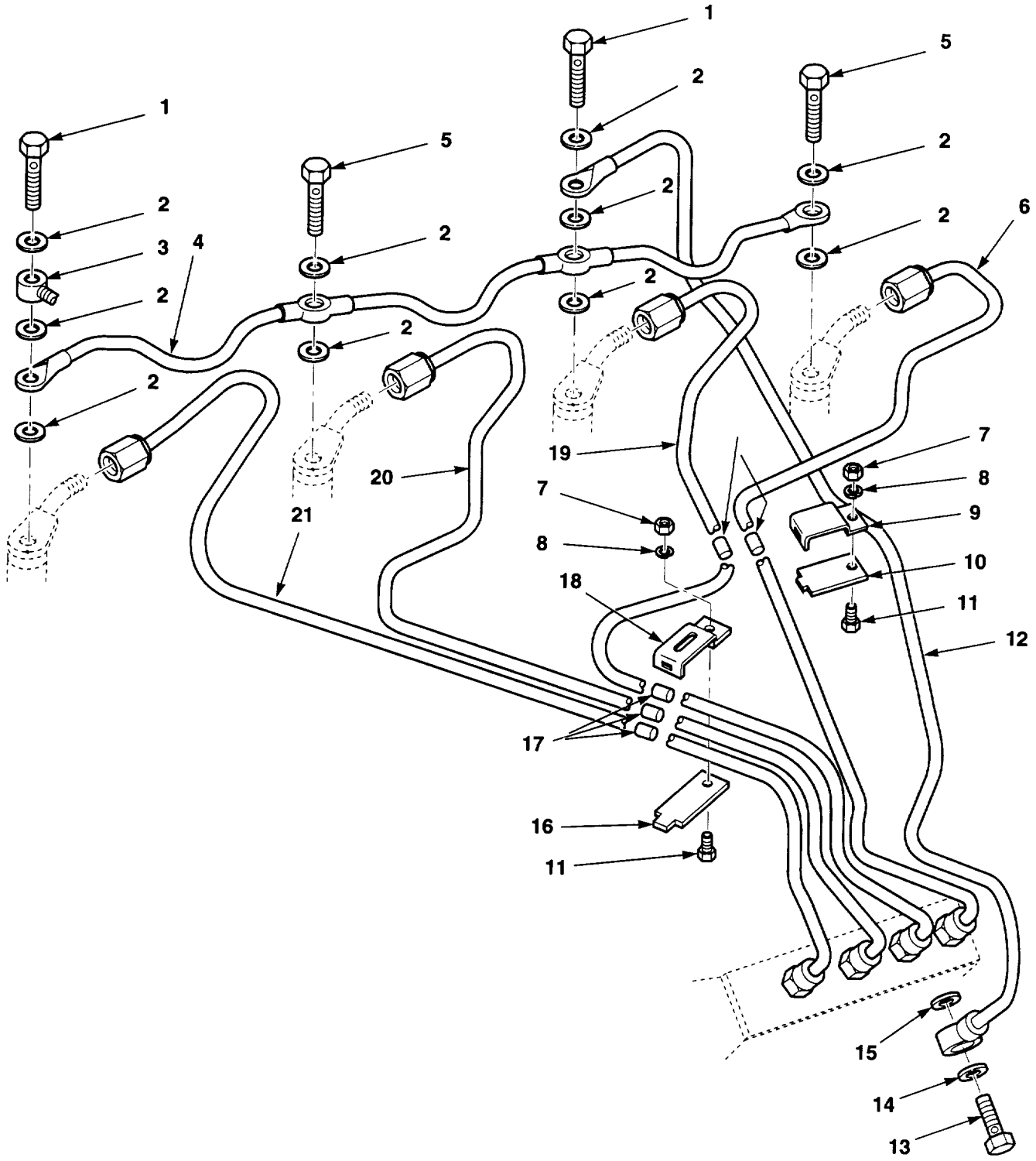

Figure 25. Fuel Injector Lines

https://truckmanualshub.com/ 62

(1) ITEM NO.	(2) SMR CODE	(3) NSN	(4) CAGEC	(5) PART NUMBER	(6) DESCRIPTION AND USABLE ON CODES (UOC)	(7) QTY
					GROUP 0301 CARBURETOR, FUEL INJECTOR FIG. 25 FUEL INJECTOR LINES	
1	PAFZZ	4730013965505	62445	0117 8622	BOLT, FLUID PASSAGE	2
2	PAFZZ		62445	1118674	WASHER, FLAT	10
3	PAFZZ	4730011510021	62445	1169557	CONNECTOR, MULTIPLE,	1
4	PAFZZ	4710123233471	62445	0336 3397	TUBE ASSEMBLY, METAL	1
5	PAFZZ	4730012353308	62445	111-9231	BOLT, FLUID PASSAGE	2
6	PAFZZ	4710123232124	62445	0415 4225	TUBE ASSEMBLY, METAL	1
7	PAOZZ	5310121564991	62445	0111 2813	NUT, PLAIN, HEXAGON M6	2
8	PAFZZ	5310013587977	77237	6EM60	WASHER, LOCK	2
9	PAFZZ	4730011888243	62445	1161469	CLAMP, PIPE, ANCHOR A	1
10	PAFZZ	5340011955773	62445	1170642	PLATE, CLIP RETAINER	1
11	XBFZZ	5306011510039	62445	111-2240	BOLT, MACHINE M6X12	2
12	PAFZZ		62445	0213 6193	TUBE ASSEMBLY, METAL	1
13	PAOZZ	4730011978226	62445	2231136	BOLT, FLUID PASSAGE	1
14	PAOZZ	5310011665857	62445	1118693	WASHER, FLAT M14	1
15	PAOZZ	5310012077210	62445	1216306	WASHER	1
16	PAFZZ	5340011905586	62445	1170291	PLATE	1
17	PAFZZ	5365011972332	62445	3372269	BUSHING, NONMETALLIC	5
18	PAFZZ	4730011860535	62445	1170287	CLAMP, PIPE, ANCHOR A	1
19	PAFZZ	4710123232123	62445	0415 4224	TUBE ASSEMBLY, METAL	1
20	PAFZZ	4710123232122	62445	0415 4223	TUBE ASSEMBLY, METAL	1
21	PAFZZ	4710123232121	62445	0415 4222	PIPE ASSEMBLY, METAL	1
					END OF FIGURE	

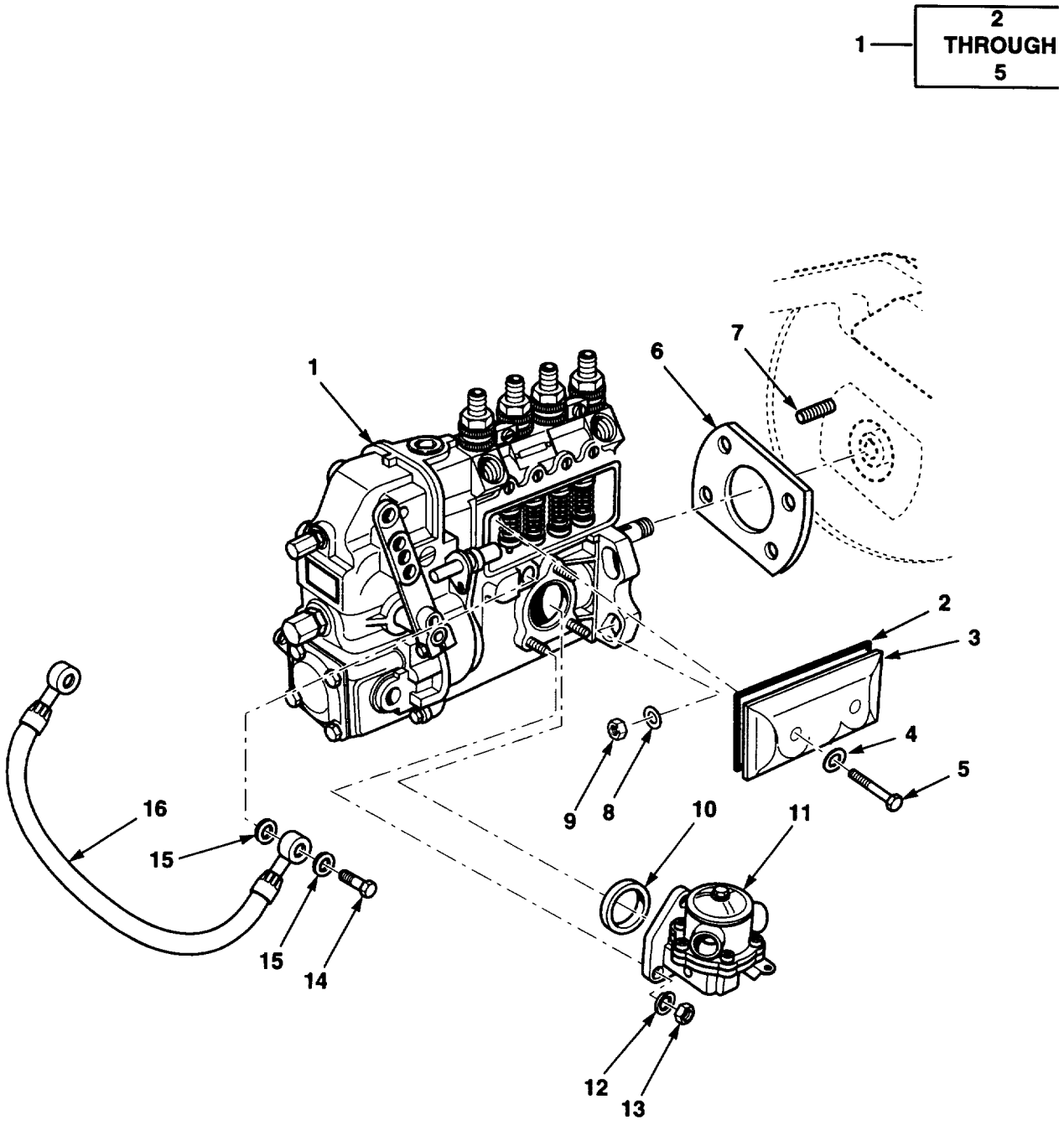

Figure 26. Fuel Injection Pump

https://truckmanualshub.com/ 64

(1) ITEM NO.	(2) SMR CODE	(3) NSN	(4) CAGEC	(5) PART NUMBER	(6) DESCRIPTION AND USABLE ON CODES (UOC)	(7) QTY
					GROUP 0302 FUEL PUMPS FIG. 26 FUEL INJECTION PUMP	
1	XDFFF		62445	0223 2500	PUMP, INJECTION	1
2	XBFZZ	5330013970827	62445	0130 8511	.GASKET	1
3	PAFZZ	5340011881102	62445	1310137	.COVER, ACCESS	1
4	PAFZZ	5330012388316	62445	1118641	.O-RING	2
5	PAFZZ	5306013957697	62445	0128 8170	.BOLT, MACHINE	2
6	PAFZZ	5330014347280	62445	0213 6717	GASKET	1
7	PAFZZ	5307012083691	62445	1174190	STUD	4
8	PAFZZ	5310014346594	89749	1EM100	WASHER, FLAT M100	4
9	PAFZZ	5310011510041	62445	1102659	NUT, PLAIN, HEXAGON	4
10	PAOZZ	5330013432648	62445	1174706	SEAL, PLAIN	1
11	PAOOZ	2910011860928	62445	4230294	PUMP, FUEL, METERING	1
12	PAOZZ	5310010135628	62445	110-2797	WASHER, LOCK	3
13	PAOZZ	5310121564991	62445	0111 2813	NUT, PLAIN, HEXAGON	3
14	PAFZZ	5305011904585	62445	111-9237	SCREW, CAP, HEXAGON H	1
15	XBFZZ	5330010159617	36719	1118659	GASKET	2
16	PAOZZ	4720123367510	62445	0117 9228	HOSE ASSEMBLY, NONME	1
					END OF FIGURE	

https://truckmanualshub.com/ 65

2 — 3 THROUGH 7

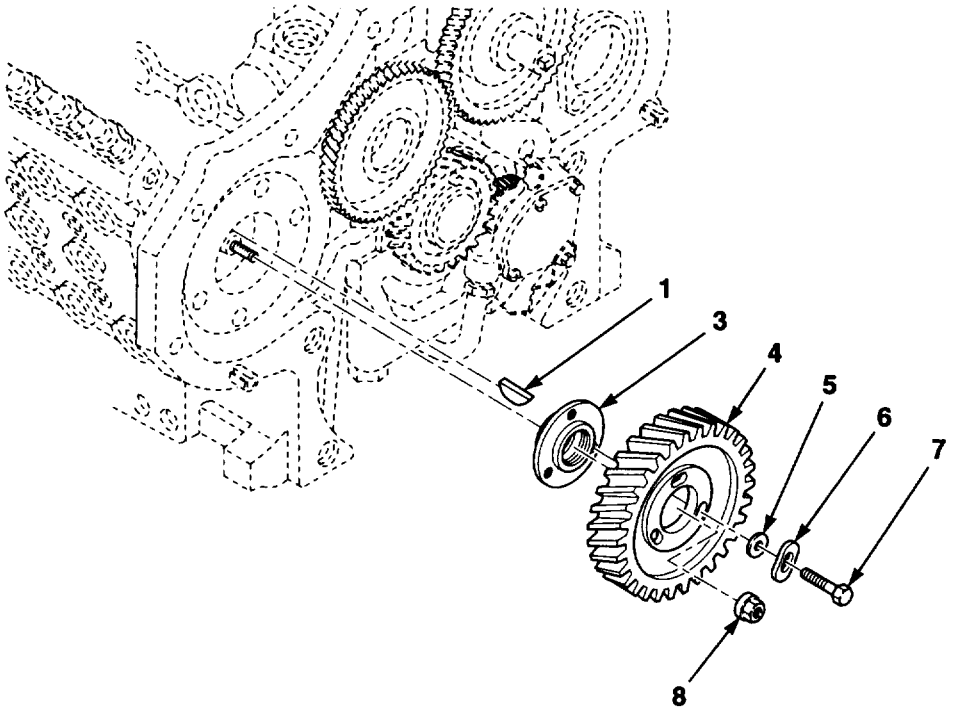

Figure 27. Injection Pump Timing Gear

https://truckmanualshub.com/ 66

(1) ITEM NO.	(2) SMR CODE	(3) NSN	(4) CAGEC	(5) PART NUMBER	(6) DESCRIPTION AND USABLE ON CODES (UOC)	(7) QTY
					GROUP 0302 FUEL PUMPS FIG. 27 INJECTION PUMP TIMING GEAR	
1	PAFZZ	5315011880754	62445	1118324	KEY, WOODRUFF	1
2	XBFFF		08018	3-63A	GEAR	1
3	XAFZZ		08018	0223-7530-XA	.HUB	1
4	XAFZZ		08018	0223-7530-XA1	.GEAR, TOOTHED	1
5	XAFZZ		08018	0223-7530-XA2	.WASHER, PLAIN	3
6	XAFZZ		08018	0223-7530-XA3	.WASHER, PLAIN	3
7	XAFZZ		08018	0223-7530-XA4	.BOLT, HEX	3
8	XBFZZ		28703	10-00-183-099	NUT	1
					END OF FIGURE	

https://truckmanualshub.com/ 67

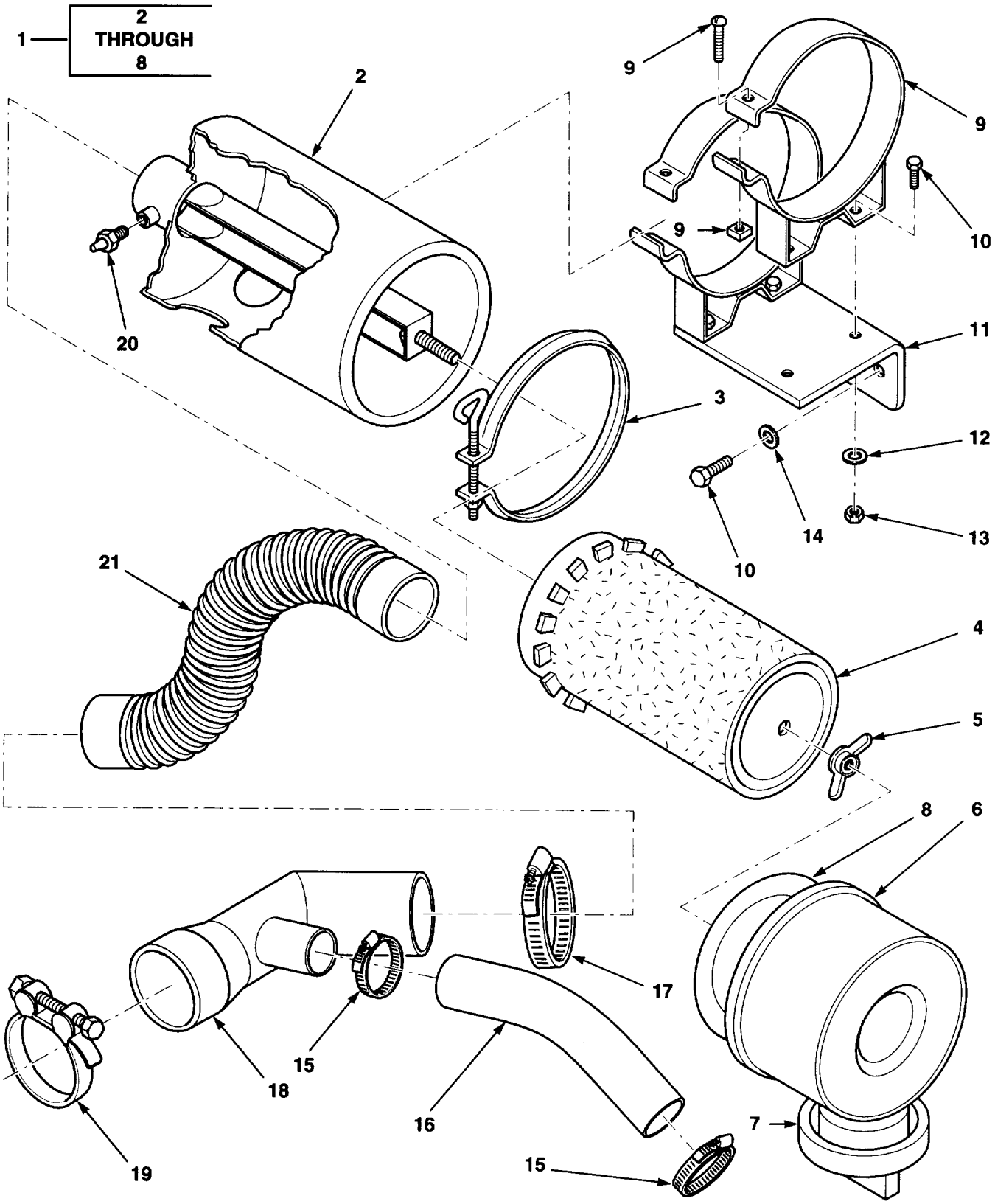

Figure 28. Air Cleaner Assembly

https://truckmanualshub.com/ 68

(1) ITEM NO.	(2) SMR CODE	(3) NSN	(4) CAGEC	(5) PART NUMBER	(6) DESCRIPTION AND USABLE ON CODES (UOC)	(7) QTY
					GROUP 0304 AIR CLEANER	
					FIG. 28 AIR CLEANER ASSEMBLY	
1	XBOOO		07443	1408105	AIR CLEANER ASSY	1
2	XAOZZ		18265	GEH06-5508	.BODY ASSY	1
3	XBOZZ	5340000095294	18265	P00-2940	.CLAMP, LOOP	1
4	PAOZZ	2940001929182	18265	SMP18-1052	.FILTER ELEMENT, INTA	1
5	XBOZZ	5310007353544	18265	P10-2144	.NUT, PLAIN, WING	1
6	XBOZZ	1040000192992	18265	P10-2805	.CUP	1
7	XBFZZ	4310001900983	18265	GAX00-1966	.CAP, AIR CLEANER INT	1
8	PAOZZ	4320000192991	18265	P10-2510	.DEFLECTOR, DIRT AND	1
9	XBOZZ		07443	51267	BAND, MOUNTING	2
10	PAOZZ	5305121250321	89749	1CM820	SCREW, CAP, HEXAGON H	6
11	XBOZZ		07443	1408104	BRACKET, AIR CLEANER	1
12	PAOZZ	5310013962874	89749	18EM816	WASHER, FLAT	4
13	PAOZZ	5310014155214	89749	1DM8	NUT, PLAIN, HEXAGON	4
14	PAOZZ	5310013962874	89749	18EM816	WASHER, FLAT	2
15	PAOZZ	4730012012085	81646	6320	CLAMP, HOSE	2
16	MOOZZ		07443	1407833-7.25	HOSE, PCB MAKE FROM HOSE P/N: 27010	1
					CAGE: 24161	
17	PAOZZ	4730011165918	12603	42H32	CLAMP, HOSE	2
18	XBOZZ		07443	1408102	TUBE ASSEMBLY	1
19	XBOZZ		07443	1408830	CLAMP	1
20	PAOZZ		59150	7675-011	FITTING	1
21	PAOZZ	4720014342307	07443	51598-2	HOSE, AIR DUCT	1
					END OF FIGURE	

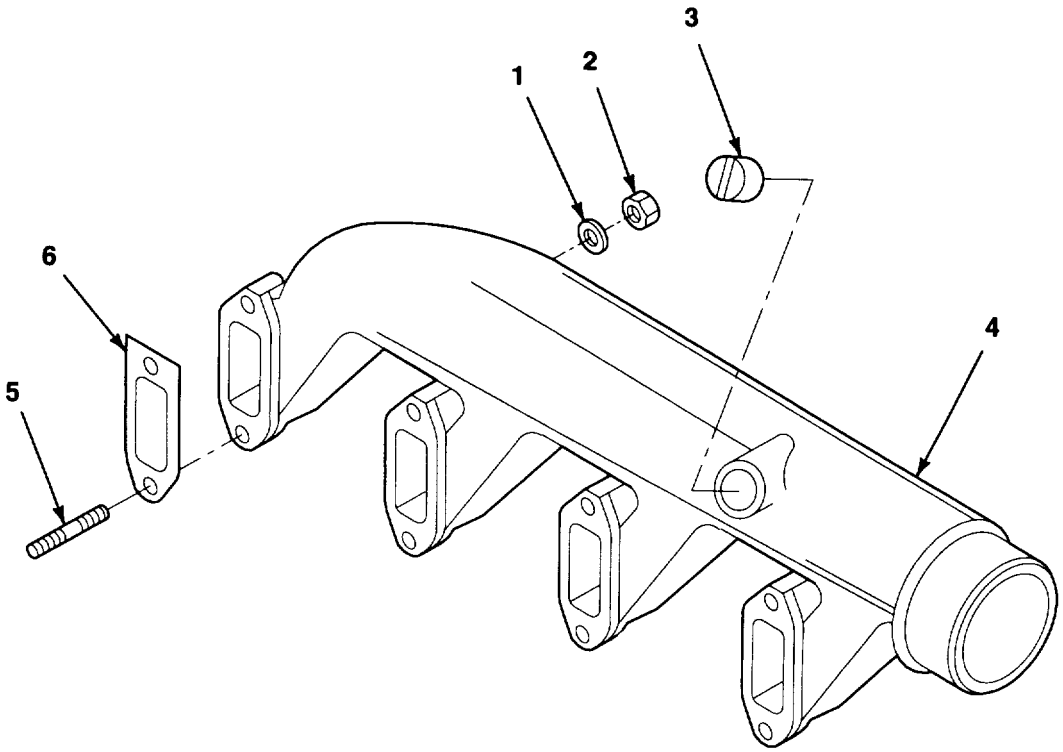

Figure 29. Intake Manifold

https://truckmanualshub.com/ 70

(1) ITEM NO.	(2) SMR CODE	(3) NSN	(4) CAGEC	(5) PART NUMBER	(6) DESCRIPTION AND USABLE ON CODES (UOC)	(7) QTY
					GROUP 0305 SUPERCHARGER, BLOWER, TURBOCHARGER OR ALTITUDE COMPENSATOR FIG. 29 INTAKE MANIFOLD	
1	PAFZZ	5310010135463	62445	110-7101	WASHER, FLAT M8	8
2	PAFZZ	5310012351857	62445	111-2824	NUT, PLAIN, HEXAGON M8	8
3	PAFZZ	5365012737446	62445	116 5789	PLUG, MACHINE THREAD	1
4	PAFZZ	2815121879316	62445	0213 4712	MANIFOLD, INTAKE	1
5	PAFZZ	5307013987396	62445	0110 4122	STUD, PLAIN M8X35	8
6	PAFZZ	5330013960445	62445	0415 7248	GASKET	4
					END OF FIGURE	

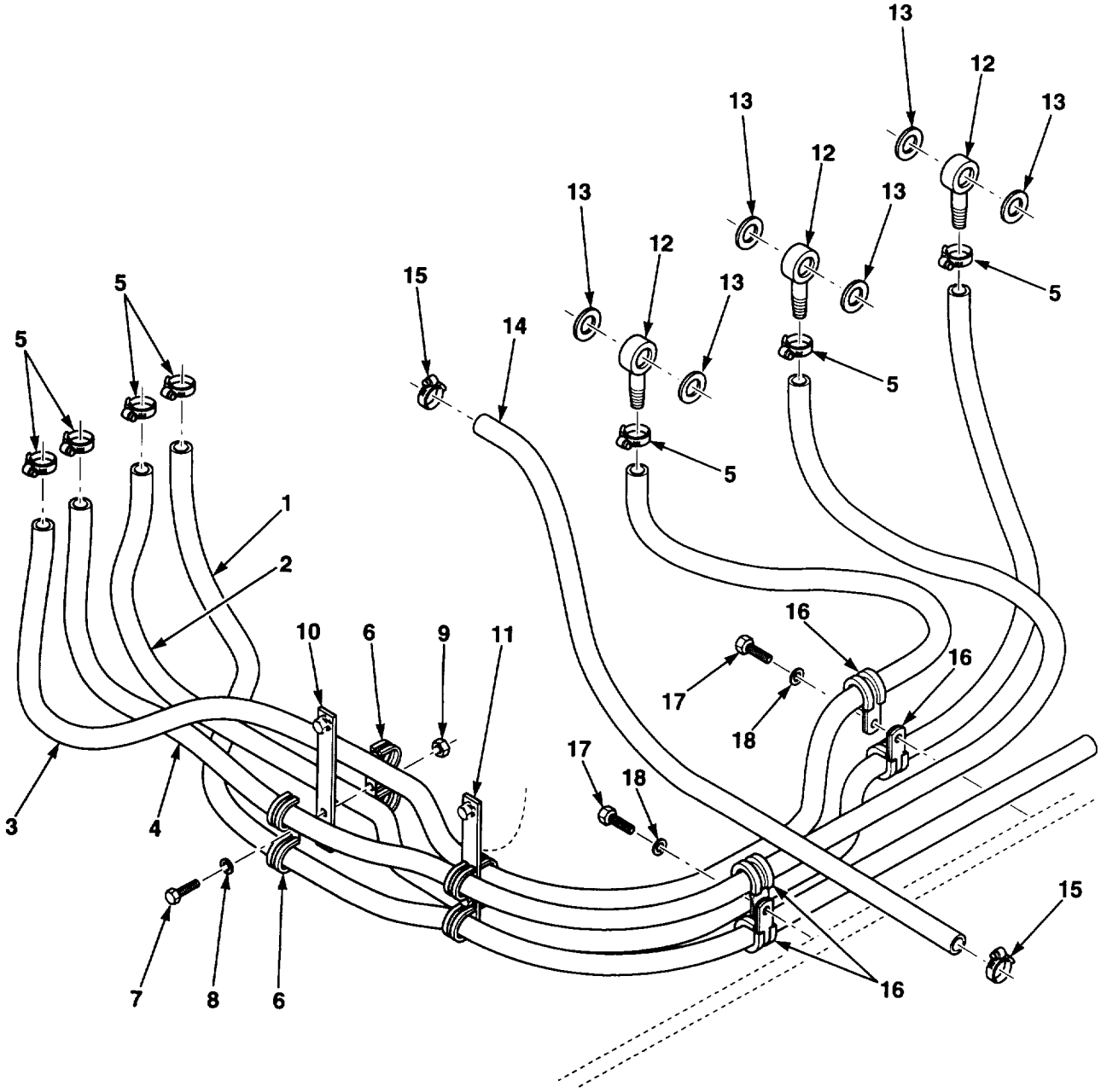

Figure 30. Fuel Lines

https://truckmanualshub.com/ 72

(1) ITEM NO.	(2) SMR CODE	(3) NSN	(4) CAGEC	(5) PART NUMBER	(6) DESCRIPTION AND USABLE ON CODES (UOC)	(7) QTY
					GROUP 0306 TANKS, LINES, FITTINGS, HEADERS FIG. 30 FUEL LINES	
1	MOOZZ		07443	1407850-44	HOSE, FUEL MAKE FROM HOSE P/N: H177 CAGE: 70842	1
2	MOOZZ		07443	1407851-71	HOSE, FUEL MAKE FROM HOSE P/N: H177 CAGE: 70842	1
3	MOOZZ		07443	1407852-88	HOSE MAKE FROM HOSE P/N: H177 CAGE 70842	1
4	MOOZZ		07443	1407853-78	HOSE, FUEL MAKE FROM HOSE P/N: H177 CAGE: 70842	1
5	PAOZZ	4730002043491	66295	C32P	CLAMP, HOSE	8
6	PAOZZ		28036	3121-4-10	CLAMP, TUBE, DOUBLE	4
7	PAFZZ	5305012683656	15526	DIN933-M6X16-8.8 -A4C	SCREW, CAP, HEXAGON H	2
8	PAOZZ	5310013404645	15526	DIN 433 ST M6	WASHER, FLAT	2
9	PAOZZ		07516	K33796	NUT, PLAIN, HEXAGON	2
10	XBOZZ		07443	1407855	STRAP	1
11	PAOZZ		07443	1407856	STRAP	1
12	PAOZZ	4730014374216	07443	1407802	CONNECTOR, MULTIPLE	3
13	PAOZZ	5310013982340	62445	0111 8688	WASHER, FLAT	6
14	MOOZZ		07443	51282-01-18	HOSE, FUEL MAKE FROM HOSE P/N: 27003 CAGE: 24161	1
15	PAOZZ	4730002043491	66295	C32P	CLAMP, HOSE	2
16	PAOZZ		96906	MS21910-G12	CLIP, HOSE	5
17	PAOZZ		89749	1CM516	SCREW, CAP, HEXAGON H M5X16	2
18	PAOZZ	5310013960985	12603	15EM50	WASHER, FLAT M5	2
					END OF FIGURE	

https://truckmanualshub.com/ 73

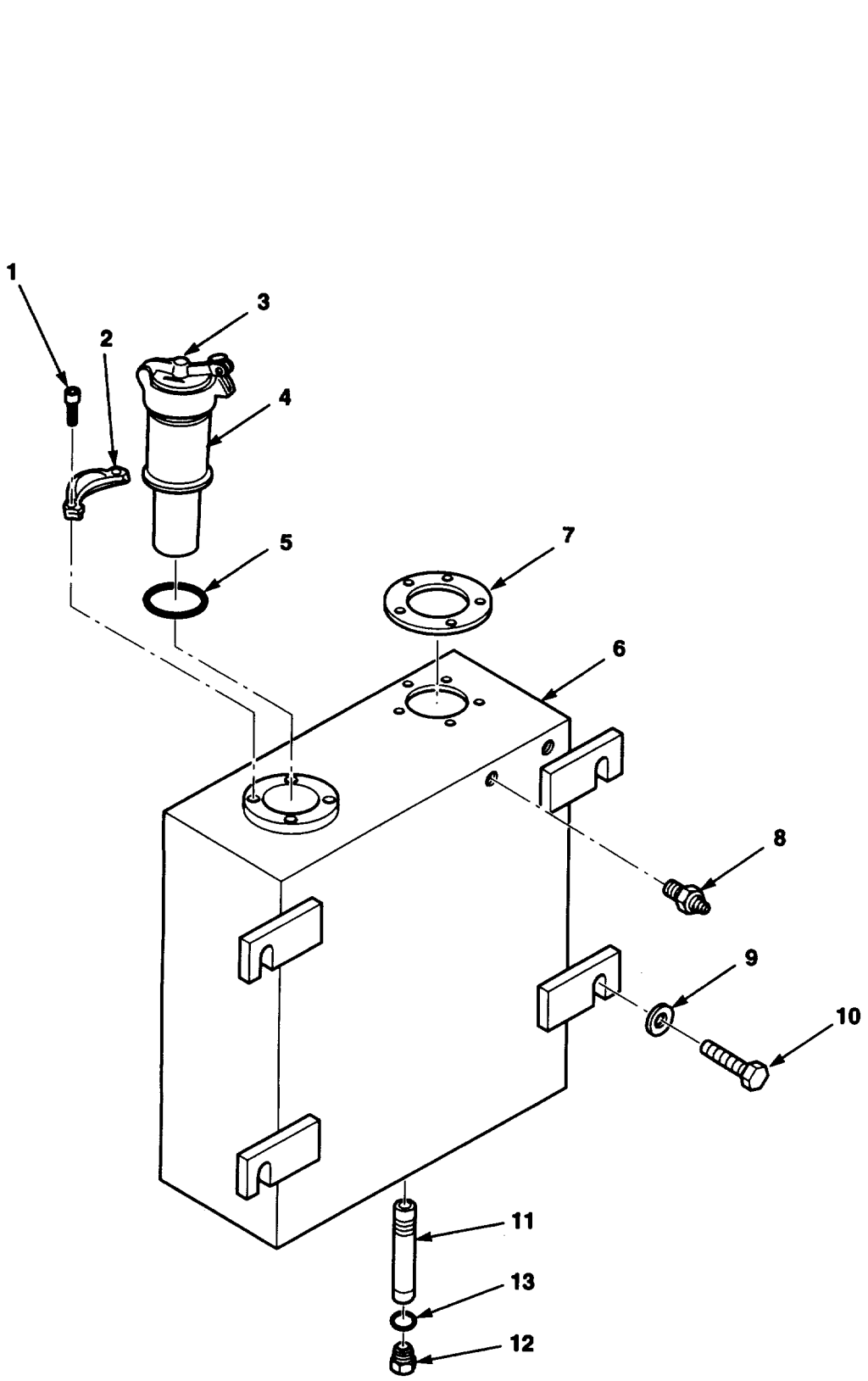

Figure 31. Fuel Tank Installation

https://truckmanualshub.com/ 74

(1) ITEM NO.	(2) SMR CODE	(3) NSN	(4) CAGEC	(5) PART NUMBER	(6) DESCRIPTION AND USABLE ON CODES (UOC)	(7) QTY
					GROUP 0306 TANKS, LINES, FITTINGS, HEADERS FIG. 31 FUEL TANK INSTALLATION	
1	PAOZZ	5305009837475	96906	MS16997-166	SCREW, CAP, SOCKET HE	4
2	PAOZZ	4730014343904	7X443	MF-24-20	FLANGE, SPLIT	2
3	PAOZZ	2590014209947	49234	1275/12	CAP, FILLER OPENING	1
4	PFOZZ	2590014201178	07443	1408703	FILLER NECK	1
5	PFOZZ		12603	76K237	PACKING, PREFORMED	1
6	PAOFZ	2910014205174	07443	1407364	TANK, FUEL, ENGINE	1
7	XAOZZ		07443	1407364 XA	.GASKET	1
8	PAOZZ	4730014196455	59257	6-6-AMSA-180	ADAPTER, STRAIGHT, HO	1
9	PAOZA	5310006858191	84955	KS1411-2-05-13	WASHER, FLAT	4
10	PAOZZ	5305012683656	15526	DIN933-M6X16-8.8 -A4C	SCREW, CAP, HEXAGON H M6X16	4
11	PAOZZ	4710014203272	07443	1408072	TUBE, METALLIC	1
12	PAOZZ	5365006746831	12603	24K6	PLUG, MACHINE THREAD	1
13	XAOZZ		12603	24K6-XA	.PACKING, PREFORMED	1
					END OF FIGURE	

https://truckmanualshub.com/ 75

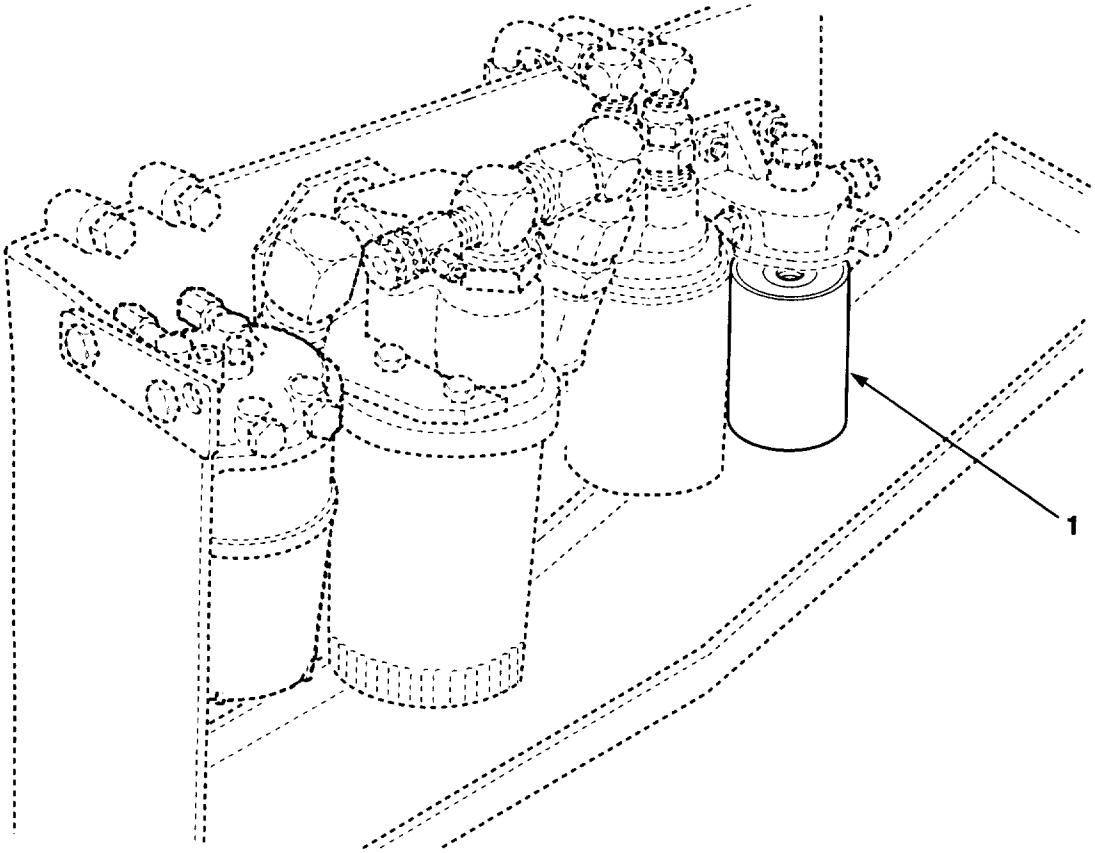

Figure 32. Fuel Filter

https://truckmanualshub.com/ 76

(1) ITEM NO.	(2) SMR CODE	(3) NSN	(4) CAGEC	(5) PART NUMBER	(6) DESCRIPTION AND USABLE ON CODES (UOC)	(7) QTY
					GROUP 0309 FUEL FILTERS FIG. 32 FUEL FILTER	
1	PAOZZ	2910002380033	62445	1174423	FILTER ELEMENT, FLUI	1
					END OF FIGURE	

https://truckmanualshub.com/ 77

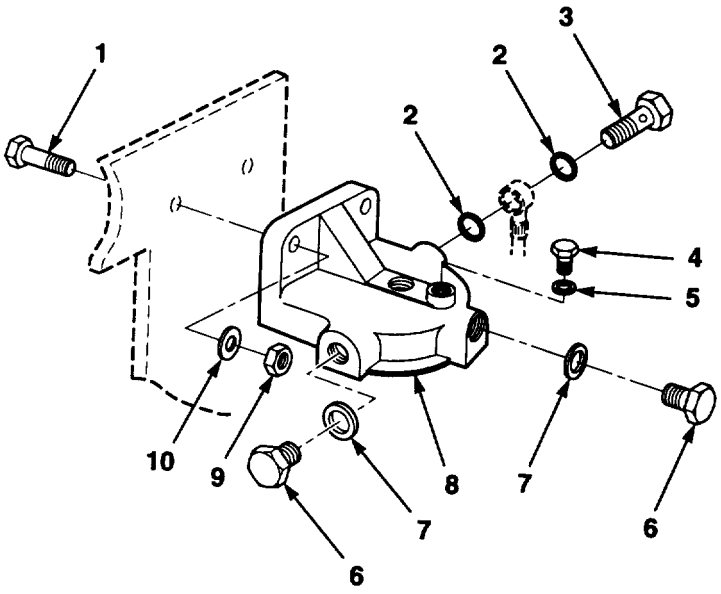

Figure 33. Fuel Filter Head

https://truckmanualshub.com/ 78

(1) ITEM NO.	(2) SMR CODE	(3) NSN	(4) CAGEC	(5) PART NUMBER	(6) DESCRIPTION AND USABLE ON CODES (UOC)	(7) QTY
					GROUP 0309 FUEL FILTERS FIG. 33 FUEL FILTER HEAD	
1	PAOZZ		07443	1CM830	SCREW, CAP, HEXAGON H	2
2	PAOZZ	5310014378700	62445	0111 8693	FITTING, WASHER	2
3	PAOZZ	4730014377482	62445	0111 9246	BOLT, FLUID PASSAGE	1
4	PAOZZ		89749	4CM610	SCREW, CAP, HEXAGON H	1
5	PAOZZ		62445	1118692	PACKING, PREFORMED	1
6	PAOZZ	5365012379127	62445	1118960	PLUG, MACHINE THREAD	2
7	PAFZZ	5310014378700	62445	0111 8693	FITTING, WASHER	2
8	PFOZZ	2940012339144	62445	117 4821	HEAD, FLUID FILTER	1
9	PAOZZ		62445	01112824	NUT, HEX HD	2
10	PAFZZ		89749	18EM824	WASHER, FLAT M8	2
					END OF FIGURE	

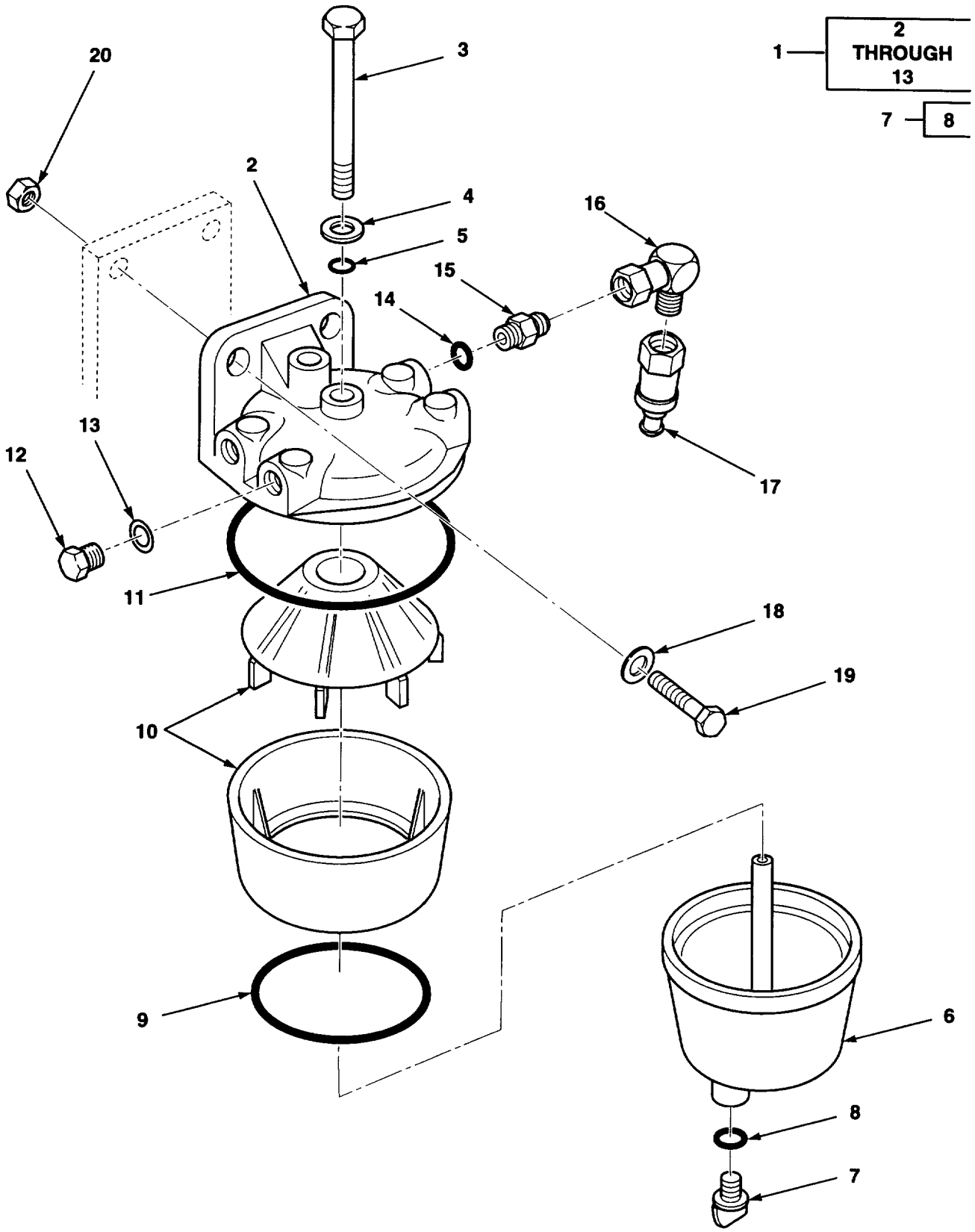

Figure 34. Fuel Water Separator

https://truckmanualshub.com/ 80

(1) ITEM NO.	(2) SMR CODE	(3) NSN	(4) CAGEC	(5) PART NUMBER	(6) DESCRIPTION AND USABLE ON CODES (UOC)	(7) QTY
					GROUP 0309 FUEL FILTERS	
					FIG. 34 FUEL WATER SEPARATOR	
1	PAOOZ	4330013061083	63632	5836B250	FILTER-SEPARATOR, LI	1
2	XBFZZ		0U9P2	7111-353AU	.SEPARATOR	1
3	PAFZZ		07443	7CM650	.SCREW, HEX HD M6X50	1
4	PAFZZ	5310011985449	63632	NW1-16Z1	.WASHER	1
5	PAFZZ	5330012006703	63632	5855-30	.SEAL	1
6	XBFZZ		0U9P2	7111-511A	.BASE	1
7	PAFZZ	5365013059387	63632	7111-740	.PLUG, MACHINE THREAD	1
8	XAFZZ		0U9P2	7111-7740-XA	..O-RING	1
9	PAFZZ	5330013066584	63632	7111-853	.O-RING	1
10	PAOZZ		0U9P2	7111-463A	.ELEMENT	1
11	PAFZZ	5330013066583	63632	7111-843	.O-RING	1
12	PAFZZ	5365013059386	63632	7111-312	.PLUG, MACHINE THREAD	2
13	PAFZZ	5310013057087	63632	5936-58T	.WASHER, FLAT	2
14	XAOZZ		0S1H5	6400-4-5-XA	PACKING, PREFORMED	2
15	PAOZZ		0S1H5	6400-4-5	ADAPTER	2
16	PAOZZ	4730013148816	01276	2071A-4-6S	ELBOW, TUBE	2
17	PAOZZ		79470	10006B-606	BUSHING, HOSE	2
18	PAOZZ		07443	18EM824	WASHER, FLAT M8X24	2
19	PAOZZ		07443	1CM830	SCREW, CAP, HEXAGON H M8X30	2
20	PAOZZ		62445	01112824	NUT, HEX HD M8	2
					END OF FIGURE	

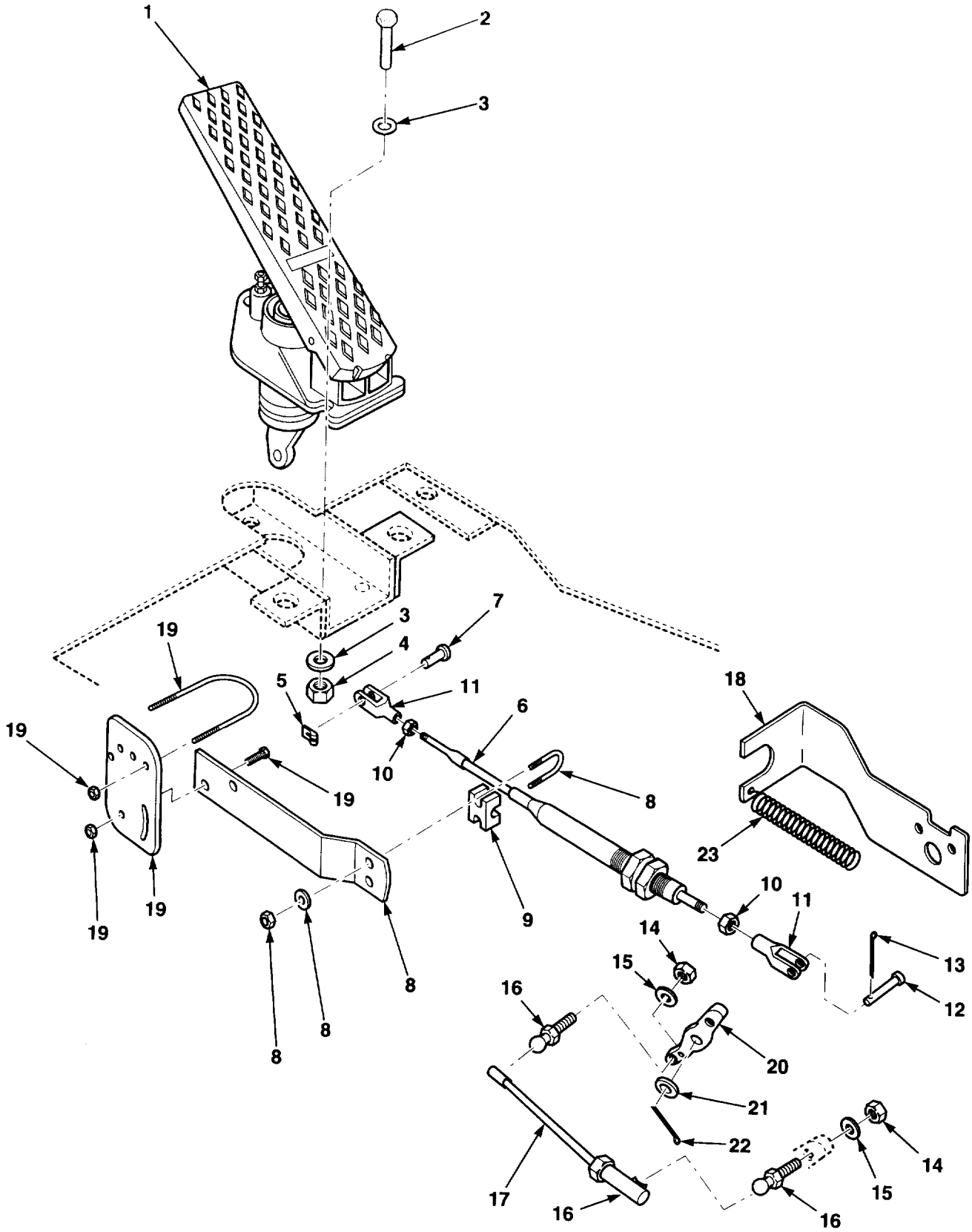

Figure 35. Throttle Pedal and Linkage Assembly.

https://truckmanualshub.com/ 82

GROUP 0312 ACCELERATOR, THROTTLE OR CHOKE CONTROL

FIG. 35 THROTTLE PEDAL AND LINKAGE ASSEMBLY

(1) ITEM NO.	(2) SMR CODE	(3) NSN	(4) CAGEC	(5) PART NUMBER	(6) DESCRIPTION AND USABLE ON CODES (UOC)	(7) QTY
1	PAOZZ	2540011631242	41625	208994	PEDAL, CONTROL	1
2	PAOZZ	5305121240527	89749	1CM625	SCREW, CAP, HEXAGON H M6X25	3
3	PAOZZ	5310013965256	89749	18EM613	WASHER, FLAT M6X13	3
4	PAOZZ	5310013960983	12603	1DM6	NUT, PLAIN, HEXAGON M6	3
5	XBOZZ		06970	J2	CLIP, SPRING	1
6	PAOZZ		06970	184-LTG-2-34	CONTROL ASSEMBLY, PU	1
7	PAOZZ		OPXJ7	11-031Z	PIN, CLEVIS	1
8	PAOZZ		1A679	301768	U-BOLT ASSY	1
9	XBOZZ		06970	F1	CLAMP, U-BOLT	1
10	PAOZZ		12603	64D4	NUT, HEX	1
11	PAOZZ	5340008659496	96906	MS35812-2	CLEVIS, ROD END	1
12	XBOZZ		07443	25079	PIN, CLEVIS	1
13	XBOZZ		89749	1F212	PIN, COTTER	1
14	PAOZZ		07516	K33796	NUT, PLAIN, HEXAGON	4
15	PAOZA	5310006858191	84955	KS1411-2-05-13	WASHER, FLAT	1
16	PAOZZ	3040011656129	06970	175-403-004	BALL JOINT	2
17	XBOZZ		07443	25085	YOKE, END	2
18	XBOZZ		07443	1407834	BRACKET	1
19	PAOZZ		1A679	301790	HANGER ASSY	1
20	PAOOO		07443	1408250	LEVER ASSEMBLY, MANU	1
21	PAOZZ	5310013982340	89749	27E6	WASHER, FLAT	2
22	PAOZZ	5315008395821	96906	MS24665-351	PIN, COTTER	1
23	PAOZZ	5360014340461	1A679	LE-049E-10MW	SPRING, HELICAL, EXTE	1

END OF FIGURE

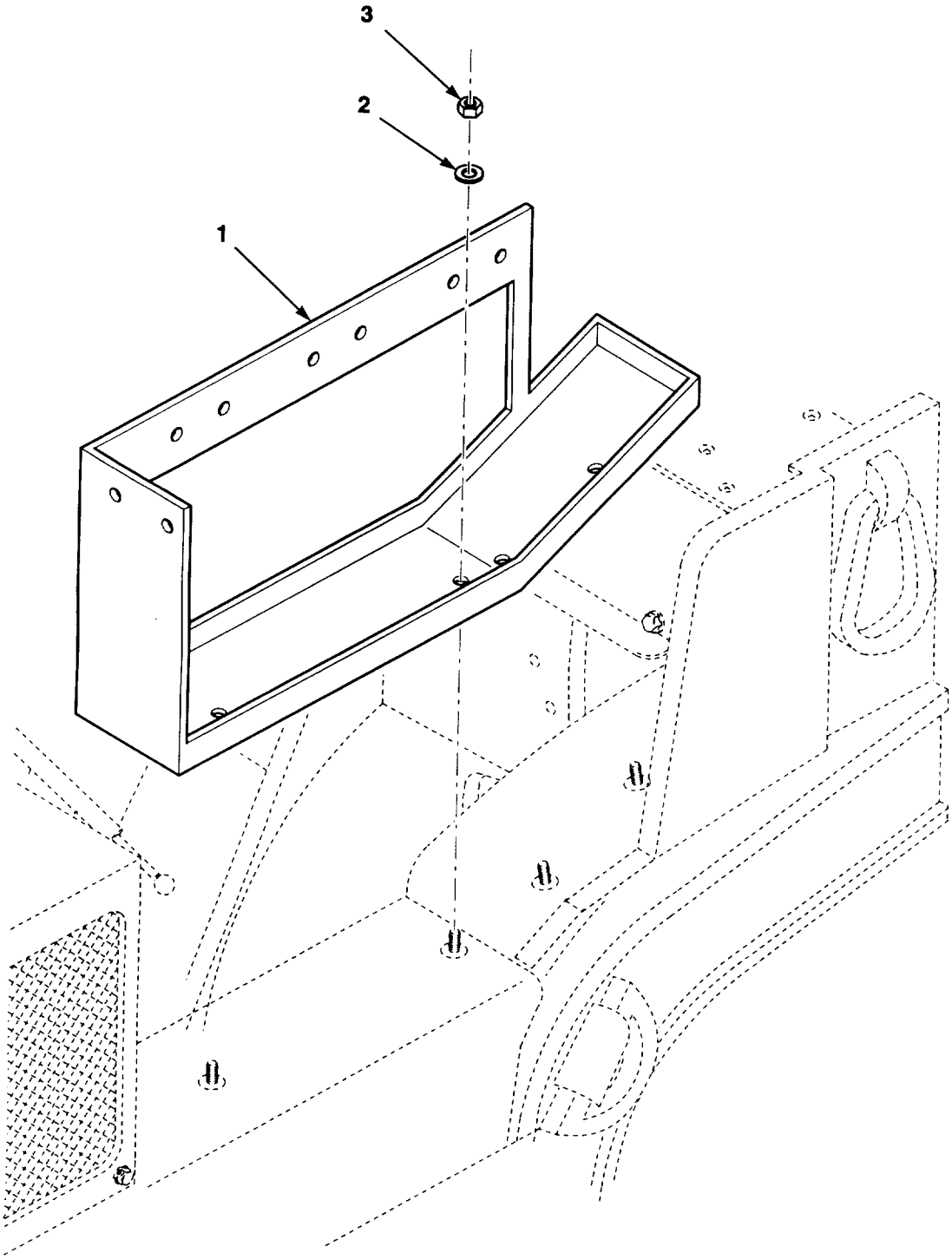

Figure 36. Oil Filter Tray.

https://truckmanualshub.com/ 84

(1) ITEM NO.	(2) SMR CODE	(3) NSN	(4) CAGEC	(5) PART NUMBER	(6) DESCRIPTION AND USABLE ON CODES (UOC)	(7) QTY
					GROUP 0312 ACCELERATOR, THROTTLE OR CHOKE CONTROL	
					FIG. 36 OIL FILTER TRAY	
1	XBOZZ		07443	1408182	TRAY, FILTER	1
2	PAOZZ		07443	18EM824	WASHER, FLAT M8	4
3	PAOZZ		62445	01112824	NUT, HEX HD M8	4
					END OF FIGURE	

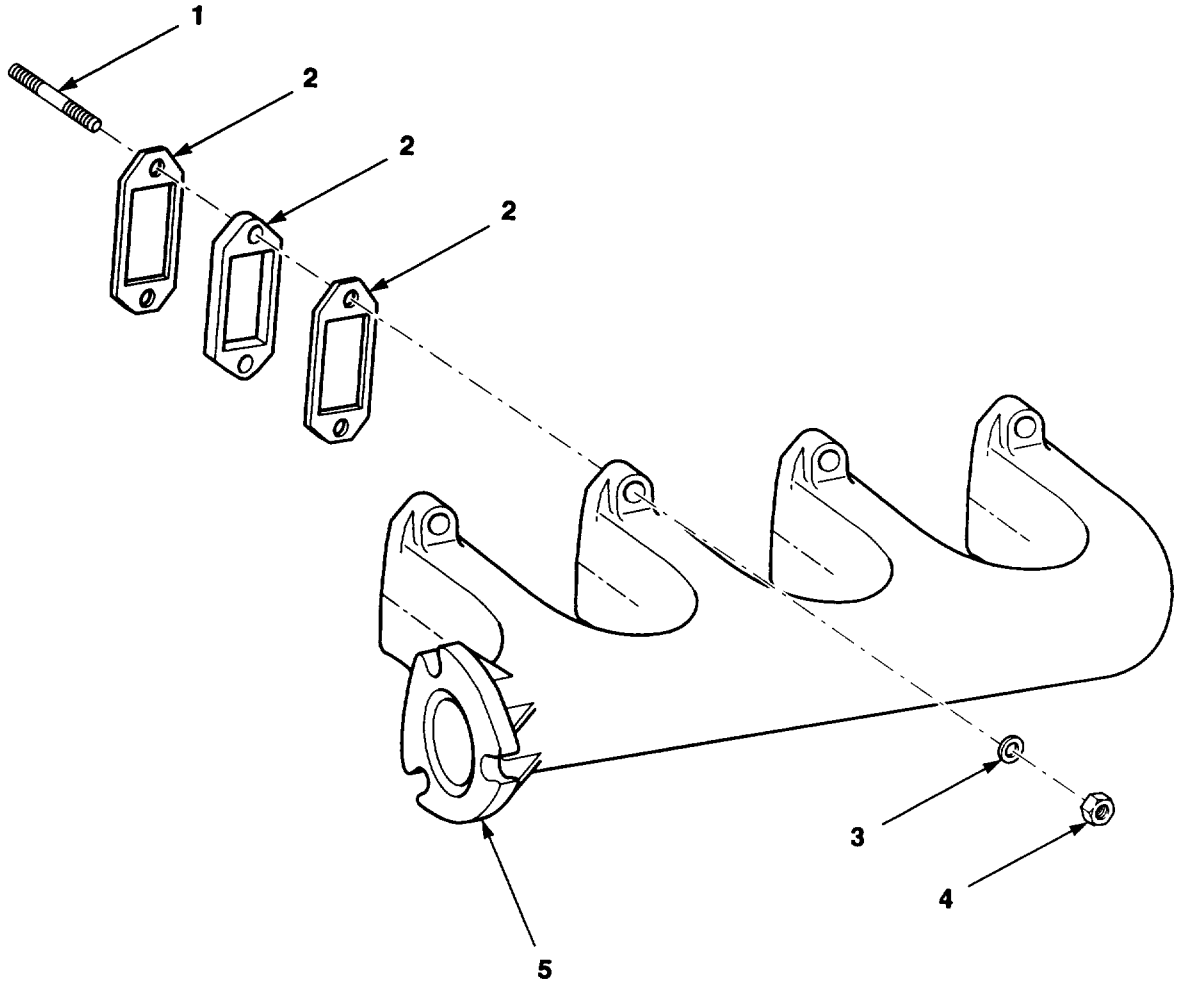

Figure 37. Exhaust Manifold.

https://truckmanualshub.com/ 86

(1) ITEM NO.	(2) SMR CODE	(3) NSN	(4) CAGEC	(5) PART NUMBER	(6) DESCRIPTION AND USABLE ON CODES (UOC)	(7) QTY
					GROUP 04 EXHAUST SYSTEM	
					GROUP 0401 MUFFLER AND PIPES	
					FIG. 37 EXHAUST MANIFOLD	
1	PAFZZ	5307013987396	62445	0110 4122	STUD, PLAIN M8X35	8
2	PAFZZ	5330013960445	62445	0415 7248	GASKET	8
2	PAFZZ	5330014347281	62445	0415 7360	GASKET	4
3	PAFZZ	5310014155222	89749	1EM80	WASHER, FLAT M8	8
4	PAFZZ	5310012444003	62445	0113 7394	NUT, SELF-LOCKING, HE	8
5	XBFZZ		62445	0027 2313	MANIFOLD, EXHAUST	1
					END OF FIGURE	

https://truckmanualshub.com/ 87

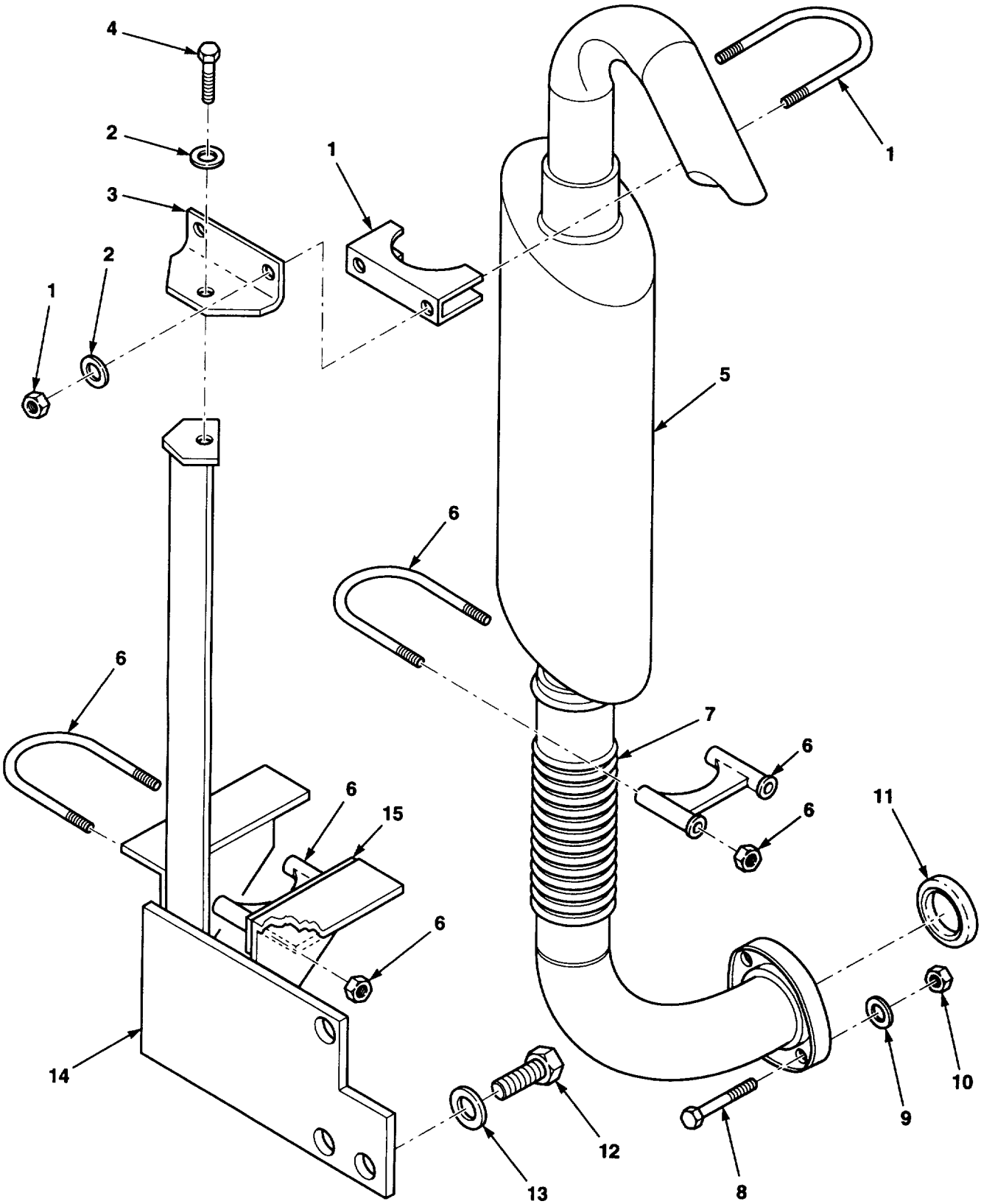

Figure 38. Muffler and Exhaust Stack.

https://truckmanualshub.com/ 88

(1) ITEM NO.	(2) SMR CODE	(3) NSN	(4) CAGEC	(5) PART NUMBER	(6) DESCRIPTION AND USABLE ON CODES (UOC)	(7) QTY
					GROUP 0401 MUFFLER AND PIPES	
					FIG. 38 MUFFLER AND EXHAUST STACK	
1	PAOZZ		76700	89543-K	CLAMP, EXHAUST	1
2	PAOZZ	5310013964294	12603	27E5	WASHER, FLAT	5
3	XBOZZ		07443	1408860	BRACKET, MUFFLER	1
4	PAOZZ	5305121250321	89749	1CM820	SCREW, CAP, HEXAGON H M8X20	1
5	PAOZZ	2990014205173	07443	1408279	MUFFLER, EXHAUST	1
6	PAOZZ	5340004511612	94257	35413	CLAMP MUFFLER	2
7	PAOZZ		07443	1408278	PIPE, EXHAUST	1
8	XDOZZ		89749	7CM1270	SCREW, CAP, HEXAGON H M12X70	3
9	PAOZZ	5310012719602	34914	991 4137	WASHER, FLAT M12X24	3
10	PAOZZ	5310014334771	89749	39DM12	NUT, SELF-LOCKING, HE	3
11	XBOZZ		07443	1405854	GASKET	1
12	PAOZZ	5305121268629	89749	1CM1630	SCREW, CAP, HEXAGON H M16X30	3
13	PAOZZ	5310013981728	12603	18EM1632	WASHER, FLAT M16X32	3
14	XBOZZ		07443	1408271	BRACKET, MUFFLER	1
15	PAOZZ		07443	1410088	SHIM	1
15	XBOZZ		07443	1410087	SHIM	1
					END OF FIGURE	

https://truckmanualshub.com/ 89

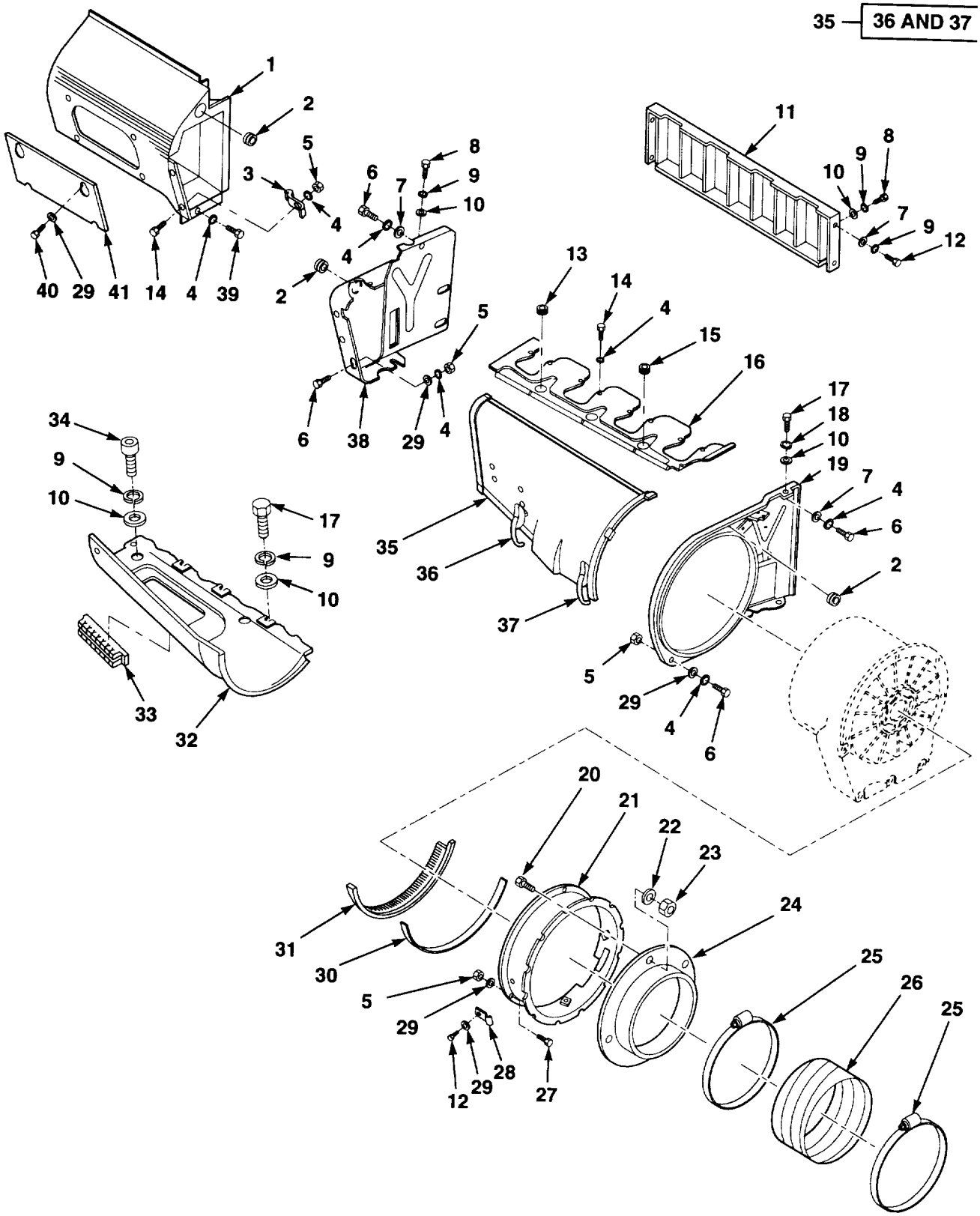

Figure 39. Engine Ducts and Shrouds.

https://truckmanualshub.com/ 90

GROUP 05 COOLING SYSTEM

GROUP 0502 COWLING, DEFLECTORS, AIR DUCTS, SHROUDS

FIG. 39 ENGINE DUCTS AND SHROUDS

(1) ITEM NO.	(2) SMR CODE	(3) NSN	(4) CAGEC	(5) PART NUMBER	(6) DESCRIPTION AND USABLE ON CODES (UOC)	(7) QTY
1	PAFZZ	5340013955120	62445	0223 5490	COVER, ACCESS	1
2	PAFZZ	5325011949154	62445	1167425	GROMMET, NONMETALLIC	3
3	PAFZZ		62445	0213 0646	BRACKET, DOUBLE ANGL	2
4	PAOZZ	5310010135628	62445	110-2797	WASHER, LOCK M6	15
5	XAFZZ	5310121564991	62445	0111 2813	NUT, PLAIN, HEXAGON 6	2
6	PAFZZ	5306011510039	62445	111-2240	BOLT, MACHINE M6X12	4
7	PAFZZ	5310012372774	62445	121-5850	WASHER, FLAT M6	6
8	PAFZZ	5305012478572	62445	111 2307	SCREW, CAP, HEXAGON H M8X16	4
9	PAFZZ	5310010135630	36719	1102799	WASHER, LOCK M8	10
10	PAFZZ	5310010135463	62445	110-7101	WASHER, FLAT 8	7
11	PAFZZ	2815123232920	62445	0223 1936	BAFFLE, AIRFLOW, ENGI	1
12	PAFZZ	5306012531592	62445	111-2233	BOLT, MACHINE M6X10	3
13	PAFZZ	5325011925823	62445	1160592	GROMMET, NONMETALLIC	1
14	PAFZZ	5305011870531	62445	1103316	SCREW, CAP, HEXAGON H M6X16	8
15	PAFZZ		62445	3361909	GROMMET, NONMETALLC	1
16	PAFZZ	2930011987323	62445	2137361	GUIDE RAIL, BLOWER	1
17	PAFZZ	5305011583207	15434	C0800205200	SCREW, CAP, HEXAGON H M8X12	2
18	PAFZZ	5310014211899	89749	9EM80	WASHER, LOCK 8	1
19	PAFZZ	2930011987326	62445	2101698	PLATE, BLOWER	1
20	PAFZZ	5305013636090	77237	1CM612	SCREW, CAP, SOCKET HE M6X12	4
21	PAFZZ	2815123232916	62445	0415 7079	BAFFLE, AIRFLOW, ENGI	3
22	PAFZZ	5310013965256	89749	18EM613	WASHER, FLAT M6X13	4
23	PAFZZ	5310013960983	12603	1DM6	NUT, PLAIN, HEXAGON M6	4
24	PAFZZ	5365014252423	07443	1402652	RING, RETAINING	1
25	PAFZZ	4730014196302	07443	42H140	CLAMP, HOSE	2
26	MFFFF		07443	1402708	HOSE, AIR MAKE FROM HOSE P/N: 9	1
					CAGE: OEGS7	
27	PAFZZ	5306012374919	62445	1112264	BOLT, MACHINE M6X20	3
28	PAOZZ	4730014347943	62445	0116 8140	CLAMP, PIPE	3
29	PAFZZ	5310012503733	53867	2 916 011 014	WASHER, FLAT M6	10
30	PAFZZ	5330013772688	62445	0140 1420	GASKET	1
31	PAFZZ		62445	0223 4942	BRUSH, SEALING	1
32	PAFZZ	2930011987325	62445	2101745	BASE, COWLING	1
33	PAFZZ	5330011918167	62445	2101802	SEAL, RUBBER SPECIAL	1
34	PAFZA	5305011013322	62445	0111 0548	SCREW, CAP, SOCKET HE M8X12	1
35	PAFZZ	2930011987324	62445	2101739	GUIDE, UPPER	1
36	PAFZZ	5340013956281	62445	0121 2483	.CATCH, CLAMPING	1
37	PAFZZ	5340013956279	62445	0121 2482	.CATCH, CLAMPING	1
38	PAFZZ	2815123232917	62445	0210 1736	BAFFLE, AIRFLOW, ENGI	1
39	PAFZZ	5306013988613	62445	0111 2228	BOLT, MACHINE M6X8	4
40	PAFZZ	5306013988612	62445	0113 8712	BOLT, MACHINE M6X12	4
41	PAFZZ	5340013956284	62445	0213 1370	COVER, ACCESS	1

END OF FIGURE

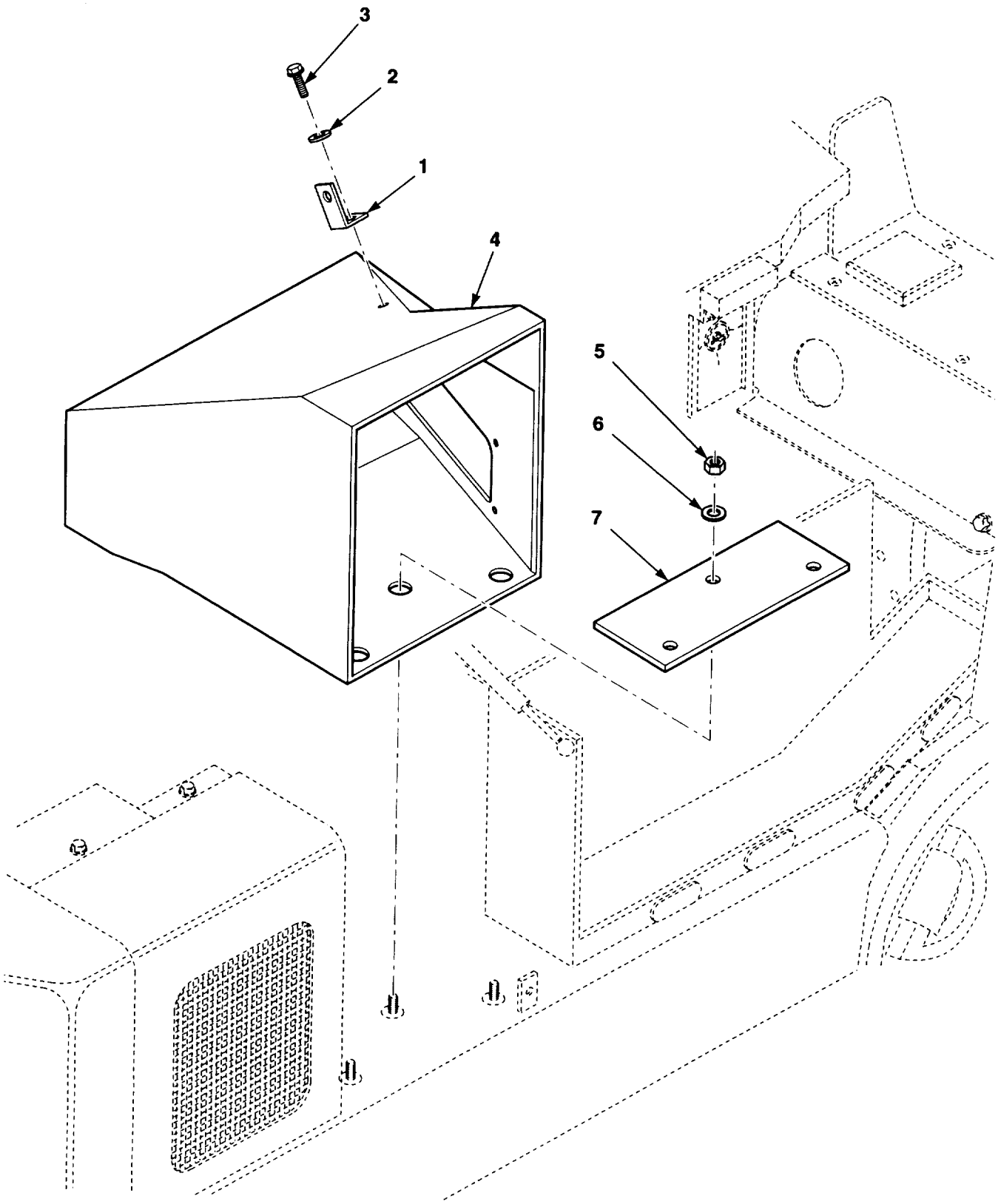

Figure 40. Engine Ventilation Panel.

https://truckmanualshub.com/ 92

(1) ITEM NO.	(2) SMR CODE	(3) NSN	(4) CAGEC	(5) PART NUMBER	(6) DESCRIPTION AND USABLE ON CODES (UOC)	(7) QTY
					GROUP 0502 COWLING, DEFLECTORS, AIR DUCTS, SHROUDS	
					FIG. 40 ENGINE VENTILATION PANEL	
1	XBOZZ		07443	1408947	COVER BRACKET	1
2	PAOZA	5310006858191	84955	KS1411-2-05-13	WASHER, FLAT	1
3	PFOZZ		39428	90275A199	SCREW, MACHINE	1
4	XBOZZ		07443	1408287	DUCT ASSEMBLY, AIR	1
5	PFOZZ		89749	12D8	NUT, HEX	3
6	PAOZZ	5310013964294	12603	27E5	WASHER, FLAT	3
7	XBOZZ		07443	1408288	PLATE, AIR DUCT	1
					END OF FIGURE	

https://truckmanualshub.com/ 93

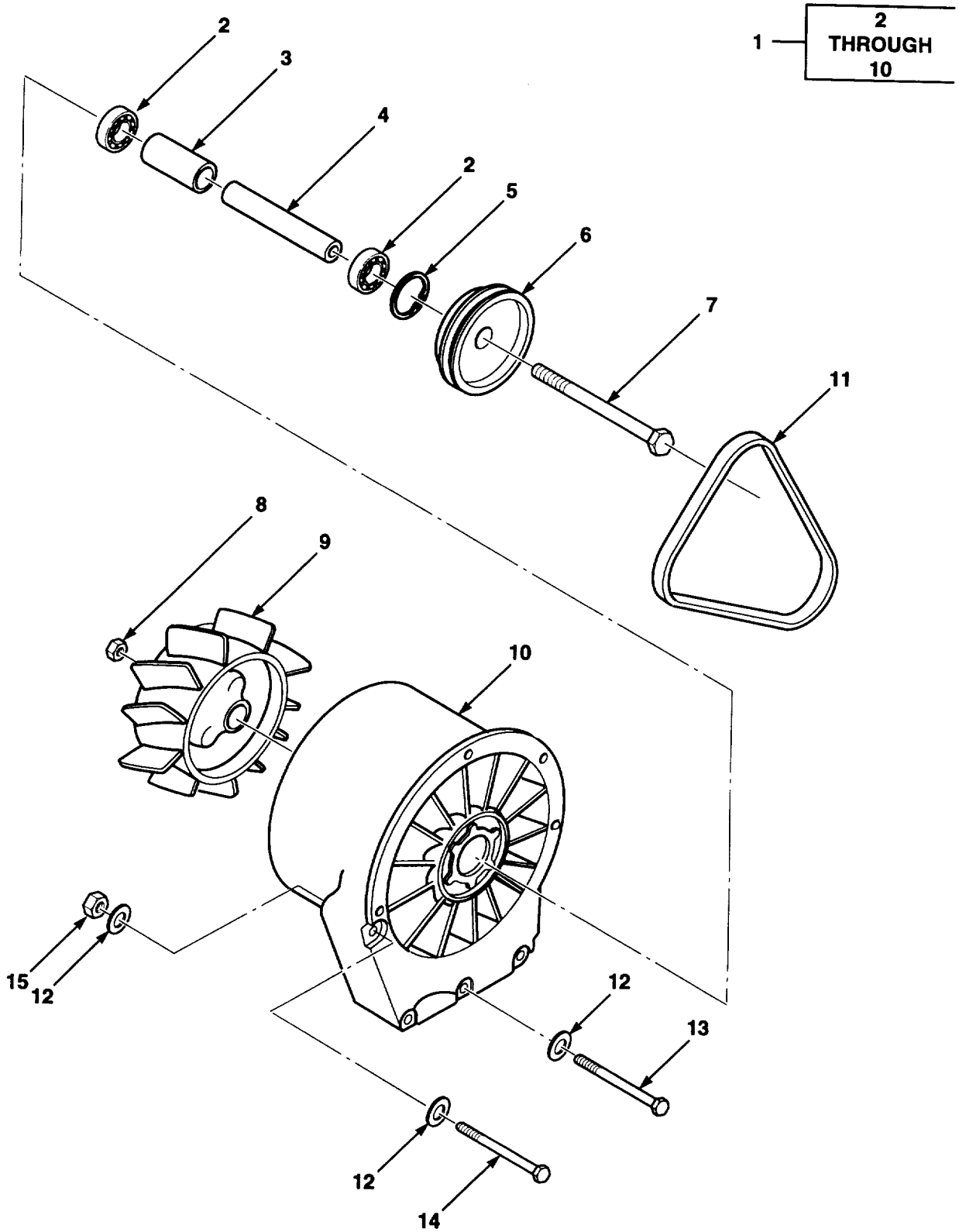

Figure 41. Air Blower Installation.

https://truckmanualshub.com/ 94

(1) ITEM NO.	(2) SMR CODE	(3) NSN	(4) CAGEC	(5) PART NUMBER	(6) DESCRIPTION AND USABLE ON CODES (UOC)	(7) QTY
					GROUP 0505 FAN ASSEMBLY	
					FIG. 41 AIR BLOWER INSTALLATION	
1	PAOFF	2930123088153	62445	0223 3421	BLOWER, ENGINE COOLI	1
2	PAFZZ	3110012980555	62445	1174602	.BEARING, BALL, ANNULA	2
3	PAFZZ	3120011957986	62445	2133633	.BUSHING, SLEEVE	1
4	PAFZZ	3040011987290	62445	3363658	.SHAFT, STRAIGHT	1
5	PAFZZ	5365011958046	62445	110-7834	.RING, RETAINING	1
6	PAFZZ		62445	0213 3634	.PULLEY, GROOVE	1
7	PAFZZ	5306011963155	62445	1111589	.BOLT, MACHINE	1
8	PAFZZ	5310011955845	62445	112 5801	.NUT, PLAIN, HEXAGON M12	1
9	PAFZZ	2930123237353	62445	0415 4640	.IMPELLER, FAN, AXIAL	1
10	XAFZZ		62445	2233424	.HOUSING, BLOWER	1
11	PAOZZ	3030013003868	62445	223 5531	BELT, V 10X1275MM	1
12	PAOZZ	5310014155222	89749	1EM80	WASHER, FLAT	5
13	PAFZZ	5306012531591	62445	1111210	BOLT, MACHINE	3
14	PAFZZ	5306012531591	62445	1126979	BOLT, MACHINE	1
15	PAOZZ	5310014155214	89749	1DM8	NUT, PLAIN, HEXAGON	1
					END OF FIGURE	

https://truckmanualshub.com/ 95

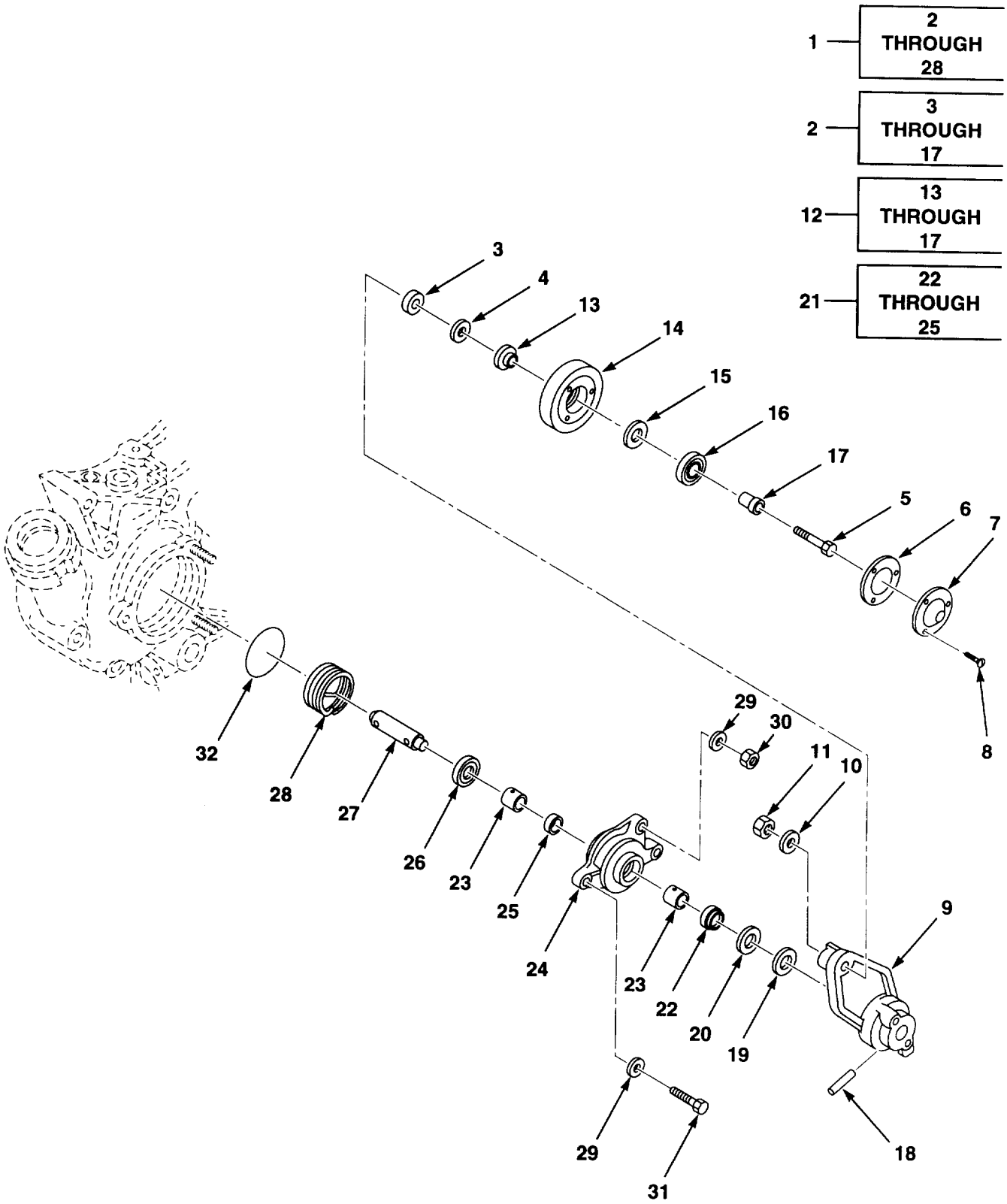

Figure 42. V Belt Tensioning Pulley.

https://truckmanualshub.com/ 96

(1) ITEM NO.	(2) SMR CODE	(3) NSN	(4) CAGEC	(5) PART NUMBER	(6) DESCRIPTION AND USABLE ON CODES (UOC)	(7) QTY
					GROUP 0505 FAN ASSEMBLY	
					FIG. 42 V BELT TENSIONING PULLEY	
1	PAFFF	3040123076331	62445	0415 2510	ADJUSTING DEVICE, BE	1
2	PAFFZ	3040123235671	62445	0415 2520	.ADJUSTING DEVICE, BE	1
3	PAFZZ	5310012077205	62445	2134884	..WASHER	1
4	PAFZZ	5310012779849	62445	2238196	..WASHER, FLAT	1
5	PAFZZ		62445	0112 4457	..BOLT, HEXAGON M8X45	1
6	PAFZZ	5330011955622	62445	2136434	..GASKET	1
7	PAFZZ	5340011957304	62445	2237847	..COVER, ACCESS	1
8	PAFZZ	5305121702292	D8286	DIN965-M6X16-4.8 -H-A2P	..SCREW, MACHINE M6x16	3
9	XAFZZ		62445	415 2519	..LEVER, PULLEY	1
10	PAFZZ	5310010135463	62445	110-7101	..WASHER, FLAT M8	3
11	PAFZZ	5310011939303	62445	112-2477	..NUT, PLAIN, HEXAGON M8	3
12	PAFFZ	3020011883676	62445	2134806	..PULLEY, IDLER ASSEMB	2
13	XAFZZ		62445	02136432	...RING	1
14	XAFZZ		62445	2133837	...PULLEY, GROOVE	1
15	XAFZZ		62445	2136433	...WASHER	1
16	XAFZZ		36719	117 2655	...BALL, BEARING	1
17	XAFZZ		62445	2133835	...BUSHING, SLEEVE	1
18	XAFZZ		62445	1115470	.PIN, SPRING M8X32	1
19	PAFZZ	3120013968372	62445	0415 2509	.BEARING, WASHER, THRU	1
20	PAFZZ	3120013969838	62445	0415 2517	.BEARING, WASHER, THRU	1
21	PAFZZ		62445	0415 3128	.COVER ASSY, IDLER	1
22	XAFZZ		62445	2238056	..SEAL	1
23	XAFZZ		62445	2238022	..BUSHING, SLEEVE	2
24	XAFZZ		62445	415 3130	..COVER, IDLER PULLEY	1
25	XAFZZ		62445	223 8084	..RING, SPACER	1
26	XAFZZ		62445	2238083	.WASHER	1
27	XAFZZ		62445	2238081	.SHAFT, STRAIGHT	1
28	PAFZZ	5360012070160	62445	223 8021	.SPRING, HELICAL, COMP	1
29	PAFZZ	5310012742086	62445	121 6108	WASHER, FLAT	3
30	PAFZZ	5310012351857	62445	111-2824	NUT, PLAIN, HEXAGON M8	2
31	PAFZZ	5306011945925	62445	1174194	BOLT M8X30	1
32	PAFZZ	5330011949950	62445	116-6111	O-RING	1
					END OF FIGURE	

https://truckmanualshub.com/ 97

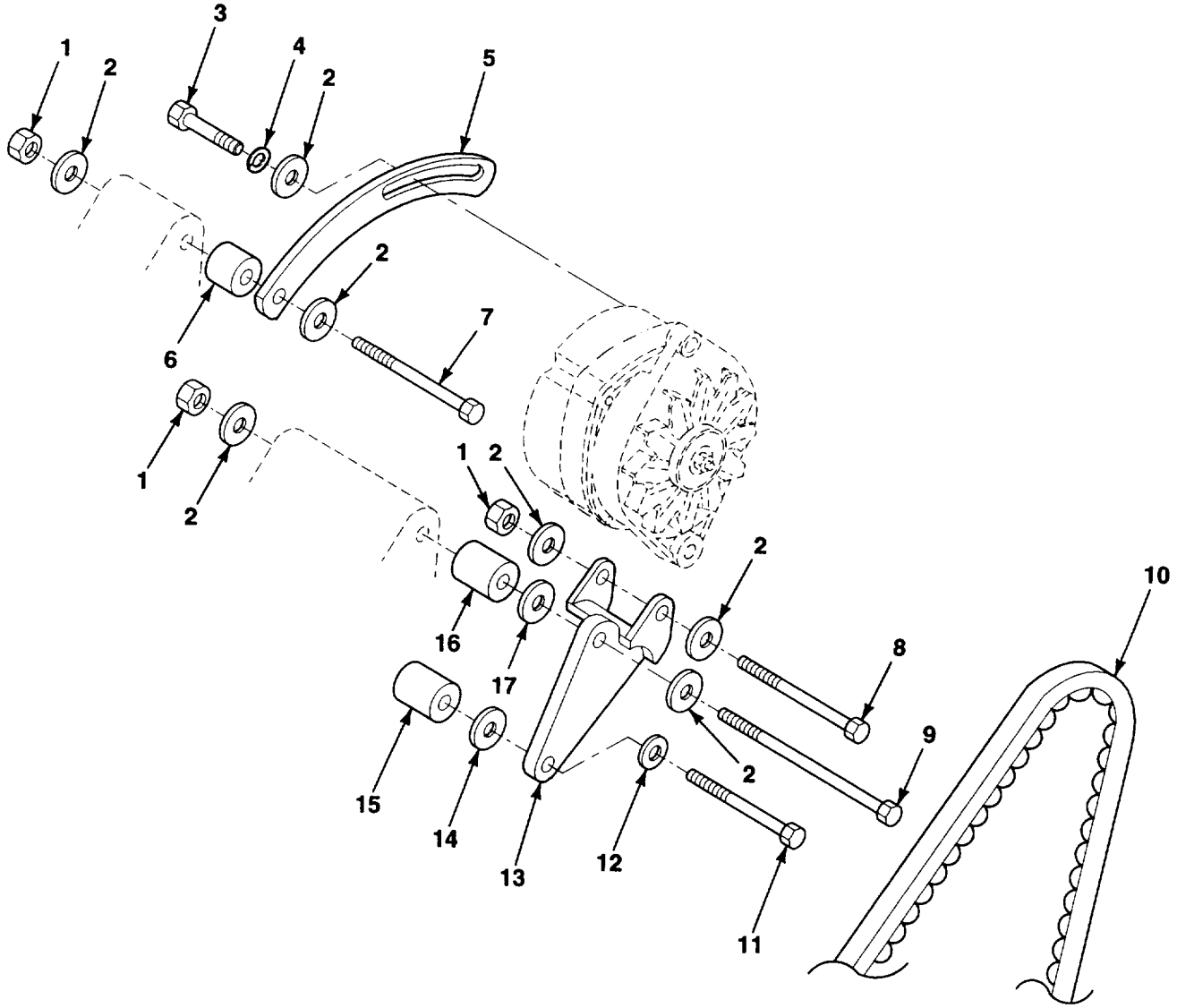

Figure 43. Alternator Mounting and Belt.

https://truckmanualshub.com/ 98

(1) ITEM NO.	(2) SMR CODE	(3) NSN	(4) CAGEC	(5) PART NUMBER	(6) DESCRIPTION AND USABLE ON CODES (UOC)	(7) QTY
					GROUP 06 ELECTRICAL SYSTEM	
					GROUP 0601 GENERATOR, ALTERNATOR	
					FIG. 43 ALTERNATOR MOUNTING AND BELT	
1	PAOZZ	5310011510041	62445	110-7731	CIRCLIP M10	3
2	PAOZZ	5310012428459	62445	1107105	WASHER, FLAT M10	7
3	PAOZZ	5305012478573	62445	111-1298	SCREW, CAP, HEXAGON H M10X45	1
4	PAOZZ	5310012742084	62445	121 6123	WASHER, FLAT	1
5	PAOZZ	5340013956286	62445	0415 8006	STRAP, CLAMPING	1
6	PAOZZ	5365012737514	62445	336 3972	SPACER, SLEEVE	1
7	PAOZZ	5306013985014	62445	0111 1342	BOLT, MACHINE M10X85	1
8	PAOZZ	5306013985015	62445	0111 1339	BOLT, MACHINE M10X80	1
9	PAOZZ	5305012852750	15526	DIN931-M10X150-8 .8-A4C	SCREW, CAP, HEXAGON H M10X150	1
10	PAOZZ	3030012709659	62445	2235180HX	BELT, V 10X1150MM	1
11	PAOZZ	5306013957698	62445	0111 1219	BOLT, MACHINE M8X125	1
12	PAFZZ	5310010135463	62445	110-7101	WASHER, FLAT M8	1
13	PAOZZ		62445	0415 8004	BRACKET, VEHICULAR C	1
14	PAFZZ	5310012742086	62445	121 6105	WASHER, FLAT M8	1
15	PAOZZ	3120013967989	62445	0336 8571	BUSHING, SLEEVE	1
16	PAOZZ	3120013969833	62445	0336 3991	BUSHING, SLEEVE	1
17	PAOZZ	5310012742084	62445	121 6123	WASHER, FLAT	1
					END OF FIGURE	

https://truckmanualshub.com/ 99

1 — 2 THROUGH 16

3 — 4 THROUGH 7

8 — 9 THROUGH 12

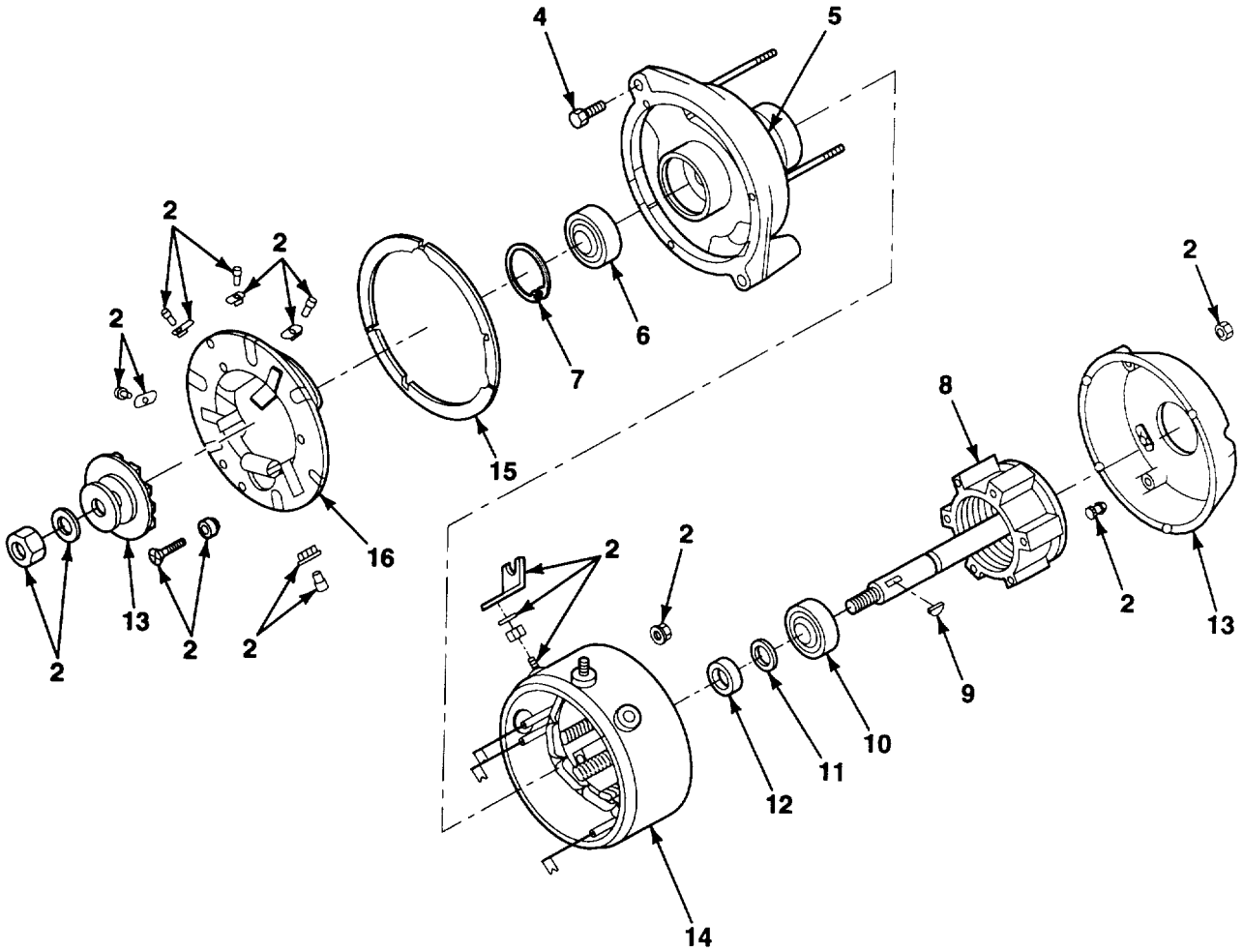

Figure 44. Alternator Assembly.

https://truckmanualshub.com/ 100

(1) ITEM NO.	(2) SMR CODE	(3) NSN	(4) CAGEC	(5) PART NUMBER	(6) DESCRIPTION AND USABLE ON CODES (UOC)	(7) QTY
					GROUP 0601 GENERATOR, ALTERNATOR	
					FIG. 44 ALTERNATOR ASSEMBLY	
1	PFOFZ	2920013476069	76761	A1-103	GENERATOR, ENGINE AC	1
2	XBOZZ	5340013955123	76761	A9-101	.HARDWARE KIT, MECHAN	1
3	PFFZZ		76761	A5-121	.COIL, ELECTRICAL	1
4	PFFZZ	5306013957699	76761	A9-501	..BOLT, MACHINE	1
5	PFFZZ		76761	A7-216	..WINDING, GENERATOR F	1
6	PFFZZ	3110013971480	76761	A9-202	..BEARING, ROLLER, CYLI	1
7	PFFZZ	5365011366095	76761	A9-513	..RING, RETAINING	1
8	PFFFZ	6115011348153	76761	A7-301	.ROTOR, GENERATOR	1
9	PFFZZ	5315011368328	76761	A9-506	..KEY	1
10	PFFZA	3120010482456	76761	A9-200	..BEARING, SLEEVE	1
11	PFFZZ	5365011366096	76761	A9-511	..RING, RETAINING	1
12	PFFZZ	6115011348122	76761	A9-505	..CUP, RETAINER	1
13	XBFZZ	5340013955121	76761	A6-101	.COVER, ACCESS	1
14	PFFZZ		76761	A7-167	.STATOR	1
15	XBFZA	5330010477712	76761	A9-514	.GASKET	1
16	PFFZZ		76761	A8-116	.ELECTRONIC COMPONEN	1
					END OF FIGURE	

https://truckmanualshub.com/ 101

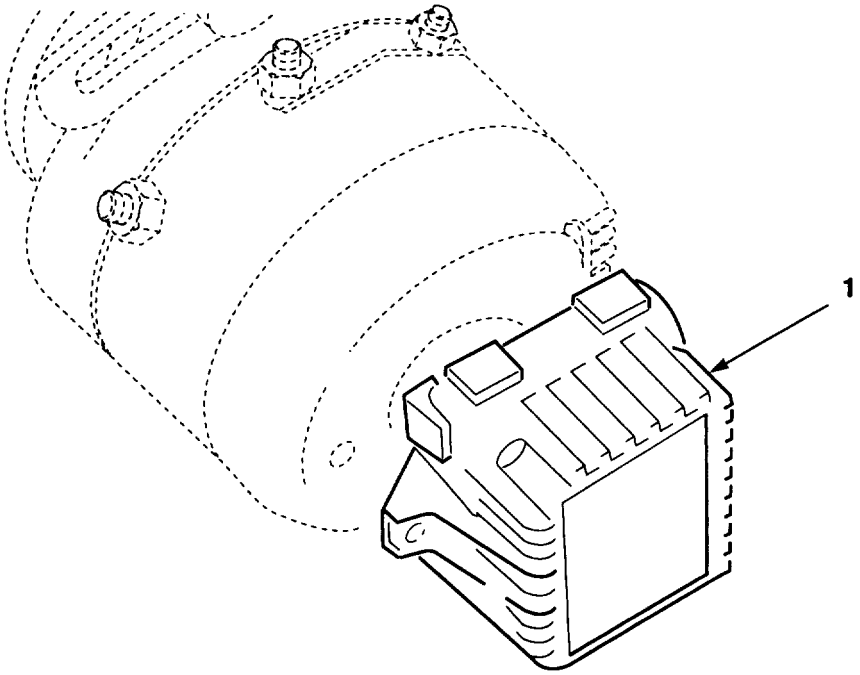

Figure 45. Voltage Regulator Installation.

https://truckmanualshub.com/ 102

(1) ITEM NO.	(2) SMR CODE	(3) NSN	(4) CAGEC	(5) PART NUMBER	(6) DESCRIPTION AND USABLE ON CODES (UOC)	(7) QTY
					GROUP 0602 GENERATOR REGULATOR (VOLTAGE)	
					FIG. 45 VOLTAGE REGULATOR INSTALLATION	
1	PAOZZ	6110013958347	76761	A2-102	REGULATOR, VOLTAGE	1
					END OF FIGURE	

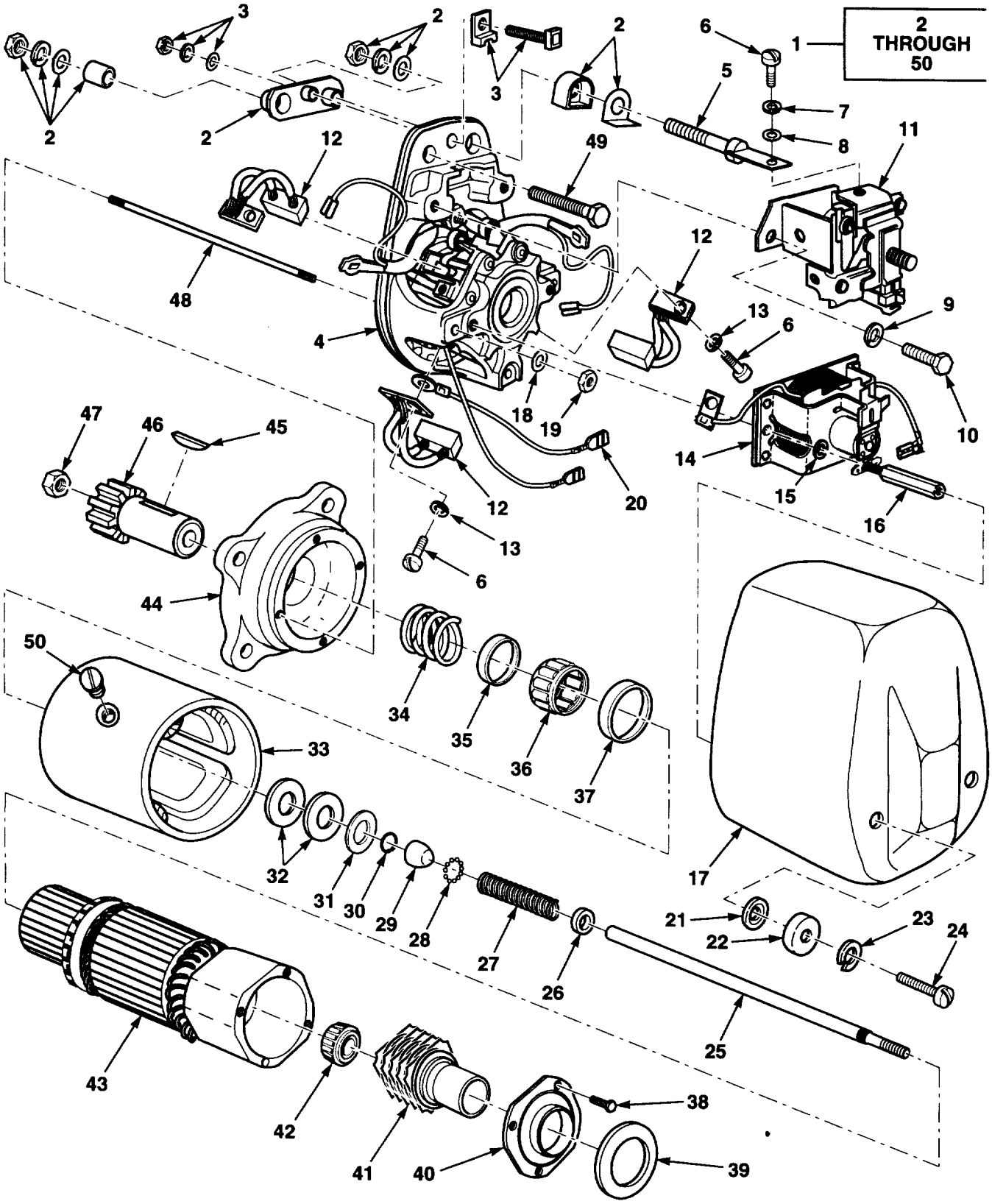

Figure 46. Starter Assembly.

https://truckmanualshub.com/ 104

GROUP 0603 STARTING MOTOR

FIG. 46 STARTER ASSEMBLY

(1) ITEM NO.	(2) SMR CODE	(3) NSN	(4) CAGEC	(5) PART NUMBER	(6) DESCRIPTION AND USABLE ON CODES (UOC)	(7) QTY
1	PAFFF		62445	0117 4631	STARTER, ENGINE, ELEC	1
2	XBFZZ		62445	01320043	.PARTS KIT, SHIM	1
3	XBFZZ		62445	01304445	.PARTS KIT, SHIM	1
4	XBFZZ		62445	01290163	.BEARING, COMMUTATOR	1
5	XBFZZ		62445	01290021	.RAIL, BAR	1
6	PAFZZ		62445	01307966	.SCREW, CHEESE HD	6
7	PAFZZ		62445	01102796	.WASHER, LOCK	8
8	XBFZZ		62445	01107089	.WASHER, FLAT	3
9	PAFZZ		62445	01102799	.WASHER, LOCK	2
10	XBFZZ		62445	01112307	.SCREW, HEX HD	2
11	PAFZZ		62445	01298635	.SWITCH	1
12	PAFZZ		62445	01308522	.BRUSHES, CARBON	4
13	XBFZZ		62445	01306000	.WASHER	2
14	PAFZZ		62445	01298826	.MAGNET	1
15	XBFZZ		D8015	2000100100	.WASHER, FLAT	2
16	XBFZZ		62445	01290074	.BOLT, STUD	2
17	XBFZZ		62445	01306477	.CAPSULE	1
18	XBFZZ		62445	01124654	.WASHER, FLAT	4
19	PAFZZ	5310121564991	D9477	DIN934-M6-8-A2P	.NUT, PLAIN, HEXAGON	4
20	XBFZZ		62445	01306478	.ELECTRIC LINE	1
21	XBFZZ		62445	01289929	.WASHER, FLAT	2
22	XBFZZ		62445	01289992	.WASHER, FLAT	2
23	PAFZZ		62445	01102797	.WASHER, LOCK	2
24	XBFZZ		62445	01105537	.SCREW, CHEESE HD	2
25	XBFZZ		62445	01290051	.AXLE	1
26	XBFZZ		62445	01307289	.RING	1
27	PAFZZ		62445	01309610	.COMPRESSION SPRING	1
28	XBFZZ		62445	01289875	.BALL	11
29	XBFZZ		62445	01309611	.BUSH, STOP	1
30	PAFZZ		62445	01200129	.RING, SNAP	1
31	XBFZZ		62445	01209919	.WASHER, FLAT	1
32	XBFZZ		62445	01289918	.SPACER	1
33	PAFZZ		62445	01298801	.WINDING	1
34	PAFZZ		62445	01290138	.SPRING	1
35	PAFZZ		62445	01289957	.SEAL, ROTARY SHAFT	1
36	XBFZZ		62445	01290012	.NEEDLE ROLLER BRG	1
37	PAFZZ		62445	01289970	.BUSH	1
38	XBFZZ		62445	01304714	.SCREW, HEX HD	4
39	XBFZZ		62445	01289921	.SPACER	1
40	XBFZZ		62445	01290150	.BEARING CAP	1
41	PAFZZ		62445	01308729	.CLUTCH, COUPLING	1
42	XBFZZ		62445	01290010	.NEEDLE ROLLER BRG	1
43	XBFZZ		62445	01290078	.ARMATURE	1
44	PAFZZ		62445	01308106	.DRIVE BEARING	1
45	XBFZZ		62445	01117970	.KEY, PARALLEL	1
46	XBFZZ		62445	01290195	.PINION	1
47	XBFZZ		62445	01309612	.NUT, HEX	1
48	PAFZZ		62445	01307226	.PIN, CLEVIS	1
49	XBFZZ		62445	01112456	.SCREW, HEX	1

https://truckmanualshub.com/ 105

(1) ITEM NO.	(2) SMR CODE	(3) NSN	(4) CAGEC	(5) PART NUMBER	(6) DESCRIPTION AND USABLE ON CODES (UOC)	(7) QTY
50	XBFZZ		62445	01137807	.SCREW, COUNTERSUNK	8

END OF FIGURE

https://truckmanualshub.com/ 106

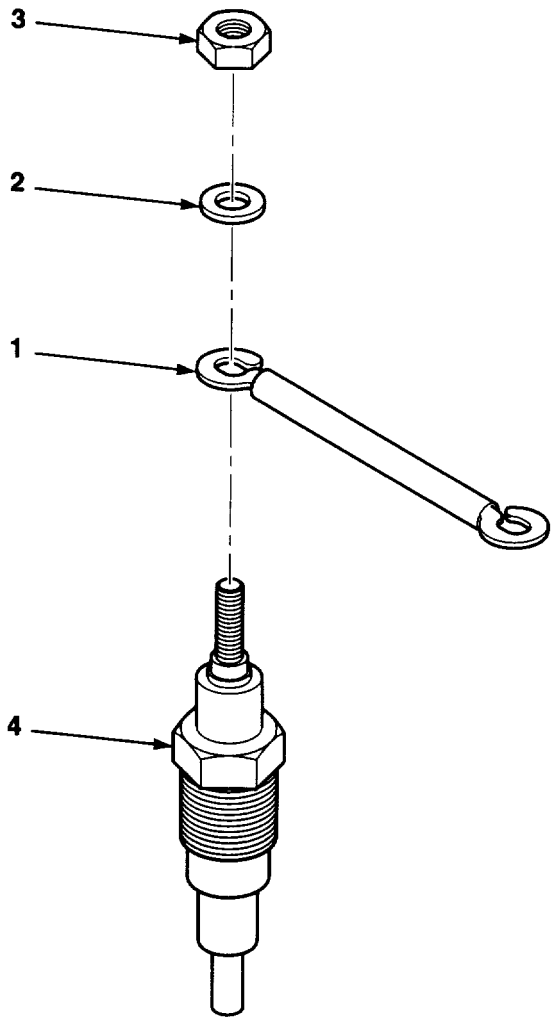

Figure 47. Glow Plug.

https://truckmanualshub.com/ 107

(1) ITEM NO.	(2) SMR CODE	(3) NSN	(4) CAGEC	(5) PART NUMBER	(6) DESCRIPTION AND USABLE ON CODES (UOC)	(7) QTY
					GROUP 0605 IGNITION COMPONENTS	
					FIG. 47 GLOW PLUG	
1	XDOZZ		62445	0224 8681	CONNECTING LINK, RIG	3
2	PAOZZ	5310013414135	62445	0110 4946	WASHER, FLAT M5	4
3	PAOZZ		62445	0111 2803	NUT, PLAIN, HEXAGON	4
4	PAOZZ	2920121952652	62445	0117 0058	GLOW PLUG	4
					END OF FIGURE	

https://truckmanualshub.com/ 108

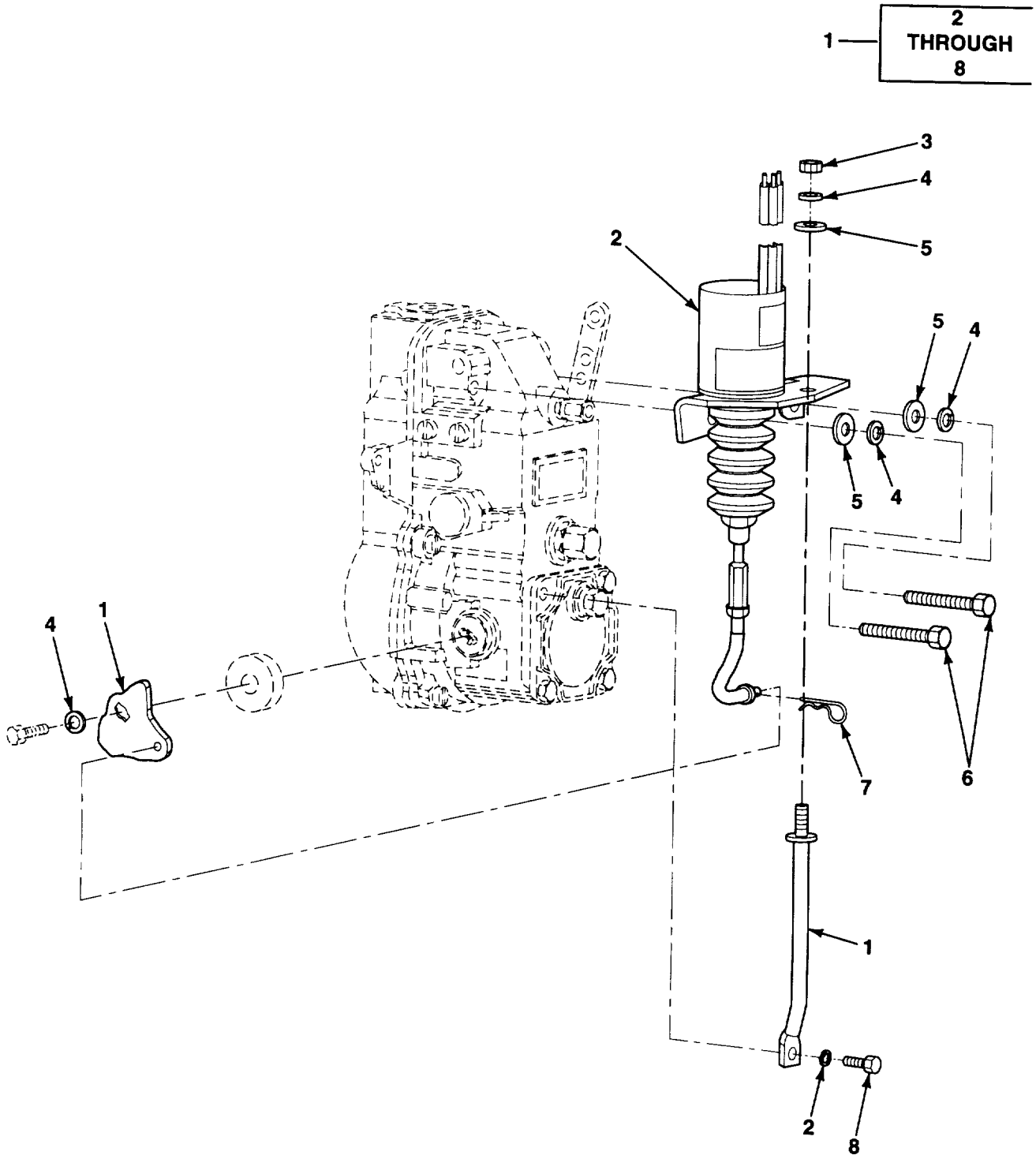

Figure 48. Engine Shutdown Solenoid.

(1) ITEM NO.	(2) SMR CODE	(3) NSN	(4) CAGEC	(5) PART NUMBER	(6) DESCRIPTION AND USABLE ON CODES (UOC)	(7) QTY
					GROUP 0606 ENGINE SAFETY CONTROLS	
					FIG. 48 ENGINE SHUTDOWN SOLENOID	
1	PAOOO		78388	SA-3742-24	SOLENOID ASSY	1
2	XAOZZ		78388	1751ES-24XA	.SOLENOID	1
3	PAOZZ	5310013960983	12603	1DM6	.NUT, PLAIN, HEXAGON M6	1
4	PAOZZ	5310013587977	77237	6EM60	.WASHER, LOCK M6	5
5	PAOZZ	5310013965256	89749	18EM613	.WASHER, FLAT M6X13	3
6	PAOZZ	5305011660614	56161	10504861	.SCREW, CAP, HEXAGON H	2
7	PAOZZ	5315013953587	78388	2368789	.PIN, LOCK	1
8	PAOZZ	5305012683656	15526	DIN933-M6X16-8.8 -A4C	.SCREW, CAP, HEXAGON H M6X16	1
					END OF FIGURE	

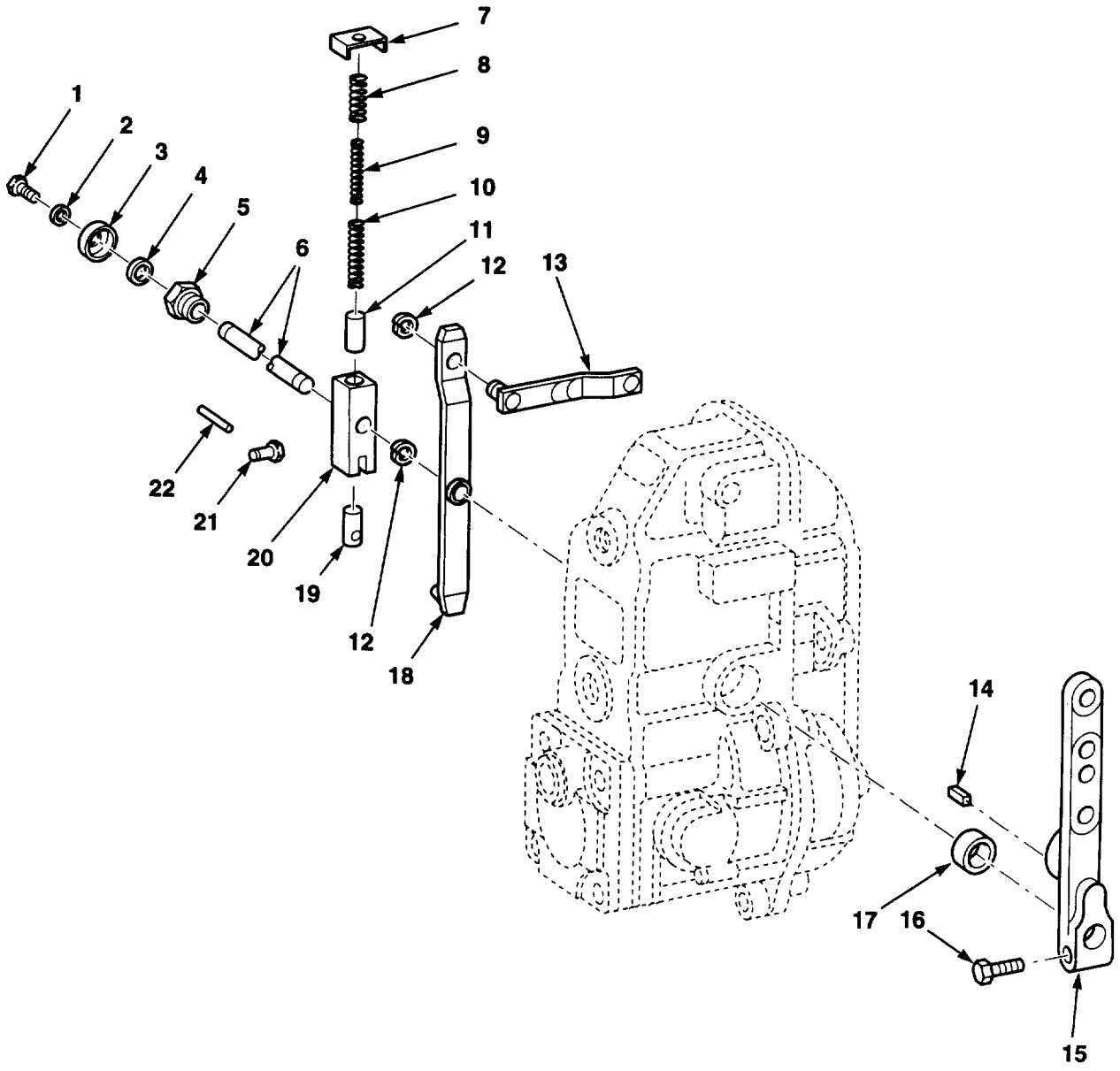

Figure 49. Throttle and Engine Shutdown Solenoid Levers.

https://truckmanualshub.com/ 111

(1) ITEM NO.	(2) SMR CODE	(3) NSN	(4) CAGEC	(5) PART NUMBER	(6) DESCRIPTION AND USABLE ON CODES (UOC)	(7) QTY
					GROUP 0606 ENGINE SAFETY CONTROLS	
					FIG. 49 THROTTLE AND ENGINE SHUTDOWN SOLENOID LEVERS	
1	XBHZZ		D8286	DIN933-M6X20-8.8 -A3C	SCREW, CAP, HEXAGON H	1
2	XAFZZ	5310010135628	62445	110-2797	WASHER, LOCK N6	1
3	XAHZZ	5360013954664	62445	0128 8602	SPRING, HELICAL, TORS	1
4	XAHZZ	5330013958012	62445	0129 9059	O-RING	1
5	XAHZZ	5365012023007	62445	1299062	BUSHING, MACHINE THR	1
6	XAHZZ	3040013975272	62445	0129 9061	SHAFT, STRAIGHT	1
7	XAHZZ	5340011983353	62445	1298782	HOLDER, SPRING	1
8	XDHZZ		53867	1424626000	SPRING, HELICAL, COMP	1
9	XDHZZ		53867	1424627002	SPRING, HELICAL, COMP	1
10	XDHZZ		53867	1424612011	SPRING, HELICAL, COMP	1
11	XDHZZ		62445	1299060	SPACER, SLEEVE	1
12	XAHZZ	5310012521344	62445	1117927	WASHER, LOCK M4	2
13	XAHZZ	5340013954666	62445	0132 1214	PLATE, MOUNTING	1
14	XAHZZ	5315121564502	62445	0111 8323	KEY, WOODRUFF M3X5	1
15	XAHZZ		62445	0128 8686	LEVER, REMOTE CONTRO	1
16	XAHZZ	5306012374919	62445	111-2264	BOLT, MACHINE	1
17	XAHZZ	3120013964289	62445	0130 4992	BUSHING, SLEEVE	1
18	XAHZZ	3040013967741	62445	0128 8662	LEVER, REMOTE CONTRO	1
19	XAHZZ	3120011893673	62445	1306960	BUSHING, SLEEVE	1
20	XAHZZ	5340013954670	62445	0129 8780	CLEVIS, ROD END	1
21	XAHZZ	5315012916635	53867	1-423-204-000	PIN, STRAIGHT, HEADED	1
22	XAHZZ	5315012712413	62445	1137555	PIN, STRAIGHT, HEADLE M8X12	1
					END OF FIGURE	

https://truckmanualshub.com/ 112

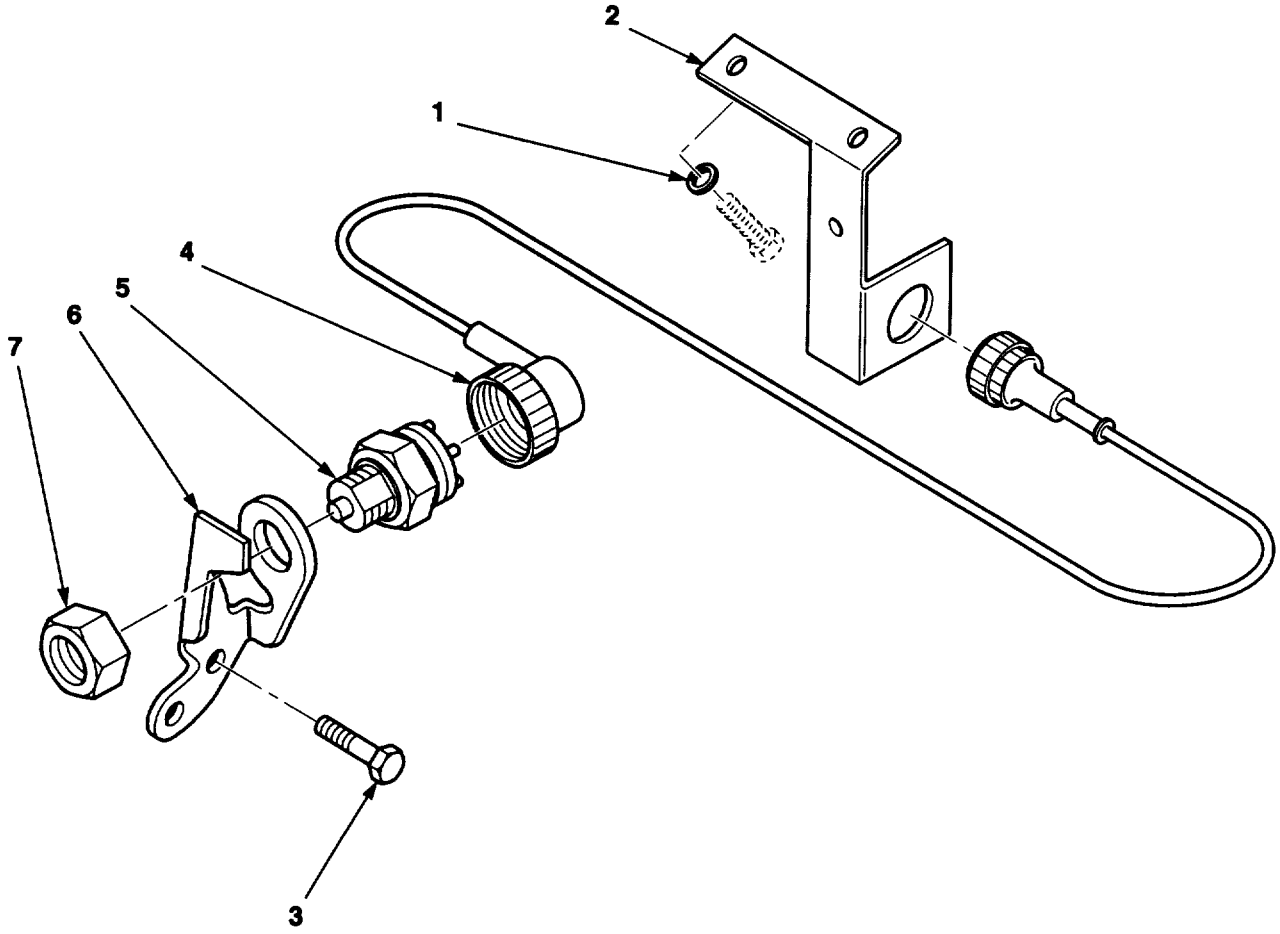

Figure 50. Broken Fan Belt Warning Switch and Cable.

https://truckmanualshub.com/ 113

(1) ITEM NO.	(2) SMR CODE	(3) NSN	(4) CAGEC	(5) PART NUMBER	(6) DESCRIPTION AND USABLE ON CODES (UOC)	(7) QTY
					GROUP 0607 INSTRUMENT OR ENGINE CONTROL PANEL	
					FIG. 50 BROKEN FAN BELT WARNING SWITCH AND CABLE	
1	PAOZZ	5310013962872	62445	0338 2693	WASHER, FLAT	1
2	PAOZZ	5340013956285	62445	0415 4610	BRACKET, MOUNTING	1
3	PAOZZ	5305012737553	62445	1171763	SCREW, CAP, HEXAGON H M8X20	1
4	PAOZZ	5935013270956	62445	224-5054	CONNECTOR, PLUG, ELEC	1
5	PAOZZ	2990013656928	62445	4191001	SWITCH, ENGINE TEMPE	1
6	PAOZZ	5930011980916	62445	2245062	BRACKET, ELECTRICAL	1
7	PAOZZ	5310011963871	62445	110 1294	NUT, PLAIN, HEXAGON M18	1
					END OF FIGURE	

https://truckmanualshub.com/ 114

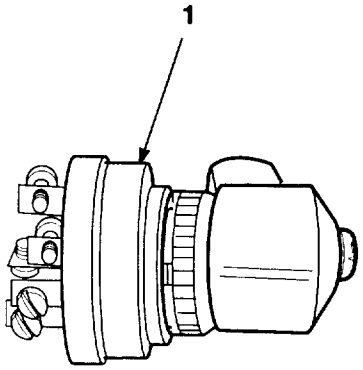

Figure 51. Starter Switch.

https://truckmanualshub.com/ 115

(1) ITEM NO.	(2) SMR CODE	(3) NSN	(4) CAGEC	(5) PART NUMBER	(6) DESCRIPTION AND USABLE ON CODES (UOC)	(7) QTY
					GROUP 0607 INSTRUMENT OR ENGINE CONTROL PANEL FIG. 51 STARTER SWITCH	
1	PAOZZ	2920011324961	13445	956-3124	SWITCH, ENGINE START	1
					END OF FIGURE	

https://truckmanualshub.com/ 116

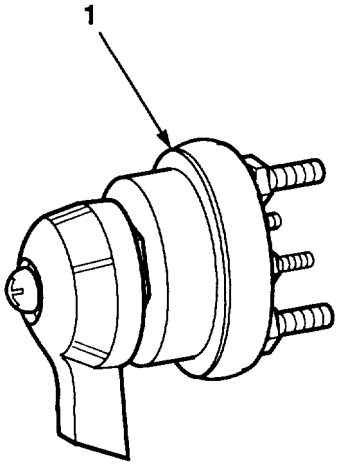

Figure 52. Master Disconnect Switch.

https://truckmanualshub.com/ 117

(1) ITEM NO.	(2) SMR CODE	(3) NSN	(4) CAGEC	(5) PART NUMBER	(6) DESCRIPTION AND USABLE ON CODES (UOC)	(7) QTY
					GROUP 0607 INSTRUMENT OR ENGINE CONTROL PANEL	
					FIG. 52 MASTER DISCONNECT SWITCH	
1	PAOZZ		13445	M-75903	SWITCH, ROTARY	1
					END OF FIGURE	

https://truckmanualshub.com/ 118

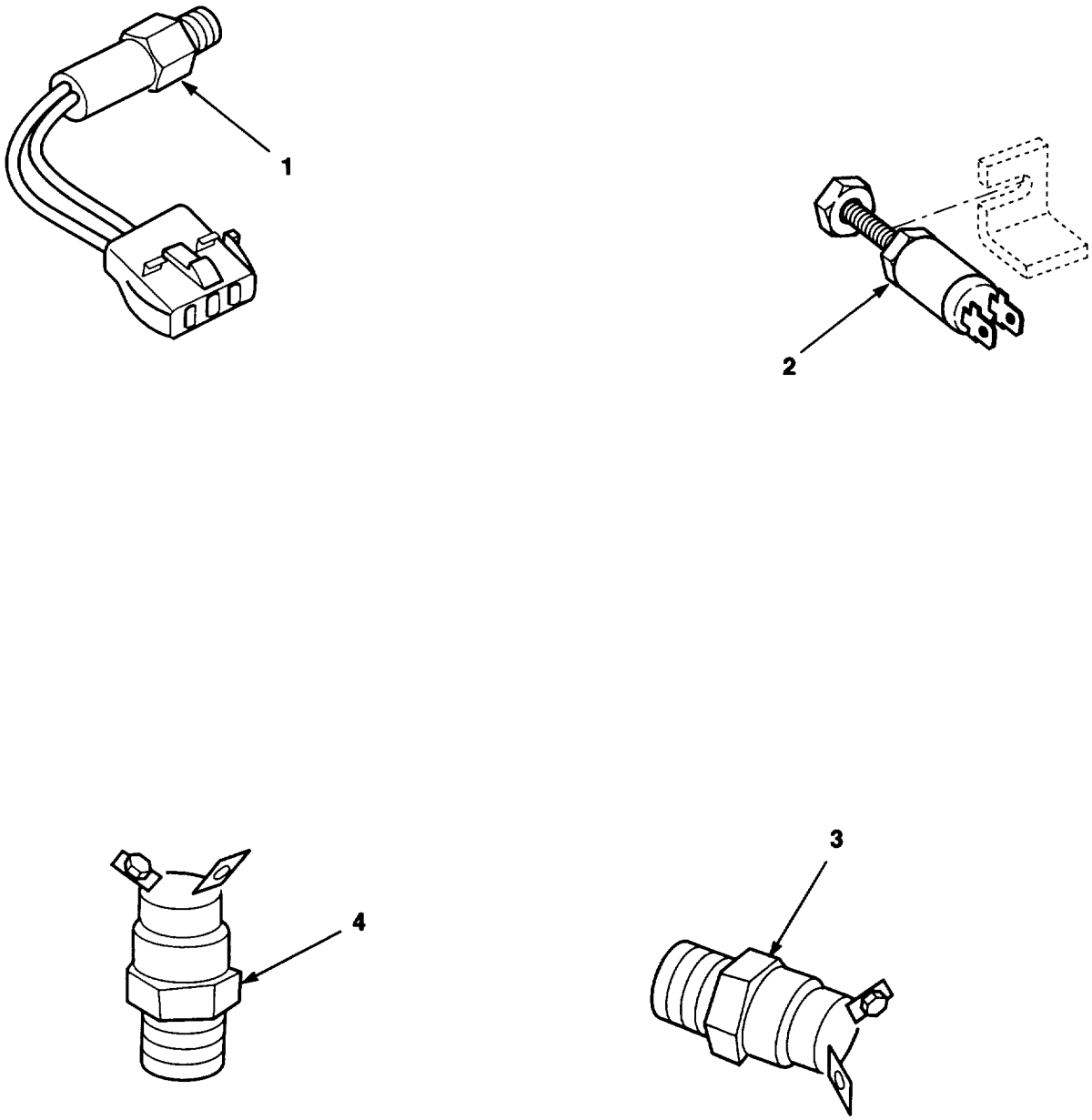

Figure 53. Switches.

https://truckmanualshub.com/ 119

(1) ITEM NO.	(2) SMR CODE	(3) NSN	(4) CAGEC	(5) PART NUMBER	(6) DESCRIPTION AND USABLE ON CODES (UOC)	(7) QTY
					GROUP 0607 INSTRUMENT OR ENGINE CONTROL PANEL	
					FIG. 53 SWITCHES	
1	PAOZZ	6620012043181	62445	117-6023	TRANSMITTER, PRESSUR	1
2	PAOZZ	1420007866682	10001	1407422	SWITCH	1
3	PAOZZ		55443	TM-511C2-105NO	SWITCH, THERMAL	1
4	PAOZZ		55443	TM-502C2-190NO	SWITCH, THERMAL	1
					END OF FIGURE	

https://truckmanualshub.com/ 120

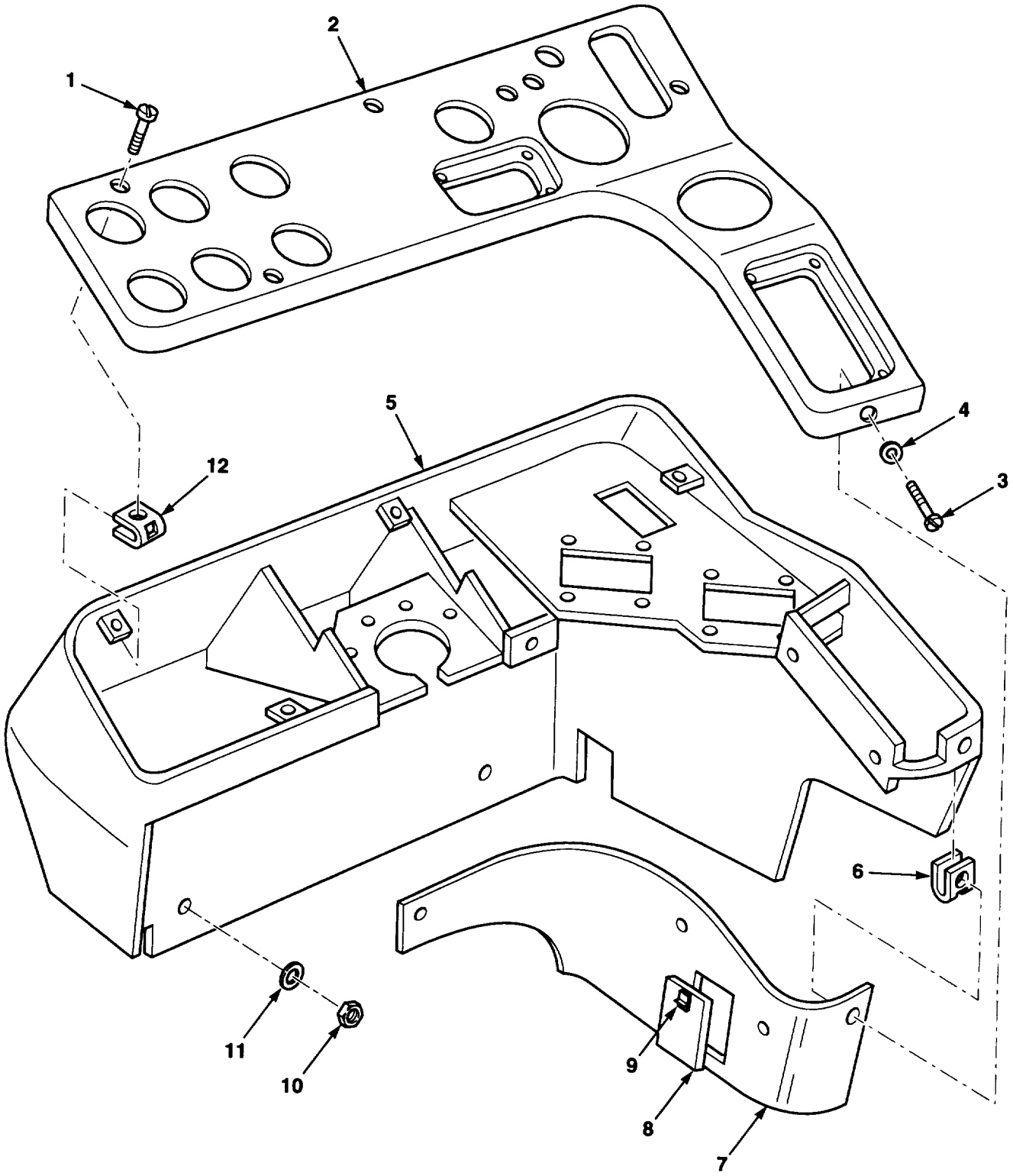

Figure 54. Instrument Panel.

https://truckmanualshub.com/ 121

(1) ITEM NO.	(2) SMR CODE	(3) NSN	(4) CAGEC	(5) PART NUMBER	(6) DESCRIPTION AND USABLE ON CODES (UOC)	(7) QTY
					GROUP 0607 INSTRUMENT OR ENGINE CONTROL PANEL	
					FIG. 54 INSTRUMENT PANEL	
1	PAOZZ		07443	1408663	SCREW, MACHINE, LARGE	4
2	XBOZZ		07443	1408213	INSTRUMENT PANEL	1
3	PAOZZ		89749	27CM820	SCREW M8X20	5
4	PAOZZ	5310014156113	89749	15EM80	WASHER, FLAT	5
5	XBOZZ		07443	1408024	CONSOLE	1
6	PAOZZ	5310012907456	72582	11500661	NUT, CLIP-ON	5
7	XBOZZ		07443	1408005	PANEL, SIDE CONSOLE	1
8	PAOZZ		07443	1409045	COVER, FUSE	1
9	PAOZZ	5340011912702	94222	A3-30-519-12	LATCH, SLIDE	2
10	PAOZZ	5310013964295	12603	1DM10	NUT, PLAIN, HEXAGON M10	5
11	PAOZZ	5310013231606	81860	R18733-1	WASHER, FLAT	5
12	PAOZZ		07443	1408862	NUT, U-TYPE	4
					END OF FIGURE	

https://truckmanualshub.com/ 122

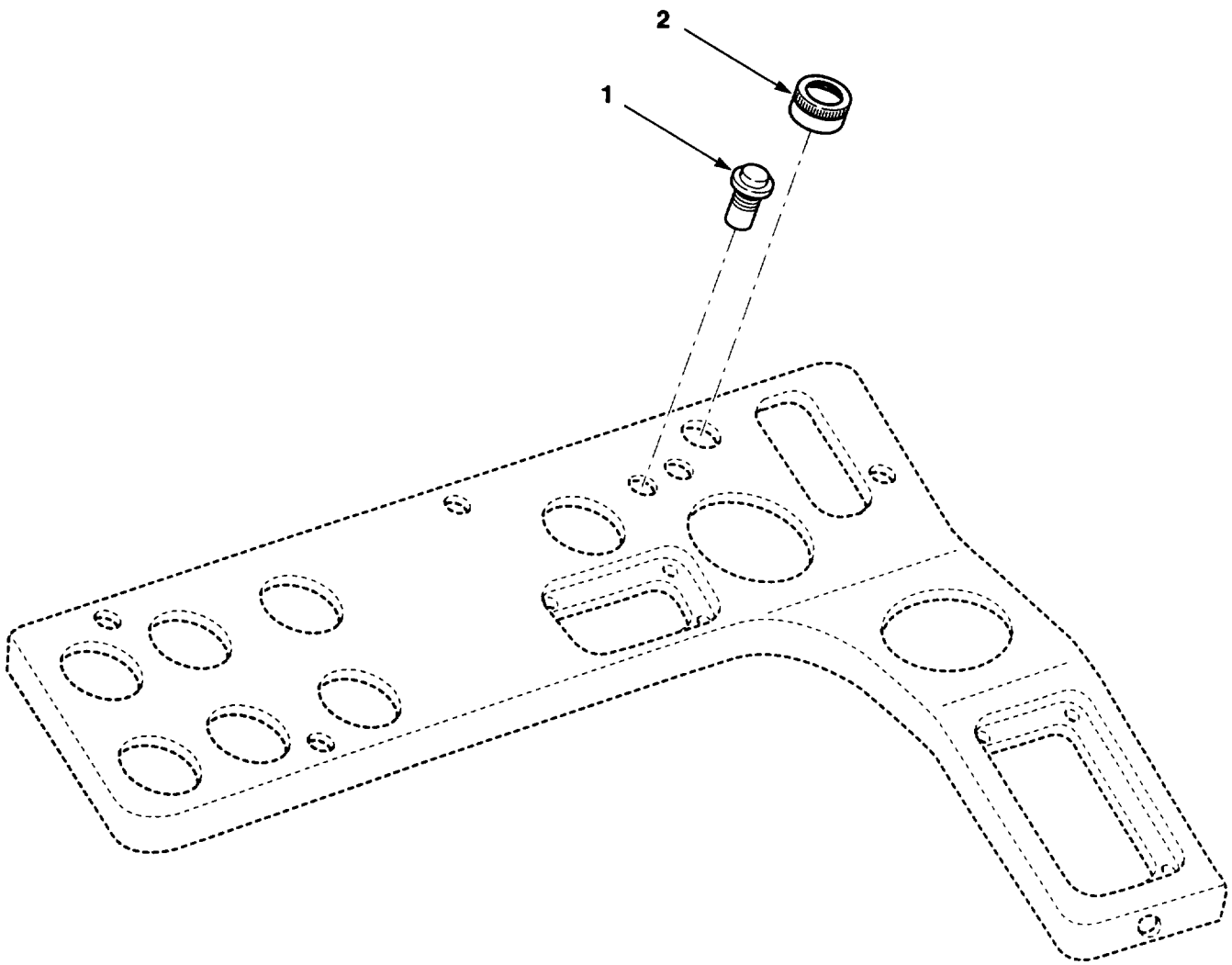

Figure 55. Warning Lights and Alarms.

https://truckmanualshub.com/ 123

(1) ITEM NO.	(2) SMR CODE	(3) NSN	(4) CAGEC	(5) PART NUMBER	(6) DESCRIPTION AND USABLE ON CODES (UOC)	(7) QTY
					GROUP 0607 INSTRUMENT OR ENGINE CONTROL PANEL FIG. 55 WARNING LIGHTS AND ALARMS	
1	PAOZZ	6625014185645	02929	557-1104-203	INDICATOR, FAULT LOC	2
2	PAOZZ	6340013472633	18479	ML-100-RMB	ALARM-MONITOR	1
					END OF FIGURE	

https://truckmanualshub.com/ 124

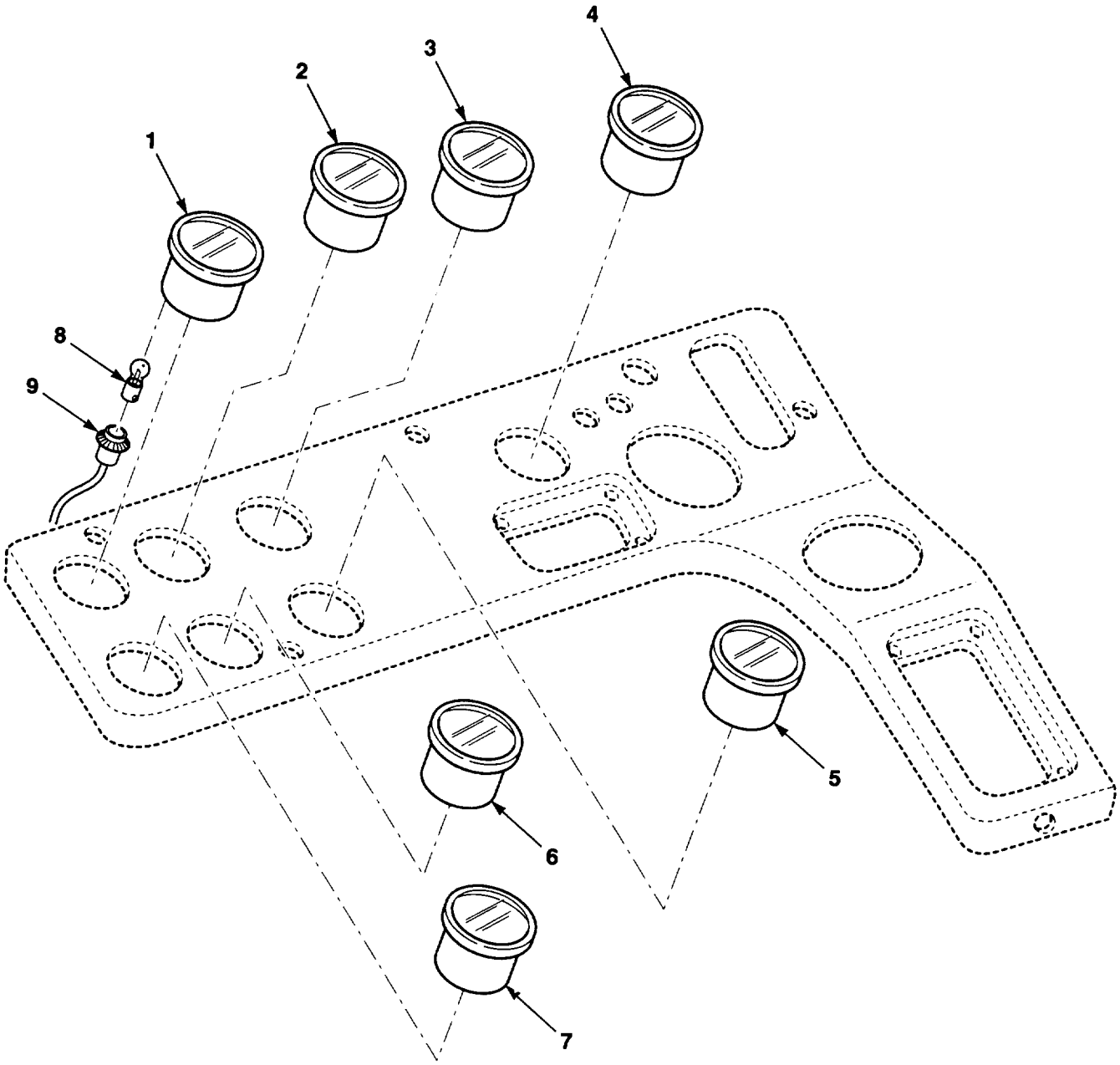

Figure 56. Instrument Panel Gauges.

https://truckmanualshub.com/ 125

(1) ITEM NO.	(2) SMR CODE	(3) NSN	(4) CAGEC	(5) PART NUMBER	(6) DESCRIPTION AND USABLE ON CODES (UOC)	(7) QTY
					GROUP 0607 INSTRUMENT OR ENGINE CONTROL PANEL	
					FIG. 56 INSTRUMENT PANEL GAUGES	
1	PAOZZ	6625014200841	33955	9154675	AMMETER	1
2	PAOZZ	6680012846517	33955	53481	INDICATOR, LIQUID QU	1
3	PAOZZ	5220014189362	59150	2781-325	GAGE, COMPARATOR, AIR	1
4	PAOZZ	6680014203350	33955	56298	GAGE, TRANSMISSION O	1
5	PAOZZ		33955	100224	HOURMETER	1
6	PAOZZ		33955	56050	GAGE, PRESSURE, DIAL	1
7	PAOZZ		33955	58435-001	GAGE, PRESSURE, DIAL	1
8	PAOZZ		33955	6285870	LIGHT, PANEL	5
9	PAOZZ		07443	1404387	SOCKET, LIGHT, VEHICU	5
					END OF FIGURE	

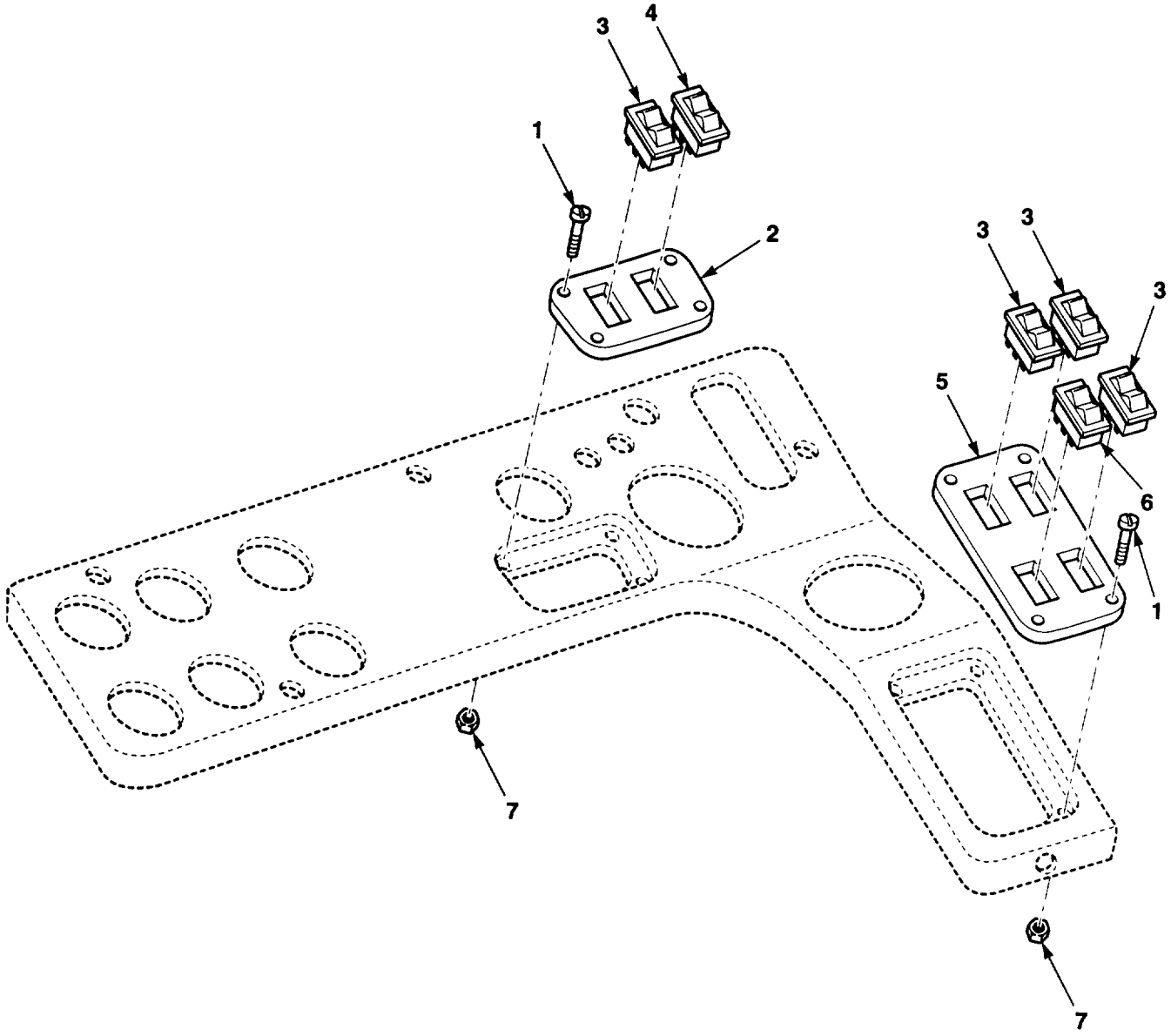

Figure 57. Instrument Panel Switches.

https://truckmanualshub.com/ 127

(1) ITEM NO.	(2) SMR CODE	(3) NSN	(4) CAGEC	(5) PART NUMBER	(6) DESCRIPTION AND USABLE ON CODES (UOC)	(7) QTY
					GROUP 0607 INSTRUMENT OR ENGINE CONTROL PANEL	
					FIG. 57 INSTRUMENT PANEL SWITCHES	
1	PAOZZ	5305008892999	96906	NS35206-217	SCREW, MACHINE	8
2	XBOZZ		07443	1401212	PLATE, SWITCH	1
3	PAOZZ		07443	1404389	SWITCH	4
4	PAOZZ		07443	1401014	SWITCH, ROCKER	1
5	PAOZZ	5975014191925	07443	1408191	PLATE, WALL, ELECTRIC	1
6	PAOZZ		9A070	8005K23N413V31	SWITCH, TOGGLE	1
7	PAOZZ	5310000880551	96906	MS21044-N04	NUT, SELF-LOCKING, HE	8
					END OF FIGURE	

https://truckmanualshub.com/ 128

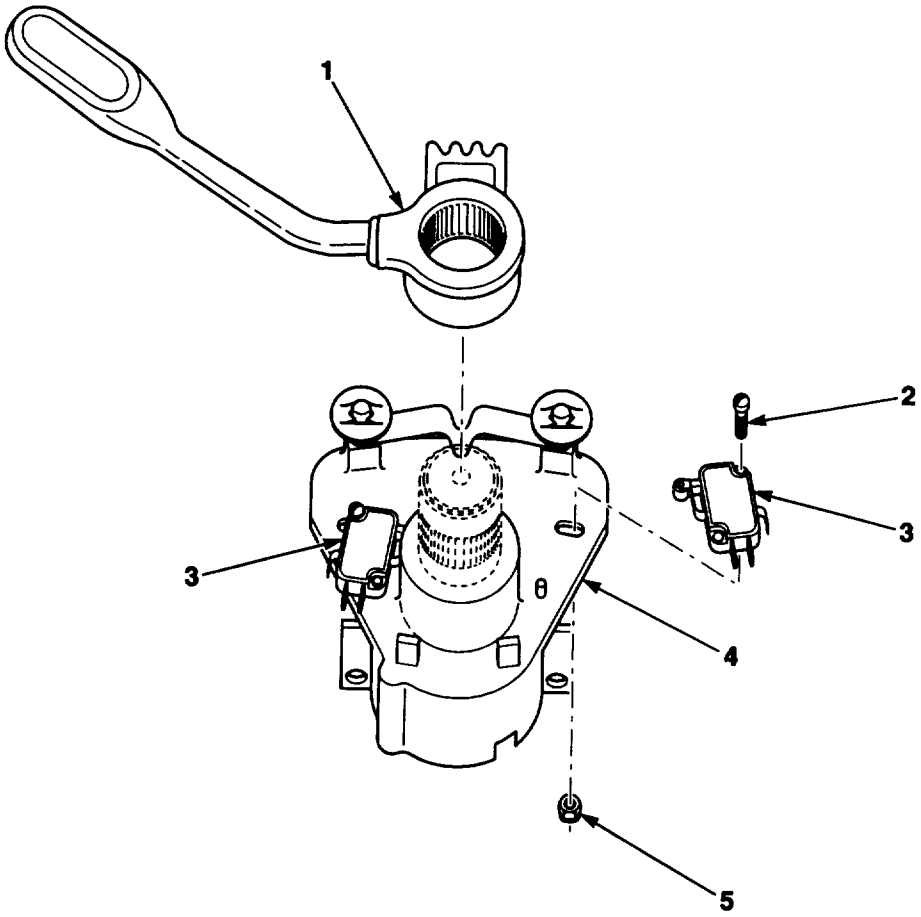

Figure 58. Transmission Shift Lever.

https://truckmanualshub.com/ 129

(1) ITEM NO.	(2) SMR CODE	(3) NSN	(4) CAGEC	(5) PART NUMBER	(6) DESCRIPTION AND USABLE ON CODES (UOC)	(7) QTY
					GROUP 0608 MISCELLANEOUS ITEMS FIG. 58 TRANSMISSION SHIFT LEVER	
1	PAOZZ		07443	2782872	HANDLE ASSY, LEVER	1
2	PAOZZ		12603	13GM3020	SCREW, MACHINE	4
3	PAOZZ	5930002586606	91929	V3L139D8	SWITCH, SENSITIVE	2
4	PAOZZ		12603	2782871	SUPPORT	1
5	PAOZZ		1CJ86	DIN 985M3	NUT, SELF-LOCKING HE	4
					END OF FIGURE	

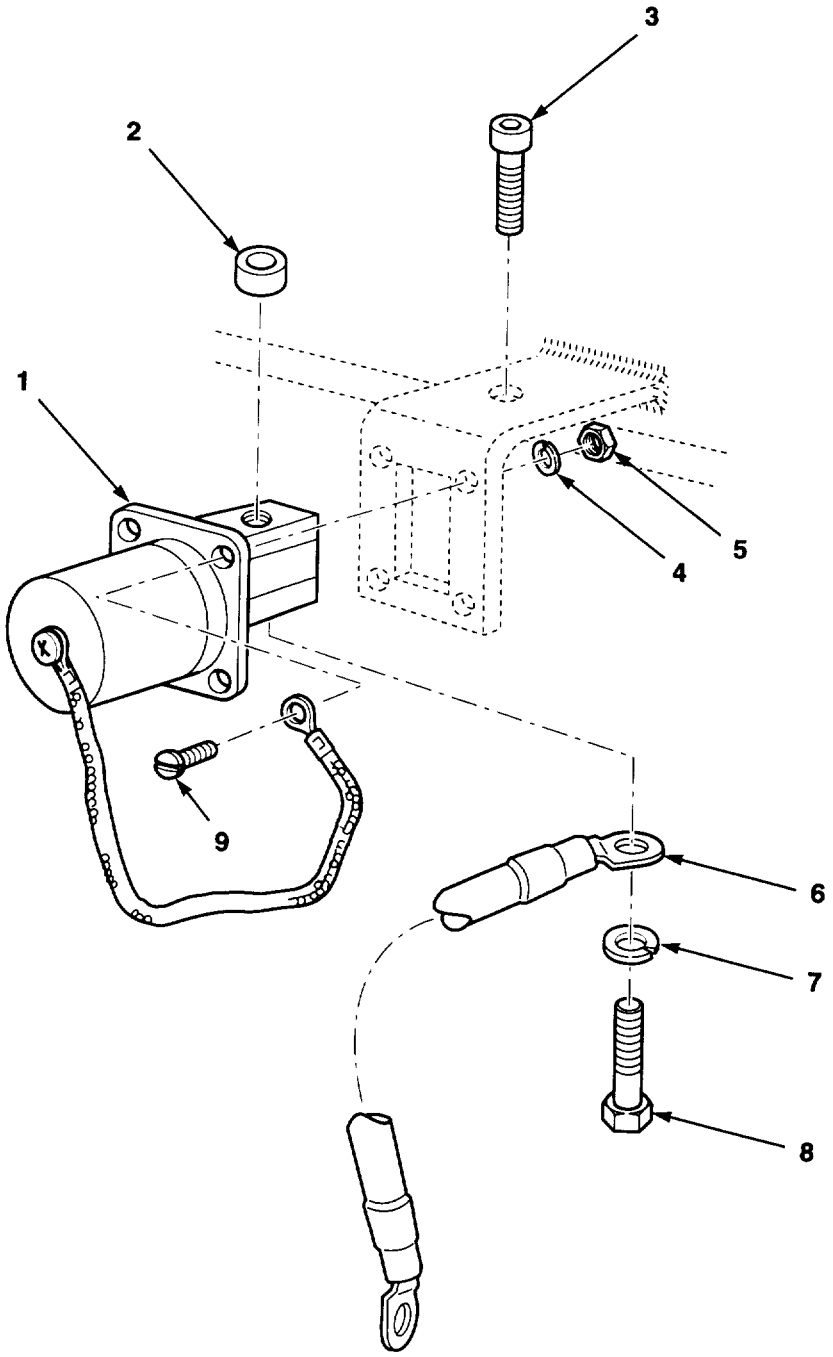

Figure 59. NATO Plug.

https://truckmanualshub.com/ 131

(1) ITEM NO.	(2) SMR CODE	(3) NSN	(4) CAGEC	(5) PART NUMBER	(6) DESCRIPTION AND USABLE ON CODES (UOC)	(7) QTY
					GROUP 0608 MISCELLANEOUS ITEMS FIG. 59 NATO PLUG	
1	PAOZZ		19207	1162345	CONNECTOR, 24V	1
2	XBOZZ		07443	1408264	SPACER	1
3	PAOZZ	5305012067235	12603	2C610	SCREW, CAP, HEXAGON H	1
4	PAOZZ	5310013703987	15526	DIN127-B5-FST	WASHER, LOCK M5	4
5	PAOZZ	5310013508553	89749	1DM5	NUT, PLAIN, HEXAGON M5	4
6	PAOZZ		07443	1408256	CABLE, SHUNT	1
7	PAOZZ	5310013703987	15526	DIN127-B5-FST	WASHER, LOCK	1
8	PAOZZ	5305002693238	80204	B1821BH038F125N	SCREW, CAP, HEXAGON H 3/8-24X1 1/4	1
9	PAOZZ		89749	13GM5016	SCREW, CAP, SOCKET HE M5	4
					END OF FIGURE	

https://truckmanualshub.com/ 132

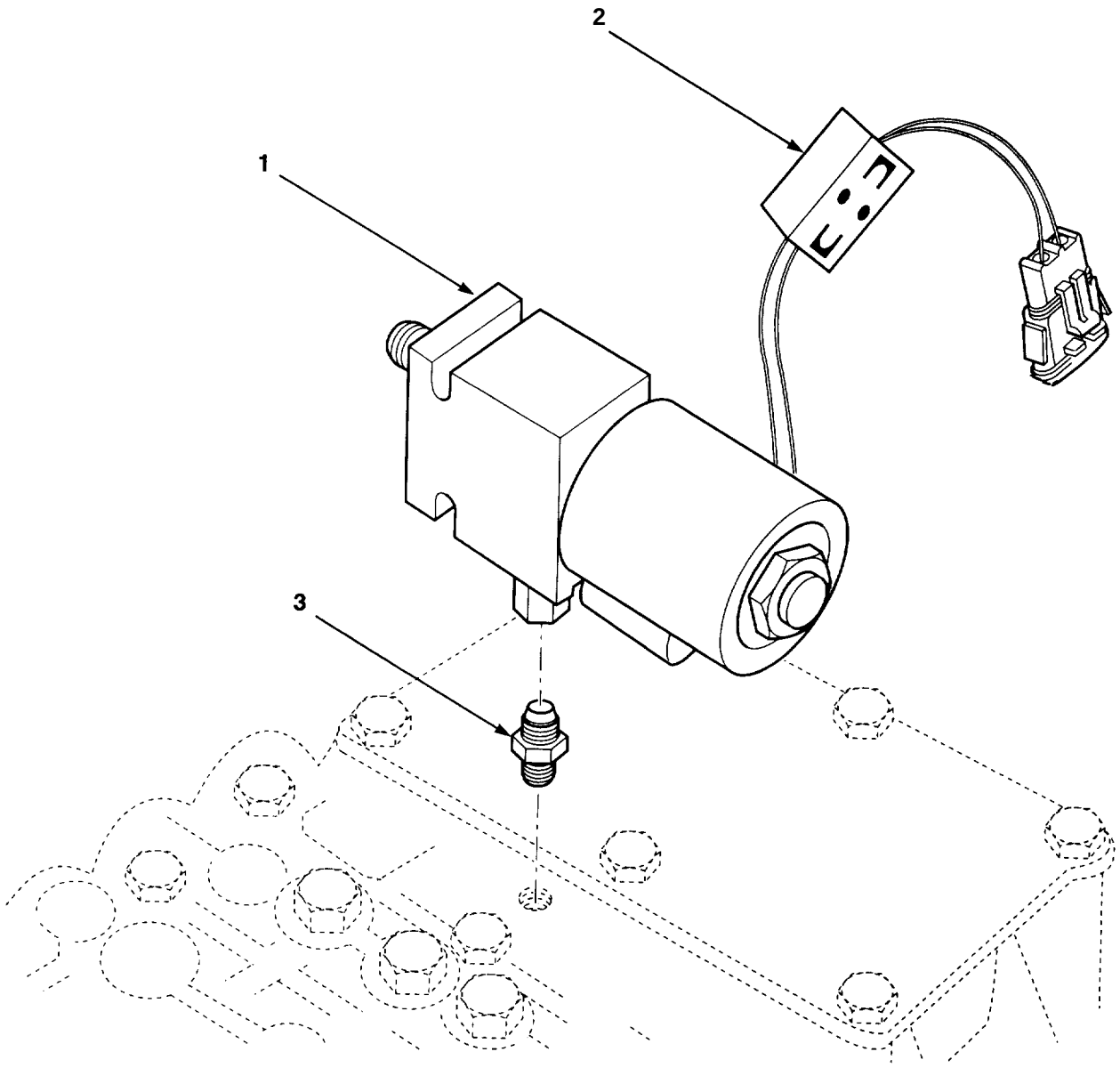

Figure 60. Transmission Inching Valve.

https://truckmanualshub.com/ 133

(1) ITEM NO.	(2) SMR CODE	(3) NSN	(4) CAGEC	(5) PART NUMBER	(6) DESCRIPTION AND USABLE ON CODES (UOC)	(7) QTY
					GROUP 0608 MISCELLANEOUS ITEMS FIG. 60 TRANSMISSION INCHING VALVE	
1	PAOZZ	4820013983338	79410	1022-237-007	VALVE, CHECK	1
2	XBOZZ		07443	1409037	FILTER, EMI/RFI SUPRESS	2
3	PAOZZ	4730004204441	30780	20V50XS	ELBOW, TUBE TO BOSS	1
					END OF FIGURE	

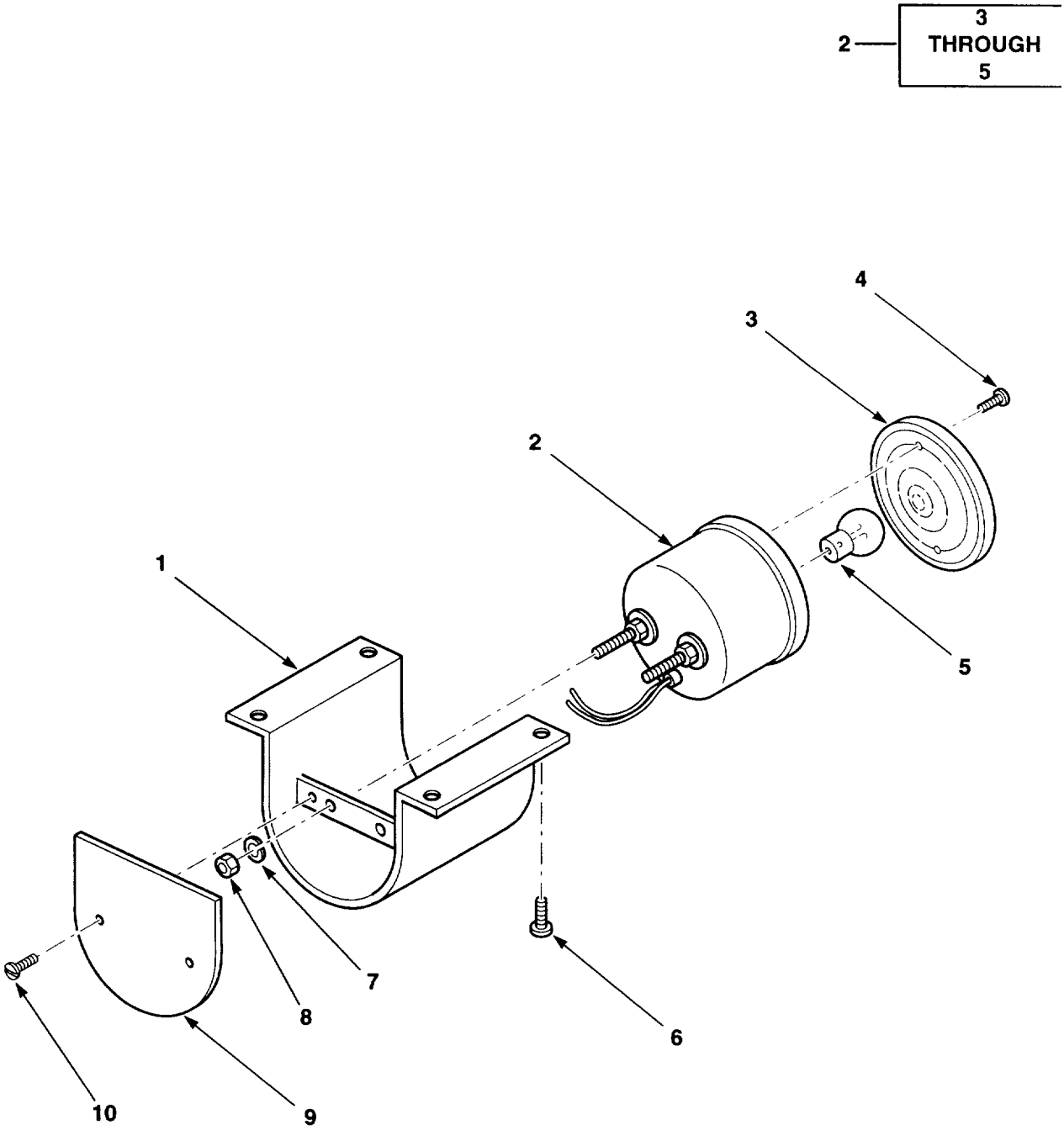

Figure 61. Brake Tail Light Installation.

https://truckmanualshub.com/ 135

(1) ITEM NO.	(2) SMR CODE	(3) NSN	(4) CAGEC	(5) PART NUMBER	(6) DESCRIPTION AND USABLE ON CODES (UOC)	(7) QTY
					GROUP 0609 LIGHTS FIG. 61 BRAKE TAIL LIGHT INSTALLATION	
1	PAOZZ	6220014326858	07443	12837	BRACKET, LIGHT RETEN	1
2	PAOZZ	6220014326854	78422	207-24V	STOP LIGHT-TAILLIGH	1
3	PAOZZ	6220004826916	78422	3042	.LENS, LIGHT	1
4	PAOZZ	5305121240527	89749	1CM625	.SCREW, CAP, HEXAGON H N6X25	3
5	XBOZZ		78422	1662	.BULB, 24V	1
6	PAOZZ	5305009897435	96906	MS35207-264	SCREW, MACHINE	4
7	PAOZZ	5310013965256	89749	18EM613	WASHER, FLAT N6X13	2
8	PAOZZ	5310013960983	12603	1DM6	NUT, PLAIN, HEXAGON M6	2
9	PAOZZ	5340014327685	07443	12838	COVER, ACCESS	1
10	PAOZZ	5305014330480	89749	86G1020	BOLT, INTERNAL WRENC	2
					END OF FIGURE	

https://truckmanualshub.com/ 136

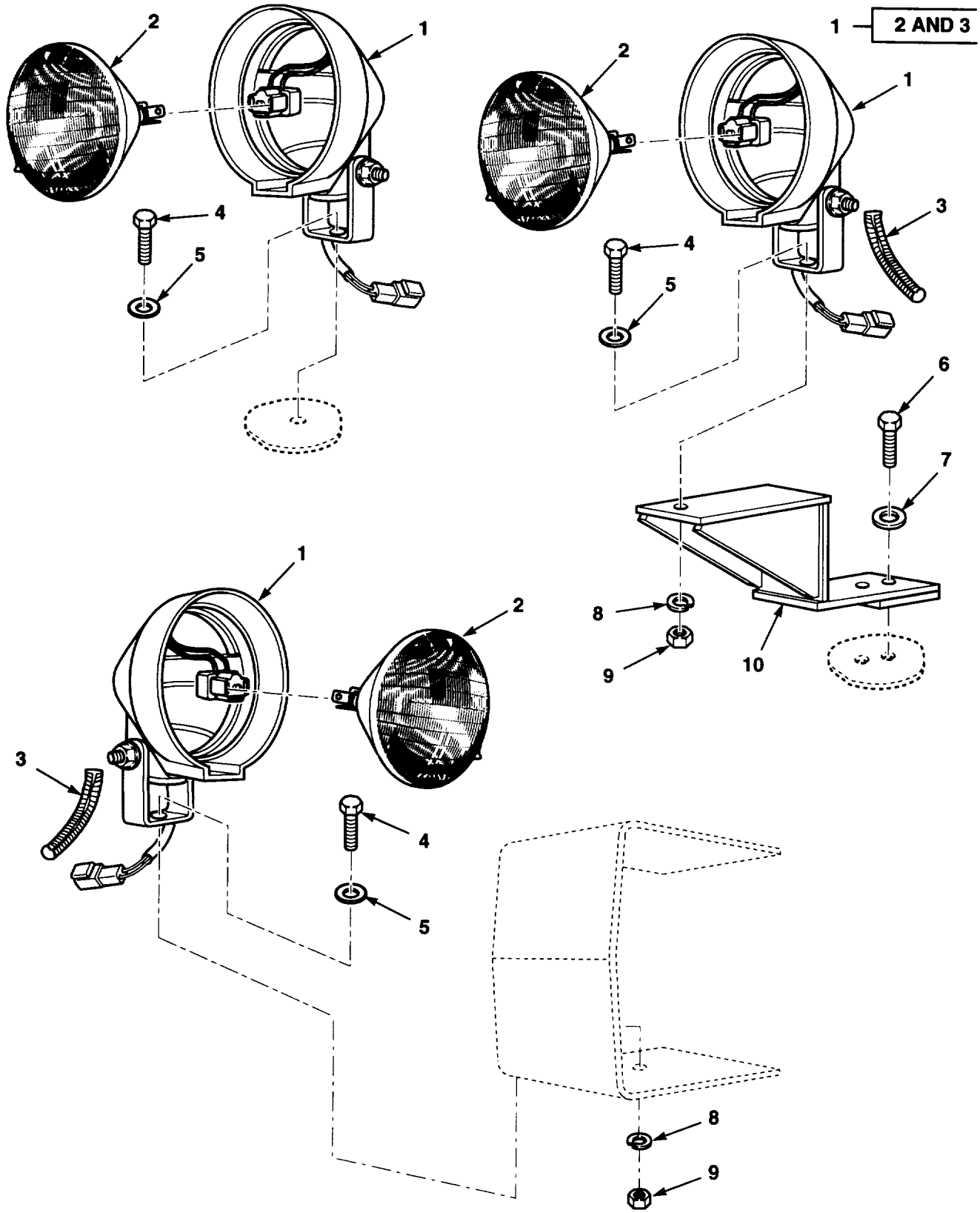

Figure 62. Flood Lights.

(1) ITEM NO.	(2) SMR CODE	(3) NSN	(4) CAGEC	(5) PART NUMBER	(6) DESCRIPTION AND USABLE ON CODES (UOC)	(7) QTY
					GROUP 0609 LIGHTS FIG. 62 FLOOD LIGHTS	
1	PAOZZ	6220014369308	07443	1408406	FLOODLIGHT, ELECTRIC	3
2	PAOZZ	6220014369501	78422	7701-24V	.FLOODLIGHT, ELECTRIC	1
3	PAOZZ	9330013970409	78174	CL5S	.TUBING, NONMETALLIC	1
4	PAOZZ	5305013957727	12603	29CM820	SCREW, CAP, HEXAGON H M8X20	3
5	PAOZZ	5310014334770	07443	1404058	WASHER, FLAT	3
6	PAOZZ	5306013218718	12603	1CM1030H	BOLT, MACHINE M10X30	1
7	PAOZZ	5310013962874	89749	18EM816	WASHER, FLAT M8X16	1
8	PAOZZ	5310013587977	77237	6EM60	WASHER, LOCK M60	2
9	PAOZZ	5310013960983	12603	1DM6	NUT, PLAIN, HEXAGON M6	2
10	XBOZZ		07443	1409542	BRACKET, LAMP	1
					END OF FIGURE	

https://truckmanualshub.com/ 138

1 — 2

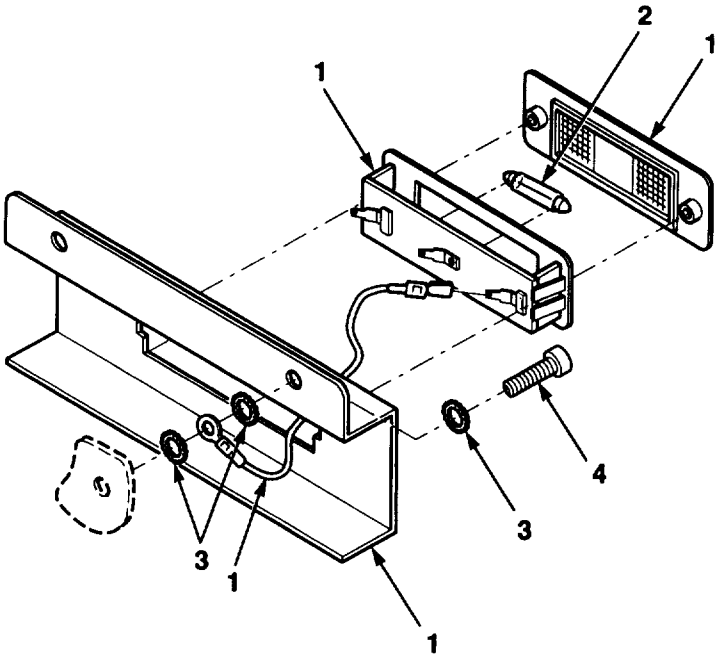

Figure 63. Cab Interior Light.

https://truckmanualshub.com/ 139

(1) ITEM NO.	(2) SMR CODE	(3) NSN	(4) CAGEC	(5) PART NUMBER	(6) DESCRIPTION AND USABLE ON CODES (UOC)	(7) QTY
					GROUP 0609 LIGHTS FIG. 63 CAB INTERIOR LIGHT	
1	PAOZZ		38022	XC7180	LIGHT ASSY, DOME	1
2	PAOZZ	6220014185001	38022	224120	.LIGHT, DOME	1
3	PAOZZ	5310000453299	96906	MS35338-42	WASHER, LOCK M40	2
4	PAOZZ	5305013980348	12603	1CM620	SCREW, CAP, HEXAGON H M6X20	2
					END OF FIGURE	

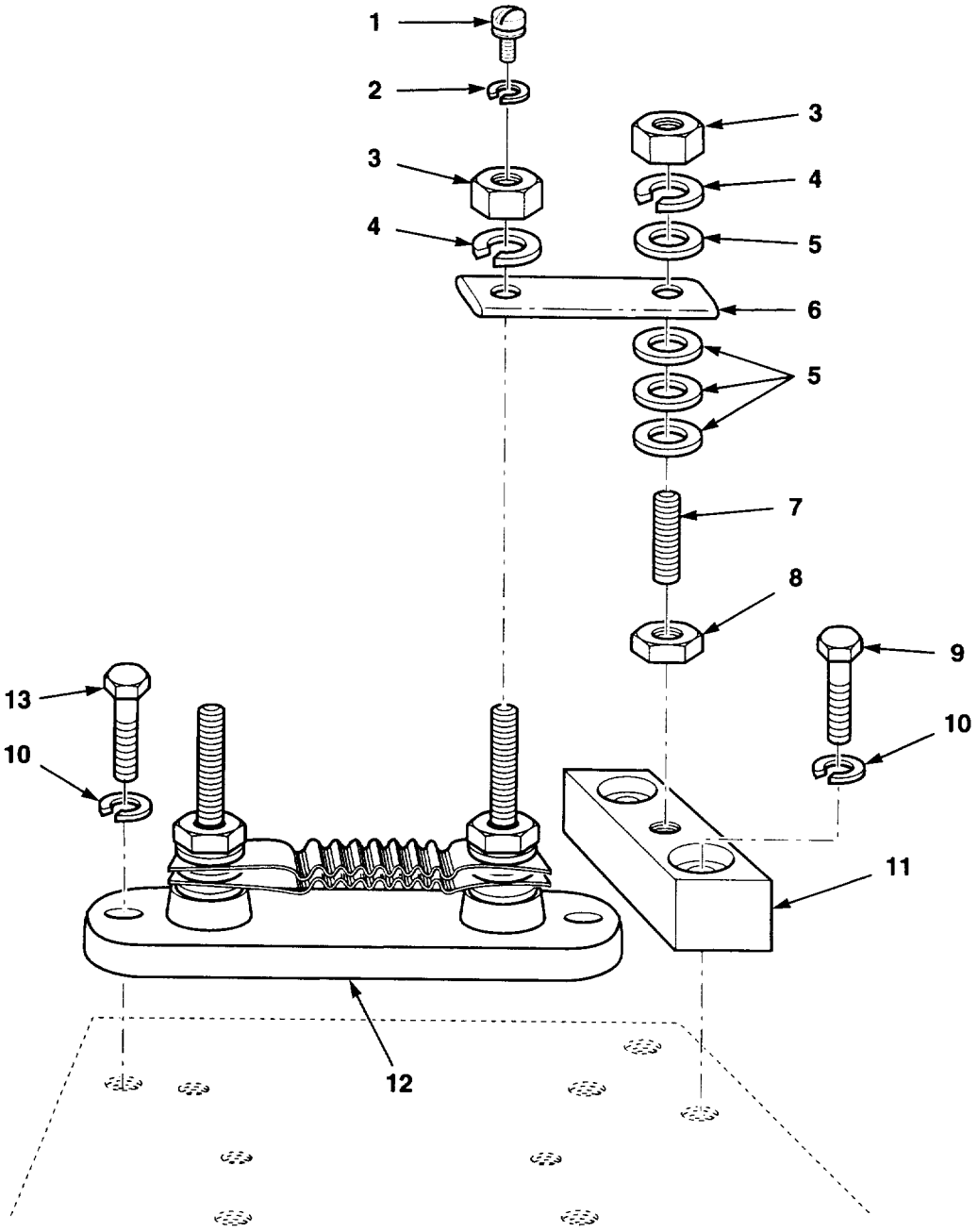

Figure 64. Shunt Assembly.

https://truckmanualshub.com/ 141

(1) ITEM NO.	(2) SMR CODE	(3) NSN	(4) CAGEC	(5) PART NUMBER	(6) DESCRIPTION AND USABLE ON CODES (UOC)	(7) QTY
					GROUP 0609 LIGHTS FIG. 64 SHUNT ASSEMBLY	
1	PAOZZ		89749	1CM516	SCREW, CAP, HEXAGON H M5X16	1
2	PAOZZ	5310005765752	96906	MS35333-39	WASHER, LOCK	1
3	PAOZZ	5310013960983	12603	1DM6	NUT, PLAIN, HEXAGON M6	2
4	PAOZZ	5310013962874	89749	18EM816	WASHER, FLAT M8X16	2
5	PAOZZ	5310013965256	89749	18EM613	WASHER, FLAT M6X13	4
6	XBOZZ		07443	14103	BAR, BUSS	1
7	PAOZZ		07443	51741-1	STUD	1
8	PAOZZ	5310014370029	07443	51454-5	NUT, PLAIN, HEXAGON	1
9	PAOZZ	5305012683656	15526	DIN933-M6X16-8.8 -A4C	SCREW, CAP, HEXAGON H	2
10	PAOZZ	5310013703987	15526	DIN127-B5-FST	WASHER, LOCK	3
11	XBOZZ		07443	15666	CONNECTOR STRIP	1
12	PFOZZ	6625013970225	78710	54125	SHUNT, INSTRUMENT	1
13	PAOZZ	5305121240527	89749	1CM625	SCREW, CAP, HEXAGON H M6X25	2
					END OF FIGURE	

https://truckmanualshub.com/ 142

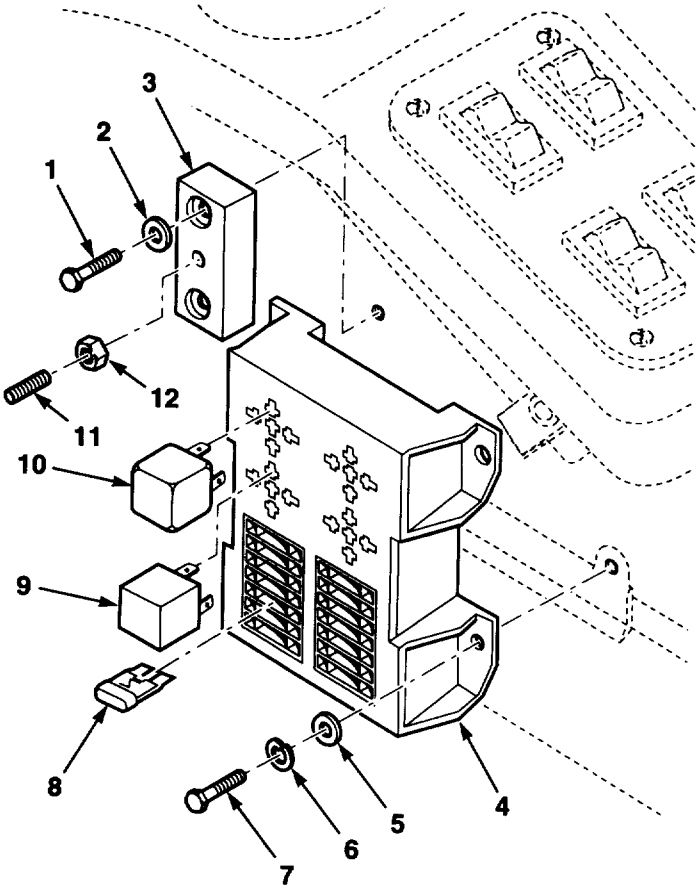

Figure 65. Fuse Panel.

https://truckmanualshub.com/ 143

(1) ITEM NO.	(2) SMR CODE	(3) NSN	(4) CAGEC	(5) PART NUMBER	(6) DESCRIPTION AND USABLE ON CODES (UOC)	(7) QTY
					GROUP 0609 LIGHTS FIG. 65 FUSE PANEL	
1	PAOZZ	5305013228719	12603	1CM816H	SCREW, CAP, HEXAGON H M8X16	2
2	PAOZZ	5310014156113	89749	15EM80	WASHER, FLAT	2
3	XBOZZ		07443	15665	BLOCK, FUSE	1
4	XBOZZ		07443	1411162	FUSE PANEL ASSY	1
5	PAOZZ	5310013960985	12603	15EM50	WASHER, FLAT	4
6	PAOZZ	5310013703987	15526	DIN127-B5-FST	WASHER, LOCK M50	4
7	PAOZZ		89749	1CM516	SCREW, CAP, HEXAGON H M5X16	4
8	PAOZZ	5920010850825	71400	ATC-20	FUSE, INCLOSED LINK 20A	4
8	PAOZZ	5920011496952	71400	ATC-15	FUSE, INCLOSED LINK 15A	5
8	PAOZZ	5920011235211	71400	ATC-10	FUSE, INCLOSED LINK 10A	2
9	PAOZZ		6Z742	2649	RELAY, 24V	2
10	PAOZZ		2E480	59196	DIODE MODULE	1
10	PAOZZ		2E480	100687	DIODE, MODULE	1
11	PAOZZ		07443	51741-1	STUD	1
12	PAOZZ		1CJ86	VSM-13756-1D	NUT, HEX	1
					END OF FIGURE	

https://truckmanualshub.com/ 144

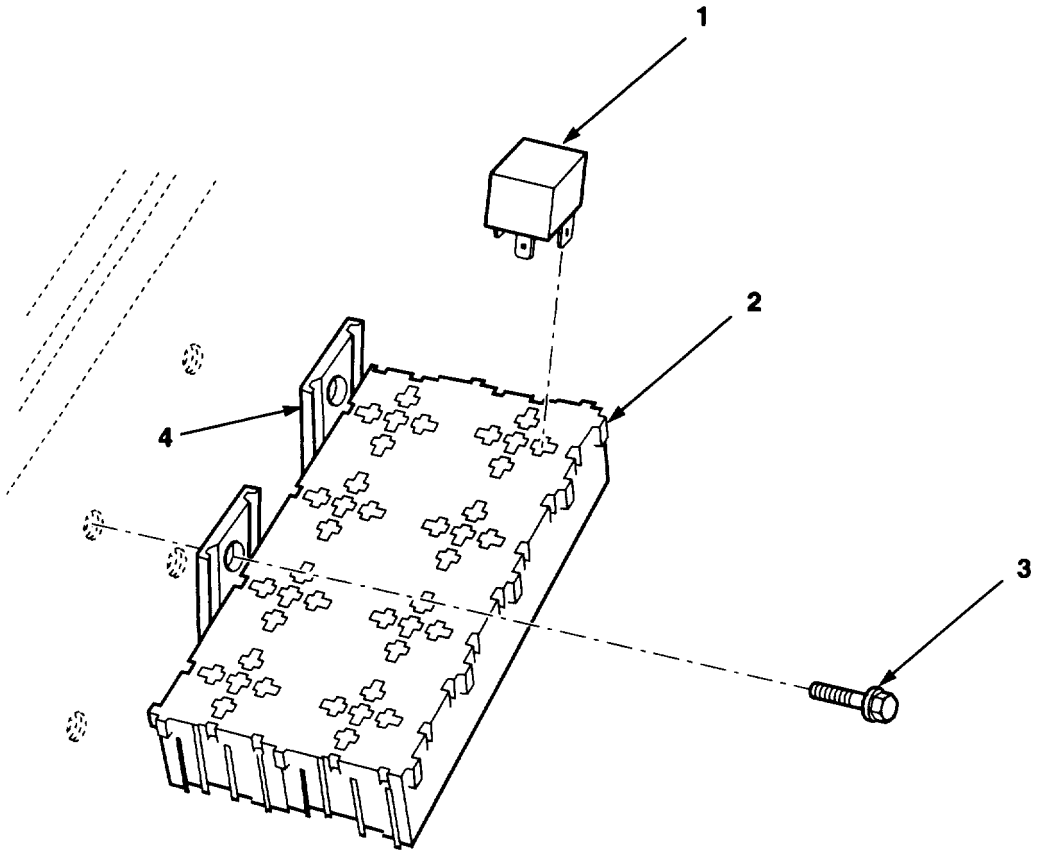

Figure 66. Relay Panel.

https://truckmanualshub.com/ 145

(1) ITEM NO.	(2) SMR CODE	(3) NSN	(4) CAGEC	(5) PART NUMBER	(6) DESCRIPTION AND USABLE ON CODES (UOC)	(7) QTY
					GROUP 0609 LIGHTS FIG. 66 RELAY PANEL	
1	XBOZZ		94969	CB1F-D-M-12V	RELAY	7
2	XBOZZ		07443	1411163	RELAY PANEL ASSY	1
3	PAOZZ	5305012067235	12603	2C610	SCREW, CAP, HEXAGON H	2
4	PAOZZ	5340014370028	2E480	59205	BRACKET, MOUNTING	2
					END OF FIGURE	

https://truckmanualshub.com/ 146

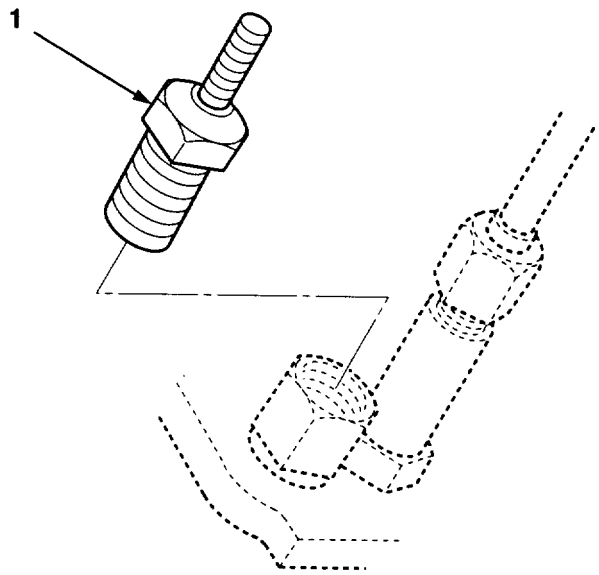

Figure 67. Transmission Fluid Temperature Switch.

https://truckmanualshub.com/ 147

(1) ITEM NO.	(2) SMR CODE	(3) NSN	(4) CAGEC	(5) PART NUMBER	(6) DESCRIPTION AND USABLE ON CODES (UOC)	(7) QTY
					GROUP 0610 SENDING UNITS AND WARNING SWITCHES	
					FIG. 67 TRANSMISSION FLUID TEMPERATURE SWITCH	
1	PAOZZ		62809	52320-027	SENDER, TRANS, OIL, TE.....	1
					END OF FIGURE	

https://truckmanualshub.com/ 148

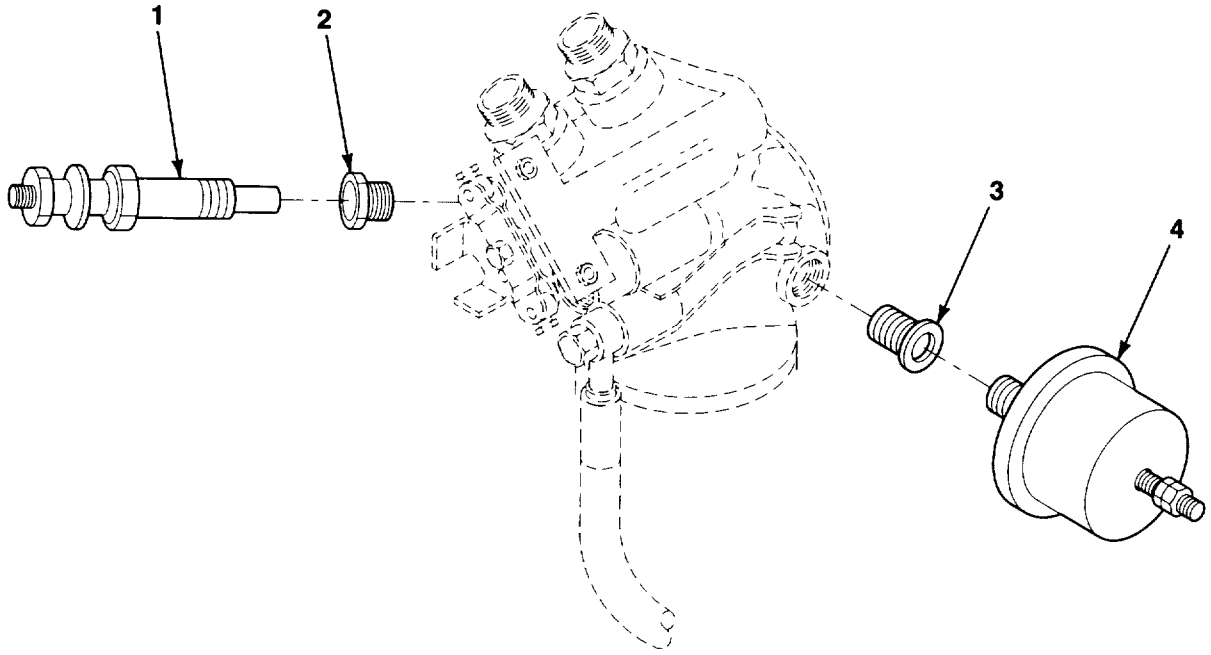

Figure 68. Oil Senders.

https://truckmanualshub.com/ 149

(1) ITEM NO.	(2) SMR CODE	(3) NSN	(4) CAGEC	(5) PART NUMBER	(6) DESCRIPTION AND USABLE ON CODES (UOC)	(7) QTY
					GROUP 0610 SENDING UNITS AND WARNING SWITCHES	
					FIG. 68 OIL SENDERS	
1	PAOZZ		62809	52320-027	SENDER, TRANS, OIL, TE	1
2	PAOZZ	4730013957313	62809	824520	ADAPTER, STRAIGHT, PI	1
3	PAOZZ		07443	1407425	FITTING	1
4	PAOZA	6620009628699	33955	1500171	TRANSMITTER, PRESSUR	1
					END OF FIGURE	

https://truckmanualshub.com/ 150

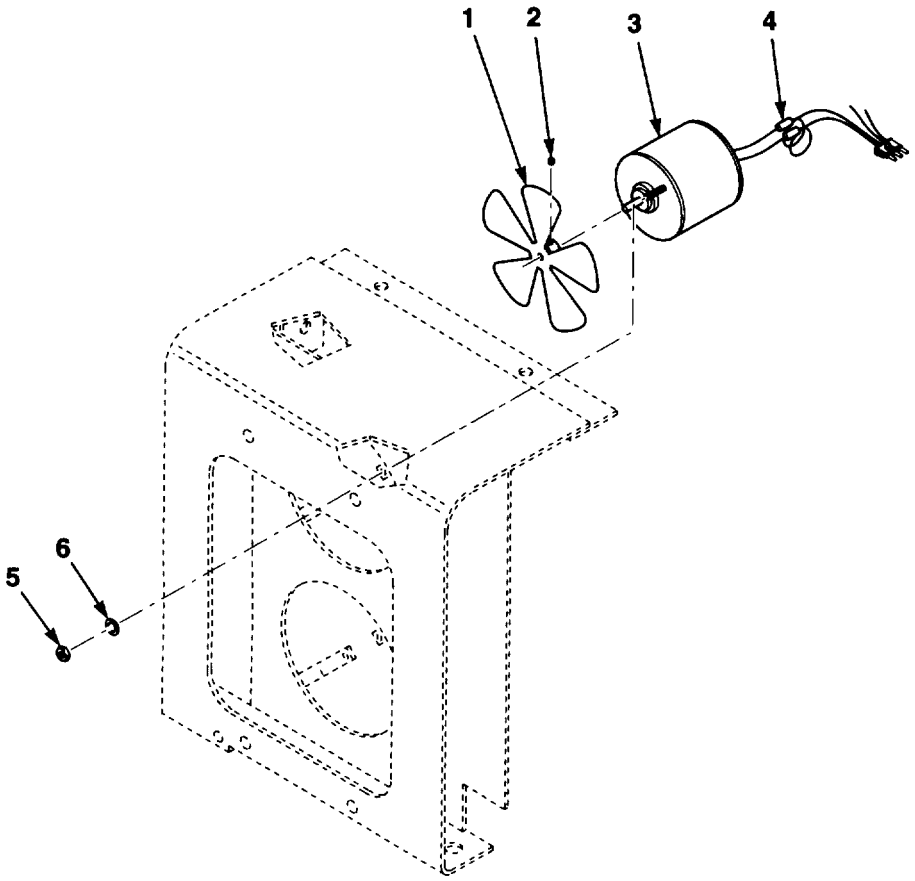

Figure 69. Axle Cooling Fan.

https://truckmanualshub.com/ 151

(1) ITEM NO.	(2) SMR CODE	(3) NSN	(4) CAGEC	(5) PART NUMBER	(6) DESCRIPTION AND USABLE ON CODES (UOC)	(7) QTY
					GROUP 0610 SENDING UNITS AND WARNING SWITCHES	
					FIG. 69 AXLE COOLING FAN	
1	PAOZZ		81169	4C473	IMPELLER, FAN, AXIAL	2
2	XBOZZ		07443	1411176	SETSCREW	2
3	PAOZZ		81169	2M197	MOTOR ASSEMBLY, ELEC	2
4	PAOZZ		OKN95	4402-65	FILTER	4
5	PAOZZ		07443	12D8E	NUT, PLAIN, HEXAGON	4
6	PAOZZ		07443	13E8	WASHER, LOCK	4
					END OF FIGURE	

https://truckmanualshub.com/ 152

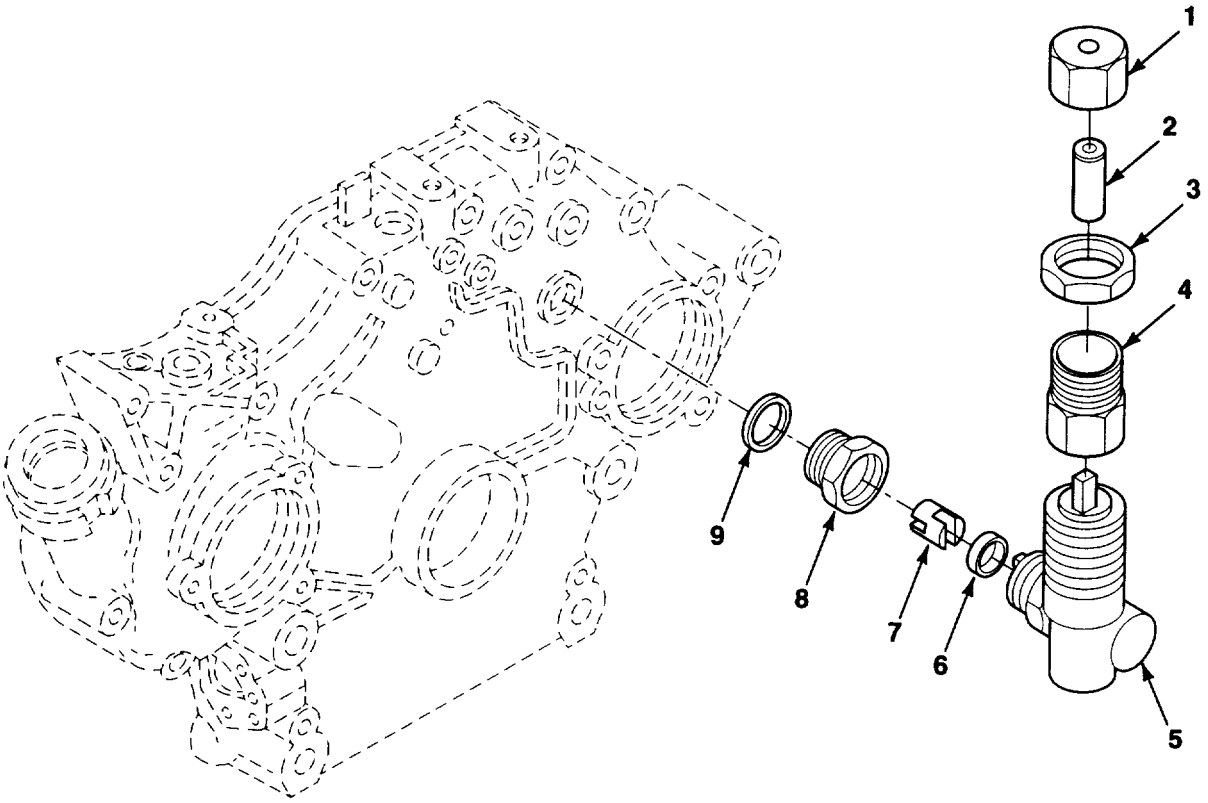

Figure 70. Tachometer Adapter.

https://truckmanualshub.com/ 153

(1) ITEM NO.	(2) SMR CODE	(3) NSN	(4) CAGEC	(5) PART NUMBER	(6) DESCRIPTION AND USABLE ON CODES (UOC)	(7) QTY
					GROUP 0610 SENDING UNITS AND WARNING SWITCHES	
					FIG. 70 TACHOMETER ADAPTER	
1	XDOZZ		07443	1408661	CAP ASSEMBLY	1
2	PAOZZ	3040014380632	07443	1408665	SHAFT, STRAIGHT	1
3	PAOZZ	5310014375846	07443	1408666	NUT, PLAIN, HEXAGON	1
4	XBOZZ		07443	1408664	BODY, HEX	1
5	XBFZZ		62445	1174540	ADAPTER	1
6	XBFZZ		62445	2167770	RING	1
7	XBFZZ		62445	2245518	ACTUATOR	1
8	XBFZZ		62445	2230937	PLUG	1
9	XBFZZ		62445	1118750	RING	1
					END OF FIGURE	

https://truckmanualshub.com/ 154

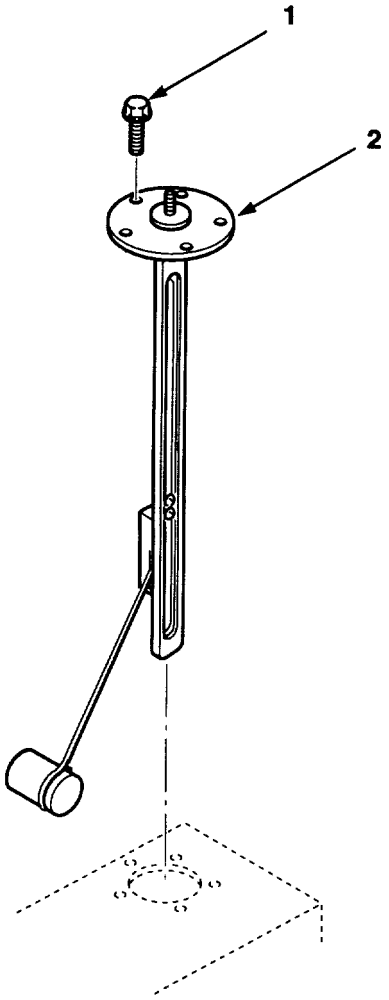

Figure 71. Fuel Level Sensor.

https://truckmanualshub.com/ 155

(1) ITEM NO.	(2) SMR CODE	(3) NSN	(4) CAGEC	(5) PART NUMBER	(6) DESCRIPTION AND USABLE ON CODES (UOC)	(7) QTY
					GROUP 0610 SENDING UNITS AND WARNING SWITCHES	
					FIG. 71 FUEL LEVEL SENSOR	
1	PAOZZ		07443	46G1008	SCREW, CAP, HEX HD	5
2	PAOZZ	6680014200383	07443	1408827	TRANSMITTER, LIQUID	1
					END OF FIGURE	

https://truckmanualshub.com/ 156

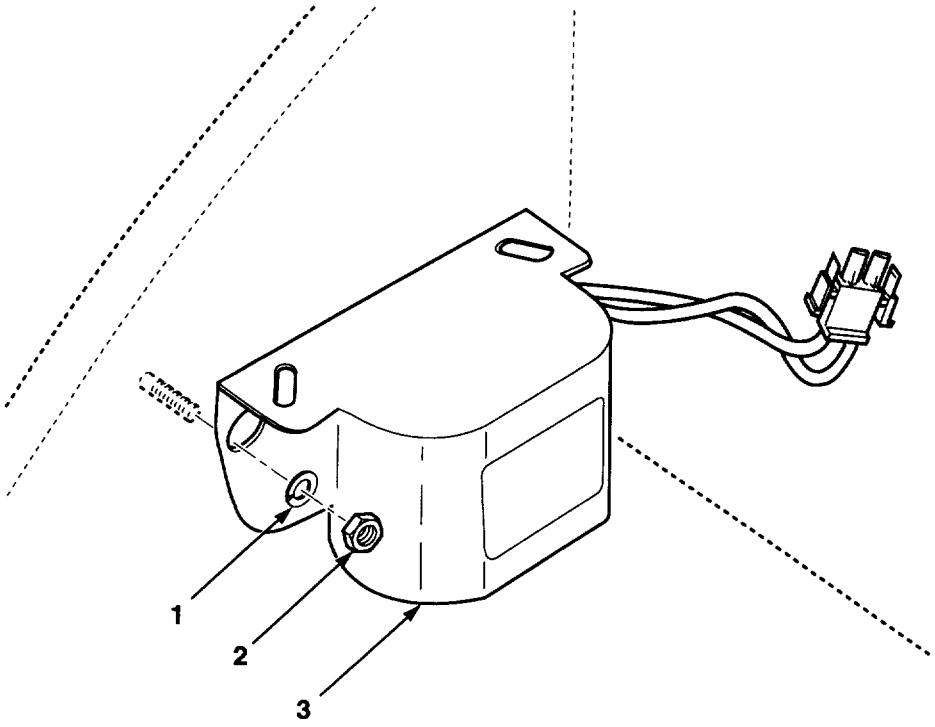

Figure 72. Horn Installation.

https://truckmanualshub.com/ 157

(1) ITEM NO.	(2) SMR CODE	(3) NSN	(4) CAGEC	(5) PART NUMBER	(6) DESCRIPTION AND USABLE ON CODES (UOC)	(7) QTY
					GROUP 0611 HORN, SIREN FIG. 72 HORN INSTALLATION	
1	PAOZZ	5310013962874	89749	18EM816	WASHER, FLAT M8X16	2
2	PAOZZ	5310014155214	89749	1DM8	NUT, PLAIN, HEXAGON M8	2
3	PAOZZ		07443	1406267	HORN ASSEMBLY	1
					END OF FIGURE	

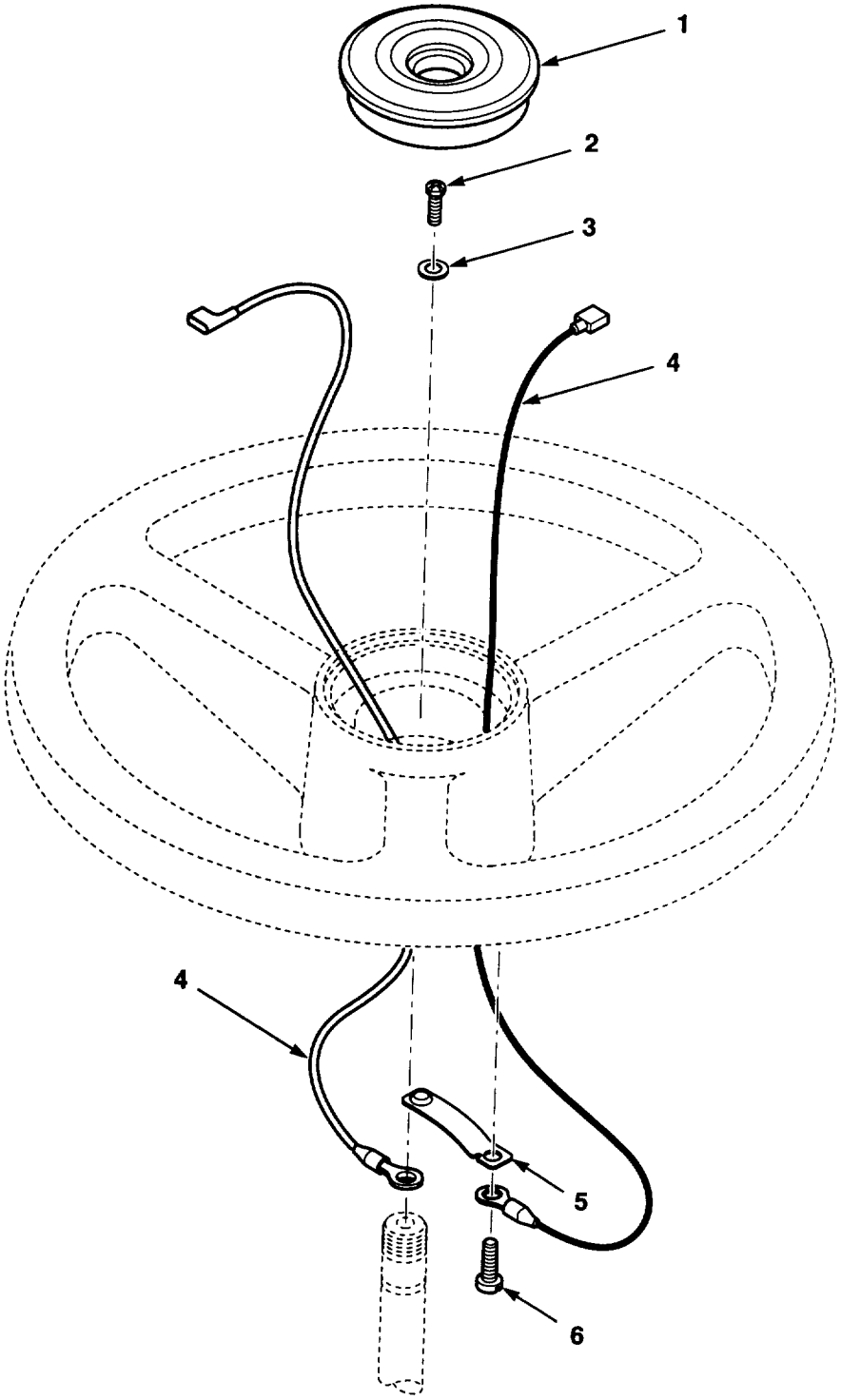

Figure 73. Horn Button.

https://truckmanualshub.com/ 159

(1) ITEM NO.	(2) SMR CODE	(3) NSN	(4) CAGEC	(5) PART NUMBER	(6) DESCRIPTION AND USABLE ON CODES (UOC)	(7) QTY
					GROUP 0611 HORN,SIREN FIG. 73 HORN BUTTON	
1	PAOZZ		0KAW7	HB8CK	HORN BUTTON,VEHICUL	1
2	PAOZZ		1CJ86	BN1014 M3.5X13	SCREW,TAPPING M5	1
3	PAOZZ	5310014382306	07443	11EM50	WASHER,LOCK M5	1
4	PAOZZ	6150014370386	07443	1408952	WIRING HARNESS	1
5	PAOZZ		07443	2788722	CONTACT,ELECTRICAL	1
6	PAOZZ		07443	18G806	SCREW,TAPPING,THREA	1
					END OF FIGURE	

https://truckmanualshub.com/ 160

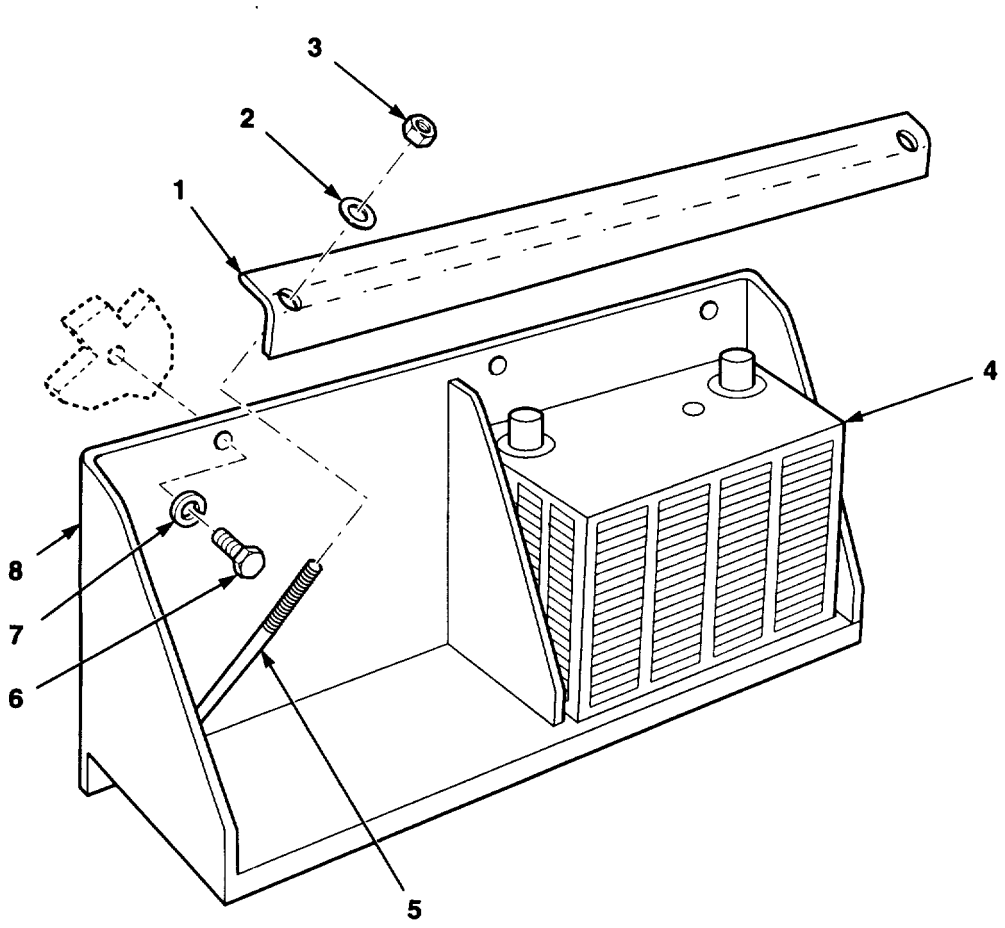

Figure 74. Battery Installation

https://truckmanualshub.com/ 161

(1) ITEM NO.	(2) SMR CODE	(3) NSN	(4) CAGEC	(5) PART NUMBER	(6) DESCRIPTION AND USABLE ON CODES (UOC)	(7) QTY
					GROUP 0612 BATTERIES,STORAGE (WET OR DRY)	
					FIG. 74 BATTERY INSTALLATION	
1	XBOZZ		07443	1407454	ANGLE, BATTERY HOLD	1
2	PAOZZ	5310013962874	89749	18EM816	WASHER, FLAT M8	2
3	PAOZZ	5310013960983	12603	1DM6	NUT, PLAIN, HEXAGON M6	2
4	PAOZZ		5A627	24-550	BATTERY	2
5	PAOZZ	6160014369142	07443	1407453	RETAINER, BATTERY	2
6	PAOZZ	5305013980348	12603	1CM620	SCREW, CAP, HEXAGON H M6X20	5
7	PAOZZ	5310013965256	89749	18EM613	WASHER, FLAT M6	5
8	XBOZZ		07443	1407446	BATTERY TR	1
					END OF FIGURE	

https://truckmanualshub.com/ 162

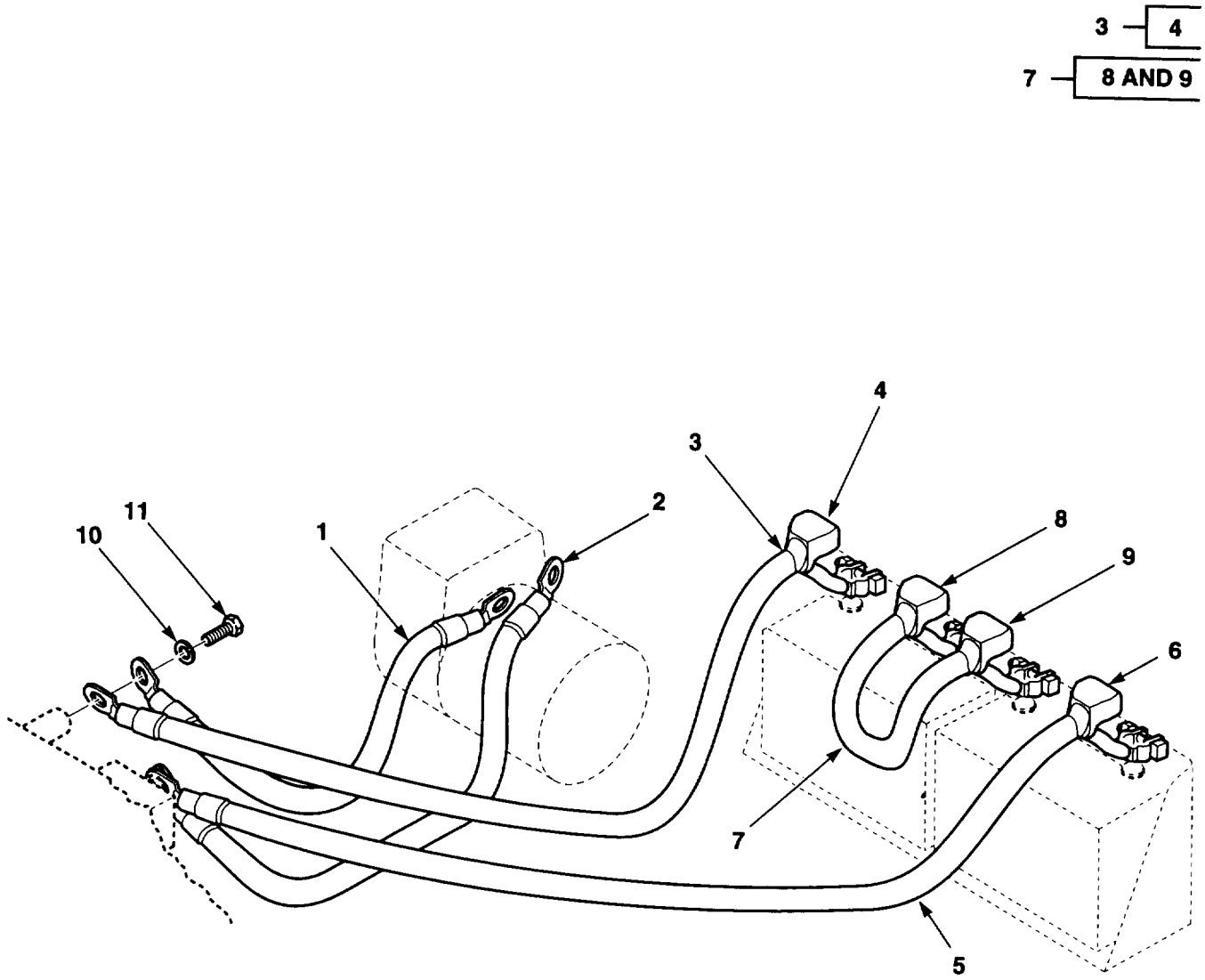

Figure 75. Battery Cable Installation

https://truckmanualshub.com/ 163

(1) ITEM NO.	(2) SMR CODE	(3) NSN	(4) CAGEC	(5) PART NUMBER	(6) DESCRIPTION AND USABLE ON CODES (UOC)	(7) QTY
					GROUP 0612 BATTERIES,STORAGE (WET OR DRY)	
					FIG. 75 BATTERY CABLE INSTALLATION	
1	PAOZZ		07443	1408246	LEAD,ELECTRICAL	1
2	PAOZZ		07443	1408254	LEAD,ELECTRICAL	1
3	PAOZZ		07443	1408232	LEAD,ELECTRICAL	1
4	PAOZZ		5G996	706-R	.BATTERY TERMINAL CO	1
5	PAOZZ		07443	1408233	LEAD,ELECTRICAL	1
6	PAOZZ		5G996	706-B	.BATTERY TERMINAL CO	1
7	PAOZZ		07443	1408234	LEAD,ELECTRICAL	1
8	PAOZZ		5G996	706-R	.BATTERY TERMINAL CO	1
9	PAOZZ		5G996	706-B	.BATTERY TERMINAL CO	1
10	PAOZZ	5310013962874	89749	18EM816	WASHER,FLAT M8	1
11	PAOZZ	5305012599516	89749	1CM830	SCREW,CAP,HEXAGON H M8X30	1
					END OF FIGURE	

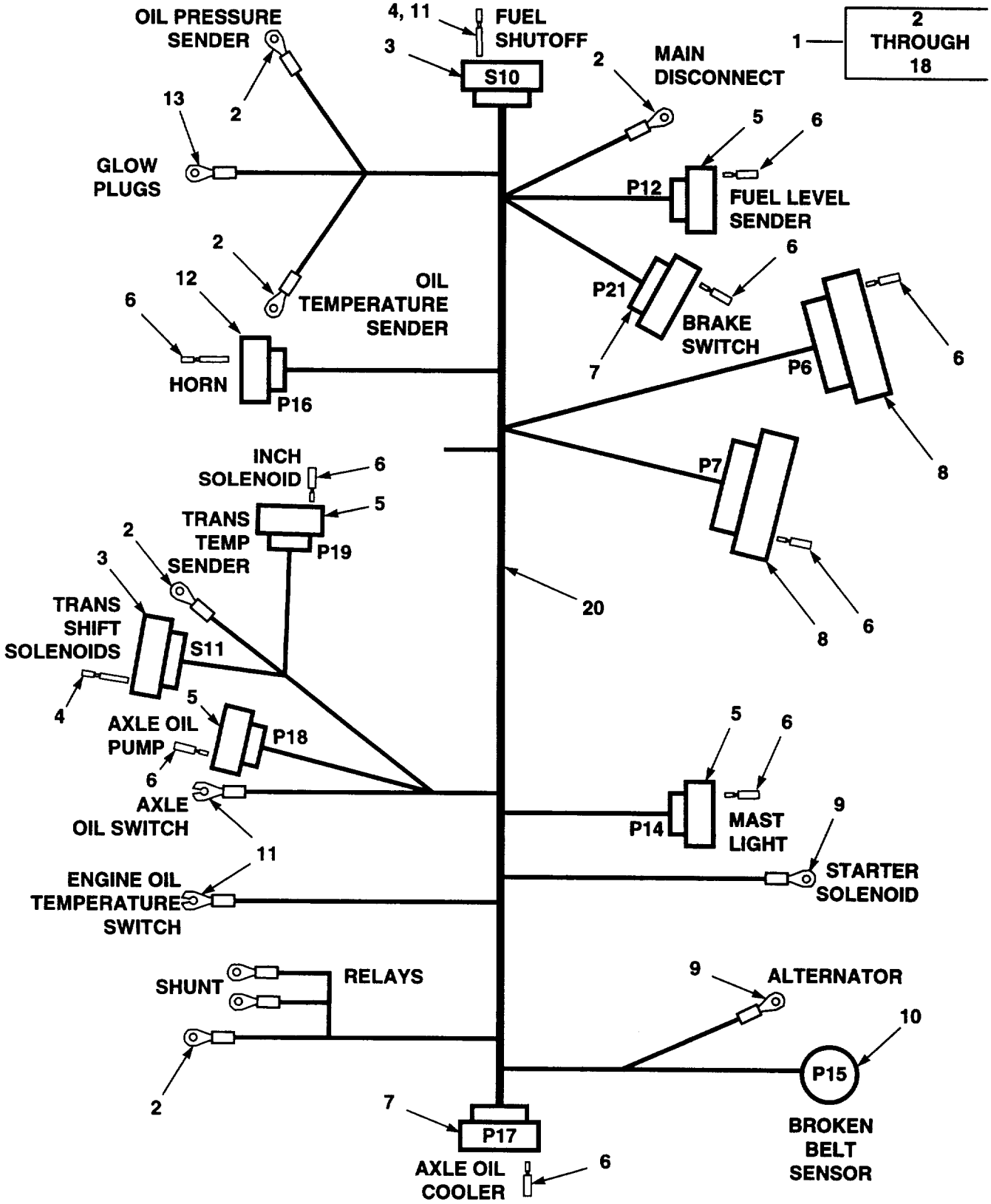

Figure 76. Wire Harnesses, Cab and Chassis (Sheet 1 of 4)

https://truckmanualshub.com/ 165

DEVICE	WIRE NO.	FROM DESTINATION	TERMINAL	TO DESTINATION	TERMINAL	WIRE TYPE	LENGTH
12VDC	2	SW5 - 01	MS25036-118	SH1 - 02	MS25036-118	51371	135
GLOW PLUG	7	SW5 - 02	1406569	R6 - 30	1408108	51091	139
GLOW PLUG	30	R6 - 87	1408108	GLOW PLUG	28802	51091	150
START SOL.	7	SW5 - 02	1406569	R5 - 30	1408108	51091	137
START SOL.	23	R5 - 87	1408108	START SOL.	1405730	51091	35
ALTERNATOR	2	SH1 - 02	1406569	ALTERNATOR - B+	1405730	51091	24
FUEL SHUTOFF	7	SW5 - 02	51425	R4 - 30	1407379	50669	138
FUEL SHUTOFF	6	S10 - 02	25214	P7 - 08	25215	50669-1	83
HORN	27	P6 - 07	25215	P16 - 01	25215	50669-1	35
AXLE COOL	74	P18 - 01	25215	R8 - 87	1407379	50669-1	95
AXLE COOL	29	P6 - 03	25215	SW10 - 01	25257	50669-1	58
AXLE COOL	29	SW10 - 01	25257	SW09 - 01	25257	50669-1	85
AXLE COOL	29	SW09 - 01	25257	R7 - 30	1407379	50669-1	52
AXLE COOL	29	R7 - 30	1407379	R8 - 30	1407379	50669-1	4
AXLE COOL	73	R7 - 87	1407379	P17 - 01	25215	50669-1	30
BRAKE	10A	P6 - 08	25215	P21 - 01	25215	50669-1	72
BRAKE	10B	P6 -12	25215	P21 - 02	25215	50669-1	72
INCHING	27A	P6 - 13	25215	R9 - 86	1407379	50669-1	88
INCHING	27B	R9 - 87	25215	P19 - 01	25215	50669-1	95
GLOW PLUG	30	P6 - 04	25215	GLOW PLUG	28882	50669-3	88
FUEL SHUTOFF	9A	S10 - 03	25214	R4 - 87	1407379	50669-3	145
OIL PRESS.	16	P7 - 02	25215	OIL PRESS. SENDER	28882	50669-3	88
OIL TEMP.	19	P7 - 03	25215	OIL TEMP. SENDER	28882	50669-3	84
FUEL LEVEL	18	P6 - 01	25215	P12 - 01	25215	50669-3	71
HORN	21	P6 - 02	25215	P16 - 02	25215	50669-3	35
TRANS. TEMP.	15	P7 - 04	25215	TRANS. TEMP. SENDER	28882	50669-3	55
FORWARD	39	P7 - 10	25215	S11 - 03	25214	50669-3	43
REVERSE	40	P7 - 11	25215	S11 - 02	25214	50669-3	43
HI SPEED	14	P7 - 12	25215	S11 - 01	25214	50669-3	43
AXLE COOL	72	SW10 - 02	25257	R8 - 86	1407379	50669-3	107
AXLE COOL	71	SW09 - 02	25257	R7 - 86	1407379	50669-3	52
AMMETER	11	P6 - 05	25215	SH1 - 01	28882	50669-3	95
AMMETER	12	P6 - 06	25215	SH1 - 02	28882	50669-3	91
START	32	P7 - 05	25215	R4 - 86	1407379	50669-3	91
START	32	R4 - 86	1407379	R5 - 86	1407379	50669-3	4
CHARGE	34	P7 - 07	25215	R1 - 86	1407379	50669-3	93
HOURMETER	64	P7 - 06	25215	ALTERNATOR - R	28882	50669-3	101
CHARGE	60	R1 - 30	1407379	ALT. WHT FIELD	23881	50669-3	28
CHARGE	60A	R1 - 87	1407379	ALT. WHT FIELD	23881	50669-3	27
BELT ALARM	6	P7 - 01	25215	P15 - 01	1404364	50669-3	101
BELT ALARM	8	P7 - 09	25215	P15 - 04	1404364	50669-3	101
GLOW PLUG	31	P7 - 13	25215	R6 - 86	1407379	50669-3	92
MAST LIGHT	25	P6 - 09	25215	P14 - 01	25215	50669-3	48
INCHING	27	P6 - 14	25215	R9 - 30	1407379	50669-3	87
MAST LIGHT	13	CHASSIS GROUND	28882	P14 - 02	25215	50669-2	68
AXLE COOL	13	CHASSIS GROUND	28882	P17 - 03	25215	50669-2	29
INCHING	13	CHASSIS GROUND	28882	P19 - 02	25215	50669-2	96
AXLE COOL	13	CHASSIS GROUND	28882	P18 - 02	25215	50669-2	93
GLOW PLUG	13	CHASSIS GROUND	28882	R6 - 85	1407379	50669-2	8
START	13	R6 - 85	1407379	R5 - 85	1407379	50669-2	3
AXLE COOL	13	R5 - 85	1407379	R8 - 85	1407379	50669-2	3
CHARGE	13	CHASSIS GROUND	28882	R1 - 85	1407379	50669-2	8
FUEL SHUTOFF	13	R1 - 85	1407379	R4 - 85	1407379	50669-2	3
AXLE COOL	13	R4 - 85	1407379	R7 - 85	1407379	50669-2	3
INCHING	13	R7 - 85	1407379	R9 - 85	1407379	50669-2	3

Figure 76. Wire Harnesses, Cab and Chassis (Sheet 2 of 4)

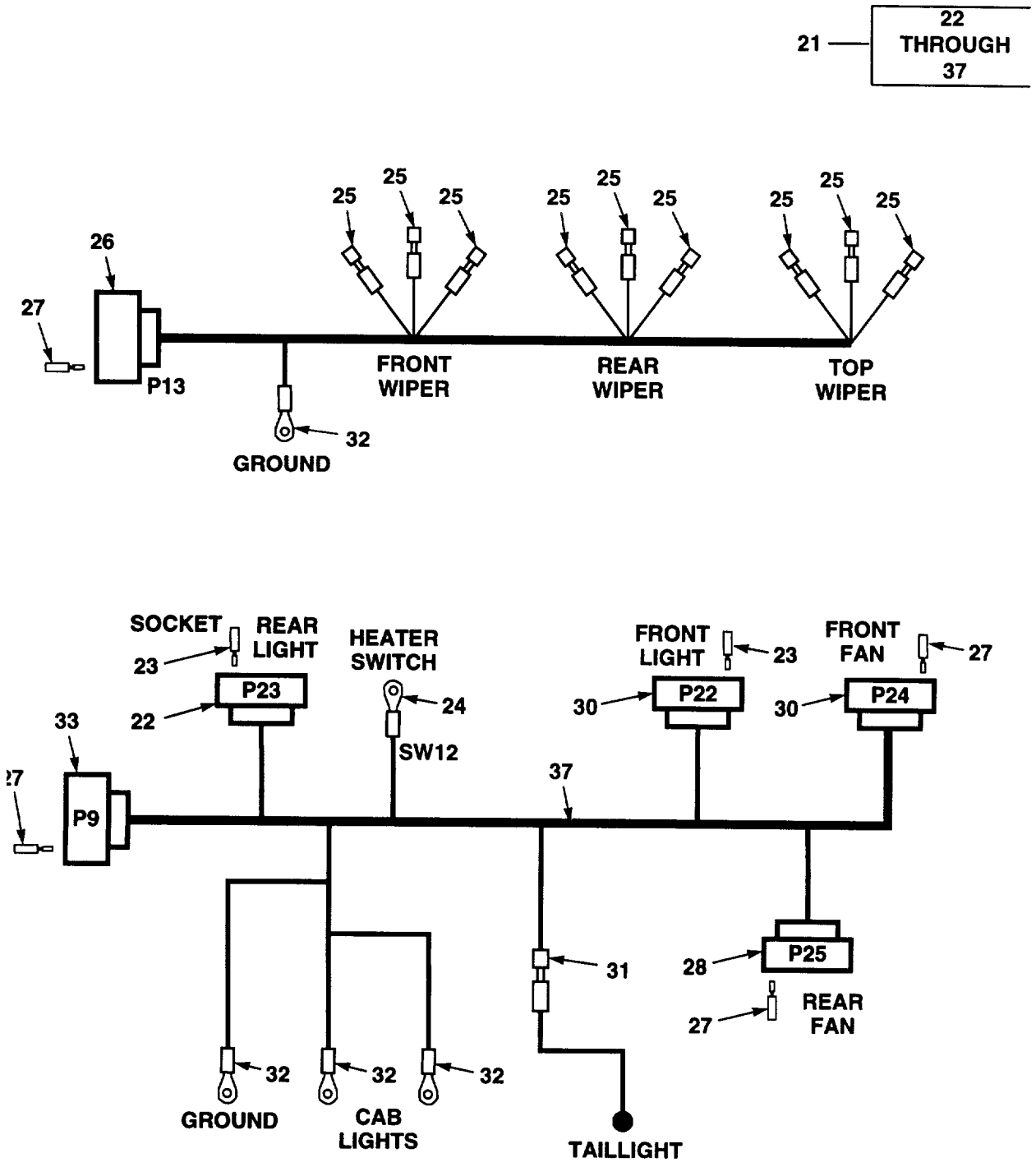

Figure 76. Wire Harnesses, Cab and Chassis (Sheet 3 of 4)

https://truckmanualshub.com/ 167

DEVICE	WIRE NO.	FROM DESTINATION	TERMINAL	TO DESTINATION	TERMINAL	WIRE TYPE	LENGTH
TOP WIPER	49	P13 - 01	25215	TOP WIPER - PARK	25236	BLK 16	102
TOP WIPER	50	P13 - 02	25215	TOP WIPER - LOW	25236	50669-2	102
TOP WIPER	51	P13 - 03	25215	TOP WIPER - HIGH	25236	50669-1	102
FRONT WIPER	43	P13 - 04	25215	FRONT WIPER - PARK	25236	BLK 16	49
FRONT WIPER	45	P13 - 05	25215	FRONT WIPER - LOW	25236	50669-2	49
FRONT WIPER	44	P13 - 06	25215	FRONT WIPER - HIGH	25236	50669-1	49
REAR WIPER	46	P13 - 07	25215	REAR WIPER - PARK	25236	BLK 16	147
REAR WIPER	47	P13 - 08	25215	REAR WIPER - LOW	25236	50669-2	147
REAR WIPER	48	P13 - 09	25215	REAR WIPER - HIGH	25236	50669-1	147
FRONT LIGHT	13	P9 - 01	25215	P22 - 02	2790208	50669-2	52
REAR LIGHT	13	P9 - 02	25215	P23 - 02	2790208	50669-2	91
HEATER	13	P9 - 03	25215	HEATER	23881	1409551	77
FRONT FAN	13	P9 - 04	25215	P24 - 02	25215	1409551	27
REAR FAN	13	P9 - 05	25215	P25 - 02	25215	1409551	153
CAB LIGHT	36	P9 - 08	25215	RIGHT CAB LIGHT +	25236	50669-1	129
CAB LIGHT	36	RIGHT CAB LIGHT +	25237	LEFT CAB LIGHT +	25236	50669-1	50
REAR FAN	36	P9 - 09	25215	P25 - 01	25215	1409551	153
FRONT FAN	36	P9 - 10	25215	P24 - 01	25215	1409551	27
HEATER	38	P9 - 11	25215	SW12	1409894	1409551	77
REAR LIGHT	24	P9 - 12	25215	P23 - 01	2790208	50669-3	91
TAIL LIGHT	25	P9 - 13	25215	TAIL LIGHT	23881	50669-3	147
BRAKE LIGHT	27A	P9 - 14	25215	BRAKE LIGHT	23881	50669-1	147
FRONT LIGHT	25B	P9 - 15	25215	P22 - 01	2790208	50669-3	52
CAB LIGHT	13	RIGHT CAB LIGHT -	1409894	CHASSIS GROUND	28883	50669-2	10
CAB LIGHT	13	LEFT CAB LIGHT -	1409894	CHASSIS GROUND	28883	50669-2	10
HEATER	4	SW12	1409894	HEATER	23881	50669-3	20
HEATER	1	SW12	1409894	HEATER	23881	50669-1	20
FRONT WIPER	13	GROUND STUD	25481	FRONT WIPER	28032	50669-2	60
TOP WIPER	13	GROUND STUD	25481	TOP WIPER	28032	50669-2	110
REAR WIPER	13	GROUND STUD	25481	REAR WIPER	28032	50669-2	135

Figure 76. Wire Harnesses, Cab and Chassis (Sheet 4 of 4)

https://truckmanualshub.com/ 168

(1) ITEM NO.	(2) SMR CODE	(3) NSN	(4) CAGEC	(5) PART NUMBER	(6) DESCRIPTION AND USABLE ON CODES (UOC)	(7) QTY
					GROUP 0613 HULL OR CHASSIS WIRING HARNESS	
					FIG. 76 WIRE HARNESSES	
1	PFFFF		07443	1408255	HARNESS, CHASSIS	1
2	PAOZZ	5940001434780	96906	MS25036-108	.TERMINAL, LUG	7
3	PAOZZ		00779	1-480701-0	.CAP, 3 CIRCUIT	2
4	PAOZZ	5999011381528	00779	350552-1	.CONTACT, ELECTRICAL	5
5	PAOZZ	5935010961872	00779	1-480698-0	.CONNECTOR BODY, PLUG	5
6	PAOZZ	5999010689543	00779	350551-1	.CONTACT, ELECTRICAL	38
7	PAOZZ		14933	87097-003	.CONNECTOR, BODY, PLUG	2
8	PAOZZ		07443	25223	.PLUG, 15 CIRCUIT	2
9	PAOZZ	5940014092479	56501	RC10-14	.TERMINAL, LUG	2
10	PAOZZ	5935013270956	62445	224-5054	.CONNECTOR, PLUG, ELEC	1
11	PAOZZ	5940001434774	96906	MS25036-153	.TERMINAL, LUG	2
12	PAOZZ	5940002835281	00779	320575	.TERMINAL, LUG	1
13	PAOZZ		59730	RC10-10X	.TERMINAL, LUG	1
14	PAOZZ	5940013617065	15912	RC10-38	.TERMINAL, LUG	3
15	PAOZZ	5940005574345	96906	MS25036-118	.TERMINAL, LUG	3
16	PAOZZ		2W733	720217	.CONNECTOR KIT	1
17	PAOZZ	5940013748363	2E480	30521	.TERMINAL, QUICK DISC	9
18	PAOZZ		6Z742	2649	.RELAY, 24V	7
19	PAOZZ		OFW39	12419928-002	.TERMINAL	19
20	PAOZZ		90816	95939 REC	.WIRE, RED 16 GAUGE	1
20	PAOZZ		90816	95939 RLW	.WIRE, YELLOW 16 GAUGE	1
20	PAOZZ		78930	3077	.WIRE, BLACK 16 GAUGE	1
21	XBFFF		07443	1409110	WIRING ASSEMBLY, CAB	1
22	PAOZZ		11139	DT06-2S	.CONNECTOR BODY, PLUG	2
23	PAOZZ	5999012036687	11139	0462-201-16141	.CONTACT, ELECTRICAL	4
24	PAOZZ	5940010880271	14726	S05309F	.TERMINAL, QUICK DISC	1
25	PAOZZ	5940010823321	59730	14RB-2577	.TERMINAL, QUICK DISC	9
26	PAOZZ		00799	1-480706-0	.CAP, RETENTION, PRESS	1
27	PAOZZ	5999010689543	00779	350551-1	.CONTACT, ELECTRICAL	26
28	PAOZZ	5940014370407	59730	RK727	.TERMINAL, LUG	1
29	PAOZZ	5999012036687	11139	0462-201-16141	.CONTACT, ELECTRICAL	4
30	PAOZZ		11139	DT06-2S	.CONNECTOR BODY, PLUG	2
31	PAOZZ	5940013825664	59730	2RB14	.SPLICE, CONDUCTOR	1
32	PAOZZ	5940010880271	14726	S05309F	.TERMINAL, QUICK DISC	2
33	PAOZZ	5935013238569	14933	87097-013	.CONNECTOR BODY, PLUG	1
34	PAOZZ		11139	W2S	.CONNECTOR BODY, PLUG	2
35	PAOZZ	5999011381528	00779	350552-1	.CONTACT, ELECTRICAL	1
36	PAOZZ		00779	1-480699-0	.CAP, CIRCUIT, 2	1
37	PAOZZ		90816	95939 REC	.WIRE, RED 16 GAUGE	1
37	PAOZZ		90816	95939 RLW	.WIRE, YELLOW 16 GAUGE	1
37	PAOZZ		78B930	3077-2	.WIRE, GREEN 16 GAUGE	1
37	PAOZZ		78930	3077	.WIRE, BLACK 16 GAUGE	1
37	PAOZZ		2W733	8471	.WIRE, TWISTED 16 AWG	1
					END OF FIGURE	

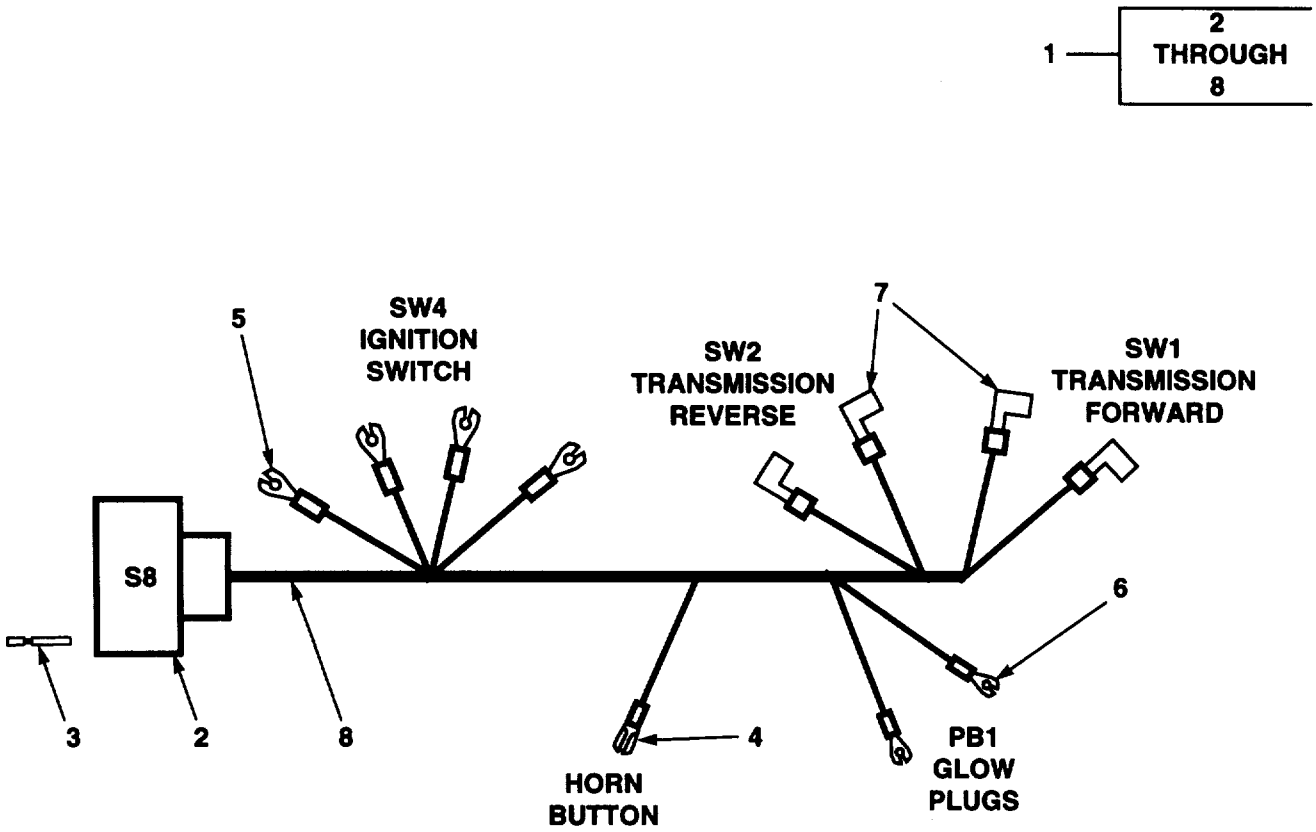

DEVICE	WIRE NO.	FROM DESTINATION	TERMINAL	TO DESTINATION	TERMINAL	WIRE TYPE	LENGTH
IGN. SW.	4	S8 - 01	25214	SW4 - BAT.	25234	50669-1	31
GLOW PLUG	29	S8 - 10	25214	PB1	25182	50669-1	31
HORN	21	S8 - 03	25214	HORN SWITCH	25236	50669-3	31
IGN SW.	33	S8 - 04	25214	SW4 - ST.	25234	50669-3	31
IGN. SW.	34	S8 - 05	25214	SW4 - IGN.	25234	50669-3	31
IGN. SW.	34	S8 - 06	25214	SW4 - IGN.	25234	50669-3	31
TRANS.	35	S8 - 07	25214	SW1 - COM.	51309	50669-3	29
TRANS.	39	S8 - 08	25214	SW1 - N.O.	51309	50669-3	29
FILTER	39	S8 - 08	25214	FILTER	N/A	50669-1	7
TRANS.	40	S8 - 09	25214	SW2 - N.O.	51309	50669-3	29
FILTER	40	S8 - 09	25214	FILTER	N/A	50669-1	7
TRANS.	35	S8 - 11	25214	SW2 - COM.	51309	50669-3	29
GLOW PLUG	31	S8 - 13	25214	PB1	25182	50669-3	31
FILTER	13	S8 - 14	25214	FILTER	N/A	50669-2	7
FILTER	13	S8 - 15	25214	FILTER	N/A	50669-2	7

Figure 77. Wire Harnesses, Steering and Instrument Panel (Sheet 1of 4)

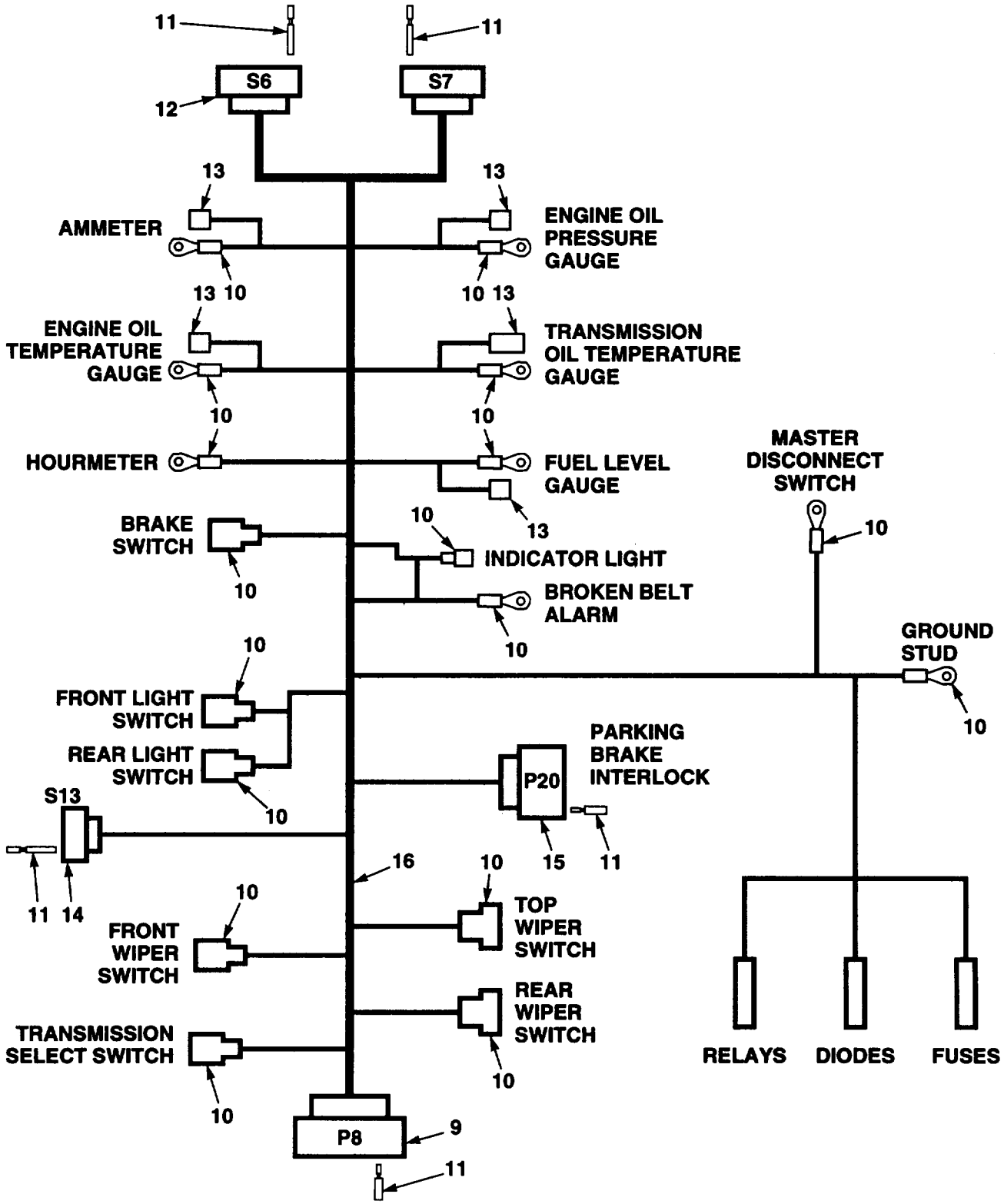

Figure 77. Wire Harnesses, Steering and Instrument Panel (Sheet 2of 4)

https://truckmanualshub.com/ 171

DEVICE	WIRE NO.	FROM DESTINATION	TERMINAL	TO DESTINATION	TERMINAL	WIRE TYPE	LENGTH
FUEL LEVEL	25	GAUGE 2 LIGHT	1404387	SPLICE, BUTT	22567	50669	5
AMMETER	25	GAUGE 5 LIGHT	1404387	SPLICE, BUTT	22567	50669	5
ENG. OIL TEMP.	25	GAUGE 3 LIGHT	1404387	SPLICE, BUTT	22567	50669	5
ENG. OIL PRESS.	25	GAUGE 4 LIGHT	1404387	SPLICE, BUTT	22567	50669	5
	25	SPLICE, BUTT	22567	SPLICE, BUTT	22567	50669-3	22
TRANS. OIL TMP.	25	GAUGE 1 LIGHT	1404387	SPLICE, BUTT	22567	50669	5
MAST LIGHT	25	SPLICE, BUTT	22567	S6 - 09	25214	50669-3	41
LIGHT SW	25	SPLICE, BUTT	22567	LS1 - 06	25349	50669-3	5
TAIL LIGHT	25	LS1 - 06	25236	S9 - 13	25214	50669-3	44
TRANS. OIL TMP.	13	GROUND STUD	25481	GAUGE 1 - G	25234	50669-2	36
FUEL LEVEL	13	GAUGE 1 - G	25234	GAUGE 2 - G	25234	50669-2	22
AMMETER	13	GAUGE 2 - G	25234	GAUGE 5 - G	25234	50669-2	5
ENG. OIL PRESS.	13	GAUGE 5 - G	25234	GAUGE 4 - G	25234	50669-2	5
ENG. OIL TEMP.	13	GAUGE 4 - G	25234	GAUGE 3 - G	25234	50669-2	5
HOURMETER	13	GAUGE 3 - G	25234	HM - 1 -	25236	50669-2	9
BELT ALARM	13	GAUGE 1 - G	25234	BA - GND	25182	50669-2	9
BELT LAMP	13	BL & GP - GROUND		BA - GND	25233	50669-2	N/A
TRANS. OIL TMP.	5	FU7	1407376	GAUGE 1 - I	25234	50669-1	33
FUEL LEVEL	5	GAUGE 1 - I	25234	GAUGE 2 - I	25234	50669-1	21
ENG. OIL PRESS.	5	GAUGE 2 - I	25234	GAUGE 4 - I	25234	50669-1	7
ENG. OIL TEMP.	5	GAUGE 4 - I	25234	GAUGE 3 - I	25234	50669-1	12
HOURMETER	5	GAUGE 3 - I	25234	HM - 1 +	25236	50669-1	12
HOURMETER	64	HM - 1 - S	25480	S7 - 06	25214	50669-1	61
ENG. OIL TEMP.	19	GAUGE 3 - S	25234	S7 - 03	25214	50669-3	57
ENG. OIL PRESS.	16	GAUGE 4 - I	25234	S7 - 02	25214	50669-3	60
FUEL LEVEL	18	GAUGE 2 - S	25234	S6 - 01	25214	50669-3	57
AMMETER	12	GAUGE 5 - S	25234	S6 - 06	25214	50669-1	59
AMMETER	11	GAUGE 5 - I	25234	S6 - 05	25214	50669-1	61
TRANS. OIL TMP.	15	GAUGE 1 - S	25234	S7 - 04	25214	50669-3	41
BELT ALARM	8	BA & BL +	25182	S7 - 09	25214	50669-3	47
GLOW PLUG LMP.	30	GP +	25480	S6 - 04	25214	50669-3	40
FRONT LIGHT	25B	LS1 - 03	25236	S9 - 15	25214	50669-3	43
FRONT LIGHT	25A	FU6	1407379	LS1 - 02	25236	50669-1	36
REAR LIGHT	24	LS2 - 03	25236	S9 - 12	25214	50669-3	43
BRAKE LIGHT	27	FU5	1408193	SW11 - 01	25236	50669-1	42
BRAKE LIGHT	27A	SW11 - 02	25236	SPLICE	22567	50669-3	11
BRAKE LIGHT	27A	SPLICE	22567	S6 - 13	25214	50669-3	33
BRAKE LIGHT		SPLICE	22567	S9 - 14	25214	50669-3	33
FRONT WIPER	43	WS2 - 06	25236	S13 - 04	25214	50669-3	24
FRONT WIPER	44	WS2 - 04	25236	S13 - 06	25214	50669-3	23
FRONT WIPER	45	WS2 - 03	25236	S13 - 05	25214	50669-3	24
REAR WIPER	46	WS3 - 06	25236	S13 - 07	25214	50669-3	26
REAR WIPER	47	WS3 - 03	25236	S13 - 08	25214	50669-3	26
REAR WIPER	48	WS3 - 04	25236	S13 - 09	25214	50669-3	25
TOP WIPER	49	WS1 - 06	25236	S13 - 01	25214	50669-3	24

Figure 77. Wire Harnesses, Steering and Instrument Panel (Sheet 3 of 4)

https://truckmanualshub.com/ 172

DEVICE	WIRE NO.	FROM DESTINATION	TERMINAL	TO DESTINATION	TERMINAL	WIRE TYPE	LENGTH
TOP WIPER	50	WS1 - 03	25236	S13 - 02	25214	50669-3	24
TOP WIPER	51	WS1 - 04	25236	S13 - 03	25214	50669-3	23
HIGH SPEED	10	SW3 - 02	25236	FU3	1408193	50669-1	20
FILTER	13	SW3 - 06	25349	FILTER	N/A	50669-2	7
HIGH SPEED	13	SW3 - 06	25236	GROUND STUD	25481	50669-2	26
FILTER	14	SW3 - 01	25349	FILTER	N/A	50669-2	7
HIGH SPEED	14	SW3 - 01	25236	S7 - 12	25214	50669-3	31
TOP WIPER	37	WS1 - 02	25349	FU11	1407376	50669-1	17
FRONT WIPER	37	WS1 - 02	25236	WS2 - 02	25349	50669-1	4
REAR WIPER	37	WS2 - 02	25236	WS3 - 02	25236	50669-1	6
FUSE BESS	26	BUSS 1	1407382	BUSS 2	1407384	51091	4
FUSE BUSS	26	BUSS 1	1407382	R2 - 87	1408108	51091	4
MAIN POWER	7	R2 - 30	1408108	SW5 - 02	MS25036-118	51091	80
MAIN POWER	7	FU1	1407376	SW5 - 02	51425	50669	80
BRAKE INTRLK	10	FU3	1408193	P20 - 01	25215	50669-1	19
BRAKE INTRLK	10A	P20 - 02	25215	S6 - 08	25214	50669-1	26
HORN	27	FU5	1408193	S6 - 07	25214	50669-1	30
INCHING	27	FU5	1408193	S6 - 14	25214	50669-1	30
FANS, CB LTS	36	FU10	1408193	S9 - 09, 10	25214	1409551	32
FANS, CB LTS	36	FU10	1408193	S9 - 08	25214	50669-1	27
HEATER	38	FU9	1407376	S9 - 11	25214	1409551	32
GLOW PLUGS	29	FU4	1408193	P8 - 10	25215	50669-1	30
AXLE COOL	29	FU4	1408193	S6 - 03	25214	50669-1	30
BRK BLT ALARM	6	FU2	1408193	S7 - 01	25214	50669-1	27
FUEL SHUTOFF	6	FU2	1408193	S7 - 08	25214	50669-1	27
START	4	FU1	1407376	P8 - 01	25215	50669-1	29
MAIN RELAY	13	R2 - 85	1407379	R3 - 85	1407379	50669-2	4
TRANS INTRLK	13	R3 - 85	1407379	GROUND STUD	25481	50669-2	12
MAIN RELAY	34	R2 - 86	1407379	P8 - 05	25215	50669-3	28
TRANS INTRLK	41	R3 - 86	1407379	DM2 - T1	1407379	50669-3	3
TRANS INTRLK	33	DM1 - T3	1407379	P8 - 04	25215	50669-3	27
TRANS INTRLK	33	DM1 - T3	1407379	R3 - 30	1407379	50669-3	5
TRANS INTRLK	32	R3 - 87A	1407379	S7 - 05	25214	50669-3	27
TRANS INTRLK	10B	DM1 - T4	1407379	S6 - 12	25214	50669-1	25
TRANS INTRLK	35	DM1 - T1	1407379	P8 - 07	25215	50669-3	27
TRANS INTRLK	35	DM1 - T1	1407379	P8 - 11	25215	50669-3	27
TRANS INTRLK	39	DM2 - T3	1407379	P8 - 08	25215	50669-3	26
TRANS INTRLK	39	DM2 - T3	1407379	S7 - 10	25214	50669-3	26
TRANS INTRLK	40	DM2 - T4	1407379	P8 - 09	25215	50669-3	26
TRANS INTRLK	40	DM2 - T4	1407379	S7 - 11	25214	50669-3	25
HORN	21	P8 - 03	25215	S6 - 02	25214	50669-3	35
CHARGING	34	P8 - 06	25215	S7 - 07	25214	50669-3	37
GLOW PLUGS	31	P8 - 13	25215	S7 - 13	25214	50669-3	36
HEATER	13	GROUND STUD	25481	S9 - 03	25214	1409551	32
FANS	13	GROUND STUD	25481	S9 - 04, 05	25214	1409551	32
REAR LIGHT	13	GROUND STUD	25481	S9 - 02	25214	50669-2	32
FRONT LIGHT	13	GROUND STUD	25481	S9 - 01	25214	50669-2	32
FILTER	13	GROUND STUD	25481	P8 - 14	25214	50669-2	31
FILTER	13	GROUND STUD	25481	P8 - 15	25214	50669-2	31

Figure 77. Wire Harnesses, Steering and Instrument Panel (Sheet 4 of 4)

https://truckmanualshub.com/ 173

(1) ITEM NO.	(2) SMR CODE	(3) NSN	(4) CAGEC	(5) PART NUMBER	(6) DESCRIPTION AND USABLE ON CODES (UOC)	(7) QTY
					GROUP 0613 HULL OR CHASSIS WIRING HARNESS	
					FIG. 77 WIRE HARNESSES, STEERING COLUMN AND INSTRUMENT PANEL	
1	PAOOO		07443	1408098	HARNESS, STEERING CO	1
2	PAOZZ	5935013238569	14933	87097-013	.CONNECTOR BODY, PLUG	13
3	PAOZZ	5999011381528	00779	350552-1	.CONTACT, ELECTRICAL	1
4	PAOZZ	5940010823321	59730	14RB-2577	.TERMINAL, QUICK DISC	1
5	PAOZZ	5940012801617	00779	52936	.TERMINAL, LUG	4
6	PAOZZ	5940009260085	59730	14RB250F	.TERMINAL, QUICK DISC	2
7	PAOZZ		59730	RBD14-188A	.TERMINAL, QUICK DISC	4
8	PAOZZ		90816	95939 REC	.WIRE, RED 16 GAUGE	1
8	PAOZZ		90816	95939 RLW	.WIRE, YELLOW 16 GAUGE	1
9	PAOZZ		07443	24138	.CAP,15 CIRCUIT	3
9	PAOZZ	5935013236815	14933	87096-009	.CONNECTOR BODY, RECE	1
10	PAOZZ		07443	25233	.TERMINAL, FORK	4
10	PAOZZ	5940008431550	00779	60279-1	.TERMINAL, QUICK DISC	5
10	PAOZZ	5940010823321	59730	14RB-2577	.TERMINAL, QUICK DISC	24
10	PAOZZ	5940012801617	00779	52936	.TERMINAL, LUG	25
10	PAOZZ	5940011106423	00779	52935	.TERMINAL, LUG	5
10	PAOZZ	5940002835281	00779	320575	.TERMINAL, LUG	9
10	PAOZZ	5940013749839	2E480	23433	TERMINAL, QUICK DISC	7
10	PAOZZ		2E480	12419928-008	TERMINAL	5
10	PAOZZ		2E480	12419928-002	TERMINAL	9
10	PAOZZ	5940013748363	2E480	30521	TERMINAL, QUICK DISC	5
10	PAOZZ	5940005574345	96906	MS25036-118	TERMINAL, LUG	1
10	PAOZZ		59730	RB737	TERMINAL, RING	1
11	PAOZZ	5999011381528	00779	350552-1	CONTACT, ELECTRICAL	46
11	PAOZZ	5999010689543	00779	350551-1	CONTACT, ELECTRICAL	15
12	PAOZZ	5940009986126	10001	2614572-2	TERMINAL, QUICK DISC	2
13	PAOZZ	5940006021575	59730	RCC-217-250	SPLICER, CONDUCTOR	4
14	PAOZZ	5935010961872	00779	1-480698-0	CONNECTOR BODY, PLUG	1
15	PAOZZ	5935010659769	00779	1-480710-0	CONNECTOR BODY, PLUG	1
16	PAOZZ		90816	95939 REC	WIRE, RED 16 GAUGE	1
16	PAOZZ		90816	95939 RLW	WIRE, YELLOW 16 GAUGE	1
16	PAOZZ		7B930	3077-2	WIRE, GREEN 16 GAUGE	1
16	PAOZZ		2W733	8471	WIRE, TWISTED 16 AWG	1
					END OF FIGURE	

https://truckmanualshub.com/ 174

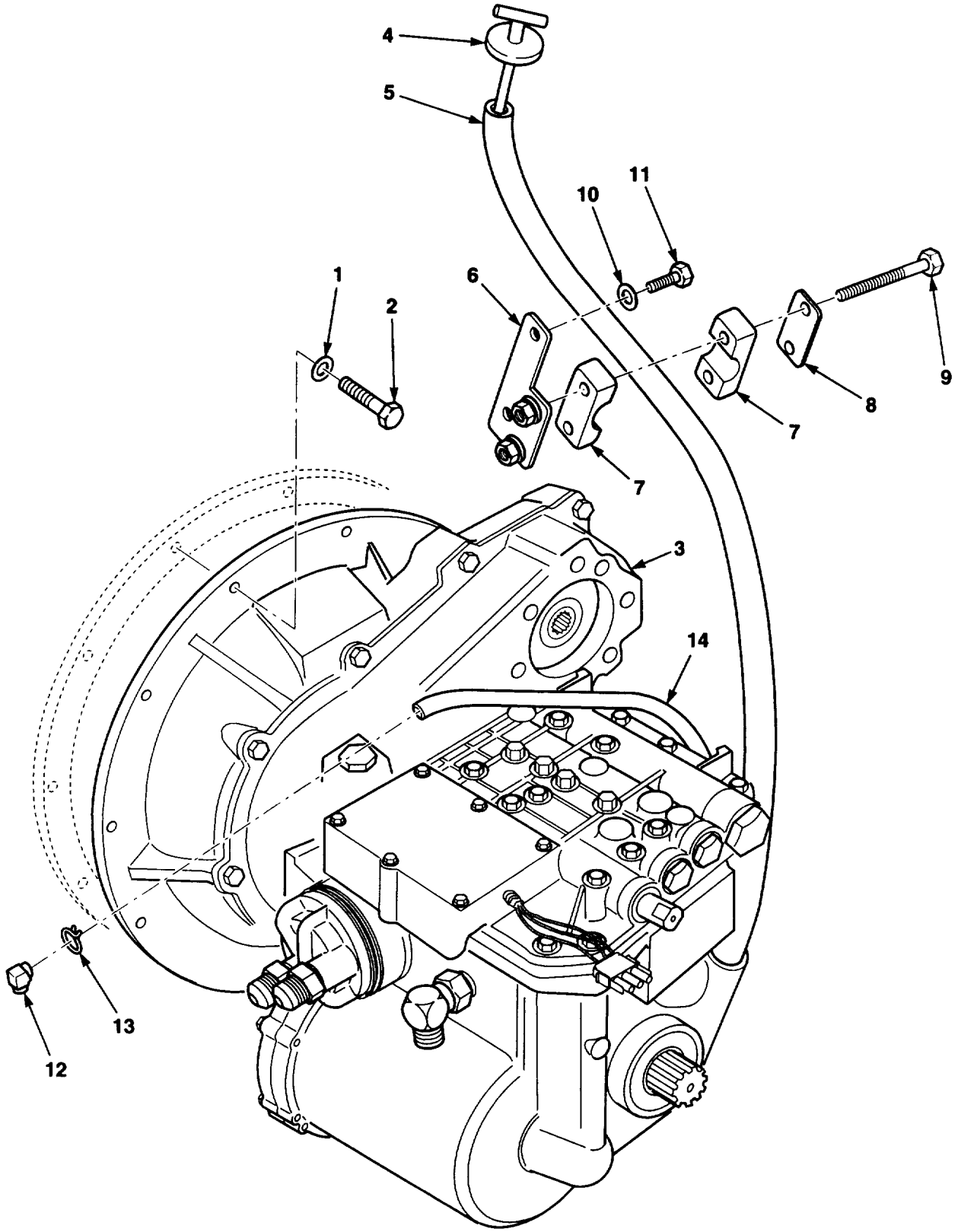

Figure 78. Transmission Installation

https://truckmanualshub.com/ 175

(1) ITEM NO.	(2) SMR CODE	(3) NSN	(4) CAGEC	(5) PART NUMBER	(6) DESCRIPTION AND USABLE ON CODES (UOC)	(7) QTY
					GROUP 07 TRANSMISSION GROUP 0710 TRANSMISSION ASSEMBLY FIG. 78 TRANSMISSION INSTALLATION	
1	PAFZZ		79410	F-12-K-56	WASHER,FLAT	12
2	PAFZZ		79410	GM-9409010	SCREW	12
3	PAFHH	2520013975273	79410	10-22-000-028	TRANSMISSION,MECHAN	1
4	PAOZZ		07443	1408001	GAGE ROD,LIQUID LEV	1
5	XBOZZ		07443	1407983	TUBE ASSY	1
6	XBOZZ		07443	1408022	BRACKET ASSY	1
7	PAOZZ		53790	3250PP	CLAMP	2
8	XBOZZ	5340012313916	53790	DP-3	COVER,ACCESS	1
9	PAOZZ	5305000712509	80204	B1821BH025C150N	SCREW,CAP,HEXAGON H	2
10	PAFZZ	5310013965256	89749	18EM613	WASHER,FLAT	1
11	PAFZZ	5305012683656	15526	DIN933-M6X16-8.8 -A4C	SCREW,CAP,HEXAGON H	1
12	PAFZZ		79410	10-21-188-002	FITTING,ELBOW	2
13	PAFZZ		79410	10-00-139-053	CLIP,SPRING	2
14	PAFZZ		79410	10-22-034-003	HOSE	1
					END OF FIGURE	

https://truckmanualshub.com/ 176

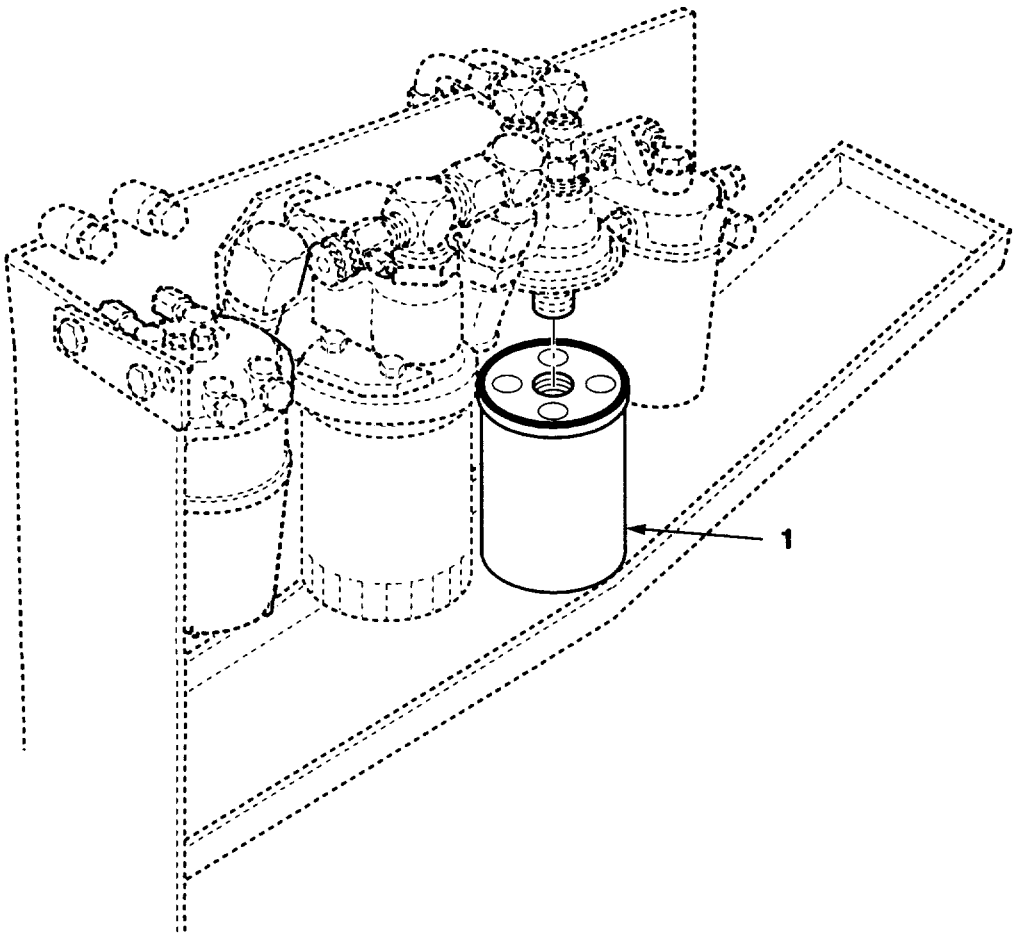

Figure 79. Transmission Oil Filter

https://truckmanualshub.com/ 177

(1) ITEM NO.	(2) SMR CODE	(3) NSN	(4) CAGEC	(5) PART NUMBER	(6) DESCRIPTION AND USABLE ON CODES (UOC)	(7) QTY
					GROUP 0710 TRANSMISSION ASSEMBLY FIG. 79 TRANSMISSION OIL FILTER	
1	PAOZZ	2940011646206	88142	X278166	FILTER ELEMENT,FLUI	1
					END OF FIGURE	

https://truckmanualshub.com/ 178

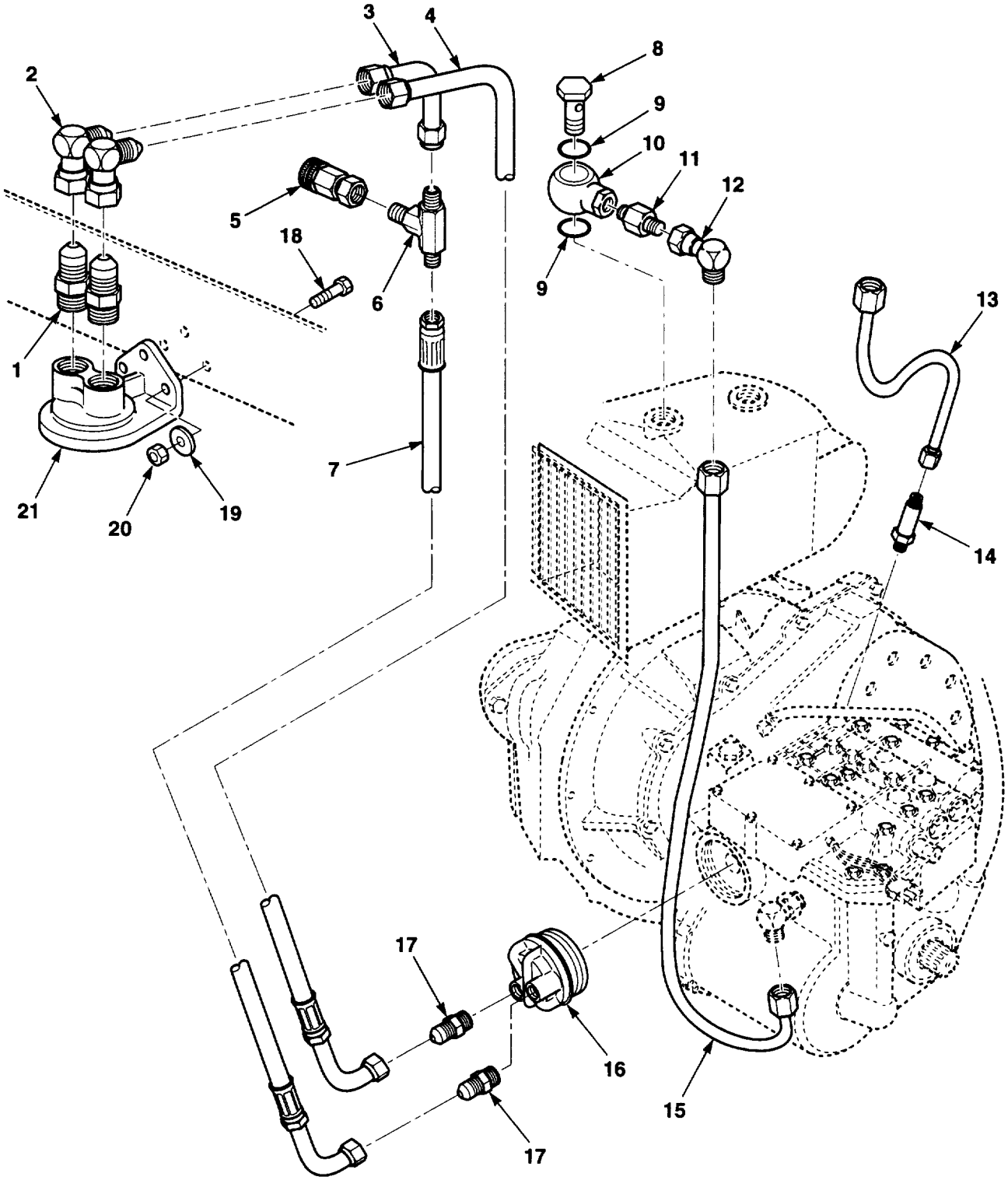

Figure 80. Transmission Oil Filter Adapter and Lines

https://truckmanualshub.com/ 179

(1) ITEM NO.	(2) SMR CODE	(3) NSN	(4) CAGEC	(5) PART NUMBER	(6) DESCRIPTION AND USABLE ON CODES (UOC)	(7) QTY
					GROUP 0710 TRANSMISSION ASSEMBLY FIG. 80 TRANSMISSION OIL FILTER ADAPTER AND LINES	
1	PAOZZ		59257	8-8-37-2	CONNECTOR	2
2	PAOZZ		59257	8-SW-6	FITTING,HYD	2
3	PAFZZ	4730012616561	13174	63UC-08X08	ELBOW,TUBE	2
4	PAOZZ	4720014359497	07443	1408372	HOSE ASSEMBLY,NONME	1
5	PAFZZ	4820013935272	01276	FD15-1026-04	VALVE,BLEEDER,HYDRA	1
6	PAOZZ		92985	8-SW-12	FITTING	1
7	PAFZZ	4720014359498	07443	1403047	HOSE ASSEMBLY,NONME	1
8	XBOZZ		07443	1406104	BOLT,FLUID PRESSURE	1
9	PAFZZ	5365013893470	62445	0111 8784	RING,RETAINING	2
10	PAOZZ		07443	1407802	CONNECTOR,MULTIPLE	1
11	PAFZZ		30327	883-FS-10X08	REDUCER,TUBE	1
12	PAFZZ	4730004327713	30780	8C6XS	ELBOW,TUBE	1
13	PAFZZ		07443	1407806	TUBE ASSEMBLY,METAL	1
14	PAFZZ		93061	8-FF50X-S	CONNECTOR,MULTIPLE,	1
15	PAFZZ		07443	1407804	TUBE ASSEMBLY,METAL	1
16	PFFZZ		70842	4730	HEAD,FLUID FILTER	1
17	PAFZZ	4730008099427	96906	MS51500A8-8	ADAPTER,STRAIGHT,PI	2
18	PAOZZ		07443	1CM830	SCREW,CAP,HEXAGON H M8X30	3
19	PAOZZ		07443	18EM824	WASHER,FLAT M8X24	3
20	PAOZZ		62445	01112824	NUT,HEX HD M8	3
21	XBFZZ		47870	91028	BASE,REMOTE	1
					END OF FIGURE	

https://truckmanualshub.com/ 180

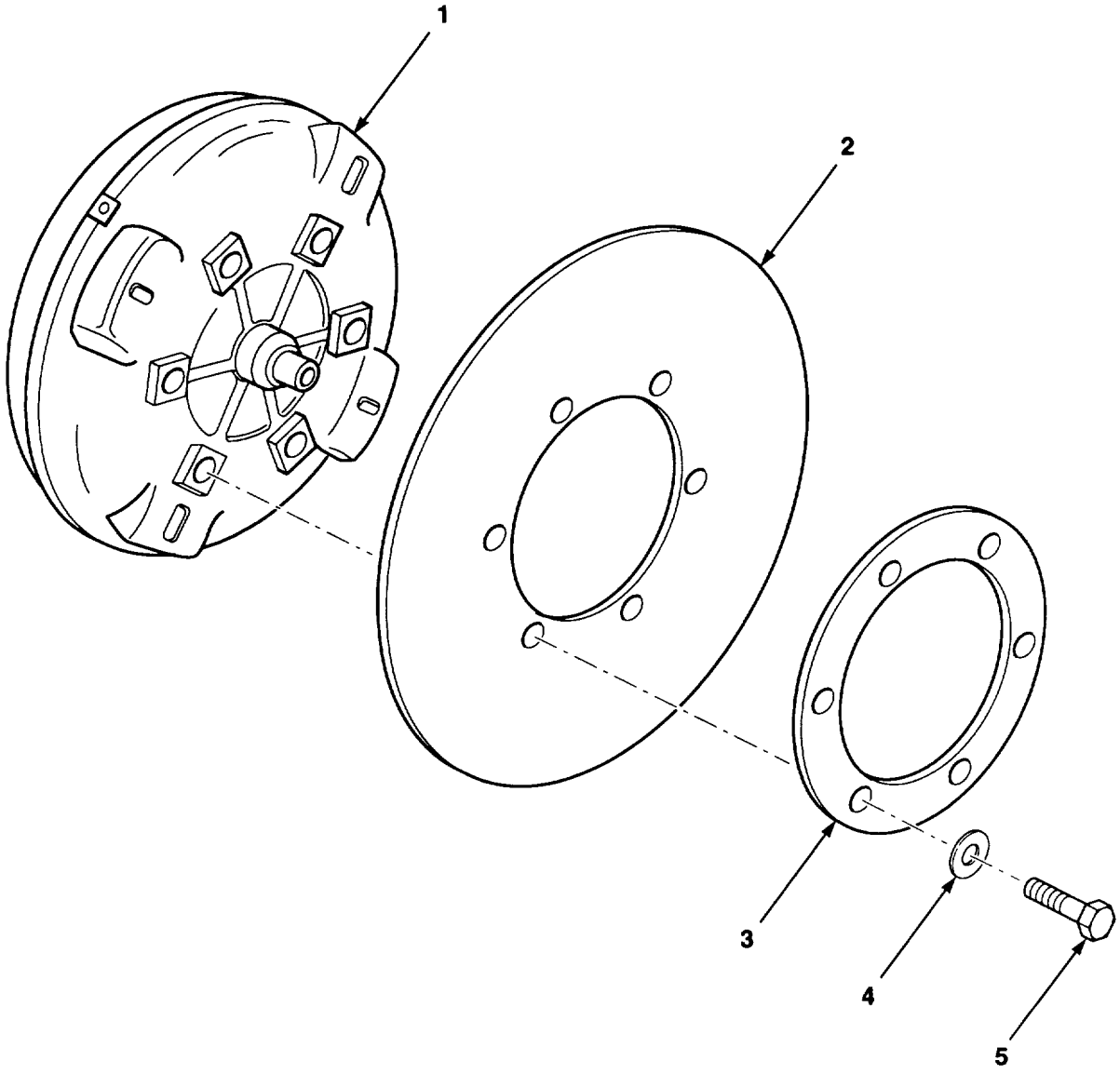

Figure 81. Torque Converter

https://truckmanualshub.com/ 181

(1) ITEM NO.	(2) SMR CODE	(3) NSN	(4) CAGEC	(5) PART NUMBER	(6) DESCRIPTION AND USABLE ON CODES (UOC)	(7) QTY
					GROUP 0710 TRANSMISSION ASSEMBLY FIG. 81 TORQUE CONVERTER	
1	PFFZZ	2520013965008	71000	203-10290	TORQUE CONVERTER	1
2	PAFZZ	2520014256573	07443	28805	PLATE,INTERMEDIATE	1
3	XBFZZ		28703	F-7-X-90	PLATE,DRIVE REINF	1
4	PAFZZ		79410	F-12-K-56	WASHER,FLAT	6
5	PAFZZ		79410	GM-9409010	SCREW	6
					END OF FIGURE	

https://truckmanualshub.com/ 182

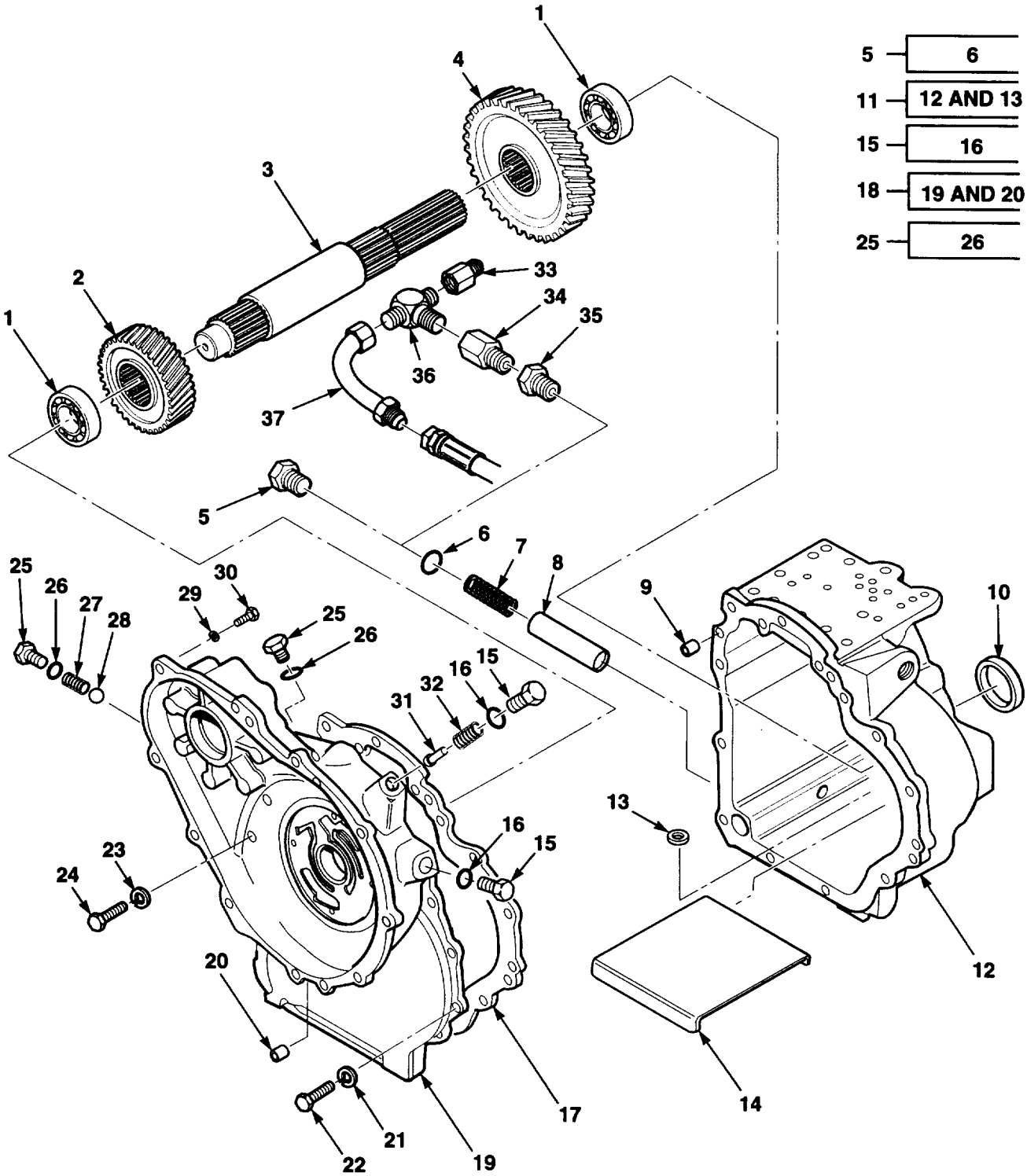

Figure 82. Transmission Case and Output Shaft

https://truckmanualshub.com/ 183

(1) ITEM NO.	(2) SMR CODE	(3) NSN	(4) CAGEC	(5) PART NUMBER	(6) DESCRIPTION AND USABLE ON CODES (UOC)	(7) QTY
					GROUP 0710 TRANSMISSION ASSEMBLY FIG. 82 TRANSMISSION CASE AND OUTPUT SHAFT	
1	PAHZZ	3110013116925	79410	10-00-130-015	BEARING,BALL,ANNULA	2
2	PAHZZ	3020012525827	07718	10-22-070-002	GEAR,SPUR 25 TOOTH	1
3	PAHZZ	3040012535541	79410	10-22-171-001	SHAFT,SHOULDERED	1
4	PAHZZ	3020013983342	79410	10-22-070-001	GEAR,SPUR	1
5	PAFZZ	5365013519341	60764	189190	PLUG,MACHINE THREAD	1
6	PAFZZ	5330012548995	79410	274251	.O-RING	1
7	PAFZZ	5360012548898	79410	T11-99	SPRING	1
8	PAFZZ	4730004109700	79410	T11-98	STRAINER ELEMENT,SE	1
9	PAHZZ	5315012549667	79410	141281	PIN,STRAIGHT,HEADLE	2
10	PAFZA	5330008937594	79410	T22-110A	GASKET	1
11	PFHHH	3040013961401	79410	10-22-565-014	HOUSING,MECHANICAL	1
12	PFHZZ	2520013975691	79410	10-22-065-008	.HOUSING,TRANSMISSIO	1
13	PAHZZ	5340012560497	79410	4915	.MAGNET,PERMANENT	2
14	PAHZZ	2520013956910	79410	10-22-036-008	BAFFLE,OIL	1
15	PAHZZ	5340012571813	79410	10-00-552-003	PLUG,PROTECTIVE,DUS	2
16	PAHZZ	5330010244853	79410	274247	.O-RING	1
17	PAHZZ	5330011286460	0AHU0	74913941-3	GASKET	1
18	XAHHH		79410	10-22-607-003	COVER ASSEMBLY	1
19	XAHZZ		79410	10-.22-107-003	.COVER	1
20	PAHZZ	5315012549667	79410	141281	.PIN,STRAIGHT,HEADLE	1
21	PAHZZ	5310013963942	79410	103321	WASHER,LOCK 3/8	8
22	PAHZZ	5305000680511	80204	B1821BH038C125N	SCREW,CAP,HEXAGON H	8
23	PAHZZ	5310013963944	79410	103322	WASHER,LOCK 7/16	4
24	PAHZZ	5305000429477	79218	W1507-32CA	SCREW,CAP,HEXAGON H 7/16-14X2	4
25	PAHZZ	5365013954682	79410	10-00-552-004	PLUG,MACHINE THREAD	2
26	PAHZZ	5330012608806	79410	274246	.O-RING	1
27	PAHZZ	5360013954678	79410	10-21-156-011	SPRING,HELICAL,COMP	1
28	PAHZZ	3110001006155	96906	MS19059-2418	BALL,BEARING	1
29	PAHZZ	5310013963942	79410	103321	WASHER,LOCK	10
30	PAHZZ	5305000680511	80204	B1821BH038C125N	SCREW,CAP,HEXAGON H 3/8-16X1 1/4	10
31	PAHZZ	4820012531969	79410	10-21-237-001	STEM,FLUID VALVE	1
32	PAHZZ	5360012552543	79410	10-21-156-001	SPRING,HELICAL,COMP	1
33	PAOZZ		13174	883-FS-12X08	REDUCER,TUBE	1
34	PAOZZ	4730007621239	96906	MS51531B8	NUT,TUBE COUPLING	1
35	PAOZZ		53790	848-FSO-08X16	NIPPLE,TUBE	1
36	PAOZZ	4730004914983	01276	203102-8-8S	TEE,TUBE	1
37	PAOZZ	4730012616561	13174	63UC-08X08	ELBOW,TUBE	1
					END OF FIGURE	

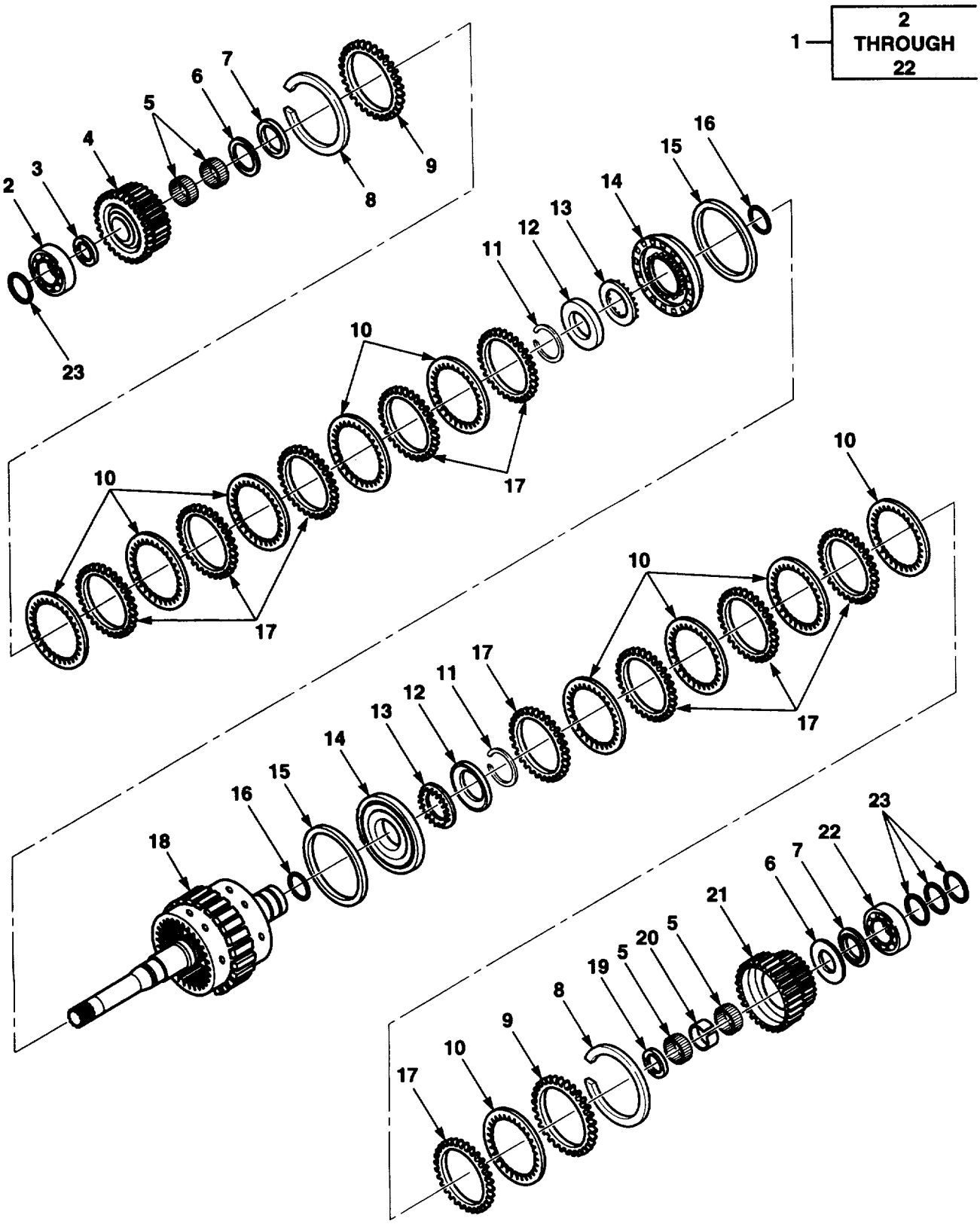

Figure 83. Input Shaft Assembly

https://truckmanualshub.com/ 185

(1) ITEM NO.	(2) SMR CODE	(3) NSN	(4) CAGEC	(5) PART NUMBER	(6) DESCRIPTION AND USABLE ON CODES (UOC)	(7) QTY
					GROUP 0710 TRANSMISSION ASSEMBLY FIG. 83 INPUT SHAFT ASSEMBLY	
1	PAHHH	2520013965516	79410	10-22-689-021	SHAFT,INPUT	1
2	PAHZZ	3110012554871	79410	1345-130-001	.BEARING,BALL,ANNULA	1
3	PAHZZ	3120013969832	79410	10-00-193-007	.BEARING,WASHER,THRU	1
4	PAHZZ	3020013983348	79410	10-22-080-001	.GEAR	1
5	PAHZZ	3110012542353	79410	10-00-132-033	.BEARING,ROLLER,NEED	4
6	PAHZZ	3120013539440	79410	10-00-193-009	.BEARING,WASHER,THRU	2
7	PAHZZ	3120013539441	79410	10-00-193-011	.BEARING,WASHER,THRU	2
8	PAHZZ	5365012564633	79410	10-00-139-020	.RING,RETAINING	2
9	PAHZZ	2520011681707	OAHUO	4913947-0	.PRESSURE PLATE ASSE	2
10	PAHZZ	2520012528907	79410	10-21-666-005	.CLUTCH ASSEMBLY,FRI	10
11	PAHZZ	5365012564634	79410	14-00-139-020	.RING,RETAINING	2
12	PAHZZ	5340012559395	79410	10-21-040-002	.SEAT,HELICAL COMPRE	2
13	PAHZZ	5340012577691	79410	10-21-540-001	.SEAT,HELICAL COMPRE	2
14	PAHZZ	2520013961910	79410	10-21-124-003	.PISTON,CLUTCH SHAFT	2
15	PAHZZ	5330012552561	79410	10-00-016-013	.SEAL,PLAIN	2
16	PAHZZ	5330012552565	11083	7G1800	.0-RING	2
17	PAHZZ	2520011539169	79410	10-21-166-001	.DISK,CLUTCH	10
18	PAHZZ		28703	10-22-689-013	.SHAFT,INPUT	1
19	PAHZZ	3120013535200	79410	10-00-193-008	.BEARING,WASHER,THRU	1
20	PAHZZ	5365012559524	79410	10-00-053-009	.SPACER,SLEEVE	1
21	PAHZZ	3020012525825	79410	10-22-080-002	.GEAR CLUSTER	1
22	PAHZZ	3110013116925	79410	10-00-130-015	.BEARING,BALL,ANNULA	1
23	PAHZZ	5330006468240	79410	4806C	RETAINER,PACKING	4
					END OF FIGURE	

https://truckmanualshub.com/ 186

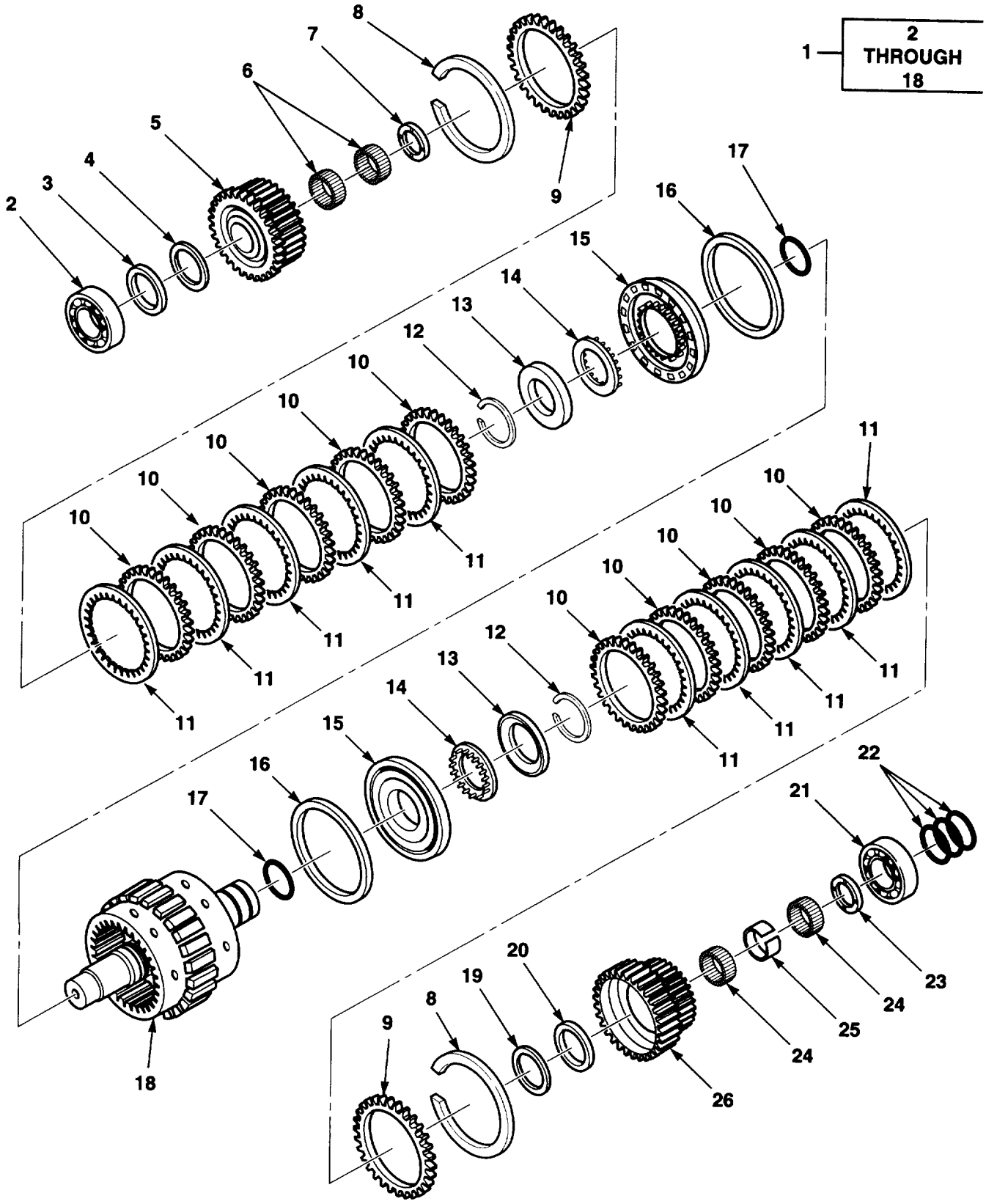

Figure 84. Forward Shaft Assembly

https://truckmanualshub.com/ 187

(1) ITEM NO.	(2) SMR CODE	(3) NSN	(4) CAGEC	(5) PART NUMBER	(6) DESCRIPTION AND USABLE ON CODES (UOC)	(7) QTY
					GROUP 0710 TRANSMISSION ASSEMBLY FIG. 84 FORWARD SHAFT ASSEMBLY	
1	PAHHH	2520013965509	79410	10-22-567-017	SHAFT	1
2	PAHZZ	3110012554871	79410	1345-130-001	.BEARING,BALL,ANNULA	1
3	PAHZZ	3120013539441	79410	10-00-193-011	.BEARING,WASHER,THRU	1
4	PAHZZ	3120013539440	79410	10-00-193-009	.BEARING,WASHER,THRU	1
5	PAHZZ	3020013983348	79410	10-22-080-001	.GEAR	1
6	PAHZZ	3110012542353	79410	10-00-132-033	.BEARING,ROLLER,NEEDD	2
7	PAHZZ		28703	10-00-193-020	.WASHER,THRUST	7
8	PAHZZ	5365012564633	79410	10-00-139-020	.RING,RETAINING	2
9	PAHZZ	2520011681707	0AHU0	4913947-0	.PRESSURE PLATE ASSE	2
10	PAHZZ	2520011539169	79410	10-21-166-001	.DISK,CLUTCH	10
11	PAHZZ	2520012528907	79410	10-21-666-005	.CLUTCH ASSEMBLY,FRI	10
12	PAHZZ	5365012564633	79410	10-00-139-020	.RING,RETAINING	2
13	PAHZZ	5340012559395	79410	10-21-040-002	.SEAT,HELICAL COMPRE	2
14	PAHZZ	5340012577691	79410	10-21-540-001	.SEAT,HELICAL COMPRE	2
15	PAHZZ	2520013961910	79410	10-21-124-003	.PISTON,CLUTCH SHAFT	2
16	PAHZZ	5330012552561	79410	10-00-016-013	.SEAL,PLAIN	2
17	PAHZZ	5330012552565	11083	7G1800	.O-RING	2
18	XAHZZ		79410	10-22-567-010	.SHAFT,AXLE,AUTO	1
19	PAHZZ	3120013539441	79410	10-00-193-011	BEARING,WASHER,THRU	1
20	PAHZZ	3120013539440	79410	10-00-193-009	BEARING,WASHER,THRU	1
21	PAHZZ	3110013116925	79410	10-00-130-015	BEARING,BALL,ANNULA	1
22	PAHZZ	5330006468240	79410	4806C	RETAINER,PACKING	3
23	PAHZZ		28703	10-00-143-007	WASHER,THRUST	1
24	PAHZZ	3110012542353	79410	10-00-132-033	BEARING,ROLLER,NEED	2
25	PAHZZ	5365012559524	79410	10-00-053-009	SPACER,SLEEVE	1
26	PAHZZ	3020012525825	79410	10-22-080-002	GEAR CLUSTER	1
					END OF FIGURE	

https://truckmanualshub.com/ 188

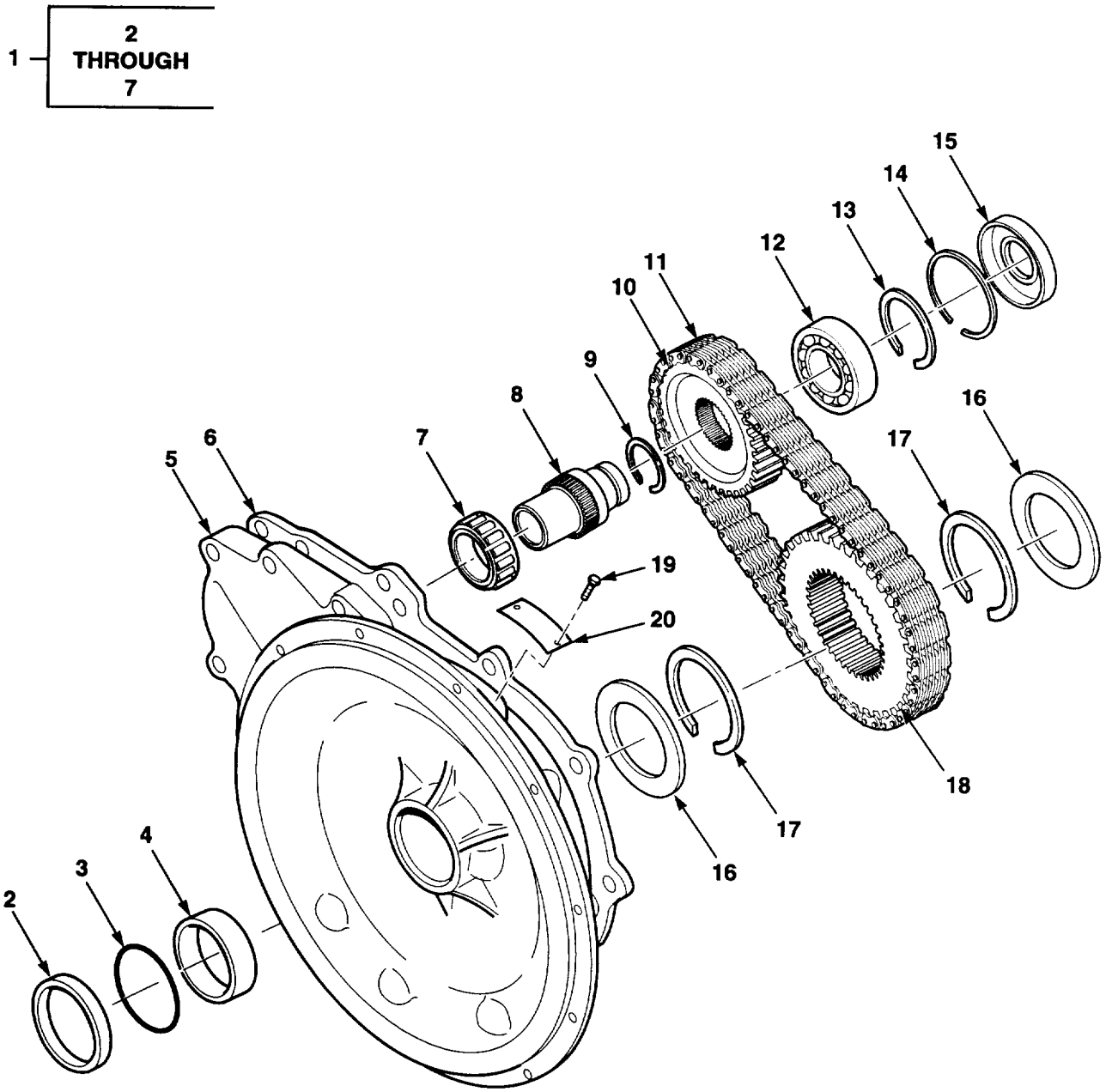

Figure 85. Auxiliary Pump Drive

https://truckmanualshub.com/ 189

(1) ITEM NO.	(2) SMR CODE	(3) NSN	(4) CAGEC	(5) PART NUMBER	(6) DESCRIPTION AND USABLE ON CODES (UOC)	(7) QTY
					GROUP 0710 TRANSMISSION ASSEMBLY FIG. 85 AUXILIARY PUMP DRIVE	
1	PAHHH		08018	10-21-712-008	COVER AND BUSHING A	1
2	PAHZZ	5330012552559	79410	10-00-044-026	.SEAL,PLAIN	1
3	PAHZZ	5330012552562	79410	10-00-141-136	.O-RING	1
4	PAHZZ	3120012562928	79410	10-00-127-022	.BUSHING,SLEEVE	1
5	XAHZZ		79410	10-21-212-008	.HOUSING,CONVERTER	1
6	PAHZZ	5330012552579	79410	10-21-045-005	.GASKET	1
7	PAHZZ	3110009023756	79410	4840D	.BEARING,ROLLER,NEED	1
8	PAHZZ	3040013975688	79410	10-21-171-003	SHAFT,SHOULDERED	1
9	PAHZZ	5365002815403	79410	4734	RING,RETAINING	1
10	PAHZZ	3020012528871	79410	10-21-144-006	SPROCKET WHEEL	1
11	PAHZZ	020012525819	79410	10-21-143-002	CHAIN,ROLLER	1
12	PAHZZ	3110012554870	79410	10-00-130-008	BEARING,BALL,ANNULA	1
13	PAHZZ	5365012559319	79410	4671	RING,RETAINING	1
14	PAHZZ	5365012559318	79410	10-00-139-025	RING,RETAINING	1
15	PAHZZ	5330012552559	79410	10-00-044-026	SEAL,PLAIN	1
16	PAHZZ	5310012554833	79410	10-21-193-006	WASHER	2
17	PAHZZ		79410	10-00-139-003	RING,RETAINING	2
18	PAHZZ	3020012528872	79410	10-21-144-005	SPROCKET WHEEL	1
19	PAHZZ	5305013890065	79410	10-00-183-077	SCREW,DRIVE	2
20	XDHZZ	79410	4636CG		PLATE,IDENTIFICATIO	1
					END OF FIGURE	

https://truckmanualshub.com/ 190

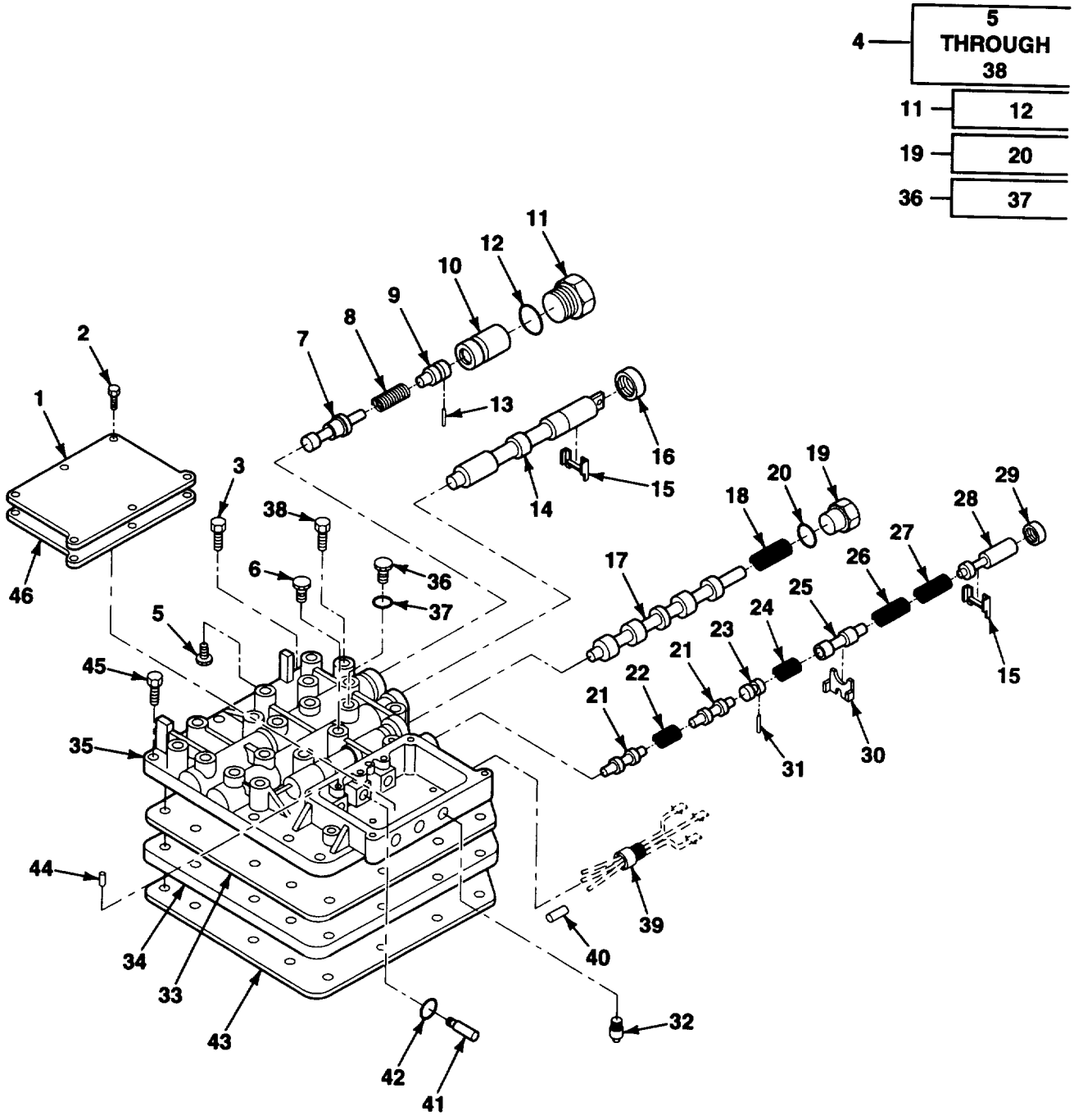

Figure 86. Transmission Valve Body

https://truckmanualshub.com/ 191

(1) ITEM NO.	(2) SMR CODE	(3) NSN	(4) CAGEC	(5) PART NUMBER	(6) DESCRIPTION AND USABLE ON CODES (UOC)	(7) QTY
					GROUP 0714 SERVO UNIT FIG. 86 TRANSMISSION VALVE BODY	
1	PAHZZ	5340013954683	79410	10-22-039-001	COVER,ACCESS	1
2	PAHZZ	5305000680502	96906	MS90725-6	SCREW,CAP,HEXAGON H 1/4-20X3/8	6
3	PAHZZ	5305013954686	79410	179820	SCREW,CAP,HEXAGON H 5/16-18X1	2
4	PAHHZ	4820013967104	79410	10-22-736-023	BODY,VALVE	1
5	PAHZZ	5305011220459	0AHU0	0928597-4	.SCREW,ASSEMBLED WAS	1
6	PAHZZ	4730011289621	79410	X1516H	.PLUG,PIPE	3
7	PAHZZ	4820012531970	79410	10-21-237-002	.STEM,FLUID VALVE	1
8	PAHZZ	5360013954681	79410	10-22-156-008	.SPRING,HELICAL,COMP	1
9	PAHZZ	4810013983339	79410	1022-040-004	.VALVE,PLUG	1
10	XDHZZ		79410	1022-237-004	.VALVE,ACCUMULATOR	1
11	PAHZZ	5365013954675	79410	10-00-552-016	.PLUG,MACHINE THREAD	1
12	PAHZZ	5330013970277	79410	274250	..PACKING,PREFORMED	1
13	XDHZZ		24617	103696	.PIN,STRAIGHT,HEADLE	1
14	XAHZZ		79410	10-22-237-013	.VALVE	1
15	PAHZZ	4810013965000	54825	1022-040-003	.SEAT,VALVE	2
16	PAHZZ	5330012552560	79410	1000-016-017	.SEAL,PLAIN ENCASED	1
17	PAHZZ	4810013964999	54825	1022-237-005	.VALVE,FLOW CONTROL	1
18	PAHZZ	5360013954674	79410	10-22-156-004	.SPRING,HELICAL,CONP	1
19	PAHZZ	5365013954677	79410	10-00-552-009	.PLUG,MACHINE THREAD	1
20	PAHZZ	5330010244853	79410	274247	O-RING	1
21	PAHZZ	4820013983347	79410	1022-237-006	.VALVE,ACCUMULATOR	2
22	PAHZZ	5360013954689	79410	10-22-156-005	.SPRING,HELICAL,COMP	1
23	PAHZZ	5340013957716	79410	1022-040-001	.STOP,MECHANICAL	1
24	PAHZZ	5360004103054	79410	T11-215	.SPRING,HELICAL,COMP	1
25	PAOZZ	4820013983338	79410	1022-237-007	.VALVE,CHECK	1
26	PAHZZ	5360013954685	79410	10-22-156-006	.SPRING,HELICAL,COMP	1
27	PAHZZ	5360013954684	79410	10-22-156-007	.SPRING,HELICAL,COMP	1
28	PAHZZ	5340013955122	79410	1022-239-008	.PLUNGER,DETENT	1
29	PAHZZ	5330012552560	79410	1000-016-017	.SEAL,PLAIN ENCASED	1
30	XDHZZ		79410	1021-040-008	.STOP,INCHING VALVE	1
31	PAHZZ	3110001170633	79410	F1-42	.ROLLER,BEARING	1
32	PAHZZ	4820013477701	79410	10-22-237-008	.BODY,VALVE	2
33	PAHZZ	5330013965825	79410	1022-045-004	.GASKET	1
34	PAHZZ	2590013973549	79410	1022-036-007	.PLATE,DISTRIBUTOR	1
35	XAHZZ		79410	1022-736-011	.BODY,VALVE	1
36	PAHZZ	5340012592587	79410	1000-552-005	.PLUG,PROTECTIVE,DUS	4
37	PAHZZ		79410	274245	..PACKING,PREFORMED	1
38	PAHZZ	5305013954690	79410	10-00-183-080	.SCREW,CAP,HEXAGON H 5/16-18X2 1/2	7
39	XBHZZ	4730013474843	79410	1022640003	.FITTING	1
40	XBHZZ		79410	102264003	.FITTING	3
41	PAHZZ		79410	10-22-640-006	SOLENOID,24V	3
42	PAHZZ	5330012552563	79410	10-00-141-046	O-RING	3
43	PAHZZ	5330013957868	79410	10-22-045-005	GASKET	1
44	PAHZZ	5315013957863	79410	103679	PIN,STRAIGHT,HEADED	3
45	PAHZZ	5305002264831	80204	B1821BHO31C150N	SCREW,CAP,HEXAGON H 5/16-18X1 1/2	9
46	PAHZZ	5330013976262	79410	10-22-045-006	ITEM,SPECIAL	1
					END OF FIGURE	

https://truckmanualshub.com/ 192

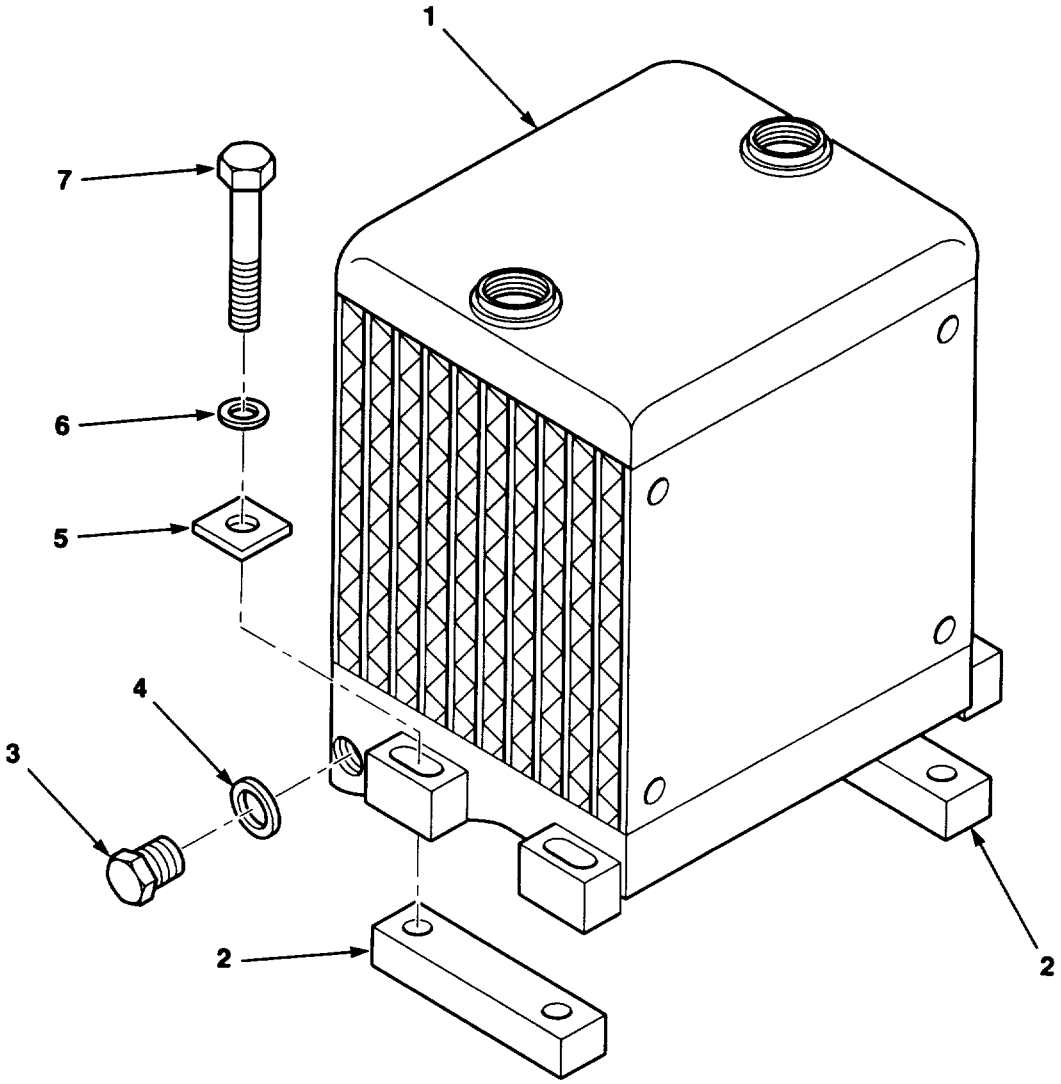

Figure 87. Transmission Oil Cooler

https://truckmanualshub.com/ 193

(1) ITEM NO.	(2) SMR CODE	(3) NSN	(4) CAGEC	(5) PART NUMBER	(6) DESCRIPTION AND USABLE ON CODES (UOC)	(7) QTY
					GROUP 0721 COOLERS, PUMPS, MOTORS FIG. 87 TRANSMISSION OIL COOLER	
1	PAOZZ	2520013975268	62445	0223 5338	COOLER,FLUID,TRANSM	1
2	PAOZZ		62445	0346 9591	BRACKET,VEHICULAR C	2
3	PAOZZ	5365014347273	62445	0111 8970	PLUG,MACHINE THREAD M18X1.5	2
4	PAOZA	5330010128856	36719	1118712	GASKET	2
5	PAOZZ	5310013962860	62445	0337 0743	WASHER,FLAT	4
6	PAOZZ	5310012428459	62445	1107105	WASHER,FLAT M10.5	4
7	PAFZZ	5305012742097	62445	111 1336	SCREW,CAP,HEXAGON H M10X75	4
					END OF FIGURE	

https://truckmanualshub.com/ 194

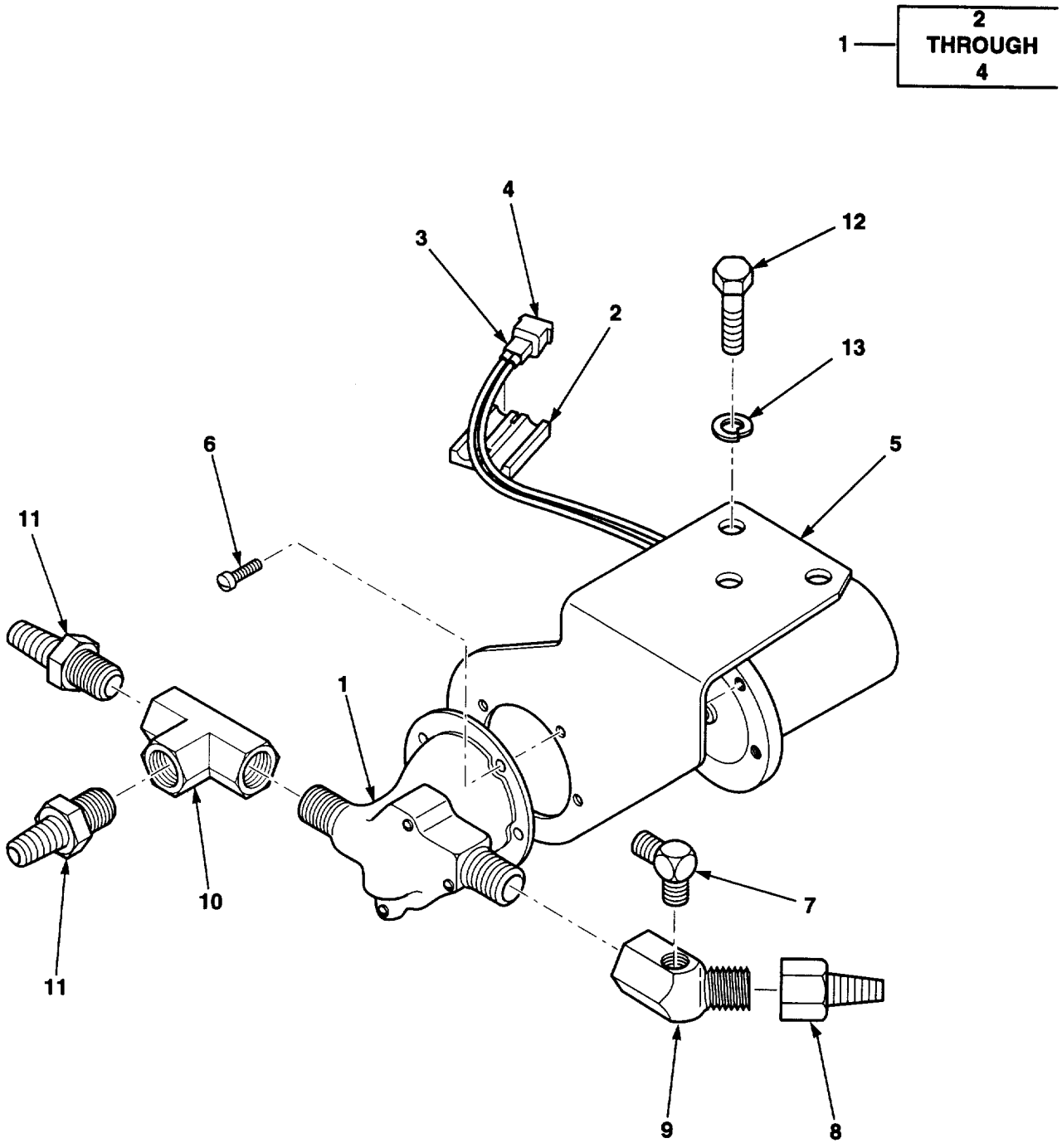

Figure 88. Axle Cooling Pump

https://truckmanualshub.com/ 195

(1) ITEM NO.	(2) SMR CODE	(3) NSN	(4) CAGEC	(5) PART NUMBER	(6) DESCRIPTION AND USABLE ON CODES (UOC)	(7) QTY
					GROUP 08 TRANSFER AND FINAL DRIVE ASSEMBLIES	
					GROUP 0801 POWER TRANSFER AND FINAL DRIVE ASSEMBLIES	
					FIG. 88 AXLE COOLING PUMP	
1	PAOOO		07443	1408633	PUMP,CENTRIFUGAL	1
2	PAOZZ		OKN95	4402-65	.FILTER	2
3	PAOZZ		00779	1-480699-0	.CAP,CIRCUIT	1
4	PAOZZ	5999011381528	00779	350552-1	.CONTACT,ELECTRICAL	2
5	XBOZZ		07443	1408410	BRACKET OIL	1
6	PAOZZ	5305009846195	96906	MS35206-247	SCREW,MACHINE	4
7	PAOZZ		07443	1408632	RESTRICTOR,FLUID FL	1
8	PAOZZ		30327	KFO8-08RS	ADAPTER,FEMALE BRASS	1
9	PAOZZ		07443	1408630	ADAPTER,MODIFIED	1
10	PAOZZ		30327	101-B-08	TEE,PIPE	1
11	PAOZZ	4730004655928	30327	KF08-08PS	ADAPTER,STRAIGHT,PI	2
12	PAOZZ		1CJ86	BN54M10X1.5-25	SCREW,CAP,HEXAGON H	2
13	PAOZZ		07443	18EM1019	WASHER,FLAT	2
					END OF FIGURE	

https://truckmanualshub.com/ 196

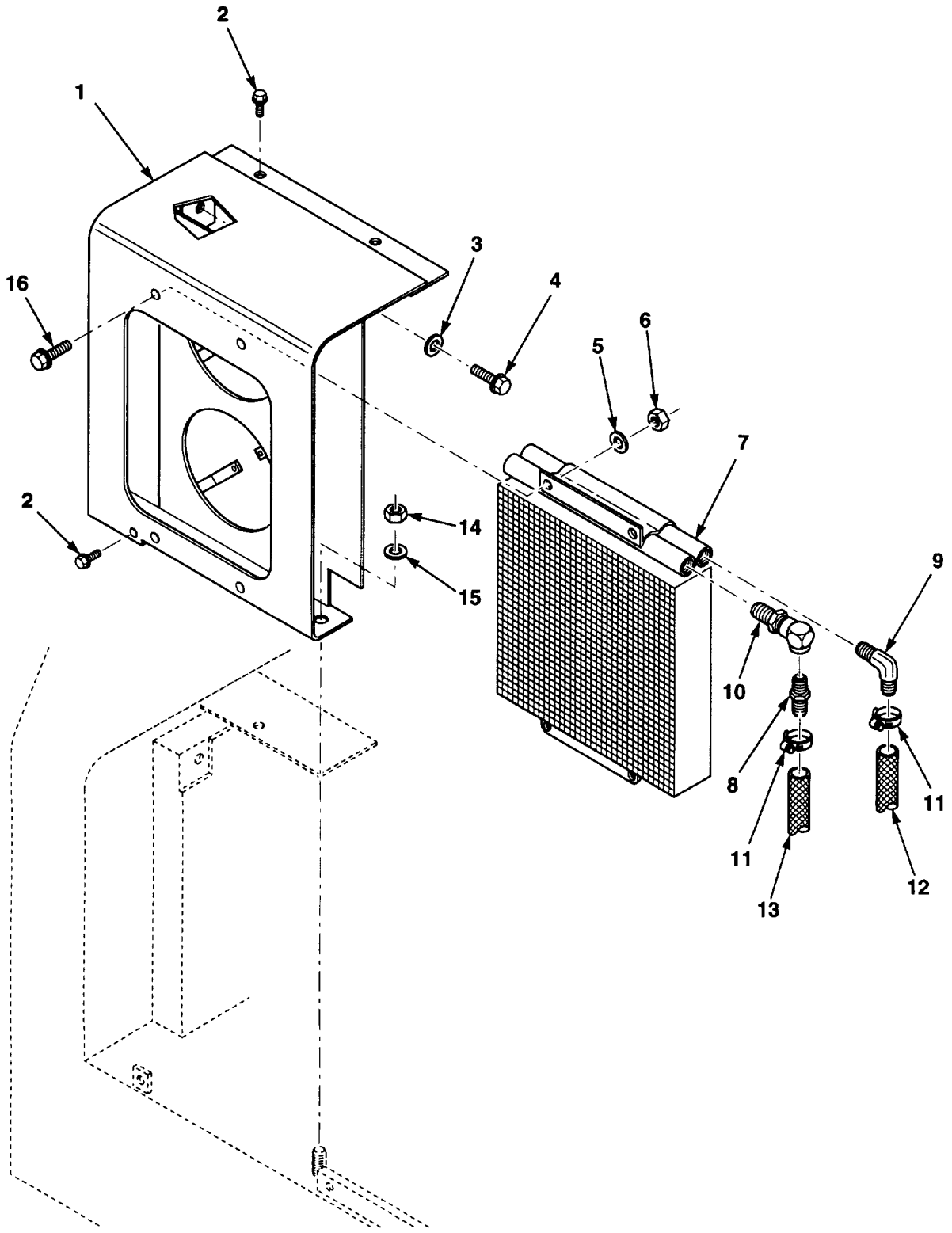

Figure 89. Axle Oil Cooler

https://truckmanualshub.com/ 197

(1) ITEM NO.	(2) SMR CODE	(3) NSN	(4) CAGEC	(5) PART NUMBER	(6) DESCRIPTION AND USABLE ON CODES (UOC)	(7) QTY
					GROUP 0802 CLUTCH AND CLUTCH CONTROLS FIG. 89 AXLE OIL COOLER	
1	XBOZZ		07443	1407943	WELDMENT, OIL CLR	1
2	PAOZZ		07443	29CM616	SCREW, CAP, HEXAGON H M6X16	2
3	PAOZZ		07443	18EM1632	WASHER, FLAT M16X32	1
4	PAOZZ		1CJ86	DIN9338.8BN58M16 X	SCREW, CAP, HEXAGON H M16X30	1
5	PAOZZ		88274	18EM816	WASHER, FLAT M8X16	4
6	PAOZZ		62445	01112824	NUT, HEX HD M8	4
7	PAOZZ		93480	63002-1	HEAT EXCHANGER, FLUI	1
8	PAOZZ	4730009130762	30327	KFO8-06PS	ADAPTER, STRAIGHT, PI	1
9	PAOZA	4730002325478	30327	KFO8-06PS90	ELBOW, PIPE TO HOSE BRASS	1
10	PAOZZ		92985	6-6-SPC-18	ELBOW, STREET	1
11	PAOZZ		81646	5408 CLAMP, HOSE 2		
12	MOOZZ		07443	1409141	HOSE, CUT HIGH MAKE FROM HOSE P/N: A208 CAGE: 30327	1
13	MOOZZ		07443	1409140	HOSE, CUT HIGH MAKE FROM HOSE P/N: A208 CAGE: 30327	1
14	PAOZZ		62445	01112824	NUT, HEX HD M8	1
15	PAOZZ		07443	27E4 WASHER		1
16	PAOZZ		07443	29CM820	SCREW, CAP, HEXAGON H M8X20	4
					END OF FIGURE	

https://truckmanualshub.com/ 198

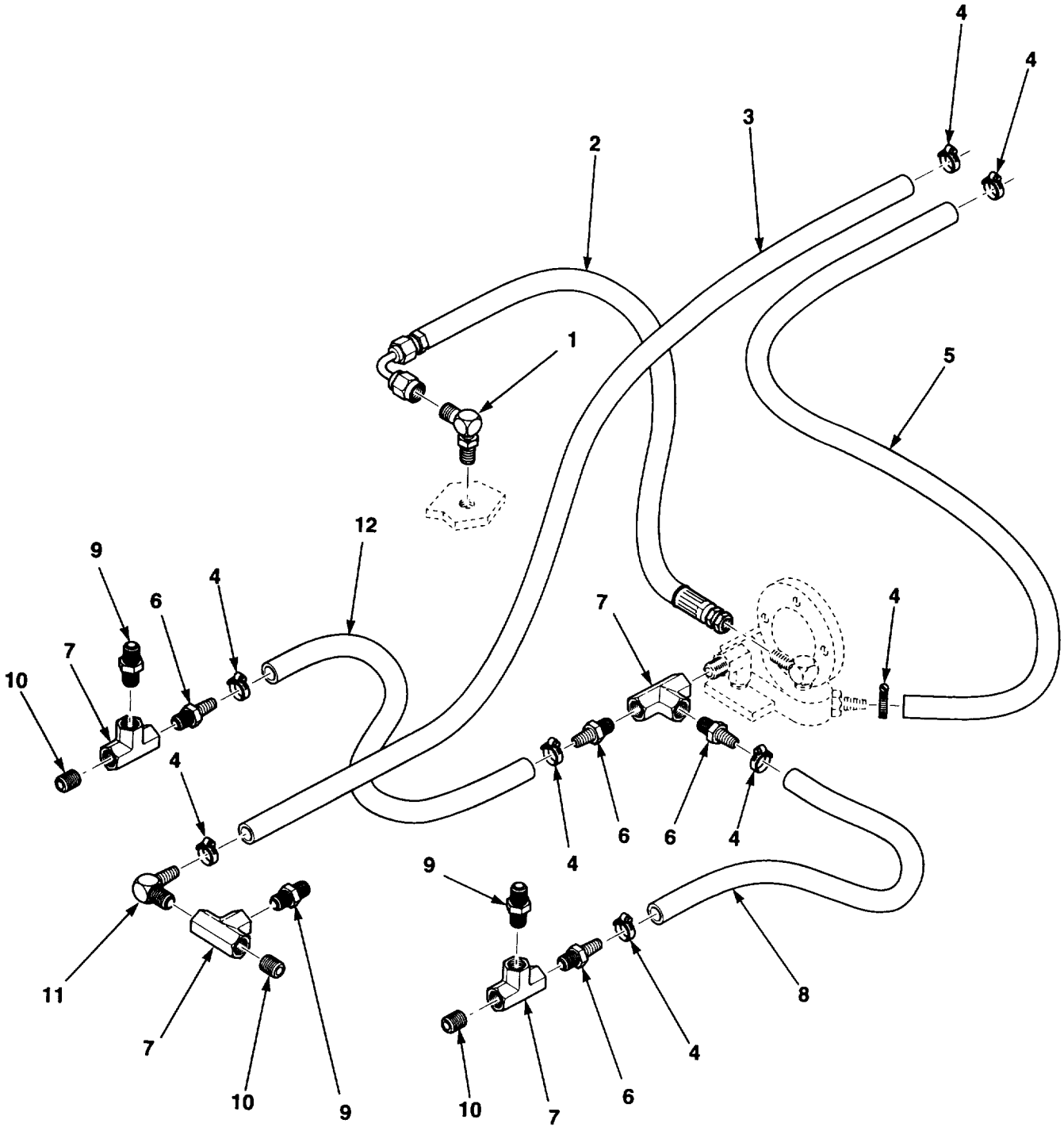

Figure 90. Axle Oil Cooler Hoses

https://truckmanualshub.com/ 199

(1) ITEM NO.	(2) SMR CODE	(3) NSN	(4) CAGEC	(5) PART NUMBER	(6) DESCRIPTION AND USABLE ON CODES (UOC)	(7) QTY
					GROUP 0802 CLUTCH AND CLUTCH CONTROLS FIG. 90 AXLE OIL COOLER HOSES	
1	PAOZZ		92985	4-37-6	ELBOW, MALE	1
2	PAOZZ		07443	1409238	HOSE ASSEMBLY, NONME	1
3	MOOZZ		07443	1409141	HOSE, CUT HIGH MAKE FROM HOSE P/N: A208 CAGE: 30327	1
4	PAOZZ		81646	5408	CLAMP, HOSE	8
5	MOOZZ		07443	1409140	HOSE, CUT HIGH MAKE FROM HOSE P/N: A208 CAGE: 30327	1
6	PAOZZ	4730004655928	30327	KFO8-08PS	ADAPTER, STRAIGHT, PI	4
7	PAOZZ		30327	101-B-08	TEE, PIPE	3
8	MOOZZ		07443	1409139	HOSE, CUT HIGH MAKE FROM HOSE P/N: A208 CAGE: 30327	1
9	PAOZZ		07443	1408630	ADAPTER, MO DIFIED	3
10	PAOZZ		07443	1408413	NIPPLE, PIPE	3
11	PAOZZ		59257	8-8-AM-90	NIPPLE, HOSE	1
12	MOOZZ		07443	1409138	HOSE, CUT MAKE FROM HOSE P/N: A208 CAGE: 30327	1
					END OF FIGURE	

https://truckmanualshub.com/ 200

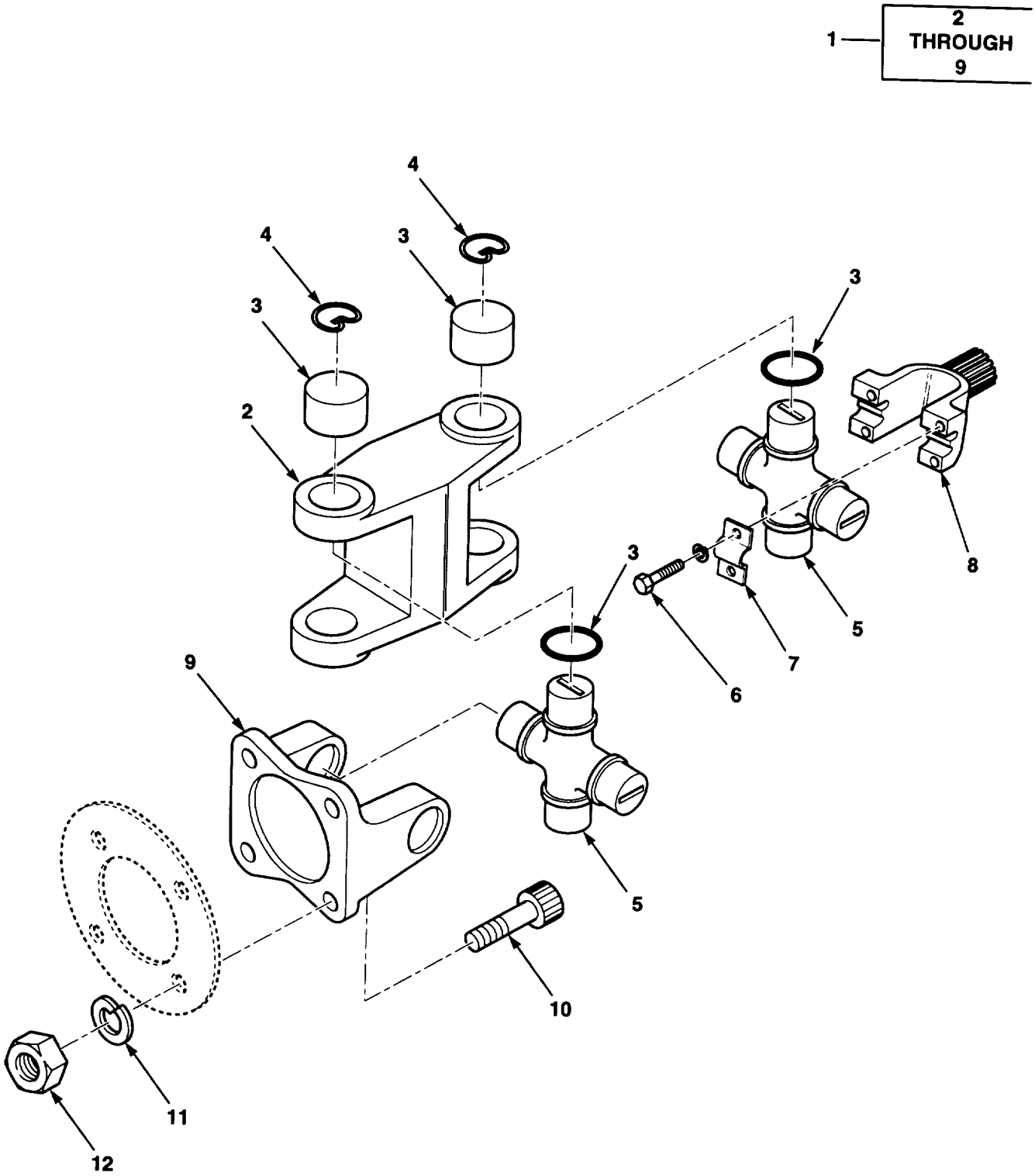

Figure 91. Driveshaft Assembly

https://truckmanualshub.com/ 201

(1) ITEM NO.	(2) SMR CODE	(3) NSN	(4) CAGEC	(5) PART NUMBER	(6) DESCRIPTION AND USABLE ON CODES (UOC)	(7) QTY
					GROUP 09 PROPELLER, PROPELLER SHAFTS, UNIVERSAL JOINTS, COUPLER AND CLAMP ASSEMBLY	
					GROUP 0900 PROPELLER SHAFTS	
					FIG. 91 DRIVESHAFT ASSEMBLY	
1	PAOOZ	2520014205308	72447	918920	PROPELLER SHAFT WIT	1
2	XBOZZ		4M339	3-26-747	.BEARING SUPPORT	1
3	PAOZZ		72447	3-6-608X	.BEARING, NEEDLE	4
4	PAOZA	5365010438794	72447	3-7-39	.RING, RETAINING	6
5	XBOZZ		4M339	3-5-386	.CROSS	1
6	PAOZZ	5306013511744	72447	231142	.BOLT, MACHINE	4
7	PAOZZ	5340013892417	72447	3-70-89	.STRAP, RETAINING	2
8	XBOZZ		4M339	3-4-12541-1X	.SPLINED FLANGE	2
9	XBOZZ		4M339	3-2-159	.SUPPORT, BEARING	1
10	PAOZZ		89749	74G724	SCREW, CAP, SOCKET HE	4
11	PAOZZ		91812	740D10-28	WASHER, LOCK	4
12	PAOZZ	5310013211995	12603	64D7	NUT, PLAIN, HEXAGON	4
					END OF FIGURE	

https://truckmanualshub.com/ 202

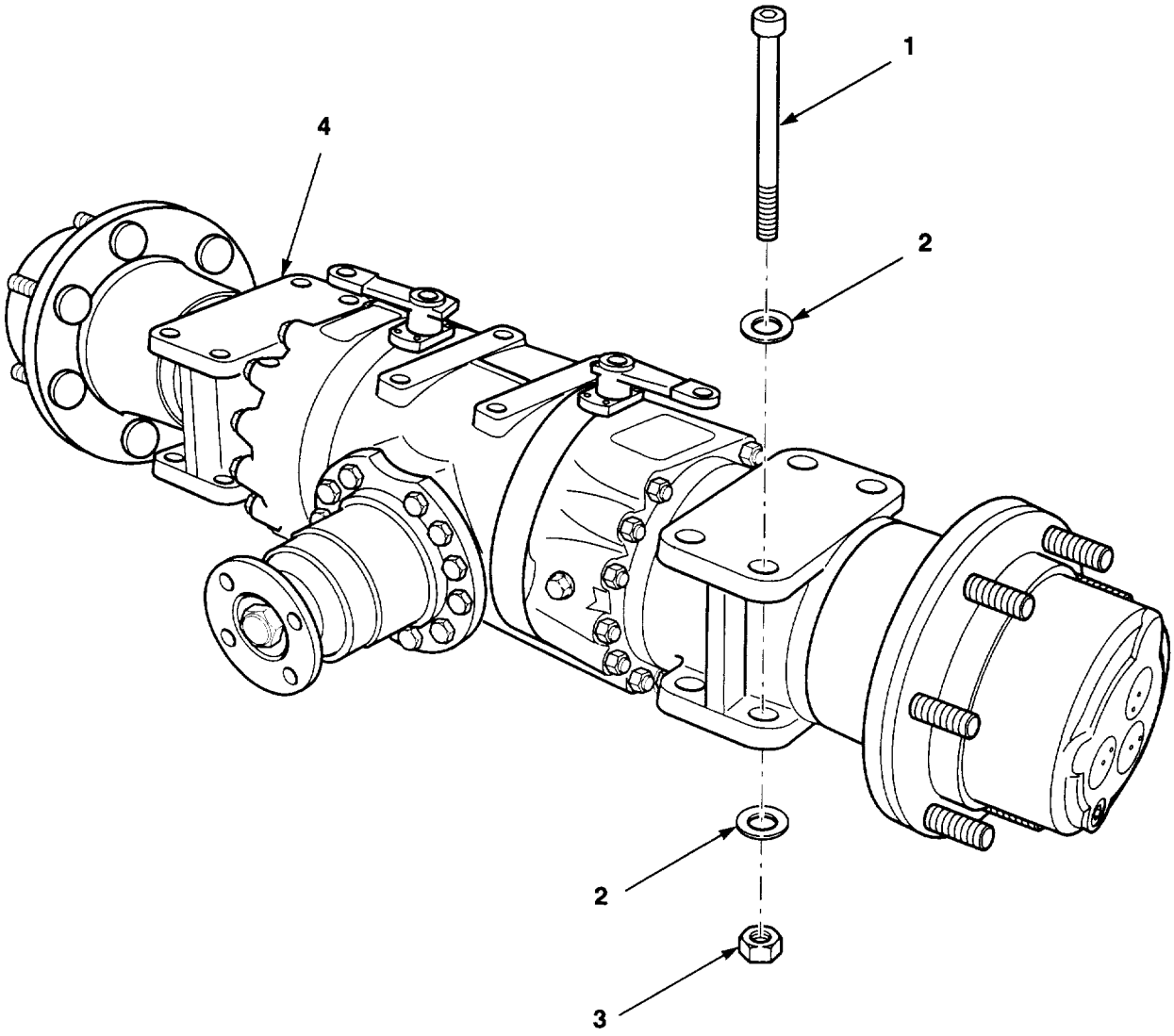

Figure 92. Drive Axle Assembly

https://truckmanualshub.com/ 203

(1) ITEM NO.	(2) SMR CODE	(3) NSN	(4) CAGEC	(5) PART NUMBER	(6) DESCRIPTION AND USABLE ON CODES (UOC)	(7) QTY
					GROUP 10 FRONT AXLE GROUP 1000 FRONT AXLE ASSEMBLY FIG. 92 DRIVE AXLE ASSEMBLY	
1	PAFZZ	5305014342943	89749	3GM20240	SCREW, CAP, SOCKET HE	8
2	PAFZZ	5310014195194	89749	18EM2040	WASHER, FLAT M20X40	16
3	PAFZZ	5310014194428	07443	1401146	NUT, PLAIN, HEXAGON	8
4	PFFHH		07443	1409221	DRIVE AXLE	1
					END OF FIGURE	

https://truckmanualshub.com/ 204

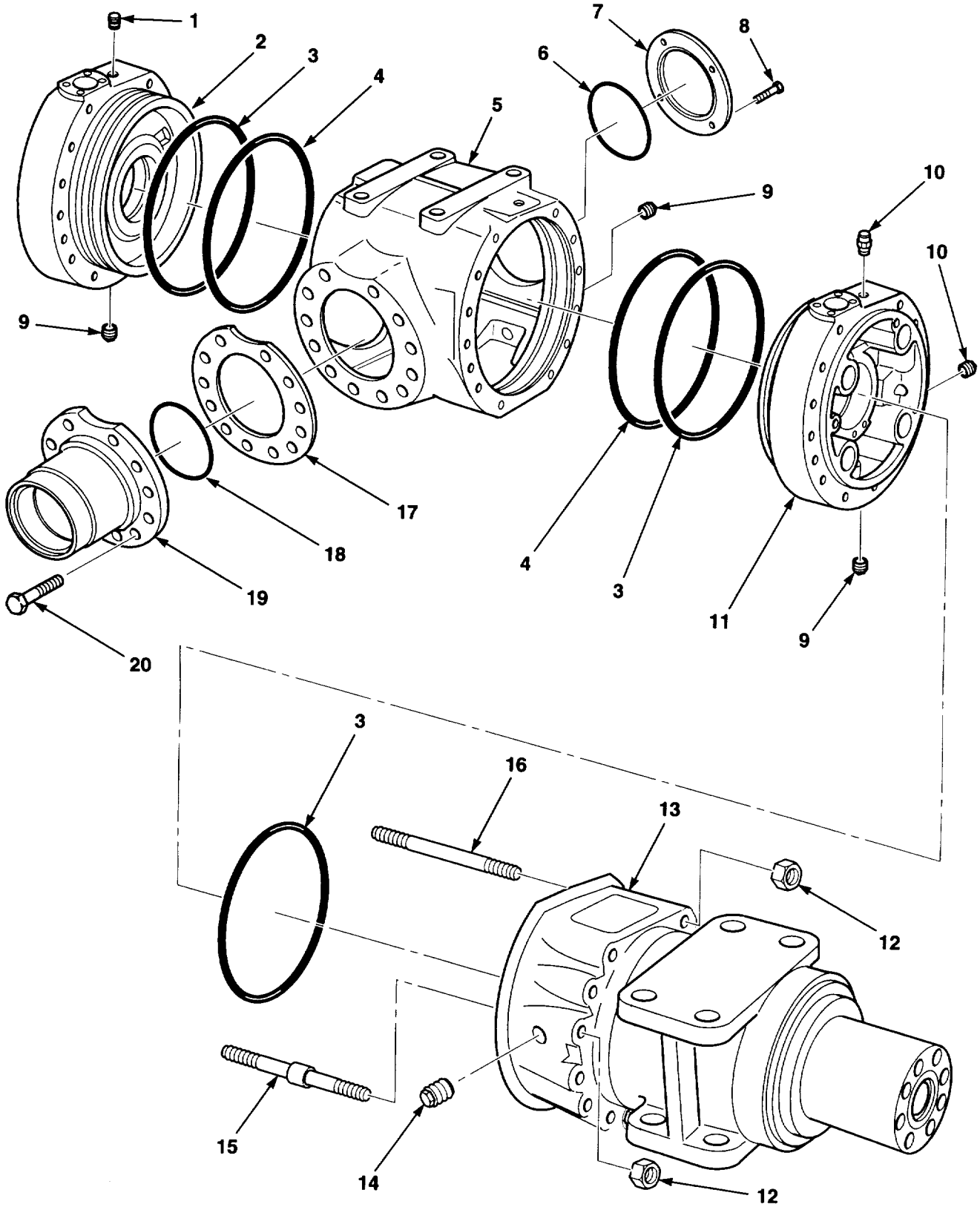

Figure 93. Front Axle Housing

https://truckmanualshub.com/ 205

(1) ITEM NO.	(2) SMR CODE	(3) NSN	(4) CAGEC	(5) PART NUMBER	(6) DESCRIPTION AND USABLE ON CODES (UOC)	(7) QTY
					GROUP 1000 FRONT AXLE ASSEMBLY	
					FIG. 93 FRONT AXLE HOUSING	
1	PAOZZ	5365013145293	3M126	016.14.1177	PLUG, MACHINE THREAD	2
2	XBHZZ		0B5C7	738.01.002.21	COVER, INTERMEDIATE	1
3	PAHZZ	5330013144797	77237	001-05-1178	O-RING	4
4	PAHZZ	5330014194427	0B5C7	738.07.089.01	PACKING, PREFORMED	2
5	XBHZZ		0B5C7	738.01.001.10	HOUSING	1
6	PAHZZ	5330013144799	77237	001-05-0817	O-RING	1
7	XBHZZ		0B5C7	734-01-007-01	COVER, ACESS	1
8	PAHZA	5305011013322	16004	82246	SCREW, CAP, SOCKET HE	4
9	PAOZZ	5365013143865	77237	819.01.610.01	PLUG, MACHINE THREAD	3
10	PAOZZ	5365013145292	77237	016.14.1138	PLUG, MACHINE THREAD	1
11	XBHZZ		0B5C7	738.01.003.11	COVER, INTERMEDIATE	1
12	PAHZZ	5310013145286	0B5C7	006.01.1497	NUT, PLAIN, HEXAGON	28
13	XBHZZ		0B5C7	738.06.001.09	HOUSING, AXLE	1
14	PAOZZ	5365013130232	77237	808.01.017.01	PLUG, MACHINE THREAD	2
15	PFHZZ	5307013161404	0B5C7	738-06-016-04	STUD, PLAIN	4
16	PAHZZ	5307013144842	0B5C7	738-06-016-03	STUD, SHOULDERED	24
17	PAHZZ	5365013140869	0B5C7	738-01-006-06	SHIM	1
17	PAHZZ	5365013137939	0B5C7	738-01-006-05	SHIM	1
18	PAHZZ	5330013080100	27315	1045Z2845	O-RING	1
19	XBHZZ		0B5C7	738.01.004.03	COVER	4
20	PAHZZ	5305011753667	60248	7001012030	SCREW, CAP, HEXAGON H	12
					END OF FIGURE	

https://truckmanualshub.com/ 206

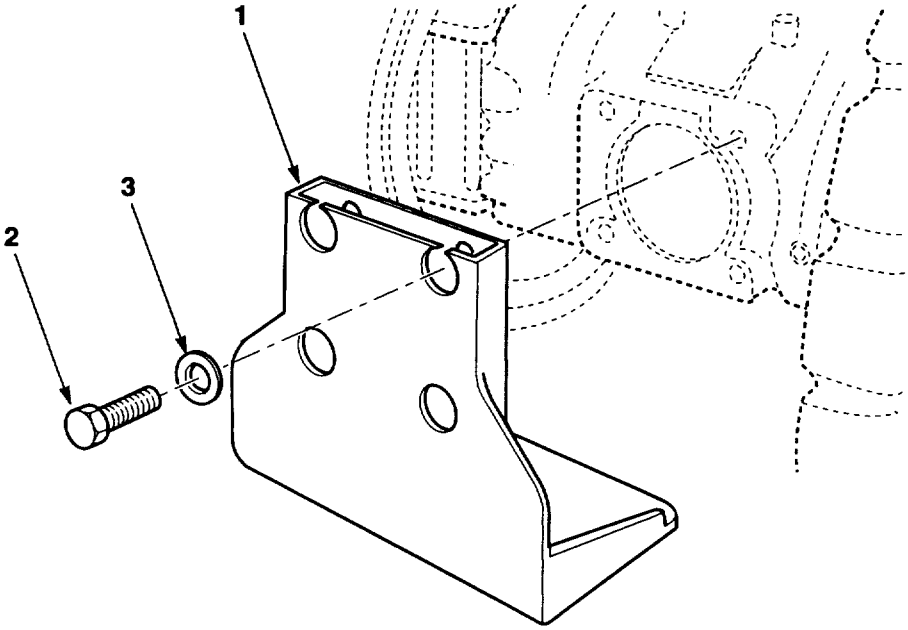

Figure 94. Drive Axle Guard

https://truckmanualshub.com/ 207

(1) ITEM NO.	(2) SMR CODE	(3) NSN	(4) CAGEC	(5) PART NUMBER	(6) DESCRIPTION AND USABLE ON CODES (UOC)	(7) QTY
					GROUP 1000 FRONT AXLE ASSEMBLY FIG. 94 DRIVE AXLE GUARD	
1	XBFZZ		07443	1408485	GUARD	1
2	PAOZZ	5305121240527	89749	1CM625	SCREW, CAP, HEXAGON H M16X25	4
3	PAOZZ	5310013981728	12603	18EM1632	WASHER, FLAT M16X32	4
					END OF FIGURE	

https://truckmanualshub.com/ 208

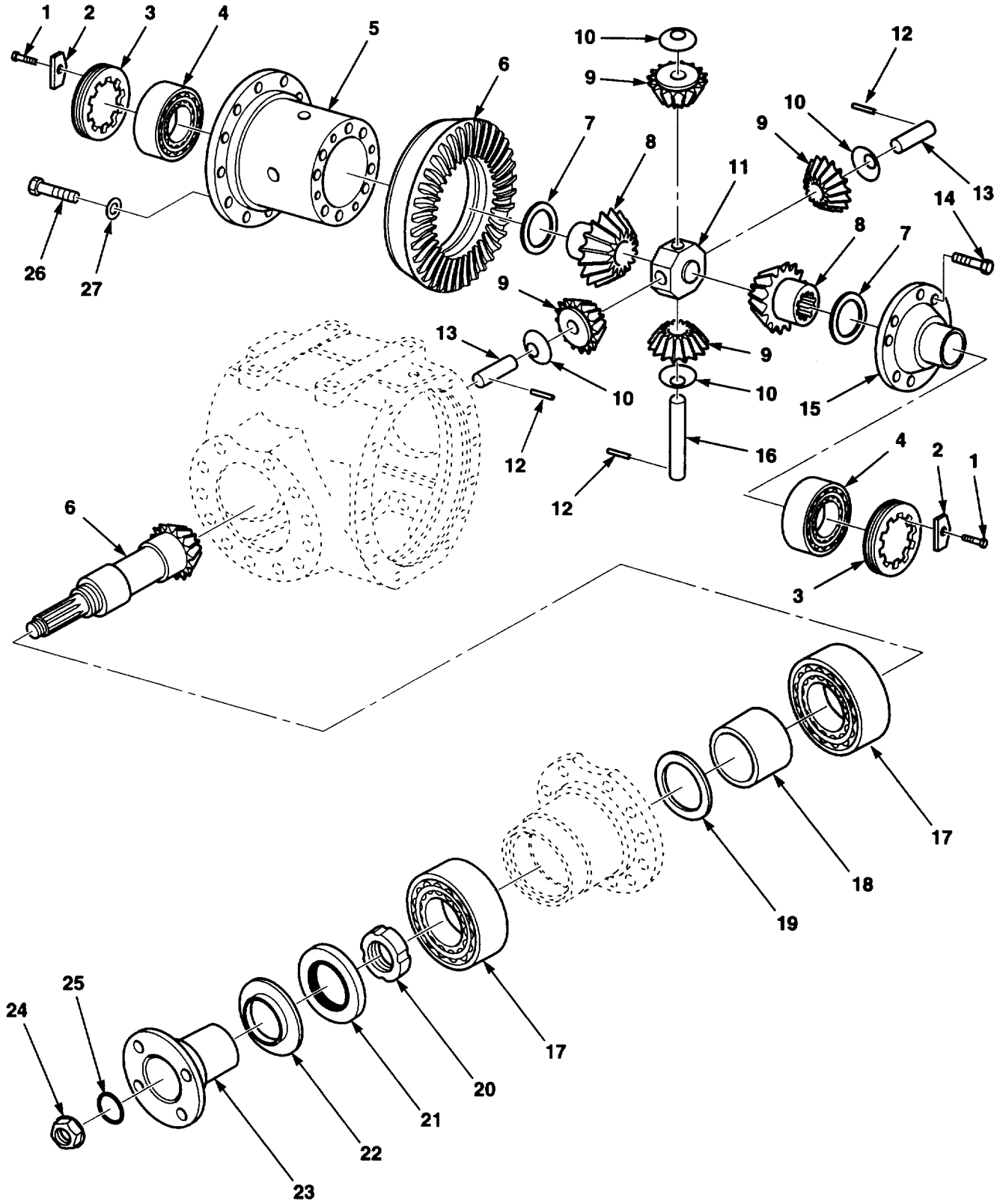

Figure 95. Differential

https://truckmanualshub.com/ 209

(1) ITEM NO.	(2) SMR CODE	(3) NSN	(4) CAGEC	(5) PART NUMBER	(6) DESCRIPTION AND USABLE ON CODES (UOC)	(7) QTY
					GROUP 1002 DIFFERENTIAL	
					FIG. 95 DIFFERENTIAL	
1	PANZA	5305011014832	16004	82058	SCREW, CAP, HEXAGON H	2
2	PAHZZ	3110013133059	0B5C7	738-04-025-01	PLATE, RETAINING, BEA	2
3	PAHZZ	5310013133051	0B5C7	738-04-004-02	NUT SPACER, PLATE	2
4	PAHZZ	3110013082124	27315	1025Z3361	BEARING, ROLLER, TAPE	2
5	XBHZZ		0B5C7	738.04.001.04	CARRIER, DIFFERENTIA	1
6	XBHZZ		0B5C7	738.04.505.13	GEAR SET, BEVEL AND RING GEAR	1
7	PAHZZ	5365013137950	0B5C7	738-04-012-01	SPACER, RING	2
8	PFHZZ	3020013134197	77237	738-04-006-03	GEAR SET, BEVEL, MATC	2
9	PFHZZ	3020013134196	77237	738-04-005-03	GEAR SET, BEVEL, MATC	4
10	PAHZZ	3120013133033	0B5C7	738-04-011-01	BEARING, WASHER, THRU	4
11	PFHZZ	5365013137953	0B5C7	738-04-009-02	SPACER, PLATE	1
12	PAHZZ		0B5C7	014-03-0336	PIN, SPRING	3
13	PAHZZ	5315013141848	0B5C7	738-04-008-02	PIN, STRAIGHT, HEADLE	2
14	PAHZZ	5305011753667	60248	7001012030	SCREW, CAP, HEXAGON H	8
15	XBHZZ		0B5C7	738.04.003.06	COVER	1
16	PFHZZ	5315013135612	0B5C7	738-04-008-01	PIN, STRAIGHT, HEADLE	1
17	PAHZZ	3110013075810	27315	1025Z3362	BEARING, ROLLER, TAPE	2
18	PFHZZ	5365013135842	77237	953-04-002-06	SPACER, SLEEVE	1
19	PAHZZ	5365013144855	0B5C7	013-01-0284	SHIM	1
19	PAHZZ	5365013137940	0B5C7	013-01-0283	SHIM	1
19	PAHZZ	5365013137941	0B5C7	013-01-0285	SHIM	1
19	PAHZZ	5365014201385	0B5C7	013.01.1203	SHIM	1
19	PAHZZ	5365014201384	0B5C7	013.01.1204	SHIM	1
20	PAHZZ	5310013133041	0B5C7	953-04-012-01	NUT, SELF-LOCKING, RO	1
21	PAHZZ	5330013151543	77237	001.03.0730	SEAL, PLAIN ENCASED	1
22	PFHZZ	5340013133081	77237	953.01.025.01	PLATE, RETAINING, SEA	1
23	XBHZZ		0B5C7	738.04.028.01	FLANGE	1
24	PAHZZ	5310013133069	0B5C7	738-04-016-01	NUT, SELF-LOCKING, AS	1
25	PAHZZ	5330013151551	77237	001.05.0041	O-RING	1
26	PAHZZ	5305014201587	OB5C7	016.02.1375	SCREW, CAP, HEXAGON H	16
27	PAHZZ	5310013133042	77237	011.04.1318	WASHER, SPRING TENSI	16
					END OF FIGURE	

https://truckmanualshub.com/ 210

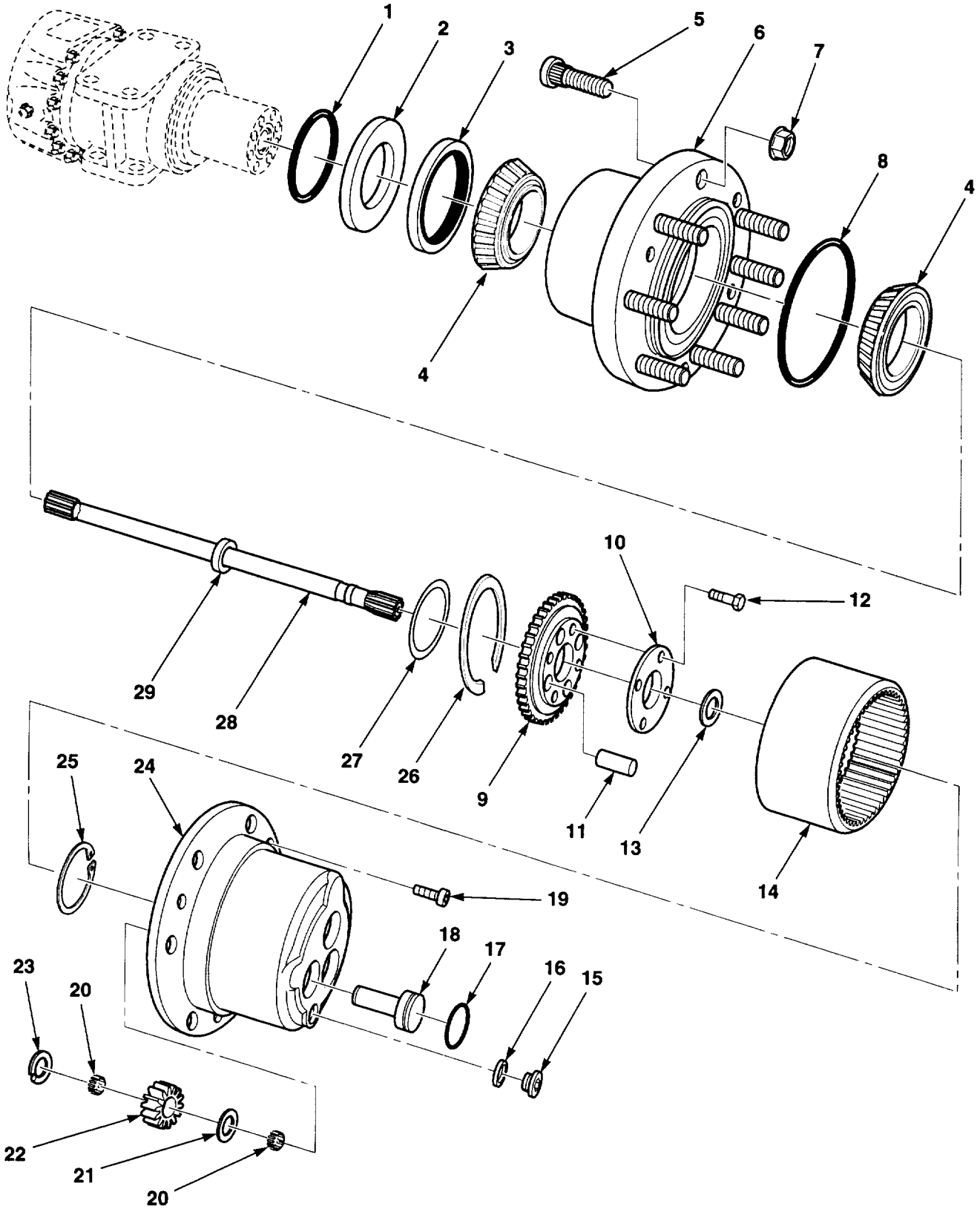

Figure 96. Planetary Reductive Drive

https://truckmanualshub.com/ 211

(1) ITEM NO.	(2) SMR CODE	(3) NSN	(4) CAGEC	(5) PART NUMBER	(6) DESCRIPTION AND USABLE ON CODES (UOC)	(7) QTY
					GROUP 1003 PLANETARY OR FINAL DRIVE FIG. 96 PLANETARY REDUCTION DRIVE	
1	PAHZZ	5330013123753	77237	001.05.1041	O-RING	2
2	PAHZZ	5365013130303	0B5C7	738.06.010.01	SPACER, RING	2
3	PAHZZ	5330013127132	77237	001.13.0608	SEAL, PLAIN ENCASED	2
4	PFHZZ	3110013075811	0FNE7	1025Z3364	BEARING, ROLLER, TAPE	4
5	PAHZZ	5307013644791	77237	932.06.074.01	STUD, SHOULDERED	16
6	XBHZZ		0B5C7	738.06.019.01	HUB	2
7	PAHZZ	5310013644171	0B5C7	006.11.1413	NUT, PLAIN, HEXAGON	16
8	PAHZZ	5330013127176	77237	001.05.1480	O-RING	2
9	XBHZZ		77237	738-06-007-03	HOUSING, MECH DRIVE	2
10	PFHZZ	5340013123882	0B5C7	738-06-033-01	PLATE, MOUNTING, FLAT	2
11	XBHZZ		0B5C7	738-06-011-02	PIN, STRAIGHT, HDLS	8
12	PAHZZ	5306013127606	0B5C7	016-02-1439	BOLT, SHOULDER	8
13	PAHZZ	5310013123834	0B5C7	171-06-010-02	WASHER, SHOULDERED	2
14	XBHZZ		0BJ33	738-06-005-01	GEAR, INTERNAL	2
15	PAOZZ	5365013132956	77237	728-06-011-01	PLUG, MACHINE THREAD	2
16	PAOZZ	5310014195087	0B5C7	011-07-0704	WASHER, SEAL	2
17	PAHZZ	5330013127175	77237	001.05.0935	O-RING	6
18	PAHZZ	5315013131976	77237	738.06.037.02	PIN, STRAIGHT, HEADED	6
19	PAHZZ	5305013127643	77237	016.05.0437	SCREW, SHOULDER	8
20	PAHZZ	3110013132938	0B5C7	005-13-0546	BEARING, ROLLER, NEED	12
21	PAHZZ	5365013133061	77237	738.06.012.01	SPACER, RING	6
22	PFHZZ	3020013156727	77237	738-06-006-01	GEAR, BEVEL	6
23	PAHZZ	5365013133062	77237	738.06.009.02	SPACER, RING	6
24	XBHZZ	3040013606513	77237	738.06.034.03	HUB, BODY	2
25	PAHZZ	5365013133007	77237	002.02.1044	RING, RETAINING	2
26	PAHZZ	5365013133006	0B5C7	002-06-1045	RING, RETAINING	2
27	PAHZZ	5365013127237	0B5C7	013-01-0325	SHIM	1
27	PAFZZ	5365013133053	0B5C7	013-01-0323	SHIM	1
27	PAFZZ	5365013127639	0B5C7	013-01-1348	SHIM	1
28	XBHZZ		0B5C7	738.06.002.02	SHAFT, HALF	2
29	PAHZZ	5330013127151	0B5C7	001-01-0009	SEAL, PLAIN	2
					END OF FIGURE	

https://truckmanualshub.com/ 212

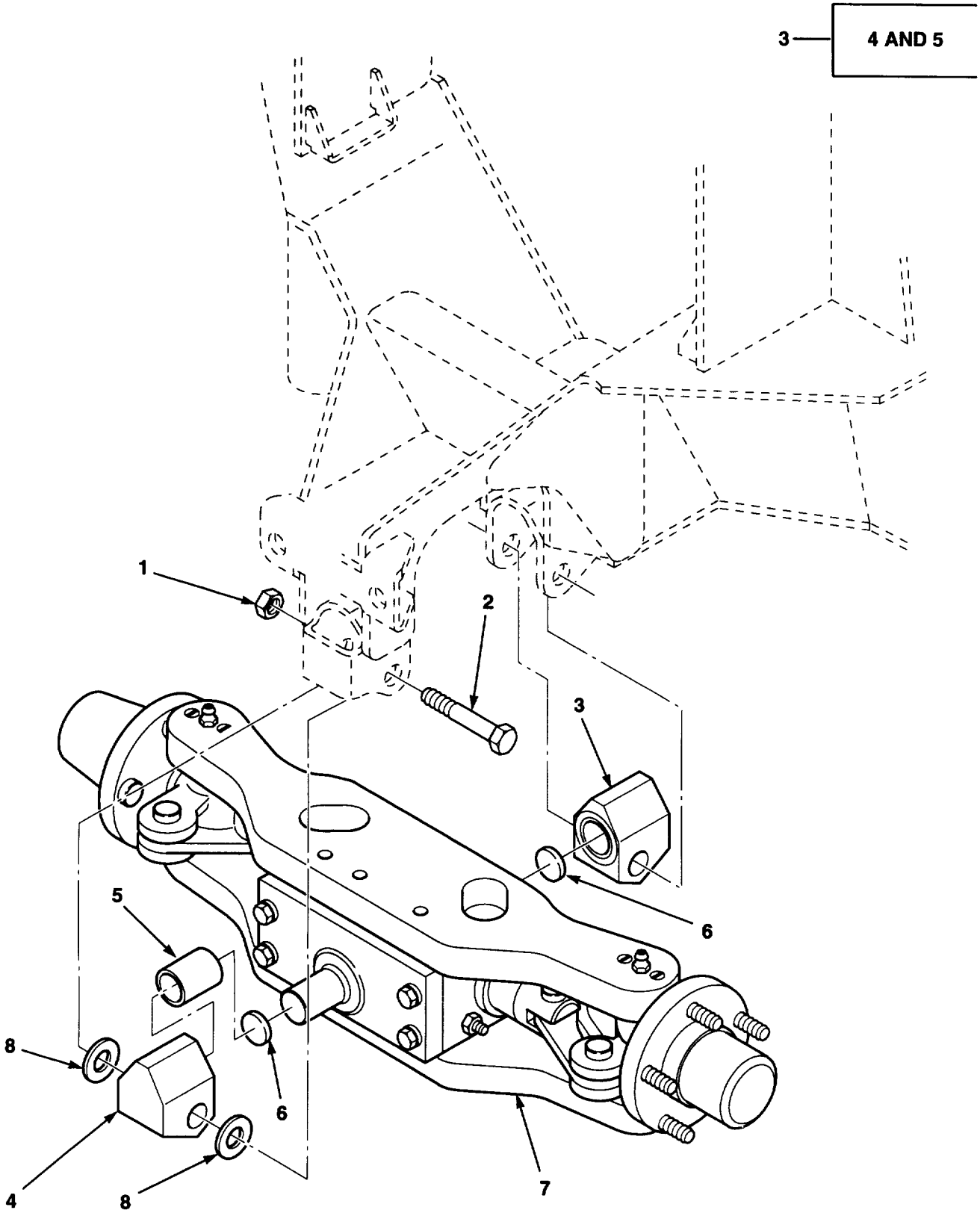

Figure 97. Rear Axle Installation

https://truckmanualshub.com/ 213

(1) ITEM NO.	(2) SMR CODE	(3) NSN	(4) CAGEC	(5) PART NUMBER	(6) DESCRIPTION AND USABLE ON CODES (UOC)	(7) QTY
					GROUP 11 REAR AXLE GROUP 1100 REAR AXLE ASSEMBLY FIG. 97 REAR AXLE INSTALLATION	
1	PAFZZ	5310013964290	12603	40DM24	NUT, SELF-LOCKING, HE M24	2
2	PAFZZ	5305013958749	12603	1CM24130	SCREW, CAP, HEXAGON H M24X130	2
3	PFFFZ	5340013955879	07443	1409571	MOUNT	2
4	XAFZZ		07443	1409570	.MOUNT, AXLE	1
5	PAFZZ	3120013971675	12603	2391199	.BUSHING, SLEEVE	1
6	PAFZZ	5365013968375	12603	2778988	BEARING, WASHER, THRU	2
7	PAFFF		07443	1407432	AXLE, STEER	1
8	PAFZZ		07443	1405875	WASHER, FLAT	4
					END OF FIGURE	

https://truckmanualshub.com/ 214

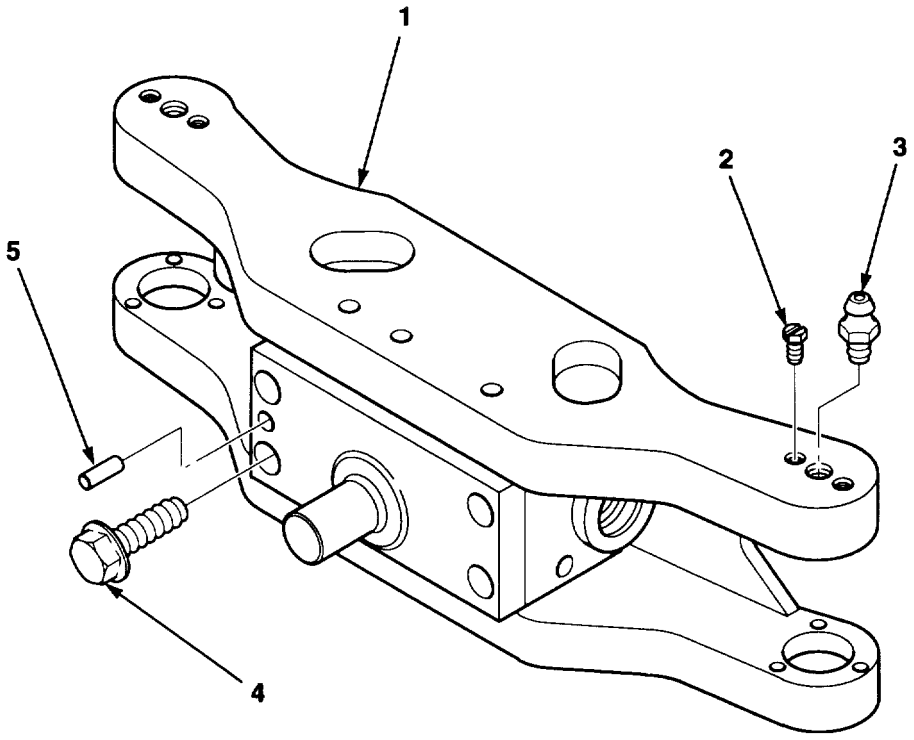

Figure 98. Rear Axle Housing

https://truckmanualshub.com/ 215

(1) ITEM NO.	(2) SMR CODE	(3) NSN	(4) CAGEC	(5) PART NUMBER	(6) DESCRIPTION AND USABLE ON CODES (UOC)	(7) QTY
					GROUP 1100 REAR AXLE ASSEMBLY FIG. 98 REAR AXLE HOUSING	
1	XAFZZ		07443	1407433	AXLE HOUSING	1
2	PAFZZ	5305012936637	12603	13GM506	SCREW, MACHINE	2
3	PAOZZ	4730013963036	12603	1HM8	FITTING, LUBRICATION M8	2
4	XBFZZ		89749	29CM1650	SCREW, FLANGED M16X50	4
5	PAFZZ		39428	97360A350	PIN, DOWEL	1
					END OF FIGURE	

https://truckmanualshub.com/ 216

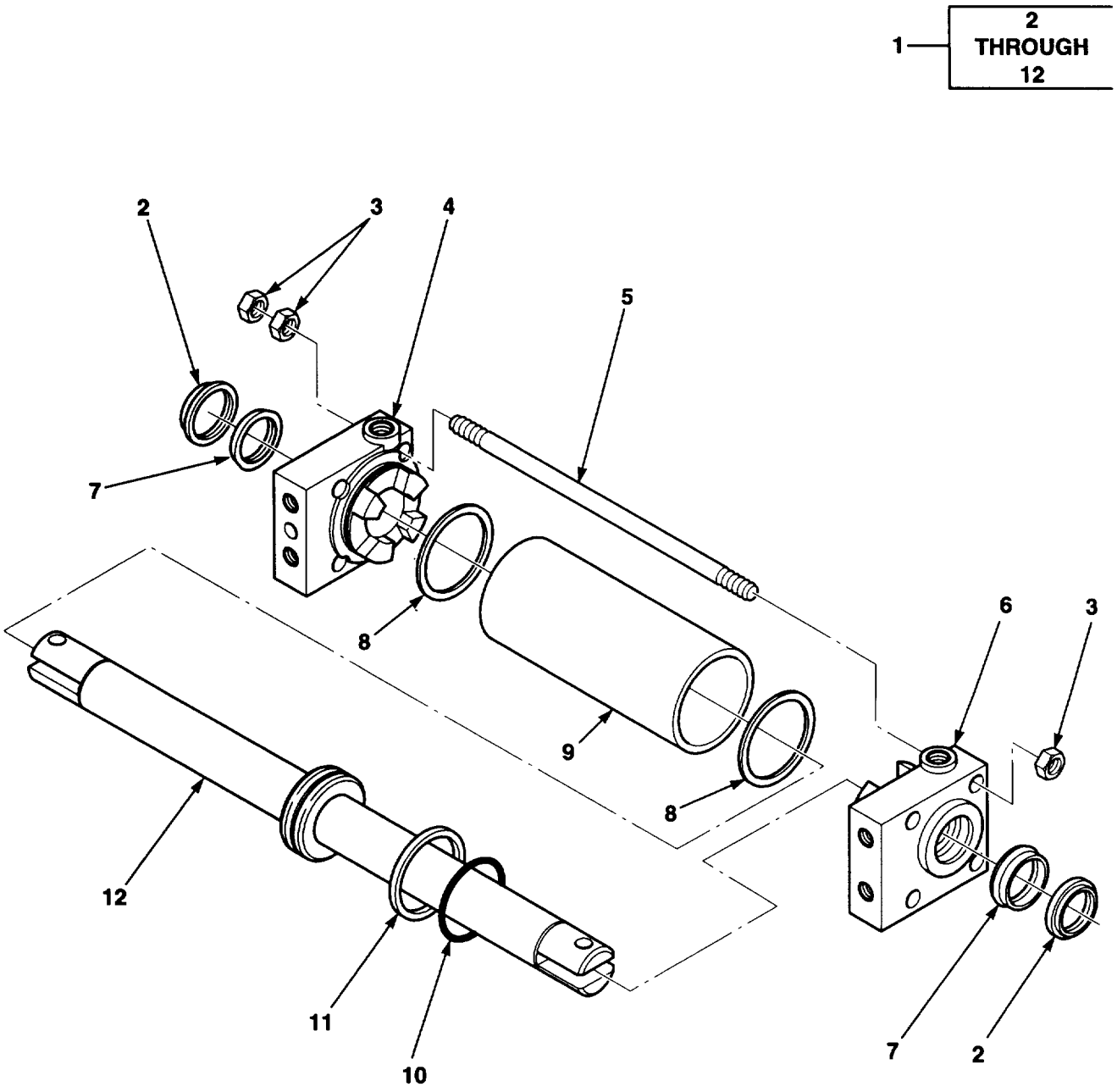

Figure 99. Steering Cylinder

https://truckmanualshub.com/ 217

(1) ITEM NO.	(2) SMR CODE	(3) NSN	(4) CAGEC	(5) PART NUMBER	(6) DESCRIPTION AND USABLE ON CODES (UOC)	(7) QTY
					GROUP 1104 STEERING, SIDESHIFT, AND WHEEL LEANING MECHANISMS FIG. 99 STEERING CYLINDER	
1	PAFFF		07443	2805184	STEERING, CYLINDER	1
2	KFFZZ		05283	686-30183	.ROD, WIPER PART OF KIT P/N 786-0334-K004	1
3	PAFZZ		05283	686-30219	.NUT N10	12
4	XBFZZ		05283	686-51068	.HEAD, LH	1
5	PAFZZ		05283	686-51067	.TIE, ROD	4
6	XBFZZ		05283	686-51069	.HEAD, RH	1
7	KFFZZ		05283	686-30218	.SEAL, ROD PART OF KIT P/N 786-0334-K004	2
8	KFFZZ		05283	100-234	.TUBE, SEAL PART OF KIT P/N 786-0334-K004	2
9	XBFZZ		05283	686-51064	.TUBE	1
10	KFFZZ		05283	686-30216	.SEAL, PISTON PART OF KIT P/N 786-0334-K004	1
11	KFFZZ		05283	100-150	.SEAL, PISTON PART OF KIT P/N 786-0334-K004	1
12	XBFZZ		05283	686-00021	.PISTON ROD ASSY	1
					END OF FIGURE	

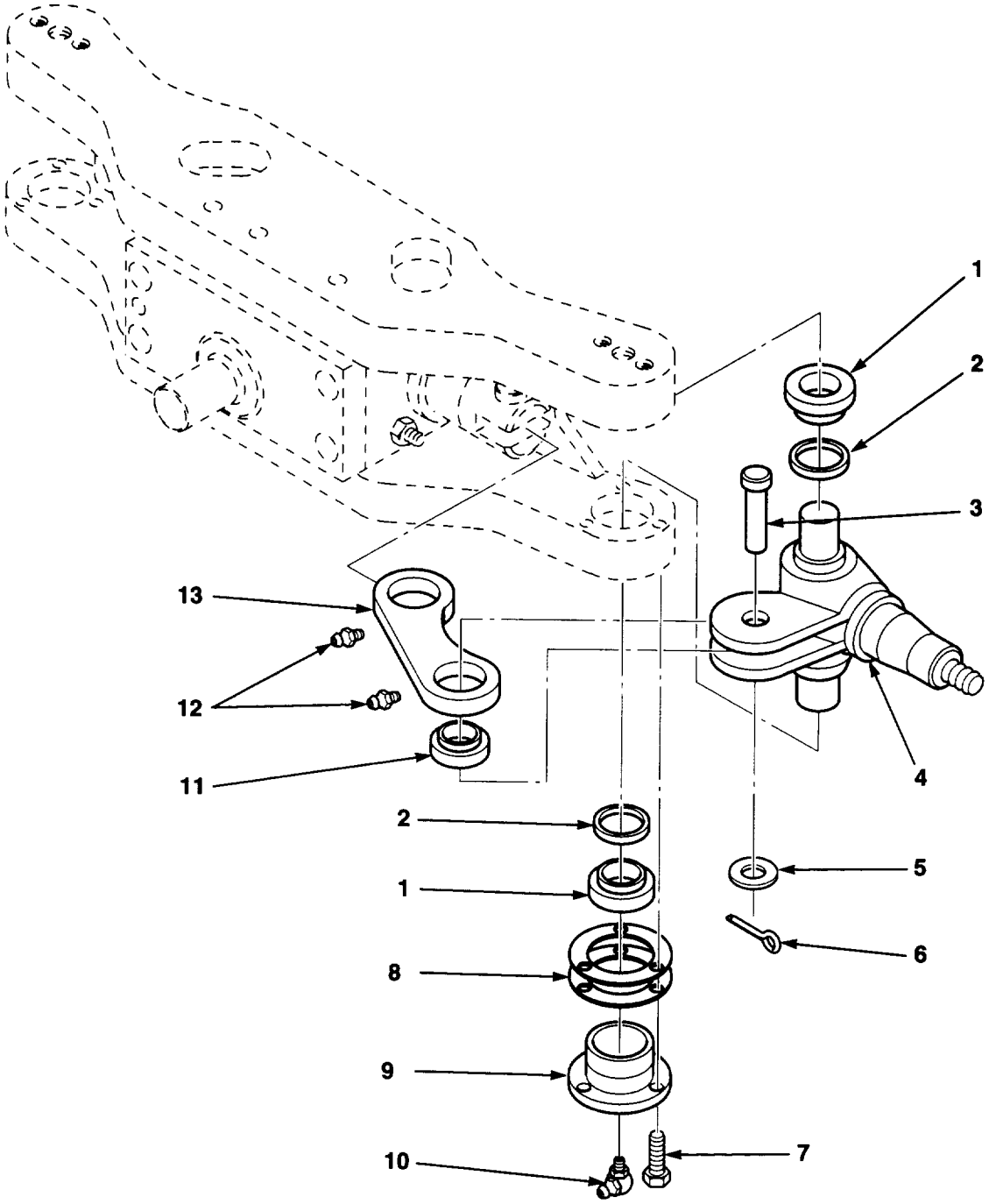

Figure 100. Steering Knuckles and Tie Rods

https://truckmanualshub.com/ 219

(1) ITEM NO.	(2) SMR CODE	(3) NSN	(4) CAGEC	(5) PART NUMBER	(6) DESCRIPTION AND USABLE ON CODES (UOC)	(7) QTY
					GROUP 1104 STEERING, SIDESHIFT, AND WHEEL LEANING MECHANISMS FIG. 100 STEERING KNUCKLES AND TIE RODS	
1	KFOZZ		12603	2772669	BEARING PART OF KIT P/N 2778988	4
2	KFOZZ		12603	894754	SEAL, KNUCKLE PIN PART OF KIT P/N 2778988	4
3	PAOZZ	5315013955125	12603	2772639	PIN, STRAI GHT, HEADED	4
4	PAOZZ	2530013961410	12603	2772642	SPINDLE, WHEEL, DRIVI	1
4	PAOZZ	2530013956860	12603	2772644	SPINDLE, WHEEL, DRIVI	1
5	PAOZZ	5310014155224	12603	1EM200	WASHER, FLAT M200	4
6	PAOZZ	5315013954747	12603	1F518	PIN, COTTER	4
7	PAOZZ	5305013957727	12603	29CM820	SCREW, CAP, HEXAGON H M8X20	6
8	KFOZZ		12603	1811920	SHIM SET, BEARING PART OF KIT P/N 2778988	2
9	PAOZZ	3130013969836	12603	2779162	CAP, PILLOW BLOCK	2
10	PAOZZ		12603	3HM8	FITTING, LUBRICANT	2
11	XBOZZ		51588	MB20-55Q	BEARING	4
12	PAOZZ	4730000504203	96906	MS15001-1	FITTING, LUBRICATION	4
13	PAFZZ		07443	1407436	CONNECTING LINK, RIG	2
					END OF FIGURE	

https://truckmanualshub.com/ 220

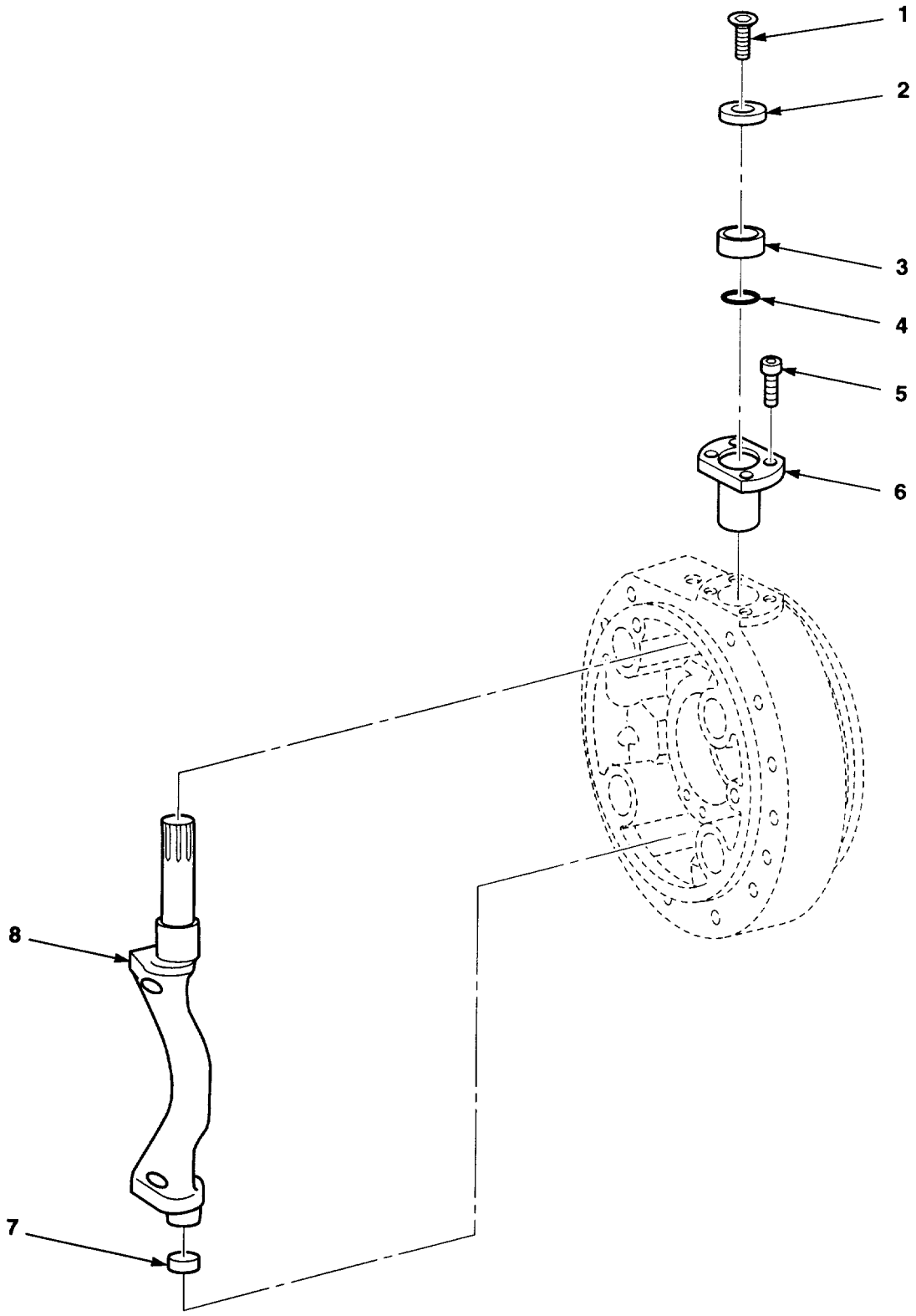

Figure 101. Parking Brake Levers

https://truckmanualshub.com/ 221

(1) ITEM NO.	(2) SMR CODE	(3) NSN	(4) CAGEC	(5) PART NUMBER	(6) DESCRIPTION AND USABLE ON CODES (UOC)	(7) QTY
					GROUP 12 BRAKES GROUP 1201 HAND BRAKES FIG. 101 PARKING BRAKE LEVERS	
1	PAOZZ	5305013147591	77237	016-06-0439	SCREW, CAP, SOCKET HE M8X18	2
2	PAOZZ	5365013145357	0B5C7	738.04.017.01	SPACER, RING	2
3	PAOZZ	5365013157153	0B5C7	931-04-006-01	SPACER, SLEEVE	2
4	PAOZZ	5330013080104	27315	1045Z2841	O-RING	2
5	PAOZZ	5305013147592	0B5C7	016-04-0843	SCREW, CAP, SOCKET HE	8
6	PFOZZ	2530013148745	0B5C7	738-07-003-01	PLATE, WEAR, BRAKE SH	2
7	PFFZZ	5340013149014	0B5C7	015-01-0361	PLUG, EXPANSION	2
8	XBFZZ		0B5C7	738-07-001-02	LEVER, MANUAL CTRL L	1
8	XBFZZ		77237	738-07-002-02	LEVER, REMOTE CTRL R	1
					END OF FIGURE	

https://truckmanualshub.com/ 222

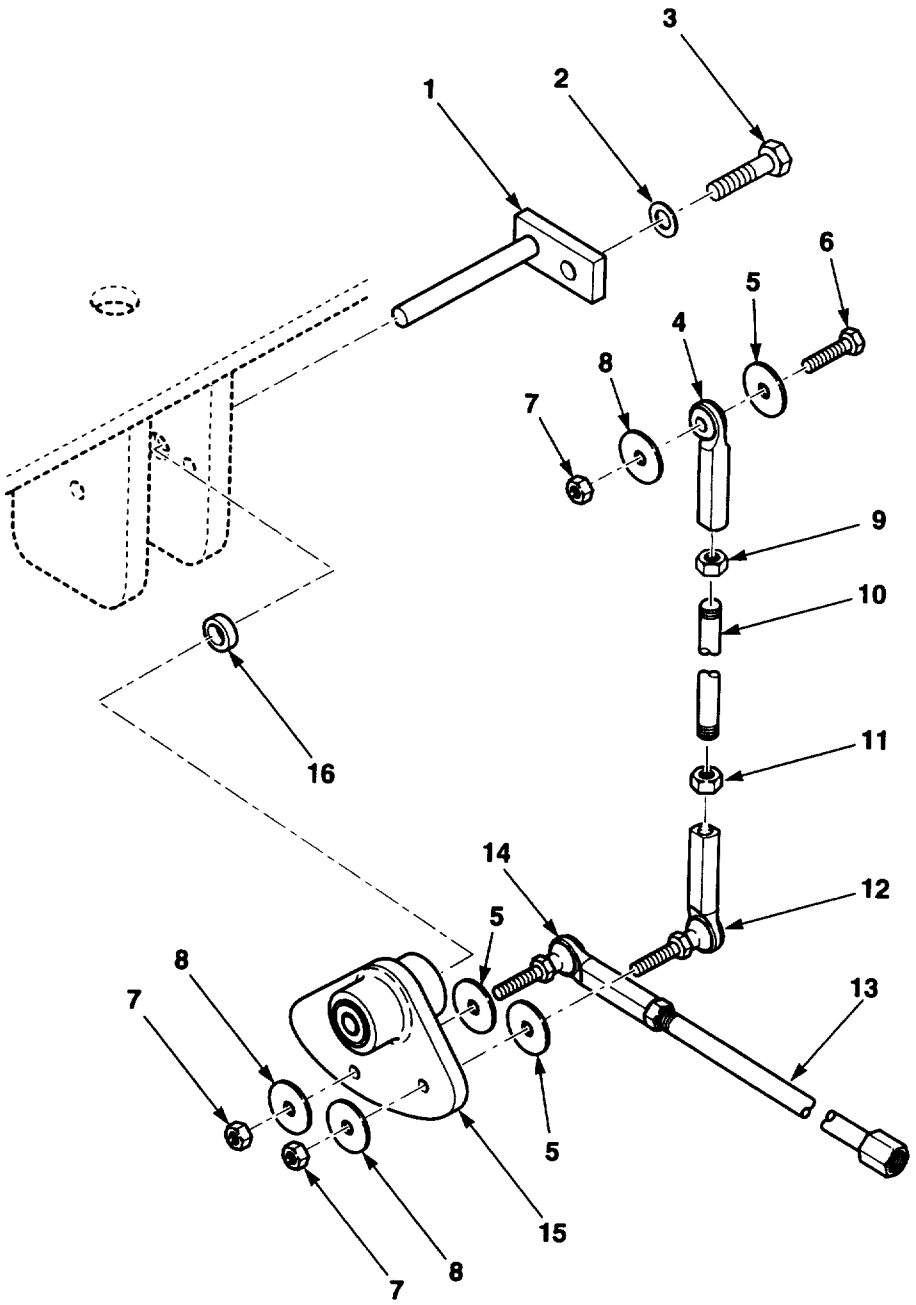

Figure 102. Brake Linkage

https://truckmanualshub.com/ 223

(1) ITEM NO.	(2) SMR CODE	(3) NSN	(4) CAGEC	(5) PART NUMBER	(6) DESCRIPTION AND USABLE ON CODES (UOC)	(7) QTY
					GROUP 1201 HAND BRAKES FIG. 102 BRAKE LINKAGE	
1	PAOZZ		07443	1408039	BRACKET, EYE NONROTA	1
2	PAOZZ	5310013962874	89749	18EM816	WASHER, FLAT M8	1
3	PAFZZ	5305121250321	89749	1CM820	SCREW, CAP, HEXAGON H M8X20	1
4	XBOZZ		07443	1410341	END, ROD	1
5	PAOZZ		07443	1410344	WASHER	3
6	PAOZZ		07443	18C624	BOLT	3
7	PAOZZ	5310000821679	96906	MS35690-627	NUT, PLAIN, HEXAGON	5
8	PAOZZ	5310013982340	89749	27E6	WASHER, FLAT	3
9	PAOZZ		OAHP5	13D6	NUT, HEX	1
10	PAOZZ		07443	1408061	SHAFT THREADED, BRAK	1
11	PAOZZ	5310000821679	12603	62D6	NUT, PLAIN, HEXAGON	1
12	XBOZZ		07443	1410343	END, ROD	1
13	PAOZZ		07443	1408059	TUBING, BRAKE SHAFT	1
14	XBOZZ		07443	1410341	END, ROD	1
15	PAOZZ		07443	1408109	CAM, CONTROL	1
16	PAOZZ	3120014363946	56644	AM-6	BEARING, PLAIN, ROD E	2
					END OF FIGURE	

https://truckmanualshub.com/ 224

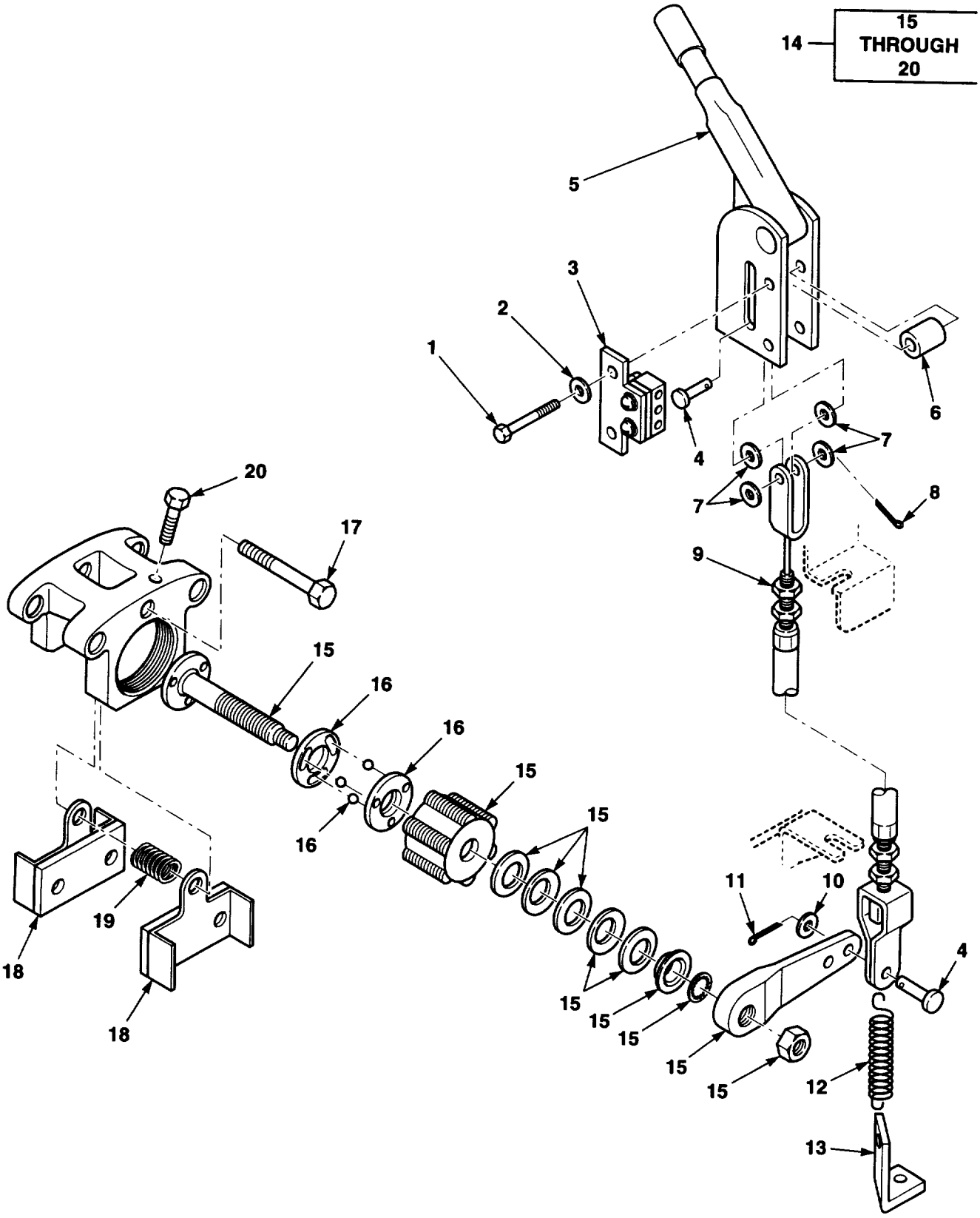

Figure 103. Parking Brake Installation

https://truckmanualshub.com/ 225

(1) ITEM NO.	(2) SMR CODE	(3) NSN	(4) CAGEC	(5) PART NUMBER	(6) DESCRIPTION AND USABLE ON CODES (UOC)	(7) QTY
					GROUP 1201 HAND BRAKES FIG. 103 PARKING BRAKE INSTALLATION	
1	PAOZZ	5305014342565	89749	1CM1045	SCREW, CAP, HEXAGON H M10X45	2
2	PAOZZ	5310013962871	12603	18EM1019	WASHER, FLAT M10X19	2
3	PAOZZ		07443	1408219	SWITCH ASSEMBLY	1
4	XBOZZ		07443	25079	PIN, CLEVIS	1
5	PAOZZ	3040010093814	60168	160034	LEVER, MANUAL CONTRO	1
6	PAOZZ		92867	81-000155	SPACER, SLEEVE	2
7	PAOZZ	5310013962874	89749	18EM816	WASHER, FLAT M8X16	4
8	XBOZZ		89749	1F212	PIN, COTTER	1
9	XBOZZ		8Y119	CS564/060/33/060 /CS540/40/2	CABLE, PUSH-PULL	1
10	PAOZZ		89749	25E17	WASHER	1
11	PAOZZ	5315013954747	12603	1F518	PIN, COTTER	1
12	PAOZZ	5360014340461	1A679	LE-049E-10MW	SPRING, HELICAL, EXTE	1
13	XBOZZ		07443	1409988	BRACKET	1
14	PAOOZ	2530013949718	92865	28-010-103	PARTS KIT, HAND BRAK	1
15	XAOZZ		92865	28-010-103	.PISTON ASSY, BRAKE	1
16	PAOZZ	2530013822838	92865	02-500-133	.PARTS KIT, CALIPER, D	1
17	PFOZZ	5305000680509	80204	B1821BH025C125N	.SCREW, CAP, HEXAGON H	1
18	PAOZZ	2530012020302	92865	20-060-022	.BRAKE SHOE SET	1
19	PAOZZ	5360013819774	92865	32-660-071	.SPRING, HELICAL, EXTE	1
20	PAOZZ	5305014342997	89749	1C420	.SCREW, CAP, HEXAGON H	1
					END OF FIGURE	

https://truckmanualshub.com/ 226

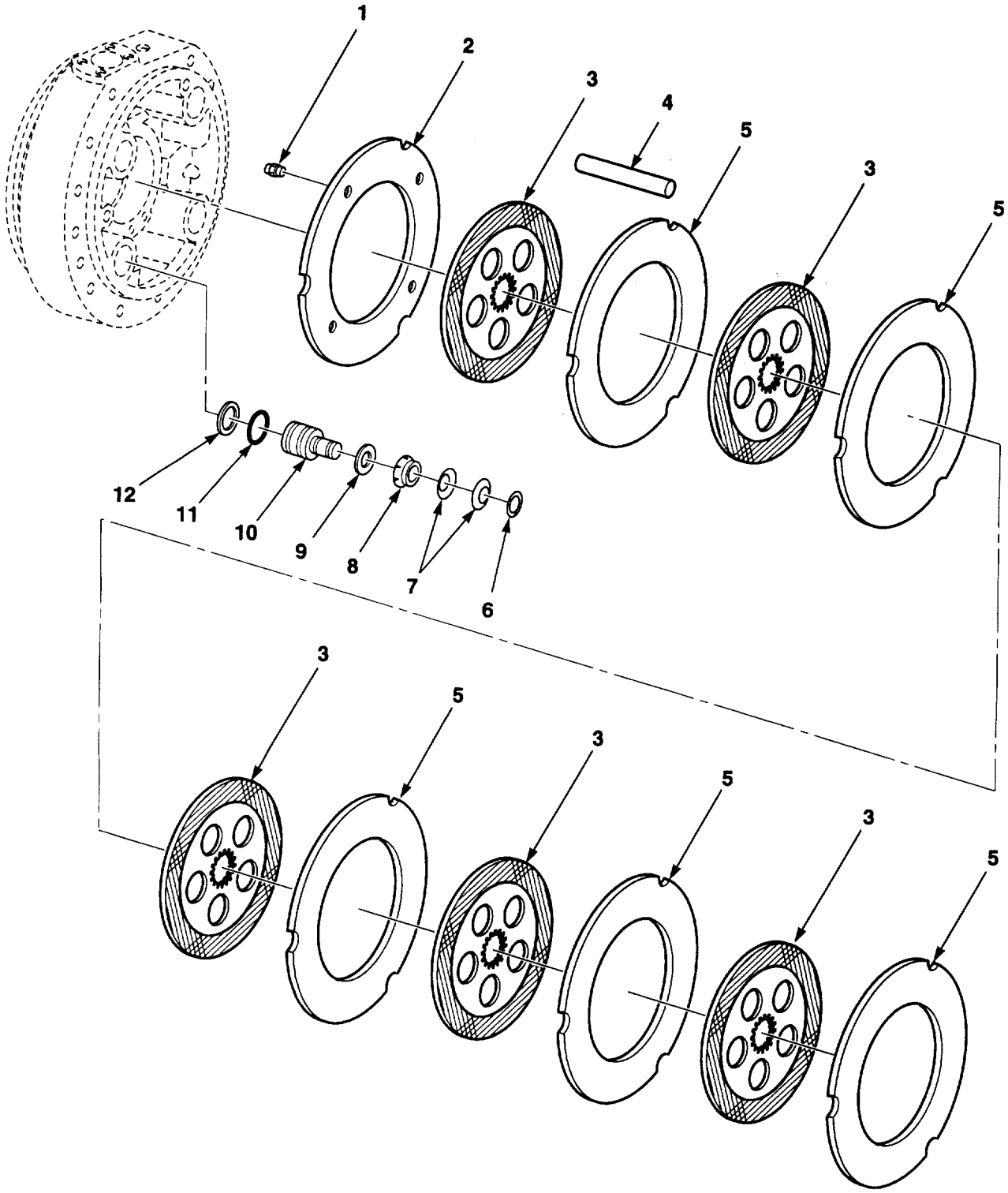

Figure 104. Brake Piston and Discs

https://truckmanualshub.com/ 227

(1) ITEM NO.	(2) SMR CODE	(3) NSN	(4) CAGEC	(5) PART NUMBER	(6) DESCRIPTION AND USABLE ON CODES (UOC)	(7) QTY
					GROUP 1202 SERVICE BRAKES FIG. 104 BRAKE PISTON AND DISCS	
1	PAFZZ		0B5C7	738.07.018.02	PUSHER	4
2	PAFZZ	5365013154226	0B5C7	738-07-006-02	SPACER, PLATE	2
3	PAFZZ		0B5C7	738.07.610.04	DISC, BRAKE	10
4	PAFZZ	5315013149011	0B5C7	738-07-008-01	PIN, STRAIGHT, HEADLE	6
5	PAFZZ		0B5C7	738.07.005.03	DISC, BRAKE	10
6	PAFZZ	5365013145319	0B5C7	002.01.0059	RING, RETAINING	8
7	PAFZZ	5360013144905	0B5C7	009-03-1108	SPRING, FLAT	16
8	PAFZZ	5340014084124	0B5C7	738.07.029.03	RETAINER, HELICAL CO	8
9	PAFZZ	5365014077928	77237	738.07.030.12	SPACER, SLEEVE	8
10	PAFZZ	2530014074920	0B5C7	738.07.007.06	PISTON, HYDRAULIC BR	8
11	PAFZZ	5365013145317	77237	738.07.009.01	RING, RETAINING	8
12	PAFZZ	5365013145316	77237	738.07.010.01	RING, RETAINING	8
					END OF FIGURE	

https://truckmanualshub.com/ 228

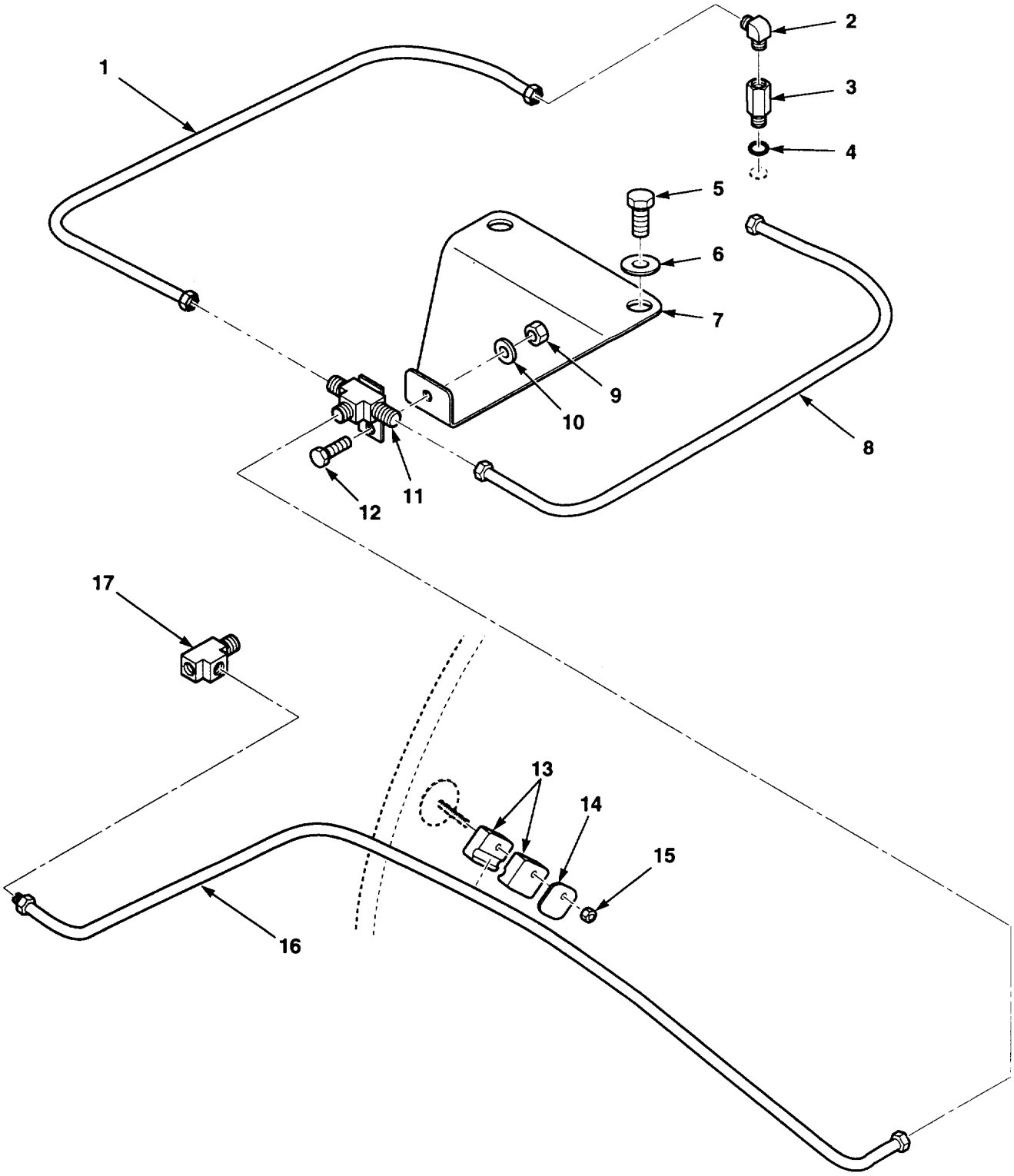

Figure 105. Brake Lines

https://truckmanualshub.com/ 229

(1) ITEM NO.	(2) SMR CODE	(3) NSN	(4) CAGEC	(5) PART NUMBER	(6) DESCRIPTION AND USABLE ON CODES (UOC)	(7) QTY
					GROUP 1204 HYDRAULIC BRAKE SYSTEMS FIG. 105 BRAKE LINES	
1	PAOZZ		07443	1408238	TUBE ASSEMBLY, LH	1
2	PAOZZ	4730002778643	79470	402X4X4	ELBOW, PIPE TO TUBE	2
3	PAOZZ	4730013957309	62809	82572	NUT, TUBE COUPLING	2
4	PAOZZ		07443	1407539	PACKING, PREFORMED	2
5	PAOZZ	5305121240527	89749	1CM625	SCREW, CAP, HEXAGON H M16X25	2
6	PAOZZ	5310013981728	12603	18EM1632	WASHER, FLAT M16	2
7	XBOZZ		07443	1409035	PLATE, BRAKE LINE	1
8	PAOZZ		07443	1408239	TUBE ASSENBLY, RH	1
9	PAOZZ	5310014156108	89749	40DM8	NUT, SELF-LOCKING, HE M8	1
10	PAOZZ	5310013962874	89749	18EM816	WASHER, FLAT M8	1
11	PAOZZ	4730012153421	79470	7765	CONNECTOR, MULTIPLE,	1
12	PAOZZ	5305121250321	89749	1CM820	SCREW, CAP, HEXAGON H M8X20	1
13	PAOZZ		53798	1064/64	CLAMP, BODY	2
14	PFOZZ		53790	DP-AS	PLATE COVER	1
15	PAOZZ	5310013960983	12603	1DM6	NUT, PLAIN, HEXAGON M6	1
16	PAOZZ		07443	1408240	TUBE ASSEMBLY	1
17	PAOZZ	4730012682404	79470	552X4	TEE, PIPE TO TUBE	1
					END OF FIGURE	

https://truckmanualshub.com/ 230

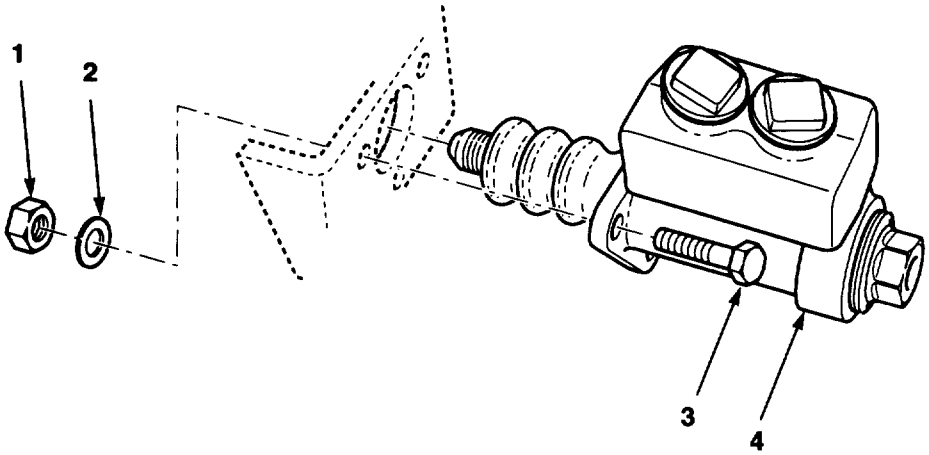

Figure 106. Master Cylinder Installation

https://truckmanualshub.com/ 231

(1) ITEM NO.	(2) SMR CODE	(3) NSN	(4) CAGEC	(5) PART NUMBER	(6) DESCRIPTION AND USABLE ON CODES (UOC)	(7) QTY
					GROUP 1204 HYDRAULIC BRAKE SYSTEMS FIG. 106 MASTER CYLINDER INSTALLATION	
1	PAOZZ	5310013964295	12603	1DM10	NUT, PLAIN, HEXAGON M10	3
2	PAOZZ	5310013962871	12603	18EM1019	WASHER, FLAT M10	3
3	PAOZZ		89749	1CM1035	SCREW, CAP, HEX HD M10X35	3
4	PAOZZ		92865	03-021-421	MASTER CYLINDER, BRK	1
					END OF FIGURE	

https://truckmanualshub.com/ 232

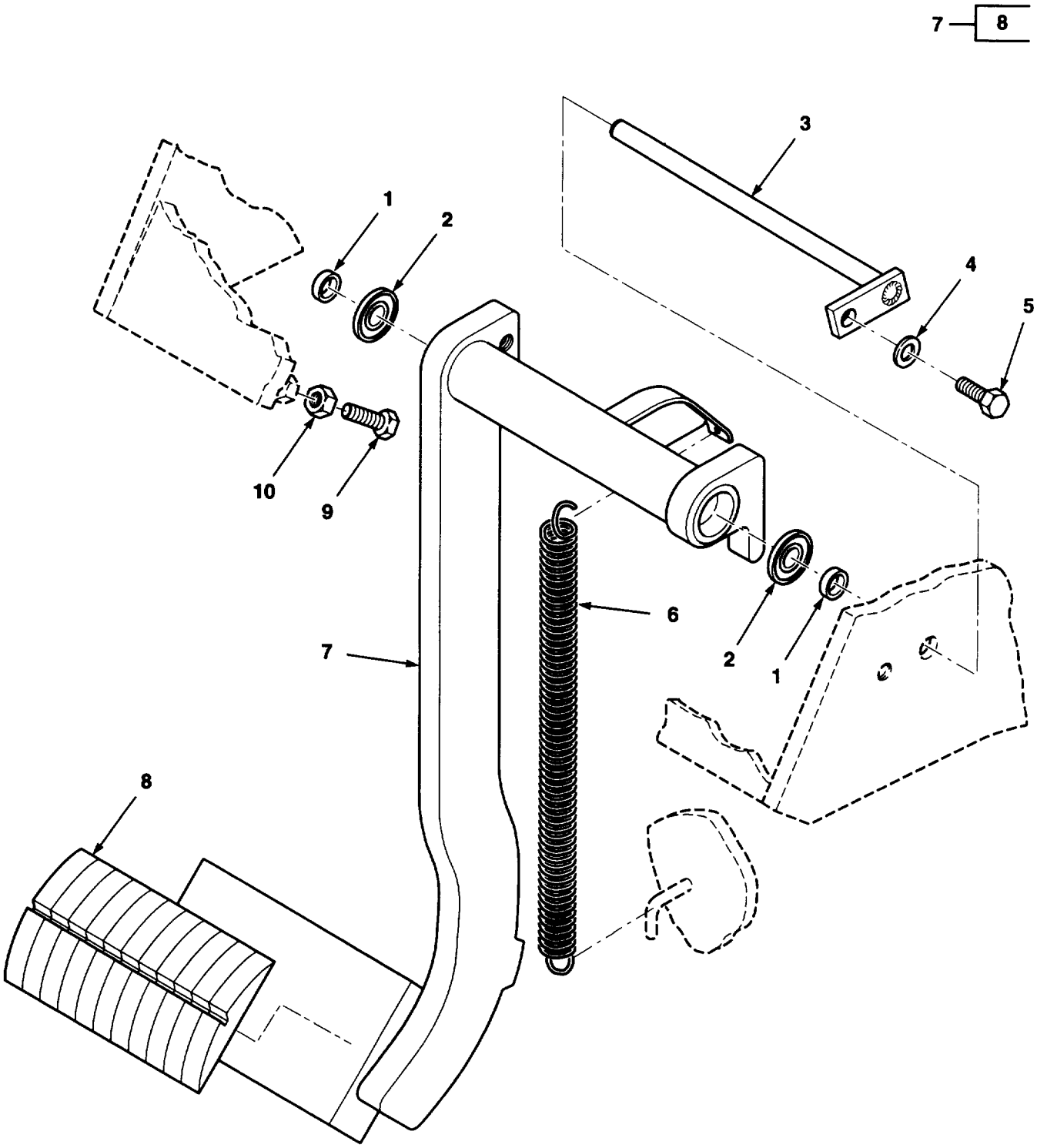

Figure 107. Brake Pedal Installation

https://truckmanualshub.com/ 233

(1) ITEM NO.	(2) SMR CODE	(3) NSN	(4) CAGEC	(5) PART NUMBER	(6) DESCRIPTION AND USABLE ON CODES (UOC)	(7) QTY
					GROUP 1206 MECHANICAL BRAKE SYSTEM FIG. 107 BRAKE PEDAL INSTALLATION	
1	PAOZZ	3120007638929	96906	MS17796-45	BEARING, SLEEVE	2
2	PAOZZ		76527	SFR6SS	BALL BEARING, ANNULA	2
3	XBOZZ		07443	1408040	SHAFT, SUPPORT	1
4	PAOZZ	5310013962874	89749	18EM816	WASHER, FLAT M8	1
5	PAOZZ	5305013228719	12603	1CM816H	SCREW, CAP, HEXAGON H M8X16	1
6	PAOZZ		84830	LE-075G-10-S	SPRING, HELICAL, EXTE	1
7	PAOOZ	2540014348711	07443	1408205	PEDAL ASSEMBLY, CONT	1
8	XBOZZ		70750	A2549	.PAD, BRAKE PEDAL	1
9	PAOZZ	5305012599516	89749	1CM830	SCREW, CAP, HEXAGON H M8X30	1
10	PAOZZ	5310014155214	89749	1DM8	NUT, PLAIN, HEXAGON M8	1
					END OF FIGURE	

https://truckmanualshub.com/ 234

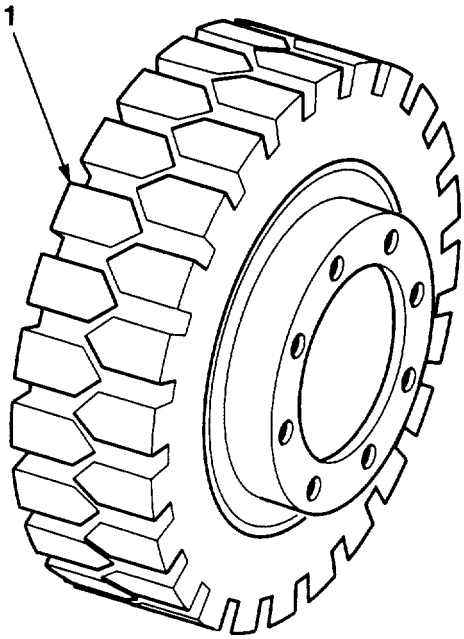

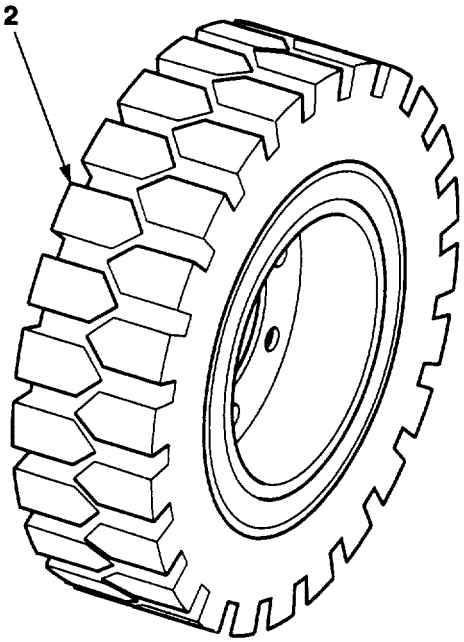

Figure 108. Drive Wheel Assemblies

https://truckmanualshub.com/ 235

(1) ITEM NO.	(2) SMR CODE	(3) NSN	(4) CAGEC	(5) PART NUMBER	(6) DESCRIPTION AND USABLE ON CODES (UOC)	(7) QTY
					GROUP 13 WHEELS AND TRACKS GROUP 1311 WHEEL ASSEMBLY FIG. 108 DRIVE WHEEL ASSEMBLIES	
1	PAOZZ		B0068	2537757	WHEEL, DRIVE ASSY, IN	2
2	PAOZZ		B0068	2537758	WHEEL, DRIVE ASSY	2
					END OF FIGURE	

https://truckmanualshub.com/ 236

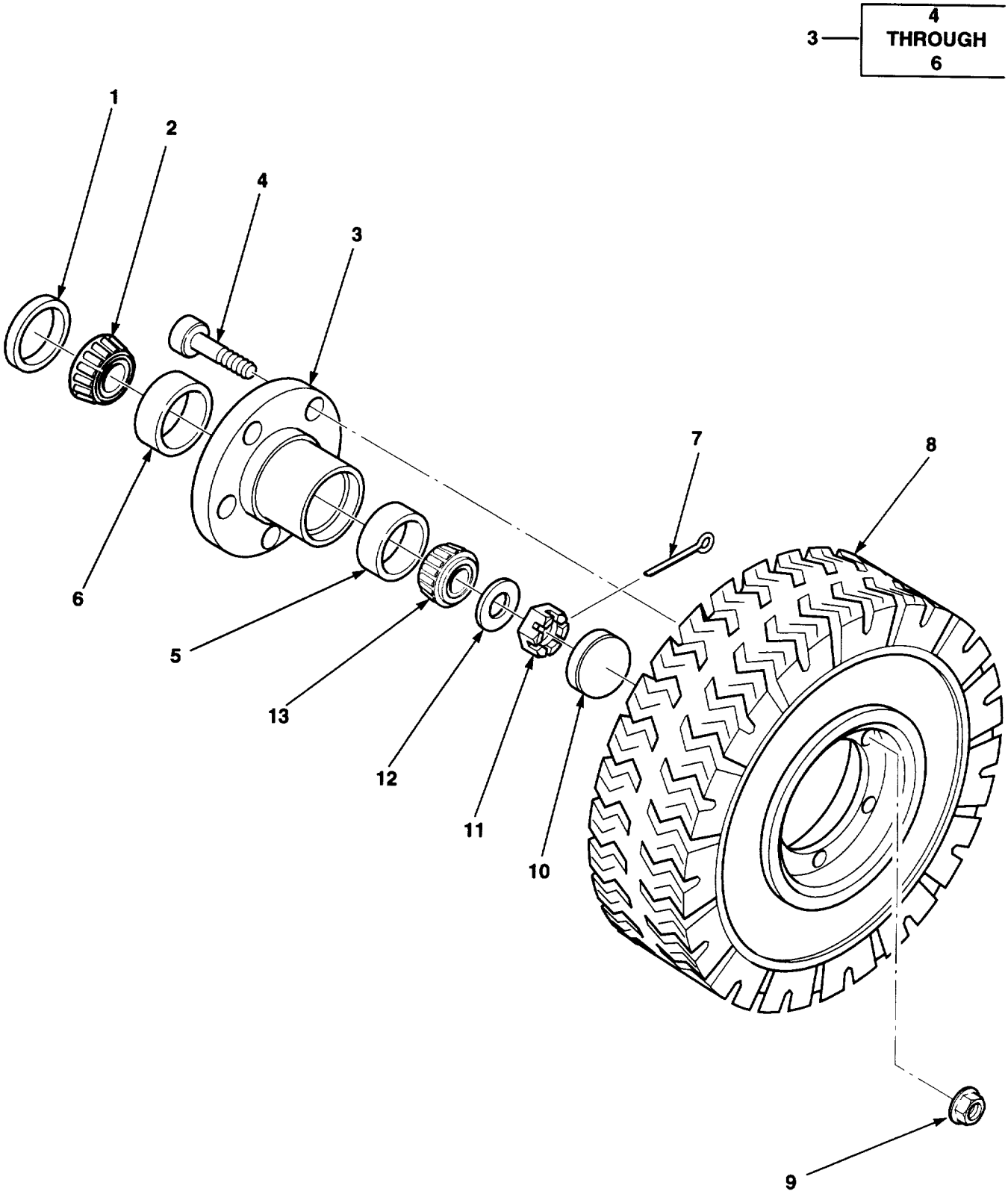

Figure 109. Rear Wheel and Hub

https://truckmanualshub.com/ 237

(1) ITEM NO.	(2) SMR CODE	(3) NSN	(4) CAGEC	(5) PART NUMBER	(6) DESCRIPTION AND USABLE ON CODES (UOC)	(7) QTY
					GROUP 1311 WHEEL ASSEMBLY FIG. 109 REAR WHEEL AND HUB	
1	PAFZZ	5330013284137	03504	2109665	SEAL, PLAIN	2
2	XBFZZ		07443	6511331	CONE, BEARING	2
3	PAFFF	3040013965001	12603	2772659	HUB	2
4	PAFZZ	5307013957722	12603	2772661	.STUD	5
5	PAFZZ	3110005868306	12603	2107647	.CUP, OUTER BEARING	1
6	PAFZZ	3110001712489	12603	2107649	.CUP, TAPERED, ROLLER	1
7	PAFZZ	5315013882053	77237	1F428	PIN, COTTER	2
8	PAOZZ		07443	1400854	TIRE & WHEEL ASSY	2
9	PAOZZ	5310013964296	12603	2382893	NUT, PLAIN, HEXAGON	10
10	PAOZZ	3130013969836	12603	2779162	CAP, PILLOW BLOCK	2
11	PAFZZ	5310003834677	12603	SN10	NUT, PLAIN, SLOTTED,H	2
12	PAFZA	5310010525767	03504	100588	WASHER,FLAT	2
13	PAFZZ	3110005868305	12603	712603	CONE AND ROLLERS, TA	2
					END OF FIGURE	

https://truckmanualshub.com/ 238

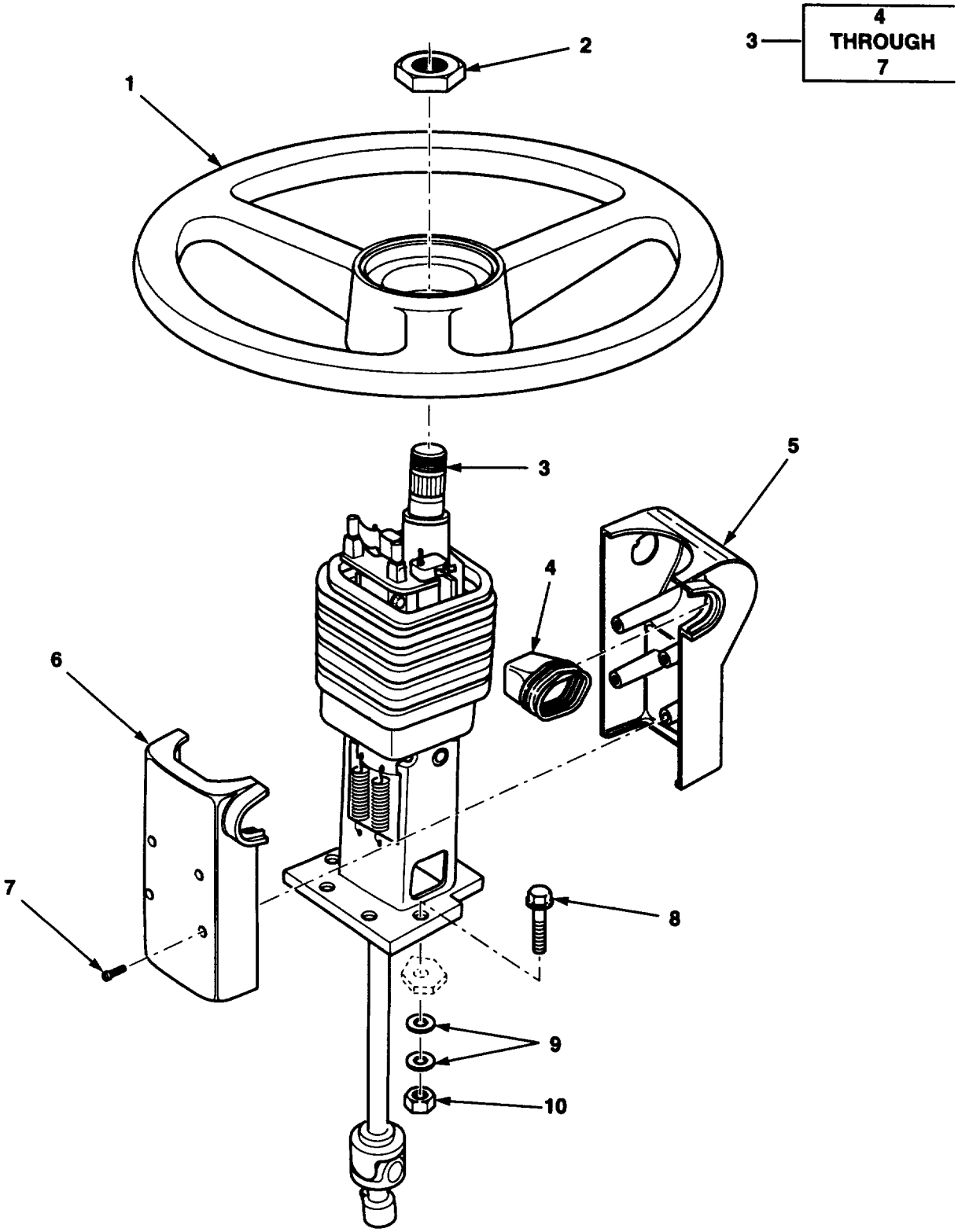

Figure 110. Steering Column and Steering Wheel

(1) ITEM NO.	(2) SMR CODE	(3) NSN	(4) CAGEC	(5) PART NUMBER	(6) DESCRIPTION AND USABLE ON CODES (UOC)	(7) QTY
					GROUP 14 STEERING GROUP 1401 MECHANICAL STEERING GEAR ASSEMBLY FIG. 110 STEERING COLUMN AND STEERING WHEEL	
1	XBOZZ		12603	2788175	WHEEL, STEERING	1
2	PAOZA	5310000732165	12603	664880	NUT	1
3	XBOFF		07443	1408096	COLUMN ASY, STEERING	1
4	XBOZZ		12603	2787928	.BOOT, STEERING COLUM	1
5	PAOZZ		07443	1408097	.COVER	1
6	PAOZZ		12603	2783148	.COLUMN, FRONT COVER	1
7	PAOZZ		89749	27CM420	.SCREW, CAP, SOCKET HE M4X20	4
8	PAOZZ		07443	1408663	SCREW, MACHINE, LARGE	4
9	PAOZZ	5310013962874	89749	18EM816	WASHER, FLAT M30	8
10	PAOZZ	5310014155214	89749	1DM8	NUT, PLAIN, HEXAGON M8	4
					END OF FIGURE	

https://truckmanualshub.com/ 240

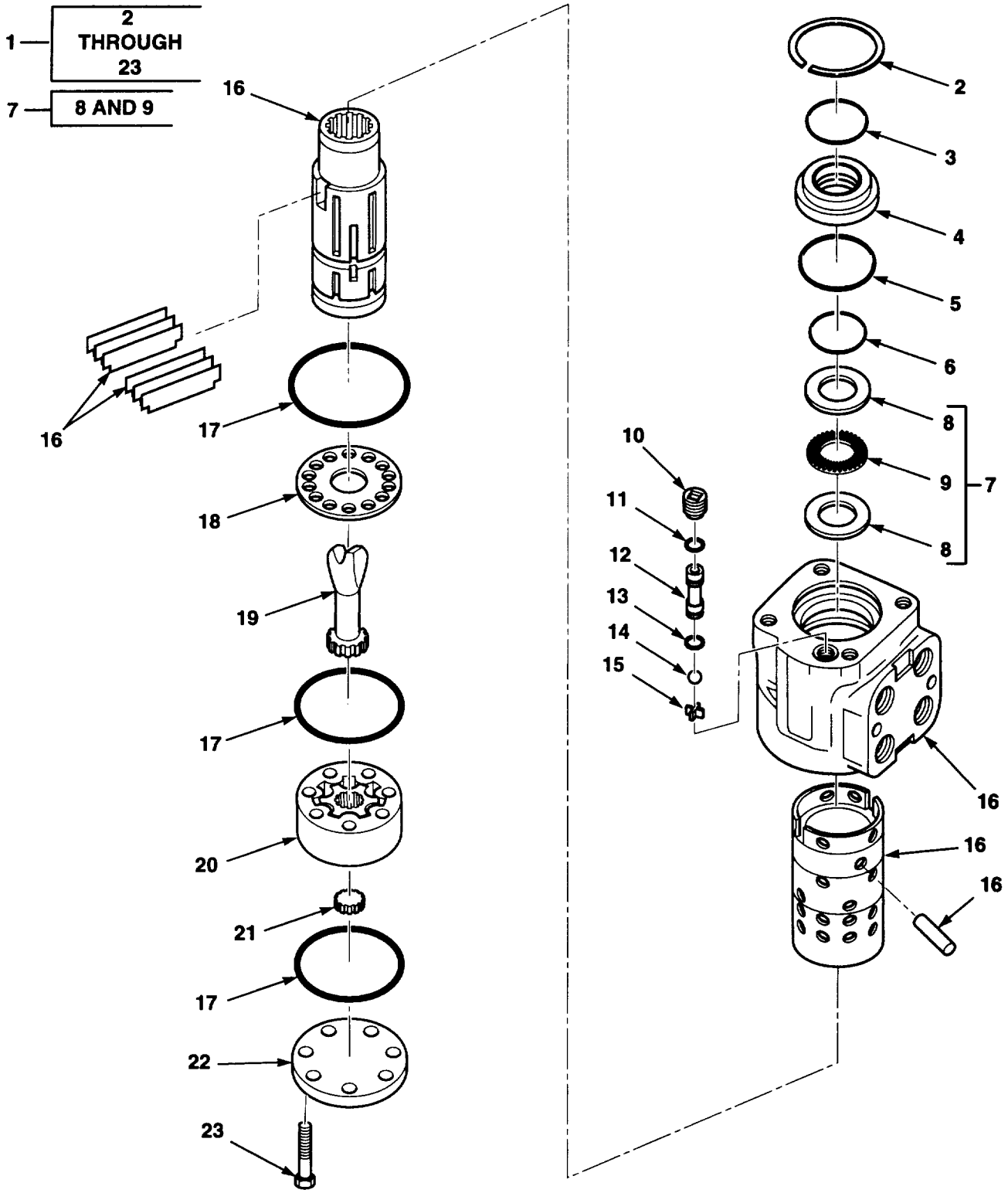

Figure 111. Power Steering Unit

https://truckmanualshub.com/ 241

(1) ITEM NO.	(2) SMR CODE	(3) NSN	(4) CAGEC	(5) PART NUMBER	(6) DESCRIPTION AND USABLE ON CODES (UOC)	(7) QTY
					GROUP 1410 HYDRAULIC PUMP OR FLUID MOTOR ASSEMBLY	
					FIG. 111 POWER STEERING UNIT	
1	PAOFF		96151	213-4045	UNIT, POWER STEERING	1
2	PAFZZ	5365010853125	96151	14317	.RING, RETAINING	1
3	PAFZZ	5330008541603	11083	8F5340	.SEAL, PLAIN ENCASED	1
4	PAFZZ	3120010683473	96151	7443	.BUSHING, SLEEVE	1
5	KFFZZ	5330010666772	96151	15074	.O-RING PART OF KIT P/N 64418	1
6	KFFZZ	5330007978389	96151	845	.PACKING,PREFORMED PART OF KIT P/N 64418	1
7	PAFZZ	3110010676901	96151	64009	.BEARING, NEEDLE, KIT	1
8	PAFZZ	3120010877063	10988	D82804	..BEARING, WASHER, THRU	2
9	PAFZZ	3110006066435	77640	065989	..RETAINER AND ROLLER	1
10	PAFZZ	5305010978184	10988	D82805	.SETSCREW	1
11	KFFZZ	5330009941610	96151	15007	.SEAL PART OF KIT P/N 64418	1
12	PAFZZ	4820010791486	96151	8318	.SEAT, VALVE	1
13	KFFZZ	5330003546509	35301	64-82	.O-RING PART OF KIT P/N 64418	1
14	PAFZZ	3110011009048	96151	18001	.BALL, BEARING	1
15	PAFZZ	5340005989577	17875	6862	.FASTENER,FLARE LOCK	1
16	PFFZZ		96151	23051	.CONTROL ASSY	1
17	KFFZZ	5330013366718	96151	9086-002	.O-RING PART OF KIT P/N 64418	3
18	PAFZZ	5977010955206	11083	3G6905	.RING ASSEMBLY, ELECT	1
19	PAFZZ	3040001240880	96151	5126	.GEARSHAFT, SPUR	1
20	PAFZZ		96151	8618-009	.GEROTOR	1
21	PAFZZ		96151	6901-010	.SPACER	1
22	XBFZZ	3040010812752	96151	8438	.PLATE, RETAINING, SHA	1
23	PAFZZ		96151	5389-002	.CAPSCREW, HEX, HD	7
					END OF FIGURE	

https://truckmanualshub.com/ 242

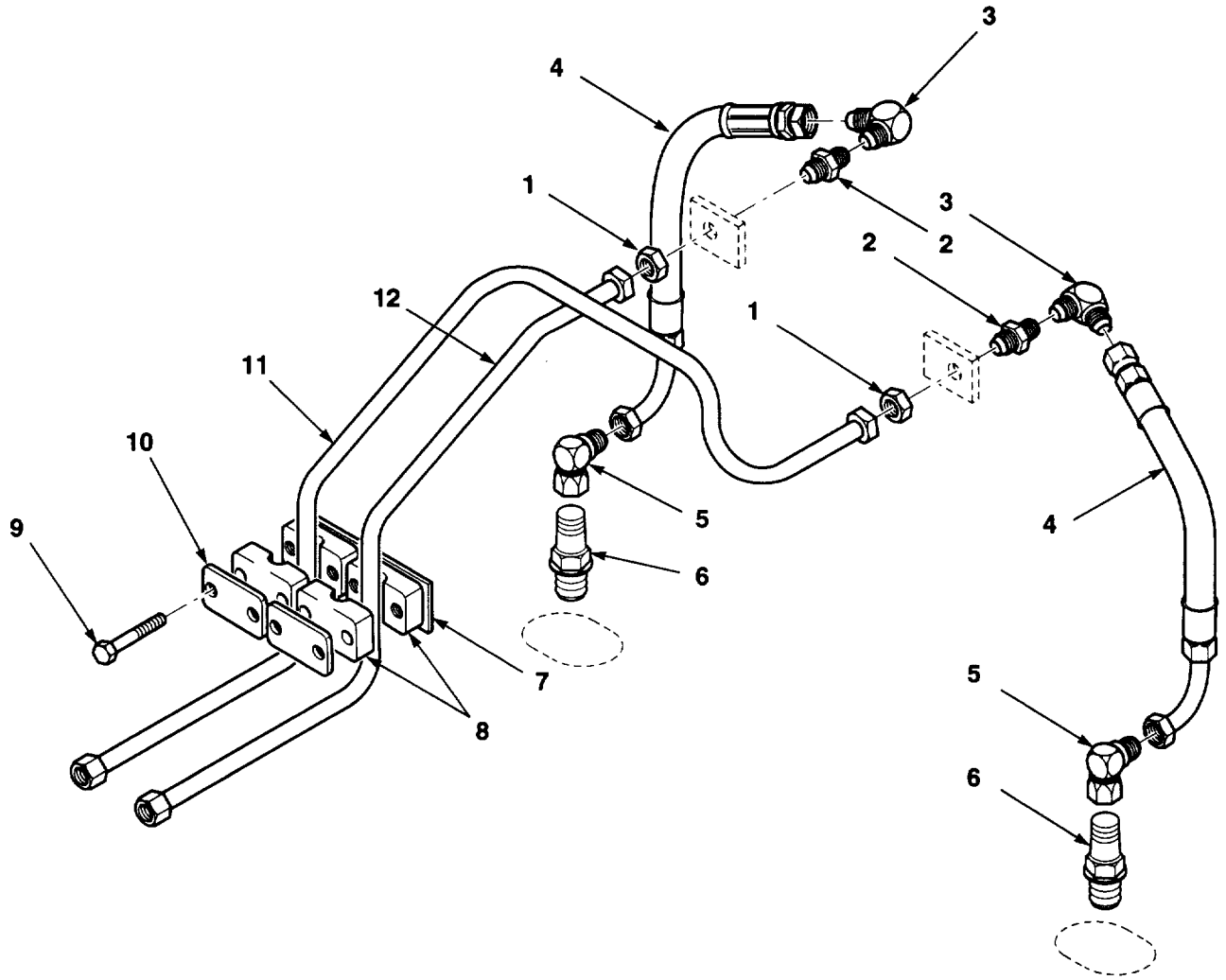

Figure 112. Steering Lines

(1) ITEM NO.	(2) SMR CODE	(3) NSN	(4) CAGEC	(5) PART NUMBER	(6) DESCRIPTION AND USABLE ON CODES (UOC)	(7) QTY
					GROUP 1411 HOSES, LINES, AND FITTINGS	
					FIG. 112 STEERING LINES	
1	PAOZZ	5310001384272	12603	86F6	NUT, PLAIN, HEXAGON	2
2	PAOZZ		07516	K104-8	ADAPTER, STRAIGHT, TU	2
3	PAOZZ	4730004327713	30780	8C6XS	ELBOW, TUBE	2
4	PAOZZ		07443	1407962	HOSE ASSEMBLY, NONME	2
5	PAOZZ	4730006185372	81343	6-6 070221CA	ELBOW, TUBE	2
6	PAOZZ		5E240	6400-L-06-06-0	COUPLING, HOSE	2
7	XBOZZ		53790	DSP2	PLATE, WELD	1
8	PFOZZ	5340012182101	53790	2127PP	BRACKET, PIPE	4
9	PAOZZ	5306013032815	96906	MS90725-13	BOLT, MACHINE	4
10	XBOZZ		53790	DP6	PLATE, COVER	2
11	XBOZZ		07443	1407902	TUBE ASSY	1
12	XBOZZ		07443	1407901	TUBE ASSY	1
					END OF FIGURE	

https://truckmanualshub.com/ 244

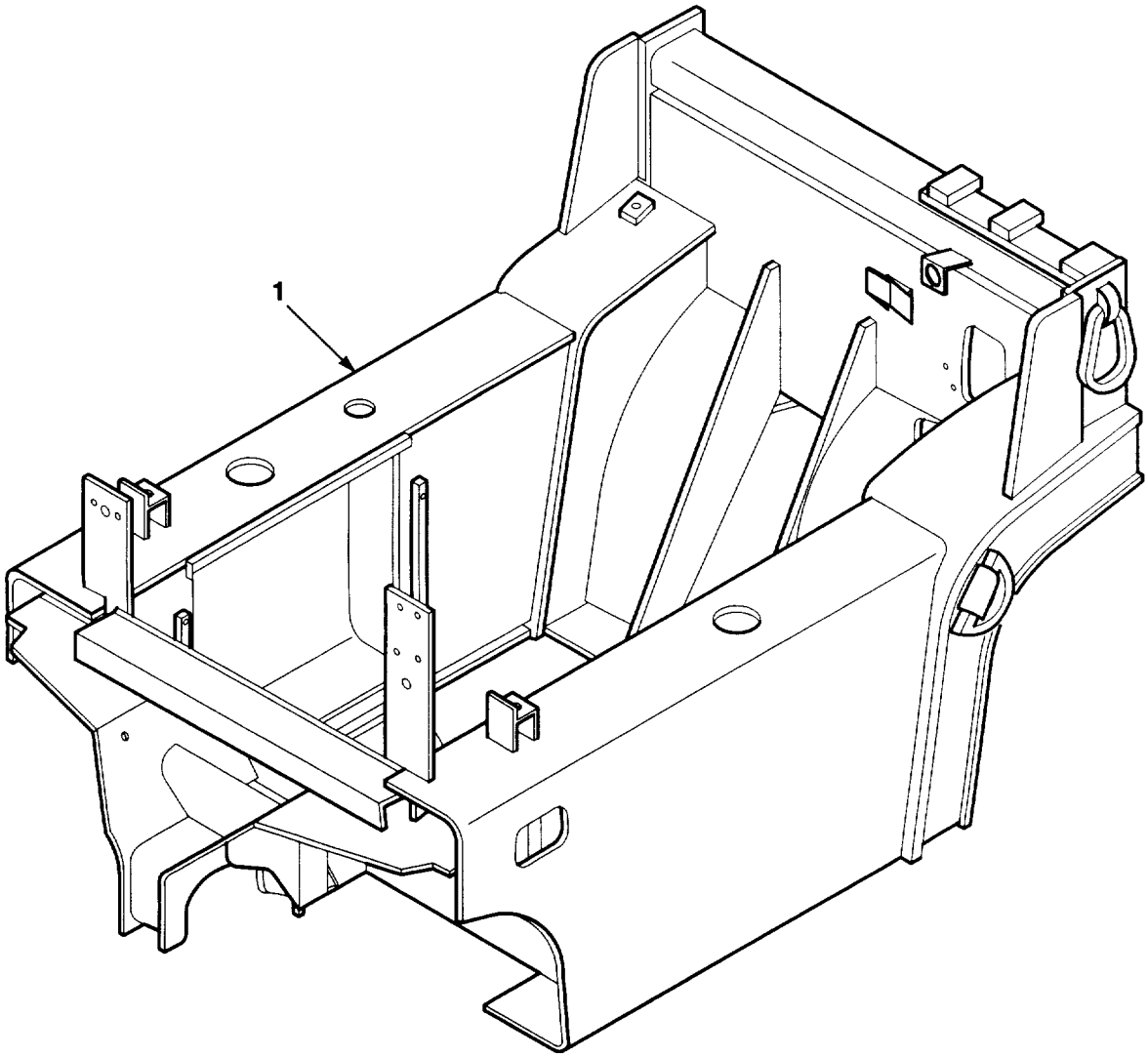

Figure 113. Frame

(1) ITEM NO.	(2) SMR CODE	(3) NSN	(4) CAGEC	(5) PART NUMBER	(6) DESCRIPTION AND USABLE ON CODES (UOC)	(7) QTY
					GROUP 15 FRAME, TOWING ATTACHMENTS, DRAWBARS, AND ARTICULATION SYSTEMS	
					GROUP 1501 FRAME ASSEMBLY	
					FIG. 113 FRAME	
1	XBHZZ		07443	1407754	FRAME	1
					END OF FIGURE	

https://truckmanualshub.com/ 246

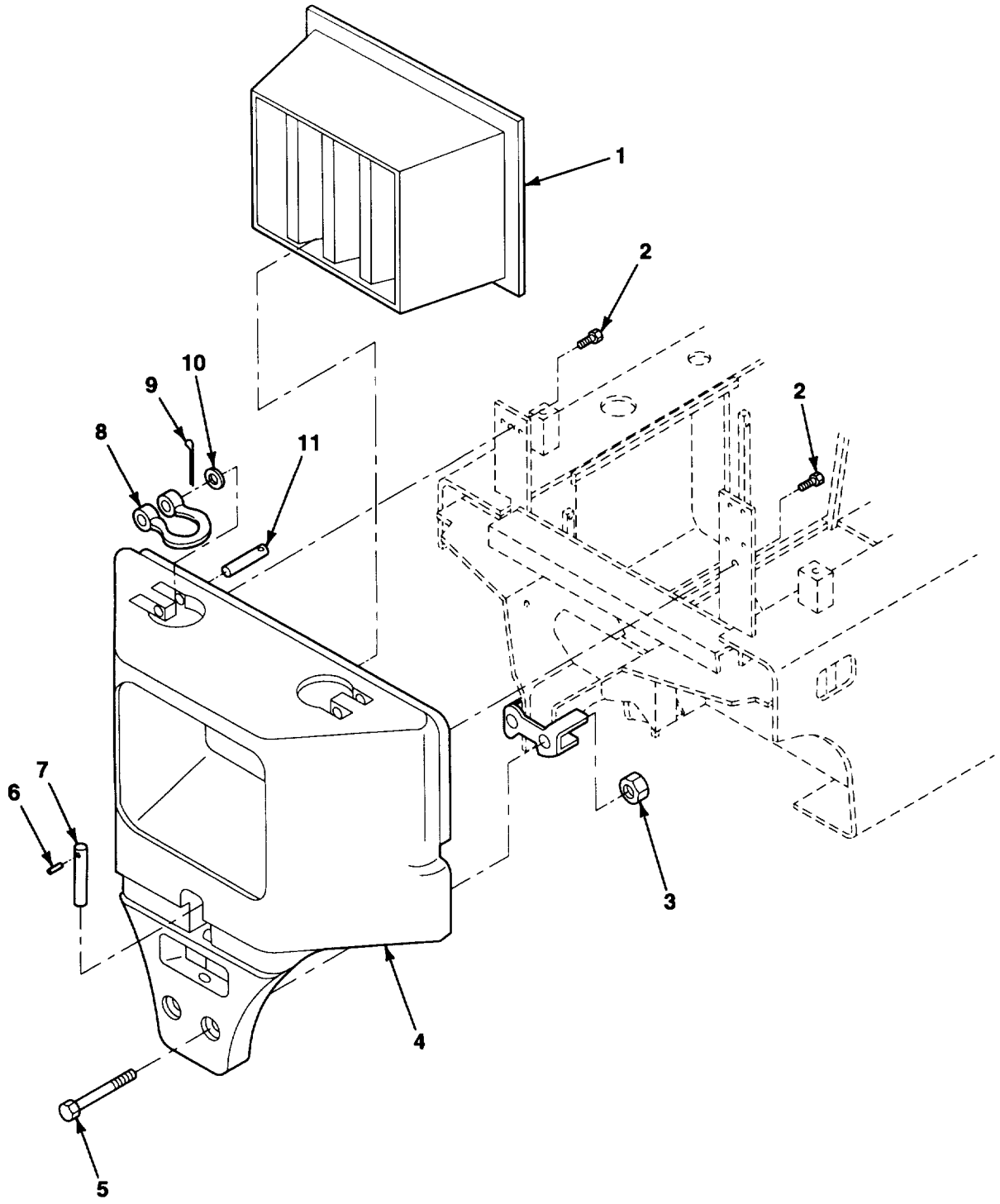

Figure 114. Rear Counterweights

(1) ITEM NO.	(2) SMR CODE	(3) NSN	(4) CAGEC	(5) PART NUMBER	(6) DESCRIPTION AND USABLE ON CODES (UOC)	(7) QTY
					GROUP 1502 COUNTERWEIGHT FIG. 114 REAR COUNTERWEIGHTS	
1	XBFZZ		07443	1407182	INSERT	1
2	PAFZZ	5305121739190	89749	1CM2470	SCREW, CAP, HEXAGON H M24X70	2
3	PAFZZ	5310014195191	89749	1DM24	NUT, PLAIN, HEXAGON M24	2
4	XBFZZ		07443	1401294	COUNTERWEIGHT	1
5	PAFZZ	5305014155223	89749	1CM24120	SCREW,CAP, HEXAGON H M24X120	2
6	PAFZZ	5315000589816	96906	MS9048-242	PIN, SPRING	1
7	PFFZZ	5315014202923	07443	1407682	PIN, STRAIGHT, HEADLE	1
8	XBOZZ		39428	3780T16	SHACKLE	2
9	PAOZZ	5315014202922	89749	1F624	PIN, COTTER 3/16X1 1/2	2
10	PAFZZ	5310011898478	12361	6-294-003907	WASHER, FLAT	2
11	XBOZZ		07443	1404649	PIN, SHACKLE 1X8	2
					END OF FIGURE	

https://truckmanualshub.com/ 248

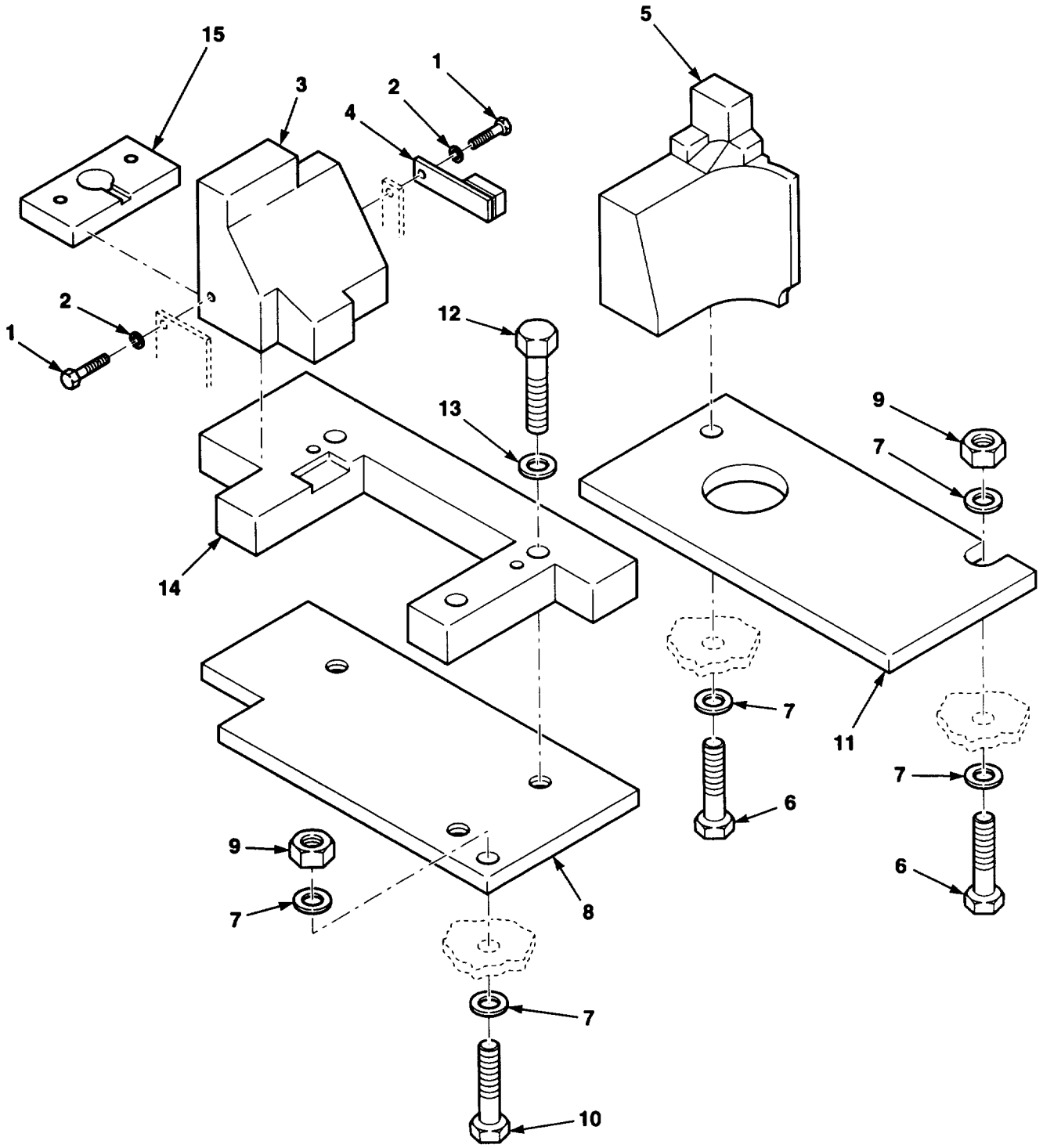

Figure 115. Frame Counterweights

https://truckmanualshub.com/ 249

(1) ITEM NO.	(2) SMR CODE	(3) NSN	(4) CAGEC	(5) PART NUMBER	(6) DESCRIPTION AND USABLE ON CODES (UOC)	(7) QTY
					GROUP 1502 COUNTERWEIGHT FIG. 115 FRAME COUNTERWEIGHTS	
1	XDFZZ		89749	1CM1025	SCREW,CAP, HEXAGON H M10X25	2
2	PAFZZ	5310013962871	12603	18EM1019	WASHER, FLAT M10	2
3	XBFZZ		07443	1406684	COUNTERWEIGHT, REAR	1
4	XBFZZ		07443	1408637	STOP, COUNTERWEIGHT	7
5	XBFZZ		07443	1406683	COUNTERWEIGHT,FRONT	1
6	PAFZZ		89749	1CM24100	SCREW,CAP, HEXAGON H M24X100	2
7	PAFZZ	5310014195192	89749	1EM240	WASHER, FLAT M24	8
8	XBFZZ		07443	1407178	PLATE	1
9	PAFZZ	5310014195191	89749	1DM24	NUT, PLAIN, HEXAGON M24	3
10	PAFZZ	5305121739188	89749	1CM2460	SCREW, CAP, HEXAGON H M24X130	1
11	XBFZZ		07443	1407184	PLATE	1
12	PAFZZ	5305121267945	89749	1CM12100	SCREW, CAP, HEXAGON H M12X100	2
13	PAFZZ		81860	9810145-02804	MOUNT, RESILIENT	2
14	XBFZZ		07443	1407218	COUNTERWEIGHT, REAR	1
15	XBFZZ		07443	1405329	COUNTERWEIGHT, LEAD	1
					END OF FIGURE	

https://truckmanualshub.com/ 250

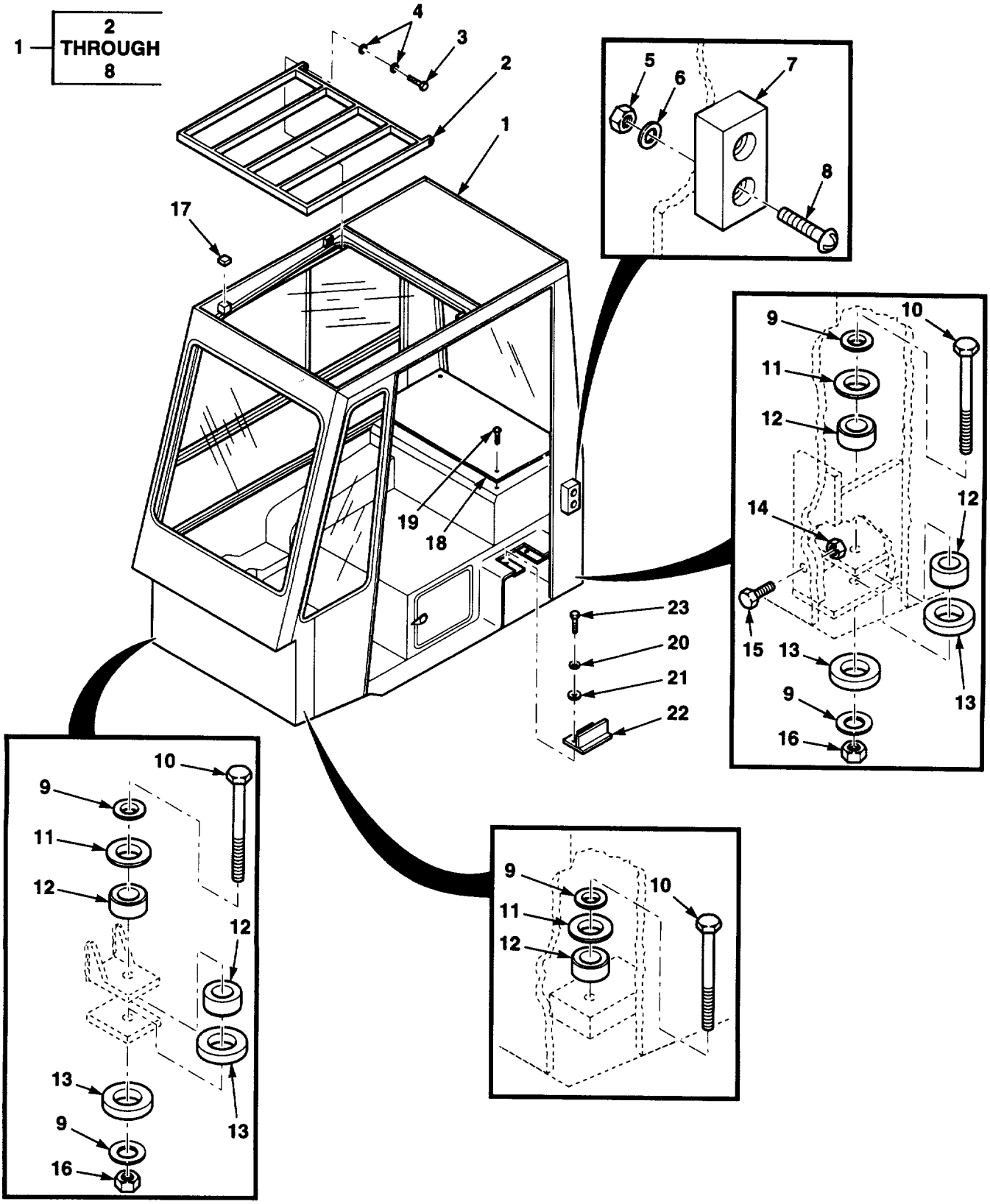

Figure 116. Cab Installation

(1) ITEM NO.	(2) SMR CODE	(3) NSN	(4) CAGEC	(5) PART NUMBER	(6) DESCRIPTION AND USABLE ON CODES (UOC)	(7) QTY
					GROUP 18 BODY, CAB, HOOD AND HULL	
					GROUP 1801 BODY, CAB, HOOD, AND HULL ASSEMBLIES	
					FIG. 116 CAB INSTALLATION	
1	PAOFF		07443	1409109	CAB	1
2	XBOZZ		38022	2232-140	.GUARD, OVERHEAD	1
3	PAOZZ		38022	0108-D265	.SCREW	2
4	PFOZZ		38022	DR27	.WASHER	4
5	PAOZZ	5310013960983	12603	1DM6	.NUT, PLAIN, HEXAGON	2
6	PAOZZ	5310013965256	89749	18EM613	.WASHER, FLAT	2
7	XDOZZ		1BZ41	A1472W	.BUMPER, NONMETALLIC	1
8	PAOZZ	5305009897435	96906	MS35207-264	.SCREW, MACHINE	2
9	PAOZZ	5310014156114	89749	15EM120	WASHER, FLAT	8
10	PAOZZ	5305014338870	89749	1CM12120	SCREW, CAP, HEXAGON	4
11	PAOZZ	5310012019955	81860	9810145-02	WASHER, FLAT	4
12	PAOZZ	5340011817555	81860	22002-14	MOUNT, RESILIENT	7
13	PAOZZ	5310014334772	07443	1408935	WASHER, FLAT	8
14	PAOZZ		62445	01102659	NUT, PLAIN, HEX	1
15	PAOZZ	5310013976489	77237	1CM1035	SCREW, CAP, HEX HD	1
16	PAOZZ	5310013527374	89749	1DM12	NUT, PLAIN, HEXAGON	4
17	PAOZZ	5340014348086	1BZ41	A1149	BUMPER, NONMETALLIC	2
18	XBOZZ		07443	1411135	COVER	1
19	PAOZZ		89749	52720-1	SCREW, CAP, HEX HD	4
20	PAOZZ		89749	6EM50	WASHER, LOCK	2
21	PAOZZ	5310013960985	12603	15EM50	WASHER, FLAT	2
22	XBOZZ		07443	1411134	COVER	1
23	PAOZZ		89749	18G806	SCREW, CAP, HEX HD	2

END OF FIGURE

https://truckmanualshub.com/ 252

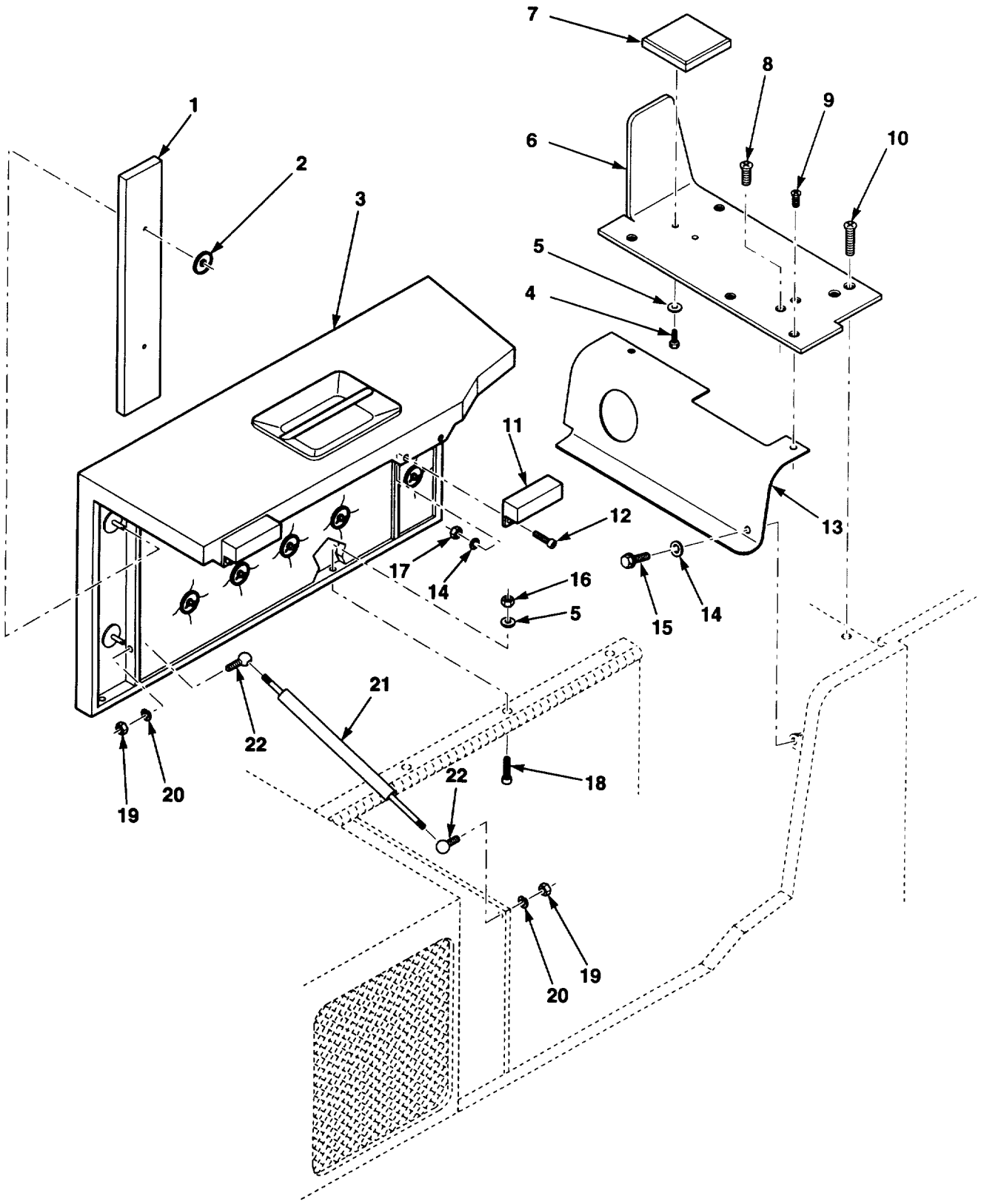

Figure 117. Side Covers Installation

https://truckmanualshub.com/ 253

(1) ITEM NO.	(2) SMR CODE	(3) NSN	(4) CAGEC	(5) PART NUMBER	(6) DESCRIPTION AND USABLE ON CODES (UOC)	(7) QTY
					GROUP 1801 BODY, CAB, HOOD, AND HULL ASSEMBLIES	
					FIG. 117 SIDE COVERS INSTALLATION	
1	PAOZZ		28818	BF31AH72	NYLAR, METALIZED	1
2	PAOZZ		1GT03	101-301-104	CLIP, SPRING	12
3	XBOZZ		07443	1407942	HOOD	1
4	PAOZZ	5305121250321	89749	1CM820	SCREW, CAP, HEXAGON H M8X20	2
5	PAOZZ	5310013962874	89749	18EM816	WASHER, FLAT M8	6
6	XBOZZ		07443	1408284	REST, LOAD	1
7	PAOZZ		07443	1408835	PAD ASSEMBLY, WEAR	1
8	PAOZZ		89749	9G524	SCREW,CAP, SOCKET HE	2
9	PAOZZ		15526	M6X1X20	BOLT, INTERNAL WRENC M6X20	3
10	PAOZZ	5305013035631	80204	B18231B08020N	SCREW, CAP, HEXAGON H M8X20	3
11	XBOZZ		1BZ41	A1472W	PAD, BUMPER	2
12	PAOZZ	5305014155212	89749	27CM620	SCREW, CAP, SOCKET HE M6X20	4
13	PFOZZ		07443	1408285	COVER, FILTER	1
14	PAOZA	5310006858191	84955	KS1411-2-05-13	WASHER, FLAT .25 ID	5
15	PAOZZ	5305014226060	89749	29CM616	SCREW, CAP, HEXAGON H M6X16	1
16	PAOZZ	5310014155214	89749	1DM8	NUT, PLAIN, HEXAGON M8	4
17	PAOZZ	5310013960983	12603	1DM6	NUT, PLAIN, HEXAGON M6	4
18	PAOZZ		89749	27CM820	SCREW M8X20	4
19	PAOZZ		07516	K33797	NUT, HEX	2
20	PAOZZ	5310013588280	77237	4E5	WASHER, LOCK	2
21	PAOZZ		2K900	FBN-12	SPRING	1
22	XBOZZ		07443	1401756	STUD, BALL	2
					END OF FIGURE	

https://truckmanualshub.com/ 254

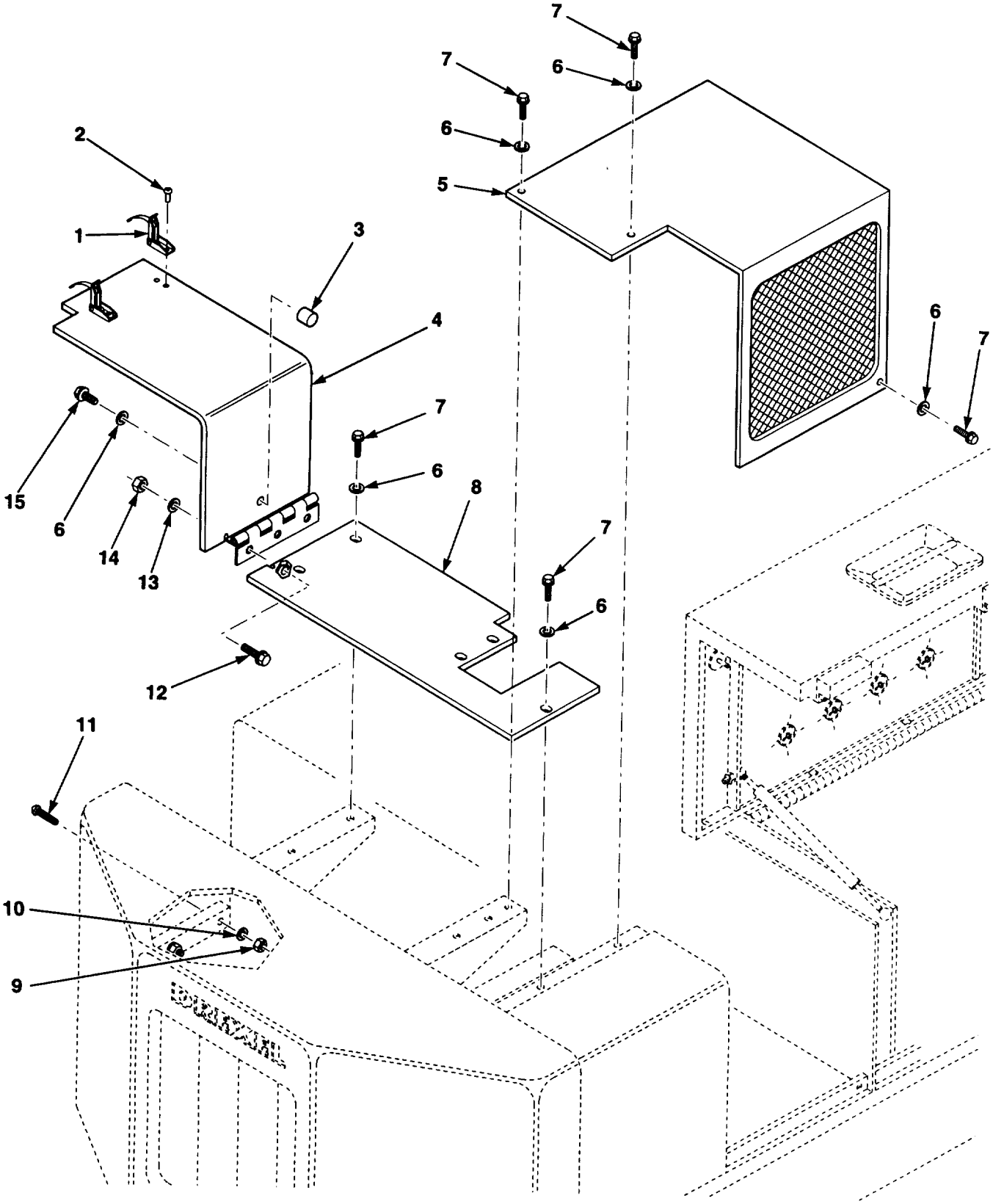

Figure 118. Rear Engine Access Covers

https://truckmanualshub.com/ 255

(1) ITEM NO.	(2) SMR CODE	(3) NSN	(4) CAGEC	(5) PART NUMBER	(6) DESCRIPTION AND USABLE ON CODES (UOC)	(7) QTY
					GROUP 1801 BODY, CAB, HOOD, AND HULL ASSEMBLIES	
					FIG. 118 REAR ENGINE ACCESS COVERS	
1	PFOZZ		39428	97-50-263-11	LATCH, DRAW OVER-CEN	2
2	XBOZZ		07443	51365-3	RIVET	4
3	PFOZZ	5340014370420	1BZ41	A5524	BUMPER, NONMETALLIC	1
4	XBOZZ		07443	1408289	COVER, LEFT	1
5	XBOZZ		07443	1408290	COVER, AIR DUCT	1
6	PAOZA	5310006858191	84955	KS1411-2-05-13	WASHER, FLAT .25 ID	9
7	PAOZZ	5305014226060	89749	29CM616	SCREW, CAP, HEXAGON H M6X16	9
8	XBOZZ		07443	1408286	COVER, RIGHT	1
9	PAOZZ	5310014330997	89749	12D8	NUT,PLAIN, HEXAGON #8-32	2
10	PAOZZ		89749	25E8	WASHER, PLAIN #8	2
11	PAOZZ		39428	90273A199	SCREW, FLATHEAD	2
12	PAOZZ		89749	27CM820	SCREW M8X20	3
13	PAOZZ	5310013962874	89749	18EM816	WASHER, FLAT M8	3
14	PAOZZ	5310014155214	89749	1DM8	NUT, PLAIN, HEXAGON M8	3
15	PAOZZ	5307003491230	12603	1C408	STUD, GASOLINE ENGIN	1
					END OF FIGURE	

https://truckmanualshub.com/ 256

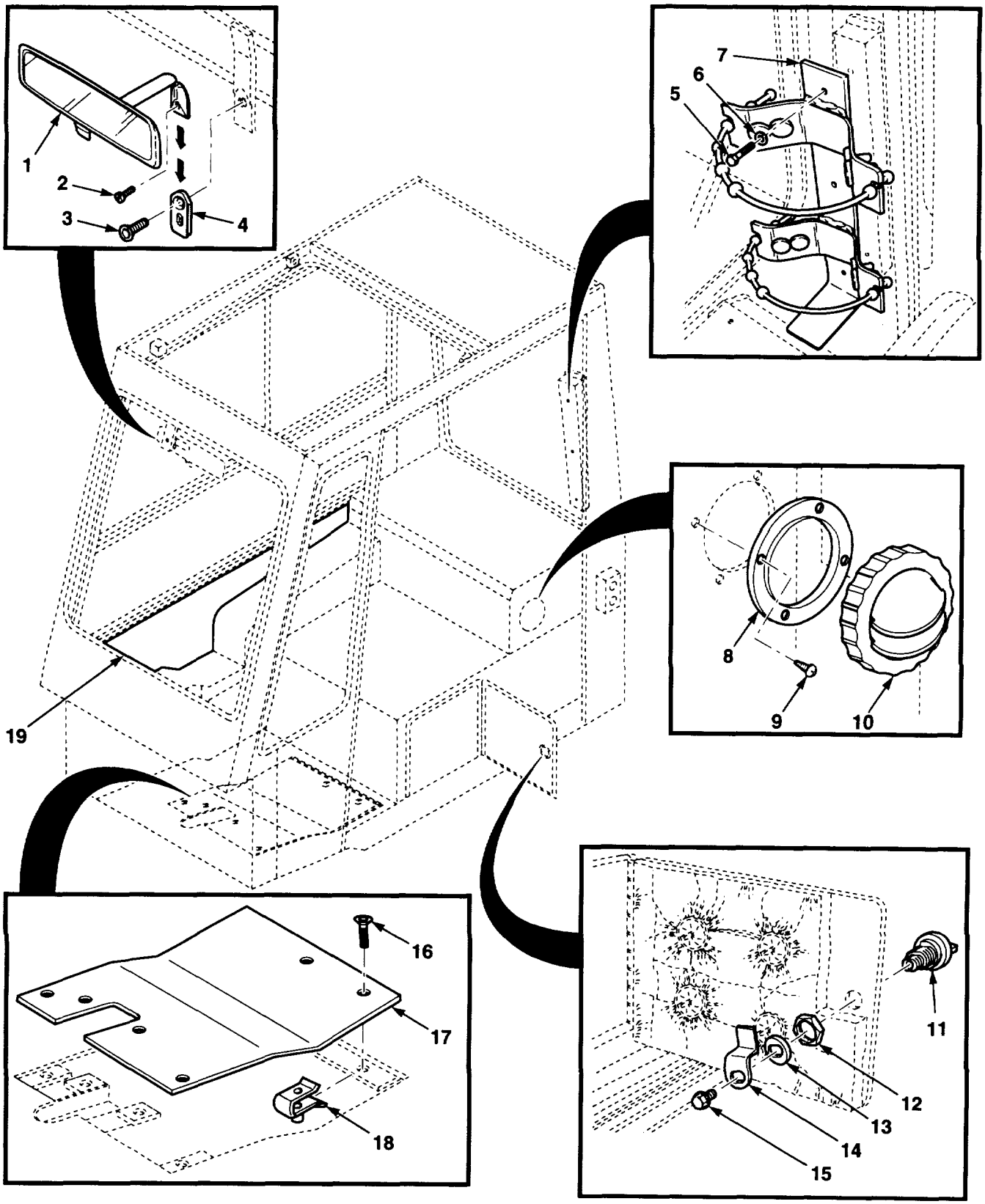

Figure 119. Cab Miscellaneous Items

https://truckmanualshub.com/ 257

(1) ITEM NO.	(2) SMR CODE	(3) NSN	(4) CAGEC	(5) PART NUMBER	(6) DESCRIPTION AND USABLE ON CODES (UOC)	(7) QTY
					GROUP 1801 BODY, CAB, HOOD, AND HULL ASSEMBLIES	
					FIG. 119 CAB MISCELLANEOUS ITEMS	
1	PAOZZ		38022	730-2065	MIRROR ASSEMBLY, REA	1
2	XBOZZ		70842	730-2065-XA	SCREW	1
3	PAOZZ	5305014199931	12603	23GM612	SCREW, CAP, SOCKET HE	1
4	PAOZZ		07443	1405948	PLATE, MOUNTING	1
5	PAOZZ	5305121240527	89749	1CN625	SCREW, CAP, HEXAGON H M6X25	3
6	PAOZZ	5310013965256	89749	18EM613	WASHER, FLAT	3
7	XBOZZ		07443	1408403	BRACKET, FIRE EXT	1
8	PFOZZ		38022	VH230008	ADAPTER, LOUVRE	1
9	PAOZZ		38022	0152-J311	SCREW	4
10	PFOZZ		38022	VH230045	LOUVRE	1
11	PAOZZ	5340014335330	38022	E5-2-125-030	FASTENER, SNAP	1
12	XAOZZ		94222	E5-2-125-030-XA	NUT	1
13	XAOZZ		94222	E5-2-125-030-XA1	.LATCH	1
14	XAOZZ		94222	E5-2-125-030-XA2	LATCH	1
15	PAOZZ		38022	0152-D308	.SCREW	1
16	PAOZZ		07443	23GN820	SCREW	6
17	XBOZZ		38022	2232-369	PLATE, ACCESS	1
18	XBOZZ		07443	1401012	NUT, U	1
19	PFOZZ		38022	2232-400	INSULATION, THERMAL	1
					END OF FIGURE	

https://truckmanualshub.com/ 258

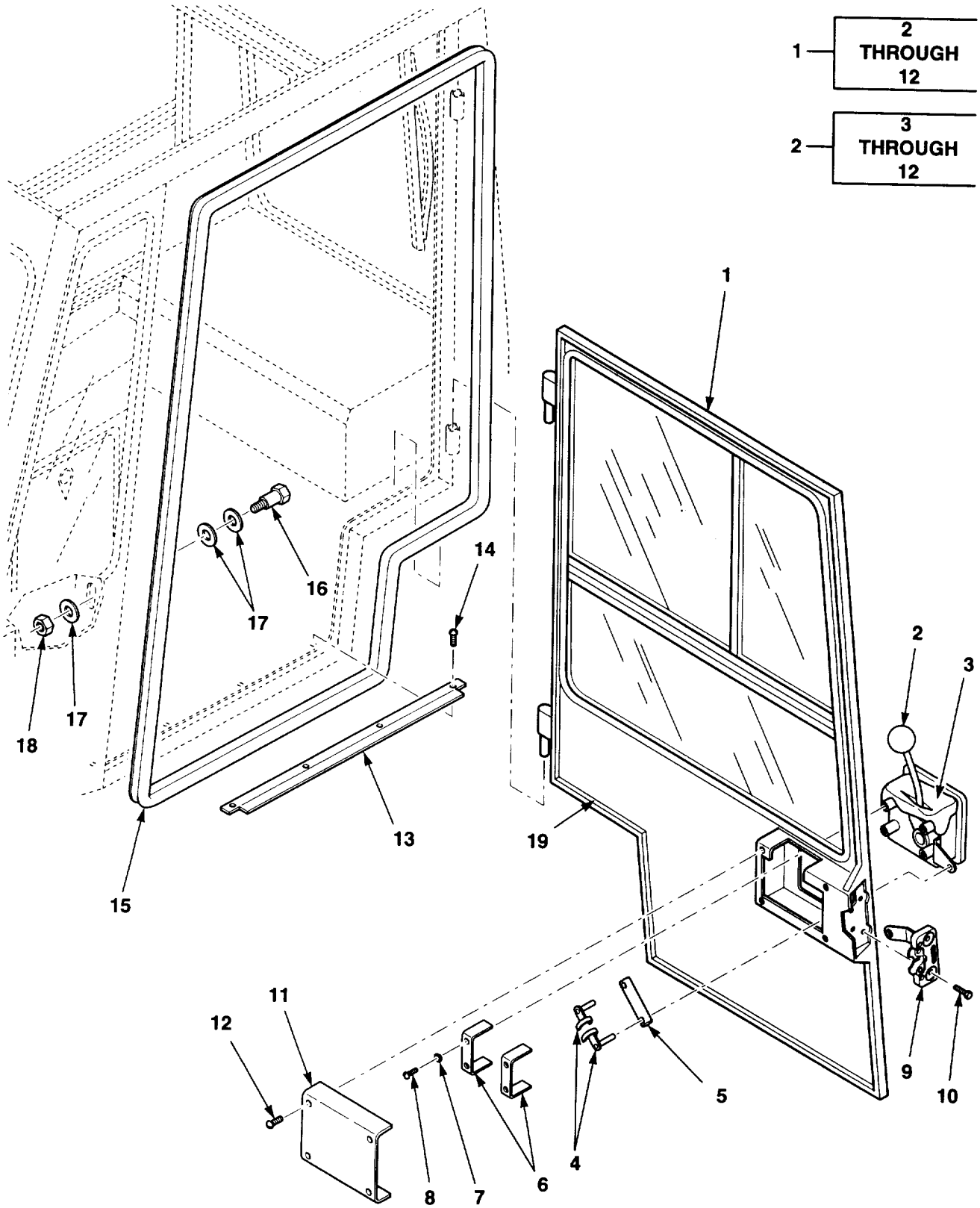

Figure 120. Cab Door Assembly

https://truckmanualshub.com/ 259

(1) ITEM NO.	(2) SMR CODE	(3) NSN	(4) CAGEC	(5) PART NUMBER	(6) DESCRIPTION AND USABLE ON CODES (UOC)	(7) QTY
					GROUP 1801 BODY, CAB, HOOD, AND HULL ASSEMBLIES	
					FIG. 120 CAB DOOR ASSEMBLY	
1	XBOZZ		38022	2232-920	DOOR	1
2	PAOZZ		38022	DLI10	.LATCH, DOOR, VEHICULA	1
3	PFOZZ		38022	DL106	..HANDLE, DOOR, VEHICUL	1
4	PFOZZ		38022	DL102	..LINK, DOOR LATCH	1
5	PAOZZ	5340219129989	38022	DL114	..CLIP, SPRING TENSION	2
6	PAOZZ		38022	H081-101	..CLAMP, LATCH	2
7	PAOZZ		38022	0313-D014	..WASHER	4
8	PAOZZ		38022	0151-J004	..SCREW	4
9	PAOZZ		38022	DL110	..LATCH, DOOR, VEHICULA	1
10	PAOZZ		38022	0152-D308	..SCREW	4
11	XBOZZ		38022	H081-101	..CLAMP, LATCH	1
12	PAOZZ		38022	0152-Z309	..SCREW	4
13	XBOZZ		38022	2232-356	SILL, DOOR	1
14	PAOZZ		38022	0152-J310	SCREW	4
15	PAOZZ	5330219124404	38022	WE010	SEAL, NONMETALLIC SP	1
16	XBOZZ	5306219130181	38022	DL125	BOLT, MACHINE	1
17	PAOZZ		38022	0605-D008	WASHER	3
18	PAOZZ		38022	0201-D047	.NUT	1
19	XBOZZ		38022	W1010	INSULATION, DOOR	1
					END OF FIGURE	

https://truckmanualshub.com/ 260

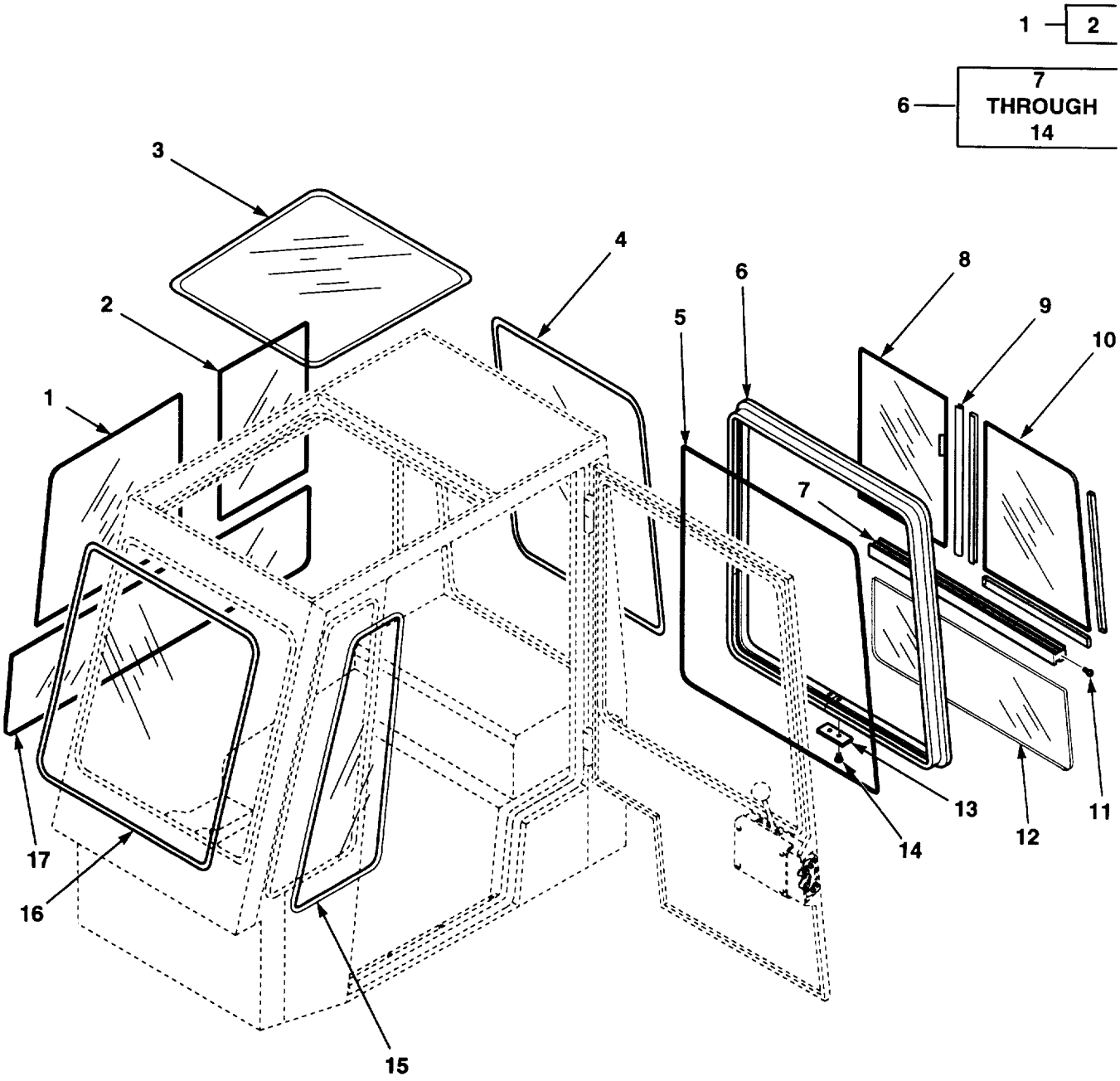

Figure 121. Cab Windshield and Glass

https://truckmanualshub.com/ 261

(1) ITEM NO.	(2) SMR CODE	(3) NSN	(4) CAGEC	(5) PART NUMBER	(6) DESCRIPTION AND USABLE ON CODES (UOC)	(7) QTY
					GROUP 1802 FENDERS, RUNNING BOARDS WITH MOUNTING AND ATTACHING PARTS, WINDSHIELD, GLASS, ETC.	
					FIG. 121 CAB WINDSHIELD AND GLASS	
1	XBFZZ		38022	AS216	SLIDER,DOOR	1
2	XAFZZ		38022	A5216-XA	.SLIDER,DOOR,WINDOW	1
3	XBFZZ		38022	2232-4-E	WINDOW, SKYLITE	1
4	XBFZZ		38022	2232-4-B	GLASS, REAR	1
5	PAFZZ	5330219124406	38022	1205R046	SEAL,NONMETALLIC SP	1
6	XBFZZ		38022	AS215	SLIDER, DOOR	1
7	XAFZZ		38022	A5215-XA	.STRIP, SLIDE	1
8	XAFZZ		38022	AS215-XA1	.WINDOW, SLIDE	1
9	XAFZZ		38022	ASZ215-XA2	.STRIP, SLIDE	4
10	XAFZZ		38022	AS215-XA3	.WINDOW, SLIDE	1
11	XAFZZ		38022	AS215-XA4	.SCREW	1
12	XAFZZ		38022	AS215-XA5	.WINDOW	1
13	XAFZZ		38022	AS215-XA6	.PLATE	1
14	XAFZZ		38022	AS215-XA7	.SCREW	2
15	XBFZZ		38022	2232-4-D	WINDOW, SIDE, LH, FRNT	1
16	XBFZZ		38022	2232-4-A	WINDSHIELD	1
17	XBFZZ		38022	2232-4-C	WINDOW, SIDE, RH, LWR	1
					END OF FIGURE	

https://truckmanualshub.com/ 262

1 — 2

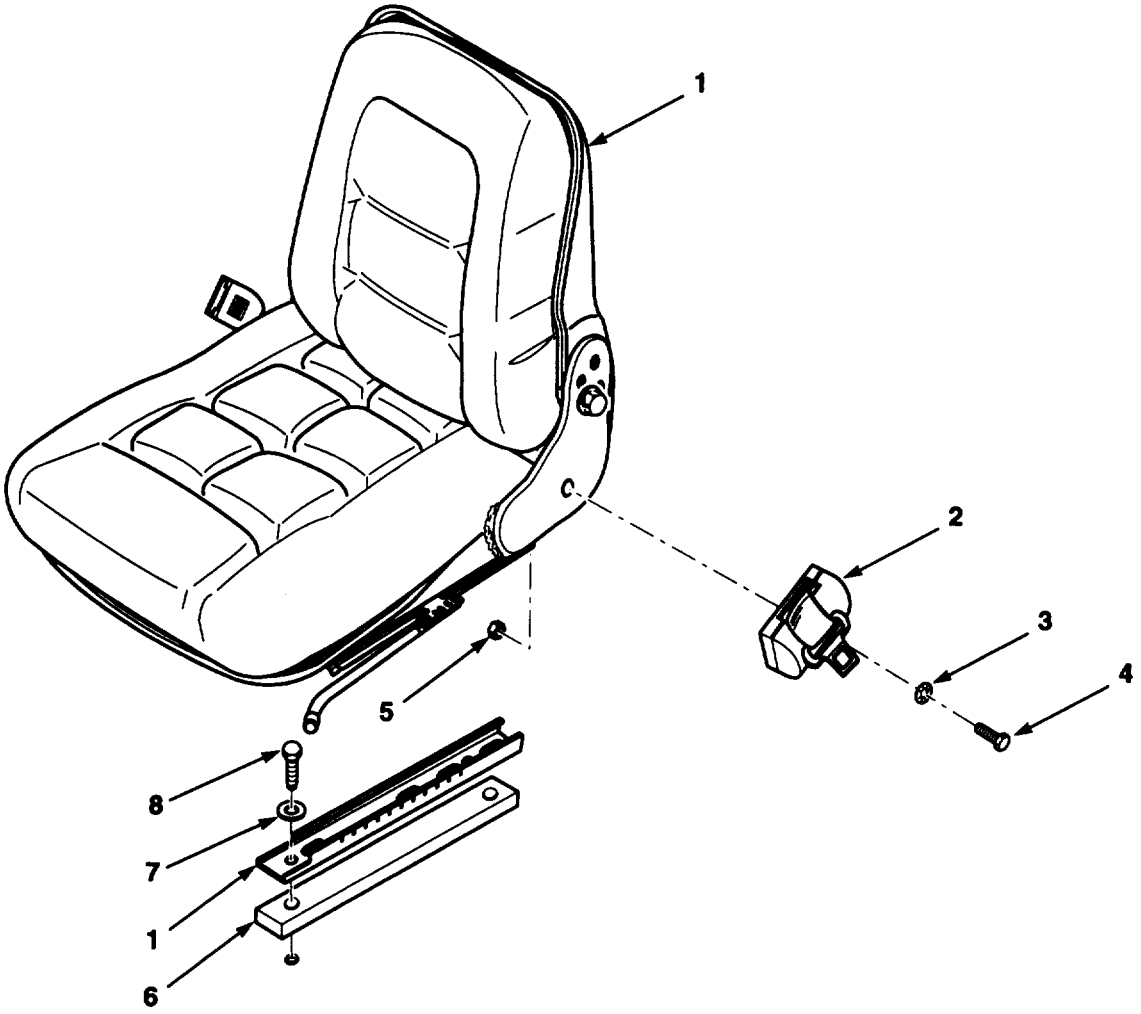

Figure 122. Seat assembly

https://truckmanualshub.com/ 263

(1) ITEM NO.	(2) SMR CODE	(3) NSN	(4) CAGEC	(5) PART NUMBER	(6) DESCRIPTION AND USABLE ON CODES (UOC)	(7) QTY
					GROUP 1806 UPHOLSTERY SEATS AND CARPETS	
					FIG. 122 SEAT ASSEMBLY	
1	PAOZZ	2540014345558	0U6G7	116915	SEAT, VEHICULAR	1
2	PAOZZ	2540014338128	26786	SBLR2120-C	.BELT, VEHICULAR SAFE	1
3	PAOZZ	5310013962871	12603	18EM1019	WASHER, FLAT M10X19	2
4	PAOZZ	5305011755374	20418	571-50-1025-3	SCREW, CAP, HEXAGON H	2
5	PAOZZ	5310013964295	12603	1DM10	NUT, PLAIN, HEXAGON M10	2
6	XBOZZ		07443	1402416	PLATE, SEAT SPACER	2
7	PAOZZ	5310014156113	89749	15EM80	WASHER, FLAT	4
8	PAOZZ		89749	1CM835	SCREW, CAP, HEX HD M8X35	4
					END OF FIGURE	

https://truckmanualshub.com/ 264

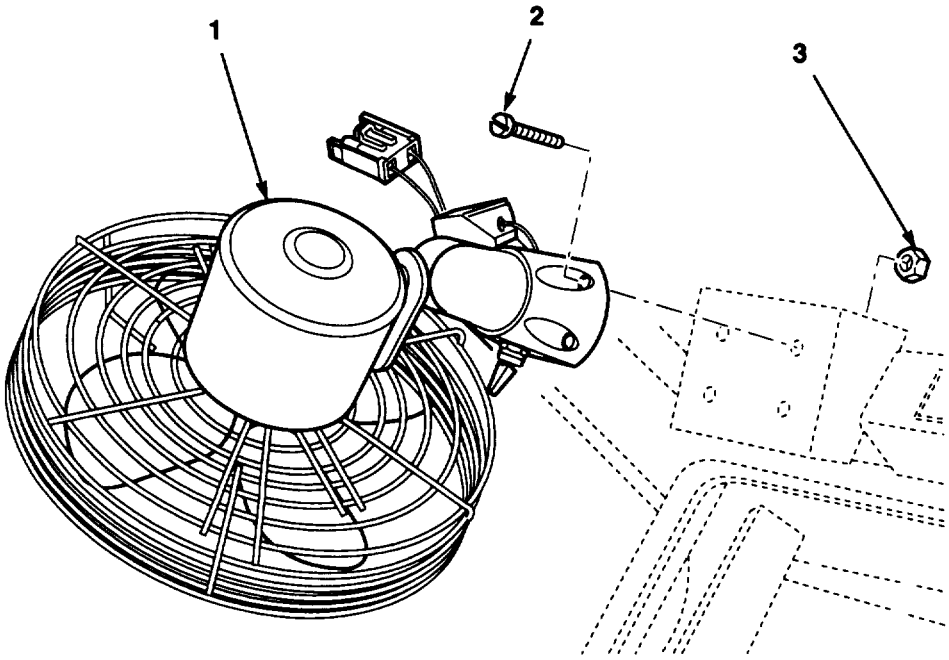

Figure 123. Fan Installation

https://truckmanualshub.com/ 265

(1) ITEM NO.	(2) SMR CODE	(3) NSN	(4) CAGEC	(5) PART NUMBER	(6) DESCRIPTION AND USABLE ON CODES (UOC)	(7) QTY
					GROUP 22 BODY, CHASSIS, AND HULL ACCESSORY ITEMS	
					GROUP 2202 ACCESSORY ITEMS	
					FIG. 123 FAN INSTALLATION	
1	XBOZZ		38022	VF002	FAN	2
2	PAOZZ		07443	73G406	SCREW, CAP, SOCKET HE	4
3	PAOZZ		OAHP5	13D6	NUT, HEX	4
					END OF FIGURE	

https://truckmanualshub.com/ 266

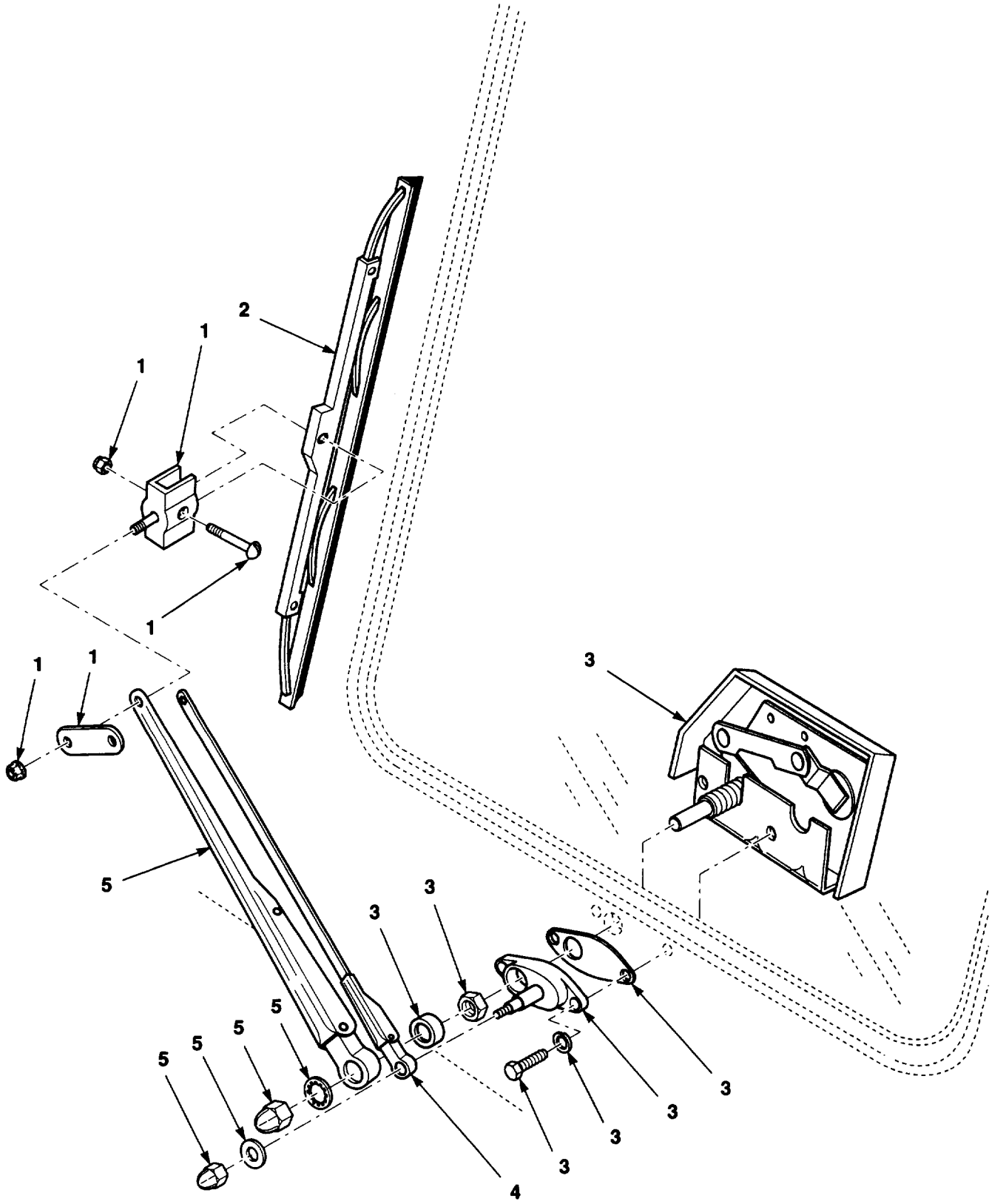

Figure 124. Windshield Wipers (Front/Rear)

https://truckmanualshub.com/ 267

(1) ITEM NO.	(2) SMR CODE	(3) NSN	(4) CAGEC	(5) PART NUMBER	(6) DESCRIPTION AND USABLE ON CODES (UOC)	(7) QTY
					GROUP 2202 ACCESSORY ITEMS FIG. 124 WINDSHIELD WIPERS (FRONT/REAR)	
1	XBOZZ		38022	EWWF24	WINDSHIELD WIPER	2
2	PAOZZ		38022	EWB04	BLADE, WINDSHIEL WIP	2
3	PAOZZ		38022	WJ65674	MOTOR, WINDSHIELD WI	2
4	XBOZZ		38022	EWA18	ARM, PANTOGRAPH	2
5	XBOZZ		38022	EWAJ14	DRIVER ARM	2
					END OF FIGURE	

https://truckmanualshub.com/ 268

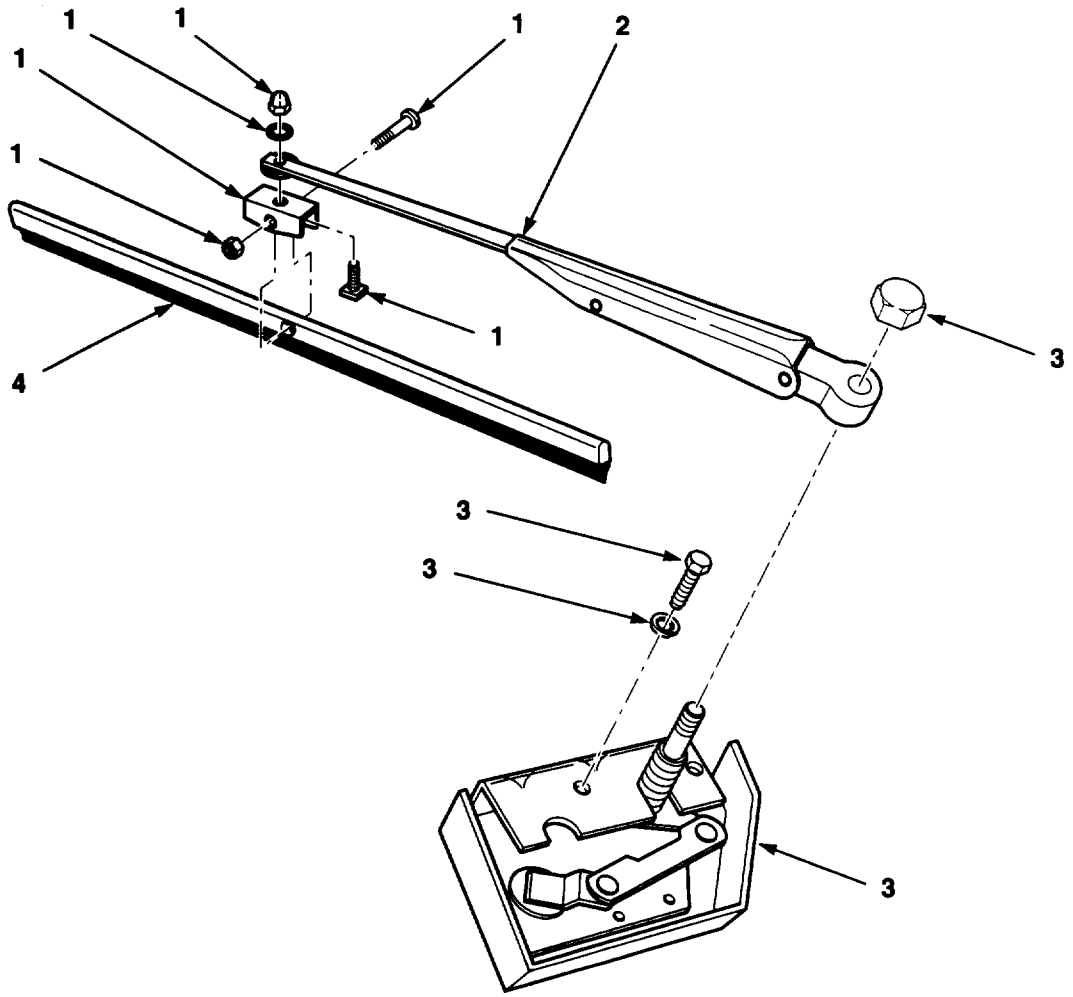

Figure 125. Top Window Wiper

https://truckmanualshub.com/ 269

(1) ITEM NO.	(2) SMR CODE	(3) NSN	(4) CAGEC	(5) PART NUMBER	(6) DESCRIPTION AND USABLE ON CODES (UOC)	(7) QTY
					GROUP 2202 ACCESSORY ITEMS FIG. 125 TOP WINDOW WIPER	
1	XBOZZ		38022	EWWF24	WINDSHIELD WIPER	2
2	XBOZZ		38022	EWA19	ARM, WIPER, ADJ	1
3	PAOZZ		38022	WJ65674	MOTOR,WINDSHIELD WI	1
4	PAOZZ	2540011544203	60703	HF14	BLADE, WINDSHIELD WI	1
					END OF FIGURE	

https://truckmanualshub.com/ 270

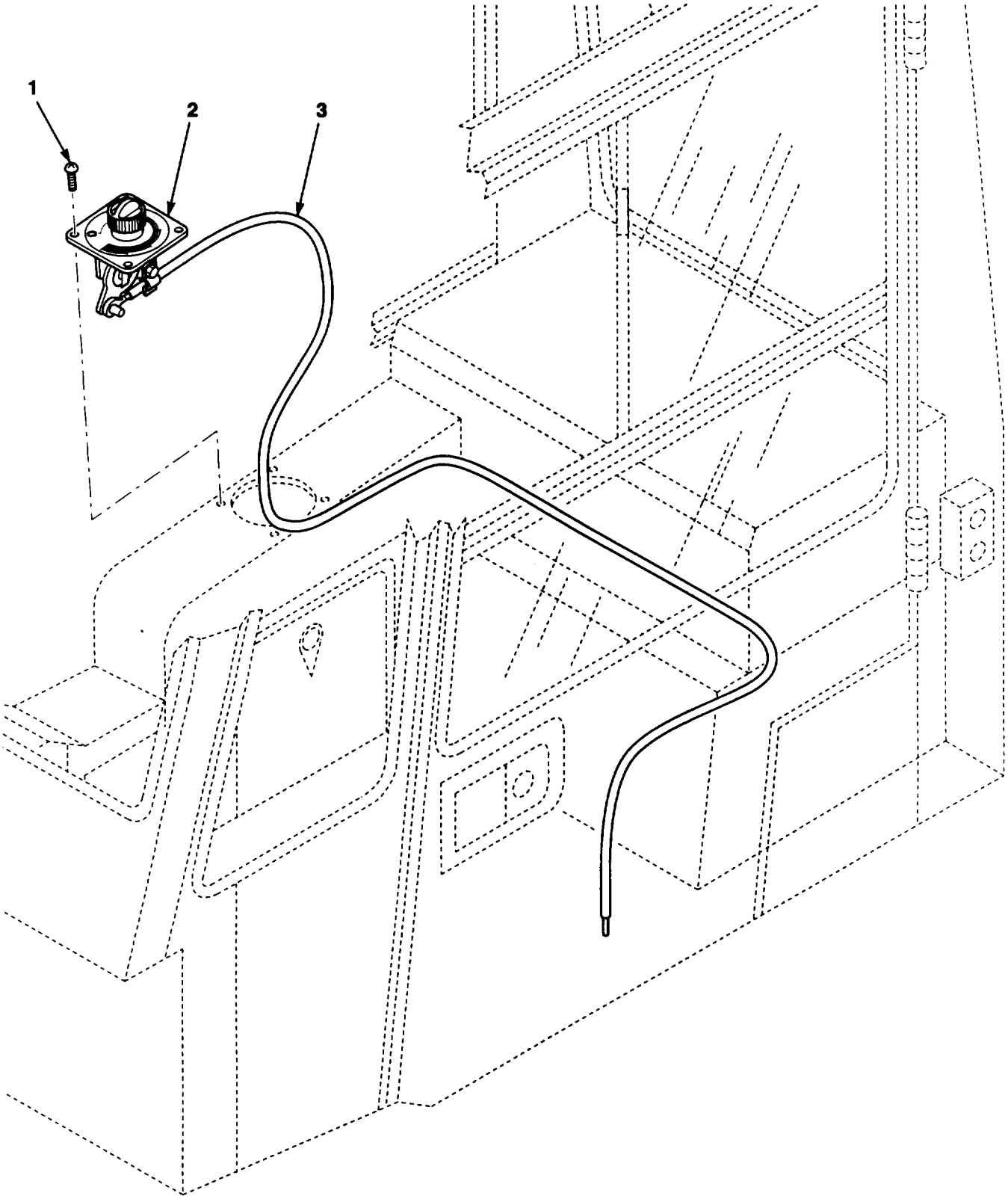

Figure 126. Heater Control

https://truckmanualshub.com/ 271

(1) ITEM NO.	(2) SMR CODE	(3) NSN	(4) CAGEC	(5) PART NUMBER	(6) DESCRIPTION AND USABLE ON CODES (UOC)	(7) QTY
					GROUP 2202 ACCESSORY ITEMS FIG. 126 HEATER CONTROL	
1	PAOZZ		1CJ86	BN1014 M3.5X13	SCREW, TAPPING	4
2	PAOZZ		0NZJ1	335-100-0002-60-64	HEATER CONTROL ASSY	1
3	PAOZZ		0NZJ1	0335-100-0002	CABLE, HEATER CNTRL	1
					END OF FIGURE	

https://truckmanualshub.com/ 272

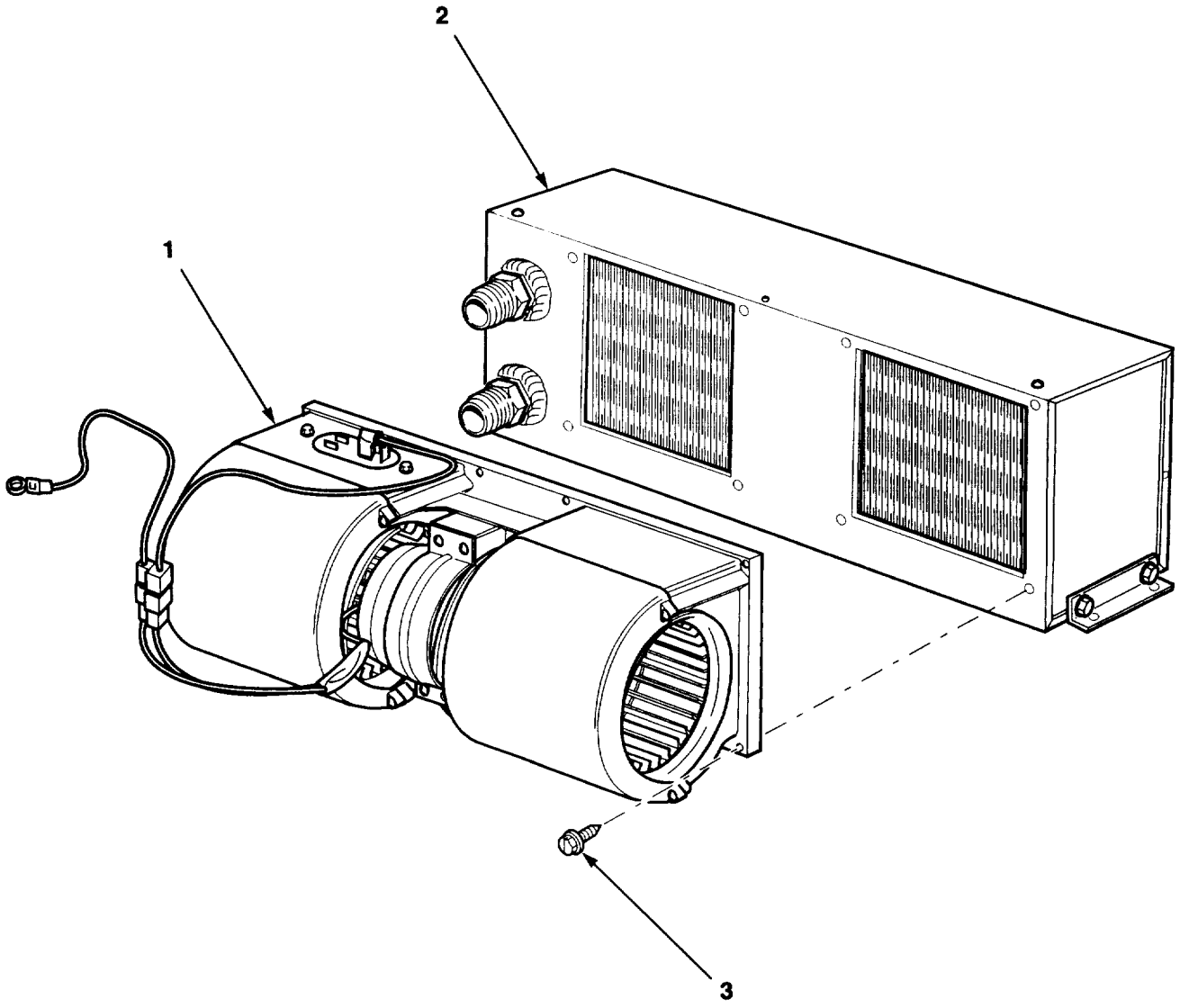

Figure 127. Oil to Air Heater

https://truckmanualshub.com/ 273

(1) ITEM NO.	(2) SMR CODE	(3) NSN	(4) CAGEC	(5) PART NUMBER	(6) DESCRIPTION AND USABLE ON CODES (UOC)	(7) QTY
					GROUP 2202 ACCESSORY ITEMS FIG. 127 OIL TO AIR HEATER	
1	XBOZZ		07443	1411164	HEATER BLOWER ASSY	1
2	XBOZZ		07443	1411165	HEATER CORE ASSY	1
3	PAOZZ		07443	29CM616	SCREW, CAP, HEXAGON H	8
					END OF FIGURE	

https://truckmanualshub.com/ 274

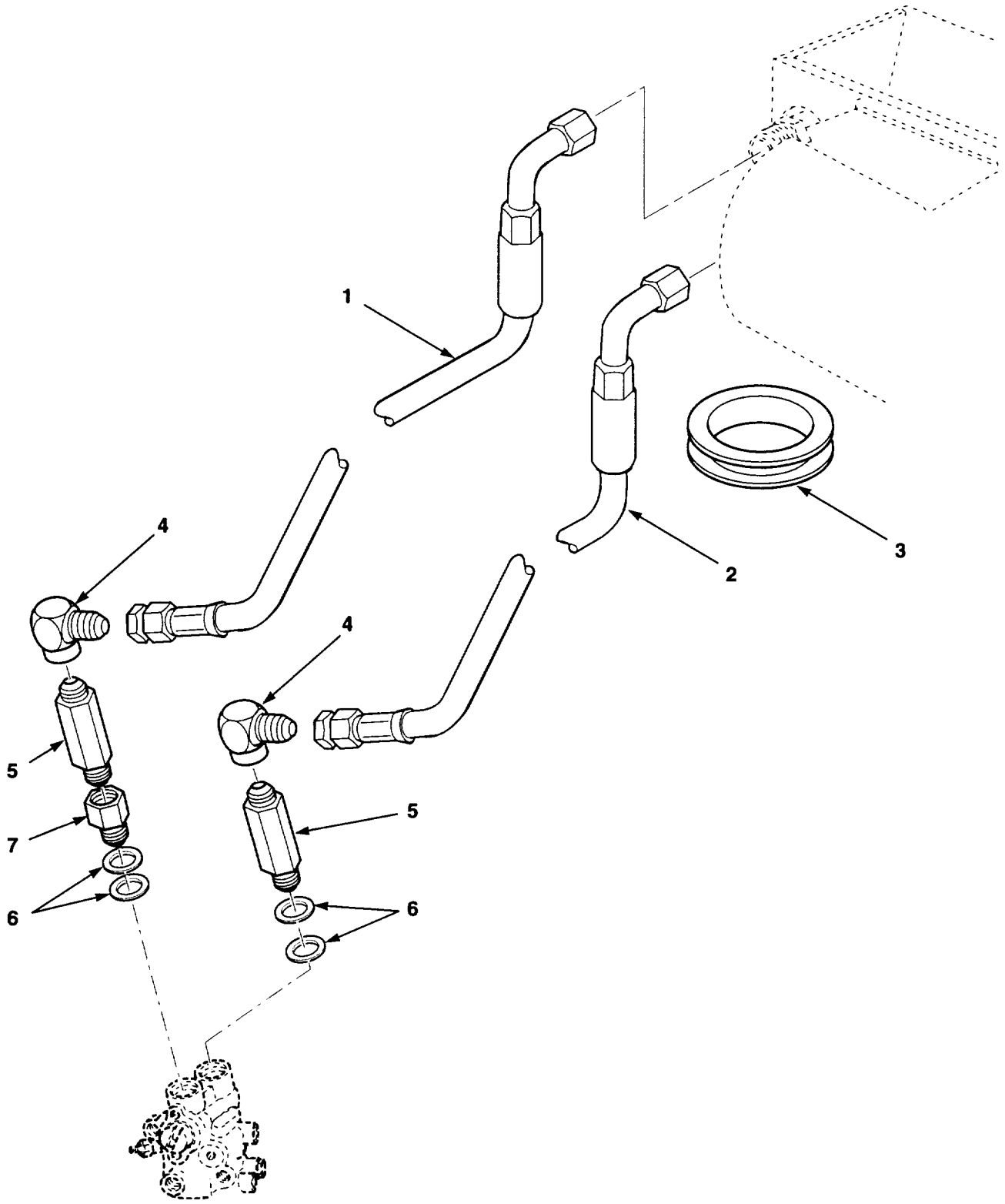

Figure 128. Oil to Air Heater Lines

(1) ITEM NO.	(2) SMR CODE	(3) NSN	(4) CAGEC	(5) PART NUMBER	(6) DESCRIPTION AND USABLE ON CODES (UOC)	(7) QTY
					GROUP 2202 ACCESSORY ITEMS FIG. 128 OIL TO AIR HEATER LINES	
1	PAOZZ	4720013958800	07443	1404992	HOSE ASSEMBLY, NONME	1
2	PAOZZ	4720013958793	07443	1404991	HOSE ASSEMBLY, NONME	1
3	PAFZZ	5325011949154	62445	1167425	GROMMET, NONMETALLIC	1
4	PAOZZ	4730001333196	96906	MS51521A12	ELBOW, TUBE	2
5	PAFZZ		93061	8-FF50X-S	CONNECTOR, MULTIPLE,	2
6	PAOZZ	5310011907470	72957	25E17	WASHER, FLAT	4
7	PAOZZ	4730002784311	13174	848-FS01X08	ADAPTER, STRAIGHT, PI	1
					END OF FIGURE	

https://truckmanualshub.com/ 276

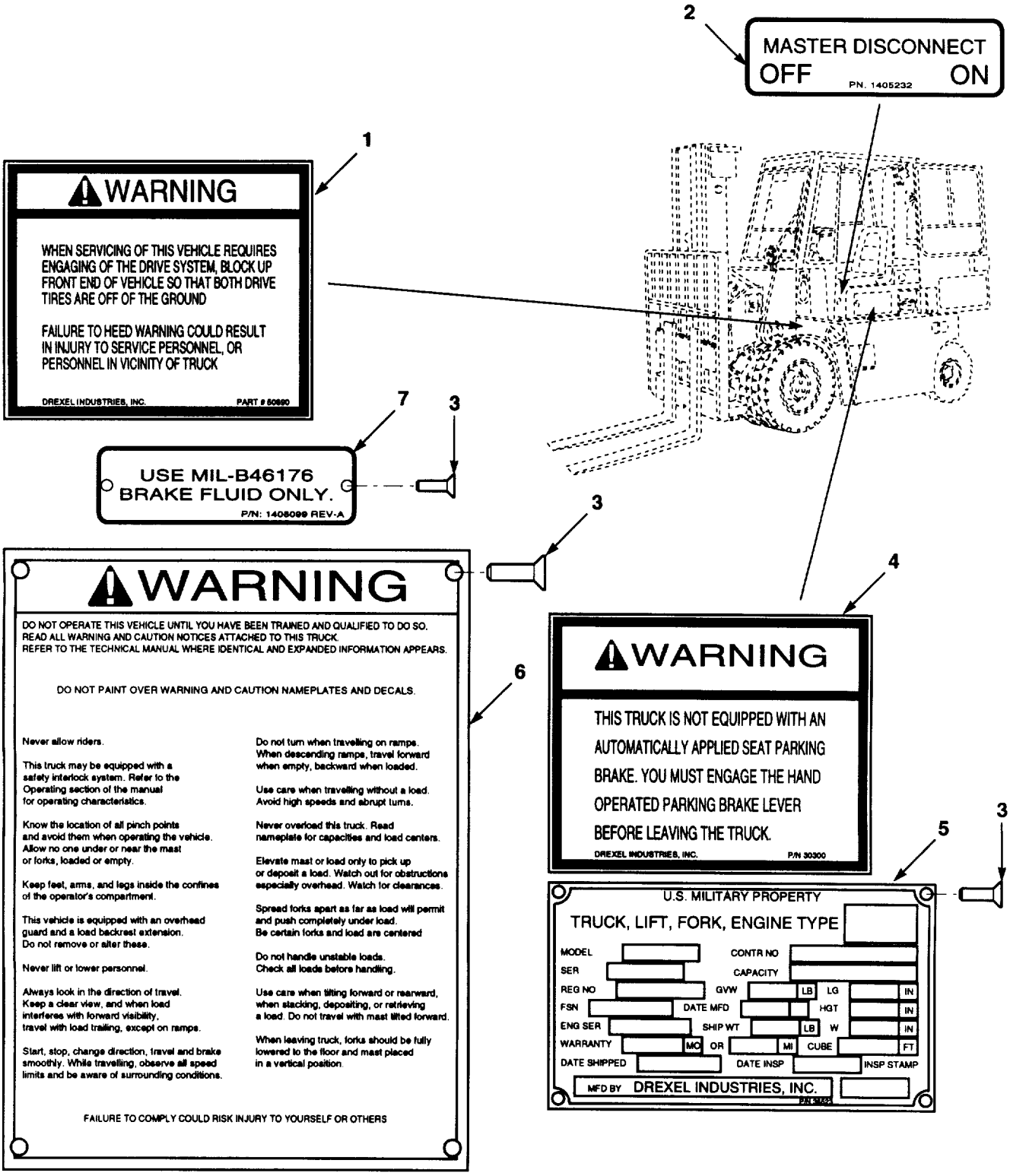

Figure 129. Data Plates and Decals (Sheets 1 of 7)

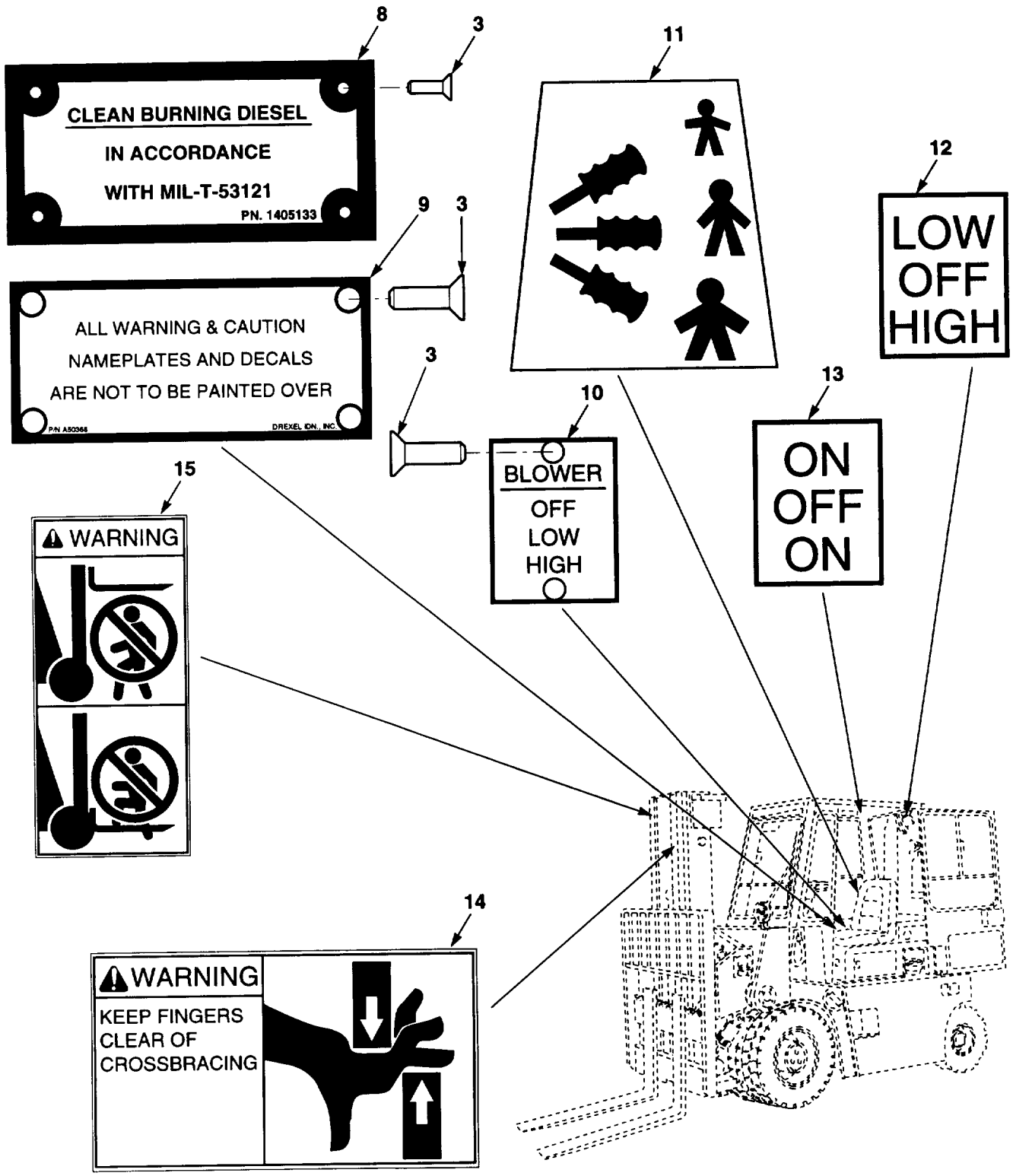

Figure 129. Data Plates and Decals (Sheet 2 of 7)

https://truckmanualshub.com/ 278

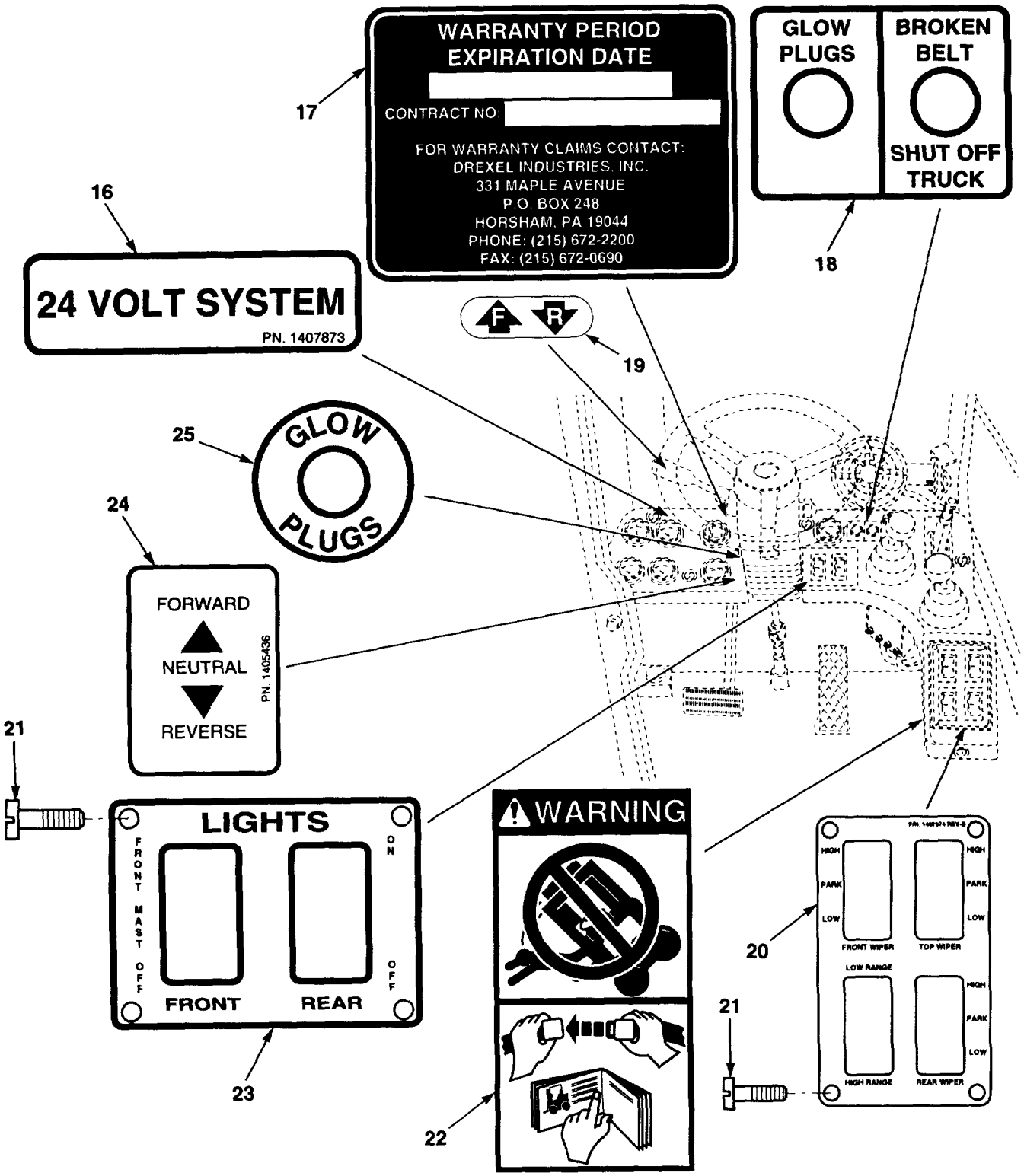

Figure 129. Data Plates and Decals (Sheet 3 of 7)

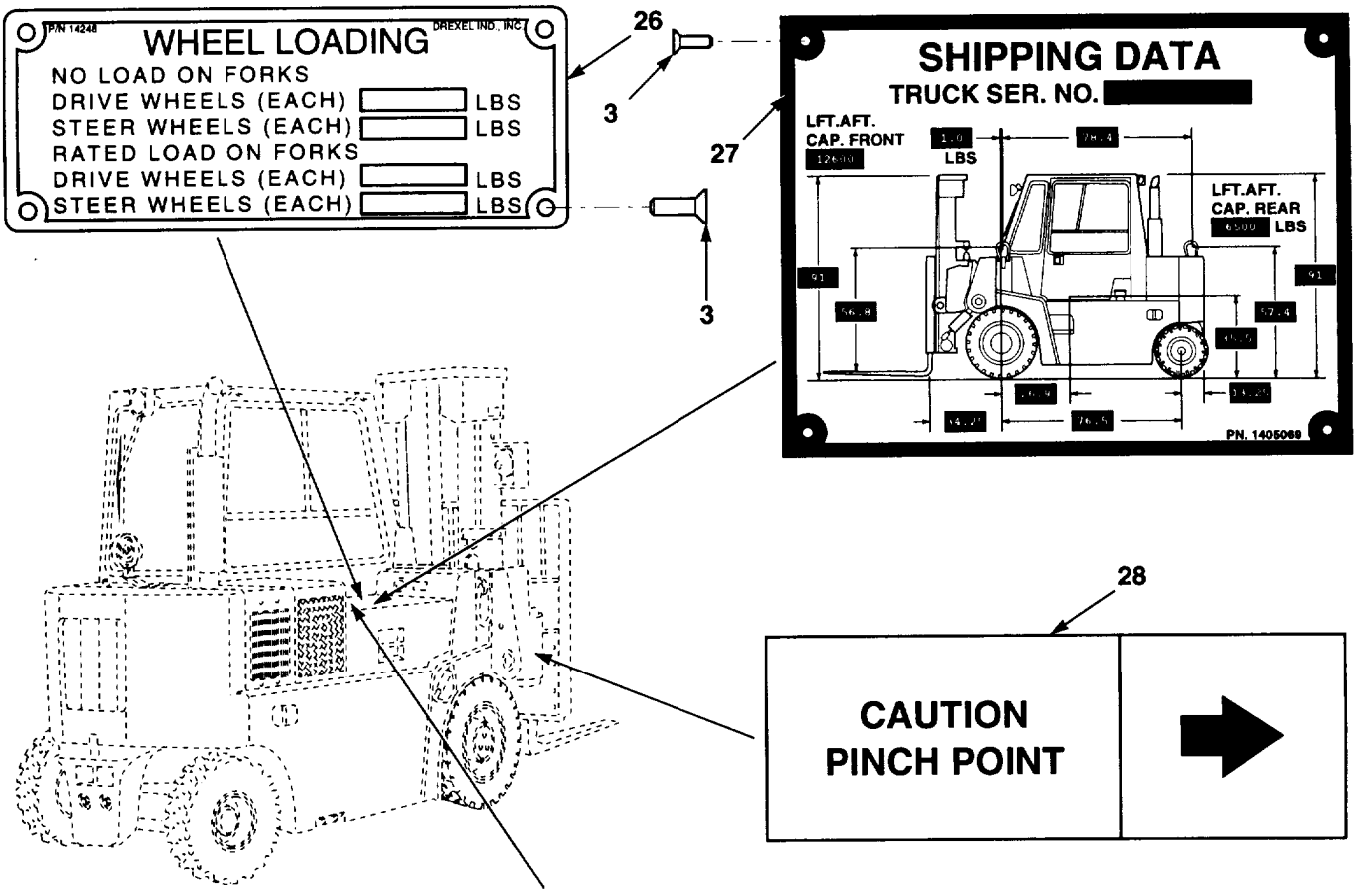

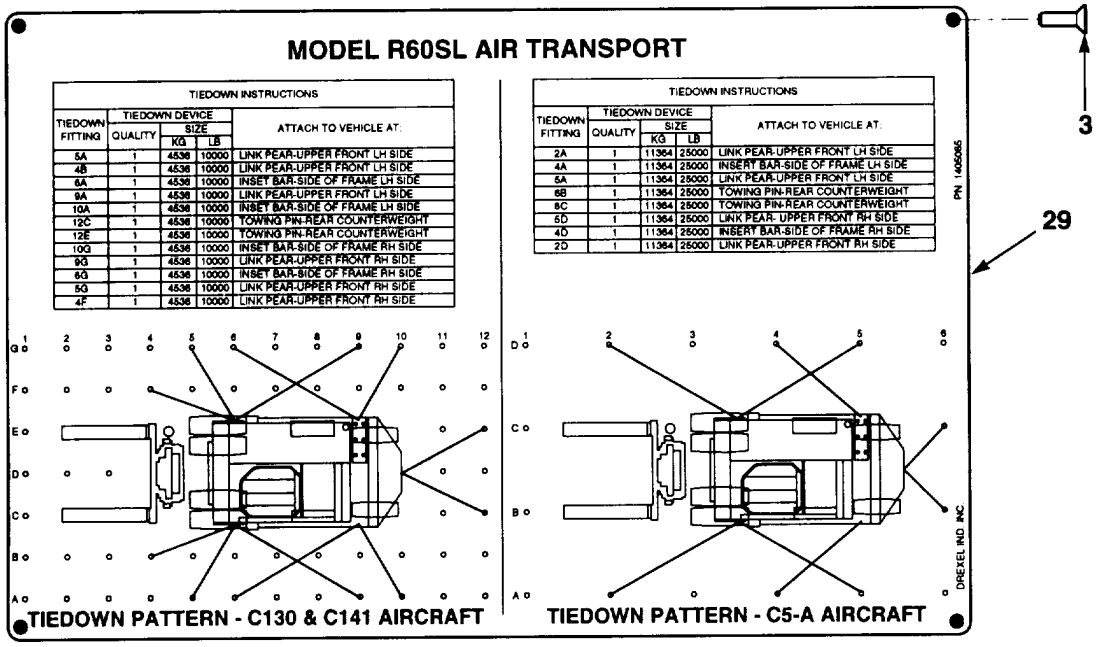

TIEDOWN INSTRUCTIONS

TIEDOWN FITTING	TIEDOWN DEVICE QUALITY	SIZE KG	SIZE LB	ATTACH TO VEHICLE AT:
5A	1	4536	10000	LINK PEAR-UPPER FRONT LH SIDE
4B	1	4536	10000	LINK PEAR-UPPER FRONT LH SIDE
6A	1	4536	10000	INSET BAR-SIDE OF FRAME LH SIDE
9A	1	4536	10000	LINK PEAR-UPPER FRONT LH SIDE
10A	1	4536	10000	INSET BAR-SIDE OF FRAME LH SIDE
12C	1	4536	10000	TOWING PIN-REAR COUNTERWEIGHT
12E	1	4536	10000	TOWING PIN-REAR COUNTERWEIGHT
10G	1	4536	10000	INSET BAR-SIDE OF FRAME RH SIDE
9G	1	4536	10000	LINK PEAR-UPPER FRONT RH SIDE
6G	1	4536	10000	INSET BAR-SIDE OF FRAME RH SIDE
5G	1	4536	10000	LINK PEAR-UPPER FRONT RH SIDE
4F	1	4536	10000	LINK PEAR-UPPER FRONT RH SIDE

TIEDOWN INSTRUCTIONS

TIEDOWN FITTING	TIEDOWN DEVICE QUALITY	SIZE KG	SIZE LB	ATTACH TO VEHICLE AT:
2A	1	11364	25000	LINK PEAR-UPPER FRONT LH SIDE
4A	1	11364	25000	INSERT BAR-SIDE OF FRAME LH SIDE
5A	1	11364	25000	LINK PEAR-UPPER FRONT LH SIDE
6B	1	11364	25000	TOWING PIN-REAR COUNTERWEIGHT
8C	1	11364	25000	TOWING PIN-REAR COUNTERWEIGHT
5D	1	11364	25000	LINK PEAR- UPPER FRONT RH SIDE
4D	1	11364	25000	INSERT BAR-SIDE OF FRAME RH SIDE
2D	1	11364	25000	LINK PEAR-UPPER FRONT RH SIDE

Figure 129. Data Plates and Decals (Sheet 4 of 7)

https://truckmanualshub.com/ 280

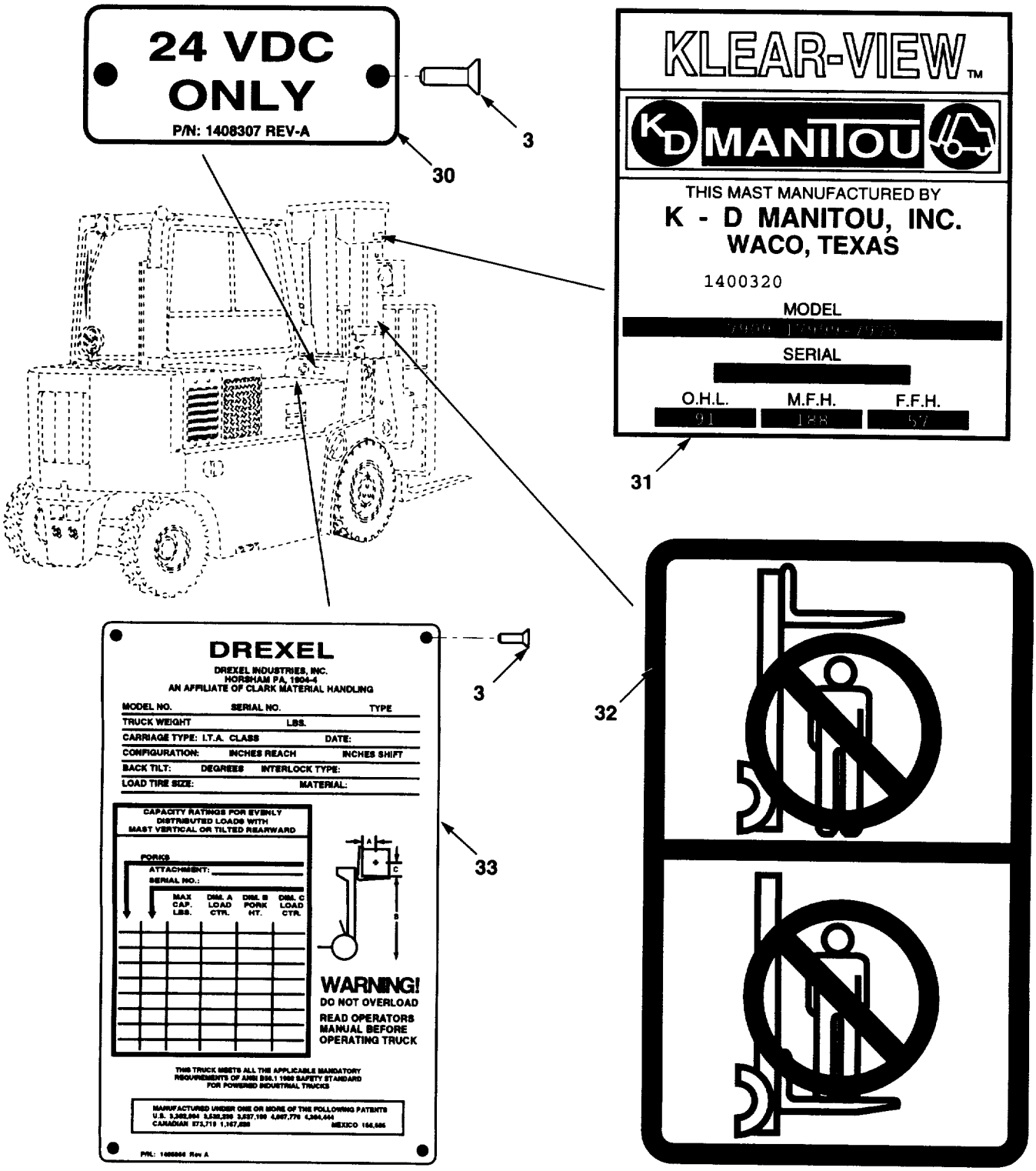

Figure 129. Data Plates and Decals (Sheet 5 of 7)

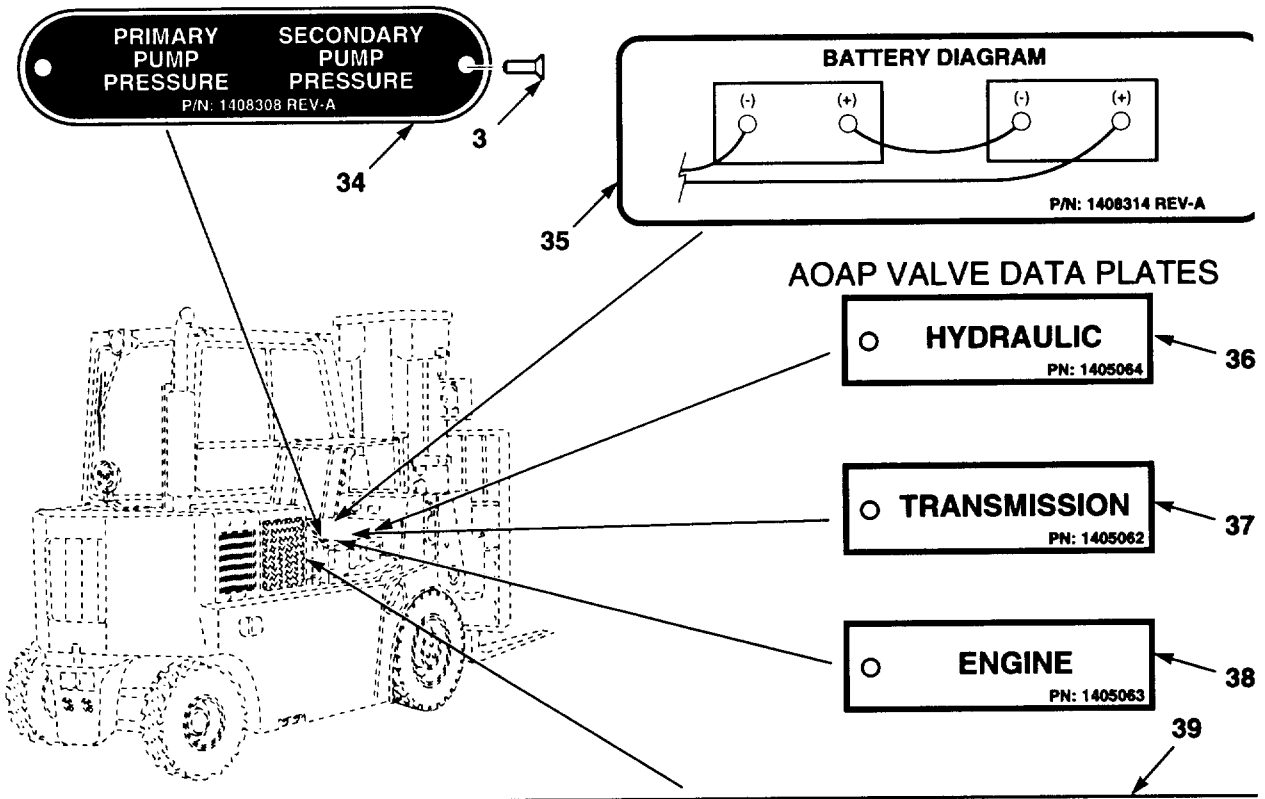

MAINTENANCE CHART

INTERVAL HOURS	REF. NO.	IDENTIFICATION	TYPE SERVICE	SERVICE POINTS	LUBRICANT	TEMP. RANGE
DAILY		ENGINE CRANKCASE OIL LEVEL	CHECK	1	SEE #15	
	1	SHIFT CARRIAGE	LUBE	1	MIL-G-10924	ALL
	2	HYDRAULIC TANK OIL LEVEL	CHECK	1	SEE #26	
50	3	FUEL/WATER SEPARATOR	CHECK	1		
	4	AIR CLEANER	CHECK	1		
		TRANSMISSION OIL LEVEL	CHECK	1	SEE #19	
	5	PIVOT CYLINDER	LUBE	2	MIL-G-10924	ALL
	6	STEER AXLE	LUBE	4	MIL-G-10924	ALL
	7	TILT CYLINDERS	LUBE	4	MIL-G-10924	ALL
	8	SHIFT CYLINDER	LUBE	3	MIL-G-10924	ALL
250	9	SHIFT AND MAST CHAINS	LUBE	6	MIL-C-16173	ALL
	10	ENGINE COOLING FINS & COOLERS	CLEAN	6		
	11	FAN & ALTERNATOR BELTS	CHECK	2		
	12	BRAKE FLUID LEVEL	CHECK	1	SEE #29	
	13	SHIFT CAM ROLLERS	LUBE	2	MIL-G-10924	ALL
	14	MAST CHANNELS	LUBE	10	MIL-G-10924	ALL
	15	ENGINE CRANKCASE OIL & FILTER	CHANGE	1	MIL-L-46167-OEA MIL-L-2104-15W40	-65°F/40°F 0°F/120°F
		DRIVE AXLE OIL LEVEL	CHECK	3	SEE #21	
	16	PIVOT SHAFT BEARINGS	LUBE	2	MIL-G-10924	ALL
	17	MAST TRUNNIONS	LUBE	2	MIL-G-10924	ALL
	18	HYDRAULIC FILTER	CHANGE	1		
500	19	TRANSMISSION OIL & FILTER	CHANGE	1	MIL-L-2104-OE/HDO-10 MIL-L-2104-OE/HDO-30	-15°F/40°F 15°F/120°F
	20	FUEL FILTER	CHANGE	1		
	21	DRIVE AXLE OIL	CHANGE	1	M2105-X-75W M2105-X-80W90	-70°F/40°F -10°F/120°F
1000	22	FUEL TANK SEDIMENT	DRAIN	1		
	23	FORK LATCHES	LUBE	2	MIL-L-2104-OE/HDO-10	ALL
	24	HOOD LATCHES & HINGES	LUBE	4	MIL-L-2104-OE/HDO-10	ALL
	25	THROTTLE LINKAGE	LUBE	2	MIL-L-2104-OE/HDO-10	ALL
	26	HYDRAULIC TANK OIL	CHANGE	1	MIL-L-46167-OEA MIL-L-2104-OE/HDO-10	-65°F/40°F -15°F/120°F
	27	ENGINE VALVES	ADJUST	1		
2000	28	STEER WHEEL BEARINGS	LUBE	2	MIL-G-21164	ALL
	29	BRAKE FLUID	CHANGE	1	MIL-B-46176	ALL

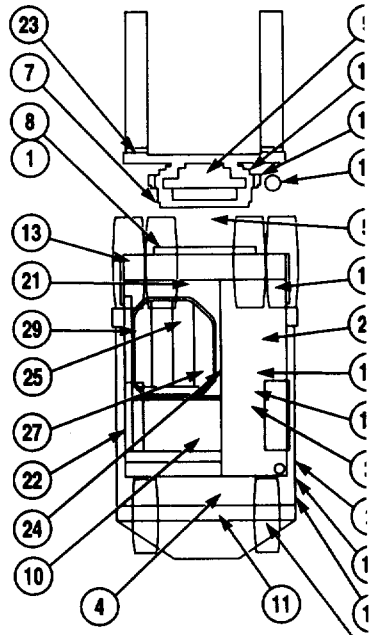

FOR DETAILED MAINTENANCE INFORMATION SEE R60SL MANUALS

Figure 129. Data Plates and Decals (Sheet 6 of 7)

https://truckmanualshub.com/ 282

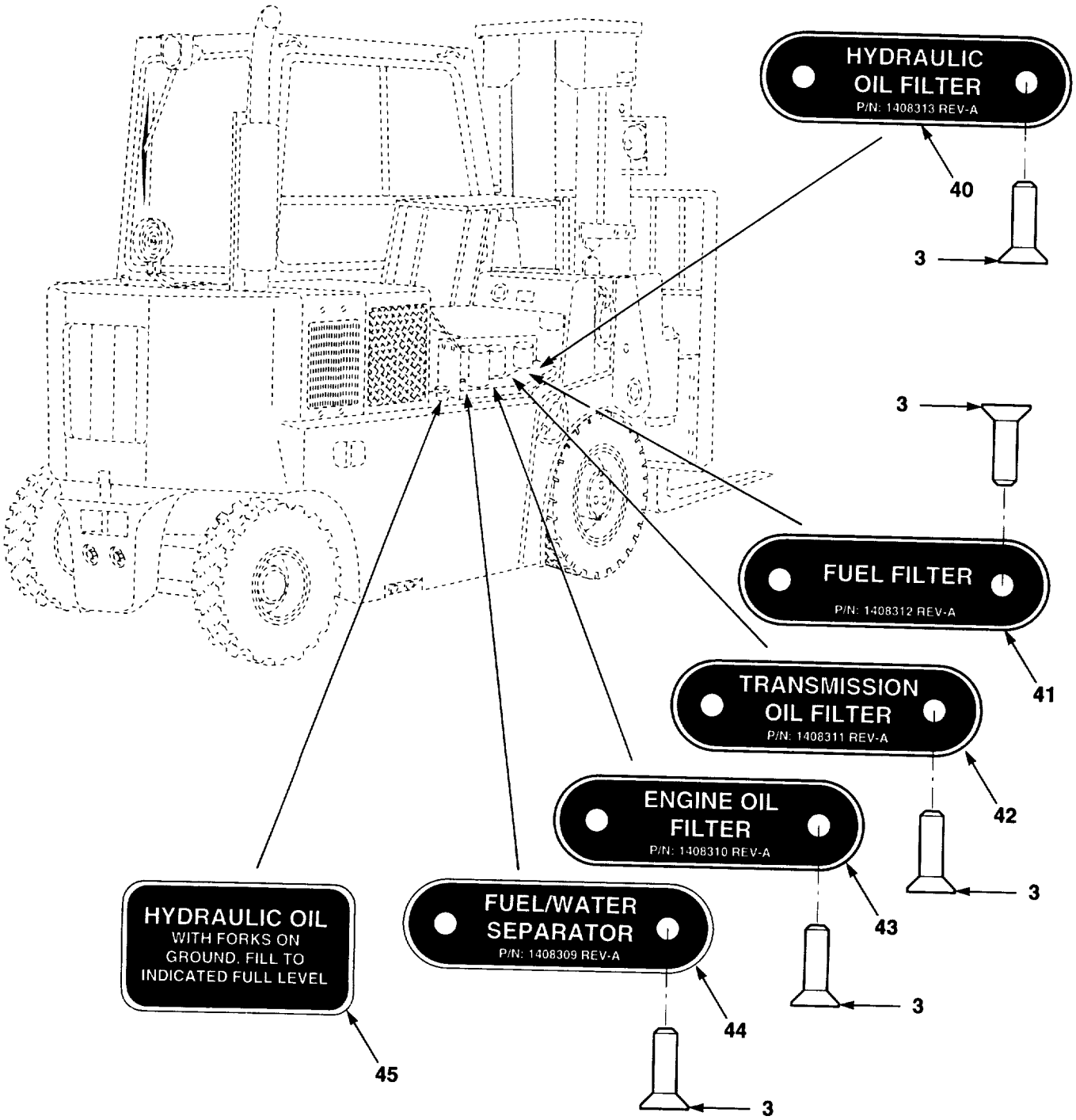

Figure 129. Data Plates and Decals (Sheet 7 of 7)

https://truckmanualshub.com/ 283

(1) ITEM NO.	(2) SMR CODE	(3) NSN	(4) CAGEC	(5) PART NUMBER	(6) DESCRIPTION AND USABLE ON CODES (UOC)	(7) QTY
					GROUP 2210 DATA PLATES AND INSTRUCTION HOLDERS	
					FIG. 129 DATA PLATES AND DECALS	
1	PAOZZ		07443	50690	MARKER, IDENTIFICATI	1
2	PAOZZ	9905014203467	07443	1405232	PLATE, INSTRUCTION DISCONNECT	1
3	XBOZZ		07443	51365-3	RIVET	38
4	XBOZZ		07443	30300	DECAL, WARNING, SEAT	1
5	PAOZZ		07443	36523	PLATE, IDENTIFICATION	1
6	XBOZZ		07443	50365-Y	NAMEPLATE, WARNING	1
7	PAOZZ	9905014203466	07443	1408099	PLATE, INSTRUCTION CYLINDER	1
8	PAOZZ		07443	1405133	PLATE, INSTRUCTION	1
9	PAOZZ		07443	50368-Y	NAMEPLATE PAINT	1
10	PAOZZ		07443	1405055	PLATE, HEATER SWITCH	1
11	XBOZZ		38022	116915-XB	DECAL, SEAT ADJUST	1
12	XBOZZ		38022	VF025HUPP-XB	DECAL, FAN CONTROL	1
13	PAOZZ	7690014198504	07443	1407957	DECAL	1
14	XBOZZ		07443	2372605	DECAL, PINCH POINTS	1
15	XBOZZ		07443	1408725-XA	DECAL, WARNING	1
16	PAOZZ		07443	1407873	LABEL	1
17	PAOZZ	9905014203470	07443	1408389	PLATE, INSTRUCTION	1
18	XBOZZ		07443	1407974-XB	DECAL, INSTRM PANEL	1
19	XBOZZ		07443	1407974-XB1	DECAL, INSTRM F&R	1
20	PAOZZ	7690014198502	07443	1407874	DECAL	1
21	PAOZZ		89749	1CM516	SCREW, CAP, HEXAGON H	8
22	XBOZZ		07443	1409832	DECAL, WARNING, TRUCK	1
23	PAOZZ		07443	1405188	PLATE, INSTRUCTION	4
24	XBOZZ		07443	1405436	DECAL, TRANS	4
25	PAOZZ	7690014198503	07443	1407875	DECAL	4
26	XBOZZ		07443	14248	NAMEPLATE, LOAD WHL	1
27	XBOZZ		07443	1405069	PLATE, SHIPPING DATA	1
28	PAOZZ		07443	14261-02	LABEL	1
29	PAOZZ		07443	1405065	PLATE, IDENTIFICATIO	1
30	PAOZZ	9905014203471	07443	1408307	PLATE, IDENTIFICATIO	1
31	PAOZZ		07443	14261-04	LABEL	1
32	XBOZZ		07443	1408791	WARNING, FORK LIFT	1
33	PAOZZ	9905014203464	07443	1405966	PLATE, INSTRUCTION RATING	1
34	PAOZZ	9905014207037	07443	1408308	PLATE, IDENTIFICATION SECONDARY	1
35	PAOZZ	9905014203463	07443	1408314	PLATE, INSTRUCTION	1
36	XBOZZ		07443	1405062	PLATE, INSTRUCTION	1
37	PAOZZ		07443	1405062	PLATE, INSTRUCTION	2
38	XBOZZ		07443	1405063	TAG, ENGINE	
39	XBOZZ		07443	1405067	PLATE, MAINTENANCE	1
40	PAOZZ	9905014203461	07443	1408313	PLATE, IDENTIFICATIO	1
41	PAOZZ	9905014203460	07443	1408312	PLATE, IDENTIFICATIO (R60SL)	1
42	PAOZZ	9905014230406	07443	1408311	PLATE, IDENTIFICATIO OIL	1
43	PAOZZ	9905014203468	07443	1408310	PLATE, IDENTIFICATIO FILTER	1
44	PAOZZ	9905014203469	07443	1408309	PLATE, IDENTIFICATIO	1
45	PAOZZ	9905014203465	07443	1408388	PLATE, INSTRUCTION	1
					END OF FIGURE	

https://truckmanualshub.com/ 284

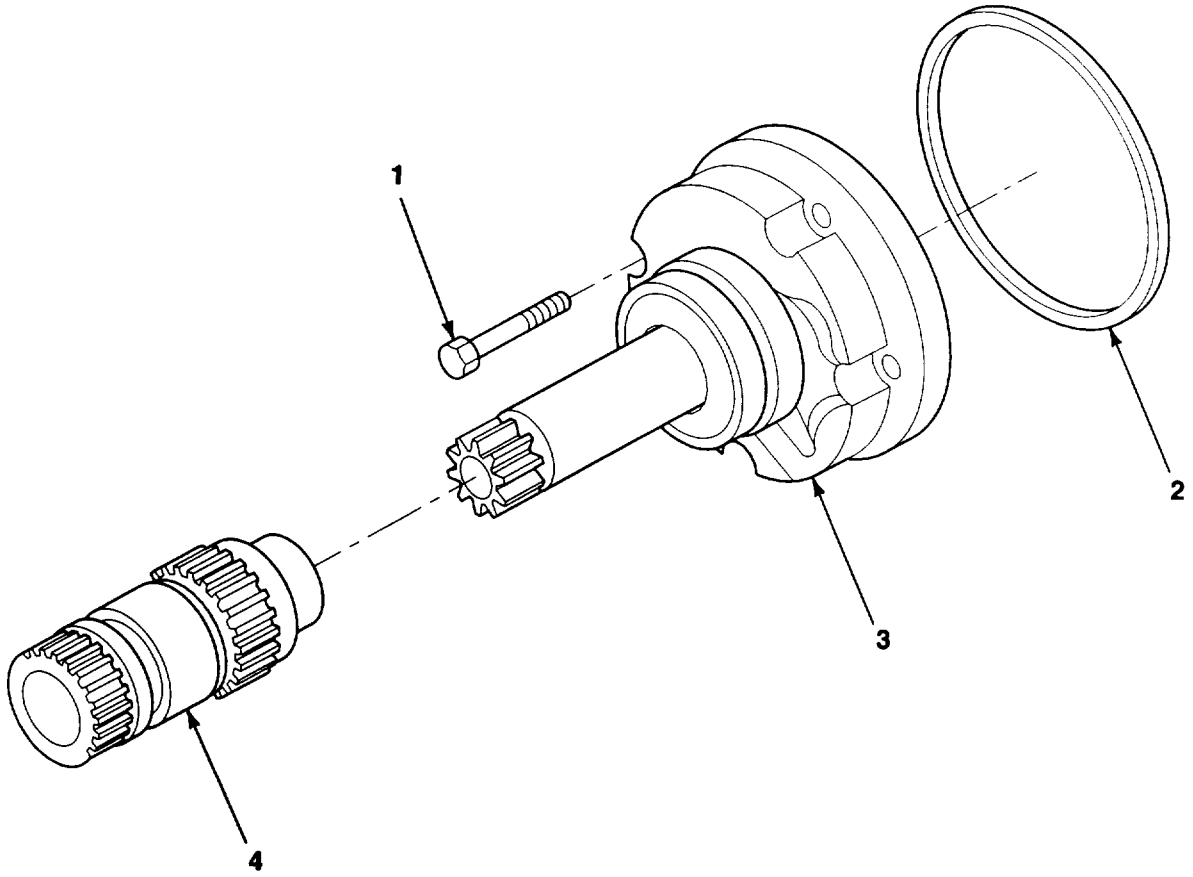

Figure 130. Transmission Hydraulic Pump

https://truckmanualshub.com/ 285

(1) ITEM NO.	(2) SMR CODE	(3) NSN	(4) CAGEC	(5) PART NUMBER	(6) DESCRIPTION AND USABLE ON CODES (UOC)	(7) QTY
					GROUP 24 HYDRAULIC AND FLUID SYSTEMS GROUP 2401 HYDRAULIC PUMP FIG. 130 TRANSMISSION HYDRAULIC PUMP	
1	PAFZZ	5306001610794	79410	179825	BOLT, MACHINE 5/16-18X1 7/8	4
2	PAFZZ	5330009650740	79410	3-61	GASKET	1
3	PAFZZ	2520012527623	79410	10-21-508-005	PUMP ASSEMBLY, FRONT	1
4	PAFZZ	3040012535543	79410	10-21-122-002	SHAFT, SHOULDERED	1
					END OF FIGURE	

https://truckmanualshub.com/ 286

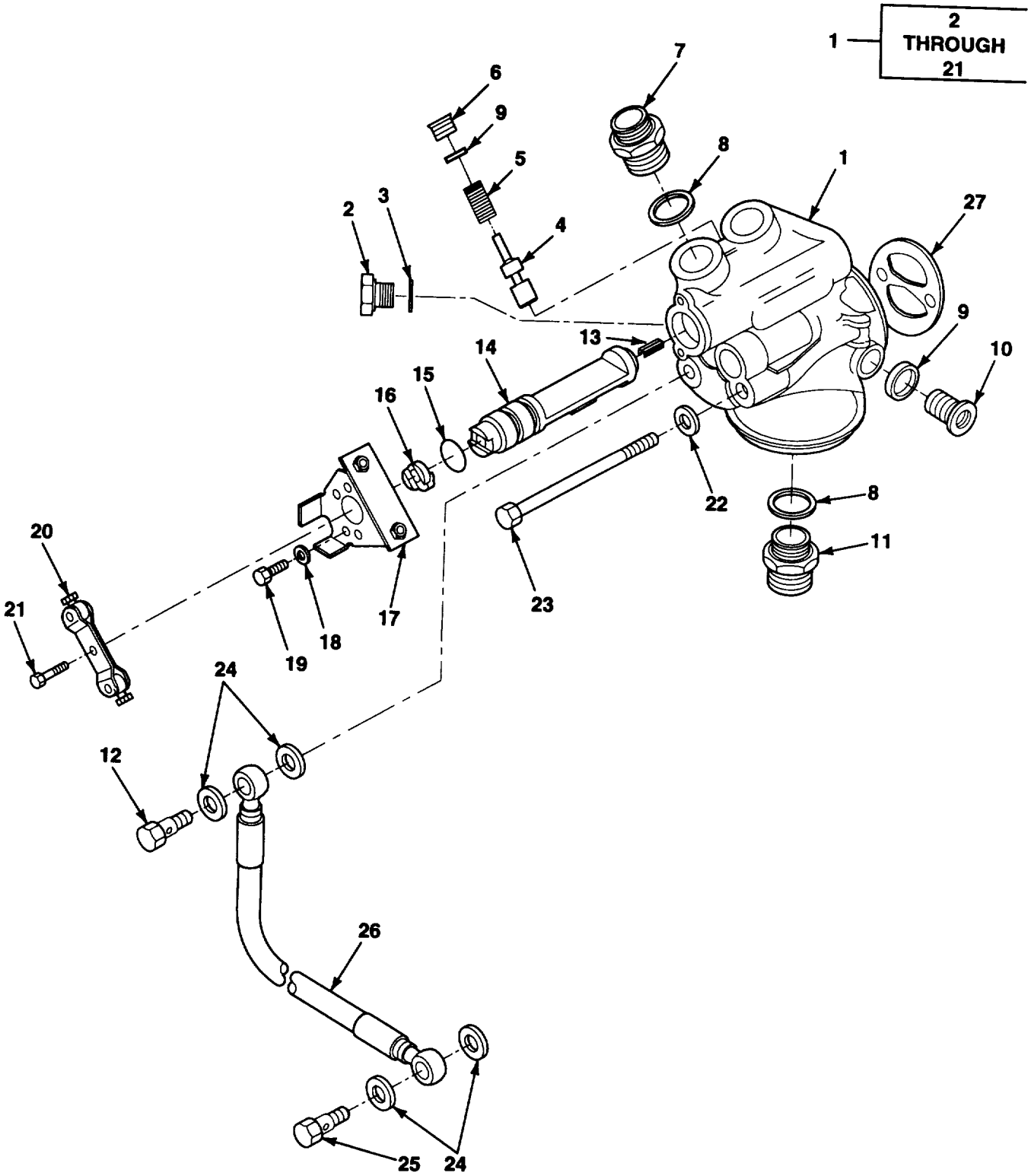

Figure 131. Changeover Valve

https://truckmanualshub.com/ 287

(1) ITEM NO.	(2) SMR CODE	(3) NSN	(4) CAGEC	(5) PART NUMBER	(6) DESCRIPTION AND USABLE ON CODES (UOC)	(7) QTY
					GROUP 2402 MANIFOLD AND/OR CONTROL VALVES FIG. 131 CHANGEOVER VALVE	
1	PAOOO		62445	415 8936	SWITCH, CHANGEOVER	1
2	PAOZZ		62445	01118960	.PLUG, SCREW	1
3	PAOZZ		62445	01118688	.SEAL, PLAIN	1
4	XBOZZ		62445	223 2803	.PISTON	1
5	XBOZZ		62445	223 2804	.SPRING	1
6	XBOZZ		62445	116 5787	.PLUG, SLOTTED	1
7	XBOZZ		62445	116 9838	.ADAPTER	2
8	PAOZZ	5365012807191	62445	111 8737	.RING, SEALING	3
9	PAOZZ	5330012867812	62445	1118700	.GASKET	1
10	PAOZZ		62445	223 2699	.NIPPLE	1
11	PAOZZ		62445	223 2968	.NIPPLE	1
12	PAOZZ		62445	331 5353	.BOLT, FLUID PASSAGE	1
13	PAOZZ		62445	111-5414	.PIN, SPRING	1
14	PAOZZ		62445	415 6728	.COCK, DRAIN	1
15	PAOZZ		62445	223 2991	.PACKING, PREFORMED	1
16	PAOZZ		62445	223 3497	.ADAPTER	1
17	XBOZZ		62445	415 8909	.PLATE, RETAINING	1
18	XBOZZ	5310012503733	53867	2 916 011 014	.WASHER, FLAT	4
19	XBOZZ	5306011510039	62445	111-2240	.BOLT, MACHINE	4
20	XBOZZ		62445	241 3879	.LEVER	1
21	XBOZZ		62445	112 7031	.BOLT, MACHINE	1
22	PAOZZ	5310014155222	89749	1EM80	WASHER, FLAT	2
23	XBFZZ	5306012443716	62445	112-4803	BOLT, MACHINE	4
24	PAFZZ	5330010159617	36719	1118659	GASKET	4
25	PAFZZ	5305011904585	62445	111-9237	SCREW, CAP, HEXAGON H	1
26	XBFZZ		62445	223 8725	HOSE ASSY	1
27	PAFZZ	5330013432670	62445	415 4482	GASKET	1
					END OF FIGURE	

https://truckmanualshub.com/ 288

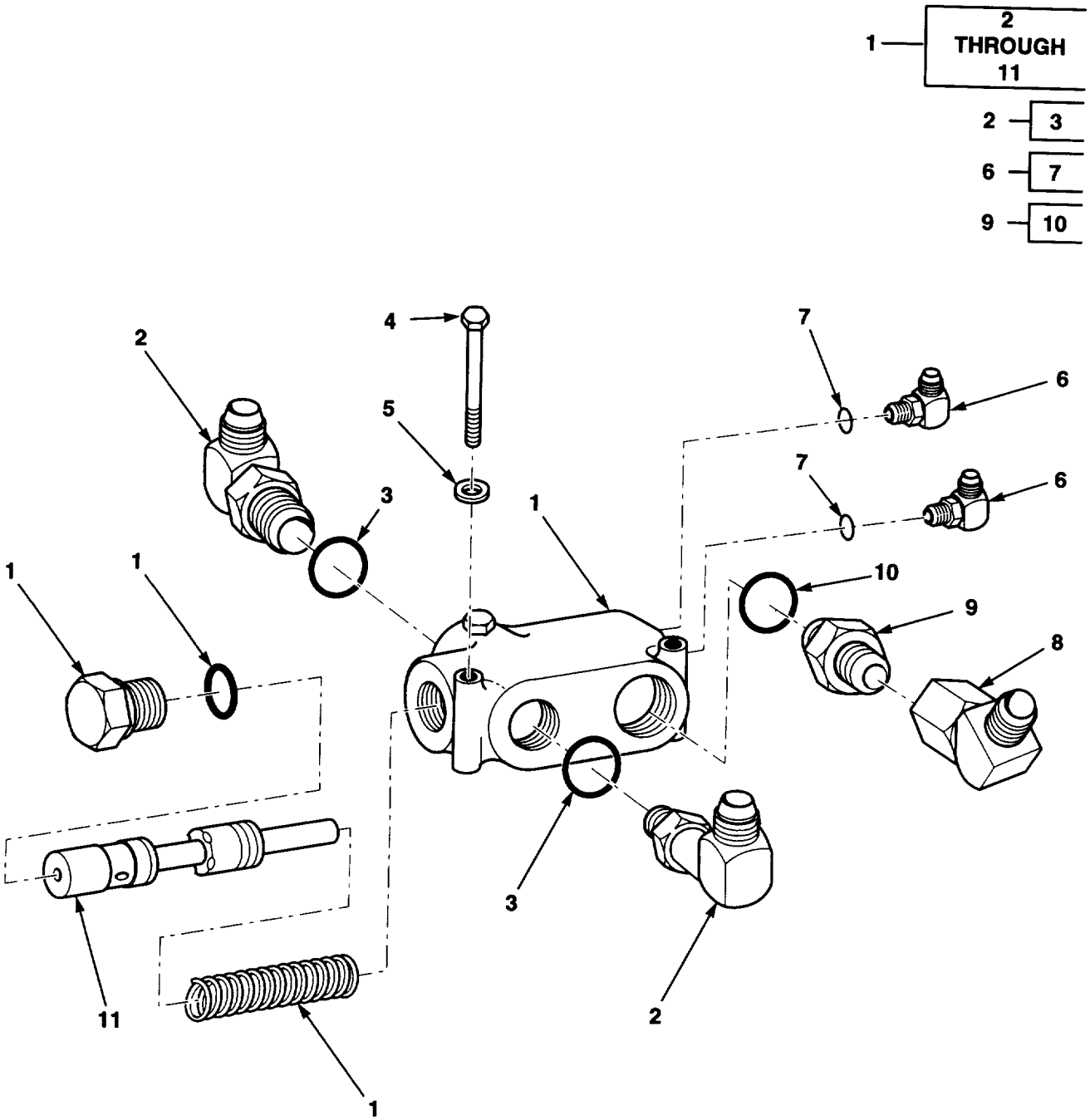

Figure 132. Priority Valve

https://truckmanualshub.com/ 289

(1) ITEM NO.	(2) SMR CODE	(3) NSN	(4) CAGEC	(5) PART NUMBER	(6) DESCRIPTION AND USABLE ON CODES (UOC)	(7) QTY
					GROUP 2402 MANIFOLD AND/OR CONTROL VALVES FIG. 132 PRIORITY VALVE	
1	PAOFF	4820013965028	96151	606-1295-LA	VALVE, SAFETY RELIEF	1
2	PAOZZ	4730011564835	56161	10503869	.ADAPTER, STRAIGHT, TU	2
3	PAOZZ		96906	MS28778	..PACKING, PREFORMED	1
4	PAOZZ	5305014342484	89749	1CM880	.SCREW, CAP, HEXAGON H M8X80	2
5	PAOZZ	5310014194499	89749	18EM824	.WASHER, FLAT M8X24	2
6	PAOZZ	4730005852309	96906	MS51527A4	.ELBOW, TUBE TO BOSS	2
7	PAOZZ		96906	NS28778	..PACKING, PREFORMED	1
8	PAOZZ		93061	10 46X-S	.FITTING, SWIVEL	1
9	PAOZZ		93061	851-FS0--8X08	.ADAPTER	1
10	PAOZZ		96906	MS28778	..PACKING, PREFORMED	1
11	PAOZZ		07443	2779127	.VALVE, INLET CHECK	1
					END OF FIGURE	

https://truckmanualshub.com/ 290

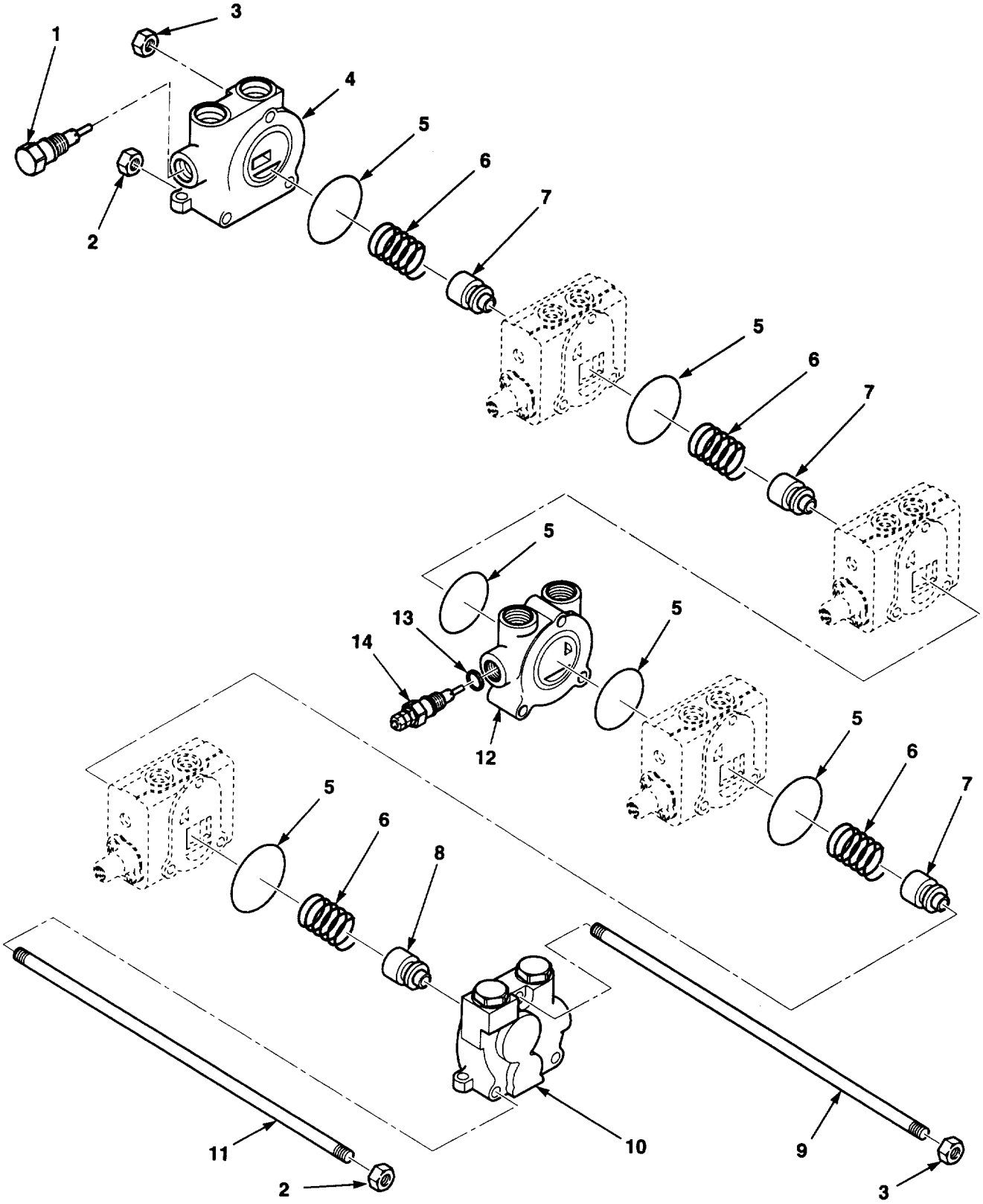

Figure 133. Stack Valve (Sheet 1 of 2)

https://truckmanualshub.com/ 291

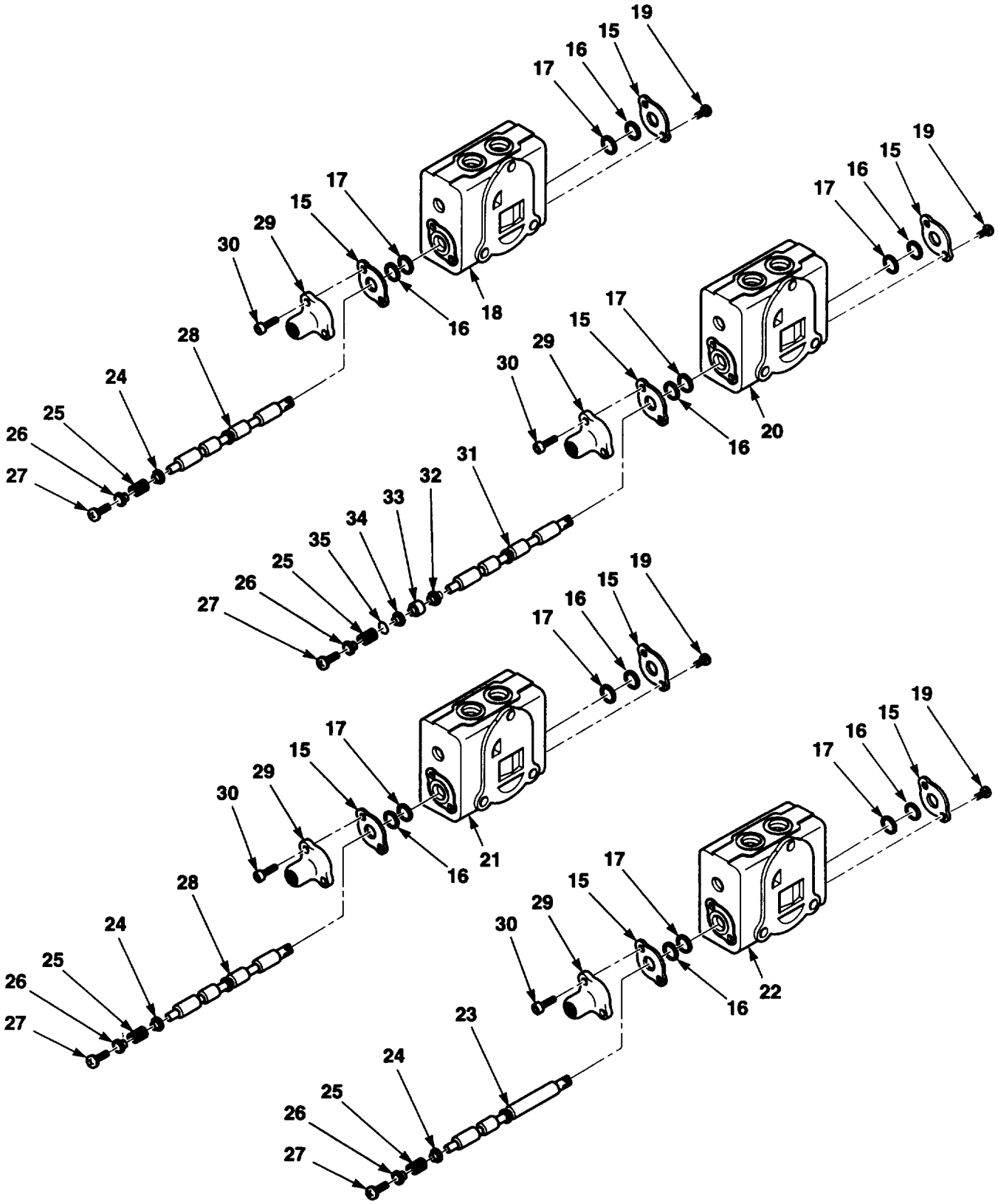

Figure 133. Stack Valve (Sheet 2 of 2)

https://truckmanualshub.com/ 292

(1) ITEM NO.	(2) SMR CODE	(3) NSN	(4) CAGEC	(5) PART NUMBER	(6) DESCRIPTION AND USABLE ON CODES (UOC)	(7) QTY
					GROUP 2402 MANIFOLD AND/OR CONTROL VALVES FIG. 133 STACK VALVE	
1	PAFZZ	5365012663174	93784	52610	PLUG, MACHINE THREAD	1
2	PAFZZ		93784	1861	NUT, SPECIAL	2
3	PAFZZ		93784	1052	NUT, SPECIAL TOP	1
4	XBFZZ		93784	5006-C3	HOUSING, OUTLET	1
5	PAFZA	5330000718844	93784	564	PACKING, PREFORMED	6
6	PAFZZ	5360001577372	93784	5064	SPRING, HELICAL, COMP	4
7	PAFZZ	4820004941861	93784	5011	DISK, VALVE 1, 2, 3 SPOOLS	3
8	PAFZZ	4820004941866	93784	5648	DISK, VALVE 4 SPOOL	1
9	PAFZZ		93784	5089-5	TIE ROD TOP	1
10	XBFZZ		93784	P5003-A67	OUTLET SECTION ASSY	1
11	PAFZZ		93784	5069-5	TIE ROD BOTTOM	2
12	XBFZZ		93784	5004-N1	HOUSING, INLET	1
13	PAFZZ	5330008107491	93784	3384	O-RING	1
14	XBFZF	4820003499089	93784	5060	VALVE, SAFETY RELIEF	1
15	XBFZZ	4820004941860	93784	5012	PLATE, SEAL, PLUNGER	8
16	PAFZZ	2590008138320	93784	5029	RING, WIPER	8
17	PAFZZ	5330002119376	93784	130	O-RING	8
18	XBFZZ		93784	5005-A1	HOUSING, SPOOL	1
19	PAFZZ	5305011918163	93784	5035	SCREW, CAP, HEXAGON H	8
20	XBFZZ		93784	5005-L2	HOUSING, SPOOL SPOOL #2	1
21	XBFZZ		93784	5005-V2	HOUSING, SPOOL SPOOL #3	1
22	XBFZZ		93784	5005-V6	HOUSING, SPOOL SPOOL #4	1
23	XBFZZ		93784	55172	SPOOL 4 SPOOL	1
24	PAFZZ	5340011918203	93784	5013	SEAT, HELICAL COMPRE 1, 3, 4 SPOOLS	3
25	PAFZZ	5360012652242	93784	52270	SPRING, HELICAL, COMP 2 SPOOL	4
26	PAFZZ	5305001384618	93784	5015	SCREW, SHOULDER 1, 3, 4 SPOOLS	3
27	PAFZZ	5305009890844	93784	3432	SCREW, MACHINE	4
28	PAFZZ		93784	5031	SPOOL 1, 3 SPOOLS	2
29	PAFZZ		93784	5028-2	CAP, SPOOL	4
30	PAFZZ	5305009890844	93784	3432	SCREW, MACHINE	8
31	XBFZZ		93784	52488	SPOOL 2 SPOOL	1
32	PAFZZ		93784	51984	PISTON 2 SPOOL	1
33	PAFZZ	5365012664121	93784	51983	PLUG, MACHINE THREAD 2 SPOOL	1
34	PAFZZ	5340012656746	93784	5264	RETAINER, HELICAL CO 2 SPOOL	2
35	PAFZZ	5330008357485	96906	MS28778-3	O-RING 2 SPOOL	1
					END OF FIGURE	

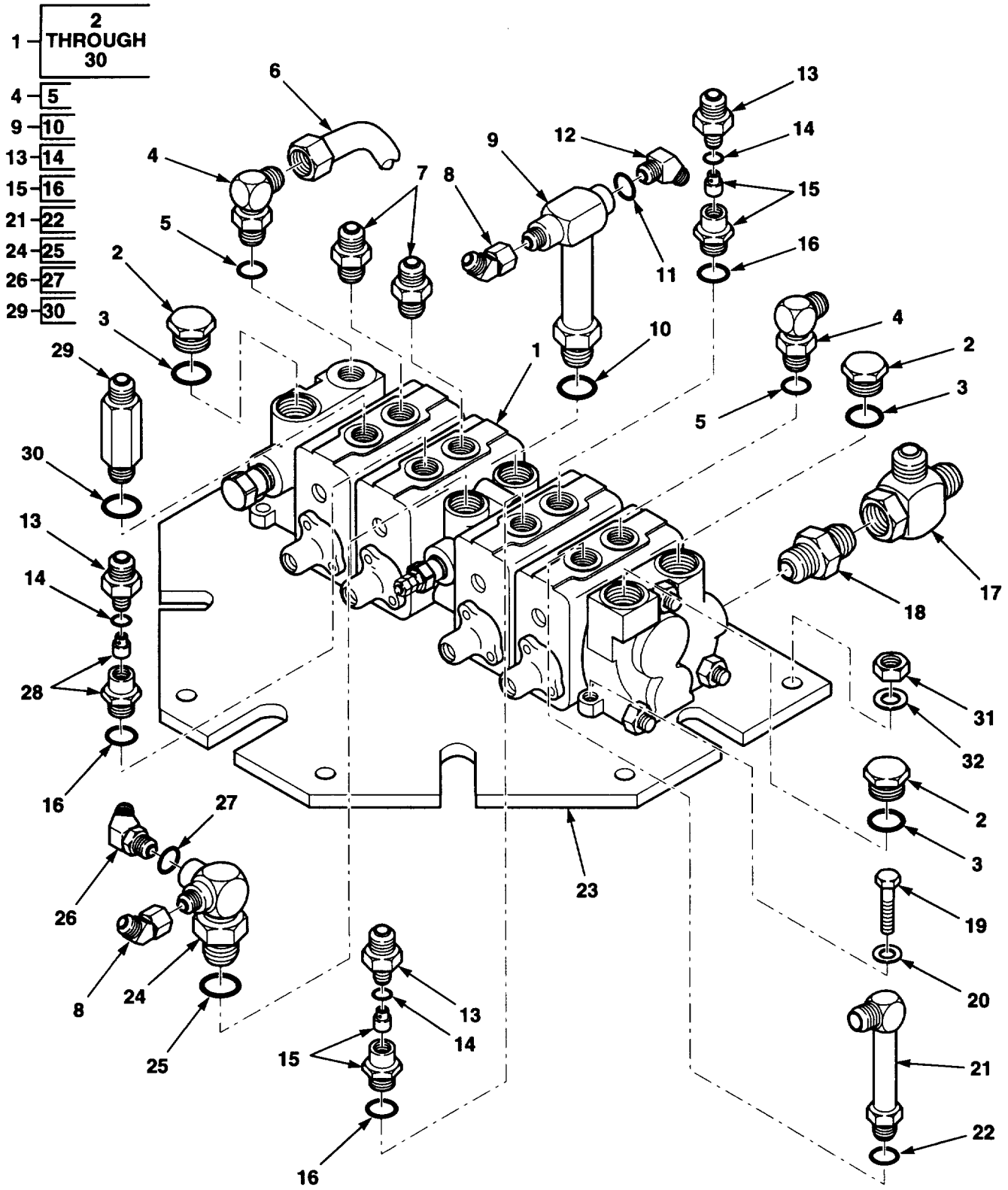

Figure 134. Stack Valve Fittings

https://truckmanualshub.com/ 294

(1) ITEM NO.	(2) SMR CODE	(3) NSN	(4) CAGEC	(5) PART NUMBER	(6) DESCRIPTION AND USABLE ON CODES (UOC)	(7) QTY
					GROUP 2402 MANIFOLD AND/OR CONTROL VALVES FIG. 134 STACK VALVE FITTINGS	
1	XBFFF		93784	5000D216	VALVE, STACK	1
2	PAFZZ	5365000034162	93784	3390	.PLUG, MACHINE THREAD	1
3	PAFZZ	5330008107491	93784	3384	.O-RING	1
4	PAOZZ	4730006759216	96906	MS51534A12-8	.REDUCER, TUBE	1
5	XAOZZ		53790	854-FSO-04X-4-XA	..PACKING, PREFORMED	1
6	XBOZZ		07443	1407663	.TUBE, POWER	1
7	PAOZZ		59257	6-8-SA-2	.CONNECTOR, STRAIGHT	1
8	PAOZZ		93061	10 V6X-S	.ELBOW, SWIVEL FLANGE	2
9	PAOZZ		53790	854-FSO-04X04	.ELBOW	1
10	XAOZZ		53790	854-FSO-04X-4-XA	..PACKING, PREFORMED	1
11	PAOZZ	4730014345214	07443	1407279	.ELBOW, PIPE TO HOSE	1
12	PAOZZ		53790	848-FSO-06X04	.ELBOW	3
13	PAOZZ	4730008120924	96906	M5S51531B12	.NUT, TUBE COUPLING	3
14	XAOZZ		53790	854-FSO-04X-4-XA	..PACKING, PREFORMED	1
15	PAOZZ		5E240	6410-08-08-0-089	.BUSHING	2
16	XAOZZ		53790	854-FSO-04X-4-XA	..PACKING, PREFORMED	1
17	PAOZZ	4730011047503	96906	MS51523A12	.TEE, TUBE	1
18	PAOZZ	4730013958802	07516	K62-12-10	.FITTING, LUBRICATION	1
19	PAOZZ	5305013996910	89749	1CM825	.SCREW, CAP, HEXAGON H M8X25	3
20	PAOZZ	5310014194499	89749	18EM824	.WASHER, FLAT M8X24	3
21	PAOZZ	4730014338281	5E240	6801LL-10X10NW0	.ELBOW	1
22	XAOZZ		53790	854-FSO-04X-4-XA	..PACKING, PREFORMED	1
23	XBOZZ		07443	1407361	.PLATE, MOUNTING	1
24	PAOZZ	4730005852309	96906	M5S51527A4	.ELBOW, TUBE TO BOSS	1
25	XAOZZ		53790	854-FSO-04X-4-XA	..PACKING, PREFORMED	1
26	PAOZZ	4730014345215	07443	1407278	.ELBOW, PIPE TO HOSE	1
27	XAOZZ		53790	854-FSO-04X-4-XA	..PACKING, PREFORMED	1
28	PAOZZ		5E240	6410-08-08-0-.42	.BUSHING	1
29	PAOZZ	4730014345432 5	E240	6400-L-06-08-0	.ADAPTER, STRAIGHT, PI	1
30	XAOZZ		53790	854-FSO-04X-4-XA	..PACKING, PREFORMED	1
31	PAOZZ	5310014155214	89749	1DM8	NUT, PLAIN, HEXAGON M8	5
32	PAOZZ	5310014194499	89749	18EM824	WASHER, FLAT M8X24	5
					END OF FIGURE	

https://truckmanualshub.com/ 295

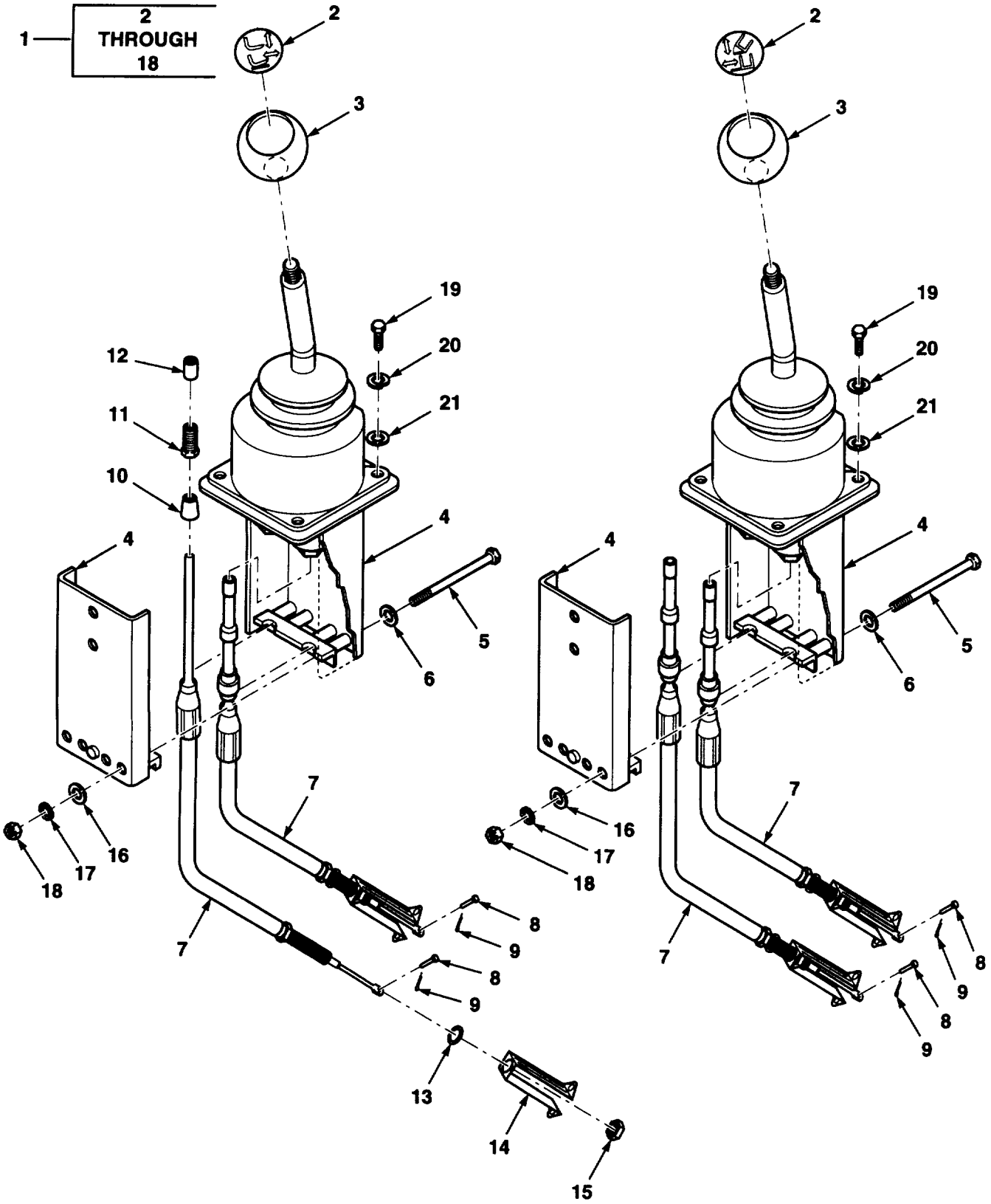

Figure 135. Joystick Controls

https://truckmanualshub.com/ 296

(1) ITEM NO.	(2) SMR CODE	(3) NSN	(4) CAGEC	(5) PART NUMBER	(6) DESCRIPTION AND USABLE ON CODES (UOC)	(7) QTY
					GROUP 2403 HYDRAULIC CONTROL LEVERS AND LINKAGE	
					FIG. 135 JOYSTICK CONTROLS	
1	PAOOO		07443	1407331	JOYSTICK CONTROL L & T	1
1	PAOOO		07443	1407330	JOYSTICK CONTROL P & S	1
2	XBOZZ		07443	1400611	.DECAL, LIFT	1
2	XBOZZ		07443	1400612	.DECAL, SIDE	1
3	XBOZZ		07443	A50381	.KNOB	2
4	XBOZZ		06970	DC470	.HOUSING, INNER	1
4	XBOZZ		06970	DC471	.HOUSING, OUTER	1
5	PAOZZ	5305014343001	89749	1C432	.SCREW, CAP, HEXAGON H	6
6	PAOZA	5310006858191	84955	KS1411-2-05-13	.WASHER, FLAT	6
7	XBOZZ		07443	1407470	.CABLE ASSEMBLY	4
8	XBOZZ		07443	1405944	.PIN, CLEVIS	1
9	PAFZZ	5315002341863	96906	MS24665-300	.PIN, COTTER	4
10	PAOZZ		06970	D2644-2	.BOOT, DUST AND MOIST	1
11	PAOZZ		06970	DP147-1	.LOCK SCREW, CABLE	1
12	PAOZZ		06970	DG7128-1	.BUSHING, CABLE	4
13	XAOZZ		07443	1407470-XA	.WASHER	4
14	XAOZZ		07443	1407470-XA3	.ADAPTER	4
15	XAOZZ		07443	1407470-XA4	.NUT	4
16	PAOZA	5310006858191	84955	KS1411-2-05-13	.WASHER, FLAT	6
17	PAOZZ	5310007542005	96906	MS35338-52	.WASHER, LOCK	12
18	PAOZZ		89749	61D4	.NUT, HEX	6
19	PAOZZ	5305121240527	89749	1CM625	SCREW, CAP, HEXAGON H M6X25	8
20	PAOZZ	5310013587977	77237	6EM60	WASHER, LOCK M60	8
21	PAOZZ	5310013965256	89749	18EM613	WASHER, FLAT M6X13	8
					END OF FIGURE	

https://truckmanualshub.com/ 297

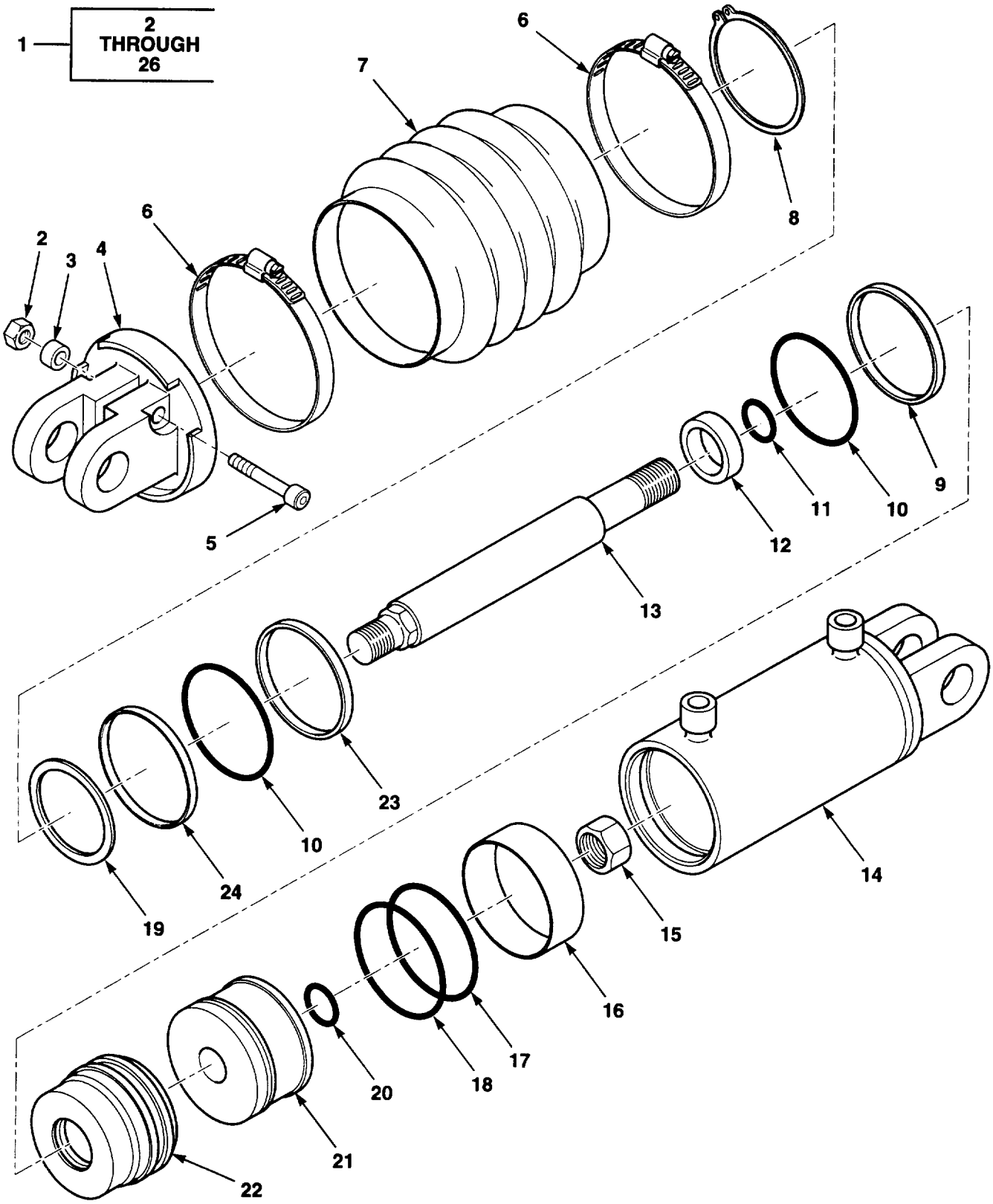

Figure 136. Mast Tilt Cylinder

https://truckmanualshub.com/ 298

(1) ITEM NO.	(2) SMR CODE	(3) NSN	(4) CAGEC	(5) PART NUMBER	(6) DESCRIPTION AND USABLE ON CODES (UOC)	(7) QTY
					GROUP 2404 HYDRAULIC TILT CYLINDER AND TILT CRANK	
					FIG. 136 MAST TILT CYLINDER	
1	XBOFF		07443	1408629	CYLINDER, TILT	2
2	PAFZZ		07443	51169-3	.NUT, SELF-LOCKING HE	1
3	PAFZZ	5365014339009	07443	1408868	.SPACER, SLEEVE	1
4	PAOZZ		07443	1408625	.CLEVIS	1
5	PAFZZ		89749	73G636	.SCREW	1
6	PAOZZ	4730012008460	81646	6364	.CLAMP, HOSE	2
7	PAOZZ		07443	36510	.COVER, CYL ROD	1
8	PAFZZ		05283	311-0325	.RING, RETAINING	1
9	KFFZZ		05283	157-0162-0125-03 7	.PACKING, PERFORMED PART OF KIT P/N 795-0350-K008	1
10	KFFZZ		05283	100-236	.SEAL, TUBE PART OF KIT P/N 795-0350-K008	2
11	KFFZZ		05283	185-301-0350	.PACKING, PREFORMED PART OF KIT P/N 795-0350-K008	1
12	KFFZZ		05283	165-500-0125	.WIPER, ROD PART OF KIT P/N 795-0350-K008	1
13	PAFZZ		05283	695-55056	.ROD, PISTON, LINEAR A	1
14	XAFZZ		05283	695-23266	.CAP AND TUBE	1
15	PAFZZ	5310013122408	05283	410-10014	.NUT, PLAIN, HEXAGON	1
16	KFFZZ		05283	575-302-100-06-0 35	.BEARING PART OF KIT P/N 795-0350-K008	1
17	KFFZZ		05283	695-30029	.PACKING, PERFORMED PART OF KIT P/N 795-0350-K00B	1
18	PAFZZ	5330013123725	05283	100-214	.SEAL, PLAIN	1
19	PAFZZ		05283	695-50194	.SPACER	1
20	KFFZZ		05283	100-151	.RING, EXPANDER PART OF KIT P/N 795-0350-K008	1
21	PAFZZ		05283	695-50184	.PISTON	1
22	XBFZZ		05283	695-55053	.HEAD	1
23	KFFZZ		05283	134-001-236	.RING, BACKUP PART OF KIT P/N 795-0350-K008	1
24	PAFZZ		05283	695-50204	.RING, SHEAR	1
					END OF FIGURE	

https://truckmanualshub.com/ 299

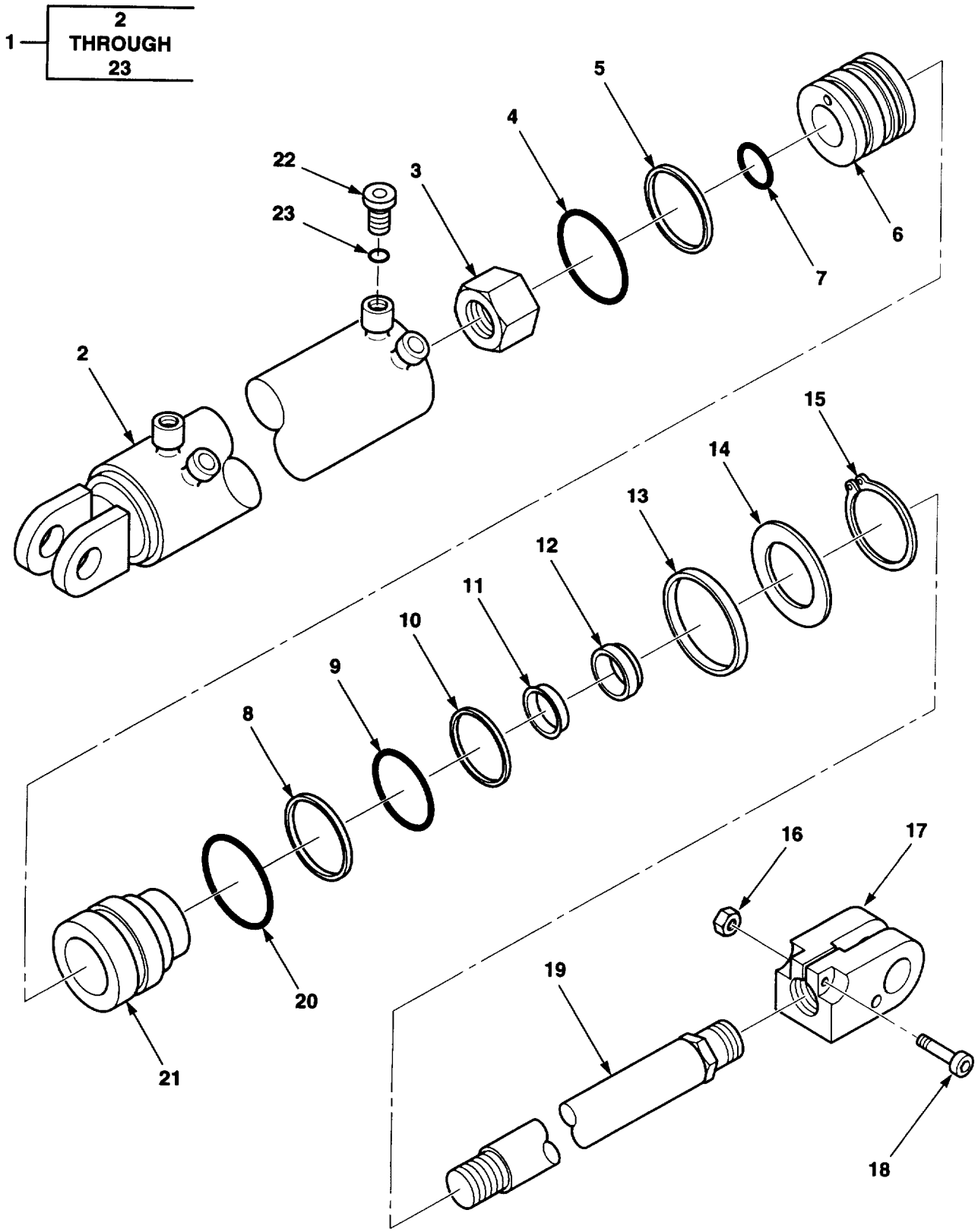

Figure 137. Pivot Cylinder

https://truckmanualshub.com/ 300

(1) ITEM NO.	(2) SMR CODE	(3) NSN	(4) CAGEC	(5) PART NUMBER	(6) DESCRIPTION AND USABLE ON CODES (UOC)	(7) QTY
					GROUP 2405 MAST COLUMN FIG. 137 PIVOT CYLINDER	
1	PFOFZ		05283	3WH-A025	CYLINDER ASSEMBLY, A	1
2	XAFZZ		05283	52936	.CAP AND TUBE	1
3	PAFZZ		05283	410-12512	.NUT, SELF-LOCKING	1
4	KFFZZ		05283	185-301-0300	.PACKING, PISTON PART OF KIT P/N 795-0300-K008	1
5	KFFZZ		05283	100-145	.RING, EXPANSION PART OF KIT P/N 795-0300-K008	1
6	XAFZZ		05283	695-54570	.PISTON	1
7	KFFZZ		05283	100-218	.SEAL, PISTON, INNER PART OF KIT P/N 795-0300-K008	1
8	KFFZZ		07443	1401132	.SEAL, BACKUP PART OF KIT P/N 795-0300-K008	1
9	KFFZZ		05283	52948	.SEAL, BACKUP PART OF KIT P/N 795-0300-K008	1
10	PAFZZ	5330003594050	12603	25K40116	.O-RING	1
11	KFFZZ		05283	4300-BD-1870-150 0Y375	.PACKING, ROD PART OF KIT P/N 795-0300-K008	1
12	KFFZZ		05283	165-500-0150	.WIPER, ROD PART OF KIT P/N 795-0300-K008	1
13	KFFZZ		05283	695-50203	.RING, SHEAR PART OF KIT P/N 795-0300 K008	1
14	XDFZZ		05283	695-50193	.SPACER	1
15	XDFZZ		05283	311-0275	.RING, RETAINING	1
16	PAFZZ		05283	410-03716	.NUT	1
17	PAFZZ		05283	695-54572	.CLEVIS, ROD END	1
18	PAFZZ		05283	350-03716-0175	.SCREW, CAP, HEX HD	1
19	XAFZZ		05283	695-54569	.ROD, PISTON	1
20	KFFZZ		05283	100-232	.SEAL PART OF KIT P/N 795-0300-K008	1
21	XAFZZ		05283	52935	.HEAD	1
22	XAFZZ		05283	3WH-A025-XA	.PLUG, CYLINDER	1
23	XAFZZ		05283	3WH-A025-XA1	.PACKING, PREFORMED	1
					END OF FIGURE	

https://truckmanualshub.com/ 301

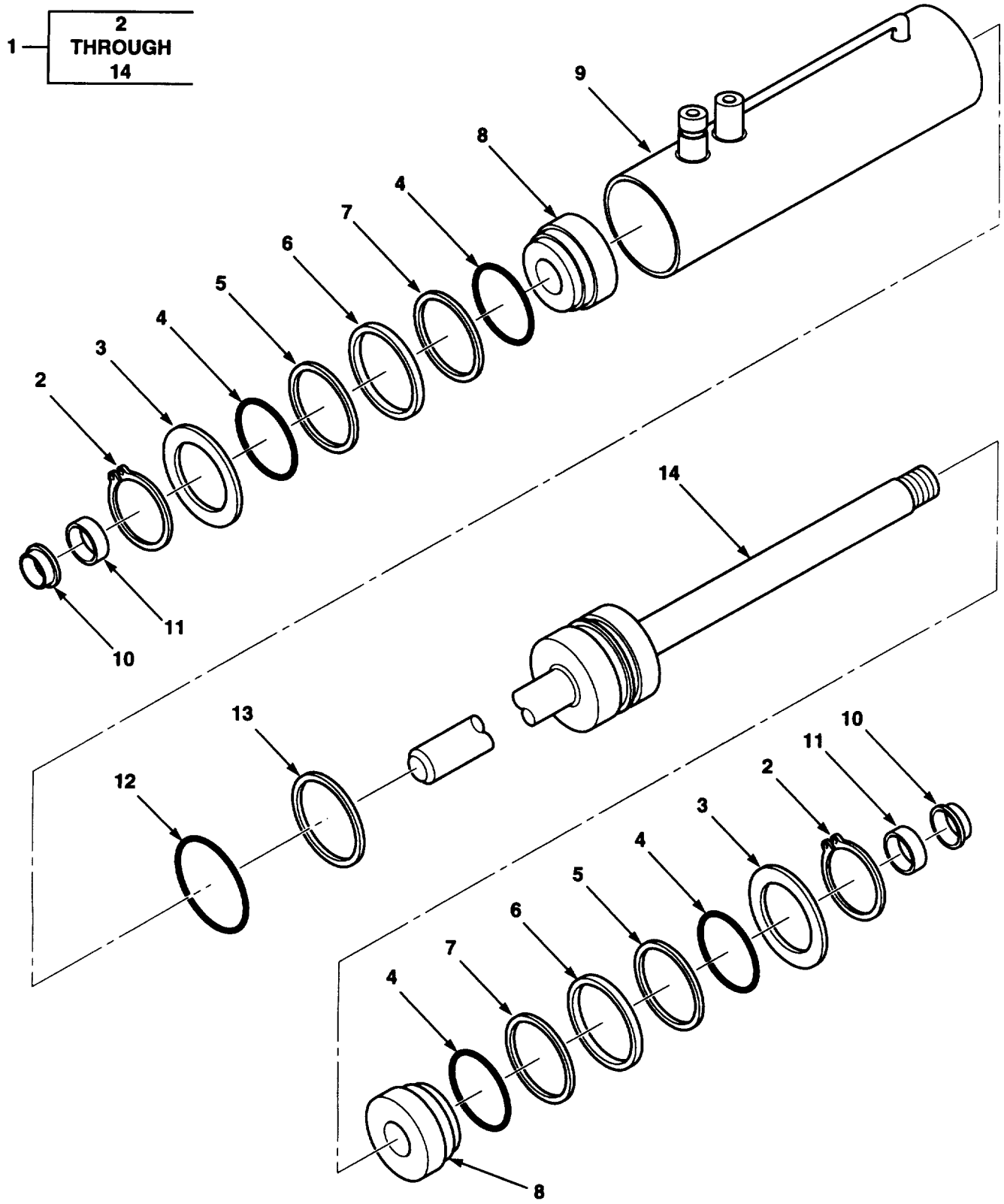

Figure 138. Shift Cylinder

https://truckmanualshub.com/ 302

(1) ITEM NO.	(2) SMR CODE	(3) NSN	(4) CAGEC	(5) PART NUMBER	(6) DESCRIPTION AND USABLE ON CODES (UOC)	(7) QTY
					GROUP 2405 MAST COLUMN FIG. 138 SHIFT CYLINDER	
1	PAFFF	3040013965033	05283	4WH-A004	CYLINDER ASSEMBLY	1
2	PAFZZ	5365013958017	05283	313-0375	.RING, RETAINING	2
3	PAFZZ	5365013982295	05283	695-55586	.SPACER, TUBE END	2
4	KFFZZ		05283	100-240	.PACKING, PREFORMED PART OF KIT P/N 795-0400-K004	4
5	KFFZZ		05283	695-30045	.SEAL PART OF KIT P/N 795-0400-K004	2
6	PAFZZ	5340013960528	05283	695-50205	.RING, SHEAR	2
7	KFFZZ		05283	130-001-240	.SEAL, BACKUP PART OF KIT P/N 795-0400- K004	2
8	XAFZZ		05283	695-55578	.HEAD	2
9	XAFZZ		05283	695-23226	.TUBE	1
10	KFFZZ		05283	165-5000-0150	.WIPER, ROD PART OF KIT P/N 795-0400-K004	2
11	KFFZZ		05283	157-0187-0150-037	.PACKING, ROD PART OF KIT P/N 795-0400-KO04	2
12	KFFZZ		05283	100-153	.PACKING, PREFORMED PART OF KIT P/N 795-0400-K004	1
13	KFFZZ		05283	185-301-0400	.GASKET PART OF KIT P/N 795-0400-K004	1
14	XAFZZ		05283	695-00004	.ROD ASSEMBLY, PISTON	1
					END OF FIGURE	

https://truckmanualshub.com/ 303

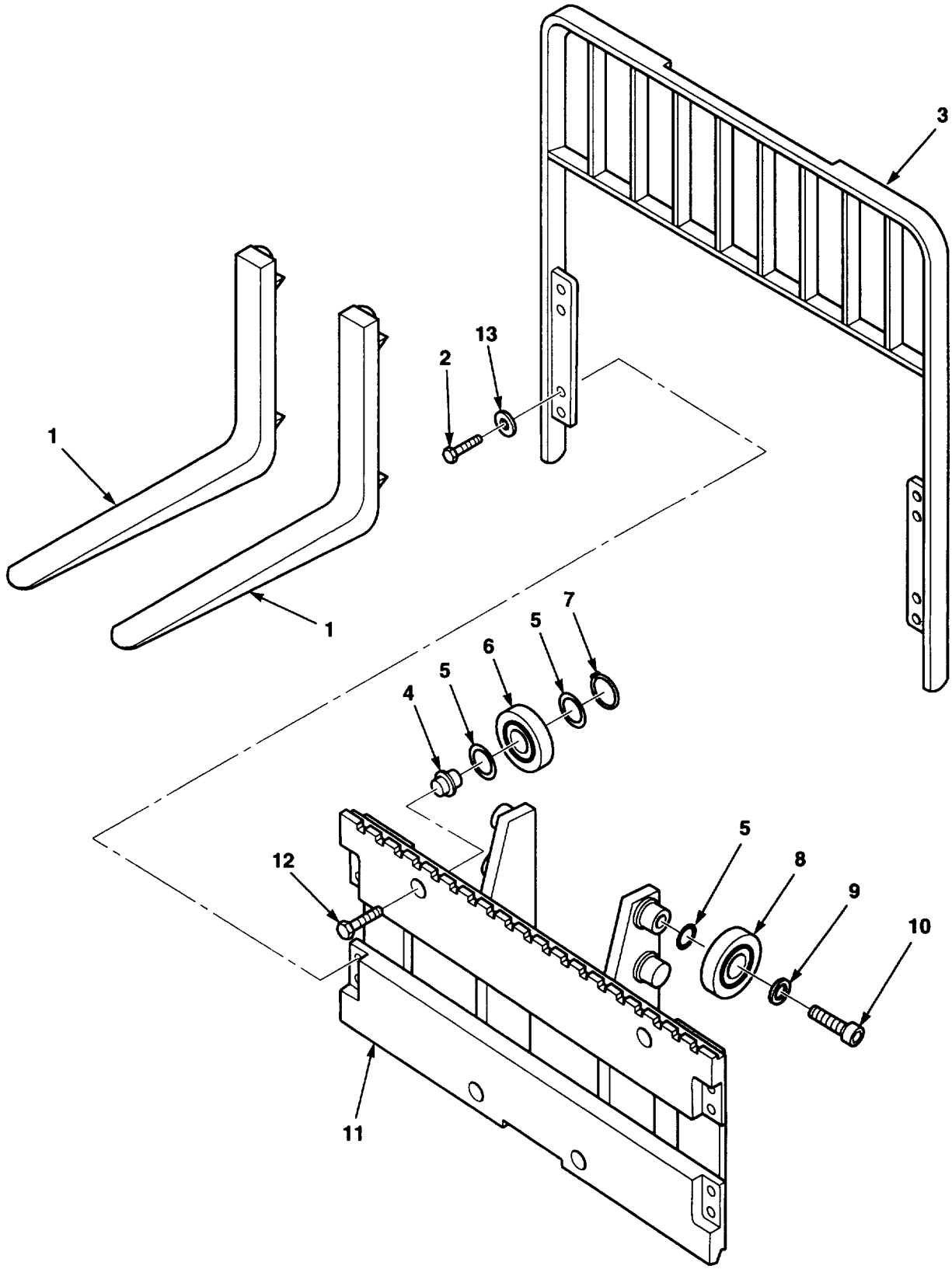

Figure 139. Carriage and Forks

https://truckmanualshub.com/ 304

(1) ITEM NO.	(2) SMR CODE	(3) NSN	(4) CAGEC	(5) PART NUMBER	(6) DESCRIPTION AND USABLE ON CODES (UOC)	(7) QTY
					GROUP 2405 MAST COLUMN FIG. 139 CARRIAGE AND FORKS	
1	XBOZZ		07443	1400062	FORK ASSY	2
2	PAOZZ		12603	9G1020	SCREW	8
3	XBOZZ		07443	1407341	REST, LOAD	1
4	PAFZZ	3040013961416	07516	R3561	SHAFT, ECCENTRIC	4
5	PAFZZ	5365013952782	07516	R206	SHIM	1
5	PFFZZ	5365013952782	07516	R206	SHIM	V
6	PAFZZ	5340013957726	07516	R3595	ROLLER ASSEMBLY	4
7	PAFZZ	5325013952135	07516	K97535	RING, RETAINING	4
8	PAFZZ	3110011685303	07443	23253	BEARING, ROLLER	6
9	PAFZZ	5310013960984	07516	R2389	WASHER, FLAT	2
10	PAFZZ	5305013532022	53711	211041411	SCREW, CAP, SOCKET HE	2
11	XBFZZ		07443	1408478	CARRIAGE WELD	1
12	PAFZZ	5306013959602	07516	R3564	BOLT, SELF-LOCKING	4
13	PAFZZ	5310013981728	12603	18EM1632	WASHER, FLAT	4
					END OF FIGURE	

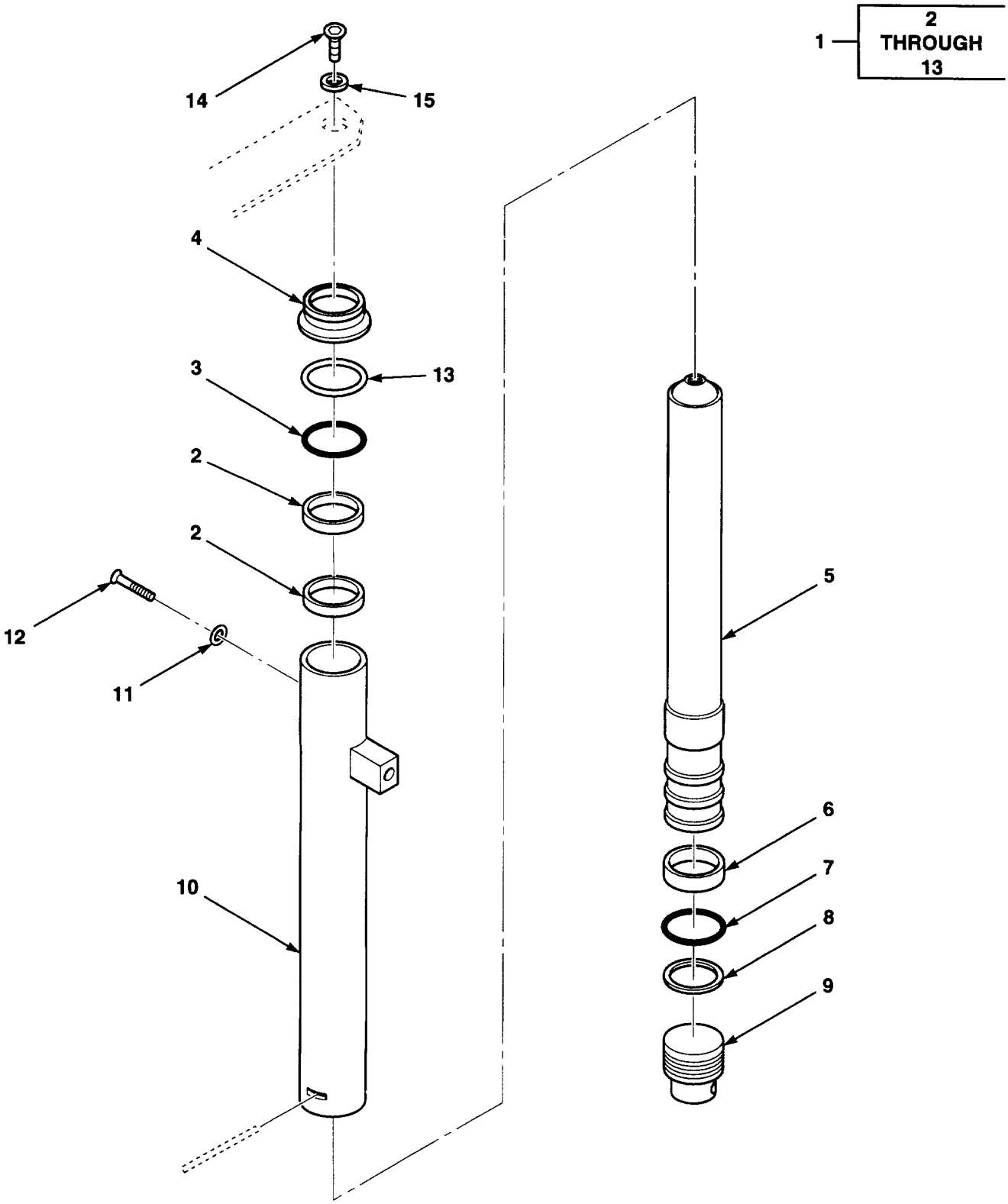

Figure 140. Mast Secondary Cylinder

https://truckmanualshub.com/ 306

(1) ITEM NO.	(2) SMR CODE	(3) NSN	(4) CAGEC	(5) PART NUMBER	(6) DESCRIPTION AND USABLE ON CODES (UOC)	(7) QTY
					GROUP 2405 MAST COLUMN FIG. 140 MAST SECONDARY CYLINDER	
1	PAFFF	3040013958796	07516	R22150-9	CYLINDER ASSEMBLY, A RIGHT	1
1	PFFFZ	3040014344807	07516	R22150L-9A	CYLINDER ASSEMBLY, A LEFT	1
2	PAFZZ	2935013960451	07516	R9037	.RING, WEARING	2
3	PAFZZ	5330014353893	07516	R9034	.SEAL, PLAIN	1
4	PAFZZ	5330014353885	07516	R9169	.RING, WIPER	1
5	XAFZZ		07516	R22155-9A	.ROD ASSY	1
6	PAFZZ	2935013960448	07516	R9038	.RING, WEARING	1
7	KFFZZ		07516	K332	.PACKING, PREFORMED PART OF KIT P/N R22150K	1
8	KFFZZ		07516	K8-332	.RING, BACKUP PART OF KIT P/N R22150K	1
9	PFFZZ	2590013962339	07516	R9096	.BASE	1
10	XBFZZ		07516	R22160R-9	.BARREL ASSY RIGHT	1
10	XBFZZ		07516	R22160L-9	.BARREL ASSY LEFT	1
11	KFFZZ		07516	R2552	.WASHER, SEAL PART OF KIT P/N R22150K	1
12	PAFZZ	5305013957710	07516	R2551	.SCREW, BUTTON HEAD	1
13	PAFZZ	5330010320582	30781	18702250	.PACKING, PREFORMED	2
14	PAFZZ	5305013954672	07516	R4858	SCREW, MACHINE	2
15	PAFZZ		07516	R10328	SHIM	2
					END OF FIGURE	

https://truckmanualshub.com/ 307

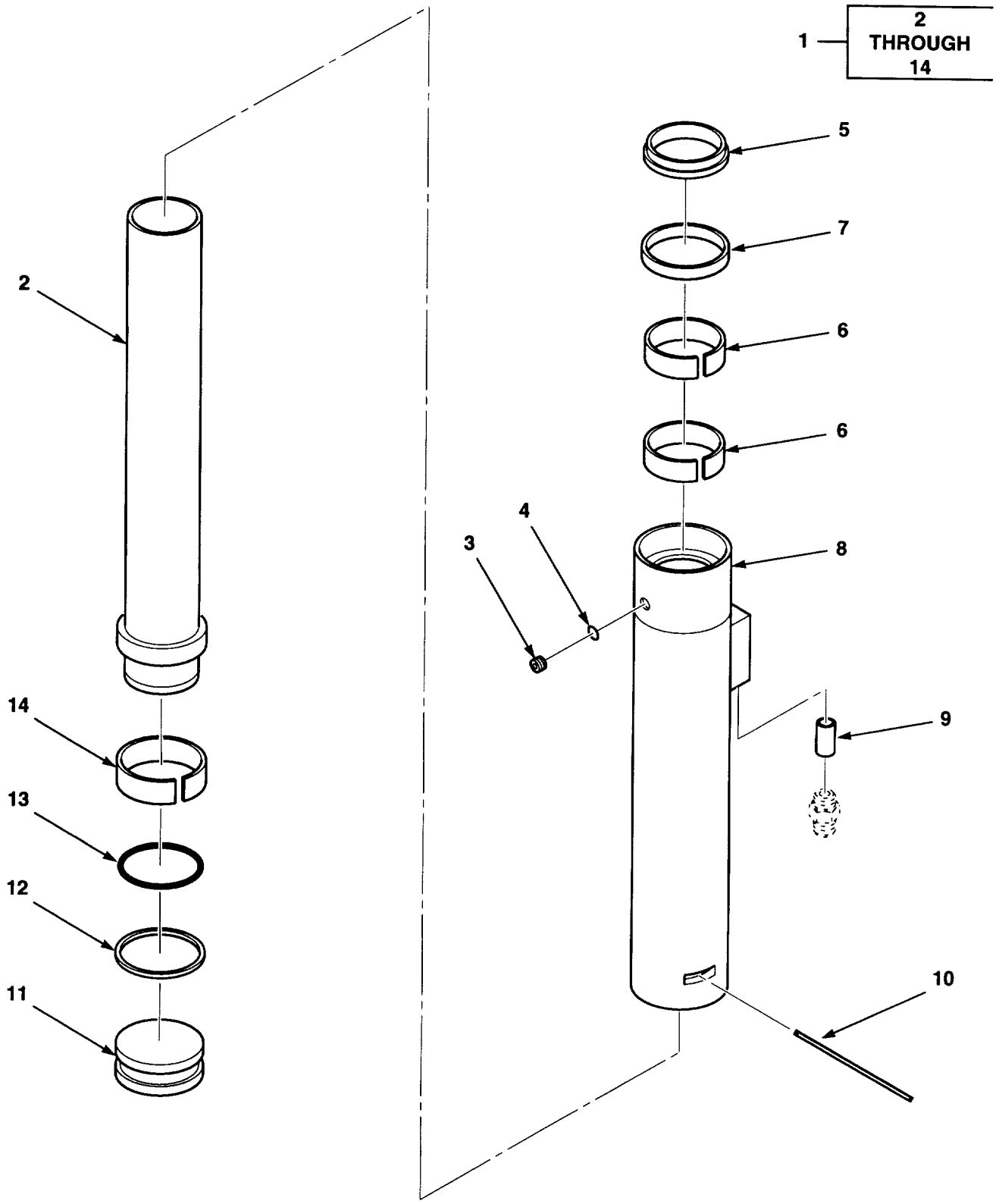

Figure 141. Mast Primary Cylinder

https://truckmanualshub.com/ 308

(1) ITEM NO.	(2) SMR CODE	(3) NSN	(4) CAGEC	(5) PART NUMBER	(6) DESCRIPTION AND USABLE ON CODES (UOC)	(7) QTY
					GROUP 2405 MAST COLUMN FIG. 141 MAST PRIMARY CYLINDER	
1	PAFFF	3040013958795	07516	R18265-90	CYLINDER ASSEMBLY	1
2	XAFZZ		07516	R9085-90	.PISTON ASSY	1
3	PAFZZ	5305013957710	07516	R2551	.SCREW, BUTTON HEAD	1
4	KFFZZ		07516	R2552	.WASHER, SEAL PART OF KIT P/N R18265K	1
5	KFFZZ		07516	R9166	.WIPER PART OF KIT P/N R18265K	1
6	PAFZZ	2935013960453	07516	R9012	.RING, WEARING	2
7	KFFZZ		07516	R9009	.SEAL PART OF KIT P/N R18265K	1
8	XAFZZ		07516	R18270-9	.BARREL ASSY	1
9	PAFZZ	4820012206736	07443	23499	.CARTRIDGE, FLOW PROT	1
10	PAFZZ		07516	R2211-9	.WIRE, LOCK	1
11	PFFZZ	2590013962341	07516	R9076	.BASE, CYLINDER	1
12	KFFZZ		07516	K8-340	.RING, BACKUP PART OF KIT P/N R18265K	1
13	KFFZZ		07516	K340	.PACKING, PREFORMED PART OF KIT P/N R18265K	1
14	PAFZZ	4320013965510	07516	R9013	.RING, WEARING	1
					END OF FIGURE	

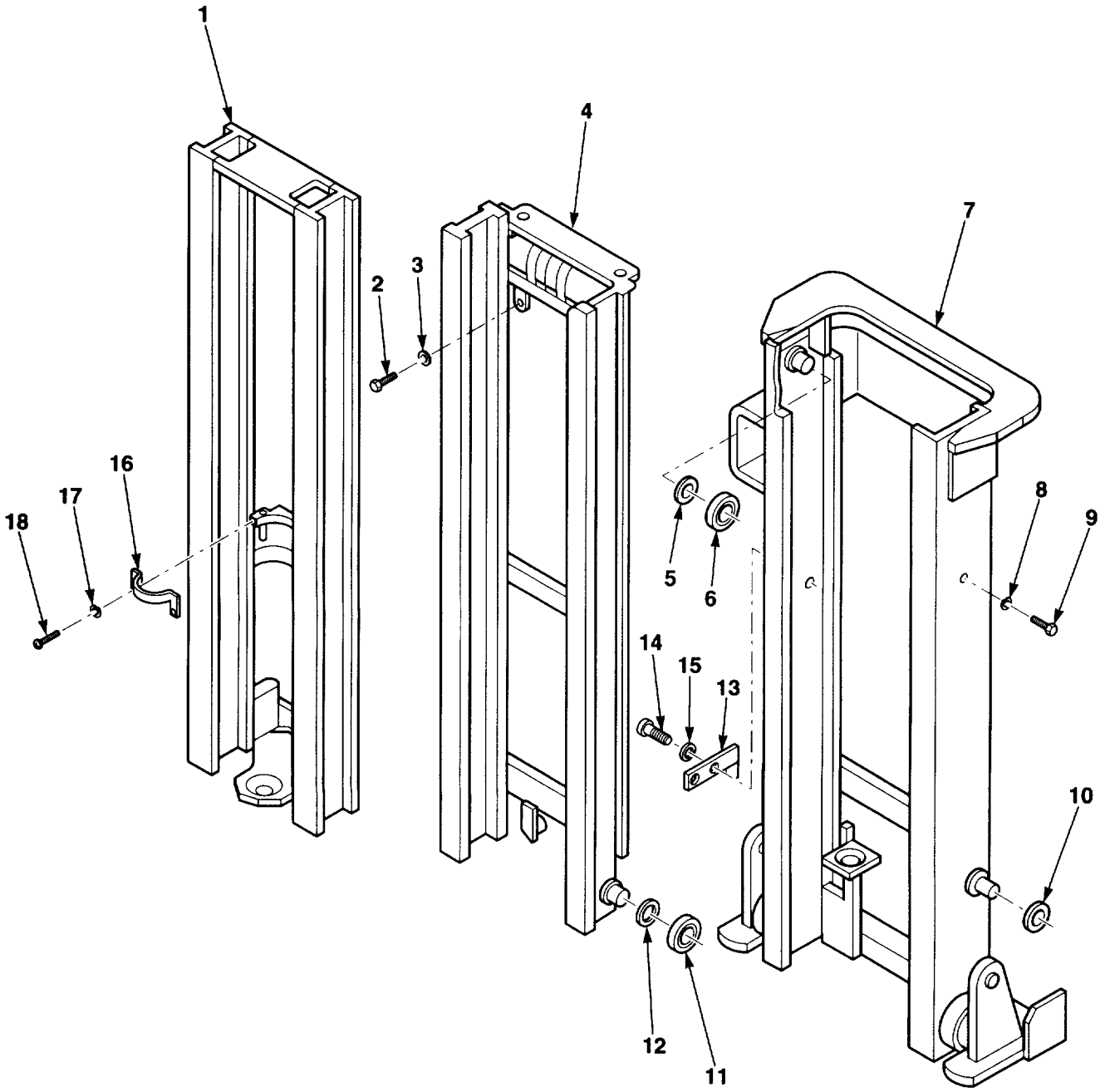

Figure 142. Mast Rail Assembly

https://truckmanualshub.com/ 310

(1) ITEM NO.	(2) SMR CODE	(3) NSN	(4) CAGEC	(5) PART NUMBER	(6) DESCRIPTION AND USABLE ON CODES (UOC)	(7) QTY
					GROUP 2405 MAST COLUMN FIG. 142 MAST RAIL ASSEMBLY	
1	XBFZZ		07516	R17650-9	RAIL ASSY, INNER	1
2	PAFZZ	5305013957720	07516	K302240	SCREW, CAP, HEXAGON H	2
3	PAFZZ	5365013953586	07516	B531	SHIM	4
4	XBFZZ		07516	R17625-9	RAIL ASSY, INTERMED	1
5	PFFZZ	5365013952782	07516	R206	SHIM	2
6	PAFZZ	3110011685303	07443	23253	BEARING, ROLLER	2
7	XBFZZ		07443	1408725	RAIL, OUTER	1
8	PAFZZ	5310005847888	96906	MS35338-51	WASHER, LOCK	2
9	PAFZZ	5305009838339	96906	MS16997-187	SCREW, CAP, SOCKET HE	2
10	PAFZZ		3U613	GE 60 ES-2RS	BEARING, SPHERICAL	2
11	PAFZZ	3120011478115	07443	23381	ROLLER	2
12	PAFZZ	5365013953591	07516	R22	SHIM	2
13	PAOZZ		07443	1407225	INDICATOR, MAST POSI	1
14	PAOZZ	5305000444153	96906	MS90725-109	SCREW, CAP, HEXAGON H	2
15	PAOZZ	5310013964292	12603	27E8	WASHER, FLAT	2
16	PAFZZ	5340013957709	07516	R9155	RETAINER, CYLINDER	1
17	PAFZZ	5310006379541	81718	H2525M	WASHER, LOCK	2
18	PAFZZ	5305002693211	96906	MS35295-60	SCREW, CAP, HEXAGON H	2
					END OF FIGURE	

https://truckmanualshub.com/ 311

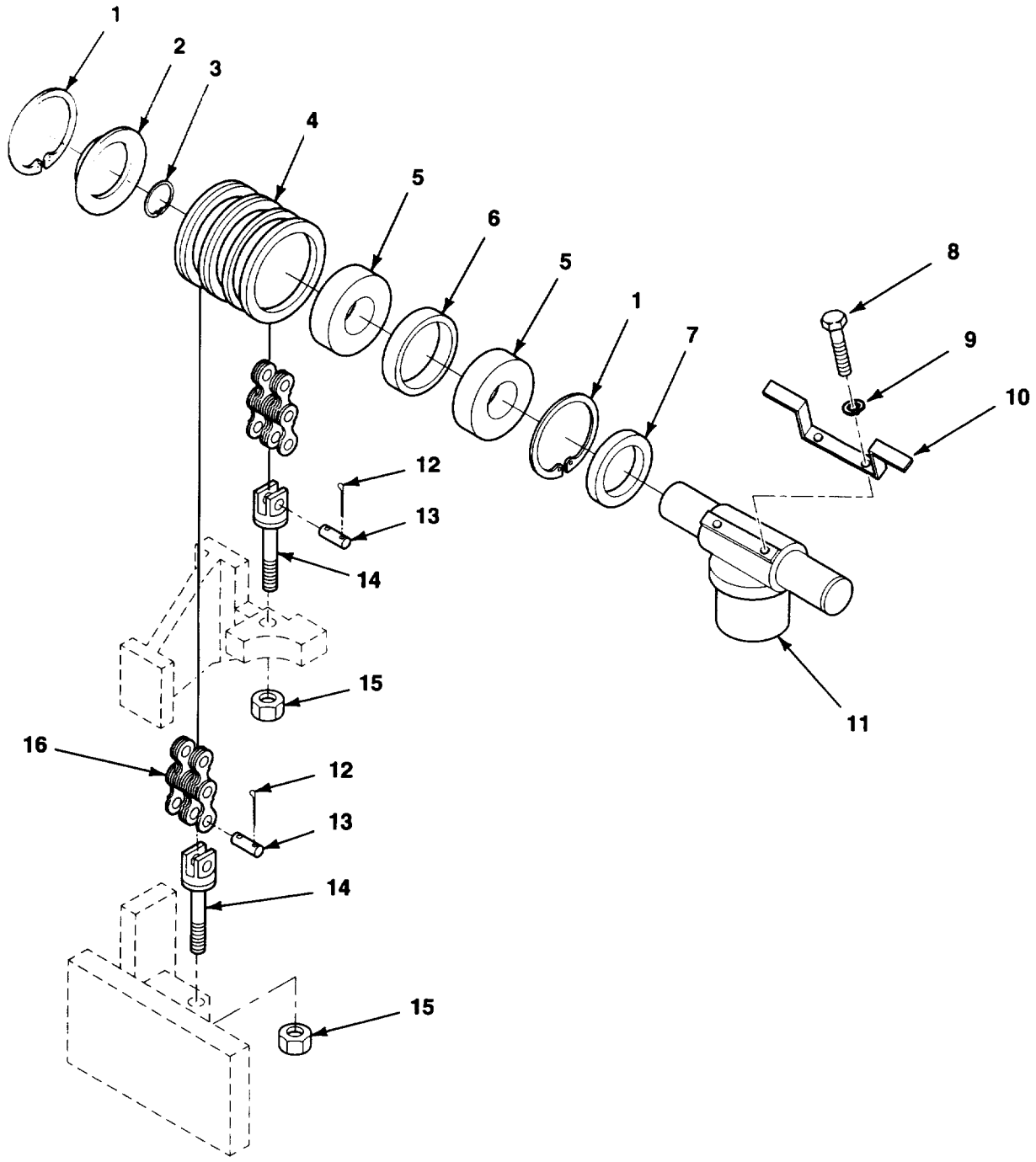

Figure 143. Mast Primary Chain

https://truckmanualshub.com/ 312

(1) ITEM NO.	(2) SMR CODE	(3) NSN	(4) CAGEC	(5) PART NUMBER	(6) DESCRIPTION AND USABLE ON CODES (UOC)	(7) QTY
					GROUP 2405 MAST COLUMN FIG. 143 MAST PRIMARY CHAIN	
1	PAOZZ	5365013954676	07516	R9089	RING, RETAINING	4
2	PAOZZ	5330013955126	07516	R9099	SEAL, PLAIN ENCASED	2
3	PAOZZ	5365013952134	07516	K97538	RING, RETAINING	2
4	PAOZZ	3020013967747	07516	R22148	PULLEY, FLAT	2
5	PAOZZ	3110013970173	07516	R9098	BEARING, BALL, ANNULA	4
6	PAOZZ	5365013952139	07516	R18962	SPACER, SLEEVE	2
7	PAOZZ	5330013954750	07516	R9094	SEAL, PLAIN ENCASED	2
8	PAOZZ		07516	R17660-1	SCREW, CAP	2
9	PAOZZ		07516	R17660-2	WASHER, FLAT	2
10	XBOZZ		07516	51784	CLIP	1
11	PAOZZ	2590013962342	07516	R17660	CROSSHEAD ASSEMBLY	1
12	PAOZZ	5315008392326	96906	M5S24665-281	PIN, COTTER	8
13	PAOZZ	5315013955124	07516	R9054	PIN, STRAIGHT, HEADLE	4
14	PAOZZ	3020013959280	07516	R22147	ANCHOR, CHAIN	4
15	PAOZZ		07516	R22158	NUT, STOP	4
16	PAOZZ	4010013968137	07516	R22137-7	CHAIN	2
					END OF FIGURE	

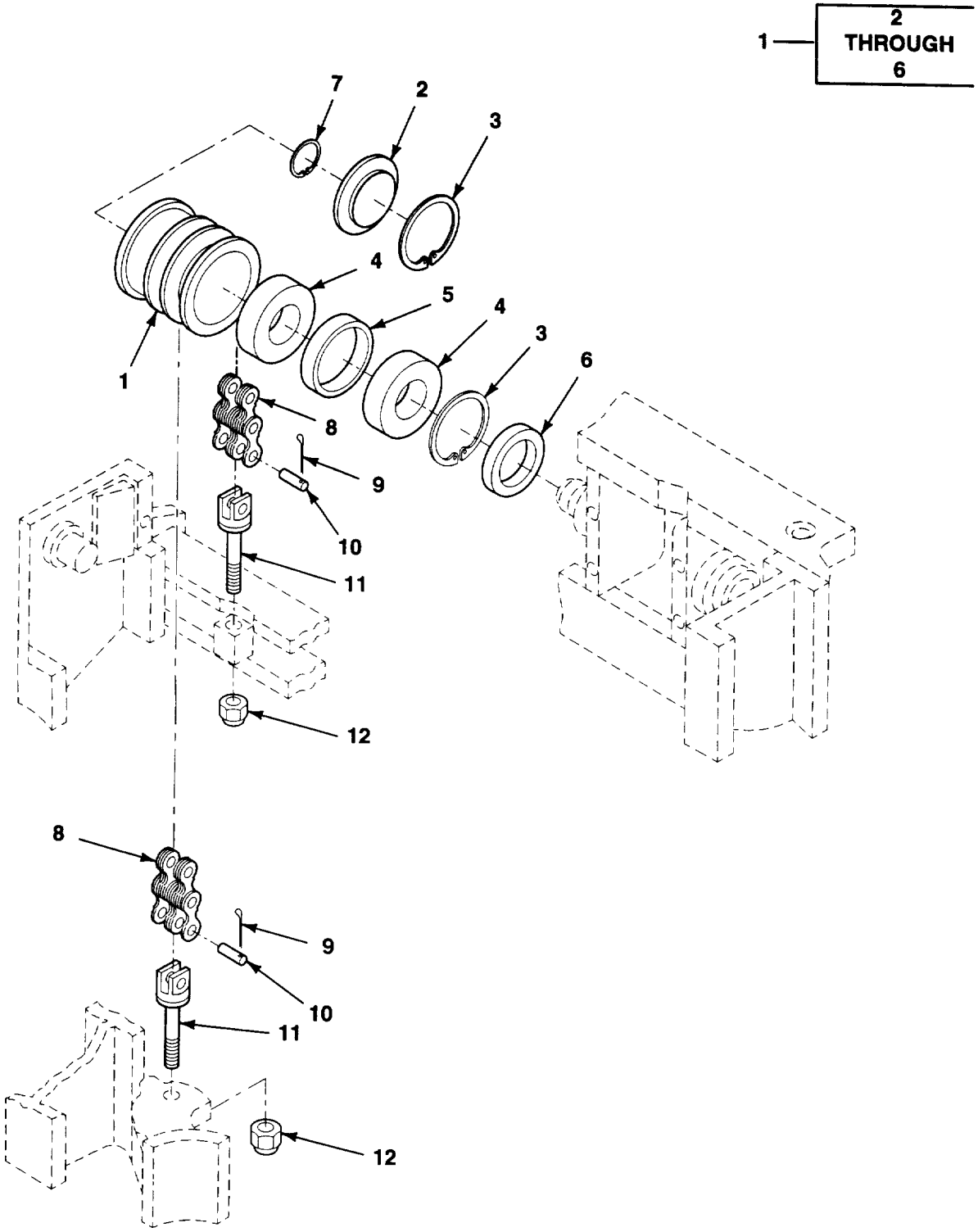

Figure 144. Mast Secondary Chain

https://truckmanualshub.com/ 314

(1) ITEM NO.	(2) SMR CODE	(3) NSN	(4) CAGEC	(5) PART NUMBER	(6) DESCRIPTION AND USABLE ON CODES (UOC)	(7) QTY
					GROUP 2405 MAST COLUMN FIG. 144 MAST SECONDARY CHAIN	
1	PAOZZ		07516	R23202	CHAIN, ROLLER	2
2	XAOZZ	5330013955126	07516	R9099	.SEAL, PLAIN ENCASED	2
3	PAOZZ	5365013954676	07516	R9089	.RING, RETAINING	4
4	XAOZZ	3110013970173	07516	R9098	.BEARING, BALL, ANNULA	4
5	XAOZZ	5365013952139	07516	R18962	.SPACER, SLEEVE	2
6	XAOZZ	5330013954750	07516	R9094	.SEAL, PLAIN ENCASED	2
7	PAOZZ	5365013952134	07516	K97538	RING, RETAINING	2
8	PAOZZ	4010013968135	07516	R22137-28	CHAIN	2
9	PAOZZ	5315008392326	96906	MS24665-281	PIN, COTTER 3/32X1/2	8
10	PAOZZ	5315013955124	07516	R9054	PIN, STRAIGHT, HEADLE	4
11	PAOZZ	3020013959280	07516	R22147	ANCHOR, CHAIN	4
12	PAOZZ		07516	R22158	NUT, STOP	4
					END OF FIGURE	

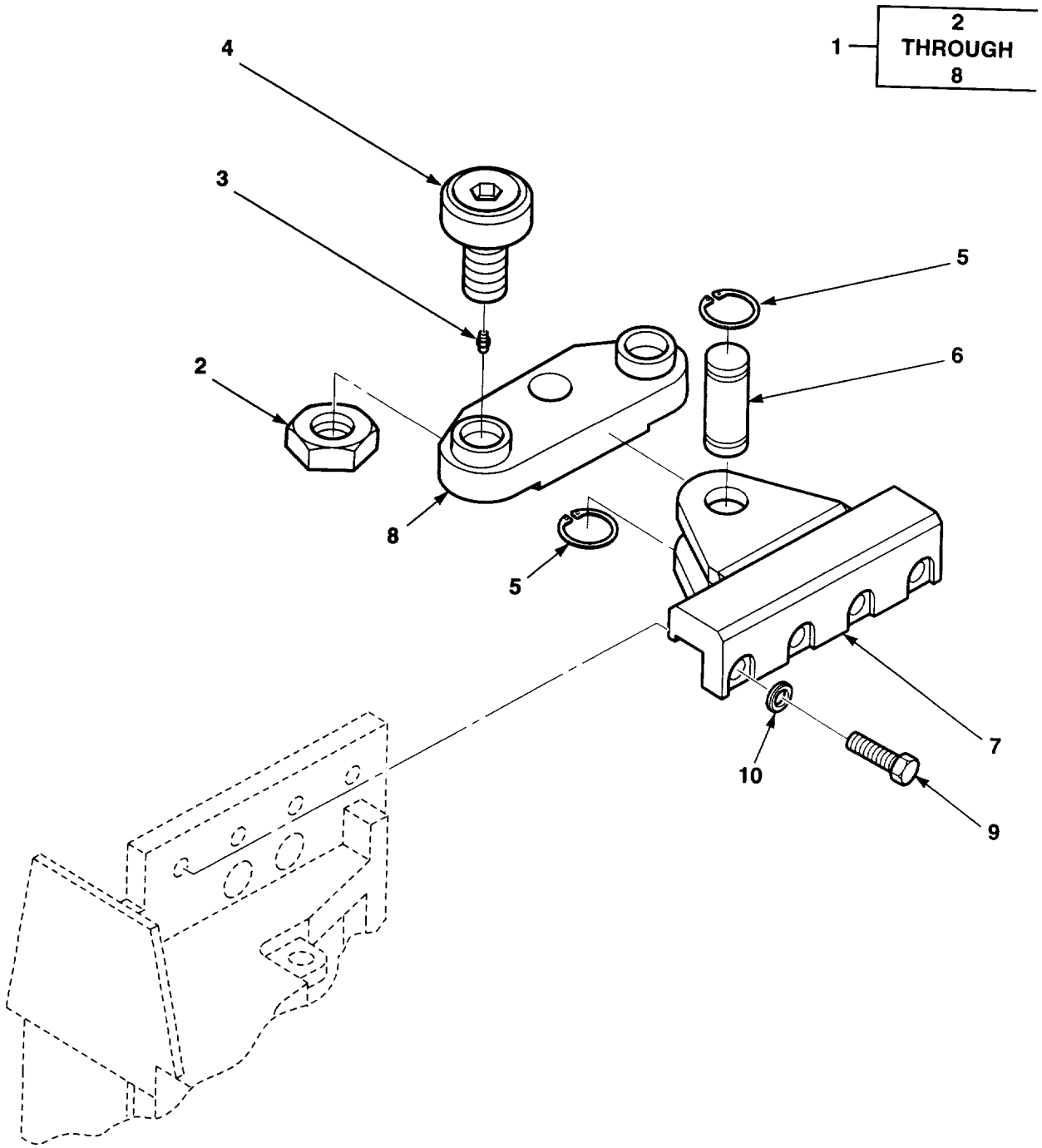

Figure 145. Bearing Assembly

https://truckmanualshub.com/ 316

PLISN	(1) ITEM NO	(2) SMR CODE	(3) NSN	(4) CAGEC	(5) PART NUMBER	(6) DESCRIPTION AND USABLE ON CODES (UOC)	(7) QTY	TM-CODE WJM
						GROUP 2405 MAST COLUMN		
						FIG. 145 BEARING ASSEMBLY		
	1	PFFFF	3130013971650	07443	1400176	BEARING ASSEMBLY	1	
	2	PAFZZ	5310012276119	39428	90496A046	.NUT,PLAIN,HEXAGON 2-12	2	
	3	PAOZZ	4730002790353	57733	1728-B	.FITTING,LUBRICATION	2	
	4	PAFZZ	3110012569767	92563	CCFH-4-SB	.CAM FOLLOWER,NEEDLE	2	
	5	PAFZZ	5365002524758	96906	MS16624-1200	.RING,RETAINING 2 IN	2	
	6	PAFZZ		02260	256-1116	.PLUG,CUP 2 IN	1	
	7	PAFZZ	5340013957867	07443	1400169	.PIN,SUPPORT	1	
	8	PAFZZ	3040013964994	07443	1400173	.BRACKET,EYE,NONROTA	1	
	9	PAFZZ	5305013955876	12603	7CM2060	SCREW,CAP,HEXAGON H M20X60	4	
	10	PAFZZ	5310012393545	75160	T36034	WASHER,FLAT 25/32	4	
						END OF FIGURE		

https://truckmanualshub.com/ 317

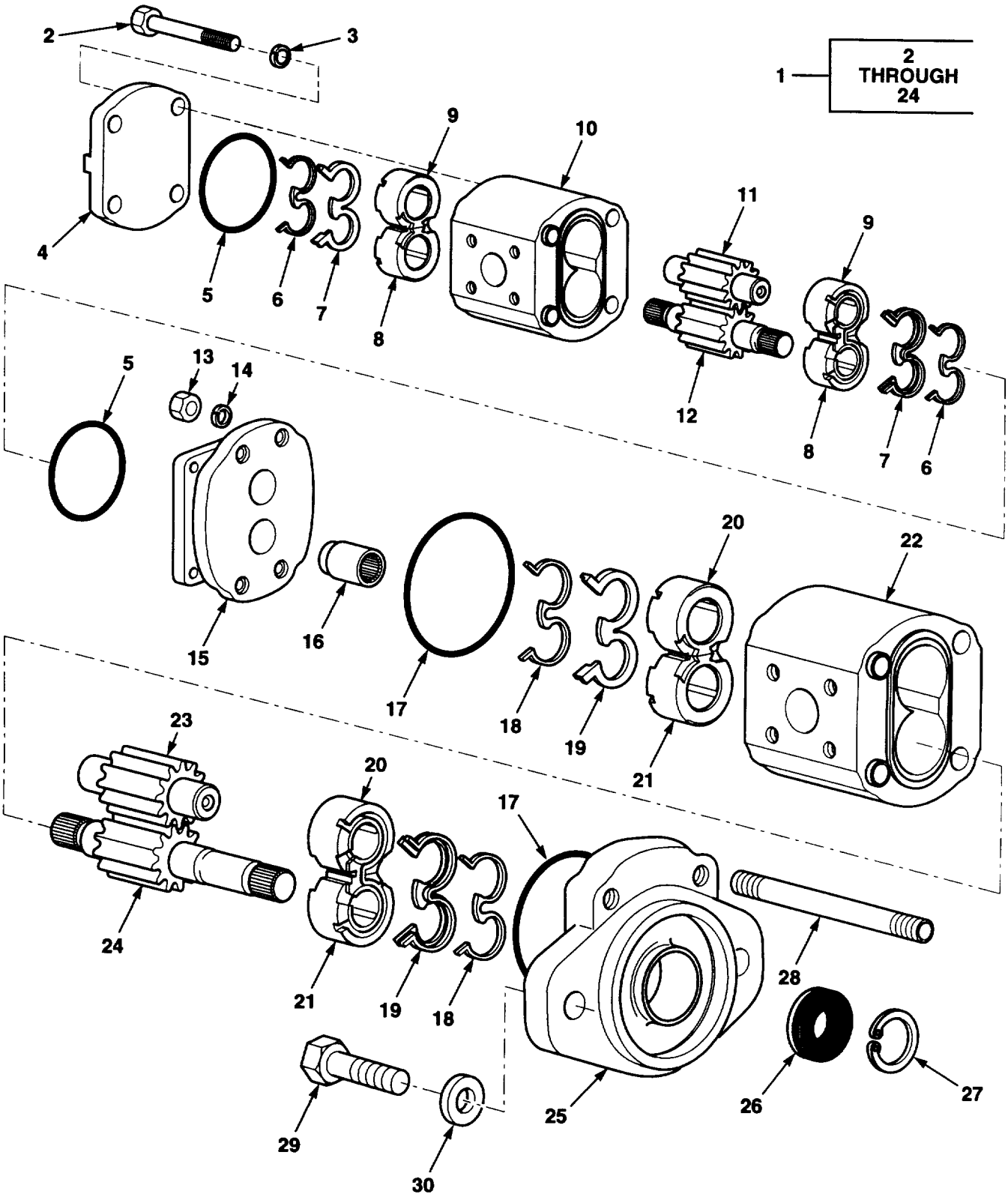

Figure 146. Tandem Pump

https://truckmanualshub.com/ 318

(1) ITEM NO.	(2) SMR CODE	(3) NSN	(4) CAGEC	(5) PART NUMBER	(6) DESCRIPTION AND USABLE ON CODES (UOC)	(7) QTY
					GROUP 2405 MAST COLUMN FIG. 146 TANDEM PUMP	
1	PAFFZ	4320014374037	OKAC7	2PX1701PX060C542 1	PUMP UNIT,ROTARY	1
2	XBFZZ		07443	1409286	.BOLT	4
3	XBFZZ		07443	1409267.	WASHER,SPRING	4
4	XAFZZ		07443	1409288	.COVER,END	1
5	KFFZZ		0KAC7	9313-145-00B	.BODY,O-RING PART OF KIT P/N 8677- 023-000	2
6	KFFZZ		0KAC7	8611-016-OOR	.SEAL,BACKUP PART OF KIT P/N 8677- 023-000	2
7	KFFZZ		0KAC7	8611-015-000	.SEAL,BUSH PART OF KIT P/N 8677-023- 2 000	
8	XAFZZ		07443	1409292	.BUSH	2
9	XAFZZ		07443	1409293	.BUSH	2
10	XAFZZ		07443	1409294	.BODY,REAR	1
11	XAFZZ		07443	1409295	.GEAR,DRIVE,REAR	1
12	XAFZZ		07443	1409296	.DRIVESHAFT & GEAR	1
13	XBFZZ		07443	1409297	.NUT	4
14	XBFZZ		07443	1409298	.WASHER	4
15	XAFZZ		07443	1409299	.PLATE,SPACER	1
16	XAFZZ		07443	1409300	.COUPLING,SPLINED	1
17	PAFZZ	5330014373844	OKAC7	9313-150-00S	.PACKING,PREFORMED	1
18	PAFZZ	5330014373848	OKAC7	8676-017-OOR	.SEAL,BACKUP	1
19	KFFZZ		0KAC7	8676-015-004	.BRUSH SEAL	2
20	XAFZZ		07443	1409304	.BUSH	1
21	XAFZZ		07443	1409306	.BUSH	1
22	XAFZZ		07443	1409306	.BODY,FRONT	1
23	XAFZZ		07443	1409309	.GEAR,DRIVE,FRONT	1
24	XAFZZ		07443	1409309	.DRIVESHAFT,GEAR,FRT	1
25	XAFZZ		07443	1403310	.FLANGE	1
26	KFFZZ		OKAC7	7112-119-005	.SHAFT AND SEAL	1
27	KFFZZ		OKAC7	9211-331-OO00E	.CIRCLIP	1
28	XBFZZ		07443	1409312	STUD	1
29	PAFZZ	5305013258388	96906	MS90725-113	SCREW,CAP,HEXAGON H	2
30	PAOZZ	5310013964292	12603	27E8	WASHER,FLAT	2
					END OF FIGURE	

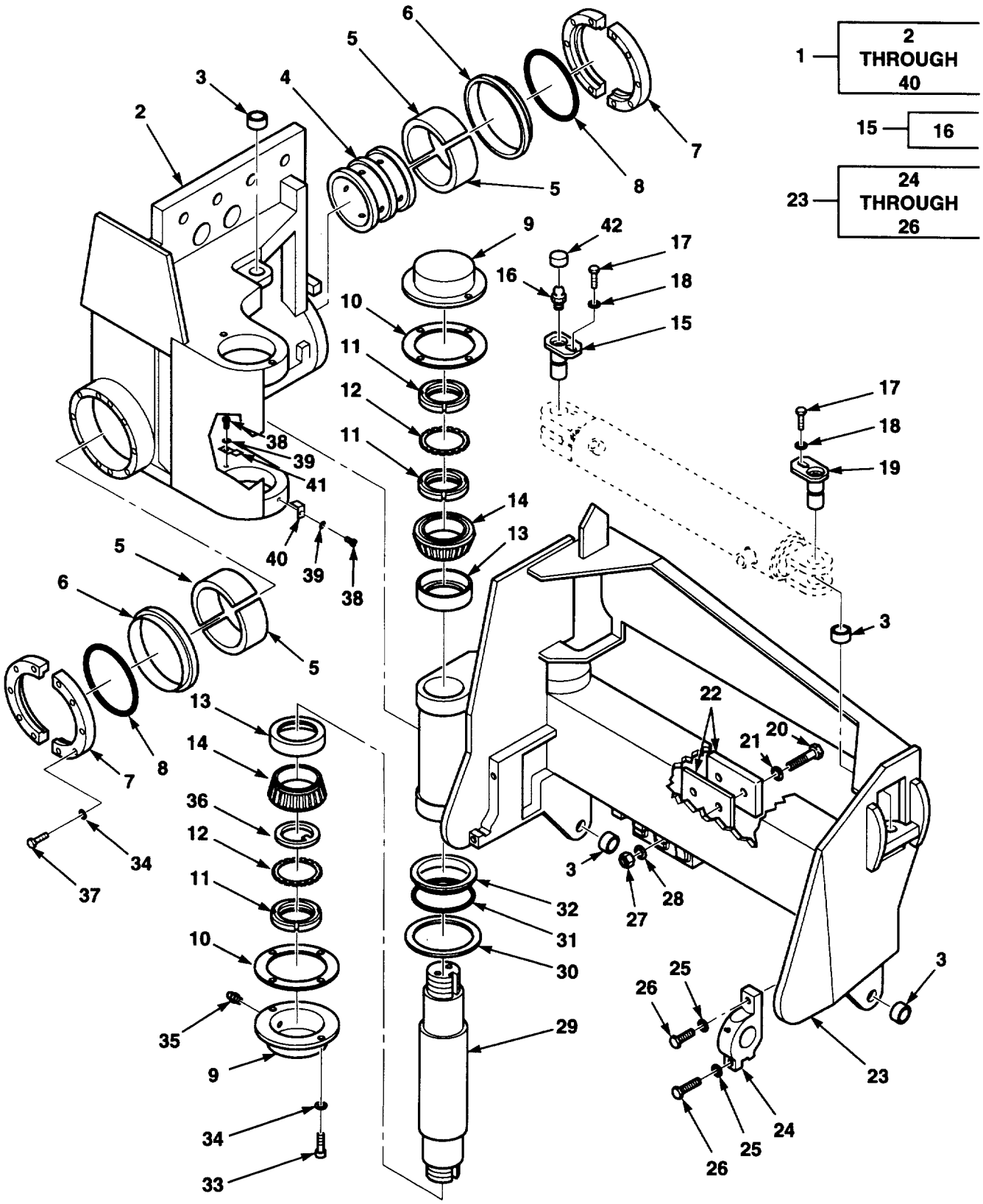

Figure 147. Pivot Arm Assembly

https://truckmanualshub.com/ 320

(1) ITEM NO.	(2) SMR CODE	(3) NSN	(4) CAGEC	(5) PART NUMBER	(6) DESCRIPTION AND USABLE ON CODES (UOC)	(7) QTY
					GROUP 2405 MAST COLUMN FIG. 147 PIVOT ARM ASSEMBLY	
1	XBFZZ		07443	1407220	ARM,PIVOT	1
2	XBFZZ		07443	1407208	.CROSSHEAD	1
3	PAFZZ		76527	RBC#B16-L	.BUSHING,RADIAL	4
4	PFFZZ	3120013970832	07443	1400082	.SPACER	1
5	PAFZZ	3120013971632	07443	1400000	.BEARING,SPLIT SHELL	4
6	PAFZZ	5330014340860	07443	1408836	.RING,WIPER	2
7	PAFZZ	4730014002006	07443	1400085	.FLANGE,SPLIT	2
8	PAFZZ	5330013957703	20696	AS568-440	.PACKING,PREFORMED	2
9	PAFZZ	5340014381191	07443	1407200	.CAP,PIVOT SHAFT	2
10	PAFZZ		02697	2-161	.SEAL,O-RING	2
11	PAFZZ	5310012691309	60038	TAN 15	.NUT,SPECIAL BOTTOM THREE	2
12	PAFZZ	5310009335940	60038	TW115	.WASHER,KEY TOP	1
13	PAFZZ	3110001000500	60038	5735	.CUP,TAPERED ROLLER	2
14	PAFZZ	3110001003084	53035	5760	.CONE AND ROLLERS,TA	2
15	PAFZZ	3040013975689	07443	9934	.PIVOT SHAFT ASSEMBL LEFT	1
16	PAFZZ	4730013957302	12603	1HM6J	.FITTING,LUBRICATION	1
17	PAFZZ	5305013299730	75755	19M7166	.SCREW,CAP,HEXAGON H	2
18	PAFZZ	5310013962871	12603	18EM1019	.WASHER,FLAT	2
19	PAFZZ	5315014345836	07443	1409947	.PIN,STRAIGHT,HEADLE RIGHT	1
20	PAFZZ	5306013949295	19207	12417958-009	.BOLT,MACHINE M8X40	2
21	PAFZZ	5310013964294	12603	27E5	.WASHER,FLAT	2
22	PAFZZ	5365014333305	07443	30324-2	.SPACER,SLEEVE	2
23	XBFFF		07443	1407256	.PIVOT & CROSS ASSY	1
24	PAFZA	5340014376348	07443	1407145	CLAMP,TRUNION	2
25	PAFZZ		89749	1EM240	WASHER	4
26	PAFZZ	5305012683657	81495	310V9004	SCREW,CAP,HEXAGON H M24X60	4
27	PAFZZ	5310014156108	89749	40DN8	.NUT,SELF-LOCKING,HE M8	2
28	PAFZZ	5310013964294	12603	27E5	.WASHER,FLAT	2
29	PAFZZ	3040013975271	07443	7823	.SHAFT,SHOULDERED	1
30	PAFZZ	5365014374389	07443	1407462	.RIN G,SEAL,TOP	1
31	PAFZZ	5330014378705	89749	25K30408	.PACKING,PREFORMED	1
32	XBFZZ		07443	1407455	.SPACER,TOP	1
33	PAFZZ	5305013794128	52374	01-435-0397-4 IT EM69-2	.SCREW,CAP,SOCKET HE M6 X20	8
34	PAFZZ	5310013965256	89749	18EM613	.WASHER,FLAT M6X13	2
35	XDFZZ		89749	1300633	.FITTING,LUB	3
36	PAFZZ	5310009916691	19207	10906278	.WASHER,KEY	2
37	PAFZZ	5306013873127	19207	12414309-021	.BOLT,MACHINE M6X30	20
38	PAFZZ	5305014376511	89749	27CM612	.SCREW,BUTTON M6X12	2
39	PAFZZ	5310013965256	89749	18EM613	.WASHER,FLAT M6X13	2
40	XBFZZ		07443	1408475	.CLIP,SEAL RI NG	1
41	XBFZZ		07443	1408476	.CLIP,SEAL RING	1
					END OF FIGURE	

https://truckmanualshub.com/ 321

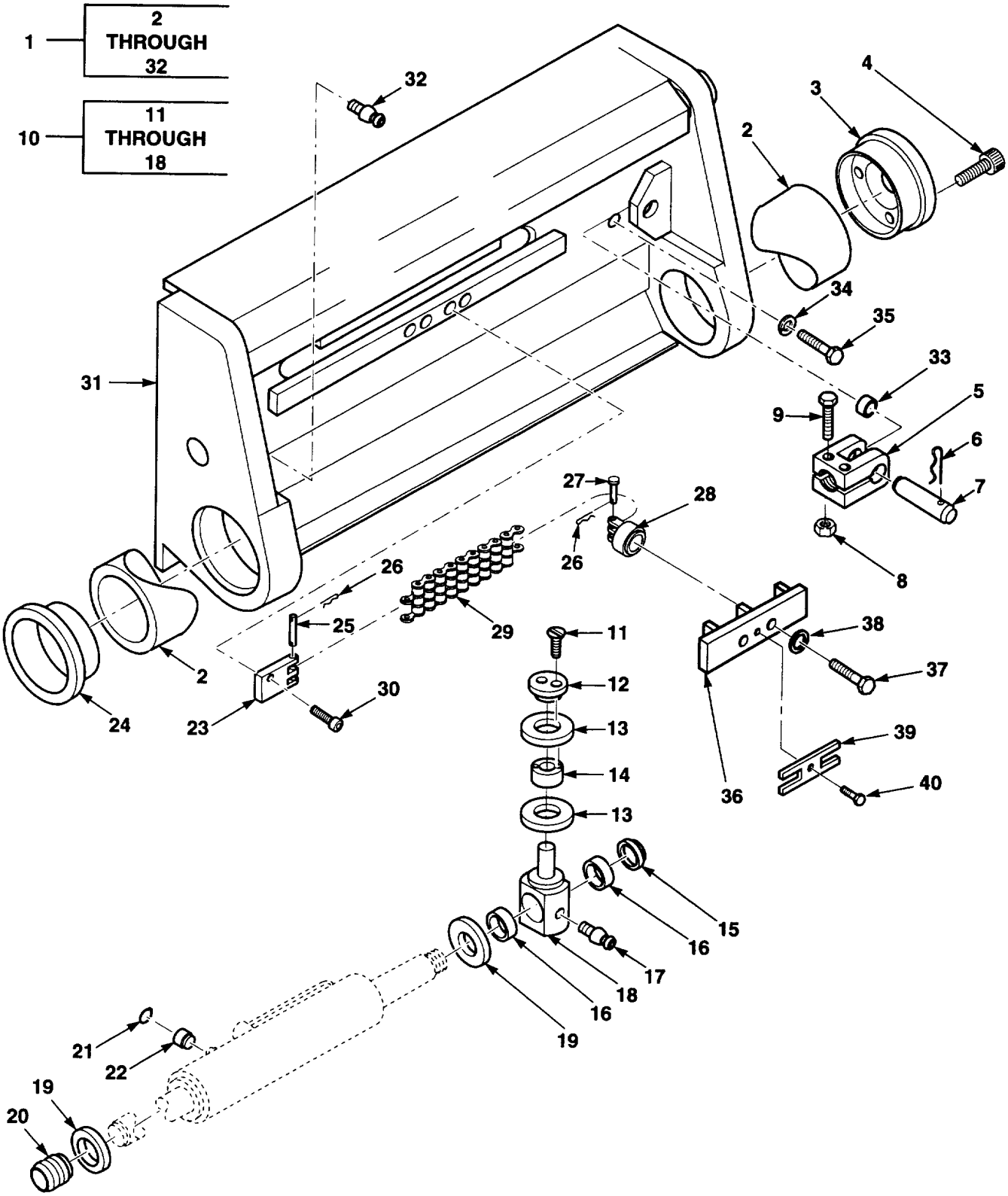

Figure 148. Pivot and Shift Assembly

https://truckmanualshub.com/ 322

GROUP 2405 MAST COLUMN
FIG. 148 PIVOT AND SHIFT ASSEMBLY

(1) ITEM NO.	(2) SMR CODE	(3) NSN	(4) CAGEC	(5) PART NUMBER	(6) DESCRIPTION AND USABLE ON CODES (UOC)	(7) QTY
1	XDOFF 1			07443	1407333 PIVOT & SHIFT ASSY	
2	PFFZZ	4710013958786	07443	1400030	.TUBE,METALLIC	1
3	PAFZZ	4730013957304	07443	1400034	.CAP,TUBE	1
4	PAFZZ		89749	3GM1225	.SCREW CAP,HEX,HD M12X25	4
5	PAFZZ	5340013957719	07443	1400046	.CLEVIS,ROD END	1
6	PAFZZ	5315002821448	96906	MS24665-515	.PIN,COTTER	2
7	PAFZZ	5315013954671	07443	1400106	.PIN,STRAIGHT,HEADLE	1
8	PAFZZ	5310013964293	12603	40DM10	.NUT,SELF-LOCKING,HE M10	2
9	PAFZZ	5306013985012	12603	1CM1080	.SCREW,CAP,HEXAGON H M10X80	2
10	PFFFF	3020013961408	07443	1400044	.PULLEY,FLAT	2
11	PAFZZ	5305013957713	07443	52855-3	SCREW,CAP,SOCKET HE	4
12	PAFZZ	3110013971590	07443	1400040	COVER,BEARING	2
13	PAFZZ	3020013962337	07443	1400041	GUIDE,CHAIN	4
14	PAFZZ		07443	1400039	BEARING,CARTRIDGE	2
15	PAFZZ	5330013699463	ODM03	006-022	RING,WIPER	1
16	PAFZZ	3120013969602	70901	24DU18	BEARING,YOKE	2
17	PAOZZ	4730013957302	12603	1HM6J	FITTING,LUBRICATION M6	1
18	PAFZZ	2520013983341	07443	1400037	YOKE	1
19	PAFZZ	5365013957721	07443	1400086	.SPACER,RING	2
20	PAFZZ	3120005874781	51588	B24L	.BEARING,PLAIN,SELF-	1
21	PAFZZ		96906	M5S16624-3125	.RING,RETAINING	1
22	PAFZZ		07443	1400107	.ROLLER,CYLINDER	1
23	PAFZZ	5340013955875	07443	1400080	.ANCHOR,CHAIN	4
24	PAFZZ	4730013957308	07443	1400033	.CAP,TUBE	1
25	PAFZZ	5315014345837	07443	1408506	.PIN,STRAIGHT,HEADED	4
26	PAFZZ	5315002341863	96906	MS24665-300	.PIN,COTTER	12
27	PAFZZ	5315009035943	96906	MS20392-4C39	.PIN,STRAIGHT,HEADED	4
28	PAFZZ	5340013957702	07443	1400047	.ANCHOR,CHAIN	4
29	PAFZZ	3020013958792	07443	1400027	.CHAIN,LEAF	4
30	PAFZZ	5305013988615	12603 7	CM1240	.SCREW,CAP,HEXAGON H M12X40	8
31	XBFZZ		07443	1400019	.HOUSING,SIDE SHIFT	1
32	PAOZZ	4730013957302	12603	1HM6J	.FITTING,LUBRICATION M6	1
33	PAFZZ	3120004971579	51588	B16-L	BEARING,PLAIN,SELF-.	1
34	PAFZZ	5310001499143	96906	MS20002-16	WASHER,FLAT	4
35	PAFZZ	5305013654860	30076	292601	SCREW,CAP,HEXAGON H M24X50	4
36	XBFZZ	5340013957704	07443	1402146	PLATE,MOUNTING	2
37	PAFZZ		89749	3GM1225	SCREW CAP,HEX,HD M12X25	4
38	PAFZZ	5310012719602	34914	991 4137	WASHER,FLAT M12	4
39	XBFZZ		07443	1407144	PLATE,LOCKING	2
40	PAFZZ		89749 1	CM1250	SCREW,CAP,HEX,HD N12X50	2

END OF FIGURE

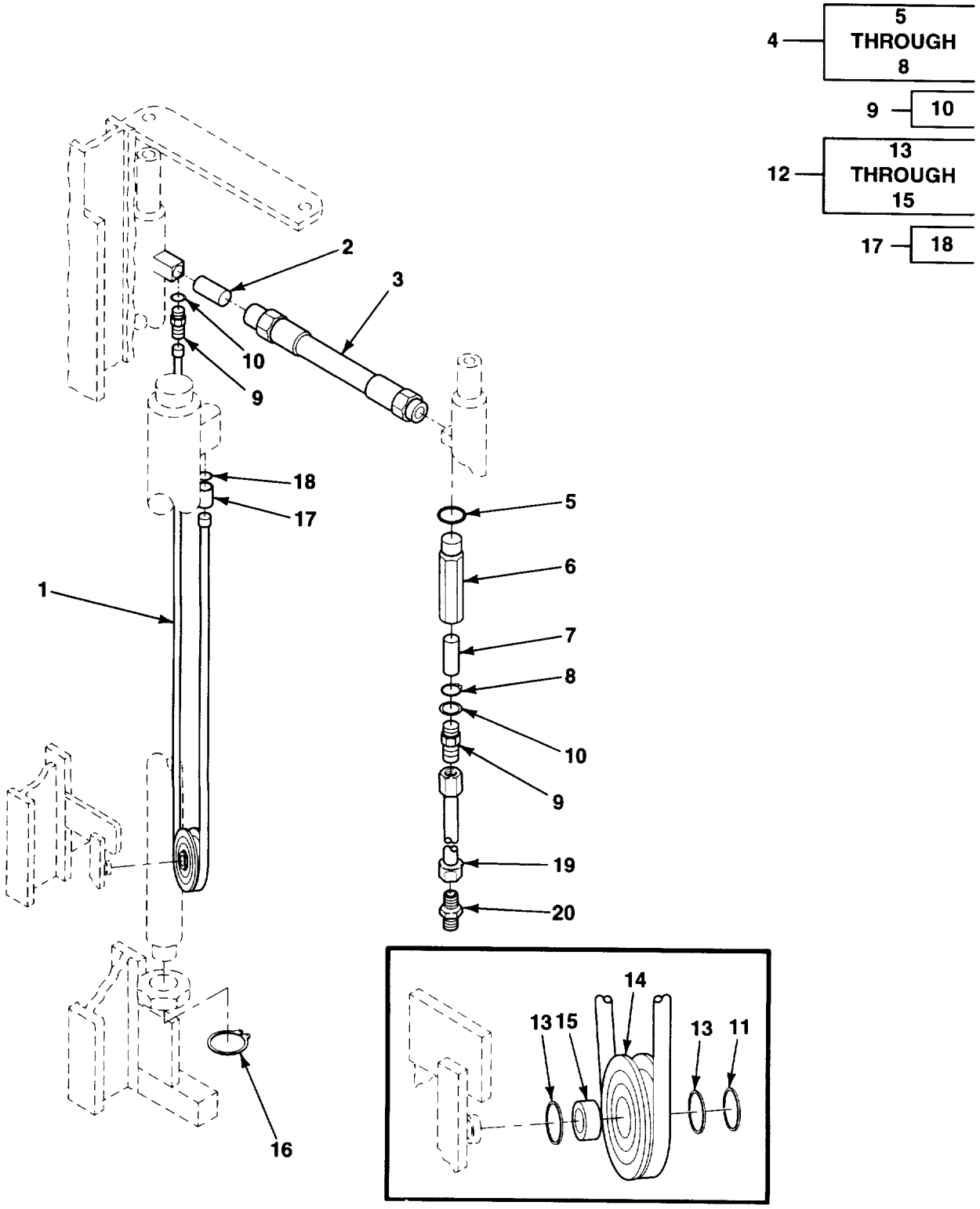

Figure 149. Mast Lines

https://truckmanualshub.com/ 324

(1) ITEM NO.	(2) SMR CODE	(3) NSN	(4) CAGEC	(5) PART NUMBER	(6) DESCRIPTION AND USABLE ON CODES (UOC)	(7) QTY
					GROUP 2406 STRAINERS, FILTERS, LINES AND FITTINGS, ETC. FIG. 149 MAST LINES	
1	PAOZZ		07443	1410130	HOSE ASSEMBLY,NONHE	1
2	PAOZZ	5340013970289	07516	R9042	PROTECTOR,FLOW	1
3	PAOZZ	4720013971164	07516	R19511	HOSE ASSEMBLY,NONHE	1
4	PAOZZ	2590013962475	07516	R12390	REGULATOR	1
5	XAOZZ		07516	K912	.PACKING,PREFORMED	1
6	XAOZZ		07516	R13396	.BODY,FLOW REGULATOR	1
7	XAOZZ		07443	29002	.VALVE,REG,FLUID PRS	1
8	PAOZZ		07516	K97615	.RING,RETAINING	1
9	PAOZZ	4730007105571	01276	213-202702-12-12	ADAPTER,STRAIGHT,TU	1
10	XAOZZ		96906	MS39324-12-12-XA	.PACKING,PREFORNED	1
11	PAOZZ	5365013952138	07516	R7333	RING,RETAINING	1
12	PAOZZ	3020012277382	07443	23198	PULLEY,GROOVE	1
13	PAFZZ	5365013954680	07516	R7332	.RING,RETAINING	2
14	PAOZZ	3020013983345	07516	R12367	.PULLEY,GROOVE	1
15	PAOZZ	3110013968373	07516	R2362	.BEARING	1
16	PAOZZ	5365013952137	07516	K97537	RING,RETAINING	2
17	PAOZZ	4730007105571	96906	MS51525A12	ADAPTER,STRAIGHT,TU	1
18	PAOZZ	5330014129862	89749	79K12	.O-RING	1
19	XBOZZ		07516	R23285-1	TUBE	1
20	XBOZZ		89749	87F7	FITTING	1
					END OF FIGURE	

https://truckmanualshub.com/ 325

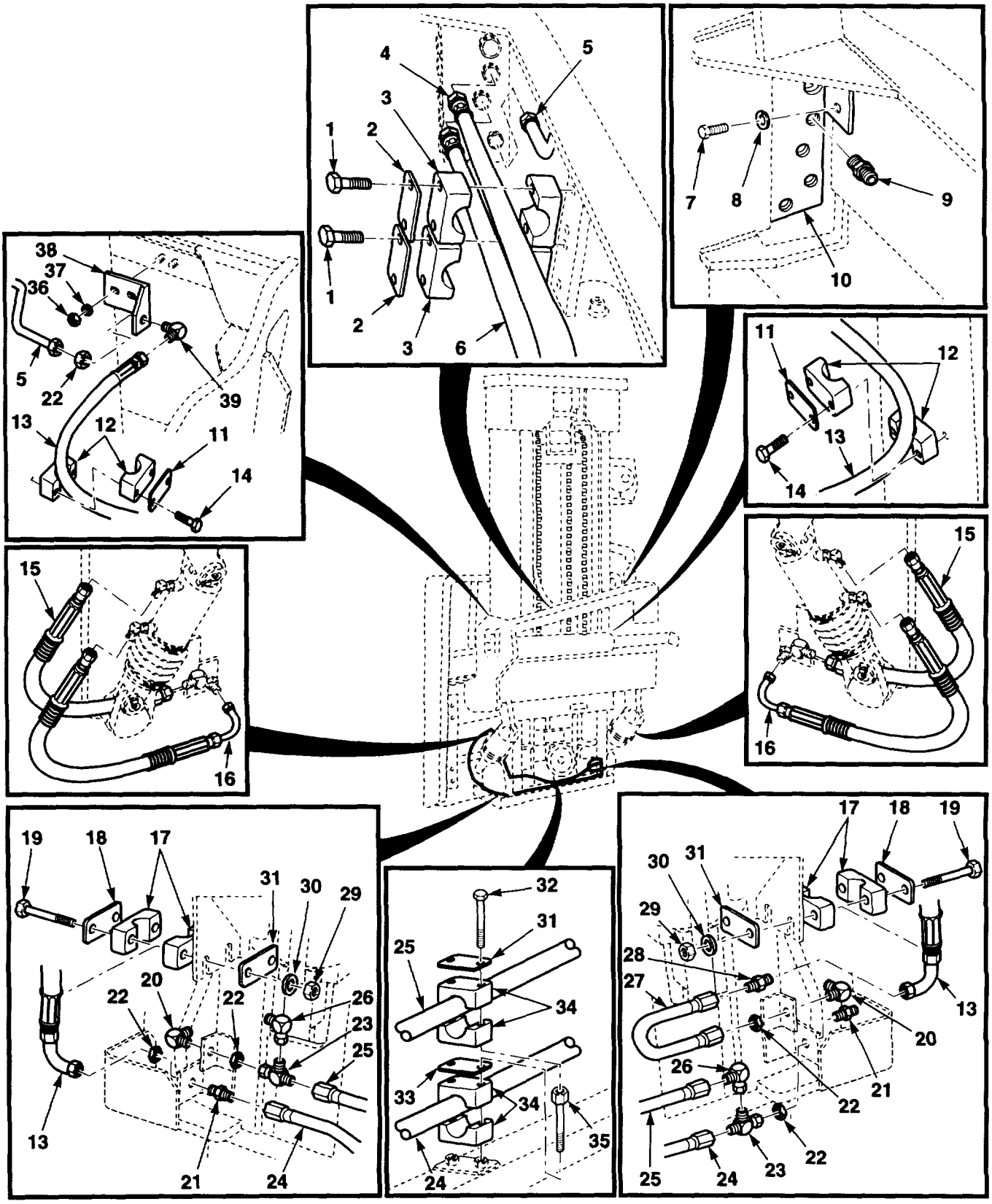

Figure 150. Mast Hoses, Tubes, and Fittings

https://truckmanualshub.com/ 326

(1) ITEM NO.	(2) SMR CODE	(3) NSN	(4) CAGEC	(5) PART NUMBER	(6) DESCRIPTION AND USABLE ON CODES (UOC)	(7) QTY
					GROUP 2406 STRAINERS, FILTERS, LINES AND FITTINGS, ETC. FIG. 150 MAST HOSES, TUBES, AND FITTINGS	
1	PAOZZ	5305002253841	80204	B1821BH025C138N	SCREW,CAP,HEXAGON H	4
2	PFOZZ	5340013556821	53790	DP-2	COVER,ACCESS	2
3	PAOZZ	5340014380458	53790	2171PP	CLAMP,HALF	4
4	PAOZZ	4720014381230	07443	1408336	HOSE ASSY	1
5	PAOZZ	4710014378849	07443	1408393	TUBE ASSY,PIVOT ARM	1
6	PAOZZ	4720014381188	07443	1408335	HOSE ASSY	1
7	PAOZZ	5306003349967	12603	1C410	BOLT,MACHINE	2
8	PAOZA	5310006858191	84955	KS1411-2-05-13	WASHER,FLAT	2
9	PAOZZ	4730013679965	12603	15K5	ADAPTER,STRAIGHT,TU	2
10	XBOZZ		63323	940813	PIVOT ARM WELDMENT	1
11	PFOZZ	5340013556821	53790	DP-2	COVER,ACCESS	1
12	PAOZZ	5340014380458	53790	2171PP	CLAMP,HALF	4
13	PAOZZ	4720014381654	07443	1408333	HOSE ASSY	2
14	PAOZZ	5305002253841	80204	B1821BH025C138N	SCREW,CAP,HEXAGON H	2
15	PAOZZ	4720014344808	07443	1408331	HOSE ASSEMBLY,NONME	2
16	PAOZZ	4720014381578	07443	1408329	HOSE ASSY	2
17	PAOZZ	5340014380458	53790	2171PP	CLAMP,HALF	4
18	PAOZZ		53790	SP2	COVER,ACCESS	2
19	PAOZZ	5305009789383	96906	MS16997-65	SCREW,CAP,SOCKET HE	4
20	PAOZZ	4730008830643	96906	MS51507A6	ELBOW,TUBE	3
21	PAOZZ	4730013957310	07443	45K5	NIPPLE,TUBE	2
22	PAOZZ		03504	K52-6	NUT,LOCK	2
23	PAOZZ	4730006185381	96906	MS51523A6	TEE,TUBE	2
24	PAOZZ		07443	1408394	TUBE ASSY,MAST	1
25	PAOZZ	4710014377006	07443	1408395	TUBE ASSY,MAST TILT	1
26	PAOZZ	4730011295572	96906	MS51521-A6Z	ELBOW,TUBE	2
27	PAOZZ	4710014377031	07443	1407719	TUBE ASSY	1
28	PAOZZ	4730007816089	96906	MS51501A6S	NIPPLE,TUBE	1
29	PAOZZ		89749	61D4	NUT,PLAIN,HEXAGON	4
30	PAOZA	5310006858191	84955	KS1411-2-05-13	WASHER,FLAT	4
31	PFOZZ	5340013556821	53790	DP-2	COVER,ACCESS	2
32	PAOZZ	5305002253841	80204	B1821BH025C138N	SCREW,CAP,HEXAGON H	2
33	PFOZZ		53790	SIG2	PLATE,SAFETY	1
34	PAOZZ	5340014373826	53790	2095PP	CLAMP,HALF	4
35	PAOZZ	5306012171881	53790	AF2	BOLT COUPLING	2
36	PAOZZ		03504	K52-6	NUT,LOCK	2
37	PAOZZ	5310013965256	89749	18EM613	WASHER,FLAT M6X13	2
38	PAOZZ	5340014381614	07443	1407727	SUPPORT,FITTING	1
39	PAOZZ	4730011284174	30327	63UC-06X06	ELBOW,TUBE	1
					END OF FIGURE	

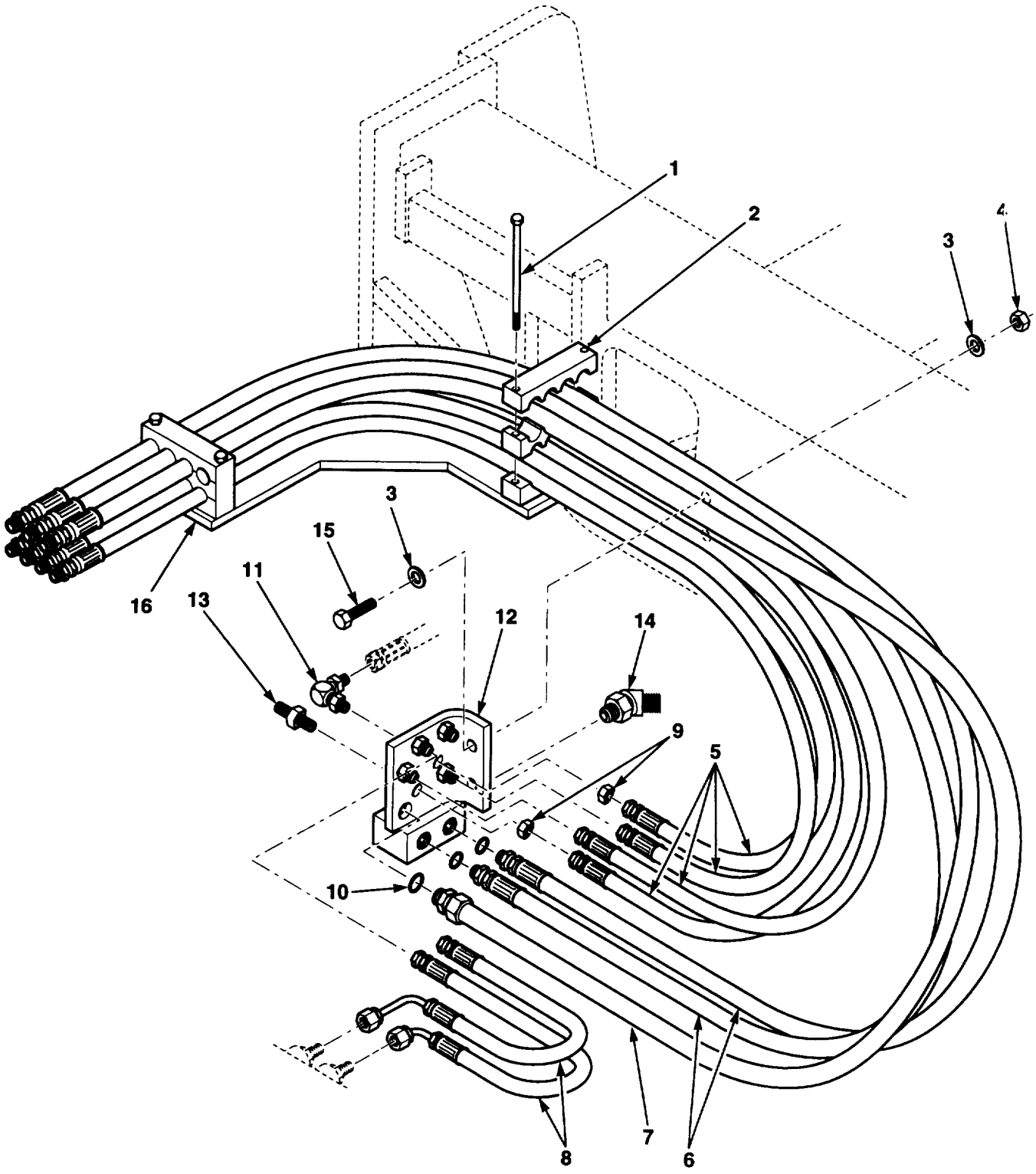

Figure 151. Umbilical Assembly

https://truckmanualshub.com/ 328

(1) ITEM NO.	(2) SMR CODE	(3) NSN	(4) CAGEC	(5) PART NUMBER	(6) DESCRIPTION AND USABLE ON CODES (UOC)	(7) QTY
					GROUP 2406 STRAINERS, FILTERS, LINES AND FITTINGS, ETC. FIG. 151 UMBILICAL ASSEMBLY	
1	PAOZZ	5305000712513	80204	B1821BHO25C250N	SCREW,CAP,HEXAGON H	4
2	XBOZZ		07443	12482	CLAMP,UMBILICAL	2
3	PAOZZ	5310013962871	12603	18EM1019	WASHER,FLAT M10X19	4
4	PAOZZ		62445	01102659	NUT,PLAIN,HEX	2
5	PAOZZ		07443	1407729	HOSE ASSEMBLY,NONME	4
6	PAOZZ		07443	1407715	HOSE ASSEMBLY,NONME	2
7	PAOZZ	4720007219893	01276	2575-8	HOSE,NONMETALLIC	1
8	PAOZZ	4720013961403	07443	1403979	HOSE ASSEMBLY,NONME TOP	1
8	PAOZZ	4720013961405	07443	1403981	HOSE ASSEMBLY,NONMEBOTTOM	2
9	PAOZZ	5310001869550	30780	6-WLN-S	NUT,PLAIN,HEXAGON	6
10	XAOZZ		07443	45K5 XA	PACKING,PREFORMED	3
11	PAOZZ		03504	K108-6	ELBOW,90 DEGREE	3
12	XBOZZ		07443	1407717	MANIFOLD	1
13	PAOZZ	4730013957310	07443	45K5	NIPPLE,TUBE	3
14	PAOZZ	4730011295572	96906	M5S51521-A6Z	ELBOW,TUBE	3
15	PAOZZ	5305000712513	80204	B1821BH025C250N	SCREW,CAP,HEXAGON H	2
16	XBOZZ		07443	1402440	PLATE,WELDMENT	1
					END OF FIGURE	

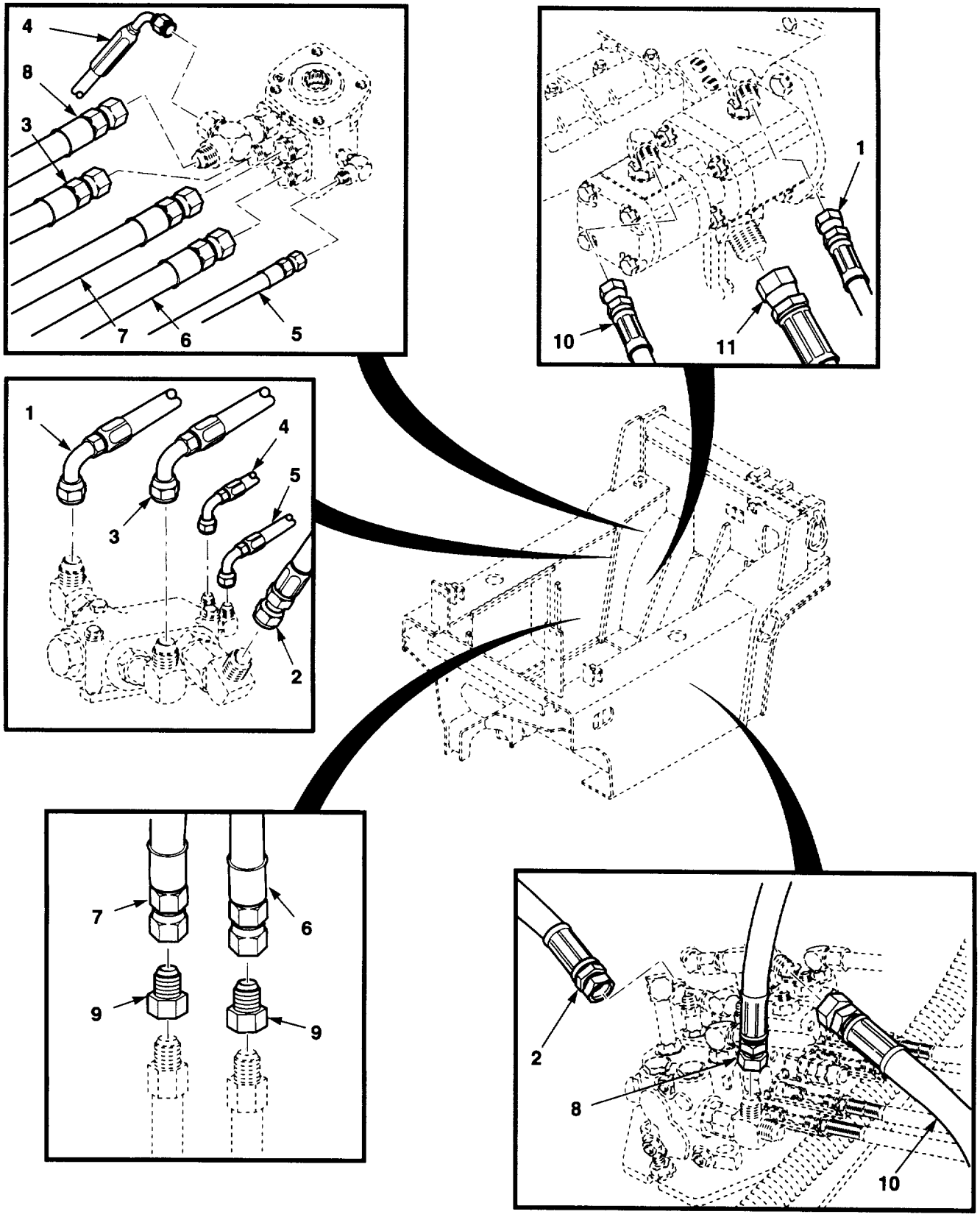

Figure 152. Hydraulic Hoses

https://truckmanualshub.com/ 330

(1) ITEM NO.	(2) SMR CODE	(3) NSN	(4) CAGEC	(5) PART NUMBER	(6) DESCRIPTION AND USABLE ON CODES (UOC)	(7) QTY
					GROUP 2406 STRAINERS, FILTERS, LINES AND FITTINGS, ETC. FIG. 152 HYDRAULIC HOSES	
1	PAOZZ		07443	1408351	HOSE ASSEMBLY,NONME	1
2	PAOZZ		07443	51126-06	HOSE ASSEMBLY,NONME	1
3	PAOZZ		07443	50976-25	HOSE ASSY	1
4	PAOZZ		07443	1407972	HOSE ASSEMBLY,NONME	1
5	PAOZZ		07443	1407961	HOSE ASSEMBLY,NONME	1
6	PAOZZ		07443	1407974	HOSE ASSEMBLY,NONME	1
7	PAOZZ		07443	1407975	HOSE ASSEMBLY,NONME	1
8	PAOZZ		07443	1408071	HOSE ASSEMBLY,NONNE	1
9	PAOZZ	4730007976567	96906	MS51501A8	NIPPLE,TUBE	2
10	PAOZZ		07443	1407960	HOSE ASSEMBLY,NONME	1
11	PAOZZ		24161	10C5E-8-8MBX45-8 -8FJX-43-10SG	HOSE,NONMETALLIC	1
					END OF FIGURE	

https://truckmanualshub.com/ 331

2 — 3 AND 4

5 — 6 AND 7

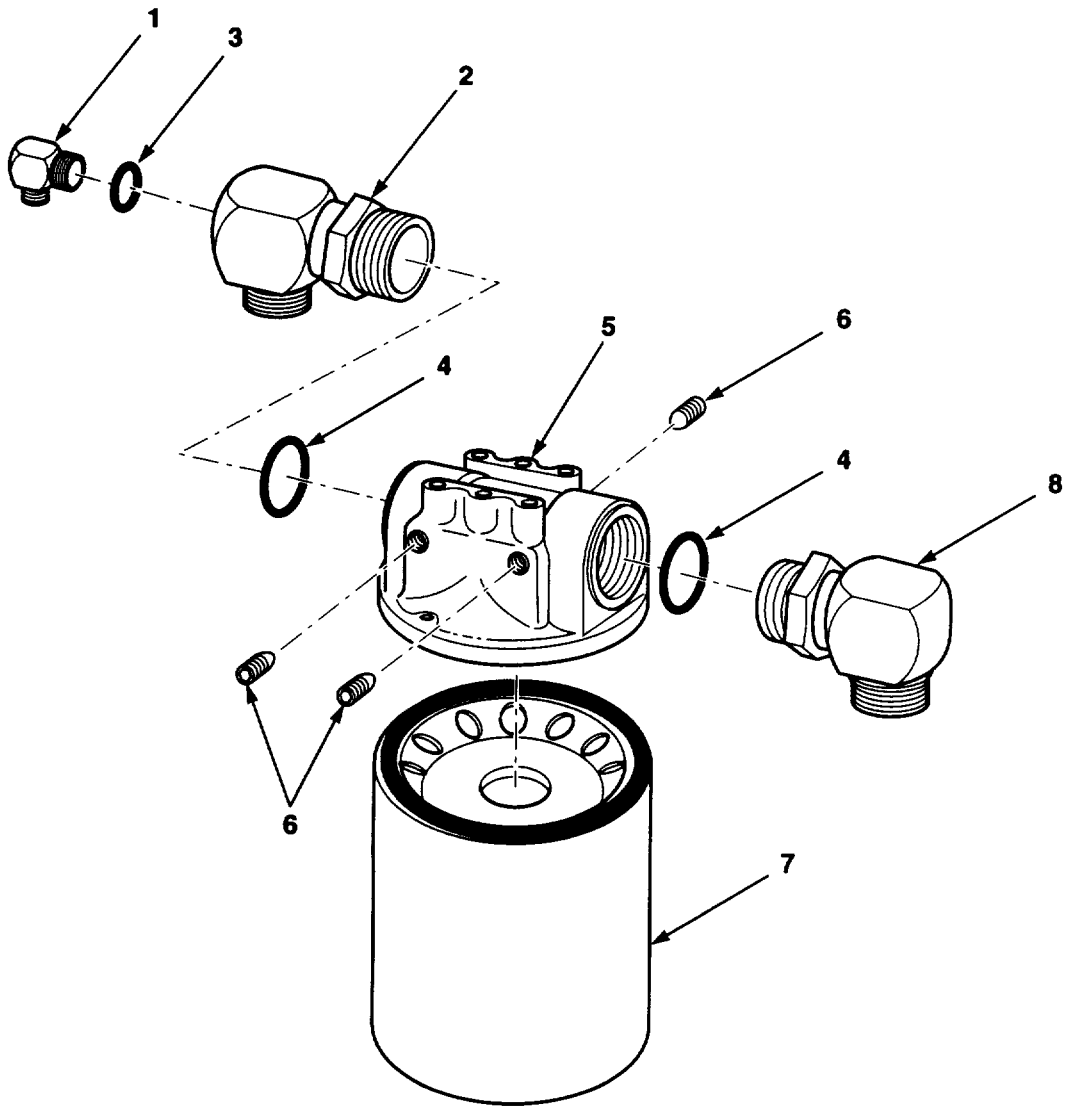

Figure 153. Hydraulic Oil Filter Head

https://truckmanualshub.com/ 332

(1) ITEM NO.	(2) SMR CODE	(3) NSN	(4) CAGEC	(5) PART NUMBER	(6) DESCRIPTION AND USABLE ON CODES (UOC)	(7) QTY
					GROUP 2406 STRAINERS, FILTERS, LINES AND FITTINGS, ETC. FIG. 153 HYDRAULIC OIL FILTER HEAD	
1	PAOZZ	4730005852309	96906	MS51527A4	ELBOW,TUBE TO BOSS	1
2	PAOZZ		OS1H5	6801-12X20 BP-4 OR	ADAPTER	1
3	XAOZZ		051H5	6801-12X20 XA	.PACKING,PREFORMED	1
4	XAOZZ		59257	16-20-SA-6 XA	.PACKING,PREFORMED	2
5	PAOZZ		02697	50AT-932443(10B) -N-25-OO-RIRO	FILTER,HEAD	1
6	XBOZZ		07443	16F2	.PLUG	4
7	PAOZZ		07443	1408619	.FILTER	1
8	PAFZZ		07443	1400610	ELBOW,PIPE	1
					END OF FIGURE	

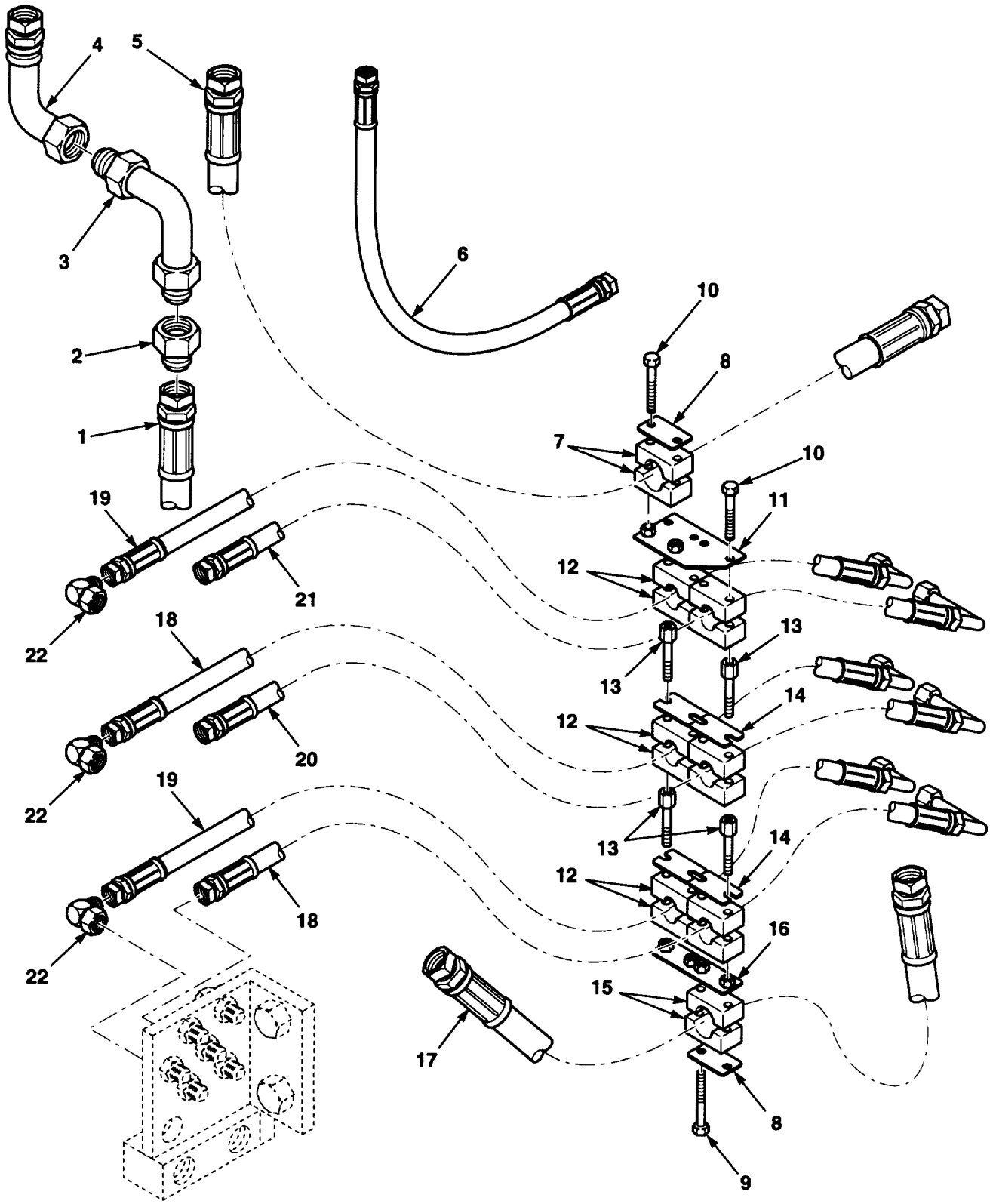

Figure 154. Stack Valve Lines

https://truckmanualshub.com/ 334

(1) ITEM NO.	(2) SMR CODE	(3) NSN	(4) CAGEC	(5) PART NUMBER	(6) DESCRIPTION AND USABLE ON CODES (UOC)	(7) QTY
					GROUP 2406 STRAINERS, FILTERS, LINES AND FITTINGS, ETC. FIG. 154 STACK VALVE LINES	
1	PAOZZ		24161	U3HU16X16NJX16NJ -58	HOSE ASSEMBLY,NONME	1
2	PAOZZ	4730000771009	96906	MS51519A16	NIPPLE,BOSS	1
3	PAOZZ	4730003130825	30327	63UA-16X16	ELBOW,TUBE	1
4	XBOZZ		07443	1407903	TUBE,RETURN	1
5	PAOZZ		24161	U3HU12X12NJX12NJ -33	HOSE ASSEMBLY,NONME	1
6	PAOZZ		07443	1408074	HOSE ASSEMBLY,NONME	1
7	PAOZZ		53790	4300PP	CLAMP,HALF	2
8	XBOZZ		53790	DP4	PLATE,COVER	1
9	PAOZZ	5305014343001	89749	1C432	SCREW,CAP,HEXAGON H	2
10	PAOZZ	5305000712509	80204	B1821BH025C150N	SCREW,CAP,HEXAGON H	6
11	XBOZZ		07443	1407778	PLATE	4
12	PAOZZ		53790	2171PP	CLAMP,HALF	12
13	PAOZZ	5306012171881	53790	AF2	BOLT COUPLING	8
14	XBOZZ		53790	SIG2	PLATE,SAFETY	4
15	PAOZZ		53790	3250PP	CLAMP	2
16	PAOZZ		07443	1407979	CLAMP,PLATE	1
17	PAOZZ		07443	1407969	HOSE ASSEMBLY,NONME	1
18	PAOZZ		07443	51032-52	HOSE ASSEMBLY,NONME	2
19	PAOZZ		07443	1407964	HOSE ASSEMBLY,NONME	2
20	PAOZZ		07443	1407966	HOSE ASSEMBLY,NONME	1
21	PAOZZ		07443	1407967	HOSE ASSEMBLY,NONME	1
22	PAOZZ	4730006185372	81343	6-6 070221CA	ELBOW,TUBE	1
					END OF FIGURE	

https://truckmanualshub.com/ 335

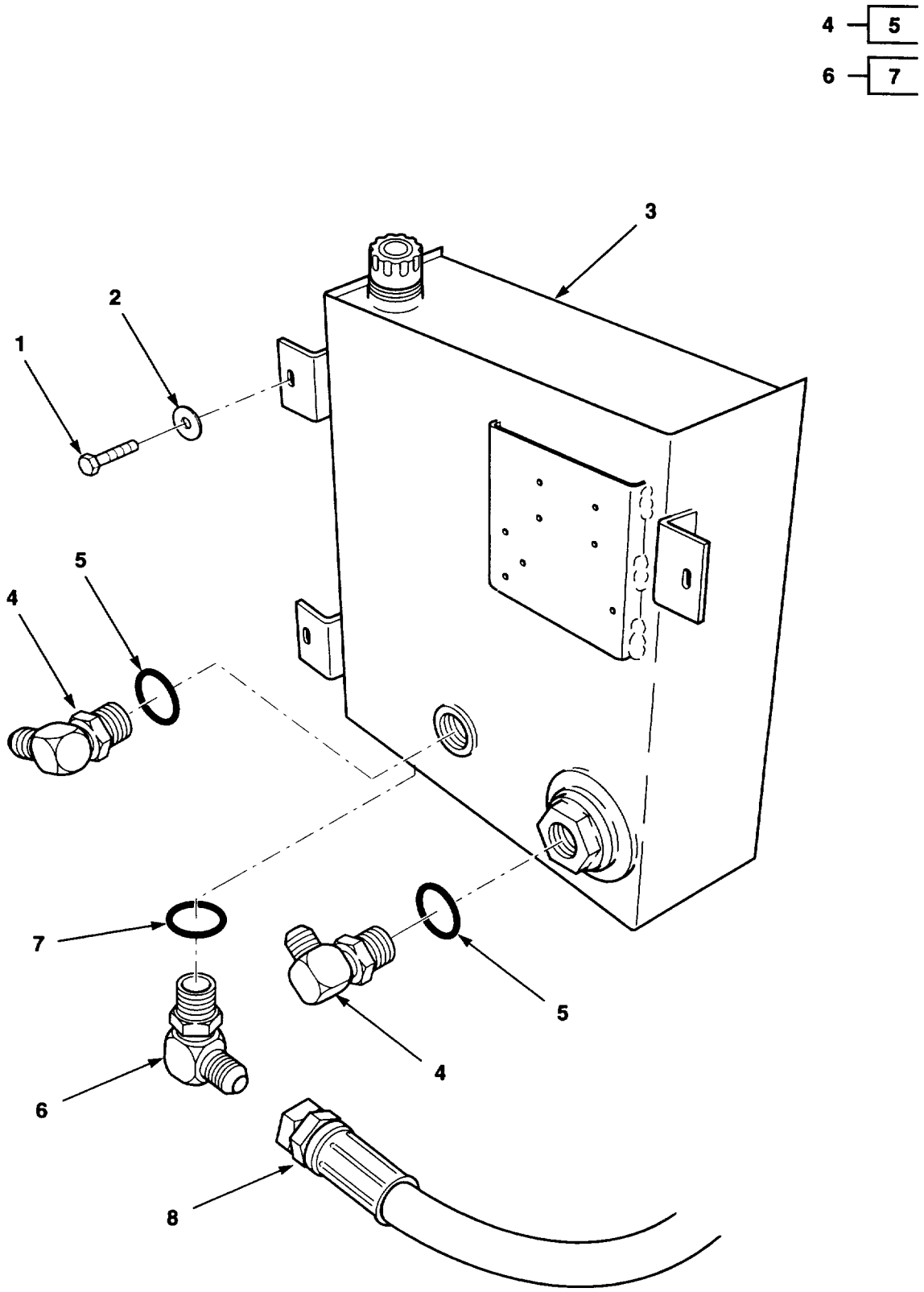

Figure 155. Hydraulic Reservoir

https://truckmanualshub.com/ 336

(1) ITEM NO.	(2) SMR CODE	(3) NSN	(4) CAGEC	(5) PART NUMBER	(6) DESCRIPTION AND USABLE ON CODES (UOC)	(7) QTY
					GROUP 2408 LIQUID TANKS OR RESERVOIRS FIG. 155 HYDRAULIC RESERVOIR	
1	PAFZZ	5305012683656	15526	DIN933-M6X16-8.8 -A4C	SCREW,CAP,HEXAGON H	2
2	PAFZA	5310006858191	84955	KS1411-2-05-13	WASHER,FLAT	2
3	PFFZZ		28122	908910	TANK,OIL,HYDRAULIC	1
4	PAFZZ		07443	1400610	ELBOW,PIPE	2
5	XAOZZ		07443	1400610-XA	.O-RING	1
6	PAFZZ	4730008225609	96906	MS51527A8	ELBOW,TUBE TO BOSS	1
7	PAOZZ	5330014129862	89749	79K12	.O-RING	1
8	PAOZZ		24161	10C5E-8-8MBX45-8 -8FJX-14-10SG	HOSE,NONMETALLIC	1

https://truckmanualshub.com/ 337

(1) ITEM NO.	(2) SMR CODE	(3) NSN	(4) CAGEC	(5) PART NUMBER	(6) DESCRIPTION AND USABLE ON CODES (UOC)	(7) QTY
					GROUP: 94 REPAIR KITS	
					GROUP: 9401 REPAIR KITS	
					FIG. KITS	
	PAFZZ	5330013954742	07516	R18265K	PARTS KIT,SEAL REPL	1
					PACKING,PREFORMED (1) 141-13	
					RING,BACKUP (1) 141-12	
					SEAL (1) 141-7	
					WASHER,SEAL (1) 141-4	
					WIPER (1) 141-5	
	PAFZZ		05283	786-0334-K004	SEAL,KIT	1
					ROD,WIPER (1) 99-2	
					SEAL,PISTON (1) 99-10	
					SEAL,PISTON (1) 99-11	
					SEAL,ROD (2) 99-7	
					TUBE,SEAL (2) 99-8	
	PAFZZ		05283	795-0300-K008	PARTS KIT,SEAL REPL	1
					PACKING,PISTON (1) 137-4	
					PACKING,ROD (1) 137-11	
					RING,EXPANSION (1) 137-5	
					RING,SHEAR (1) 137-13	
					SEAL (1) 137-20	
					SEAL,BACKUP (1) 137-8	
					SEAL,BACKUP (1) 137-9	
					SEAL,PISTON,INNER (1) 137-7	
					WIPER,ROD (1) 137-12	
	PAFZZ		05283	795-0350-K008	KIT,TILT CYLINDER	1
					BEARING (1) 136-16	
					PACKING,PREFORMED (1) 136-11	
					PACKING,PREFORMED (1) 136-9	
					PACKING,PREFORMED(1) 136-17	
					RING,BACKUP (1) 136-23	
					RING,EXPANDER (1) 136-20	
					SEAL,TUBE (2) 136-10	
					WIPER,ROD (1) 136-12	
	PAFZZ	5330013953590	05283	795-0400-K004	PARTS KIT,SEAL REPL	1
					GASKET (1) 138-13	
					PACKING,PREFORMED (4) 138-4	
					PACKING,PREFORMED (1) 138-12	
					PACKING,ROD (2) 138-11	
					SEAL (2) 138-5	
					SEAL,BACKUP (2) 138-7	
					WIPER,ROD (2) 138-10	
					END OF FIGURE	

https://truckmanualshub.com/ 338

(1) ITEM NO.	(2) SMR CODE	(3) NSN	(4) CAGEC	(5) PART NUMBER	(6) DESCRIPTION AND USABLE ON CODES (UOC)	(7) QTY
					GROUP:95 GENERAL USE STANDARDIZED PARTS GROUP:9501 HARDWARE SUPPLIES AND BULK MATERIEL	
					FIG. BULK MATERIEL	
1	PAOZZ		30327	A208	HOSE	1
2	PAOZZ		30327	27010	HOSE	1
3	PAOZZ		70842	H177	HOSE	1
4	PAOZZ		OEGS7	9	HOSE	1
5	PAOZZ	4720001439390	24161	27003	HOSE,NONMETALLIC	1
6	PAOZZ		7B930	3077	WIRE,BLACK 16 GAU GE	1
7	PAOZZ		7B930	3077-2	WIRE,GREEN16 GAUGE	1
8	PAOZZ		90816	95939 REC	WIRE,RED 16 GAUGE	1
9	PAOZZ		2W733	8471	WIRE,TWISTED 16 AWG	1
10	PAOZZ		90816	95939 RLW	WIRE,YELLOW 16 GAUGE	1
					END OF FIGURE	

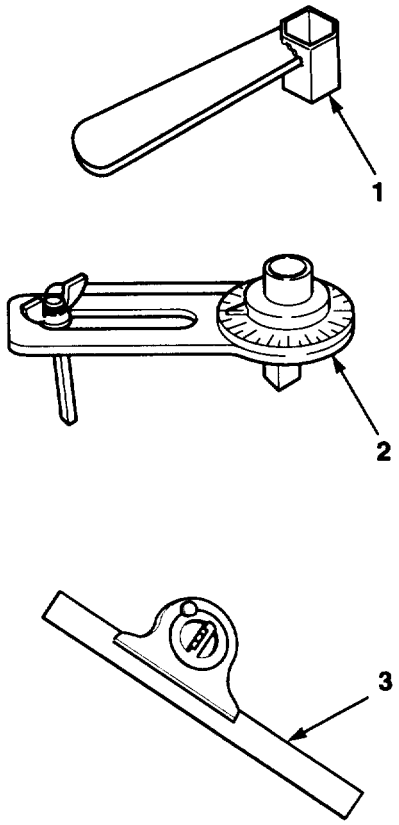

Figure 156. Unit Maintenance Special Tools

(1) ITEM NO.	(2) SMR CODE	(3) NSN	(4) CAGEC	(5) PART NUMBER	(6) DESCRIPTION AND USABLE ON CODES (UOC)	(7) QTY
					GROUP 2604 SPECIAL TOOLS FIG. 156 ORGANIZATIONAL MAINTENANCE SPECIAL TOOLS	
1	PEOZZ		62445	0301107	RETAINER,CRANKSHAFT	
2	PEOZZ		62445	0301102	GAGE,TI GHTE NING.....	
3	PEOZZ		81348	GGG-S-656	SQUARE,COMBI NATION.....	
					END OF FIGURE	

https://truckmanualshub.com/ 341

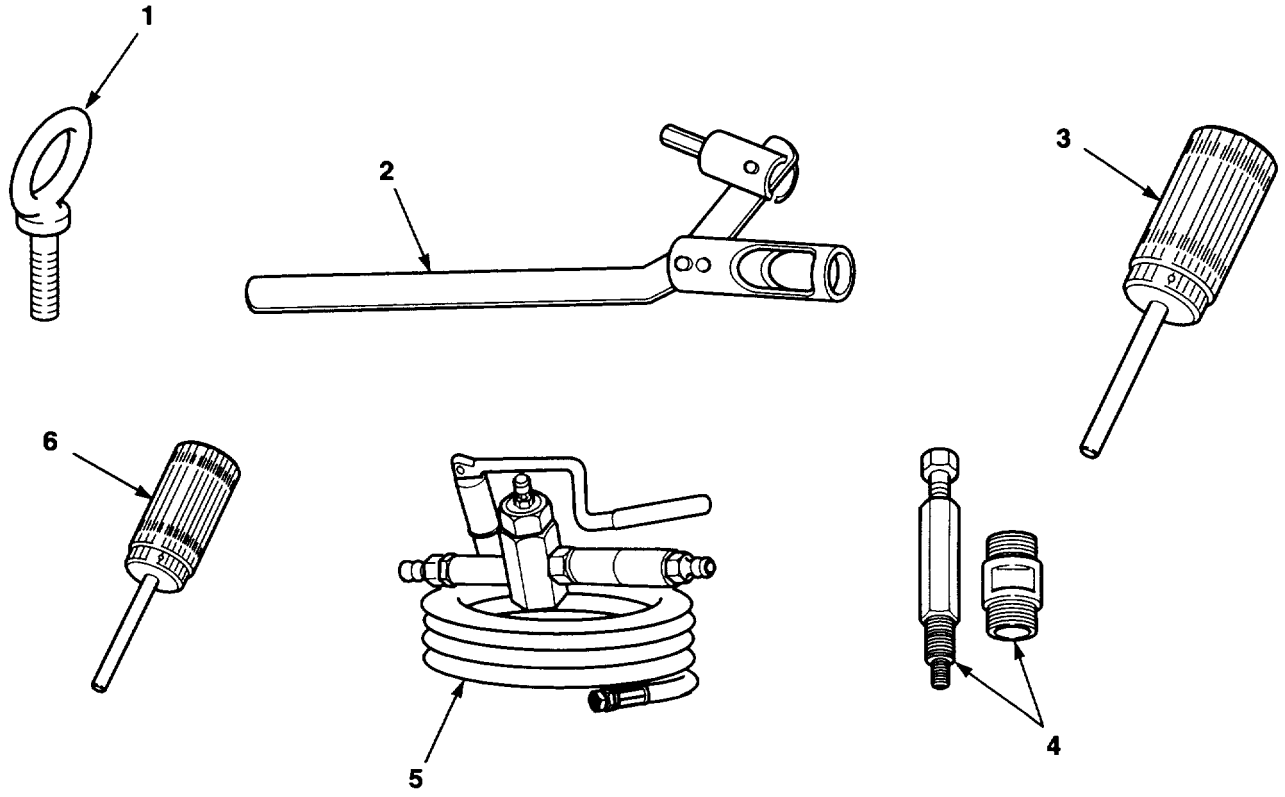

Figure 157. Direct Support Maintenance Special Tools

https://truckmanualshub.com/ 342

(1) ITEM NO.	(2) SMR CODE	(3) NSN	(4) CAGEC	(5) PART NUMBER	(6) DESCRIPTION AND USABLE ON CODES (UOC)	(7) QTY
					GROUP 2604 SPECIAL TOOLS FIG. 157 DIRECT MAINTENANCE SPECIAL TOOLS	
1	PEFZZ		07443	1411224	HOIST,RING	
2	PEFZZ	5120014369761	07443	1400154	INSERTER,BEARING AN	
3	PEFZZ		62445	J-33345	COMPRESSOR,VALVE SP	
4	PEFZZ	3460011897943	62445	003-0441	MANDREL,EXPANSION	
4	PEFZZ	3460011897942	62445	003-0620	MANDREL,EXPANSION	
5	PEFZZ	4320012639680	62445	003-0714	PUMP,RECIPROCATING	
6	PEFZZ		62445	003-0762	PULLER, GEAR	
					END OF FIGURE	

https://truckmanualshub.com/ 343

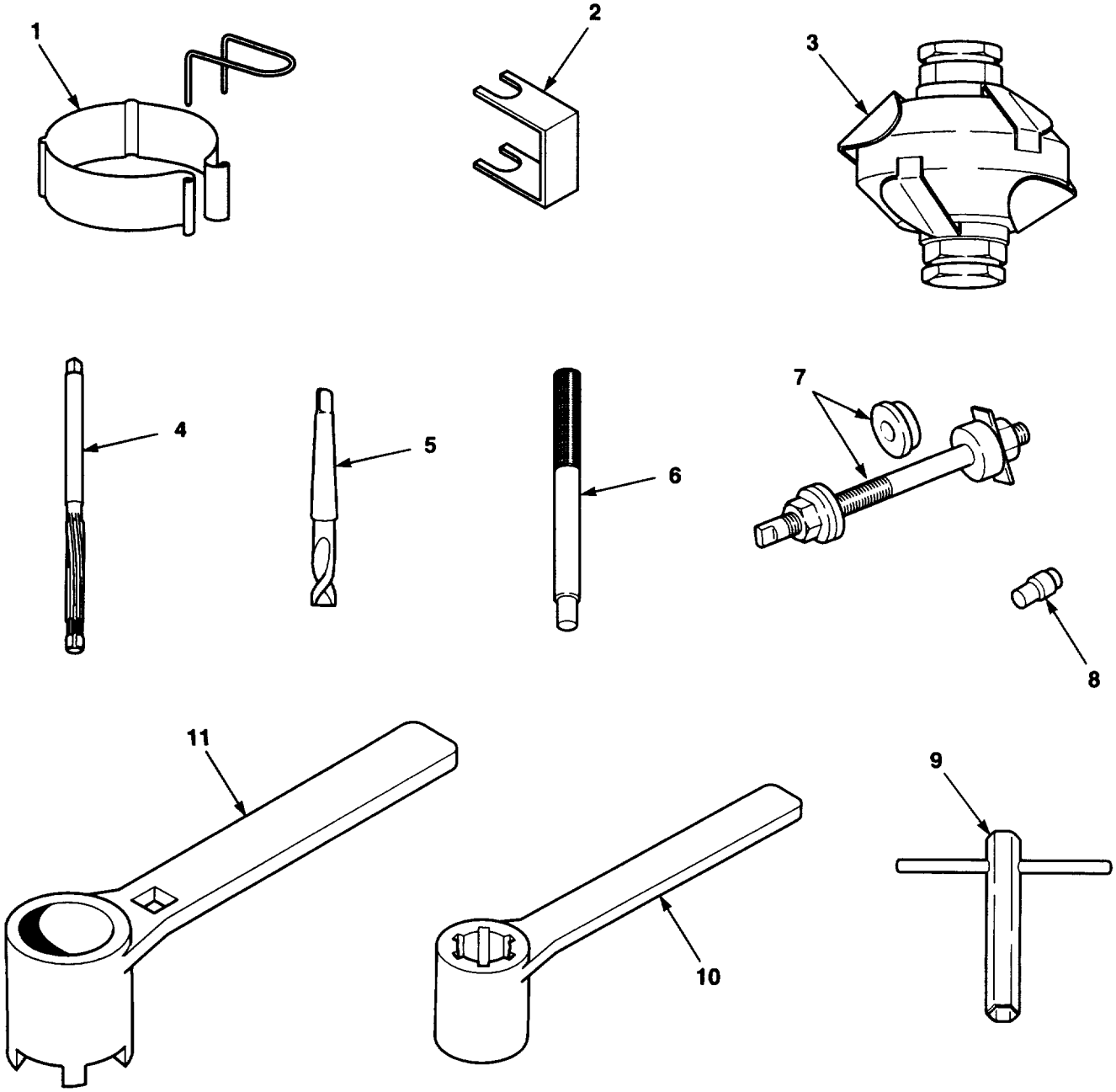

Figure 158. General Support Maintenance Special Tools

https://truckmanualshub.com/ 344

(1) ITEM NO.	(2) SMR CODE	(3) NSN	(4) CAGEC	(5) PART NUMBER	(6) DESCRIPTION AND USABLE ON CODES (UOC)	(7) QTY
					GROUP 2604 SPECIAL TOOLS FIG. 158 GENERAL MAINTENANCE SPECIAL TOOLS	
1	PEHZZ	5120012476128	62445	003-0430	COMPRESSOR,PISTON R	
2	PEHZZ	5120012523905	62445	125300	COMPRESSOR,PUSHROD	
3	PEHZZ	5120012802284	62445	003-0784	CUTTER,VALVE SEAT	
4	PEHZZ	5110012037945	62445	003-0452	REAMER,HAND	
5	PEHZZ	5110012045070	62445	003-0652	REAMER,HAND	
6	PEHZZ	5120012045073	62445	003-0453	INSERTER AND REMOVE	
7	PEHZZ	5120012800077	62445	003-0433	INSERTER AND REMOVE	
8	PEHZZ		62445	003-0789	INSTALLING TOOL	
9	PEHZZ		62445	003-1078	SPANNER, WRENCH	
10	PEHZZ		07443	1401499	WRENCH,PINION	
11	PEHZZ	5120012481797	62445	003-1043	WRENCH,SOCKET	
					END OF FIGURE	

CROSS-REFERENCE INDEXES

STOCK NUMBER	FIG.	ITEM
2815-00-003-0021	12	16
5365-00-003-4162	134	2
5305-00-007-6338	21	5
4320-00-019-2991	28	8
5305-00-042-9477	82	24
5305-00-044-4153	142	14
5310-00-045-3299	63	3
4730-00-050-4203	100	12
5315-00-058-9816	114	6
5305-00-068-0502	86	2
5305-00-068-0509	103	17
5305-00-068-0511	82	22
	82	30
5305-00-071-2509	78	9
	154	10
5305-00-071-2513	151	1
	151	15
5330-00-071-8844	133	5
5310-00-073-2165	110	2
4730-00-077-1009	154	2
5310-00-082-1679	102	7
	102	11
5310-00-088-0551	57	7
3110-00-100-0500	147	13
3110-00-100-3084	147	14
3110-00-100-6155	82	28
3110-00-117-0633	86	31
3040-00-124-0880	111	19
4730-00-133-3196	128	4
5310-00-138-4272	112	1
5305-00-138-4618	133	26
5940-00-143-4774	76	11
5940-00-143-4780	76	2
4720-00-143-9390	BULK	5
5310-00-149-9143	148	34
5360-00-157-7372	133	6
5306-00-161-0794	130	1
3110-00-171-2489	109	6
5310-00-186-9550	151	9
2940-00-192-9182	28	4
4730-00-202-8469	21	18
4730-00-204-3491	30	5
	30	15
5330-00-211-9376	133	17
5305-00-225-3841	150	1
	150	14
	150	32
5305-00-226-4831	86	45
4730-00-231-3017	21	21
4730-00-231-4009	90	1

STOCK NUMBER	FIG.	ITEM
4730-00-232-5478	89	9
5315-00-234-1863	135	9
	148	26
2910-00-238-0033	32	1
3120-00-240-8053	6	6
5365-00-252-4758	145	5
5930-00-258-6606	58	3
5305-00-269-3211	142	18
5305-00-269-3238	59	8
4730-00-277-8643	105	2
4730-00-278-4311	128	7
4730-00-279-0353	145	3
5325-00-281-5403	85	9
5325-00-281-6623	148	21
5315-00-282-1448	148	6
5940-00-283-5281	76	12
	77	10
4730-00-313-0825	154	3
5306-00-334-9967	150	7
5307-00-349-1230	118	15
5330-00-359-4050	137	10
5310-00-383-4677	109	11
2940-00-405-7377	20	1
5360-00-410-3054	86	24
4730-00-410-9700	82	8
4730-00-420-4441	60	3
4730-00-432-7713	80	12
	112	3
4730-00-435-8015	16	9
	80	14
	128	5
5340-00-451-1612	38	6
4730-00-465-5928	88	11
	90	6
6220-00-482-6916	61	3
4730-00-491-4983	82	36
4820-00-494-1861	133	7
4820-00-494-1866	133	8
3120-00-497-1579	148	33
5940-00-557-4345	76	15
	77	10
5310-00-576-5752	64	2
5310-00-584-7888	142	8
4730-00-585-2309	132	6
	134	24
	153	1
3110-00-586-8305	109	13
3110-00-586-8306	109	5
3120-00-587-4781	148	20
5340-00-598-9577	111	15

https://truckmanualshub.com/ 346

CROSS-REFERENCE INDEXES

STOCK NUMBER	FIG.	ITEM
5940-00-602-1575	77	13
3110-00-606-6435	111	9
4730-00-618-5372	112	5
	154	22
4730-00-618-5381	150	23
6150-00-636-8766	91	11
5310-00-637-9541	142	17
5330-00-646-8240	83	23
	84	22
5365-00-674-6831	31	12
4730-00-675-9216	134	4
5310-00-685-8191	31	9
	35	15
	40	2
	117	14
	118	6
	135	6
	135	16
	150	8
	150	30
	155	2
4730-00-710-5571	149	9
	149	17
4720-00-721-9893	151	7
5310-00-754-2005	135	17
4730-00-762-1239	82	34
3120-00-763-8929	107	1
4730-00-781-6089	150	28
1420-00-786-6682	53	2
4730-00-797-6567	152	9
4730-00-809-9427	80	17
5330-00-810-7491	133	13
	134	3
4730-00-812-0924	134	13
2590-00-813-8320	133	16
4730-00-822-5609	155	6
5310-00-823-8804	89	15
5330-00-835-7485	133	35
5315-00-839-2326	143	12
	144	9
5315-00-839-5821	35	22
5940-00-843-1550	77	10
5330-00-854-1603	111	3
5340-00-865-9496	35	11
4730-00-883-0643	150	20
	151	11
5305-00-889-2999	57	1
5330-00-893-7594	82	10
3110-00-902-3756	85	7
5315-00-903-5943	148	27
4730-00-913-0762	89	8
5310-00-933-5940	147	12
6620-00-962-8699	68	4
5330-00-965-0740	130	2
5305-00-978-9383	150	19
5305-00-983-7475	31	1
5305-00-983-8339	142	9
5305-00-984-6195	88	6
5305-00-989-0844	133	27
	133	30
5305-00-989-7435	61	6
	116	8
5310-00-991-6691	147	36
5940-00-998-6126	77	12
3040-01-009-3814	103	5
5360-01-012-3590	12	14
5306-01-012-7251	5	3
5330-01-012-8856	87	4
5310-01-013-5463	3	21
	10	4
	12	3
	29	1
	39	10
	42	10
	43	12
5310-01-013-5473	5	4
5310-01-013-5628	26	12
	39	4
5310-01-013-5630	8	9
	10	10
	39	9
5310-01-013-5631	10	8
5365-01-013-5649	4	2
5330-01-015-9617	3	3
	131	24
2815-01-021-9092	12	10
2815-01-021-9093	12	7
2815-01-022-0094	13	14
3020-01-022-3663	7	3
5330-01-024-4853	82	16
	86	20
5340-01-029-1194	12	15
5330-01-032-0582	140	13
5325-01-043-8794	91	4
3120-01-048-2456	44	10
5325-01-049-3976	12	12
5310-01-052-5767	109	12
3110-01-067-6901	111	7
3120-01-068-3473	111	4
5999-01-068-9543	76	6

https://truckmanualshub.com/ 347

CROSS-REFERENCE INDEXES

STOCK NUMBER	FIG.	ITEM
5999-01-068-9543	76	27
	77	11
4820-01-079-1486	111	12
5920-01-085-0825	65	8
5325-01-085-3125	111	2
3120-01-087-7063	111	8
5940-01-088-0271	76	24
	76	32
5977-01-095-5206	111	18
5935-01-096-1872	76	5
	77	14
5305-01-097-8184	111	10
3110-01-100-9048	111	14
5305-01-101-3322	39	34
	93	8
5305-01-101-4832	95	1
4730-01-104-7503	134	17
5940-01-110-6423	77	10
4730-01-116-5918	28	17
5305-01-122-0459	86	5
5920-01-123-5211	65	8
4730-01-128-4174	150	39
5330-01-128-6460	82	17
4730-01-128-9621	86	6
4730-01-129-5572	150	26
	151	14
2920-01-132-4961	51	1
6115-01-134-8122	44	12
6115-01-134-8153	44	8
5325-01-136-6095	44	7
5325-01-136-6096	44	11
5315-01-136-8328	44	9
5999-01-138-1528	76	4
	76	35
	77	3
	77	11
	88	4
3120-01-147-8115	142	11
5920-01-149-6952	65	8
4730-01-151-0021	25	3
5306-01-151-0039	39	6
5310-01-151-0041	26	9
2520-01-153-9169	83	17
	84	10
2540-01-154-4203	125	4
4730-01-156-4835	132	2
5305-01-158-3207	39	17
5310-01-160-5720	2	5
2540-01-163-1242	35	1
2940-01-164-6206	79	1

STOCK NUMBER	FIG.	ITEM
3040-01-165-6129	35	16
5305-01-166-0614	48	6
5310-01-166-5857	25	14
2520-01-168-1707	83	9
	84	9
3110-01-168-5303	139	8
	142	6
5305-01-175-3667	93	20
95	14	
5305-01-175-5374	122	4
5340-01-181-7555	116	12
2815-01-185-8298	12	11
4730-01-186-0535	25	18
2910-01-186-0928	26	11
5305-01-187-0531	17	13
	39	14
2815-01-187-7163	4	1
5315-01-188-0754	27	1
5330-01-188-0851	19	2
5330-01-188-0903	16	3
5330-01-188-0904	18	8
5365-01-188-1089	4	2
5340-01-188-1102	26	3
3020-01-188-3676	42	12
4730-01-188-8243	25	9
3460-01-189-7942	157	4
3460-01-189-7943	157	4
5310-01-189-8478	114	10
5305-01-190-4585	26	14
	131	25
5340-01-190-5586	25	16
5310-01-190-7468	13	10
	13	15
5310-01-190-7470	128	6
2910-01-191-0684	19	1
5340-01-191-2702	54	9
5360-01-191-8019	13	13
5305-01-191-8163	133	19
5330-01-191-8167	39	33
5340-01-191-8203	133	24
3020-01-191-8669	6	17
2815-01-191-9418	14	1
3120-01-192-5794	6	4
5325-01-192-5823	39	13
2815-01-192-5872	9	5
2935-01-192-6067	18	1
2815-01-192-9801	13	16
5365-01-193-7160	22	3
5306-01-193-9282	8	1
5306-01-193-9285	10	5

https://truckmanualshub.com/ 348

CROSS-REFERENCE INDEXES

STOCK NUMBER	FIG.	ITEM
5310-01-193-9303	42	11
5365-01-193-9336	3	2
5306-01-193-9689	6	15
5365-01-194-0758	10	13
3120-01-194-4817	6	2
5306-01-194-5925	42	31
5305-01-194-5926	11	5
5305-01-194-5927	16	10
5305-01-194-5928	16	12
5305-01-194-5929	6	11
5305-01-194-5930	13	4
3120-01-194-6285	14	2
5340-01-194-9143	13	12
5325-01-194-9154	39	2
	128	3
5330-01-194-9950	10	6
	42	32
4730-01-195-4244	18	9
5315-01-195-5439	9	11
5330-01-195-5622	42	6
5340-01-195-5773	25	10
5310-01-195-5845	41	8
2815-01-195-7143	12	1
5340-01-195-7304	42	7
3120-01-195-7984	10	12
3120-01-195-7985	11	4
3120-01-195-7986	41	3
5325-01-195-8046	41	5
5306-01-196-0433	9	10
3120-01-196-2583	16	13
5306-01-196-3155	41	7
5307-01-196-3329	10	16
5307-01-196-3330	10	17
5310-01-196-3871	50	7
5325-01-196-6635	9	2
5315-01-197-1478	3	17
5340-01-197-1502	3	4
5365-01-197-1503	3	5
5365-01-197-2332	6	18
	25	17
3120-01-197-6657	9	9
4730-01-197-8226	25	13
5930-01-198-0916	50	6
5310-01-198-5449	34	4
3040-01-198-7290	41	4
2930-01-198-7323	39	16
2930-01-198-7324	39	35
2930-01-198-7325	39	32
2930-01-198-7326	39	19
5310-01-200-1095	17	9
5330-01-200-6703	34	5
4730-01-200-8460	136	6
5365-01-201-2008	5	1
4730-01-201-2085	28	15
5310-01-201-9955	116	11
2530-01-202-0302	103	18
5325-01-202-3642	6	5
5999-01-203-6687	76	23
	76	29
5110-01-203-7945	158	4
6620-01-204-3181	53	1
5110-01-204-5070	158	5
5120-01-204-5073	158	6
5340-01-204-7153	17	14
2815-01-204-7958	9	4
5305-01-206-7235	59	3
	66	3
5360-01-207-0160	42	28
5307-01-207-0170	13	8
5310-01-207-7205	42	3
5310-01-207-7206	5	2
5310-01-207-7210	25	15
4710-01-208-1313	17	2
5307-01-208-3691	26	7
5310-01-208-6603	6	7
5310-01-209-7212	13	2
5330-01-209-7304	17	1
5310-01-209-9395	6	12
5310-01-210-1673	6	16
5330-01-210-4983	3	19
4730-01-215-3421	105	11
5306-01-217-1881	150	35
	154	13
5340-01-218-2101	112	8
4820-01-220-6736	141	9
5310-01-227-6119	145	2
3020-01-227-7382	149	12
2940-01-233-9144	33	8
2815-01-234-7390	12	13
5310-01-235-1857	13	5
	29	2
	42	30
5310-01-235-3084	10	14
4730-01-235-3308	25	5
5340-01-236-6391	6	8
5310-01-237-2050	15	5
5310-01-237-2051	16	11
5310-01-237-2774	39	7
5306-01-237-4919	39	27
5365-01-237-9127	33	6

https://truckmanualshub.com/ 349

CROSS-REFERENCE INDEXES

STOCK NUMBER	FIG.	ITEM
5330-01-238-8316	26	4
5330-01-238-8390	3	6
5305-01-239-1322	15	4
5305-01-239-2282	3	22
5310-01-239-3545	145	10
5310-01-242-8459	43	2
	87	6
5310-01-244-3775	15	3
5310-01-244-4003	37	4
5305-01-246-4430	8	10
5120-01-247-6128	158	1
5305-01-247-8572	6	20
	39	8
5305-01-247-8573	43	3
5120-01-248-1797	158	11
5310-01-250-3733	39	29
5120-01-252-3905	158	2
3020-01-252-5819	85	11
3020-01-252-5825	83	21
	84	26
3020-01-252-5827	82	2
5306-01-252-7113	18	6
5310-01-252-7222	17	5
2520-01-252-7623	130	3
3020-01-252-8871	85	10
3020-01-252-8872	85	18
2520-01-252-8907	83	10
	84	11
5306-01-253-1591	41	13
	41	14
5306-01-253-1592	39	12
4820-01-253-1969	82	31
4820-01-253-1970	86	7
3040-01-253-5541	82	3
3040-01-253-5543	130	4
3110-01-254-2353	83	5
	84	6
	84	24
5306-01-254-2361	17	15
5360-01-254-8898	82	7
5330-01-254-8995	82	6
5315-01-254-9667	82	9
	82	20
5360-01-255-2543	82	32
5330-01-255-2559	85	2
	85	15
5330-01-255-2560	86	16
	86	29
5330-01-255-2561	83	15
	84	16
5330-01-255-2562	85	3
5330-01-255-2563	86	42
5330-01-255-2565	83	16
	84	17
5330-01-255-2579	85	6
5310-01-255-4833	85	16
3110-01-255-4870	85	12
3110-01-255-4871	83	2
	84	2
5365-01-255-9318	85	14
5365-01-255-9319	85	13
5340-01-255-9395	83	12
	84	13
5365-01-255-9524	83	20
	84	25
5340-01-256-0497	82	13
3120-01-256-2928	85	4
5325-01-256-4633	83	8
	84	8
	84	12
5325-01-256-4634	83	11
3110-01-256-9767	145	4
5340-01-257-1813	82	15
5340-01-257-7691	83	13
	84	14
5340-01-259-2587	86	36
5305-01-259-9516	75	11
	107	9
5330-01-260-8806	82	26
4730-01-261-6561	16	7
	80	3
	82	37
4320-01-263-9680	157	5
5360-01-265-2242	133	25
5340-01-265-6746	133	34
5365-01-266-3174	133	1
5365-01-266-4121	133	33
4730-01-268-2404	105	17
5305-01-268-3656	1	9
	30	7
	31	10
	48	8
	64	9
	78	11
	155	1
5305-01-268-3657	147	26
5305-01-268-5796	12	4
5310-01-269-1309	147	11
5310-01-271-9602	1	2
	2	14

CROSS-REFERENCE INDEXES

STOCK NUMBER	FIG.	ITEM
5310-01-271-9602	38	9
	148	38
5365-01-273-7446	29	3
5365-01-273-7514	43	6
5305-01-273-7553	50	3
5310-01-274-2084	43	4
	43	17
5310-01-274-2086	42	29
5305-01-274-2097	10	9
	87	7
5340-01-274-7403	3	18
5305-01-274-7424	8	3
5365-01-274-7435	4	2
5365-01-274-7436	4	2
5310-01-277-9849	42	4
5330-01-278-6912	24	11
5120-01-280-0077	158	7
5940-01-280-1617	77	5
	77	10
5120-01-280-2284	158	3
5365-01-280-7191	131	8
5310-01-283-4552	18	7
6680-01-284-6517	56	2
5305-01-285-2750	43	9
5330-01-286-7812	131	9
5310-01-290-7456	54	6
5305-01-293-6637	98	2
2815-01-294-1587	12	9
3110-01-298-0555	41	2
3030-01-300-3868	41	11
5306-01-303-2815	21	16
	112	9
5305-01-303-5631	117	10
5310-01-305-7087	34	13
5365-01-305-9386	34	12
5365-01-305-9387	34	7
4330-01-306-1083	34	1
5330-01-306-6583	34	11
5330-01-306-6584	34	9
3110-01-307-5810	95	17
3110-01-307-5811	96	4
5330-01-308-0100	93	18
5330-01-308-0104	101	4
3110-01-308-2124	95	4
3110-01-311-6925	82	1
	83	22
	84	21
5310-01-312-2408	136	15
5330-01-312-3725	136	18
5330-01-312-3753	96	1
5310-01-312-3834	96	13
5340-01-312-3882	96	10
5330-01-312-7132	96	3
5330-01-312-7151	96	29
5330-01-312-7175	96	17
5330-01-312-7176	96	8
5365-01-312-7237	96	27
5306-01-312-7606	96	12
5365-01-312-7639	96	27
5305-01-312-7643	96	19
5365-01-313-0232	93	14
5365-01-313-0303	96	2
5315-01-313-1976	96	18
3110-01-313-2938	96	20
5365-01-313-2956	96	15
5365-01-313-3006	96	26
5325-01-313-3007	96	25
3120-01-313-3033	95	10
5310-01-313-3041	95	20
5310-01-313-3042	95	27
5310-01-313-3051	95	3
5365-01-313-3053	96	27
3110-01-313-3059	95	2
5365-01-313-3061	96	21
5365-01-313-3062	96	23
5310-01-313-3069	95	24
5340-01-313-3081	95	22
3020-01-313-4196	95	9
3020-01-313-4197	95	8
5315-01-313-5606	95	12
5315-01-313-5612	95	16
5365-01-313-5842	95	18
5365-01-313-7939	93	17
5365-01-313-7940	95	19
5365-01-313-7941	95	19
5365-01-313-7950	95	7
5365-01-313-7953	95	11
5365-01-314-0869	93	17
5315-01-314-1848	95	13
5365-01-314-3865	93	9
5330-01-314-4797	93	3
5330-01-314-4799	93	6
5307-01-314-4842	93	16
5365-01-314-4855	95	19
5360-01-314-4905	104	7
5310-01-314-5286	93	12
5365-01-314-5292	93	10
5365-01-314-5293	93	1
5325-01-314-5316	104	12
5325-01-314-5317	104	11

https://truckmanualshub.com/ 351

CROSS-REFERENCE INDEXES

STOCK NUMBER	FIG.	ITEM
5325-01-314-5319	104	6
5365-01-314-5357	101	2
5305-01-314-7591	101	1
5305-01-314-7592	101	5
2530-01-314-8745	101	6
4730-01-314-8816	34	16
5315-01-314-9011	104	4
5340-01-314-9014	101	7
5330-01-315-1543	95	21
5330-01-315-1551	95	25
5365-01-315-4226	104	2
5305-01-315-5532	148	4
	148	37
3020-01-315-6727	96	22
5365-01-315-7153	101	3
5307-01-316-1404	93	15
5310-01-321-1995	91	12
5306-01-321-8718	62	6
5305-01-322-8719	65	1
	107	5
5310-01-323-1606	2	10
	54	11
5935-01-323-6815	77	9
5935-01-323-8569	76	33
	77	2
	77	15
5340-01-324-3695	38	1
2815-01-324-3705	13	11
5305-01-325-8388	146	29
5305-01-326-4922	148	40
5935-01-327-0956	50	4
	76	10
5330-01-328-4137	109	1
5305-01-329-9730	147	17
5310-01-340-4645	30	8
5310-01-341-4135	47	2
3020-01-342-4887	6	9
5330-01-343-2648	26	10
5330-01-343-2670	131	27
6340-01-347-2633	55	2
2920-01-347-6069	44	1
4820-01-347-7701	86	32
5310-01-350-8553	59	5
5306-01-351-1744	91	6
5365-01-351-9341	82	5
5310-01-352-7374	2	15
	116	16
5305-01-353-2022	139	10
3120-01-353-5200	83	19
3120-01-353-9440	83	6
3120-01-353-9440	84	4
	84	20
3120-01-353-9441	83	7
	84	3
	84	19
5340-01-355-6821	150	2
	150	11
	150	31
5310-01-358-7977	8	6
	25	8
	48	4
	62	8
	135	20
5310-01-358-8280	21	4
	117	20
5940-01-361-7065	76	14
5305-01-363-6090	39	20
5310-01-364-4171	96	7
5307-01-364-4791	96	5
5330-01-364-4892	16	1
5330-01-364-4893	12	5
5305-01-365-4860	148	35
2990-01-365-6928	50	5
5305-01-366-6581	117	9
4730-01-367-9965	150	9
5330-01-369-9463	148	15
4310-01-370-0247	9	8
5310-01-370-3987	59	4
	59	7
	64	10
	65	6
	116	20
5940-01-374-8363	76	17
	77	10
5940-01-374-9839	77	10
5330-01-377-2688	39	30
5305-01-379-4128	147	33
5305-01-381-1215	2	2
5360-01-381-9774	103	19
2530-01-382-2838	103	16
5306-01-387-3127	147	37
5315-01-388-2053	109	7
5305-01-389-0065	85	19
5340-01-389-2417	91	7
5365-01-389-3470	16	6
	80	9
4820-01-393-5272	23	1
	80	5
5306-01-394-9295	147	20
2530-01-394-9718	103	14

https://truckmanualshub.com/ 352

CROSS-REFERENCE INDEXES

STOCK NUMBER	FIG.	ITEM
5365-01-395-2134	143	3
	144	7
5325-01-395-2135	139	7
5365-01-395-2137	149	16
5365-01-395-2138	149	11
5365-01-395-2139	143	6
5365-01-395-2782	139	5
	139	5
	142	5
5365-01-395-3586	142	3
5315-01-395-3587	48	7
5330-01-395-3590	KITS	
5365-01-395-3591	142	12
5365-01-395-4656	6	3
5340-01-395-4658	10	7
5315-01-395-4671	148	7
5305-01-395-4672	140	14
5360-01-395-4674	86	18
5365-01-395-4675	86	11
5365-01-395-4676	143	1
	144	3
5365-01-395-4677	86	19
5360-01-395-4678	82	27
5325-01-395-4680	149	13
5360-01-395-4681	86	8
5365-01-395-4682	82	25
5340-01-395-4683	86	1
5360-01-395-4684	86	27
5360-01-395-4685	86	26
5305-01-395-4686	86	3
5360-01-395-4689	86	22
5305-01-395-4690	86	38
5365-01-395-4737	3	11
5330-01-395-4742	KITS	
5315-01-395-4747	100	6
	103	11
5330-01-395-4750	143	7
5330-01-395-5113	6	13
5365-01-395-5118	10	3
5340-01-395-5120	39	1
5340-01-395-5122	86	28
5315-01-395-5124	143	13
	144	10
5315-01-395-5125	100	3
5330-01-395-5126	143	2
5340-01-395-5875	148	23
5305-01-395-5876	145	9
5306-01-395-5877	10	15
5340-01-395-6279	39	37
5340-01-395-6281	39	36
5340-01-395-6282	3	15
5340-01-395-6284	39	41
5340-01-395-6285	50	2
5340-01-395-6286	43	5
5340-01-395-6288	8	8
2530-01-395-6860	¶00	4
2520-01-395-6910	82	14
4730-01-395-7304	148	3
4730-01-395-7308	148	24
4730-01-395-7309	105	3
4730-01-395-7310	150	21
	151	13
4730-01-395-7313	68	2
5340-01-395-7693	3	16
5306-01-395-7697	26	5
5306-01-395-7698	43	11
5306-01-395-7699	44	4
5305-01-395-7700	3	9
5340-01-395-7702	148	28
5330-01-395-7703	147	8
5340-01-395-7709	142	16
5305-01-395-7710	140	12
	141	3
5305-01-395-7713	148	11
5340-01-395-7716	86	23
5340-01-395-7719	148	5
5305-01-395-7720	142	2
5365-01-395-7721	148	19
5307-01-395-7722	109	4
5340-01-395-7726	139	6
5305-01-395-7727	62	4
	100	7
5315-01-395-7863	86	44
5340-01-395-7867	145	7
5330-01-395-7868	86	43
5330-01-395-8016	10	2
5325-01-395-8017	138	2
6110-01-395-8347	45	1
5305-01-395-8749	97	2
4710-01-395-8786	148	2
3020-01-395-8792	148	29
4720-01-395-8793	128	2
4730-01-395-8794	21	19
3040-01-395-8795	141	1
3040-01-395-8796	140	1
4720-01-395-8800	128	1
4730-01-395-8802	134	18
3020-01-395-9280	143	14
	144	11
5306-01-395-9602	139	12

https://truckmanualshub.com/ 353

CROSS-REFERENCE INDEXES

STOCK NUMBER	FIG.	ITEM
5330-01-396-0442	17	4
5330-01-396-0443	15	7
5330-01-396-0445	29	6
	37	2
2935-01-396-0448	140	6
2935-01-396-0451	140	2
2935-01-396-0453	141	6
5340-01-396-0528	138	6
5310-01-396-0983	35	4
	39	23
	48	3
	61	8
	62	9
	64	3
	74	3
	105	15
	116	5
	117	17
5310-01-396-0984	139	9
5310-01-396-0985	30	18
	65	5
	116	21
3040-01-396-1401	82	11
4720-01-396-1403	151	8
4720-01-396-1405	151	8
3020-01-396-1408	148	10
2530-01-396-1410	100	4
3040-01-396-1416	139	4
2520-01-396-1910	83	14
	84	15
5315-01-396-2214	6	10
3020-01-396-2337	148	13
2590-01-396-2339	140	9
2590-01-396-2341	141	11
2590-01-396-2342	143	11
2590-01-396-2475	149	4
5310-01-396-2856	11	1
5310-01-396-2857	3	12
5310-01-396-2859	13	3
5310-01-396-2860	87	5
5310-01-396-2861	7	4
5310-01-396-2871	2	8
	103	2
	106	2
	115	2
	122	3
	147	18
	151	3
5310-01-396-2872	50	1
5310-01-396-2874	21	12

STOCK NUMBER	FIG.	ITEM
5310-01-396-2874	28	12
	28	14
	62	7
	64	4
	72	1
	74	2
	75	10
	102	2
	103	7
	105	10
	107	4
	110	9
	117	5
	118	13
4730-01-396-3036	98	3
5310-01-396-3869	24	7
5310-01-396-3942	82	21
	82	29
5310-01-396-3944	82	23
5310-01-396-4290	97	1
5310-01-396-4292	142	15
	146	30
5310-01-396-4293	2	7
148	8	
5310-01-396-4294	38	2
	40	6
	147	21
	147	28
5310-01-396-4295	54	10
	106	1
	122	5
5310-01-396-4296	109	9
3040-01-396-4994	145	8
4810-01-396-4999	86	17
4810-01-396-5000	86	15
3040-01-396-5001	109	3
2520-01-396-5008	81	1
4820-01-396-5028	132	1
3040-01-396-5033	138	1
5310-01-396-5256	35	3
	39	22
	48	5
	61	7
	64	5
	74	7
	78	10
	116	6
	119	6
	135	21
	147	34

https://truckmanualshub.com/ 354

CROSS-REFERENCE INDEXES

STOCK NUMBER	FIG.	ITEM
5310-01-396-5256	147	39
	150	37
4730-01-396-5505	25	1
2520-01-396-5509	84	1
4320-01-396-5510	141	14
4730-01-396-5511	18	10
4730-01-396-5512	24	6
2520-01-396-5516	83	1
5330-01-396-5825	86	33
4820-01-396-7104	86	4
4820-01-396-7742	15	1
3020-01-396-7747	143	4
3120-01-396-7989	43	15
4010-01-396-8135	144	8
4010-01-396-8137	143	16
3120-01-396-8372	42	19
3110-01-396-8373	149	15
5365-01-396-8375	97	6
6150-01-396-9505	1	7
3120-01-396-9602	148	16
3120-01-396-9832	83	3
3120-01-396-9833	43	16
3120-01-396-9835	7	6
3130-01-396-9836	100	9
	109	10
3120-01-396-9838	42	20
3110-01-397-0173	143	5
6625-01-397-0225	64	12
5330-01-397-0277	86	12
5340-01-397-0289	149	2
9330-01-397-0409	62	3
3120-01-397-0832	147	4
4720-01-397-1164	149	3
3110-01-397-1480	44	6
3110-01-397-1590	148	12
3110-01-397-1630	11	2
3120-01-397-1632	147	5
3130-01-397-1650	145	1
3120-01-397-1675	97	5
2590-01-397-3549	86	34
2520-01-397-5268	87	1
3040-01-397-5271	147	29
2520-01-397-5273	78	3
3040-01-397-5688	85	8
3040-01-397-5689	147	15
2520-01-397-5691	82	12
5330-01-397-6262	86	46
5310-01-397-6489	116	15
5340-01-397-8132	17	17
5305-01-398-0346	2	13
5305-01-398-0347	2	1
5305-01-398-0348	63	4
	74	6
5310-01-398-1728	2	3
	38	13
	94	3
	105	6
	139	13
5365-01-398-2295	138	3
5310-01-398-2340	30	13
	35	21
	102	8
4820-01-398-3338	60	1
	86	25
4810-01-398-3339	86	9
2520-01-398-3341	148	18
3020-01-398-3342	82	4
3020-01-398-3345	149	14
4820-01-398-3347	86	21
3020-01-398-3348	83	4
	84	5
5306-01-398-5012	148	9
5306-01-398-5014	43	7
5306-01-398-5015	43	8
5307-01-398-7394	7	7
5307-01-398-7396	29	5
	37	1
5306-01-398-8612	39	40
5306-01-398-8613	39	39
5305-01-398-8615	148	30
5305-01-399-6910	134	19
4730-01-400-2006	147	7
2530-01-407-4920	104	10
5365-01-407-7928	104	9
5340-01-408-4124	104	8
5940-01-409-2479	76	9
5330-01-412-9862	149	18
	155	7
5305-01-415-5212	117	12
5310-01-415-5214	28	13
	41	15
	72	2
	107	10
	110	10
	117	16
	118	14
	134	31
5310-01-415-5222	41	12
	131	22
5310-01-415-5224	100	5

https://truckmanualshub.com/ 355

CROSS-REFERNECE INDEXES

NATIONAL STOCK NUMBER INDEX

STOCK NUMBER	FIG.	ITEM
5310-01-415-6108	105	9
	147	27
5310-01-415-6113	54	4
	65	2
	122	7
5310-01-415-6114	116	9
6220-01-418-5001	63	2
6625-01-418-5645	55	1
5220-01-418-9362	56	3
5975-01-419-1925	57	5
5310-01-419-4428	92	3
5310-01-419-4499	132	5
	134	20
	134	32
5310-01-419-5087	96	16
5310-01-419-5191	114	3
	115	9
5310-01-419-5192	115	7
5310-01-419-5194	92	2
4730-01-419-6302	39	25
4730-01-419-6455	31	8
7690-01-419-8502	129	20
7690-01-419-8503	129	25
7690-01-419-8504	129	13
5305-01-419-9931	119	3
6680-01-420-0383	71	2
6625-01-420-0841	56	1
2590-01-420-1178	31	4
5365-01-420-1384	95	19
5365-01-420-1385	95	19
5305-01-420-1587	95	26
5315-01-420-2922	114	9
5315-01-420-2923	114	7
4710-01-420-3272	31	11
6680-01-420-3350	56	4
9905-01-420-3460	129	41
9905-01-420-3461	129	40
9905-01-420-3463	129	35
9905-01-420-3464	129	33
9905-01-420-3465	129	45
9905-01-420-3466	129	7
9905-01-420-3467	129	2
9905-01-420-3468	129	43
9905-01-420-3469	129	44
9905-01-420-3470	129	17
9905-01-420-3471	129	30
2990-01-420-5173	38	5
2910-01-420-5174	31	6
2520-01-420-5308	91	1
9905-01-420-7037	129	34
2590-01-420-9947	31	3
5310-01-421-1899	39	18
6620-01-422-2775	56	6
5305-01-422-6060	117	15
	118	7
9905-01-423-0406	129	42
5340-01-424-4606	2	4
5310-01-424-9560	2	12
5310-01-424-9561	2	6
5365-01-425-2423	39	24
2520-01-425-6573	81	2
6220-01-432-6854	61	2
6220-01-432-6858	61	1
5340-01-432-7685	61	9
5310-01-433-0997	40	5
	118	9
5365-01-433-3305	147	22
5310-01-433-4770	62	5
5310-01-433-4771	38	10
5310-01-433-4772	116	13
5340-01-433-5330	119	11
2540-01-433-8128	122	2
4730-01-433-8281	134	21
5305-01-433-8870	116	10
5365-01-433-9009	136	3
5330-01-434-0860	147	6
4720-01-434-2307	28	21
5305-01-434-2484	132	4
5305-01-434-2565	103	1
5305-01-434-2943	92	1
5305-01-434-2997	103	20
5305-01-434-3001	135	5
	154	9
4730-01-434-3904	31	2
3040-01-434-4807	140	1
4720-01-434-4808	150	15
4730-01-434-5214	134	11
4730-01-434-5215	134	26
4730-01-434-5432	134	29
2540-01-434-5558	122	1
5315-01-434-5836	147	19
5315-01-434-5837	148	25
5310-01-434-6594	26	8
5330-01-434-7270	6	14
5365-01-434-7273	87	3
5310-01-434-7274	17	16
5330-01-434-7280	26	6
5330-01-434-7281	37	2
5365-01-434-7401	12	6
4730-01-434-7943	39	28

https://truckmanualshub.com/ 356

CROSS-REFERNECE INDEXES

NATIONAL STOCK NUMBER INDEX

STOCK NUMBER	FIG.	ITEM
5340-01-434-8086	116	17
2540-01-434-8711	107	7
5330-01-435-3885	140	4
5330-01-435-3893	140	3
4720-01-435-9497	80	4
4720-01-435-9498	80	7
3120-01-436-3946	102	16
6160-01-436-9142	74	5
6220-01-436-9308	62	1
6220-01-436-9501	62	2
5120-01-436-9761	157	2
5340-01-437-0028	66	4
5310-01-437-0029	64	8
6150-01-437-0386	73	4
5340-01-437-0420	118	3
3040-01-437-2795	102	15
5365-01-437-2829	111	21
5305-01-437-2934	117	8
5305-01-437-2959	40	3
6680-01-437-3391	22	1
5340-01-437-3825	110	6
5340-01-437-3826	150	34
5330-01-437-3844	146	17
5325-01-437-3846	136	8
5330-01-437-3848	146	18
4320-01-437-4037	146	1
4730-01-437-4216	30	12
	80	10
4730-01-437-4217	134	7
4730-01-437-4218	153	2
2940-01-437-4219	80	16
4730-01-437-4221	112	6
4730-01-437-4280	16	8
	82	35
5365-01-437-4389	147	30
5330-01-437-4488	KITS	
5365-01-437-4494	136	24
5365-01-437-4496	136	19
5310-01-437-4499	18	3
7690-01-437-4787	129	1
7690-01-437-4788	129	31
7690-01-437-4789	129	28
5305-01-437-4896	58	2
5920-01-437-4897	54	8
2920-01-437-5361	44	14
5340-01-437-5842	119	4
5310-01-437-5846	70	3
5310-01-437-5848	97	8
4730-01-437-6036	153	8
	155	4
5340-01-437-6328	136	7
5340-01-437-6348	147	24
5305-01-437-6511	147	38
5305-01-437-6617	110	7
4710-01-437-7006	150	25
4710-01-437-7031	150	27
5310-01-437-7077	99	3
5340-01-437-7275	154	7
2530-01-437-7356	111	1
4730-01-437-7482	33	3
4730-01-437-7497	80	11
4720-01-437-7498	154	19
4720-01-437-7499	154	18
5310-01-437-8700	33	2
	33	7
5330-01-437-8705	147	31
4710-01-437-8849	150	5
4820-01-437-8916	18	4
4720-01-437-8953	154	20
5305-01-437-9170	91	10
3040-01-437-9397	137	1
4720-01-437-9545	151	6
4720-01-437-9567	151	5
2530-01-437-9642	58	4
4720-01-437-9884	152	5
5330-01-438-0331	KITS	
5340-01-438-0458	150	3
	150	12
	150	17
	154	12
3040-01-438-0632	70	2
4720-01-438-0932	154	21
4720-01-438-0934	154	17
9905-01-438-0975	129	5
9905-01-438-0977	129	37
5365-01-438-1161	103	6
4720-01-438-1188	150	6
5340-01-438-1191	147	9
4720-01-438-1230	150	4
9905-01-438-1501	129	8
9905-01-438-1504	129	23
4720-01-438-1578	150	16
5340-01-438-1614	150	38
4720-01-438-1654	150	13
5950-01-438-1687	44	3
5310-01-438-2306	73	3
5340-01-438-2327	110	5
9905-01-438-2386	129	29
4730-01-438-2438	68	3
5999-01-438-3133	44	16

https://truckmanualshub.com/ 357

CROSS-REFERNECE INDEXES

NATIONAL STOCK NUMBER INDEX

STOCK NUMBER	FIG.	ITEM
4720-01-438-3134	152	6
2530-01-438-3278	111	16
3040-01-438-3302	35	20
4710-01-438-3423	80	13
5360-01-438-3919	107	6
5360-01-438-3950	18	5
4720-01-438-4470	152	7
4720-01-438-4473	152	10
4720-01-438-4477	152	4
2910-01-438-4832	34	10
2590-01-438-4923	35	6
6680-01-438-5975	78	4
5930-01-438-6309	103	3
5305-01-438-7008	89	4
3040-01-438-7172	136	13
2530-01-438-7590	73	1
2530-01-438-7623	99	5
5315-01-438-7940	35	7
3040-01-438-9013	99	1
5305-12-124-0527	35	2
	61	4
	64	13
	94	2
	105	5
	119	5
	135	19
5305-12-125-0321	21	11
	28	10
	38	4
	102	3
	105	12
	117	4
5305-12-126-7945	115	12
5305-12-126-8629	38	12
5305-12-141-6606	17	6
5305-12-141-9848	15	6
5305-12-141-9877	10	18
5310-12-156-4913	17	12
5310-12-156-4991	17	11
	25	7
	26	13
	46	19
5305-12-166-7880	59	9
5310-12-170-1310	7	9
5305-12-170-2292	42	8
5305-12-173-9188	115	10
5305-12-173-9190	114	2
5305-12-173-9194	114	5
	115	6
2815-12-187-9316	29	4
2920-12-195-2652	47	4
2910-12-195-2896	24	10
2815-12-195-9008	5	5
2910-12-301-3452	24	1
3040-12-307-6331	42	1
2930-12-308-8153	41	1
4710-12-320-8233	15	8
4820-12-321-2533	15	2
4710-12-323-2121	25	21
4710-12-323-2122	25	20
4710-12-323-2123	25	19
4710-12-323-2124	25	6
2815-12-323-2916	39	21
2815-12-323-2917	39	38
2815-12-323-2920	39	11
4710-12-323-3471	25	4
3040-12-323-5671	42	2
2930-12-323-7353	41	9
4720-12-336-7510	26	16
2815-12-337-0033	3	1
2815-12-337-0034	6	1
2815-12-337-0094	7	2
2815-12-337-0095	17	3
2815-12-337-0096	17	7
2815-12-337-0386	16	4
5330-21-912-4404	120	15
5330-21-912-4406	121	5
5340-21-912-9989	120	5

https://truckmanualshub.com/ 358

CROSS-REFERENCE INDEXES

PART NUMBER INDEX

CAGEC	PART NUMBER	STOCK NUMBER	FIG.	ITEM
53790	AF2	5306-01-217-1881	150	35
			154	13
56644	AM-6	3120-01-436-3946	102	16
38022	AS215		121	6
38022	AS215-XA		121	7
38022	AS215-XA1		121	8
38022	AS215-XA2		121	9
38022	AS215-XA3		121	10
38022	AS215-XA4		121	11
38022	AS215-XA5		121	12
38022	AS215-XA6		121	13
38022	AS215-XA7		121	14
38022	AS216		121	1
38022	AS216-XA		121	2
20696	AS568-440	5330-01-395-7703	147	8
71400	ATC-10	5920-01-123-5211	65	8
71400	ATC-15	5920-01-149-6952	65	8
71400	ATC-20	5920-01-085-0825	65	8
76761	A1-103	2920-01-347-6069	44	1
1BZ41	A1149	5340-01-434-8086	116	17
1BZ41	A1472W		116	7
			117	11
76761	A2-102	6110-01-395-8347	45	1
30327	A208		BULK	1
70750	A2549		107	8
94222	A3-30-519-12	5340-01-191-2702	54	9
76761	A5-121	5950-01-438-1687	44	3
07443	A50381		135	3
1BZ41	A5524	5340-01-437-0420	118	3
76761	A6-101		44	13
76761	A7-167	2920-01-437-5361	44	14
76761	A7-216		44	5
76761	A7-301	6115-01-134-8153	44	8
76761	A8-116	5999-01-438-3133	44	16
76761	A9-101		44	2
76761	A9-200	3120-01-048-2456	44	10
76761	A9-202	3110-01-397-1480	44	6
76761	A9-501	5306-01-395-7699	44	4
76761	A9-505	6115-01-134-8122	44	12
76761	A9-506	5315-01-136-8328	44	9
76761	A9-511	5325-01-136-6096	44	11
76761	A9-513	5325-01-136-6095	44	7
76761	A9-514		44	15
28818	BF31AH72		117	1
1CJ86	BN1014 M3.5X13		73	2
			126	1
1CJ86	BN54M10X1.5-25		88	12
51588	B16-L	3120-00-497-1579	148	33
80204	B1821BH025C125N	5305-00-068-0509	103	17
80204	B1821BH025C138N	5305-00-225-3841	150	1
			150	14

https://truckmanualshub.com/ 359

CROSS-REFERENCE INDEXES

PART NUMBER INDEX

CAGEC	PART NUMBER	STOCK NUMBER	FIG.	ITEM
80204	B1821BH025C138N	5305-00-225-3841	150	32
80204	B1821BH025C150N	5305-00-071-2509	78	9
			154	10
80204	B1821BH025C250N	5305-00-071-2513	151	1
			151	15
80204	B1821BH031C150N	5305-00-226-4831	86	45
80204	B1821BH038C125N	5305-00-068-0511	82	22
			82	30
80204	B1821BH038F125N	5305-00-269-3238	59	8
80204	B18231B08020N	5305-01-303-5631	117	10
51588	B24L	3120-00-587-4781	148	20
07516	B531	5365-01-395-3586	142	3
94969	CB1F-D-M-12V		66	1
92563	CCFH-4-SB	3110-01-256-9767	145	4
78174	CL5S	9330-01-397-0409	62	3
8Y119	CS564/060/33/060 /CS540/40/2		103	9
15434	C0800205200	5305-01-158-3207	39	17
66295	C32P	4730-00-204-3491	30	5
			30	15
06970	DC470		135	4
06970	DC471		135	4
06970	DG7128-1		135	12
15526	DIN 433 ST M6	5310-01-340-4645	30	8
1CJ86	DIN 985M3		58	5
15526	DIN127-B5-FST	5310-01-370-3987	59	4
			59	7
			64	10
			65	6
			116	20
D8286	DIN84-M5X16-4.8-A2P	5305-12-166-7880	59	9
15526	DIN931-M10X150-8.8-A4C	5305-01-285-2750	43	9
D8286	DIN931-M8X60-8.8-A2P	5305-12-141-6606	17	6
15526	DIN933-M6X16-8.8-A4C	5305-01-268-3656	1	9
			30	7
			31	10
			48	8
			64	9
			78	11
			155	1
D8286	DIN933-M6X20-8.8-A3C		49	1
D8286	DIN933-M6X30-8.8-A2P	5305-12-141-9848	15	6
15526	DIN933-M8-1.25X30-8.8-A4C	5305-01-268-5796	12	4
D8286	DIN933-M8X60-8.8-A2P	5305-12-141-9877	10	18

https://truckmanualshub.com/ 360

CROSS-REFERENCE INDEXES

PART NUMBER INDEX

CAGEC	PART NUMBER	STOCK NUMBER	FIG.	ITEM
08286	DIN933M8X8-8.8A2 P		10	11
1CJ86	DIN9338.8BN58M16 X	5305-01-438-7008	89	4
D9477	DIN934-M6-8-A2P	5310-12-156-4991	46	19
D8286	DIN965-M6X16-4.8 -H-A2P	5305-12-170-2292	42	8
38022	DL102		120	4
38022	DL106		120	3
38022	DL110		120	2
			120	9
38022	DL114	5340-21-912-9989	120	5
38022	DL125		120	16
53790	DP-AS		105	14
53790	DP-2	5340-01-355-6821	150	2
			150	11
			150	31
53790	DP-3		21	15
			21	15
			78	8
06970	DP147-1		135	11
53790	DP4		21	15
			21	15
			154	8
53790	DP6		112	10
38022	DR27		116	4
53790	DSP2		112	7
11139	DT06-2S		76	22
			76	22
			76	30
06970	D2644-2		135	10
			135	10
10988	D82804	3120-01-087-7063	111	8
10988	D82805	5305-01-097-8184	111	10
38022	EWAJ14		124	5
38022	EWA18		124	4
38022	EWA19		125	2
38022	EWB04		124	2
38022	EWWF24		124	1
			125	1
38022	E5-2-125-030	5340-01-433-5330	119	11
94222	E5-2-125-030-XA		119	12
94222	E5-2-125-030-XA1		119	13
94222	E5-2-125-030-XA2		119	14
79410	F-12-K-56		78	1
			81	4
28703	F-7-X-90		81	3
2K900	FBN-12		117	21
			117	21
01276	FD15-0126-04-XA		23	2
01276	FD15-1026-04	4820-01-393-5272	23	1
			80	5
06970	F1		35	9
79410	F1-42	3110-00-117-0633	86	31
18265	GAX00-1966		28	7
3U613	GE 60 ES-2RS		142	10

https://truckmanualshub.com/ 361

CROSS-REFERENCE INDEXES

PART NUMBER INDEX

CAGEC	PART NUMBER	STOCK NUMBER	FIG.	ITEM
18265	GEH06-5508		28	2
81348	GGG-S-656		156	3
79410	GM-9409010		78	2
			81	5
OKAW7	HB8CK	2530-01-438-7590	73	1
60703	HF14	2540-01-154-4203	125	4
38022	H081-101		120	6
			120	11
70842	H177		BULK	3
81718	H2525M	5310-00-637-9541	142	17
62445	J-33345		157	3
06970	J2		35	5
30327	KF08-06PS	4730-00-913-0762	89	8
30327	KF08-06PS90	4730-00-232-5478	89	9
30327	KF08-08PS	4730-00-465-5928	88	11
			90	6
30327	KF08-08RS		88	8
84955	KS1411-2-05-13	5310-00-685-8191	31	9
			35	15
			40	2
			117	14
			118	6
			135	6
			135	16
			150	8
			150	30
			155	2
07516	K104-8		112	2
07516	K302240	5305-01-395-7720	142	2
07516	K332		140	7
07516	K33796		30	9
			35	14
07516	K33797		117	19
07516	K340		141	13
03504	K52-6		150	22
			150	36
07516	K62-12-10	4730-01-395-8802	134	18
07516	K8-332		140	8
07516	K8-340		141	12
07516	K912		149	5
07516	K97535	5325-01-395-2135	139	7
07516	K97537	5365-01-395-2137	149	16
07516	K97538	5365-01-395-2134	143	3
			144	7
07516	K97615		149	8
1A679	LE-049E-10MW		35	23
			103	12
84830	LE-075G-10-S	5360-01-438-3919	107	6
13445	M-75903		52	1
51588	MB20-55Q		100	11
7X443	MF-24-20	4730-01-434-3904	31	2

https://truckmanualshub.com/ 362

CROSS-REFERENCE INDEXES

PART NUMBER INDEX

CAGEC	PART NUMBER	STOCK NUMBER	FIG.	ITEM
18479	ML-100-RMB	6340-01-347-2633	55	2
96906	MS15001-1	4730-00-050-4203	100	12
96906	NS16624-1200	5365-00-252-4758	145	5
96906	NS16997-166	5305-00-983-7475	31	1
96906	MS16997-187	5305-00-983-8339	142	9
96906	MS16997-65	5305-00-978-9383	150	19
96906	MS17796-45	3120-00-763-8929	107	1
96906	NS19059-2418	3110-00-100-6155	82	28
96906	NS20002-16	5310-00-149-9143	148	34
96906	MS20392-4C39	5315-00-903-5943	148	27
96906	MS20822-4	4730-00-231-4009	90	1
96906	MS21044-N04	5310-00-088-0551	57	7
96906	MS21910-G12		30	16
96906	MS24665-281	5315-00-839-2326	143	12
			144	9
96906	MS24665-300	5315-00-234-1863	135	9
			148	26
96906	MS24665-351	5315-00-839-5821	35	22
96906	MS24665-515	5315-00-282-1448	148	6
96906	MS25036-108	5940-00-143-4780	76	2
96906	MS25036-118	5940-00-557-4345	76	15
			77	10
96906	MS25036-153	5940-00-143-4774	76	11
96906	MS27183-9	5310-00-823-8804	89	15
96906	MS28778		132	3
			132	7
			132	71
96906	MS28778-3	5330-00-835-7485	133	35
96906	MS35206-217	5305-00-889-2999	57	1
96906	MS35206-247	5305-00-984-6195	88	6
96906	MS35207-264	5305-00-989-7435	61	6
			116	8
96906	MS35295-60	5305-00-269-3211	142	18
96906	MS35333-39	5310-00-576-5752	64	2
96906	MS35338-42	5310-00-045-3299	63	3
96906	MS35338-51	5310-00-584-7888	142	8
96906	MS35338-52	5310-00-754-2005	135	17
96906	MS35690-627	5310-00-082-1679	102	7
96906	MS35812-2	5340-00-865-9496	35	11
96906	MS39324-12-12-XA		149	10
96906	MS51500A12	4730-00-202-8469	21	18
96906	MS51500A8-8	4730-00-809-9427	80	17
96906	MS51501A6S	4730-00-781-6089	150	28
96906	MS51501A8	4730-00-797-6567	152	9
96906	MS51507A6	4730-00-883-0643	150	20
			151	11
96906	MS51519A16	4730-00-077-1009	154	2
96906	MS51521-A6Z	4730-01-129-5572	150	26
			151	14
96906	MS51521A12	4730-00-133-3196	128	4
96906	MS51523A12	4730-01-104-7503	134	17

https://truckmanualshub.com/ 363

CROSS-REFERENCE INDEXES

PART NUMBER INDEX

CAGEC	PART NUMBER	STOCK NUMBER	FIG.	ITEM
96906	MS51523A6	4730-00-618-5381	150	23
96906	MS51525A12	4730-00-710-5571	149	17
96906	MS51527A4	4730-00-585-2309	132	6
			134	24
			153	1
96906	MS51527A8	4730-00-822-5609	155	6
96906	MS51531B12	4730-00-812-0924	134	13
96906	MS51531B8	4730-00-762-1239	82	34
96906	MS51534A12-8	4730-00-675-9216	134	4
96906	MS9048-242	5315-00-058-9816	114	6
96906	MS90725-109	5305-00-044-4153	142	14
96906	MS90725-113	5305-01-325-8388	146	29
96906	MS90725-13	5306-01-303-2815	21	16
			112	9
96906	MS90725-6	5305-00-068-0502	86	2
15526	M6X1X20	5305-01-366-6581	117	9
63632	NW1-16Z1	5310-01-198-5449	34	4
18265	P00-2940		28	3
18265	P10-2144		28	5
18265	P10-2510	4320-00-019-2991	28	8
18265	P10-2805		28	6
93784	P5003-A67		133	10
76527	RBC#B16-L		147	3
59730	RBD14-188A		77	7
59730	RB737		77	10
59730	RCC-217-250	5940-00-602-1575	77	13
59730	RC10-10X		76	13
56501	RC10-14	5940-01-409-2479	76	9
15912	RC10-38	5940-01-361-7065	76	14
59730	RK727		76	28
07516	R10328		140	15
07516	R12367	3020-01-398-3345	149	14
07516	R12390	2590-01-396-2475	149	4
07516	R13396		149	6
07516	R17625-9		142	4
07516	R17650-9		142	1
07516	R17660	2590-01-396-2342	143	11
07516	R17660-1		143	8
07516	R17660-2		143	9
07516	R18265-90	3040-01-395-8795	141	1
07516	R18265K	5330-01-395-4742	KITS	
07516	R18270-9		141	8
81860	R18733-1	5310-01-323-1606	2	10
			54	11
81860	R18733-3	5310-01-160-5720	2	5
07516	R18962	5365-01-395-2139	143	6
			144	5
07516	R19511	4720-01-397-1164	149	3
07516	R206	5365-01-395-2782	139	5
			139	5
			142	5

https://truckmanualshub.com/ 364

CROSS-REFERENCE INDEXES

PART NUMBER INDEX

CAGEC	PART NUMBER	STOCK NUMBER	FIG.	ITEM
07516	R22	5365-01-395-3591	142	12
07516	R2211-9		141	10
07516	R22137-28	4010-01-396-8135	144	8
07516	R22137-7	4010-01-396-8137	143	16
07516	R22147	3020-01-395-9280	143	14
			144	11
07516	R22148	3020-01-396-7747	143	4
07516	R22150-9	3040-01-395-8796	140	1
07516	R22150L-9A	3040-01-434-4807	140	1
07516	R22155-9A		140	5
07516	R22158		143	15
			144	12
07516	R22160L-9		140	10
07516	R22160R-9		140	10
07516	R23202		144	1
07516	R23285-1		149	19
07516	R2362	3110-01-396-8373	149	15
07516	R2389	5310-01-396-0984	139	9
07516	R2551	5305-01-395-7710	140	12
			141	3
07516	R2552		140	11
			141	4
07516	R3561	3040-01-396-1416	139	4
07516	R3564	5306-01-395-9602	139	12
07516	R3595	5340-01-395-7726	139	6
07516	R4858	5305-01-395-4672	140	14
07516	R7332	5325-01-395-4680	149	13
07516	R7333	5365-01-395-2138	149	11
07516	R9009		141	7
07516	R9012	2935-01-396-0453	141	6
07516	R9013	4320-01-396-5510	141	14
07516	R9034	5330-01-435-3893	140	3
07516	R9037	2935-01-396-0451	140	2
07516	R9038	2935-01-396-0448	140	6
07516	R9042	5340-01-397-0289	149	2
07516	R9054	5315-01-395-5124	143	13
			144	10
07516	R9076	2590-01-396-2341	141	11
07516	R9085-90		141	2
07516	R9089	5365-01-395-4676	143	1
			144	3
07516	R9094	5330-01-395-4750	143	7
			144	6
07516	R9096	2590-01-396-2339	140	9
07516	R9098	3110-01-397-0173	143	5
			144	4
07516	R9099	5330-01-395-5126	143	2
			144	2
07516	R9155	5340-01-395-7709	142	16
07516	R9166		141	5
07516	R9169	5330-01-435-3885	140	4

https://truckmanualshub.com/ 365

CROSS-REFERENCE INDEXES

PART NUMBER INDEX

CAGEC	PART NUMBER	STOCK NUMBER	FIG.	ITEM
78388	SA-3742-24		48	1
26786	SBLR2120-C	2540-01-433-8128	122	2
76527	SFR6SS		107	2
53790	SIG2		150	33
			154	14
18265	SMP18-1052	2940-00-192-9182	28	4
12603	SN10	5310-00-383-4677	109	11
53790	SP2		150	18
14726	S05309F	5940-01-088-0271	76	24
			76	32
60038	TAN 15	5310-01-269-1309	147	11
55443	TM-502C2-190NO		53	4
55443	TM-511C2-105NO		53	3
60038	TW115	5310-00-933-5940	147	12
79410	T11-215	5360-00-410-3054	86	24
79410	T11-98	4730-00-410-9700	82	8
79410	T11-99	5360-01-254-8898	82	7
79410	T22-110A	5330-00-893-7594	82	10
75160	T36034	5310-01-239-3545	145	10
24161	U3HU12X12NJX12NJ -33		154	5
24161	U3HU16X16NJX16NJ -58		154	1
38022	VF002		123	1
38022	VF025HUPP-XB		129	12
38022	VH230008		119	8
38022	VH230045		119	10
1CJ86	VSM-13756-1D		65	12
91929	V3L139D8	5930-00-258-6606	58	3
38022	WE010	5330-21-912-4404	120	15
38022	WJ65674		124	3
			125	3
38022	W1010		120	19
79218	W1507-32CA	5305-00-042-9477	82	24
11139	W2S		76	34
62445	W492-034/8.000/2		1	4
38022	XC7180		63	1
79410	X1516H	4730-01-128-9621	86	6
88142	X278166	2940-01-164-6206	79	1
77237	001.03.0730	5330-01-315-1543	95	21
77237	001.05.0041	5330-01-315-1551	95	25
77237	001.05.0935	5330-01-312-7175	96	17
77237	001.05.1041	5330-01-312-3753	96	1
77237	001.05.1480	5330-01-312-7176	96	8
77237	001.13.0608	5330-01-312-7132	96	3
0B5C7	001-01-0009	5330-01-312-7151	96	29
77237	001-05-0817	5330-01-314-4799	93	6
77237	001-05-1178	5330-01-314-4797	93	3
0B5C7	002.01.0059	5325-01-314-5319	104	6
77237	002.02.1044	5325-01-313-3007	96	25
0B5C7	002-06-1045	5365-01-313-3006	96	26

https://truckmanualshub.com/ 366

CROSS-REFERENCE INDEXES

PART NUMBER INDEX

CAGEC	PART NUMBER	STOCK NUMBER	FIG.	ITEM
62445	0027 2313		37	5
62445	003-0430	5120-01-247-6128	158	1
62445	003-0433	5120-01-280-0077	158	7
62445	003-0441	3460-01-189-7943	157	4
62445	003-0452	5110-01-203-7945	158	4
62445	003-0453	5120-01-204-5073	158	6
62445	003-0620	3460-01-189-7942	157	4
62445	003-0652	5110-01-204-5070	158	5
62445	003-0714	4320-01-263-9680	157	5
62445	003-0762		157	6
62445	003-0784	5120-01-280-2284	158	3
62445	003-0789		158	8
62445	003-1043	5120-01-248-1797	158	11
62445	003-1078		158	9
0B5C7	005-13-0546	3110-01-313-2938	96	20
0B5C7	006.01.1497	5310-01-314-5286	93	12
0B5C7	006.11.1413	5310-01-364-4171	96	7
0DM03	006-022	5330-01-369-9463	148	15
0B5C7	009-03-1108	5360-01-314-4905	104	7
62445	01-0500 3320		22	2
52374	01-435-0397-4 IT EM69-2	5305-01-379-4128	147	33
38022	0108-D265		116	3
77237	011.04.1318	5310-01-313-3042	95	27
0B5C7	011-07-0704	5310-01-419-5087	96	16
62445	0110 2800		8	2
62445	0110 4122	5307-01-398-7396	29	5
			37	1
62445	0110 4845		7	1
62445	0110 4946	5310-01-341-4135	47	2
62445	0110 7548	5310-01-434-7274	17	16
62445	01102659		116	14
			151	4
62445	01102796		46	7
62445	01102797		46	23
62445	01102799		46	9
62445	01105537		46	24
62445	01107089		46	8
62445	0111 0548	5305-01-101-3322	39	34
62445	0111 1219	5306-01-395-7698	43	11
62445	0111 1339	5306-01-398-5015	43	8
62445	0111 1342	5306-01-398-5014	43	7
62445	0111 1770	5306-01-395-5877	10	15
62445	0111 2228	5306-01-398-8613	39	39
62445	0111 2803		47	3
62445	0111 2813	5310-12-156-4991	17	11
			25	7
			26	13
			39	5
62445	0111 7863	5310-12-156-4913	17	12
62445	0111 8323		49	14

https://truckmanualshub.com/ 367

CROSS-REFERENCE INDEXES

PART NUMBER INDEX

CAGEC	PART NUMBER	STOCK NUMBER	FIG.	ITEM
62445	0111 8693	5310-01-437-8700	33	2
			33	7
62445	0111 8716	5330-01-395-8016	10	2
62445	0111 8784	5365-01-389-3470	16	6
			80	9
62445	0111 8835	5310-01-437-4499	18	3
62445	0111 8970	5365-01-434-7273	87	3
62445	0111 9246	4730-01-437-7482	33	3
62445	01112307		46	10
62445	01112456		46	49
62445	01112824		21	3
			33	9
			34	20
			36	3
			80	20
			89	6
			89	14
62445	01117970		46	45
62445	01118688		131	3
62445	01118960		131	2
62445	0112 4457		42	5
62445	0112 6209	5307-01-398-7394	7	7
62445	01124654		46	18
62445	0113 6452	5310-12-170-1310	7	9
62445	0113 7239	5315-01-396-2214	6	10
62445	0113 7394	5310-01-244-4003	37	4
62445	0113 8712	5306-01-398-8612	39	40
62445	01137807		46	50
62445	0115 1441	5365-01-395-5118	10	3
62445	0116 0480	5330-01-396-0443	15	7
62445	0116 8140	4730-01-434-7943	39	28
62445	0117 0058	2920-12-195-2652	47	4
62445	0117 2303		7	5
62445	0117 4631		46	1
62445	0117 6197	5340-01-395-6282	3	15
62445	0117 8622	4730-01-396-5505	25	1
62445	0117 9228	4720-12-336-7510	26	16
62445	01200129		46	30
62445	01209919		46	31
62445	0121 2482	5340-01-395-6279	39	37
62445	0121 2483	5340-01-395-6281	39	36
62445	0121 5235		3	14
62445	0128 8170	5306-01-395-7697	26	5
62445	0128 8602		49	3
62445	0128 8662		49	18
62445	0128 8686		49	15
62445	01289875		46	28
62445	01289918		46	32
62445	01289921		46	39
62445	01289929		46	21
62445	01289957		46	35

https://truckmanualshub.com/ 368

CROSS-REFERENCE INDEXES

PART NUMBER INDEX

CAGEC	PART NUMBER	STOCK NUMBER	FIG.	ITEM
62445	01289970		46	37
62445	01289992		46	22
62445	0129 0522	4730-01-396-5512	24	6
62445	0129 8780		49	20
62445	0129 9059		49	4
62445	0129 9061		49	6
62445	01290010		46	42
62445	01290012		46	36
62445	01290021		46	5
62445	01290051		46	25
62445	01290074		46	16
62445	01290078		46	43
62445	01290138		46	34
62445	01290150		46	40
62445	01290163		46	4
62445	01290195		46	46
62445	01298635		46	11
62445	01298801		46	33
62445	01298826		46	14
0B5C7	013.01.1203	5365-01-420-1385	95	19
0B5C7	013.01.1204	5365-01-420-1384	95	19
0B5C7	013-01-0283	5365-01-313-7940	95	19
0B5C7	013-01-0284	5365-01-314-4855	95	19
0B5C7	013-01-0285	5365-01-313-7941	95	19
0B5C7	013-01-0323	5365-01-313-3053	96	27
0B5C7	013-01-0325	5365-01-312-7237	96	27
0B5C7	013-01-1348	5365-01-312-7639	96	27
62445	0130 1337		14	4
62445	0130 4992		49	17
62445	0130 8511		26	2
62445	0130 9916	5310-01-396-3869	24	7
62445	01304445		46	3
62445	01304714		46	38
62445	01306000		46	13
62445	01306477		46	17
62445	01306478		46	20
62445	01307226		46	48
62445	01307289		46	26
62445	01307966		46	6
62445	01308106		46	44
62445	01308522		46	12
62445	01308729		46	41
62445	01309610		46	27
62445	01309611		46	29
62445	01309612		46	47
62445	0132 1214		49	13
62445	01320043		46	2
03504	014-03-0336	5315-01-313-5606	95	12
62445	0140 1420	5330-01-377-2688	39	30
0B5C7	015-01-0361	5340-01-314-9014	101	7
38022	0151-J004		120	8

https://truckmanualshub.com/ 369

CROSS-REFERENCE INDEXES

PART NUMBER INDEX

CAGEC	PART NUMBER	STOCK NUMBER	FIG.	ITEM
38022	0152-D308		119	15
			120	10
38022	0152-J310		120	14
38022	0152-J311		119	9
38022	0152-Z309		120	12
0B5C7	016.02.1375	5305-01-420-1587	95	26
77237	016.05.0437	5305-01-312-7643	96	19
77237	016.14.1138	5365-01-314-5292	93	10
3M126	016.14.1177	5365-01-314-5293	93	1
0B5C7	016-02-1439	5306-01-312-7606	96	12
0B5C7	016-04-0506	5305-01-315-5532	148	4
			148	37
0B5C7	016-04-0843	5305-01-314-7592	101	5
77237	016-06-0439	5305-01-314-7591	101	1
92865	02-500-133	2530-01-382-2838	103	16
38022	0201-D047		120	18
62445	0210 1736	2815-12-323-2917	39	38
62445	0210 2313	5340-01-395-6288	8	8
62445	0213 0646		39	3
62445	0213 1370	5340-01-395-6284	39	41
62445	0213 3634		41	6
62445	0213 4712	2815-12-187-9316	29	4
62445	0213 6193		25	12
62445	0213 6717	5330-01-434-7280	26	6
62445	0213 8201	5340-01-397-8132	17	17
62445	0213-9737		3	8
62445	02136432		42	13
62445	0216 9403		22	4
62445	0223 0171	5365-01-395-4656	6	3
62445	0223 0921		18	2
62445	0223 1936	2815-12-323-2920	39	11
62445	0223 2500		26	1
62445	0223 3043	2815-12-195-9008	5	5
62445	0223 3072		9	1
62445	0223 3216	4820-01-437-8916	18	4
62445	0223 3217	5360-01-438-3950	18	5
62445	0223 3421	2930-12-308-8153	41	1
62445	0223 4263		12	2
62445	0223 4942		39	31
62445	0223 5338	2520-01-397-5268	87	1
62445	0223 5490	5340-01-395-5120	39	1
62445	0223 6578	5310-01-396-2859	13	3
62445	0223 9279	4820-01-396-7742	15	1
08018	0223-7530-XA		27	3
08018	0223-7530-XA1		27	4
08018	0223-7530-XA2		27	5
08018	0223-7530-XA3		27	6
08018	0223-7530-XA4		27	7
62445	0224 5837	3120-01-396-9835	7	6
62445	0224 8681		47	1
62445	0224 9052	2815-12-337-0094	7	2

https://truckmanualshub.com/ 370

CROSS-REFERENCE INDEXES

PART NUMBER INDEX

CAGEC	PART NUMBER	STOCK NUMBER	FIG.	ITEM
62445	0224 9990	5310-01-396-2861	7	4
62445	0292 9340	2815-12-337-0034	6	1
92865	03-021-421		106	4
62445	030-3032	4730-01-395-8794	21	19
62445	0301102		156	2
62445	0301107		156	1
38022	0313-D014		120	7
0NZJ1	0335-100-0002		126	3
62445	0336 3397	4710-12-323-3471	25	4
62445	0336 3991	3120-01-396-9833	43	16
62445	0336 8571	3120-01-396-7989	43	15
62445	0337 0743	5310-01-396-2860	87	5
62445	0338 2693	5310-01-396-2872	50	1
62445	0346 9591		87	2
62445	0347 7881	5330-01-396-0442	17	4
62445	0415 0820	4710-12-320-8233	15	8
62445	0415 2404	5340-01-395-4658	10	7
62445	0415 2424	4820-12-321-2533	15	2
62445	0415 2509	3120-01-396-8372	42	19
62445	0415 2510	3040-12-307-6331	42	1
62445	0415 2517	3120-01-396-9838	42	20
62445	0415 2520	3040-12-323-5671	42	2
62445	0415 3128		42	21
62445	0415 3138		17	10
62445	0415 3143	2815-12-337-0386	16	4
62445	0415 3996		11	3
62445	0415 4138		16	2
62445	0415 4222	4710-12-323-2121	25	21
62445	0415 4223	4710-12-323-2122	25	20
62445	0415 4224	4710-12-323-2123	25	19
62445	0415 4225	4710-12-323-2124	25	6
62445	0415 4610	5340-01-395-6285	50	2
62445	0415 4640	2930-12-323-7353	41	9
62445	0415 6058	5305-01-395-7700	3	9
62445	0415 6243	2815-12-337-0033	3	1
62445	0415 6283	5310-01-396-2856	11	1
62445	0415 6284	3110-01-397-1630	11	2
62445	0415 6862	5340-01-395-7693	3	16
62445	0415 7079	2815-12-323-2916	39	21
62445	0415 7236	5330-01-188-0903	16	3
62445	0415 7248	5330-01-396-0445	29	6
			37	2
62445	0415 7360	5330-01-434-7281	37	2
62445	0415 7445	4730-01-396-5511	18	10
62445	0415 7654	5365-01-434-7401	12	6
62445	0415 8004		43	13
62445	0415 8006	5340-01-395-6286	43	5
62445	0415 8412		10	1
62445	0415 9697	2815-12-337-0096	17	7
62445	0415 9935	5310-01-396-2857	3	12
62445	0415 9964	2815-12-337-0095	17	3

https://truckmanualshub.com/ 371

CROSS-REFERENCE INDEXES

PART NUMBER INDEX

CAGEC	PART NUMBER	STOCK NUMBER	FIG.	ITEM
62445	0415-0450	4310-01-370-0247	9	8
62445	04154144	5330-01-434-7270	6	14
62445	04156890	3020-01-342-4887	6	9
62445	04159934		3	13
62445	0416 0764	5365-01-395-4737	3	11
62445	0423 0193	5330-01-395-5113	6	13
D8015	0432227022	2910-12-301-3452	24	1
08015	0434250037	2910-12-195-2896	24	10
11139	0462-201-16141	5999-01-203-6687	76	23
			76	29
38022	0605-D008		120	17
77640	065989	3110-00-606-6435	111	9
0AHU0	0928597-4	5305-01-122-0459	86	5
53867	1-423-204-000		49	21
00779	1-480698-0	5935-01-096-1872	76	5
			77	14
00779	1-480699-0		76	36
			88	3
00779	1-480701-0		76	3
00799	1-480706-0		76	26
00779	1-480710-0		76	8
89749	1CM1025		115	1
12603	1CM1030H	5306-01-321-8718	62	6
89749	1CM1035		106	3
		5310-01-397-6489	116	15
89749	1CM1045	5305-01-434-2565	103	1
12603	1CM1080	5306-01-398-5012	148	9
89749	1CM12100	5305-12-126-7945	115	12
89749	1CM12120	5305-01-433-8870	116	10
12603	1CM1230		1	1
12603	1CM1245	5305-01-398-0346	2	13
89749	1CM1630	5305-12-126-8629	38	12
89749	1CM24100	5305-12-173-9194	114	5
			115	6
12603	1CM24130	5305-01-395-8749	97	2
89749	1CM2460	5305-12-173-9188	115	10
89749	1CM2470	5305-12-173-9190	114	2
89749	1CM516		30	17
			64	1
			65	7
			129	21
77237	1CM612	5305-01-363-6090	39	20
12603	1CM620	5305-01-398-0348	63	4
			74	6
89749	1CM625	5305-12-124-0527	35	2
			61	4
			64	13
			94	2
			105	5
			119	5
			135	19

https://truckmanualshub.com/ 372

CROSS-REFERENCE INDEXES

PART NUMBER INDEX

CAGEC	PART NUMBER	STOCK NUMBER	FIG.	ITEM
12603	1CM816H	5305-01-322-8719	65	1
			107	5
89749	1CM820	5305-12-125-0321	21	11
			28	10
			38	4
			102	3
			105	12
			117	4
89749	1CM825	5305-01-399-6910	134	19
07443	1CM830		21	1
			33	1
			34	19
		5305-01-259-9516	75	11
			80	18
			107	9
89749	1CM835		122	8
89749	1CM880	5305-01-434-2484	132	4
12603	1C408	5307-00-349-1230	118	15
12603	1C410	5306-00-334-9967	150	7
89749	1C420	5305-01-434-2997	103	20
89749	1C432	5305-01-434-3001	135	5
			154	9
12603	1C512	5305-00-007-6338	21	5
12603	1DM10	5310-01-396-4295	54	10
			106	1
			122	5
89749	1DM12	5310-01-352-7374	116	16
89749	1DM24	5310-01-419-5191	114	3
			115	9
89749	1DM5	5310-01-350-8553	59	5
12603	1DM6	5310-01-396-0983	35	4
			39	23
			48	3
			61	8
			62	9
			64	3
			74	3
			105	15
			116	5
			117	17
89749	1DM8	5310-01-415-5214	28	13
			41	15
			72	2
			107	10
			110	10
			117	16
			118	14
			134	31
89749	1EM100	5310-01-434-6594	26	8
12603	1EM200	5310-01-415-5224	100	5
89749	1EM240	5310-01-419-5192	115	7

https://truckmanualshub.com/ 373

CROSS-REFERENCE INDEXES

PART NUMBER INDEX

CAGEC	PART NUMBER	STOCK NUMBER	FIG.	ITEM
89749	1EM80	5310-01-415-5222	41	12
			131	22
89749	1EN824		33	10
			37	3
89749	1F212		35	13
			103	8
77237	1F428	5315-01-388-2053	109	7
12603	1F518	5315-01-395-4747	100	6
			103	11
89749	1F624	5315-01-420-2922	114	9
12603	1HM6J		147	16
			148	17
			148	32
12603	1HM8	4730-01-396-3036	98	3
93061	10 V6X-S		134	8
93061	10 46X-S		132	8
79410	10-00-016-013	5330-01-255-2561	83	15
			84	16
79410	10-00-044-026	5330-01-255-2559	85	2
			85	15
79410	10-00-053-009	5365-01-255-9524	83	20
			84	25
79410	10-00-127-022	3120-01-256-2928	85	4
79410	10-00-130-008	3110-01-255-4870	85	12
79410	10-00-130-015	3110-01-311-6925	82	1
			83	22
			84	21
79410	10-00-132-033	3110-01-254-2353	83	5
			84	6
			84	24
79410	10-00-139-003		85	17
79410	10-00-139-020	5325-01-256-4633	83	8
			84	8
			84	12
79410	10-00-139-025	5365-01-255-9318	85	14
79410	10-00-139-053		78	13
79410	10-00-141-046	5330-01-255-2563	86	42
79410	10-00-141-136	5330-01-255-2562	85	3
28703	10-00-143-007		84	23
79410	10-00-183-077	5305-01-389-0065	85	19
79410	10-00-183-080	5305-01-395-4690	86	38
28703	10-00-183-099		27	8
79410	10-00-193-007	3120-01-396-9832	83	3
79410	10-00-193-008	3120-01-353-5200	83	19
79410	10-00-193-009	3120-01-353-9440	83	6
			84	4
			84	20
79410	10-00-193-011	3120-01-353-9441	83	7
			84	3
			84	19
28703	10-00-193-020		84	7

https://truckmanualshub.com/ 374

CROSS-REFERENCE INDEXES

PART NUMBER INDEX

CAGEC	PART NUMBER	STOCK NUMBER	FIG.	ITEM
79410	10-00-552-003	5340-01-257-1813	82	15
79410	10-00-552-004	5365-01-395-4682	82	25
79410	10-00-552-009	5365-01-395-4677	86	19
79410	10-00-552-016	5365-01-395-4675	86	11
79410	10-21-040-002	5340-01-255-9395	83	12
			84	13
79410	10-21-045-005	5330-01-255-2579	85	6
79410	10-21-122-002	3040-01-253-5543	130	4
79410	10-21-124-003	2520-01-396-1910	83	14
			84	15
79410	10-21-143-002	3020-01-252-5819	85	11
79410	10-21-144-005	3020-01-252-8872	85	18
79410	10-21-144-006	3020-01-252-8871	85	10
79410	10-21-156-001	5360-01-255-2543	82	32
79410	10-21-156-011	5360-01-395-4678	82	27
79410	10-21-166-001	2520-01-153-9169	83	17
			84	10
79410	10-21-171-003	3040-01-397-5688	85	8
79410	10-21-188-002		78	12
79410	10-21-193-006	5310-01-255-4833	85	16
79410	10-21-212-008		85	5
79410	10-21-237-001	4820-01-253-1969	82	31
79410	10-21-237-002	4820-01-253-1970	86	7
79410	10-21-508-005	2520-01-252-7623	130	3
79410	10-21-540-001	5340-01-257-7691	83	13
			84	14
79410	10-21-666-005	2520-01-252-8907	83	10
			84	11
08018	10-21-712-008		85	1
79410	10-22-000-028	2520-01-397-5273	78	3
79410	10-22-034-003		78	14
79410	10-22-036-008	2520-01-395-6910	82	14
79410	10-22-039-001	5340-01-395-4683	86	1
79410	10-22-045-005	5330-01-395-7868	86	43
79410	10-22-045-006	5330-01-397-6262	86	46
79410	10-22-065-008	2520-01-397-5691	82	12
79410	10-22-070-001	3020-01-398-3342	82	4
07718	10-22-070-002	3020-01-252-5827	82	2
79410	10-22-080-001	3020-01-398-3348	83	4
			84	5
79410	10-22-080-002	3020-01-252-5825	83	21
			84	26
79410	10-22-107-003		82	19
79410	10-22-156-004	5360-01-395-4674	86	18
79410	10-22-156-005	5360-01-395-4689	86	22
79410	10-22-156-006	5360-01-395-4685	86	26
79410	10-22-156-007	5360-01-395-4684	86	27
79410	10-22-156-008	5360-01-395-4681	86	8
79410	10-22-171-001	3040-01-253-5541	82	3
79410	10-22-237-008	4820-01-347-7701	86	32
79410	10-22-237-013		86	14

https://truckmanualshub.com/ 375

CROSS-REFERENCE INDEXES

PART NUMBER INDEX

CAGEC	PART NUMBER	STOCK NUMBER	FIG.	ITEM
79410	10-22-565-014	3040-01-396-1401	82	11
79410	10-22-567-010		84	18
79410	10-22-567-017	2520-01-396-5509	84	1
79410	10-22-607-003		82	18
79410	10-22-640-006		86	41
28703	10-22-689-013		83	18
79410	10-22-689-021	2520-01-396-5516	83	1
79410	10-22-736-023	4820-01-396-7104	86	4
24161	10C5E-8-8MBX45-8 -8FJX-14"		155	8
24161	10C5E-8-8MBX45-8 -8FJX-32"		16	14
24161	10C5E-8-8MBX45-8 -8FJX-43"		152	11
05283	100-145		137	5
05283	100-150		99	11
05283	100-151		136	20
05283	100-153		138	12
05283	100-214	5330-01-312-3725	136	18
05283	100-218		137	7
05283	100-232		137	20
05283	100-234		99	8
05283	100-236		136	10
05283	100-240		138	4
79410	1000-016-017	5330-01-255-2560	86	16
			86	29
79410	1000-552-005	5340-01-259-2587	86	36
79470	10006B-606		34	17
33955	100224		56	5
03504	100588	5310-01-052-5767	109	12
2E480	100687		65	10
30327	101-B-08		88	10
			90	7
1GT03	101-301-104		117	2
79410	1021-040-008		86	30
79410	1022-036-007	2590-01-397-3549	86	34
79410	1022-040-001	5340-01-395-7716	86	23
54825	1022-040-003	4810-01-396-5000	86	15
79410	1022-040-004	4810-01-398-3339	86	9
79410	1022-045-004	5330-01-396-5825	86	33
79410	1022-237-004		86	10
54825	1022-237-005	4810-01-396-4999	86	17
79410	1022-237-006	4820-01-398-3347	86	21
79410	1022-237-007	4820-01-398-3338	60	1
			86	25
79410	1022-239-008	5340-01-395-5122	86	28
79410	1022-736-011		86	35
79410	1022640003		86	39
79410	102264003		86	40
27315	1025Z3361	3110-01-308-2124	95	4
27315	1025Z3362	3110-01-307-5810	95	17

https://truckmanualshub.com/ 376

CROSS-REFERENCE INDEXES

PART NUMBER INDEX

CAGEC	PART NUMBER	STOCK NUMBER	FIG.	ITEM
0FNE7	1025Z3364	3110-01-307-5811	96	4
79410	103321	5310-01-396-3942	82	21
			82	29
79410	103322	5310-01-396-3944	82	23
79410	103679	5315-01-395-7863	86	44
24617	103696		86	13
27315	1045Z2841	5330-01-308-0104	101	4
27315	1045Z2845	5330-01-308-0100	93	18
56161	10503869	4730-01-156-4835	132	2
56161	10504861	5305-01-166-0614	48	6
93784	1052		133	3
53798	1064/64		105	13
19207	10906278	5310-00-991-6691	147	36
0PXJ7	11-031Z	5315-01-438-7940	35	7
07443	11EM50	5310-01-438-2306	73	3
62445	110 1294	5310-01-196-3871	50	7
62445	110-2797	5310-01-013-5628	26	12
			39	4
			49	2
62445	110-2802	5310-01-235-3084	10	14
62445	110-7101	5310-01-013-5463	3	21
			10	4
			12	3
			29	1
			39	10
			42	10
			43	12
62445	110-7548	5310-01-237-2051	16	11
62445	110-7731		13	7
			43	1
62445	110-7821	5325-01-196-6635	9	2
62445	110-7834	5325-01-195-8046	41	5
62445	1102193	5305-01-194-5927	16	10
62445	1102659	5310-01-151-0041	26	9
36719	1102799	5310-01-013-5630	8	9
			10	10
			39	9
36719	1102800	5310-01-013-5631	10	8
62445	1103316	5305-01-187-0531	17	13
			39	14
62445	1107105	5310-01-242-8459	43	2
			87	6
62445	1107556	5365-01-194-0758	10	13
62445	111 0664	5305-01-274-7424	8	3
62445	111 1336	5305-01-274-2097	10	9
			87	7
36719	111 2295	5305-01-246-4430	8	10
62445	111 2307	5305-01-247-8572	6	20
			39	8
62445	111 8737	5365-01-280-7191	131	8
62445	111-0422	5365-01-197-1503	3	5

https://truckmanualshub.com/ 377

CROSS-REFERENCE INDEXES

PART NUMBER INDEX

CAGEC	PART NUMBER	STOCK NUMBER	FIG.	ITEM
62445	111-1298	5305-01-247-8573	43	3
62445	111-2233	5306-01-253-1592	39	12
62445	111-2240		25	11
		5306-01-151-0039	39	6
			131	19
62445	111-2264		49	16
62445	111-2322	5305-01-239-2282	3	22
62445	111-2341	5305-01-239-1322	15	4
62445	111-2429	5306-01-193-9282	8	1
62445	111-2824	5310-01-235-1857	13	5
			29	2
			42	30
62445	111-5333	5315-01-197-1478	3	17
62445	111-5414		131	13
62445	111-8998	5365-01-193-9336	3	2
62445	111-9231	4730-01-235-3308	25	5
62445	111-9237	5305-01-190-4585	26	14
			131	25
62445	1110577	5305-01-194-5928	16	12
62445	1110688	5305-01-194-5926	11	5
62445	1111179	5306-01-193-9285	10	5
62445	1111193	5306-01-252-7113	18	6
62445	1111210	5306-01-253-1591	41	13
62445	1111589	5306-01-196-3155	41	7
62445	1112264	5306-01-237-4919	39	27
62445	1112299	5306-01-254-2361	17	15
62445	1113148	5310-01-209-7212	13	2
62445	1115459	3120-01-195-7984	10	12
62445	1115464	3120-01-194-4817	6	2
62445	1115470		42	18
62445	1117927		49	12
62445	1118324	5315-01-188-0754	27	1
62445	1118641	5330-01-238-8316	26	4
36719	1118659	5330-01-015-9617	3	3
			26	15
			131	24
62445	1118674		25	2
62445	1118692		33	5
62445	1118693	5310-01-166-5857	25	14
62445	1118700	5330-01-286-7812	131	9
36719	1118712	5330-01-012-8856	87	4
62445	1118750		70	9
62445	1118760	5310-01-207-7206	5	2
62445	1118960	5365-01-237-9127	33	6
62445	112 5801	5310-01-195-5845	41	8
62445	112 7031		131	21
62445	112-2477	5310-01-193-9303	42	11
62445	112-4753	5307-01-207-0170	13	8
62445	112-4803		131	23
62445	1126979	5306-01-253-1591	41	14
62445	1137280	5305-01-194-5929	6	11

https://truckmanualshub.com/ 378

CROSS-REFERENCE INDEXES

PART NUMBER INDEX

CAGEC	PART NUMBER	STOCK NUMBER	FIG.	ITEM
62445	1137555		49	22
72582	11500661	5310-01-290-7456	54	6
62445	116 5787		131	6
62445	116 5789	5365-01-273-7446	29	3
62445	116 5839	5340-01-274-7403	3	18
62445	116 9838		131	7
62445	116-6111	5330-01-194-9950	42	32
62445	116-7010	5310-01-208-6603	6	7
62445	116-8817	2815-00-003-0021	12	16
62445	1160592	5325-01-192-5823	39	13
62445	1161089		9	7
62445	1161469	4730-01-188-8243	25	9
19207	1162345		59	1
62445	1166111	5330-01-194-9950	10	6
62445	1166951	5306-01-193-9689	6	15
62445	1167266		3	7
62445	1167425	5325-01-194-9154	39	2
			128	3
0U6G7	116915	2540-01-434-5558	122	1
38022	116915-XB		129	11
62445	1169557	4730-01-151-0021	25	3
62445	1169689	5310-01-252-7222	17	5
36719	117 2655		42	16
62445	117 4821	2940-01-233-9144	33	8
62445	117-0580	5340-01-236-6391	6	8
62445	117-6023	6620-01-204-3181	53	1
62445	1170287	4730-01-186-0535	25	18
62445	1170291	5340-01-190-5586	25	16
62445	1170642	5340-01-195-5773	25	10
62445	1171718	2815-01-192-5872	9	5
62445	1171722		9	6
62445	1171763	5305-01-273-7553	50	3
62445	1172303		6	19
			7	8
62445	1173838	5330-01-188-0851	19	2
62445	1174190	5307-01-208-3691	26	7
62445	1174191	5307-01-196-3329	10	16
62445	1174192	5307-01-196-3330	10	17
62445	1174194	5306-01-194-5925	42	31
62445	1174418	2940-00-405-7377	20	1
62445	1174423	2910-00-238-0033	32	1
62445	1174540		70	5
62445	1174602	3110-01-298-0555	41	2
62445	1174605	5330-01-209-7304	17	1
62445	1174706	5330-01-343-2648	26	10
59257	12-PC-22		21	23
59257	12-SU-6		21	9
59257	12-37-6	4730-00-231-3017	21	21
59257	12-8-HB		21	24
89749	12D8	5310-01-433-0997	40	5
			118	9

https://truckmanualshub.com/ 379

CROSS-REFERENCE INDEXES

PART NUMBER INDEX

CAGEC	PART NUMBER	STOCK NUMBER	FIG.	ITEM
07443	12D8E		69	5
38022	1205R046	5330-21-912-4406	121	5
62445	121 6105		13	6
			43	14
62445	121 6108	5310-01-274-2086	42	29
62445	121 6123	5310-01-274-2084	43	4
			43	17
62445	121 6127	5310-01-283-4552	18	7
62445	121-5850	5310-01-237-2774	39	7
62445	121-6107		3	10
36719	1215500	5325-01-049-3976	12	12
62445	1216119	5310-01-209-9395	6	12
62445	1216128	5310-01-210-1673	6	16
62445	1216151	3120-01-196-2583	16	13
62445	1216240	5340-01-197-1502	3	4
62445	1216306	5310-01-207-7210	25	15
62445	1216500	5310-01-200-1095	17	9
62445	1216511	4730-01-195-4244	18	9
62445	1216512		17	8
36719	123 6290	5365-01-193-7160	22	3
19207	12414309-021	5306-01-387-3127	147	37
19207	12417958-009	5306-01-394-9295	147	20
OFW39	12419928-002		76	19
			77	10
2E480	12419928-008		77	10
07443	12482		151	2
62445	125300	5120-01-252-3905	158	2
49234	1275/12	2590-01-420-9947	31	3
07443	12837	6220-01-432-6858	61	1
07443	12838	5340-01-432-7685	61	9
62445	129 0502		24	2
62445	129 0513		24	5
62445	129 0528		24	4
62445	129 0531		24	9
62445	129 0540		24	3
62445	1298782		49	7
62445	1299060		49	11
62445	1299062		49	5
OAHP5	13D6		102	9
			123	3
07443	13E8		69	6
12603	13GM3020	5305-01-437-4896	58	2
12603	13GM506	5305-01-293-6637	98	2
93784	130	5330-00-211-9376	133	17
05283	130-001-240		138	7
89749	1300633		147	35
62445	1306960		49	19
62445	1310137	5340-01-188-1102	26	3
05283	134-001-236		136	23
79410	1345-130-001	3110-01-255-4871	83	2
			84	2

https://truckmanualshub.com/ 380

CROSS-REFERENCE INDEXES

PART NUMBER INDEX

CAGEC	PART NUMBER	STOCK NUMBER	FIG.	ITEM
79410	14-00-139-020	5325-01-256-4634	83	11
59730	14RB-2577		76	25
			77	4
			77	10
59730	14RB250F		77	6
07443	1400000	3120-01-397-1632	147	5
07443	1400019		148	31
07443	1400027	3020-01-395-8792	148	29
07443	1400030	4710-01-395-8786	148	2
07443	1400033	4730-01-395-7308	148	24
07443	1400034	4730-01-395-7304	148	3
07443	1400037	2520-01-398-3341	148	18
07443	1400039		148	14
07443	1400040	3110-01-397-1590	148	12
07443	1400041	3020-01-396-2337	148	13
07443	1400044	3020-01-396-1408	148	10
07443	1400046	5340-01-395-7719	148	5
07443	1400047	5340-01-395-7702	148	28
07443	1400062		139	1
07443	1400080	5340-01-395-5875	148	23
07443	1400082	3120-01-397-0832	147	4
07443	1400085	4730-01-400-2006	147	7
07443	1400086	5365-01-395-7721	148	19
07443	1400106	5315-01-395-4671	148	7
07443	1400107		148	22
07443	1400154	5120-01-436-9761	157	2
07443	1400169	5340-01-395-7867	145	7
07443	1400173	3040-01-396-4994	145	8
07443	1400176	3130-01-397-1650	145	1
07443	1400610	4730-01-437-6036	153	8
			155	4
07443	1400610-XA		155	5
07443	1400611		135	2
07443	1400612		135	2
07443	1400854		109	8
07443	1401012		119	18
07443	1401014		57	4
07443	1401081		1	8
07443	1401083		1	6
07443	1401132		137	8
07443	1401146	5310-01-419-4428	92	3
07443	1401147	5310-01-424-9561	2	6
07443	1401148	5310-01-424-9560	2	12
07443	1401212		57	2
07443	1401294		114	4
07443	1401499		158	10
07443	1401756		117	22
07443	1402146		148	36
07443	1402416		122	6
07443	1402440		151	16
07443	1402652	5365-01-425-2423	39	24

https://truckmanualshub.com/ 381

CROSS-REFERENCE INDEXES

PART NUMBER INDEX

CAGEC	PART NUMBER	STOCK NUMBER	FIG.	ITEM
07443	1402708		39	26
07443	1403047	4720-01-435-9498	80	7
07443	1403310		146	25
07443	1403979	4720-01-396-1403	151	8
07443	1403981	4720-01-396-1405	151	8
07443	1404058	5310-01-433-4770	62	5
07443	1404387		56	9
07443	1404389		57	3
07443	1404649		114	11
07443	1404991	4720-01-395-8793	128	2
07443	1404992	4720-01-395-8800	128	1
07443	1405055		129	10
07443	1405062		129	36
		9905-01-438-0977	129	37
07443	1405063		129	38
07443	1405065	9905-01-438-2386	129	29
07443	1405067		129	39
07443	1405069		129	27
07443	1405133	9905-01-438-1501	129	8
07443	1405188	9905-01-438-1504	129	23
07443	1405232	9905-01-420-3467	129	2
07443	1405329		115	15
07443	1405436		129	24
07443	1405854		38	11
07443	1405875	5310-01-437-5848	97	8
07443	1405944		135	8
07443	1405948	5340-01-437-5842	119	4
07443	1405966	9905-01-420-3464	129	33
07443	1406104		80	8
07443	1406267		72	3
07443	1406683		115	5
07443	1406684		115	3
07443	1407144		148	39
07443	1407145	5340-01-437-6348	147	24
07443	1407178		115	8
07443	1407182		114	1
07443	1407184		115	11
07443	1407200	5340-01-438-1191	147	9
07443	1407208		147	2
07443	1407218		115	14
07443	1407220		147	1
07443	1407225		142	13
07443	1407256		147	23
07443	1407278	4730-01-434-5215	134	26
07443	1407279	4730-01-434-5214	134	11
07443	1407330		135	1
07443	1407331		135	1
07443	1407333		148	1
07443	1407341		117	6
			139	3
07443	1407361		134	23

https://truckmanualshub.com/ 382

CROSS-REFERENCE INDEXES

PART NUMBER INDEX

CAGEC	PART NUMBER	STOCK NUMBER	FIG.	ITEM
07443	1407364	2910-01-420-5174	31	6
07443	1407364 XA		31	7
10001	1407422	1420-00-786-6682	53	2
07443	1407425	4730-01-438-2438	68	3
07443	1407432		97	7
07443	1407433		98	1
07443	1407436		100	13
07443	1407446		74	8
07443	1407453	6160-01-436-9142	74	5
07443	1407454		74	1
07443	1407455		147	32
07443	1407462	5365-01-437-4389	147	30
07443	1407470		135	7
07443	1407470-XA		135	13
07443	1407470-XA3		135	14
07443	1407470-XA4		135	15
07443	1407539		105	4
07443	1407658		1	3
07443	1407659		1	5
07443	1407663		134	6
07443	1407682	5315-01-420-2923	114	7
07443	1407715	4720-01-437-9545	151	6
07443	1407717		151	12
07443	1407719	4710-01-437-7031	150	27
07443	1407727	5340-01-438-1614	150	38
07443	1407729	4720-01-437-9567	151	5
07443	1407754		113	1
07443	1407778		154	11
07443	1407797		21	13
07443	1407802	4730-01-437-4216	30	12
			80	10
07443	1407804		80	15
07443	1407806	4710-01-438-3423	80	13
07443	1407833-7.25		28	16
07443	1407834		35	18
07443	1407839		21	10
07443	1407850-44		30	1
07443	1407851-71		30	2
07443	1407852-88		30	3
07443	1407853-78		30	4
07443	1407855		30	10
07443	1407856		30	11
07443	1407870		2	16
07443	1407873		129	16
07443	1407874	7690-01-419-8502	129	20
07443	1407875	7690-01-419-8503	129	25
07443	1407901		112	12
07443	1407902		112	11
07443	1407903		154	4
07443	1407942		117	3
07443	1407943		89	1

https://truckmanualshub.com/ 383

CROSS-REFERENCE INDEXES

PART NUMBER INDEX

CAGEC	PART NUMBER	STOCK NUMBER	FIG.	ITEM
07443	1407957	7690-01-419-8504	129	13
07443	1407960	4720-01-438-4473	152	10
07443	1407961	4720-01-437-9884	152	5
07443	1407962		112	4
07443	1407964	4720-01-437-7498	154	19
07443	1407966	4720-01-437-8953	154	20
07443	1407967	4720-01-438-0932	154	21
07443	1407969	4720-01-438-0934	154	17
07443	1407972	4720-01-438-4477	152	4
07443	1407974	4720-01-438-3134	152	6
07443	1407974-XB		129	18
07443	1407974-XB1		129	19
07443	1407975	4720-01-438-4470	152	7
07443	1407979		154	16
07443	1407983		78	5
07443	1408001	6680-01-438-5975	78	4
07443	1408002	6680-01-437-3391	22	1
07443	1408005		54	7
07443	1408022		78	6
07443	1408024		54	5
07443	1408039		102	1
07443	1408040		107	3
07443	1408059		102	13
07443	1408061		102	10
07443	1408071		152	8
07443	1408072	4710-01-420-3272	31	11
07443	1408074		154	6
07443	1408096		110	3
07443	1408097	5340-01-438-2327	110	5
07443	1408098		77	1
07443	1408099	9905-01-420-3466	129	7
07443	1408102		28	18
07443	1408104		28	11
07443	1408105		28	1
07443	1408109	3040-01-437-2795	102	15
07443	1408182		36	1
07443	1408191	5975-01-419-1925	57	5
07443	1408205	2540-01-434-8711	107	7
07443	1408213		54	2
07443	1408219	5930-01-438-6309	103	3
07443	1408232		75	3
07443	1408233		75	5
07443	1408234		75	7
07443	1408238		105	1
07443	1408239		105	8
07443	1408240		105	16
07443	1408246		75	1
07443	1408250	3040-01-438-3302	35	20
07443	1408254		75	2
07443	1408255		76	1
07443	1408256		59	6

https://truckmanualshub.com/ 384

CROSS-REFERENCE INDEXES

PART NUMBER INDEX

CAGEC	PART NUMBER	STOCK NUMBER	FIG.	ITEM
07443	1408264		59	2
07443	1408271		38	14
07443	1408278		38	7
07443	1408279	2990-01-420-5173	38	5
07443	1408285		117	13
07443	1408286		118	8
07443	1408287		40	4
07443	1408288		40	7
07443	1408289		118	4
07443	1408290		118	5
07443	1408307	9905-01-420-3471	129	30
07443	1408308	9905-01-420-7037	129	34
07443	1408309	9905-01-420-3469	129	44
07443	1408310	9905-01-420-3468	129	43
07443	1408311	9905-01-423-0406	129	42
07443	1408312	9905-01-420-3460	129	41
07443	1408313	9905-01-420-3461	129	40
07443	1408314	9905-01-420-3463	129	35
07443	1408329	4720-01-438-1578	150	16
07443	1408331	4720-01-434-4808	150	15
07443	1408333	4720-01-438-1654	150	13
07443	1408335	4720-01-438-1188	150	6
07443	1408336	4720-01-438-1230	150	4
07443	1408351		152	1
07443	1408372	4720-01-435-9497	80	4
07443	1408388	9905-01-420-3465	129	45
07443	1408389	9905-01-420-3470	129	17
07443	1408393	4710-01-437-8849	150	5
07443	1408394		150	24
07443	1408395	4710-01-437-7006	150	25
07443	1408403		119	7
07443	1408406	6220-01-436-9308	62	1
07443	1408410		88	5
07443	1408413		90	10
07443	1408475		147	40
07443	1408476		147	41
07443	1408478		139	11
07443	1408485		94	1
07443	1408506	5315-01-434-5837	148	25
07443	1408619		153	7
07443	1408625		136	4
07443	1408629		136	1
07443	1408630		88	9
			90	9
07443	1408632		88	7
07443	1408633		88	1
07443	1408637		115	4
07443	1408661		70	1
07443	1408663		54	1
			110	8
07443	1408664		70	4

https://truckmanualshub.com/ 385

PART NUMBER INDEX

CAGEC	PART NUMBER	STOCK NUMBER	FIG.	ITEM
07443	1408665	3040-01-438-0632	70	2
07443	1408666	5310-01-437-5846	70	3
07443	1408703	2590-01-420-1178	31	4
07443	1408725		142	7
07443	1408725-XA		129	15
07443	1408791		129	32
07443	1408827	6680-01-420-0383	71	2
07443	1408830		28	19
07443	1408835		117	7
07443	1408836	5330-01-434-0860	147	6
07443	1408860		38	3
07443	1408862		54	12
07443	1408868	5365-01-433-9009	136	3
07443	1408935	5310-01-433-4772	116	13
07443	1408947		40	1
07443	1408952	6150-01-437-0386	73	4
07443	1409035		105	7
07443	1409037		60	2
07443	1409045	5920-01-437-4897	54	8
07443	1409109		116	1
07443	1409110		76	21
07443	1409138		90	12
07443	1409139		90	8
07443	1409140		89	13
			90	5
07443	1409141		89	12
			90	3
07443	1409221		92	4
07443	1409238		90	2
07443	1409267		146	3
07443	1409286		146	2
07443	1409288		146	4
07443	1409292		146	8
07443	1409293		146	9
07443	1409294		146	10
07443	1409295		146	11
07443	1409296		146	12
07443	1409297		146	13
07443	1409298		146	14
07443	1409299		146	15
07443	1409300		146	16
07443	1409304		146	20
07443	1409306		146	21
			146	22
07443	1409309		146	23
			146	24
07443	1409312		146	28
07443	1409542		62	10
07443	1409570		97	4
07443	1409571		97	3
07443	1409832		129	22

https://truckmanualshub.com/ 386

PART NUMBER INDEX

CAGEC	PART NUMBER	STOCK NUMBER	FIG.	ITEM
07443	1409947	5315-01-434-5836	147	19
07443	1409988		103	13
07443	1410087		38	15
07443	1410088		38	15
07443	1410130		149	1
07443	1410282		21	6
07443	14103		64	6
07443	1410341		102	4
			102	14
07443	1410343		102	12
07443	1410344		102	5
07443	1411024		21	20
			21	22
07443	1411134		116	22
07443	1411135		116	18
07443	1411162		65	4
07443	1411163		66	2
07443	1411164		127	1
07443	1411165		127	2
07443	1411176		69	2
07443	1411224		157	1
79410	141281	5315-01-254-9667	82	9
			82	20
53867	1424612011		49	10
53867	1424626000		49	8
53867	1424627002		49	9
07443	14248		129	26
07443	14261-02	7690-01-437-4789	129	28
07443	14261-04	7690-01-437-4788	129	31
96151	14317	5325-01-085-3125	111	2
89749	15EM120	5310-01-415-6114	116	9
12603	15EM50	5310-01-396-0985	30	18
			65	5
			116	21
89749	15EM80	5310-01-415-6113	54	4
			65	2
			122	7
12603	15K5	4730-01-367-9965	150	9
33955	1500171	6620-00-962-8699	68	4
96151	15007		111	11
96151	15074		111	5
07443	15665		65	3
07443	15666		64	11
05283	157-0162-0125-03 7		136	9
05283	157-0187-0150-03 7		138	11
59257	16-20-SA-6 XA		153	4
07443	16F2		153	6
60168	160034	3040-01-009-3814	103	5
05283	165-500-0125		136	12

https://truckmanualshub.com/ 387

CROSS-REFERENCE INDEXES

PART NUMBER INDEX

CAGEC	PART NUMBER	STOCK NUMBER	FIG.	ITEM
05283	165-500-0150		137	12
05283	165-5000-0150		138	10
78422	1662		61	5
59150	1675-011		28	20
0B5C7	171-06-010-02	5310-01-312-3834	96	13
57733	1728-B	4730-00-279-0353	145	3
06970	175-403-004	3040-01-165-6129	35	16
78388	1751ES-24XA		48	2
79410	179820	5305-01-395-4686	86	3
79410	179825	5306-00-161-0794	130	1
07443	18C624		102	6
12603	18EM1019	5310-01-396-2871	2	8
			88	13
			103	2
			106	2
			115	2
			122	3
			147	18
			151	3
12603	18EM1632	5310-01-398-1728	2	3
			38	13
			89	3
			94	3
			105	6
			139	13
89749	18EM2040	5310-01-419-5194	92	2
89749	18EM613	5310-01-396-5256	35	3
			39	22
			48	5
			61	7
			64	5
			74	7
			78	10
			116	6
			119	6
			135	21
			147	34
			147	39
			150	37
89749	18EM816	5310-01-396-2874	21	12
			28	12
			28	14
			62	7
			64	4
			72	1
			74	2
			75	10
			89	5
			102	2
			103	7
			105	10

https://truckmanualshub.com/ 388

CROSS-REFERENCE INDEXES

PART NUMBER INDEX

CAGEC	PART NUMBER	STOCK NUMBER	FIG.	ITEM
89749	18EM816	5310-01-396-2874	107	4
			110	9
			117	5
			118	13
07443	18EM824		21	2
			34	18
			36	2
			80	19
		5310-01-419-4499	132	5
			134	20
			134	32
07443	18G806		73	6
			116	23
96151	18001	3110-01-100-9048	111	14
12603	1811920		100	8
06970	184-LTG-2-34	2590-01-438-4923	35	6
05283	185-301-0300		137	4
05283	185-301-0350		136	11
05283	185-301-0400		138	13
93784	1861		133	2
30781	18702250	5330-01-032-0582	140	13
60764	189190	5365-01-351-9341	82	5
75755	19M7166	5305-01-329-9730	147	17
75755	19M7361	5305-01-326-4922	148	40
53867	2 916 011 014	5310-01-250-3733	39	29
			131	18
02697	2-161		147	10
12603	2C610	5305-01-206-7235	59	3
			66	3
81169	2M197		69	3
0KAC7	2PX1701PX060C542 1	4320-01-437-4037	146	1
59730	2RB14		76	31
92865	20-060-022	2530-01-202-0302	103	18
30780	20V50XS	4730-00-420-4441	60	3
D8015	2000100100		46	15
71000	203-10290	2520-01-396-5008	81	1
01276	203102-8-8s	4730-00-491-4983	82	36
78422	207-24V	6220-01-432-6854	61	2
01276	2071A-4-6S	4730-01-314-8816	34	16
41625	208994	2540-01-163-1242	35	1
53790	2095PP	5340-01-437-3826	150	34
62445	2100132	5330-01-188-0904	18	8
62445	2101223	2815-01-191-9418	14	1
62445	2101681	5306-01-012-7251	5	3
62445	2101698	2930-01-198-7326	39	19
62445	2101739	2930-01-198-7324	39	35
62445	2101745	2930-01-198-7325	39	32
62445	2101802	5330-01-191-8167	39	33
12603	2107647	3110-00-586-8306	109	5
12603	2107649	3110-00-171-2489	109	6

https://truckmanualshub.com/ 389

CROSS-REFERENCE INDEXES

PART NUMBER INDEX

CAGEC	PART NUMBER	STOCK NUMBER	FIG.	ITEM
03504	2109665	5330-01-328-4137	109	1
53711	211041411	5305-01-353-2022	139	10
53790	2127PP	5340-01-218-2101	112	8
62445	213 1906		24	8
62445	213 3985	2815-01-324-3705	13	11
62445	213-1029	2815-01-234-7390	12	13
01276	213-202702-12-12	4730-00-710-5571	149	9
96151	213-4045	2530-01-437-7356	111	1
62445	213-7306	2815-01-021-9093	12	7
62445	2131081	3020-01-022-3663	7	3
62445	2133633	3120-01-195-7986	41	3
62445	2133835		42	17
62445	2133837		42	14
62445	2134806	3020-01-188-3676	42	12
62445	2134884	5310-01-207-7205	42	3
62445	2136433		42	15
62445	2136434	5330-01-195-5622	42	6
62445	2136596	5365-01-201-2008	5	1
62445	2137256	5365-01-013-5649	4	2
36719	2137302	2815-01-021-9092	12	10
62445	2137361	2930-01-198-7323	39	16
62445	2137750	3120-00-240-8053	6	6
62445	2167770		70	6
53790	2171PP	5340-01-438-0458	150	3
			150	12
			150	17
			154	12
81860	22002-14	5340-01-181-7555	116	12
62445	223 2699		131	10
62445	223 2803		131	4
62445	223 2804		131	5
62445	223 2968		131	11
62445	223 2991		131	15
62445	223 3074	2815-01-204-7958	9	4
62445	223 3497		131	16
62445	223 5531	3030-01-300-3868	41	11
62445	223 8021	5360-01-207-0160	42	28
62445	223 8084		42	25
62445	223 8725		131	26
62445	223 9331	5365-01-274-7436	4	2
62445	223-0774	3020-01-191-8669	6	17
62445	223-2528	2815-01-185-8298	12	11
62445	223-4263	5310-01-244-3775	15	3
62445	2230181	5325-01-202-3642	6	5
62445	2230937		70	8
62445	2231136	4730-01-197-8226	25	13
38022	2232-140		116	2
38022	2232-356		120	13
38022	2232-369		119	17
38022	2232-4-A		121	16
38022	2232-4-B		121	4

https://truckmanualshub.com/ 390

CROSS-REFERENCE INDEXES

PART NUMBER INDEX

CAGEC	PART NUMBER	STOCK NUMBER	FIG.	ITEM
38022	2232-4-C		121	17
38022	2232-4-D		121	15
38022	2232-4-E		121	3
38022	2232-400		119	19
38022	2232-920		120	1
62445	2232840	5310-01-190-7468	13	10
			13	15
62445	2232963	5365-01-188-1089	4	2
62445	2233424		41	10
62445	2234784	2815-01-195-7143	12	1
62445	2234870		3	20
62445	2235180HX		43	10
62445	2235520	5306-01-196-0433	9	10
62445	2237847	5340-01-195-7304	42	7
62445	2238022		42	23
62445	2238056		42	22
62445	2238081		42	27
62445	2238083		42	26
62445	2238196	5310-01-277-9849	42	4
62445	2239589	2910-01-191-0684	19	1
62445	2239984	4710-01-208-1313	17	2
62445	224-5054	5935-01-327-0956	50	4
			76	10
38022	224120	6220-01-418-5001	63	2
62445	2242050		8	4
62445	2245062	5930-01-198-0916	50	6
62445	2245518		70	7
12603	23GM612	5305-01-419-9931	119	3
07443	23GM820		119	16
96151	23051	2530-01-438-3278	111	16
72447	231142	5306-01-351-1744	91	6
07443	23198	3020-01-227-7382	149	12
07443	23253	3110-01-168-5303	139	8
			142	6
07443	23381	3120-01-147-8115	142	11
2E480	23433	5940-01-374-9839	77	10
07443	23499	4820-01-220-6736	141	9
78388	2368789	5315-01-395-3587	48	7
07443	2372605		129	14
12603	2382893	5310-01-396-4296	109	9
12603	2391199	3120-01-397-1675	97	5
5A627	24-550		74	4
70901	24DU18	3120-01-396-9602	148	16
12603	24K6	5365-00-674-6831	31	12
12603	24K6-XA		31	13
62445	241 3879		131	20
07443	24138		77	9
89749	25E17		103	10
		5310-01-190-7470	128	6
89749	25E8		118	10
89749	25K30408	5330-01-437-8705	147	31

https://truckmanualshub.com/ 391

CROSS-REFERENCE INDEXES

PART NUMBER INDEX

CAGEC	PART NUMBER	STOCK NUMBER	FIG.	ITEM
12603	25K40116	5330-00-359-4050	137	10
OS1H5	2501-S-12-12-OE-2		21	8
07443	25079		35	12
			103	4
07443	25085		35	17
07443	25233		77	10
B0068	2537757		108	1
B0068	2537758		108	2
02260	256-1116		145	6
01276	2575-8	4720-00-721-9893	151	7
10001	2614572-2	5940-00-998-6126	77	12
6Z742	2649		65	9
			76	18
89749	27CM420	5305-01-437-6617	110	7
89749	27CN612	5305-01-437-6511	147	38
89749	27CM620	5305-01-415-5212	117	12
89749	27CM820		54	3
			117	18
			118	12
12603	27E5	5310-01-396-4294	38	2
			40	6
			147	21
			147	28
89749	27E6	5310-01-398-2340	30	13
			35	21
			102	8
12603	27E8	5310-01-396-4292	142	15
			146	30
24161	27003	4720-00-143-9390	BULK	5
30327	27010		BULK	2
79410	274245		86	37
79410	274246	5330-01-260-8806	82	26
79410	274247	5330-01-024-4853	82	16
			86	20
79410	274250	5330-01-397-0277	86	12
79410	274251	5330-01-254-8995	82	6
12603	2772639	5315-01-395-5125	100	3
12603	2772642	2530-01-396-1410	100	4
12603	2772644	2530-01-395-6860	100	4
12603	2772659	3040-01-396-5001	109	3
12603	2772661	5307-01-395-7722	109	4
12603	2772669		100	1
12603	2778988	5365-01-396-8375	97	6
07443	2779127		132	11
12603	2779162	3130-01-396-9836	100	9
			109	10
59150	2781-325	5220-01-418-9362	56	3
12603	2782871	2530-01-437-9642	58	4
07443	2782872		58	1
12603	2783148	5340-01-437-3825	110	6

https://truckmanualshub.com/ 392

CROSS-REFERENCE INDEXES

PART NUMBER INDEX

CAGEC	PART NUMBER	STOCK NUMBER	FIG.	ITEM
12603	2787928		110	4
12603	2788175		110	1
07443	2788722		73	5
92865	28-010-103	2530-01-394-9718	103	14
			103	15
07443	2805184	3040-01-438-9013	99	1
07443	28805	2520-01-425-6573	81	2
89749	29CM1650		98	4
07443	29CM616		89	2
		5305-01-422-6060	117	15
			118	7
			127	3
12603	29CM820	5305-01-395-7727	62	4
			89	16
			100	7
07443	29002		149	7
30076	292601	5305-01-365-4860	148	35
4M339	3-2-159		91	9
4M339	3-26-747		91	2
4M339	3-4-12541-1X		91	8
4M339	3-5-386		91	5
72447	3-6-608X		91	3
79410	3-61	5330-00-965-0740	130	2
08018	3-63A		27	2
72447	3-7-39	5325-01-043-8794	91	4
72447	3-70-89	5340-01-389-2417	91	7
77237	3GM1080	5305-01-381-1215	2	2
12603	3GM1690		2	9
89749	3GM20240	5305-01-434-2943	92	1
11083	3G6905	5977-01-095-5206	111	18
12603	3HM8		100	10
05283	3WH-A025	3040-01-437-9397	137	1
05283	3WH-A025-XA		137	22
05283	3WH-A025-XA1		137	23
1A679	301768		35	8
1A679	301790		35	19
07443	30300		129	4
07443	30324-2	5365-01-433-3305	147	22
78422	3042	6220-00-482-6916	61	3
2E480	30521	5940-01-374-8363	76	17
			77	10
7B930	3077		76	20
			76	37
			BULK	6
7B930	3077-2		76	37
			77	16
			BULK	7
81495	310V9004	5305-01-268-3657	147	26
05283	311-0275		137	15
05283	311-0325	5325-01-437-3846	136	8
28036	3121-4-10		30	6

https://truckmanualshub.com/ 393

CROSS-REFERENCE INDEXES

PART NUMBER INDEX

CAGEC	PART NUMBER	STOCK NUMBER	FIG.	ITEM
05283	313-0375	5325-01-395-8017	138	2
92865	32-660-071	5360-01-381-9774	103	19
00779	320575	5940-00-283-5281	76	12
			77	10
53790	3250PP		78	7
			154	15
62445	331 5353		131	12
62445	331-2840	5310-01-237-2050	15	5
0NZJ1	335-100-0002-60-64		126	2
62445	336 3064	5340-01-204-7153	17	14
62445	336 3972	5365-01-273-7514	43	6
62445	336 9305	5360-01-012-3590	12	14
62445	336-2379	3120-01-192-5794	6	4
62445	336-7789	3120-01-194-6285	14	2
62445	3361909		39	15
62445	3362337	5330-01-210-4983	3	19
62445	3362538	3120-01-195-7985	11	4
62445	3362574	5330-01-364-4892	16	1
62445	3363658	3040-01-198-7290	41	4
62445	3364077		8	7
62445	3365861	5305-01-194-5930	13	4
62445	337 2153	5330-01-278-6912	24	11
62445	337-1666	5310-01-013-5473	5	4
62445	337-1876	5360-01-191-8019	13	13
62445	3371587	5315-01-195-5439	9	11
62445	3371612	3120-01-197-6657	9	9
62445	3371660		9	3
62445	3371748	5340-01-029-1194	12	15
62445	3371885	2815-01-192-9801	13	16
36719	3371887	2815-01-022-0094	13	14
62445	3371888	5340-01-194-9143	13	12
62445	3372269	5365-01-197-2332	6	18
			25	17
93784	3384	5330-00-810-7491	133	13
			134	3
93784	3390	5365-00-003-4162	134	2
93784	3432	5305-00-989-0844	133	27
			133	30
62445	3469625		14	3
05283	350-03716-0175		137	18
00779	350551-1	5999-01-068-9543	76	6
			76	27
			77	11
00779	350552-1	5999-01-138-1528	76	4
			76	35
			77	3
			77	11
			88	4
94257	35413	5340-00-451-1612	38	6
07443	36510	5340-01-437-6328	136	7

https://truckmanualshub.com/ 394

CROSS-REFERENCE INDEXES

PART NUMBER INDEX

CAGEC	PART NUMBER	STOCK NUMBER	FIG.	ITEM
07443	36523	9905-01-438-0975	129	5
07443	36571	6150-01-396-9505	1	7
33968	36734952	2935-01-192-6067	18	1
39428	3780T16		114	8
89749	39DM12	5310-01-433-4771	38	10
89749	4CM610		8	5
			33	4
81169	4C473		69	1
77237	4E5	5310-01-358-8280	21	4
			117	20
05283	4WH-A004	3040-01-396-5033	138	1
12603	40DM10	5310-01-396-4293	2	7
			148	8
12603	40DM24	5310-01-396-4290	97	1
89749	40DM8	5310-01-415-6108	105	9
			147	27
79470	402X4X4	4730-00-277-8643	105	2
05283	410-03716		137	16
05283	410-10014	5310-01-312-2408	136	15
05283	410-12512		137	3
62445	415 0264	5365-01-274-7435	4	2
62445	415 2519		42	9
62445	415 2750		13	9
62445	415 2752		13	1
62445	415 3130		42	24
62445	415 4482	5330-01-343-2670	131	27
62445	415 6728		131	14
62445	415 8909		131	17
62445	415 8936		131	1
62445	415-7756	2815-01-187-7163	4	1
62445	4153631	2815-01-294-1587	12	9
62445	4153697		12	8
62445	4157234	5330-01-364-4893	12	5
62445	4191001	2990-01-365-6928	50	5
07443	42H140	4730-01-419-6302	39	25
12603	42H32	4730-01-116-5918	28	17
62445	4230294	2910-01-186-0928	26	11
53790	4280PP		21	14
05283	4300-BD-1870-150 0Y375		137	11
53790	4300PP	5340-01-437-7275	154	7
OKN95	4402-65		69	4
			88	2
07443	45K5	4730-01-395-7310	150	21
			151	13
07443	45K5 XA		151	10
07443	46G1008		71	1
79410	4636CG		85	20
79410	4671	5365-01-255-9319	85	13
70842	4730	2940-01-437-4219	80	16
79410	4734	5325-00-281-5403	85	9

https://truckmanualshub.com/ 395

CROSS-REFERENCE INDEXES

PART NUMBER INDEX

CAGEC	PART NUMBER	STOCK NUMBER	FIG.	ITEM
79410	4806C	5330-00-646-8240	83	23
			84	22
79410	4840D	3110-00-902-3756	85	7
0AHU0	4913947-0	2520-01-168-1707	83	9
			84	9
79410	4915	5340-01-256-0497	82	13
02697	50AT-932443(10B) -N-25-00-RIRO		153	5
93784	5000D216		134	1
93784	5004-N1		133	12
93784	5005-A1		133	18
93784	5005-L2		133	20
93784	5005-V2		133	21
93784	5005-V6		133	22
93784	5006-C3		133	4
93784	5011	4820-00-494-1861	133	7
93784	5012		133	15
93784	5013	5340-01-191-8203	133	24
93784	5015	5305-00-138-4618	133	26
93784	5028-2		133	29
93784	5029	2590-00-813-8320	133	16
93784	5031		133	28
93784	5035	5305-01-191-8163	133	19
07443	50365-Y		129	6
07443	50368-Y		129	9
93784	5060		133	14
93784	5064	5360-00-157-7372	133	6
93784	5069-5		133	11
07443	50690	7690-01-437-4787	129	1
13636	507-2NS		2	11
93784	5089-5		133	9
07443	50976-25		152	3
13636	510-3NS	5340-01-424-4606	2	4
79136	5100-125	5325-00-281-6623	148	21
07443	51032-52	4720-01-437-7499	154	18
07443	51126-06		152	2
07443	51169-3		136	2
96151	5126	3040-00-124-0880	111	19
07443	51267		28	9
07443	51282-01-18		30	14
07443	51365-3		118	2
			129	3
07443	51454-5	5310-01-437-0029	64	8
07443	51598-2	4720-01-434-2307	28	21
07443	51741-1		64	7
			65	11
07516	51784		143	10
93784	51983	5365-01-266-4121	133	33
93784	51984		133	32
93784	52270	5360-01-265-2242	133	25
62809	52320-027		67	1

https://truckmanualshub.com/ 396

CROSS-REFERENCE INDEXES

PART NUMBER INDEX

CAGEC	PART NUMBER	STOCK NUMBER	FIG.	ITEM
62809	52320-027		68	1
93784	52488		133	31
93784	52610	5365-01-266-3174	133	1
93784	5264	5340-01-265-6746	133	34
89749	52720-1		116	19
07443	52855-3	5305-01-395-7713	148	11
00779	52935	5940-01-110-6423	77	10
			137	21
00779	52936	5940-01-280-1617	77	5
			77	10
			137	2
05283	52948		137	9
33955	53481	6680-01-284-6517	56	2
96151	5389-002		111	23
81646	5408		89	11
			90	4
78710	54125	6625-01-397-0225	64	12
93784	55172		133	23
79470	552X4	4730-01-268-2404	105	17
02929	557-1104-203	6625-01-418-5645	55	1
33955	56050	6620-01-422-2775	56	6
33955	56298	6680-01-420-3350	56	4
93784	564	5330-00-071-8844	133	5
93784	5648	4820-00-494-1866	133	8
20418	571-50-1025-3	5305-01-175-5374	122	4
60038	5735	3110-00-100-0500	147	13
05283	575-302-100-06-0 35		136	16
53035	5760	3110-00-100-3084	147	14
63632	5836B250	4330-01-306-1083	34	1
33955	58435-001		56	7
63632	5855-30	5330-01-200-6703	34	5
2E480	59196		65	10
2E480	59205	5340-01-437-0028	66	4
63632	5936-58T	5310-01-305-7087	34	13
76558	6.0492.01.0.1215	5330-01-238-8390	3	6
30780	6-WLN-S	5310-00-186-9550	151	9
12361	6-294-003907	5310-01-189-8478	114	10
81343	6-6 070221CA	4730-00-618-5372	112	5
			154	22
59257	6-6-ANSA-180	4730-01-419-6455	31	8
59257	6-6-SPC-18		89	10
59257	6-8-SA-2	4730-01-437-4217	134	7
77237	6EN60	5310-01-358-7977	8	6
			25	8
			48	4
			62	8
			135	20
00779	60279-1	5940-00-843-1550	77	10
96151	606-1295-LA	4820-01-396-5028	132	1
89749	61D4		135	18

https://truckmanualshub.com/ 397

CROSS-REFERENCE INDEXES

PART NUMBER INDEX

CAGEC	PART NUMBER	STOCK NUMBER	FIG.	ITEM
89749	61D4		150	29
12603	62D6	5310-00-082-1679	102	11
33955	6285870		56	8
30327	63UA-16X16	4730-00-313-0825	154	3
30327	63UC-06X06	4730-01-128-4174	150	39
13174	63UC-08X08	4730-01-261-6561	16	7
			80	3
			82	37
93480	63002-1		89	7
81646	6320	4730-01-201-2085	28	15
81646	6364	4730-01-200-8460	136	6
35301	64-82		111	13
12603	64D4		35	10
12603	64D7	5310-01-321-1995	91	12
5E240	6400-L-06-06-0	4730-01-437-4221	112	6
5E240	6400-L-06-08-0	4730-01-434-5432	134	29
OS1H5	6400-4-5		34	15
OS1H5	6400-4-5-XA		34	14
96151	64009	3110-01-067-6901	111	7
5E240	6410-08-08-0-.42		134	28
5E240	6410-08-08-0-089		134	15
07443	6511331		109	2
12603	664880	5310-00-073-2165	110	2
OS1H5	6801-12X20 BP-4	4730-01-437-4218	153	2
OR				
051H5	6801-12X20 XA		153	3
5E240	6801LL-10X10NWO	4730-01-433-8281	134	21
05283	686-00021		99	12
05283	686-30183		99	2
05283	686-30216		99	10
05283	686-30218		99	7
05283	686-30219	5310-01-437-7077	99	3
05283	686-51064		99	9
05283	686-51067	2530-01-438-7623	99	5
05283	686-51068		99	4
05283	686-51069		99	6
17875	6862	5340-00-598-9577	111	15
96151	6901-010	5365-01-437-2829	111	21
05283	695-00004		138	14
05283	695-23226		138	9
05283	695-23266		136	14
05283	695-30029		136	17
05283	695-30045		138	5
05283	695-50184		136	21
05283	695-50193		137	14
05283	695-50194	5365-01-437-4496	136	19
05283	695-50203		137	13
05283	695-50204	5365-01-437-4494	136	24
05283	695-50205	5340-01-396-0528	138	6
05283	695-54569		137	19
05283	695-54570		137	6

https://truckmanualshub.com/ 398

CROSS-REFERENCE INDEXES

PART NUMBER INDEX

CAGEC	PART NUMBER	STOCK NUMBER	FIG.	ITEM
05283	695-54572		137	17
05283	695-55053		136	22
05283	695-55056	3040-01-438-7172	136	13
05283	695-55578		138	8
05283	695-55586	5365-01-398-2295	138	3
12603	7CM1030	5305-01-398-0347	2	1
12603	7CM1240	5305-01-398-8615	148	30
89749	7CM1270		38	8
12603	7CM2060	5305-01-395-5876	145	9
07443	7CM650		34	3
11083	7G1800	5330-01-255-2565	83	16
			84	17
60248	7001012030	5305-01-175-3667	93	20
			95	14
5G996	706-B		75	6
			75	9
5G996	706-R		75	4
			75	8
63632	7111-312	5365-01-305-9386	34	12
OU9P2	7111-353AU		34	2
OU9P2	7111-463A	2910-01-438-4832	34	10
OU9P2	7111-511A		34	6
OU9P2	7111-740		21	7
		5365-01-305-9387	34	7
OU9P2	7111-7740-XA		34	8
63632	7111-843	5330-01-306-6583	34	11
63632	7111-853	5330-01-306-6584	34	9
OKAC7	7112-119-005		146	26
12603	712603	3110-00-586-8305	109	13
2W733	720217		76	16
77237	728-06-011-01	5365-01-313-2956	96	15
07443	73G406		123	2
89749	73G636		136	5
38022	730-2065		119	1
70842	730-2065-XA		119	2
0B5C7	734-01-007-01		93	7
0B5C7	738.01.001.10		93	5
0B5C7	738.01.002.21		93	2
0B5C7	738.01.003.11		93	11
0B5C7	738.01.004.03		93	19
0B5C7	738.04.001.04		95	5
0B5C7	738.04.003.06		95	15
0B5C7	738.04.017.01	5365-01-314-5357	101	2
0B5C7	738.04.028.01		95	23
0B5C7	738.04.505.13		95	6
0B5C7	738.06.001.09		93	13
0B5C7	738.06.002.02		96	28
77237	738.06.009.02	5365-01-313-3062	96	23
0B5C7	738.06.010.01	5365-01-313-0303	96	2
77237	738.06.012.01	5365-01-313-3061	96	21
0B5C7	738.06.019.01		96	6

https://truckmanualshub.com/ 399

CROSS-REFERENCE INDEXES

PART NUMBER INDEX

CAGEC	PART NUMBER	STOCK NUMBER	FIG.	ITEM
77237	738.06.034.03		96	24
77237	738.06.037.02	5315-01-313-1976	96	18
0B5C7	738.07.005.03		104	5
0B5C7	738.07.007.06	2530-01-407-4920	104	10
77237	738.07.009.01	5325-01-314-5317	104	11
77237	738.07.010.01	5325-01-314-5316	104	12
0B5C7	738.07.018.02		104	1
0B5C7	738.07.029.03	5340-01-408-4124	104	8
77237	738.07.030.12	5365-01-407-7928	104	9
0B5C7	738.07.089.01		93	4
0B5C7	738.07.610.04		104	3
0B5C7	738-01-006-05	5365-01-313-7939	93	17
0B5C7	738-01-006-06	5365-01-314-0869	93	17
0B5C7	738-04-004-02	5310-01-313-3051	95	3
77237	738-04-005-03	3020-01-313-4196	95	9
77237	738-04-006-03	3020-01-313-4197	95	8
0B5C7	738-04-008-01	5315-01-313-5612	95	16
085C7	738-04-008-02	5315-01-314-1848	95	13
0B5C7	738-04-009-02	5365-01-313-7953	95	11
0B5C7	738-04-011-01	3120-01-313-3033	95	10
0B5C7	738-04-012-01	5365-01-313-7950	95	7
0B5C7	738-04-016-01	5310-01-313-3069	95	24
0B5C7	738-04-025-01	3110-01-313-3059	95	2
0BJ33	738-06-005-01		96	14
77237	738-06-006-01	3020-01-315-6727	96	22
77237	738-06-007-03		96	9
0B5C7	738-06-011-02		96	11
0B5C7	738-06-016-03	5307-01-314-4842	93	16
0B5C7	738-06-016-04	5307-01-316-1404	93	15
0B5C7	738-06-033-01	5340-01-312-3882	96	10
0B5C7	738-07-001-02		101	8
77237	738-07-002-02		101	8
0B5C7	738-07-003-01	2530-01-314-8745	101	6
0B5C7	738-07-006-02	5365-01-315-4226	104	2
0B5C7	738-07-008-01	5315-01-314-9011	104	4
89749	74G724	5305-01-437-9170	91	10
91812	740D10-32	6150-00-636-8766	91	11
96151	7443	3120-01-068-3473	111	4
0AHU0	74913941-3	5330-01-128-6460	82	17
12603	76K237		31	5
78422	7701-24V	6220-01-436-9501	62	2
79470	7765	4730-01-215-3421	105	11
07443	7823	3040-01-397-5271	147	29
05283	786-0334-K004	5330-01-438-0331	KITS	
89749	79K12	5330-01-412-9862	149	18
			155	7
05283	795-0300-K008		KITS	
05283	795-0350-K008		KITS	
05283	795-0400-K004	5330-01-395-3590	KITS	
92985	8-SW-12		80	6
59257	8-SW-6		80	2

https://truckmanualshub.com/ 400

CROSS-REFERENCE INDEXES

PART NUMBER INDEX

CAGEC	PART NUMBER	STOCK NUMBER	FIG.	ITEM
59257	8-8-AM-90		90	11
59257	8-8-37-2		80	1
30780	8C6XS	4730-00-432-7713	80	12
			112	3
30780	8FF5BXS	4730-00-435-8015	16	9
			80	14
			128	5
11083	8F5340	5330-00-854-1603	111	3
11083	8T4244	5310-01-352-7374	2	15
9A070	8005K23N413V31		57	6
77237	808.01.017.01	5365-01-313-0232	93	14
92867	81-000155	5365-01-438-1161	103	6
77237	819.01.610.01	5365-01-314-3865	93	9
16004	82058	5305-01-101-4832	95	1
16004	82246	5305-01-101-3322	93	8
62809	824520	4730-01-395-7313	68	2
62809	82572	4730-01-395-7309	105	3
96151	8318	4820-01-079-1486	111	12
96151	8438		111	22
96151	845		111	6
2W733	8471		76	37
			77	16
			BULK	9
53790	848-FSO-06X04		134	12
53790	848-FSO-08X16	4730-01-437-4280	16	8
			82	35
13174	848-FS10X08	4730-00-278-4311	128	7
30327	848L-FS-12X12		21	17
93061	851-FSO--8X08		132	9
53790	854-FSO-04X-4-XA		134	5
			134	10
			134	14
			134	16
			134	22
			134	25
			134	27
			134	30
53790	854-FSO-04X04		134	9
12603	86F6	5310-00-138-4272	112	1
89749	86G1020		61	10
0KAC7	8611-015-000		146	7
0KAC7	8611-016-00R		146	6
96151	8618-009		111	20
0KAC7	8676-015-004		146	19
0KAC7	8676-017-00R	5330-01-437-3848	146	18
0KAC7	8676-023-00N	5330-01-437-4488	KITS	
89749	87F7		149	20
14933	87096-009	5935-01-323-6815	77	9
14933	87097-003		76	7
14933	87097-013	5935-01-323-8569	76	33
			77	2

https://truckmanualshub.com/ 401

PART NUMBER INDEX

CAGEC	PART NUMBER	STOCK NUMBER	FIG.	ITEM
14933	87097-013	5935-01-323-8569	77	15
30327	883-FS-10X08	4730-01-437-7497	80	11
13174	883-FS-12X08		16	5
			82	33
12603	894754		100	2
76700	89543-K	5340-01-324-3695	38	1
0EGS7	9		BULK	4
89749	9EM80	5310-01-421-1899	39	18
12603	9G1020		139	2
89749	9G524	5305-01-437-2934	117	8
39428	90273A199		118	11
39428	90275A199	5305-01-437-2959	40	3
39428	90496A046	5310-01-227-6119	145	2
96151	9086-002		111	17
28122	908910		155	3
47870	91028		80	21
33955	9154675	6625-01-420-0841	56	1
72447	918920	2520-01-420-5308	91	1
0KAC7	9211-331-00E		146	27
0B5C7	931-04-006-01	5365-01-315-7153	101	3
0KAC7	9313-145-00B		146	5
0KAC7	9313-150-00S	5330-01-437-3844	146	17
77237	932.06.074.01	5307-01-364-4791	96	5
63323	940813		150	10
77237	953.01.025.01	5340-01-313-3081	95	22
77237	953-04-002-06	5365-01-313-5842	95	18
0B5C7	953-04-012-01	5310-01-313-3041	95	20
13445	956-3124	2920-01-132-4961	51	1
90816	95939 REC		76	20
			76	37
			77	8
			77	16
			BULK	8
90816	95939 RLW		76	20
			76	37
			77	8
			77	16
			BULK	10
39428	97-50-263-11		118	1
39428	97360A350		98	5
81860	9810145-02	5310-01-201-9955	116	11
81860	9810145-02804		115	13
34914	991 4137	5310-01-271-9602	1	2
			2	14
			38	9
			148	38
07443	9934	3040-01-397-5689	147	15

https://truckmanualshub.com/ 402

By Order of the Secretary of the Army:

DENNIS J. REIMER
General, United States Army
Chief of Staff

Official:

JOEL B. HUDSON
Administrative Assistant to the
Secretary of the Army
02991

DISTRIBUTION:

To be distributed in accordance with the initial distribution number (IDN) 25 6309, requirements for TM10-3930-669-24P.

☆ U.S. GOVERNMENT PRINTING OFFICE: 1997-545-010/60044

RECOMMENDED CHANGES TO EQUIPMENT TECHNICAL PUBLICATIONS

SOMETHING WRONG WITH PUBLICATION

FROM: (PRINT YOUR UNIT'S COMPLETE ADDRESS)

DATE SENT

PUBLICATION NUMBER	PUBLICATION DATE	PUBLICATION TITLE

BE EXACT PIN-POINT WHERE IT IS

PAGE NO.	PARA-GRAPH	FIGURE NO.	TABLE NO.

IN THIS SPACE, TELL WHAT IS WRONG AND WHAT SHOULD BE DONE ABOUT IT.

PRINTED NAME, GRADE OR TITLE AND TELEPHONE NUMBER	SIGN HERE

TEAR ALONG PERFORATED LINE

DA FORM 1 JUL 79 **2028-2**

PREVIOUS EDITIONS ARE OBSOLETE.

P.S.--IF YOUR OUTFIT WANTS TO KNOW ABOUT YOUR RECOMMENDATION MAKE A CARBON COPY OF THIS AND GIVE IT TO YOUR HEADQUARTERS.

THE METRIC SYSTEM AND EQUIVALENTS

LINEAR MEASURE

1 Centimeter = 10 Millimeters = 0.01 Meters = 0.3937 Inches
1 Meter = 100 Centimeters = 1,000 Millimeters = 39.37 Inches
1 Kilometer = 1,000 Meters = 0.621 Miles

SQUARE MEASURE

1 Sq Centimeter = 100 Sq Millimeters = 0.155 Sq Inches
1 Sq Meter = 10,000 Sq Centimeters = 10.76 Sq Feet
1 Sq Kilometer = 1,000,000 Sq Meters = 0.386 Sq Miles

CUBIC MEASURE

1 Cu Centimeter = 1,000 Cu Millimeters = 0.06 Cu Inches
1 Cu Meter = 1,000,000 Cu Centimeters = 35.31 Cu Feet

LIQUID MEASURE

1 Milliliter = 0.001 Liters = 0.0338 Fluid Ounces
1 Liter = 1,000 Milliters = 33.82 Fluid Ounces

TEMPERATURE

5/9 (°F -32) = °C
212° Fahrenheit is equivalent to 100° Celsius
90° Fahrenheit is equivalent to 32.2° Celsius
32° Fahrenheit is equivalent to 0° Celsius
9/5 C° +32 = F°

WEIGHTS

1 Gram = 0.001 Kilograms = 1,000 Milligrams = 0.035 Ounces
1 Kilogram = 1,000 Grams = 2.2 Lb.
1 Metric Ton = 1,000 Kilograms = 1 Megagram = 1.1 Short Tons

APPROXIMATE CONVERSION FACTORS

TO CHANGE	TO	MULTIPLY BY
Inches	Centimeters	2.540
Feet	Meters	0.305
Yards	Meters	0.914
Miles	Kilometers	1.609
Square Inches	Square Centimeters	6.451
Square Feet	Square Meters	0.093
Square Yards	Square Meters	0.836
Square Miles	Square Kilometers	2.590
Acres	Square Hectometers	0.405
Cubic Feet	Cubic Meters	0.028
Cubic Yards	Cubic Meters	0.765
Fluid Ounces	Milliliters	29.573
Pints	Liters	0.473
Quarts	Liters	0.946
Gallons	Liters	3.785
Ounces	Grams	28.349
Pounds	Kilograms	0.454
Short Tons	Metric Tons	0.907
Pound-Feet	Newton-Meters	1.356
Pounds Per Square Inch	Kilopascals	6.895
Miles Per Gallon	Kilometers Per Liter	0.425
Miles Per Hour	Kilometers Per Hour	1.609
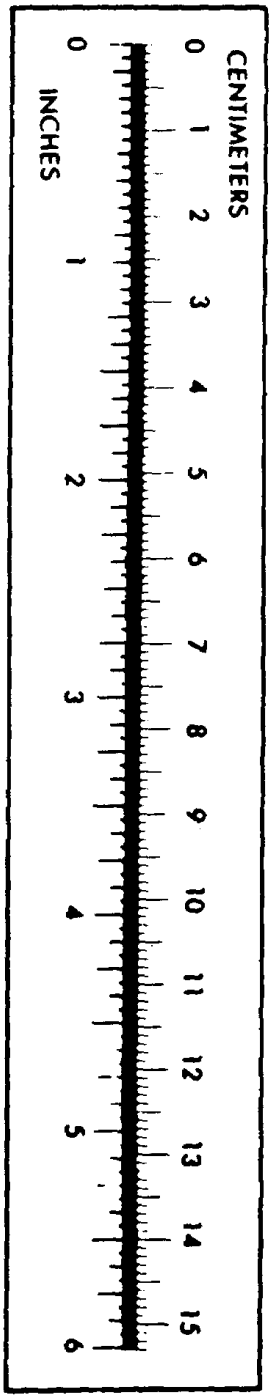
TO CHANGE	TO	MULTIPLY BY
Centimeters	Inches	0.394
Meters	Feet	3.280
Meters	Yards	1.094
Kilometers	Miles	0.621
Square Centimeters	Square Inches	0.155
Square Meters	Square Feet	10.764
Square Meters	Square Yards	1.196
Square Kilometers	Square Miles	0.386
Square Hectometers	Acres	2.471
Cubic Meters	Cubic Feet	35.315
Cubic Meters	Cubic Yards	1.308
Milliliters	Fluid Ounces	0.034
Liters	Pints	2.113
Liters	Quarts	1.057
Liters	Gallons	0.264
Grams	Ounces	0.035
Kilograms	Pounds	2.205
Metric Tons	Short Tons	1.102
Newton-Meters	Pound-Feet	0.738
Kilopascals	Pounds Per Square Inch	0.145
Kilometers Per Liter	Miles Per Gallon	2.354
Kilometers Per Hour	Miles Per Hour	0.621