https://truckmanualshub.com/

TO THE OWNER

This Owner's Manual has been prepared to provide you with important operation, maintenance and safety information relating to your UD Trucks vehicle. **We urge you and others operating the vehicle to carefully read this manual and follow the recommendations for operation, maintenance, and safety. Failure to follow these recommendations could result in serious injury or death to those riding in this vehicle or bystanders.**

This manual should be considered a permanent part of the vehicle and must be kept with the vehicle at all times. This Owner's Manual should accompany the vehicle when sold to provide future owners and operators with important operation, safety and maintenance information.

The characteristics and functions of this vehicle make its driving and handling different from that of a car. Before operating your vehicle, familiarize yourself and others operating the vehicle with these differences.

The Warranty and Service Booklet provided with each vehicle contains important information about warranty and service matters. Keep it with your vehicle at all times and present it to your authorized UD Trucks dealer or other service facility when service is required.

When service or other assistance is required, consult your UD Trucks dealer. If you have a problem that has not been handled to your satisfaction, contact UD Trucks North America, Inc., 7900 National Service Road Greensboro, NC 27409.

1206-20710-K1

All rights reserved. Reproduction by any means, electronic or mechanical including photocopying, recording or by any information storage and retrieval system or translation in whole or part is not permitted without written authorization from UD Trucks Corporation. UD Trucks may change the contents without notice and without incurring obligation.

© 2012 UD Trucks Corporation

https://truckmanualshub.com/

CLEAN IDLE CERTIFIED LABEL FOR U.S.

Make sure that the following clean engine idling certified label is affixed to the left side of the corner back outer. By the CARB regulation listed below, the label must be affixed there to prove that the new vehicle with diesel engine manufactured from Jan., 2008 conforms to this regulation.

CARB § 1956.8. Exhaust Emission Standard and Test Procedure (a) (b) Heavy-Duty Diesel Engine Idling Requirements

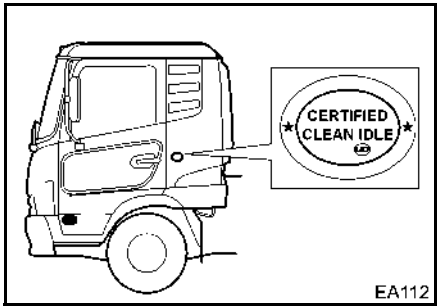

CALIFORNIA PROPOSITION 65 WARNING

⚠ WARNING

- **Engine exhaust, some of its constituents, and certain vehicle components contain or emit chemicals known to the State of California to cause cancer and birth defects or other reproductive harm. In addition, certain fluids contained in vehicles and certain products of component wear contain or emit chemicals known to the State of California to cause cancer and birth defects or other reproductive harm.**

FEDERAL HIGHWAY ADMINISTRATION REGULATION

Various regulations relating to vehicle performance, equipment, and safety have been issued by the Department of Transportation. These regulations include, but are not limited to the Federal Motor Vehicle Safety Standards and the Federal Motor Carrier Safety Regulations. Other federal, state and local regulations may also apply. Final stage manufacturers and motor carriers are responsible for knowing and complying with all regulations that may apply to the vehicle. A finished vehicle may also require devices that are not specified in the regulations. Body builders, subsequent stage manufacturers and carriers must determine what safety devices are necessary for the safe operation of the vehicle.

https://truckmanualshub.com/

⚠ WARNING

- **Making modifications to various parts, components and systems of the vehicle, such as brake and steering system can adversely affect the quality, reliability and operation of your vehicle and could result in property damage, serious injury or death. Such modifications must be avoided.**

https://truckmanualshub.com/

https://truckmanualshub.com/

TABLE OF CONTENTS

INTRODUCTION AND SAFETY 1-1
When Reading the Manual..... 1-1
New Vehicles Break-in Period 1-2
Keys 1-2
Fuel 1-3
Metric Mismatch 1-3
Abbreviation 1-4

IDENTIFICATION 2-1
Vehicle Identification Number (VIN) 2-1
Unit Identification..... 2-2

BEFORE DRIVING YOUR VEHICLE 3-1
Overloading..... 3-2
Towing Trailers 3-3
Safety Reminders..... 3-6
Daily Maintenance..... 3-6
EGR System Operation.....3-11
UD Trucks, US2010 Emissions solution.....3-11
Handling of the exhaust emission control system 3-12
Vehicle Labels 3-24

ENTERING AND LEAVING THE CAB 4-1

DOORS AND WINDOWS 5-1
Door 5-1
Keyless Entry System 5-2
Door Window (Power Window) 5-4

DRIVING POSITION.....6-1
Seats 6-1
Seat Belts 6-5
Steering Wheel 6-7

INSTRUMENTS AND CONTROLS 7-1
Ignition Key Switch 7-3
Meters and Gauges..... 7-5
Multi-display Monitor 7-15
Warnings and Indicators..... 7-26
Buzzers 7-30
Warnings 7-31
Warning and indicator lights 7-43
Switches and Buttons..... 7-53
DPF System 7-69
Levers and Control 7-75

ACCESSORIES.....8-1

HEATER OR AIR CONDITIONER CONTROL.....9-1
Air Conditioner..... 9-1

VEHICLE OPERATION 10-1
Operating Precautions..... 10-1
Break-in Precautions 10-2
Vehicle Loading 10-2

https://truckmanualshub.com/

Towing Trailers 10-3
Starting the Engine 10-4
Warming up Engine 10-7
Stopping the Engine 10-9
Driving on Grades 10-10
Driving in Difficult Conditions 10-11
Operating with Manual Transmission 10-11
Operating with Automatic Transmission 10-14
Brake Operation 10-33
Parking your Vehicle 10-35
After Parking Your Vehicle 10-36
In Cold Weather 10-36
Idle Shutdown 10-38

VEHICLE SERVICE AND MAINTENANCE...11-1
Clean Air Act 11-1
Maintenance Intervals 11-3
Grease Lubrication Points 11-16
Before Performing Maintenance 11-19
Cab 11-20
Engine Cooling System 11-24
Engine Oil and Oil Filters 11-31
Fuel System 11-37
Air Cleaner Element 11-44
Drive Belt 11-46
Aftertreatment DEF Filter 11-48
CCV Filter 11-50
Transmission Gear Oil 11-51
Differential Gear Oil 11-59
Steering System 11-60
Service Brake System 11-62
Clutch 11-65
Suspension 11-67
Windshield Washer Fluid 11-68
Outside Mirrors 11-69
Emission Control Systems 11-70
Noise Control System 11-73
Battery 11-75
Lights 11-78
Fuses 11-80
Blower Motor Filters 11-82
Wheels and Tires 11-83
Appearance Care 11-89

IN CASE OF EMERGENCY/ TROUBLESHOOTING 12-1
Engine Overheating 12-1
Jump Starting 12-3
Tire Change 12-6
Towing 12-9
Troubleshooting 12-13

SERVICE DATA 13-1
Maintenance Standard 13-1
Tightening Torque 13-3
Bulbs 13-5
Recommended Lubricants 13-5
Recommended SAE Viscosity Chart 13-6

https://truckmanualshub.com/

Refill Capacities 13-7
Conversion Factors 13-8

REPORTING SAFETY DEFECTS 14-1

INDEX 15-1

https://truckmanualshub.com/

INTRODUCTION AND SAFETY

WHEN READING THE MANUAL

In this manual, read very carefully those sections which have signs "**DANGER**", "**WARNING**", "**CAUTION**" and "**NOTE**". **They are particularly important**.

⚠ **DANGER**	Indicates an imminently hazardous situation which, if not avoided, will result in death or serious injury.
⚠ **WARNING**	Indicates a potentially hazardous situation which, if not avoided, could result in death or serious injury.
⚠ **CAUTION**	Indicates a potentially hazardous situation which, if not avoided, could result in minor or moderate injury.
CAUTION	Indicates a situation which, if not avoided, could result in property damage to the vehicle.
NOTE	Indicates good practice.

✕	If you see this symbol, it means "**Do not do this**" or "**Do not let this happen**".

UD Trucks Corporation offers a variety of options, components and features on its vehicles. Therefore, the equipment described in this manual may or may not be identified as standard or optional and may or may not be applicable to your particular vehicle. If you have any questions, consult your UD Trucks dealer.

https://truckmanualshub.com/

All information and specifications in this manual are based on the product information in effect at the time of printing. The right is reserved to discontinue models, change information, specifications or design without notice and without incurring obligation.

We urge you to drive safely, use the safety equipment provided with your vehicle and observe traffic signs and local laws.
Thank you for selecting a UD Trucks product. We sincerely hope that your UD Trucks experience is safe, satisfactory and pleasant.

NEW VEHICLES BREAK-IN PERIOD

For extended service life and reliable performance, your UD Trucks vehicle requires proper handling during the **first 600 miles (1,000 km)** of operation. Special instructions for this **break-in** period are described in the "BREAK-IN PRECAUTIONS" on page 10-2. After this initial break-in period, continued routine inspection and maintenance as described in this manual will help assure continued dependable operation of your UD Trucks vehicle.
For details, refer to the “VEHICLE SERVICE AND MAINTENANCE” section.

KEYS

Duplicate keys are provided with your UD Trucks vehicle. Each key operates the door locks and ignition key switch. Record the key number stamped on your keys and store in a safe place. Contact your UD Trucks dealer if key replacement becomes necessary. The key number will enable the UD Trucks dealer to order replacement keys.
See the “DOORS AND WINDOWS” section for door operation and Keyless Entry System.

Key number plate

The key number is engraved on the key number plate so that only the owner will know the key number. Remove this from the key you normally use and store it in a safe place other than in the vehicle. (The key number is not engraved on the key.)

https://truckmanualshub.com/

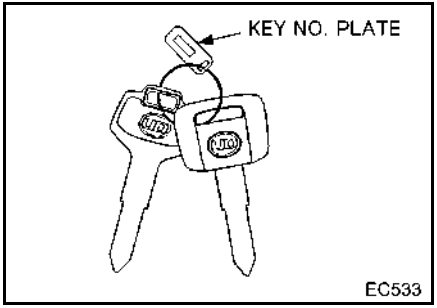

⚠ WARNING

- **Do not leave children alone in the vehicle. If you must leave the car, be sure to remove the ignition key to avoid an accident.**

⚠ CAUTION

- **Only use genuine part ignition keys to prevent accidents.**

NOTE:

- **When leaving the car, be sure to remove the key and lock the doors. This will prevent theft.**

FUEL

Your UD Trucks vehicle is designed to operate on diesel fuel only.
For details, refer to the "Fuel requirements" on page 11-38.

CAUTION

- **Do not use fuel additives, agents for removal of water from the fuel, agents for improvement of the fuel efficiency.**
  This can cause smoke generation or defects from defective sliding of the sliding surfaces lubricated by fuel system.
- **Do not install devices for improvement of the fuel efficiency inside the fuel tank.**
  Wear particles, fragments from the installed devices (aftermarket parts) can cause defects of the fuel system.

METRIC MISMATCH

Your vehicle may utilize parts which have either metric and/or SAE unit dimensions. Any fasteners e.g. bolts and nuts, used to replace old ones, must have the same dimensions and strength as those removed.

⚠ WARNING

- **Mismatched or incorrect thread fasteners can result in thread stripping and/or assembly weakness leading to vehicle damage, malfunction or possible serious injury.**

https://truckmanualshub.com/

ABBREVIATION

In this manual, the following abbreviations are used.

ATM: Automatic transmission
CAN: Controller Area Network
CCV: Closed Crankcase Ventilation
DEF: Diesel Exhaust Fluid
DPF: Diesel Particulate Filter
DTC: Diagnostic Trouble Code
EGR: Exhaust Gas Recirculation
MTM: Manual transmission
Multi-display meter: Combination meter with multi-display function
OBD: On Board Diagnostic
SCR: Selective Catalytic Reduction
TCM: Transmission Control Module

https://truckmanualshub.com/

IDENTIFICATION

VEHICLE IDENTIFICATION NUMBER (VIN)

The vehicle identification number (VIN) plate is located on the riser of the driver's side.

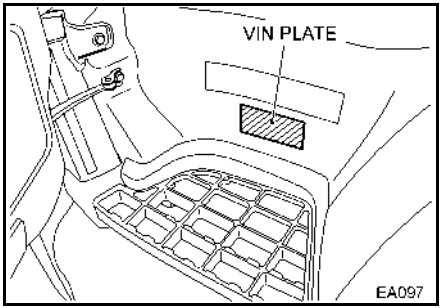

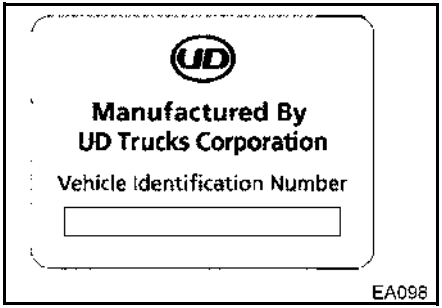

The meaning of each character in the vehicle identification number is given in the sample below.

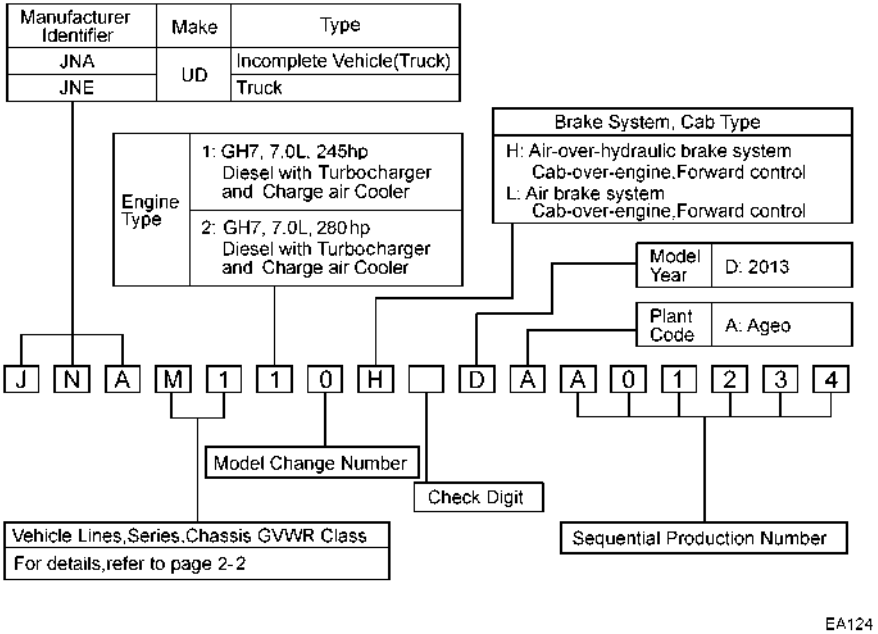

https://truckmanualshub.com/

Vehicle lines, series, Chassis, GVWR Class

Code	Information
M1	UD1800 (MKA8F) with MLS63B transmission 4 x 2, Class 5
M3	UD1800 (MKA8F) with 1000RDS transmission 4 x 2, Class 5
L1	UD2000 (MKB8F) with MLS63B transmission 4 x 2, Class 5
L3	UD2000 (MKB8F) with 1000RDS transmission 4 x 2, Class 5
C1	UD2300DH (LKC8F) with MLS63B transmission 4 x 2, Class 6
C4	UD2300DH (LKC8F) with 2200RDS transmission 4 x 2, Class 6
G1	UD2300LP (LKC8F) with MLS63B transmission 4 x 2, Class 6
G4	UD2300LP (LKC8F) with 2200RDS transmission 4 x 2, Class 6
A1	UD2600 (PKA8F) with MLS63B transmission 4 x 2, Class 6
A2	UD2600 (PKA8F) with MPS63B transmission 4 x 2, Class 6
A4	UD2600 (PKA8F) with 2200RDS transmission 4 x 2, Class 6
A6	UD2600 (PKA8F) with 3000RDS transmission 4 x 2, Class 6
D1	UD2600LP (PKA8F) with MLS63B transmission 4 x 2, Class 6
D2	UD2600LP (PKA8F) with MPS63B transmission 4 x 2, Class 6
D4	UD2600LP (PKA8F) with 2200RDS transmission 4 x 2, Class 6
D6	UD2600LP (PKA8F) with 3000RDS transmission 4 x 2, Class 6
K1	UD3300 (PKC8F) with MLS63B transmission 4 x 2, Class 7
K2	UD3300 (PKC8F) with MPS63B transmission 4 x 2, Class 7
K5	UD3300 (PKC8F) with 2500RDS transmission 4 x 2, Class 7
K6	UD3300 (PKC8F) with 3000RDS transmission 4 x 2, Class 7

UNIT IDENTIFICATION

The locations of the stamped chassis serial number, engine serial number, and each assembly and serial number of transmission, differential carrier, front axle and rear axle are shown below:

Chassis serial number location

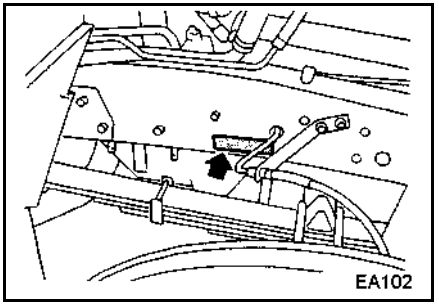

https://truckmanualshub.com/

Engine serial number location

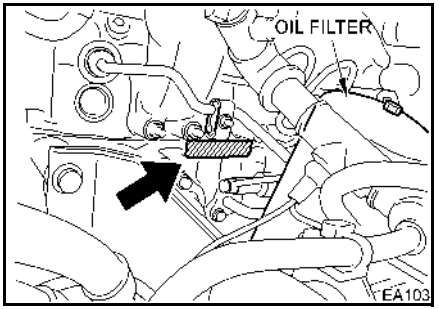

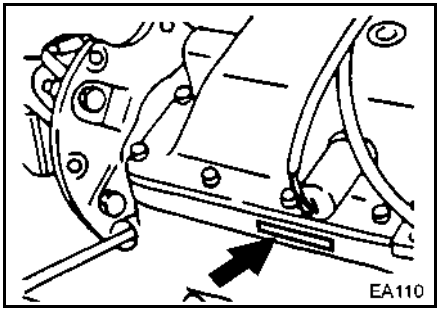

MTM (MPS63)

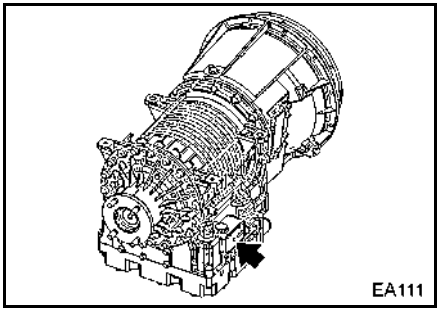

ATM (Allison 3000)

Transmission assembly and serial number location

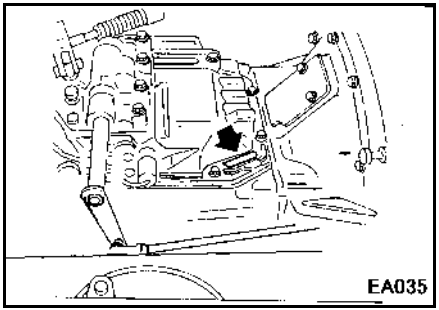

MTM (MLS63)

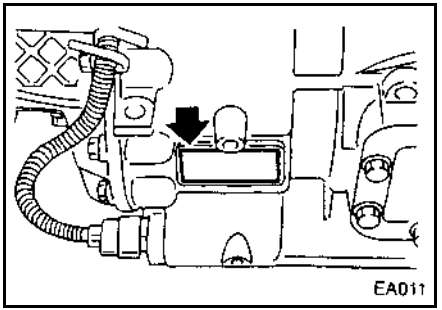

ATM (Allison 1000, 2200, 2500)

Differential carrier assembly and serial number location

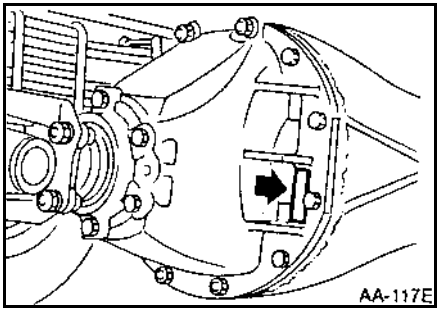

UD1800, UD2000 and UD2300LP

https://truckmanualshub.com/

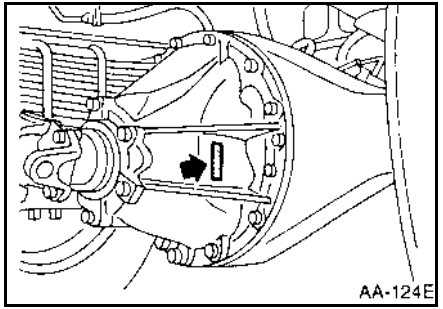

UD2300DH

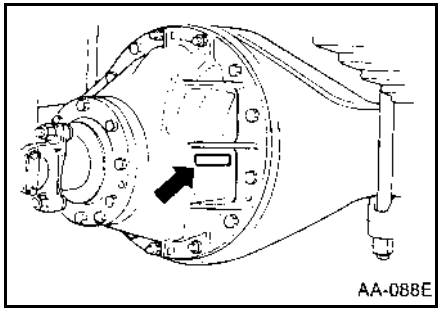

UD2600 and UD3300

Rear axle assembly and serial number location

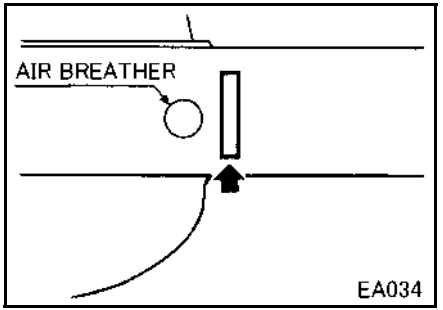

Front axle assembly and serial number location

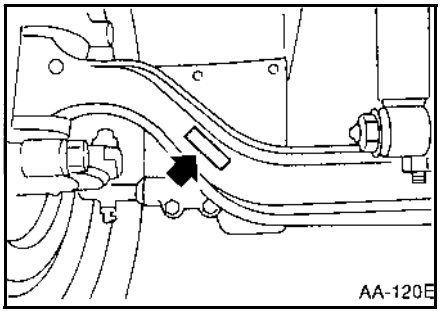

https://truckmanualshub.com/

BEFORE DRIVING YOUR VEHICLE

⚠ WARNING

Be sure this vehicle includes required safety features. This vehicle may be put to many uses, and UD Trucks Corporation cannot anticipate all of them. Always consult safety regulations in effect for location and type of use of the vehicle. Below are two safety adaptations required under certain circumstances. Other measures may be required depending on the type of body built on the chassis and the uses expected for the final vehicle. Neglecting good safety measures could cause a serious accident.

REAR IMPACT PROTECTION

Section 393.86 of the Federal Motor Carrier Safety Regulations requires certain vehicles to be equipped with rear impact protection guards. Such guards must be installed in accordance with the Federal Motor Carrier Safety Regulations. Make sure your vehicle has rear impact protection that meets or exceeds all applicable regulations for wherever it will be driven and that it is installed correctly.

VISIBILITY DEVICES

Federal Motor Vehicle Safety Standards and Federal Motor Carrier Safety Regulations require certain vehicles to be equipped with retroreflective sheeting or other devices to insure the vehicle is clearly visible. Be sure you have visibility devices in compliance with the regulations and take any other steps necessary to ensure that the vehicle is sufficiently conspicuous at night or in low lighting conditions.

https://truckmanualshub.com/

OVERLOADING

⚠ WARNING

Never load your vehicle in excess of the Gross Vehicle Weight Rating (GVWR) and the Gross Axle Weight Ratings of the front and rear axle (GAWR). Overloading may cause loss of vehicle control and result in serious injury or death. It may also void the new vehicle warranty and shorten vehicle life.

Model	Tire	GVWR	GAWR-Front	GAWR-Rear
UD1800	225/70R19.5 (F)	17,995 lb (8,160 kg)	7,280 lb (3,300 kg)	13,660 lb (6,200 kg)
UD2000	225/70R19.5 (F)	19,500 lb (8,845 kg)	7,280 lb (3,300 kg)	13,660 lb (6,200 kg)
UD2300 LP	245/70R19.5 (G)	23,000 lb (10,435 kg)	8,375 lb (3,800 kg)	15,430 lb (7,000 kg)
UD2300 DH	9R22.5 (G)		8,375 lb (3,800 kg)	16,535 lb (7,500 kg)
UD2600	11R22.5 (G)	25,995 lb (11,790 kg)	11,020 lb (5,000 kg)	20,280 lb (9,200 kg)
UD2600 LP	255/70R22.5 (H)		11,020 lb (5,000 kg)	20,280 lb (9,200 kg)
UD3300	11R22.5 (G)	32,900 lb (14,925 kg)	11,900 lb (5,400 kg)	21,000 lb (9,525 kg)

NOTE:

- **UD2300 LP**
  Tire specification: 245/70R19.5 (G)
- **UD2300 DH**
  Tire specification: 9R22.5 (G)
- **UD2600**
  Tire specification: 11R22.5 (G)
- **UD2600 LP**
  Tire specification: 255/70R22.5 (H)

https://truckmanualshub.com/

TOWING TRAILERS

⚠ WARNING

- **Towing trailers beyond the maximum recommended trailer weight which exceeds the limit of the vehicle's GCWR, GVWR, GAWR(s) or tire ratings could result in engine damage, transmission damage, structural damage, loss of vehicle control, vehicle rollover and personal injury.**

Definitions:

GAWR (Gross Axle Weight Rating) — is the maximum allowable weight that can be carried by a single axle (front or rear). These numbers are shown on the Simplified Final-stage Vehicle Certification Label that can be found on the inside of the driver's door or the door frame. The total load on each axle must never exceed its GAWR.

GCWR (Gross Combined Weight Rating) — is the maximum allowable weight of the vehicle and the loaded trailer — including all cargo and passengers — that the vehicle can handle without risking damage (Important: The towing vehicle's braking system is rated for operation at GVWR, not at GCWR). Separate functional brakes should be used for safe control of towed vehicles and for trailers where the GCW (Gross Combined Weight) of the towing vehicle plus the trailer exceed the GVWR of the towing vehicle. The GCW must never exceed the GCWR.

GVWR (Gross Vehicle Weight Rating) — is the maximum allowable weight of the fully loaded vehicle (including all options, equipment, passengers, and cargo).

⚠ CAUTION

- **Exceeding the Tire Rating or Simplified Final-stage Vehicle Certification Label vehicle weight rating limits could result in substandard vehicle handling or performance, engine, transmission and/or structural damage, serious damage to the vehicle, loss of control and personal injury.**

https://truckmanualshub.com/

The following chart indicates the allowable GCWR for your UD Trucks vehicle based on the specific transmission model and specific rear axle ratio:

Maximum GCWR - lb. (kg.)

Vehicle Model	Engine Type	Rear Axle Ratio *	MTM	ATM
UD1800	D (245hp)	3.90 / 4.11/ 4.33	29,000 (13,154)	26,000 (11,793)**
UD2000		3.90 / 4.11/ 4.33	29,000 (13,154)	26,000 (11,793)**
UD2300LP		4.11	33,135 (15,029)	26,000 (11,793)**
		4.33 / 4.56	34,000 (15,422)	26,000 (11,793)**
UD2300DH		4.88 / 5.29	34,000 (15,422)	26,000 (11,793)**
UD2600		5.14	34,945 (15,850)	26,000 (11,793)**
		5.57	41,000 (18,597)	26,000 (11,793)**
	E (280hp)	4.63	48,065 (21,800)	N/A
		4.88	50,715 (23,000)	N/A
		5.57	57,770 (26,200)	57,770 (26,200)**
		5.86	N/A	58,430 (26,500)**
		6.17	N/A	57,990 (26,300)**
UD2600LP	D (245hp)	4.88	40,225 (18,246)	26,000 (11,793)**

https://truckmanualshub.com/

Vehicle Model	Engine Type	Rear Axle Ratio *	MTM	ATM
UD2600LP	E (280hp)	4.33	50,490 (22,900)	N/A
		4.63	53,800 (24,400)	N/A
		5.14	N/A	59,975 (27,200)**
		5.86	N/A	64,385 (29,200)**
UD3300	D (245hp)	5.14	34,945 (15,850)	33,000 (14,968)**
		5.57	41,005 (18,600)	
		5.86	43,100 (19,550)	
		6.83	50,000 (22,680)	N/A
	E (280hp)	4.88	50,715 (23,000)	N/A
		5.14	53,580 (24,300)	N/A
		5.57	57,770 (26,200)	57,770 (26,200)**
		5.86	58,430 (26,500)	58,430 (26,500)**
		6.17	N/A	57,990 (26,300)**
		6.50	N/A	55,565 (25,200)**

*Consult your authorized UD Trucks dealer for information on “Rear Axle Ratio”.
**GCWR rating limitations, as directed by Allison Transmission.
N/A - not applicable, no approved GCWR.

https://truckmanualshub.com/

SAFETY REMINDERS

For your safety and that of others, observe the following precautions:

- Never drive while under the influence of intoxicating beverages or drugs which may affect your ability to operate your vehicle safely.
- Drive defensively. Expect the unexpected! Properly use the seat belts and head restraints provided with your vehicle.
- Observe posted speed limits and other local laws. Never drive faster than conditions allow.
- Know your vehicle and its operating characteristics.
- Maintain your vehicle according to the schedules and instruction described in this manual.
  See the “VEHICLE SERVICE AND MAINTENANCE”.

DAILY MAINTENANCE

Daily maintenance should be performed by the driver before or after the day’s operation in order to assure safe driving and prevent problems on the road.
For complete details, refer to the “CHECK POINTS” (next page) and “VEHICLE SERVICE AND MAINTENANCE” section in this manual.
If a problem with any part of the vehicle is noticed during daily inspection, it should be repaired immediately.
Consult your authorized UD Trucks dealer or qualified service facility for repairs.

⚠ WARNING

- **Repair any malfunction before operating your vehicle. Failure to do so can increase the risk of serious injury, death or property damage.**

Outside the vehicle

- Check tire air pressure.
- Examine all tires for cracks, damage, abnormal wear, and foreign objects embedded in tread grooves.
- Inspect disc wheels for damage.
- Check that wheel nuts are properly installed and tightened.
- Drain condensate from air reservoir.
- Check if water has accumulated in the primary fuel filter.
- Check whether a red signal shows on air cleaner service indicator for clogging of the air cleaner.
- Check that all light lenses are undamaged and clean.
- Check levels of engine oil and power steering fluid.

With the cab tilted

- Check drive belts for proper tension and for damage.
- Examine all oil and fluid reservoirs for leaks.

Inside the cab

- Check that mirrors are intact, adjusted, and clean.
- Check that doors are securely closed and locked.

https://truckmanualshub.com/

- Check that seat belts are intact, undamaged and properly adjusted.
- Check that head restraints are intact and properly adjusted.

With engine started

Refer to “INSTRUMENTS AND CONTROLS”.

- Check the horn for proper operation.
- Check the operation of windshield wipers and washer and the condition of the wiper blades.
- Check that each gauge on the instrument panel is functioning properly. Be sure that no buzzers are sounding and no warning lights, warnings are on except for the PARKING BRAKE warning light.
- Check that all lights and turn signals function properly.

Check points

Items	Check points	Reference page
● Drive belt	Check for belt tension, wear or cracks. If required, have the belt replaced by your authorized UD Trucks dealer or qualified service facility. Always replace the two belts as a set.	11-46
● Engine oil leakage and engine oil level	Check for oil leakage from engine. Also check for traces of oil on the road directly under the engine. Check engine oil level and contamination.	11-33
● Coolant leakage and engine coolant level	Check for leakage from engine. Also check for traces of water on the road directly under the engine. If leakage is noticed, check the coolant level. Check that the ENGINE COOLANT LEVEL warning light remains off while the engine is in operation.	11-25
● Air cleaner service indicator	Check whether a red signal shows on the service indicator. When the red signal is shown, replace the air cleaner element.	11-44
● Water hoses and clamps	Check all radiator and heater hose clamps for tightness. Inspect all hoses; if they are swollen, cracked or otherwise worn, replace them.	–
● Primary fuel filter	Check for water accumulation. Drain water from the fuel filter before water reaches the upper portion of the transparent case. When water has accumulated in the fuel filter, it has also accumulated in the fuel tank. Drain water from fuel tank when the fuel filter is drained.	11-41

https://truckmanualshub.com/

(Cont'd)

Items	Check points	Reference page
● Fuel quantity	Check the amount of fuel using the fuel gauge. It is advisable to keep the fuel tank full.	7-12
● DEF quantity	Check the amount of fuel using the DEF gauge. It is advisable to keep the DEF tank full.	7-10
● Starting ability and noise	Check engine for smooth starting. If engine operation is erratic or noisy, immediately stop and check the cause of the problem.	–
● Oil, fluid, fuel, DEF, grease and air leakage	Check the transmission and differential, brake system, clutch system, power steering system, fuel system and DEF dosing system for leakage of oil, fluid, fuel, DEF, grease and/or air. Fuel and air leakage is sometimes hard to detect so careful checks are needed. Leakage may be present only when the engine/vehicle is in operation. If leakage is noticed, check the level of oil/fluid/coolant, repair the leaking point and correct the level as necessary.	–
● Wheel nut	Check all wheel nuts for proper tightness. If any nut is missing or loose, check that all wheel nuts are tightened to the specified torque.	11-86
● Disc wheel	Check for deformity, cracks or damage.	–
● Tire	Check the air pressure using a tire gauge. Note that air pressure differs between the allowable load capacities of tires. Also check tread depth and for cracks or foreign matter caught in grooves.	11-83
● Service brake operation	Check for the specified air pressure of the air pressure gauge on the instrument panel. With the vehicle stopped, depress the brake pedal. Then, release the pedal to ensure the sound is accompanied by discharging air. Next, drive the vehicle at low speeds and check for braking performance.	7-8, 10-33

https://truckmanualshub.com/

(Cont'd)

Items	Check points	Reference page
● Draining water condensation from air reservoir	Open the drain cocks and drain condensation completely from air reservoir. Close the drain cocks completely. If a large quantity of water accumulates, the air dryer may be faulty and should be repaired. Drain the condensation before and after the day's operation.	11-63
● Parking brake operation	Apply the parking brake on an upgrade. Ensure the PARKING BRAKE warning light illuminates with the ignition key in the ON position and that the brake firmly operates on the wheels.	7-76
● Lighting and signal system	Turn all switches of the lighting and signal system on and off to ensure headlights, turn signal lights, etc. operate properly. Clean dirty light lenses.	7-57
● Horn	Operate the horn button to ensure the horn sounds.	7-68
● Meters, indicator light, warning and warning light	Check cluster meters (such as the air pressure gauge and engine coolant temperature gauge), to ensure they register the specified ranges. The engine coolant temperature gauge should be checked after warming up the engine sufficiently or while the vehicle is being driven. Also check the indicator light for proper operation in response to the operation of the corresponding control. Check that warnings and warning lights remain off while the engine is in operation.	7-1
● Windshield wiper and washer	Operate the wiper and washer switches to ensure the windshield wiper and washer operate. Check the level of washer fluid and add fluid as necessary. If the wiper does not wipe the windshield sufficiently or does not contact the windshield well, the wiper blades need to be replaced.	7-55

https://truckmanualshub.com/

(Cont'd)

Items	Check points	Reference page
● Mirror and front windshield	Check mirrors for proper angle of view, damage and cleanliness; clean if dirty and replace if damaged. Check the windshield for cleanliness; clean if dirty.	11-69
● Heater defroster	Operate the car heater to check the condition of hot-air discharge from the defroster. This check should be carefully performed especially in rainy weather.	9-8
● Seat belt	Fasten the seat belt to check for proper operation of the buckle. Also check the belt for damage.	6-5
● Door lock	Check door locks for proper operation.	5-1
● Cab tilt lock mechanism	Check the condition and operation of the cab tilt lock mechanism.	11-21

https://truckmanualshub.com/

EGR SYSTEM OPERATION

⚠ WARNING

- **Do not carelessly touch the EGR system components (EGR valves, EGR adapter, EGR piping, EGR cooler, coolant piping, etc.) when the engine is hot, such as during operation and immediately after driving. These components are hot and touching them could cause burns, therefore touching them is very dangerous.**

⚠ CAUTION

- **Do not rest your feet, etc., on the EGR system components. Doing so could damage the EGR system components.**

- Overheating of the engine could damage the EGR system components, so have them inspected and serviced by the nearest authorized UD Trucks dealer.

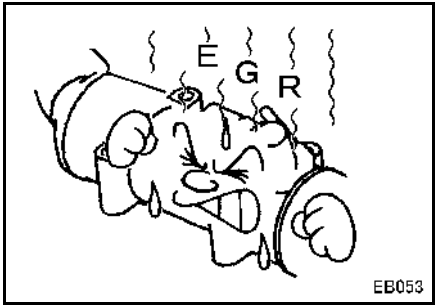

When a certain amount of soot accumulates in the aftertreatment DPF, the DPF automatically goes into the regeneration mode to burn the collected soot. To obtain the expected DPF performance, please observe the following precautions. The frequency of the occurrence of the aftertreatment DPF regeneration mode differs according to how you drive the vehicle.

UD TRUCKS, US2010 EMISSIONS SOLUTION

The exhaust aftertreatment system virtually eliminates exhaust smoke. White exhaust vapor (water condensation) may be visible during a cold start. If black exhaust smoke visible during engine operation, this indicates a problem with the exhaust aftertreatment system. Take the vehicle to an authorized UD Trucks dealer immediately.

Vehicles equipped with a 2010 emission compliant engine have an exhaust aftertreatment system which includes an aftertreatment Selective Catalytic Reduction (SCR) system and a Catalyzed aftertreatment Diesel Particulate Filter (DPF). The Aftertreatment DPF takes the place of the standard muffler, and it reduces soot and particulate emissions into the atmosphere.

Soot and other particulate matter are collected by a filter where it is eventually oxidized.

Vehicles equipped with an aftertreatment DPF require the use of UDXtra (or VDS-4) specification high perfor-

https://truckmanualshub.com/

mance diesel engine oil and Ultra Low Sulfur Diesel (ULSD) fuel.

HANDLING OF THE EXHAUST EMISSION CONTROL SYSTEM

- The exhaust emission control system reduces PM (Particulate Matter) and NOx by collecting PM through the filter that is installed in the PM reduction device and by dissolving NOx into water and nitrogen using the aftertreatment SCR system.
- When a certain amount of soot accumulates in the DPF, the DPF system automatically switches into the cleaning mode to burn (regenerate) the collected soot. The frequency of the occurrence of the aftertreatment DPF regeneration differs according to the manner in which the vehicle is driven.
- The aftertreatment SCR system reduces NOx by adding a mixture of air and diesel exhaust fluid (DEF) in the exhaust muffler to make NOx that is included in exhaust gas and is dissolved into water and nitrogen.
- The following must be observed to prevent malfunctioning of this system.

https://truckmanualshub.com/

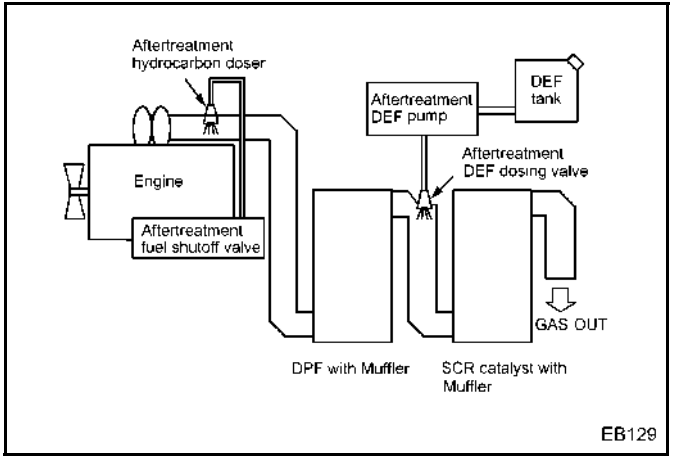

Precautions on handling the DPF

When a certain amount of soot that is included in the exhaust gas accumulates in the aftertreatment DPF, the DPF automatically burns (regenerates) the collected soot.
This prevents the excessive accumulation of soot and keeps the cleaning function of the DPF in good condition.

The DPF automatically burns (regenerates) the collected soot.

⚠ WARNING

- **Immediately after the vehicle is stopped or while the system is in the regeneration, the area around the muffler and exhaust gas are extremely hot. Do not stop the vehicle in a location where there are flammable materials such as dried grass or paper waste.**

https://truckmanualshub.com/

- **If there are flammable materials around the vehicle, a fire may occur. This could cause burns from the heated exhaust gas.**

NOTE:

- **Depending on the driving conditions, the burning (DPF regeneration) of the soot collected in the DPF may not be completed. When both the DPF clogging warning light and the indicator light that is built in the manual forced regeneration switch blink, press the exhaust gas cleaning device switch to manually clean the soot.**
- **While operating the aftertreatment DPF, the engine speed at idle may increase under the following conditions. This is due to a temperature increase of the exhaust gas in order to burn (regenerate) the collected soot. This does not indicate a malfunction.**

  ・The engine exhaust gas temperature is low for a long period of time. (For example, the engine idles too long.)

  If a gear is engaged to drive the vehicle, the operation of the device will stop. However, if the processing time is not sufficient to satisfy a specified duration, the operation of the device will resume after stopping the vehicle.

  ・The cleaning mode automatically turns on while driving.

When the DPF clogging warning light blinks, perform the DPF regeneration manually.

When both the DPF clogging warning light that is located in the combination meter and the indicator light that is built in the manual forced regeneration switch blink, immediately perform manual cleaning of the aftertreatment DPF to burn (regenerate) the soot that has collected.

⚠ WARNING

- **Do not perform manual cleaning in a location with poor ventilation. Exhaust gas may cause carbon monoxide poisoning especially in an enclosed location, such as in a garage, indoors, etc.**
- **Do not perform manual cleaning in a location where there are flammable materials such as dried grass or paper waste. The temperature of the exhaust gas and the area around the exhaust pipe and muffler become high during cleaning. Therefore, if there are flammable materials nearby, a fire may occur.**

  In addition, never allow your body to contact exhaust gas and the area around the exhaust pipe and muffler. Doing so may cause burn injuries.

  If the vehicle is stopped over a road surface that is painted, the road surface may be discolored.

https://truckmanualshub.com/

⚠ CAUTION

- **If driving is continued, clogging in the DPF or a system malfunction may occur.**

NOTE:

- **The engine speed increases while performing manual DPF regeneration. This is due to a temperature increase of the exhaust gas in order to burn (regenerate) the collected soot. This does not indicate a malfunction.**
- **While performing manual aftertreatment DPF regeneration, the aftertreatment hydrocarbon doser system supports the manual DPF regeneration by injecting fuel in the exhaust pipe.**

Handling of the aftertreatment diesel exhaust fluid (DEF) dosing system

The DEF dosing system (DEF pump, DEF dosing valve) continues to operate for approximately 120 seconds after the ignition key is turned to OFF position. Therefore, wait for at least 120 seconds before disconnecting the battery cable or electrical system connectors when servicing the vehicle, etc.

Handling of the muffler

- The muffler that is equipped with the aftertreatment DPF for the PM reduction device needs to be cleaned regularly to maintain its performance (either 155,000 miles [250,000 km] or 4,500 hours, whichever comes first). This is because unburnable ash that is different from burnable soot will accumulate in the DPF.
  For details about cleaning of the muffler equipped with the DPF, contact your nearest authorized UD dealer.
- For the muffler that is equipped with the SCR catalyst system, no inspections and maintenance are basically required.
- If they must be replaced by necessity because they are damaged, use UD Trucks genuine parts.

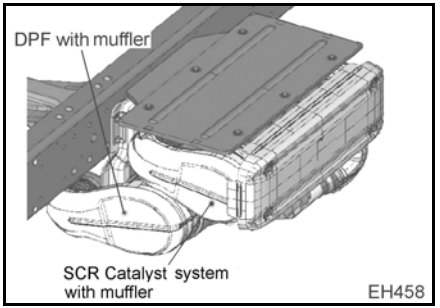

https://truckmanualshub.com/

Do not touch the water that comes from the muffler.

⚠ WARNING

- **Do not touch the water that comes from the muffler. The action of the oxidizing catalyst contained in the catalyst integrated muffler makes the water slightly acidic. If it gets on the skin, etc., flush well with water to wash it off.**

Do not kick or strike the muffler.

⚠ CAUTION

- **The muffler contains a catalyst, so do not kick or strike the muffler. Doing so could damage the catalyst inside.**

The muffler has the following characteristics.

NOTE:

- **The aftertreatment system cleans and discharges the exhaust gas, so the exhaust gas smells differently than that of conventional diesel vehicles.**
- **Some white smoke might come from the exhaust pipe when the engine is started, but this is just steam and is not a problem.**
- **White smoke may be emitted from the area around the muffler during the soot burning (DPF regeneration) process. This is due to the emission of water vapor from the area around the muffler, and it does not indicate a malfunction.**
- **When manual DPF regeneration is performed while driving in rain or after washing the vehicle, water vapor may be observed around the muffler. This does not indicate a malfunction.**

Do not modify the tailpipe.

⚠ CAUTION

- **Changing the orientation or length of the tailpipe could degrade the exhaust gas cleaning effect, so do not modify the tailpipe. When the construction of the body requires that the tailpipe be modified, contact the nearest authorized UD Trucks dealer for advice.**

https://truckmanualshub.com/

Handling of the diesel exhaust fluid (DEF)

Fill the tank with the specified amount of DEF.

Only add DEF to the DEF tank that is specified by UD Trucks and meets the ISO22241-1 specification.

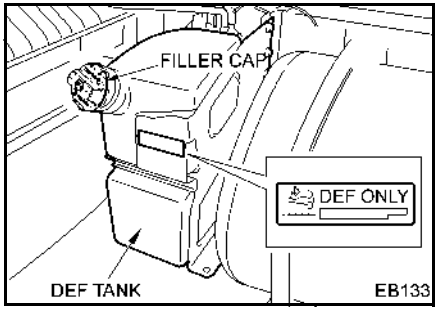

5.3 gal (20 liter) tank

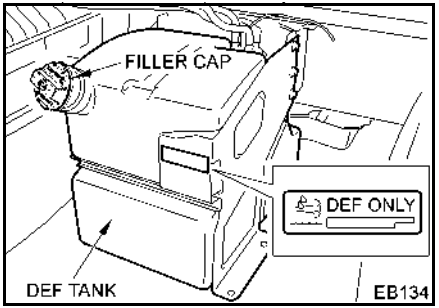

13.2 gal (50 liter) tank

⚠ CAUTION

- **If something other than the specified substance (diesel, kerosene, etc.) is mistakenly added to the DEF tank, it could cause a fire, so have it inspected and serviced by the nearest authorized UD Trucks dealer.**
- **Do not drive the vehicle when the DEF tank is empty. This will not only worsen exhaust gas emissions but will prevent the engine from being started again. Always fill the tank ahead of time to leave plenty of leeway for driving.**

NOTE:

- **Spilled DEF should been cleaned up in accordance with local regulation.**

Only use DEF that satisfies the ISO22241-1 specification.

- Only use DEF specified by UD Trucks that satisfies the ISO22241-1 specification.
- The specified DEF is colorless and odorless (urea 32.5%, water 67.5%) and begins to freeze at 12.2°F (–11°C). When the ambient air temperature (AAT) is low and the vehicle has been exposed to cold temperatures for a long time, the indicator in the cab might not show the correct DEF level.

https://truckmanualshub.com/

Precautions for handling of the DEF

<Handling Precautions>

- Handle in accordance with good industrial hygiene and safety practices.
- Only use DEF specified by UD Trucks that satisfies the ISO22241-1 specification.
- Use the UD Trucks genuine part 5.3 qt (5 liter) portable tank or a special container recommended by the DEF dealer to hold the DEF. General containers, containers that have been used for other applications, and dirty containers will not maintain the quality of the DEF, so absolutely do not use them.

<Temporary Measures>

DEF is a very safe liquid, but it might cause a very slight irritation for some people. If it is spilled on the body, wash it off with water, and if it is drunk mistakenly, drink 1 or 2 cups of milk. if milk is not available, drink water. In all case, consult physician.

<When Fires or Leaks Occur>

- DEF is nonflammable, but quickly move it to a safe location if there is a fire.
- If DEF is spilled, wash it away with water. It can be disposed of without a problem by first diluting it with a large amount of water and then pouring it into the sewage system. It must be treated as industrial waste in areas with nitrogen restrictions.

<Storage Method>

Seal the container and store it in a covered area with good ventilation. Even if it freezes, there will be no change in its quality after it thaws, so it can be used as is.
There are no problems with deterioration, etc., of DEF as long as it does not lose water due to evaporation, etc., so as long as the container is sealed, there is no particular concern about an expiration date.

Fuel for the vehicle equipped with the aftertreatment DPF

Do not use any fuel other than the specified fuel.

⚠ CAUTION

- **Use ultra low sulfur diesel (ULSD) fuel only. Use of any other fuel may adversely affect the engine, exhaust gas cleaning device, etc., resulting in aftertreatment DPF clogging and so on.**
  Refer to "Fuel requirements" on page 11-38.

https://truckmanualshub.com/

Engine oil for the vehicle equipped with the aftertreatment DPF

Do not use any engine oil other than the recommended oil.

CAUTION
● To obtain the expected maintenance life of the aftertreatment DPF, it is necessary to use the recommended engine oil. Refer to "Engine oil recommendations" on page 11-31.

https://truckmanualshub.com/

DPF Regeneration system

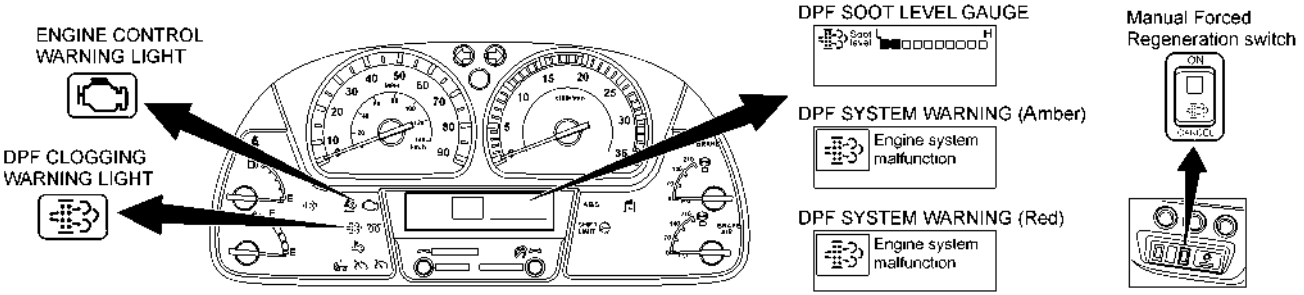

Various indicators show information about soot deposit accumulation in the DPF.

Soot deposit accumulation

Control status	Level 0									Level 1	Level 2	Level 3
Soot level gauge [Point]	0	1	2	3	4	5	6	7	8	9	10	
Regeneration request and fault indicator											(Amber)	(Red)
Manual regeneration by Switch	Not necessary						Enable			Imperative	Disable	
Engine Torque limit	Deactive									Active		
Engine Shutdown	Deactive											Active

EC634

https://truckmanualshub.com/

The status of DPF soot accumulation: Level 0

When the Level 0 indication is shown, the manual DPF regeneration is not required. However, the optional manual DPF regeneration is available.

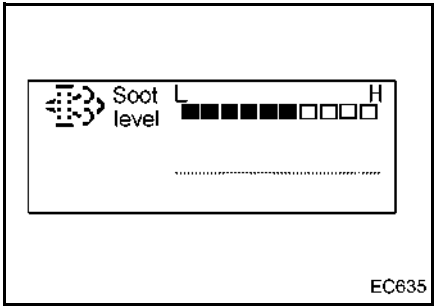

NOTE:

- **Press the mode select switch (located on the left side knob in the combination meter) to check the DPF soot accumulation level that will be shown with the DPF soot level gauge.**
- **The DPF clogging warning light may blink when soot does not accumulate in the DPF. This may occur in order to maintain the performance of the muffler.**

The status of DPF soot accumulation: Level 1

When the DPF clogging warning light blinks, immediately perform the manual DPF regeneration (before the driving distance reaches 125 miles [200 km]).

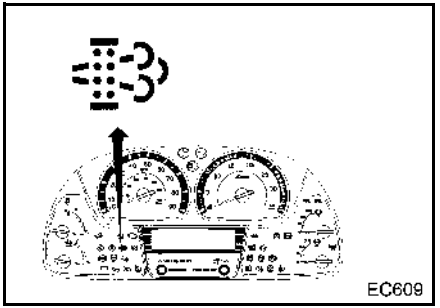

Operation procedure

1. Stop the vehicle at a safe place, apply the parking brake firmly and put the shift lever in the N (neutral) position. For automatic transmission with the P (Park) position, put the selector lever into the P (Park) position.

⚠ WARNING

- **Make sure that there are no flammable materials around or under the exhaust system components.**

2. Turn the power takeoff (PTO) switch off if the vehicle is equipped with a PTO.
3. Keep the engine running.
4. Press the manual forced regeneration switch to activate the after-treatment DPF regeneration.
   DPF regenerating warning and message are displayed.
   Idling speed will increase and the exhaust brake will be activated.

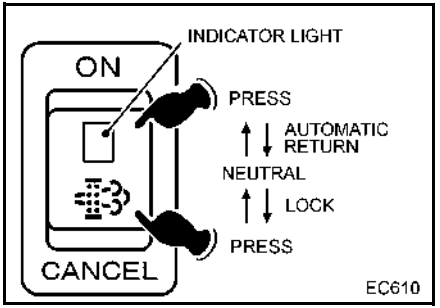

https://truckmanualshub.com/

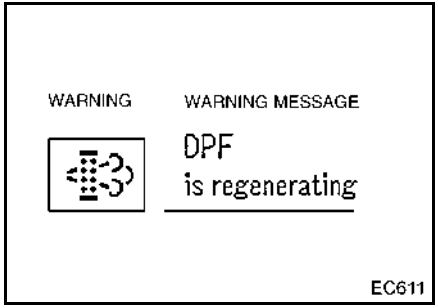

5. Wait approximately 25 minutes. (when it is operated after the engine has already warmed up.)
   When the DPF regenerating warning is no longer displayed on the multi-display monitor, regeneration is completed.

⚠ CAUTION

- **Do not continue driving the vehicle while at level 1. The system restricts engine torque and reduces engine output, depending on the amount of soot accumulation.**

NOTE:

- **Place the manual forced regeneration switch to the "CANCEL" side to deactivate the cleaning operation.**
- **If the vehicle is driven before the cleaning is completed, the DPF clogging warning light will blink again.**

The status of DPF soot accumulation: Level 2

When the engine control warning light and the DPF system warning (Amber) and message are indicated, the system restricts engine torque and reduces engine output.
Immediately contact your nearest UD Trucks dealer for inspection.

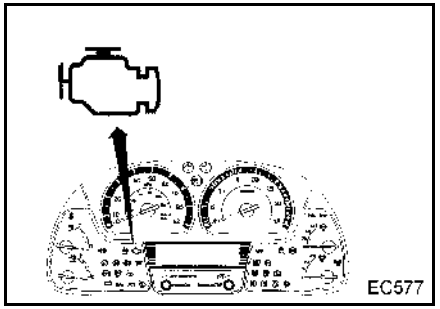

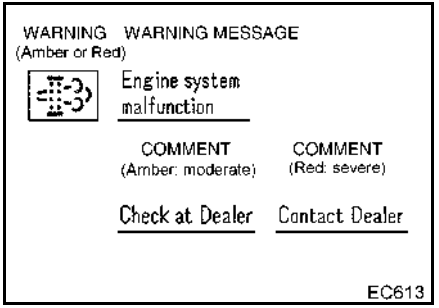

⚠ CAUTION

- **The DPF may be damaged if the vehicle is continuously driven while at level 2. Immediately contact your nearest UD Trucks dealer for inspection.**

The status of DPF soot accumulation: Level 3

If the DPF system warning (Red) is illuminated, the system will reduce torque to a specified value within approximately 10 seconds and a buzzer will sound. In this case, the acceleration pedal cannot be oper-

https://truckmanualshub.com/

ated and the engine is forced to run at the idling speed.
Vehicle speed is gradually decreased to protect the engine, which will be shut down (automatically stopped) when the vehicle is stopping or completely stops.
Contact your nearest UD trucks dealer immediately.

⚠ CAUTION

- **When the DPF system warning (red) appears, immediately stop the vehicle in a safe location and contact your nearest UD trucks dealer.**

Handling of the diesel particulate filter (DPF)

The following phenomena does not indicate trouble.

The idle speed varies and the exhaust brake operates the same time.

- When the vehicle is stopped for a traffic signal or other reason the engine shifts to idle running. (Automatic DPF regeneration is in progress.)
- When the engine is idled continuously for a long time. (The idle speed increases from time to time to prevent the emission of white smoke.)

White smoke may sometimes be emitted.

- White smoke may be emitted from the end of the exhaust muffler.
  - ・This is due to the emission of water vapor.
  - ・This will not occur when the engine exhaust gas temperature increases to a sufficient level.
- White smoke may be emitted from the surface of the exhaust muffler if the aftertreatment DPF regeneration is operated manually in the rain.
  - ・This is due to the fact that water adhering on the surface of the exhaust muffler evaporates.
- If any fuels other than the specified one are used, the emission of white smoke may continue.
  Always use ultra-low sulfur diesel (ULSD) fuel (S15) because any other fuel may adversely affect or damage the engine and the DPF.

The exhaust gas odor will not be same as that of previous diesel vehicles.

- The odor is different because the exhaust gas is passed through a catalytic converter and cleaned.

Regularly clean the aftertreatment diesel particulate filter (DPF)

- The DPF should be cleaned every 155,000 miles (250,000 km) or 4,500 hours, which occurs first as

https://truckmanualshub.com/

necessary to ensure proper performance.

- If the DPF Maintenance warning is illuminated, the vehicle should be taken to the nearest UD Trucks dealer as soon as possible.

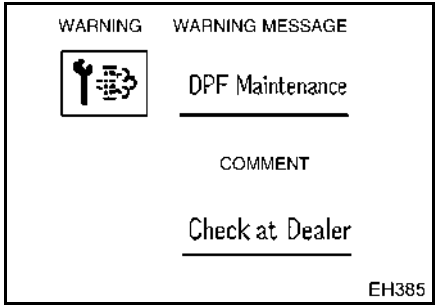

Use ultra-low sulfur diesel (ULSD) fuel only

- Failure to use ultra-low sulfur diesel fuel in this vehicle may damage the emission related parts, violate the EPA and CARB regulations and possibly void the UD Trucks vehicle warranty as listed in the Warranty & Service Booklet.

Always use genuine engine oil.

- Always use the specified engine oil to maintain the performance of the DPF.

VEHICLE LABELS

Products safety labels are affixed to your UD Trucks vehicle at the factory.

Labels with DANGER, WARNING or CAUTION are related to safety. You must follow the precautions in these labels. In addition, you must replace any labels that have been removed or are damaged. Contact your authorized UD Trucks dealer or UD Trucks North America, Inc. for replacement labels.

https://truckmanualshub.com/

ENTERING AND LEAVING THE CAB

⚠ WARNING

- **Be careful when entering or leaving cab so you don't slip or fall.**
- **Always keep your shoe soles and hands clean. Keep the cab steps and handles clean and free of ice, snow, oil, grease and/or debris. Use extra care in bad weather.**
- **Use 3 POINT CONTACT at all times with at least 2 feet and 1 hand or 2 hands and 1 foot firmly placed during all phases of entering or leaving the cab.**

Driver's side

1. Open door and firmly grasp the rear handle behind the door opening with your right hand.

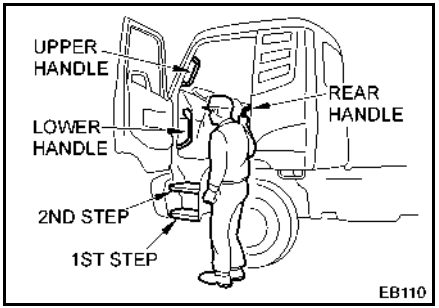

2. Firmly grasp either the lower or upper handle on the front of the door opening with your left hand and place your left foot on the 1st step.

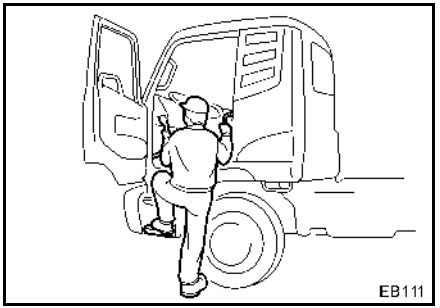

3. Bring your right foot up to the 2nd step.

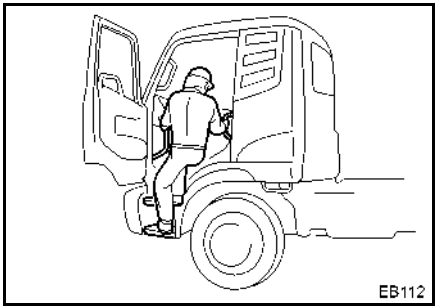

https://truckmanualshub.com/

4. Bring your left foot up to the 2nd step next to your right foot.
   If you grasped the lower handle with your left hand then move your left hand to the upper handle.

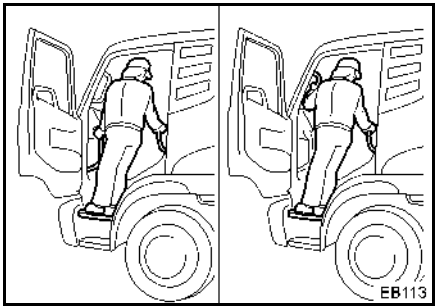

5. Step to the cab floor with your left foot.

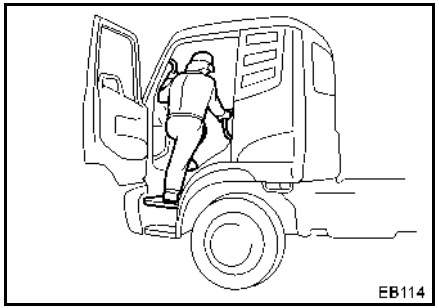

6. Bring your right foot to the cab floor.
7. Position yourself in the driver's seat and release your left hand from the front upper handle.

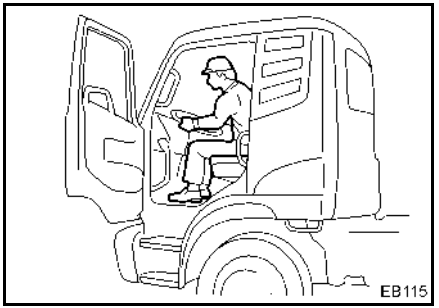

8. Close door.
9. To leave the cab, open the door and reverse the procedure for entering the cab, using both hands on the handles.
10. For passenger side, use opposite hand and foot positions.

https://truckmanualshub.com/

DOORS AND WINDOWS

⚠ WARNING

- **Before starting to drive, be sure cab doors are securely closed and locked.**
- **Before opening cab door, look for bystanders and approaching vehicles.**

Using seat belts and keeping the doors closed and locked provides greater safety in the event of an accident. It will also help keep children and other from unintentionally opening the doors and will help keep out intruders.

NOTE:

- **Lock the door from the inside by pushing the door lock knob in. To lock the door from the outside, use the ignition key or push the inside lock knob in and close the door while pushing in the outside handle push button. You may want to consider carrying a duplicate ignition key in your billfold in the event you lock your ignition key in the cab.**

DOOR

Operation from outside of vehicle

Opening door

When opening the door from the outside, pull the outside handle while pressing the push button.

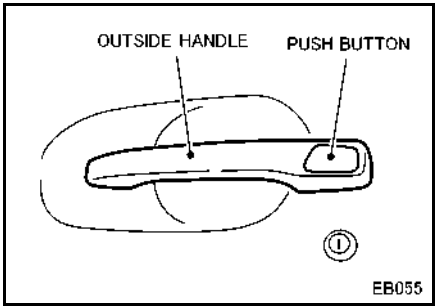

Locking and unlocking

<Power door lock >

The power door lock system allows you to lock or unlock all doors simultaneously.

Turning the driver side door key will lock or unlock both doors.

https://truckmanualshub.com/

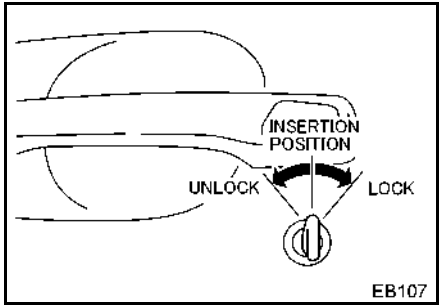

Operation from inside of vehicle

Opening door

When opening the door from the inside, pull the inside handle toward you while pushing the door outward

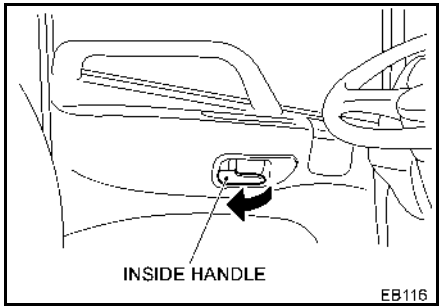

Locking and unlocking

The power door lock system allows you to lock or unlock all doors simultaneously.

Pushing the driver side lock knob will lock both doors. Pulling the lock knob will unlock both doors.

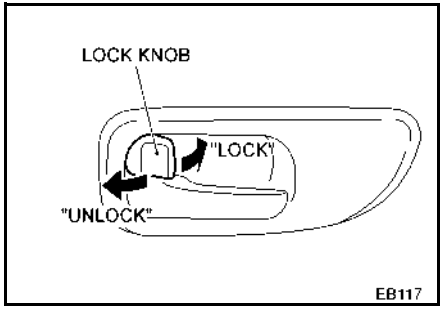

KEYLESS ENTRY SYSTEM

The keyless entry system enables you to lock/unlock all doors away from the vehicle (approximately 3.3 to 9.9 ft [1 to 3 m]) using the remote control.

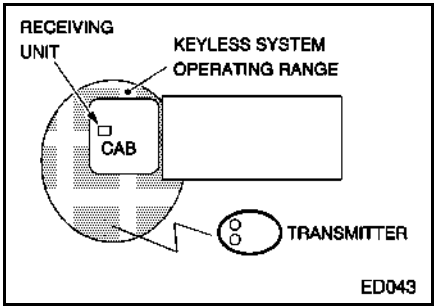

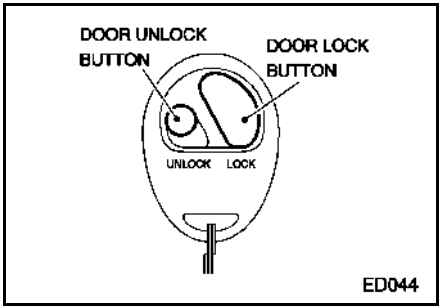

https://truckmanualshub.com/

NOTE:

- **As many as 4 remote controls can be used. Contact an authorized UD Trucks dealer for purchasing or how to start using additional remote controls.**

How to use remote control

Door lock button (LOCK):

All doors will be locked by pushing the button, and the hazard lights will blink once.

After locking the doors using the remote control, operate the door handle to confirm the door has been securely locked.

Door unlock button (UNLOCK):

All doors will be unlocked by pushing the button, and the hazard lights will blink twice. All doors will be locked automatically unless any door is opened within approximately 30 seconds after pressing the UNLOCK button.

The remote control will not function under the following conditions.

- Any door is not completely closed.
- The remote control is too far away from the vehicle.
- The battery of the remote control is completely discharged.
- The ignition key is in the ON or ACC position.

NOTE:

- **The operating range of the remote control depends upon the conditions around the vehicle. Make sure that the remote control is within 9.9 ft (3 m) from the door to make it surely function.**
- **Though the remote control is waterproof, it can be damaged when it gets wet. If the remote control gets wet, immediately wipe it off.**
  Contact an authorized UD Trucks dealer if the remote control was washed in a washing machine or if it was soaked in water for a long time.
- **Do not drop or strike the remote control.**
- **Do not leave the remote control for a long time in a hot area.**
- **In case the remote control does not function when pushing a button, the battery may be discharged. Contact an authorized UD Trucks dealer for battery replacement. (The battery used is a CR1620 lithium battery.)**

https://truckmanualshub.com/

DOOR WINDOW (POWER WINDOW)

Open/Close switch

This switch is used to open and close the door windows on the driver and passenger's side. It can be operated when the ignition key switch is in the ON position.

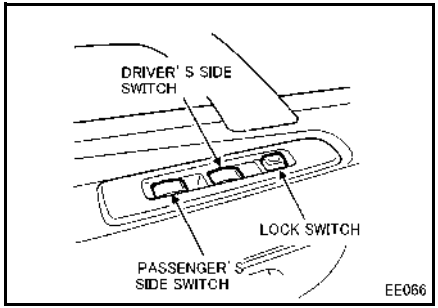

Driver's side

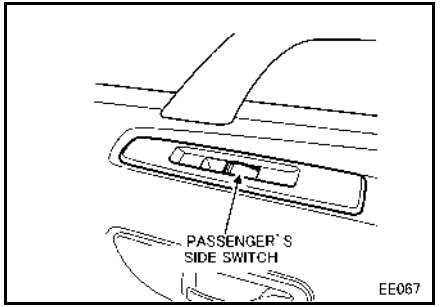

Passenger's side

⚠ WARNING

- **When closing the windows, make sure that no one has their head or hands extended outside the window before operating the switch. Not doing so could result in someone being pinched and injured by the windows.**
- **Do not leave children alone in the vehicle. If children must be left in the vehicle, be sure to remove the ignition key.**
- **When children are riding in the vehicle, for safety reasons, use the power window lock switch to lock the windows.**

<Opening and closing the driver's side>

The driver's side door window switch is used to open or close the window manually when pushed or pulled.
The window stops in its current position when the switch is released.

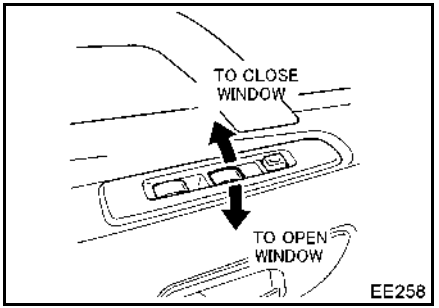

https://truckmanualshub.com/

<Opening and closing the passenger's side>

A passenger's side door window switch is provided in both the driver and passenger's side doors. The window moves while the switch is being pushed and stops when it is released.

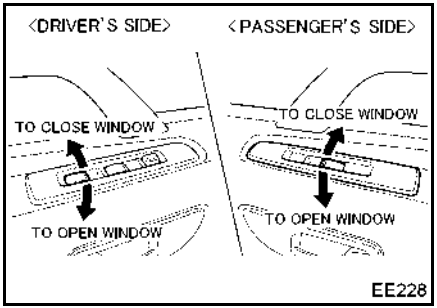

Window lock switch

When this switch is pushed, the passenger's side door window cannot be opened or closed even when the open/close switch is operated. To open or close the window, release the window lock.

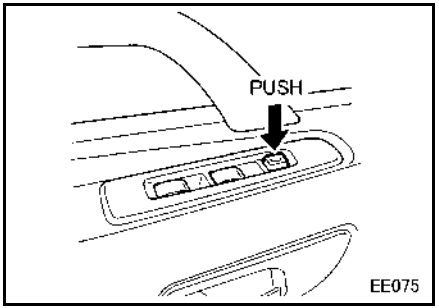

https://truckmanualshub.com/

DRIVING POSITION

⚠ WARNING

- **To prevent loss of vehicle control, never adjust the driver's seat while driving.**

SEATS

Fore and aft adjustment

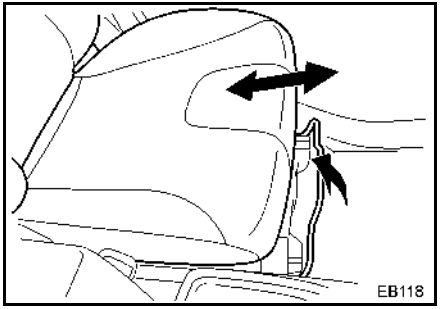

The driver's seat can be adjusted forward and backward by pulling up on the slide lever located on the front of the seat base and sliding the seat to the desired position. Lock the seat in place by releasing the lever. To assure that the seat is properly locked in place, attempt to slide the seat fore and aft with the slide lever released.

Front seat base adjustment

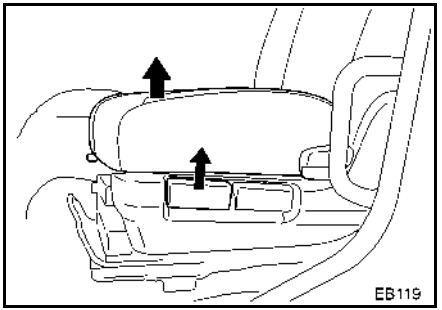

The front of the driver's seat can be raised by pulling up the lever at the left side of the seat base.
To lower the seat downward, pull the lever and push down on the seat.

Rear seat base adjustment

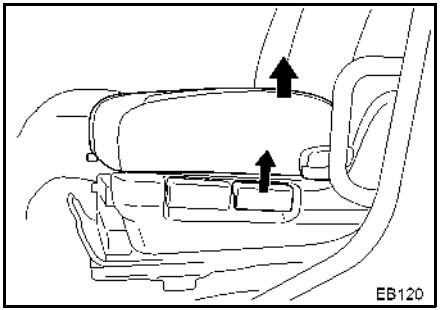

https://truckmanualshub.com/

The rear of the driver's seat can be raised by pulling up the lever at the left side of the seat base.
To lower the seat downward, pull the lever and push down on the seat.

Lumbar support adjustment

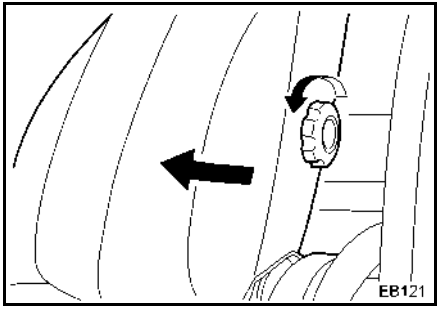

Turn the knob on the outside of the seat toward the front so that the center portion of the seatback will come out slightly to support the lumbar portion of the body. This may be useful in reducing fatigue during long distance driving. The support is adjustable continuously within the adjusting range.

Riding comfort adjustment

<Up-down air suspension>

This improves riding comfort by automatically adjusting the up-down movements of the vehicle body.

<Seat with fore-aft suspension>

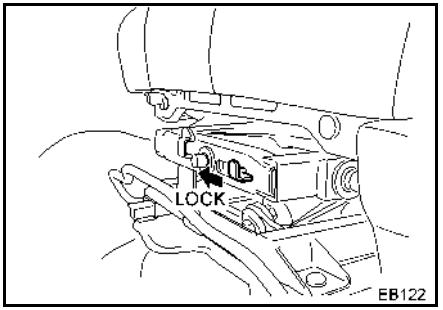

- Riding comfort in the fore-and-aft direction is automatically adjusted.
- Operate the lever on the front side of the seat to lock the fore-aft suspension of the seat.

Reclining adjustment

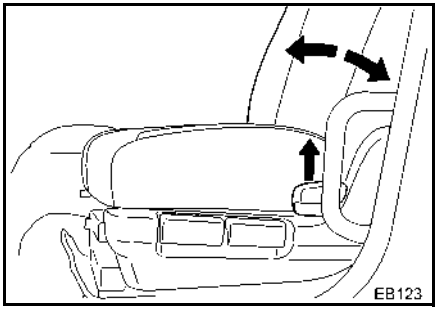

Driver's seat

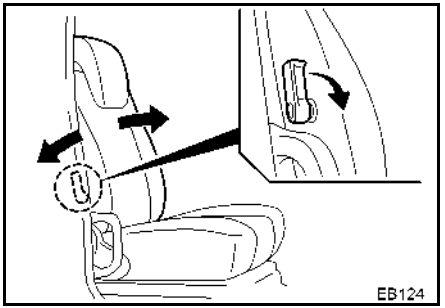

Passenger seat

To tilt the seatback rearward, pull up the lever located on the left side of the driver's seat base (right side for passenger seat) and apply a slight

https://truckmanualshub.com/

force to the seatback. To return the seatback to the upright position lift up the lever while leaning forward.

⚠ WARNING

- **Seat belts are less effective with the seatback reclined. To reduce the risk of sliding under the seat belt during an accident or sudden stop, do not recline the seatback any more than necessary for comfort.**

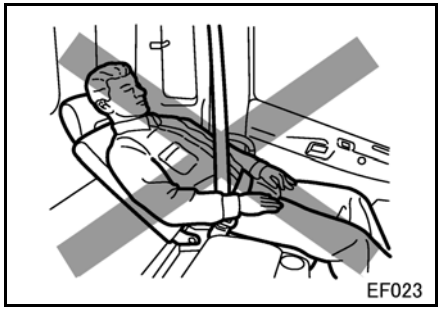

Forward and backward adjustment of cushion

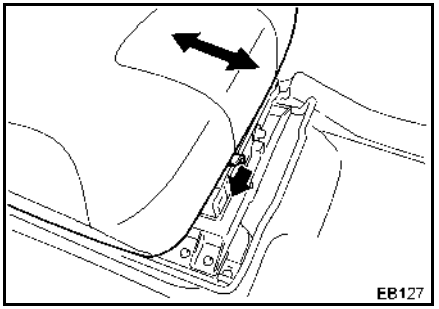

Adjust the cushion to the desired position while pushing the lever to the right. It is possible to adjust in two stages in the forward direction from the standard position.

Headrest adjustment (Passenger seat)

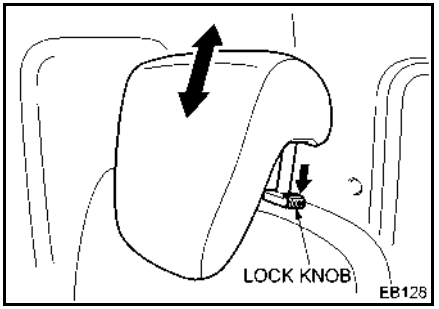

The height of the headrest can be adjusted manually. Adjust the headrest height while pressing the lock knob.

https://truckmanualshub.com/

To make fully flat / lift up the seat cushion

- In addition to being used as a regular assistant seat, the seatback can be folded forward (made fully flat) to form part of the bed. The seat cushion can also be lifted up to form a work space for changing clothes, etc., or space for storage.

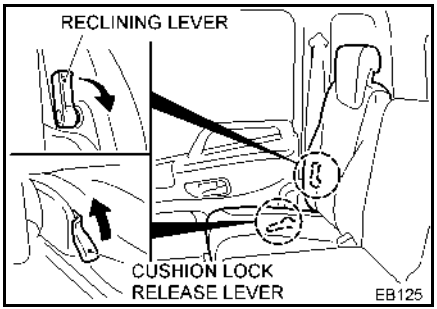

- To lift up the seat cushion, hold the front edge of the cushion and raise it until the lock engages.
- To release the cushion to lower it, pull up the cushion lock release lever to release the lock and then support the cushion by the front edge while lowering it. There is no lock to keep the cushion in the down position.
- The cushion is locked when the seatback is folded forward. Pull the reclining lever and lift up the seatback. Trying to forcefully pull up the seatback could result in an injury or it could damage the seat.

⚠ CAUTION

- **Make sure that the seat cushion is locked in place when it is raised. It is dangerous if the cushion is not locked when raised because it could fall down. This could also damage the seat.**
- **Do not use it as a seat when the seat cushion is raised. Doing so could result in an injury or it could damage the seat.**
- **Do not rest on or put your weight on the headrest or head of the seatback when the seatback is folded forward. Doing so could result in an injury or it could damage the seat.**
- **When lowering the seat cover with items placed in the space made by lifting the seat cover, carefully lower the seat to make sure that it does not strike any of the stored items.**

https://truckmanualshub.com/

SEAT BELTS

⚠ WARNING

- **Seat belts should be worn at all times. Before fastening a front seat belt, always adjust the driver's seat to the position in which you will drive. Seat belts should be worn across the hips and adjusted snugly. Never adjust a seat belt across the abdomen.**
- **Never attempt to fasten seat belts while the vehicle is in motion.**
- **Never let a passenger hold a child on his or her lap while the vehicle is moving.**
  The passenger cannot protect the child from injury in a collision. Children should be seated in appropriate child restraints.
- **Do not wear a twisted or loose belt.**
- **Never use the same belt for more than one person.**
- **Replace damaged or inoperative belts.**
- **Replace belts which were in use during an accident unless the accident was minor.**
- **Do not modify the seat belts.**

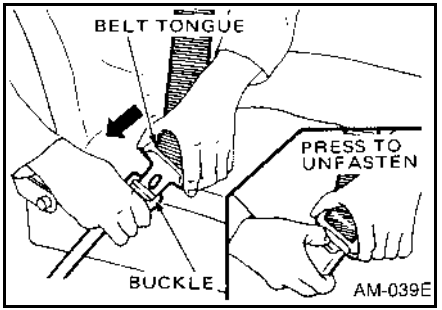

To fasten the belt, position the seat and fit the seat belt snugly without twisting. Insert the open end of the tongue into the buckle until it snaps and engages.
To unfasten the seat belt, push the release button and disengage the belt tongue from the buckle.

<Driver and passenger seat belts>
The driver and passenger seat belts are equipped with an ELR (Emergency Locking Retractor). These belts are flexible under normal conditions; however, they automatically lock in an emergency. Belt length adjustment is not necessary.

NOTE:
- **Slowly pull out the seat belt. If pulled abruptly, it may lock.**
- **Slowly rewind the belt while holding the tongue.**

If the driver tries to drive without wearing the seat belt, the warning light will illuminate to warn the driver. If the tongue of the driver's side seat belt is not completely locked into the buckle, the warning light will illuminate when the ignition switch is turned to ON or START.

https://truckmanualshub.com/

Seat belt warning light

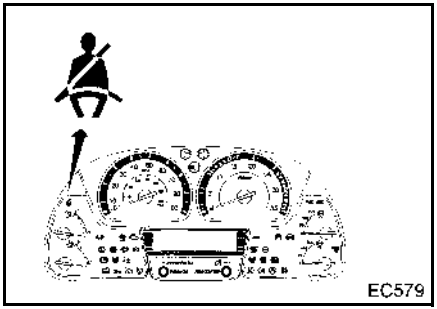

<Center seat belt (Optional)>

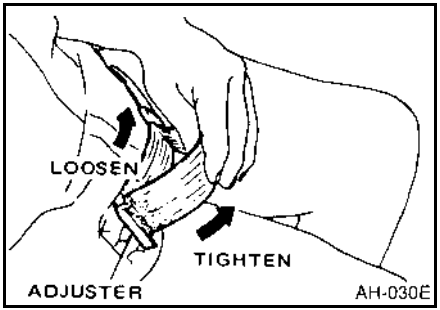

To tighten the seat belt, pull the loose end toward the belt anchorage until it fits snugly.

To loosen the seat belt, raise the front end of the adjuster and pull the belt.

NOTE:

- **When the seat belt is not in use, insert the tongue into the buckle.**

<Important child restraint precautions>

- U.S. law requires you to use safety restraints for children who are riding in this vehicle. Many states require that children use a child restraint system that complies with the Federal Motor Vehicle Safety Standards. Check your local and state laws for specific requirements regarding the safety of children in your vehicle.
- Choose a child restraint system that complies with federal standards and fits your vehicle. Install and use it in accordance with the manufacturer's instructions.
- Children who are too large for child restraint systems should be seated and restrained by the seat belts provided.

<Pregnant woman restraint>

- Pregnant women should check with their doctors before using seat belts. In you are in an accident and wearing a seat belt, significant pressure can be exerted on the abdominal area.
- Pregnant woman should place the lap belt as low as possible, over the hips and not over the waist.

https://truckmanualshub.com/

Seat belt maintenance

1. Clean the seat belt webbing only with mild soap or detergent. Avoid direct sunlight when wiping and drying the webbing.
2. Do not bleach or dye the seat belts that may significantly weaken the webbing.
3. Periodically check the seat belts, metal parts, buckles, tongues and anchors for damage and proper function. Replace the belt assembly if damaged or not functional.

⚠ WARNING

- **If foreign material gets into the buckle or it becomes dirty, the seat belt might not fasten or unfasten smoothly.**
  Protect the buckles from foreign material or dirt.

STEERING WHEEL

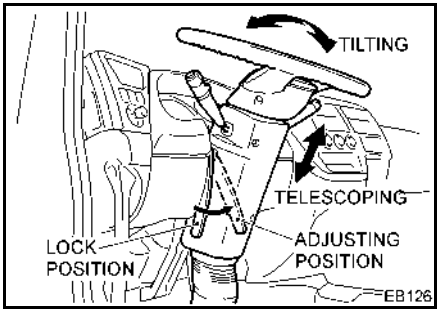

The steering wheel telescopes 2.95 inches (75 mm) and tilt angle 9.5°. Position the driver's seat before adjusting the steering wheel. Loosen the lock lever and adjust the steering wheel to the desired position. After adjustment, securely tighten the lock lever.

⚠ WARNING

To prevent loss of vehicle control, Do not adjust steering wheel while driving. Tighten lock lever securely after adjustment.

https://truckmanualshub.com/

INSTRUMENTS AND CONTROLS

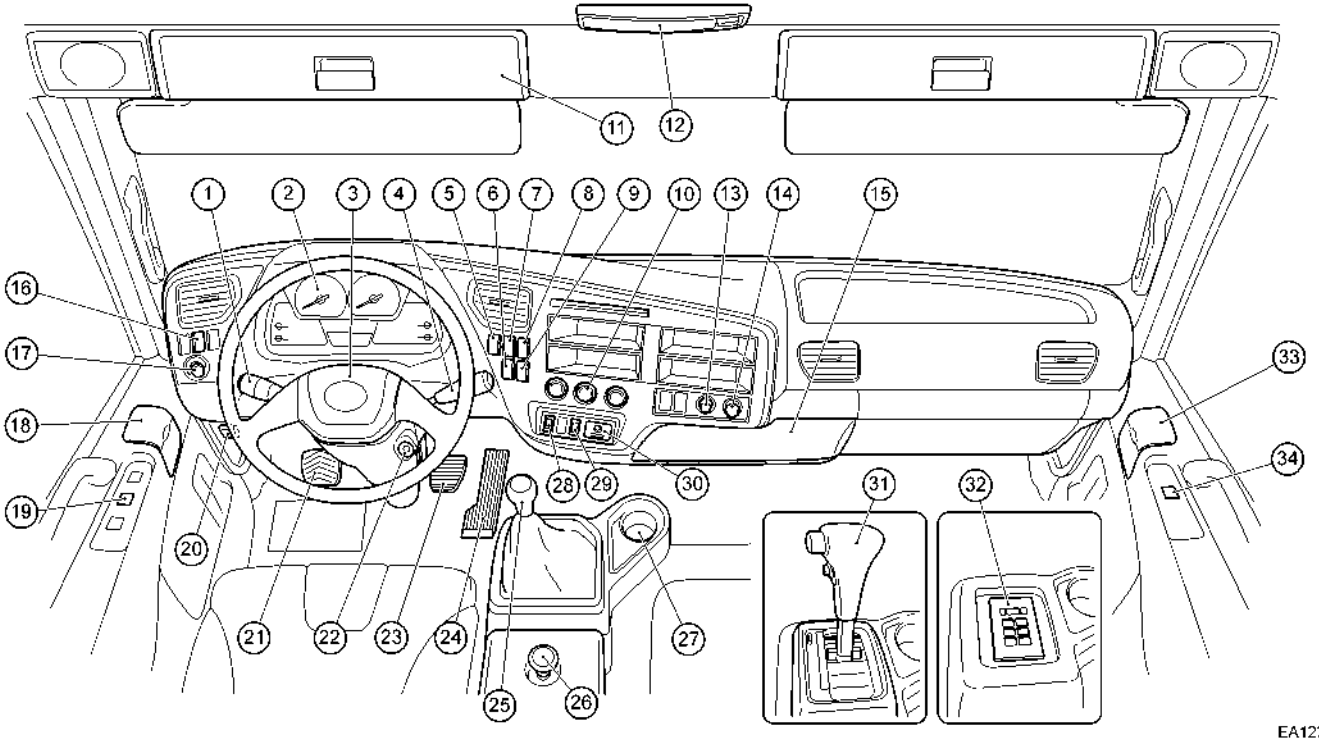

https://truckmanualshub.com/

1. Lighting, Dimmer, Passing, Turn signal, Accelerate and resume switch, Set and coast button
2. Combination meter with multi-display function
3. Horn
4. Windshield wiper, Washer, Hazard warning flasher and Exhaust brake switch
5. Multi-display select switch
6. Air suspension dump switch (UD2600 and UD3300 equipped with air suspension)
7. Power mode switch (Allison 1000, 2000 and 2500 series)
8. Cruise Control main switch
9. Mirror heater switch (Optional)
10. Heater or Air conditioner control
11. Overhead box
12. Room light
13. Cigarette lighter
14. Power socket
15. Fuse lid
16. Transmission PTO switch (Optional)
17. Engine throttle control knob
18. Ashtray
19. Power window switch
20. Front lid knob
21. Clutch pedal
22. Ignition key switch
23. Brake pedal
24. Accelerator pedal
25. Transmission gear shift lever
26. Parking brake valve
27. Cup holder
28. Engine warm-up switch
29. Manual forced regeneration switch
30. Power mirror switch (Optional)
31. Automatic transmission selector lever (Allison 1000, 2000 and 2500 series)
32. Automatic transmission selector switch (Allison 3000 series)
33. Ashtray
34. Power window switch

https://truckmanualshub.com/

IGNITION KEY SWITCH

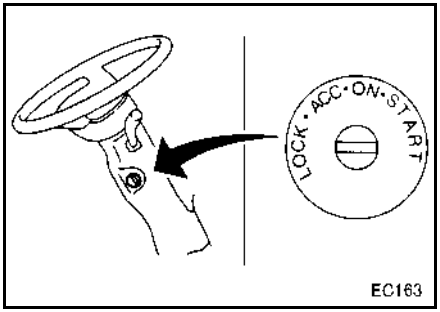

The ignition key switch, located on the right side of the steering column, has four positions:

LOCK (OFF): This is the position that turns off the power to the engine. It is also the position in which the key can be inserted and removed and in which the steering wheel can be locked. Turning the steering wheel after removing the key will automatically lock the steering wheel in the fixed position to prevent theft.

ACC: This is the position used to stop the engine. It is also the position that is used to listen to the radio, etc., when parked, etc., while the engine is stopped.

ON: This is the position used when the engine is running. Absolutely do not turn the ignition key to any other position while driving.
In addition, if the ambient air temperature is low when starting the engine, it provides power to the intake air heater and air dryer heater.

START: This is the position used to start the engine. The ignition key automatically returns to the ON position when released.
Absolutely do not turn the ignition key to the START position after the engine has started.

⚠ WARNING

- **Absolutely do not move the vehicle with the ignition key switch removed or with it in the LOCK position. The steering wheel could lock and prevent steering.**
- **Do not turn the ignition key to any position other than the ON position while driving.**
  If turned to the ACC position, the engine will stop, which will make it very difficult to turn the steering wheel and operate the clutch pedal, and the brakes will not work as well as normal. And if turned to the LOCK position, the steering wheel could lock and prevent steering, which is dangerous.

https://truckmanualshub.com/

⚠ CAUTION

- **To avoid damage to the starting system, do not turn the ignition key to the START position during engine operation.**
- **If the engine should turn over in the reverse direction, operate the ignition key to stop the engine. When the engine has turned over in the reverse direction, the engine sound will change and exhaust smoke will be emitted from the air intake pipe.**

NOTE:

- **If the ignition key is difficult to turn when inserting it and turning it to the ON position, jiggle the steering wheel back and forth while turning the ignition key to release the steering wheel lock and allow the key to turn smoothly.**

Engine stop

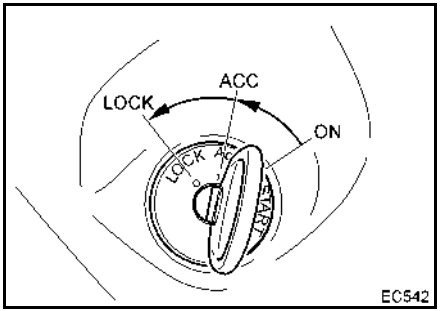

Stop the engine using the ignition key switch. When it is turned from ON to LOCK (OFF), the engine will stop.
Also when the ignition key is turned from ON to ACC, the engine will stop.

https://truckmanualshub.com/

METERS AND GAUGES

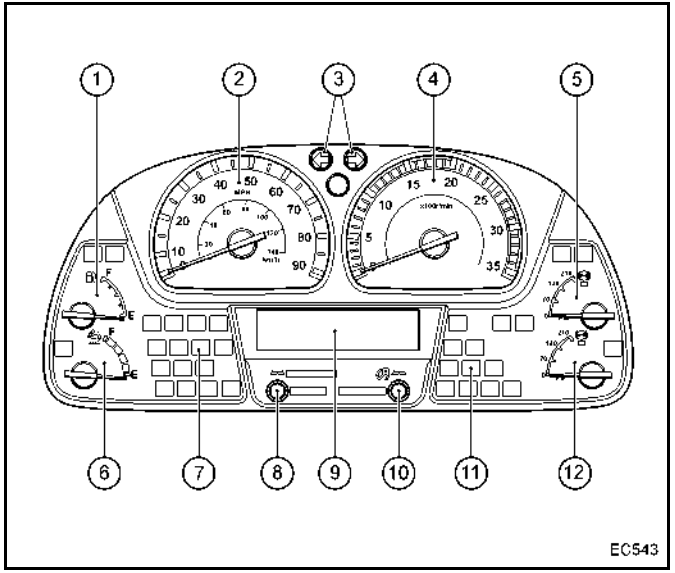

1. Fuel gauge
2. Speedometer
3. Turn signal indicator lights
4. Tachometer
5. Air pressure gauge (Front)
6. DEF gauge
7. Indicator and warning lights
8. Mode select switch
9. Multi-display monitor
10. Illumination control rheostat and odo/trip change-over switch
11. Indicator and warning lights
12. Air pressure gauge (Rear)

NOTE:

- **The meter indicators might move slightly when the ignition key is turned to ON position. This is done to detect the zero position of the meter indicators and this is not a malfunction.**

https://truckmanualshub.com/

Speedometer

The needle indicates the vehicle speed in miles and kilometers per hour on the speedometer. Observe the speed limit and make an effort to drive safely.

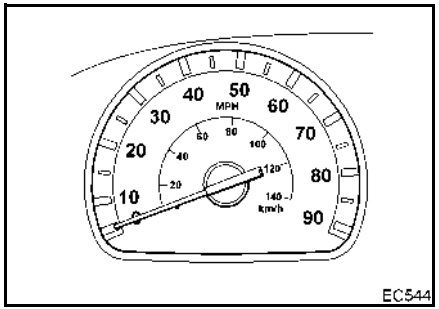

Odo/trip change-over switch

Pushing the reset knob (less than 1 second) changes the odometer and trip meter displays as follows:
ODO → TRIP A → TRIP B → ODO → ...
If the reset knob is pushed for more than 1 second in the trip meter mode, only the displayed mode meter will be reset. (For example, if TRIP A is displayed, this will be reset.)

NOTE:

- **The distance after refueling the vehicle also can be measured in TRIP B while measuring the distance from the vehicle start point in TRIP A.**
- **This switch is combined with the illumination control rheostat.**
  It adjusts the brightness of the instrument cluster. It can be used when the lighting switch is set to the 1st or 2nd position.

Odometer (Integrating distance meter)

The odometer indicates in mile the total distance the vehicle has been driven.

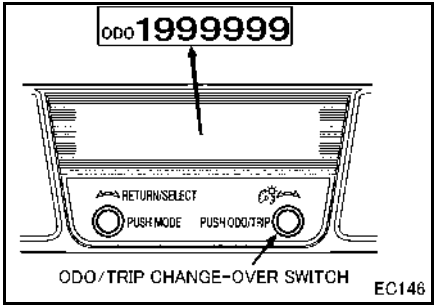

NOTE:

- **The maximum display is 1,999,999 miles.**
- **Pushing the odo/trip switch when the ignition key is in OFF position, odometer and TRIP A/B are displayed for about 45 seconds.**

https://truckmanualshub.com/

Trip meter
(Individual trip distance meter)

The trip meter indicates the distance of individual trips in miles. (The figure shown at right is in 0.1 mile unit.)
The trip meter can register two different trip distances; TRIP A and TRIP B.
The trip meter A and B displays up to 9999.9 miles. When the distance surpasses this amount, it returns to “0”.

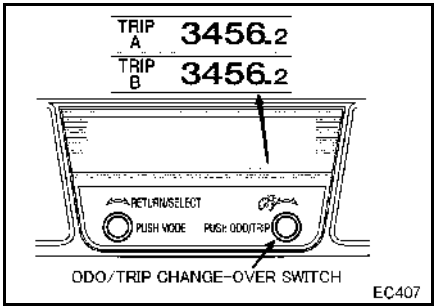

NOTE:

- **To reset the trip meter, keep pushing the reset knob until the meter displays “000.0”. After resetting, release the knob to start measuring. The odometer and another trip meter continue measuring.**

Hour/Trip hour meter

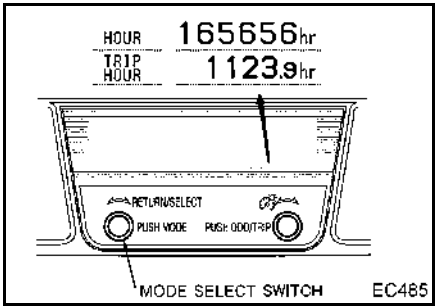

- Indicates the operating time of the engine.
- The trip hour meter will be reset to 0 when the mode select switch is pressed more than 1 second.

Tachometer

The needle of the tachometer indicates the engine speed in revolutions per minute.

- The green zone is a guide for economical driving. Drive in the green zone as much as possible to conserve fuel.
- The red zone shows the overrun operation zone. Be careful that the indicator does not enter the red zone.
  Red zone is more than 2,600 rpm.
- When the engine rpm exceeds the allowable maximum rpm, a warning message will be displayed to warn the driver.

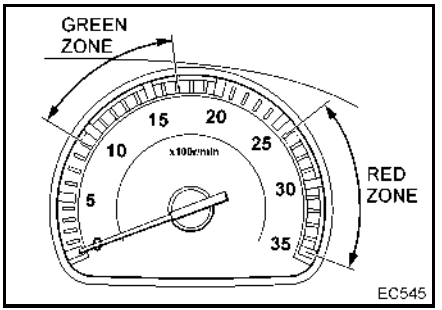

https://truckmanualshub.com/

⚠ CAUTION

- **Please do not exceed the maximum allowable rpm. Driving beyond this range overstresses the engine components and could cause the engine to malfunction.**

Air pressure gauge

This gauge shows the air pressure in the air reservoir.
If the indicator shows the standard air pressure while driving, this is normal.
Normal air pressure is:
102 - 121 psi (706 - 834 kPa)
(7.2 - 8.5 kgf/cm^2)

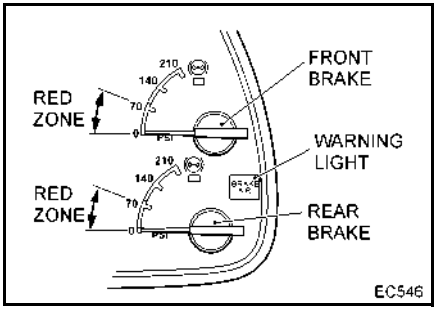

⚠ WARNING

- **If the air pressure gauge indicator is in the red zone and either the warning light illuminates or the warning buzzer sounds, stop driving the vehicle. Not doing so could lead to the brakes not working.**
- **Do not drive until the air pressure gauge indicator shows the normal air pressure.**

https://truckmanualshub.com/

Engine Coolant Temperature (ECT) gauge

This gauge indicates the engine coolant temperature (ECT).

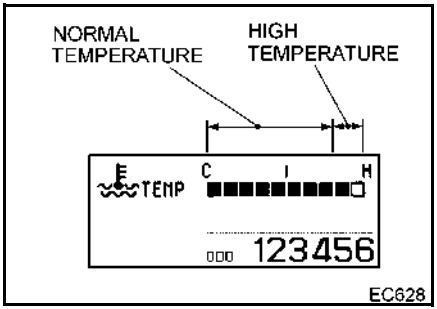

- When the gauge indicates nothing, the ECT is very cold.
  When the gauge indicates between 1 to 8 point, the ETC is normal.
- When the ECT becomes high while another screen is displayed on the multi-display, a beep will sound twice and the display will automatically change to the ECT gauge (except when other warnings are displayed).
- If the coolant temperature significantly increases, an overheat warning with a 2-phase indication (amber: moderate, red: severe) will appear.

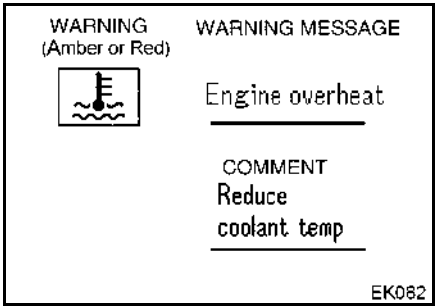

- it is recommended to idle the engine until the ECT drops, then stop the engine and check the engine coolant level (ECL), and then inspect the cooling system for leaks.

⚠ WARNING

- **If the cap is removed without allowing the pressure inside the cooling system to drop, you could be burned by hot steam or hot water, so be very careful when opening the cap.**

⚠ CAUTION

- **Do not suddenly stop the engine when it has overheated. Doing so could cause the engine to seize up.**
  Keep the engine idling until the engine coolant temperature (ECT) drops before turning off the engine.

https://truckmanualshub.com/

Diesel exhaust fluid (DEF) gauge

The DEF gauge indicates the approximate amount of DEF in the aftertreatment DEF tank.

- When the ignition key is turned OFF position, the indicator returns to E.
- F denotes FULL, and E denotes EMPTY. Add DEF before the indicator reaches E.

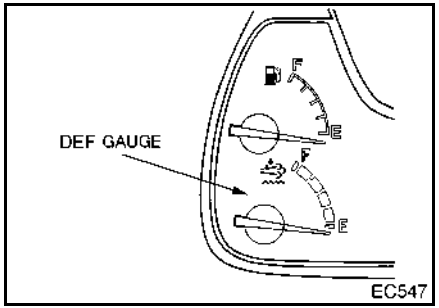

Low level

- When the level in the aftertreatment DEF tank is low, a warning message will be displayed and a warning light will illuminate to warn the driver.

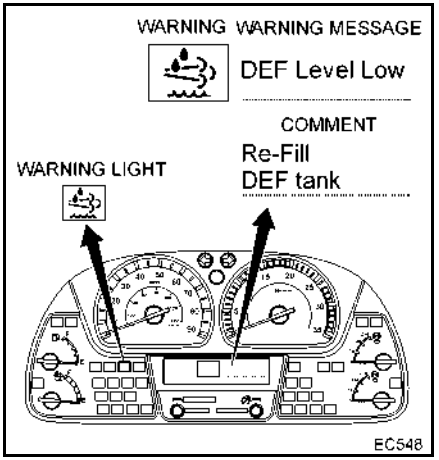

DEF empty

- If the level of DEF becomes empty, the DEF warning light blinks. The 25% of engine torque reduction is simultaneously performed.

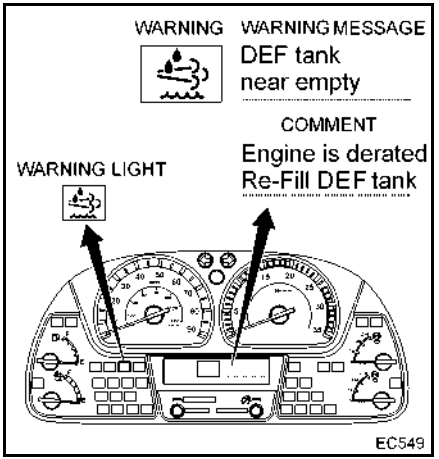

https://truckmanualshub.com/

DEF empty + 1 hour

- 1 hour after the DEF becomes nearly empty, the engine control warning light illuminates, the 40% of engine torque reduction is performed.

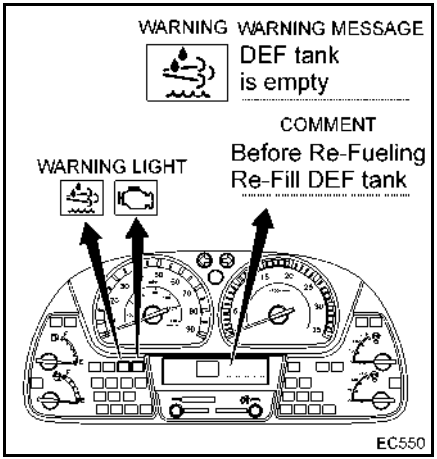

True empty & Speed limit

- Furthermore, if the warning changes to the engine control warning, vehicle speed is restricted to 5 mph (8 km/h).

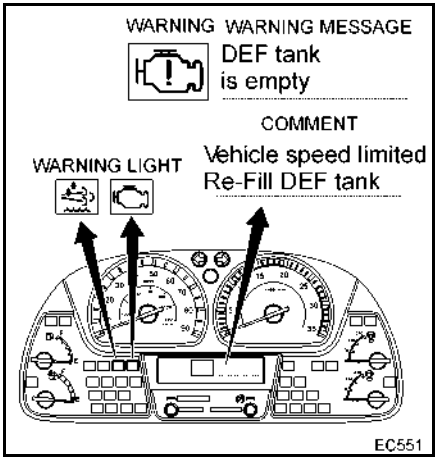

⚠ CAUTION

- **Once the DEF Trigger is achieved, the vehicle will be limited to 5 mph (8 km/h) after refuel up to the measurable amount, or keeping zero vehicle speed for 20 minutes with engine off or idle.**

https://truckmanualshub.com/

Fuel gauge

The fuel gauge indicates the approximate amount of fuel in the fuel tank.

- When the ignition key is turned OFF position, the indicator returns to E.
- F denotes FULL, and E denotes EMPTY. Add fuel before the indicator reaches E.
- If regenerate the DPF when the fuel gauge indicates less than E, engine system malfunction might be detected.
  In this case, refill the fuel and regenerate DPF again, and then confirm that this malfunction is solved.

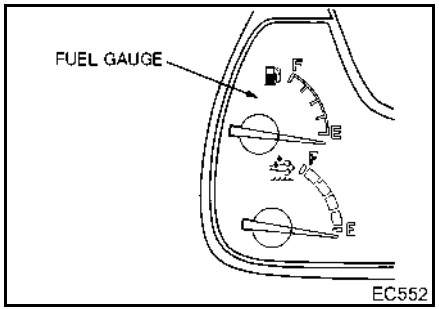

Engine oil pressure gauge

This gauge shows the engine oil pressure.

- The range of 29 to 67 psi (200 to 460 kPa) (2.0 to 4.7 kgf/cm^2) is shown while the engine is running. The pressure could exceed the standard pressure when the oil is cold, but it will return to the standard pressure when the engine warms up.
- If the engine oil pressure drops below the specified pressure, the engine oil pressure warning with a 2-phase indication (amber: moderate, red: severe) will be displayed to notify the driver.
- For more information regarding the warning, refer to “Warnings”.

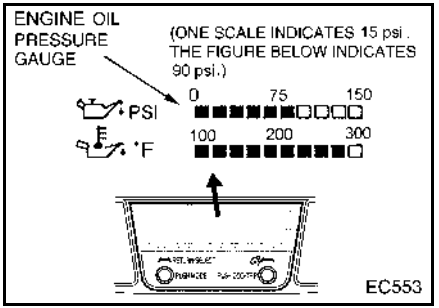

https://truckmanualshub.com/

Voltmeter

This meter operates when the ignition key is in the ON position, and it shows the battery voltage when the engine is stopped and the generator charge voltage when the engine is running.

- The normal value is 12V when the engine is stopped and 14V when it is running.
- When charging is not possible while the engine is running, the charge warning is displayed to notify the driver of the malfunction.
- For more information regarding the warning, refer to “Warnings”.

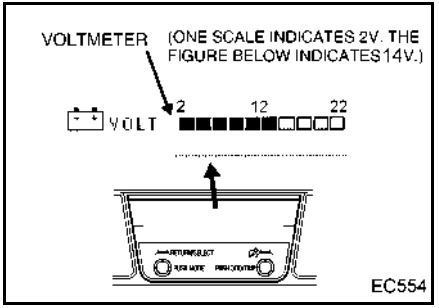

NOTE:

- **This will not decline below the battery voltage while driving even if charging is insufficient or inoperable. Always be conscious of the meter indicator and check the state of charging.**

Engine oil temperature gauge

This gauge shows the engine oil temperature.

- The range of 194 to 257 °F (90 to 125 °C) is shown while the engine is running.
- If the engine oil temperature exceeds the specified temperature, the engine oil temperature warning a 2-phase indication (amber: moderate, red: severe) will be displayed to notify the driver.
- For more information regarding the warning, refer to “Warnings”.

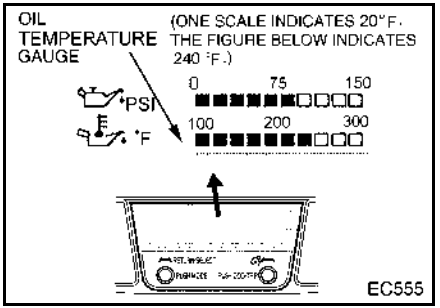

https://truckmanualshub.com/

DPF Soot level gauge

- Indicates the soot accumulation level in the diesel particulate filter (DPF).
- For details on the diesel particulate filter (DPF), refer to the “DPF system” section in “INSTRUMENTS AND CONTROLS”.
- For details on how to display the gauge, refer to the “Multi-display monitor” section.

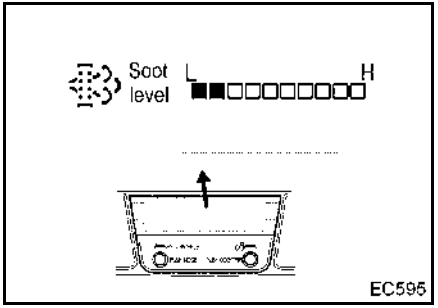

DPF ash level gauge

- Indicates the ash accumulation level in the diesel particulate filter (DPF).
- For details on the DPF ash level gauge, refer to the “Regular maintenance for the DPF system” section in “VEHICLE SERVICE AND MAINTENANCE”.
- For details on how to display the gauge, refer to the “Multi-display monitor” section.

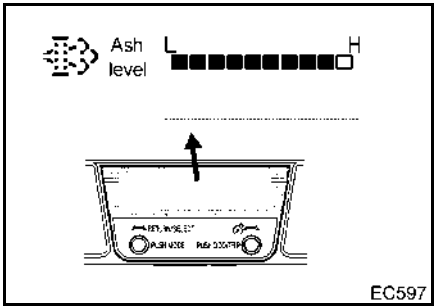

https://truckmanualshub.com/

MULTI-DISPLAY MONITOR

The multi-display monitor shows several kinds of information in each display area.

- MTM specification vehicles:
  The left area of the monitor dis plays a calendar and the time.
  ATM specification vehicles:
  The left area of the monitor displays ATM select positions, overdrive off (Allison 1000, 2200, 2500 series) and power mode (Allison 3000 series).
- The center area of the monitor displays warnings and icons.
- The right area of the monitor displays warning messages that operate simultaneously with icons and several multi-gauges.
- The ODO area displays the ODO meter and other operational messages.

MTM specification vehicles

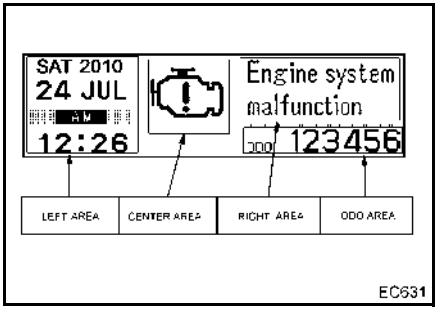

ATM specification vehicles

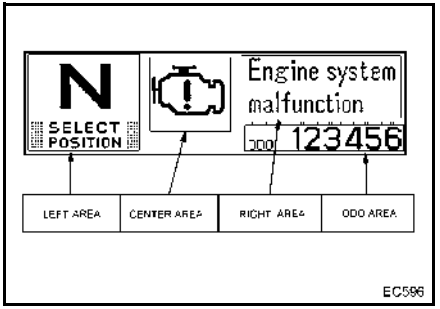

The multi-display monitor displays the following information: engine coolant temperature gauge, calendar, engine oil pressure and temperature gauges, voltmeter, DPF soot and ash level gauges, operation control display, several maintenance and inspection items. Furthermore, other setting items such as date and language are displayed. If necessary, the multi-display warns the driver with display items that include warnings and warning messages.

https://truckmanualshub.com/

The screens of the multi-display monitor can be toggled as follows.

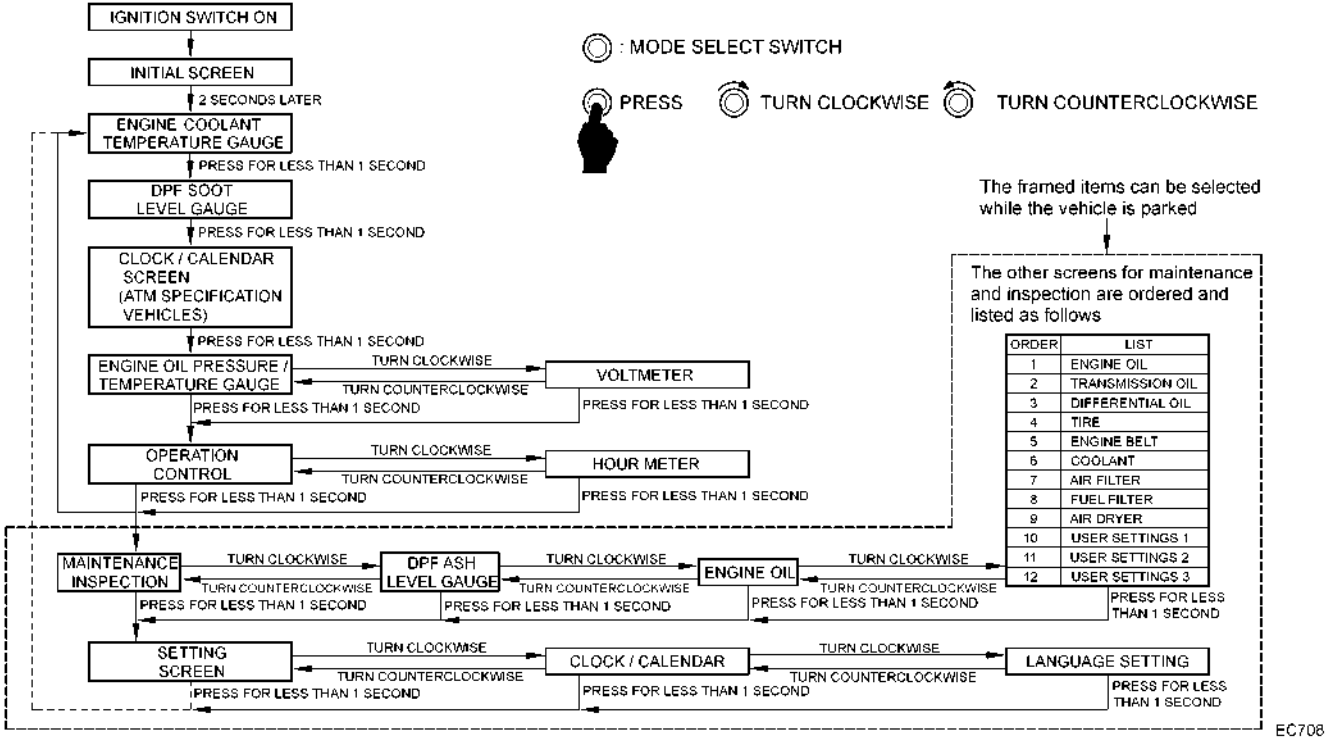

https://truckmanualshub.com/

Changing the screen of the multi-display monitor

- The initial screen is displayed when the ignition key is turned to the ON position.

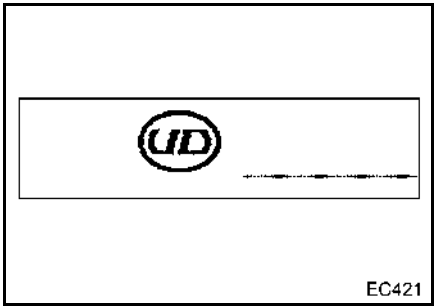

- The initial screen changes to the next screen after 2 seconds.
- After the initial screen display disappears, a warning cannot be displayed on the screen for 10 seconds in order to display the gauge.

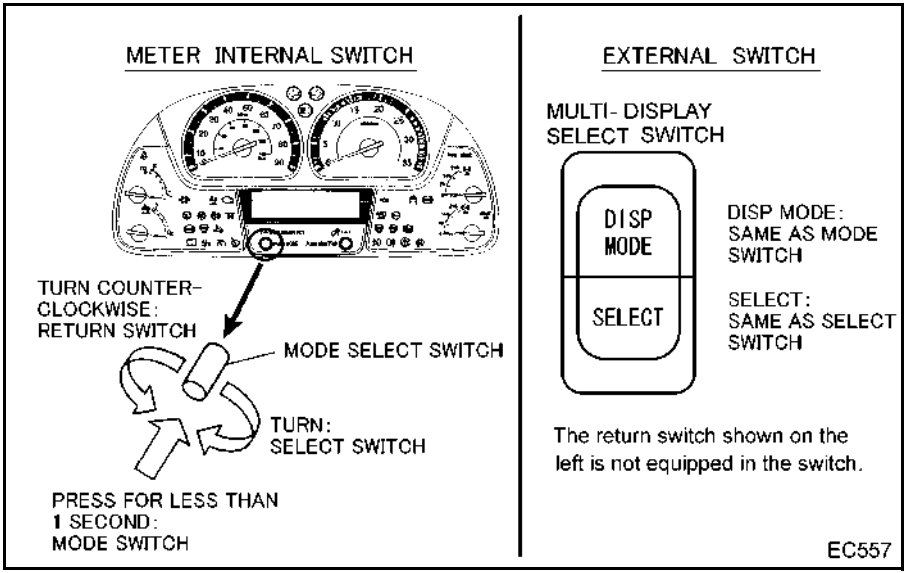

	Normal mode		While setting	
	Briefly press the button (less than 1 second)	Press and hold the button (more than 1 second)	Briefly press the button (less than 1 second)	Press and hold the button (more than 1 second)
MODE	Mode change	Go to settings	The value is increased by 1	The value is continuously increased
SELECT	Change in order	Go to settings	The digit shifts up	The screen returns to normal
RETURN	Change sub-screens in reverse order	Go to settings	The digit shifts down	The screen returns to normal

https://truckmanualshub.com/

NOTE:

- **Inputting and modifying an item cannot be done while a warning is displayed.**
  To input or modify an item while the warning is displayed, press the mode select switch for less than 1 second so that the warning display can be temporarily cancelled.
  The screen will return to the warning display approximately 60 seconds after the mode select switch is pressed.
- **Setting is not available while driving the vehicle.**
  Park the vehicle in a safe location, and then perform settings such as calendar change or data input.

EACH SCREEN DISPLAY AND VALUE INPUT METHOD

<Engine coolant temperature gauge display>

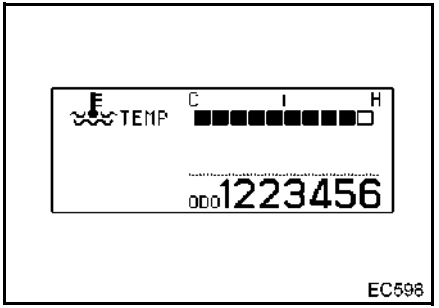

<DPF soot level gauge display>

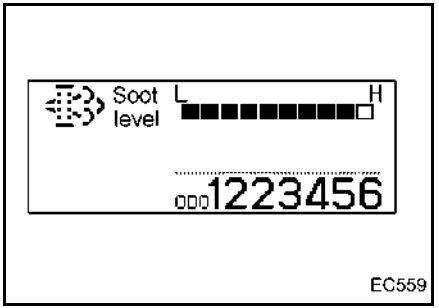

<Clock/Calendar display (ATM specification vehicles)>

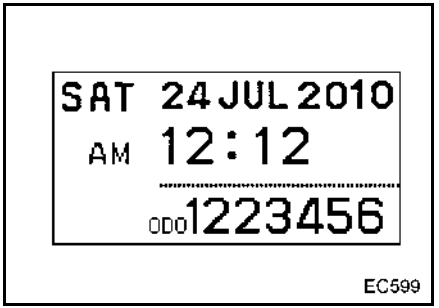

<Engine oil pressure, Engine oil temperature gauge display>

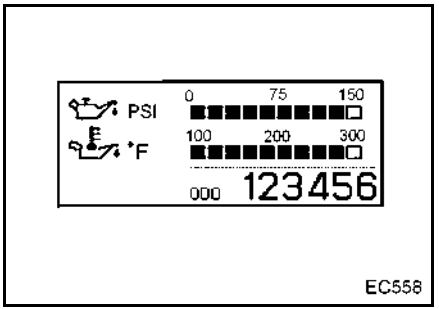

https://truckmanualshub.com/

<Voltmeter display>

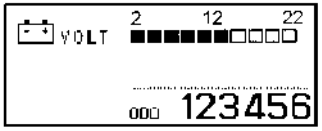

EC560

<Trip management display>

EC561

- To change the display to the distance setting screen, push the mode select switch or the select switch for more than 1 second or turn the return switch for more than 1 second while the operation control screen is displayed. A cursor will be displayed on the thousands digit.
- Press the mode select switch to change a number.
- Press and hold the mode switch to continuously increase a number.
- Turn the select switch or return switch to move the cursor.
  ・The distance can be set by 1 mile within the range of 0 to 5,000 miles.
  ・The remaining driving distance is decreased by 1 mile.
- Set the distance to “0” to reset the operation control function.
- When the remaining driving distance reaches 50%, 10% or 0% of the set distance, a notice will appear on the screen and blink 14 times.
  While the monitor displays a screen other than the operation control screen, an operation control notice will interrupt the screen and blink for 14 seconds.
- If the monitor is displaying a warning indicator, the operation control notice will not interrupt the warning indicator display. However, when the mode switch is pressed to change the display or the warning indicator display is cancelled, the operation control notice will interrupt and blink for 14 seconds.
  If the ignition key is turned to the OFF position while the notice appears and blinks, the notice will resume the next time the ignition key is turned to the ON position.

NOTE:

- **Whenever the select switch or the return switch is turned for more than 1 second while operating, the display will return to the normal screen.**
- **The cursor returns to the thousands digit after the ones digit.**
- **The indicated remaining driving distance may be different from the one that is displayed on trip meter A or B.**
- **Setting is not available while driving the vehicle.**
  Park the vehicle in a safe loca-

https://truckmanualshub.com/

tion, and then input the distance.

<Hour meter display>

The hour meter indicates the total running time of the engine at a designated engine speed. This helps determine maintenance and inspection intervals.

EC600

- The hour meter continuously counts and displays up to 199999 hours.
  The minimum unit is 1 hour.
- The trip hour meter displays up to 999.9 hours, and then returns to 0.0 hours.
  The minimum unit is 0.1 hour (6 minutes).
- When the mode switch is pressed for more than 1 second while the hour meter is displayed, the trip hour meter is reset to “0.0”.

NOTE:

- **The trip hour meter indicates 000.0 while resetting.**
- **The trip hour meter does not count while resetting.**

<Maintenance and inspection display>

- When turning the select switch (for less than 1 second) while the maintenance and inspection display appears, the ash level gauge is displayed. Then, when turning the switch more (for less than 1 second), the general maintenance and inspection screen is displayed.
- For details on the DPF ash level gauge, refer to the "Regular maintenance for the DPF" on page 11-70.

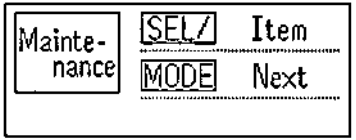

EC601

<DPF ash level gauge display>

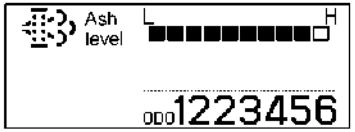

EC602

https://truckmanualshub.com/

<Several maintenance and inspection screen displays>

Engine oil

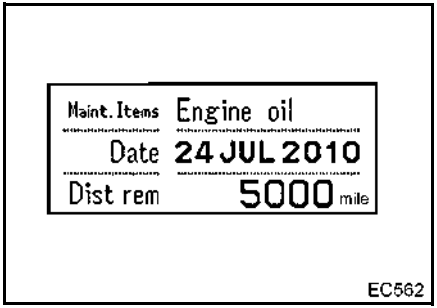

Transmission oil

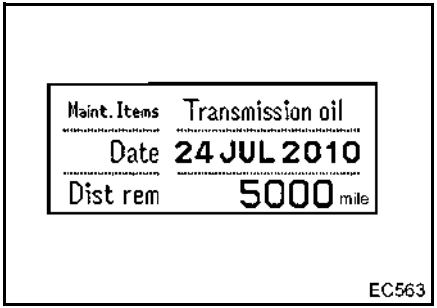

Differential oil

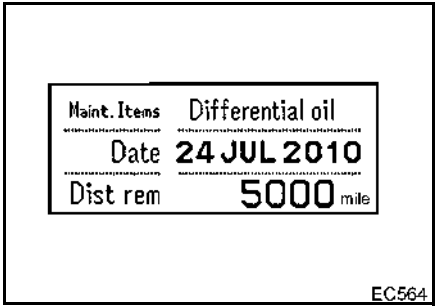

Tire

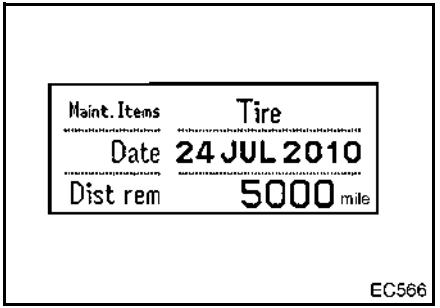

Engine belt

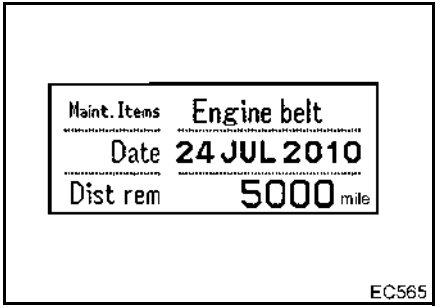

Coolant

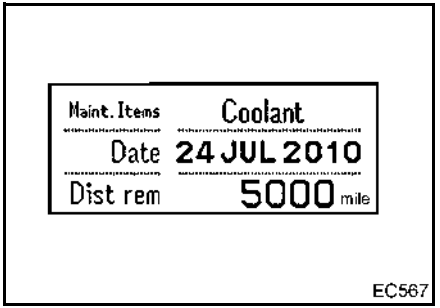

https://truckmanualshub.com/

Air cleaner element

EC568

Air dryer

EC570

User setting 2

EC572

Fuel filter

EC569

User setting 1

EC571

User setting 3

EC573

- To change the display to the input screen of the periodic replacement intervals, push the mode select switch or the select switch for more

https://truckmanualshub.com/

than 1 second or turn the return switch for more than 1 second while the maintenance and inspection screen is displayed. A cursor will be displayed on the year position.

- When the mode select switch is pressed, the number is changed.
  ・The date can be set as follows.
  Year: 2008 to 2038
  Month: January to December
  Day: 1 to 31
  ・The distance can be set by 1 mile within the range of 1 to 6 digits (from 0 to 999,999 miles).
  ・The remaining driving distance is decreased by 1 mile.
- When the mode select switch is pressed and held, the number is continuously increased.
- When the select switch or the return switch is turned, the cursor is moved.
  ・The cursor returns to the distance position after the date position.
- When the remaining driving distance reaches “0” (the vehicle has been driven for the set distance) or the set date comes, a warning and an item to be replaced are displayed while the parking brake is applied.
- To reset the maintenance and inspection display, set the distance to “0” or set the date to the present or the past date.

EC503

- The remaining driving distance is preliminarily set to 600 miles in the user setting 1 as a factory default setting.
  Contact the nearest authorized UD Trucks dealer for the 600 miles inspection.

NOTE:

- **Whenever the select switch or the return switch is turned for more than 1 second while operating, the display will return to the normal screen.**
- **The number of the set distance for replacement may be different from the one that is displayed on the trip meter A or B.**
- **Setting is not available while driving the vehicle.**
  Park the vehicle in a safe location, and then input the replacement interval.

<Settings display>

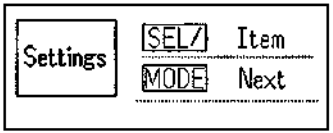

EC574

https://truckmanualshub.com/

<Calendar and clock display>

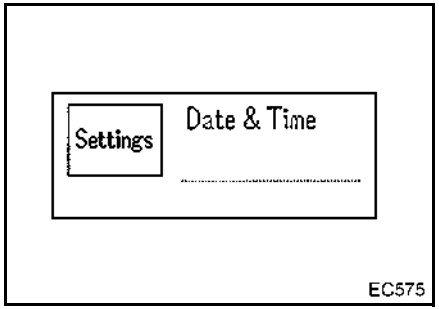

- To set the calendar and clock display, press the mode select switch or the select switch for more than 1 second or turn the return switch for more than 1 second while the calendar and clock display is shown. A cursor will be displayed and blink on the year position.

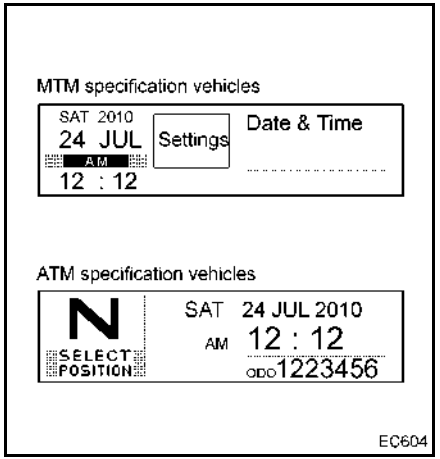

Clock display: AM 12:00 - 11:59
PM 12:00 - 11:59

- Press the mode select switch while the cursor blinks to change the number.
- Press and hold the mode select switch to continuously increase the number.
- Turn the select switch or return switch to move the cursor.
- When the odo/trip switch located on the right side is pressed for less than 1 second in the clock setting mode, the minutes of the clock will change to "00" and the display will return to the normal screen.

・When the minutes are in the 00 to 29 range, the minutes will be reset to “00”.

・When the minutes in the 30 to 59 range, the hour will advance by 1 hour and the minutes will be reset to “00”.

https://truckmanualshub.com/

CAUTION

- **When setting the clock on the calendar and clock display, always place the shift lever (MTM) or selector (ATM) in the neutral position. The combination meter is equipped with the shift recognition function that automatically recognizes the transmission specification while setting the clock.**
  If the clock is set while the transmission is shifted in the R (Reverse) position, the shift indicator may not be displayed correctly.

NOTE:

- **Whenever the select switch or the return switch is turned for more than 1 second while operating, the display will return to the normal screen.**
- **The cursor returns to the year position after the minute position.**
- **Setting is not available while driving the vehicle.**
  Park the vehicle in a safe location, and then input the time and date.

<Language setting screen>

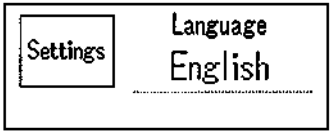

EC626

- To select language, push the mode switch or the select switch for more than 1 second or turn the return switch for more than 1 second while the language setting screen is displayed. Press the mode switch to select a language. The selected language will blink.
- When the mode switch or the select switch is pressed for more than 1 second or the return switch is turned for more than 1 second while operating, the display will return to the normal screen.
- Language can be selected from English, Chinese and Japanese.

NOTE:

- **Setting is not available while driving the vehicle.**
  Park the vehicle in a safe location, and then select a language.

https://truckmanualshub.com/

WARNINGS AND INDICATORS

Multi-display

Display			Name	Page
Mark	Color	Message		
	Red or Amber	Engine overheat	Overheat warning	7-9 12-1
		Reduce coolant temp		
	Amber	DEF level low	DEF low level warning (Low level)	7-10
		Re-Fill DEF Tank		
		DEF tank near empty	DEF low level warning (Near empty)	
		Engine is derated Re-Fill DEF tank		
		DEF tank is empty	DEF low level warning (True empty))	
		Before Re-Fueling Re-Fill DEF tank		
	Red	Reduce engine revolution	Engine overrun warning	7-31
	Red	Charging system error	Charge warning	7-32
		Check generator belt		
		Contact Dealer		
	Red or Amber	Engine oil pressure is low	Engine oil pressure warning	7-32
		Contact Dealer (or Check at Dealer)		
	Red or Amber	Engine oil temp too high	Engine oil temperature warning	7-37
		Reduce engine oil temperature		

Display			Name	Page
Mark	Color	Message		
	Red or Amber	Engine system malfunction	Engine system warning	7-38
		Contact Dealer (or Check at Dealer)		
	Amber	Communication line error	Engine communication malfunction warning	7-40
		Check at Dealer		
		DEF tank is empty	DEF low level warning (True empty & Speed limit)	7-10
		Vehicle speed limited Re-Fill DEF tank		
	Amber	Insufficient DEF quality or failure	DEF insufficient quality warning (Initial detected)	7-34
		Contact Dealer		
		Insufficient DEF quality or failure	DEF insufficient quality warning (1 hour after)	
		Engine is derated Contact Dealer		
		Insufficient DEF quality or failure	DEF insufficient quality warning (4 hours after)	
		Vehicle speed limited Contact Dealer		

https://truckmanualshub.com/

Display			Name	Page
Mark	Color	Message		
	Amber	Insufficient DEF quality or failure Contact Dealer	SCR system tampering warning (Initial detected)	7-35
		Insufficient DEF quality or failure Engine is derated Contact Dealer	SCR system tampering warning (1 hour after)	
		Insufficient DEF quality or failure Vehicle speed limited Contact Dealer	SCR system tampering warning (4 hours after)	
	Amber	Engine system malfunction Check at Dealer	SCR system fault warning	7-37
	Red or Amber	Vehicle electrical sys. malfunction Contact Dealer (or Check at Dealer)	Vehicle electrical system malfunction warning	7-39
	Amber	Communication line error Check at Dealer	Vehicle electrical system communication malfunction warning	7-40
	Amber	Communication line error Check at Dealer	Meter communication malfunction warning	7-39
	Amber	“Item to be replaced”	Maintenance and inspection screen display	7-23
	Amber	PTO is in operation	Transmission PTO indicator	7-64

Display			Name	Page
Mark	Color	Message		
	Amber	Starter overheat Waiting time	Starter overheat warning	10-4
	Amber	PTO is operation Engine start is not possible	PTO engine start interrupt warning	10-4
	Red	Transmission oil temp too high Reduce oil temperature	ATM fluid temperature warning	7-41
	Red	ATM system error Check at Dealer	ATM system warning	7-42
	Red or Amber	Engine system malfunction Contact Dealer (or Check at Dealer)	DPF system warning	3-22 7-74
	Amber	DPF is regenerating	DPF regenerating warning	3-21 7-72
	Amber	Regeneration system is disabled	DPF regeneration restriction warning	7-72
	Amber	DPF maintenance Check at Dealer	DPF maintenance warning	3-23 11-71
IDLE STOP	Amber	Auto engine shut down	Idle shutdown information	10-38
O/D OFF	Amber	-	ATM O/D OFF indicator light	7-52
POWER	Amber	-	ATM Power mode indicator light	7-52

https://truckmanualshub.com/

Warning and indicator lights

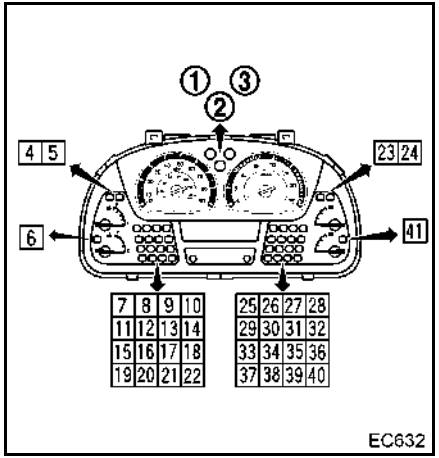

No	Tell mark	Name	Page
1		Left turn signal and hazard indicator light	7-51
2		HIGH beam indicator light	7-52
3		Right turn signal and hazard indicator light	7-51

No	Tell mark	Name	Page
4		Seat belt warning light	6-6
5		Spare	
6		Spare	
7		Spare	
8		Spare	
9		DEF low level warning light	7-10
10		Engine control warning light	7-43
11		Spare	
12		Spare	
13		DPF clogging warning light	3-21 7-70
14		Intake air heater indicator light	7-51

No	Tell mark	Name	Page
15		Spare	
16		Spare	
17		Exhaust gas high temperature indicator light	7-50
18		Spare	
19		Engine coolant level warning light	7-45
20		Tilt lock warning light	7-48
21		Cruise control “ON” indicator light	7-60
22	SET	Cruise control “SET” indicator light	7-60
23	PARK	Parking brake warning light	7-47
24	BRAKE	Brake warning light	7-47
25	ABS	ABS warning light	7-44

https://truckmanualshub.com/

No	Tell mark	Name	Page
26		Spare	
27		Exhaust brake indicator light	7-51
28		Spare	
29	SHIFT LIMIT	ATM shift limit warning light	7-49
30		ATM maintenance information light	7-50
31		Spare	
32		Spare	
33		Spare	
34		Spare	
35		Spare	
36		Spare	

No	Tell mark	Name	Page
37		Spare	
38		Spare	
39		Spare	
40		Spare	
41	BRAKE AIR	Air pressure warning light	7-43

https://truckmanualshub.com/

BUZZERS

Buzzer list in cabin

No.	Warning item	Portion	Pattern	Remarks
1	Low air pressure	In cabin	Continuous sound	Warning light and synchronizing
2	Brake			
3	ATM fluid temperature			Warning message and synchronizing
4	Tilt lock			Warning light and synchronizing
5	Engine system	In combination meter	Continuous sound	Warning message and synchronizing
6	Engine oil pressure			
7	Overheat			
8	Engine coolant level			Warning light and synchronizing
9	Engine oil temperature			Warning message and synchronizing
10	DPF system			
11	Multiple inputs		Intermittent sound 1 (short intermittent sound)	
12	ATM reverse		Intermittent sound 2 (normal intermittent sound)	Select position “R” and synchronizing
13	Interrupting buzzer on engine coolant temperature gauge		Intermittent sound 3 (intermittent sound twice)	Display switching timing

When multiple warnings occur at the same time.

When two warnings from No.5 to 10 occur at the same time, it changes to intermittent sound No.11.

If the No.12 or No.13 warning occurs while the meter buzzer is sounding, the intermittent buzzer of No.12 or No.13 is given priority.

https://truckmanualshub.com/

WARNINGS

When necessary, the multi-display displays warnings while also displaying a warning message and comments in order to warn the driver, or warning lights are illuminated.

- The basic pattern for the warning display contents is given below.

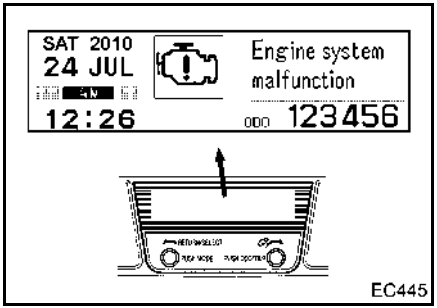

NOTE:

- **The multi-display also displays warning messages, comments, a calendar, clock, trip management, inspection and servicing message display, range select position (ATM specification vehicles) in addition to warning displays.**

Engine overrun warning

When the engine rpm exceeds the maximum allowable rpm, the warning and warning message display will turn on to warn the driver.

- The tachometer's red zone shows the overrun speed range, so make sure that the indicator does not enter the red zone.

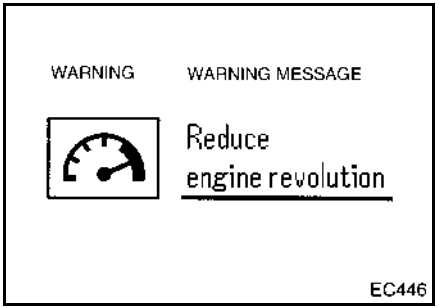

⚠ CAUTION

- **Please do not exceed the maximum allowable rpm. Driving beyond this range overstresses the engine components and could cause the engine to malfunction.**

https://truckmanualshub.com/

Charge warning

If a problem occurs with the charging circuit while driving, the warning, warning message, and comments will be displayed to warn the driver.

- Immediately stop the vehicle in a safe location, stop the engine, and check the generator drive belt tension and check for damage to the belt.
- If the belt is properly tensioned, the charging system could be faulty, so contact the nearest authorized UD Trucks dealer. If the charging is insufficient, refer to the Emergency Starting items in “JUMP STARTING”.

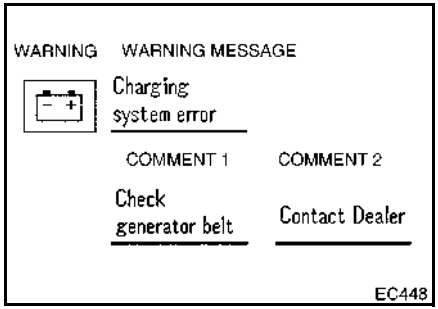

⚠ CAUTION

- **Do not drive while the warning display is shown. Doing so could result in damage to the electronic components due to over-voltage or a discharged battery.**

Engine oil pressure warning

If the engine oil pressure decreases below a specified pressure while the engine is running, an amber warning (moderate), a warning message and comments will be displayed.
If the engine oil pressure decreases further, the color of the warning will turn red (severe), and at the same time a buzzer will sound to warn the driver.

- When this warning message is displayed, immediately stop the vehicle in a safe location, stop the engine, and check the engine oil level and look for oil leaks.
- If there is an oil leak or other problems, the vehicle must be inspected and repaired. Contact the nearest authorized UD Trucks dealer.

https://truckmanualshub.com/

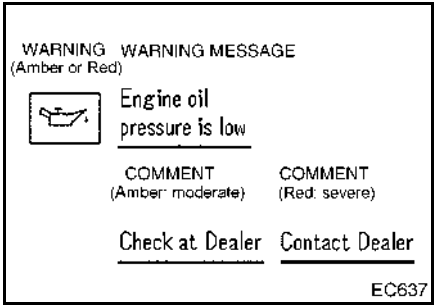

WARNING

- **Be careful not to get burned during inspections conducted immediately after driving because the engine oil is still very hot.**

CAUTION

- **The engine protection function may provide torque derating to prevent the engine from being damaged, so have it inspected and serviced by the nearest authorized UD Trucks dealer.**
- **Absolutely do not drive while the warning display is shown. A drop in the oil pressure could cause the engine to seize up.**

DEF low level warning

When the level of DEF in the tank is low, this warning and warning message are displayed and a warning light illuminates to warn the driver.

- Add the specified DEF as soon as possible when this warning is displayed.

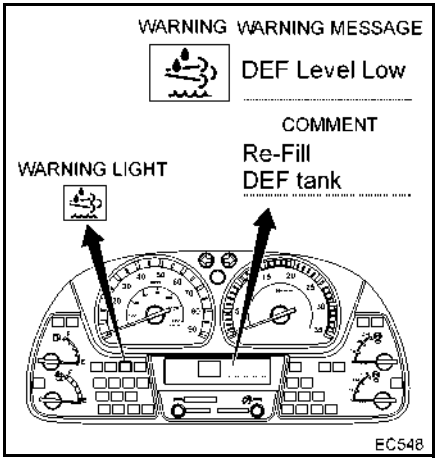

https://truckmanualshub.com/

NOTE:

- **Try to add DEF ahead of time so that the tank does not become empty.**
- **After the ignition key is turned to the ON position, the DEF low level warning light will be illuminated for about 1 seconds to check the system.**

DEF insufficient quality warning

When refilling the DEF tank with liquid other than the specified DEF, the warning, warning message and warning light illuminate. When the warning illuminates, drain the liquid that was used to refill the tank, and refill again using the specified urea water solution.

Initial detected

Once an insufficient DEF quality is detected, a warning will be displayed, and a warning light will be illuminated to warn the driver.

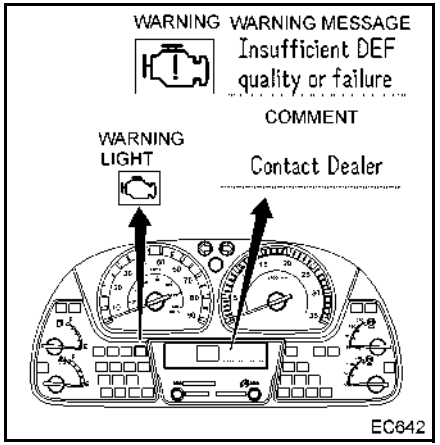

Initial detected + 1 hour

1 hour after an insufficient DEF quality is detected, engine torque is reduced by 25%.

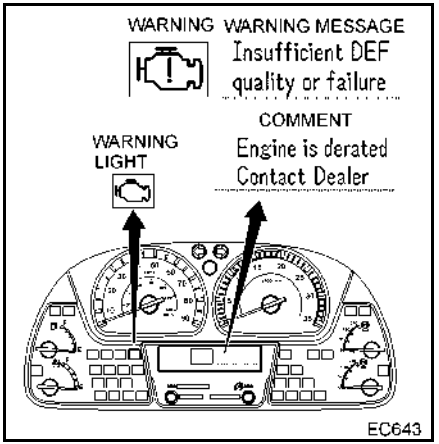

https://truckmanualshub.com/

Initial detected + 4 hours

4 hours after an insufficient DEF quality is detected, engine torque is reduced by 40%. Furthermore, the vehicle speed is restricted to 5 mph (8km/h) when diesel fuel is refueled up to measurable level, or after keeping zero vehicle speed for 20 minutes with engine off or idle. However, by first restart or with service tool DTC cleaning, engine torque is recovered to 25% decrease.

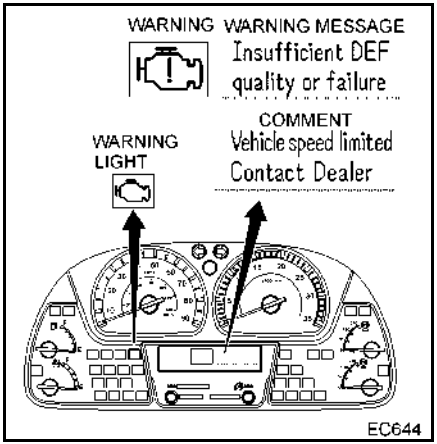

CAUTION

- **These warning messages are displayed, contact the nearest authorized UD Trucks dealer for inspection and maintenance.**

NOTE:

- **Only use DEF specified by UD Trucks that satisfies the ISO22241-1 specification.**

SCR system tampering warning

SCR system is designed to be tamper resistant.
When the SCR system malfunctions due to the following causes, this warning and warning message are displayed and the warning light illuminates.

- Disconnected DEF tank level sensor
- Blocked DEF line or dosing unit
- Disconnected DEF dosing unit
- Disconnected DEF pump
- Disconnected SCR wiring harness
- Disconnected NOx sensor
- Disconnected exhaust temperature sensor
- Disconnected DEF temperature sensor

https://truckmanualshub.com/

Initial detected

Once a tampering is detected, a warning will be displayed, and a warning light will be illuminated to warn the driver.

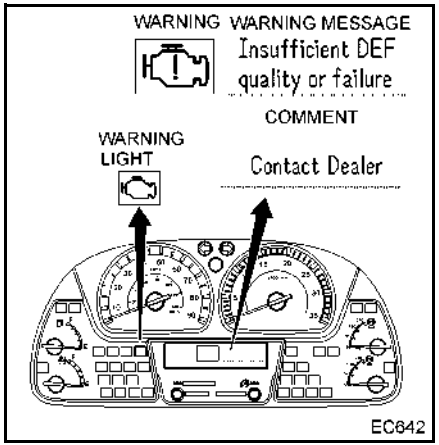

Initial detected + 1 hour

1 hour after a tampering is detected, engine torque is reduced by 25%.

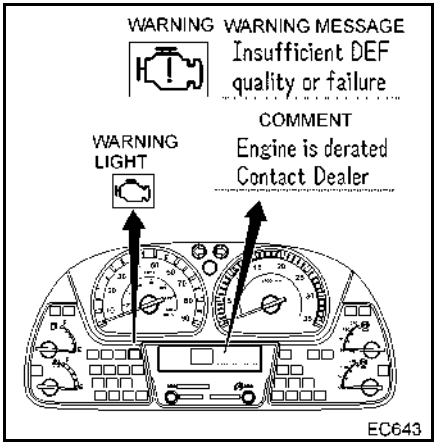

Initial detected + 4 hours

4 hours after a tampering is detected, engine torque is reduced by 40%.

Furthermore, the vehicle speed is restricted to 5 mph (8 km/h) when diesel fuel is refueled up to measurable level, or after keeping zero vehicle speed for 20 minutes with engine off or idle.

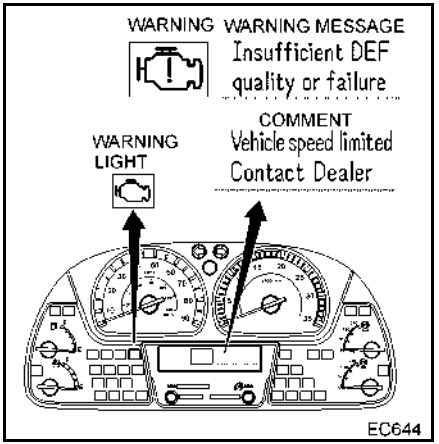

https://truckmanualshub.com/

CAUTION

- **These warning messages are displayed, contact the nearest authorized UD Trucks dealer for inspection and maintenance.**

SCR system fault warning

When the SCR system fault, this warning and warning message are displayed and the warning light illuminates to warn the driver.

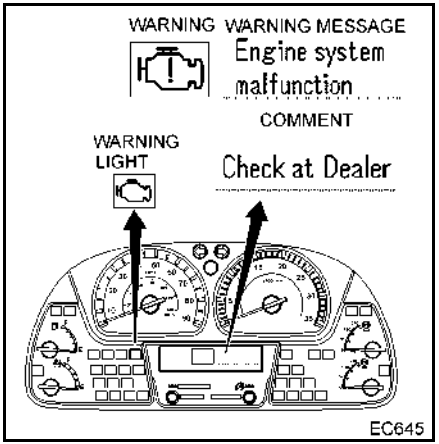

CAUTION

- **This warning message is displayed, contact the nearest authorized UD Trucks dealer for inspection and maintenance.**

Engine oil temperature warning

When the engine oil temperature exceeds a specified temperature, an amber warning (moderate), a warning message and comments are displayed.
If the engine oil temperature increases further, the color of the warning will turn red (severe), and at the same time a buzzer will sound to warn the driver.

- Immediately stop the vehicle in a safe location and continue fast idling until the engine oil temperature drops.
- After the engine oil temperature drops, stop the engine and check the engine oil level, and look for engine oil leaks.
- If the engine oil temperature does not decrease, have the system inspected and serviced by the nearest authorized UD Trucks dealer.

https://truckmanualshub.com/

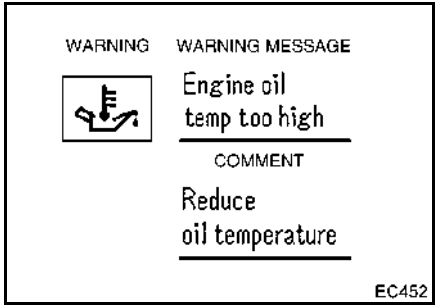

WARNING

- **Be careful not to get burned during inspections conducted immediately after driving because the engine oil is still very hot.**

CAUTION

- **The engine protection function may provide torque derating to prevent the engine from being damaged, so have it inspected and serviced by the nearest authorized UD Trucks dealer.**
- **Do not continue driving when the warning is displayed and the buzzer sounds.**

Engine system warning

When the engine system malfunctions due to the following causes, an amber warning (moderate), a warning message and comments are displayed.
If a malfunction becomes more severe, the color of the warning will turn red (severe), and at the same time a buzzer will sound to warn the driver.

- Engine control system malfunction
- DPF system malfunction

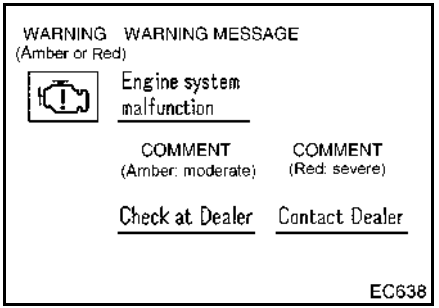

https://truckmanualshub.com/

⚠ CAUTION

- **Do not drive while the engine system warning is displayed. The engine protection function may provide torque derating to prevent the engine from being damaged, so have it inspected and serviced by the nearest authorized UD Trucks dealer.**
- **If the engine stops or is clearly producing an abnormal sound or vibration, contact the nearest authorized UD Trucks dealer.**

Vehicle electrical system malfunction warning

When the vehicle electrical system malfunctions due to following causes, an amber warning (moderate) or red warning (severe), a warning message and comments are displayed.

- Accelerator pedal position (APP) sensor malfunction
- Power relay malfunction
- Switch malfunction

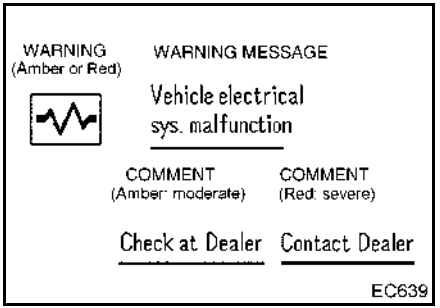

- This warning message is displayed, have it checked at the nearest authorized UD Trucks dealer.

Meter communication malfunction warning

When the meter communication malfunctions, a warning, a warning message and comments are displayed.
When this warning appears, the following will or may occur.

- Items that use CAN communication such as the tachometer, engine oil pressure gauge, warnings for engine, etc. may not work properly.
- If the engine control warning light illuminates, all communications with the vehicle will stop.

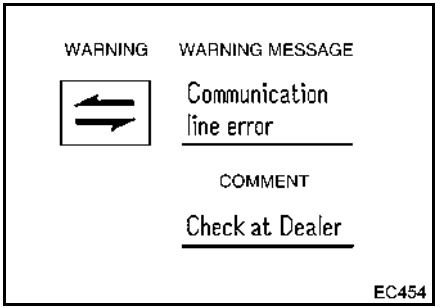

https://truckmanualshub.com/

- This warning message is displayed, have it checked at the nearest authorized UD Trucks dealer.

Engine communication malfunction warning

When the engine communication malfunctions, a warning, a warning message and comments are displayed.
When this warning appears, the following will occur.

- No warnings related to the engine will appear.
- Engine control warning light will illuminate.

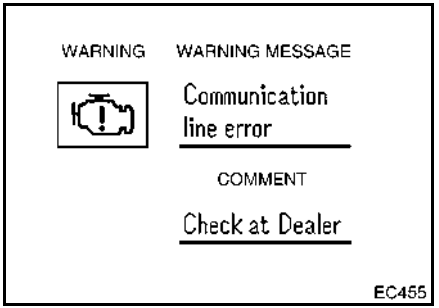

- This warning message is displayed, have it checked at the nearest authorized UD Trucks dealer.

Vehicle electrical system communication malfunction warning

When the vehicle communication malfunctions, a warning, a warning message and comments are displayed.
When this warning appears, the following will occur.

- No warnings related to the vehicle electrical system will appear.

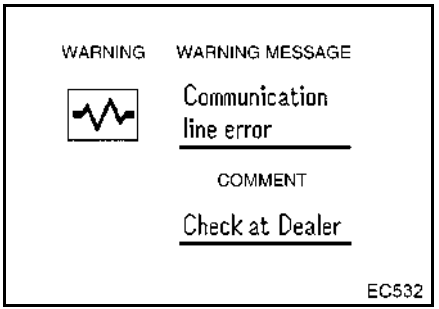

- This warning message is displayed, have it checked at the nearest authorized UD Trucks dealer.

https://truckmanualshub.com/

ATM fluid temperature warning

If automatic transmission fluid temperature rises above 250°F (121°C), the warning, warning message and comments are displayed and the warning buzzer will sound.

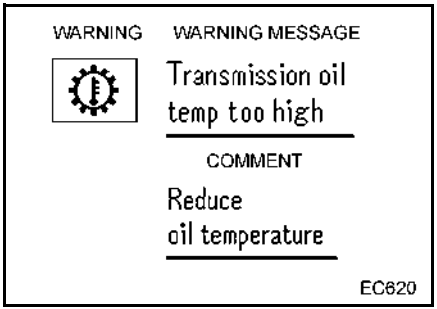

CAUTION

- **If the warning, warning message and comments are displayed and the buzzer sounds, stop the vehicle and operate the engine at fast idle until the fluid temperature returns to normal. Do not stop the engine immediately. If the warnings remains on, have the transmission and cooling system checked and repaired. Do not operate the vehicle.**

1. When the warnings are displayed and the warning buzzer sounds, immediately move the vehicle to a safe place. Apply the parking brake and shift the transmission to the neutral position.

CAUTION

Failures to take the following precautions may result in serious transmission damage:

- **When the warnings are displayed and a warning buzzer is sounding, do not stop the engine until you have performed steps 2-5.**
- **Never operate the vehicle when the warnings are displayed.**

2. Operate the engine at a fast idle with the throttle control knob located to the left of the steering column.
3. Idle the engine until the engine coolant temperature (ECT) gauge needle points to the middle of the gauge.
4. While idling the engine, check the fluid level. If the level is on the low side of the HOT band, add fluid through the filler tube. Do not overfill.
5. If the warning light still remains on, stop the engine. Have the trans-

https://truckmanualshub.com/

mission checked by an authorized UD Trucks dealer.

ATM system warning

The automatic transmission system warning, warning message and comments will be displayed when the transmission control module (TCM) detects a malfunction.

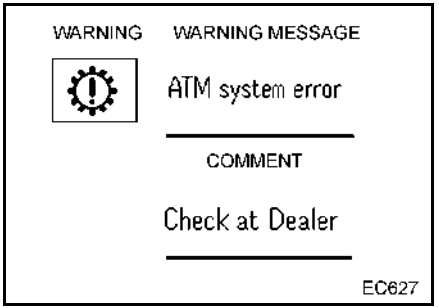

1. The automatic transmission system warnings will be displayed when the TCM detects a malfunction. At this time a diagnostic trouble code (DTC) is set in the TCM and transmission cannot be shifted. Depending on the malfunction, the TCM does not respond to gear shifting operation and the current gear is fixed.
2. When a malfunction occurs and shifting becomes impossible in the N position, turn the ignition key to OFF position to stop the engine and restart it. When malfunction is intermittent, the TCM resets and driving becomes possible.
3. If the warnings still remains on, stop the engine. Have the transmission checked by an authorized UD Trucks dealer.

CAUTION

- **When a vehicle is stopped and engine speed is raised for a long time with the gear shifted to other than the N position, fluid temperature increases and the transmission will be damaged. Do not keep the engine in that circumstance more than 30 seconds.**

https://truckmanualshub.com/

WARNING AND INDICATOR LIGHTS

Air pressure warning light

If the air pressure drops and the meter indicator falls below the red zone, the warning light will turn on and the buzzer will sound to warn the driver. The buzzer will stop when the vehicle stops and the parking brake is pulled to the park position.

Red zone: 78 psi (539 kPa)
(5.5 kgf/cm^2) or less.

- If the warning light illuminates, immediately stop the vehicle in a safe location and leave the engine idling to increase the air pressure.
- If the warning light does not turn off even though idling is continued, contact the nearest authorized UD Trucks dealer.

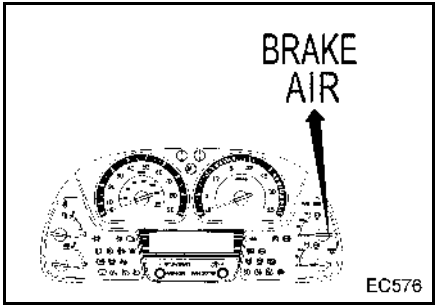

⚠ WARNING

- **Immediately stop driving if the low air pressure warning light illuminates, the warning buzzer sounds, or the air pressure gauge indicator is in the red zone. Not doing so is very dangerous because the brakes, clutch, or gearshift could stop working.**
- **Immediately stop the vehicle in a safe location when this warning light illuminates. Continuing to drive in this condition could cause the spring brake to operate, which would make driving impossible.**

Engine control warning light

This warning light illuminates when a problem occurs in the engine control system.

- This light turns off after about 16 seconds or engine is started and the system is normal.

Lights that illuminate when the ignition key is turned to the ON position.

Operation status	When normal	When abnormal
Ignition key ON before start the engine	ON (about 15 seconds)	-
Engine running and Engine stall	OFF	ON

https://truckmanualshub.com/

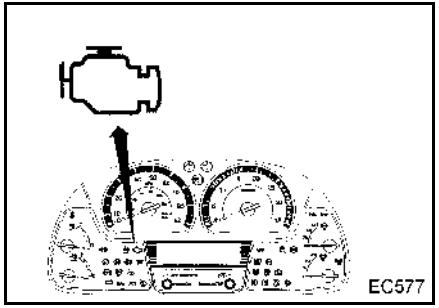

⚠ CAUTION

- **Do not drive while the engine control light is illuminated. This could cause decreased fuel economy or decreased power, so have it inspected and serviced by the nearest authorized UD Trucks dealer.**
- **If the engine stops or is clearly producing an abnormal sound or vibration, contact the nearest authorized UD Trucks dealer.**

NOTE:

- **When the amount of aftertreatment diesel exhaust fluid (DEF) is empty (the level is zero) and the engine control warning light illuminates, add DEF. However, the engine control warning light may not turn off.**
  In this case, turn the ignition key to the OFF position, wait for about 10 seconds and then restart the engine. Then, if the engine control warning light turns off, there is no malfunction in the engine control system.

ABS warning light

The warning light comes on when there is an abnormality in the ABS (Anti-lock Brake System). Under normal operation, the warning light comes on with the engine stopped and the ignition key turned to the ON position. The warning light goes out after about 3.0 seconds if there is no malfunction in the ABS.

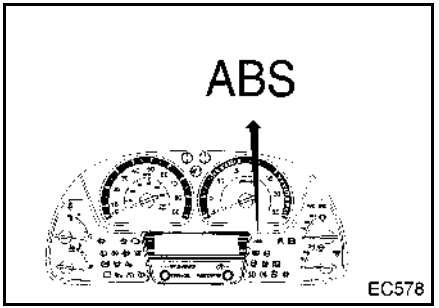

https://truckmanualshub.com/

⚠ WARNING

- **If the vehicle is operated with the warning light illuminated, stable braking may not be obtained depending on road conditions. Have the vehicle checked and repaired by an authorized UD Trucks dealer or other qualified service facility.**

NOTE:

- **Take care since the anti-lock brake system serves as only a conventional brake system while the warning light is on.**

Engine coolant level warning light

When the engine coolant level decreases below a specified level, the warning light comes on and at the same time a buzzer will sound to warn the driver.

- If the warning light comes on and the temperature gauge indicator is still within the normal zone, immediately stop the vehicle in a safe location, stop the engine, and then add engine coolant. When supplying the coolant, also check the cooling system for leaks.
- If the warning light comes on and the temperature gauge indicator is approaching to the high temperature zone or in the high temperature zone, keep the engine idling and do not touch the coolant reservoir tank cap until the engine coolant temperature drops to the normal range.

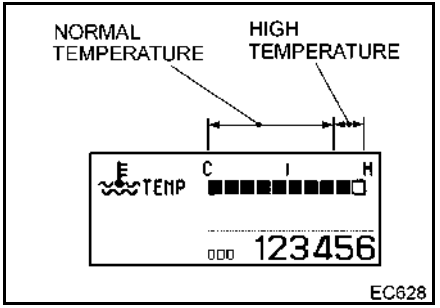

EC628

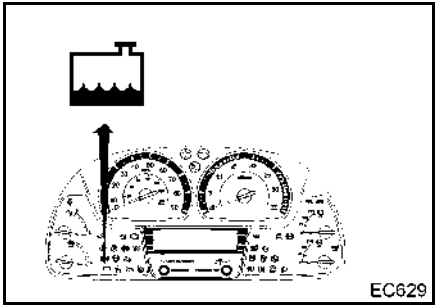
EC629

https://truckmanualshub.com/

⚠ CAUTION

- **Do not continue driving when the warning light is illuminated and the buzzer sounds.**
- **Continuing to drive with too little coolant should absolutely not be done because it could cause overheating.**

1. When the warning light comes on and the warning buzzer sounds, immediately move the vehicle to a safe place. Apply the parking brake and shift the transmission to the neutral position or P (Park) position.
2. After the engine cooling system cools down, open the radiator filler cap.
   If the engine coolant level is below the bottom of the filler neck, add the proper coolant solution until the level reaches the bottom of the filler neck.
3. Also check the engine coolant level in the coolant reservoir tank. If coolant level in the reservoir tank is below the LOW line, coolant will be insufficient. Add the coolant to the HIGH line on the coolant reservoir tank. If an emergency exists and it is not possible to add the proper coolant solution, then add plain municipally supplied water. If plain water is added in an emergency, restore the genuine Long Life Coolant that has been diluted 50% as soon as possible.

⚠ WARNING

To avoid serious injury from hot coolant or steam release:

- **Do not open the radiator filler cap while the engine cooling system is still hot; wait until it cools. If the radiator cap is removed right after the engine is shut off, scalding fluid and steam may blow out under pressure and cause serious burn injuries.**
- **Be extremely careful when opening the radiator filler cap. Place a thick cloth on the cap and slowly loosen it to allow a reduction in pressure in the cooling system.**

CAUTION

- **Do not add water or coolant when engine is hot to avoid serious damage to the cylinder block or head.**
- **Do not operate the engine for a prolonged period without coolant solution.**

4. Check the cooling system for coolant leaks and radiator blockage. If required have the cooling system repaired by an authorized UD Trucks dealer or other qualified service facility.

https://truckmanualshub.com/

Parking brake warning light

The warning light comes on when the parking brake valve is engaged. The light also comes on when air pressure drops below approximately 54 psi (373 kPa) (3.8 kgf/cm^2). Be sure that the warning light is off before moving the vehicle.
If the air pressure drops to approximately 40 psi (275 kPa) (2.8 kgf/cm^2) in both front and rear brake system, the parking brake will automatically be applied.

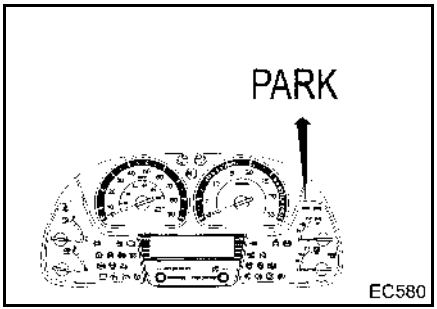

In this case, refer to the item “Releasing parking brake” in In case of emergency / Trouble-shooting.

⚠ WARNING

- **Never operate the vehicle with the warning light on. The service brake will not provide normal braking action. The vehicle should be towed and not to driven to the UD Trucks dealer.**

Brake warning light

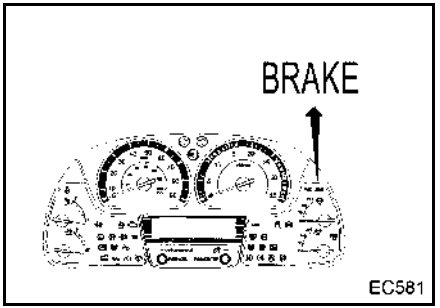

<Brake shoe clearance (Not applicable to UD3300)>
The warning light comes on and the warning buzzer sounds if brake shoe clearance is excessive or if there is a brake system malfunction. The buzzer will stop when the vehicle is stopped and the parking brake is engaged.
Have the brake system checked and repaired by an authorized UD Trucks dealer or a qualified brake service facility.

https://truckmanualshub.com/

⚠ WARNING

- **Never operate the vehicle with the warning light on and a warning buzzer sounding. The brakes may provide less effective action or become totally ineffective.**

<Brake fluid level (Not applicable to UD3300)>

When the fluid level in the brake fluid reservoir drops below the normal operating level, the warning light comes on and a warning buzzer sounds. The buzzer stops when the vehicle is stopped and the parking brake is engaged.

Have the brake system checked and repaired by an authorized UD Trucks dealer or a qualified brake service facility.

⚠ WARNING

- **Never drive the vehicle while the warning light is on and the warning buzzer is sounding. The brakes will not provide normal braking effectiveness and may become totally ineffective. Determine cause of brake fluid loss, repair system, and refill brake fluid.**

Tilt lock warning light

If the tilt lock of the cab is improperly latched, the warning light will come on and the warning buzzer will sound.

When the tilt lock is secure, the warning light will go off and the warning buzzer will stop sounding.

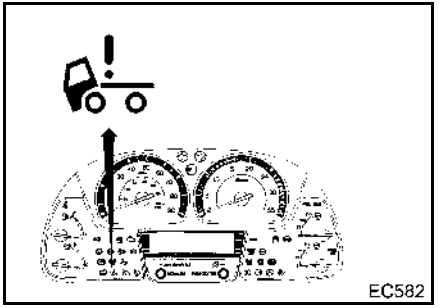

When the warning light comes on and the warning buzzer sounds, immediately move the vehicle to a safe place. To do this, apply the brake slowly.

Correct the tilt lock of the cab, and make sure that the cab is securely locked and the warning light is off. If the warning light does not turn off, have the tilt lock system checked at

https://truckmanualshub.com/

an authorized UD Trucks dealer or other qualified service facility.

⚠ WARNING

- **Do not operate the vehicle when the warning light is on and the warning buzzer is sounding. Otherwise, if the brake is used during driving, the cab could raise, causing a serious accident.**

ATM shift limit warning light (Allison 1000, 2200 and 2500 series)

The warning light comes on when there has been an error in operation or when the safety circuit has been activated. It indicates that the change from the current range to another specified range cannot be done.
For Allison 3000 series, refer to the "SHIFT LIMIT warning message" on page 10-30.

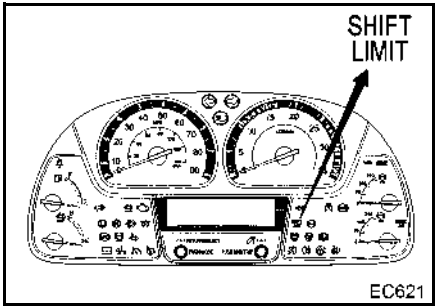

CAUTION

- **Do not drive the vehicle if the warning light remains on. Have the vehicle checked by an authorized UD Trucks dealer**

Shift limit

Under the following conditions, the transmission control module (TCM) prohibits gear shifting for the purpose of transmission protection, as the reaction of diagnostic trouble code (DTC) or a safety measure of optional functions.

1. Idling too high: At 1,000 rpm or higher, shifting from the Neutral is prohibited.
2. Forward/reverse change-over: When the vehicle is moving at over a specified speed, forward/reverse change-over is prohibited. If this occurs, stop the vehicle, and shift first to P or N. then depress the brake pedal and shift to the desired driving range.
3. Transmission failure: When the TCM receives abnormal signals, gear shifting is limited to protect

https://truckmanualshub.com/

the system from major troubles. The SHIFT LIMIT warning light and the ATM SYSTEM warning light illuminate and transmission is fixed to a safety range. When the lock up clutch is engaged, it will be disengaged.

Exhaust gas high temperature indicator light

This indicator does not indicate a system malfunction, however it alerts the driver of the high temperature of the system.

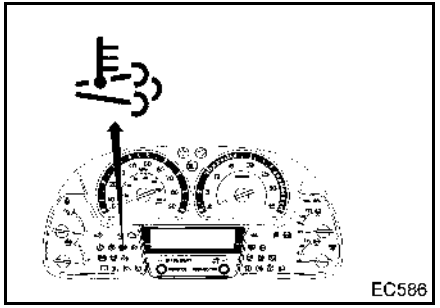

⚠ DANGER

- **Exhaust component and exhaust gas are at extremely high temperature when this warning light becomes on.**
- **When parking vehicle keep away from people, or any flammable materials, vapors or structures.**

ATM maintenance information light

This light will illuminate when the ATM should be serviced as soon as possible for its components such as fluid, filter or clutch.

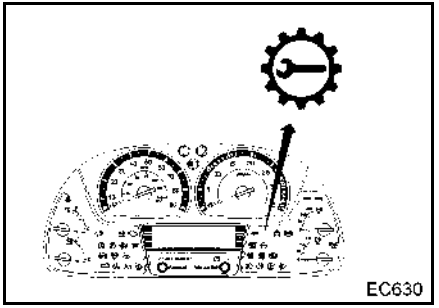

For details, refer to the section "Automatic transmission maintenance schedule" on page 11-12.

CAUTION

- **Do not continue driving the vehicle with the ATM maintenance information light on. Doing so may cause damage to the ATM.**

https://truckmanualshub.com/

Turn signal and hazard indicator light

When the turn signal switch is operated, the left or right indicator light flashes. When the hazard warning flasher switch is turned to the ON position, the left and right indicator lights flash simultaneously.

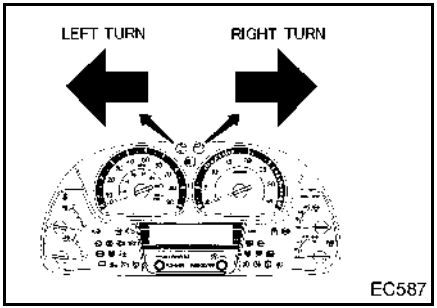

Exhaust brake indicator light

The indicator light will come on if the exhaust brake switch is turned on and the exhaust brake is operating.

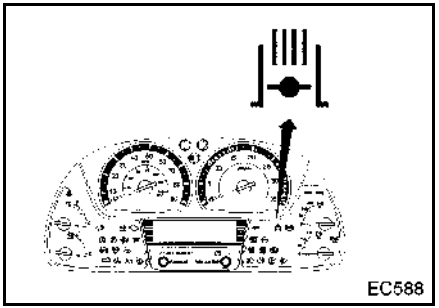

Intake air heater indicator light

The indicator light will come on when the ignition key is turned to the ON position to preheat intake air. When the light goes off, the engine is ready to start.

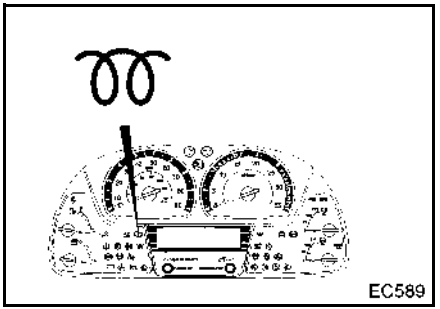

NOTE:

- **Do not crank the engine until the indicator light goes off.**

The intake air heater will not activate unless the engine coolant temperature drops below normal operating temperature.
The engine coolant temperature determines whether the indicator light stays off or comes on when the ignition key is turned to the ON position.

https://truckmanualshub.com/

High beam indicator light

This indicator light comes on when the dimmer switch is set to the high beam position with the lighting switch in the second position or the passing switch is operated.

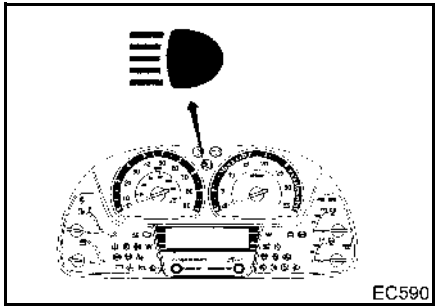

Automatic transmission O/D OFF indicator light (Allison 1000, 2200 and 2500 series)

This indicator comes on when the overdrive switch is turned OFF. The overdrive switch is located on the selector lever.

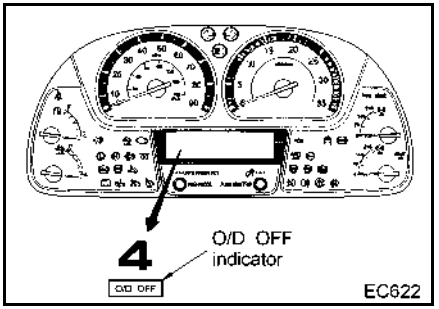

POWER MODE indicator light

The indicator light will come on when the power mode switch is set to the power mode.

While operating, the indicator light in the switch come on. (Allison 1000, 2200, 2500 series)

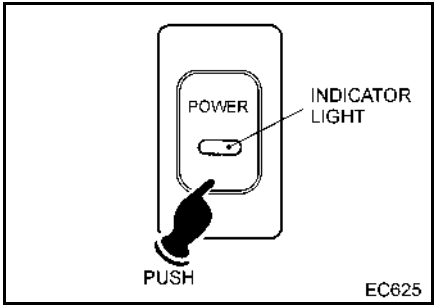

Allison 1000, 2200, 2500 series

While operating, both the indicator light in the power mode switch and the indicator light on the multi-display monitor come on. (Allison 3000 series)

https://truckmanualshub.com/

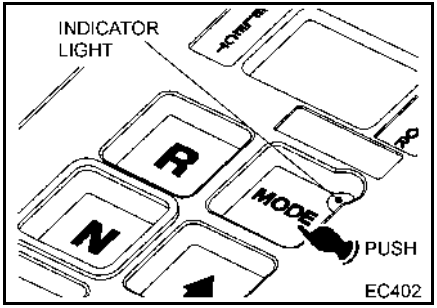

Allison 3000 series

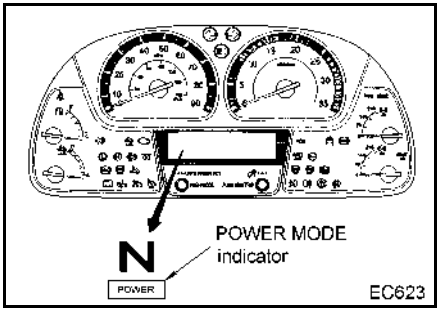

Allison 3000 series

SWITCHES AND BUTTONS

Engine throttle control knob

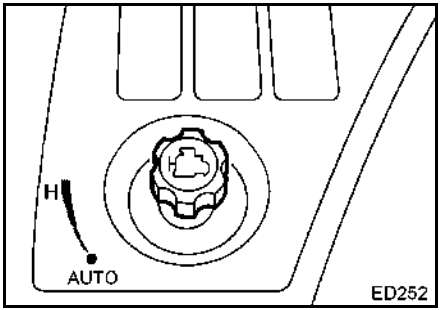

The engine throttle control knob, located to the left of the steering column, can be used to adjust engine idling speed. Normal engine idling speed is 550 rpm. If equipped with automatic transmission, make sure the engine idling speed is 550 rpm at the forward range.

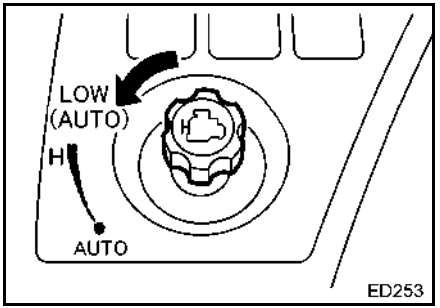

The automatic adjustment of engine idling speed

- When the knob is turned all the way to the left (counterclockwise), automatic idling mode will be reached, and the engine idling speed will be adjusted automatically according to the temperature of the engine coolant.
- Normally, this should be turned all the way to the left (counterclockwise).

https://truckmanualshub.com/

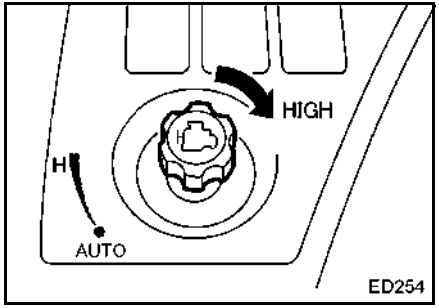

The manual adjustment of engine idling speed

- Stop the vehicle and apply the parking brake before performing manual adjustment.
- When the knob is turned to the right (clockwise), the mode changes from automatic idling mode to manual adjustment mode, the engine speed will increase, and adjustment up to about 980 rpm will become possible.

⚠ CAUTION

- **The manual adjustment mode is canceled while driving. Set to the automatic adjustment mode while driving.**
- **Turn the knob carefully, or the engine speed may increase too quickly.**

Engine warm-up switch

- The engine warm-up system operates the exhaust shutter during idling to shorten the engine warm-up time and temperature of the engine coolant.
  Note that the engine warm-up system can only be used when the vehicle is stopped.
- For information regarding the operation method, refer to the section “To quickly warm up the engine” of Vehicle Operation.

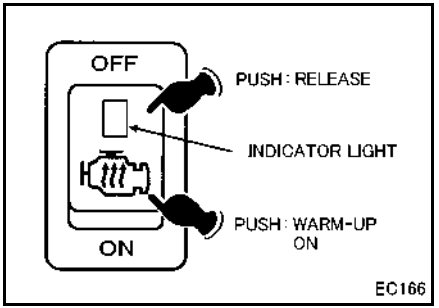

https://truckmanualshub.com/

⚠ WARNING

- **Do not warm up the engine in areas with poor ventilation.**

⚠ CAUTION

- **When not warming up the engine, leave the engine warm-up switch OFF. Leaving it on could worsen the fuel economy when idling.**
- **Leave the engine warm-up switch OFF when the transmission PTO is operating.**
- **When turning ON the engine warm-up switch, put the throttle control knob in the AUTO position. Turning the engine warm-up switch to ON when at high speed could generate black smoke, although this only occurs rarely.**

NOTE:

- **Even if the engine warm-up switch is ON, the engine warm-up system will cancel it if the vehicle is being driven, the engine speed is increased, or the clutch pedal is depressed.**
- **If the engine coolant temperature rises abnormally when the engine warm-up switch is ON, the engine warm-up system will automatically cancel it.**

Windshield wiper, washer and exhaust brake switch

Windshield wiper and washer

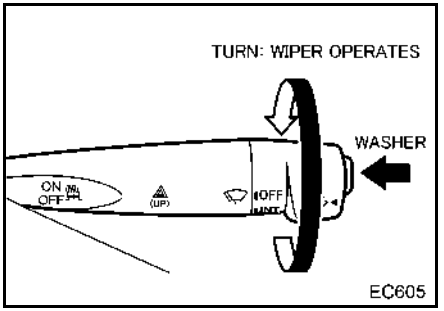

The windshield wiper control is located on the lever mounted on the right side of the steering column.

- Turning this switch turns on the wipers, and washer liquid is sprayed while pushing the switch on the end of the lever.

  INT: Intermittent operation
  LO: Operates at a low speed
  HI: Operates at a high speed

https://truckmanualshub.com/

- Operating the wipers when the wiper blades are stuck or frozen to the glass will cause the wiper stop function to operate and temporarily stop the wipers (for about 10 seconds). When this happens, be sure to turn off the wiper switch and remove what is causing the wiper blades to stick before operating the wipers again.

⚠ WARNING

- **Do not use cooling system solution in the windshield washer fluid reservoir. When sprayed on the windshield, cooling system solution can significantly affect visibility.**
- **To reduce the possibility of washer fluid freezing on the windshield which may reduce visibility, use the defroster to warm the windshield.**

CAUTION

- **Do not operate the windshield wipers when the windshield is dry. Dry wiper operation will scratch the windshield.**
- **To avoid damage to the washer motor, do not operate the windshield washer continuously for more than 20 seconds or with no washer fluid in the tank.**
- **To avoid damage to the wiper blades, do not operate the wipers when the windshield is iced over.**
- **The windshield wiper motor is protected by a circuit breaker in addition to a fuse. If the motor overheats, due to overload caused by heavy snow, etc., the wiper will remain stopped until the motor cools. Be sure to have the cause of the overload corrected.**

Exhaust brake

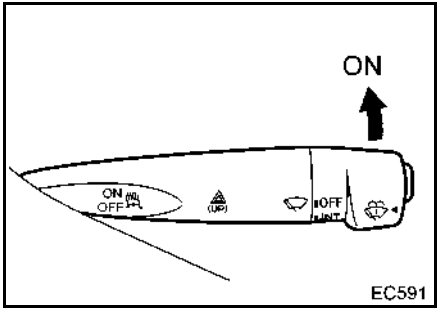

Operating instructions for exhaust brake

Exhaust brake provides additional engine braking effect. Use it as an auxiliary brake when descending a prolonged grade or when decelerating from high speeds. The exhaust brake is controlled by the exhaust brake switch lever located on the right side of the steering column.

To apply the exhaust brake, move the lever upward to the ON position with the accelerator and clutch pedals released and shift gear in other than neutral. An indicator light on the instrument panel comes on when the

https://truckmanualshub.com/

lever is in the ON position and the exhaust brake is operating.
The exhaust brake is activated only when both clutch and accelerator pedals are released. The purpose of these provisions is to protect the engine and to improve driveability.

To release the exhaust brake, move the lever downward to the OFF position. Depressing either the accelerator or clutch pedal can release the exhaust brake, but it is preferable to use the lever to release the exhaust brake.

NOTE:

- **The wheels could slip when using the exhaust brake while driving on slippery roads or over bumps, etc., which could cause the ABS to operate and the exhaust brake to be temporarily cancelled and the indicator light to turn off, but this is normal ABS operation and is not a problem. Try to drive carefully taking into consideration the road conditions, the inter-vehicular distance, and other factors.**

If the exhaust brake is released by depressing the accelerator pedal suddenly and not by operating the lever, it may cause fuel injection into the engine with a blocked exhaust system and subsequent puff of black smoke and possible exhaust pipe overheating.

While the vehicle is stationed, confirm exhaust brake actuation by following procedures:

1. Move the exhaust brake switch lever upward to the ON position
2. Confirm that the exhaust brake indicator light illuminates and that the engine sound changes at the same time.

Lighting, dimmer, passing and turn signal switch

This switch lever mounted on the left side of the steering column operates and dims the headlights. It also serves as a turn signal and passing switch.

Lighting

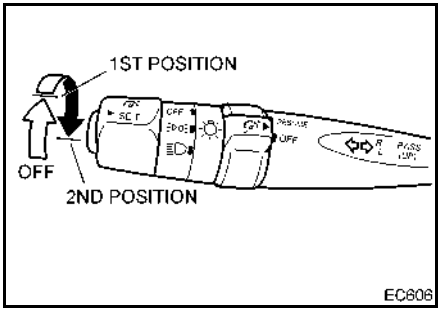

Turn the knob on the end of the switch lever to the 1st or 2nd position to operate the following lights.

https://truckmanualshub.com/

Light name	Knob position	
	1st	2nd
Tail light	☼	☼
License plate light	☼	☼
Front position light	☼	☼
Instrument cluster illumination light	☼	☼
Heater or Air conditioner control illumination light	☼	☼
Automatic transmission selector control illumination light	☼	☼
Clearance and identification light	☼	☼
Headlight		☼
*Daytime running light	☼	

* The daytime running lights comes on when:
- The ignition key is turned ON.
- The headlight is turned off (with the lighting switch in the OFF or 1st position).
- The parking brake is released. (After the headlight comes on, it will not turn off when operating the parking brake.)

NOTE:
- **If the lighting switch is in the 1st position, daytime running light does not go out by turning off the key switch. The light goes out when the lighting switch is turned off.**

Dimmer, passing and turn signal

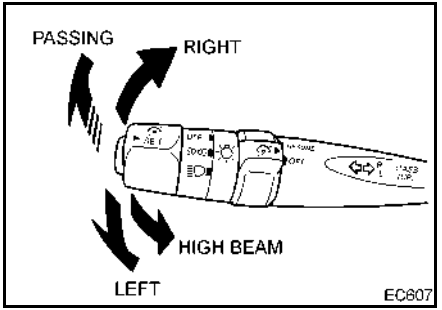

To operate the left turn signal, pull the turn lever on the left side of the steering column down beyond the resistance. To operate the right turn signal, push the lever up beyond the resistance. The lever will automatically return to the neutral position after the turn is completed. When operating the left or right signal, confirm that the TURN SIGNAL AND HAZARD indicator light flashes. When the ON-OFF intervals are unusually short, the bulb is probably burned out.

https://truckmanualshub.com/

⚠ WARNING

- **Replace the burned-out bulb as soon as possible.**

To change the headlights to high beam, push the turn lever forward. To return the headlights to low beam pull the lever to its normal position. An indicator light on the instrument panel comes on when the headlights are on high beam.

The headlight high beams can be momentarily operated as a signal when passing another vehicle by pulling the turn lever towards the driver. The lever will return to the neutral position when released. Return the headlights to the low beam position as a courtesy when overtaking vehicles or meeting oncoming traffic.

Hazard warning flasher switch

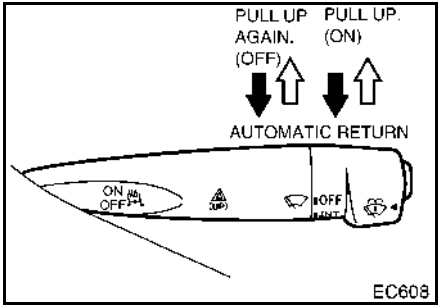

The hazard warning flasher switch is located on the lever mounted on the right side of the steering column.
Use the switch to warn approaching vehicles during an emergency stop or other extraordinary conditions. Pull the switch lever to activate the hazard warning flashers. When the switch is operated, both the outside left and right turn signals and TURN SIGNAL AND HAZARD indicator lights flash. Pull the switch lever to turn off the flashers. The switch can be used with the ignition key in any position.

NOTE:

- **Turn flasher signals do not work when the switch is operating.**

Cruise Control

Cruise Control is a device that allows a vehicle to be driven at a set constant speed without depressing the accelerator pedal with your foot. This is useful when driving on expressways and at other times when there is no need to accelerate or brake frequently. Cruise Control is engaged by switching it on at the speed you want to maintain.

https://truckmanualshub.com/

⚠ WARNING

To prevent loss of control and an accident, do not use Cruise Control under the following road conditions.

- **When the roads are slippery, such as when they are icy or snowy or wet.**
- **When descending steep slopes and engine braking is not sufficient, thus allowing the vehicle to exceed the set speed.**
- **When driving in traffic conditions that require frequent acceleration and deceleration, such as roads with heavy traffic on city streets, winding roads or roads with sharp curves.**

Cruise Control operation instructions

To set Cruise Control to preferred constant speed

1. Make sure the exhaust brake switch is in the OFF position.
2. Turn the Cruise Control main switch to the ON position. Confirm that the Cruise Control ON indicator light is illuminated.

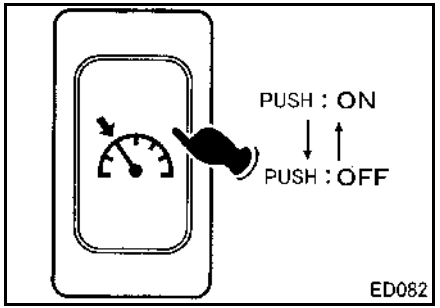

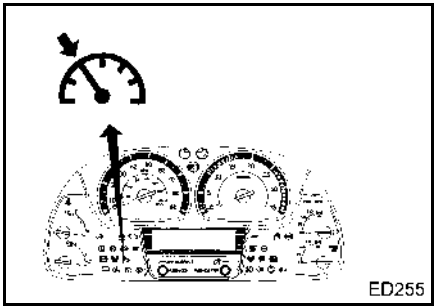

3. When the preferred speed is reached, press and release the Cruise Control Set and Coast Button located at the end of the combination switch.

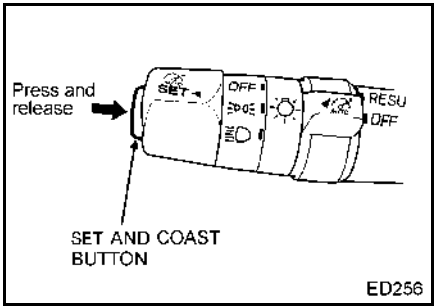

https://truckmanualshub.com/

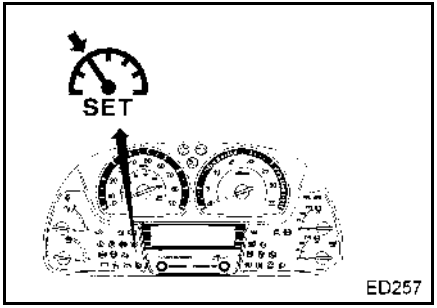

4. Remove your foot from the accelerator pedal.

To temporarily accelerate

Accelerate by depressing the accelerator pedal.

You can then return to the originally set speed by removing your foot from the accelerator pedal and allowing the vehicle to gradually slow down to the set speed.

To increase the set speed

There are three ways to increase speed:

<Tip up operation>

- Press and immediately release (within 0.5 second) the Accelerate and Resume switch to increase the set speed 0.6 mph (1 km/h) at a time.

<Set acceleration operation>

- Press and hold the Accelerate and Resume switch until the preferred speed is reached, and then release the switch to set the speed.

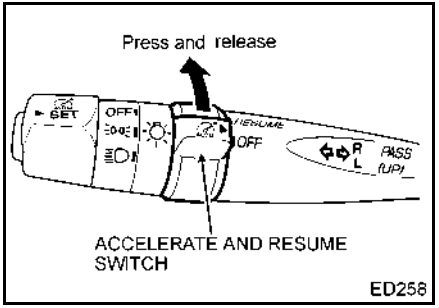

<Acceleration pedal operation>

- Depress the accelerator pedal to increase to the preferred speed quickly, and when the preferred speed is reached, press and release the Set and Coast Button to set the speed.

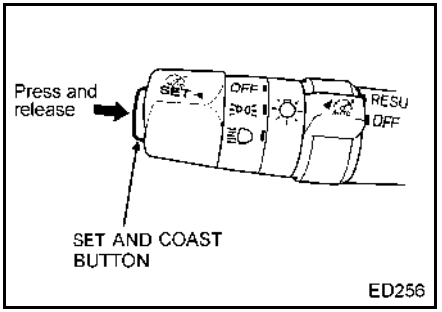

To decrease the set speed

There are three ways to decrease speed:

<Tip down operation>

- Press and immediately release (within 0.5 second) the Set and Coast Button to decrease the set speed 0.6 mph (1 km/h) at a time.

https://truckmanualshub.com/

<Set and Coast operation>

- Press and hold the Set and Coast Button until the preferred speed is reached, and then release the button to set the speed.

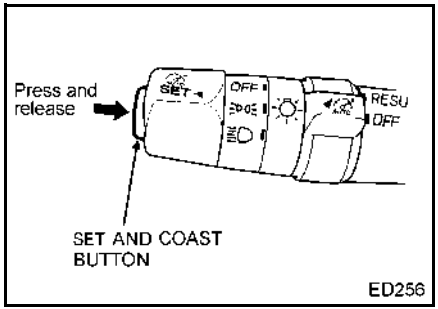

NOTE:

- **If you continue to press and hold the Set and Coast Button, the speed will not drop below approximately 22 mph (35 km/h), it is set at a speed of approximately 22 mph (35 km/h).**

<Brake pedal operation>

- Depress the brake pedal to decrease to the preferred speed quickly. When the preferred speed is reached, press and release the Set and Coast Button to set the speed.

To temporarily cancel the Cruise Control

Cruise Control will be temporarily cancelled in the following situations.

- When you depress the brake pedal.
- When you depress the clutch pedal.
- When the gear shift lever or selector lever is moved to neutral.
- When the exhaust brake switch is switched to the operation position.
- When the vehicle speed drops below approximately 22 mph (35 km/h).

When the Cruise Control is temporarily cancelled, Cruise Control ON indicator light continues to illuminate and Cruise Control SET indicator light turns off.

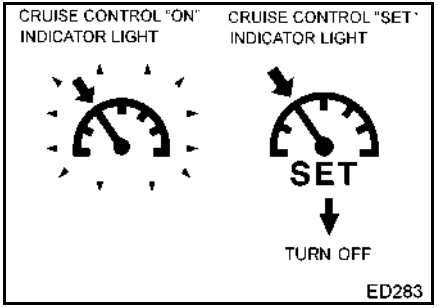

NOTE:

Cruise Control will be temporarily cancelled in the following situations.

- **When the Set and Coast Button and the Accelerate and Resume switch are pressed at the same time.**
- **When a malfunction occurs within the system.**

https://truckmanualshub.com/

⚠ WARNING

- **Before cancelling the Cruise Control, make sure that no car is too close. Cancelling the Cruise Control can significantly reduce vehicle speed.**

To resume the speed that was set before cancellation

When Cruise Control has been temporarily cancelled, pressing and releasing the Accelerate and Resume switch will cause the vehicle to resume the speed that was set before cancellation.

Resume cannot be performed when vehicle speed is less than 19 mph (30 km/h).

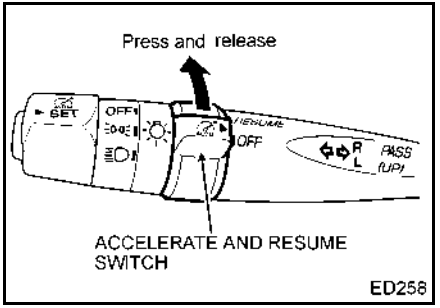

⚠ WARNING

- **When resuming your set speed, do not press and hold the Accelerate and Resume switch for any length of time. Doing so causes the set speed to increase.**

To cancel the Cruise Control

The following situations will cancel the Cruise Control and cause the Cruise Control ON and SET indicator lights to turn off.

- When the Cruise Control main switch is switched to the OFF position.
- When the ignition key is turned to the OFF position.

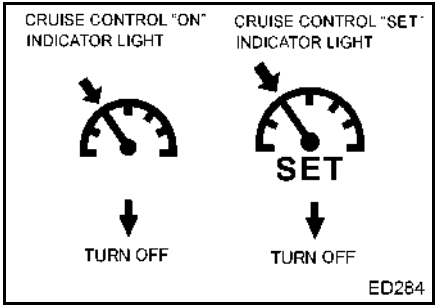

⚠ WARNING

- **To prevent the vehicle from accidentally starting to move, when not using Cruise Control, switch the Cruise Control main switch to the OFF position.**

https://truckmanualshub.com/

Illumination control rheostat

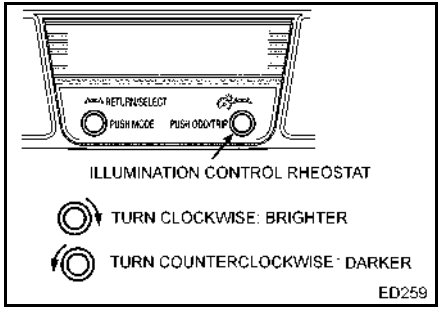

- The illumination in the combination meter turns on when the lighting switch is in the 1st or in the 2nd position.
- The brightness can be adjusted by turning the switch to the right and left. Turn it to the right for brighter illumination and to the left for darker illumination.
- When the brightness is adjusted while the combination meter is illuminated, the brightness of the multi-display meter screen is simultaneously adjusted.

NOTE:

- **When the combination meter is not illuminated, the brightness of the multi-display meter screen cannot be adjusted.**
- **If a warning or an indicator light interrupts the monitor display of the multi-display meter, the monitor screen is brightened to alert the driver regardless of the adjusted illumination.**

Transmission PTO switch

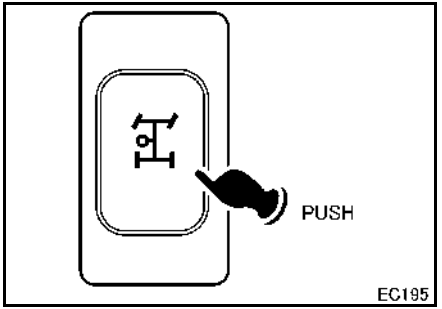

This switch located on the instrument panel to the left of the steering column, couples and uncouples power flow to the transmission PTO. To turn the PTO ON, idle the engine, depress the clutch pedal fully, and depress the switch. The PTO indicator and operation message will come on. To turn the PTO OFF, idle the engine, depress the clutch pedal fully, and depress the switch. The PTO indicator and operation message will go out.

https://truckmanualshub.com/

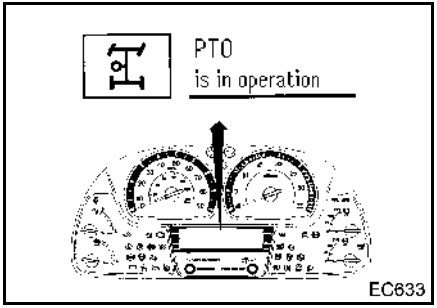

CAUTION

- **Never operate the PTO while driving the vehicle.**
- **Operate the PTO switch only when the vehicle is stopped. The transmission gears may be damaged if the switch is operated while the vehicle is moving.**
- **Turn the PTO switch off before starting the vehicle.**
- **Depress the clutch pedal fully before activating the PTO switch to the ON or OFF position.**

Power mode switch (ATM specification vehicles)

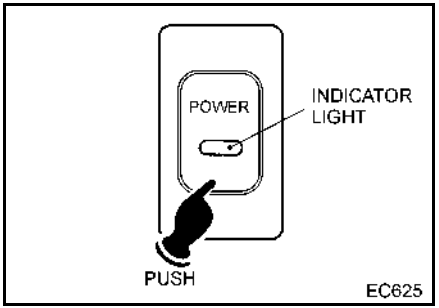

Allison 1000, 2200, 2500 series

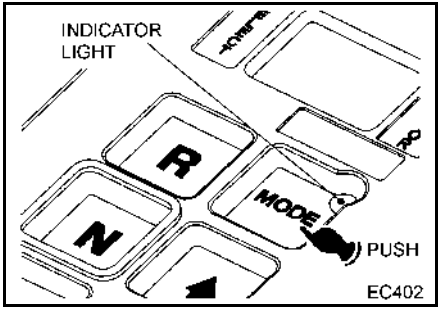

Allison 3000 series

This switch is located on the instrument panel to the right of the steering column (Allison 1000, 2200 and 2500 series) or on the selector switch to the right of the driver's seat (Allison 3000 series).

Select the normal or power mode with the mode change switch depending on the driving condition.

When the switch is pushed once, the power mode will operate. When the switch is pushed again, operation stops (normal mode). While operating, the indicator light in the switch illuminates and also the indicator on the multi-display comes on (Allison 3000 series only).

https://truckmanualshub.com/

Air suspension dump switch

<UD2600 and UD3300 equipped with air suspension>

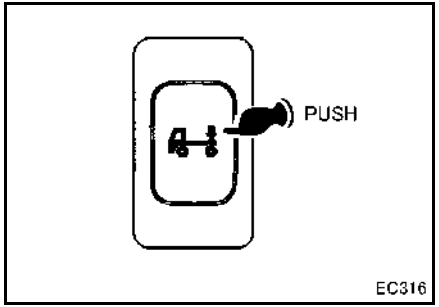

This switch is located at the right side of the heater control.
By operating this switch, the vehicle bed can be lowered by exhausting air from the air spring at the rear axle to facilitate loading/unloading work.

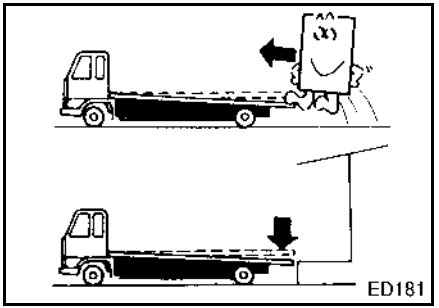

Operation procedure

Operation procedure for lowering the bed

1. Stop the vehicle on a level ground.
2. Pull up the parking brake valve and turn the ignition key to the ON or ACC position.
3. Before operating the air suspension switch, check that there is no person or object under or near the vehicle.
4. After confirming the safety, push the air suspension dump switch. Air is exhausted from the air spring at the rear axle and the bed is lowered.

Procedure for returning the bed to the normal driving height

1. Check that there is no person or object under or near the vehicle.
2. After ensuring the safety around the vehicle, start the engine and push off the air suspension dump switch. The bed is returned to the normal driving height.

CAUTION

- **Before operating the air suspension dump switch, check that there is no person or object under or near the vehicle.**
- **Before turning ignition key to the OFF position or releasing the parking brake, make sure that the bed is in the normal driving height.**

  If the ignition key is turned to the OFF position or the parking brake is released while the bed is in the lowered state, the bed will be automatically returned to the normal driving height.

https://truckmanualshub.com/

- **The air suspension dump switch will be activated only when the parking brake valve is pulled up and the ignition key is turned to the ON or ACC position.**
- **If the air suspension dump switch is accidentally pressed during driving, the bed will not be lowered for safety but a warning buzzer will sound.**
  BY pressing the dump switch again, the warning buzzer stops.

Mirror heater switch (Optional)

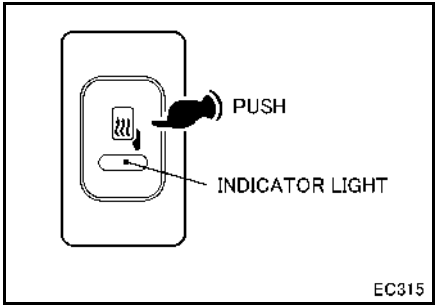

This switch is located at the right side of the steering column.
By turning on the mirror heater switch, the heaters incorporated in the right and left outside mirrors are energized and the mirrors are defogged.
While the heaters are energized, the indicator light in the switch stays illuminated.

CAUTION

- **After removing the fogging of the mirrors, immediately turn off the switch.**
  If not, the battery may go dead.

https://truckmanualshub.com/

Power mirror switch (Optional)

This switch is located on the instrument panel below the heater control. This switch is used to adjust the angle of the rear view mirrors on the driver's side and passenger side. It will operate when the ignition key is turned to the ON position.

- Push the right/left selection switch and then move the operation switch up or down, left or right to adjust the view to the rear.

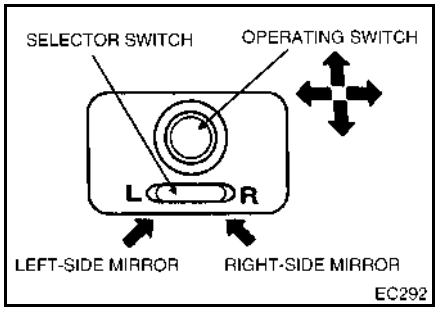

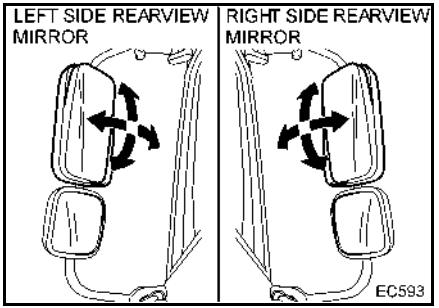

Horn

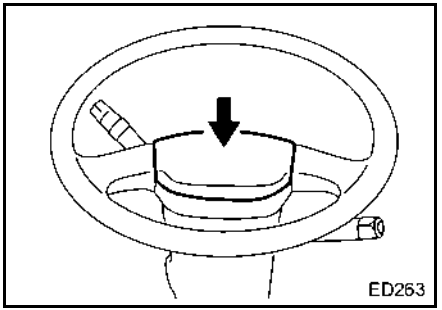

The horn pad is mounted in the center of the steering wheel. Press on the pad to sound the horn.

https://truckmanualshub.com/

DPF SYSTEM

- The PM reduction device collects the soot (particulate matter) that is part of exhaust gas through the aftertreatment diesel particulate filter (DPF) located in the muffler, and then continuously regenerates (burns) the soot by oxidation catalysis.
- When continuous DPF regeneration cannot be performed due to low speed driving, the automatic DPF regeneration starts to burn (regenerate) the soot to prevent excessive accumulation in the DPF that is located inside the muffler.
- When automatic regeneration does not operate due to low speed driving or starting/stopping the engine many times while driving, manual regeneration must be performed after stopping the vehicle.
- Based on the amount of soot accumulated in the DPF, perform DPF regeneration following the table below.

NOTE:

- **If a certain amount of soot from exhaust gas accumulates in the DPF, the PM reduction device automatically burns (regenerates) the collected soot. Depending on the driving condition, soot may not be completely burned (regenerated). In that case, the DPF clogging warning light and the indicator light that is built in the manual forced regeneration switch will flash to indicate that manual DPF regeneration is needed.**

https://truckmanualshub.com/

Soot deposit accumulation	Status of the vehicle	Cleaning method
Little ↓	Normal driving	(Continuous regeneration is performed while driving at a high speed or with a high load, therefore, soot is burned and cleaned.)
	Automatic DPF regeneration	When a certain amount of soot is accumulated, the soot is automatically burned and cleaned.
	Flashing of the DPF clogging warning light and the indicator light that is built in the manual forced regeneration switch	Stop the vehicle in a safe location, and then perform manual DPF regeneration.
Large	DPF system warning (Amber) and warning message are displayed	Contact your nearest UD Trucks dealer for inspection.

Device information

Manual forced regeneration switch

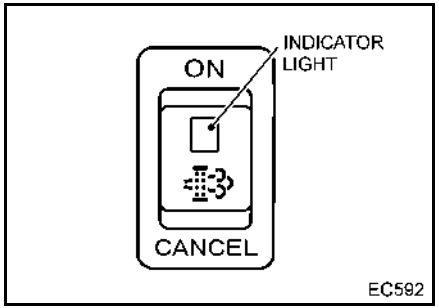

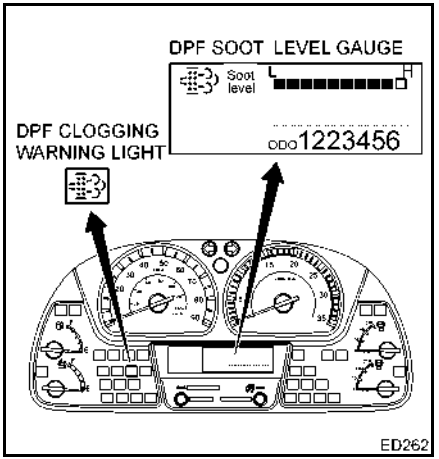

DPF clogging warning light

- The DPF clogging warning light will blink if manual DPF regenaration should be performed due to soot accumulation in the DPF. When the warning light blinks, perform the following procedure.
- Also, when the ignition key is turned to the ON position, it illuminates for 1 second for a bulb check.

Procedure

Stop the vehicle in a safe location, and then perform manual DPF

https://truckmanualshub.com/

regeneration by operating the manual forced regeneration switch.

Manual forced regeneration switch

- By operating this switch, the soot collected in the DPF is manually burned (regenerated) to keep the function of the exhaust gas cleaning device properly.
  For details on how to use this switch, refer to the “Manual DPF regeneration operation” section.
- The indicator light that is built in the switch will blink just as the DPF clogging warning light blinks if manual cleaning should be performed due to soot accumulation in the DPF.

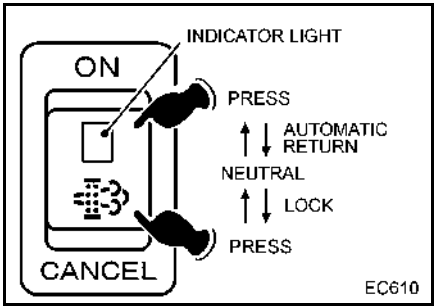

DPF soot level gauge

- The DPF soot level gauge indicates the accumulation level of the soot in the DPF. Check if necessary.
- For details on how to display, refer to the “Multi-display monitor” section in “INSTRUMENT AND CONTROLS”.

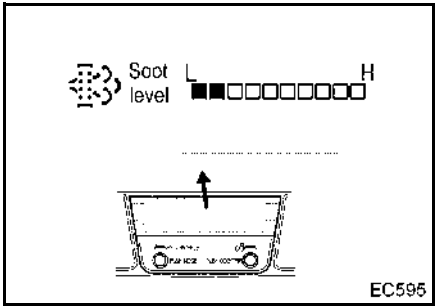

Automatic DPF regeneration

- To prevent excessive accumulation of soot in the DPF, the soot is automatically burned and cleaned. Though engine noise and engine speed at idle will vary, the vehicle can be driven as usual.

⚠ WARNING

- **Immediately after the vehicle is stopped or while the system is in the cleaning mode, the area around the muffler and exhaust gas are extremely hot. Do not stop the vehicle in a location where there are flammable materials such as dried grass or paper waste.**
- **If there are flammable materials around the vehicle, a fire may occur. This could cause burns from the heated exhaust gas.**

NOTE:

- **While performing automatic regeneration, engine noise will vary and engine speed at idle will increase. This does not indicate a malfunction.**

https://truckmanualshub.com/

Manual regeneration (when the DPF clogging warning light blinks)

- If the vehicle is driven at a low speed or the engine is started/stopped many times while driving, the soot in the DPF may not be burned and cleaned automatically.
- In this case, the DPF clogging warning light informs the driver that the soot in the DPF must be burned and cleaned manually.

CAUTION

- **When the DPF clogging warning light blinks, operate the manual forced DPF regeneration switch to perform the cleaning manually, and then burn and clean the soot in the DPF.**
  If driving is continued, clogging in the DPF or a system malfunction may occur.

NOTE:

- **If the vehicle is driven under any of the following conditions, the DPF clogging warning light may blink many times because the automatic regeneration may not operate.**
  ・The vehicle is frequently driven at a low speed.
  ・The engine is started/stopped many times while driving.
  ・The vehicle is driven many times for only a short distance.
  ・The engine is always stopped before it warms up.

Manual DPF regeneration operation

- When the DPF clogging warning light blinks, perform manual DPF regeneration according to the following procedure, and then burn and clean the soot in the DPF. Note that manual regeneration can be performed when the indicator light blinks or automatic DPF regeneration is started.
- The approximate time required for manual DPF regeneration depends on the conditions the last time the vehicle was driven and the engine idling status, however normally it takes 25 minutes.

1. Stop the vehicle in a safe location, and then keep the engine idling.
2. Be sure to apply the parking brake. Place the gearshift lever in the neutral position. Do not depress the accelerator pedal.
3. Press the ON side of the manual forced regeneration switch.
4. When the DPF regeneration starts, the warning of DPF regeneration appears on the multi-display monitor. The engine speed at idle will increase.

https://truckmanualshub.com/

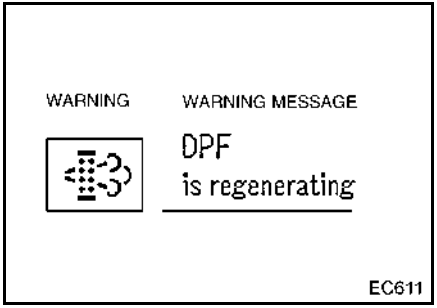

5. When the warning of DPF regeneration by the exhaust gas cleaning device is no longer displayed on the multi-display monitor, manual DPF regeneration is completed. The engine speed at idle will return to normal.
6. After manual regeneration is completed, the vehicle can be driven as usual.
7. To stop manual regeneration partway, press the CANCEL side of the manual forced DPF regeneration switch. When manual DPF regeneration is stopped partway, the warning of regeneration restriction of the exhaust gas cleaning device appears on the multi-display monitor.

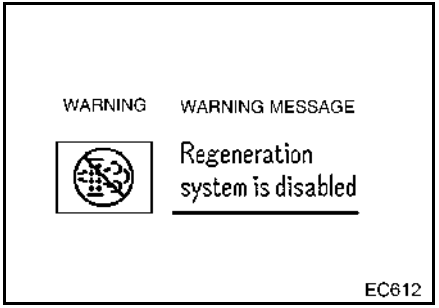

⚠ WARNING

- **Do not perform manual DPF regeneration in a location with poor ventilation. Exhaust gas may cause carbon monoxide poisoning especially in an enclosed location, such as in a garage, indoors, etc.**
- **Do not perform manual DPF regeneration in a location where there are flammable materials such as dried grass or paper waste. The temperature of the exhaust gas and the area around the exhaust pipe and muffler become high during the cleaning mode. Therefore, if there are flammable materials nearby, a fire may occur.**
  In addition, never allow your body to contact the exhaust gas and the area around the exhaust pipe and muffler. Doing so may cause burn injuries. If the vehicle is stopped over a road surface that is painted, the road surface may be discolored.

https://truckmanualshub.com/

NOTE:

- **The engine speed at idle increases while manual DPF regeneration is being performed. This is due to a temperature increase of the exhaust gas to burn (regenerate) the collected soot. This does not indicate a malfunction.**
- **While performing manual DPF regeneration, the aftertreatment hydrocarbon doser system supports the manual DPF regeneration by automatically injecting fuel in the exhaust pipe.**
- **If the temperature of the inside of the muffler is higher, the manual DPF regeneration is completed in a shorter time.**
- **Manual DPF regeneration is completed in a shorter time when the engine is hot immediately after the vehicle is stopped than when the engine is cool.**
  When the engine is cool, the time required for DPF regeneration takes longer because the DPF regeneration is performed after the engine warms up.
  The time spent for warming up the engine depends on the outside temperature, but generally it takes about 5 to 10 minutes. Therefore, manual DPF regeneration should be performed immediately after the vehicle is stopped (while the engine is still warm).
- **Manual cleaning cannot be performed under the following conditions.**
  ・The engine coolant temperature (ECT) is low. (Perform after the engine warms up.)
  ・The accelerator pedal (AP) is depressed.
  ・The parking brake is released.
  ・The transmission gear is placed in any position other than the neutral position.
- **For the models equipped with the PTO switch, be sure to turn the PTO switch off when turning the manual forced aftertreatment DPF regeneration switch on. The regeneration process does not start.**
- **When manual aftertreatment DPF regeneration is stopped partway, it is not completed. Resume manual regeneration soon.**
- **If the vehicle is driven before the regeneration is completed, the DPF clogging warning light will blink again.**
- **Manual DPF regeneration can be performed as stated above even if automatic cleaning is being performed.**

When the DPF system warning is displayed

- If the soot accumulation level reaches a specified limit by driving the vehicle with the DPF clogging warning light blinking, the DPF system warning, warning message and comment are displayed on the multi-display monitor to alert the driver. The warning appears in two different steps, amber and red.
- When it appears, clogging in the DPF or system malfunction may occur.

https://truckmanualshub.com/

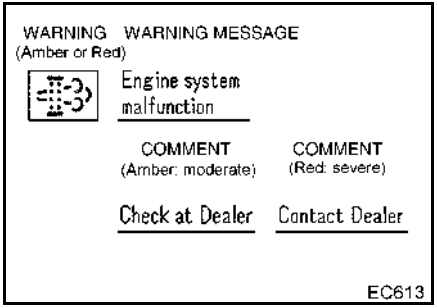

- When the amber DPF system warning appears, contact your nearest UD Trucks dealer for inspection.
- While the amber DPF system warning appears, engine torque is reduced to protect the DPF.
- When the red DPF system warning appears, immediately stop the vehicle in a safe location and contact your nearest UD Trucks dealer.

⚠ CAUTION

- **If the vehicle is continued to be driven, the engine shutdown will operate.**
- **Do not drive the vehicle with the DPF system warning displayed. The DPF that is equipped with muffler may be damaged.**

NOTE:

- **If the DPF system warning appears, the exhaust gas cleaning device may be damaged. Manual DPF regeneration is not possible.**

LEVERS AND CONTROL

Transmission gear shift lever

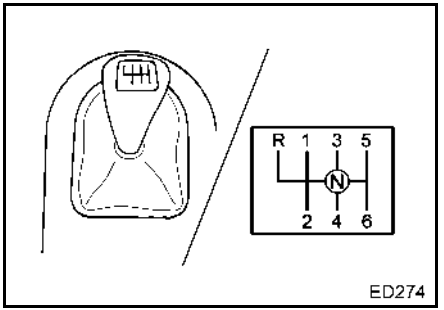

The transmission gear shift lever is located on the right of the driver's seat. When shifting gears, depress the clutch pedal fully and move the lever firmly. When the shift lever is moved into reverse, the backup lights come on and the backup buzzer sounds. The backup lights and buzzer are located on the rear of the vehicle.

https://truckmanualshub.com/

Automatic transmission selector lever (switch)

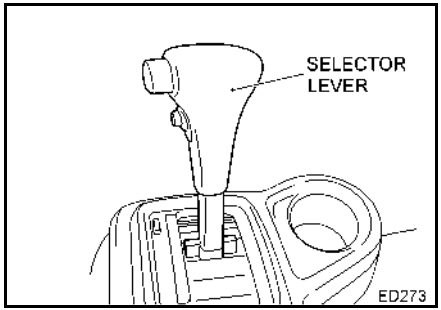

Allison 1000, 2200 and 2500 series

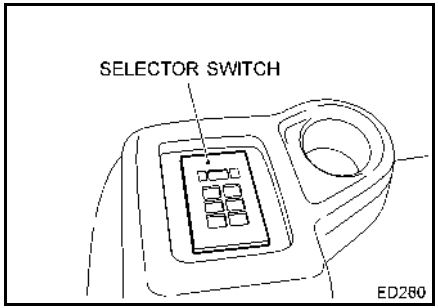

Allison 3000 series

The selector lever (switch) is located on the right of the driver's seat. When the selector lever (switch) is moved (pushed) into R (Reverse) position, the backup lights come on and the backup buzzer sounds and the back buzzer sounds in the cabin. The backup lights and buzzer are located on the rear of the vehicle.
The engine starts in the N (Neutral) or P (Park) position.

Parking brake valve

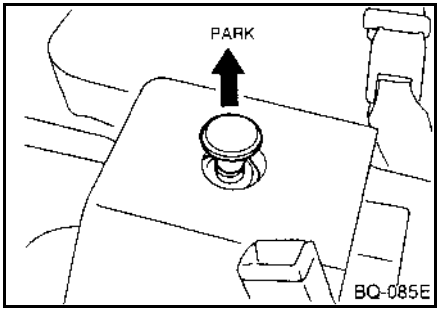

The parking brake valve is located to the rear of the gear shift lever. Pull the knob up to operate the parking brake. When the knob is pulled up, the PARKING BRAKE warning light comes on. To release the parking brake, press the knob down. The warning light will go out.

https://truckmanualshub.com/

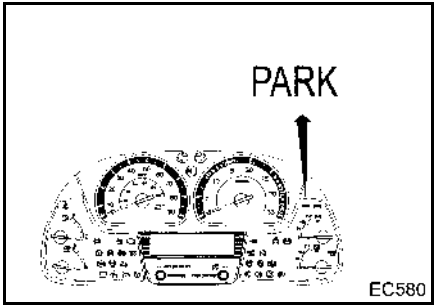

WARNING

- **Never apply the parking brake when the vehicle is moving. Such application will lock the rear wheels and may result in loss of vehicle control, could cause damage to the driveline and/or brake drum on the transmission.**
- **Do not operate the parking brake valve with a person near the rear axle. The movement of the parking brake actuating rod can cause serious injury.**
- **When parking on a grade, apply chocks to the wheels in addition to using the parking brake.**

CAUTION

- **Release the parking brake before driving the vehicle. Failure to release the parking brake can cause brake damage.**

https://truckmanualshub.com/

ACCESSORIES

Cigarette lighter

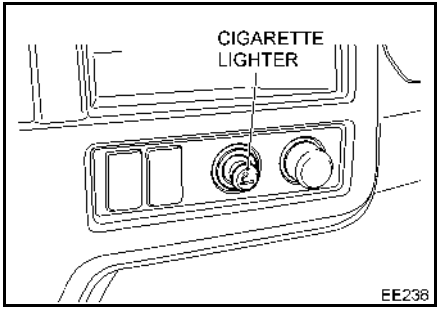

The cigarette lighter is located at the right side of the heater control. To operate the lighter, push it in. The lighter will pop out to its normal position when heated.

⚠ CAUTION

- **To avoid damage to the lighter, do not hold the lighter in manually.**
- **Avoid deforming the cigarette lighter. Using a deformed lighter could be dangerous, as it will not pop out. Make sure that defective parts are replaced with genuine parts or equivalent.**
- **If the cigarette lighter does not pop out within 20 seconds after it has been pushed in, remove it immediately and have it checked at an authorized UD Trucks dealer or other qualified service facility.**
- **Never leave your vehicle with the cigarette lighter pushed in.**

https://truckmanualshub.com/

Power socket

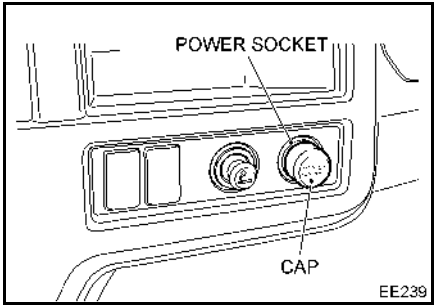

The power socket is located at the right side of the cigarette lighter.
Use the power socket in the cab to connect commercially available car accessories. Remove the cap before use. The following devices can be connected to the socket.

Device	Rated current
Charger for mobile phone	2A
GPS	2A
TV	9.5A
Wireless device	2.2A
Computer	7A

⚠ CAUTION

- **Do not use a TV while driving. The use of a TV may shorten the life of the battery depending on operating or use conditions. Keep the use of a TV to a minimum when ever possible.**

⚠ WARNING

- **The use of any device with a higher current than the allowable load can heat the socket and cord and cause fire. Use devices with the allowable load current.**
- **The socket is for 12 volts only. Do not use any car accessory for 24 volts with the socket. A trouble may be caused in the device.**
- **The socket can be used while the ignition key switch is in the ACC position. Before leaving the vehicle, disconnect the device from the socket.**

Ashtray

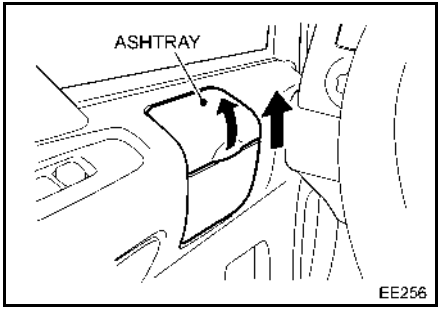

The ashtray is located inside of the right and left doors.
To open the ashtray, pull the tab upward.
To remove the ashtray for cleaning, pull the tray upward.

⚠ WARNING

- **To prevent fire, ensure that any lit or smoldering materials in the ashtray are completely extinguished.**

https://truckmanualshub.com/

Overhead box

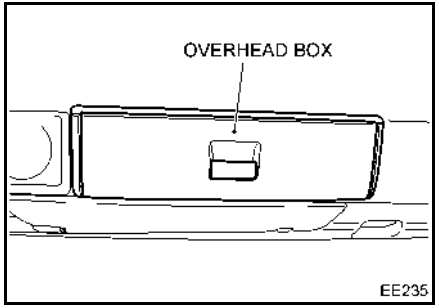

Store only lightweight items, such as the vehicle inspection certificate and magazines, in the large box with the lid.

⚠ CAUTION

The standard weight of objects stored in the overhead is indicated below. Storing objects with the weight exceeding the following limit may damage the console and lid.

- **Overhead box: 6.6 lb (3 kg) or less**

- **Be sure to keep the overhead box closed while driving. Driving with it open could allow the items in the box to fall over and hinder driving.**

Cup holder

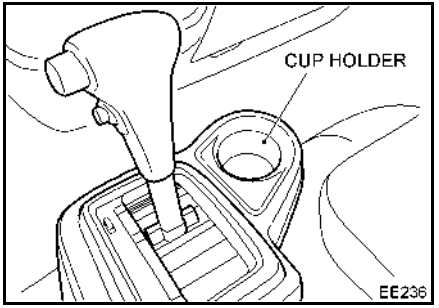

This is used to hold bottle and cup for drinks, etc.

⚠ CAUTION

- **Avoid abrupt starting and braking to prevent a drink from being spilt when it is stored in the cup holder.**

https://truckmanualshub.com/

Room light

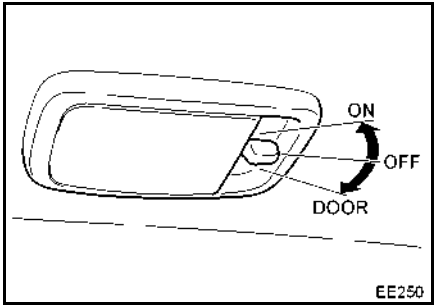

- Turning on the room light switch to ON turns on the room light regardless of whether or not a door is open or closed.
- The room light turns off when the room light switch is turned to OFF.
- When the room light switch is in the DOOR position, the room light will turn on when the driver's seat door or the passenger seat door is opened, and will turn off when the door is closed.

<table>
<tr><th colspan="2">State of the doors</th><th colspan="3">Room light switch position</th></tr>
<tr><th>Driver's side</th><th>Passen-ger side</th><th>ON</th><th>OFF</th><th>DOOR</th></tr>
<tr><td colspan="2">Close</td><td rowspan="4">Turn on</td><td rowspan="4">Turn off</td><td>Turn off</td></tr>
<tr><td>Open</td><td>Close</td><td rowspan="3">Turn on</td></tr>
<tr><td>Close</td><td>Open</td></tr>
<tr><td colspan="2">Open</td></tr>
</table>

Card holder

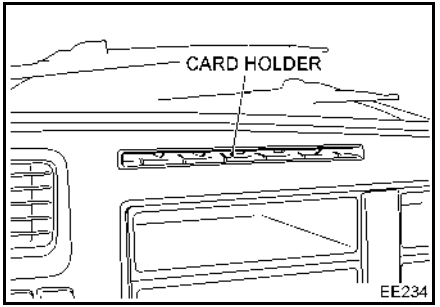

This can be used to hold such cards as telephone cards and highway cards.

CAUTION

- **To prevent theft, do not leave credit cards in the card holder when away from the vehicle.**

https://truckmanualshub.com/

Door pocket

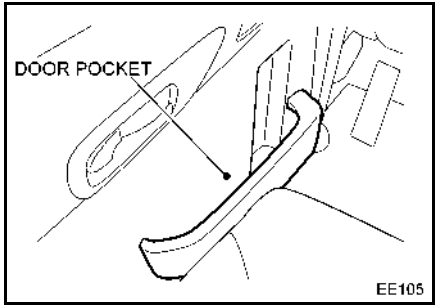

Door pockets are located in the left and right doors. Place road maps, magazines, etc. inside it.

Console box (optional)

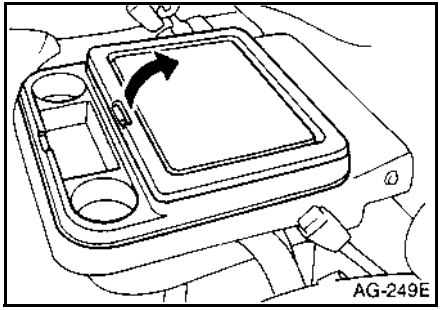

When the seatback of the center seat is folded forward, some documents, small items, etc. can be stored on the reverse side of the seatback.

https://truckmanualshub.com/

https://truckmanualshub.com/

HEATER OR AIR CONDITIONER CONTROL

AIR CONDITIONER

Air vent

- Use the air conditioner when the engine is running.
- The engine coolant is used to heat the air used for heating. The air coming from the air vent will not be warm until the engine coolant temperature.

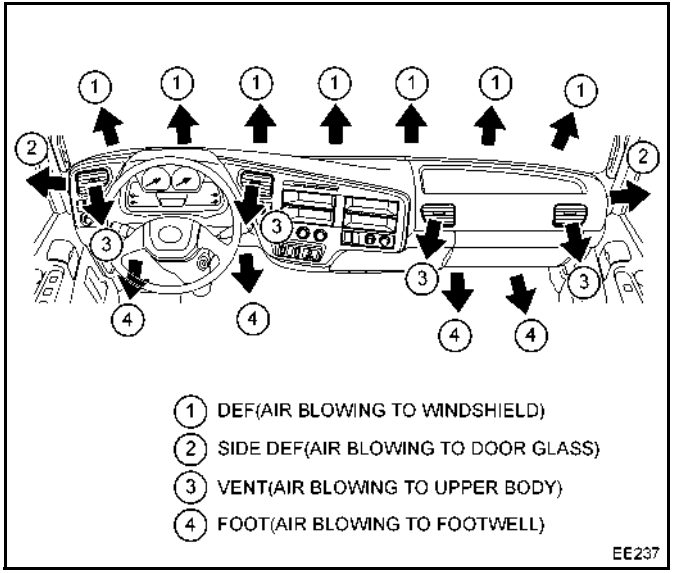

<Handling the blower motor filters>

- Both the outside and inside air intakes have a cartridge air filter. The air conditioner will not be as effective if these air filters become clogged, so inspect and clean them periodically.
- For information about how to clean the air filter, refer to "BLOWER MOTOR FILTERS" on page 11-82.

https://truckmanualshub.com/

Manual air conditioner

Change the switch and dial selections to match the season to make your driving pleasant.

Operation Panel

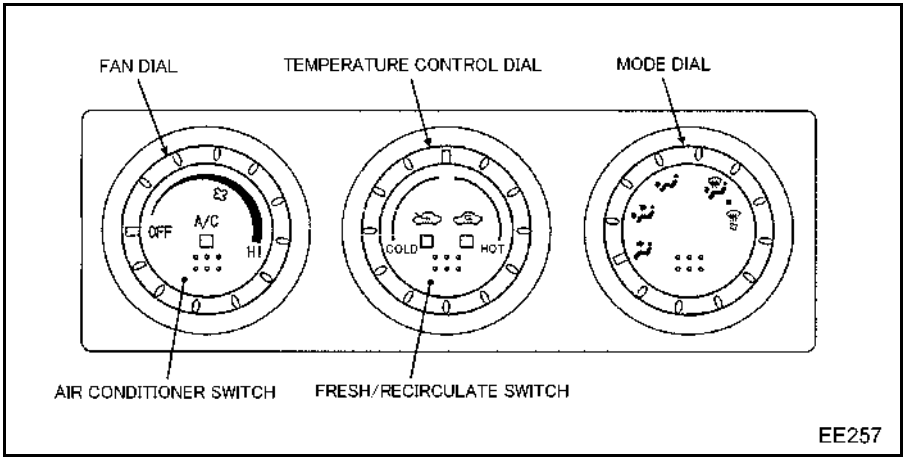

https://truckmanualshub.com/

Name		Position	Purpose and Function
Dial	Fan dial	OFF	To stop fan operation: ● This stops the air from the fan and the compressor. However, the fan continues operating at the minimum air level when the mode dial is in the “Defrost” position.
		– HI	To adjust the fan speed: The fan speed is adjusted manually. ● Turn right: Increases airflow, Turn left: Reduces airflow
	Temperature control dial	COLD	Use maximum cooling: Blows a cool air without passing the air through the heater core.
		HOT	Use maximum heating: Blows a warm air after passing the air through the heater core.
		COLD - HOT	Adjust the temperature of the air: This changes the temperature of the air to match the temperature control dial setting. ● Turn right: Increases temperature, Turn left: Lowers temperature
	Mode dial	Vent	Send air from the vent: Set the air outlet to the Vent position.
		Vent & Foot	Send air from the vent and foot vents: Set the air outlet to the Vent & Foot position.
		Foot	Send air from the foot vents: Set the air outlet to the Foot position.
		Foot & Defrost 1	Send air from the foot and defrost vents: Set the air vents to the Foot & Defrost position.
		Foot & Defrost 2	Send air from the foot and defrost vents: Set the air vents to the Foot & Defrost position. (This divides the air to blow more from the defrost vents than from the foot vents.)
		Defrost	Send air from the defrost vents: Set the air vents to the Defrost position. Set the intake vents to outside air. Run the compressor. ● The minimum air will blow even if the fan dial is set to OFF.

https://truckmanualshub.com/

Name		Position	Purpose and Function
Switch	Air conditioner switch	The light turns on/ off each time this is pushed.	This switches between the dehumidifier mode (light on) and heater mode (light off). ● Light on: Compressor is operating normally ● Light off: Heater is operating (compressor is not operating)
	Fresh/Recircula-tion switch	Alternates between turning on the inside air light and outside air light each time this is pushed.	It switches between insider air recirculation and letting in the outside air. ● Inside air light: Set to inside air recirculation. ● Outside air light: Set to let in the outside air.

NOTE:

- **Do not operate the dials or switches while driving.**

https://truckmanualshub.com/

Heating

- Moving the mode dial to the Foot position will blow warm air on the feet.
- The temperature control dial is used to adjust the air temperature, and the fan dial is used to adjust the fan speed as desired.
- When you want to heat up the cab quickly or when you are in a dusty location, push the Fresh/Recirculation switch to select the inside air.
- When the windshield fogs up easily, set the air vents to Foot & Defrost.

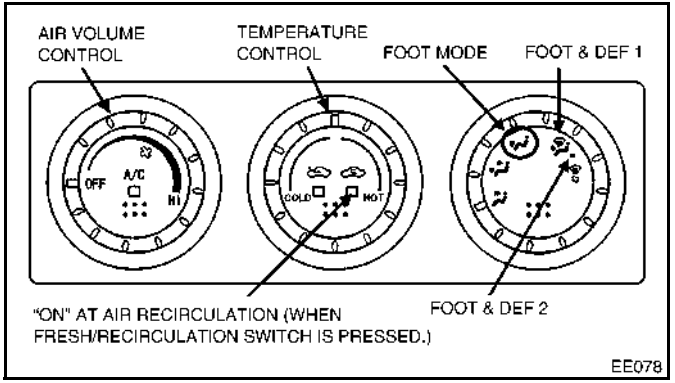

NOTE:

- **Mode dial Foot & Defrost 1 blows more air through the foot vents than the defrost vents, and Foot & Defrost 2 blows more air through the defrost vents than through the foot vents.**

https://truckmanualshub.com/

When resting in the seat

Use the heater as instructed below when idling the engine to heat the cab during cold weather.

No.	Operation method and description	Illustration
1	Adjust the air conditioner temperature higher than normal. ● The air temperature in the cabin rises according to the adjustment of the temperature control dial. **NOTE:** ● **The air temperature in the cabin tends to decrease because the temperature of the engine coolant becomes low. Set the air conditioner temperature higher beforehand to keep the air temperature comfortable.**	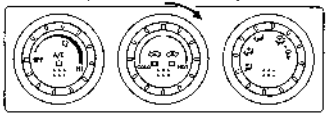 EE252
2	Push the air conditioner switch and turn off the position light (heater mode). ● The air conditioner compressor stops. **NOTE:** ● **When the position light is on (dehumidifier mode), the air conditioner cools the incoming air before warming it. Thus, the air temperature from the vent becomes low.**	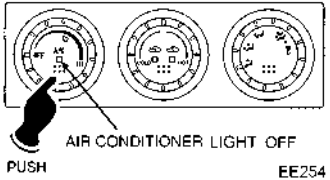 EE254
3	Push the fresh/recirculation switch to illuminate the position light of the inside air recirculation mode. ● The intake vent is fixed at inside air recirculation. **NOTE:** ● **The air temperature from the vent becomes low when the outside air mode is selected because the cold outside air is warmed. However, the air temperature from the vent becomes high when the inside air recirculation mode is selected because the warm inside air is warmed again.**	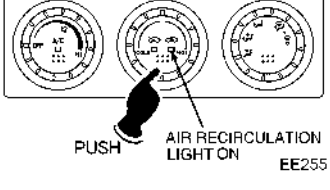 EE255
If the air temperature in the cabin is cool after performing steps 1 to 3 above, perform the following step.		

https://truckmanualshub.com/

No.	Operation method and description	Illustration
4	Turn the warm-up switch to the ON position. ● The exhaust brake operates, and the idle speed increases and then the temperature of engine coolant rises. **NOTE:** ● **While parking the vehicle for a long period of time, the temperature of the engine coolant tends to decrease. However, using the warm-up switch allows sufficient performance of the heater.** ● **For details on how to use the warm-up switch, refer to the "VEHICLE OPERATION" chapter.**	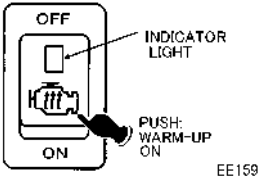
5	If it is still cold, even when the warm-up switch is turned on, operate the engine throttle control knob to turn idle speed up with the warm-up switch in the ON position.	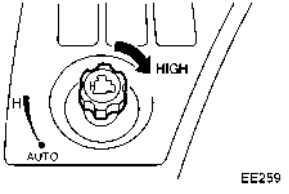

<When resting in the seat after driving>

	Push the fresh/recirculation switch to illuminate the position light of the inside air recirculation mode. ● The intake vent is fixed at inside air recirculation.	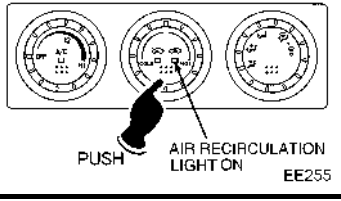

NOTE:

● **The heater utilizes heat from the engine coolant. While idling, the engine coolant temperature gauge may indicate a lower value because the temperature of engine coolant tends to decrease. However, performing the steps above will allow sufficient performance of the heater.**

https://truckmanualshub.com/

Vent & Foot (Cool head, warm feet)

- Moving the mode dial to the Vent & Foot eliminates the discomfort caused by the warm air making the heat too hot, etc.
- The temperature control dial is used to adjust the air temperature, and the fan dial is used to adjust the fan speed as desired.

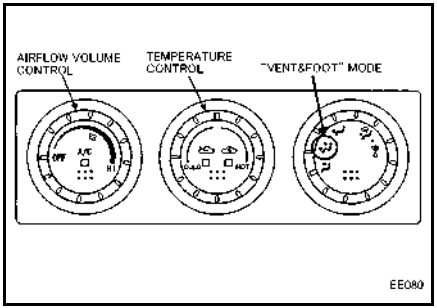

Defrost

Putting the mode dial in the Defrost position will blow warm air from the defroster on the inside of the windshield.

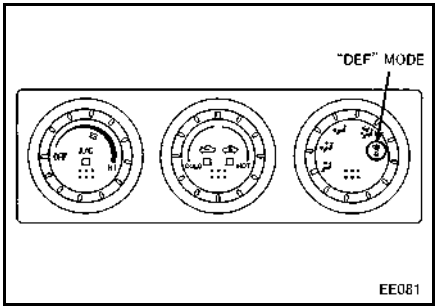

NOTE:

- **When the mode dial is moved to the Defrost position, the compressor begins to run and the intake vents are set to outside air. Note that the compressor might not turn on due to certain conditions, such as the outside air temperature.**
- **When the mode dial is moved to the Defrost position, the minimum amount of air will blow even if the fan dial is set to OFF.**

Switching between inside and outside air

Normally, the intake vents use outside air, but when you want to avoid dust, exhaust fumes, etc., push the Fresh/Recirculation switch to switch to inside air recirculation.

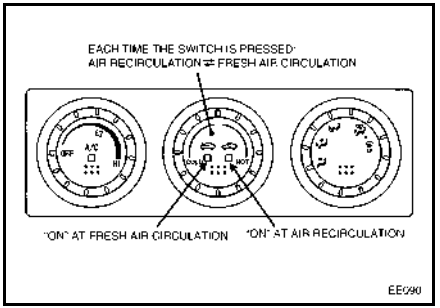

⚠ WARNING

- **Do not use inside air recirculation for a long time. Doing so will cause the air inside the cab to become foul or the windshield to fog up, etc.**

https://truckmanualshub.com/

Cooling and dehumidifying

- Cooling and dehumidifying can be done by pushing the air conditioner switch.
- The temperature control dial is used to adjust the air temperature, the fan dial is used to adjust the fan speed, and the mode dial is used to select the air vents as desired.
- When you want to quickly cool down the cab, push the Fresh/ Recirculation switch to switch inside air recirculation.

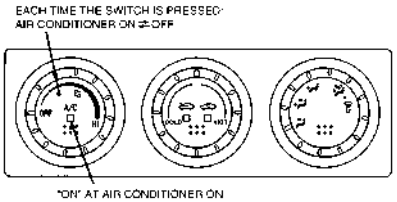

Information regarding automobile refrigerant

- The cooling performance could drop causing poor cooling if there is insufficient refrigerant or the refrigerant compressor belt is loose.
- If refrigerant is leaking, have it inspected by the nearest authorized UD Trucks dealer. Also, if the belt is loose, have it adjusted.

⚠ CAUTION

- **Use Freon HFC134a to help protect the environment. Only use the specified refrigerant to charge the cooling system.**
- **To protect the global environment, do not discharge refrigerant into the atmosphere.**

https://truckmanualshub.com/

VEHICLE OPERATION

⚠ WARNING

Never drive the vehicle with
- **the engine stopped.**
- **the clutch disengaged (not applicable to automatic transmission).**
- **the transmission gear shift lever in neutral.**

These are very hazardous and can cause loss of control resulting in death or serious injury. This is because:

1. **You cannot use the engine brake.**
2. **When the engine is not running, the brake system will not function properly, and this can result in a longer stopping distance.**
3. **The power steering system will not function, and much greater effort is needed to control the steering.**

OPERATING PRECAUTIONS

Following a few precautions will help lengthen the life and reliability of your vehicle.

- After starting, warm up the engine until it runs smoothly.
- Do not race the engine during the warm-up period.
- Avoid sudden starts and abrupt stops.
- When you start a loaded vehicle, use 1st gear. When you go uphill, use an appropriate lower gear.
- Use the same gears going down a grade as you used or would use going up.

https://truckmanualshub.com/

BREAK-IN PRECAUTIONS

During the initial 600 miles (1,000 km) of operation:

- Observe the “OPERATING PRECAUTIONS” section above.
- Do not exceed 75% of the vehicle GVWR. See the “BEFORE DRIVING YOUR VEHICLE” section for details.

VEHICLE LOADING

Do not exceed the GVWR or the front and rear GAWRs of the vehicle. The vehicle GAWRs may be exceeded before the vehicle load reaches the GVWR depending on the body and equipment on the vehicle. Confirm that the vehicle’s tires, springs and axles are not overloaded. Always balance and secure the vehicle load. Loading and balance of the load will affect the braking, handling, stability and other characteristics of your vehicle.

⚠ WARNING

- **The vehicle’s stopping distance will increase as the load of the vehicle increases. Acceleration performance will also be reduced. In addition, a loaded vehicle’s handling characteristics differ from those of an unloaded vehicle. Depending on the loading, differences in steering response and vehicle leaning while turning and in curves may occur. Anticipate these differences and operate your vehicle accordingly. Always balance and secure the vehicle load.**
- **The muffler (catalyst system in the muffler) become very hot. Do not touch it, also do not let it come in contact with the sheets or ropes on the rear body or dry grass on the ground as they may ignite and cause a fire.**

https://truckmanualshub.com/

TOWING TRAILERS

Trailer brakes

Electric brakes and manual, automatic or surge-type trailer brakes are safe if installed properly and adjusted to the manufacturer's specifications. The trailer brakes must meet local and Federal regulations.
If you own a trailer with a hydraulic brake system, do not connect the trailer's hydraulic brake system directly to your vehicle's brake system. The vehicle's brake system is only designed to carry the appropriate amount of brake fluid for the vehicle alone. Connecting a hydraulic trailer braking system could adversely affect your vehicle's braking performance.

NOTE:

- **The braking system of the tow vehicle is rated for operation at the GVWR not GCWR.**

Trailer lamps

Trailer lamps are required on most towed vehicles. Make sure all running lights, brake lights, turn signals and hazard lights are working. Consult your authorized UD Trucks dealer or the authorized dealer/manufacturer of your trailer for instructions to connect the trailer lamps to the tow vehicle.

Safety chains

Always connect the trailer's safety chains to the frame or hook retainers of the vehicle hitch.
To connect the trailer's safety chains, cross the chains under the trailer tongue and allow slack for turning corners. If you use a rental trailer, follow the instructions that the rental agency provides to you.

Driving while you tow

When towing a trailer:

- Turn off and do not use the cruise control.
- Consult your local motor vehicle speed regulations for towing a trailer.
- Anticipate stops and brake gradually.
- Do not exceed the GCWR rating or transmission damage may occur.

Servicing after towing

If you tow a trailer for long distances, your vehicle will require more frequent service intervals. Refer to the "Vehicle Service and Maintenance" section for "Type 1" vehicle operation.

Trailer towing safety tips

General

- Ensure that the trailer, safety chains and electrical connectors are securely fastened.
- Make sure the truck receiver, draw bar, and coupler are properly connected and adjusted.
- Check side mirrors for proper visibility, especially when towing a trailer wider than the truck.
- When towing, operate the vehicle at lower speeds than you would when not towing a trailer. The likelihood of trailer sway is greater at higher speeds.

https://truckmanualshub.com/

- When turning, make wide turns to allow trailer tires to properly clear any obstacles.
- Be prepared for trailer sway due to buffeting when larger vehicles pass in either direction.

Loading

- Keep the center-of-gravity low for best handling.
- Trailer loads should be evenly distributed front to back and left to right.
- Never exceed truck, trailer, receiver, ball, tongue, tire or coupler loading recommendations.

Braking

- The trailer brakes must be inspected and serviced at intervals specified by the trailer manufacturer. This includes shoes, drums, and trailer brake magnets.
- Electric brakes also require periodic adjustment to keep the shoes properly spaced.
  If the brakes get hot when driving or if they will not hold, chances are that they need adjustment.
- Anticipate the need to stop; allow additional distance and time to stop than normal.
- Do not apply the trailer brakes for extended periods of time as they can overheat and lose their effectiveness.

Backing up

- Practice backing up, particularly if you are a novice. Turn the steering wheel to the right to move the trailer's rear end to the right.
- Sharp steering movements may cause the trailer to jackknife or go out of control.

Tires

- All trailer tires should be of the same size and construction.
- Select tires that meet the trailer loading requirements.
- Always check tow vehicle and trailer tire pressure before towing.

STARTING THE ENGINE

Before starting the engine, check to be sure that:

- **The MTM is shifted to the neutral position. The engine can only be started when the shift lever is in the N (Neutral) position.**
  For ATM, put the selector lever (switch) into the P (Park) or N (Neutral) position.
- **The transmission PTO switch (optional) is turned off.**
- **The parking brake is pulled to the PARK position.**
- **The power steering fluid level is proper.**
- **The engine oil level and engine coolant level are proper.**

Normal temperature conditions:

Depress the clutch pedal (Not available with automatic transmission) fully, and then turn the ignition key to the START position.

https://truckmanualshub.com/

Cold weather conditions (Vehicle with intake air heater system: If so equipped):

1. When the engine coolant temperature is low, turn the ignition key to ON position. The indicator light turns on and pre-heating is carried out.
2. After the indicator light turns off, turn the ignition key to the START position and start the engine. After starting the engine, the indicator light will illuminate again and after-heating will be performed for a set time.

NOTE:

- **The engine start control system is equipped with an automatic anti-overheating device. (Generally, when attempting to start the engine for about 15 seconds and doing so three or four times in a row, this will cause the operation of the automatic anti-overheating device.)**
  When the anti-overheating device is operated, a warning and a warning message will be displayed. These warnings indicate that the anti-overheating function is operating.
  This message displays the cooling time (10 to 15 minutes regularly) that is required for the starter to operate again.

- **When the PTO engine start interrupt warning is operated, a warning and a warning message will be displayed. These warnings indicate that the engine is unable to start because the PTO switch is in the ON position.**
  If this occurs, turn the PTO switch to the OFF position, and then start the engine.

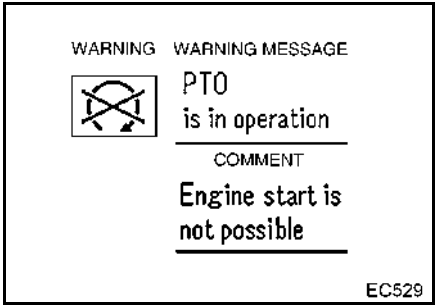

- **Turn the ignition key to ON position before depressing the accelerator pedal. When the ignition key is at LOCK or ACC position, the fuel system function for cold weather will not operate.**
- **Right after stalling the engine, the engine start control system inhibits the cranking for about 1 second to avoid the damage for the starter.**
- **When the engine does not start on the first attempt, wait approximate 30 seconds before trying again.**

https://truckmanualshub.com/

- **Do not keep the starter engaged for more than 15 seconds at a time.**

⚠ WARNING

- **Do not start or idle the engine in inadequately ventilated areas. Carbon monoxide poisoning can cause unconsciousness and is potentially lethal.**
- **Avoid breathing exhaust fumes. If you suspect that exhaust fumes are entering the cab, stop the vehicle immediately. Open all windows, and have the vehicle inspected and repaired immediately. Do not drive the vehicle if you notice the presence of any exhaust fumes in the cab.**
- **Do not use ether or other starting aids which are flammable.**
- **Avoid attempting to start your vehicle by pushing or towing. Instead, use the jump starting procedure or tow your vehicle, as described in this manual, to the nearest service station.**

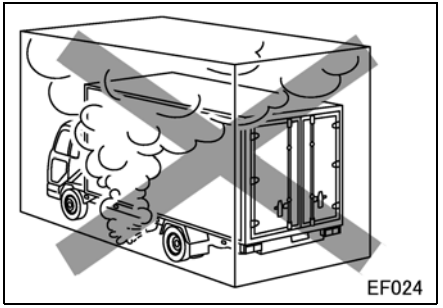

3. When the engine starts, make sure the gearshift lever is still in neutral If the vehicle is equipped with automatic transmission, the selector lever is still in the N (Neutral) or P (Parking) position, and release the clutch pedal (Not available with automatic transmission).

https://truckmanualshub.com/

CAUTION

- **Do not attempt to start the engine with a power source of more than 12 volts.**
- **After the engine starts, do not turn the ignition key to the START position. This could cause damage to the starter motor and/or engine.**
- **Do not attempt to start the vehicle until the intake air heater indicator light goes out.**

WARMING UP ENGINE

To avoid shortening engine life, engine warm-up is necessary. The warm up is performed by adjusting the engine throttle control knob.

Adjusting engine idling speed

The automatic adjustment of engine idling speed.

- When the engine throttle control knob is turned all the way to the left, automatic idling mode will be reached, and the idling speed will be adjusted automatically according to the temperature of engine coolant.
  Refer to "Engine throttle control knob" on page 7-53.
- Normally, the knob should be turned all the way to the left (counterclockwise).

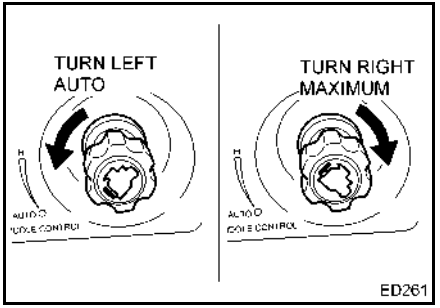

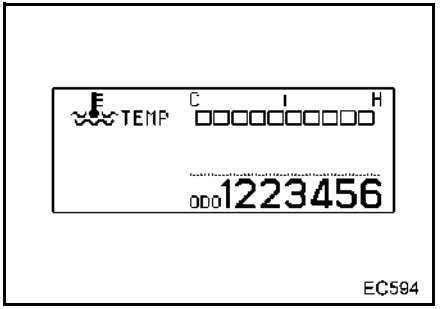

- When the knob is turned to the right (clockwise), the mode changes from automatic idling mode to manual adjustment mode, the engine speed will increase, and adjustment up to about 980 rpm will become possible.

https://truckmanualshub.com/

- The standard idling speed is 550 rpm.
- Warm-up has been completed when the idling speed drops.

The manual adjustment of engine idling speed.

- When the engine has started, gradually release the accelerator pedal and set a slightly higher idling speed with the throttle control knob.
- Perform warm-up operation until the needle of the engine coolant temperature gauge starts to move.
- When the needle of the engine coolant temperature gauge starts to move, return the throttle control knob to the standard idling speed.

NOTE:

- **Never drive with higher idling speed than standard. That could result in excessive fuel consumption and reduced clutch life.**
- **Failure to warm up the engine will shorten engine life.**

⚠ WARNING

- **Driving with the throttle control knob set to any speed higher than standard idling speed is dangerous and could cause the vehicle to suddenly accelerate, even when the vehicle is stopped with the engine running.**

To warm up more quickly

If you wish to make the heater or defroster work more quickly after starting the engine, or to enhance the effectiveness of the heater in cold weather, activate the exhaust brake and the idle speed increases.

⚠ WARNING

- **Do not warm up the engine in an insufficiently ventilated location such as a garage or indoors. This can be dangerous and can cause carbon monoxide poisoning.**

Activation

1. Put the parking brake in the PARK position.
2. Shift the gear shift lever to the “N” position.
3. Start the engine and turn the warm-up switch to ON to engage the exhaust brake, and the idle speed increases and begin engine warm-up. During this time, the switch’s built-in indicator light will illuminate.

https://truckmanualshub.com/

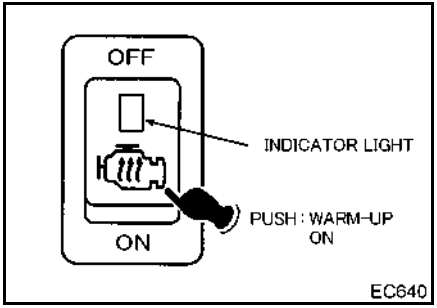

NOTE:

- **For information regarding precautions when using the warm-up switch, refer to the "Engine warm-up switch" on page 7-54.**

Deactivation

Turn the warm-up switch to OFF to turn off the indicator lights and cancel engine warm-up.

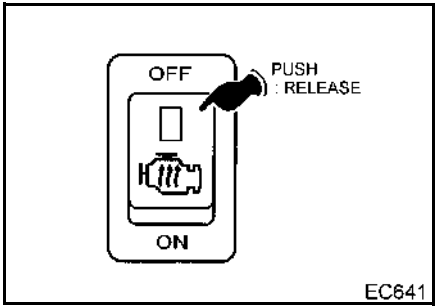

STOPPING THE ENGINE

After vehicle operation, idle the engine for 3 to 5 minutes before stopping the engine. After the engine is cooled by idling, stop the engine. Follow the instructions in the "Engine stop" on page 7-4. Turn the ignition key to the OFF position.

https://truckmanualshub.com/

DRIVING ON GRADES

1. When driving up a grade, operate the vehicle in a lower transmission gear at the engine speed (about 1,400 rpm) for which the engine develops its maximum torque. Sustained high speed operation may cause severe engine failure.
2. When descending a grade, first use engine braking by selecting the same gear which was used or would be appropriate for going up the grade. Supplement the engine braking with exhaust braking and finally with service brakes, as necessary, to maintain a safe vehicle speed.

⚠ WARNING

- **Do not rest your foot on the brake pedal or use the foot brakes for extended periods. Such can cause the brake drums to overheat, the linings to wear excessively and/or cause a drop in braking pressure resulting in a reduction in braking effectiveness and increased stopping distances.**

3. When downshifting, wait until engine speed corresponds to the road speed of the next lower gear before shifting. Do not allow the engine to overspeed. Do not operate the engine at speeds within the tachometer red zone.

⚠ WARNING

- **Operating the engine in the red zone of the tachometer can cause severe engine damage and serious injury.**
- **Do not downshift if the engine speed is in the red zone of the tachometer.**

4. Check the operation of the brakes before you begin the descent of an extended or steep grade.

https://truckmanualshub.com/

DRIVING IN DIFFICULT CONDITIONS

1. Ice, snow, loose sand, mud or wet surfaces present hazardous driving conditions. Tire traction is decreased, stopping distance becomes unpredictable and heavy braking, sudden maneuvers or excessive speeds can result in loss of vehicle control.

⚠ CAUTION

- **When a wheel spins when traction is poor, do not spin the wheels for a long time or the differential could seize up.**

2. On slippery surfaces, avoid quick movements of the steering wheel or transmission shift lever. Gently apply the brakes steadily and evenly to avoid skidding and wheel lockup. Decrease your vehicle speed and allow for extra stopping distances.
3. Always make sure your tires are in good condition. Badly worn or improperly inflated tires provide poor traction and increase the hazards of driving on slippery surfaces.
4. A loaded vehicle handles differently from an empty one. Be prepared for longer stopping distances, slower acceleration, more leaning on curves, different steering response. A vehicle should be evenly loaded.
5. When driving on slippery surfaces or on curves, be sure to use the service brake together with the exhaust brake.

CAUTION

- **Never drive the vehicle through a flooded area. If the water is deep enough to reach the bottom of the oil pan, this will cause failure of the cooling fan, slippage of the drive belts, or failure of the engine due to water sucked into the air intake.**

OPERATING WITH MANUAL TRANSMISSION

Your UD Trucks vehicle is equipped with a manual transmission with 6 forward and 1 reverse gears. The gear shift pattern is shown on the shift lever knob.

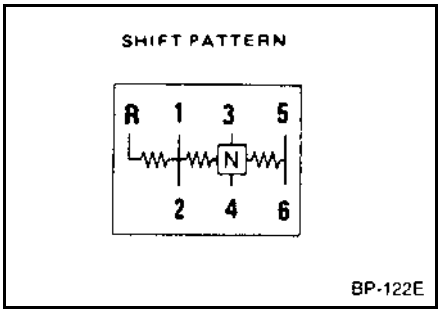

Familiarize yourself and others operating the vehicle with the manual transmission, the gear shift pattern and clutch operation. When using the clutch, be sure that the clutch is fully engaged or disengaged. Never operate the vehicle with the clutch partially engaged.

https://truckmanualshub.com/

⚠ WARNING

To avoid engine and clutch failure which may result in serious injury:

- **Do not operate your vehicle with a worn or damaged clutch.**
- **Do not operate the vehicle with your foot resting on the clutch pedal.**
- **Do not use the clutch to hold your vehicle on a grade.**

To reduce the possibility of loss of vehicle control:

- **Do not allow the vehicle to coast with the clutch pedal depressed or with the transmission in neutral.**
- **Do not operate the vehicle with the clutch partially engaged.**
- **Always use 1st gear when starting to move the vehicle.**

CAUTION

- **Do not ride the clutch pedal. "Riding the clutch" by resting your foot on the clutch pedal while driving can lead to premature clutch failure.**
- **Avoid shifting the transmission into first gear while the vehicle is moving. Shifting into first gear while moving may damage the transmission.**
- **Stop the vehicle completely before shifting from forward to reverse or from reverse to forward.**
- **When shifting down or up, shift the lever being careful not to pass the correct shift gate.**
  When shifting from 6th to 5th gear, push the shift lever to the right. If this is not done during shifting 6th to 5th, a misdownshift to 3rd gear may occur, resulting in engine overspeeding and possible engine or clutch damage.

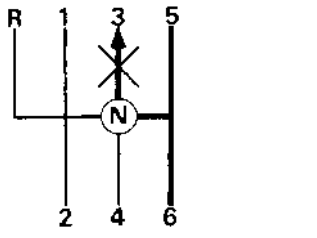

BP-134E

https://truckmanualshub.com/

Double-clutch operation

Use the following double-clutch technique when shifting:

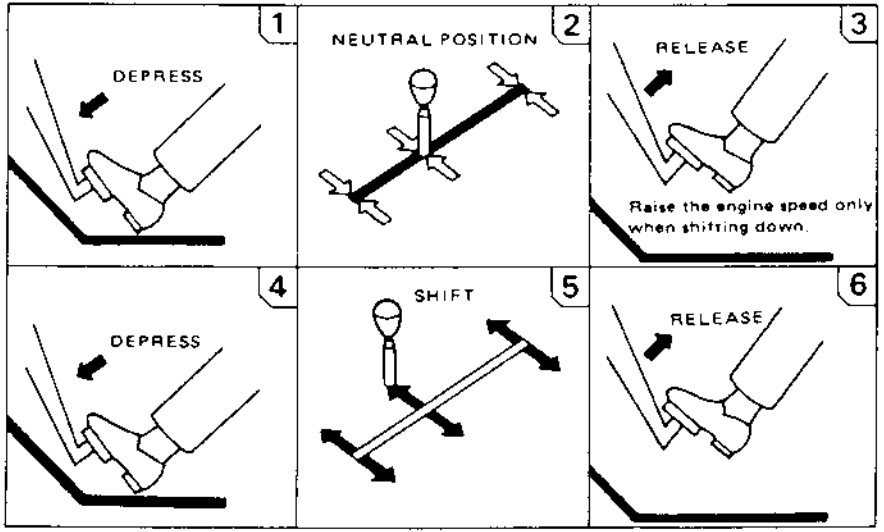

DC-031E

1. Fully depress the clutch pedal to disengage the clutch.
2. With the clutch pedal fully depressed, shift the gear shift lever to the neutral position.
3. Release the clutch pedal. When downshifting, raise the engine speed using the accelerator pedal.
4. Fully depress the clutch pedal again.
5. While holding the pedal down, shift to the next gear.
6. Release the clutch pedal. When downshifting, wait until engine speed corresponds to the road speed of the next lower gear before shifting. Do not overspeed the engine.

https://truckmanualshub.com/

OPERATING WITH AUTOMATIC TRANSMISSION

Your UD trucks vehicle may be equipped with an optional automatic transmission. The automatic transmission has the operation flexibility of manual selecting and holding in lower driving ranges.
This permits the driving selection of the most suitable forward gear range to match varying road and load conditions.

ALLISON 1000, 2200 and 2500 automatic transmission (1000: Optional for UD1800 and UD2000) (2200: Optional for UD2300 and UD2600) (2500: Optional for UD3300)

The Allison 1000, 2200 and 2500 automatic transmissions have 5 forward and 1 reverse gear ranges.

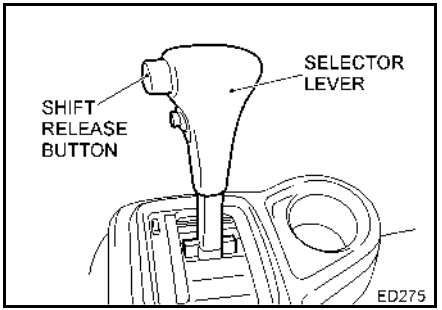

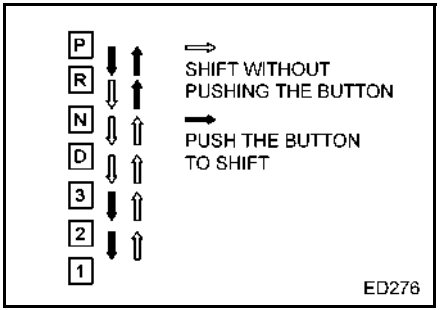

1000 and 2200 series

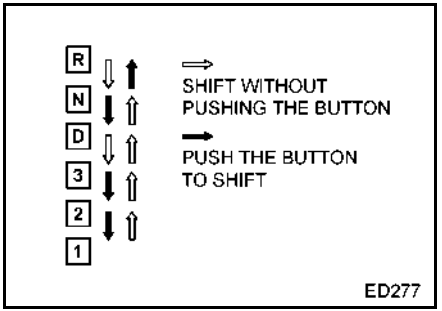

2500 series

(P): Park Position —

- This position is used when starting the engine, for warming up the engine, and when stopped or parked. The engine can only be

https://truckmanualshub.com/

started when the shift lever is in the P (Park) or N (Neutral) position.

- When shifting from Park to any other range, depress the brake pedal while shifting.
- Shifting is not done if the engine speed is high (1,000 rpm or more).

Use P (Park) for the following.

- to turn on or turn off the engine
- to check vehicle accessories
- to operate the engine in idle for longer than five minutes
- for stationary operation of the power takeoff (if your vehicle is equipped with a PTO)

This position places the transmission in N (Neutral) and engages the park pawl.

(R): Reverse Position —

- This position is used when moving the vehicle backwards. You must first stop the vehicle before shifting from a forward gear to Reverse, or from Reverse to a forward gear.
- This range cannot be shifted to while driving (although the shift lever will move). At this time the SHIFT LIMIT warning light comes on. If this occurs, stop the vehicle, and shift first to P (Park) or N (Neutral). Then depress the brake pedal and shift to the desired driving range.

(N): Neutral Position —

- This position is used when starting the engine, for warming up the engine, and when stopped. The engine can only be started when the shift lever is in the P (Park) or N (Neutral) position.
- When shifting from Neutral to a driving range, depress the brake pedal while shifting. At this time the SHIFT LIMIT warning light illuminates. If this occurs, return the shift lever to the P (Park) or N (Neutral) position, then depress the brake pedal and shift to the desired driving range.
- Shifting will not be done if the engine speed is high (1,000 rpm or more).

NOTE:

- **When shifting from Neutral to any other range, approximately 1 second is required for the transmission clutch to connect. If the accelerator pedal is depressed during this time, excessive stress is placed on the transmission. Wait until the clutch has connected and then gradually depress the accelerator pedal.**

(D): Driving Position —

- This is the position used during normal driving.
  Gears will change from 1 - 5 when the overdrive (O/D) switch is on, and from 1st to 4th when it is off.

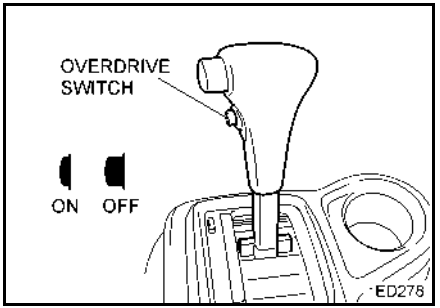

https://truckmanualshub.com/

(3): Third Range —

- This position is used when engine braking is needed while the vehicle is descending a slope. Shifting between gears 1 - 3 is done automatically.

(2): Second Range —

- This position is used when strong engine braking is needed. Shifting between gears 1 - 2 is done automatically.

(1): First Range —

- This position can be used during rough road conditions, when freeing the vehicle from mud or deep snow, when driving at very slow speed through narrow spaces, when climbing or descending steep slopes, or when the maximum amount of engine braking force is required. The transmission remains in 1st gear and does not shift.

⚠ WARNING

- **Always apply the service brakes when selecting R (Reverse). The range selected may not be obtained, resulting in unexpected vehicle motion.**
- **Do not allow the vehicle to coast in N (Neutral). If you let the vehicle coast in N (Neutral), there is no engine braking and you could lose control. Coasting can also cause severe transmission damage.**

⚠ WARNING

Without applying the service brakes, parking brake, or emergency brake:

- **Do not make shifts from R (Reverse) to N (Neutral). Selecting N (Neutral) does not apply vehicle brakes unless an auxiliary system to apply the parking brake is installed.**
- **Do not make shifts from N (Neutral) to a forward range or from N (Neutral) to R (Reverse) to avoid sudden movement of the vehicle.**
- **Do not make shifts from a forward range to N (Neutral). Selecting N (Neutral) does not apply vehicle brakes unless an auxiliary system to apply the parking brake is installed.**

https://truckmanualshub.com/

⚠ WARNING

- **D (Drive) and other forward ranges may not be obtained due to an active inhibitor. The range selected may not be obtained, resulting in unexpected vehicle motion. Always apply the service brakes when selecting D (Drive) or other forward ranges.**
- **The transmission incorporates a hold feature to prohibit upshifting above the range selected during normal driving. For downhill operation, select a lower transmission range. If the engine-governed speed is exceeded in the held range, however, the transmission may upshift to the next higher range. To avoid loss of vehicle control, use the vehicle brakes to prevent exceeding engine governed speed in the held range.**

⚠ WARNING

- **If you just downshift or just use service brakes when going downhill, you can lose control and cause injury and/or property damage. To avoid loss of control, use a combination of downshifting, braking, and other retarding devices.**
  Downshifting to a lower transmission range increases engine braking and helps you to maintain control. The transmission has a feature to prevent automatic upshifting above the lower range selected. However, during downhill operation, if engine governed speed is exceeded in the lower range, the transmission may upshift to the next higher range. This will reduce braking and could cause a loss of control. Apply the vehicle brakes or other retarding device to prevent exceeding engine governed speed in the lower range selected.

CAUTION

- **Do not idle in R (Reverse) or D (Drive) for more than 5 minutes. Doing so may cause transmission overheating and damage. Always use P (Park) or N (Neutral) if you need to idle over 5 minutes.**

<Operating with automatic transmission>

Check before engine start

- Always use the right foot to operate the accelerator pedal and the brake pedal in order to prevent depressing either by accident.

Shift lock system

<Model without P position (2500 series)>

- When shifting the selector lever for the first time after turning the ignition key to the ON position, the selector lever cannot be shifted from N to another position if the brake pedal is not depressed. Moreover, when the shift lever is

https://truckmanualshub.com/

left engaged in the N position for about 5 minutes even after shifting the selector lever for the second time, it cannot be shifted from the N position. In this case, depress the brake pedal and operate the selector lever.

- When the ignition key is in the ACC or LOCK position, the selector lever cannot be shifted from N to another position even if the brake pedal is depressed.
- When the selector lever is in any position other than the N position
  - ・The key cannot be removed from the ignition key switch. Place the selector lever to the N position and then remove the key.
  - ・The ignition key cannot be turned from ACC to the LOCK position.
- When shifting the selector lever from N to another position, depress the brake pedal first and then operate the lever. If the lever is operated first, it does not move so that the shift lock mechanism is not released.
- If the selector lever cannot be shifted from N to another position even when the brake pedal is depressed, press the shift lock release button. While pressing the button, the selector lever can be shifted.

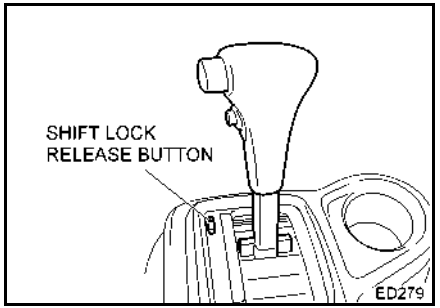

NOTE:

- **If this situation occurs, contact your nearest UD Trucks dealer for inspection.**

<Model with P position (1000 and 2200 series)>

- The selector lever cannot be shifted from the P position if the brake pedal is not depressed.
- When the ignition key is in the ACC or LOCK position, the selector lever cannot be shifted from the P position even if the brake pedal is depressed.
- When the selector lever is in any position other than the P position
  - ・The key cannot be removed from the ignition key switch. Place the selector lever in the P position and then remove the key.
  - ・The ignition key cannot be turned from ACC to the LOCK position.
- When shifting the selector lever from P to another position, depress the brake pedal first and then operate the lever. If the lever is operated first, it does not move so that the shift lock mechanism is not released.
- If the selector lever cannot be shifted from the P position even when the brake pedal is

https://truckmanualshub.com/

depressed, press the shift lock release button. While pressing the button, the selector lever can be shifted.

NOTE:

- **If this situation occurs, contact your nearest UD Trucks dealer for inspection.**

Engine start

- Check that the parking brake has been pulled up.
- Check that the shift lever is in the P (Park) or N (Neutral) position, then start the engine. (The engine will not start if the lever is in another position.) Check that the warning light turns off after the engine has started.

Starting to move the vehicle

- Depress the brake pedal with your right foot. Select a gear range. To move the vehicle forward, select D (Drive), to move backwards select R (Reverse).
- The gear will not shift if the engine speed is high.
- Release the parking brake. Lift your foot off of the brake pedal.
- When traveling forward, acceleration begins from 1st gear. According to the engine load and speed, the transmission will automatically shift from 1st gear, to 2nd, to 3rd... up to the maximum gear for the selected range.

NOTE:

- **The engine protection function may provide torque derating to prevent the engine from being damaged, in this case, also shift shock might occur.**

Stopping and parking

- When stopping temporarily, leave the shift lever in the D (Drive) position. Be sure to keep the brake pedal depressed with the right foot. In this way, there is no need to return the shift lever to N (Neutral).
- When stopping for 5 minutes or longer, shift to the N (Neutral) or P (Park) position.
- When parking, first stop the vehicle, then shift to P (Park) or N (Neutral). Then slowly release the brake pedal and check that the lock has been engaged. Then firmly set the parking brake.
- Each time you park the vehicle or leave the operator's station with the engine running, do the following.
  1. Bring the vehicle to a complete stop using the service brake.
  2. Ensure that the engine is at low idle rpm.
  3. Put the transmission in P (Park) or N (Neutral).
  4. Engage the P (Park) range by slowly releasing the service brake.
  5. Apply the emergency brake and/or parking brake, if present, and make sure it is properly engaged.
  6. If the operator's station will be unoccupied with the engine running, chock the wheels and take any other steps necessary to keep the vehicle from moving.

https://truckmanualshub.com/

NOTE:

- **When the vehicle is in motion, attempting to shift to the P (Park) range may produce only a clicking sound without actually shifting. Be sure to use the brake to stop the vehicle before shifting to P (Park).**

Accelerator pedal control

The position of the accelerator pedal influences the automatic shifting. When the pedal is fully depressed, the transmission will automatically upshift near the governed speed of the engine. A partially depressed position of the pedal will cause the upshifts to occur at a lower engine speed.

WARNING

- **When depressing the accelerator pedal or when the engine speed is higher than the idling speed, do not shift the selector lever from N to the forward or R range.**
  It is very dangerous as the vehicle might jump suddenly forward or backward. The transmission might also be damaged.

Downshift or reverse inhibitor feature

The transmission hydraulic system will not permit a shift into any forward gear at a speed that will cause excessive engine overspeed. Any lower forward range may be selected at any time, but the actual engagement of the gears in that range will not occur until road speed is reduced — downshifting is progressive as road speed decreases. The inhibitor effect will cause downshifts to occur at slightly higher speeds than normal automatic downshifts.

If the shift lever is accidentally moved to reverse while traveling forward, the transmission is designed not to shift into reverse gear until road speed is very low. To avoid shift shock, always come to a full stop before shifting from forward to reverse or from reverse to forward.

https://truckmanualshub.com/

Using the engine to slow the vehicle
To use the engine as a braking force, shift the selector to the next lower range. If the vehicle is exceeding the maximum speed for a lower gear, use the service brakes to slow the vehicle to an acceptable speed where the transmission may be downshifted safely.

Parking brake (2500 series)
There is no park position in the transmission shift pattern. Therefore, always put the selector in neutral and apply the parking brake to hold the vehicle when it is unattended.

Driving on ice or snow
Here is where all of your ability as a professional driver comes into focus regardless of what transmission you have. If possible, reduce your speed and select a lower range before you lose traction. Select the range that will not exceed the speed you expect to maintain. Accelerate or decelerate very gradually to prevent losing traction. It is very important to slow gradually when a lower range is selected. It is important that you reach the lower range selected before attempting to accelerate. This will avoid an unexpected downshift during acceleration.

Rocking out
If the vehicle is stuck in deep sand, snow, or mud, it may be possible to rock it out. Shift to D (Drive) and apply steady, light throttle (never full throttle). When the vehicle has rocked forward as far as it will go, apply and hold the vehicle service brakes. Allow the engine to return to idle; then select R (Reverse). Release the brakes and apply a steady, light throttle and allow the vehicle to rock in R (Reverse) as far as it will go. Again, apply and hold the service brakes and allow the engine to return to idle. This procedure may be repeated in D (Drive) and R (Reverse) if each directional shift continues to move the vehicle a greater distance. Never make N (Neutral)-to-D (Drive) or directional shift changes when the engine rpm is above idle.

⚠ WARNING

- **To avoid injury or property damage caused by sudden movement of the vehicle, do not make shifts from N (Neutral) to a forward range or R (Reverse) when the accelerator pedal is depressed. The vehicle will lurch forward or rearward and the transmission can be damaged. Avoid this condition by making shifts from N (Neutral) to a forward range or R (Reverse) only when the throttle is closed.**

https://truckmanualshub.com/

CAUTION

- **If the wheels are stuck and not turning, do not apply full power for more than 30 seconds in either D (Drive) or R (Reverse). Full power for more than 30 seconds under these conditions will cause the transmission to overheat. If the transmission overheats, shift to N (Neutral) and operate the engine at 1,200 to 1,500 rpm until it cools (2 to 3 minutes).**

Converter driven PTO

<PTO configuration>

The PTO is mounted on the left and/or right side of the transmission housing. The PTO drivetrain consists of a large drive gear in the transmission, an idler gear arrangement, and a smaller driven gear in the PTO. The drive gear is integral to the transmission rotating clutch housing, which rotates at the same speed as the torque converter turbine. With this drive configuration the PTO rotates in the same direction as the engine.

Two types of transmission-mounted PTOs may be used with these transmission models.

- A constant-drive PTO is used in applications which require full-time PTO operation. The PTO driven gear is in constant mesh with the drive gear and cannot be disengaged.
- Clutch drive and sliding gear PTOs are used in applications which require only part-time operation of the PTO or the capability to engage or disengage the driven equipment. For clutch drive PTOs, the following applies: 1) the engagement/disengagement provision is facilitated by a hydraulic clutch mechanism in the PTO assembly; 2) the PTO can be engaged or disengaged at any time (except at engine speeds that exceed drive speed limits imposed on the driven equipment).

CAUTION

- **Do no use or install a sliding gear PTO where the sliding gear meshes directly with the PTO driver gear. The PTO driver gear may be damaged when the sliding gear slides into the PTO drive gear, producing metal particles that can cause transmission damage.**

<PTO engagement — Sliding gear PTOs>

CAUTION

- **Never engage the sliding gear PTO by clashing the gear teeth. This may damage the PTO unit. Stop the clashing by releasing the vehicle brakes and allowing the vehicle to move slightly or by moving the shift selector from a drive range to N (Neutral) and back to a drive range.**

Engage the PTO drivetrain as follows.

https://truckmanualshub.com/

- Turn the PTO switch on.
- Set the engine speed at idle.
- Place shift selector lever in D (Drive).
- Shift the PTO power shift clutch lever to Drive.
- Bring the engine up to speed.
- Shift to N (Neutral).

Disengage the PTO drivetrain as follows.
- Stop the vehicle.
- Idle the engine.
- Set the brake.
- Place the shift selector in a drive range.
- Stop the PTO-driven equipment.
- Disengage the power takeoff.
- Return the transmission shift selector to N (Neutral).
- Turn the PTO switch to off.

<PTO Engagement—Clutch Driven>
The PTO will engage only when the PTO switch is on, the throttle position is low, and engine speed and output speed are within the limits specified by body builders.

<PTO operation>

CAUTION

- **Do not exceed the engagement and operational speed limits imposed on the driven equipment during the operation of the PTO. Exceeding the speed limits produces high hydraulic pressure in the PTO that can damage the PTO components. Consult the vehicle manufacturer's literature for these speed limits.**
- **Some vehicles creep in range at low vehicle speeds while maintaining a specified engine speed for PTO operation (e.g., paint stripers and feed lot trucks). For PTO operation at low speeds, do not use the brakes to limit vehicle speed while using the throttle to maintain an engine speed above idle when the transmission is in range. Such operation will cause the transmission to overheat. Extended operation at elevated temperatures will result in transmission damage.**

The transmission operates in either converter mode or torque converter clutch mode. In converter mode, the torque converter (lockup) clutch is not engaged and the PTO is driven through the torque converter, producing a torque at the PTO drive gear that is always greater than the input torque. In torque converter clutch mode, the torque converter (lockup) clutch is engaged, the PTO drivetrain is driven at a speed proportional to the engine speed.
The PTO drive is normally in continuous converter mode operation when the transmission is in P (Park) and R (Reverse). Torque converter clutch operation in N (Neutral) is available for some applications. If the PTO is used with the transmission in D (Drive) or another forward range, transmission shifts (both converter/torque converter clutch mode shifts and shifts between gears) are based on the automatic shift sequence of the transmission shift controls. PTO drive gear speed will be affected each time a shift occurs.
With the vehicle stopped and the engine at idle, PTO output speed is

https://truckmanualshub.com/

dependent upon the transmission gear selection.

- If the transmission is in D (Drive) or R (Reverse), the PTO output speed is zero.
- If the transmission is in N (Neutral) or P (Park), the PTO output will rotate slowly.

In some vehicles, the transmission will shift into N (Neutral) regardless of the shift selector position under the following conditions.

- the PTO is enabled
- the transmission output speed is near zero
- the throttle position is near zero

To reselect a range, the operator must shift into N (Neutral), then shift to the desired range.

<PTO overspeed protection>

CAUTION

- **Do not exceed the engagement and operational speed limits imposed on the driven equipment during the operation of the PTO. Exceeding the speed limits produces high hydraulic pressure in the PTO-driven components that can damage the PTO-driven components. Consult the vehicle manufacturer's literature for these speed limits.**
- **When the PTO is disengaged due to overspeed, the PTO will be automatically re-engaged at user specified speed, which is typically relatively low. The resultant re-engagement shock could cause damage to a high-inertia PTO system.**

ALLISON 3000 automatic transmission (Optional for UD2600 and UD3000)

The Allison automatic transmissions have 6 forward and 1 reverse gear ranges.

Selector switch

The Range selector switch is used to shift the gear to the desired driving range from among 6 forward ranges and the reverse range. When the switch is pushed, the selected range is displayed on the left side of the digital display of the selector. With the ⬆ or ⬇ switch, the range can be selected. While driving forward, each time the ⬇ switch is pushed once, the selector range is shifted downward by one gear, and each time the ⬆ switch is pushed once, the selector range is shifted upward by one gear. The selected range is displayed on the left side of the digital display of the selector, and the range in operation on the right side.

https://truckmanualshub.com/

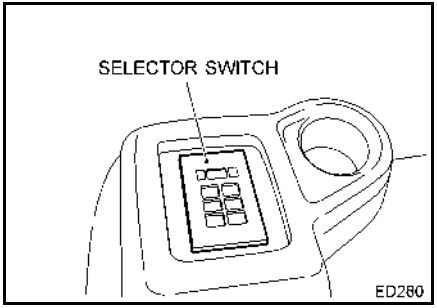

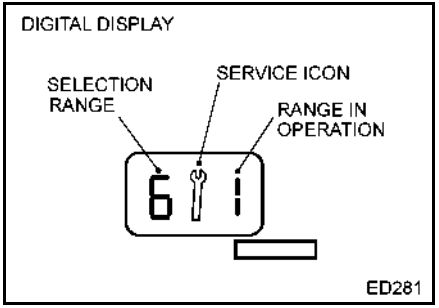

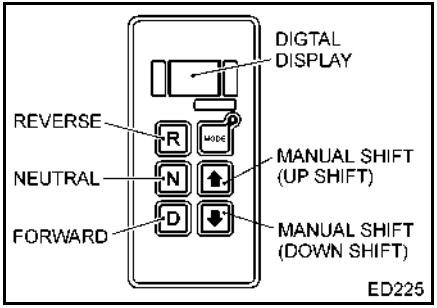

Relationship between switch operation and digital display

Range operation	Digital display		Automatic transmission range
	Selection range	Range in operation	
R	R	R	R
N	N	N	N
D	6	1 to 6	1 to 6
↓ Once	5	1 to 5	1 to 5
↓ Twice	4	1 to 4	1 to 4
↓ 3 times	3	1 to 3	1 to 3
↓ 4 times	2	1 to 2	1 to 2
↓ 5 times	1	1	1

https://truckmanualshub.com/

(R): Reverse Position —

- This position is used when moving the vehicle backwards. The backup light comes on and the back buzzer sounds and the back buzzer sounds in the cabin.

(N): Neutral Position —

- This position is used when starting the engine, for warming up the engine, and when stopped.

(D): Driving Position —

- This is the position used during normal driving. Shifting between gears 1 - 6 is done automatically, according to engine load and speed.

(5): Fifth Range —

- This position is used when a small amount of engine braking is needed. Shifting between gears 1 - 5 is done automatically.

(4): Fourth Range —

- This position is used when engine braking is needed while the vehicle is descending a slope. Shifting between gears 1 - 4 is done automatically.

(3): Third Range —

- This position is used when strong engine braking is needed while the vehicle is descending a slope. Shifting between gears 1 - 3 is done automatically.

(2): Second Range —

- This position is used when strong engine braking is needed. Shifting between gears 1 - 2 is done automatically.

(1): First Range —

- This position can be used during rough road conditions, when freeing the vehicle from mud or deep snow, when driving at very slow speed through narrow spaces, when climbing or descending steep slopes, or when the maximum amount of engine braking force is required. The transmission remains in 1st gear and does not shift.

⚠ WARNING

- **Always apply the service brakes when selecting R (Reverse). The range selected may not be obtained, resulting in unexpected vehicle motion.**
- **Do not allow the vehicle to coast in N (Neutral). If you let the vehicle coast in N (Neutral), there is no engine braking and you could lose control. Coasting can also cause severe transmission damage.**

⚠ WARNING

Without applying the service brakes, parking brake, or emergency brake:

- **Do not make shifts from R (Reverse) to N (Neutral). Selecting N (Neutral) does not apply vehicle brakes unless an auxiliary system to apply the parking brake is installed.**

https://truckmanualshub.com/

- **Do not make shifts from N (Neutral) to a forward range or from N (Neutral) to R (Reverse) to avoid sudden movement of the vehicle.**
- **Do not make shifts from a forward range to N (Neutral). Selecting N (Neutral) does not apply vehicle brakes unless an auxiliary system to apply the parking brake is installed.**

⚠ WARNING

- **D (Drive) and other forward ranges may not be obtained due to an active inhibitor. The range selected may not be obtained, resulting in unexpected vehicle motion. Always apply the service brakes when selecting D (Drive) or other forward ranges.**

- **The transmission incorporates a hold feature to prohibit upshifting above the range selected during normal driving. For downhill operation, select a lower transmission range. If the engine-governed speed is exceeded in the held range, however, the transmission may upshift to the next higher range. To avoid loss of vehicle control, use the vehicle brakes to prevent exceeding engine governed speed in the held range.**

⚠ WARNING

- **If you just downshift or just use service brakes when going downhill, you can lose control and cause injury and/or property damage. To avoid loss of control, use a combination of downshifting, braking, and other retarding devices.**

- **Downshifting to a lower transmission range increases engine braking and helps you to maintain control. The transmission has a feature to prevent automatic upshifting above the lower range selected. However, during downhill operation, if engine governed speed is exceeded in the lower range, the transmission may upshift to the next higher range. This will reduce braking and could cause a loss of control. Apply the vehicle brakes or other retarding device to prevent exceeding engine governed speed in the lower range selected.**

https://truckmanualshub.com/

CAUTION

- **Do not idle in R (Reverse) or D (Drive) for more than 5 minutes. Doing so may cause transmission overheating and damage. Always use N (Neutral) if you need to idle over 5 minutes.**

NOTE:

- **You must first stop the vehicle before shifting from a forward gear to Reverse, or from Reverse to a forward gear.**
- **The maximum speed varies by range. Select an appropriate range depending on situations.**
- **When shifting to lower speed gears, the transmission is done within the range where an engine overrun is not caused.**
- **When the vehicle speed gets excessively high on a downslope, etc., the transmission may upshift to a higher range than the selected range due to activation of the safety device. In that case, use the service brake to drive at a safe speed.**

<Operating with automatic transmission>

Check before engine start

- Always use the right foot to operate the accelerator pedal and the brake pedal in order to prevent depressing either by accident.

Engine start

- Check that the parking brake has been pulled up.
- Before starting the engine, make sure that “N N” is displayed on the digital display. The engine can only be started when “N N” is displayed on the digital display. If “N N” is not displayed, push the N switch to display “N N”.

https://truckmanualshub.com/

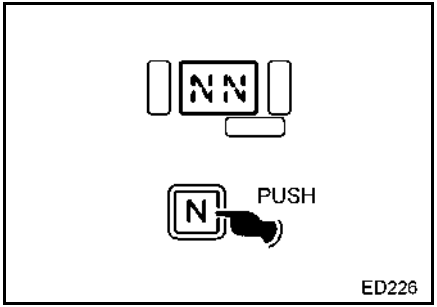

NOTE:

- **After the engine is started, warm up the engine. When the fluid temperature is low during wintertime, only “N”, “R” and the lowest speed gear of “D” can be used.**
- **When the engine can be started in any range other than “N”, there is something wrong. Contact the nearest authorized UD Trucks dealer.**
- **Avoid attempting to start your vehicle by pushing or towing.**

Starting to move the vehicle

- With the power mode switch, select normal or power mode.
- Keeping the brake pedal depressed with the right foot, push the switch and select the range. To move the vehicle forward, select D (Drive), to move backwards select R (Reverse).

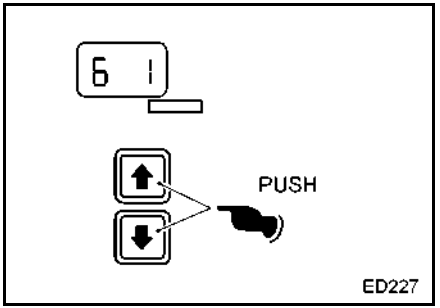

- If the engine speed is high, the gear is not engaged. Then, turn the engine throttle control knob to the AUTO position to lower the speed.
- To start the vehicle on a level ground, select the “D” range.
- Release the parking brake. Lift your foot off of the brake pedal.
- When traveling forward, acceleration begins from 1st gear. According to the engine load and speed, the transmission will automatically shift from 1st gear, to 2nd, to 3rd... up to the maximum gear for the selected range.

NOTE:

- **Shifting with the power mode switch can be done only during the engine running.**
- **The engine protection function may provide torque derating to prevent the engine from being damaged, in this case, also shift shock might occur.**

CAUTION

- **If the phenomenon in which upshifts and downshifts are repeated (shift hunting) occurs while driving, shift to a lower speed gear range using the ⬇ switch.**

https://truckmanualshub.com/

- **When the accelerator pedal is gradually depressed to accelerate the vehicle or to maintain the constant speed when climbing slopes, kickdown may occur, leading to an increase of the engine speed, but it is not a failure.**
- **Before shifting the range from "N" to "D" or "R" or from "D" to "R", allow the engine to idle. Before shifting the range to the position above the 1st gear, release the accelerator pedal.**

SHIFT LIMIT warning message

The selector digital display, LH (selection range) character (can be "R", "6", "5", "4", "3", "2" or "1") flashes when there has been an error in operation or when the safety circuit has been activated. It indicates that the change from the current shift to another specified shift cannot be done.

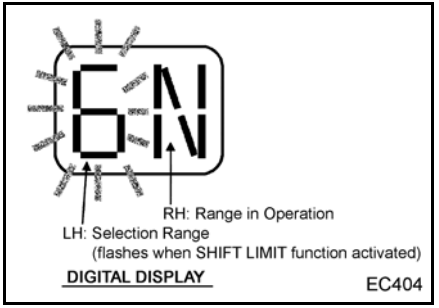

Stopping and parking

- When stopping temporarily, leave the shift lever in the D (Drive) position. Be sure to keep the brake pedal depressed with the right foot. In this way, there is no need to return the selector switch to N (Neutral).
- When stopping for 5 minutes or longer, shift to the N (Neutral) position.
- When parking, first stop the vehicle, then shift to N (Neutral). Then slowly release the brake pedal and check that the lock has been engaged. Then firmly set the parking brake.
- Each time you park the vehicle or leave the operator's station with the engine running, do the following.

1. Bring the vehicle to a complete stop using the service brake.
2. Ensure that the engine is at low idle rpm.
3. Put the transmission in N (Neutral).

https://truckmanualshub.com/

4. Apply the emergency brake and/or parking brake, if present, and make sure it is properly engaged.
5. Slowly release the service brake.
6. If the operator's station will be unoccupied with the engine running, chock the wheels and take any other steps necessary to keep the vehicle from moving.

Accelerator pedal control
The position of the accelerator pedal influences the automatic shifting. When the pedal is fully depressed, the transmission will automatically upshift near the governed speed of the engine. A partially depressed position of the pedal will cause the upshifts to occur at a lower engine speed.

⚠ WARNING

- **When depressing the accelerator pedal or when the engine speed is higher than the idling speed, do not shift the selector switch from N to the forward or R range.**
  It is very dangerous as the vehicle might jump suddenly forward or backward. The transmission might also be damaged.

Downshift or reverse inhibitor feature
The transmission hydraulic system will not permit a shift into any forward gear at a speed that will cause excessive engine overspeed. Any lower forward range may be selected at any time, but the actual engagement of the gears in that range will not occur until road speed is reduced — downshifting is progressive as road speed decreases. The inhibitor effect will cause downshifts to occur at slightly higher speeds than normal automatic downshifts.

If the selector switch is accidentally pushed to reverse while traveling forward, the transmission is designed not to shift into reverse gear until road speed is very low. To avoid shift shock, always come to a full stop before shifting from forward to reverse or from reverse to forward.

Using the engine to slow the vehicle
To use the engine as a braking force, shift the selector to the next lower range. If the vehicle is exceeding the maximum speed for a lower gear, use the service brakes to slow the vehicle to an acceptable speed where the transmission may be downshifted safely.

Parking brake
There is no park position in the transmission shift pattern. Therefore, always put the selector in neutral and apply the parking brake to hold the vehicle when it is unattended.

Driving on ice or snow
Here is where all of your ability as a professional driver comes into focus

https://truckmanualshub.com/

regardless of what transmission you have. If possible, reduce your speed and select a lower range before you lose traction. Select the range that will not exceed the speed you expect to maintain. Accelerate or decelerate very gradually to prevent losing traction. It is very important to slow gradually when a lower range is selected. It is important that you reach the lower range selected before attempting to accelerate. This will avoid an unexpected downshift during acceleration.

Rocking out

If the vehicle is stuck in deep sand, snow, or mud, it may be possible to rock it out. Shift to D (Drive) and apply steady, light throttle (never full throttle). When the vehicle has rocked forward as far as it will go, apply and hold the vehicle service brakes. Allow the engine to return to idle; then select R (Reverse). Release the brakes and apply a steady, light throttle and allow the vehicle to rock in R (Reverse) as far as it will go. Again, apply and hold the service brakes and allow the engine to return to idle. This procedure may be repeated in D (Drive) and R (Reverse) if each directional shift continues to move the vehicle a greater distance. Never make N (Neutral)-to-D (Drive) or directional shift changes when the engine rpm is above idle.

⚠ WARNING

- **To avoid injury or property damage caused by sudden movement of the vehicle, do not make shifts from N (Neutral) to a forward range or R (Reverse) when the accelerator pedal is depressed. The vehicle will lurch forward or rearward and the transmission can be damaged. Avoid this condition by making shifts from N (Neutral) to a forward range or R (Reverse) only when the throttle is closed.**

CAUTION

- **If the wheels are stuck and not turning, do not apply full power for more than 30 seconds in either D (Drive) or R (Reverse). Full power for more than 30 seconds under these conditions will cause the transmission to overheat. If the transmission overheats, shift to N (Neutral) and operate the engine at 1,200 to 1,500 rpm until it cools (2 to 3 minutes).**

When descending slopes or downshifting

- When descending a slope, downshift to D→5→4→3→2→1 depending on the conditions of the slope and use engine braking. In addition, use exhaust braking in combination for safe driving.
- Be careful not to let the engine overrun while driving (especially, descending slopes).

https://truckmanualshub.com/

BRAKE OPERATION

UD1800 thru UD2600 equipped with air-over-hydraulic service brakes and spring-activated rear wheel parking brakes. UD3300 equipped with full-air service brake and spring-activated rear wheel parking brake. Auxiliary exhaust braking and engine braking provide additional braking action.

Service brakes

1. For normal stops, supplement the service brakes with engine braking by downshifting the transmission at the same time that the service brakes are applied.

⚠ WARNING

- **Avoid applying the service brakes when the manual transmission/automatic transmission is in neutral. When the transmission is in neutral, there is neither engine braking nor exhaust braking. This results in an increased load on the service brakes and eventual reduced braking efficiency.**

2. When descending a grade, first use engine braking by selecting the same transmission gear which would be appropriate for going up the grade. Supplement the engine braking with exhaust braking and finally with service brakes as necessary to maintain a safe vehicle speed.
3. Do not abruptly apply the brakes except in an emergency. Always maintain sufficient distance from the vehicle in front of you. Allow for additional stopping distance as vehicle load increases and when operating your vehicle on slippery road surfaces.

⚠ CAUTION

- **Driving through deep water may get the wheel brakes wet and stopping distance will be longer than normal.**
  Make sure there is no other vehicles around you, then dry the brakes by applying them gently several times while the vehicle is moving slowly.

⚠ WARNING

- **Do not rest your foot on the brake pedal while driving. Avoid extended braking with the service brakes only. Either may cause the brake drums to overheat, the linings to wear excessively, and/or cause a drop in braking pressure resulting in a reduction in braking effectiveness and increased stopping distances.**
- **Repeated brake pedal pumping uses air needed for braking action and reduces braking effectiveness.**
- **Never operate the vehicle when the AIR PRESSURE warning light is on or the low air pressure warning buzzer is sounding.**
- **Check the low air pressure warning system regularly.**
- **When the vehicle has been parked for long periods in cold climates, moisture on the brake linings may freeze, making the brakes inoperative. Check braking action by operating the brakes while driving the vehicle at a low speed.**

https://truckmanualshub.com/

(ABS) Anti-lock Brake System

The ABS, when it activates, properly controls the slippage of wheels and effectively utilizes frictions between tires and road surfaces. It is a device that enhances safety, but it does not enable you to drive beyond the limitations. Follow the precautions below, and always drive safely.

- Confirm that the warning light illuminates when the ignition key is turned to the ON position and that it goes out after about 3.0 seconds.
- The motor operating sound may be temporarily heard from the frame side when the vehicle speed reaches 4 mph (7 km/h) each time after the engine is started. This is the sound of the ABS operation check, and it is not a malfunction.
- When the ABS is in operation, the operating sound is intermittently heard. This is not a malfunction.
- The stopping distance on slippery road surfaces will be longer than on normal, dry, paved road surfaces.
  Also, in deep snow, on gravel roads, or when tire chains are installed, if the ABS activates, the stopping distance may be slightly longer than the models without ABS.
  Always take into account the road conditions, tire conditions, etc., maintain a safe distance from the vehicle in front of you, and drive at safe speeds.
- The ABS helps to prevent the wheel slippage when the brake is applied, and it does not function for the slippage when the accelerator pedal is applied or when turning. Also, even if the ABS activates, on a frozen and very slippery road, the steering wheel operation can be difficult due to the loss of control.Always drive at safe speeds, and avoid abrupt braking or steering operations as much as possible.
- When driving with the transmission in a lower gear position on a frozen and slippery road, engine braking may lock the driving wheel, and the vehicle can become unstable. In this case, release the clutch, and apply the brake.
- When decelerating on slippery or uneven road surface with the auxiliary brake (exhaust brake) applied, if wheel slippage occurs, the auxiliary brake may be automatically released and the indicator light goes out. This is a normal operation of ABS, and it is not a malfunction. Pay attention to the road conditions and the distance between vehicles, and always drive safely.

⚠ CAUTION

- **When installing an electronic device such as radio or communication equipment, be careful not to affect the function of the ABS. Contact an authorized UD Trucks dealer if you have any unclear points.**

https://truckmanualshub.com/

Parking brake

<Spring-activated rear wheel parking brake>

The rear axle brake shoes are mechanically actuated by a spring system when the parking brake are applied. To apply the parking brake, pull the parking brake valve on the cab floor in rear of the transmission gear shift lever. Push the valve down to release the parking brake.

WARNING

- **Never apply the parking brake when the vehicle is moving. Such application will lock the rear wheels and may result in loss of vehicle control, could cause damage to the driveline and/or brake drum on the transmission.**
- **Do not operate the parking brake valve when someone is working near the rear axle. The movements of the parking brake actuating rod may cause serious injury.**
- **Before operating the vehicle, release the parking brake. Make sure that the PARKING BRAKE warning light goes out. If the parking brake is not released, the brake system may be damaged resulting in a loss of braking effectiveness.**
- **When parking on a slope or off the road, use wheel chocks in addition to the parking brake.**

PARKING YOUR VEHICLE

Whenever it is possible, park the vehicle on a level ground. When parking on a slope or off the road, use wheel chocks in addition to the parking brake.

WARNING

- **Always place the transmission in neutral position (Manual transmission) or P (Park) or N (Neutral) position (Automatic transmission) to prevent unintended engine startup resulting from sudden or unexpected vehicle movement.**
- **Always set the parking brake.**
- **Do not leave the vehicle unattended with the engine running.**
- **Avoid parking in a place where there are flammable objects such as dry grass, etc. They may ignite and cause a fire due to the high temperature of the engine and exhaust system.**

https://truckmanualshub.com/

To park the vehicle

1. Shift the transmission to the neutral position (Manual transmission) or P (Park) or N (Neutral) position (Automatic transmission).
2. Apply the parking brake.
3. Idle the engine for 3 to 5 minutes to lower the engine temperature before stopping the engine.

CAUTION

- **Neglecting to idle the engine properly may damage the engine especially after completing a high-load or high-speed run.**

4. Stop the engine and turn all switches to OFF.
5. Remove the ignition key.
6. Lock the doors.

AFTER PARKING YOUR VEHICLE

1. Check for oil, water and fluid leaks.
2. Drain any condensate from the air reservoir.
3. In cold climates drain water from the fuel filter. If water remains, it may freeze resulting in damage to the fuel filter.
4. Perform all necessary service and repairs.

IN COLD WEATHER

Starting the engine in cold weather

The diesel engine utilizes a compression ignition system and therefore starting the engine in cold weather may be difficult compared to a gasoline engine.
In order to facilitate cold weather starting, adhere to the following procedures.

Starting method

⚠ WARNING

- **Do not use ether to assist with starting since it is highly toxic and flammable and could cause a fire or explosion.**

Fuel

- Use diesel fuel ASTM 1-D in cold weather.
- Avoid getting water in the fuel system. Water in the fuel system will freeze and make starting the

https://truckmanualshub.com/

engine impossible. At the end of each daily operation, drain water from the fuel filter.

- Always fill the fuel tank up to its specified level to prevent condensation.

Oil

- The lubricating oil thickens as it gets colder, slowing engine cranking speed. Be sure to use proper lubricating oil in order to offer less resistance to the cranking effort of the engine.
  See the "Oil viscosity and relation between viscosity and temperature:" on page 11-32.

Battery

- If the battery is not fully charged, the battery electrolyte may freeze and the resultant expansion may damage the battery.
  To maintain maximum efficiency, the battery should be checked regularly, at least once a month, and maintained in the fully-charged condition.

⚠ WARNING

- **Do not attempt to jump start a vehicle having a frozen battery; the battery may rupture or explode. If a frozen battery is suspected or if ice can be seen in each cell, do not attempt to start the vehicle with jumper cables.**

Anti-freeze

- Check the UDXtra Long Life Diesel Engine Antifreeze/Coolant to assure proper winter protection. For details, see the "ENGINE COOLING SYSTEM" on page 11-24.

Draining air reservoir

- At the end of each daily operation, always drain water from the air reservoir. If a large quantity of water accumulates, the air dryer may be faulty and should be repaired.

⚠ WARNING

- **Failure to drain water could cause freezing in the air lines and result in serious injury due to insufficient braking power.**

https://truckmanualshub.com/

Cold Weather Operation of Allison Automatic Transmission

The following chart is the minimum fluid temperature at which the transmission may be safely operated in a forward or reverse range. When ambient air temperature is below the minimum fluid temperature limit and the transmission is cold, warm-up is required.

Run the engine at idling for at least 20 minutes with the transmission in neutral before operating in a forward or reverse range.

CAUTION
● **Failure to observe the minimum fluid temperature limit can result in transmission malfunction or reduced transmission life.**

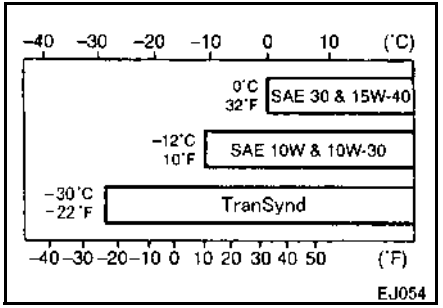

Coolant heater

- At temperatures below –4°F (–20°C), an engine block immersion coolant heater is recommended to aid cold weather starting by keeping the engine warm. For details, please consult your UD trucks dealer.

IDLE SHUTDOWN (Optional)

The Idle shutdown function saves fuel consumption and reduces emission gas when a vehicle is standing still and ignition key is ON position.

<Function Overview>

This function stops the engine automatically if a predefined time has elapsed since the entry conditions are fulfilled when the vehicle is standing still and the ignition key position is ON.

The warning period is 30 seconds before the engine stops. The displayed message and audible alarm warn the driver during this period.

The warning to the driver continues until turn the ignition key to OFF position.

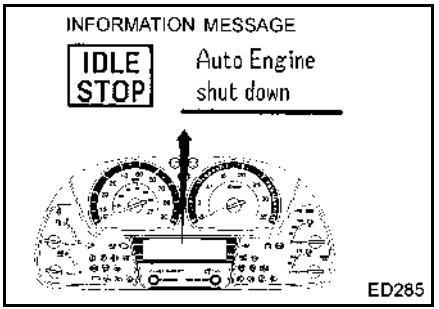

https://truckmanualshub.com/

⚠ CAUTION

- **If the vehicle is left as it is after engine was shut down automatically by this function, it results in low battery.**
- **It is not easy to operate steering because the power steering is not available just after engine shutdown.**

<Entry Condition>
The idle shutdown function starts the timer to stop the engine if following all conditions are fulfilled.

AND Engine has been warmed up.
AND The engine is running and the vehicle is standing still.
AND Accelerator pedal is released.
AND Parking brake is applied.
(This condition can be applied according to the customer needs.)

<Override Condition>
The idle shutdown function does not shutdown the engine if any of following conditions is fulfilled.

- PTO switch is ON.
- DPF is being regenerated.
- Brake pedal is depressed during the warning period.
- Engine load is over the threshold.
- External lever is in use.
- Any of the entry conditions is not fulfilled.
- Just after engine was run at high load.
- Any failure occurs in the engine system.

<Engine restart>
1. Turn the ignition key to LOCK (OFF) position, and a audible alarm will stop sounding.
2. Turn the ignition key to the START position.

https://truckmanualshub.com/

VEHICLE SERVICE AND MAINTENANCE

CLEAN AIR ACT

Heavy-duty engine rebuilding practices.

§ 86.004-40

The provisions of this section are applicable to heavy-duty engines subject to model year 2004 or later standards and are applicable to the process of engine rebuilding (or rebuilding a portion of an engine or engine system). The process of engine rebuilding generally includes disassembly, replacement of multiple parts due to wear, and reassembly, and also may include the removal of the engine from the vehicle and other acts associated with rebuilding an engine. Any deviation from the provisions contained in this section is a prohibited act under section 203 (a) (3) of the Clean Air Act (42 U.S.C. 7522 (a) (3)).

1. When rebuilding an engine, portions of an engine, or an engine system, there must be a reasonable technical basis for knowing that the resultant engine is equivalent, from an emissions standpoint, to a certified configuration (i.e., tolerances, calibrations, specifications) and the model year(s) of the resulting engine configuration must be identified. A reasonable basis would exist if:

A. Parts installed, whether the parts are new, used, or rebuilt, are such that a person familiar with the design and function of motor vehicle engines would reasonably believe that the parts perform the same function with respect to emissions control as the original parts; and

B. Any parameter adjustment or design element change is made only:

a. In accordance with the original engine manufacturer's instructions; or

b. Where data or other reasonable technical basis exists that such parameter adjustment or design element change, when performed on the engine or similar engines, is not expected to adversely affect in-use emissions.

2. When an engine is being rebuilt and remains installed or is reinstalled in the same vehicle, it must be rebuilt to a configuration of the same or later model year as the original engine. When an engine is being replaced, the replacement engine must be an engine of (or rebuilt to) a configuration of the same or later model year as the original engine.

3. At time of rebuild, emissions-related diagnostic trouble codes (DTCs) or signals from on-board diagnostic (OBD) monitoring systems may not be erased or reset

https://truckmanualshub.com/

without diagnosing and responding appropriately to the DTCs, regardless of whether the systems are installed to satisfy requirements in § 86.004-25 or for other reasons and regardless of form or interface. Diagnostic systems must be free of all such DTCs when the rebuilt engine is returned to service. Such signals may not be rendered inoperative during the rebuilding process.

4. When conducting a rebuild without removing the engine from the vehicle, or during the installation of a rebuilt engine, all critical emissions-related components listed in § 86.004-25 (b) not otherwise addressed by paragraphs 1 through 3 of this section must be checked and cleaned, adjusted, repaired, or replaced as necessary, following manufacturer recommended practices.

5. Records shall be kept by parties conducting activities included in paragraphs 1 through 4 of this section. The records shall include at minimum the mileage and/or hours at time of rebuild, a listing of work performed on the engine and emissions-related control components including a listing of parts and components used, engine parameter adjustments, emissions-related DTCs or signals responded to and reset, and work performed under paragraph 4 of this section.

A. Parties may keep records in whatever format or system they choose as long as the records are understandable to an EPA enforcement officer or can be otherwise provided to an EPA enforcement officer in an understandable format when requested.

B. Parties are not required to keep records of information that is not reasonably available through normal business practices including information on activities not conducted by themselves or information that they cannot reasonably access.

C. Parties may keep records of their rebuilding practices for an engine family rather than on each individual engine rebuilt in cases where those rebuild practices are followed routinely.

D. Records must be kept for a minimum of two years after the engine is rebuilt.

https://truckmanualshub.com/

MAINTENANCE INTERVALS

Abbreviations:

A = Check and adjust if necessary
R = Replace or change
I = Inspect, clean and correct or replace as necessary
T = Tighten to specified torque
L = Lubricate

NOTE:

- **It is the owner's responsibility to see that the vehicle receives proper care and maintenance.**
- **The maintenance or lubrication services shown below are to be performed at the indicated intervals (miles or months, whichever occurs first).**
- **Items indicated by "♦" should be performed only by your authorized UD Trucks dealer or qualified service facility. For other items, the maintenance procedures are given in this chapter.**
- **Items marked with "*" are related to the EMISSION CONTROL SYSTEM MAINTENANCE.**
- **Under the following severe operating conditions, more frequent servicing will be required.**
  - **Operation in heavy dust conditions**
  - **Operation at extremely low or high ambient air temperature**
  - **Extended high-speed operation with vehicle fully-loaded to its GVWR**
  - **Extended low-speed operation**
  - **Frequent stop-and-go operation**
- **Any replacement parts used for required maintenance service or repairs should be genuine UD Trucks parts or equivalent in quality and design to genuine UD Trucks parts.**

https://truckmanualshub.com/

Engine

Items		First	Every												Months (every)	Reference page
	Miles x 1,000	3	6	9	10	12	15	18	20	24	30	36	50	72		
	Kilometers x1,000	5	10	15	16	20	25	30	32	40	48	60	80	120		
BASIC MECHANICAL SYSTEM																
♦ Valve clearance													A		24	
♦*Cylinder compression pressure														A	36	
♦*Engine mounting														A	36	
FUEL SYSTEM																
♦Low and High idle speed													A		-	
*Fuel filters (Main and primary fuel filter)		Once for every 2 engine oil and filter replacements													-	11-39
Fuel hose and pipe (Fuel filter to supply pump, Fuel tank to fuel filter, Engine to fuel tank)						A								R	R:36	11-43
LUBRICATION																
*Engine oil and oil filter:	Type 1									R					12	11-33
(With UDXtra Engine oil)	Type 2										R				12	
*Engine oil and oil filter:	Type 1						R								6	
(With Non-UDXtra Engine oil) (Refer to note 1.)	Type 2								R						6	
Type 1/Type 2: For type of operation details refer to page 11-33																

NOTE: 1. Non-UDXtra engine oil details refer to page 11-31.

https://truckmanualshub.com/

Engine (Cont'd)

Items		First	Every											Months (every)	Reference page
	Miles x 1,000	3	6	9	10	12	15	18	20	24	30	36	50	72		
	Kilometers x1,000	5	10	15	16	20	25	30	32	40	48	60	80	120		
COOLING SYSTEM																
*Cooling fan												I			12	11-27
*Drive belts		Initial inspection at first 6,000 miles (10,000 km)														11-46
												R			12	
Engine coolant		R: Every 320,000 miles (500,000 km)													48	11-28
*Radiator and heater hoses and clamps												A			12	11-24
INTAKE AND EXHAUST SYSTEM																
*Air cleaner element												R			12	11-44
Intake air hose and clamps												R			24	11-75
*Charge air cooler body					I										6	11-27
♦*Charge air cooler hoses														I	24	
♦ Turbocharger rotor operation														I	24	
Exhaust pipe and muffler attachment loose and damage					A										12	11-75
♦*DPF		I: Every 155,000 miles (250,000 km) or 4,500 hours													-	11-70
♦*CCV filter		R: Every 62,000 miles (100,000 km)													12	11-50
♦*DEF filter		R: Every 150,000 miles (240,000 km) or 7,000 hours													-	11-48
♦*DPF sensor hose		R: Every 36 months													36	
♦*DPF regeneration system		I: Every 12 months													12	11-71

https://truckmanualshub.com/

Engine (Cont'd)

Items		First	Every												Months (every)	Reference page
	Miles x 1,000	3	6	9	10	12	15	18	20	24	30	36	50	72		
	Kilometers x1,000	5	10	15	16	20	25	30	32	40	48	60	80	120		
ELECTRICAL EQUIPMENT																
Starter bearing grease												I			12	
♦ Starter brush														I	24	
♦ Alternator assy		R: Every 218,000 miles (350,000 km)													-	

https://truckmanualshub.com/

Chassis

Items		First	Every												Reference page
	Miles x 1,000	3	6	9	10	12	15	18	20	24	30	36	50	72	
	Kilometers x1,000	5	10	15	16	20	25	30	32	40	48	60	80	120	
	Months (every)	1	2		4		6		8	10	12				
CLUTCH															
Clutch fluid							I				R				11-66
Clutch pedal play					I										11-65
♦ Clutch disc					I										
♦ Clutch piping											I				
MANUAL TRANSMISSION															
♦ Breather											I				
Manual transmission gear oil		R									R				11-56
AUTOMATIC TRANSMISSION (UD1800 thru UD3300)															
Automatic transmission fluid & filter		Refer to 11-12													
PROPELLER SHAFT															
Sliding shaft											I				
♦ Universal joint											I				
♦ Center bearing											I				
♦ Condition of propeller shaft							T								
DIFFERENTIAL GEAR															
Differential gear oil		R									R				11-60

https://truckmanualshub.com/

Chassis (Cont'd)

Items		First	Every												Reference page
	Miles x 1,000	3	6	9	10	12	15	18	20	24	30	36	50	72	
	Kilometers x1,000	5	10	15	16	20	25	30	32	40	48	60	80	120	
	Months (every)	1	2		4		6		8	10	12				
STEERING SYSTEM															
♦ Gear box							T								
Power steering fluid and filter		R			I						R				11-62
Steering wheel free play					I										11-60
♦ Steering linkage					T										
♦ Power steering rubber hose		R: Every 24 months													
AXLE AND WHEEL															
♦ Front axle (I-beam)											I				
♦ Clearance between front axle and knuckle											I				
♦ Kingpin cotter pin											T				
♦ Wheel alignment											I				
♦ Rear axle housing											I				
♦ Breather											I				
♦ Front wheel bearing (Refer to note 1.)							I								
♦ Front wheel bearing grease											R				
♦ Rear wheel bearing (Refer to note 1.)							I								
♦ Rear wheel bearing grease											R				
Wheel nut (Refer to note 2.)			I												11-86

NOTE: **1. If the mileage is 2,500 miles (4,000 km) or less in 6 months just before the 6 month inspection, the inspection can be skipped.**
2. Perform maintenance after the first 1,000 miles (1,600 km) of operation. This maintenance procedure also applies whenever a tire is replaced.

https://truckmanualshub.com/

Chassis (Cont'd)

Items		First	Every												Reference page
	Miles x 1,000	3	6	9	10	12	15	18	20	24	30	36	50	72	
	Kilometers x1,000	5	10	15	16	20	25	30	32	40	48	60	80	120	
	Months (every)	1	2		4		6		8	10	12				
AIR-OVER-HYDRAULIC BRAKE SYSTEM (UD1800 thru UD2600)															
♦ Service brake valve											I				
Air dryer			I												11-64
♦ Air dryer repair kit		R: Every 12 months													
♦ Air compressor and air pressure governor (air dryer integrated model)											I				
♦ Brake piping											I				
♦ Brake hose		R: Every 12 months													
♦ Air booster repair kit		R: Every 12 months													
Brake fluid							I				R				11-62
♦ Wheel cylinder repair kit		R: Every 12 months													
♦ Brake lining clearance (Refer to note 1.)		I: Every 2,500 miles (4,000 km) or 1 month													
♦ Brake lining					I										
♦ Brake drum											I				
♦ Parking brake system (note 2.)											I				
♦ Parking brake chamber diaphragm (note 2.)		R: Every 24 months													

NOTE: **1. During periods of severe service operation or frequent stop-and-go operation, more frequent inspections of the brake system should be performed.**
2. Spring-activated rear wheel parking brake.

https://truckmanualshub.com/

Chassis (Cont'd)

Items		First	Every												Reference page
	Miles x 1,000	3	6	9	10	12	15	18	20	24	30	36	50	72	
	Kilometers x1,000	5	10	15	16	20	25	30	32	40	48	60	80	120	
	Months (every)	1	2		4		6		8	10	12				
AIR BRAKE SYSTEM (UD3300)															
♦ Service brake valve											I				
Air dryer			I												11-64
♦ Air dryer repair kit		R: Every 12 months													
♦ Air compressor and air pressure governor											I				
♦ Brake piping											I				
♦ Brake hose		R: Every 12 months													
♦ Rear and front brake chamber diaphragm		R: Every 24 months													
♦ Brake chamber push rod stroke (Refer to note 1.)		I: Every 2,500 miles (4,000 km) or 1 month													
♦ Rear brake chamber spring cylinder (Refer to note 2.)		R: Every 36 months													
♦ Brake lining					I										
♦ Brake drum											I				
♦ Parking brake system											I				

NOTE: 1. During periods of severe service operation or stop-and-go high volume operation, more frequent inspections of the brake system should be performed. Always maintain correct push rod stroke and brake adjustment to ensure correct braking.
2. Non-disassembling

https://truckmanualshub.com/

Chassis (Cont'd)

Items		First	Every												Reference page
	Miles x 1,000	3	6	9	10	12	15	18	20	24	30	36	50	72	
	Kilometers x1,000	5	10	15	16	20	25	30	32	40	48	60	80	120	
	Months (every)	1	2		4		6		8	10	12				
SUSPENSION															
Leaf spring			I												11-67
Shock absorber					I										11-68
♦ U-bolt and nut		T					I								
Air bellows (Air suspension)				I			I				I				11-68
Leveling valve (Air suspension)				I			I				I				11-68
Air leakage (Air suspension)				I			I				I				11-68
♦ Looseness and damage (Air suspen-sion)				I			I				I				11-68
Shock absorber (Air suspension)					I										
ELECTRICAL SYSTEM															
Battery electrolyte level							I								11-76
Battery terminal			I												11-77
Specific gravity of battery electrolyte							I								11-77
OTHERS															
♦ Acoustical shielding											I				
Grease lubrication		L: Every 5,000 miles (8,000 km) or 1 month													11-16

https://truckmanualshub.com/

Automatic transmission maintenance schedule

Change the automatic transmission fluid and filter at the intervals specified in the following chart.

UD1800 thru UD3300 (Allison 1000, 2200 and 2500 series)

Vocation	Fluid* (#1)	Filters (#2)		
		Control Main**	Internal	Lube/Auxiliary
General or severe	Change fluid when indicated by controller or 48 months, whichever comes first.	Change filter when indicated by controller or 48 months, whichever comes first.	Overhaul	Change filter when indicated by controller or 48 months, whichever comes first.
* Allison Prognostics must only be used with Allison approved TES 295 fluid. ** Allison Prognostics must only be used with Allison P/N 29539579 control main spin-on filter. Control Main Spin-on Filters Only - Initial 10,000 miles (16,000 km) or 400 hours, whichever comes first.				

#1 OIL LIFE MONITOR

The ATM maintenance indicator will be illuminated, denoting a required change of the transmission fluid, when the remaining fluid life reaches approximately 2 percent (the parameter begins at 100 percent moving downward towards the lowest threshold). The ATM maintenance indicator will be lit steadily upon each initialization of the TCM, and will remain on steady for approximately two minutes after the initial selection of a drive range, until service is performed and the indicator is reset.

Failure to perform maintenance and reset the ATM maintenance indicator within the next 100 hours of transmission operation will result in the illumination of the ATM system light (in addition to the ATM maintenance light). Any time this light is illuminated.

https://truckmanualshub.com/

#2 FILTER LIFE MONITOR

The ATM maintenance indicator will flash beginning with the first TCM initialization after reaching the time and mileage parameters, indicating that the filter has reached the end of its designed life. The indicator will continue to flash for two minutes after D (Drive) has been selected. Thereafter, the indicator will illuminate and flash upon each TCM initialization, continuing to flash for two minutes after the selection of D (Drive) each time, until service is performed and the indicator is reset.

Failure to perform maintenance and reset the ATM maintenance indicator after an additional 100 hours of transmission operation will result in the illumination of the ATM system light (in addition to the ATM maintenance light). Any time this light is illuminated.

TRANSMISSION HEALTH MONITOR

The ATM maintenance indicator will be illuminated, indicating the need for clutch maintenance, when the remaining clutch life reaches approximately 10 percent, or if the running clearance exceeds a maximum value which may indicate a non-wear-related issue. The indicator will be lit steadily upon initialization of the TCM, and will remain on steady at all times, continuing to operate in this manner until service is performed and indicator is reset. If reset does not occur within 100 hours, the ATM system light will be illuminated (in addition to the ATM maintenance light) and the TCM will register a diagnostic trouble code (DTC).

The indicator will reset automatically upon elimination of the clutch clearance condition which initiated it.

https://truckmanualshub.com/

UD2600 and UD3300 (Allison 3000 series)

Filter Type	Fluid and Filter Change Interval			
		Fluid Change Intervals	High capacity** Main and Lube Filter Change Intervals	Suction Filter Assembly Change Interval
A disassembled type (Incorporated in the oil pan)	TES 295 Fluids* (includes TranSynd®)	Whichever is first of the following: ・If the wrench icon in the selector is illuminated steady for 2 minutes after D (Drive) is selected ・60 calendar months** **NOTE**: Always replace main and lube filters with the fluid change**.	Whichever is first of the following: ・If the wrench icon in the selector is flashing on and off for 2 minutes after D (Drive) selected ・Any time the fluid is changed ・60 calendar months**	At time of transmission overhaul

TRANSMISSION HEALTH MONITOR (TM)

This prognostic feature determines clutch life status of the transmission's clutches and alerts you when clutch maintenance is required. It helps avoid costly repairs and downtime by taking the guesswork out of scheduling routine transmission maintenance, and it ensures your transmission is operating at its maximum performance level. The clutch life status is determined by monitoring the cumulative changes and the calculated running clearance of the transmission clutches.

https://truckmanualshub.com/

CLUTCH MAINTENANCE NOTIFICATION

The TM determines when clutch maintenance is needed. If any of the clutches (except lockup) reaches a remaining life of approximately 10 percent or if any of the clutch running clearances (except lockup) exceeds a maximum value, then the wrench icon in the selector is steadily illuminated from just after ignition key on until ignition key is turned the OFF position. if TM mode has been accessed via the shift selector, an “ok” or “Lo” is displayed. The “ok” message means no clutch maintenance is needed, and the “Lo” message means an unacceptable clutch life status exists and clutch maintenance is required.

DTC (Diagnostic Trouble Code) P2789, Clutch Adaptive Learning at Limit, sets if multiple warnings have occurred due to the TM actively detecting issues with the clutch system and illuminating the ATM system light.

https://truckmanualshub.com/

GREASE LUBRICATION POINTS

	Lubrication point	No. of points		Lubrication point	No. of points
1	Rear helper spring	2RL	9	Steering column	1
2	Rear spring pin & shackle pin	3RL	10	Door hinge	2RL
3	Propeller shaft journal & yoke	3 to 6	11	King pin	2RL
4	Clutch release shaft	2	12	Tie rod end (Not applicable to UD1800 thru UD2300)	1RL
5	Clutch release sleeve	1	13	Parking brake chamber arm shaft (Not applicable to UD1800 and UD2000)	1RL
6	Cab mounting front torsion bar contact seat	1RL	14	Rear brake camshaft and slack adjuster (UD3300)	2RL
7	Front spring pin & shackle pin	3RL	15	Front brake camshaft and slack adjuster (UD3300)	2RL
8	Cab mounting main hook & pin	1			

Recommended lubricants (Chassis grease)

Specifications	Parts
NLGI No. 1	1, 6, 8, 10
NLGI No. 2 or NLGI No. 3	2, 3, 4, 5, 7, 9, 11, 12, 13, 14, 15

https://truckmanualshub.com/

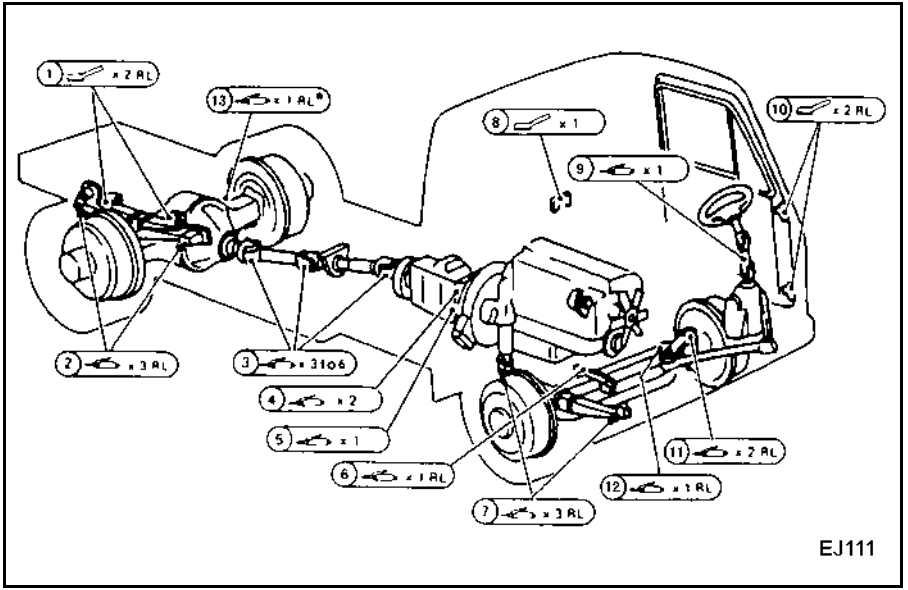

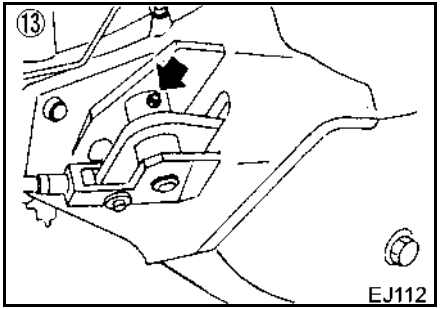

UD2300

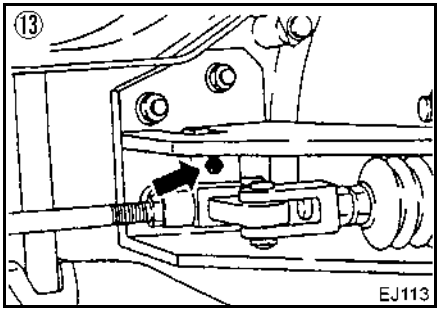

UD2600

: Lubricate with a grease gun.

: Apply grease manually with a stick. Do not apply with finger or hand.

RL : Lubrication points located on both left and right sides of vehicle.

x 2 : Number of grease nipples or points.

* : Refer to enlarged view.

https://truckmanualshub.com/

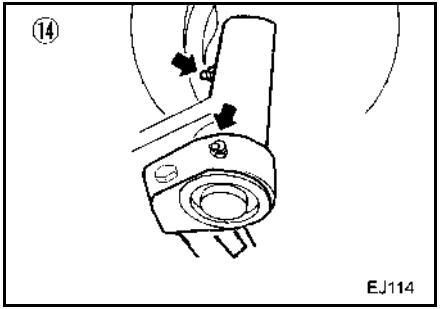

UD3300

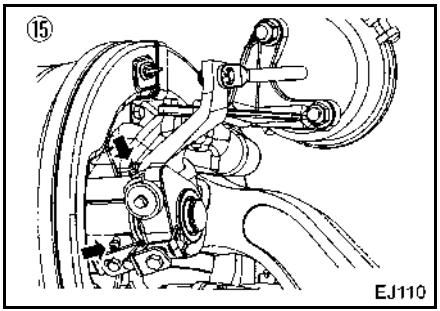

UD3300

https://truckmanualshub.com/

BEFORE PERFORMING MAINTENANCE

⚠ WARNING

- **Incomplete or improper service or repair could cause vehicle malfunction resulting in serious injury or vehicle damage.**
- **If you must work under the vehicle while it is jacked up, use safety stands and wheel chocks.**

Use care when inspecting, servicing or repairing the vehicle. Heed the warnings and follow the instructions given on the labels and in this manual.

If you have any questions, contact your authorized UD Trucks dealer or qualified service facility before proceeding. Assure that the service or repair has been completed properly.

Before performing any service or maintenance on your UD Trucks vehicle;

- Park the vehicle on a level ground.
- Shift the transmission to the NEUTRAL position (Manual transmission) or P (Park) or N (Neutral) position (Automatic transmission).
- Apply the parking brake and chock the wheels.
- Allow the engine to cool before attempting to service the vehicle.
- Whenever possible, perform inspections with the engine off and cooled.

⚠ WARNING

When you must inspect or service a part or system with the engine running:

- **Remove neckties, rings, watches, other jewelry and loose articles.**
- **Keep articles, hands, clothes, hair and tools away from the drive belts and fan.**
- **Avoid shorting the battery terminals.**
- **Be sure that sufficient ventilation is available.**
- **Avoid contact with hot surfaces.**

Used oil, coolant, fuel, etc.

It is illegal and harmful to the environment to dispose of used oil or coolant, fuel, etc., by pouring it on the ground, into sewers, or into bodies of water. Only use authorized recycling facilities that may be provided by the local government or a service facility. If any doubt, contact local government authorities or your authorized UD Trucks dealer or qualified service facility.

https://truckmanualshub.com/

CAB

Opening and closing the front lid

⚠ CAUTION

- **Crush hazard. Turn off wipers before servicing.**
- **Before opening the front lid, set the wiper arms to their normal positions. If the front lid is opened with the wiper arms tilted forward, the front lid will contact the wiper arms. This could damage the wiper arms and front lid.**
- **Before driving, make sure the front lid is securely locked.**

Opening the front lid

1. Pull the lever located near the underside of the left front pillar to release the front lid lock.

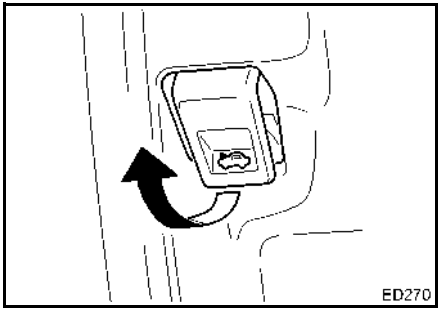

2. Disengage the front lid hook. Push up the front lid and secure it with the rod.

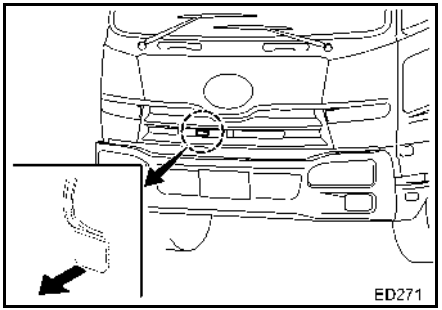

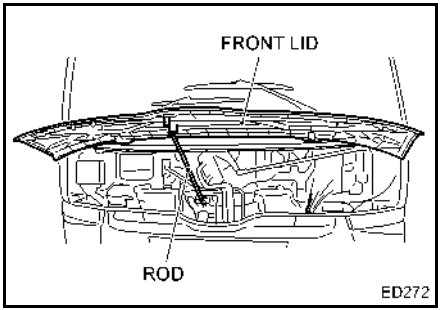

3. When opening the front lid, be sure to set the lever into the hole that is indicated with the mark located on the front lid.

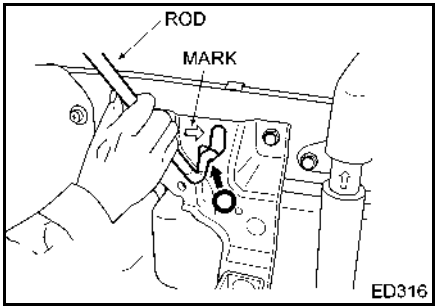

https://truckmanualshub.com/

Closing the front lid

1. Put away the rod.
2. Lower the front lid slowly.
3. Push down the front lid until it clicks into place.
4. Make sure that the front lid is locked.

WARNING

- **When opening the front lid, be sure to set the lever into the hole that is indicated with the mark located on the front lid. If the lever is placed on other locations, the lever may disengage and the front lid may then close. This may cause an injury.**

CAUTION

- **To prevent possible damage, before washing inside the front lid, close the heater air inlet to protect it from water.**

Tilting the cab

Your UD Trucks vehicle provides easy access for routine service and maintenance. Many inspection and maintenance procedures can be performed without tilting the cab. For those that require tilting, the cab of your UD Trucks vehicle can be lifted with one person. The torsional spring lifting system raises the cab automatically after it is released with little or no upward pressure from the operator.

Before tilting the cab

Before tilting the cab indoors, make sure that there is sufficient clearance above the cab (height clearance; H) and in front of the cab (advance clearance; F). The vehicle requires minimum clearances of 13.1 ft (4 m) in height and 4.9 ft (1.5 m) forward of the cab.

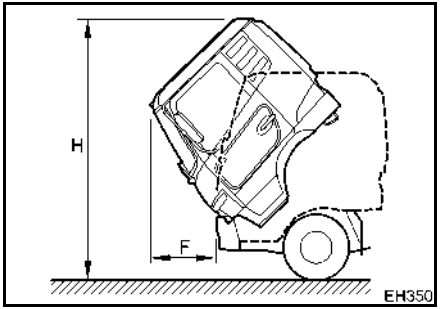

1. Stop the vehicle on a level ground.
2. Shift the transmission to the neutral position and apply the parking brake.
3. Make sure the engine is not running.
4. Chock the wheels as necessary.
5. Remove loose or heavy articles from the cab.
6. Close the cab doors.

https://truckmanualshub.com/

Tilting the cab

⚠ WARNING

- **Do not stand in front of or under the cab while tilting or lowering the cab. Put the safety pin into the pin hole immediately after tilting to avoid accidental lowering of the cab.**

1. Remove the lock pin from the tilt lock lever.

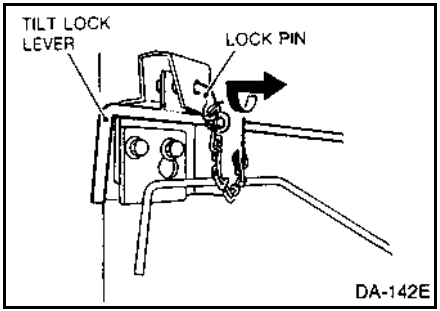

2. Pull the tilt lock lever out all the way. This releases the main hook which holds the cab body to the cab frame. The torsional springs will cause the cab to raise slightly.

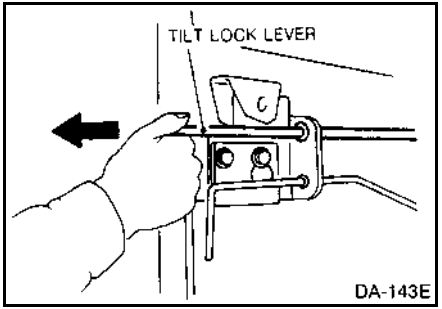

3. While holding the grip (located on the lower left side of the cab) on the cab, pull the sub hook lever out all the way. When the sub hook lever is fully extended, the cab will float up. If the cab does not float up, push the cab body up manually.

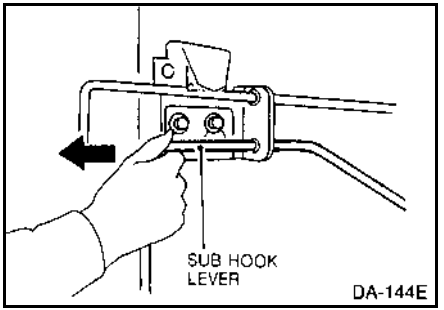

4. Tilt the cab all the way forward until the tilt strut is straight and insert the safety pin into the pin hole on the side of the tilt strut.

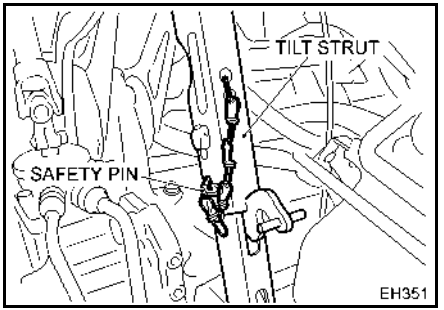

https://truckmanualshub.com/

⚠ WARNING

To avoid the chance of serious injury and/or property damage when working on engine with the cab tilted:

- **Make sure that the parking brake is firmly applied, the wheels are blocked, and the transmission shift lever is in N (Neutral), before starting engine.**
- **Be careful not to touch the transmission control cable when the engine is running. Otherwise, the transmission gears could engage and the vehicle could move suddenly.**
- **Keep yourself, your clothing and your tools away from moving parts such as the cooling fan and drive belts when the engine is running.**

NOTE:

- **Cover the air cleaner opening to prevent dust or rainwater from entering when leaving the cab tilted for a long time.**

Lower the cab

1. Check that no cloth, gloves, or tools are left on or around the engine, the exhaust manifold or other hot surfaces.

CAUTION

- **Tools left in the engine compartment can damage the vehicle.**
- **Flammable materials left on or near hot surfaces can be a fire hazard.**

2. Remove the safety pin from the pin hole and store it in the storage hole on the tilt strut.

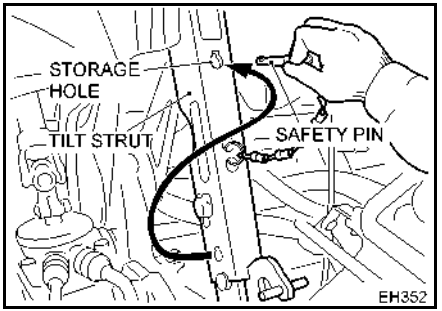

3. While supporting the cab with your hand on the grip, under the left side of the cab, pull the tilt strut rearward and lower the cab.

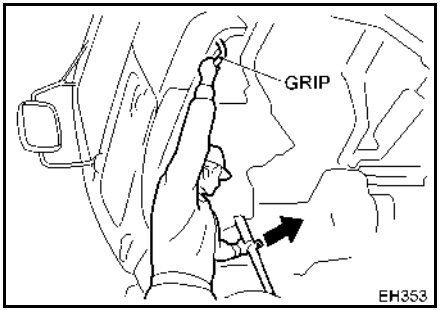

⚠ WARNING

- **When the tilt strut is pulled rearward, the weight of the cab may cause it to lower. Maintain your secure grip on the grip and lower the cab in a controlled manner.**

4. Lower the cab all the way to its normal position.
5. Check to be sure that the main hook on the rear center portion of

https://truckmanualshub.com/

the cab firmly engages the main hook pin, located at the center of the cab mounting bracket.

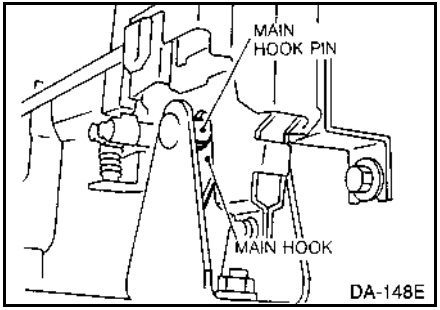

6. Replace the lock pin in the tilt lock lever.

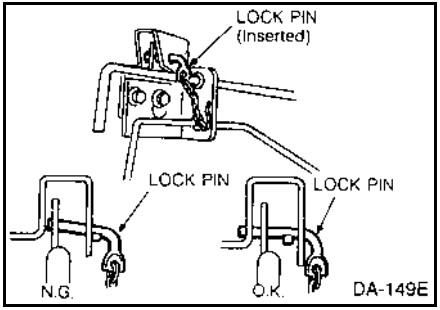

⚠ WARNING

- **If the cab has not been completely locked, when the ignition key is turned ON, the warning light will come on and the warning buzzer will sound at the same time. Relock the cab.**
- **Do not operate the vehicle without engaging the lock pin in the tilt lock lever. If the lock pin cannot be inserted, then the main hook is not engaged with the main hook pin. If not properly engaged, then the cab could rise accidentally while the vehicle is moving which could cause loss of vehicle control and serious injury.**

ENGINE COOLING SYSTEM

The engine cooling system was filled at the factory with UDXtra Long Life Diesel Engine Antifreeze/Coolant with a 50/50 antifreeze/water mixture. UDXtra Long Life Diesel Engine Antifreeze/Coolant contains rust and corrosion inhibitors. UDXtra Long Life Diesel Engine Antifreeze/Coolant provides protection against freezing to approximately –31°F (–35°C). UDXtra Long Life Diesel Engine Antifreeze/Coolant must remain in the system within 4 years or 320,000 miles (500,000 km) to provide protection against freezing, boiling, rust and corrosion. Do not use additional cooling system additives or inhibitors. They may interfere with the proper operation of the cooling system.

Check the engine, radiator, hoses and pipes daily. Repair any leaks. Replace swollen and worn hoses and tighten loose clamps.

Check the ENGINE COOLANT LEVEL warning light daily. If the warning light comes on, follow the

https://truckmanualshub.com/

instructions in the “INSTRUMENTS AND CONTROLS” of this manual.

Checking engine coolant level

⚠ WARNING

To avoid serious injury from hot coolant or steam release:

- **Do not open the radiator filler cap while the engine cooling system is hot; wait until it cools.**
- **Be extremely careful when opening the radiator filler cap. Place a thick cloth on the cap and slowly loosen it to allow a reduction in pressure in the cooling system.**

⚠ WARNING

- **Never drink Long Life Coolant, as it is toxic.**
  If you drink it by mistake, immediately induce vomiting and then consult with your doctor.
- **If the coolant gets into the eye, immediately rinse it away with fresh water and take medical treatment promptly.**
- **Wash the coolant off with clean water and then with soap immediately when the coolant gets on to your skin or cloth.**
- **Tighten the coolant container cap and store it out of the reach of children.**

Open the front lid.
Check the engine coolant level daily only when the engine is cool. Check the coolant level in the coolant reservoir tank located behind the front lid.
The coolant level should be between the MAX and MIN lines. If the coolant level is below the MIN line, add the proper coolant solution to the MAX line.

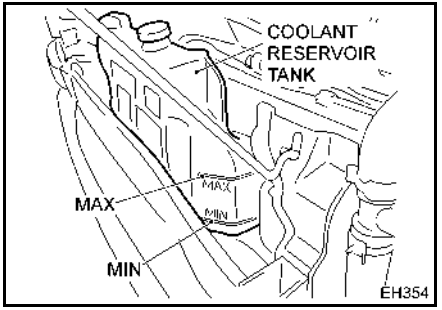

NOTE:

- **Coolant will automatically be supplied from the reservoir tank to the radiator. Do not remove the radiator filler cap.**

Long Life Coolant

For the coolant, use UDXtra Long Life Diesel Engine Antifreeze/Coolant that has been diluted 50% year round. The LLC has an additive for rust prevention and anti-freezing. It is not necessary to add commercially available antifreeze or rustproof agent.

Precautions for use of LLC

- The service period of LLC is 4 years or 320,000 miles

https://truckmanualshub.com/

(500,000 km). After the service period, clean the cooling system completely and replace the coolant.

- When the engine coolant level has dropped due to natural water dissipation while using Long Life Coolant, add genuine Long Life Coolant that has been diluted 50%.

Dilution Water

Dilution water for the cooling system should be clean, free from deposit and scale forming materials, and corrosive chemicals.

CAUTION

- **Antifreeze made with methoxy propanol or propylene glycol is not recommended for use with UD Trucks engines. These types of antifreeze can damage engine internal seals and coolant hoses and create a potential fire hazard due to lower flash points than ethylene glycol type antifreeze.**
- **Use only municipally supplied water in the cooling system. River, well or other water produces scale in the cooling system, which may cause damage to the engine or cooling system.**
- **Do not add water without adding ethylene glycol antifreeze to the engine cooling system, except in an emergency. If plain water is added in an emergency, restore the proper mixture of antifreeze and water as soon as possible.**

CAUTION

- **If the coolant should get extremely low and the engine very hot, let the engine cool before adding coolant; then, with the engine running, add coolant slowly. Adding cold coolant to a hot engine may crack the cylinder head or cylinder block. Never use water alone.**

Checking and cleaning radiator

To maintain cooling system efficiency and keep the engine from overheating, always keep the front surface of the radiator core clean. Remove insects, dirt and other debris by directing pressurized air at the rear surface of the radiator core.

https://truckmanualshub.com/

CAUTION

- **Do not direct pressurized air to the front surface of the radiator (that is, with the air hose pointed toward the engine). Doing so will force insects, dirt and other debris into the radiator core and possibly cause engine overheating.**

Clean charge air cooler body

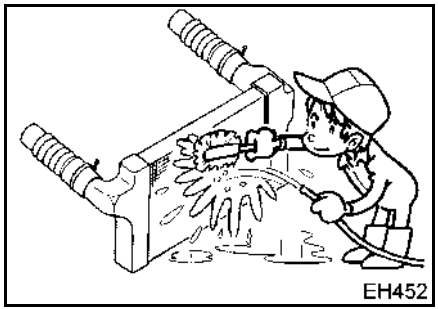

The charge air cooler is used to cool the overheated intake air charged by the turbocharger, and is installed at the front of the radiator.

When mud, debris, etc., becomes attached to the front of the core, the passage of cooling air is impaired, so it is recommended that this material should be removed completely by washing with a non corrosive detergent and water solution. (Refer to instructions on the detergent container.)

Deformed fins also can impair cooling, and should be repaired.
Clean the inside by blowing with air when changing charge air cooler hoses.

CAUTION

Precautions when washing near the alternator.

- **Using a moist alternator brush may shorten the life of the alternator. Use an alternator that has been sufficiently dried by using an item such as an air-blower.**

NOTE:

- **Do not use water to clean the inside of the charge air cooler body. Using water will impair cooling due to corrosion.**

Cooling fan and fan shroud

Check the cooling fan and fan shroud for proper installation, cracks or damage. Replace or repair faulty parts or damage.

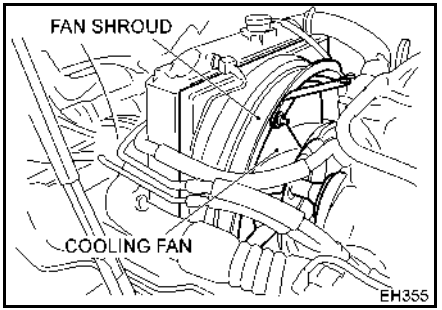

https://truckmanualshub.com/

⚠ WARNING

- **To prevent hand injury, never get your hand near the fan when the engine is running. If vehicle has an automatic fan clutch, the fan may slow when the coolant is cool, but it can still cause hand injury.**

⚠ CAUTION

- **Do not modify the crankshaft or fan pulleys to increase the rated speed of the engine or fan. Doing so may cause the cooling fan blades to break possibly resulting in injury. Also, such modification constitutes tampering with the noise control system.**

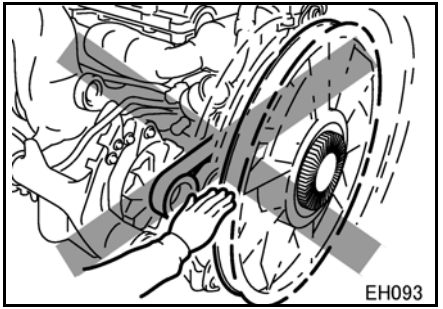

Changing coolant

⚠ WARNING

To avoid serious injury from hot coolant or steam release:

- **Do not open the radiator filler cap and drain cocks while the engine cooling system is hot; wait until it cools.**
- **Be extremely careful when opening the radiator filler cap. Place a thick cloth on the cap and slowly loosen to allow a reduction in pressure in the cooling system.**
- **Be careful not to spill coolant over the hot exhaust system which can cause fire, serious injury and/or property damage.**

Every 4 years or 320,000 miles (500,000 km) the UDXtra Long Life Diesel Engine Antifreeze/Coolant or its equivalent in the cooling system should be drained and thoroughly flushed.

https://truckmanualshub.com/

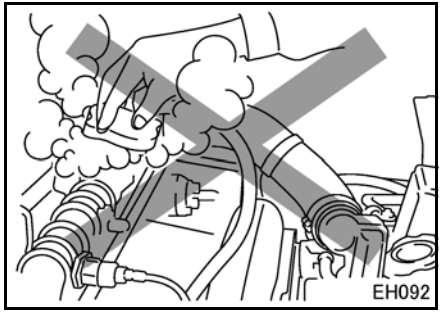

Unless the cooling system is treated with corrosion preventive, rust and scale will eventually clog up passages in the radiator and water jackets. This condition is aggravated in some localities by formation of insoluble salts from the water used.

CAUTION

- **Do not use chemical mixtures to stop radiator leaks except in an emergency. Never use such solutions in place of needed radiator repair.**

⚠ WARNING

- **Never drink Long Life Coolant, as it is toxic.**
  If you drink it by mistake, immediately induce vomiting and then consult with your doctor.
- **If the coolant gets into the eye, immediately rinse it away with fresh water and take medical treatment promptly.**
- **Wash the coolant off with clean water and then with soap immediately when the coolant gets on to your skin or cloth.**
- **Tighten the coolant container cap and store it out of the reach of children.**

To clean the cooling system

1. Open the radiator filler cap.
2. Place containers under the radiator drain cock and the cylinder block drain cock.

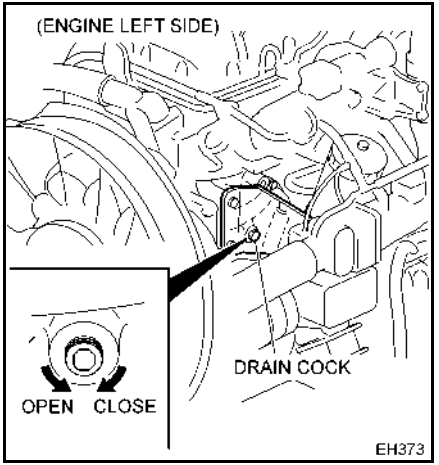

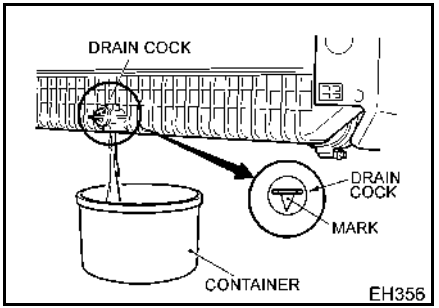

Except for Allison 3000 series specification vehicles

https://truckmanualshub.com/

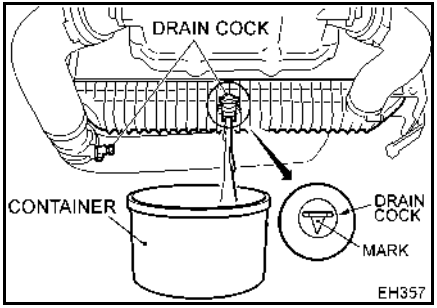

Allison 3000 series specification vehicles

3. Open the radiator drain cock and the cylinder block drain cock.

NOTE:

- **The radiator drain cock has a specified turning direction and must be turned to the position directly below the mark when draining water.**
- **Drain water by turning the radiator drain cock round approximately 7 to 8 times.**
  Be careful not turn the radiator drain cock round more than 9 times. Doing so may cause the drain cock to fall off.

4. Drain all coolant solution from the system into the containers.
   For Allison 3000 series specification vehicles, drain coolant from two drain cocks: one is located on the oil cooler coolant hose and the other is located under the radiator.
5. Shut the drain cocks. Fill the cooling system with a proper mixture of water and a good quality cooling system detergent. (Refer to the additional instructions on the detergent container)
6. Start the engine and run it at a high idling speed until the indicator points to the middle region of the engine coolant temperature gauge. Maintaining the above engine coolant temperature with the thermostat open, run the engine and allow the detergent to circulate throughout the cooling system for at least 15 minutes.
7. Stop the engine. Open the drain cocks and completely drain the detergent from the system.
8. Shut the drain cocks and fill the cooling system with plain water. Start the engine and run it at a moderate speed in the same manner as described in step 6.
9. Stop the engine. Open the drain cocks and drain the rinsing water.
10. Repeat the rinsing procedure 2 or 3 times until the discharged rinsing water appears clean.
11. Close the drain cocks.

To fill up the cooling system (With coolant)

Use the following refill procedure to remove air from the system and provide proper engine coolant level.

1. Fill the radiator slowly with the proper coolant solution up to the filler opening. Add coolant solution up to the MAX level of the coolant reservoir tank. Capacities are shown below.

https://truckmanualshub.com/

		US measure	Liters
With manual transmission		6.9 gal	26
With automatic transmission	Except for Allison 3000 series	6.6 gal	25
	Allison 3000 series	7.9 gal	30

Then properly close the radiator filler cap and the reservoir tank cap.

2. Operate the engine at a slightly higher than normal idling speed with the throttle control knob until the engine coolant temperature indicator points the middle region of the gauge. Run the engine an additional 10 minutes to allow the air to escape from the engine cooling system.
3. Stop the engine. After the engine has completely cooled down, remove the radiator filler cap and check the engine coolant level in the radiator. If low, add coolant to the radiator filler opening.
   Reinstall the radiator filler cap.
4. Check the engine coolant level in the coolant reservoir tank. If the level is between the MIN and MAX lines, it is normal. If it is below the MIN level, add coolant solution up to the MAX level.
5. If the added coolant solution is more than 16.9 US fl oz (500 milli liter), check and correct for any sign of leakage, then repeat steps 1 to 4.
6. Check the drain cock for leaks.

ENGINE OIL AND OIL FILTERS

Engine oil recommendations

To extend the lubrication performance of your engine “UDXtra Engine oil” or equivalent is available, which has been specifically tested and approved for UD Trucks engines.
Please contact an authorized UD Trucks dealer for further details about “UDXtra Engine oil”.
Please consult the following instructions to select and use the proper lubricant from a reliable supplier to enhance trouble-free operation and service life of the engine.

Oil grade: VDS-4

Oil quality

UD TRUCKS North America recognizes engine oils that meet or exceed the standards given by American Petroleum Institute (API) for the oil classifications listed in this manual.
Only oils licensed to carry the API symbol should be used. Lubricants meeting API standards have pro-

https://truckmanualshub.com/

vided maximum engine life when used together with the recommended oil and oil filter change intervals.
UDXtra (or VDS-4) diesel engine oil is mandatory for use in all 2010 emission compliant engine.
UDXtra (or VDS-4) oils exceed the API CJ-4.
For a complete list of approved oils, see your UD TRUCKS dealer.
Also, refer to Technical Bulletin EN-42, Approved Oils, UDNA.

NOTE:

- **UD Trucks recommends using the engine oil designated above for the proper function of the DPF system, and also use ultra low sulfur diesel fuel (0.0015% [15 ppm] by weight) only and low-ash fuel must be less than 1% in weight.**

Oil viscosity and relation between viscosity and temperature:

The viscosity grade defines the thickness of the oil. The oil must be thin enough at low temperatures for easy cold starts and thick enough to protect at high temperatures. An oil is not fully defined until both the API quality classification and the viscosity grade are specified.
Choose the viscosity grade for the typical ambient air temperature (AAT) for the application.
Multi grade oils have a broad range that suit operation in changing temperature.
The standard oil weight for UD TRUCKS engines is 10W/30.
UD TRUCKS recommends the viscosities shown in the viscosity/ temperature table for UD TRUCKS engines.

NOTE:

- **Select the oil viscosity according to the next diagram, basing your selection on the maximum and the minimum ambient air temperatures.**

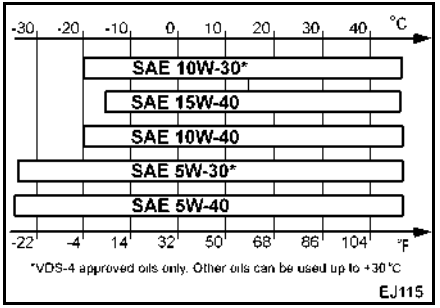

CAUTION

- **Use of diesel fuel other than ULSD (Ultra Low Sulfur Diesel fuel) and engines oils other than UDXtra (or VDS-4), will adversely affect performance, efficiency and durability of the Aftertreatment DPF system and the engine may not run at all.**
- **Manufacture's warranties can also be rendered void due to usage of improper fuel. Unapproved fuel additives (including engine oil) are NOT permitted.**

https://truckmanualshub.com/

- **DO NOT add extra oil additives. Additives such as break-in oils, top oils, graphitizes, and friction - reducing liquids are not necessary and can harm the engine.**

Periodic service interval

Type of operation	UDXtra Engine oil	*Non-UDXtra Engine oil
Type 1	24,000 mile (40,000 km)	15,000 mile (25,000 km)
Type 2	30,000 mile (48,000 km)	20,000 mile (32,000 km)

*Non-UDXtra engine oil refer to page 11-31.

Type of operation

Type 1

1.Unpaved road
2.Dusty road
3.Heavy long distance transport
4.Mountain road operations
5.Sort-haul distribution operations
6.Construction operations (off-road)
7.Light duty in city operations
8.Annually mileage up to 65,000 miles (100,000 km)

Type 2

1.Light long duty distance transport
2.Mainly on motor ways and express highways
3.Annually mileage over 65,000 miles (100,000 km)
4.Paved and flat road operations

Checking engine oil level

⚠ WARNING

- **To avoid serious injury from hot engine and engine oil, only check engine oil level and perform maintenance after engine has cooled.**

Check the engine oil level before driving your vehicle each day. Check the oil level with the engine off. When checking the oil level after stopping the engine, wait at least 30 minutes to allow the oil to return to the oil pan.

To check the engine oil level

1.Park the vehicle on a level ground.
2.Remove the oil level gauge (dipstick) located on the left hand side of the engine. Wipe the gauge clean with an oil rag and reinsert it. Remove the gauge and check the oil level. Maintain the engine oil level between the MAX and MIN

https://truckmanualshub.com/

marks on the engine oil level gauge.

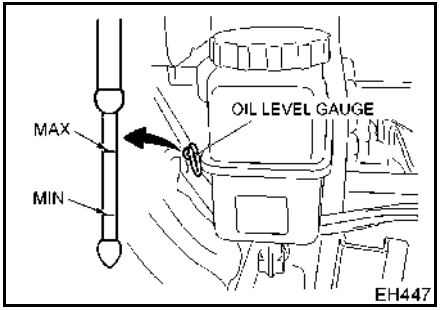

3. If oil level is low, add engine oil of the proper viscosity for the anticipated temperature range during the service interval through the oil filler port located on the valve cover on top of the engine. Do not add oil above the MAX mark on the engine oil level gauge.

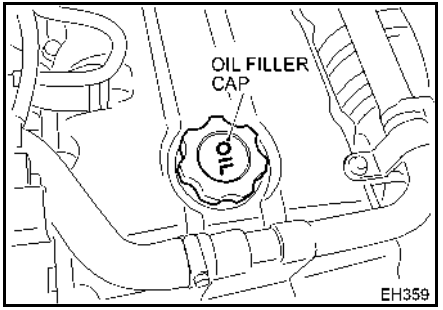

⚠ WARNING

- **Be careful not to spill oil. Do not add oil if engine or exhaust system are hot. Spilling oil on hot parts can result in a fire.**

4. Change the oil if it shows signs of contamination such as discoloration and changes in oil texture. See the instructions under the caption "Changing engine oil"on page 11-34.
5. After adding oil, wait at least 10 minutes, then recheck the oil level.
6. After checking, securely insert the engine oil level gauge.

CAUTION

- **Do not drive the vehicle with the engine oil level below the LOW mark on the engine oil level gauge. An insufficient quantity of engine oil can cause engine seizure.**
- **Use care to keep dirt and debris from entering the crankcase through the oil filler port when adding engine oil.**

Changing engine oil

⚠ WARNING

- **To avoid serious injury from hot engine and engine oil, only change oil after engine has cooled.**

CAUTION

- **Try to avoid direct skin contact with used oil. If skin contact is made, wash thoroughly with soap or hand cleaner as soon as possible.**

https://truckmanualshub.com/

Engine oil capacity

	US measure	Liter
With oil filter	18.4 qt	17.4
Without oil filter	18.0 qt	17.0

The engine oil change interval varies with the type of engine oil used and vehicle driving conditions. If the vehicle is driven for extended periods of time at high or low speeds, in dusty areas, with frequent idling or carrying heavy loads, engine oil will deteriorate faster and require more frequent changing.
As the temperature rises, the engine oil's viscosity decreases, reducing its lubricating effect. To choose an oil with the proper viscosity for the anticipated ambient air temperature range, refer to "Oil viscosity and relation between viscosity and temperature:"on page 11-32.

To change the engine oil

1.Park the vehicle on level ground.
2.Remove the oil filler cap.

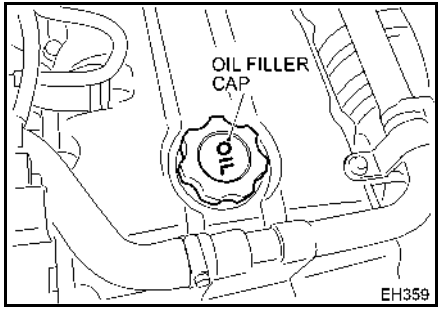

3.Place a container under the drain plug in the bottom of the oil pan. Remove the plug and drain the oil into the container.

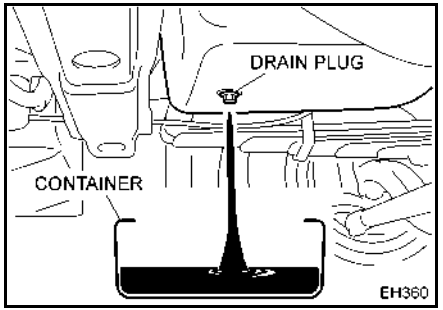

4.When all the oil has been drained from the oil pan, replace the drain plug in the drain hole and tighten the drain plug.
Replace washer with new ones for each remove the drain plug.
Tightening torque:
40 to 44 ft·lbf (54 to 59 N·m)
(5.5 to 6.0 kgf·m)
5.Replace the oil filter. Refer to "Oil filter"on page 11-36 for the instructions.
6.Add engine oil through the oil filler port.
7.After refilling the engine oil, wait for at least 10 minutes, then using the oil level gauge (dipstick) check the oil level. If the engine oil level is low, add additional oil. Wait 10 minutes, then recheck the oil level. Repeat this procedure until the engine oil reading on the engine oil level gauge is between MAX and MIN.

https://truckmanualshub.com/

Oil filter

⚠ CAUTION

- **Do not handle hot oil filter without hand protection. Failure to do so may result in burn injury.**

NOTE:

- **Use genuine UD Trucks filter or equivalent in quality and design. Use of an inferior filter could diminish operation of the engine and emission controls.**
- **Always replace the oil filter at the same time that the engine oil is replaced.**

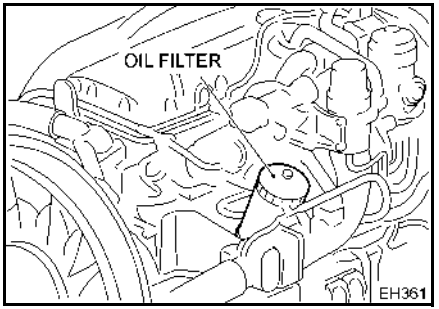

To replace the filter

⚠ CAUTION

- **Just after driving, the engine oil is still hot and can burn you. Before changing or checking the oil, let it cool down until you can touch the oil without getting burned.**

As oil is full in the cartridge after an engine stops, it is needed to drain the oil. The following is an outline of the procedure.

1. Remove the air draining plug, and loosen the drain plug until it spins free.

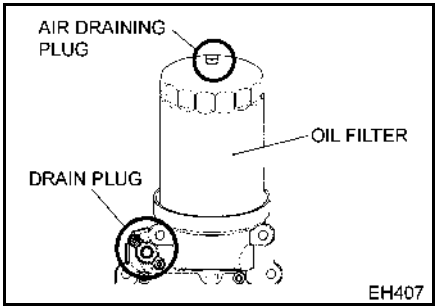

2. The oil will drain within approximately 5 minutes and the cartridge can then be removed.
3. Tighten the drain plug.
   Tightening torque:
   9.4 to 16.7 ft·lbf (12.8 to 22.6 N·m)
   (1.3 to 2.3 kgf·m)
4. Place a new cartridge, turn it 3/4 to 1 time after the seal contacts.

NOTE:

- **Make sure the oil drain plug is tightened to the listed specification prior to the installation of the new cartridge.**

5. Add approximately of engine oil and install the filler cap tightly.

	US measure	Liter
With oil filter	18.4 qt	17.4
Without oil filter	18.0 qt	17.0

6. Start the engine and check for oil leaks.

https://truckmanualshub.com/

⚠ WARNING

- **After replacement of the oil filter, operate the engine to check if there is any oil leakage around the oil filter. Oil leakage can cause a fire.**

7. Stop the engine and wait at least 10 minutes.
   Recheck the level and fill to the MAX mark if necessary.

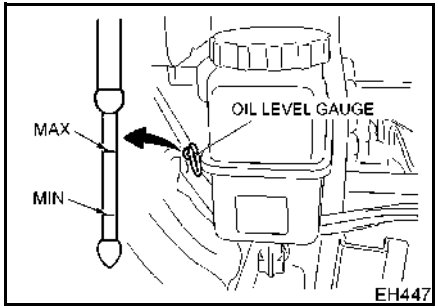

- Wipe any spilled oil off the engine.
- Do not run the engine with the oil level below the MIN mark, or with the filler cap and/or level gauge removed.

FUEL SYSTEM

⚠ WARNING

- **Keep flames and heat away from the fuel system since the fuel is flammable and can cause a fire or explosion.**

A problem with the components that supply fuel to the engine can cause low fuel pressure. This can decrease engine performance.

1. Check the fuel level in the fuel tank. Make sure the breather valve of the fuel tank is not clogged with dirt.
2. Check the fuel lines for fuel leakage. Be sure the fuel supply line does not have a restriction or a bad bend.

Fuel tank

Water in the diesel fuel will accumulate at the bottom of the fuel tank. A small area near the drain cock traps the water. When water has accumulated in the fuel filter, it has also accumulated in the fuel tank. Drain the accumulated water from the fuel tank when the fuel filter is drained.
To minimize loss of fuel, drain the fuel tank as it approaches empty. Do not re-use any fuel drained with the water.

To drain water from the fuel tank

1. Put a container under the fuel tank drain plug.
2. Remove the drain plug from the bottom of the fuel tank.

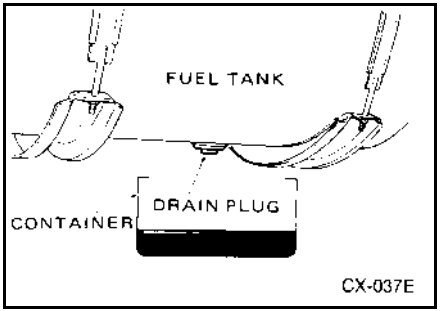

https://truckmanualshub.com/

3. Allow all the water to drain from the tank.
4. When fuel begins to drain from the tank, replace the drain plug. Tighten the drain plug.
   Tightening torque:
   36 to 51 ft·lbf (49 to 69 N·m) (5 to 7 kgf·m)

⚠ WARNING

- **Wipe off any leaked fuel, as it could cause a fire.**

CAUTION

- **Check the packing of the drain plug for damage. If damaged, replace with a new one.**

Fuel requirements

Use only ultra-low sulfur diesel fuel which contains less than 15 ppm (parts per million) by volume of sulfur.

CAUTION

- **The aftertreatment DPF* requires diesel fuel with a sulfur content of less than 15 ppm (0.0015%) by weight. If the sulfur content is higher than 15 ppm (0.0015%) by weight, the DPF system and engine may be damaged.**

DPF*: Diesel Particulate Filter system

Use good quality ASTM 2-D

Expected temperature	Preferred fuel grade
Above +20°F (-7°C)	Grade Ultra Low Sulfur Grade 2-D S15
Below +20°F (-7°C)	Grade Ultra Low Sulfur Grade 1-D S15

Use diesel fuel with cetane number 45 or higher. Check with the service establishment to be sure you get the properly blended fuel for the season.

⚠ WARNING

- **Do not use ether or other starting aids which are flammable.**

CAUTION

- **Use diesel fuel only. Do not use gasoline or any other non-diesel fuel.**

NOTE:

- **Fuel additives should not be used.**
- **For prolonged idling operation, operation in temperatures below 32°F (0°C), or operation in high altitude areas (above 5,000 ft., 1,500 m), winterized 2-D may be used.**
- **If gasoline is put into the fuel tank by mistake, completely drain the fuel system to remove the gasoline.**

https://truckmanualshub.com/

Keep fuel clean and prevent water from entering the fuel system.

Feeding clean fuel to the engine depends both upon the supplier and the user.
For example, when fuel is supplied from a corroded storage tank, the fuel should be filtered before it is put into the fuel tank of the vehicle. Water in fuel adversely affects the fuel injection system and engine. Water and dirt should be removed from fuel contaminated during storage.
When filling the fuel tank in the rain or snow, care should be taken not to allow water in the fuel tank.
Do not forget to screw on the fuel tank cap securely.

Fuel filling

⚠ WARNING

- **Keep flames and heat away from the fuel system since the fuel is flammable.**
  Any of these can result in serious injury and/or property damage due to fire.
- **Wipe off any leaked fuel, as it could cause a fire.**

Keeping your fuel tank filled with fuel will help reduce condensation within the tank.

Fuel cap

⚠ WARNING

- **Use of an incorrect fuel cap or operating the vehicle without a fuel cap could result in a fire.**

CAUTION

- **Never operate your vehicle without a fuel cap. If the fuel cap needs to be replaced, use a UD Trucks cap or an equivalent. Use of an incorrect fuel cap could result in a fuel system or emission control system malfunction.**

Fuel filter

Your UD Trucks vehicle is equipped with a main fuel filter and primary fuel filter with water separator.
The fuel filters remove dirt and the water separator removes water from the fuel.

NOTE:

- **Failure to perform periodic maintenance can cause fuel filters to clog and the fuel supply to decrease or to stop.**

Periodic maintenance of the fuel filter should be performed.
If the fuel is contaminated with dirt, more frequent maintenance on fuel

https://truckmanualshub.com/

filter is required as shown in "Engine"on page 11-4.
If you are not certain concerning the proper interval, contact your authorized UD Trucks dealer. Use genuine UD Trucks fuel filters or equivalent. Consult your authorized UD Trucks dealer regarding the quality and interchangeability of fuel filters.

⚠ WARNING

Fuel is flammable and can cause fire or explosion. To minimize this hazard, do the following:
- **Be sure to drain the fuel into a container and dispose of it properly.**
- **If fuel is spilled on engine parts, wipe it off entirely.**
- **Do not smoke when performing maintenance on the fuel system. Keep flame and heat away from the fuel system.**
- **Use a filter wrench to loosen the fuel filter. Use of an ordinary tool (for example, chain-type tool) can scratch or dent the peripheral surface of the fuel filter. If the fuel filter is damaged, it can cause fuel to leak.**
- **After replacing the filter, inspect the external surface of the fuel filter checking for scratches and dents. It is dangerous to use a scratched or dented fuel filter, since it can cause fuel to leak.**
- **After replacement of the element, operate the engine to check if there is any fuel leakage around the fuel filter.**

Inspect the water level in the fuel filter daily through the transparent case. Drain water before it reaches the upper portion of the transparent case.

Main filter

To replace the fuel filter

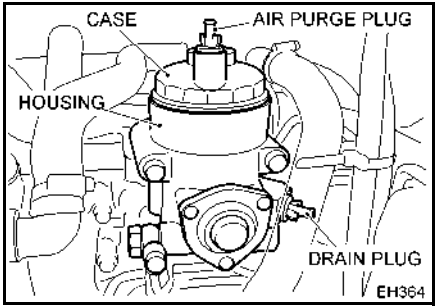

1. Clean outside the filter not to get dust into the filter at the disassembly. Prepare a tray for drained fuel (approx. 2.1 qt [2.0 liter]) and a hose (inner diameter 0.2 in [5 mm], length 3.3 ft [1 m]).
2. Put the hose in the drain plug, and loose the drain plug and air purge plug to drain the fuel. The fuel will be received by the tray. [loosen until you can see an o-ring on the plug (approx. 0.2 in [5 mm]).
3. After draining, loosen the case and remove the case and element from the housing.

https://truckmanualshub.com/

4. Install a new o-ring for the case lubricating it with clean diesel fuel.
5. After putting a new element into the case, place it to the housing and tighten the case to the following torque.
   Tightening torque:
   26 to 29 ft·lbf (35 to 40 N·m)
   (3.6 to 4.1 kgf·m)
6. Tighten the drain plug and air purge plug securely by hand.
7. After the filter change, purge the air from the fuel system. For air purging details, refer to "Purging air from fuel system"on page 11-43.
8. Start engine and check the fuel system for leaks.

⚠ WARNING

- **Using improper fuel filters can shorten the life of the engine and/or fuel injection system. Such fuel filters can become damaged or may leak fuel which can result in serious injury and/or property damage due to fire.**

Primary fuel filter

To drain water from the fuel filter

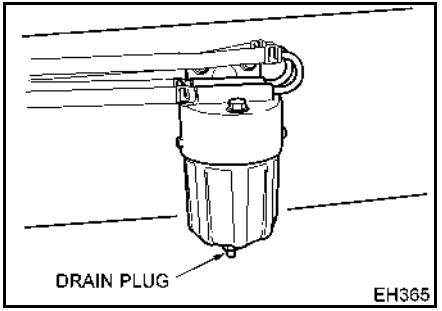

1. Stop the engine, prepare a tray to receive drained water.
2. Loosen the drain plug and drain the water (approx. 6.8 USfl oz [200 milli liter] into the tray).
3. After finish the draining, tighten the drain plug securely by hand.

https://truckmanualshub.com/

To replace the fuel filter

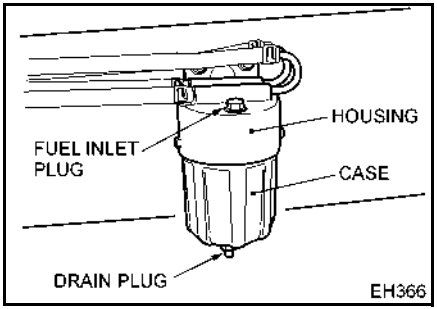

1. Clean outside the filter not to get dust into the filter at the disassembly. Prepare a tray for drained fuel (approx. 2.1 qt [2.0 liter]).
2. Loosen the drain plug to drain the fuel. The fuel will be received by the tray.
3. After draining, loosen the case and remove the case and element from the housing.
4. Change the o-ring for case to new one and put some clean diesel on the new o-ring.
5. After putting a new element into the case, place it to the housing and tighten the case to the following torque.
   Tightening torque:
   26 to 29 ft·lbf (35 to 40 N·m)
   (3.6 to 4.1 kgf·m)
6. Tighten the drain plug surely by hand.
7. Remove the fuel inlet plug on top of the filter and pour diesel fuel fully in it, and tighten the plug to the following torque.
   Tightening torque:
   1.7 to 2.5 ft·lbf (2.3 to 3.4 N·m)
   (0.2 to 0.3 kgf·m)
8. After the filter change, purge the air from the fuel system. For air purging details, refer to "Purging air from fuel system"on page 11-43.
9. Start engine and check the fuel system for leaks.

⚠ WARNING

- **Using improper fuel filters can shorten the life of the engine and/or fuel injection system. Such fuel filters can become damaged or may leak fuel which can result in serious injury and/or property damage due to fire.**

https://truckmanualshub.com/

Purging air from fuel system

If air gets into the fuel system, it will cause inconsistent fuel injection and possible engine malfunction. It is therefore necessary that any air be bled off which may have found its way into the fuel system while changing fuel filters, or when the fuel lines have been otherwise disconnected.

To purge air from the fuel system

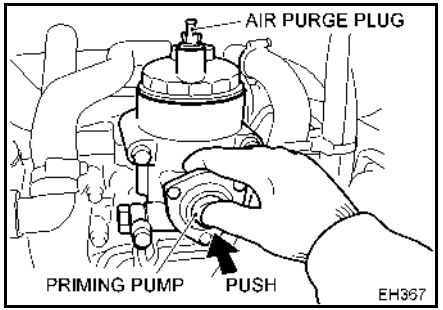

1. Prepare a tray for drained fuel (approx. 2.1 qt [2.0 liter]) and a hose (inner diameter 0.2 in [5 mm], length 3.3 ft [1 m]).
2. Put the hose in the air purge plug and loose the plug. Let the other side of the hose get into the tray. (loosen until you can see an o-rings on the plug).
3. Push the priming pump then the fuel is pumped up from the tank and get into the filter.
4. Keep pushing the priming pump until clear fuel with no air is exiting the air purge plug.
5. After the air has been removed, tighten the air purge plug securely by hand.

Fuel hose and clamp

Check the fuel rubber hose and clamp of the fuel system for looseness cracks or damage. Replace faulty parts if necessary.

⚠ WARNING

- **Keep flames and heat away from the fuel system since the fuel is flammable.**
  Any of these can result in serious injury and/or property damage due to fire.
- **Wipe off any leaked fuel, as it could cause a fire.**

Fuel tubing

Check the fuel tubing for fractures, damage or improper installation. Replace faulty parts if necessary. Whenever the fuel tubing is disconnected, be sure to purge air from the fuel system.

https://truckmanualshub.com/

⚠ WARNING

- **Keep flames and heat away from the fuel system since the fuel is flammable.**
  Any of these can result in serious injury and/or property damage due to fire.
- **Wipe off any leaked fuel, as it could cause a fire.**

AIR CLEANER ELEMENT

To inspect the air cleaner service indicator

The air cleaner service indicator is installed near air cleaner.
Check whether a red signal is shown on the service indicator for clogging of the air cleaner element.
If the dust indicator signal is red, and if it often becomes red after resetting by pushing the button on the end, replace the element.

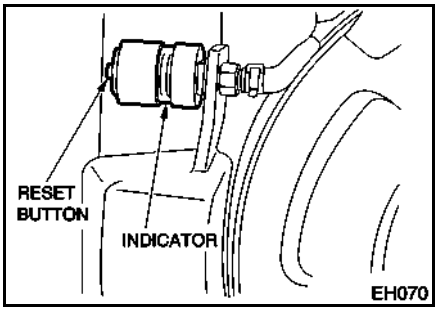

To replace the air cleaner element

Never clean the viscous type (wet type) air cleaner element.

CAUTION

- **If the viscous type (wet type) element is sprayed with compressed air, washed, hit, or struck, the filter function can be seriously deteriorated, and early clogging may occur.**

1. Unlock the clips and remove the air cleaner cover.

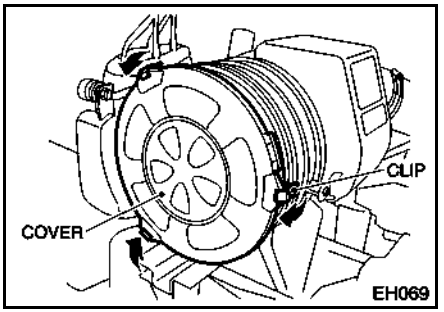

2. Remove the element.

https://truckmanualshub.com/

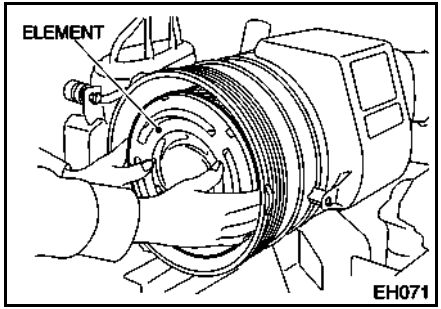

3. Clean the cover and inside of the case with a clean, dry cloth.

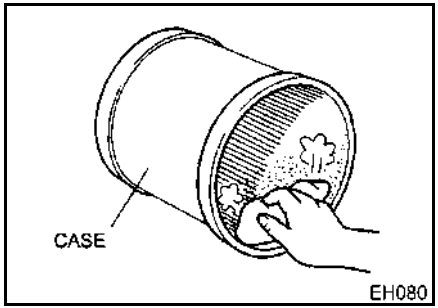

4. Clean the vacuator valve. Be sure it is not broken or missing.

NOTE:

- **If the vacuator valve is broken or missing, water and dirt can easily enter the air cleaner. Install a new vacuator valve.**

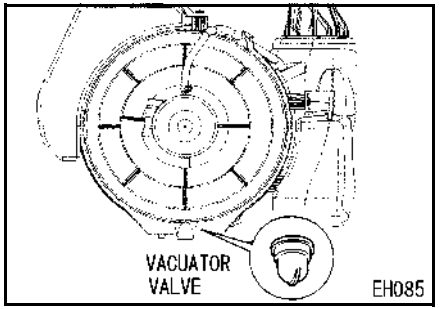

5. Check the rubber seal and hose for breakage and the clamps for looseness. If broken, replace it with a new part. If the clamps are loose, tighten them.
6. Replace the element.

NOTE:

- **Be sure to use genuine UD Trucks element. Do not use an inferior element because it may aspirate dust due to a bad seal or be damaged by excessive tightening.**

7. Reinstall the new element in the reverse sequence of removal.
   - Be sure that all three clips are locked securely when replacing the element and housing cover.
   - Install the rubber seal so that it may not be twisted.

CAUTION
• **Failure to completely install the clips may cause a defect in the element packing surface, allow dust into the engine, and cause premature wear of pistons and liners.**

8. After finishing replace of the element, press the reset button at the end of the indicator to reset.

https://truckmanualshub.com/

DRIVE BELT

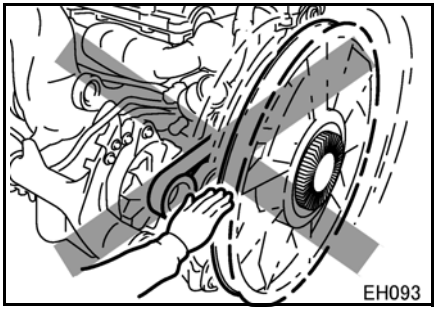

⚠ WARNING

- **Do not check or adjust drive belt, unless engine is off and the transmission is in N (Neutral).**

Engage the parking brake securely. Visually check the drive belt daily for cracks and damage. If a belt is in poor condition, have it replaced by an authorized UD Trucks dealer or other qualified service facility.

NOTE:

- **The belt tension measurement is recommended to be performed using a "sonic tension meter". For daily inspections without the sonic tension meter, checking the amount of deflection of the belt using a hand is allowed.**

Check air conditioner belts for proper tension by applying pressure of 22 lbf (98 N) (10 kgf) with your finger to the belt at measuring as shown in the figure. If necessary, adjust them to their specified tensions.

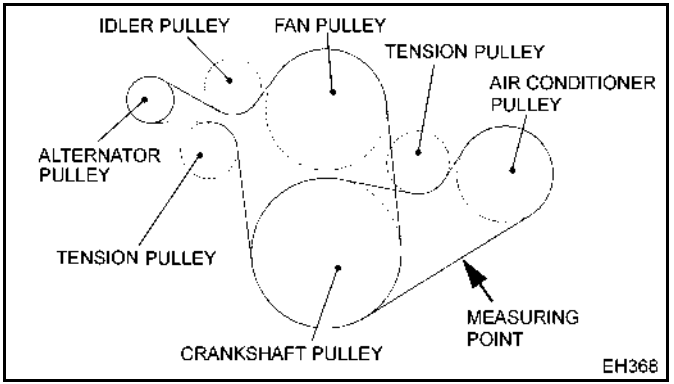

https://truckmanualshub.com/

Air conditioner belt tension

Belt	When measuring with a sonic tension meter				Belt deflection 22 lbf (98 N) (10 kgf) by depressing in (mm)
	Frequency (Hz)	Number of ribs	Length of span in (mm)	Specific weight of the belt (gf/rib·m)	
When new	202 - 216	4	10.7 (272)	14.5	0.32 - 0.36 (8.2 - 9.1)
When adjusted	175 - 187				0.39 - 0.43 (10 - 11)

To adjust belt tension

Air conditioner belt:

1. Loosen the lock nut A of the idler pulley.
2. Adjust the adjusting bolt B and adjust the deflection of the belt at measuring point **Y** so that it comes within the standard range.
   The tension of the belt can be increased by turn the adjusting bolt B clockwise.

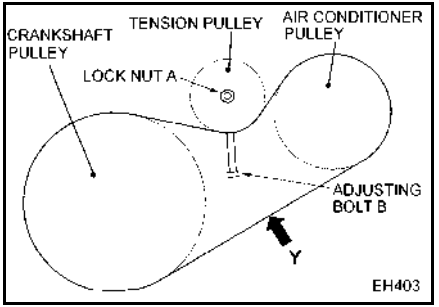

3. After adjustment, securely tighten the lock nut A.
   Tightening torque:
   Lock nut A
   22.4 to 28.9 ft·lbf
   (30.4 to 39.2 N·m)
   (3.1 to 4.0 kgf·m)

Fan belt

Because this engine is equipped with a belt tensioner, the adjustment of belt deflection is not necessary. However, it is necessary to confirm that the indicator (engraved line) of the belt tensioner is in the belt usable range by performing the visual check from the **X** position (X arrow view). Also, check the belt for damage at this time.

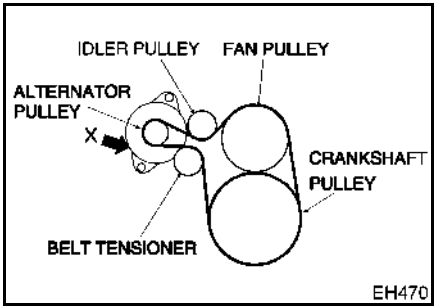

https://truckmanualshub.com/

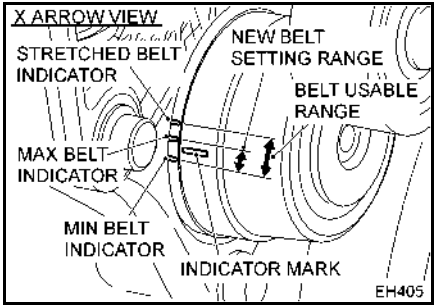

If the indicator (raised line) is out of stretched belt indicator, or if the belt is damaged, replace the belt with a new one.

To inspect the belt tensioner

Push down the belt between the pulleys with a constant force. Check to see that the tension pulleys move with constant speed.

Then release the belt and check to see that the tension pulleys return to the original position by the spring force.

Replace the belt tensioner when any of the following conditions exist.

- If the pulleys do not move when pushing down the belt.
- If there are any abnormalities of pulleys motion.
- If the pulleys do not return when releasing the belt.

AFTERTREATMENT DEF FILTER

Replacement of DEF filter

The main filter is provided under the supply module (DEF pump). Replace the filter on a regular basis.

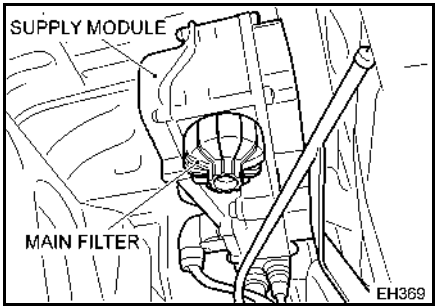

NOTE:

- **DEF is a very safe liquid, but it might cause a very slight irritation for some people. If it is spilled on the body, wash it off with water, and if it is drunk mistakenly, drink 1 or 2 cups of milk. If milk is not available, drink water. In all case, consult a physician.**

https://truckmanualshub.com/

- **To prevent dirt getting into the DEF system, clean the DEF lines and the DEF tank before removing them.**
- **Always plug DEF lines to prevent dirt getting into the DEF system and the crystallization of the DEF.**

Replacement procedure

1.Switch off the engine.

NOTE:

- **Wait at least two minutes before removing DEF hoses to allow the automatic draining of the DEF system and to depressurise the DEF system.**

2.Disconnect all electrical power to the vehicle by disconnecting the battery negative (–) terminal.
Fetch equipment and place a suitable container under the DEF pump.

3.Remove the filter cover from the pump.

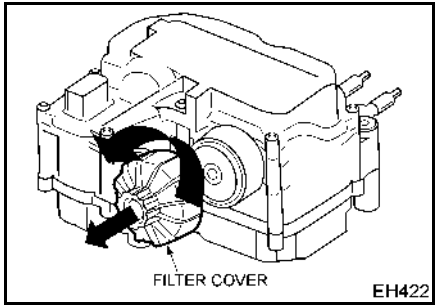

4.Remove the equalizing element.

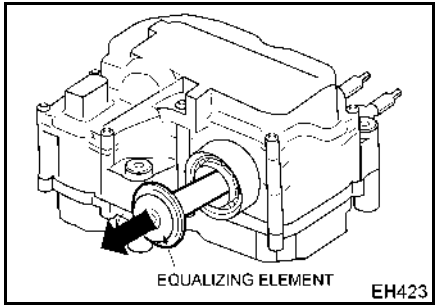

5.Insert the puller, and remove the filter using the puller.

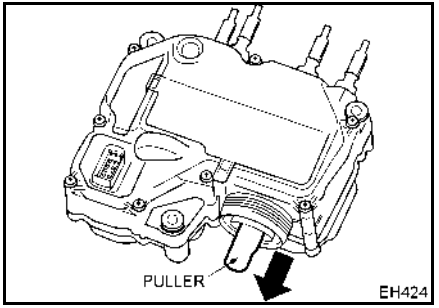

6.Clean the sealing surface of the housing with water only.

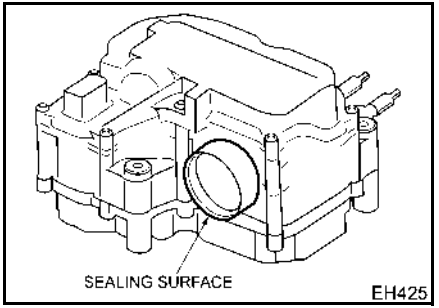

7.Install the new filter.

https://truckmanualshub.com/

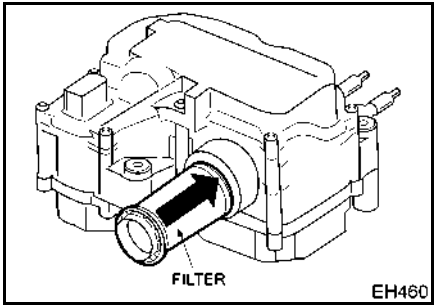

8.Apply a thin film of engine oil to the o-ring on the new equalizing element.
Install the new equalizing element.

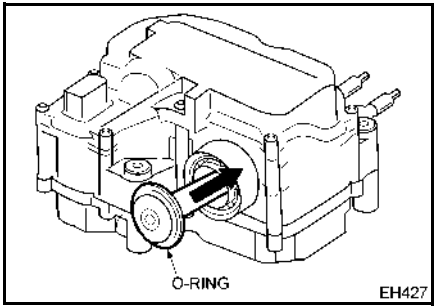

9.Install the filter cover. Tighten the filter cover to the torque specified on the cover.
Tightening torque:
15 to 18 ft·lbf (20 to 25 N·m)
(2.0 to 2.5 kgf·m)

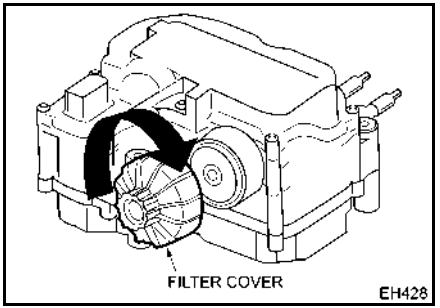

10.Connect the battery negative (–) terminal.
11.Start the engine and ensure there is no leakage.

NOTE:

- **If any DEF splashed onto any part, completely wipe it off.**

CCV FILTER

Replacement of CCV filter

The CCV (blow-by gas reducing system) filter captures oil contained in blow-by gas. Replace it on a regular basis.

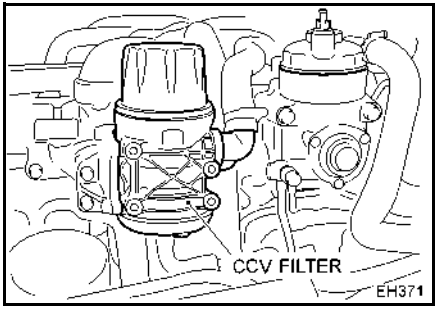

1.Clean the area around the CCV filter cap to prevent dirt from entering during replacement.
2.Turn the filter cap counterclockwise for removal and replace the element.
3.After replacing the cap O-ring with a new one, apply engine oil lightly and install the cap. Tighten the cap

https://truckmanualshub.com/

securely until it is raised and stopped.

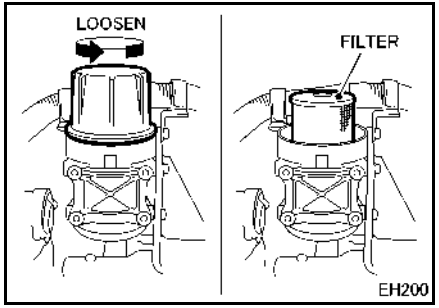

⚠ CAUTION

- **Be sure to turn the filter cap by hand. Use of a tool may damage the cap.**
- **Be sure to replace the element at the specified time. Use of the element after the replacement period may cause clogging of the element, resulting in increase of oil mist in the blow-by gas that is reduced after intake.**

NOTE:

- **Since blow-by gas, which is reduced after intake, includes a trace of oil mist, oil comes in contact with the inner surfaces of the air intake parts even under normal operation environment due to operation over a long period of time. This is not a failure.**

TRANSMISSION GEAR OIL

⚠ WARNING

- **To avoid possible burn injury, allow the transmission to cool before checking or changing the transmission oil.**

Check the vehicle daily for transmission oil leakage. If there is any evidence of oil leakage, locate and correct the cause. Visually check the transmission oil level. If low, add oil until the level reaches the bottom of the filler plug hole.

To check the manual transmission gear oil level

1. Remove the transmission filler plug and visually check that the oil level reaches the bottom of the filler hole.

https://truckmanualshub.com/

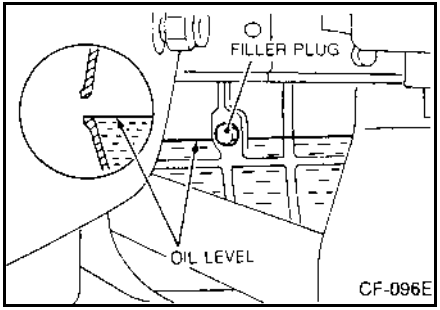

CAUTION

- **To prevent dirt and debris from entering the transmission, clean the filler plug, transmission housing, and surrounding area before checking.**
- **If the transmission oil level is low, the transmission will not operate normally and could malfunction. Check to determine the cause of low oil level. Correct the condition before operating the vehicle.**

2. After checking the oil level, replace the filler plug gasket with a new one.
3. Reinsert the plug and tighten the plug.
   Tightening torque:
   UD1800 thru UD3300
   MLS63
   72 to 89 ft·lbf (98 to 120 N·m)
   (10 to 12 kgf·m)
   UD2600 and UD3300
   MLS63
   72 to 94 ft·lbf (98 to 130 N·m)
   (10 to 13 kgf·m)
   MPS63
   87 to 101 ft·lbf (118 to 137 N·m)
   (12 to 14 kgf·m)

To check the automatic transmission fluid level (Allison 1000, 2200 and 2500 series)

- Check the fluid while the vehicle is on level ground and the parking brake applied. Start the engine and run for at least one minute at 900 to 1,000 rpm to clear the system of air. Shift the transmission to Drive, Reverse, and then to Neutral to fill the clutch cavities and fluid passages.
- Always clean around the end of the filler tube before removing the dipstick. Dirt or foreign matter must not be permitted to enter the fluid system. It can cause valves to stick, cause undue wear of transmission parts, or clog passages. Check the fluid level by one of the following procedures and report any abnormal fluid level to your maintenance personnel.

https://truckmanualshub.com/

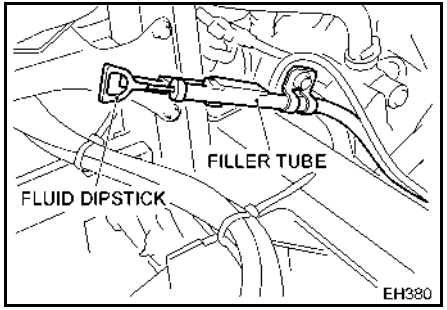

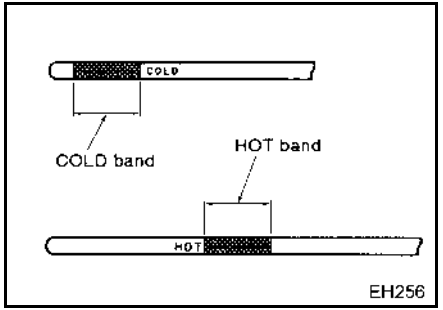

<COLD CHECK>

NOTE:

- **The purpose of the cold check is to determine if the transmission has enough fluid to be safely operated until a hot check can be made.**

- A cold fluid check may be made when engine coolant temperature gauge starts to move. (Reference; approximately 86°F: 30°C)
- Run the engine for at least 1 minute to clear the fluid system of air.
- With the engine running at idle, wipe the dipstick clean and check the fluid level. Any level within the COLD band is satisfactory for operating the vehicle. If the level is not within the COLD band, add or drain fluid as necessary to bring the level to the middle of the COLD band.
- Perform a hot check at the first opportunity after driving vehicle for at least 30 minutes. (Reference; Sump temperature is 160 to 200°F: 71 to 93°C.)

<HOT CHECK>

- Operate the transmission in a drive range for at least 30 minutes to get operating temperature. (Reference; 160 to 200°F: 71 to 93°C)

NOTE:

- **The fluid must be hot to ensure an accurate check. The fluid level rises as temperature increases.**

- Park the vehicle on a level spot, shift to (N) neutral and apply the parking brake. Let the engine run at idle speed.
- Wipe the dipstick clean and check the fluid level. The safe operating level is any level within the HOT band on the dipstick.
- If not within this range, add or drain fluid as necessary to bring the level to the middle of the HOT band.

https://truckmanualshub.com/

To check the automatic transmission fluid level (Allison 3000 series)

Inspection with the fluid dipstick

- Check the fluid while the vehicle is on level ground and the parking brake applied. Start the engine and run for at least one minute at 900 to 1,000 rpm to clear the system of air.
- Idle the engine.
- With the engine at idle, depress the brake pedal and shift the range to D (Drive) or R (Reverse) to fill the whole hydraulic circuit with fluid.
- Shift the range to N (Neutral).
- With the engine at idle and the range in the N (Neutral) position, inspect the fluid level.

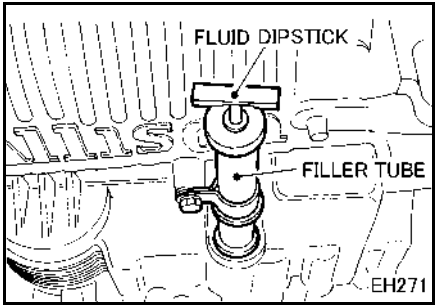

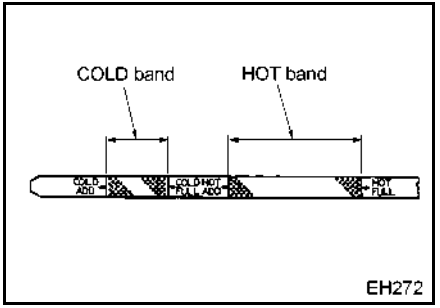

<COLD CHECK>

- Pull the fluid dipstick out of the filler tube, wipe fluid off the dipstick surface, and then insert the dipstick back in the original position.
- Pull out the fluid dipstick again to inspect the fluid level. Check (at least twice) to make sure that the fluid level is within the COLD band range. If the fluid level is not within the range, refill fluid.

<HOT CHECK>

- After warming up the engine and driving for about 10 to 15 minutes, pull the fluid dipstick out of the filler tube, wipe fluid off the dipstick surface, and then insert the dipstick back in the original position.
- Pull out the fluid dipstick again to inspect the fluid level. Check (at least twice) to make sure that the fluid level is within the HOT band range.
- If the fluid level is within the HOT band range, the inspection is completed. If the fluid level is not within the range, refill fluid.

https://truckmanualshub.com/

CAUTION

- **Before the inspection, be sure to apply the parking brake. Then, while the engine is running at idle, conduct the inspection. If the inspection is conducted while the engine stops, the apparent amount becomes large.**
- **If the fluid temperature increases, the fluid level increases. Be sure to conduct a final check while the fluid temperature is high after warming-up.**
- **Before the inspection, clean around the end of the filler tube to prevent dust, mud or water from entering the filler tube. If dust, mud or water enters, a failure of the transmission may be caused.**

Inspection with the electronic fluid level sensor

- Warm up the engine, drive the vehicle for about 10 to 15 minutes, stop on a level ground, and then shift to the N (Neutral) range.
- The vehicle has been stationary for about 2 minutes to allow the fluid to settle.
- Run the engine at an idle.
- Push the ⬆ and ⬇ switches of the selector at the same time.

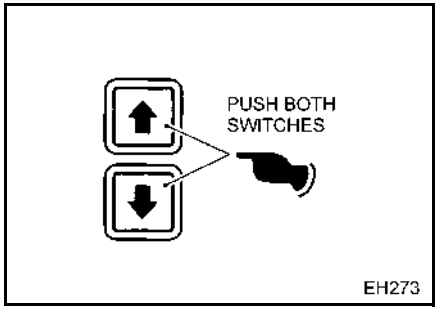

NOTE:

- **To recover the fluid level check mode, push the N switch of the selector.**

- If the measuring conditions have been satisfied, the results will be displayed on the digital display about 2 minutes later.

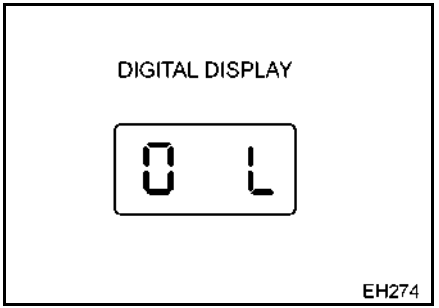

Fluid level is proper:
“O L” “O K” “O K” are displayed by two letters in sequence, 6 letters in total, on the digital display.

Fluid level is low:
“O L” “L O” “O 1” are displayed by two letters in sequence, 6 letters in total, on the digital display. If the last figure is 1, 1 quart of fluid must be added.

Fluid level is high:
“O L” “H I” “O 2” are displayed by two letters in sequence, 6 letters in total, on the digital display. If the last figure is 2, 2 quarts of fluid must be released.

https://truckmanualshub.com/

- If the measuring conditions have not been satisfied, “O L” “ — — ” “E L” are displayed by two letters in sequence, 6 letters in total, on the digital display. The meanings of the last two figures are as indicated in the following table.

Code			Cause of code
“O L”	“ — — ”	“X * ”	Waiting period is not complete
		“E L”	Engine speed (rpm) too low
		“E H”	Engine speed (rpm) too high
		“S N”	N (Neutral) must be selected
		“T L”	Sump fluid temperature too low
		“T H”	Sump fluid temperature too high
		“S H”	Output shaft rotation
		“F L”	Sensor failure (may be speed sensor, throttle sensor, temperature sensor, or oil level sensor — but this indication does not identify which has failed)

* : The display is a flashing numeral, counting down from 8 to 1 until the waiting period is complete.

Manual transmission gear oil change

To change the manual transmission gear oil

WARNING

- **To avoid possible burn injury, allow the transmission to cool before checking or changing the transmission oil.**

1. Place a container under the drain plug. Remove the drain plug and completely drain the transmission oil.

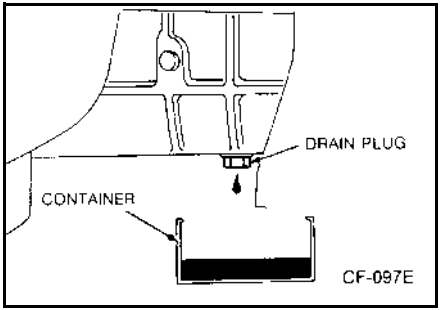

https://truckmanualshub.com/

2. After draining, replace the gasket of the drain plug with a new one. Reinsert the plug and tighten the plug.
   Tightening torque:
   UD1800 thru UD3300
   MLS63
   72 to 89 ft·lbf (98 to 120 N·m)
   (10 to 12 kgf·m)
   UD2600 and UD3300
   MLS63
   72 to 94 ft·lbf (98 to 130 N·m)
   (10 to 13 kgf·m)
   MPS63
   87 to 101 ft·lbf (118 to 137 N·m)
   (12 to 14 kgf·m)

NOTE:

- **The drain plug contains a magnet. Remove any iron filings on the plug before reinstalling the plug.**

3. Fill the transmission with fresh oil through the filler plug hole located on the side of the transmission.

Oil refill capacity (Approximately)

	PTO	Oil capacities US qt (liters)
MLS63	Without	7.2 (6.8)
	With	7.8 (7.3)
MPS63	Without	8.3 (7.8)
	With	8.8 (8.3)

4. Visually check the oil level and add oil, if necessary, until it reaches the bottom of the filler plug hole.

Automatic transmission fluid change

Have the automatic transmission fluid changed by an authorized UD Trucks dealer or other qualified service facility. Use only the transmission fluid listed in the "RECOMMENDED LUBRICANTS"on page 13-5.

Automatic transmission fluid filter (Allison 1000, 2200 and 2500 series)

⚠ WARNING

- **Do not handle hot filter without hand protection. Failure to do so may result in burn injury.**

To replace the filter

1. Drain the fluid when the transmission is at normal operating sump temperature 160 to 200°F (71 to 93°C). Hot fluid flows quicker and drains more completely.

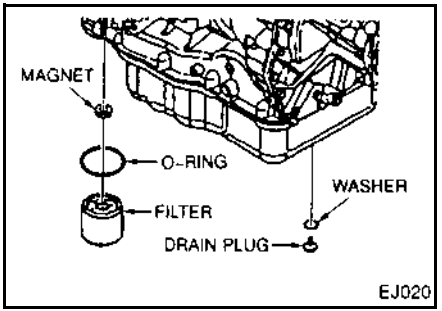

https://truckmanualshub.com/

2. Remove the drain plug from the oil pan and allow the fluid to drain into a suitable container.
3. Using a filter wrench, remove the control-main filter by rotating it counterclockwise.
4. Remove the magnet from the filter attachment tube or from the top of the filter element.
5. Clean any metal debris from the magnet. Report any metal pieces larger than dust to your maintenance personnel.
6. Reinstall the magnet onto the filter attachment tube.
7. Lubricate the O-ring on the control-main filter with transmission fluid.
8. Install, by hand, the control-main filter until the O-ring on the control-main filter touches the converter housing.
9. Turn the filter ONE FULL TURN ONLY by hand, after O-ring contact.

CAUTION

- **Turning the filter more than ONE FULL TURN after gasket contact will damage the filter.**

10. Reinstall the drain plug and sealing washer.
    Tightening torque:
    22 to 30 ft·lbf (30 to 40 N·m) (3.1 to 4.1 kgf·m)
11. After refill, check the fluid level and add the proper fluid, if necessary.
    For the fluid check procedure, refer to "To check the automatic transmission fluid level (Allison 1000, 2200 and 2500 series)"on page 11-52.
12. Start the engine. Check the filter and seal for leaks.

Allison 3000 series

A disassembled type of filter is used and incorporated in the oil pan.

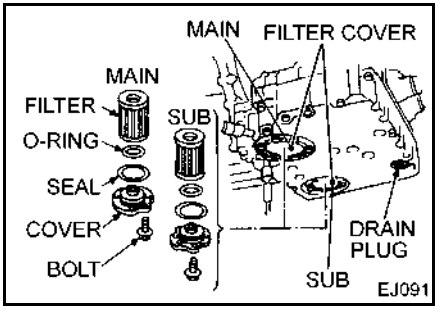

1. Clean the periphery of the filter cover to prevent dust from entering at the time of removal of the filter.
2. Remove the mounting bolts of the filter cover and pull out the cover and filter downward.
3. Replace the filter, O-ring and seal with new ones and install to the cover. When installing, apply a light coating of clean oil to the entire perimeter of O-ring and seal.
4. Install the cover and filter combined in one unit into the transmission body.

https://truckmanualshub.com/

Tightening torque:
37.6 to 45.0 ft·lbf (51 to 61 N·m)
(5.2 to 6.2 kgf·m)

5. After replacement, be sure to refill fluid. After refilling, check the fluid level.

DIFFERENTIAL GEAR OIL

Gear oil

Inspect the vehicle daily for differential oil leakage. If there is any evidence of leakage, locate and correct the cause. Check oil level and, if low, add oil.

⚠ WARNING

- **Check and/or change the differential gear oil only after the rear axle cools to avoid possible burn injuries.**

To check the differential gear oil level

1. Remove the filler plug and visually check the oil level. The level should reach the bottom of the filler plug hole.

CAUTION

- **Before removing the differential filler plug, clean the plug and surrounding area to prevent dirt and debris from entering filler hole.**

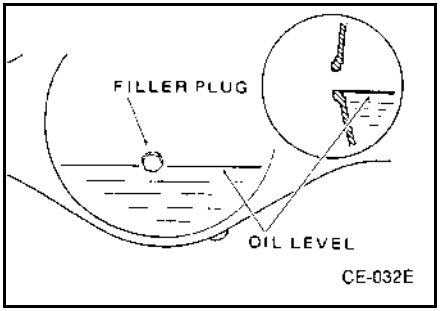

2. Add oil, if necessary.
3. Replace the gasket of the filler plug with a new one. Reinsert the plug and tighten the plug.
   Tightening torque:
   95 to 108 ft·lbf (128 to 147 N·m)
   (13 to 15 kgf·m)

https://truckmanualshub.com/

Oil change

⚠ WARNING

- **Check and/or change the differential gear oil only after the rear axle cools to avoid possible burn injuries.**

1. Place a container under the differential drain plug. Remove the drain plug and drain the oil completely.

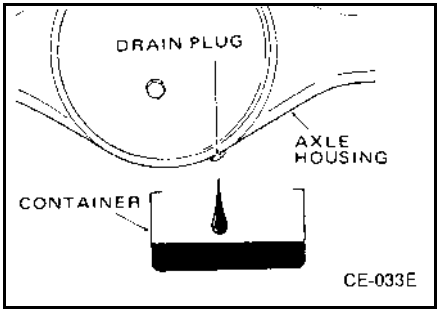

2. After draining, replace the gasket of the drain plug with a new one. Install the plug and tighten the plug.

   Tightening torque:
   95 to 108 ft·lbf (128 to 147 N·m) (13 to 15 kgf·m)

NOTE:

- **The drain plug contains a magnet. Remove any iron filings on the plug before reinserting the plug.**

3. Fill the differential with fresh oil. Check the oil level. Add oil until the level reaches the bottom of the filler plug hole.

Oil refill capacity (Approximately)

	US measure	Liters
UD1800, UD2000 and UD2300LP	6.9 qt	6.5
UD2300HD	9.5 qt	9
UD2600 and UD3300	13.8 qt	13

STEERING SYSTEM

Wheel free play

To check for free-play, start and idle the engine. Set the front wheels to the straight-ahead position and lightly rotate the steering wheel to the right and left until the front wheels move. Steering wheel play on the circumference of the steering wheel should be 0.39 to 1.57 inches (10 to 40 mm) for UD1800, UD2000 and UD2300 or 1.18 to 1.97 inches (30 to 50 mm) for UD2600 and UD3300. If the play exceeds 1.57 inches (40 mm) for UD1800, UD2000 and UD2300 or 1.97 inches (50 mm) for UD2600 and UD3300, have it corrected by an authorized UD Trucks dealer or other qualified service facility.

https://truckmanualshub.com/

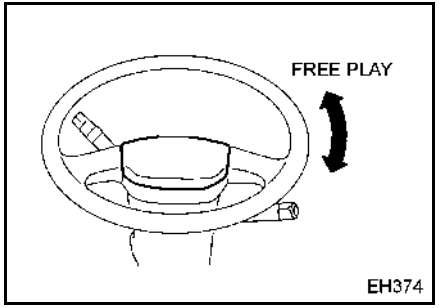

⚠ WARNING

- **Do not operate your vehicle with excessive steering wheel free-play. If free-play exists, have the vehicle thoroughly inspected by an authorized UD Trucks dealer or qualified service facility.**

Steering fluid level

If the steering fluid is low or contaminated, the power steering may not operate normally which could adversely affect steering control. If the fluid level is low, check the steering system for leaks and correct the condition before operating the vehicle. If the fluid is contaminated, have it replaced by an authorized UD Trucks dealer or qualified service facility.

⚠ WARNING

- **To avoid possible burn injury, allow the steering system to cool before checking or changing the steering fluid.**
- **Do not operate the vehicle when the steering fluid is low or contaminated.**

⚠ CAUTION

- **Do not allow dirt or debris to enter the fluid reservoir when open. Always clean the fluid reservoir and cap before removing the cap.**
- **Check for proper fluid level before engine start.**

To inspect the steering fluid level

1. Visually inspect the steering system for fluid leaks.
2. The fluid level should be between the HIGH and LOW lines. If the fluid level is below the LOW line, add steering fluid to the HIGH line.

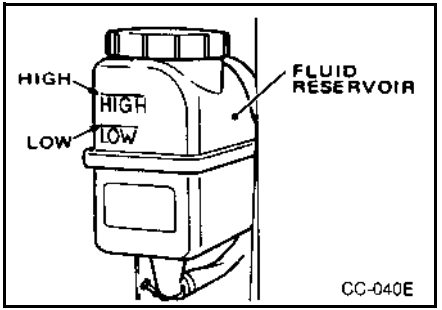

https://truckmanualshub.com/

Steering fluid and filter change

Have the steering fluid and filter changed by an authorized UD Trucks dealer or other qualified steering system repair facility. Use only DEXRON®II or higher fluid.

SERVICE BRAKE SYSTEM

Brake fluid level check

Maintain the fluid level in the reservoir between the HIGH and LOW marks on the brake fluid reservoir. If the fluid level is below the LOW mark then add brake fluid.

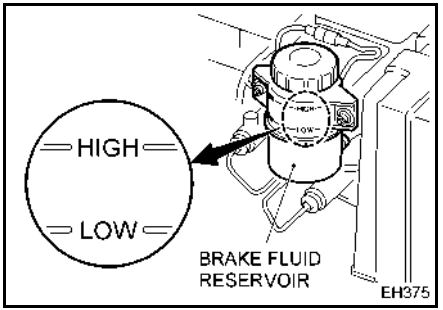

⚠ WARNING

- **Brake fluid loss may indicate a leak in the brake system. Have the brake system checked immediately by an authorized UD Trucks dealer or other qualified brake repair facility.**
- **To avoid fire hazard, do not allow brake fluid to contact the hot parts of the exhaust system.**
- **To avoid possible burn injury, allow the engine and brake system to cool before checking or changing brake fluid.**
- **If the brake (and clutch) fluid is accidentally ingested, force the person to vomit and secure medical help immediately. If the brake (and clutch) fluid gets in an eye, flood the eye with lots of water and get medical attention immediately.**

https://truckmanualshub.com/

⚠ CAUTION

- **Remove any dirt accumulation from the brake fluid reservoir cap and surrounding area before removing the reservoir cap. Do not allow dirt, debris, water or other foreign materials to enter the reservoir while it is open.**
- **Use only approved DOT 3 fluid from a sealed container.**
- **Do not add brake fluid above the HIGH mark.**
- **Do not allow brake fluid to contact the painted surfaces of your vehicle. Brake fluid contact may result in paint damage.**
- **Remove the reservoir strainer and clean any foreign matter from it. If the reservoir contains sediment, have the reservoir inspected and cleaned by an authorized UD Trucks dealer or other qualified brake repair facility.**

Brake fluid change

Have the brake fluid changed by an authorized UD Trucks dealer or other qualified brake system repair facility. Use only DOT 3 fluid from a sealed container.

NOTE:

- **After the brake fluid has been changed, operate the service brakes several times to assure proper operation.**

⚠ CAUTION

- **Do not expose the brake fluid to moisture when checking, adding or changing the brake fluid. Brake fluid absorbs moisture. When it does, its boiling point drops which can cause vapor lock and corrosion of brake system components.**
- **Do not add brake fluid which has been exposed to moisture to the system. Use fresh DOT 3 fluid from a sealed container only.**

Draining air reservoir

To drain accumulated water from the air reservoir

1. Open the drain cocks.

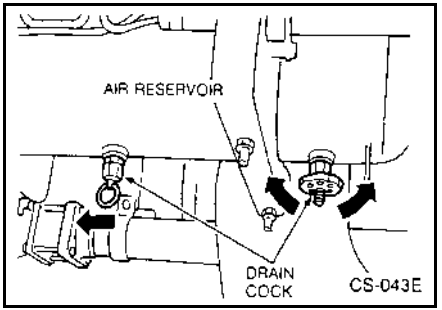

2. Allow the water to drain.
3. After draining, release the drain cock rings and close the drain cocks.

⚠ WARNING

- **Do not drive vehicle unless accumulated water has been drained. If not, water could get into brake system and adversely effect brake function.**

https://truckmanualshub.com/

CAUTION

- **As vehicles are equipped with an air dryer, water will normally not drain from the air reservoir when the drain cock is opened. However, a small amount of water may drain out under humid conditions. If a large amount of water is drained, the air dryer may not be functioning properly. Check the air dryer.**

Air dryer

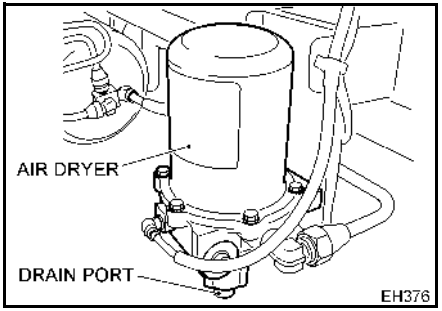

Visually check to be sure that water drains from the drain port of the air dryer. Water will drain when the air pressure governor stops pressurization. The governor stops pressurization when the air pressure in the reservoir reaches the upper level of the normal operating pressure range. When the sound of air supplied to the reservoir can no longer be heard, or when the sound of the engine changes, this condition has been reached.
If no water drains from the air dryer, drain the water from the air reservoir. If a large amount of water is drained, have the air dryer repaired by an authorized UD Trucks dealer or other qualified brake system repair facility.
If the drained liquid contains a large amount of oil, additionally have the air compressor checked.

⚠ WARNING

To avoid brake failure:

- **Visually check to be sure that water or air is discharged from bottom drain port.**
- **Replace desiccant, filters and gasket annually.**
- **Do not allow drain port to clog with foreign material.**

https://truckmanualshub.com/

CLUTCH

Clutch pedal free play

To check clutch pedal free play, depress the clutch pedal by hand until resistance is felt. The play, the distance from the point where the clutch pedal normally rests and where resistance is felt should be 1.18 to 1.97 inches (30 to 50 mm). If the play is less than 1.18 inches (30 mm) or more than 1.97 inches (50 mm), then adjust the clutch pedal free play.

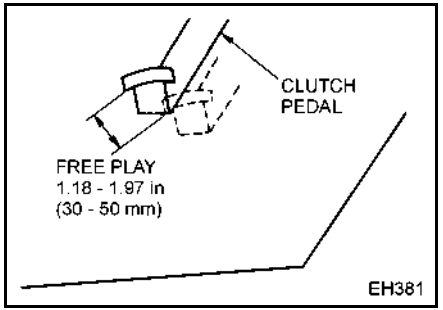

Adjusting clutch pedal free play

To adjust the clutch master cylinder

First adjust the master cylinder located on the clutch pedal.

1. Loosen the lock nut on the push rod.
2. Turn the push rod until it touches the piston and there is no play. Under this condition, return the push rod 4/5 turn and make sure the free play is approximately 0.04 inches (1 mm).
3. Tighten the lock nut while holding the push rod stationary with a wrench.

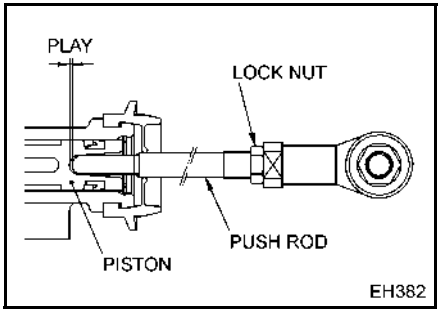

To adjust the outer lever assembly

After adjusting the clutch master cylinder, adjust the clutch booster outer lever assembly located at the left side of the transmission.

1. Remove the return spring.
2. Loosen the push rod lock nut.
3. Adjust the play of the outer lever to 0.177 to 0.217 inches (approx. 4.5 to 5.5 mm) by turning the push rod.

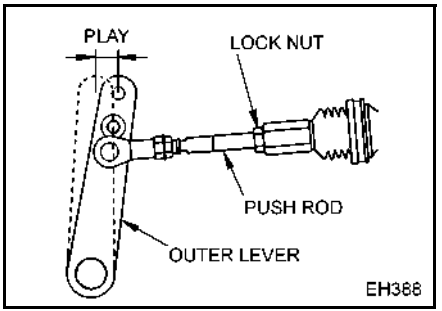

MLS63

https://truckmanualshub.com/

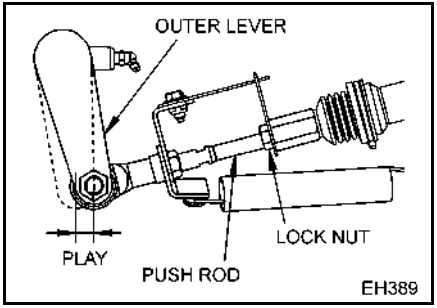

MPS63

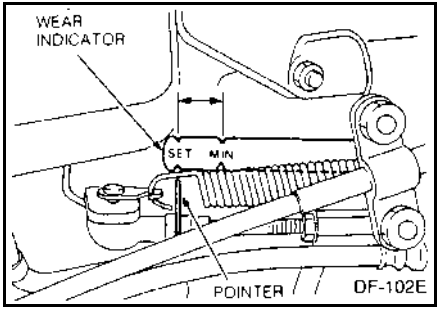

MLS63

4. Tighten the lock nut.
5. Reinstall the return spring.
6. Check clutch disc wear with the wear indicator installed near the left side clutch booster. Clutch disc wear is within acceptable limits when the pointer at the wear indicator is between MIN and SET. If the pointer goes past MIN, have the clutch disc replaced by an authorized UD Trucks dealer or qualified service facility.

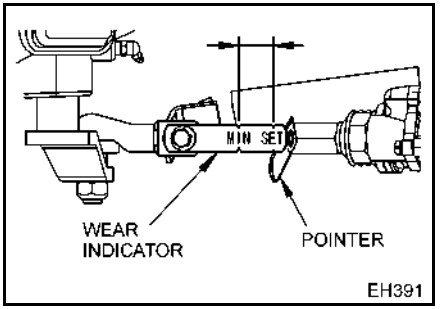

MPS63

Checking clutch fluid

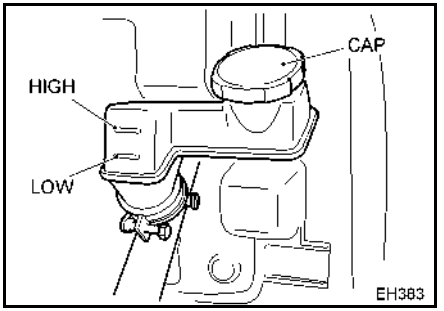

NOTE:

- **DOT 3 brake fluid is used as clutch fluid. Be sure to handle it carefully. (Refer to "Brake fluid level check"on page 11-62.)**

The clutch fluid level should be between the HIGH and LOW marks on the fluid reservoir located behind the front lid. If the fluid level is low, add DOT 3 brake fluid until the level is between the HIGH and LOW marks. Also check the clutch fluid for contamination. If the fluid appears contaminated, have the clutch fluid changed.

https://truckmanualshub.com/

⚠ WARNING

- **To avoid fire hazard, do not allow clutch fluid to contact the hot parts of the exhaust system.**

CAUTION

- **Do not expose the clutch fluid to moisture when checking, adding or changing the clutch fluid. Clutch fluid absorbs moisture. When it does, its boiling point drops which can cause corrosion of clutch system components.**
- **Do not add clutch fluid which has been exposed to moisture to the system. Use fresh DOT 3 fluid from a sealed container only.**
- **Do not allow clutch fluid to contact the painted surfaces of your vehicle. Clutch fluid contact may result in paint damage.**

Changing clutch fluid

Have the clutch fluid changed by an authorized UD Trucks dealer or other qualified brake system repair facility. Use only DOT 3 fluid from a sealed container.

SUSPENSION

Leaf spring

Check the leaf spring for damage, displacement of leaves or looseness. If loose, align the leaves and tighten bolts and nuts to the specified torque. Periodically have the U-bolt nut retightened by an authorized UD Trucks dealer or qualified service facility.

Tightening torque:
- Front spring U-bolt nut
  - UD1800, UD2000 and UD2300
    174 - 203 ft·lbf
    (235 - 275 N·m) (24 - 28 kgf·m)
  - UD2600 and UD3300
    362 - 398 ft·lbf
    (490 - 539 N·m) (50 - 55 kgf·m)
- Rear spring U-bolt nut
  - UD1800, UD2000 and UD2300
    195 - 239 ft·lbf
    (265 - 324 N·m) (27 - 33 kgf·m)
  - UD2600 and UD3300
    362 - 398 ft·lbf
    (490 - 539 N·m) (50 - 55 kgf·m)

https://truckmanualshub.com/

Air spring

Check the air bellows for damage, air leakage, looseness and leveling valve for proper functioning.
Periodically have the U-bolt nut retightened by an authorized UD Trucks dealer or qualified service facility.

Tightening torque:
U- bolt nut
406 - 455 ft·lbf
(550 - 617 N·m) (56 - 63 kgf·m)

Shock absorber

Check the shock absorber for proper installation, damage or leakage. If leakage is present, have the shock absorber checked or replaced by an authorized UD Trucks dealer or qualified service facility.

WINDSHIELD WASHER FLUID

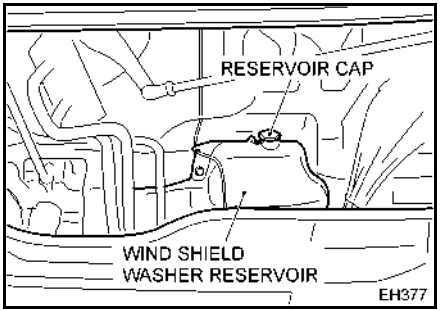

Open the front lid, and check the fluid level in the windshield washer reservoir daily. If low, add an appropriate washer fluid solution. Also, check that fluid is properly sprayed onto the windshield.
In cold weather, use a windshield washer anti-freeze with water at the proper mixture ratio. Follow the anti-freeze manufacturer's instructions for the mixture ratio.

Replenishing washer fluid
The windshield washer reservoir located behind the front lid.

1. Open the front lid, and check the washer reservoir fluid level.
2. If it is low, add more washer fluid via reservoir cap opening

⚠ WARNING

- **Do not use cooling system solution in the windshield washer reservoir. When sprayed on the windshield, cooling system solution can significantly diminish visibility.**

NOTE:

- **Do not overfill the windshield washer reservoir.**

https://truckmanualshub.com/

OUTSIDE MIRRORS

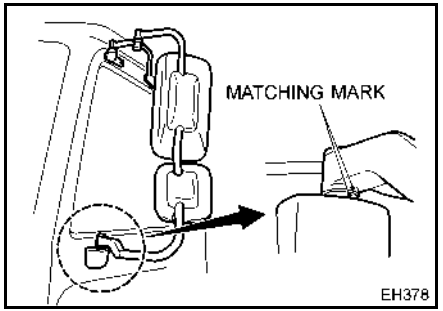

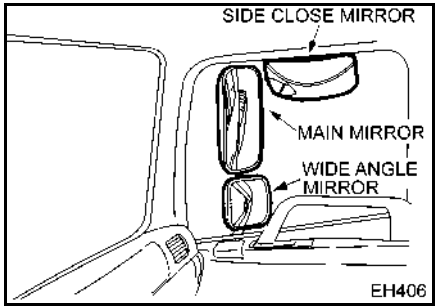

Check the outside mirrors daily for damage, position and visibility. Also check that the mirror mounting bolts are properly tightened.

Adjusting outside mirrors

1. Set the stay by aligning it with the matching mark.
2. Adjusting the outside mirror position.

- Since the plain mirror on the upper side cannot be adjusted using the mirror alone, adjust it by moving the mirror housing. The convex mirror on the lower side can be adjusted using the mirror alone.

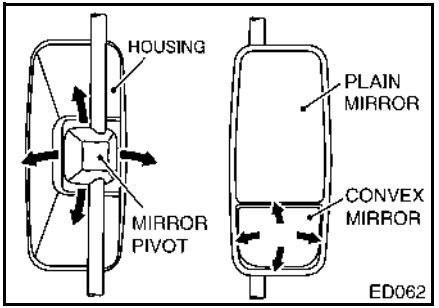

- For vehicles equipped with power mirror, refer to the "Power mirror switch (Optional)"on page 7-68.

To check the mirror heater (Optional)

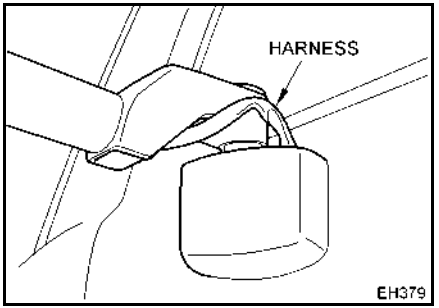

On a vehicle equipped with a mirror heater, check the following points.

- Check the heater harness for slack and twist.

CAUTION

- **Do not yank the heater harness by hand or hang on the heater harness. The heater harness may be broken.**

https://truckmanualshub.com/

EMISSIONS CONTROL SYSTEMS

To maintain efficient emissions control systems operation, have the emission control system maintenance in the VEHICLE SERVICE AND MAINTENANCE performed at the intervals indicated.

CAUTION

- **Do not modify, alter, disconnect or remove any part of the vehicle which could affect, directly or indirectly, vehicle emissions.**
- **Do not operate your vehicle if you notice engine misfire, a significant loss of performance or other improper operation. Consult your UD Trucks dealer or other qualified service facility for service.**

Exhaust Aftertreatment System Maintenance

The vehicle must be taken to an authorized UD Trucks dealer to remove the ash from the Aftertreatment Diesel Particulate Filter and clean the Aftertreatment Hydrocarbon Doser.

Emissions Maintenance

Emissions Maintenance Interval – EPA / CARB defines this as the adjustment, cleaning, repair, or replacement shall be recommended at intervals no less than described below.

Injector tips (cleaning only), crankcase ventilation
valve, EGR filters and coolers:
Medium Heavy Duty:
Miles: 50,000
Hours: 1500

Injectors, Turbocharger, ECM, sensors, actuators, EGR components (except filter and coolers), Aftertreatment DPF plus related components, this includes ash cleaning
Medium Heavy Duty:
Miles: 150,000
Hours: 4500

Regular maintenance for the DPF

- The muffler that is equipped with the DPF needs to be cleaned regularly to maintain its performance (either every 155,000 miles [250,000 km] or 4,500 hours). This is because unburnable ash will accumulate in the filter during regeneration; otherwise, the soot accumulated in the DPF can be burned to regenerate the filter.
- For details on the cleaning information about the muffler that is equipped with the DPF, contact your nearest UD trucks dealer.
- The DPF ash level gauge that is displayed on the multi-display monitor indicates the amount of ash accumulation.

https://truckmanualshub.com/

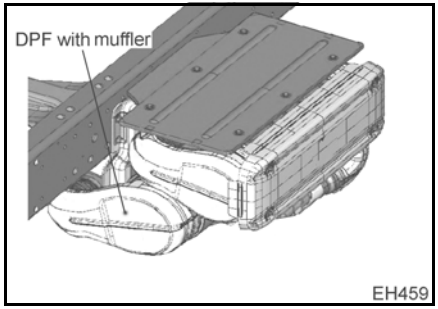

DPF ash level gauge

- The DPF ash level gauge indicates the accumulation level of the ash in the filter.
- For details on how to display the meter, refer to the “Multi-display monitor” section in “INSTRUMENT AND CONTROLS”.
- When the level reaches “H”, it indicates that the filter should be cleaned. The system simultaneously indicates the DPF maintenance warning, warning message and comment to alert the driver of cleaning the DPF.

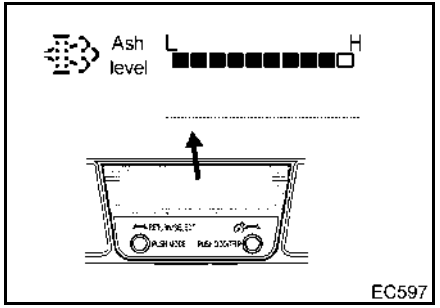

DPF maintenance warning

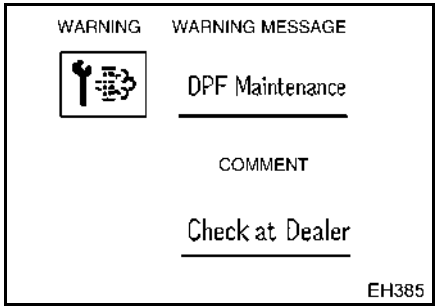

CAUTION

- **The muffler that is equipped with the DPF for the PM reduction device needs to be cleaned regularly (either every 155,000 miles [250,000 km] or 4,500 hours) even if the DPF ash level gauge does not reach “H”.**
  If not, poor fuel economy and engine output decrease may occur.

NOTE:

- **Ash is mainly generated from the elements included in engine oil additives. Always use the specified engine oil to minimize ash generation.**
- **The soot collected in the DPF that is built in the muffler for the PM reduction device is burned to be regenerated. However, ash is unburnable during regeneration and accumulates in the filter. Thus, the filter must be cleaned regularly.**
  To keep the DPF efficiency, it recommend that the manual

https://truckmanualshub.com/

forced regeneration is performed once a year even if the DPF soot level indicates. For details on the manual forced regeneration, refer to the "DPF SYSTEM"on page 7-69

- **The accumulation level shown in the DPF ash level gauge is calculated by the control unit using the fuel consumption data. Therefore, the gauge indication may differ from the filter cleaning interval of the muffler that is equipped with the filter for the PM reduction device (either every 155,000 miles [250,000 km] or 4,500 hours).**
  Use the DPF ash level gauge indication as a reference.

https://truckmanualshub.com/

NOISE CONTROL SYSTEM

To assure noise control system integrity, the maintenance services shown in the following chart must be performed at the intervals indicated. When inspecting the exhaust system confirm that all components are intact and securely fitted. Also check all exhaust system components for holes, leaks and corrosion. Do not perform any prohibited act to the noise control system as described in the following chart.

Tampering with Noise Control System Prohibited

Federal law prohibits the following acts or the causing thereof:

(1) The removal or rendering inoperative by any person other than for purposes of maintenance, repair, or replacement, of any device or element of design incorporated into any new vehicle for the purpose of noise control prior to its sale or delivery to the ultimate purchaser or while it is in use, or

(2) the use of the vehicle after such device or element of design has been removed or rendered inoperative by any person.

Among those acts presumed to constitute tampering are the acts listed below.

⚠ WARNING

- **To avoid serious injury from hot engine and exhaust system, perform maintenance after engine has cooled.**

Control System	Prohibited Acts
Air Intake System	Removal or rendering inoperative air cleaner, intake resonator or intake duct, and piping.
Acoustical Shielding	Removal of cab shields or acoustical insulation. Removal of engine enclosures.
Cooling System	Removal or rendering inoperative fan clutch. Removal of fan shrouds or radiator side shields.
Engine and Drive Line System	Removal or rendering engine speed governor inoperative so as to allow engine speed to exceed manufacturer specifications.
Exhaust System	Removal or rendering inoperative exhaust system components including muffler, pipe shield or piping.

https://truckmanualshub.com/

Noise Control System Maintenance Schedule

In order to comply with federal noise regulation, the UD Trucks vehicle may be equipped with the following items.

To avoid or minimize the degradation of noise emission level, it is essential to perform proper inspection and maintenance at the intervals shown in the following maintenance chart.

Abbreviations:

A = Check and adjust if necessary

T = Tighten to specified torque

R = Replace or change

Items		First	Every												Months (every)
	Miles x 1,000	3	6	9	10	12	15	18	20	24	30	36	50	72	
	Kilometersx1,000	5	10	15	16	20	25	30	32	40	48	60	80	120	
High idling speed											A				12
Cooling fan											A				12
Air intake system hose and clamps						A									4
Air cleaner element												R			12
Exhaust manifolds mounting nuts											T				12
Muffler with catalyst and exhaust pipe clamps								A							6
Splash shields, under hood insulator											A				12

Maintenance of noise emission control system

Splash shield, under hood insulation

Check shields and under hood insulation for damage or looseness.

Repair, replace or clean if necessary.

Cooling fan

- Check the cooling fan for damage, and replace it when damaged.
- Check the cooling fan mounting bolts for looseness, and tighten them if necessary.

https://truckmanualshub.com/

Intake system

- Check the intake system components such as ducts, hoses, resonator air cleaner, intake manifold, clamps and fasteners for damage. Replace if necessary. Check to be sure that hose clamps and fasteners are tight.
- Check to be sure that the air cleaner dust cover is installed securely.
- Check the rubber gasket in the dust cover for deterioration. Replace if necessary.

Exhaust system

Check the complete exhaust system. Check for damage, missing or mispositioned parts, loose connections, open seams, holes, loose fasteners, or deformed or plugged outlets. Replace or tighten if necessary.
Inspect for leaks at various joint connections and tighten clamp. Make visual inspection for crack or holes in DPF cleaner and tail pipe. Always replace with UD Trucks recommended parts. Tail pipe elbow or offset tail pipe orientation must not be changed from standard position as originally received.
To avoid abnormal changes in vehicle sound level, maintenance is necessary at the intervals shown in the maintenance schedules, and record on the inspection verification form provided. Please consult an authorized UD Trucks dealer.

BATTERY

Your UD Trucks vehicle is equipped with a maintenance-free battery at the factory.
Below are the specifications for the two 12 volt batteries installed at the factory. Their reserved capacity (RC) and cold cranking amperes (CCA) are rated at 159 minutes and 622 amperes.

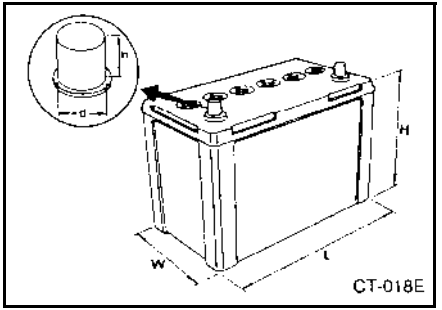

https://truckmanualshub.com/

W	6.81 in (173 mm)	
L	12.05 in (306 mm)	
H	8.03 in (204 mm)	
d	Positive (+) terminal: 0.756 - 0.768 in (19.2 - 19.5 mm)	Taper 1/9
	Negative (–) terminal: 0.693 - 0.705 in (17.6 - 17.9 mm)	
h	0.67 - 0.79 in (17 - 20 mm)	

Battery electrolyte level

⚠ DANGER

Batteries produce explosive gases. To minimize risk of serious injury or death:

- **Keep sparks and open flame away from the batteries. Never smoke when working on or around the batteries.**
- **Make sure that adequate ventilation is provided when working on or around the battery in an enclosed area.**
- **Do not permit metal tools to simultaneously contact the positive battery terminal and any other metal on either vehicle at the same time.**
- **Always wear eye protection when working near batteries.**

The battery electrolyte should be maintained between the upper and lower levels on the case. If low, add distilled water to the specified level and charge the battery for at least 30 minutes with the engine idling.

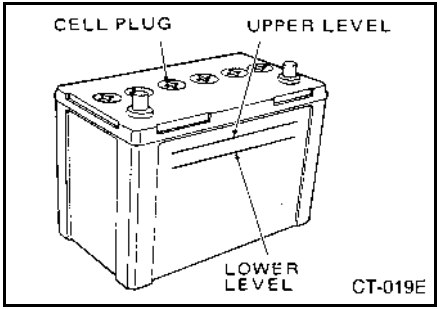

To add distilled water

1. Remove the cell plugs using a suitable tool.
2. Add distilled water up to the upper level.
3. Tighten cell plugs.

https://truckmanualshub.com/

⚠ CAUTION

- **Avoid battery acid contact with eyes, skin, wearing materials or painted surfaces. Immediately and thoroughly flush any contacted area with water. If acid is swallowed or comes into contact with your eyes, secure medical help immediately.**

CAUTION

- **Do not add water above the specified level. If the battery electrolyte spills, it can cause damage to the vehicle equipment and body.**
- **Do not add diluted sulfuric acid to the battery. This increases the specific gravity of the battery electrolyte and shortens the service life of the battery. It also affects specific gravity readings made to determine battery charge.**

Specific gravity of battery electrolyte

The specific gravity of the battery electrolyte determines the battery condition. The specific gravity decreases as the battery discharges and increases as it is charged. The electrolyte temperature also affects the specific gravity. The specific gravity of a fully-charged battery is 1.280 at 68°F (20°C). Check the specific gravity of the battery electrolyte in each cell with a hydrometer. If necessary, have the battery checked and charged by an authorized UD Trucks dealer or other qualified service facility.

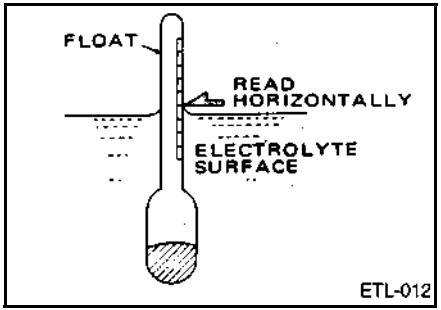

Cleaning battery terminals

Periodically inspect the battery cables and connectors for corrosion and tightness. When inspecting the cables and connections:

1. Stop the engine.
2. Remove the battery cables and clean contaminated or corroded terminals. Badly corroded terminals can be cleaned by disconnecting the cables and rubbing with a wire brush or sandpaper. Flush any white powder from the terminals with lukewarm water and wipe clean.

⚠ WARNING

- **When disconnecting the battery cables, remove the cable from the negative (–) terminal first. When reconnecting the cables, attach the cable to the negative (–) terminal last.**

https://truckmanualshub.com/

3. After tightly connecting the cables, apply a thin coat of grease to the terminals to prevent corrosion.

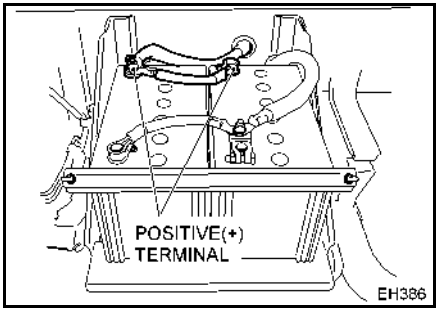

Always dispose of automotive batteries in a responsible manner. Follow your local authorized standard for disposal. Call your local authorized recycling center to find out more about recycling automotive batteries.

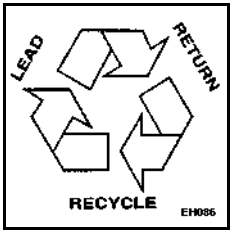

LIGHTS

Occasionally it may become necessary to replace a burned out bulb on your vehicle. When replacing bulbs with a lens, take care not to overtighten lens screws. Overtightening the screws could damage the lens.

NOTE:

- **Use the same number and wattage as originally installed. Refer to "BULBS"on page 13-5.**

Headlights

Your vehicle is equipped with halogen headlights.
To replace a burned out headlight bulb:

1. Turn the ignition key and lighting switch to OFF.
2. Tilt the cab.
3. Turn the bulb cover toward OPEN and remove it.
4. Disconnect the harness connector.
5. While pressing on the set spring, bring it to the center to take it out.
6. Insert a new bulb into the socket. Install it in the reverse order of removal. During this operation, do not touch the bulb with bare hands.

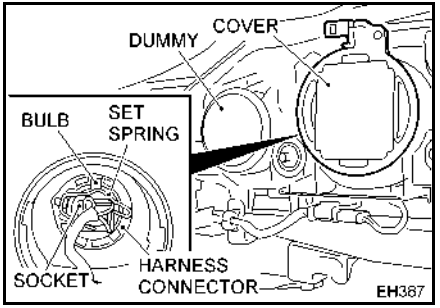

NOTE:

- **When the headlight is changed, the light axis must be adjusted. If you inevitably replaced it, bring the vehicle for inspection immediately at the nearest authorized UD Trucks dealer.**

https://truckmanualshub.com/

Front turn signal light

1. Remove the fixing clips (2 locations) from the rubber and turn over the rubber.

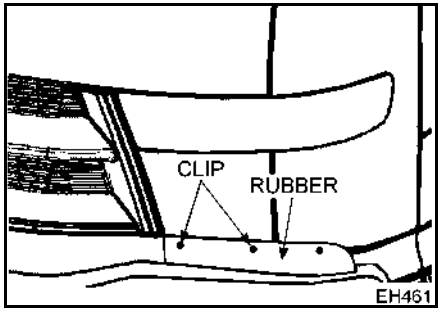

2. Remove the fixing clip from the lower cover, slide the lower cover downward and remove it.

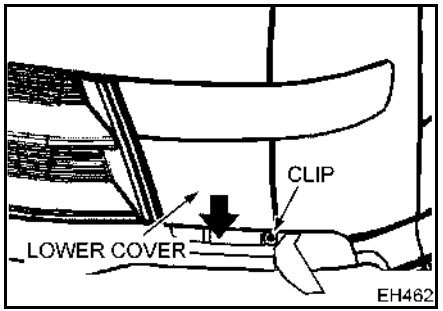

3. Turn the socket counterclockwise to remove it and replace the bulb with new one.

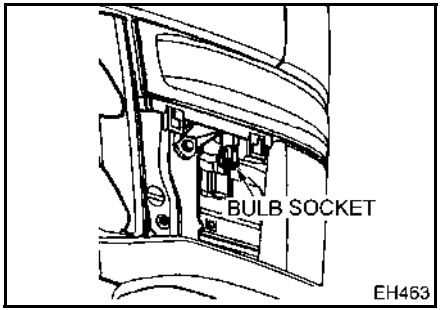

Front side turn signal light

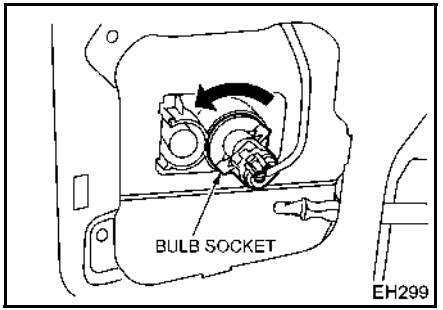

Rear combination light

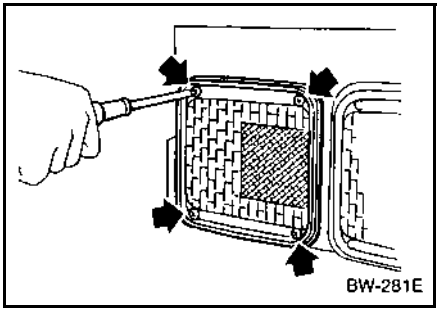

Rear turn signal light

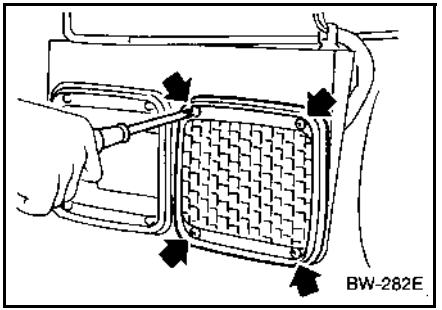

https://truckmanualshub.com/

License plate light

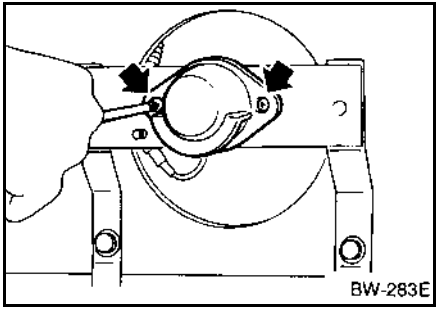

Back-up light

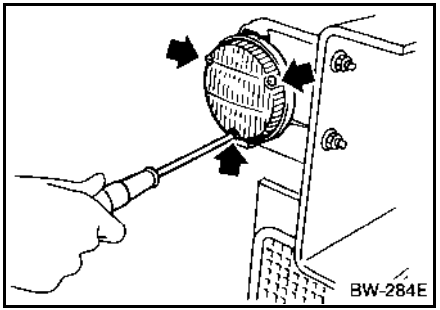

Clearance and identification light

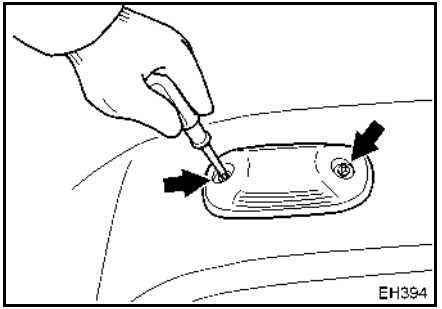

Room light

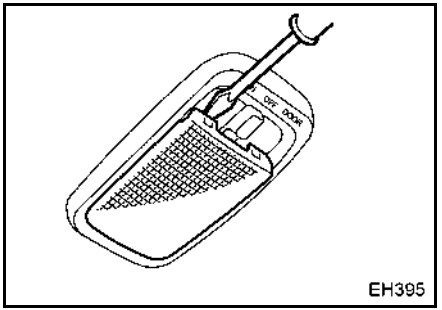

FUSES

The fuse box is located on the lower portion of main dash and consists of mini-type fuses.

Also, they are stored in the fusible link box that is located in front of the DPF with the muffler installed on the right side of the chassis.

Open the lid or cover. Labels above each fuse specify the circuit current capacity of the fuse to be used in the circuit.

The fuses are color coded: 5 amp - tan; 10 amp - red; 15 amp - blue; 20 amp - yellow; 25 amp - natural and 30 amp - Green; for easy identification of current capacity.

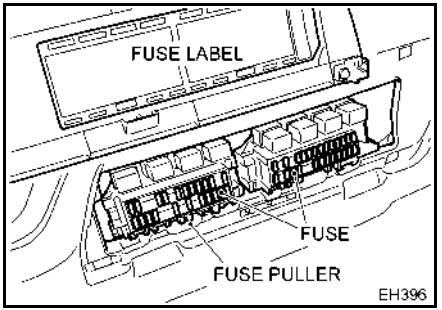

Lower portion of main dash

https://truckmanualshub.com/

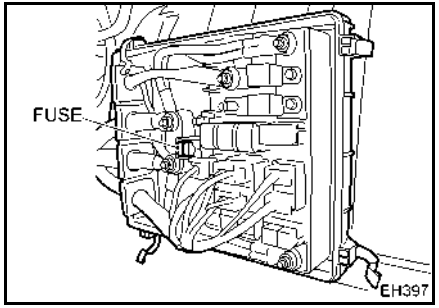

Inside fusible link box

⚠ WARNING

- **When replacing a fuse, never use a fuse with a higher current rating than that specified for the circuit. Heat produced by currents in excess of circuit capacity can cause fire.**

CAUTION

- **Never connect add-on electrical accessories (or electrical circuits) to engine control fuses or circuits. Doing so could cause fuses to burn out, thereby causing a possible loss of engine and ABS function.**

To replace a blown fuse

1. Use the fuse puller to remove the blown fuse.

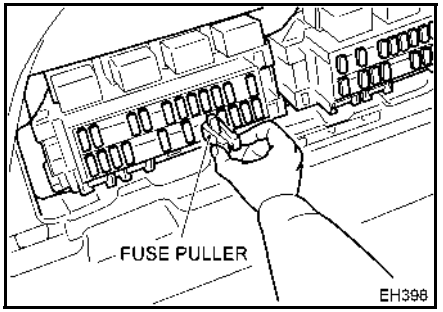

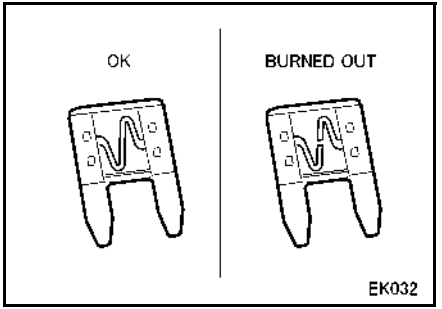

2. Install a new fuse with the same current rating as that specified for the circuit.

A new fuse that burns out immediately could indicate other problems in the electrical system. If this occurs, have the electrical circuits checked by an authorized UD Trucks dealer or other qualified service facility.

https://truckmanualshub.com/

BLOWER MOTOR FILTERS

Air filters for a heater or an air conditioner are installed behind the front lid at the right side of the cab front.

- The air filters for outside air intake and inside air intake may cause clogging due to dirt or dust. Clean them.
- The installation and removal of the air filter is a cartridge type.
- Clean the air filter with water or air.

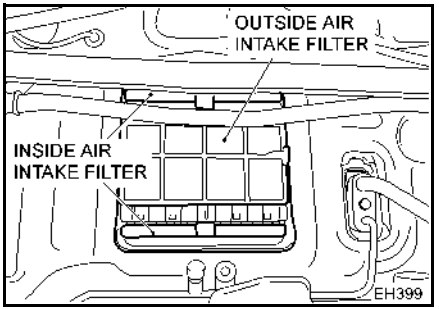

Outside air intake filter

<Method for removal>

1. Hold the upper and lower centers of the filter with left hand and bend the filter toward you.
2. Hold the handle at the right end of the filter with right hand and pull it toward you.

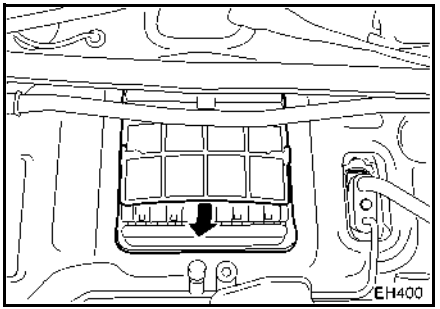

<Installation method>

1. Hold the handle at the left of the filter and insert the tab around the handle into the hole of the case.
2. Hold the upper and lower centers of the filter and bend the filter toward you.
3. Hold the handle at the right end of the filter and insert the tab around the handle into the hole of the case.

Inside air intake filter

1. Pull the upper and lower two filters toward you.
2. After cleaning, insert the filter into the filter slot of the case until it is locked.

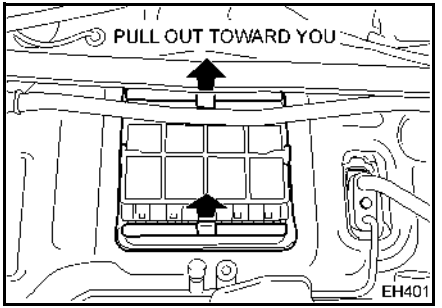

NOTE:

- **Clogging of the air filter lowers air flow, resulting in poor performance of the heater and the air conditioner.**
- **Clean the air filter every 6 months or when performance of the heater or the air conditions is poor.**

https://truckmanualshub.com/

WHEELS AND TIRES

Tires

Note that the size charts on the following pages are examples of typical tire sizes and do not necessarily apply to your vehicle.

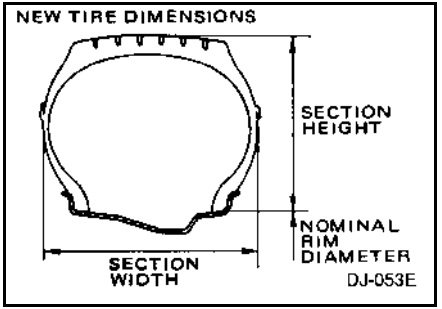

Type of Tire	Tire size designation
TRUCK TYPE RADIAL	245 / 70 R 19.5 G

- G — Load range
- 19.5 — Rim diameter in inches
- R — Indicates radial construction
- 70 — Height to width ratio of tire
- 245 — Nominal section width in millimeters

11 R 22.5 G

- G — Load range
- 22.5 — Rim diameter in inches
- R — Indicates radial construction
- 11 — Nominal section width in inches

https://truckmanualshub.com/

Load specification

Tire size designation			TIRE LOAD LIMITS AT VARIOUS COLD INFLATION PRESSURES (The pressure is minimum for the load.)													
			Current	SI units	Current	SI units	Current	SI units	Current	SI units	Current	SI units	Current	SI units	Current	SI units
		kPa		660		670		690		720		760		790		830
		psi	90	(95)	95	(95)	100	(100)	105	(105)	110	(110)	115	(115)	120	(120)
		kgf/cm^2	(6.30)		(6.65)		(7.00)		(7.35)		(7.70)		(8.05)		(8.40)	
Radial Tires	225/70R 19.5 (F)	Dual	–	1,550 kg (3,415 lb)	–	–	–	–	–	–	–	–	–	–	–	–
		Single	–	1,650 kg (3,640 lb)	–	–	–	–	–	–	–	–	–	–	–	–
	11R 22.5 (G)	Dual	–	–	–	–	–	–	–	2,650 kg (5,840 lb)	–	–	–	–	–	–
		Single	–	–	–	–	–	–	–	2,800 kg (6,175 lb)	–	–	–	–	–	–
	245/70R 19.5 (G)	Dual	–	–	–	–	–	–	–	–	–	1,950 kg (4,300 lb)	–	–	–	–
		Single	–	–	–	–	–	–	–	–	–	2,060 kg (4,540 lb)	–	–	–	–
	9R 22.5 (G)	Dual	–	–	–	–	–	–	–	–	–	–	–	–	–	2,120 kg (4,675 lb)
		Single	–	–	–	–	–	–	–	–	–	–	–	–	–	2,240 kg (4,940 lb)
	255/70R 22.5 (H)	Dual	–	–	–	–	–	–	–	–	–	–	–	–	–	2,300 kg (5,070 lb)
		Single	–	–	–	–	–	–	–	–	–	–	–	–	–	2,500 kg (5,510 lb)

https://truckmanualshub.com/

Checking the tire pressure and tire condition

1. Check the pressure of each tire with a tire gauge daily. For accurate measurement, check the tires when they are cool. Be sure to inflate tires to proper pressure according to the load and inflation pressure table. Check tire valves regularly for air leaks. Replace valves when damaged or leaking. Replace missing valve caps.
2. Check the tire sidewall and tread for cuts, cracks and damage daily. Remove any foreign objects such as metal, glass and stones wedged in the tread grooves and check for tire damage.
   Repair or replace as necessary.
3. Check the tires for uneven or unusual tread wear. Consult the table below to determine the cause of uneven or unusual wear and corrective action to be taken. Correct the cause of the wear and, if necessary, replace the tire.

	Condition	Cause	Cause Correction
Shoulder wear	DJ-036E	● Underinflation ● Sharp turning at high speed ● Excessive loading	● Inflate ● Reduce speed ● Reduce loading
Center wear	DJ-037E	● Overinflation ● Slippage due to abrupt braking	● Inflate ● Apply brakes slowly
Diagonal wear	DJ-038E	● Incorrect toe-in ● Imbalanced braking force	● Adjust toe-in ● Inspect and adjust service brake
Heel/toe wear	DJ-039E	● Incorrect toe-in ● Underinflation	● Adjust toe-in or camber ● Inflate

https://truckmanualshub.com/

Each tire has six wear indicators. Check the tread grooves of each tire daily. Replace a tire when any of the tread indicators become visible.

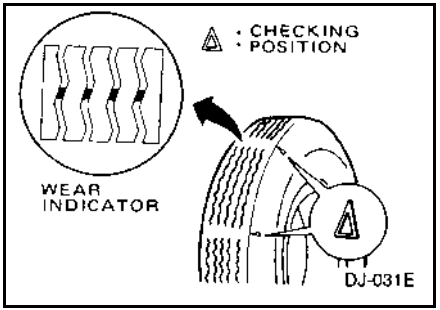

⚠ WARNING

- **Be sure to confirm that the wheel has not been damaged or deformed before putting a new tire on it. Follow industry and government safety regulations when assembling and inflating new tires. Failure to do so could result in serious injury or death.**

⚠ WARNING

Do not operate your vehicle:

- **With tires inflated in excess of the recommendations of the tire or wheel manufacturer.**
- **With cut, cracked or damaged tires.**
- **When any of the tire tread wear indicators are visible.**

Improperly inflated and damaged tires, and tires with uneven or excessive wear may cause blowouts, loss of vehicle control and reduced braking effectiveness. Inspect tires carefully and make any necessary repairs or replacements.

<Front wheel alignment>

If abnormal tire wear or ride and handling characteristics such as vehicle lead or wander are experienced with properly inflated tires, the front wheel alignment should be checked.

Checking and retightening the wheel nuts

Loose wheel stud nuts may cause shimmy and vibration which can cause damage to the wheel bearings. Retorque the wheel stud nuts at the first 1,000 miles (1,600 km) of operation. Thereafter, check the nuts for tightness every 6,000 miles (10,000 km) or two months of operation, whichever occurs first and, if necessary, retorque to specification.

Using a torque wrench, alternately tighten wheel nuts. Do not exceed wheel nut torque specification. Overtightening the wheel nuts will elongate the bolts, deform the wheels and prevent tightening to the specified torque.

Tightening torque:

UD1800 and UD2000
273 - 310 ft·lbf (370 - 420 N·m)
(38 - 43 kgf·m)

UD2300, UD2600 and UD3300
398 - 435 ft·lbf (540 - 590 N·m)
(55 - 60 kgf·m)

https://truckmanualshub.com/

NOTE:

- **The wheel nuts on the right side of the vehicle have right-handed threading; the left side wheel nuts have left-handed threading.**

Re-tightening procedures for rear dual nuts

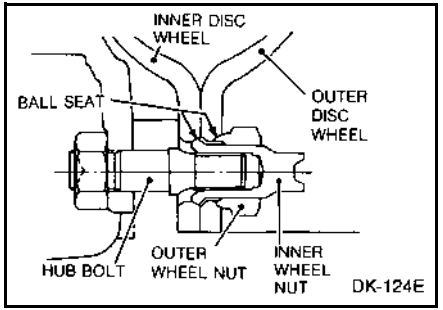

1. Loosen the outer wheel nuts.
2. Tighten the inner wheel nuts.
3. Tighten the outer wheel nuts.

Tire position rotation

NOTE:

- **For removal and mounting of tires, refer to "TIRE CHANGE"on page 12-6.**
- **After rotating the position of the tires, drive the vehicle a distance of 30 to 60 miles (50 to 100 km) to settle the wheel disc with hub, and then retighten the wheel nuts to the specified torque.**
- **The wheel must not be overloaded. Pay attention to the total vehicle load, the weight distribution related to individual axle loading and the matching of tire pressures in the case of dual wheels.**

Tire wear differs depending on where the tire is mounted. Rotate the tire position to allow more even wear and extend tire life.
Tire rotation is recommended every 6,000 miles (10,000 km). Shown are two types of rotation patterns. Use the one best suited to your needs. After rotation, adjust individual tire pressure as specified in the "Load specification"on page 11-84. Tighten wheel stud nuts to the required torque specification and after 1,000 miles (1,600 km), retorque again to specification.

When tire tread pattern is identical all the way around:

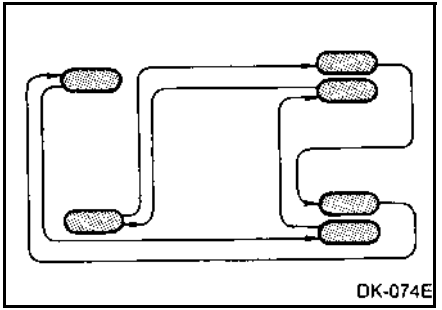

When tire tread pattern differs between front and rear:

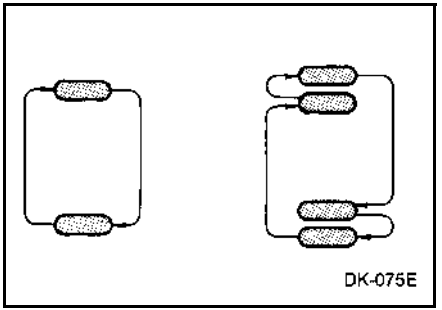

https://truckmanualshub.com/

⚠ WARNING

- **Never mix different tire size, construction or patterns on the same axle.**
- **If tires of different patterns are to be used for the front and rear, the best combination is to use rib type tires for the front wheels and traction type tires for the rear wheels.**
- **Do not use radial and bias tires together.**
- **After mounting dual tires, ensure that tires do not contact each other under a loaded condition.**

NOTE:

- **Mount less worn tires on front wheels, and it is advisable to check the front wheels for the dynamic balance.**
- **New tires should be used in pairs and mounted on the front wheels first.**
- **The inflation pressure of a new tire must be adjusted after break-in operation.**
- **Replace the hub bolts and nuts or wheel disc if the threads are damaged or deformed or the wheel disc is deformed or cracked.**
- **When replacing both dual wheels, make sure that the inner wheel nuts are securely tightened before installing the outside wheel.**
- **When installing the outside wheel, place the air valve 180° apart from the inside wheel.**

Changing wheel types

⚠ WARNING

Use only the same type and style wheels and mounting hardware to replace original parts.
Do not use unauthorized wheel components. Failure to do so may result in an assembly which does not fit together properly resulting in premature wheel or fastener failures. Mismatched or incorrect fasteners can result in the vehicle damage or possible serious injury.

- **Fasteners like bolts and nuts removed from the vehicle should be re-used in the same spot whenever possible.**
  If not possible, new fasteners selected must match those replaced and obtain good metal-to-metal contact. Do not attempt to use the fasteners removed from the vehicle for the vehicle other than UD1800-UD3300.

https://truckmanualshub.com/

It is imperative to identify and use only those fasteners designated for use with the respective vehicle being serviced.

- **Do not attempt to mix ball seat wheels or fasteners with flange nut wheels or fasteners.**
- **The non-domestic wheel components on this vehicle are similar, but not exactly the same as domestic wheels. Do not mix non-domestic and domestic parts.**
- **Do not change from steel wheels to aluminum.**

When replacing wheels, consult your UD Trucks dealer or qualified service facility before attempting any wheel or fastener changes.

APPEARANCE CARE

Neglecting body maintenance can be a major cause of corrosion, which not only makes the vehicle unsightly, but can also bring about weakening of the vehicle's body and considerably shorten the vehicle's life. In order to prevent corrosion from occurring and/or spreading, we would like to suggest the observance of the points listed below.

If you should notice any abnormalities, such as excessive rusting, please contact your nearest authorized UD Trucks dealer or other qualified service facility.

Wash away any accumulated dust, sand, mud, etc., with water, paying special attention to joints in the sheet metal, wheel wells and runners, and edges. After washing, use chamois or soft cloth to wipe away remaining water droplets. Waxing the vehicle surface also promotes corrosion prevention.

We would also like to suggest rinsing the vehicle with water after driving in rainy weather or on bad roads.

NOTE:

- **Use only soft water for cleaning the vehicle as the use of hard water promotes the deterioration of rubber parts and fittings.**
- **Scrubbing with hard brushes and the like can scratch the vehicle's painted surfaces.**
- **Avoid getting electrical equipment wet. Also, close all doors and windows so that water will not find its way into gaps.**
- **Carefully wash the vehicle with water if it has come into contact with brine, been exposed to seawater for extended periods, or after traveling salted winter roads.**
- **Repair (paint) chips and other damage to the vehicle's painted surfaces resulting from flying pebbles and such as early as possible.**
- **Avoid parking the vehicle in direct sunlight, as this can also adversely affect the body finish.**
- **Do not wipe the vehicle's finish with gasoline or alcohol.**

https://truckmanualshub.com/

- **Be cautious with the use of garage heaters as their use can also promote corrosion.**

https://truckmanualshub.com/

https://truckmanualshub.com/

IN CASE OF EMERGENCY/ TROUBLE-SHOOTING

Proper operation of your vehicle, together with regular inspection and maintenance, will provide safe and dependable service for many years.
Occasionally a problem may arise which requires operator action to prevent serious injury, accident and/ or damage to the vehicle. When a problem arises, consult the following pages for information to assist you with the problem.

Hazard Warning Flasher

Use the hazard warning flasher to warn other drivers when your vehicle presents a safety hazard. If needed, use flares, portable reflectors, and other appropriate warnings.
To activate the hazard warning flashers, pull the switch lever located on the right side of the steering column. The flasher will operate with the ignition key in any position. To turn off the hazard warning flashers, pull the switch lever again.

ENGINE OVERHEATING

⚠ CAUTION

- **Do not suddenly stop the engine when it has overheated. Seizure of the engine may occur, so keep the engine idling until the engine coolant temperature drops before turning off the engine.**

Engine coolant temperature gauge

- This gauge indicates the engine coolant temperature.
- When the engine coolant temperature becomes high while another screen is displayed on the multi-display, a beep will sound and the display will automatically change to the engine coolant temperature gauge (except when warning is displayed).

https://truckmanualshub.com/

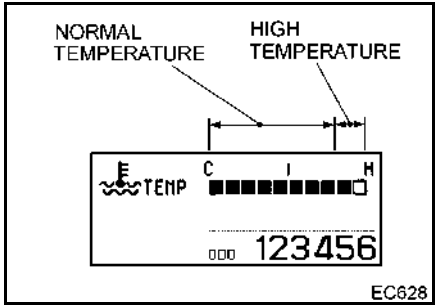

- If the engine coolant temperature (ECT) significantly increases, an overheat warning with a 2-phase indication (amber: moderate, red: severe) will appear.

Warning message or light

If the temperature gauge indicator is in the high temperature zone, keep the engine idling and do not stop the engine until the indicator falls into the suitable range.

- When the engine overheats, an overheat warning with a 2-phase indication (amber: moderate, red: severe) will appear and at the same time, a buzzer sounds.

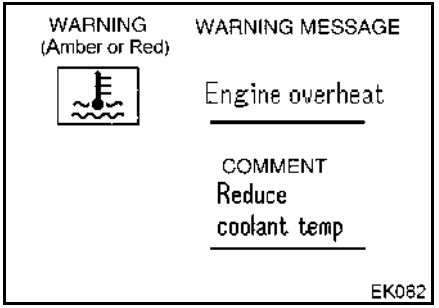

⚠ CAUTION

- **Do not drive while the engine overheat warning is displayed. The engine protection function may provide torque derating to prevent the engine from being damaged, so have it inspected and serviced by the nearest authorized UD Trucks dealer.**

1. Immediately stop the vehicle in a safe place. Apply the parking brake and shift the transmission to the neutral position or P (Park) position.
2. Operate the engine at a fast idle with the engine throttle knob located to the right of the steering column.
3. Following instructions in this manual tilt the cab to provide ventilation.
4. Stop the engine when the engine coolant temperature drops to the normal range on the gauge.
5. After the engine and cooling system have cooled, open the radiator cap.
   If the engine coolant level is below the bottom of the filler neck, add coolant and take necessary cares by following instructions steps 2-4 in the section, "Engine coolant level warning light" on page 7-45.

https://truckmanualshub.com/

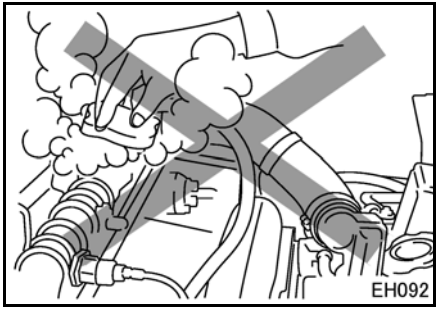

⚠ WARNING

To avoid serious injury from hot coolant or steam release:

- **Do not open the radiator filler cap while the engine cooling system is still hot; wait until it cools.**
  If the radiator cap is removed right after the engine is shut off, scalding fluid and steam may blow out under pressure and cause serious burn injuries.
- **Be extremely careful when opening the radiator filler cap. Place a thick cloth on the cap and slowly loosen it to allow a reduction in pressure in the cooling system.**

JUMP STARTING

Emergency Starting

⚠ DANGER

Batteries produce explosive gases. To minimize risk of serious injury or death:

- **Keep sparks and open flame away from the batteries. Never smoke when working on or around the batteries.**
- **Make sure that adequate ventilation is provided when working on or around the battery in an enclosed area.**
- **Do not permit metal tools to simultaneously contact the positive battery terminal and any other metal on either vehicle at the same time.**
- **Always wear eye protection when working near batteries.**

https://truckmanualshub.com/

⚠ WARNING

- **Do not use ether or other starting aids which are flammable.**
- **The engine should never be started by pushing or towing the vehicle. Since with the engine stopped the effectiveness of the service brake system is seriously reduced and the power steering requires greater effort than in normal conditions.**

CAUTION

- **Do not hold the ignition key at the START position continuously for more than 15 seconds. Extended cranking will shorten the life of the battery and damage the starting system. If the engine cannot be started on the first try, wait 30 seconds and try again.**

Before attempting to jump start a vehicle, check the battery cables and connections for corrosion and tightness. Tighten the connectors and remove corrosion as necessary. Turn off all electrically operated equipment and accessories and attempt to start the engine.
When the engine still cannot be started because of a discharged battery, use the following procedure to jump start the vehicle with the discharged battery.

⚠ WARNING

- **Do not attempt to jump start a vehicle having a frozen battery; the battery may rupture or explode.**
- **Route the jumper cables to avoid parts such as fans and belts which will move when the engines are started.**
- **Your vehicle has a 12-volt negative ground electrical system (two 12 volt batteries connected in parallel). Make sure that the other vehicle also has a 12-volt negative ground electrical system. Do not attempt to jump start either vehicle if you are unsure of the other vehicle's voltage or grounding system.**
- **Do not use jumper cables which have been damaged or are not properly insulated.**

https://truckmanualshub.com/

<To jump start a vehicle>

1. Position the vehicles so that the jumper cables can be attached. Do not allow the vehicles to come into contact with one another.
2. Turn off the ignitions of both vehicles and apply the parking brakes.
3. Connect one end of one jumper cable to the red positive (+) terminal of the discharged battery and the other end to the red positive terminal of the good battery.
4. Connect one end of the second jumper cable to the grounded black negative (–) terminal of the good battery. Connect the other end of the second cable to the frame of the vehicle with the discharged battery at a location as distant from the battery as possible. Confirm that the cables are routed such that they will not come into contact with fans, belts, or other moving parts when the engines are started.
5. Start the engine of the vehicle with the good battery. After increasing to a moderate engine speed, start the vehicle with the discharged battery.
6. After your engine is started, remove the jumper cables in the reverse order of connection.
7. Charge the discharged battery at an authorized UD Trucks dealer or other qualified service facility.

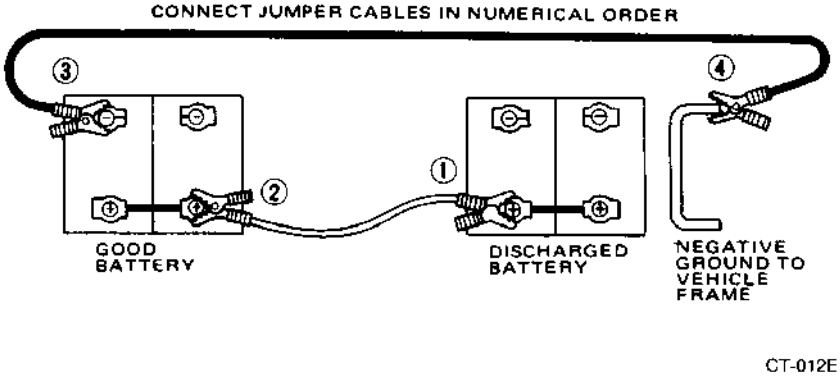

https://truckmanualshub.com/

TIRE CHANGE

Damaged tire

⚠ WARNING

- **Avoid full or panic braking if you have a flat tire while driving since this may cause loss of vehicle control.**
  Cautiously pull your vehicle off the road while paying attention to other traffic. Hold the steering wheel firmly and park the vehicle in a level and safe place. Apply the parking brake firmly, turn on the hazard warning flasher switch and stop the engine.
- **If the vehicle is operated continuously with a flat tire, it may become hot, causing the tire to ignite or burst. This is very dangerous.**
- **An inflated tire contains air under high pressure. An inflated tire and wheel can be dangerous if misused, and can result in serious injury and/or property damage.**
  The maintenance of a damaged tire and wheel requires the use of proper tools, safe equipment, and tire service expertise.

To replace a tire, refer to the following instructions.

Jack operating instructions

Follow the jacking instructions in this manual as well as the instructions of the jack manufacturer.

⚠ WARNING

To avoid serious injury when jacking up your vehicle:

- **Never start the engine or get under your vehicle while it is supported by a jack.**
- **Select a flat, hard surface when using a jack.**
- **Place chocks at both the front and back of the tire diagonally opposite the tire being replaced.**
- **While jacking up the vehicle, do not load or unload cargo. The jack might come off by vibration and shifting of the center of gravity.**
- **When lowering the vehicle, do not open the release valve fully at one time. The vehicle might drop rapidly, causing the jack to come off.**

https://truckmanualshub.com/

⚠ CAUTION

- **Do not allow any person to stay in the vehicle while it is on the jack.**
- **Remove oil and grease, if any, before using the jack.**
- **Place the jack directly under the jack-up point.**
- **If leaving the vehicle jacked up for a considerable time, support the vehicle with wooden blocks or stands for safety.**

Jacking up the vehicle with air suspension

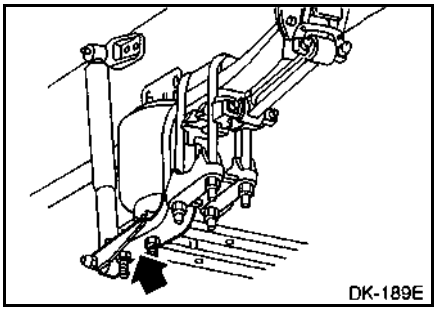

<Before jacking up>

While the engine stops, operate the air suspension dump switch repeatedly to discharge air from the tank and air spring till the vehicle height cannot be returned to the normal position.

After that, turn the ignition key to the OFF position and start the jack-up operation.

⚠ CAUTION

- **If the jack-up operation is conducted without discharging air, the vehicle height may change during the operation. It is dangerous.**

Changing tires

<Removing a tire>

1. Park on a level ground. Stop the engine and set the parking brake. Turn on the hazard warning flasher.
2. Place chocks at both the front and back of the tire diagonally opposite the tire to be replaced.
3. Place the jack(s) directly beneath the axle or other main structured members. Do not attempt to raise the vehicle by the bumper.
4. Using the wheel nut wrench, loosen but do not remove the wheel nuts (or the outer wheel nuts if working on a dual wheel) of the wheel to be removed.

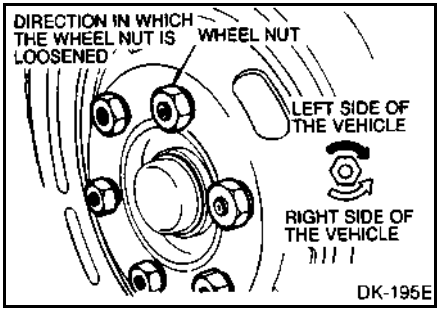

https://truckmanualshub.com/

NOTE:

- **The wheel nuts on the right side of the vehicle have right-handed threading; the left side wheel nuts have left-handed threading.**

5. Raise the vehicle to the height where an inflated tire will just clear the surface.
6. Remove the wheel nuts (or the outer wheel nuts) and wheel. If replacing an inside dual wheel:
   a) Lower the axle and loosen the inner wheel nuts.
   b) Raise the vehicle again to the height where an inflated tire will clear the surface.
   c) Remove the inner wheel nuts and inner wheel.

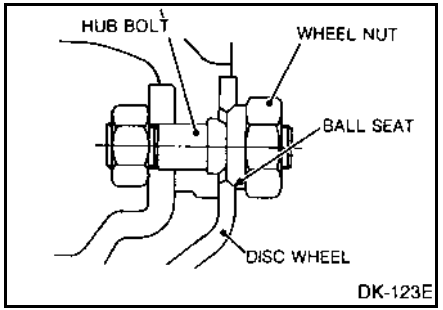

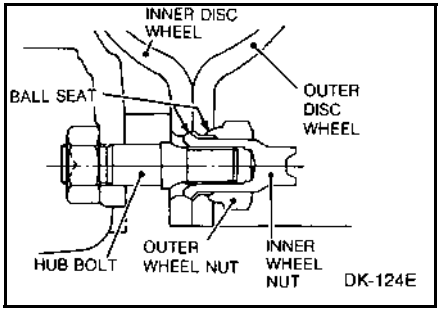

<Installing a tire>

NOTE:

- **Replace the hub bolts and nuts or wheel disc if the threads are damaged or deformed or the wheel disc is deformed or cracked.**
- **Clean the wheel mounting surfaces with a wire brush and clean waste cloth. Dirty mounting surfaces may cause the wheel nut to loosen.**
- **Before reinstalling the wheel, apply a small amount of engine oil or grease to the threaded portions of the hub bolts and wheel nuts and the spherical surfaces of the ball seats. Do not use molybdenum grease for this purpose.**
- **Make sure that the nut spherical surface faces the wheel disc.**

1. Using a lever, raise and fit the wheel to the hub by aligning the wheel disc bolt holes to the hub bolts.
2. Position the wheel so that the hub bolts are in the middle of the bolt holes, and then tighten the wheel nuts temporarily.
3. Loosen the jack and lower the wheels slowly.
4. Tighten the wheel nuts a little at a time in the numerical sequence shown below to the specified torque.
   UD1800 and UD2000
   273 to 310 ft·lb (370 to 420 N·m) (38 to 43 kgf·m)
   UD2300, UD2600 and UD3300
   398 to 435 ft·lb (540 to 590 N·m) (55 to 60 kgf·m)

https://truckmanualshub.com/

(UD1800 and UD2000)

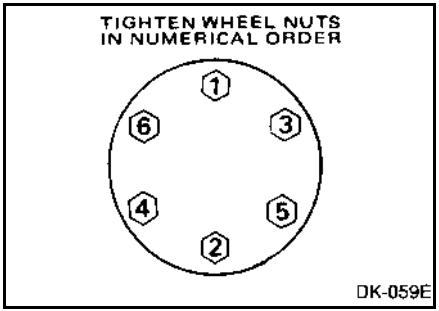

(UD2300)

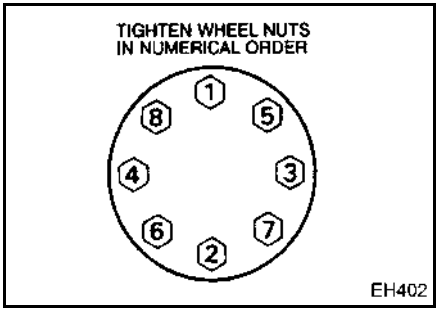

(UD2600 and UD3300)

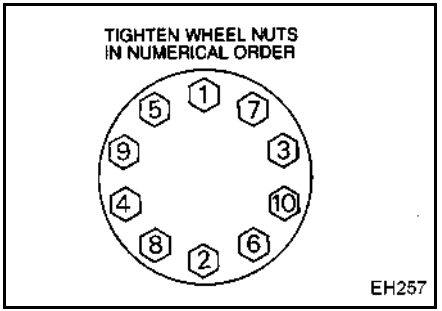

NOTE:

- **When replacing both dual wheels, make sure that the inner wheel nuts are securely tightened before installing the outside wheel.**
- **When installing the outside wheel, place its air valve 180° apart from the inside wheel.**
- **After changing the wheels, drive the vehicle a distance of 30 to 60 miles (50 to 100 km) to settle the wheel disc with hub, and then retighten the wheel nuts to the specified torque.**

TOWING

⚠ WARNING

- **When towing your vehicle, observe all state and local laws and regulations.**

NOTE:

- **Turn signals do not work when the hazard warning flasher switch is operating.**

Towing the vehicle

If there is a need to tow your vehicle:

1. Unload your vehicle.
2. Turn the ignition key to the OFF position.
3. Release the parking brake.
4. Shift the transmission to the NEUTRAL position.
5. Use a qualified towing service with a suitable lift and towing equipment.
6. When possible, tow the vehicle from the front.

https://truckmanualshub.com/

⚠ CAUTION

- **Do not raise the vehicle by its bumpers. Always use towing chains or jacks. When using towing chains, attach the chains to a main structural member. When using a jack or jacks, place directly under a main structural member.**
- **When towing the automatic transmission model, raise the rear wheels or remove the drive shaft.**

Towing with front axle off ground or with all wheels on ground.

To tow the vehicle from the front, remove either the propeller shaft or the rear axle shafts. If the rear axle shafts are removed, drain lubricant to prevent it from leaking from the rear axle housing. Cover both ends of the rear axle housing to keep out dirt. Attach the chains to or place a jack or jacks directly under the main structural members of the vehicle.

⚠ CAUTION

- **Do not attempt to secure the tow chains to the bumper. Lifting or towing by the bumper could result in the vehicle breaking loose and vehicle runaway. Attach the chains to the main structural members of the vehicle and use a bumper protector bar.**

Towing with rear axle off ground

To tow the vehicle from the rear, secure the steering wheel so that the front wheels are straight. If this cannot be done, do not tow the vehicle from the rear. If the vehicle is equipped with the manual transmission, drain about 1.1 US pt (0.5 liter) of oil from the transmission so that it does not enter the clutch housing. Attach the chains to or place a jack or jacks directly under the main structural member of the vehicle.

To tow a vehicle with an inoperative rear axle, it is necessary to raise the rear wheels. If the transmission is inoperative, the propeller shaft must be removed or the rear wheels must be raised.

Releasing parking brake

(With spring-activated rear wheel parking brake vehicles)

In case of an emergency when the air pressure cannot be restored and the vehicle must be towed the parking brakes must be released manually as follows:

⚠ WARNING

- **To avoid serious injury or property damage, be sure to block the wheels so that the vehicle cannot move when the brakes are manually released.**
  For towing, make sure the vehicle is securely connected to the tow vehicle before releasing the parking brakes.
- **Do not operate the vehicle when the parking brake activates automatically.**
  Have the brake system checked and repaired by an authorized UD Trucks dealer or a qualified brake repair facility.

https://truckmanualshub.com/

NOTE:

- **If the air pressure drops to approximately 40 psi (275 kPa) (2.8 kgf/cm^2) in both front and rear brake system, the parking brake will automatically be applied.**

[UD1800 and UD2000]

Manual Release Procedure

1. Block the wheels to prevent the vehicle from moving.
2. Loosen the lock nuts. (See figure below.)
3. Turn the turnbuckle to extend the push rod until the brake shoes are released from the drum.

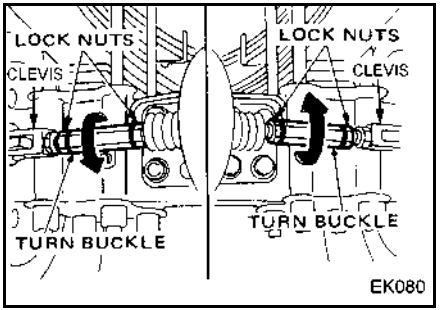

CAUTION

- **Do not apply excessive force to the clevis. Doing so may damage the wheel cylinder.**

[UD2300 and UD2600]

Manual Release Procedure

1. Block the wheels to prevent the vehicle from moving.
2. Loosen the lock nut. (See figure below.)
3. Turn the release nut to extend the push rod until the brake shoes are released from the drum.

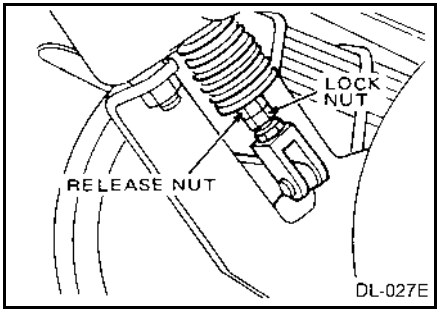

UD2300

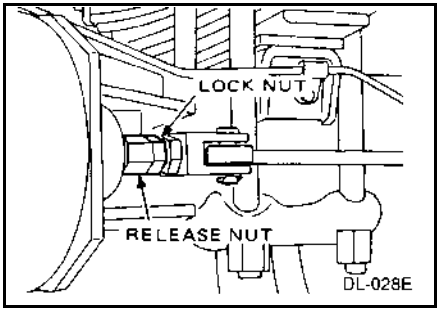

UD2600

[UD3300]

Manual Release Procedure

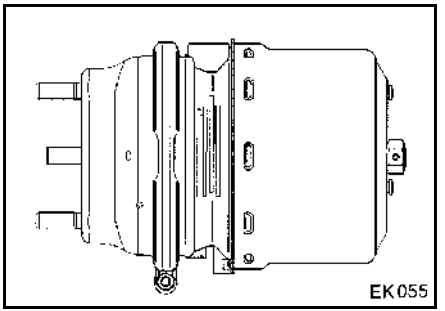

1. Block the wheels to prevent the vehicle from moving.

https://truckmanualshub.com/

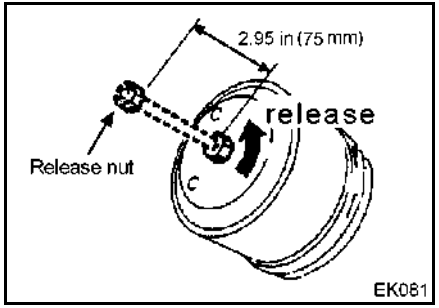

2. Release the release nut by turning it counterclockwise by the specified release amount (Do not use impact wrench).
3. To ensure the compression spring is fully caged, the stud length should be approximately 2.95 in (75 mm).

CAUTION

- **The release nut is secured on the release bolt with the knock pin. Do not remove the knock pin for securing. If it is removed, the spring brake cannot be released.**

https://truckmanualshub.com/

TROUBLESHOOTING

The information in the following charts may be helpful in identifying the cause and corrective action to be taken when a problem arises.

Engine starting problems

Problem		Possible Cause	Cause Correction
Engine does not turn	Starter does not turn, or turns at low speed	Battery discharged	Charge or replace
		Battery terminals disconnected, loose, or corroded	Connect securely and remove corrosion
		Ground is disconnected	Secure ground connection
		Improper viscosity engine oil used	Replace with proper engine oil
	Starter turns, but engine does not start	No fuel	Add fuel
		Insufficient preheating time	Operate intake air heater until light goes out
		Fuel filter is clogged	Replace fuel filter element
		Fuel is frozen	Warm fuel line with hot water
		Air in fuel system	Bleed air from fuel system
		Air cleaner is clogged	Replace air cleaner element

Warm-up

Problem	Possible Cause	Cause Correction
Engine stops immediately after starting	Low idling speed	Adjust with throttle control knob
	No fuel	Add fuel
	Fuel filter clogged	Replace fuel filter element
	Air cleaner clogged	Replace air cleaner element

https://truckmanualshub.com/

Operation

Problem	Possible Cause	Cause Correction
Engine lacks power	Parking brake is not completely released	Release parking brake completely if problem persists, consult an authorized UD Trucks dealer or other qualified service facility
	Fuel filter clogged	Replace fuel filter element
	Air cleaner clogged	Replace air cleaner element
	Brakes are dragging	Have brakes checked and adjusted by an authorized UD Trucks dealer or other qualified service facility
	Clutch slipping	Have clutch checked and adjusted by an authorized UD Trucks dealer or other qualified service facility
Engine overheats	Fan clutch malfunctioning	Replace at an authorized UD Trucks dealer or other qualified service facility
	Radiator front is clogged with insects and debris	Clean
	Radiator is clogged with scale	Clean
	Insufficient coolant solution	Add coolant solution
	Drive belt loose	Adjust belt tension or replace belts
	Defective thermostat	Check at an authorized UD Trucks dealer or other qualified service facility

https://truckmanualshub.com/

Operation (Cont'd)

Problem	Possible Cause	Cause Correction
Excessive fuel consumption	Fuel leaks	Check fuel system and tighten connections if loose
	Air cleaner clogged	Replace air cleaner element
	Tire air pressure low	Adjust to proper pressure
	Brakes are dragging	Have brakes checked and adjusted by an authorized UD Trucks dealer or other qualified service facility
	Clutch slipping	Have clutch checked and adjusted by an authorized UD Trucks dealer or other qualified service facility
Excessive engine oil consumption	Improper grade or viscosity engine oil used	Replace with proper engine oil
	Too much engine oil	Adjust engine oil level properly
	Oil leaks	Check lubrication system and tighten connections as necessary
Steering wheel does not return smoothly	Insufficient lubrication of steering system	Lubricate steering system
Steering wheel is heavy	Tire air pressure low	Adjust the air pressure
	Lack of power steering fluid	Add fluid up to normal level
Excessive steering wheel vibration	Wheel nuts loose	Tighten to specified torque
	Tire air pressure low or uneven	Adjust to normal air pressure
	Tires partially worn	Replace tires
	Improperly adjusted wheel balance	Check and adjust at an authorized UD Trucks dealer or other qualified service facility
	Excessive steering wheel play	Check and adjust at an authorized UD Trucks dealer or other qualified service facility

https://truckmanualshub.com/

Operation (Cont'd)

Problem	Possible Cause	Cause Correction
Vehicle vibrates excessively	Bolts and nuts connecting propeller shafts loose	Tighten
	Excessive propeller shaft deflection	Check at an authorized UD Trucks dealer or other qualified service facility
	Wheel balance out of adjustment	Check and adjust at an authorized UD Trucks dealer or other qualified service facility
	Loose propeller shaft universal joints	Replace at an authorized UD Trucks dealer or other qualified service facility
Poor braking action	Air in brake system	Bleed air from brake system at an authorized UD Trucks dealer or other qualified brake service facility
	Worn linings Incorrect shoe clearance	Adjust or replace at an authorized UD Trucks dealer or other qualified brake service facility
	Brake system leaks air or fluid	Tighten loose connections. If still leaking, check and repair at an authorized UD Trucks dealer or other qualified brake service facility
Brakes on one side operate more than on other	Uneven tire pressure	Adjust air pressure
	Tires partially worn	Replace tires
	Incorrect shoe clearance	Adjust at an authorized UD Trucks dealer or other qualified brake service facility
Brakes drag	Incorrect shoe clearance	Adjust at an authorized UD Trucks dealer or other qualified brake service facility
	Wheel cylinder returns improperly. Broken return spring	Check at an authorized UD Trucks dealer or other qualified brake service facility

https://truckmanualshub.com/

Operation (Cont'd)

Problem	Possible Cause	Cause Correction
Loss of brake fluid	Brake system leaks fluid	Tighten loose connections. If still leaking, check and adjust at an authorized UD Trucks dealer or other qualified brake service facility
Battery runs down	Battery terminals disconnected, loose, or corroded	Connect securely and remove corrosion
	Insufficient battery fluid	Add fluid
	Battery life has expired	Replace battery
	Loose or slipping drive belt	Adjust belt tension or replace belts
	Light or electrical device left on	Turn off switch

Other

Problem	Possible Cause	Cause Correction
Lights do not come on	Bulb burned out	Replace bulb
	Fuse blown	Replace fuse
	Loose connection at system ground	Clean and tighten ground terminal

https://truckmanualshub.com/

SERVICE DATA

MAINTENANCE STANDARD

Items			Maintenance Standard	Remarks
Engine	Valve clearance	Intake	0.012 - 0.016 in (0.30 - 0.40 mm)	While cold
		Exhaust	0.018 - 0.020in (0.45 - 0.50 mm)	
	Drive belt tension		Auto adjusting	Fan belt deflection
			See page 11-47.	Air conditioner belt tension
	Engine low idling speed		550 rpm	
	Engine high idling speed		2,750 rpm	
Chassis	Steering wheel free play		0.39 - 1.57 in (10 - 40 mm)	UD1800, UD2000 and UD2300
			1.18 - 1.97 in (30 - 50 mm)	UD2600 and UD3300
	Wheel alignment	Toe-in	0 - 0.08 in (0 - 2 mm)	UD1800, UD2000 and UD2300
			0 in (0 mm)	UD2600 and UD3300
		Camber	1.5°	UD1800, UD2000 and UD2300
			1°	UD2600 and UD3300
		Caster	3°20′	
	Brake pedal play		0.12 - 0.28 in (3 - 7 mm)	
	Clearance between service brake drum and lining		Auto adjusting	

https://truckmanualshub.com/

⚠ WARNING

- **Automatic brake slack adjusters should not be manually adjusted in an effort to correct excessive push-rod chamber stroke.**
  This condition indicates that a problem exists with the automatic brake slack adjuster, the installation of the adjuster, or with the related foundation brake components, which manual adjustment will not correct. The manual adjustment of automatic brake slack adjusters is a dangerous practice that could have serious consequences, because it gives the vehicle operator a false sense of security about the brake effectiveness, which may likely go out of adjustment again.

MAINTENANCE STANDARD (CONT'D)

Items		Maintenance Standard	Remarks
Chassis	Tire tread groove depth	More than 0.063 in (1.6 mm)	
	Clutch pedal free play	1.18 - 1.97 in (30 - 50 mm)	
	Clutch outer lever free play	0.177 - 0.217 in (4.5 - 5.5 mm)	

https://truckmanualshub.com/

TIGHTENING TORQUE

Items			Maintenance Standard ft·lbf (N·m) (kgf·m)	Remarks
Engine	Oil pan drain plug		40 - 44 (54 - 59) (5.5 - 6.0)	
	Oil filter drain plug		9.4 - 16.7 (12.8 - 22.6) (1.3 - 2.3)	
	Valve clearance adjust screw nut	Rocker arm	18 (25) (2.5)	
		Cross-head	18 (25) (2.5)	
	Valve cover mounting bolt		8.6 - 10.1 (11.7 - 13.7) (1.2 - 1.4)	
	Fuel filter case		26 - 29 (35 - 40) (3.6 - 4.1)	
	Primary fuel filter case		26 - 29 (35 - 40) (3.6 - 4.1)	
	Primary fuel filter fuel inlet plug		1.7 - 2.5 (2.3 - 3.4) (0.2 - 0.3)	
	Air conditioner compressor tension pulley lock nut		22.4 - 28.9 (30.4 - 39.2) (3.1 - 4.0)	
	DEF filter cover		15 - 18 (20 - 25) (2.0 - 2.5)	
	Crankcase ventilation pipe mounting bolt		8.6 - 10.1 (11.7 - 13.7) (1.2 - 1.4)	

Items		Maintenance Standard ft·lbf (N·m) (kgf·m)	Remarks
Engine	Air compressor inlet pipe mounting bolt	8.6 - 10.1 (11.7 - 13.7) (1.2 - 1.4)	
Chassis	Steering gear body mounting bolt	155 - 170 (210 - 230) (21 - 24)	UD1800, UD2000 and UD2300
		251 - 288 (340 - 390) (35 - 40)	UD2600 and UD3300
	Differential drain and filler plug	95 - 108 (128 - 147) (13 - 15)	
	Axle shaft mounting bolt	103 - 111 (140 - 150) (14 - 15)	UD1800, UD2000 and UD2300
		111 - 118 (150 - 160) (15 - 16)	UD2600 and UD3300
	Wheel nut	273 - 310 (370 - 420) (38 - 43)	UD1800 and UD2000
		398 - 435 (540 - 590) (55 - 60)	UD2300, UD2600 and UD3300

https://truckmanualshub.com/

TIGHTENING TORQUE (Cont'd)

Items			Maintenance Standard ft·lbf (N·m) (kgf·m)	Remarks
Chassis	Chassis spring U-bolt nut	Front	174 - 203 (235 - 275) (24 - 28)	UD1800, UD2000 and UD2300
			362 - 398 (490 - 539) (50 - 55)	UD2600 and UD3300
		Rear	195 - 239 (265 - 324) (27 - 33)	UD1800, UD2000 and UD2300
			362 - 398 (490 - 539) (50 - 55)	UD2600 and UD3300
			406 - 455 (550 - 617) (56 - 63)	UD2600 and UD3300 with air suspension
	Front spring center bolt		35 - 53 (47 - 72) (4.8 - 7.3)	UD1800, UD2000 and UD2300
			80 - 94 (108 - 127) (11 - 13)	UD2600 and UD3300
	Rear spring center bolt		80 - 94 (108 - 127) (11 - 13)	
	Manual transmission drain and filler plug		72 - 89 (98 - 120) (10 - 12)	MLS63 UD1800 thru UD3300
			87 - 101 (118 - 137) (12- 14)	MPS63 UD2600 and UD3300

Items		Maintenance Standard ft·lbf (N·m) (kgf·m)	Remarks
Chassis	Automatic transmission drain plug	22 - 30 (30 - 40) (3.1 - 4.1)	Allison 1000, 2200 and 2500 series UD1800 thru UD3300
		18.5 - 23.6 (25 - 32) (2.5 - 3.3)	Allison 3000 series UD2600 and UD3300
	Automatic transmission filter cover mounting bolt	37.6 - 45.0 (51 - 61) (5.2 - 6.2)	Allison 3000 series UD2600 and UD3300
	Propeller shaft mounting bolt	65 - 80 (88 - 108) (9 - 11)	UD1800 UD2000 and UD2300
		156 - 177 (211 - 240) (21.5 - 24.5)	UD2600 and UD3300
	Fuel tank drain plug	36 - 51 (49 - 69) (5 - 7)	
	Actuator lock nut	25 - 33 (34 - 45) (3.5 - 4.6)	UD1800 and UD2000
		90 - 105 (122 - 142) (12.4 - 14.5)	UD2300 and UD2600

https://truckmanualshub.com/

BULBS

Items		Wattage (W)	Trade No.
Headlight (Halogen)		60/55	HB2
Front turn signal light		21	-
Front side turn signal light		21	-
Front clearance light		5	168
Front identification light		5	168
Rear combination light	Tail & stop light	8/27	1157
Rear turn signal light		27	1156
License plate light		8	67
Back-up light		27	1156
Room light		10	-

RECOMMENDED LUBRICANTS

Lubricant/Fluid		Specifications		Remarks
Engine oil		VDS-4		See page 11-31
Gear oil	Manual transmission	API :GL-4 #80W/90		Refer to "RECOMMENDED SAE VISCOSITY CHART" on page 13-6.
	Differential	API GL-5	MIL-L2105B	
Automatic transmission fluid		See the Allison automatic transmission fluid recommendations next page.		UD1800 thru UD3300
Power steering fluid		DEXRON® II or higher grade		GM ATF type
Grease	Apply grease	NLGI No. 1		Lithium soap base
	Lubricate with a grease gun	NLGI No. 2 or NLGI No. 3		
Brake and clutch fluid		DOT 3		US FMVSS No. 116
Antifreeze		-		(1)

Remarks:

(1) UDXtra Long Life Diesel Engine Antifreeze/Coolant

https://truckmanualshub.com/

Allison automatic transmission fluid recommendations

Hydraulic fluids used in the transmission are important influences on transmission reliability and durability.
Allison TranSynd fluids or TES-295 approved fluids are recommended.
This vehicle is factory filled with TranSynd fluid.

Synthetic Lubrication

Synthetic oils are offered by some oil suppliers as an alternative to the traditional, petroleum based oils for engines. These oils may be used in UD TRUCKS engines, provided UDXtra and VDS-4 they meet the quality levels specified in “Oil Quality”.
The use of synthetic oils does not permit the extension of the recommended oil change intervals. It is the contamination rate, i.e., soot, and the depletion of additives, rather than base oil quality that determines the useful engine oil life and therefore the oil change intervals.

RECOMMENDED SAE VISCOSITY CHART

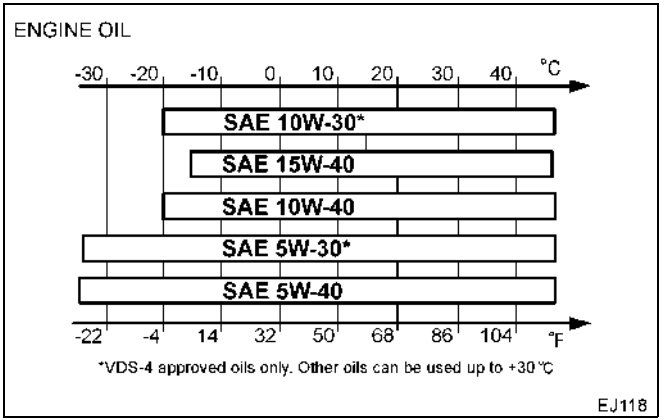

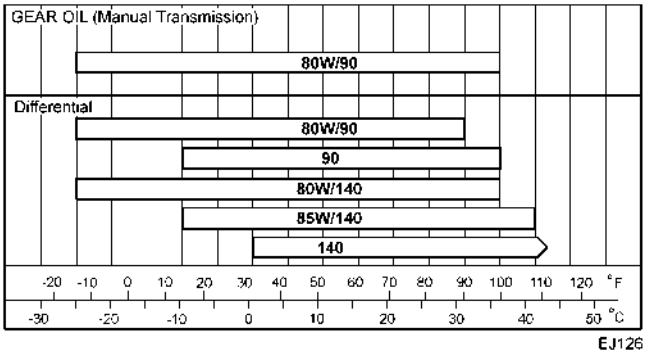

https://truckmanualshub.com/

REFILL CAPACITIES

Item			US measure	Liter	Remarks
Engine oil		With oil filter	18.4 qt	17.4	
		Without oil filter	18.0 qt	17.0	
Power steering fluid			5.9 qt	5.5	
Manual transmis-sion gear oil	UD1800 thru UD3300	Without PTO	7.2 qt	6.8	MLS63
		With PTO	7.8 qt	7.3	
	UD2600 and UD3300	Without PTO	8.3 qt	7.8	MPS63
		With PTO	8.8 qt	8.3	
Automatic transmis-sion fluid (system total)		UD1800 thru UD3300	16.3 qt	15.4	Allison 1000, 2200 and 2500 series
		UD2600 and UD3300	31.6 qt	29.9	Allison 3000 series

(Cont'd)

Item	US measure	Liter	Remarks
Differential gear oil	6.9 qt	6.5	UD1800, UD2000 and UD2300LP
	9.5 qt	9	UD2300DH
	13.8 qt	13	UD2600 and UD3300
Fuel tank	32.8 gal	124	UD1800 and UD2000
	32.8 gal	124	UD2300
	48.9 gal	185	Optional for UD2300DH only
	48.9 gal	185	UD2600 and UD3300
Windshield washer fluid	4.3 qt	4	
Cooling system solution	6.9 gal	26	With manual transmission
	6.6 gal	25	With Allison 1000, 2200 and 2500 series
	7.9 gal	30	With Allison 3000 series

NOTE:

- **Quantities listed are approximate. When filling, observe the specified level.**

https://truckmanualshub.com/

CONVERSION FACTORS

Length
- 1 inch (in) = 25.40 millimeters (mm)

Pressure
- 1 kilopascal (kPa)
- = 0.1450 pound/square-inch (psi)
- = 0.01020 kilogram/square-centimeter (kgf/cm^2)

Torque
- 1 newton-meter (N·m)
- = 0.7375 feet-pound (ft·lbf)
- = 0.1020 kilogram-meter (kgf·m)

Weight
- 1 pound (lb) = 0.4536 kilogram (kg)

Volume
- 1 US pint (US pt) = 0.4732 liter
- 1 US quart (US qt) = 0.9463 liter
- 1 US gallon (US gal) = 3.785 liter

Temperature
- degrees Fahrenheit (°F)
- = 1.8 x degrees Celsius (°C) + 32

https://truckmanualshub.com/

REPORTING SAFETY DEFECTS

If you believe that your vehicle has a defect which could cause a crash or could cause injury or death, you should immediately inform the National Highway Traffic Safety Administration (NHTSA) in addition to notifying UD Trucks North America, Inc. If NHTSA receives similar complaints, it may open an investigation, and if it finds that a safety defect exists in a group of vehicles, it may order a recall and remedy campaign. However, NHTSA cannot become involved in individual problems between you, your dealer, or UD Trucks North America, Inc.

To contact NHTSA, you may either call the Auto Safety Hotline toll-free at 1-800-424-9393 (or 366-0123 in Washington, D.C. area) or write to: NHTSA, U.S. Department of Transportation, Washington, D.C. 20590. You can also obtain other information about motor vehicle safety from the Hotline.

https://truckmanualshub.com/

INDEX

A

Abbreviation 1-4
ABS 10-34
ABS warning light.....7-44
Accelerate and Resume switch 7-61
Accessories.....8-1
Air cleaner element 11-44
Air conditioner 9-1
  Air vent 9-1
  Heating.....9-5
  Operation panel.....9-2
Air dryer..... 11-64
Air pressure gauge.....7-8
Air pressure warning light.....7-43
Air spring 11-68
Air suspension dump switch.....7-66
Allison ATM fluid.....13-6
Antifreeze 10-37, 11-24, 13-5
Appearance care..... 11-89
Ashtray 8-2
Automatic transmission
  Fluid change..... 11-57
  Fluid filter..... 11-57, 58
  Fluid refill capacity.....13-7
  Fluid temperature warning... 7-41
  Maintenance 11-12
  Maintenance information light 7-50
  Operation..... 10-14
  Power mode indicator light .. 7-52
  Selector lever..... 7-76
  Selector switch 7-76
  Shift limit warning light 7-49, 10-30
  System warning 7-42

B

Battery
  Electrolyte level 11-76
  Gravity 11-77
  Jump start..... 12-3
  Specifications.....11-75
Block immersion heater 10-38
Blower motor filter.....11-82
Brake
  Air dryer 11-64
  Air reservoir 11-63
  Drum and lining clearance... 13-1
  Fluid..... 13-5
  Fluid level 11-62
  Maintenance 11-9
  Operation..... 10-33
  Pedal play 13-1
Break-in..... 1-2, 10-2
Bulbs 11-78, 13-5
Buzzers 7-30

C

Cab
  Accessories.....8-1
  Air conditioner 9-1
  Doors & windows 5-1
  Driving position 6-1
  Entering & leaving cab 4-1
  Front lid 11-20
  Instruments & controls 7-1
  Lower the cab 11-23
  Tilting the cab..... 11-21
Calendar.....7-18, 24
Camber 13-1
Card holder 8-4
Caster.....13-1
CCV filter..... 11-50
Chassis grease 11-16, 13-5
Child restraint.....6-6
Cigarette lighter.....8-1
Circuit breaker.....7-56
Clean air act 11-1
Clock 7-18, 24
Clutch
  Fluid 11-66

https://truckmanualshub.com/

Free play 11-65
Clutch fluid 13-5
Clutch pedal free play 13-2
Cold weather 10-36
Console box 8-5
Controls 7-1
Conversion factors 13-8
Coolant
Antifreeze 11-24, 13-5
Level warning light 7-45
Reservoir tank 11-25
Temperature gauge 7-9
Coolant heater 10-38
Cooling system
Drive belts 11-46
Fan and fan shroud 11-27
Radiator 11-26
Cruise Control
Accelerate and Resume switch 7-61
Indicator light 7-60
Main switch 7-60
Operation 7-60
Set and Coast button 7-60
Cup holder 8-3

D

Daily maintenance 3-6
DEF filter 11-48
DEF gauge 7-10
DEF tank 3-17, 7-10
Defrost 9-8
Differential gear oil 11-59, 13-5
Dilution water 11-26
Dimmer switch 7-57
Door pocket 8-5
Doors 5-1
Double-clutch 10-13
DPF ash level gauge 7-14
DPF regeneration system 3-20
DPF soot level gauge 7-14, 7-70
DPF system 7-69
Drive belt tension 11-47, 13-1
Drive belts 11-46
Driver seat 6-1
Driving in difficult conditions 10-11
Driving on grades 10-10
Driving position 6-1

E

EGR 3-11
ELR 6-5
Emergency starting 12-3
Emission control systems maintenance 11-70
Engine control warning light 7-43
Engine idling speed 7-53, 10-7, 13-1
Engine oil 11-31, 13-5
Engine oil filter 11-36
Engine oil pressure gauge 7-12
Engine oil refill capacity 13-7
Engine oil temperature gauge 7-13
Engine overheating 12-1
Engine overspeed 10-10
Engine throttle control knob ..... 7-53 , 10-7
Engine warm-up switch 7-54, 10-8
Exhaust brake indicator light 7-51
Exhaust brake switch 7-55
Exhaust system 11-75

F

Fan and fan shroud 11-27
Fan drive belt 11-46
Front lid 11-20
Front wheel alignment 13-1
Fuel 1-3, 11-38
Fuel gauge 7-12
Fuel system
Fuel cap 11-39
Fuel filling 11-39
Fuel tank 11-37
Main fuel filter 11-40
Primary fuel filter 11-41

https://truckmanualshub.com/

Purging air from fuel system 11-43
Fuel requirements 11-38
Fuses 11-80
Fusible link box 11-80

G

Gauges 7-5
GAWR 3-2
GCWR 3-3
Gear oil refill capacities 13-5
Gear shift lever 7-75
Grease 13-5
Greasing points 11-16
GVWR 3-2

H

Hazard warning flasher switch .. 7-59
Headlights 11-78
Headrest 6-3
Heater 9-5
Heater or air conditioner blower motor filters 11-82
Horn 7-68
Hotline 14-1
Hour meter 7-7

I

Identification number (VIN) 2-1
Idle shut down 10-38
Idling speed 7-53, 10-7, 13-1
Ignition key switch 7-3
Illumination control rheostat 7-64
Immersion heater 10-38
In cold weather 10-36
Indicator lights
ATM maintenance 7-50
ATM O/D OFF 7-52
ATM power mode 7-52
Cruise Control ON 7-60
Cruise Control SET 7-60
Exhaust brake 7-51
Exhaust gas high temperature 7-50
Hazard 7-51
High beam 7-52
Intake air heater 7-51
Transmission PTO 7-64
Turn signal 7-51
Instruments 7-1
Intake air heater indicator light 7-51

J

Jack operation 12-6
Jump start 12-3

K

Keyless entry system 5-2
Battery 5-3
Keys 1-2, 5-1, 7-3

L

Labels 3-24
Language setting 7-25
Leaf spring 11-67
Lighting switch 7-57
Lights 11-78
Lining clearance 13-1
Loading 10-2
Long life coolant 11-24, 13-5
Lower the cab 11-23
Lubricants 13-5
Lumber support 6-2

M

Maintenance
Chassis 11-7
Engine 11-4
Intervals 11-3
Noise emission control system 11-73

https://truckmanualshub.com/

Precautions 11-19
Standard 13-1
Maintenance and inspection display 7-20
Meters 7-5
Metric 1-3, 13-8
Mirror 11-69
Mirror heater 11-69
Mirror heater switch 7-67
Multi-display 7-15

N

New vehicle break-in period 1-2, 10-2
NHTSA 14-1
Noise control system 11-73

O

Odometer 7-6
Operating precautions 10-1
Outside mirrors 11-69
Overhead box 8-3
Overheating 12-1
Overloading 3-2, 10-2
Overspeed 10-10

P

Parking brake valve 7-76, 10-35
Parking brake warning light 7-47
Passenger seat 6-2
Passing switch 7-57
Power mirror switch 7-68
Power mode switch 7-65
Power socket 8-2
Power steering system
Fluid 11-61, 13-5
Refill capacities 13-7
Power window 5-4
Pregnant woman restraint 6-6
Primary fuel filter 11-41
PTO 7-64, 10-22
PTO switch 7-64

R

Radiator
Changing coolant 11-28
Cleaning 11-26
Engine coolant level 7-45, 11-25
Recommended lubricants 13-5
Refill capacities 13-7
Refrigerant 9-9
Regeneration switch 3-20, 7-70
Remote control 5-2
Reporting safety defects 14-1
Rheostat 7-64
Room light 8-4

S

SAE viscosity chart 13-6
Safety reminders 3-6
Seat adjustment 6-1
Seat belts 6-5
Serial number 2-2
Set and Coast button 7-60
Shift limit 10-15, 30
Shift lock 10-17
Shock absorber 11-68
Speedometer 7-6
Spring-activated parking brake 12-10
Starter switch 7-3
Starting the engine 10-4
Starting the engine (In cold weather) 10-36
Steering fluid 11-61
Steering fluid filter 11-62
Steering wheel 6-7
Steering wheel free play 13-1
Stopping engine 10-9

T

Tachometer 7-7
Throttle control knob 7-53
Tightening torque 13-3
Tilting and telescoping steering wheel 6-7

https://truckmanualshub.com/

Tilting the cab 11-21
Tire
Change.....12-6
Condition 11-85
Inflation pressure..... 11-84
Load specification 11-84
Position rotation 11-87
Size 11-83
Tire tread groove depth 13-2
Toe-in 13-1
Towing 12-9
Towing trailers 3-3, 10-3
Transmission
Automatic transmission operation 10-14
Gear oil..... 11-51, 13-5
Manual transmission operation 10-11
Oil refill capacity 13-7
PTO switch 7-64
Trip hour meter.....7-7
Trip meter 7-7
Troubleshooting.....12-1, 13
Turn signal and hazard indicator light 7-51
Turn signal switch.....7-57

U

Unit identification 2-2

V

Valve clearance 13-1
Vehicle identification number..... 2-1
Vehicle loading 3-2, 10-2
Vehicle operation 10-1
VIN..... 2-1
Viscosity chart..... 13-6
Volt meter 7-13

W

Warming up engine..... 10-7
Warning lights 7-43
ABS 7-44
Air pressure 7-43
Automatic transmission shift limit..... 7-49, 10-15, 30
Brake 7-47
DEF low level..... 7-10
DPF clogging 3-20, 7-70
Engine control..... 7-43
Engine coolant level 7-45
Parking brake 7-47
Seat belt 6-6
Tilt lock..... 7-48
Warnings..... 7-31
ATM fluid temperature.....7-41
ATM system 7-42
Charge 7-32
DEF low level 7-33
DPF maintenance 3-24, 11-71
DPF regenerating.....3-21, 7-72
DPF regeneration restriction 7-73
DPF system 3-22
Engine communication malfunction.....7-40
Engine oil pressure 7-32
Engine oil temperature.....7-37
Engine overrun.....7-31
Engine system 7-38
Meter communication malfunction.....7-39
Overheat 7-9, 12-1
PTO engine start interrupt.... 10-5
Starter overheat 10-5
Vehicle electrical system communication malfunction . 7-40
Vehicle electrical system malfunction.....7-39
Wheel alignment 13-1
Wheels, tires and nuts.... 11-86, 12-7
Window lock switch 5-5

https://truckmanualshub.com/

Windshield
Washer fluid 11-68,13-7
Washer reservoir..... 11-68
Wiper, washer and
exhaust brake switch 7-55

https://truckmanualshub.com/