https://truckmanualshub.com/

SISU AXLES

Maintenance Manual

FP-330 Drive Gear

Sisu Axles, Inc.
Autotehtaantie 1
P.O. Box 189
FIN-13101 Hämeenlinna
Finland
Phone int + 358 204 55 2999
Fax int + 358 204 55 2900

FP330DG 2/2008

https://truckmanualshub.com/

Table of contents ..... Page

Repairs 5
Removing the drive gear from the axle casing 5
Dismantling of the Inter-Axle Differential and related parts 8
DRIVE GEAR 10
Differential disassembly 10
Assembly 10
PINION ASSEMBLY 10
Disassembly 10
Assembly 11
DRIVE GEAR 13
Assembly of the drive gear assembly 13
Assembly and adjustment of gear backlash and contact 13
Replacement of the crown wheel and pinion 14
Installation of the inter-axle differential housing 16
Assembly of the transfer gear including the inter-axle differential 16
Adjustment o f running clearance on inter-axle differential 18
Input shaft bearing adjustment 19
Installation of drive gear assembly 20
Installation of the trough going output shaft 20
DIFFERENTIAL LOCKS (Both inter-axle and axle) 21
Disassembly 21
Assembly 21
Lock Adjustment 21
Adjustment of the inter-axle differential lock indicator light sender 22
OIL CHECKS AND OIL CHANGES 23
Drive gear oils 23
Change in the oil filling plug in the tridem drive gear FP-330 23
LUBRICATION 24
SPECIAL TOOLS 25
TORQUE VALUES 25

NOTE ! This Manual is intended for use by experienced mechanics using safe procedures in properly equipped shops.
Safety precautions should always be followed such as wearing safety glasses, using adequate lifting aids, and using tools and equipment in good condition. Sisu Axles, Inc., its agents, associates or representatives are not responsible for damage or injury occurring while working on their components.

https://truckmanualshub.com/

FP-330 DRIVE GEAR

1 Repairs

Drain drive gear oil.

Remove the cotter pin from the propeller shaft flange nut and unscrew the nut a few turns. Use a retaining bar to keep the flange stationary while unscrewing the nut. It is best to do this while the axle is in the vehicle or in a repairs stand if one is available.

Remove the axle from the vehicle. (The drive gear can be removed alone while the axle remains in the vehicle by using a special jack).

Place the axle assembly on a repair stand so the pinion flange is facing upward.

1.1 Removing the drive gear from the axle casing

Remove the drive gear housing cap screws and screw two of them into the threaded holes in the drive gear housing to act as extractors. (These holes are protected by plastic plug). Remove the drive gear with suitable lifting gear and place it on a repair stand with the crown wheel down.

Remove cap screws from output bearing cover on rear of axle casing. Remove the trough going output shaft and its bearing from the rear of the axle casing.

NOTE. If the ratio of the drive gear is (with most large diameter crown wheel) 4.68 : 1. or more fast, removing of the trough going output shaft cannot be made by pulling it outwards and removing of the complete drive gear is impossible too. In this case the inside spline section of the shaft touches against the crown wheel. Only possible way to remove the shaft or the drive gear is to remove the trough going output shaft flange with related parts as follows; see Picture no. 1.

1. Remove output shaft flange nut cotter pin, nut and take the flange (A) off the shaft.
2. Remove seal flange retaining screws (B) and take the flange off the casing.
3. Remove the ball bearing (C) of the shaft by pulling it off by a suitable ball bearing extractor

Now the drive gear can be removed and the trough going output shaft will follow the drive gear.

Pls. note that seal (D) and ball bearing (C) can be easily replaced in the axle when so needed. Removal of the complete drive gear is necessary only when the shaft must be replaced and ONLY IN AXLES WITH 4.68 : 1 RATIO OR MORE FAST ONE.

Installation of the trough going output shaft shall be done in reversed order to removal

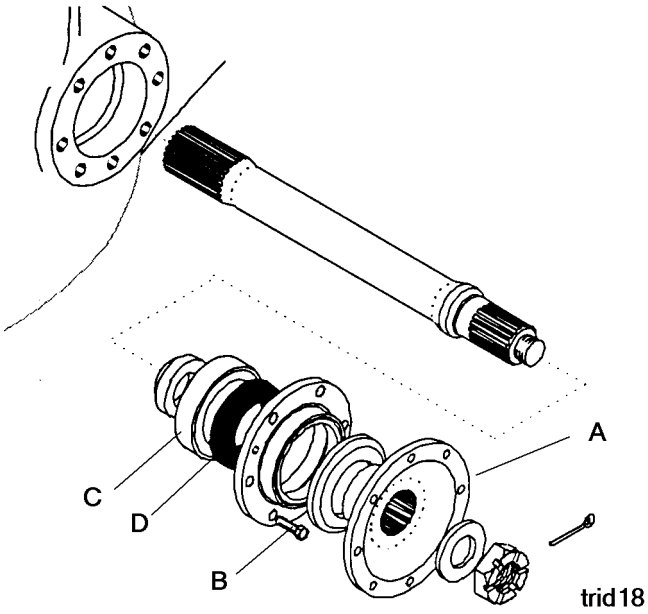

Picture 1: Details of the trough going output shaft

https://truckmanualshub.com/

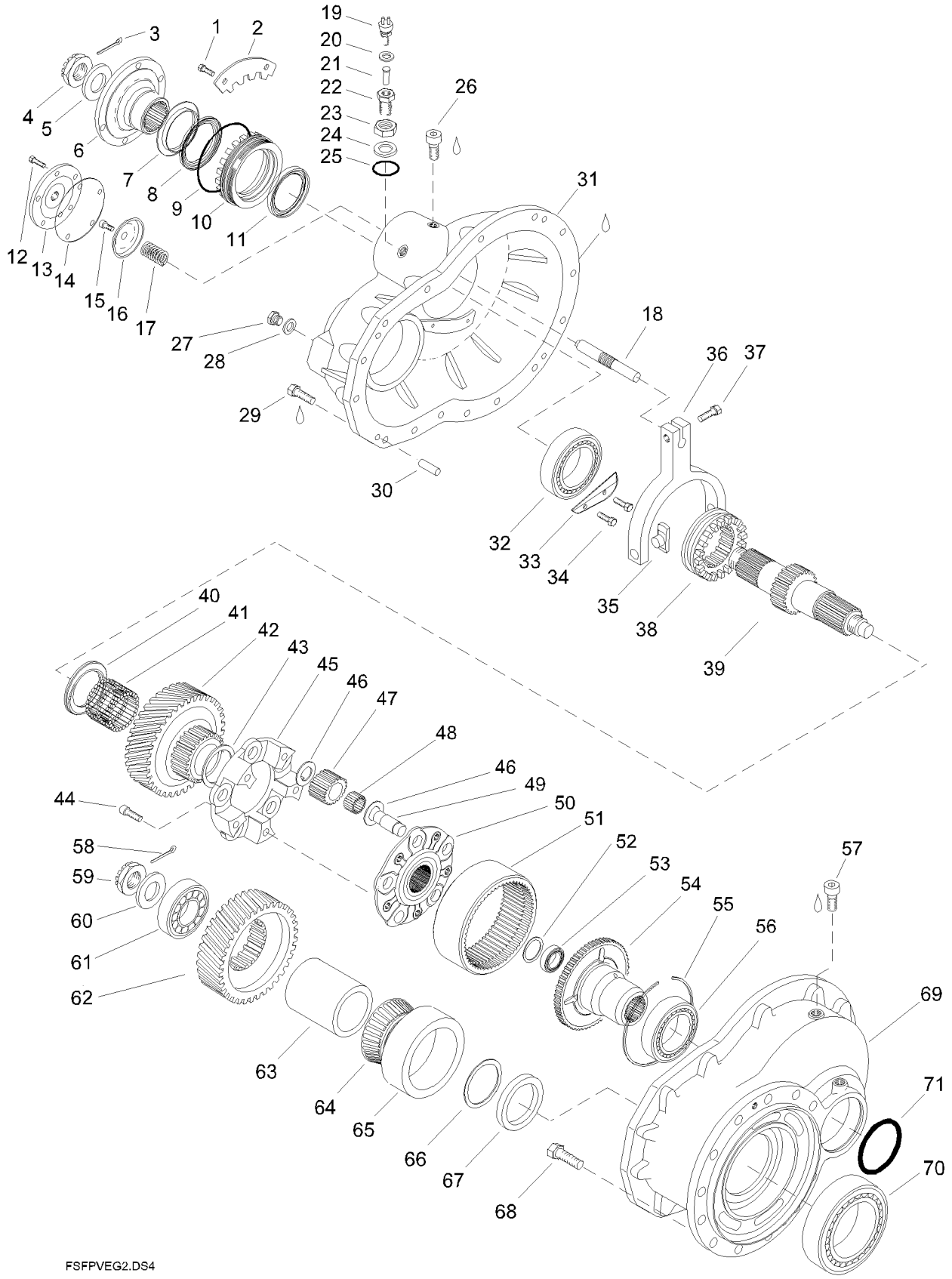

Picture 2: Exploded view of transfer gear and inter-axle differential

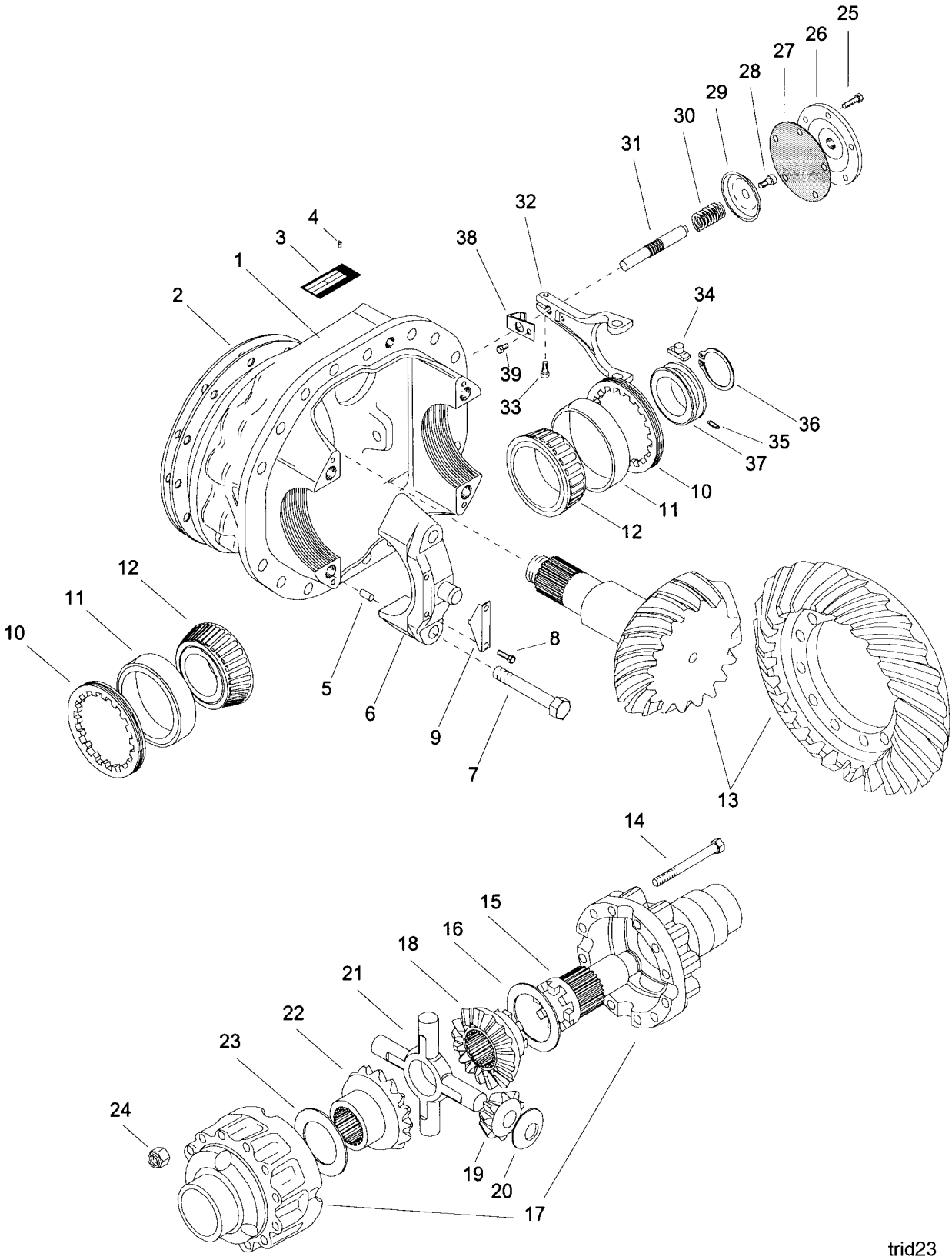

Picture 3: Drive gear housing with crown wheel and pinion and related parts in exploded view

https://truckmanualshub.com/

1.2 Dismantling of the Inter-Axle Differential and related parts

Item numbers in following text refer to Picture no. 2.

1. Remove the switch (19) for the inter-axle differential lock warning light.
2. Remove the input flange retaining nut (4) and the input flange (6).
3. Remove bearing adjuster/seal flange lock plate retaining screws (1) and take the lock plate (2) off the housing.
4. Rotate the bearing adjuster/seal flange counter clockwise and take it off the housing.

Disassemble the inter-axle differential lock as follows: See Picture no. 4.

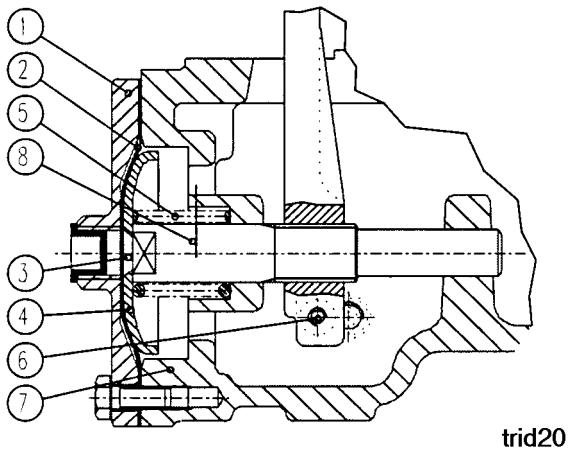

Picture 4: Differential lock engagement cylinder

1. Remove the lock cylinder cover cap screws (5 pcs), the cover (1), and the diaphragm (2).
2. Remove the diaphragm support cup screw (3), the cup (4) and the spring (5).

CAUTION! When removing the diaphragm support cup screw (3), spring (5) force may be released suddenly and parts can be bolted away if caution is not exercised

3. Loosen the shift fork lock screw (6) approx. two turns (For access to the screw, remove the plug from the housing.) and remove the fork shaft (8) by turning it counter clockwise with a suitable open end wrench.
   See Picture no. 2 in connection of following paras:

3/1 Remove retaining screws (29) of the outer half of the inter-axle differential housing (31).

3/2 Lift the forward half of the inter-axle differential housing (31) off the other half (68).

NOTE. Remove the housing half carefully by tilting it back and forth, so that the oil retaining plate (33) in the housing does clear the bearing (32) inner cone.

The differential lock fork and engagement gear remain on the spur gear (42). The input shaft (39) with related parts do remain in the inner half of the inter-axle differential housing (69).

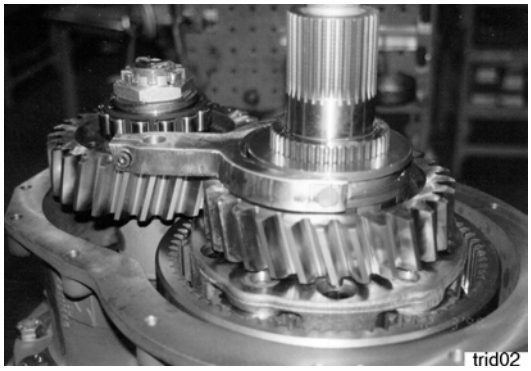

Picture 5: Outer half of inter-axle differential housing removed

3/3 Remove the differential lock fork (36) with glide shoes (35).

3/4 Remove the inner part of the bearing (32) together with the engagement gear (38) by a suitable extractor.
If bearing is being replaced, remove the bearing cup from the housing with a soft drift.

3/5 Lift the output shaft (39) off the housing.

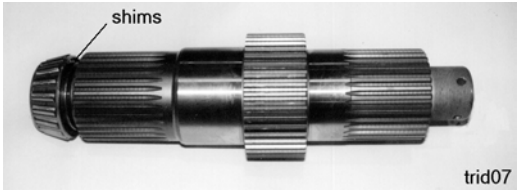

Picture 6: Output shaft removed

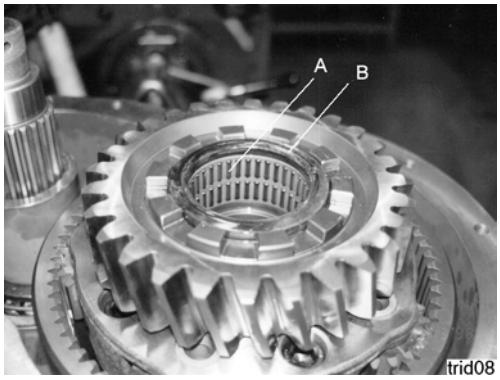

Picture 7: Spur gear with thrust ring (b) and needle bearing (A)

3/6 Remove the thrust ring (40) and the needle bearing (41) together with upper spur gear (42).

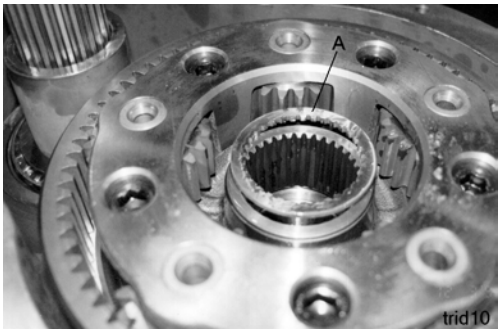

Picture 8: Thrust bearing (A) on the from top of the planetary carrier unit

3/7 Remove the thrust bearing (43) from top of the planetary carrier unit (44 - 50).

3/8 Remove the planetary carrier unit (44 - 50).

Take the planetary carrier to work bench for further repairs if required:

Inspect the planetary gears, bearings and splines:

Dismantle the planetary carrier as follows:

1. Remove retaining screws (44).
2. Separate planetary carrier housing halves (45 and 50) from each other.
3. Remove all planetary gears (47), with needle bearings (47) and shims (46).
4. Remove the planetary gear shafts (49) from the housing (50) if required by a workshop press.
5. Inspect condition of all parts and replace as required by new ones.

Continue with remaining parts in the drive gear housing as follows:

1. Remove the planetary ring gear (51) with the hub (54)

Picture 9: Removal of the planetary hub locking ring

2. Remove the cotter pin (58) and nut (59) from the pinion shaft.

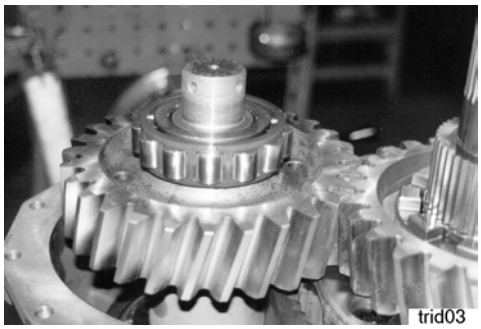

Picture 10: Lower spur gear and pinion support bearing ready for removal

3. Pull the pinion support bearing (61) from the pinion together with lower spur gear (62) by a suitable extractor. There are suitable threaded holes in the spur gear (see Picture no. 10)
4. Remove the cap screws (68) attaching the inner half of the inter-axle differential housing (69) to the drive gear case.
5. Separate the inner half of the inter-axle differential housing (69) from the drive gear case (1 in Picture no. 3)
6. The pinion and its bearing are removed with the rear half of the inter-axle differential housing.

Note: Carefully save the shims between the two housings. The pinion to crown wheel engagement is adjusted by these shims and the old shims will be used at re-assembly.

NOTE. If the tapered roller bearing (53) must be removed due to wear or damage from the output shaft, take care of the shims (52) under the bearing. These shims adjust the inter axle differential running clearance. When installing the new bearing, use old shims first and check clearance according to related instructions

https://truckmanualshub.com/

1.3 DRIVE GEAR

1.3.1 Differential disassembly

Item numbers in following text refer to Picture no. 3

1. Remove bearing adjustment nut lock plates (9) and unscrew the bearing adjustment nuts (10) 1/2 turn.
2. Make punch marks on the side bearing caps (6) and the adjacent main case to ensure that the caps are reinstalled in the same way they were originally installed.

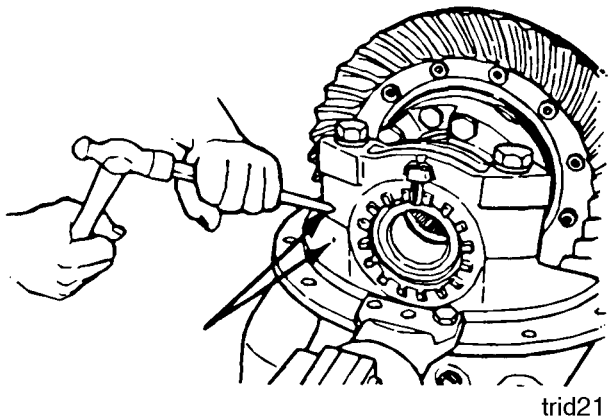

Picture 11: Area to be marked with centre punch

3. Remove bearing cap screws (7) and remove caps.
4. Remove the dowels (5) under the caps if necessary. Lift the crown wheel, differential, and side bearing cones (12) from the housing. Be careful not to damage the bearing cups (11) when removing the differential assembly.
5. Mark the differential case halves (17) with a centre punch. Mount the assembly in a bench vice or a repair stand with the crown wheel teeth facing upwards.
6. Remove the nuts (24) from the screws holding the differential housing and crown wheel together and lift off the outer half of the housing. Remove the differential parts from the lower half of the housing.
7. If the crown wheel and pinion are to be replaced, remove the lower housing half from the crown wheel.

1.3.2 Assembly

Item numbers in following text refer to Picture no. 3

Prior to assembly, ensure that all components to be reused are in good condition without exception.

1. If bearings are being replaced, press the outer bearing cones (12) onto the differential housing halves (17).
2. Install the crown wheel side of the differential housing half inside the crown wheel.
3. Put the differential lock engagement sleeve (15) and side gear (18) with the thrust washer (16) into the housing half.
4. Place the differential spider gears (19) with their thrust washers (20) on the spider (21). Place the spider gear assembly on the side gear in the housing half.
5. Place the other side gear (22) with its thrust washer (23) on the top of the spider gears.
6. Install the outer housing half with the punch marks aligned and install cap screws (14) and nuts (24).
7. Tighten these self locking nuts to 320 Nm [236 lb-ft] torque. Always use new nuts.

1.4 PINION ASSEMBLY

1.4.1 Disassembly

Item numbers in following text refer to Picture no. 2

Cotter pin (58), nut (59), and washer (60), support bearing (61) and the spur gear (61) are removed earlier within inter axle differential dismantling.

1. Take the housing (69) complete to a shop press.
2. Remove the pinion from the housing (69) with a shop press. The inner bearing cone (70), spacer bushing (67), and the bearing adjusting shims (66) come with the pinion. The outer bearing cone (64) and cup (65) remain in the housing

1.4.2 Assembly

Item numbers in following text refer to Picture no. 2

Prior to assembly, ensure that all components to be reused are in good condition without exception. Only a bearing in perfect condition may be reused. If a new crown wheel and pinion set is installed, always use a new bearing.

1. Start assembly by pressing the inner bearing (70) onto the pinion. Place old shim(s) (66) and spacer ring (67) on the pinion.

Picture 12: Pinion with inner bearing installed

Note installation of spacer bushing and shims

2. Press bearing outer rings (65 and 70) into the housing (69).
3. Place the rear half of the inter-axle differential housing (69) on the pinion.
4. Using a shop press, install the outer bearing (64), on the pinion using a suitable bushing while rotating the housing.

Picture 13: Pinion bearing installation and adjustment

5. Increase pressing force up to 160 kN [35,000 lbs.]. If bearing bottoms and resists rotation, press the pinion out and replace shims and/or spacer ring until proper clearance results and repeat previous step.

When bearings rotate properly, check the pinion preliminary rotating torque as follows:

6. Wrap a few turns of string around the machined surface of the housing (69) (255 mm [10 in.] dia) and pull the string with a spring scale. Correct force needed to rotate the housing is 40 - 65N [9.2 - 15.0 lb.].

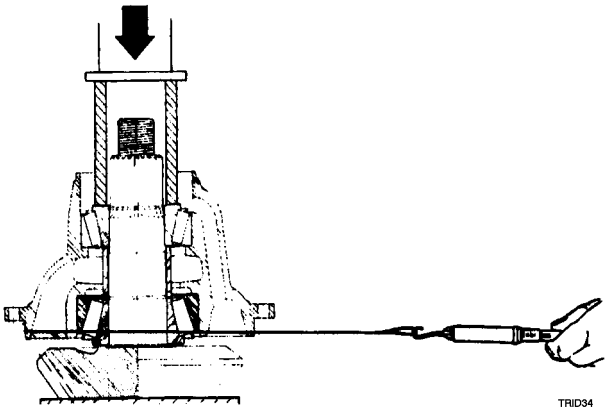

Picture 14: Principal illustration of the pinion rotating torque check

When the bearing adjustment is done, install spacer tube (63) and lower spur gear (62), support bearing (61), washer (60) and nut (59) and tighten the nut to 1,300 Nm [970 lb-ft] torque and secure it with a cotter pin (58).

Final check of the pinion rotating torque shall be performed with a torque wrench.
The rotating torque shall be within 5,3 ... 8,0 Nm [3,9 ...5,9 lb-ft].

NOTE. If the cotter pin cannot be inserted due to misalignement, do tighten the nut until the holes are aligned and the cotter pin can be installed.

https://truckmanualshub.com/

The following shims are available for pinion bearing adjustment:

Description	Part No.	Thickness	
		millimeters	inches
Shim	099 516 7000	0.1 mm	0.004 in
Shim	099 516 7001	0.3 mm	0.012 in
Shim	099 516 7002	0.5 mm	0.020 in
Shim	099 516 7003	0.25 mm	0.010 in

If a shop press in not available for assembly, adjustment can be performed as follows:

Items in text are for Picture no. 2.

Assemble as described but instead of pressing on the bearing (64), install spacer tube (63) and lower spur gear (62), support bearing (61), washer (60) and nut (59) and tighten the nut to 1,300 Nm [970 lb-ft] torque. Measure and adjust the bearing rotating torque as previously described. When the rotating force is correct, install spacer tube and spur gear, support bearing, washer and nut and tighten the nut to 1,300 Nm [970 lb-ft] torque and secure it with a cotter pin (58).

The following shims are available for crown wheel and pinion engagement adjustment:

(Between inter-axle differential housing and drive gear housing)

Description	Part No.	Thickness	
		millimeters	inches
Shim	144 239 2003	0.1 mm	0.004 in
Shim	144 239 2002	0.2 mm	0.008 in
Shim	144 239 2001	0.5 mm	0.020 in
Shim	144 239 2000	1.0 mm	0.040 in

1.5 DRIVE GEAR

The pinion is already assembled in the housing.

1.5.1 Assembly of the drive gear assembly

1. Place the drive gear housing so that the so that the inter-axle differential housing mounting face is down.
2. Using suitable lifting gear, place the differential assembly with the crown wheel and bearing outer rings installed in the housing.
3. Install the bearing caps according to the punch marks.
4. Install the bearing cap retaining screws with Loctite on them and tighten them finger tight only.
5. Screw in the bearing adjusting nuts until their outer surfaces are flush with the bearing outer ring surfaces.
6. Tighten the bearing cap retaining screws to 480 Nm [254 lb-ft.] torque.
7. Adjust the bearing adjusting nuts until the bearing end play is eliminated

1.5.2 Assembly and adjustment of gear backlash and contact

1. Turn the drive gear housing over so that the inter-axle differential housing mounting face is up.
2. Place the previously removed pinion engagement shims (2 in Picture no. 3) on the housing surface and install the inter-axle differential housing (68 in picture 2) and the installed pinion on the drive gear housing with screws (67 in Picture no. 3). Tighten to 240 Nm [177 lb-ft] torque.

Note: If the pinion and/or some other part in the pinion assembly, the thickness of the pinion engament shims must be determined as instructed in .

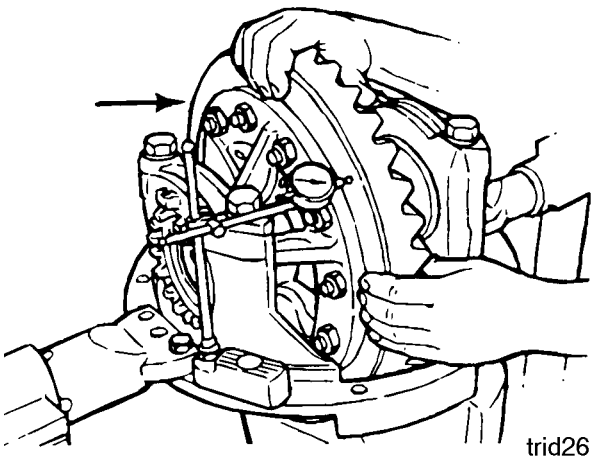

Picture 15: Adjusting the differential housing bearings

3. Adjust the position of the crown wheel so that the backlash is approximately correct, 0.15 - 0.25 mm [0.006 - 0.010 in].
4. Position a dial indicator with a magnetic base as shown in Picture no. 15 and tighten the bearing adjusting nuts until end play is eliminated. Tighten the crown wheel tooth side adjusting nut 1 to 1.5 slots further with wrench No. 7143-024-010.
5. Place dial indicator as seen in Picture no. 16.
6. Adjust gear backlash by moving the crown wheel in or out by turning both adjusting nuts equally so that bearing pre-load remains as previously set.
7. Adjust gear backlash to 0.15 - 0.25 mm [0.006 - 0.010 in].

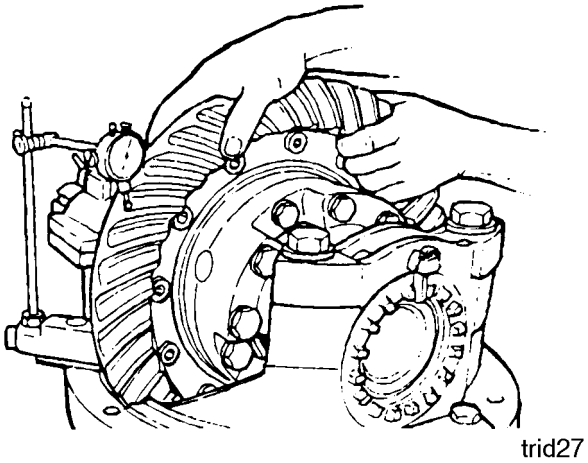

Picture 16: Checking gear backlash

https://truckmanualshub.com/

1.6 Replacement of the crown wheel and pinion

The crown wheel and pinion are marked with Information so that when a new crown wheel and pinion gear assembly is to be installed, the correct relationship of the pinion can be determined. The information includes:

1. Part number
2. Number of teeth
3. Crown wheel and pinion kit part number
4. Variation value which is needed for correct positioning of the pinion.

The part number and tooth combination numbers are die cut on the outer surface of all pinions. On crown wheels, these numbers are marked on the outside diameters. The tooth combination number (for example, 27/21) indicates that the pinion has 21 teeth and the crown wheel 27 equal to a gear ratio of 1.286 : 1.

All crown wheel and pinion assemblies are supplied in matched sets and both parts have the same pair number. On pinions, the pair number is die cut in the inner end of the pinion.

On crown wheels, the pair numbers are marked on the outside diameter.

Never use a crown wheel and pinion together which do not have the same pair numbers.

Each pinion is marked with a true installation distance or with a variation value which indicates the correct installation compared to the nominal installation distance.

Variation value = True installation distance - 173 mm.

This variation value will be used in calculating the shims to place between the inter-axle differential housing and the carrier housing.

The variation number (for example +0.1 or -0.1) is marked on either end of the pinion.

To calculate the thickness of the shims:

1. Measure the thickness of the previously used shim(s) with a micrometer.
2. Note the variation number on the new pinion. If this number has a plus value (+), subtract it from the measurement calculations, below.
   If this number has a minus value, (-), add it to the measurement calculations, below.

Take note of this measurement.

CALCULATION EXAMPLES

Example 1

· Thickness of original shim(s)	0.75 mm
· Variation value on pinion = +0.05	-0.05
· Measurement obtained	0.70 mm
· Variation No. on new pinion +0.10	+0.10
· New thickness of shim(s) to be used	0.80 mm

Example 2

· Thickness of original shim(s)	0.65 mm
· Variation value on pinion = -0.05	+0.05
· Measurement obtained	0.70 mm
· Variation No. on new pinion +0.15	+0.15
· New thickness of shim(s) to be used	0.85 mm

Example 3

· Thickness of original shim(s)	0.70 mm
· Variation value on pinion = +0.05	-0.05
· Measurement obtained	0.65 mm
· Variation No. on new pinion -0.05	-0.05
· New thickness of shim(s) to be used	0.60 mm

Available shims for setting the location of the pinion:

Description	Part No.	Thickness	
		mm	inch
Shim	144 239 2003	0.1	0.004
Shim	144 239 2002	0.2	0.008
Shim	144 239 2001	0.5	0.020
Shim	144 239 2000	1.0	0.039

Use these shims singly or in combination as required.

Note: Check the tooth contact and correct it as required. Obtaining the correct contact pattern may require the pinion to be moved. This will change gear backlash and adjustment has to be done simultaneously.

Correct tooth contact is most important and gear backlash has to be set within 0.15 - 0.30 mm [0.006 - 0.012 in] with a new crown wheel and pinion assembly.

With an old assembly, the tooth contact and the gear backlash have to be set as they were prior to disassembly.

Check tooth contact by using lead oxide paint (red lead).

The following pictures illustrate tooth contact patterns unloaded.

Picture no. 17 indicates that the pinion is set correctly. This gives a quiet drive and long life.

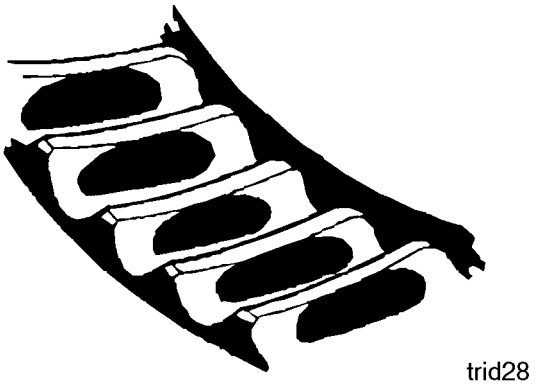

Picture 17: Good tooth contact.

Picture no. 18 indicates that the pinion is set too deeply. This causes a noisy drive and excessive wear or damage to the gears.

To set the correct position of the pinion, add shims under the inter-axle differential housing and move the pinion out (in the direction of arrow A in picture) and the crown wheel in (in the direction of arrow B in picture). The correct backlash is 0.15 - 0.25 mm [0.006 - 0.010 in].

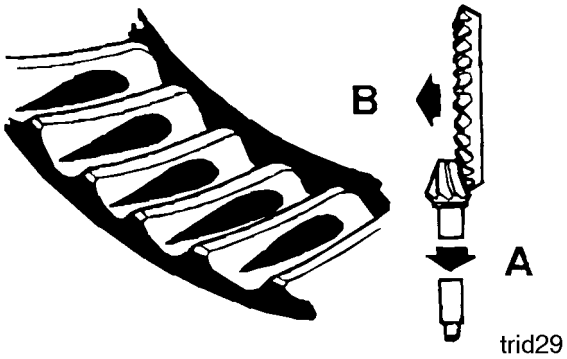

Picture 18: Poor tooth contact- too deep.

Picture no. 19 indicates that the pinion is set too far out. This causes a noisy drive and excessive wear or damage to the gears. To set the correct position of the pinion, remove shims under the inter-axle differential housing and move the pinion in (in the direction of arrow A in picture) and the crown wheel out (in the direction of arrow B in picture)

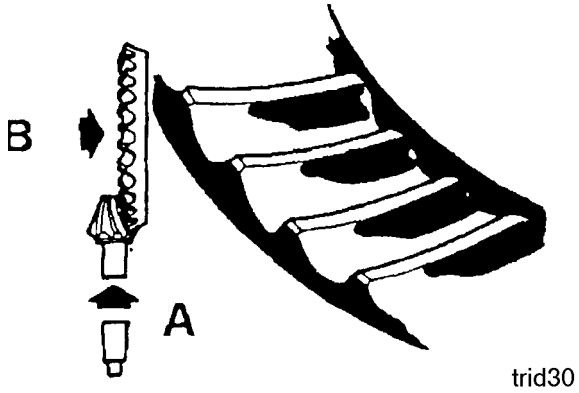

Picture 19: Poor tooth contact-too shallow.

When the differential side bearings are finally adjusted, lock the adjustment nut with their respective lock plates and tighten their retaining screws to 21 Nm [15 lb-ft] torque. When the screws are tightened, drive the lock plate tabs into the groove of the adjustment nut with a hammer.

1.7 Installation of the inter-axle differential housing

When the adjustments are completed, remove the inter-axle differential housing and coat both surfaces and shim(s) with Silmate Silicone Rubber RTV 1473 or similar Room Temperature Vulcanising sealant. Install the lubricated O-Ring (71 in Picture 2) in the upper shaft seal housing.

Reinstall the inter-axle differential housing. Install the screws (68 in Picture no. 2) with Loctite on them and tighten them to 240 Nm [177 lb-ft] torque.

1.7.1 Assembly of the transfer gear including the inter-axle differential

Item numbers in following text refer to Picture no. 2

Wash all drop gear components and inspect them carefully. Discard all faulty or excessively worn parts. Inspect bearing very carefully. Replace all bearings if their condition is at all questionable.

Lubricate all parts with engine oil within assembly.

1. Install the outer rings of the bearings (56 and 32) in the housings and the bearing (56) onto the planetary ring gear hub (54).
2. Install input shaft support bearing outer ring (53) inside the planetary ring gear hub (54).
3. Heat the input shaft support bearing (53) to a temperature of approx. 120° C [248° F] and install it on the input shaft against the shoulder.

Note. If this bearing has been replaced, use old shims (52) between the bearing cone and the shaft shoulder (these shims are used to adjust inter axle differential running clearance).

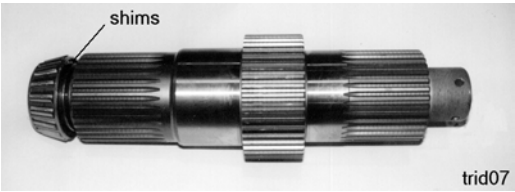

Picture 20: Input shaft with installed support bearing

Picture 21: Installation of the ring gear hub locking ring.

4. Place assembled planetary ring gear with hub (52, 54 and 55) into the housing on the bearing.
5. Assemble the planetary carrier according to following pictures.

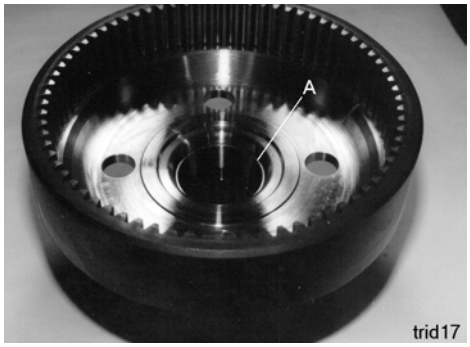

Picture 22: Input shat support bearing outer ring (A) inside ring gear hub.

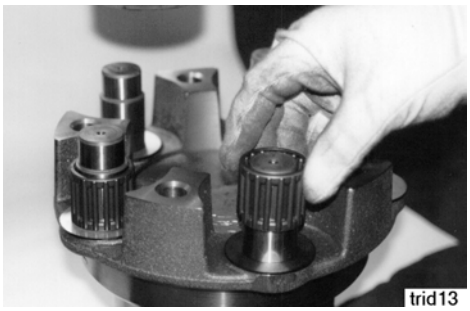

Picture 23: Installation of planetary gears. Note shims (A) below the gears.

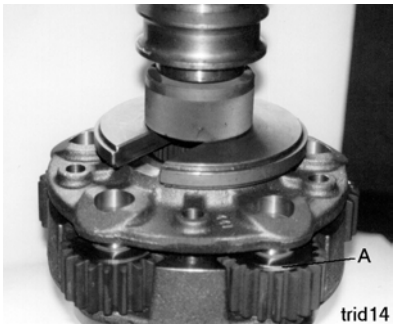

Picture 24: Pressing of planetary carrier cover. Note shims (A) on top of the gears.

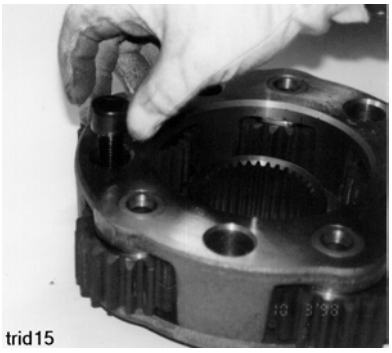

Picture 25: Installation of planetary carrier cover screws.

6. Tighten screws to 320 Nm [235 lb-ft] torque.
7. Place assembled planetary carrier (44 - 50) inside the planetary ring gear.

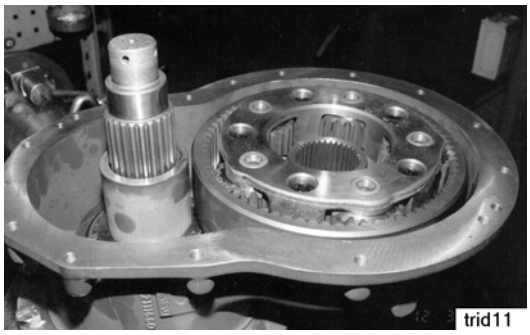

Picture 26: Assembled planetary carrier inside the planetary ring gear

8. Place the thrust bearing (43) onto the planetary carrier. Use the shaft (39) to align the splines.

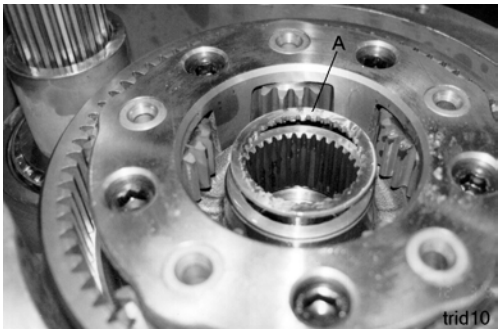

Picture 27: . Thrust bearing (A) being placed

9. Place the upper spur gear (42) onto the planetary carrier so that gear will engage with planetary gears.
10. Install the needle bearing (41) inside the spur gear (42) and the thrust bearing onto the spur gear (42).

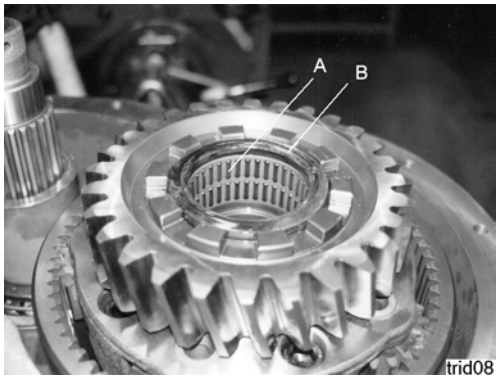

Picture 28: Spur gear installed with needle bearing (A) and thrust bearing (B)

11. Install the input shaft (39) inside the spur gear (42) and the planetary assy. Do rotate the shaft during installation so that splines engages into the thrust bearing (43) and into the planetary ring gear hub (54).

1.7.2 Adjustment o f running clearance on inter-axle differential

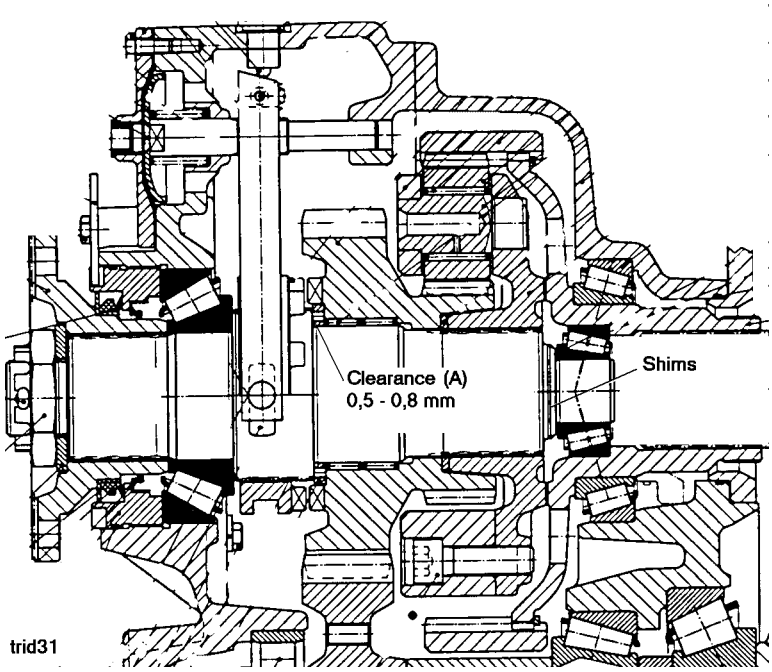

Picture 29: Section through input shaft assembly showing clearance measurement point (A)

The axial running clearance of differential gears has to be 0.5 - 0.8 mm [0.0012 - 0.020 in]. With repairs, this axial clearance has to be verified and adjusted with shims (see Picture no. 29).

Running clearance in differential planetary can be checked with assembled input shaft.

Item numbers in following text refer to Picture no. 2

Clearance can be checked with a feeler gauge placed between the dog coupling teeth as shown in Picture no. 30. Place the feeler gauge between the input shaft shoulder and the thrust bearing (40).

If the clearance is within the limits of 0.5 - 0.8 mm [0.0012 - 0.020 in] continue assembly. If not, remove bearing (53) and replace the shim (52) with an appropriate one and recheck the clearance.

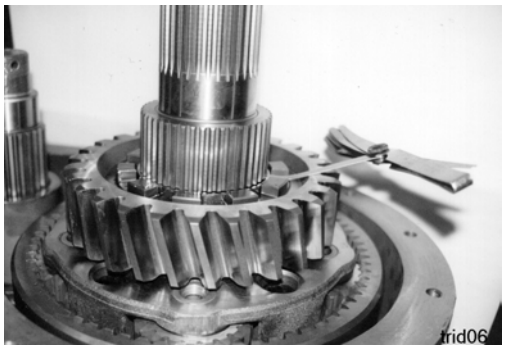

Picture 30: Clearance check with a feeler gauge.

1. Place the differential lock engagement sleeve (38) onto splines of the input shaft (39), Heat inner race of the bearing (32) to a temperature of approx. 120° C [248° F] and install it on the input shaft against the shoulder.

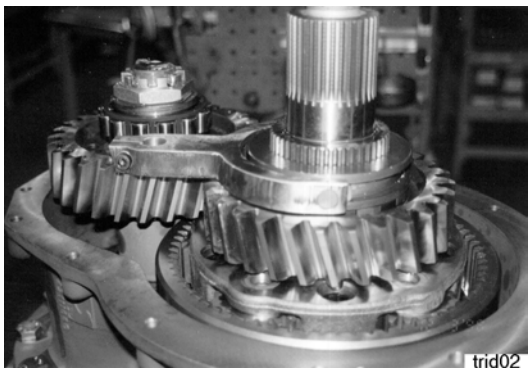

Picture 31: Differential lock fork with glide shoes installed (bearing not yet installed)

2. Place the differential lock fork (36) with glide shoes (35) into the groove of the differential lock engagement sleeve (38).
3. Now the inner inter axle differential housing with transfer gear (spur gears 42 and 62) is ready assembled and waiting for installation of the outer inter axle differential housing with related parts.

Do following with the outer inter axle differential housing (31).

1. Replace the seal (11) inside the input shaft adjustment nut (10) and fill the inside of the seal with Mobil-Grease MP grease and install a new lubricated O-Ring (9) into outside groove of the nut.
2. Tighten adjusting nut (10) by hand against the bearing outer ring (32) inside the housing, then back the nut off one complete turn. This is necessary to avoid unnecessary stress on the bearing during assembly.

Picture 32: Oil retaining plate in the housing

1.7.3 Input shaft bearing adjustment

Adjust the input shaft bearing as follows:

Item numbers in following text refer to Picture no. 2

1. Tighten the adjusting nut (10) with a special tool No. 7544-201-010 until there is no clearance in bearing (Picture no. 33). Back nut off to the nearest locking position. Note that the lock plate (2) can be used in two positions. Apply Loctite locking liquid to lock plate screws (1) and tighten to 21 Nm [15 lb-ft] torque.
2. Install a new protection plate (7) and a new V-Seal (8) on the propeller shaft flange (6).
3. Install flange on input shaft splines. Place washer (5) on shaft and tighten nut (4) to 1,300 Nm [960 lb-ft] torque. and install cotter pin (3). If easier, this can be done after the axle is installed in the truck.

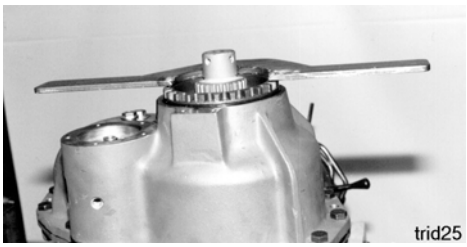

Picture 33: Input shaft bearing adjustment

3. Check that oil retaining plate (33) is installed. If not, do install the input bearing oil retaining plate (33) with the screws (34) using Loctite locking liquid. Tighten to 21 Nm (15 Lb-ft) torque.
4. Coat inner inter axle differential housing sealing surface with Silmate Silicone Rubber RTV 1473 or similar Room Temperature Vulcanising sealant.
5. Place the outer inter-axle differential housing (31) on the rear section (69).

NOTE. Install the housing half carefully by tilting it back and forth, so that the oil retaining plate (33) in the housing does clear the bearing (32) inner cone.

6. Install screws (29) with Loctite locking liquid on the threads and tighten to 130 Nm [96 lb-ft] torque.
7. Install the differential lock parts and adjust it according separate instructions in this manual.

https://truckmanualshub.com/

1.8 Installation of drive gear assembly

1. Coat mating surfaces of drive gear assembly and axle housing with Silmate Silicone Rubber RTV 1473 or similar Room Temperature Vulcanizing sealant.
2. Install the drive gear assembly on the axle casing using suitable lifting gear. With Loctite locking liquid on threads, install the cap screws and tighten evenly to 240 Nm [177 lb-ft] torque.
3. Install the drive shafts and wheel hubs. Fill drive gear housing with oil to level of the appropriate fill plug opening (A in Picture no. 34).

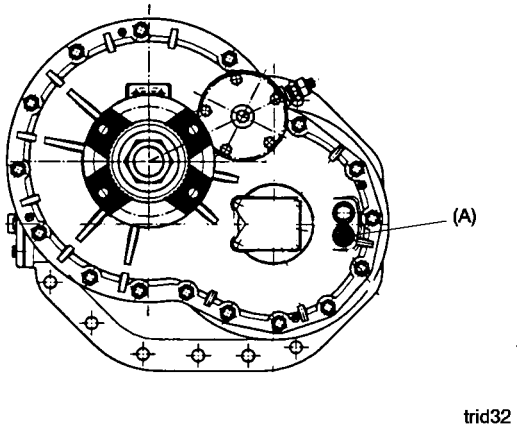

Picture 34: Oil level plug

1.8.1 Installation of the trough going output shaft

NOTE. Please read special note for axles with 4.68 : 1 ratio or faster on page 5

1. Assemble the output shaft using new parts as required and fill the inside cavity of the seal with Mobil-Grease MP grease.
2. Tighten flange nut to 600 ± 150 Nm [440 ± 110 lb-ft] torque and secure it with a cotter pin.
3. Install the shaft assembly

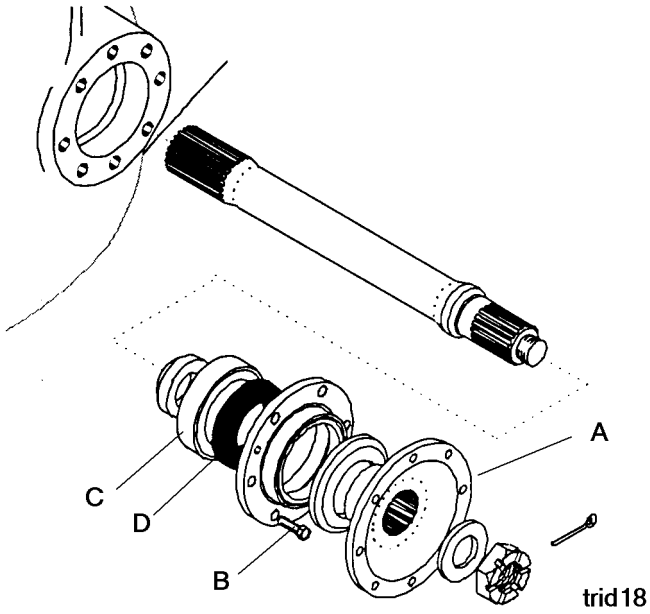

Picture 35: Exploded view of output shaft parts

1.9 DIFFERENTIAL LOCKS (Both inter-axle and axle)

Item numbers in following text refer to Picture no. 36

1.9.1 Disassembly

1. Remove the lock cylinder cover cap screws (5 pcs), the cover (1), and the diaphragm (2).
2. Remove the diaphragm support cup screw (3), the cup (4) and the spring (5).
3. Loosen the shift fork lock screw (6) approx. two turns (For access to the screw, remove the plug from the housing.) and remove the fork shaft (8) by turning it counter clockwise with a suitable open end wrench.
4. With the shaft removed, remove the fork and slide shoes.

CAUTION! When removing the fork, take care of the glide shoes, which can be bolted away if caution is not exercised.

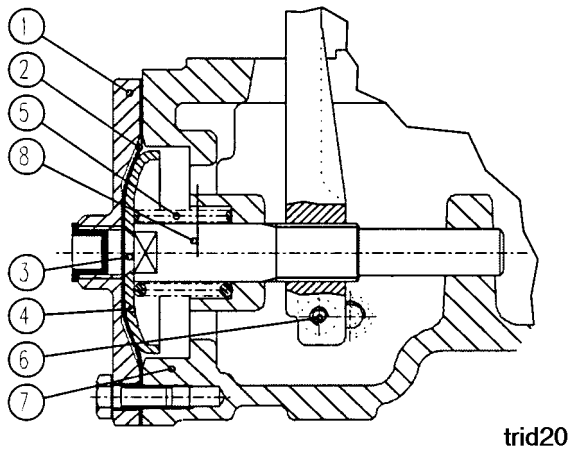

Picture 36: Differential lock.

1.9.2 Assembly

Inspect all lock components to ensure that they are in good condition and not excessively worn. Replace all damaged parts. Assemble by following the above steps in reverse order.

Differential lock parts:

1. Lock cylinder cover
2. Diaphragm
3. Support cup retaining screw
4. Support cup
5. Releasing spring
6. Fork lock screw
7. Lock housing (part of main housing)
8. Fork shaft

1.9.3 Lock Adjustment

For adjustment, the following parts must be removed.

1. Cover
2. Diaphragm
3. Screw
4. Cup
5. Spring

Adjusting procedure:

1. Engage the dog clutch of the differential lock by pushing the fork shaft in all the way.
2. Place the cup (4) on the fork shaft without the retaining screw.
3. Adjust the fork shaft by turning it in the fork so that the cup touches both the end of the shaft and the bottom of the casing simultaneously.
4. Check by rotating the pinion or input shaft and pushing the fork shaft at the same time to see if the shaft will go in further.
5. If the shaft and the fork went in further, repeat step 3.
6. When the shaft does not go in further, turn it clockwise 1/4 turn (approx. 0.4 mm [0.02 in]) on axle differential locks and 4/5 turn (approx. 1.2 mm [0.05 in]] on inter-axle differential lock.
7. Tighten the fork locking screw (6)
8. Install the cup (4) and retaining screw(3).
9. Push on support cup manually to make sure that the cup rim touches the bottom of the casing.

https://truckmanualshub.com/

1.9.4 Adjustment of the inter-axle differential lock indicator light sender

Item numbers in following text refer to Picture no. 2

To adjust the inter-axle differential lock indicator light sender:

Engage the inter-axle differential lock either manually or with air pressure and rotate the sender switch (19) clockwise until the switch closes. (this can be checked with a multimeter or the indicator light in the vehicle). Rotate the sender an additional 3/4 to 1 full turn clockwise and lock the sender in this position with its lock nut.

https://truckmanualshub.com/

2 OIL CHECKS AND OIL CHANGES

2.1 Drive gear oils

With the vehicle on level ground, oil level must be to bottom of inspection plug as shown (A in Picture no. 37) for most vehicle applications.

On the front tridem axle for operation on steep grades or with heavy loads at very low speeds, it is advisable to raise the oil level to the upper inspection plug.

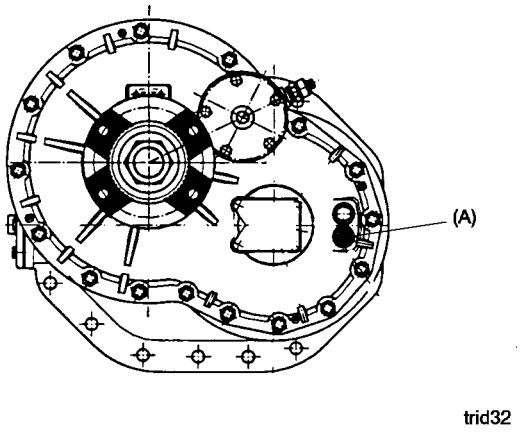

Picture 37: Oil level plug on front tridem axle.

2.2 CHANGE IN THE OIL FILLING PLUG IN THE TRIDEM DRIVE GEAR FP-330

Change: The upper oil filling/inspection plug has been removed and the lower oil filling/inspection plug has been moved approximately 5 mm downwards. There are no changes in part numbers.

Cause of change: This change is for better control for the correct amount of oil.

Oil Level: Oil quantities varies according to the axle mounting position. Oil level shall be at the level of the plug opening. Filling volumes see “LUBRICATION” on page 24.

Identify: In the new design there are only one oil filling/inspection plug compared to two in the old design.

Changed Parts:

Description	**Old design**	**New design**
Plug 90871-22193	2 pcs	1 pcs
Seal ring 91201-22150	2 pcs	1 pcs

Interchangeability: The new design is totally interchangeable with the old design.

Date of change: **From serial No. 00951, March 2000.**

https://truckmanualshub.com/

3 LUBRICATION

Grease quality for grease lubrication NLGI 2 - Mobil Grease MP or comparable
Drive gear oil quality API GL - 5; use of the synthetic oil is permitted too.
Viscosity according to prevailing ambient
temperature as shown on the accompanying table

Oil grades in various ambient operation temperatures

We suggest in very cold operation conditions "full synthetic" 75W-90 and in very hot conditions SAE 140 oil types.

Grease quality for grease lubrication NLGI 2 - Mobil Grease MP or comparable

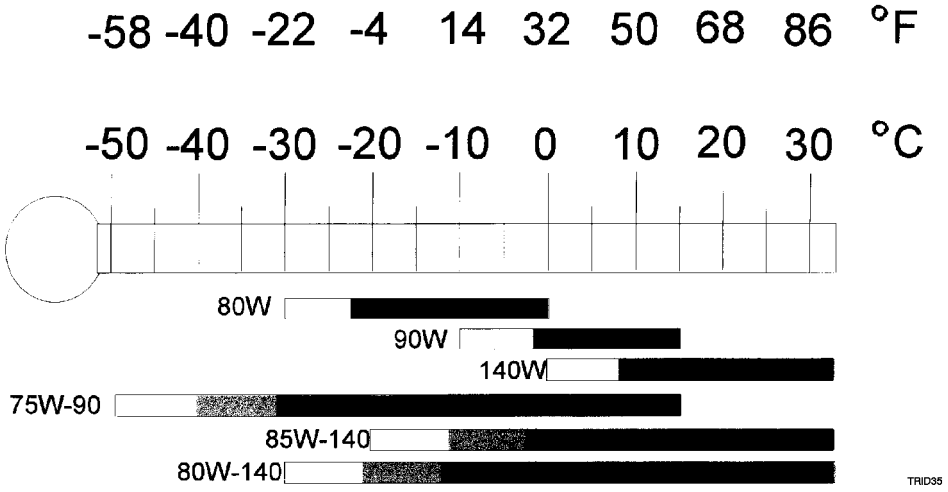

Oil volumes

Filling volumes - approx.

According to the pinion position:	**Axle angle**	**Metric**	**U.S.**
Front tridem axle drive gear	0°	20 ltrs	42 pints
	3°	24 ltrs	51 pints

From March 2000 (with one level plug only)

According to the pinion position:

Filling volumes - approx	0°	18,5 ltrs	38,5 pints
	1°	19,5 ltrs	40,6 pints
	2°	21,0 ltrs	43,7 pints
	3°	22,5 ltrs	46,9 pints

In rigid axles fill the hubs first and the drive gear after that.

4 SPECIAL TOOLS

Adjustment wrench for differential side bearing	7143-024-010
Input shaft bearing adjustment tool	7544-201-010

5 TORQUE VALUES

Description	Nm	Lb-ft
Wheel nuts	550	406
Propeller shaft flange nut	1300	960
Pinion nut	1300	960
Differential housing bearing cap screws	480	354
Differential housing halves and crown wheel nuts	320	236
Drive gear housing to axle casing cap screws	240	177
Inter-axle differential housing halves cap screws	130	96
Inter-axle differential housing to drive gear housing	240	177
Inter-axle differential planetary carrier cover screws	320	235
Output shaft flange nut	600	470
Differential lock cylinder cover screws	21	15
Differential lock cylinder diaphragm to cup cap screw	30	22
Differential side bearing adjustment lock plate cap screws	21	15
Drive gear oli level plug	50 - 70	37 - 52

https://truckmanualshub.com/

SISU AXLES

PRODUCT CHANGE NOTE NO. P14003

23.12.2004 (rev. 8.3.2007)

CHANGE IN THE INPUT AND OUTPUT DRIVE FLANGE SEALING IN THE HEAVY THROUGH DRIVE AXLES

1. Change: In the input and output drive flange sealing the shaft seal with one sealing lip is replaced by a new cassette type seal with multiple sealing lips. Simultaneously the v-ring dust seal and the shield plate (only input) have been removed.

2. Cause of Change: Better technical solution for the input/output flange sealing.

3. Applications: The new cassette seal replaces the older shaft seals in the through drive FRMP-13/16, FSMP-14, FRFP-13/16 and FSFP-14 axles. The differential carrier assemblies are MP-330 and FP-330.
MP-330 drive gear is used in through drive rear tandem axle FRMP-13/16 and through drive steer front tandem axle FSMP-14.
FP-330 drive gear is used in rear Tridem axle FRFP-13/16 and in drive steer Tridem axle FSFP-14. The Axle product codes and the part numbers of the differential carrier assemblies have changed along with the sealing change.

4. Changed Items in MP-330 Drive Gear:

Description	Old Part No.	New Part No.
Shaft Seal (input & output)	91122-08505	591122-08507
Adjusting Nut/Seal Housing (input)	143-226-1200	543-226-1400
V-Ring Seal (input)	090-400-9500	-
Shield Plate(input)	090-711-9010	-
Seal Housing (output)	144-321-0010	544-321-0500
V-Ring Seal (output)	91121-09001	-
Input Flange HS1700/1800	138-918-0400	538-918-1610
Input Flange ISO T180	138-918-0401	538-918-1611
Input Yoke 1710	538-967-0100	538-967-0600
Output Flange HS1700/1800	138-917-2410	538-917-2510
Output Flange ISO T180	538-917-2411	538-917-2511
Output Yoke 1710	538-967-0110	538-967-0610

. Changed Items in FP-330 Drive Gear:

Description	Old Part No.	New Part No.
Shaft Seal (input & output)	91122-08505	591122-08507
Adjusting Nut/Seal Housing (input)	143-226-1200	543-226-1400
V-Ring Seal (input)	090-400-9500	-
Shield Plate(input)	090-711-9010	-
Seal Housing (output)	544-321-0200	544-321-0500
V-Ring Seal (output)	91121-09001	-
Seal Housing Bolts (output)	590303-10503	90303-10303
Input Flange HS1700/1800	538-918-0700	538-918-0900
Input Flange ISO T180	538-918-0500	538-918-0511

5. Date of Change: Installing of the new input flange seal has started gradually by axle type from August 2004 (Mainly in the new model year 2005 axles).

6. Interchangeability:
The new cassette seal is not interchangeable with the old shaft seal.
Retrofit cassette seal kits are available for converting the sealing to the new design. Please see Spare Parts Bulletin SP14003.

https://truckmanualshub.com/

7. Installing the Cassette Seal:
Use installing tool 7544-301-050 when pressing the cassette seal into the adjusting nut/seal housing for input flange sealing and tool 7544-301-060 when pressing the cassette seal into the seal housing for the output flange sealing. The pressing should be done evenly with care by using a shop press.
These installing tools can be also made locally according to the drawings in pictures 1. & 2.
When installing the input drive flange (2 in picture 3.) the sealing surface has to be wiped with **Fretax AF 281** assembly gel to prevent friction between the input flange and the seal during installation.
Alternatively Klüberplus S 06-100 assembly gel or blend of alcohol and water (1:1) can be used in installing.

Note! If installed dry the seal may damage.

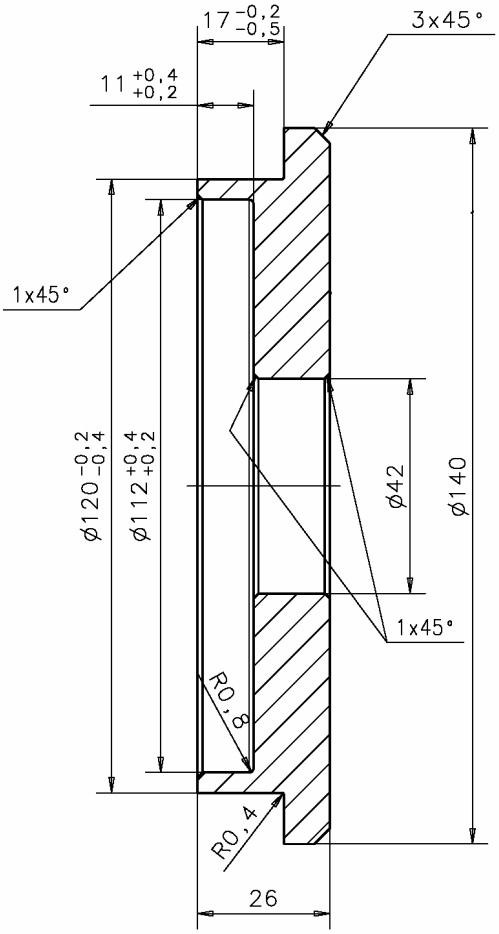

Picture 1. Press tool 7544-301-050 for input seal installation

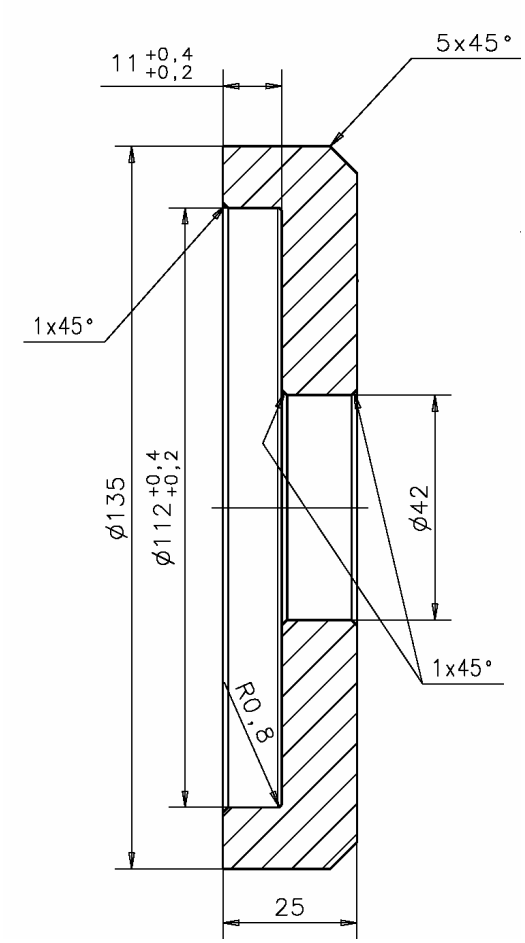

Picture 2. Press tool 7544-301-060 for output seal installation

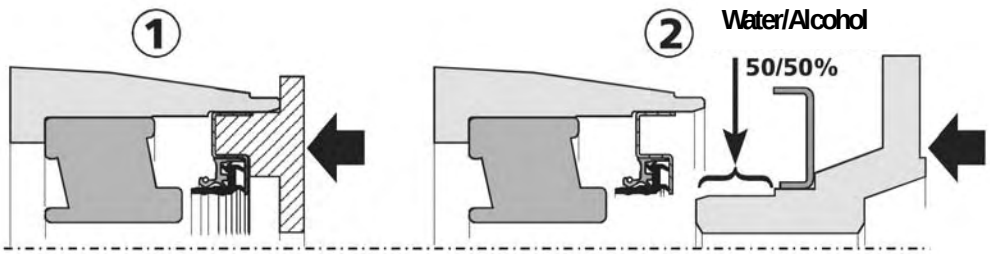

Picture 3. Principle pictures of common cassette seal installation.

Sisu Axles, Inc. PO Box 189 FIN-13101 Hameenlinna Finland
Technical Support Phone +358 204 55 2999 Fax +358 204 55 2900