https://truckmanualshub.com/

Parts Catalogue

T394SH

www.tym.co.kr
TONG YANG MOOLSAN CO., LTD.

Printed : 2016 /09 Version
Part number of this book :1234 912 003 0

https://truckmanualshub.com/

Important tips of Parts Catalogue

We thank you for your purchasing our product, manufactured under strict quality control, by gathering plenty of experiences and new technology, designed for a comport and pleasant work.

1. Part Composition

This catalogue deals with engine and chassis.

Detailed classifications are listed in the following page.

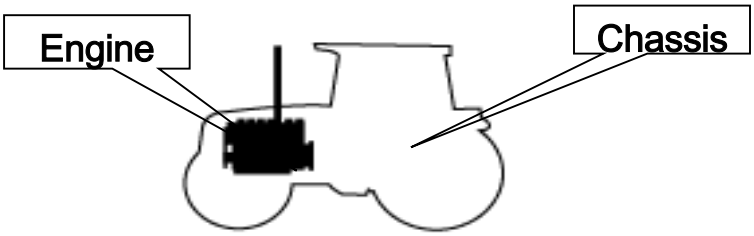

2.For locating parts easily,Please Note:

A.If you know the assembly where the part is used.

-Refer to the relevant figure from the identifying group symbol illustration,

-Locate the relevant chapter

-Refer to the particular chapter desired.

3. For ordering parts

To obtain spare parts please contact your nearest dealer and give him the details listed below.

①Tractor Model : Tractor

②Tractor Serial Number : W050000

③Part Number : 16001032000

④Description : Air cleaner assembly

⑤Quantity required: 1

4. For ordering PARTS CATALOGUE

This is Priced item and one is to order the same on part No. 13219400020

This supersedes all our editions.

Note)When replacing parts, please use original spare parts to be sure of the performance and the longer life of the product

※The information in this catalogue may at any time be modified without a prior notice for the improvement of performance, please consult our spare parts dept. for the detailed inquiry.

https://truckmanualshub.com/

5. How to use parts catalogue

FIG 021 ②	RADIATOR ③	P ④	Year ⑤ 2016	①

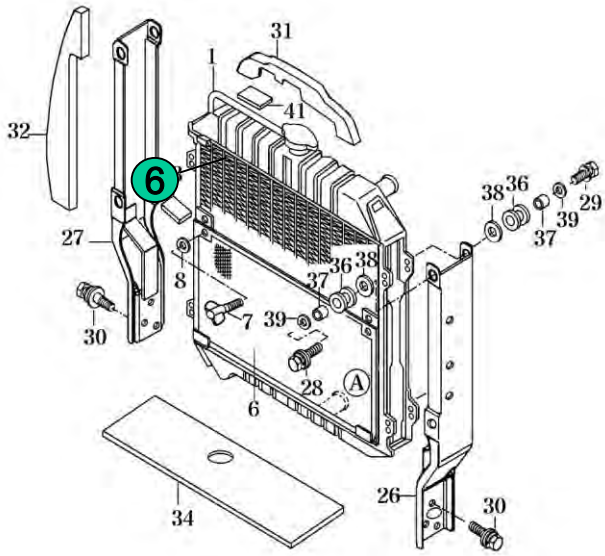

NOTE	⑬

FIG 021 ②	RADIATOR ③	P1 ④	Year ⑤ 2016	①

KEY NO	PART NO	PART NAME	SPEC	Q'TY	REPAIR	E/G SERIAL NO	REMARKS
023 001	14571042001	RADIATOR SET		1			
023 002	14571042101	RADIATOR SET		1			
023 003	14571042171	SHROUD		1			
02 006 ⑥	1457 301HB ⑦	NET COMP ⑧	⑨	⑩	⑪	⑫	⑭
02 007	V27 012	BOLT , WING	M6X12				

NOTE	⑬

① Group Indication : Indicate the relevant location of the part with a symbol illustration.

② Figure Number: Indicate the relevant section of the machine with a figure number.

③ Section Name : Indicate the section name of the machine

④ Section Page : Page number of the section in this catalogue.

⑤ Date : Show the Year of the section made or updated

https://truckmanualshub.com/

⑥ Key number : Indicating number of each parts in the illustration.

⑦ TYM Part Number : Unique part number maintained in our system

The part number starting with V or W means it is TYM s standard part

The alphabet at the end of part number means the status of material or the color of paint

Legend : M:Machining, DG:Dark Gray, BR:Bright Red, SW:Summer White, DD:Heat proof Black, PB:Pure Black, TY: Tangerine Yellow, GB:Glossy Black, JY:JCB Yellow, MS:JCB Silver etc.

⑧ JCB Part Number : Unique part number maintained in JCB

⑨ Description : Description of a part, Abbreviation means as follows.

- Indicate the mixture condition of a part

ASSY : Assembly with a mixture of several parts, so can be broke up retaining their original form

COMP : Assembly with a mixture of several parts, but can not be broke up retaining their original form

SUB : mean the same as ASSY but used in lower level in aid.

SET : Part consist of ASSY, COMP, and part(s) as a group

- Indicate the location of a part

LH : Left, RH : Right, FR : Front, RR : Rear, UPR : Upper, LOW : Lower

⑩ Type : Type of the standard items like bolt or nut

⑪ Quantity : Total quantity of the part referred to in the page.

Symbol below indicate options. So, show the quantity of each option.

Note) AR means as requested quantity.

⑫ Repair Parts consumption frequency class: indicate the level of a part in aid of stocking spares, anticipating the service requirements.

A :Fast moving part (frequently required)

B :Medium moving part (sometimes required)

C :Slow moving part (rarely required)

⑬ Modification :

Year/Month~ : From which the change starts

~Year/Month : To which the part installed

⑭ Notes : explain some reference data

⑮ Remark : indicate reference data or abbreviation in the content.

https://truckmanualshub.com/

ENGINEERING GROUP INDEX

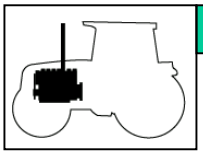

1 ENGINE

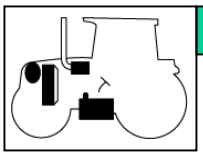

2 ENGINE ACCESSORIES & CONTROL

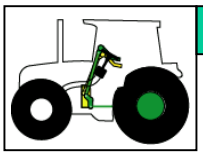

3 CLUTCH,BRAKE,STEERING

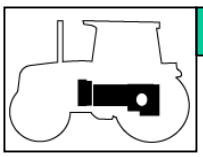

4 TRANSMISSION & REAR AXLE

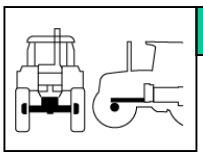

5 FRONT AXLE,SUPPORTER & DRIVE SHAFT

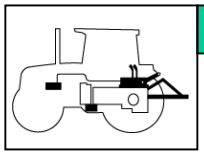

6 HYDRAULICS & 3-POINT LINK

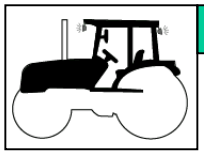

7 SHEET METAL & CABIN

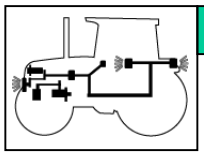

8 ELECTRICALS & HARNESS

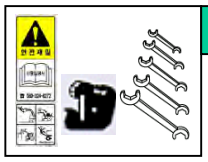

9 WEIGHT,LABEL,TOOLS

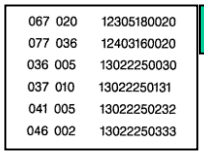

067	020	12305180020
077	036	12403160020
036	005	13022250030
037	010	13022250131
041	005	13022250232
046	002	13022250333

10 NUMERICAL INDEX

https://truckmanualshub.com/

CONTENTS

ENGINE

1 ENGINE

FIG 101 CYLINDER BLOCK----------04
FIG 102 GEAR HOUSING----------06
FIG 103 FLYWHEEL HOUSING & OIL SUMP----------08
FIG 104 CYLINDER HEAD & BONNET----------10
FIG 105 SUCTION MANIFOLD----------14
FIG 106 EXHAUST MANIFOLD----------16
FIG 107 DIESEL PARTICULATE FILTER(DPF)----------18
FIG 108 CAMSHAFT & DRIVING GEAR----------20
FIG 109 CRANKSHAFT & PISTON----------22
FIG 110 LUB.OIL SYSTEM----------24
FIG 111 COOLING WATER SYSTEM----------26
FIG 112 FUEL SUPPLY PUMP----------28
FIG 113 FUEL INJECTION VALVE----------30
FIG 114 FUEL PIPE----------32
FIG 115 STARTER MOTOR----------34
FIG 116 GENERATOR----------36
FIG 117 ELECTRONIC CONTROL UNIT(ECU)----------38
FIG 118 ELECTRIC PARTS----------40

https://truckmanualshub.com/

CHASSIS

2 ENGINE ACCESSORIES & CONTROL

FIG 201 AIR CLEANER----------48
FIG 202 RADIATOR----------50
FIG 203 MUFFLER----------52
FIG 204 FUEL TANK & HOSE ----------54
FIG 205 OIL COOLER----------56

3 CLUTCH,BRAKE,STEERING

FIG 301 FLYWHEEL & CLUTCH----------62
FIG 302 BRAKE PEDAL----------64
FIG 303 BRAKE----------66
FIG 304 FRONT WHEEL MOUNTING----------68
FIG 305 REAR WHEEL MOUNTING----------70
FIG 306 STEERING WHEEL & DASH COVER----------72
FIG 307 STEERING VALVE & TILT----------74
FIG 308 STEERING CYLINDER----------76

4 TRANSMISSION & REAR AXLE

FIG 401 TRANSMISSION FRONT CASE----------82
FIG 402 HST----------84
FIG 403 MID CASE----------86
FIG 404 4WD DRIVE GEAR----------88
FIG 405 INPUT GEAR----------90
FIG 406 SUB CHANGE GEARS----------92

https://truckmanualshub.com/

FIG 407 PINION GEARS----------94
FIG 408 P.T.O DRIVE SHAFT----------96
FIG 409 P.T.O CHANGE GEARS----------98
FIG 410 DIFF LOCK----------100
FIG 411 TRANSMISSION REAR CASE----------102
FIG 412 REAR AXLE HOUSINGS(1)----------104
FIG 413 REAR AXLE HOUSINGS(2)----------106
FIG 414 MID P.T.O GEARS----------108
FIG 415 SUB CHANGE LEVER----------110
FIG 416 FORWARD & REVERSE CONTROL LINKAGE----------112
FIG 417 CRUISE CONTROL KIT(OPTION)----------114
FIG 418 4WD CHANGE LEVER----------116

5 FRONT AXLE

FIG 501 FRONT AXLE BRACKET ----------122
FIG 502 FRONT DIFFERENTIAL GEARS ----------124
FIG 503 FRONT AXLE HOUSING----------126
FIG 504 FRONT GEAR CASE (1)----------128
FIG 505 FRONT GEAR CASE (2)----------130

6 HYDRAULICS & 3-POINT LINK

FIG 601 GEAR PUMP----------136
FIG 602 CYLINDER CASE ----------138
FIG 603 LIFT ARM----------140
FIG 604 CYLINDER----------142
FIG 605 POSITION LINK(1)----------144
FIG 606 POSITION LINK(2)----------146
FIG 607 CONTROL VALVE----------148
FIG 608 POSITION LEVER----------150
FIG 609 HYDRAULIC PIPE(1)----------152
FIG 610 HYDRAULIC PIPE(2)----------154
FIG 611 EXTERIOR HYD.VALVE----------156
FIG 611-1 VALVE Kit----------158
FIG 612 3-POINT LINK----------160
FIG 613 HITCH & COVER----------162

https://truckmanualshub.com/

7 SHEET METAL & CABIN

FIG 701 HOOD (1)----------168
FIG 702 HOOD (2)----------170
FIG 704 FENDER & REAR FRAME----------172
FIG 705 DASHPANEL----------174
FIG 706 SEAT & MAT ----------176
FIG 707 DOOR ----------178
FIG 708 FRONT GLASS ----------182
FIG 709 REAR GLASS ----------184
FIG 710 SUB FENDER & COVER ----------186
FIG 711 MIRROR ----------188
FIG 712 HEATER & AIR-CON ----------190
FIG 713 FENDER COVER ----------194
FIG 714 ROOF ----------196
FIG 715 CABIN INTERIOR ----------198

8 ELECTRICALS & HARNESS

FIG 801 BATTERY & MOUNTING----------204
FIG 802 LIGHTS----------206
FIG 803 INSTRUMENT PANEL----------208
FIG 804 ELECTRIC SYSTEM----------210
FIG 805 HARNESS (1)----------212
FIG 806 HARNESS (2)----------214

9 WEIGHT,LABEL,TOOLS

FIG 901 TOOL & ACCESSORY----------220
FIG 902 LABEL----------222
FIG 903 WEIGHT----------226

10 NUMERICAL INDEX

ENGINE----------231
CHASSIS----------235

https://truckmanualshub.com/

ENGINE

1 ENGINE

FIG 101 CYLINDER BLOCK----------04
FIG 102 GEAR HOUSING----------06
FIG 103 FLYWHEEL HOUSING & OIL SUMP----------08
FIG 104 CYLINDER HEAD & BONNET----------10
FIG 105 SUCTION MANIFOLD----------14
FIG 106 EXHAUST MANIFOLD----------16
FIG 107 DIESEL PARTICULATE FILTER(DPF)----------18
FIG 108 CAMSHAFT & DRIVING GEAR----------20
FIG 109 CRANKSHAFT & PISTON----------22
FIG 110 LUB.OIL SYSTEM----------24
FIG 111 COOLING WATER SYSTEM----------26
FIG 112 FUEL SUPPLY PUMP----------28
FIG 113 FUEL INJECTION VALVE----------30
FIG 114 FUEL PIPE----------32
FIG 115 STARTER MOTOR----------34
FIG 116 GENERATOR----------36
FIG 117 ELECTRONIC CONTROL UNIT(ECU)----------38
FIG 118 ELECTRIC PARTS----------40

https://truckmanualshub.com/

CHASSIS

2 ENGINE ACCESSORIES & CONTROL

FIG 201 AIR CLEANER----------48
FIG 202 RADIATOR----------50
FIG 203 MUFFLER----------52
FIG 204 FUEL TANK & HOSE ----------54
FIG 205 OIL COOLER----------56

https://truckmanualshub.com/

3 CLUTCH,BRAKE,STEERING

FIG 301 FLYWHEEL & CLUTCH----------62
FIG 302 BRAKE PEDAL----------64
FIG 303 BRAKE----------66
FIG 304 FRONT WHEEL MOUNTING----------68
FIG 305 REAR WHEEL MOUNTING----------70
FIG 306 STEERING WHEEL & DASH COVER----------72
FIG 307 STEERING VALVE & TILT----------74
FIG 308 STEERING CYLINDER----------76

https://truckmanualshub.com/

4 TRANSMISSION & REAR AXLE

FIG 401 TRANSMISSION FRONT CASE----------82
FIG 402 HST----------84
FIG 403 MID CASE----------86
FIG 404 4WD DRIVE GEAR----------88
FIG 405 INPUT GEAR----------90
FIG 406 SUB CHANGE GEARS----------92
FIG 407 PINION GEARS----------94
FIG 408 P.T.O DRIVE SHAFT----------96
FIG 409 P.T.O CHANGE GEARS----------98
FIG 410 DIFF LOCK----------100
FIG 411 TRANSMISSION REAR CASE----------102
FIG 412 REAR AXLE HOUSINGS(1)----------104
FIG 413 REAR AXLE HOUSINGS(2)----------106
FIG 414 MID P.T.O GEARS----------108
FIG 415 SUB CHANGE LEVER----------110
FIG 416 FORWARD & REVERSE CONTROL LINKAGE----------112
FIG 417 CRUISE CONTROL KIT(OPTION)----------114
FIG 418 4WD CHANGE LEVER----------116

https://truckmanualshub.com/

5 FRONT AXLE

FIG 501 FRONT AXLE BRACKET ----------122
FIG 502 FRONT DIFFERENTIAL GEARS ----------124
FIG 503 FRONT AXLE HOUSING----------126
FIG 504 FRONT GEAR CASE (1)----------128
FIG 505 FRONT GEAR CASE (2)----------130

https://truckmanualshub.com/

6 HYDRAULICS & 3-POINT LINK

FIG 601 GEAR PUMP----------136
FIG 602 CYLINDER CASE ----------138
FIG 603 LIFT ARM----------140
FIG 604 CYLINDER----------142
FIG 605 POSITION LINK(1)----------144
FIG 606 POSITION LINK(2)----------146
FIG 607 CONTROL VALVE----------148
FIG 608 POSITION LEVER----------150
FIG 609 HYDRAULIC PIPE(1)----------152
FIG 610 HYDRAULIC PIPE(2)----------154
FIG 611 EXTERIOR HYD.VALVE----------156
FIG 611-1 VALVE Kit----------158
FIG 612 3-POINT LINK----------160
FIG 613 HITCH & COVER----------162

https://truckmanualshub.com/

7 SHEET METAL & CABIN

FIG 701 HOOD (1)----------168
FIG 702 HOOD (2)----------170
FIG 704 FENDER & REAR FRAME----------172
FIG 705 DASHPANEL----------174
FIG 706 SEAT & MAT ----------176
FIG 707 DOOR ----------178
FIG 708 FRONT GLASS ----------182
FIG 709 REAR GLASS ----------184
FIG 710 SUB FENDER & COVER ----------186
FIG 711 MIRROR ----------188
FIG 712 HEATER & AIR-CON ----------190
FIG 713 FENDER COVER ----------194
FIG 714 ROOF ----------196
FIG 715 CABIN INTERIOR ----------198

https://truckmanualshub.com/

8 ELECTRICALS & HARNESS

FIG 801 BATTERY & MOUNTING----------204
FIG 802 LIGHTS----------206
FIG 803 INSTRUMENT PANEL----------208
FIG 804 ELECTRIC SYSTEM----------210
FIG 805 HARNESS (1)----------212
FIG 806 HARNESS (2)----------214

https://truckmanualshub.com/

9 WEIGHT,LABEL,TOOLS

FIG 901 TOOL & ACCESSORY----------220
FIG 902 LABEL----------222
FIG 903 WEIGHT----------226

https://truckmanualshub.com/

10 NUMERICAL INDEX

ENGINE ---------- 231
CHASSIS ---------- 235

https://truckmanualshub.com/

FIG 101 T394	CYLINDER BLOCK	P1	Year 2016	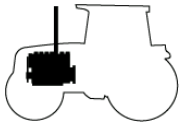

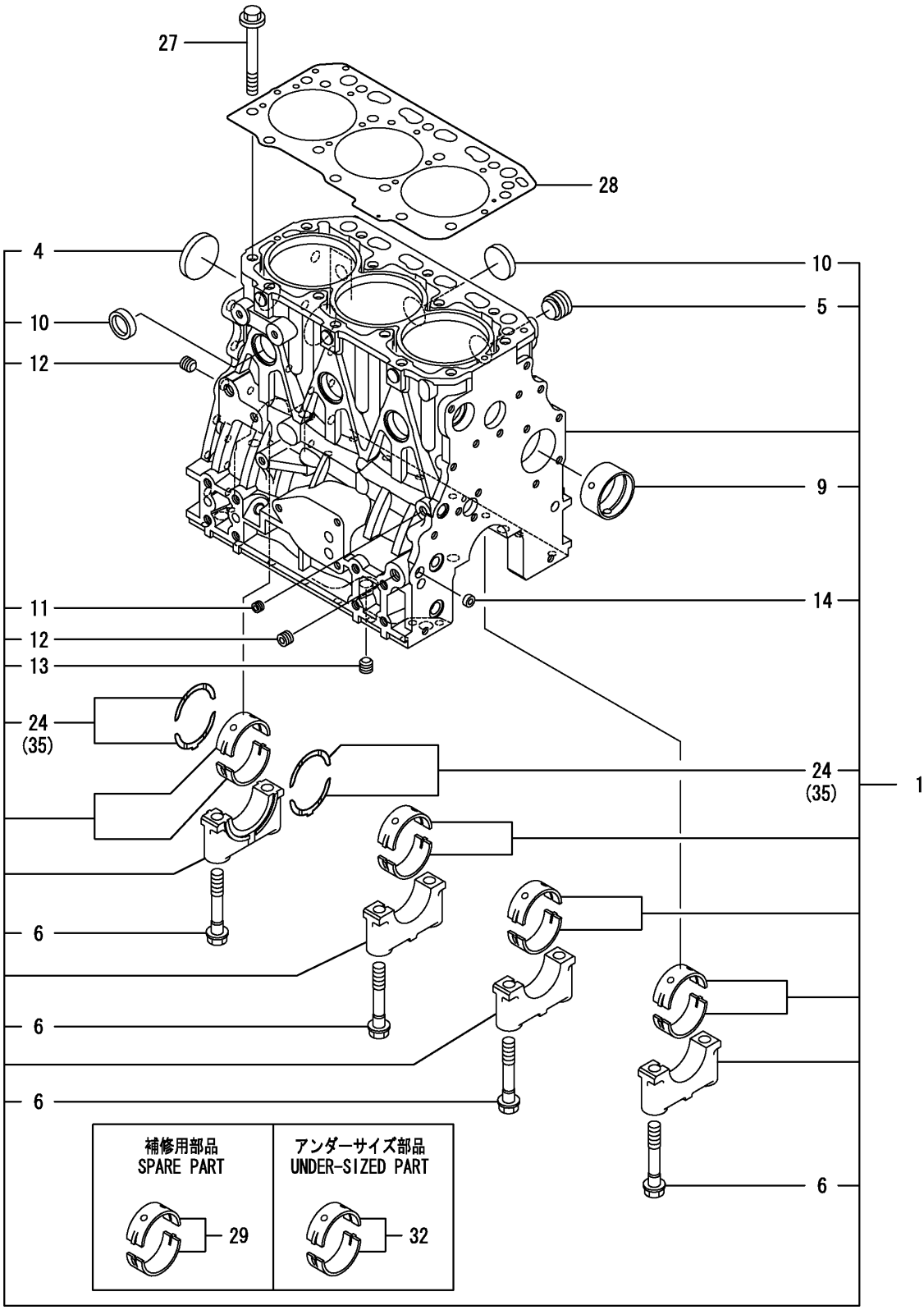

NOTE

https://truckmanualshub.com/

FIG 101

T394

CYLINDER BLOCK

P1

Year

2016

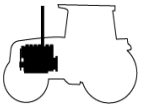

KEY NO.		PART NO.	DESCRIPSTION	SPEC.	QTY. T394	REPAIR	ENG.SERIAL NO	REMARKS
101	1	129A00-01560	BLOCK ASSY, CYLINDER		1			
101	4	129001-01250	PLUG, DISH TYPE 50 1		1			
101	5	171051-01921	PLUG, NPTF1 1		1			
101	6	129150-02020	BOLT, METAL CAP		8			
101	9	129795-02412	BUSH, CAMSHAFT		1			
101	10	27241-300000	PLUG 30		6			
101	11	124060-01050	PLUG, PT1/8		1			
101	12	124160-01910	PLUG, PT1/4		2			
101	13	124160-01910	PLUG, PT1/4		1			
101	14	27241-120000	PLUG, 12		1			
101	24	129150-02931	BEARING ASSY, THRUST		2			
101	27	129150-01200	BOLT, CYLINDER HEAD		14			
101	28	129A00-01331	GASKET ASSY, HEAD		1			
101	29	129001-02931	BEARING ASSY, MAIN		4			
101	32	129150-02871	BEARING ASSY, MAIN		4			
101	35	129150-02941	BEARING, THRUST 0.25		1			

NOTE

https://truckmanualshub.com/

FIG 102 T394	GEAR HOUSING	P1	Year 2016	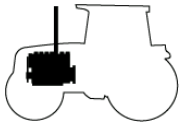

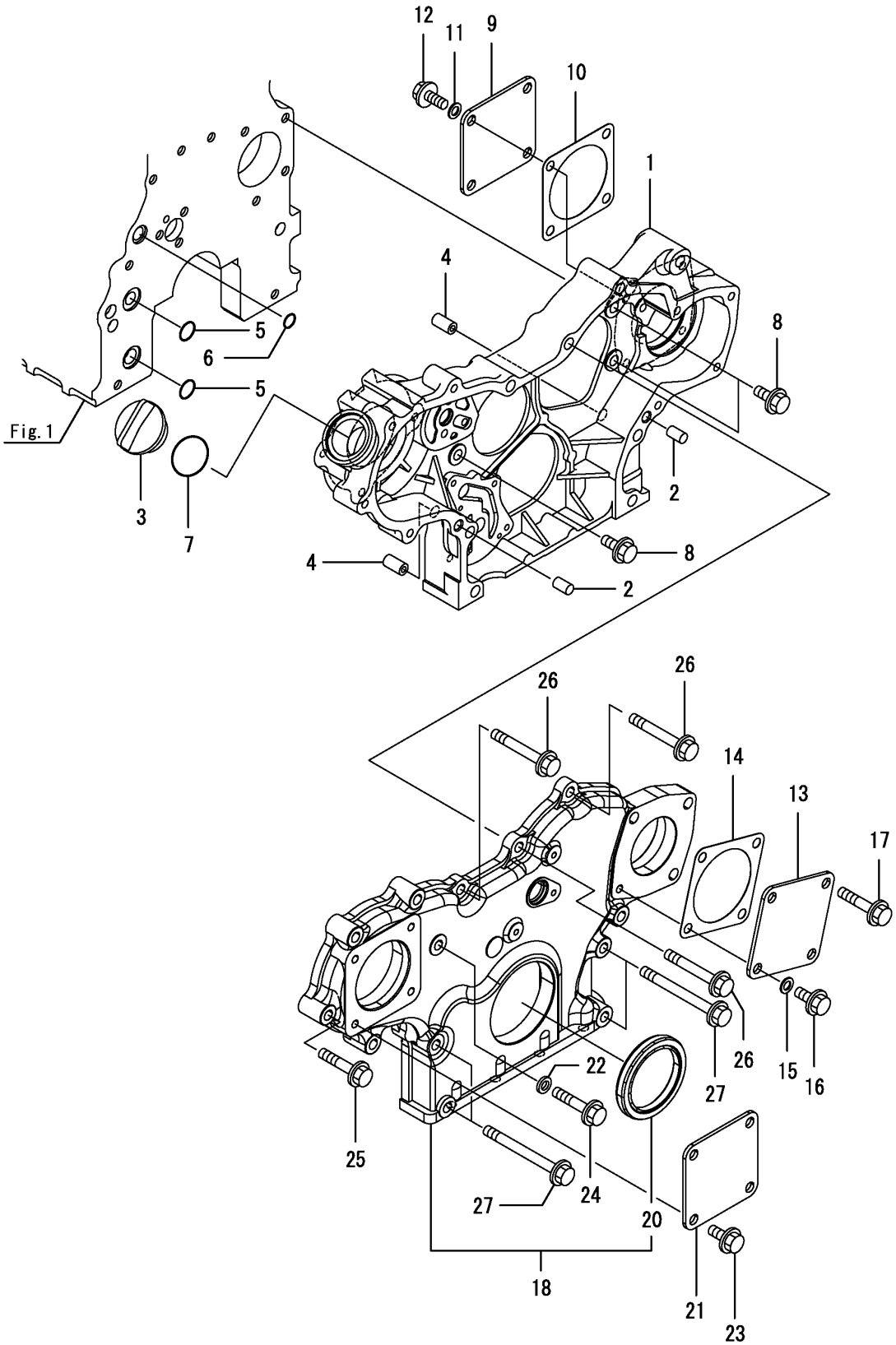

NOTE

https://truckmanualshub.com/

FIG 102

T394

GEAR HOUSING

P1

Year

2016

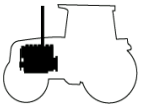

KEY NO.		PART NO.	DESCRIPSTION	SPEC.	QTY. T394	REPAIR	ENG.SERIAL NO	REMARKS
102	1	129C00-01500	CASE, GEAR		1			
102	2	129100-01580	PIN, PARALLEL 8X16		2			
102	3	124160-01751	CAP, FILLER		1			
102	4	129795-01950	PIPE, DOWEL L=18		2			
102	5	119609-32040	O-RING, P16		2			
102	6	119624-32040	O-RING, P12.0		1			
102	7	24311-000320	O-RING, 1AP32.0		1			
102	8	26106-080162	BOLT, M8X 16 PLATED		3			
102	9	124240-01871	COVER, PUMP		1			
102	10	129C26-01890	GASKET, HO-P		1			
102	11	22190-080002	WASHER, SEAL 8		1			
102	12	26106-080162	BOLT, M8X 16 PLATED		4			
102	13	124240-01871	COVER, PUMP		1			
102	14	129C26-01890	GASKET, HO-P		1			
102	15	22190-080002	WASHER, SEAL 8		1			
102	16	26106-080142	BOLT, M8X 14 PLATED		1			
102	17	26106-080352	BOLT, M8X 35 PLATED		3			
102	18	129C00-01550	COVER ASSY, GEAR CAS		1			
102	20	119934-01800	SEAL, OIL		1			
102	21	124240-01871	COVER, PUMP		1			
102	22	22190-080002	WASHER, SEAL 8		1			
102	23	26106-080162	BOLT, M8X 16 PLATED		4			
102	24	26106-080352	BOLT, M8X 35 PLATED		1			
102	25	26106-080402	BOLT, M8X 40 PLATED		5			
102	26	26106-080602	BOLT, M8X 60 PLATED		3			
102	27	26106-080852	BOLT, M8X 85 PLATED		4			

NOTE

https://truckmanualshub.com/

FIG 103 T394	FLYWHEEL HOUSING & OIL SUMP	P1	Year 2016	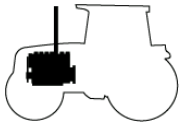

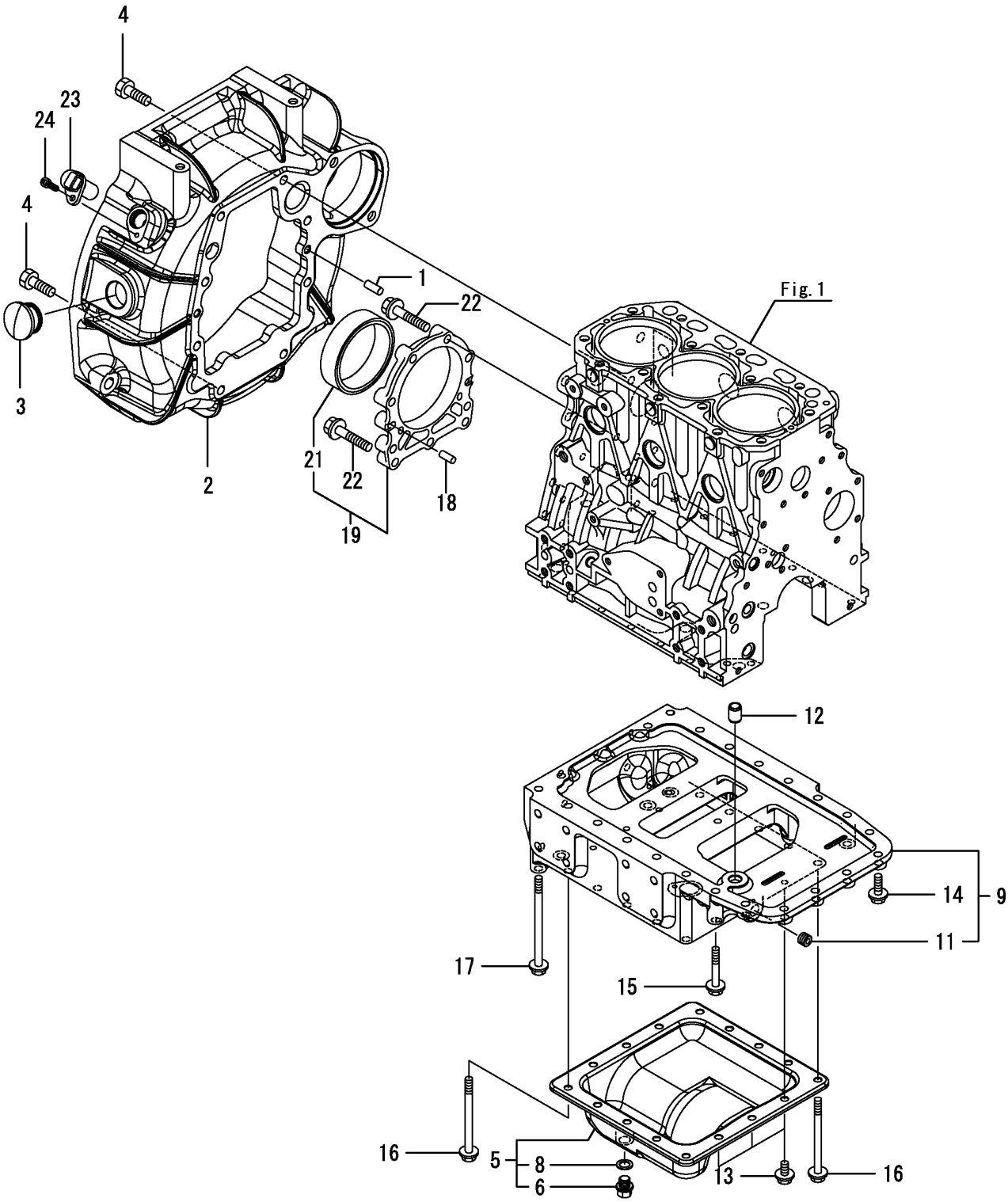

NOTE	

https://truckmanualshub.com/

FIG103 T394	FLYWHEEL HOUSING & OIL SUMP	P1	Year 2016

KEY NO.		PART NO.	DESCRIPSTION	SPEC.	QTY. T394	REPAIR	ENG.SERIAL NO	REMARKS
103	1	129100-01580	PIN, PARALLEL 8X16		2			
103	2	129A26-01600	HOUSING, FLYWHEEL		1			
103	3	119620-01750	CAP		1			
103	4	26206-100252	BOLT, M10X 25 PLATED		8			
103	5	129052-01551	COVER ASSY, OIL SUMP		1			
103	6	129054-01640	PLUG, DRAIN 12		1			
103	8	22190-120002	WASHER, SEAL 12		1			
103	9	129052-01692	SUMP ASSY, OIL		1			
103	11	124160-01910	PLUG, PT1/4		1			
103	12	129555-01750	PIPE, DOWEL 14X19		1			
103	13	26106-080122	BOLT, M8X 12 PLATED		6			
103	14	26106-080252	BOLT, M8X 25 PLATED		6			
103	15	26106-080502	BOLT, M8X 50 PLATED		2			
103	16	26106-081002	BOLT, M8X100 PLATED		10			
103	17	26106-081202	BOLT, M8X120 PLATED		4			
103	18	129100-01580	PIN, PARALLEL 8X16		2			
103	19	129100-01640	CASE ASSY, OIL SEAL		1			
103	21	129795-01780	SEAL, OIL		1			
103	22	129486-01670	BOLT, M8X30		9			
103	23	129A00-21710	SENSOR, FLYWHEEL REV		1			
103	24	26450-060162	BOLT, M6X 16		1			

NOTE

https://truckmanualshub.com/

FIG 104

T394

CYLINDER HEAD & BONNET

P1

Year

2016

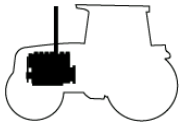

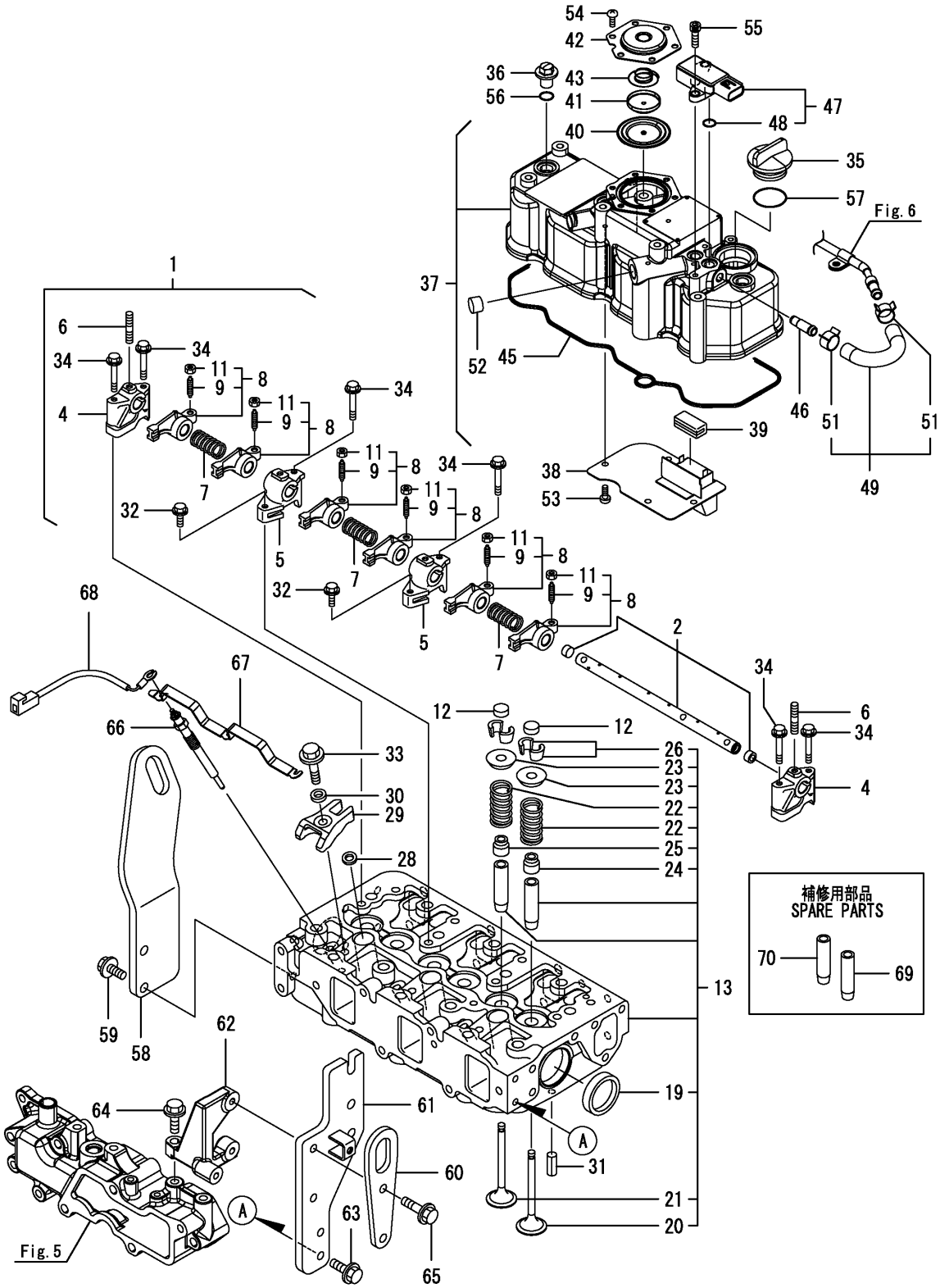

NOTE

https://truckmanualshub.com/

FIG 104

T394

CYLINDER HEAD & BONNET

P1

Year

2016

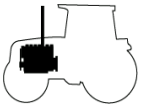

KEY NO.		PART NO.	DESCRIPSTION	SPEC.	QTY. T394	REPAIR	ENG.SERIAL NO	REMARKS
104	1	129004-11241	SHAFT ASSY, ROCKER		1			
104	2	129004-11251	SHAFT, ROCKER ARM		1			
104	4	119802-11260	SUPPORT, ROCKER ARM		2			
104	5	119802-11270	SUPPORT, ROCKER ARM		2			
104	6	119802-11280	BOLT, STUD		3			
104	7	129150-11280	SPRING, ROCKER		3			
104	8	129004-11650	ARM ASSY, ROCKER		6			
104	9	129150-11230	SCREW, VALVE ADJUST		6			
104	11	129150-11750	NUT, M8		6			
104	12	129150-11370	CAP, VALVE		6			
104	13	129A00-11710	HEAD ASSY, CYLINDER		1			
104	19	27241-400000	PLUG, 40		2			
104	20	129005-11100	VALVE, SUCTION		3			
104	21	129100-11112	VALVE, EXHAUST		3			
104	22	129795-11120	SPRING, VALVE		6			
104	23	129795-11180	RETAINER, SPRING		6			
104	24	124460-11340	SEAL, VALVE STEM		3			
104	25	129A00-11340	SEAL, VALVE STEM		3			
104	26	27310-080001	COTTER, 8		6			
104	28	129978-11871	GASKET,INJECTOR		3			
104	29	129A00-11900	RETAINER, INJECTOR		3			
104	30	120270-54410	WASHER, INJECTOR		3			
104	31	22351-060012	PIN, SPRING 6.0X12		2			
104	32	26106-080252	BOLT, M8X 25 PLATED		2			
104	33	26106-080352	BOLT, M8X 35 PLATED		3			
104	34	26106-080502	BOLT, M8X 50 PLATED		6			
104	35	124160-01751	CAP, FILLER		1			
104	36	124160-11360	KNOB		3			
104	37	129A00-11360	BONNET ASSY		1			
104	38	129004-03010	PLATE, BAFFLE		1			
104	39	129150-03070	BAFFLE, BREATHER		1			
104	40	123907-03100	DIAPHRAGM		1			
104	41	123907-03110	PLATE		1			
104	42	123907-03120	PLATE, BREATHER		1			
104	43	123907-03140	SPRING, DIAPHRAGM		1			
104	45	129A00-11310	GASKET, BONNET		1			
104	46	129A00-11330	JOINT		1			
104	47	129978-12700	SENSOR,PRESSURE		1			
104	48	129A00-12780	O-RING,PRES SENSOR		2			
104	49	129A00-13360	HOSE ASSY, PRES EXH		1			
104	51	129A00-13380	CLIP, HOSE 14		2			
104	52	119640-61400	PLUG		1			
104	53	22857-500100	SCREW, 5X10		4			
104	54	22857-500100	SCREW, 5X10		6			
104	55	26450-060162	BOLT, M6X 16		2			
104	56	24311-000120	O-RING, 1AP12.0		3			
104	57	24311-000320	O-RING, 1AP32.0		1			
104	58	129A00-07900	LIFTER, ENGINE		1			

NOTE

https://truckmanualshub.com/

FIG 104 T394	CYLINDER HEAD & BONNET	P2	Year 2016	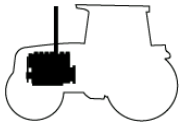

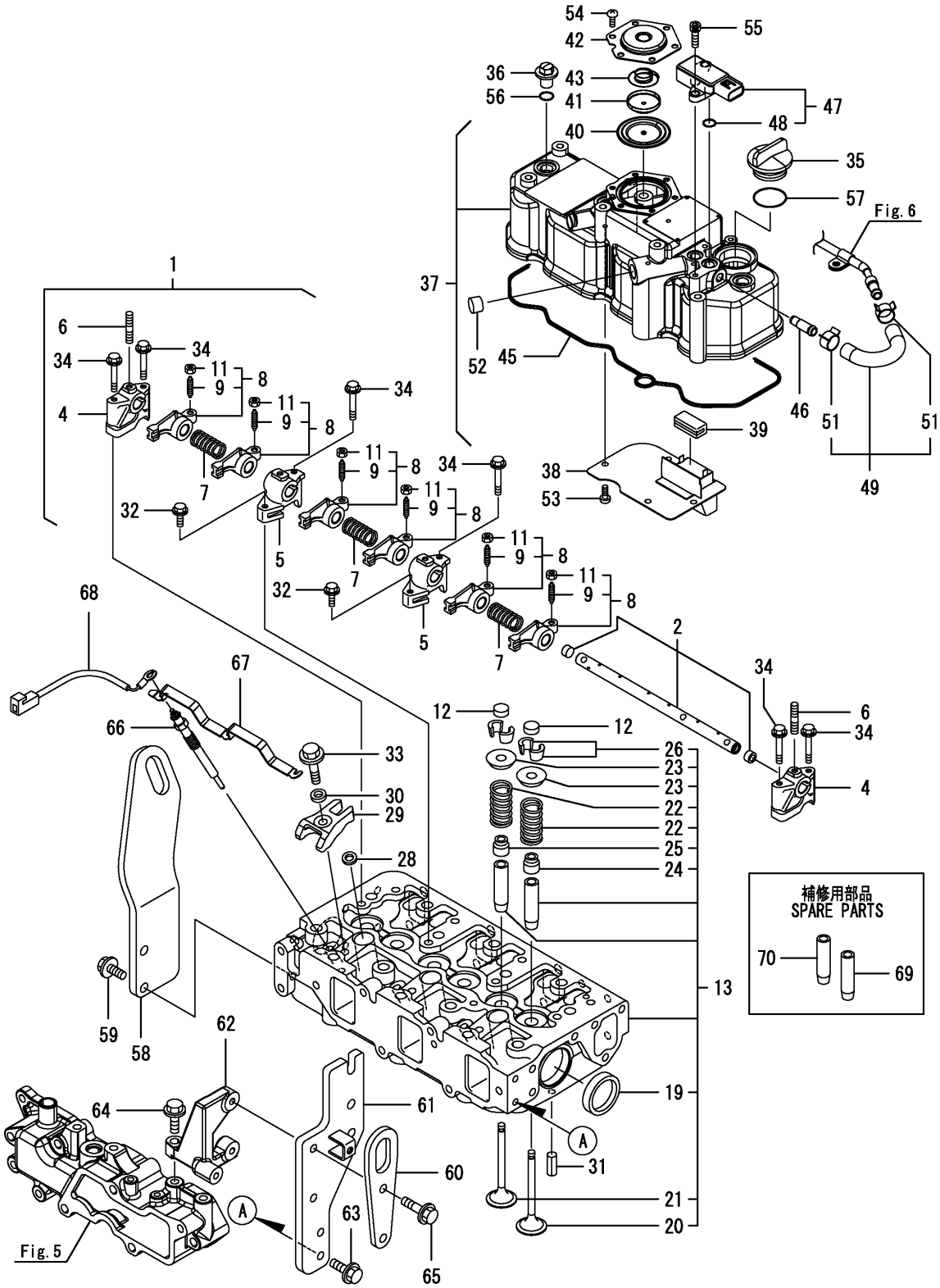

NOTE

https://truckmanualshub.com/

FIG 104

T394

CYLINDER HEAD & BONNET

P2

Year

2016

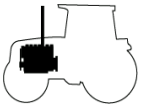

KEY NO.		PART NO.	DESCRIPSTION	SPEC.	QTY. T394	REPAIR	ENG.SERIAL NO	REMARKS
104	59	26106-080202	BOLT, M8X 20 PLATED		2			
104	60	129A01-07900	LIFTER, ENGINE		1			
104	61	129A01-16810	STAY,DPF		1			
104	62	129A23-17380	BRACKET, DPF		1			
104	63	26106-080202	BOLT, M8X 20 PLATED		2			
104	64	26106-080252	BOLT, M8X 25 PLATED		1			
104	65	26106-080302	BOLT, M8X 30 PLATED		2			
104	66	129008-77800	PLUG, GLOW		3			
104	67	129A00-77820	CONNECTOR, GLOW PLUG		1			
104	68	119803-77830	HARNESS, WIRE		1			
104	69	120130-11860	GUIDE, VALVE		3			
104	70	129150-11810	GUIDE, VALVE		3			

NOTE

https://truckmanualshub.com/

FIG 105 T394	SUCTION MANIFOLD	P1	Year 2016	

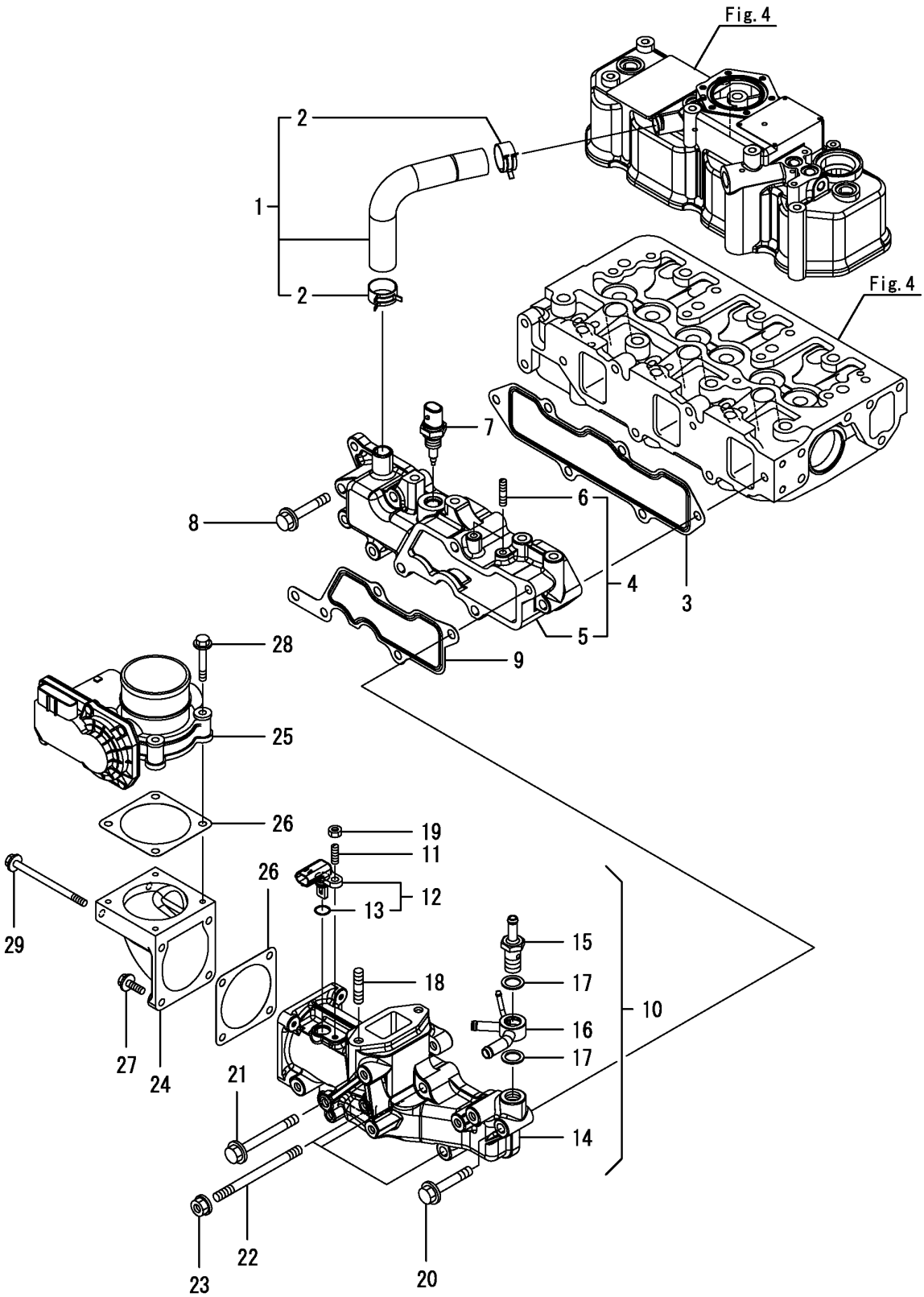

NOTE

https://truckmanualshub.com/

FIG 105

T394

SUCTION MANIFOLD

P1

Year

2016

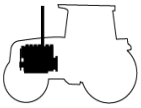

KEY NO.		PART NO.	DESCRIPSTION	SPEC.	QTY. T394	REPAIR	ENG.SERIAL NO	REMARKS
105	1	129005-03080	HOSE ASSY, BREATHER		1			
105	2	129410-03990	CLAMP, HOSE 21.5		2			
105	3	129A00-12110	GASKET,INT.MANIFOLD		1			
105	4	129A00-12150	MANIFOLD ASSY,INTAKE		1			
105	5	129A00-12100	MANIFOLD, AIR INTAKE		1			
105	6	26216-060202	STUD, M6X 20		2			
105	7	129A00-12720	SENSOR,AIR TEMP		1			
105	8	26106-080502	BOLT, M8X 50 PLATED		3			
105	9	129A00-12810	GASKET, COLLECTOR		1			
105	10	129A00-12851	COLLECTOR, INT CMP		1			
105	11	119660-01570	BOLT, STUD M6X12		1			
105	12	129A00-12711	SENSOR,AIR TEMP		1			
105	13	129A00-12790	O-RING,TEMP SENSOR		1			
105	14	129A00-12830	COLLECTOR, INT		1			
105	15	129A00-59110	JOINT, HOSE M14		1			
105	16	129A00-59120	JOINT, HOSE 14		1			
105	17	22190-140002	WASHER, SEAL 14		2			
105	18	26216-080302	STUD, M8X 30		2			
105	19	26716-060002	NUT, M6		1			
105	20	26106-080502	BOLT, M8X 50 PLATED		1			
105	21	26106-080752	BOLT, M8X 75 PLATED		1			
105	22	26216-081052	STUD, M8X105		3			
105	23	26306-080002	NUT, M8		3			
105	24	129A00-12820	BEND, INLET		1			
105	25	129A00-12900	THROTTLE BODY(INT		1			
105	26	129A00-12910	GASKET,THROTTLE 2		2			
105	27	26106-060202	BOLT, M6X 20 PLATED		2			
105	28	26106-060402	BOLT, M6X 40 PLATED		4			
105	29	26106-060902	BOLT, M6X 90 PLATED		2			

NOTE

https://truckmanualshub.com/

FIG 106 T394	EXHAUST MANIFOLD	P1	Year 2016	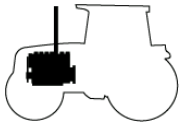

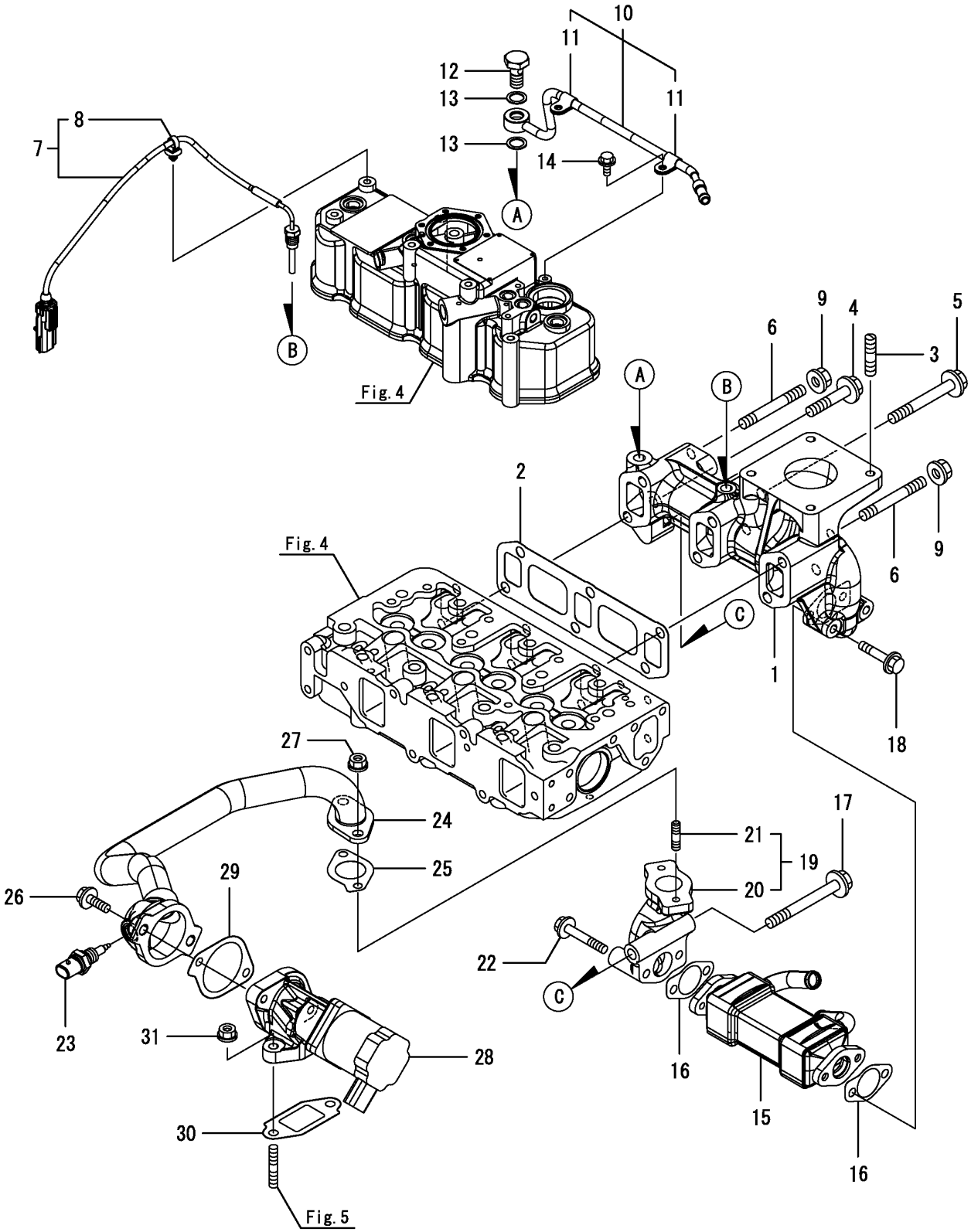

NOTE

https://truckmanualshub.com/

FIG 106

T394

EXHAUST MANIFOLD

P1

Year

2016

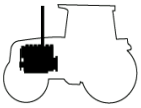

KEY NO.		PART NO.	DESCRIPSTION	SPEC.	QTY. T394	REPAIR	ENG.SERIAL NO	REMARKS
106	1	129A00-13100	MANIFOLD, EXHAUST		1			
106	2	129A00-13110	GASKET, EXH MANIFOLD		1			
106	3	123900-13130	STUD, M10X22		4			
106	4	129A01-13601	BOLT, M10X50 10.9T		1			
106	5	129F01-13630	BOLT, M10X80 10.9T		3			
106	6	129A01-13700	STUD,10X80		2			
106	7	129A00-13770	SENSOR,EXH TEMP.		1			
106	8	129A00-91200	BAND CLIP		1			
106	9	26306-100002	NUT, M10		2			
106	10	129A00-13300	PIPE ASSY, EXHAUST P		1			
106	11	23297-080061	CLAMP, A8X 6		2			
106	12	129A00-13350	BOLT, PIPE JOINT		1			
106	13	23414-120000	GASKET, 12X1.0		2			
106	14	26106-060122	BOLT, M6X 12 PLATED		2			
106	15	129A00-13400	COOLER, EGR		1			
106	16	129A00-13410	GASKET, EGR COOLER		2			
106	17	129F01-13600	BOLT, M10X90 10.9T		1			
106	18	129E00-13620	BOLT, M8X40 10.9		2			
106	19	129A00-13851	PIPE CMP, EGR OUT		1			
106	20	129A00-13861	PIPE,EGR OUT		1			
106	21	129418-18320	BOLT, STUD M8X20		2			
106	22	26106-080502	BOLT, M8X 50 PLATED		2			
106	23	129A00-13751	SENSOR,EGR GAS TEMP		1			
106	24	129A00-13800	PIPE(EGR CMP		1			
106	25	129927-13810	GASKET		1			
106	26	26106-080252	BOLT, M8X 25 PLATED		2			
106	27	26306-080002	NUT, M8		2			
106	28	129A00-13901	VALVE, EGR		1			
106	29	129A00-13910	GASKET, EGR-V IN		1			
106	30	129A00-13920	GASKET(EGR-V OUT		1			
106	31	26306-080002	NUT, M8		2			

NOTE

https://truckmanualshub.com/

FIG 107 T394	DIESEL PARTICULATE FILTER(DEF)	P1	Year 2016	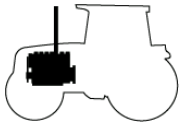

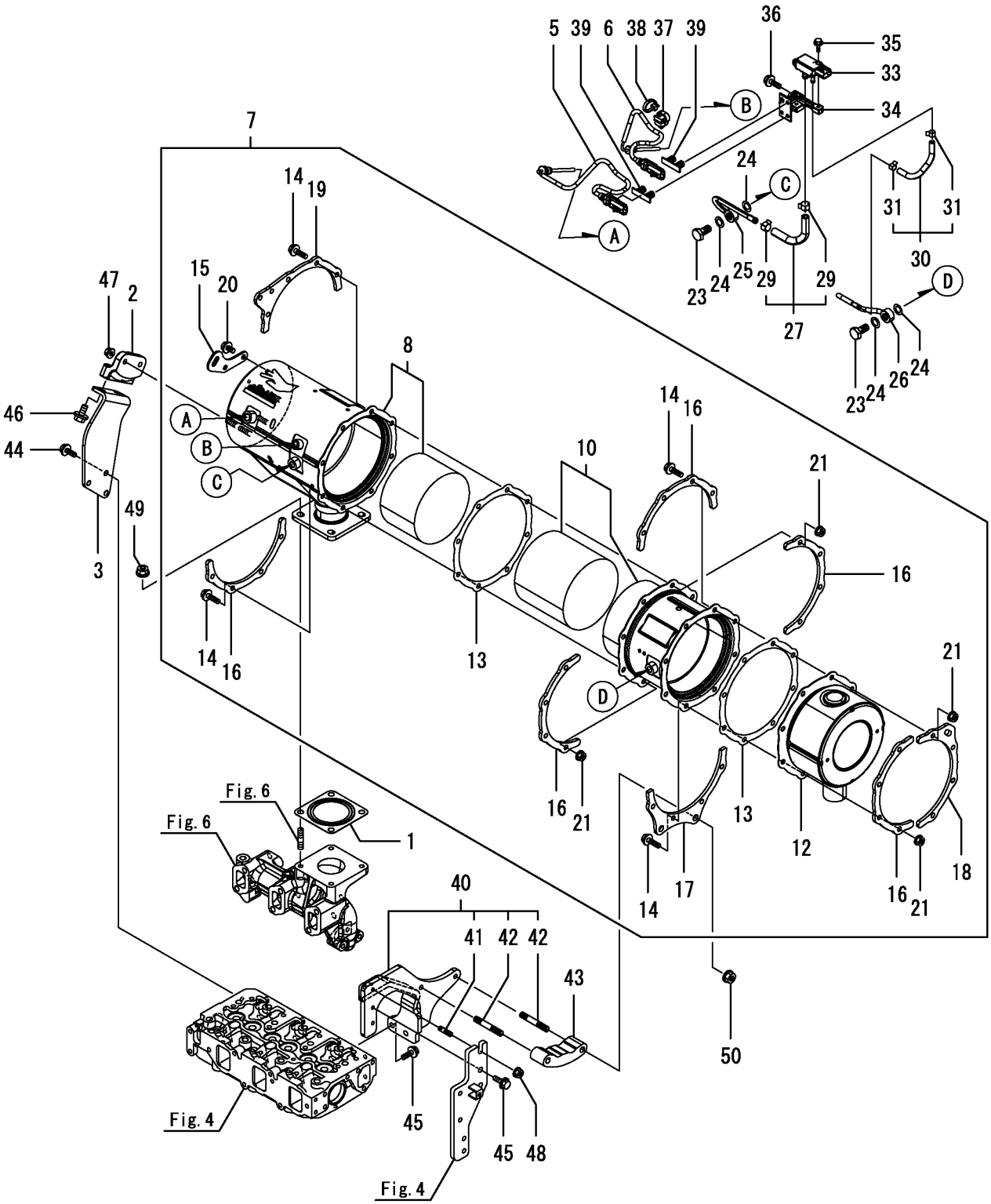

NOTE

https://truckmanualshub.com/

FIG 107

T394

DIESEL PARTICULATE FILTER(DPF)

P1

Year 2016

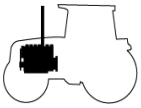

KEY NO.		PART NO.	DESCRIPSTION	SPEC.	QTY. T394	REPAIR	ENG.SERIAL NO	REMARKS
107	1	128300-13230	GASKET, SILENCER		1			
107	2	129A00-16820	STAY,DPF		1			
107	3	129A00-16830	STAY,DPF		1			
107	5	129C00-13940	SENSOR, EXH.TEMP		1			
107	6	129C00-13950	SENSOR, EXH.TEMP		1			
107	7	129A26-16000	DPF ASSY		1			
107	8	129A00-16210	CASE, DOC		1			
107	10	129A00-16410	CASE, SOOT FILTER		1			
107	12	129A00-16500	SILENCER, DPF		1			
107	13	129A00-16600	GASKET, DPF		2			
107	14	129A00-16610	BOLT, M8X28 10.9T		16			
107	15	129C01-16690	LIFTER, DPF		1			
107	16	129A00-16700	STIFFENER, DPF A		5			
107	17	129A00-16720	STIFFENER, DPF B		1			
107	18	129A00-16740	STIFFENER, DPF C		1			
107	19	129A00-16750	STIFFENER, DPF C		1			
107	20	26106-080142	BOLT, M8X 14 PLATED		2			
107	21	26306-080002	NUT, M8		16			
107	23	129A00-13350	BOLT, PIPE JOINT		2			
107	24	129A00-17311	GASKET,SENSOR		4			
107	25	129A00-17330	PIPE ASSY, SENSOR		1			
107	26	129A00-17360	PIPE ASSY, SENSOR		1			
107	27	129A00-17610	HOSE ASSY,PRES EXH		1			
107	29	129A00-17520	CLIP, HOSE		2			
107	30	129A00-17670	HOSE ASSY,PRES EXH		1			
107	31	129A00-17570	CLIP, HOSE		2			
107	33	129978-17700	SENSOR,PRESSURE		1			
107	34	129A00-17780	BRACKET, SENSOR		1			
107	35	26106-060162	BOLT, M6X 16 PLATED		2			
107	36	26106-080202	BOLT, M8X 20 PLATED		2			
107	37	129A00-91200	BAND CLIP		1			
107	38	129C00-91200	BAND		1			
107	39	129A00-91430	CLIP, CONNECTOR		2			
107	40	129A26-17360	STAY ASSY, DPF		1			
107	41	26216-080202	STUD, M8X 20		1			
107	42	26216-100552	STUD, M10X 55		2			
107	43	129A23-17370	SPACER, DPF		1			
107	44	26106-080162	BOLT, M8X 16 PLATED		3			
107	45	26106-080202	BOLT, M8X 20 PLATED		4			
107	46	26106-100202	BOLT, M10X 20 PLATED		2			
107	47	26306-080002	NUT, M8		2			
107	48	26306-080002	NUT, M8		1			
107	49	26306-100002	NUT, M10		4			
107	50	26306-100002	NUT, M10		2			

NOTE

https://truckmanualshub.com/

FIG 108 T394	CAMSHAFT & DRIVING GEAR	P1	Year 2016	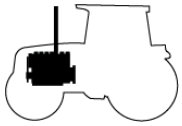

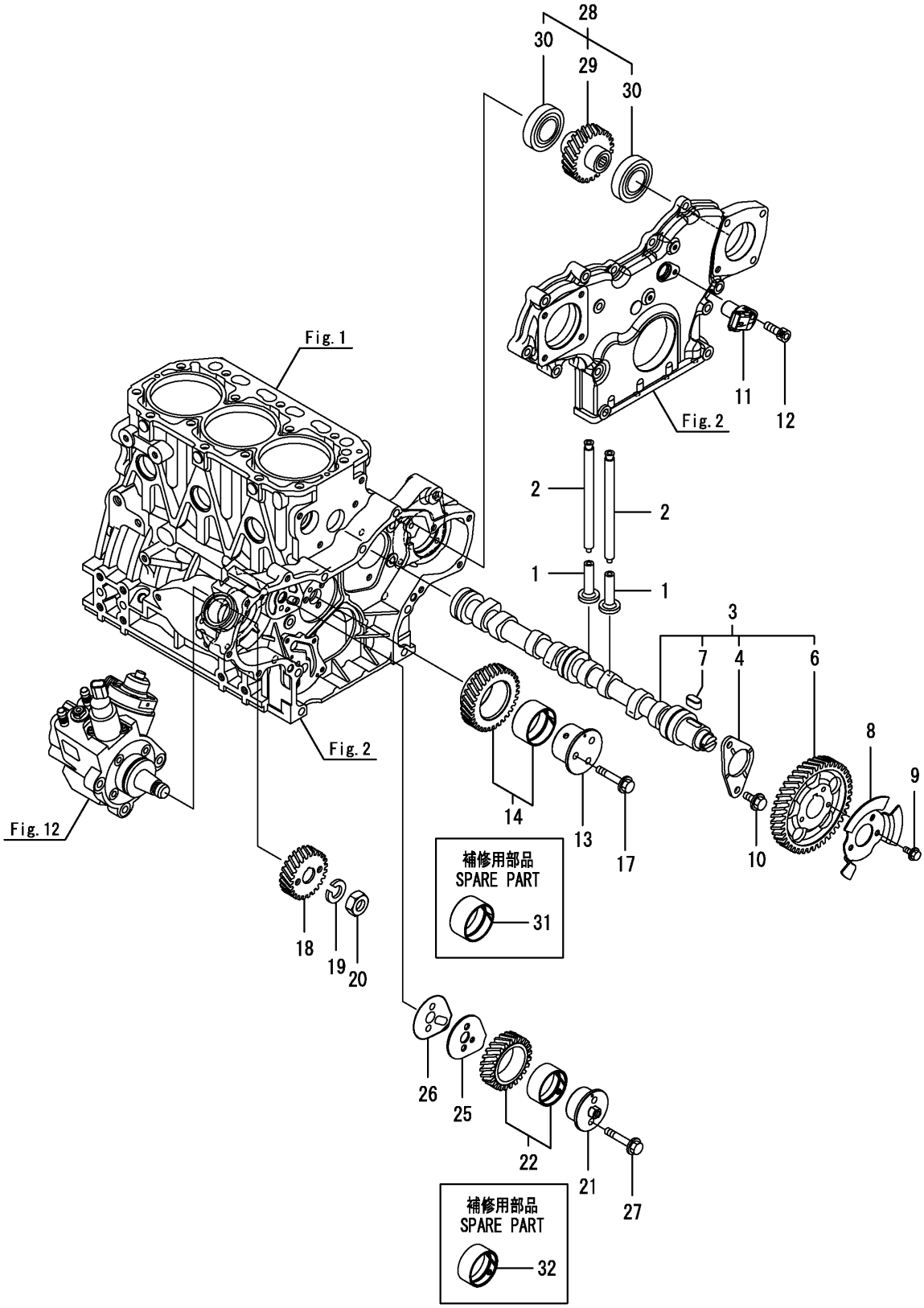

NOTE

https://truckmanualshub.com/

FIG 108

T394

CAMSHAFT & DRIVING GEAR

P1

Year

2016

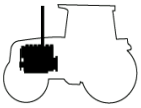

KEY NO.		PART NO.	DESCRIPSTION	SPEC.	QTY. T394	REPAIR	ENG.SERIAL NO	REMARKS
108	1	129150-14200	TAPPET 6		6			
108	2	129150-14400	PUSH-ROD, L=178		6			
108	3	129A00-14580	CAMSHAFT ASSY 1		1			
108	4	129150-02450	BEARING, THRUST		1			
108	6	129A00-14100	GEAR,CAMSHAFT 1		1			
108	7	22512-070140	KEY, 7X 14 1		1			
108	8	129A00-14700	PULSER, CAMSHAFT		1			
108	9	26106-060102	BOLT, M6X 10 PLATED		3			
108	10	26106-080142	BOLT, M8X 14 PLATED		2			
108	11	129A00-14710	SENSOR, GEAR REV		1			
108	12	26450-060162	BOLT, M6X 16 1		1			
108	13	129A00-25050	SHAFT, IDLE GEAR A		1			
108	14	129A00-25110	GEAR ASSY, IDLE A		1			
108	17	26106-080452	BOLT, M8X 45 PLATED		3			
108	18	129A00-25900	GEAR, SUPPLY PUMP		1			
108	19	22217-180000	WASHER, SPRING 18		1			
108	20	26776-180002	NUT, LOCK M18 1		1			
108	21	129A00-25060	SHAFT, IDLE GEAR B		1			
108	22	129A00-25120	GEAR ASSY, IDLE B		1			
108	25	129A00-25200	PLATE, IDLE SHAFT B		1			
108	26	129A00-25210	GASKET, IDLE SHAFT B		1			
108	27	26106-080402	BOLT, M8X 40 PLATED		2			
108	28	129A26-26000	DRIVE ASSY, HO-P		1			
108	29	129555-26201	GEAR ASSY, PUMP		1			
108	30	24105-060064	BEARING, BALL 6006Z		2			
108	31	119802-25071	BUSH, IDLE GEAR		1			
108	32	129A00-25080	BUSH		1			

NOTE

https://truckmanualshub.com/

FIG 109 T394	CRANKSHAFT & PISTON	P1	Year 2016	

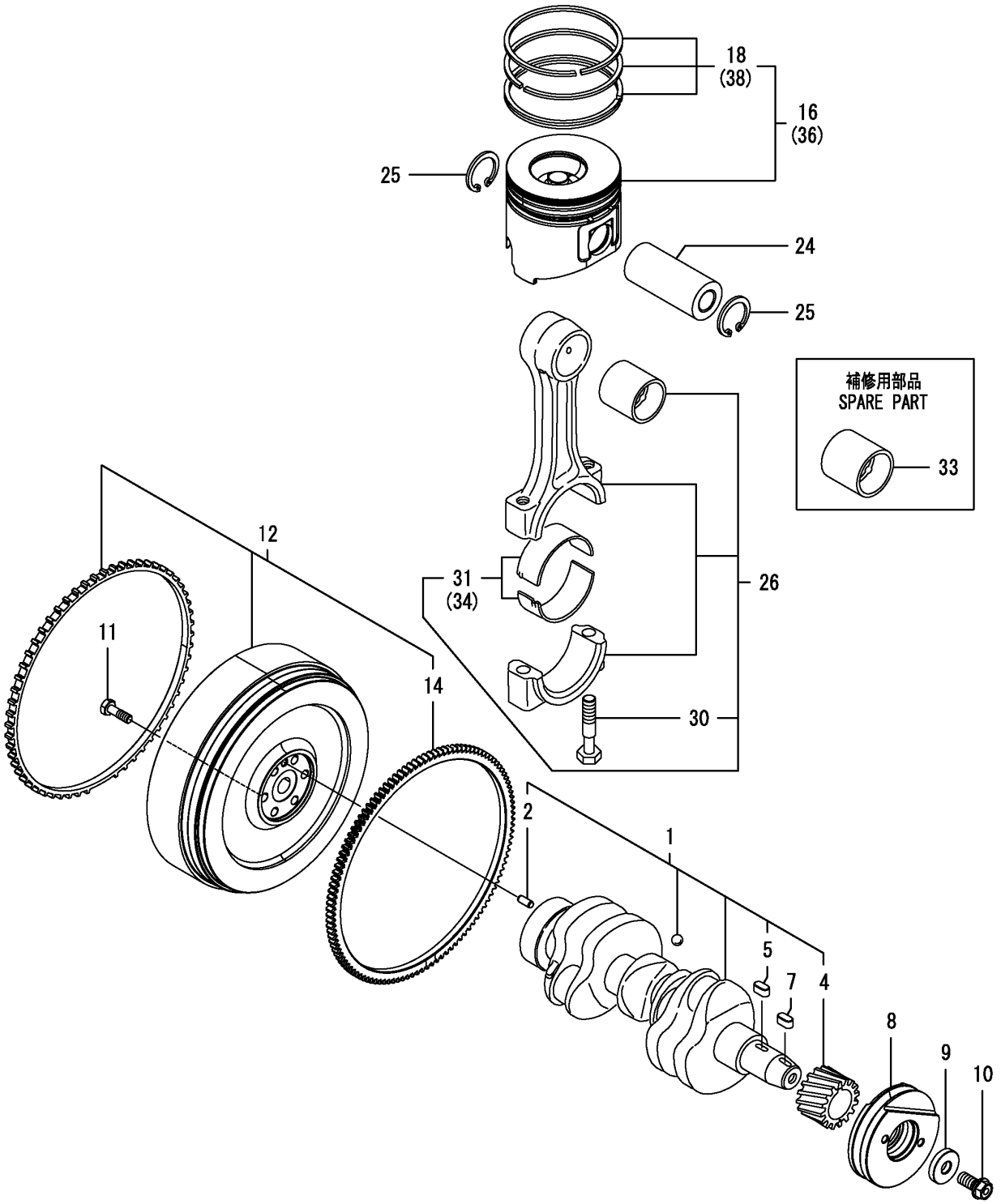

NOTE

https://truckmanualshub.com/

FIG 109

T394

CRANKSHAFT & PISTON

P1

Year

2016

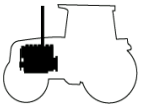

KEY NO.		PART NO.	DESCRIPSTION	SPEC.	QTY. T394	REPAIR	ENG.SERIAL NO	REMARKS
109	1	129008-21000	CRANKSHAFT ASSY		1			
109	2	129100-01580	PIN, PARALLEL 8X16		1			
109	4	119803-21200	GEAR, CRANKSHAFT		1			
109	5	22512-070140	KEY, 7X 14		1			
109	7	22512-070140	KEY, 7X 14		1			
109	8	129055-21650	V-PULLEY, 120		1			
109	9	129795-21661	WASHER		1			
109	10	121850-21680	BOLT		1			
109	11	121111-21501	BOLT, FLYWHEEL		6			
109	12	129A26-21580	FLYWHEEL ASSY		1			
109	14	119865-21600	GEAR, RING Z=116		1			
109	16	129C00-22080	PISTON ASSY		3			
109	18	129A00-22500	RING ASSY, PISTON		3			
109	24	129202-22300	PIN, PISTON D26 L70		3			
109	25	22252-000260	RING, 26		6			
109	26	729402-23100	ROD ASSY, CONNECTING		3			
109	30	121550-23200	BOLT, CONNECTING ROD		6			
109	31	129150-23601	BEARING, CRANK PIN		3			
109	33	129100-23910	BEARING, PISTON PIN		3			
109	34	129150-23611	BEARING, 0.25 US		3			
109	36	129C00-22900	PISTON ASSY, 0.25OS		3			
109	38	129A00-22950	RING SET, 0.25 OS		3			

NOTE

https://truckmanualshub.com/

FIG 110 T394	LUB. OIL SYSTEM	P1	Year 2016	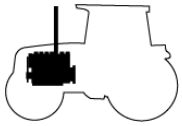

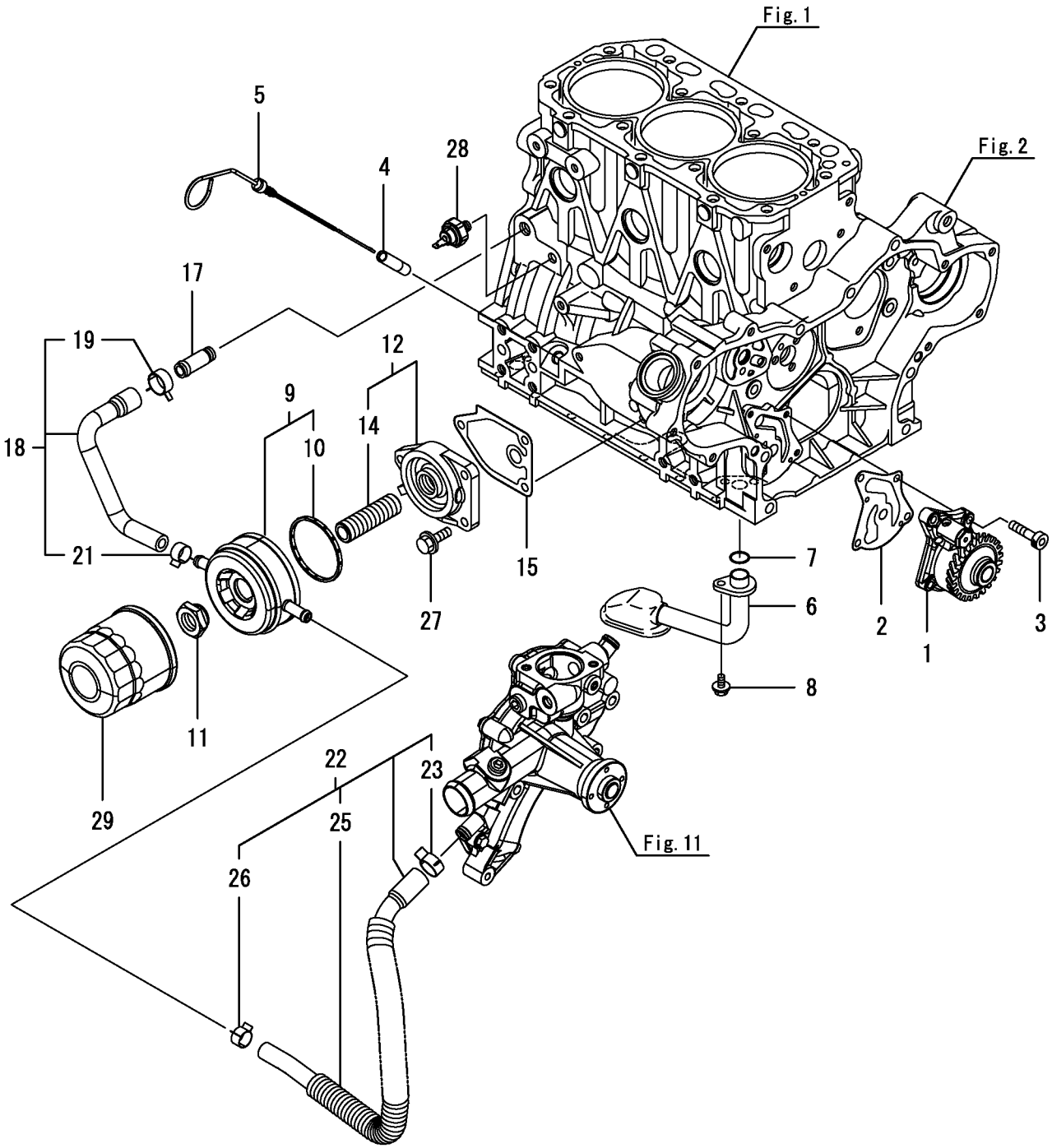

NOTE

https://truckmanualshub.com/

FIG 110

T394

LUB. OIL SYSTEM

P1

Year

2016

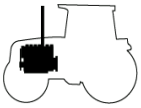

KEY NO.		PART NO.	DESCRIPSTION	SPEC.	QTY. T394	REPAIR	ENG.SERIAL NO	REMARKS
110	1	129A00-32000	PUMP ASSY, LUB.OIL		1			
110	2	129486-32020	GASKET, PUMP		1			
110	3	26450-060252	BOLT, M6X 25		4			
110	4	121520-34810	GUIDE, DIPSTICK		1			
110	5	129263-34811	DIPSTICK, OIL		1			
110	6	129052-35090	PIPE ASSY, OIL INLET		1			
110	7	24311-000160	O-RING, 1AP16.0		1			
110	8	26106-060122	BOLT, M6X 12 PLATED		1			
110	9	129508-33031	COOLER ASSY, OIL		1			
110	10	129508-33060	PACKING, OIL COOLER		1			
110	11	129417-33111	NUT, OIL COOLER		1			
110	12	129006-35100	BRACKET ASSY, FILTER		1			
110	14	129417-35150	BOLT, STUD M20X67		1			
110	15	129150-35111	GASKET		1			
110	17	129122-44480	JOINT		1			
110	18	129508-49030	HOSE ASSY, WATER		1			
110	19	171008-03990	CLAMP, HOSE 18.5		1			
110	21	23080-015000	CLAMP, 15		1			
110	22	129006-49040	HOSE ASSY, WATER		1			
110	23	171008-03990	CLAMP, HOSE 18.5		1			
110	25	129642-49180	TUBE, CORRUGATED 19		1			
110	26	23080-015000	CLAMP, 15		1			
110	27	26106-080202	BOLT, M8X 20 PLATED		3			
110	28	119761-39450	SWITCH, HYDRAULIC		1			
110	29	129150-35153	FILTER ASSY, D80X8OL		1			

NOTE

https://truckmanualshub.com/

FIG 111 T394	COOLING WATER SYSTEM	P1	Year 2016	

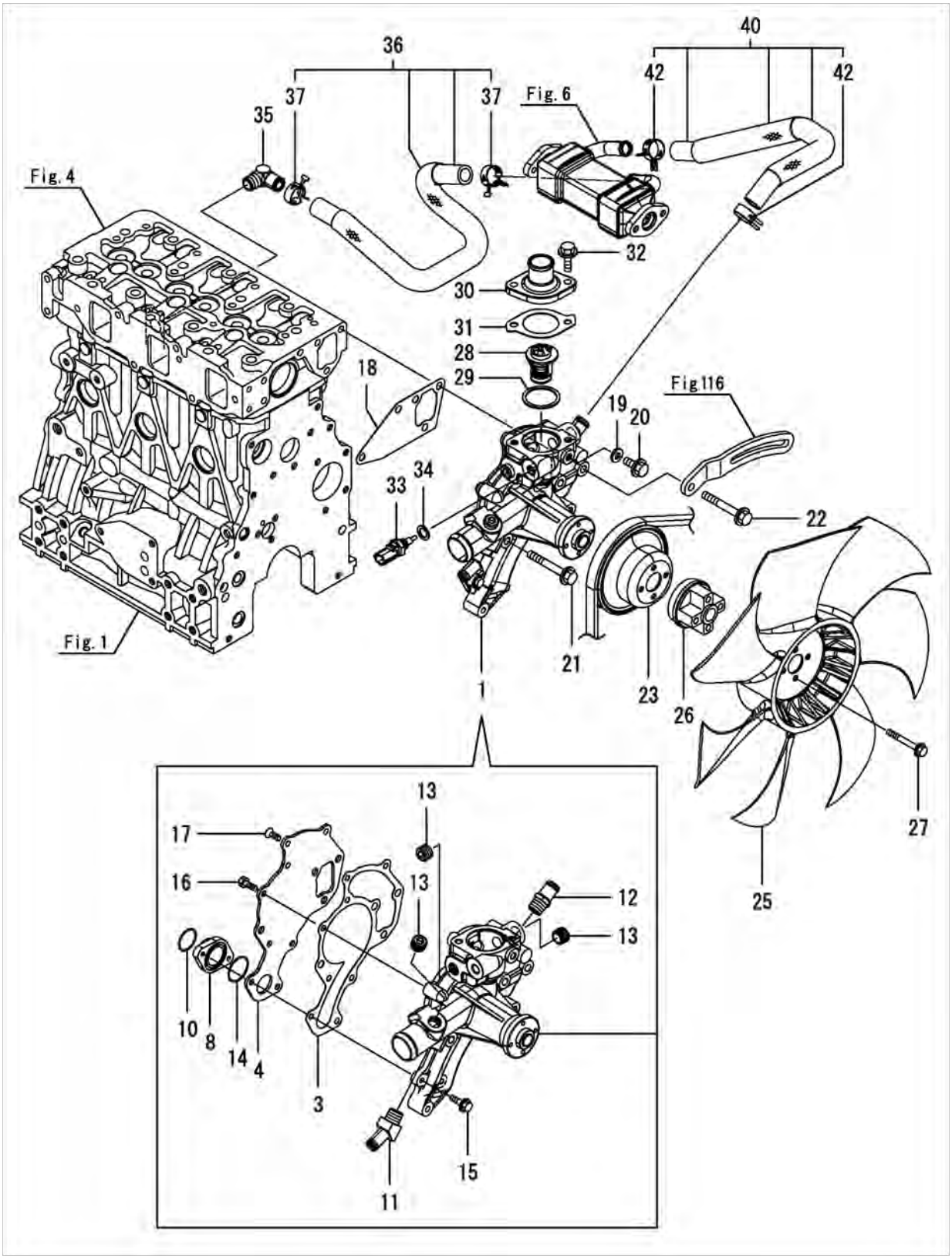

NOTE

https://truckmanualshub.com/

FIG 111

T394

COOLING WATER SYSTEM

P1

Year

2016

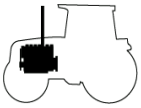

KEY NO.		PART NO.	DESCRIPSTION	SPEC.	QTY. T394	REPAIR	ENG.SERIAL NO	REMARKS
111	1	129A33-42001	PUMP ASSY, CW HIGH		1			
111	3	129150-42059	GASKET		1			
111	4	129263-42120	PLATE, PUMP		1			
111	8	129150-42301	FLANGE		1			
111	10	129054-42320	O-RING		1			
111	11	129055-49300	ELBOW, R3/8		1			
111	12	129928-49420	JOINT		1			
111	13	129916-49740	PLUG, R3/8		3			
111	14	24358-240310	O-RING, 524031		1			
111	15	26106-060202	BOLT, M6X 20 PLATED		2			
111	16	26116-060162	BOLT, M6X 16 PLATED		3			
111	17	26577-060162	SCREW, M6X16		3			
111	18	129486-42050	GASKET, WATER PUMP		1			
111	19	23414-080000	GASKET, 8X1.0		1			
111	20	26106-080122	BOLT, M8X 12 PLATED		1			
111	21	26106-080552	BOLT, M8X 55 PLATED		3			
111	22	26106-080602	BOLT, M8X 60 PLATED		1			
111	23	129403-42380	V-PULLEY, D=110		1			
111	25	129655-44740	FAN, COOLING D380		1			
111	26	129030-44760	SPACER, FAN L38.5		1			
111	27	26106-060502	BOLT, M6X 50 PLATED		4			
111	28	129155-49801	THERMOSTAT, 71C		1			
111	29	129150-49811	GASKET, THERMOSTAT		1			
111	30	129350-49530	COVER, THERMOSTAT		1			
111	31	129795-49551	GASKET		1			
111	32	26106-080222	BOLT, M8X 22 PLATED		2			
111	33	129927-44900	SENSOR, WATER TEMP.		1			
111	34	22190-120002	WASHER, SEAL 12		1			
111	35	129051-49310	ELBOW, PT3/8		1			
111	36	129A23-49610	PIPE ASSY, CW EGR-C		1			
111	37	129960-03990	CLAMP, HOSE 19.8		2			
111	40	129A23-49640	HOSE ASSY, EGR-C OUT		1			
111	42	129960-03990	CLAMP, HOSE 19.8		2			

NOTE

https://truckmanualshub.com/

FIG 112 T394	FUEL SUPPLY PUMP	P1	Year 2016	

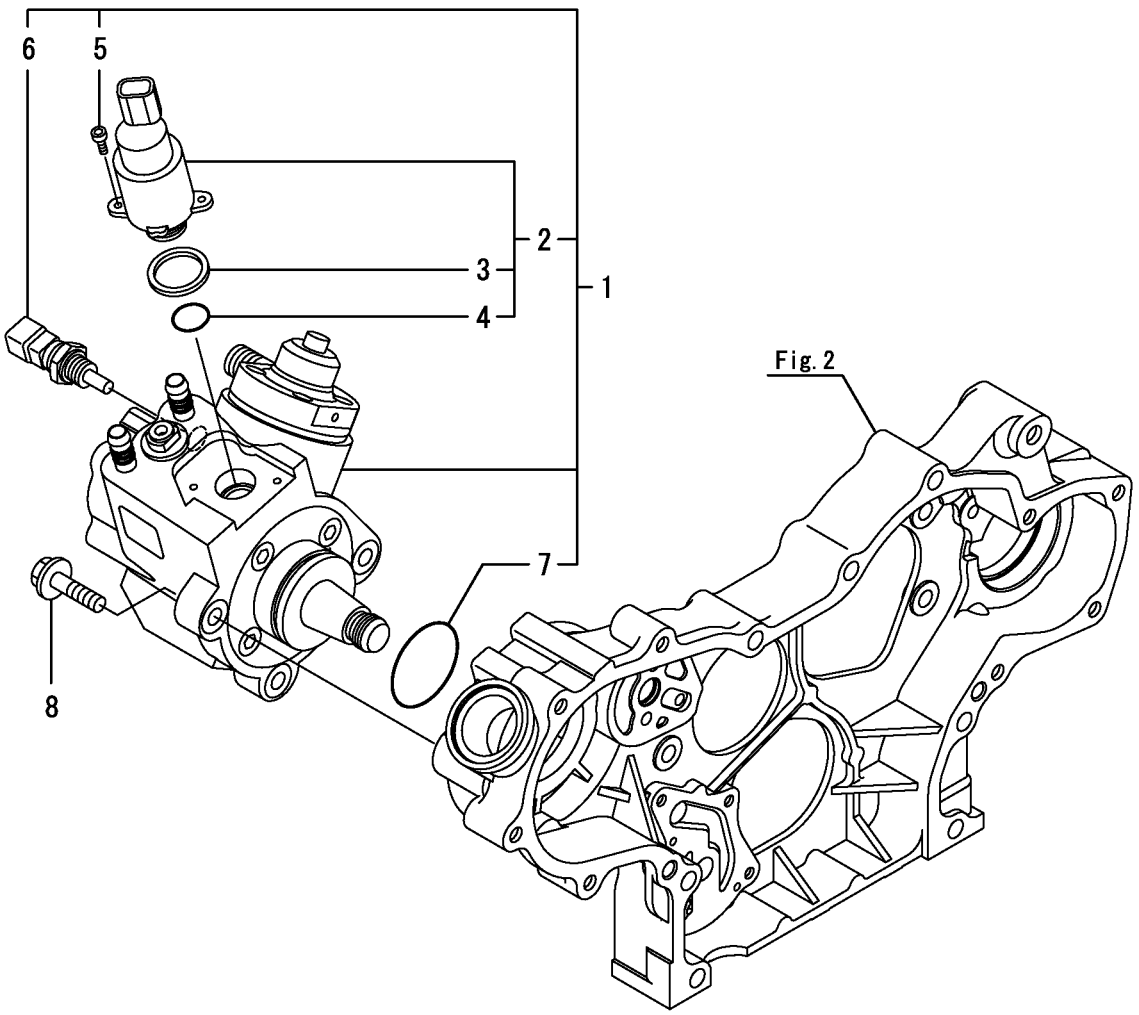

NOTE

https://truckmanualshub.com/

FIG 112 T394	FUEL SUPPLY PUMP	P1	Year 2016	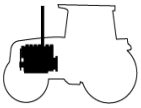

KEY NO.		PART NO.	DESCRIPSTION	SPEC.	QTY. T394	REPAIR	ENG.SERIAL NO	REMARKS
112	1	129A00-51000	PUMP ASSY, FUEL		1			
112	2	129A00-51100	VALVE ASSY, MPROP		1			
112	3	129A00-51110	RING, SEALING		1			
112	4	129A00-51120	O-RING, MPROP		1			
112	5	129A00-51130	BOLT, MPROP		2			
112	6	129A00-51200	SENSOR, TEMPERATURE		1			
112	7	129A00-51900	O-RING, FUEL PUMP		1			
112	8	26106-080302	BOLT, M8X 30 PLATED		3			

NOTE

https://truckmanualshub.com/

FIG 113 T394	FUEL INJECTION VALVE	P1	Year 2016	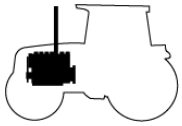

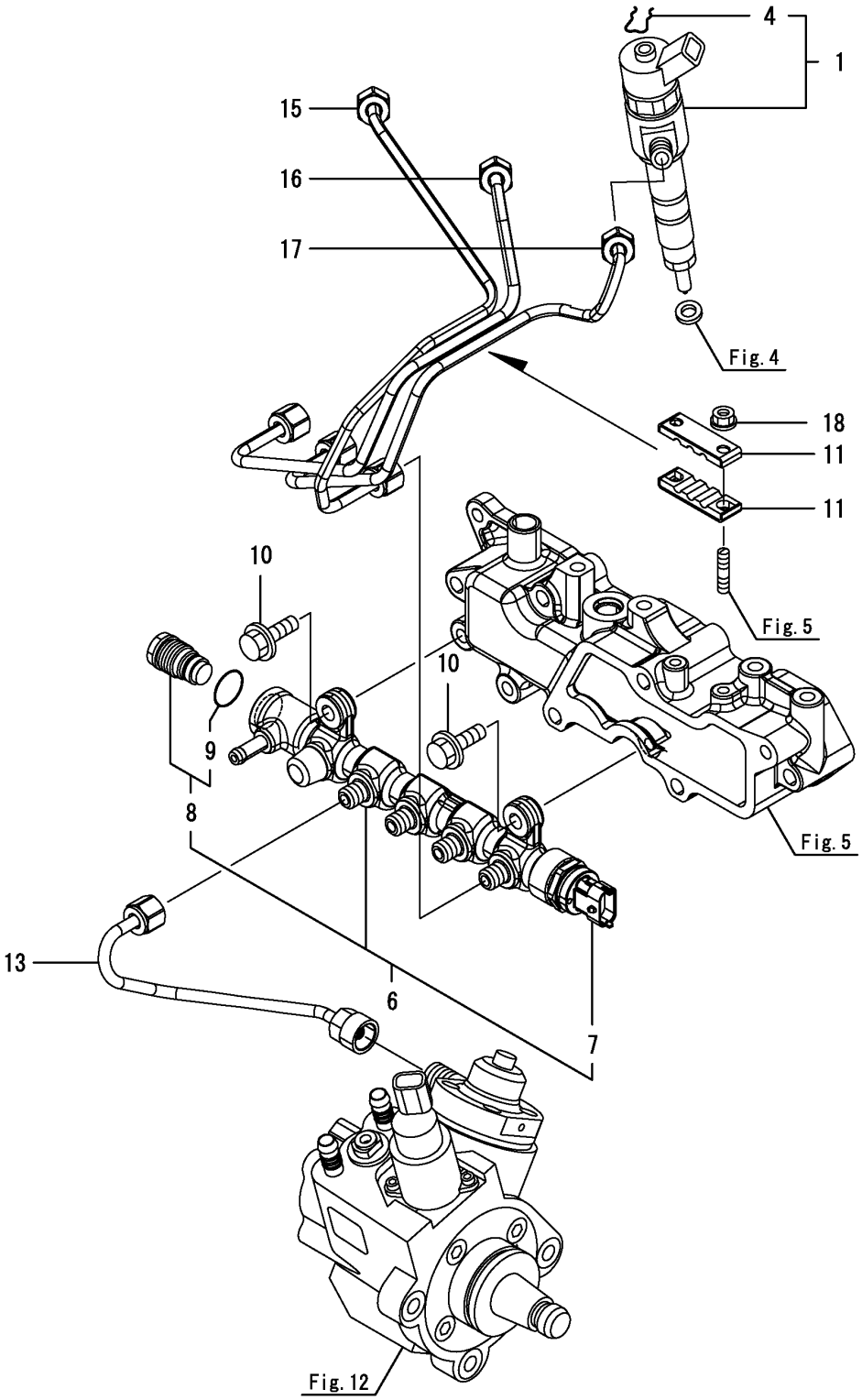

NOTE

https://truckmanualshub.com/

FIG 113

T394

FUEL INJECTION VALVE

P1

Year

2016

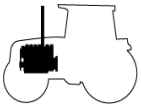

KEY NO.		PART NO.	DESCRIPSTION	SPEC.	QTY. T394	REPAIR	ENG.SERIAL NO	REMARKS
113	1	129A00-53100	INJECTOR, CR		3			
113	4	129A00-53200	RING, RETAINING		3			
113	6	129A00-57000	RAIL ASSY		1			
113	7	129A00-57100	SENSOR, RAILPRESSURE		1			
113	8	129A00-57200	VALVE ASSY, PLV4		1			
113	9	129A00-57210	O-RING, PLV4		1			
113	10	26106-080252	BOLT, M8X 25 PLATED		2			
113	11	123372-59100	RETAINER, PIPE		2			
113	13	129A00-59700	PIPE ASSY, RAIL IN		1			
113	15	129A00-59810	PIPE ASSY, INJECTION		1			
113	16	129A00-59820	PIPE ASSY, INJECTION		1			
113	17	129A00-59830	PIPE ASSY, INJECTION		1			
113	18	26366-060002	NUT, M6		2			

NOTE

https://truckmanualshub.com/

FIG 114 T394	FUEL PIPE	P1	Year 2016	

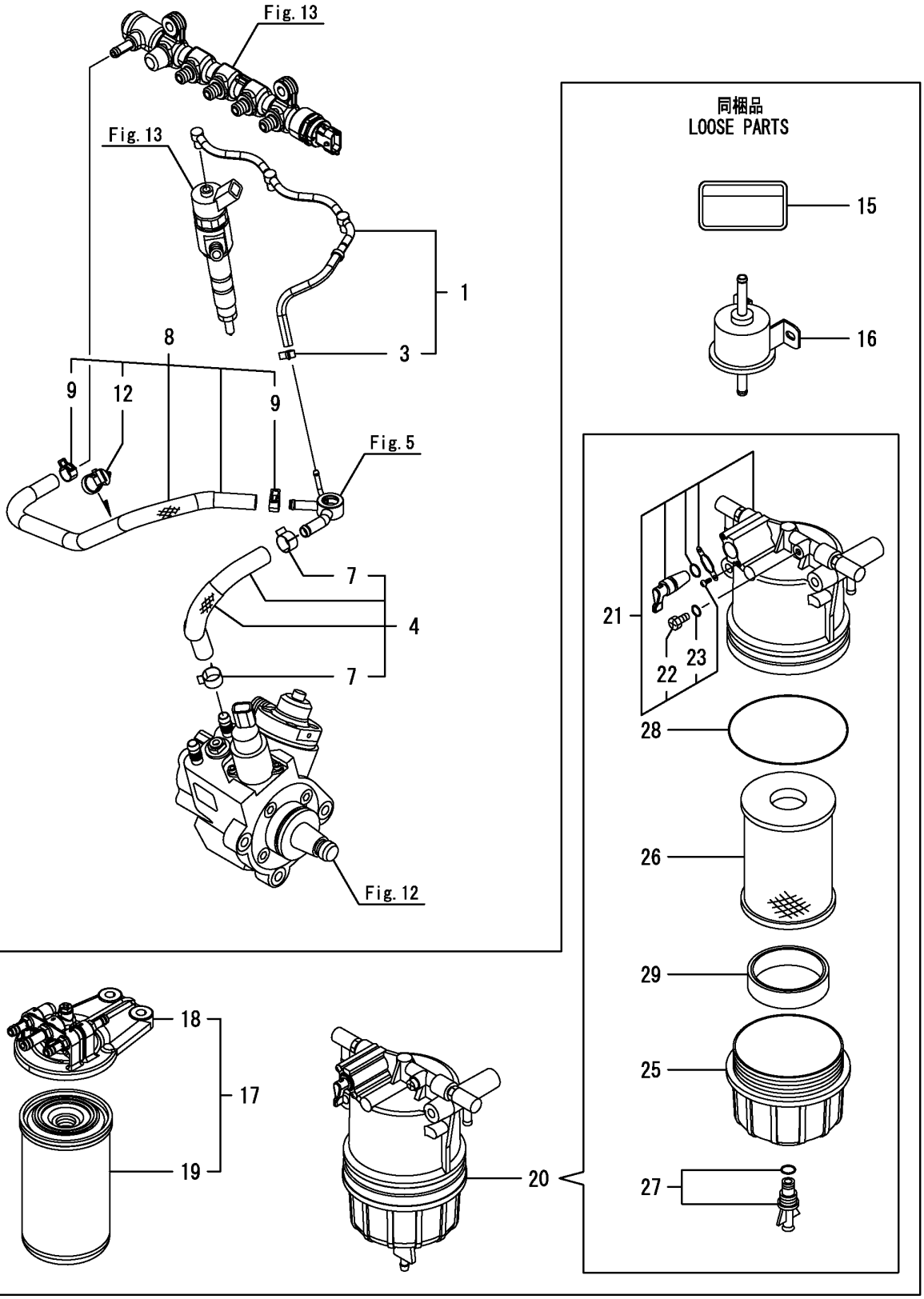

NOTE

https://truckmanualshub.com/

FIG 114

T394

FUEL PIPE

P1

Year

2016

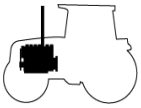

KEY NO.		PART NO.	DESCRIPSTION	SPEC.	QTY. T394	REPAIR	ENG.SERIAL NO	REMARKS
114	1	129A23-59500	PIPE ASSY, FO RETURN		1			
114	3	23080-007000	CLAMP, 7		1			
114	4	129A00-59020	PIPE ASSY, FUEL		1			
114	7	23080-015000	CLAMP, 15		2			
114	8	129A00-59030	PIPE ASSY, FUEL		1			
114	9	114270-59010	CLAMP, HOSE 12		2			
114	12	129A00-91200	BAND CLIP		1			
114	15	114110-07761	LABEL, FUEL OIL CAUT		1			
114	16	129612-52100	PUMP, FUEL FEED		1			
114	17	129A00-55600	FILTE ASSY,FO		1			
114	18	129A00-55610	BRACKET ASSY,FO FILT		1			
114	19	129A00-55800	FILTER, FUEL OIL		1			
114	20	129E22-55700	FILTER ASSY, FUEL		1			
114	21	129E00-55710	BODY ASSY		1			
114	22	129A00-55750	PLUG,BREATHER		1			
114	23	129A00-55760	O-RING		1			
114	25	129A00-55720	CUP(CLEAR		1			
114	26	129A00-55730	ELEMENT		1			
114	27	129242-55740	PLUG, DRAIN		1			
114	28	129A00-55740	O-RING		1			
114	29	129A00-55770	FLOAT		1			

NOTE

https://truckmanualshub.com/

FIG 115 T394	STARTER MOTOR	P1	Year 2016	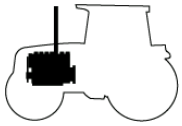

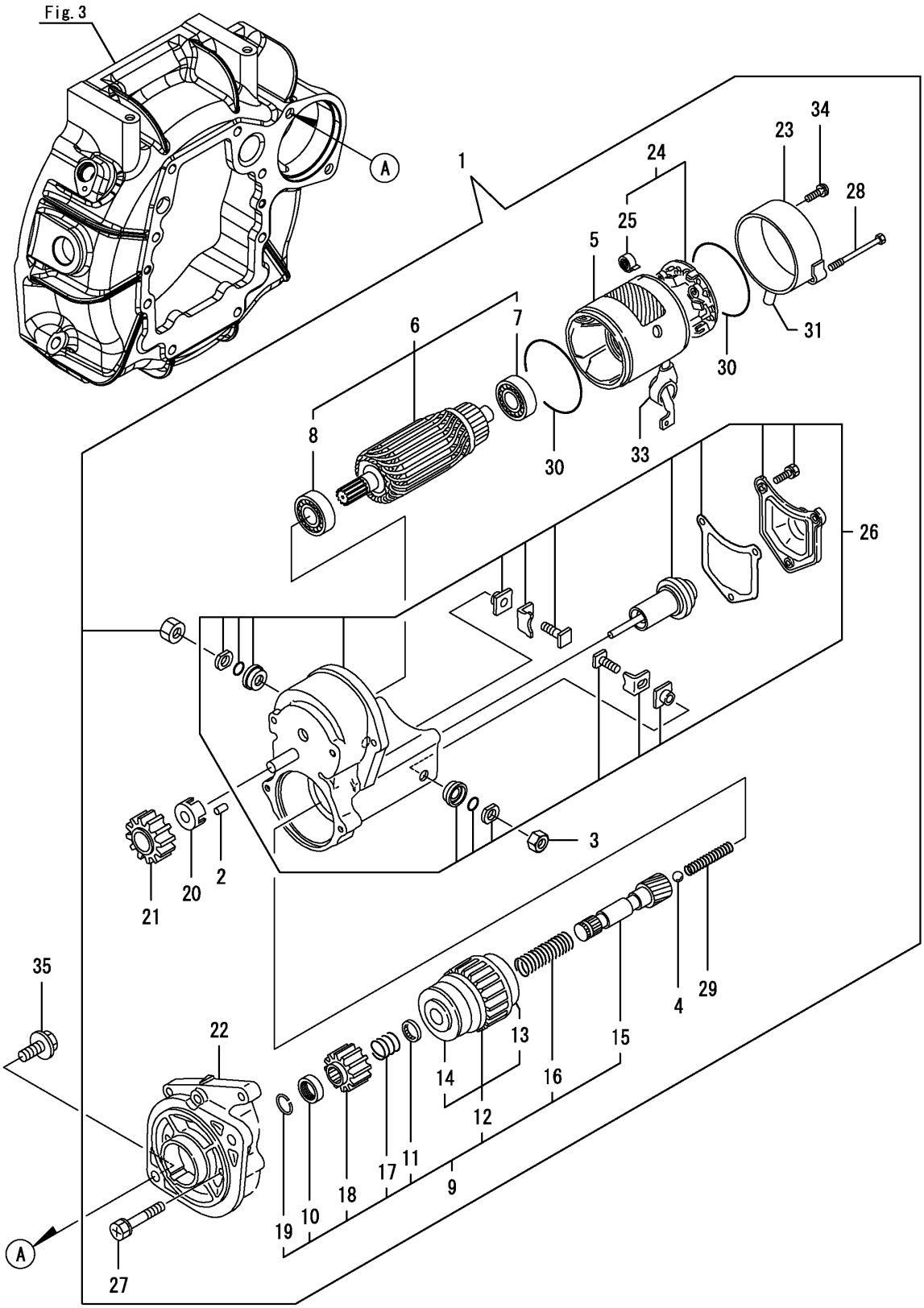

NOTE

https://truckmanualshub.com/

FIG 115

T394

STARTER MOTOR

P1

Year

2016

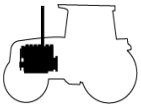

KEY NO.		PART NO.	DESCRIPSTION	SPEC.	QTY. T394	REPAIR	ENG.SERIAL NO	REMARKS
115	1	129407-77010	STARTER ASSY		1			
115	2	X0283060061	ROLLER		5			
115	3	X9490561370	NUT		1			
115	4	X9491200240	BALL, STEEL		1			
115	5	129407-77210	YOKE ASSY		1			
115	6	129407-77220	ARMATURE ASSY		1			
115	7	129129-77230	BEARING, BALL		1			
115	8	129129-77240	BEARING, BALL		1			
115	9	129407-77250	STARTER ASSY		1			
115	10	X0280210230	NUT		1			
115	11	X0283270140	RETAINER		1			
115	12	129407-77390	CLUTCH ASSY		1			
115	13	129129-77440	BEARING, BALL		1			
115	14	129129-77450	BEARING, BALL		1			
115	15	129129-77400	SHAFT, STATER		1			
115	16	129129-77410	SPRING		1			
115	17	X9491703371	SPRING		1			
115	18	129129-77420	PINION, STARTER		1			
115	19	129129-77430	RING, SNAP		1			
115	20	129129-77260	RETAINER		1			
115	21	129129-77270	PINION		1			
115	22	129407-77280	HOUSING, STARTOR		1			
115	23	129407-77290	COVER		1			
115	24	129407-77300	HOLDER ASSY		1			
115	25	X9491730461	SPRING		4			
115	26	129407-77310	SWITCH ASSY,MAGNET		1			
115	27	129129-77320	BOLT		2			
115	28	129407-77330	BOLT		2			
115	29	129129-77340	SPRING		1			
115	30	129129-77350	O-RING		2			
115	31	129129-77362	COVER		1			
115	33	129129-77380	CAP		1			
115	34	129129-77460	SCREW		2			
115	35	26106-120252	BOLT, M12X 25 PLATED		2			

NOTE

https://truckmanualshub.com/

FIG 116 T394	ALTERNATOR	P1	Year 2016	

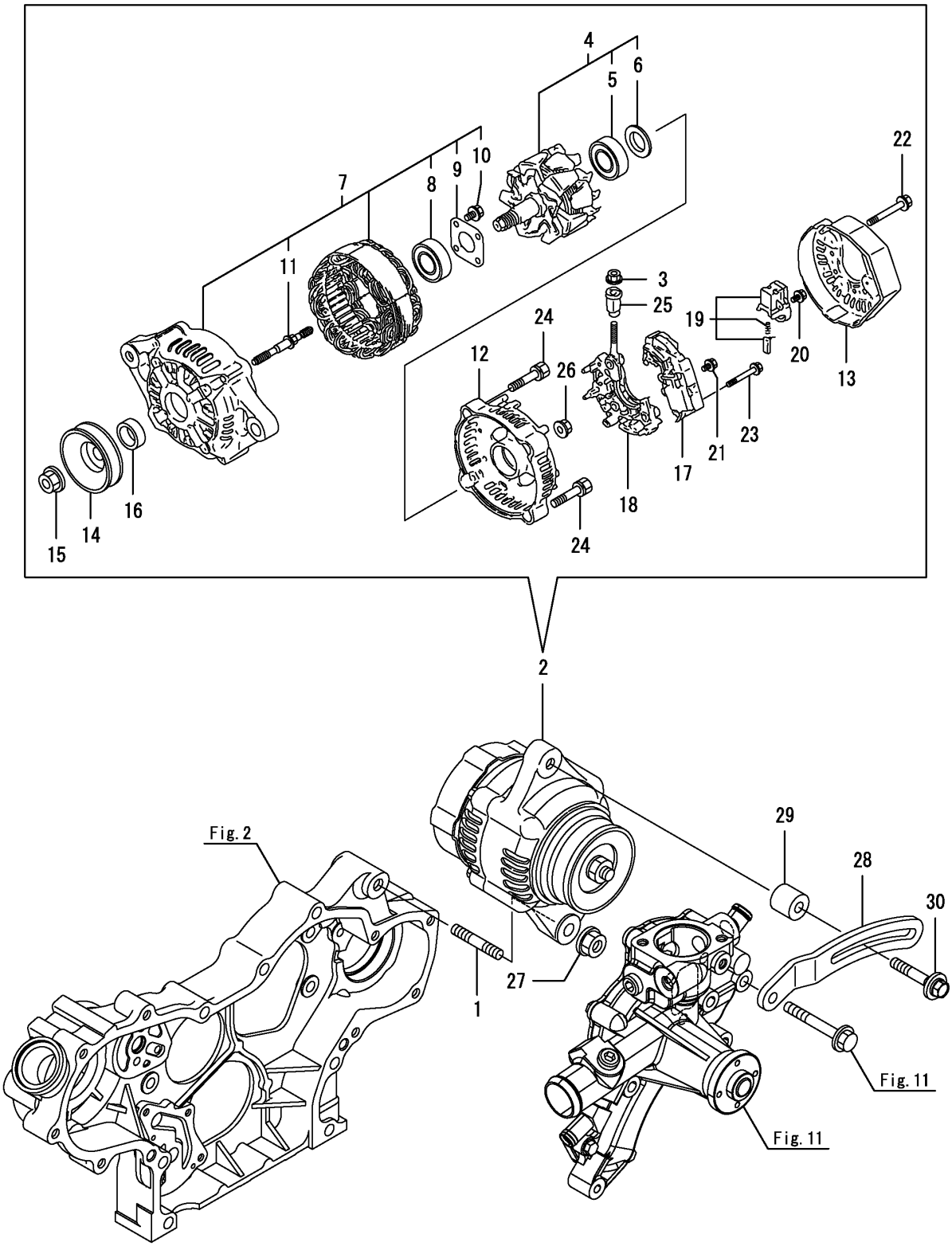

NOTE

https://truckmanualshub.com/

FIG 116

T394

ALTERNATOR

P1

Year

2016

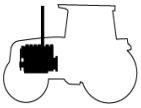

KEY NO.		PART NO.	DESCRIPSTION	SPEC.	QTY. T394	REPAIR	ENG.SERIAL NO	REMARKS
116	1	129795-01900	BOLT, STUD M10X33		1		~2016.12.31	
116	2	129052-77220	GENERATOR ASSY, 55A		1		~2016.12.31	
116	3	X9490561001	NUT		1		~2016.12.31	
116	4	129052-77380	ROTOR ASSY		1		~2016.12.31	
116	5	123501-79240	BEARING, BALL		1		~2016.12.31	
116	6	119620-79250	COVER, BEARING		1		~2016.12.31	
116	7	129052-77422	FRAME ASSY		1		~2016.12.31	
116	8	119620-79200	BEARING, BALL		1		~2016.12.31	
116	9	119620-79210	RETAINER		1		~2016.12.31	
116	10	119620-79220	SCREW		4		~2016.12.31	
116	11	119620-79230	BOLT, STUD		2		~2016.12.31	
116	12	128401-77440	FRAME		1		~2016.12.31	
116	13	128401-77450	COVER, GENERATOR		1		~2016.12.31	
116	14	119620-77461	PULLEY, GENERATOR		1		~2016.12.31	
116	15	119620-77471	NUT		1		~2016.12.31	
116	16	119620-77490	COLLAR		1		~2016.12.31	
116	17	119620-77710	REGULATOR ASSY		1		~2016.12.31	
116	18	129052-79260	HOLDER		1		~2016.12.31	
116	19	129052-79270	HOLDER, BRUSH		1		~2016.12.31	
116	20	119620-79290	SCREW		6		~2016.12.31	
116	21	119620-79300	SCREW		1		~2016.12.31	
116	22	119620-79310	BOLT		3		~2016.12.31	
116	23	119620-79320	SCREW		2		~2016.12.31	
116	24	119620-79330	BOLT		2		~2016.12.31	
116	25	119620-79340	BUSH, INSULATION		1		~2016.12.31	
116	26	119620-79350	NUT		2		~2016.12.31	
116	27	26306-100002	NUT, M10		1		~2016.12.31	
116	28	129602-77310	ADJUSTER		1		~2016.12.31	
116	29	124732-77340	SPACER		1		~2016.12.31	
116	30	129972-77341	BOLT, ADJUST L=50		1		~2016.12.31	

NOTE

https://truckmanualshub.com/

FIG 117 T394	ELECTRONIC CONTROL UNIT(ECU)	P1	Year 2016	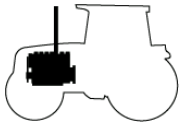

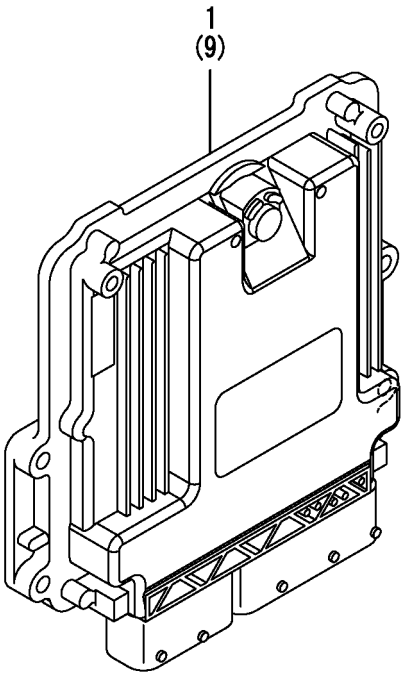

NOTE	

https://truckmanualshub.com/

FIG 117 T394	ELECTRONIC CONTROL UNIT(ECU)	P1	Year 2016

KEY NO.		PART NO.	DESCRIPSTION	SPEC.	QTY. T394	REPAIR	ENG.SERIAL NO	REMARKS
117	1	129A26-75040	ECU ASSY,3-88CDKTF		1			
117	9	129A00-75910	ECU ASSY,SERVICE YMR		1			

NOTE

https://truckmanualshub.com/

FIG 118 T394	ELECTRIC PARTS	P1	Year 2016	

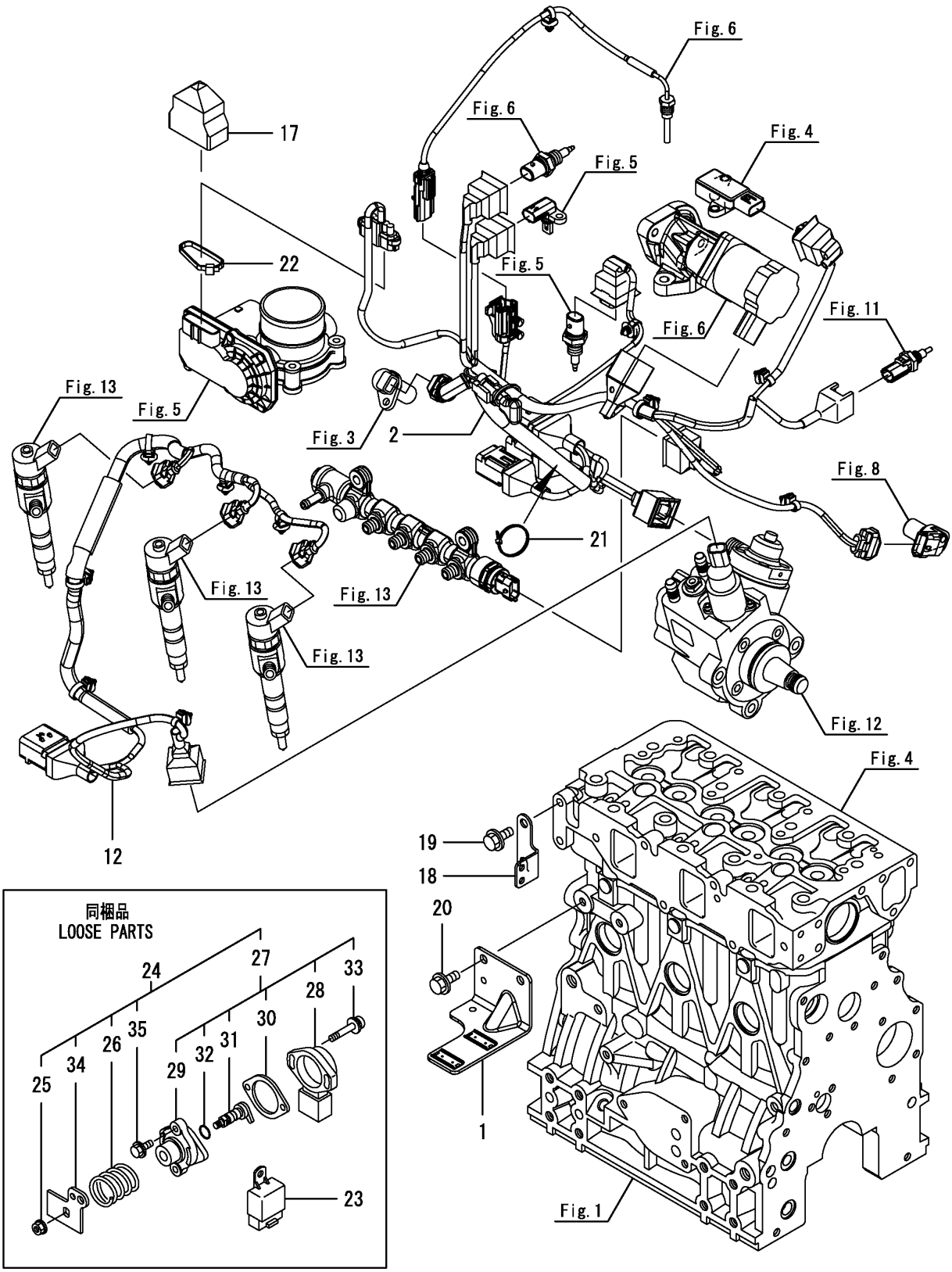

NOTE

https://truckmanualshub.com/

FIG 118

T394

ELECTRIC PARTS

P1

Year

2016

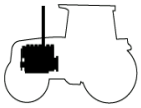

KEY NO.		PART NO.	DESCRIPSTION	SPEC.	QTY. T394	REPAIR	ENG.SERIAL NO.	REMARKS
118	1	129A00-77930	BRACKET,CONNECTOR		1			
118	2	129A00-91222	HARNESS,B ECO ENGINE		1			
118	12	129A00-91231	HARNESS		1			
118	17	129A00-91451	BOOT,CAP TYPE		1			
118	18	129A00-91600	BRACKET, HARNESS		1			
118	19	26106-080122	BOLT, M8X 12 PLATED		2			
118	20	26106-080122	BOLT, M8X 12 PLATED		2			
118	21	29621-100000	BAND, TR100		1			
118	22	29621-200000	BAND		1			
118	23	172B02-17150	RELAY,CA C TYPE		1			
118	24	129938-77800	SENSOR ASSY, ACCEL		1			
118	25	194990-22130	NUT, M6		1			
118	26	119060-61990	SPRING, RETURN		1			
118	27	129054-77800	SENSOR ASSY, ACCEL		1			
118	28	185100-50070	BODY		1			
118	29	129054-77811	SUPPORT, SENSOR		1			
118	30	129054-77820	GASKET		1			
118	31	129054-77830	SHAFT ASSY		1			
118	32	24311-000070	O-RING, 1AP7.0		1			
118	33	26023-040202	SCREW, M4X20		2			
118	34	129938-77810	LEVER, SENSOR		1			
118	35	26106-060122	BOLT, M6X 12 PLATED		2			

NOTE

https://truckmanualshub.com/

FIG 201 T394SH	AIR CLEANER	P1	Year 2016	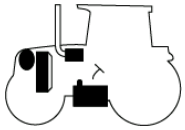

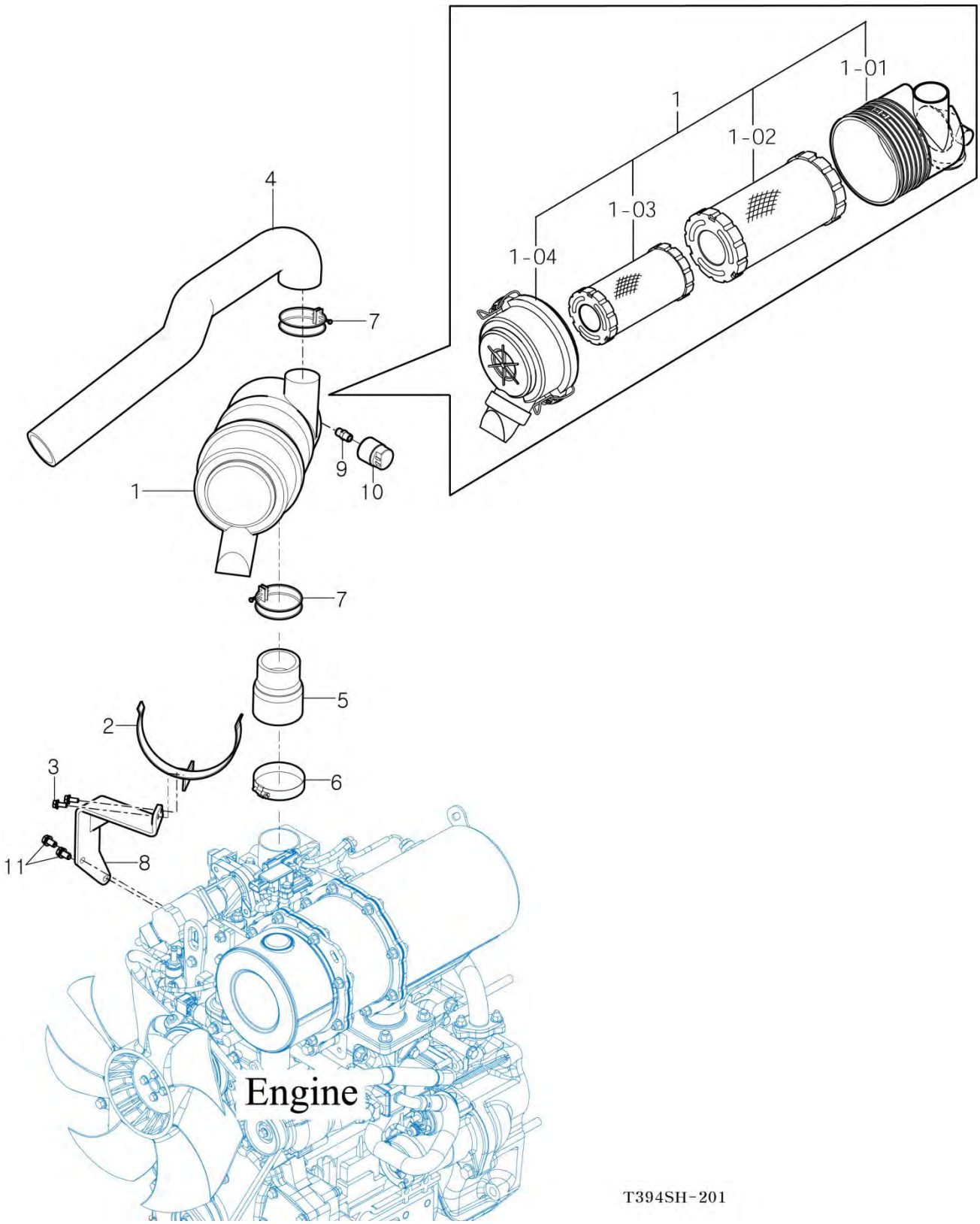

NOTE

https://truckmanualshub.com/

FIG 202 T394SH	RADIATOR	P1	Year 2016	

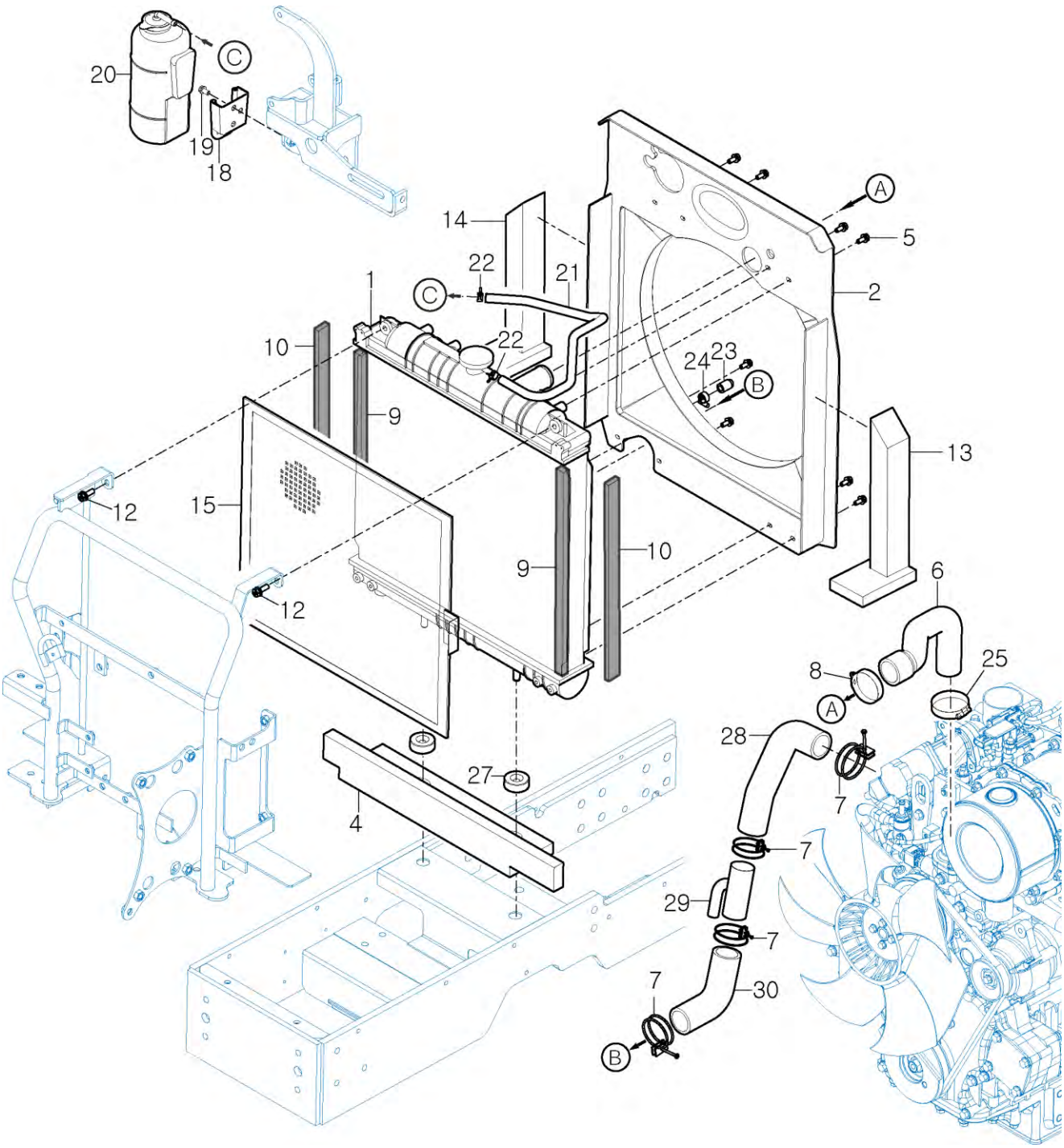

NOTE

https://truckmanualshub.com/

FIG 203 T394SH	MUFFLER	P1	Year 2016	

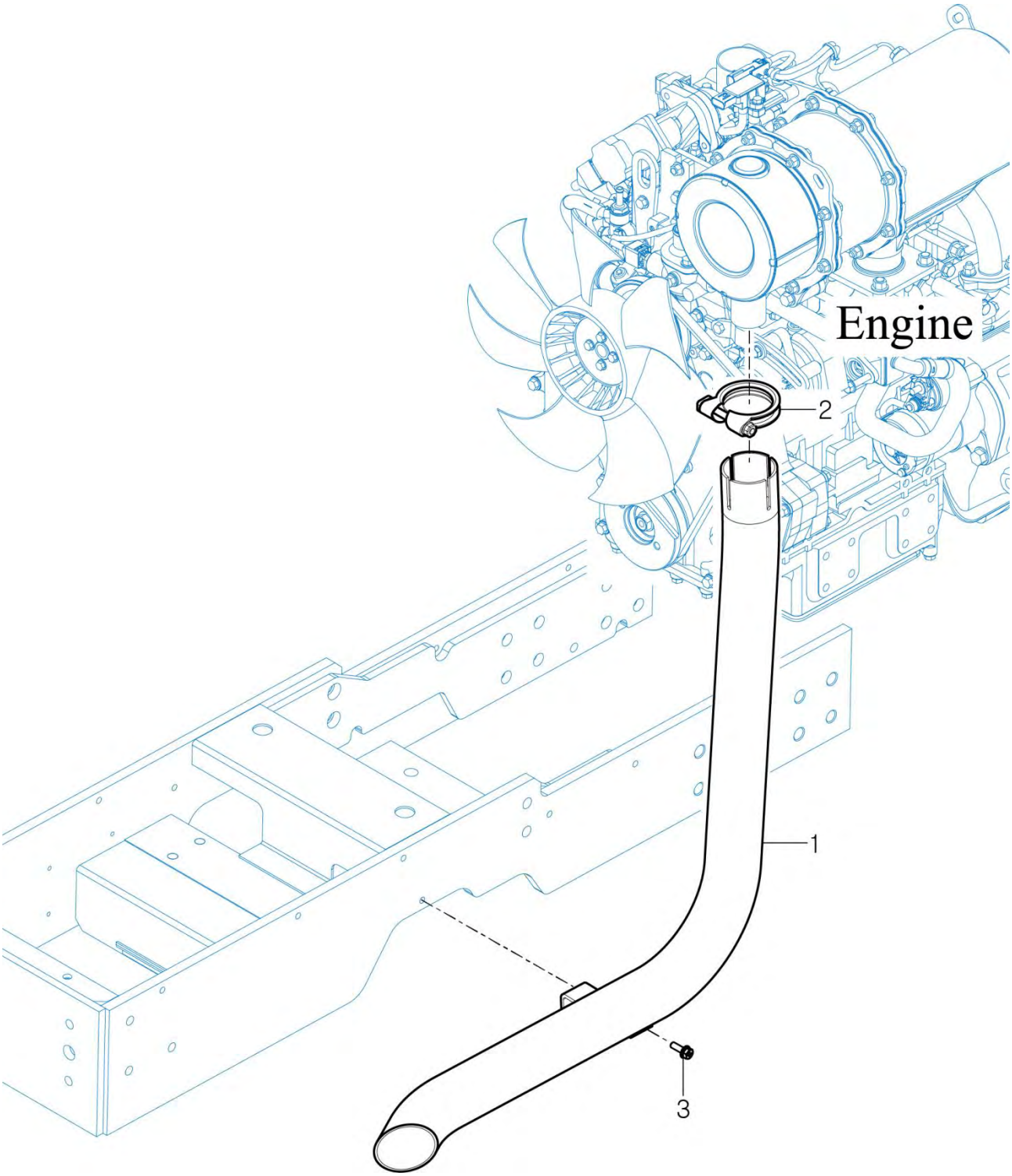

NOTE

https://truckmanualshub.com/

FIG 204 T394SH	FUEL TANK & HOSE	P1	Year 2016	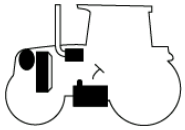

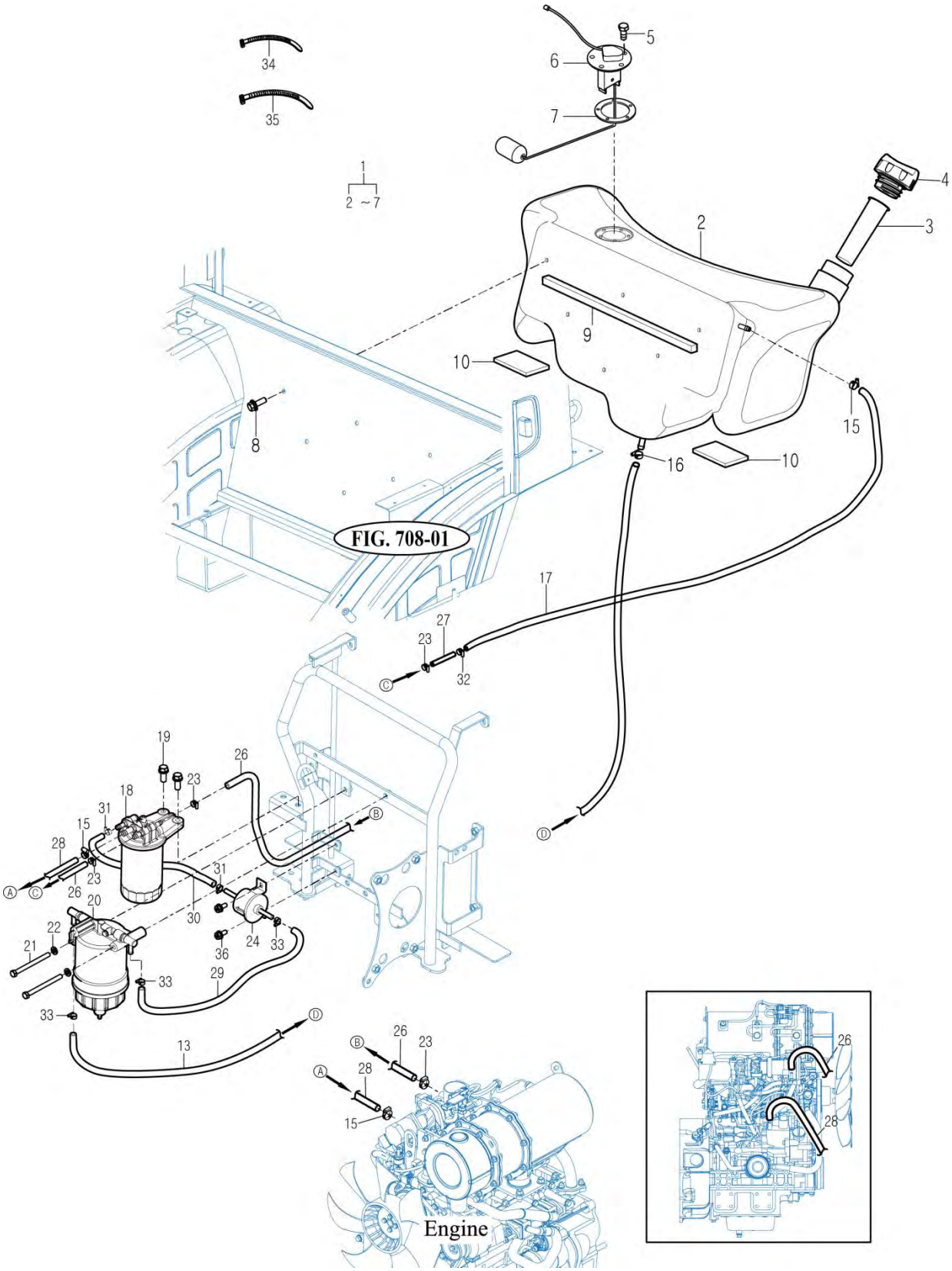

NOTE

https://truckmanualshub.com/

FIG 205 T394SH	OIL COOLER	P1	Year 2016	

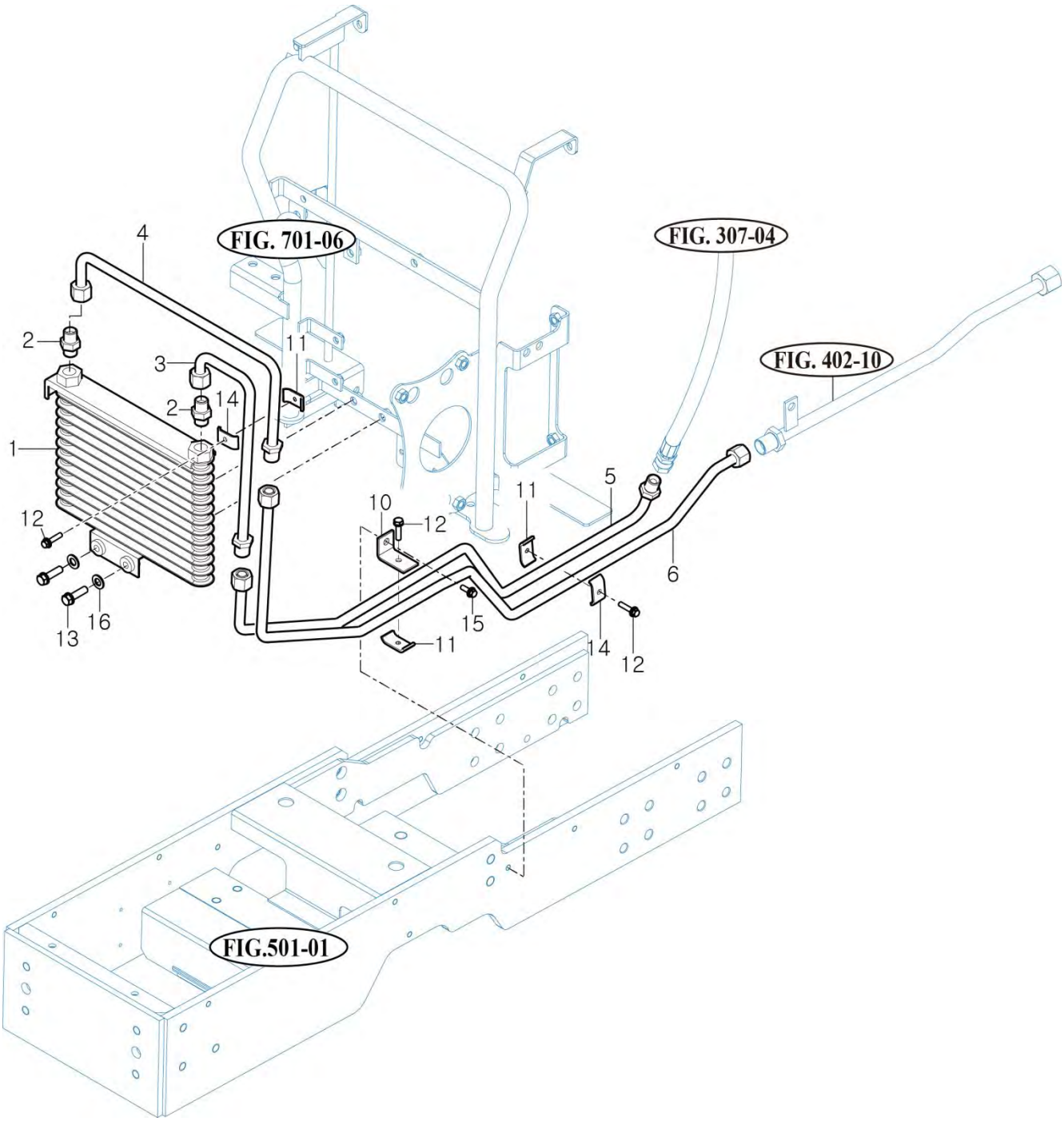

NOTE

FIG 301 T394SH	FLYWHEEL & CLUTCH	P1	Year 2016

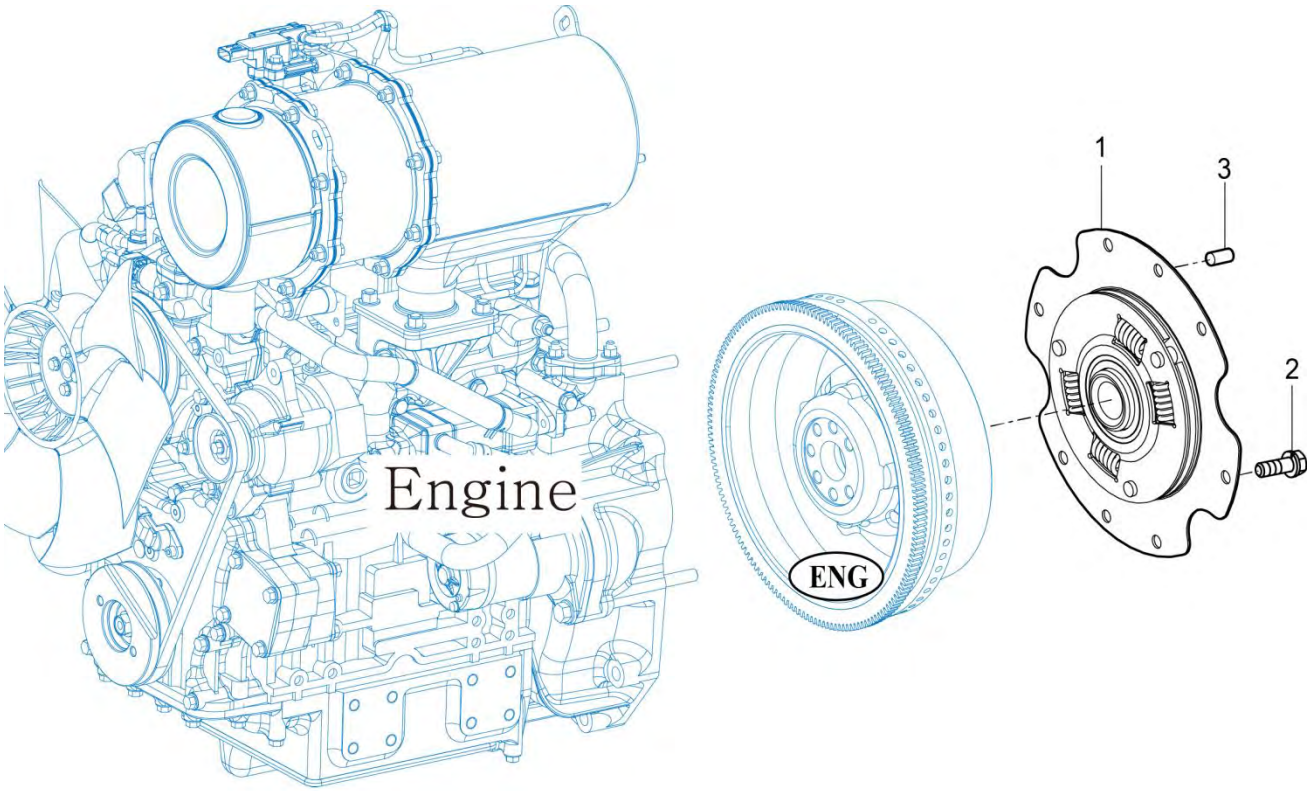

T384NH-E-301

NOTE	

https://truckmanualshub.com/

FIG 302

T394SH

BRAKE PEDAL

P1

Year

2016

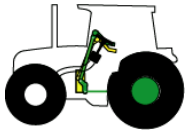

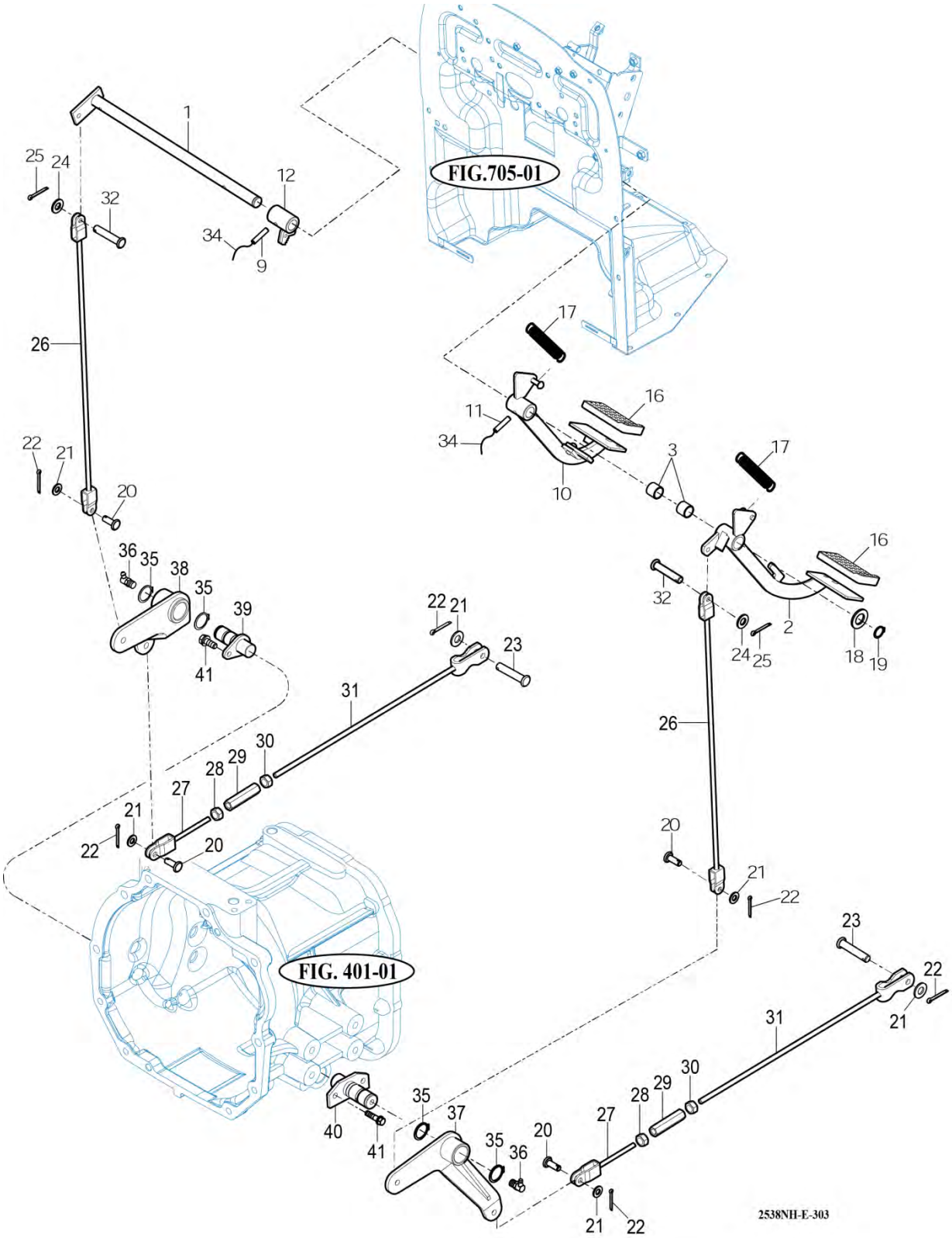

NOTE

https://truckmanualshub.com/

FIG 303 T394SH	BRAKE	P1	Year 2016	

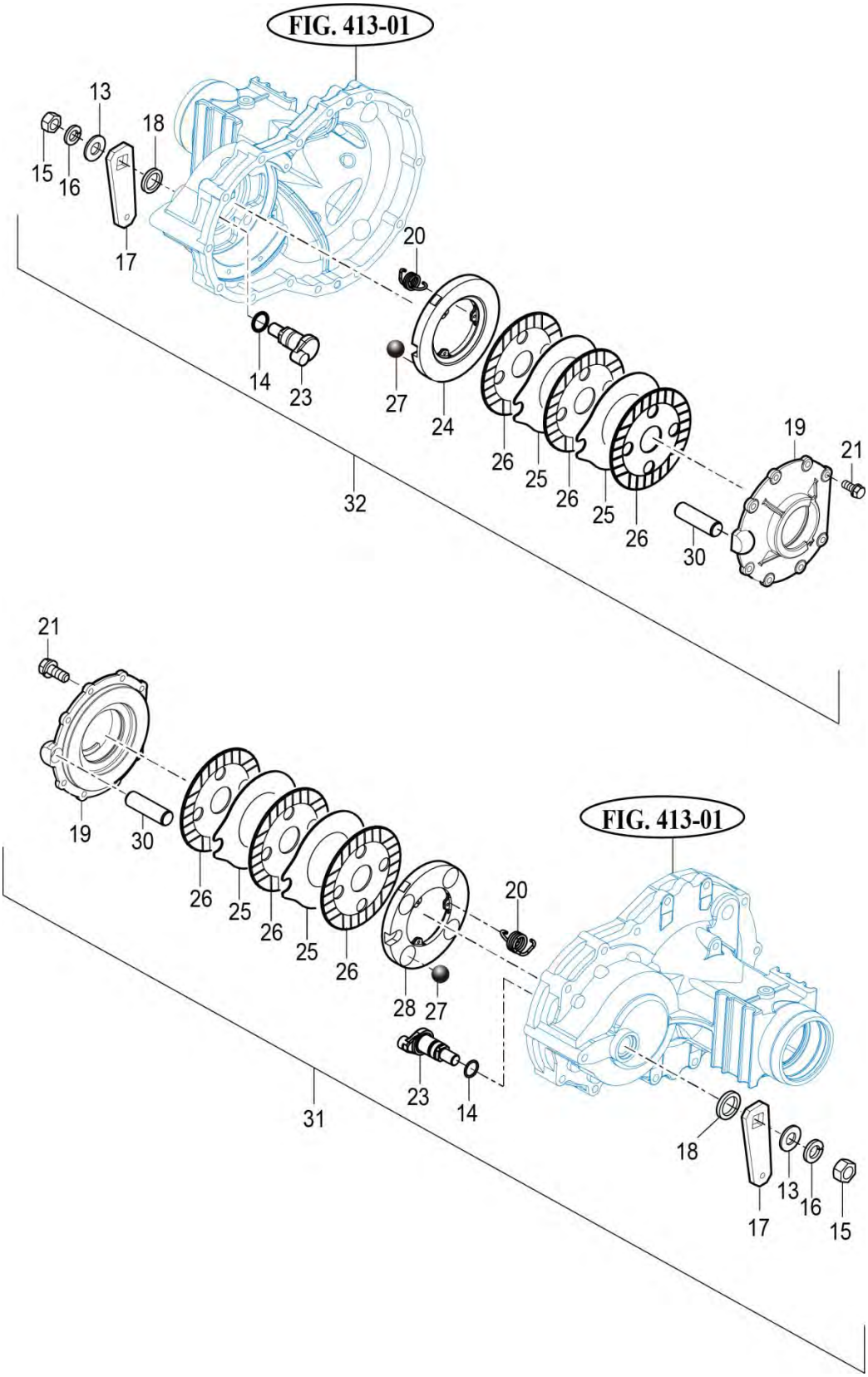

NOTE

https://truckmanualshub.com/

FIG 304 T394SH	FRONT WHEEL MOUNTING	P1	Year 2016	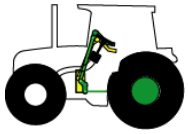

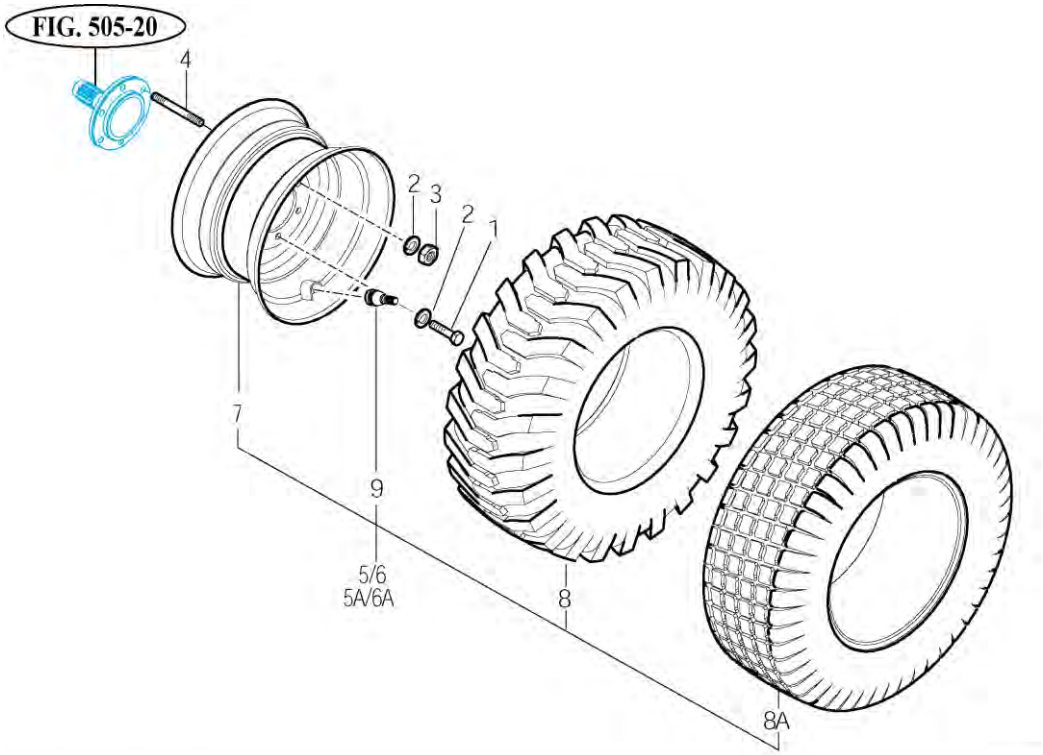

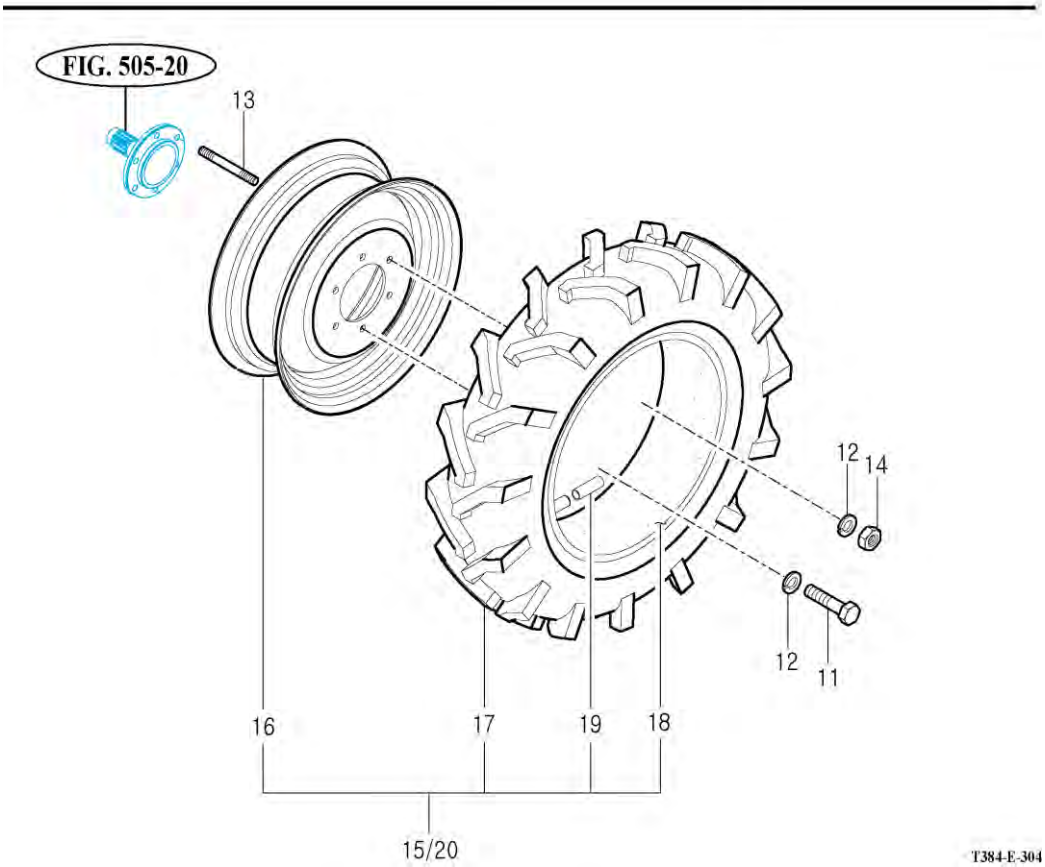

NOTE

https://truckmanualshub.com/

FIG 305 T394SH	REAR WHEEL MOUNTING	P1	Year 2016	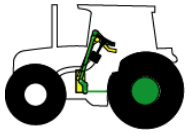

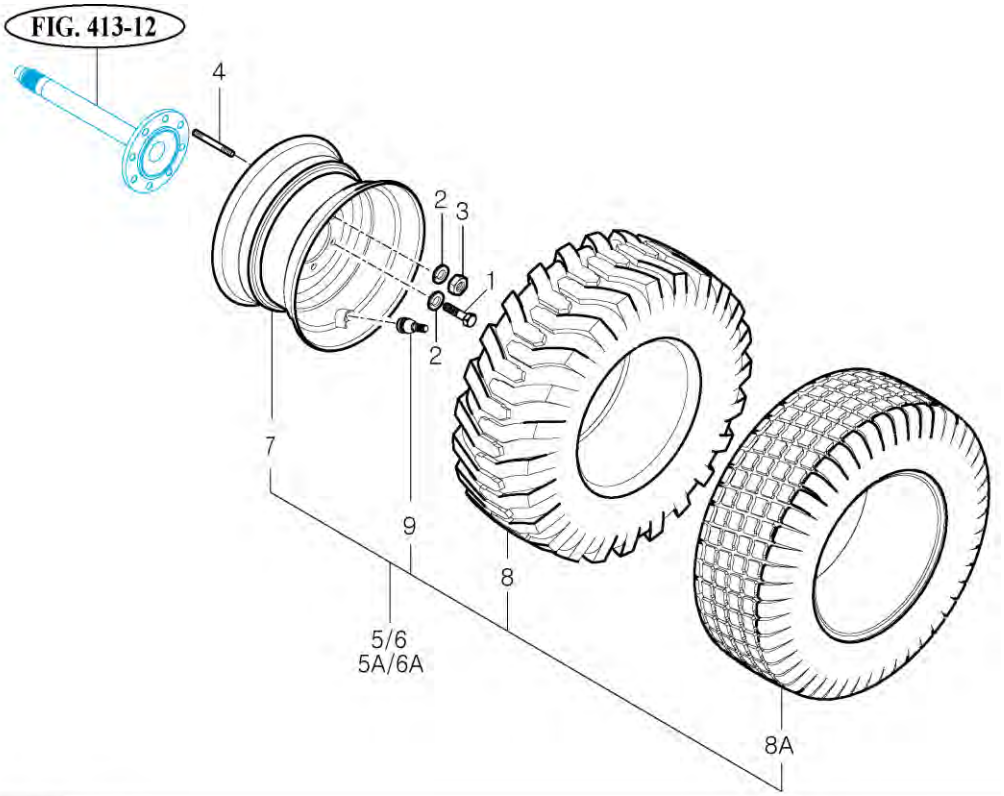

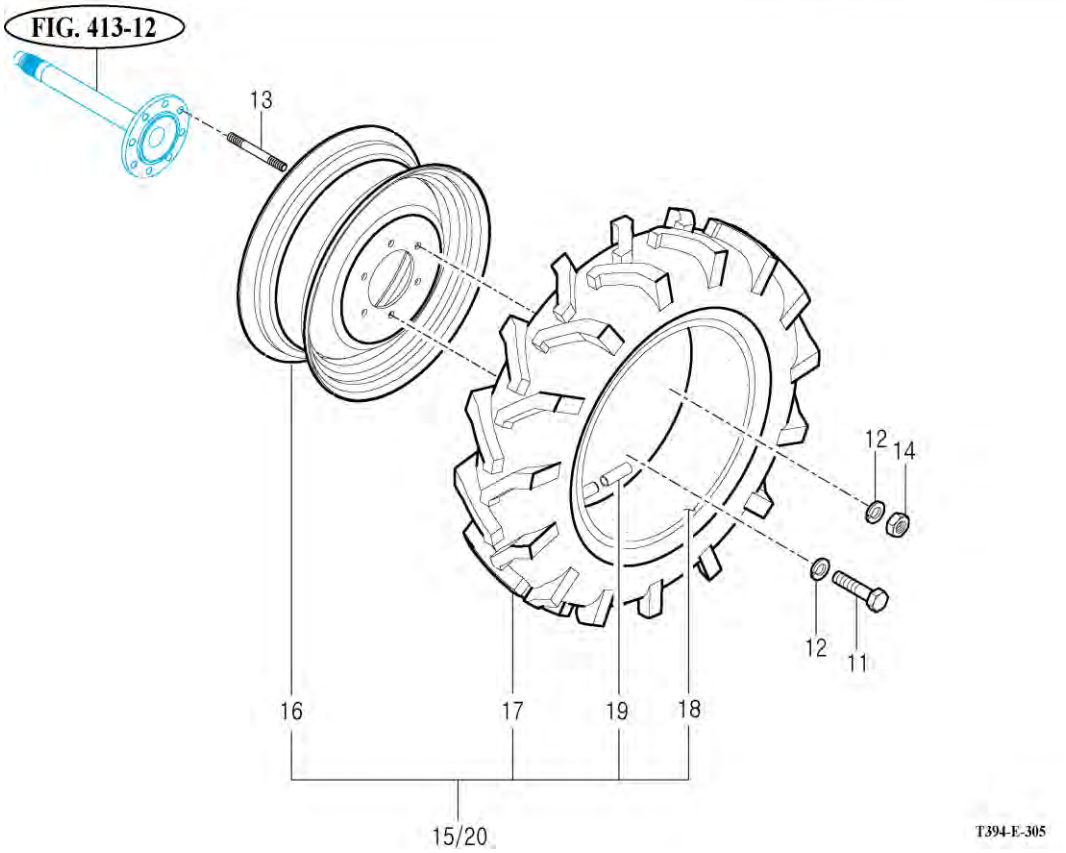

NOTE	

https://truckmanualshub.com/

FIG 306 T394SH	STEERING WHEEL & DASH COVER	P1	Year 2016	

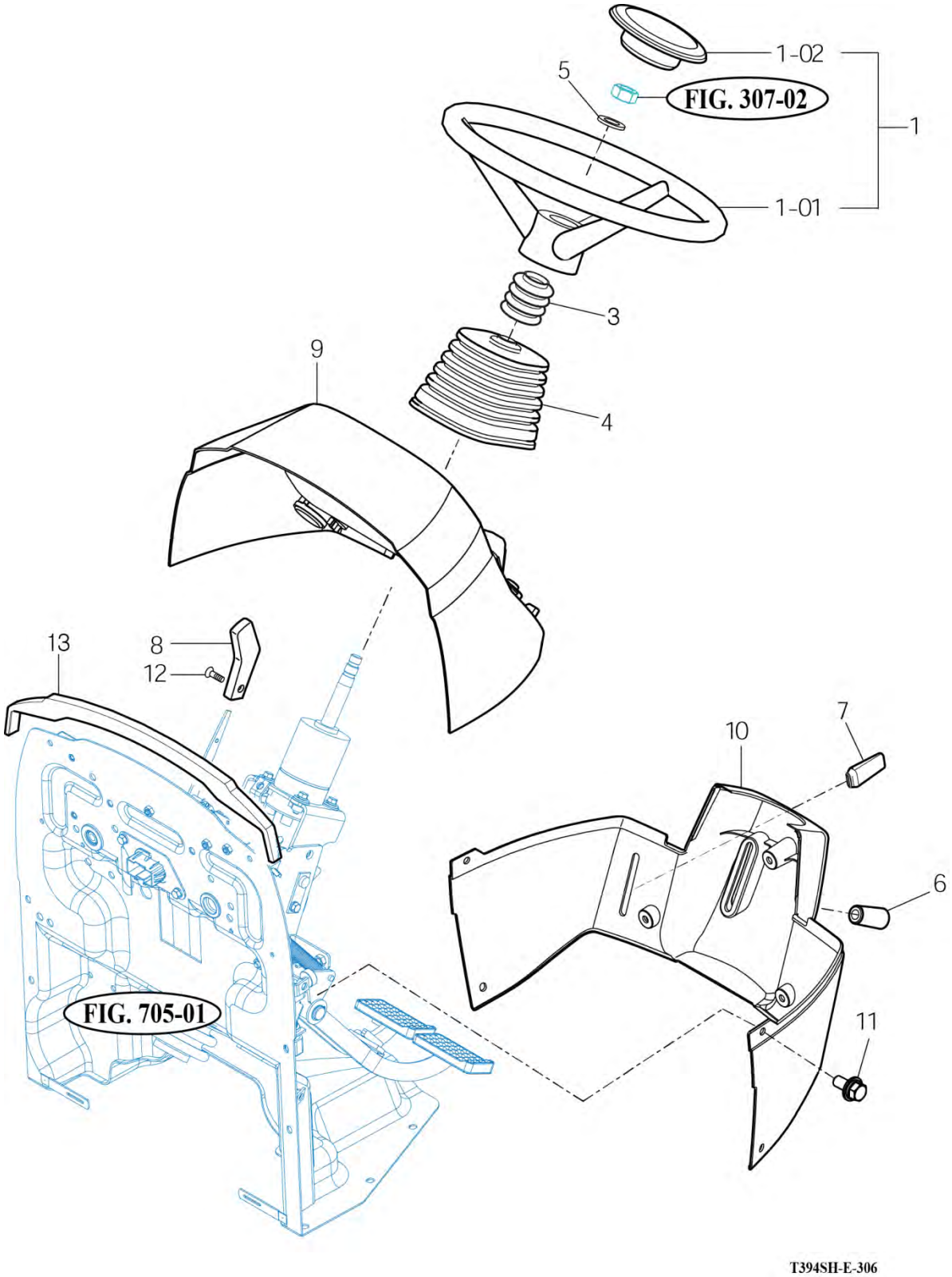

NOTE	

https://truckmanualshub.com/

FIG 307 T394SH	STEERING VALVE & TILT	P1	Year 2016	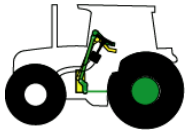

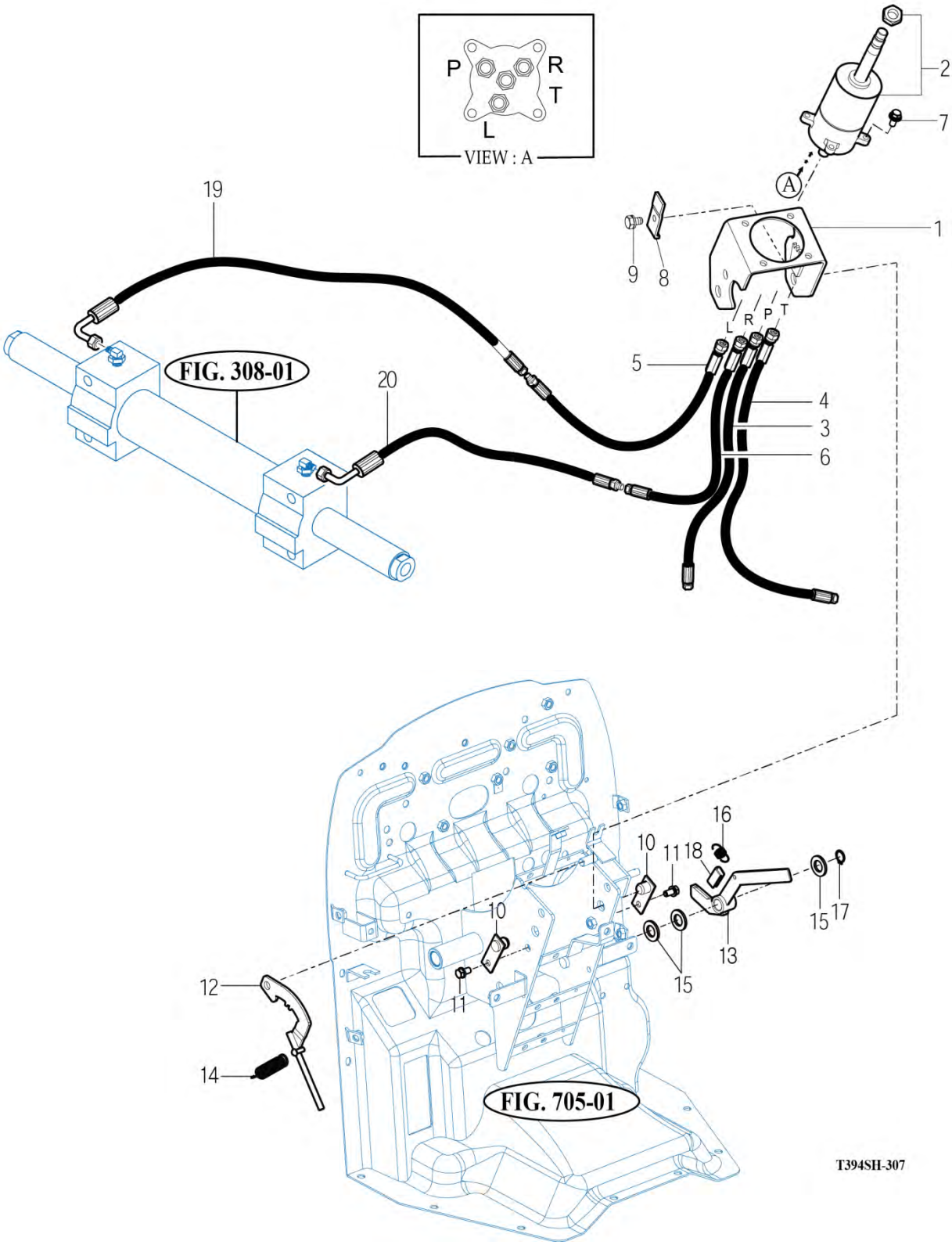

NOTE

https://truckmanualshub.com/

FIG 308 T394SH	STEERING CYLINDER	P1	Year 2016	

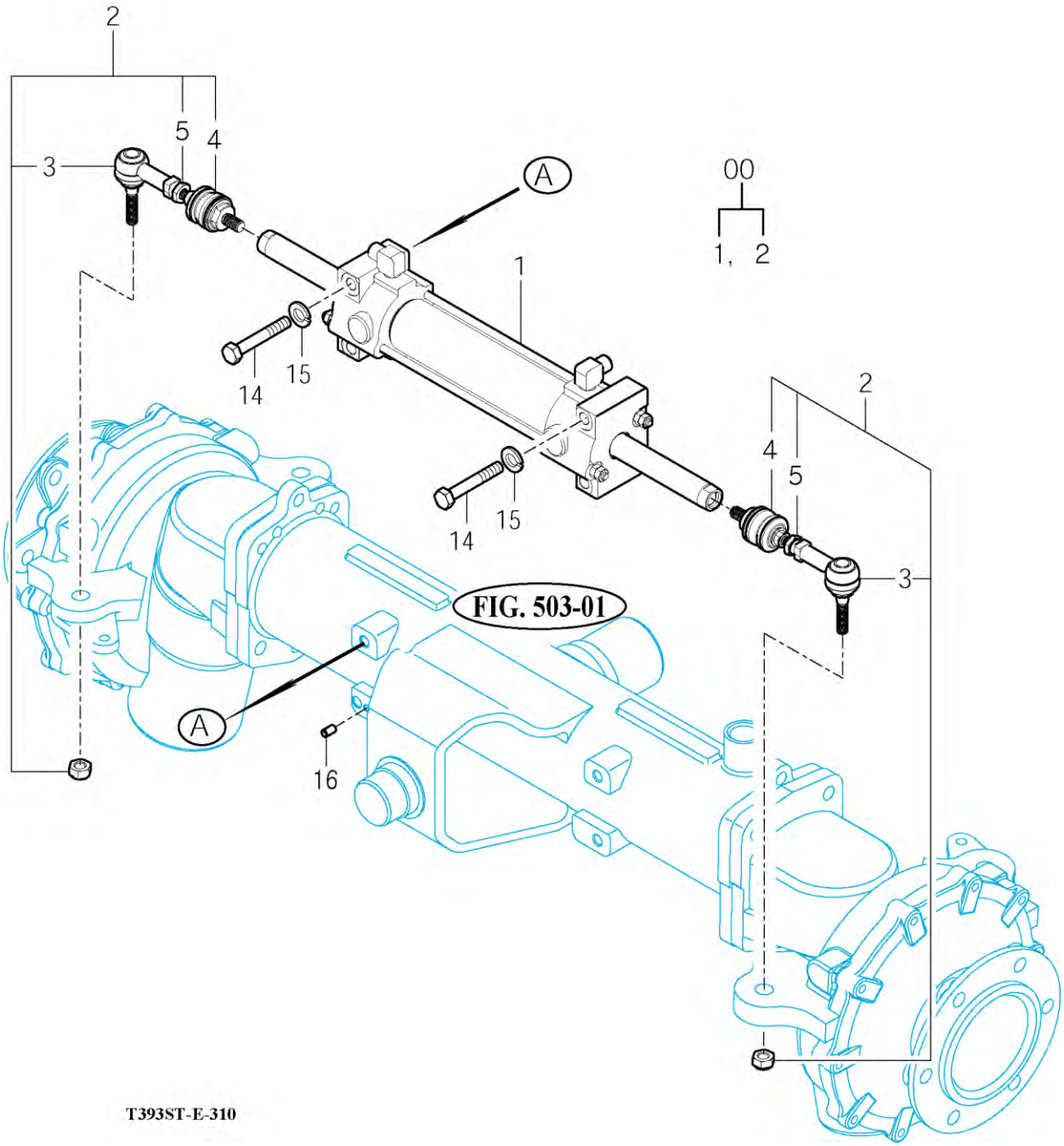

NOTE

https://truckmanualshub.com/

FIG 401 T394SH	TRANSMISSION FRONT CASE	P1	Year 2016	

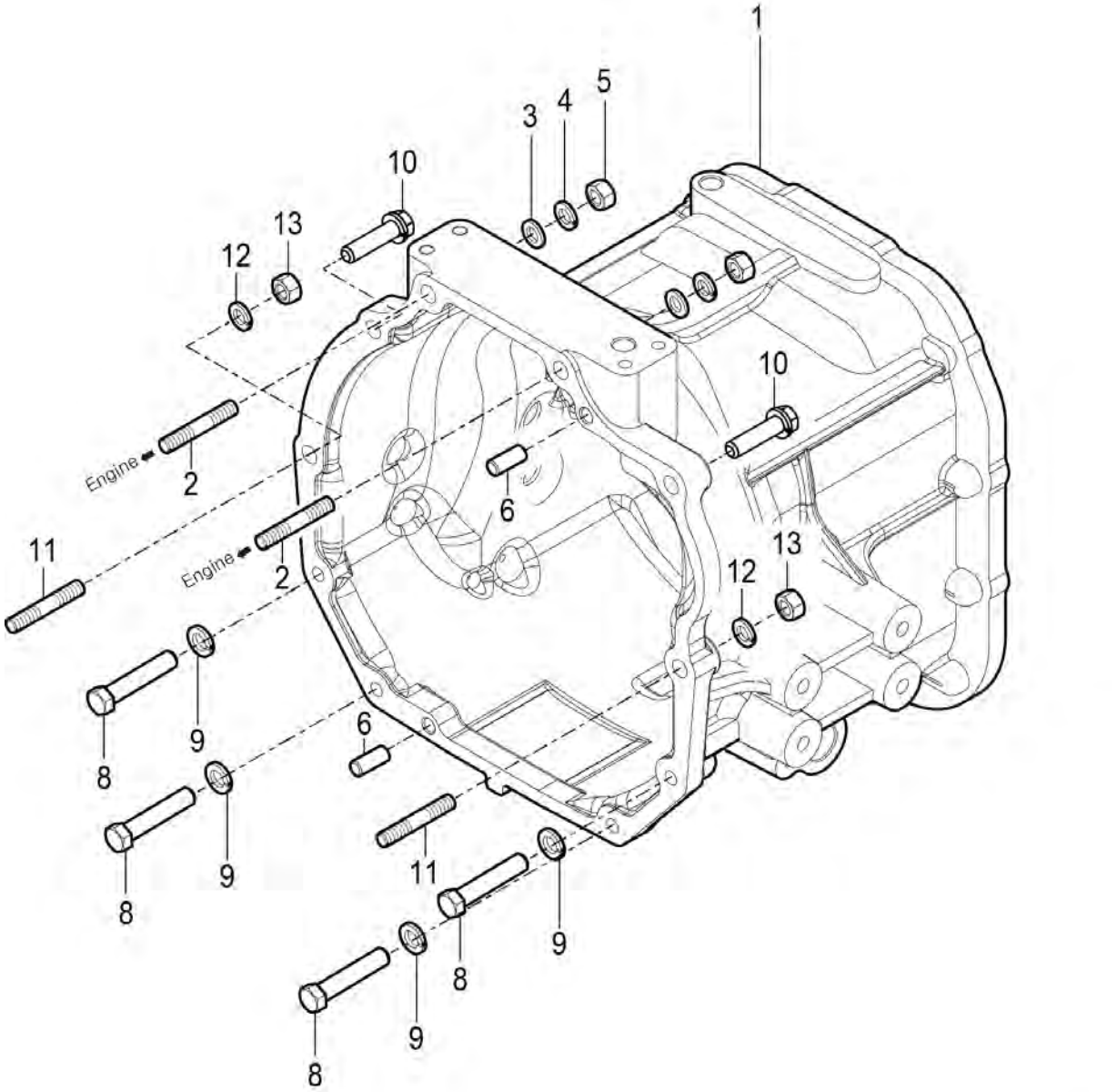

NOTE	

FIG 402 T394SH	HST	P1	Year 2016	

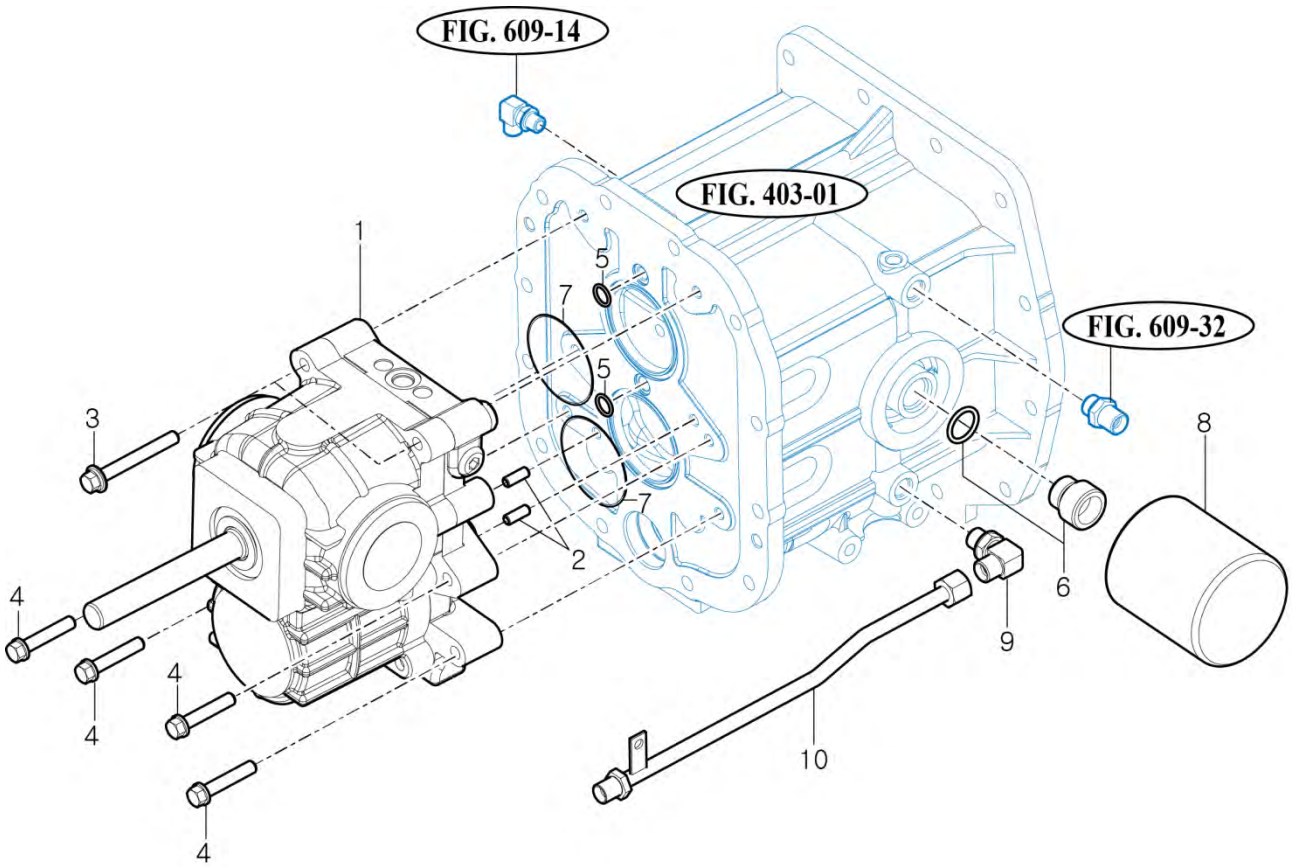

NOTE

https://truckmanualshub.com/

FIG 403 T394SH	MID CASE	P1	Year 2016	

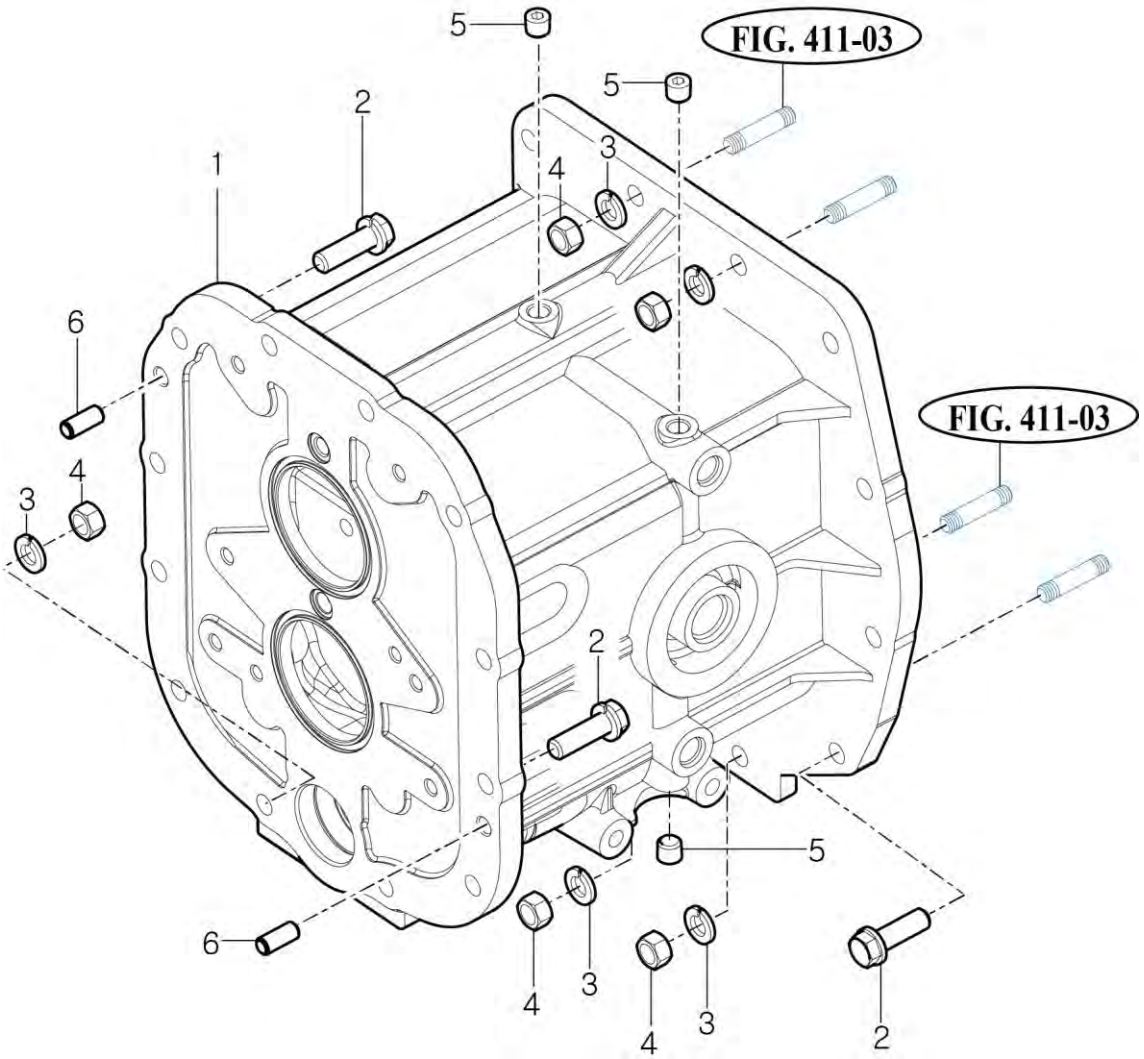

NOTE

https://truckmanualshub.com/

FIG 404 T394SH	4WD DRIVE GEAR	P1	Year 2016

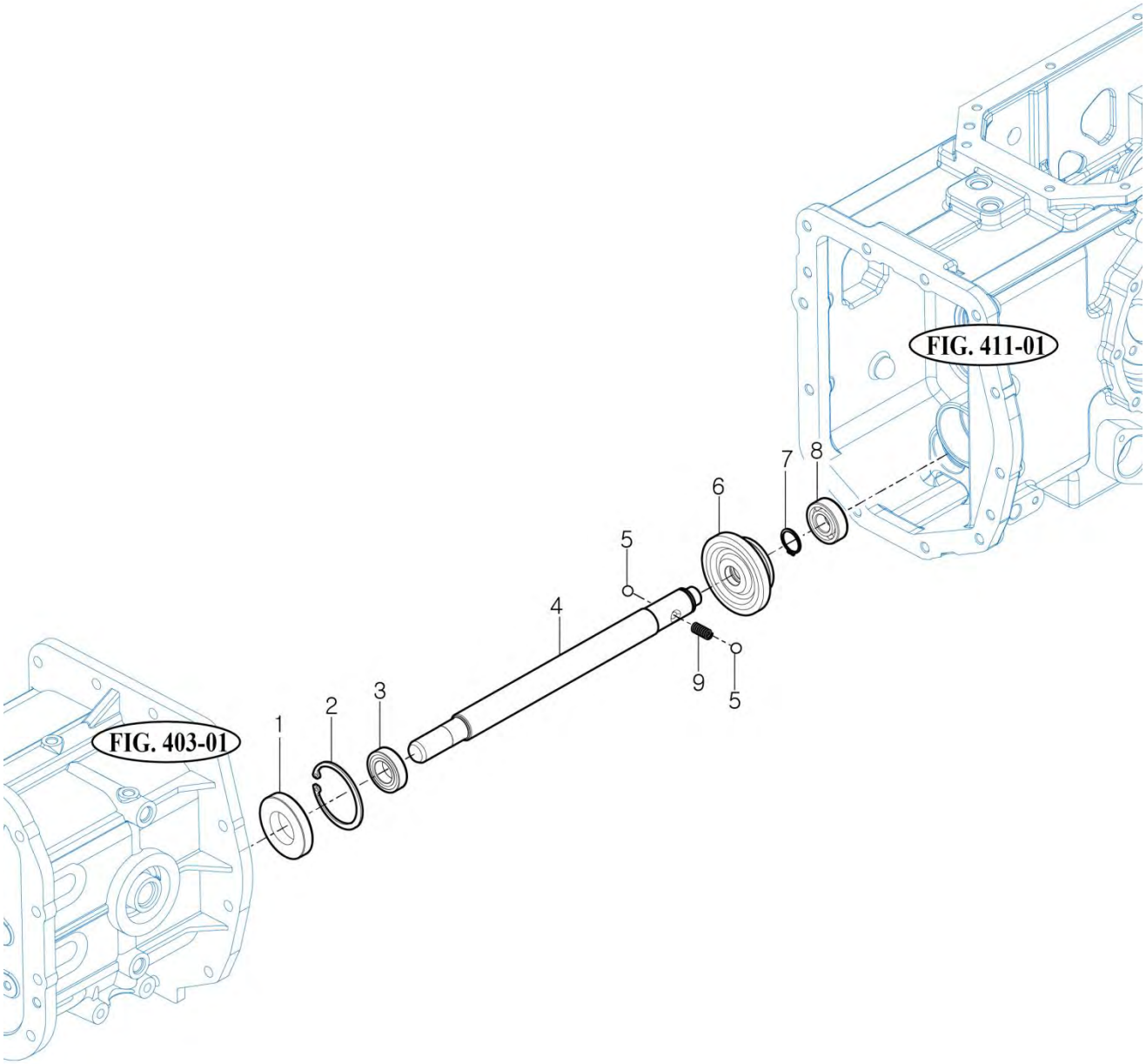

NOTE

https://truckmanualshub.com/

FIG 405 T394SH	INPUT GEAR	P1	Year 2016	

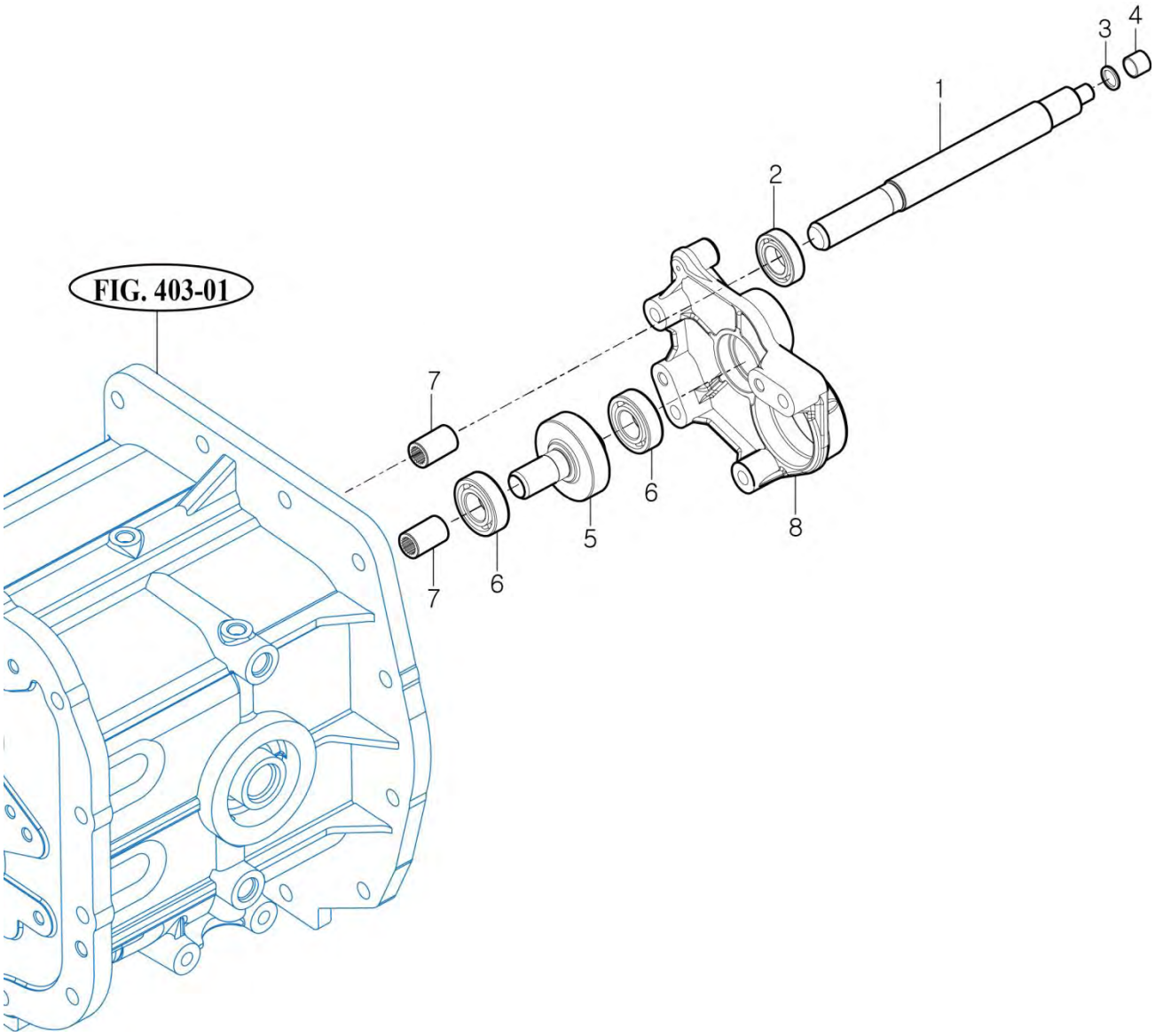

NOTE

https://truckmanualshub.com/

FIG 406 T394SH	SUB CHANGE GEARS	P1	Year 2016	

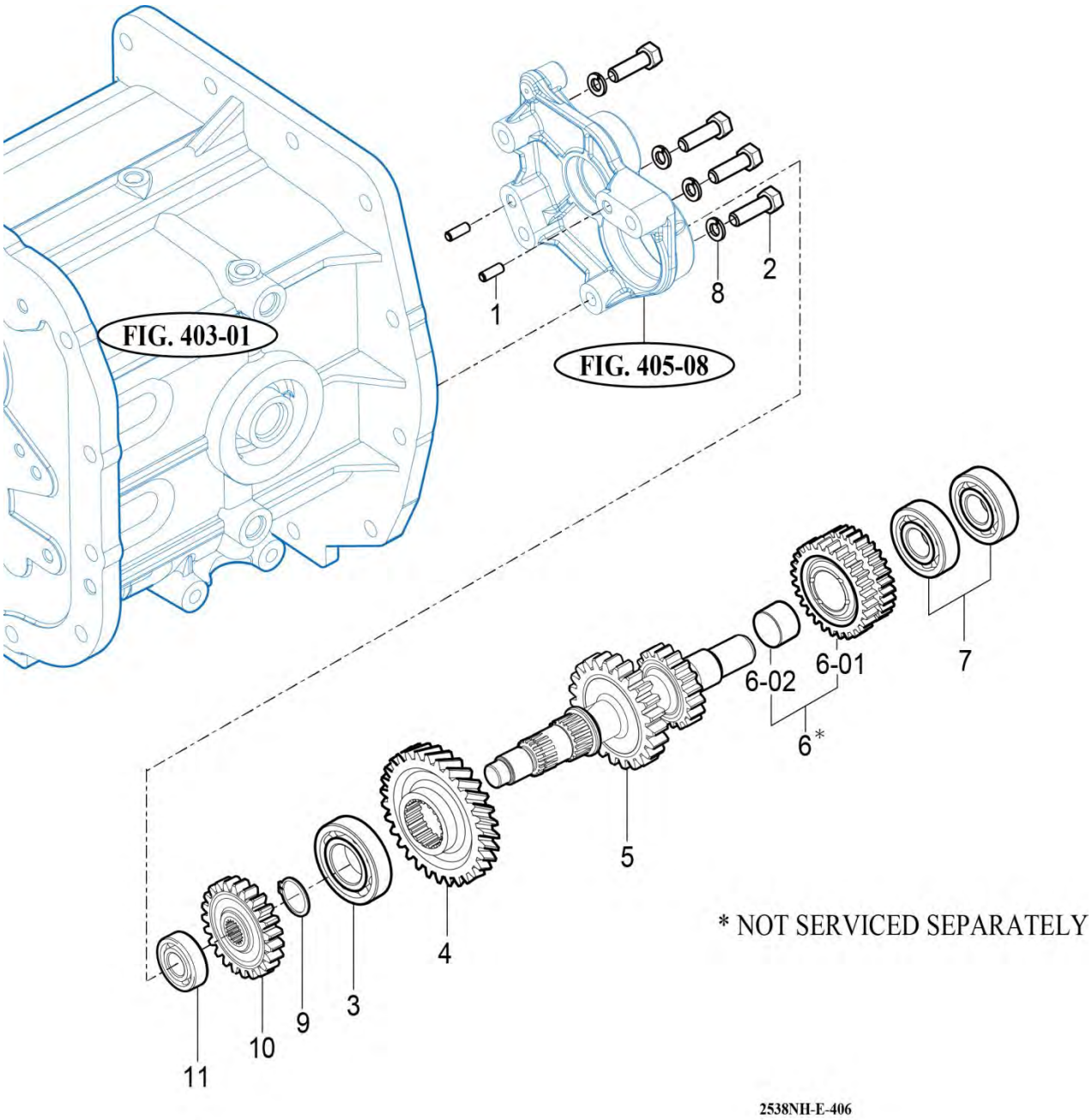

NOTE

https://truckmanualshub.com/

FIG 407 T394SH	PINION GEARS	P1	Year 2016	

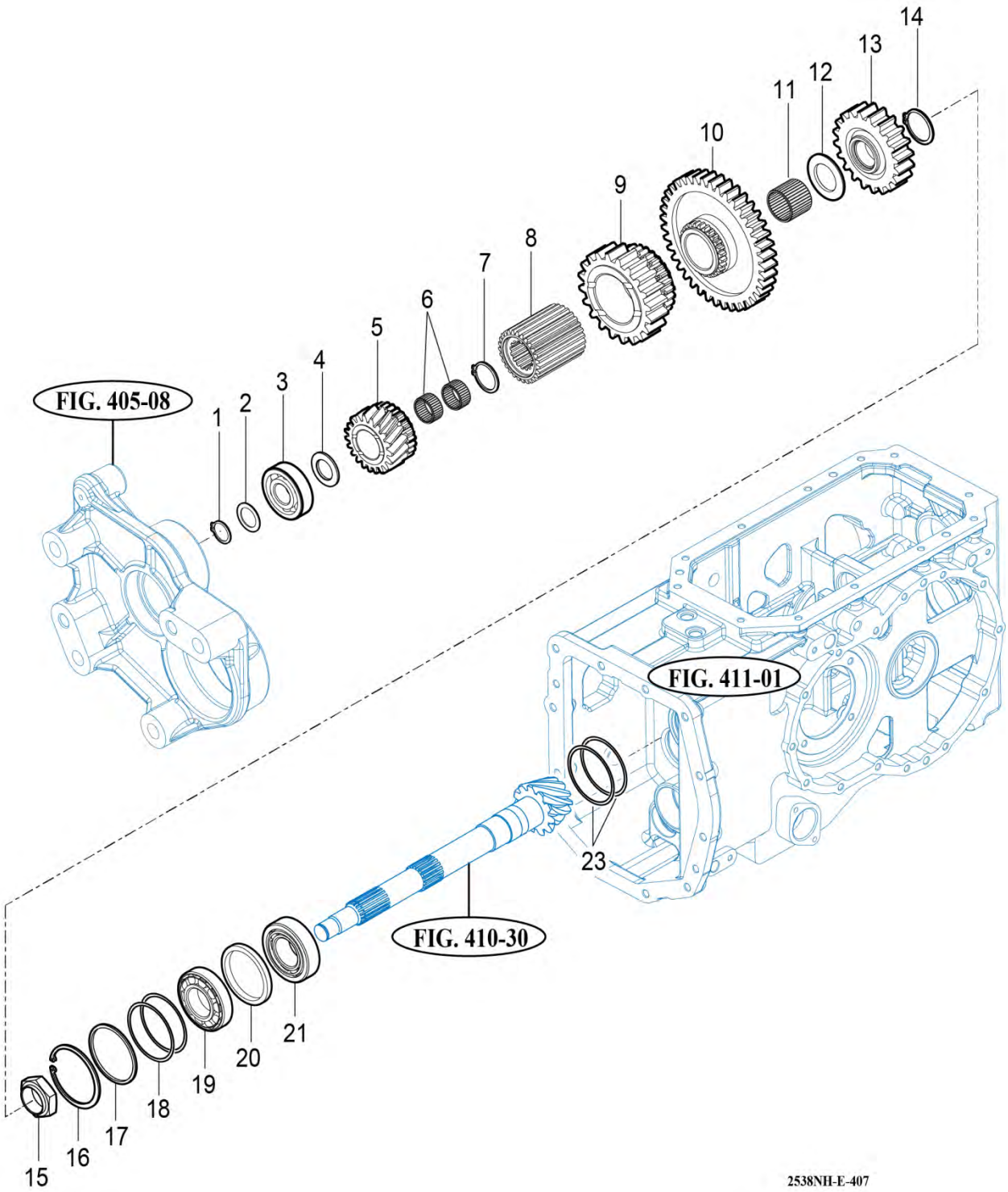

NOTE

https://truckmanualshub.com/

FIG 408 T394SH	P.T.O DRIVE SHAFT	P1	Year 2016	

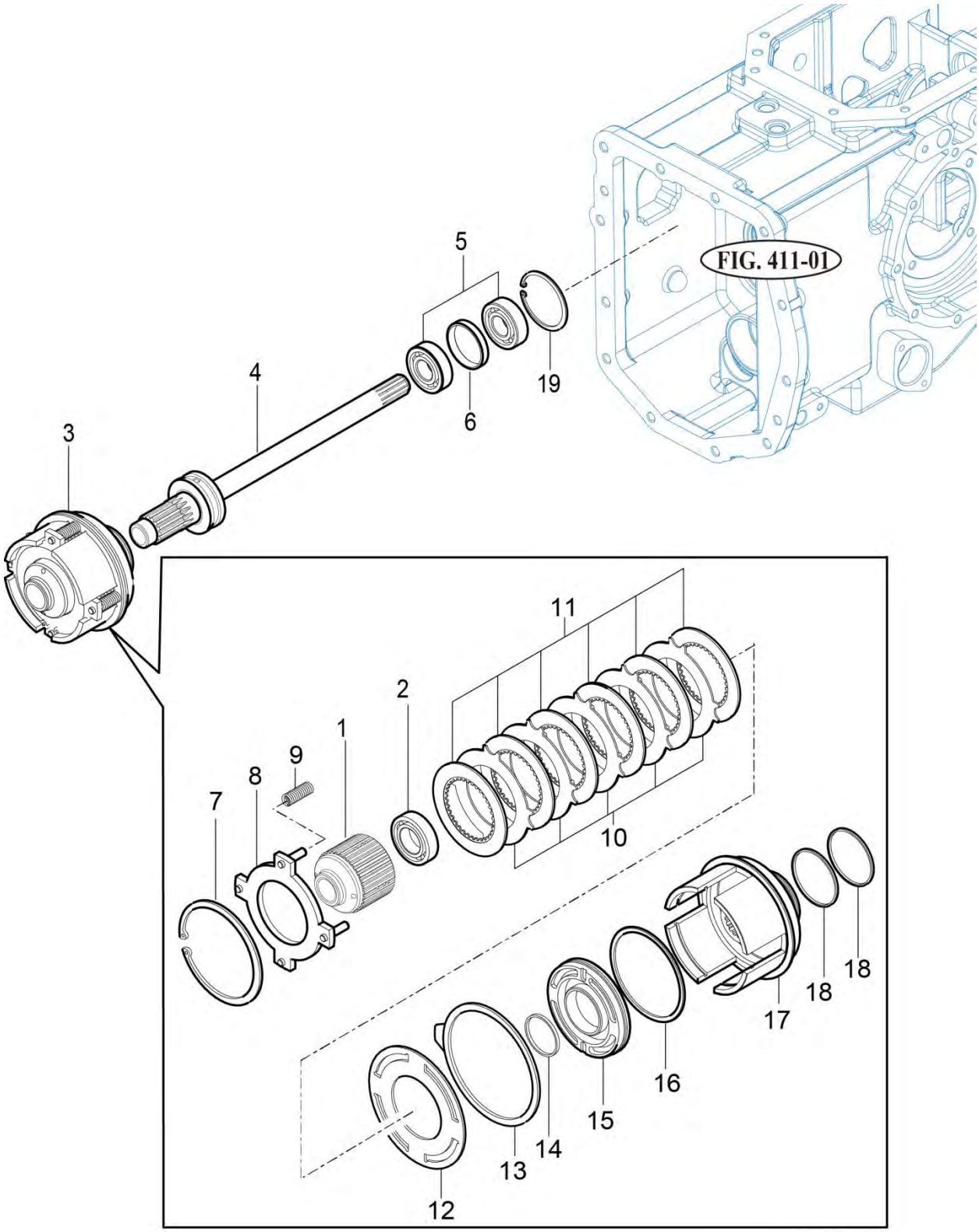

NOTE	

https://truckmanualshub.com/

FIG 409 T394SH	P.T.O CHANGE GEARS	P1	Year 2016	

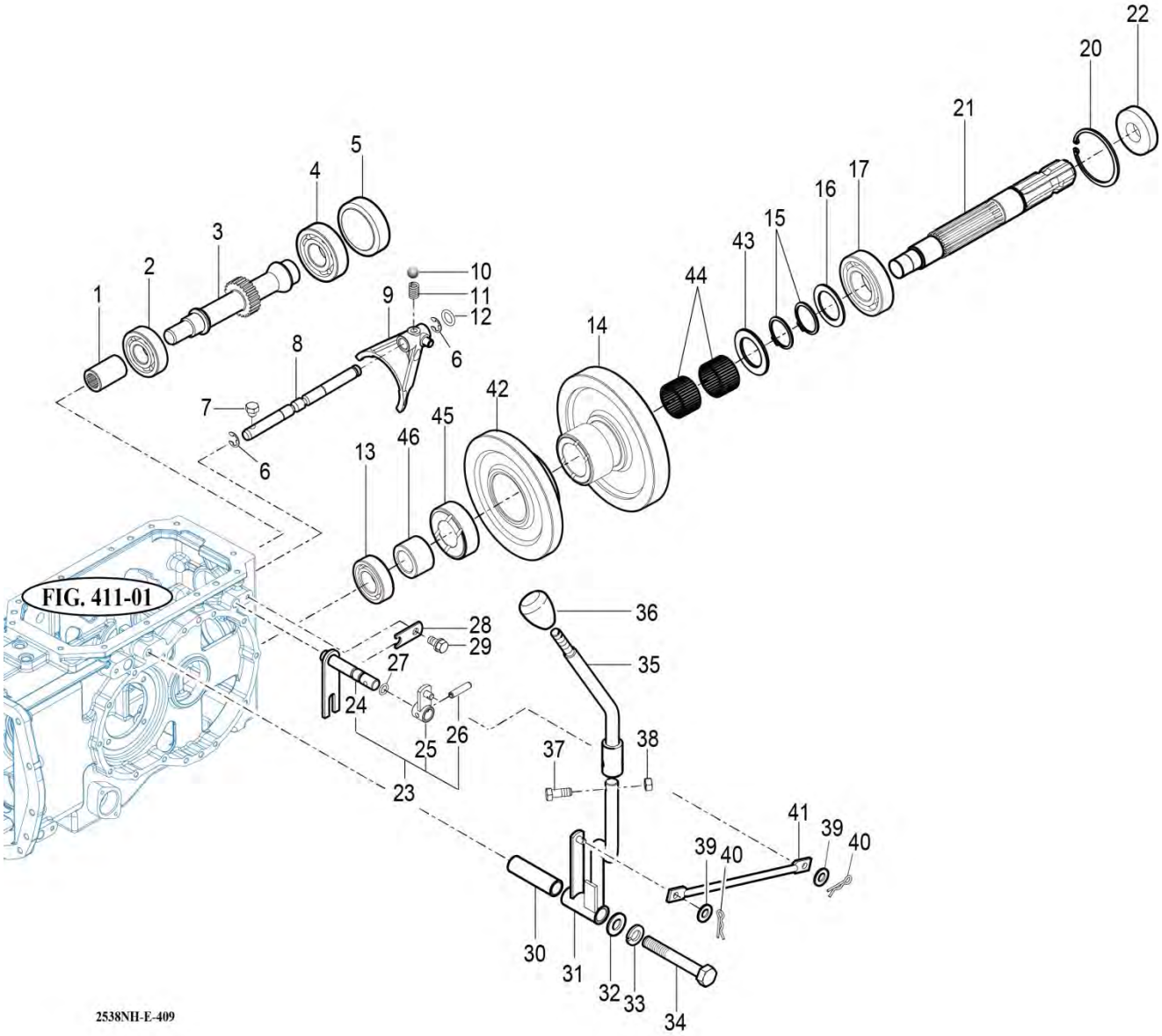

NOTE

https://truckmanualshub.com/

FIG 410 T394SH	DIFF LOCK	P1	Year 2016	

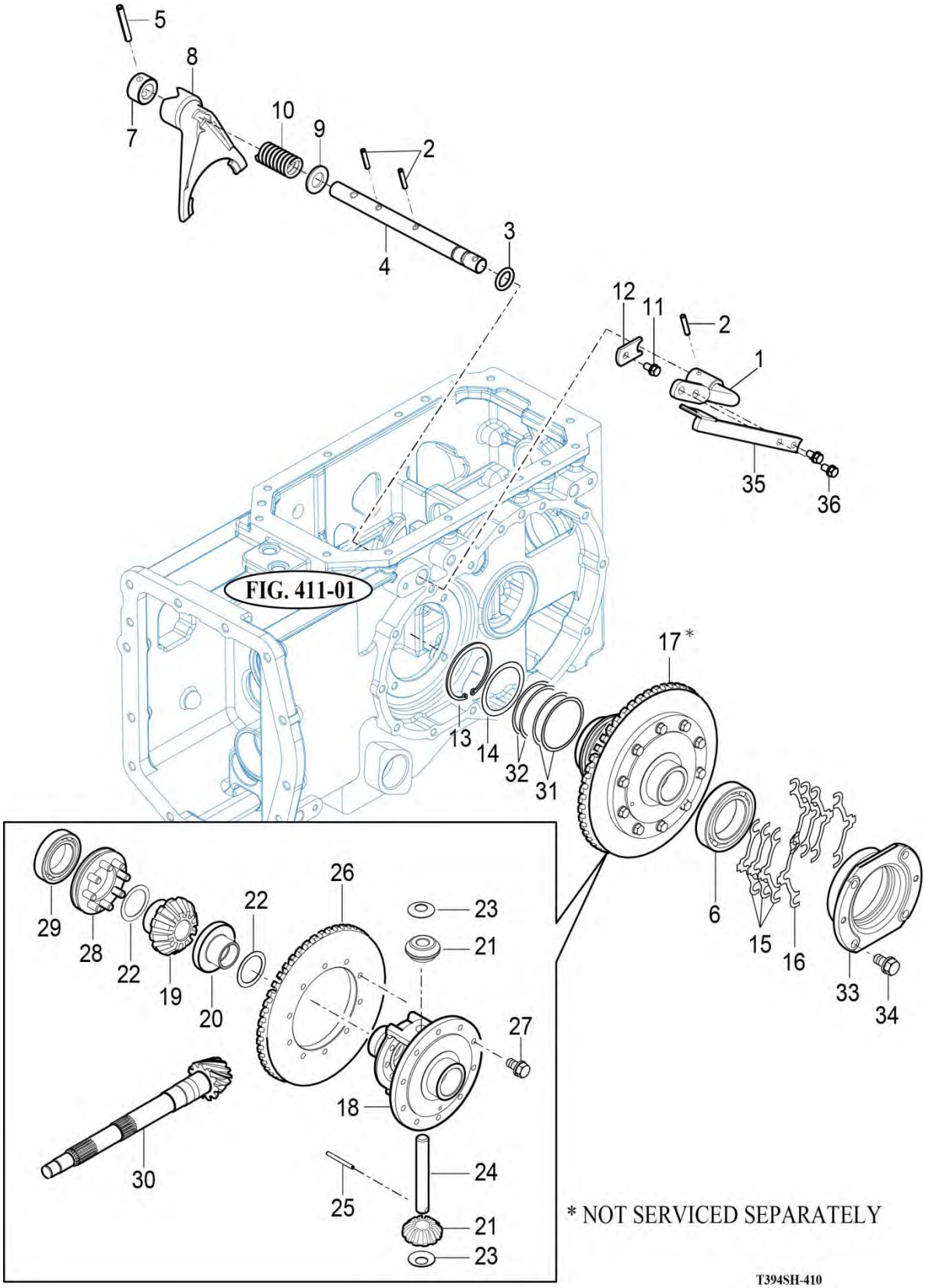

NOTE

https://truckmanualshub.com/

FIG 411 T394SH	TRANSMISSION REAR CASE	P1	Year 2016	

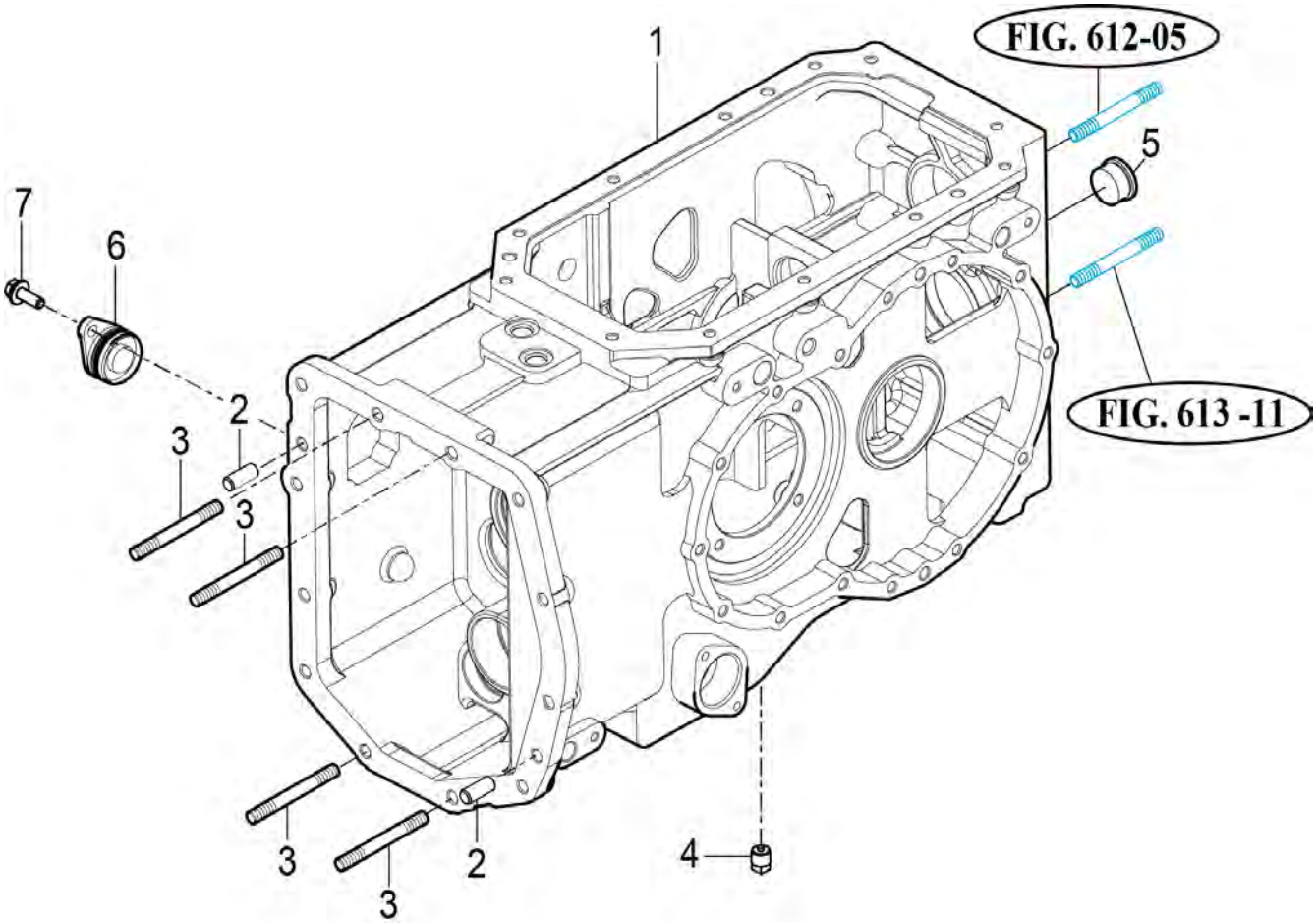

NOTE	

https://truckmanualshub.com/

FIG 412 T394SH	REAR AXLE HOUSINGS (1)	P1	Year 2016	

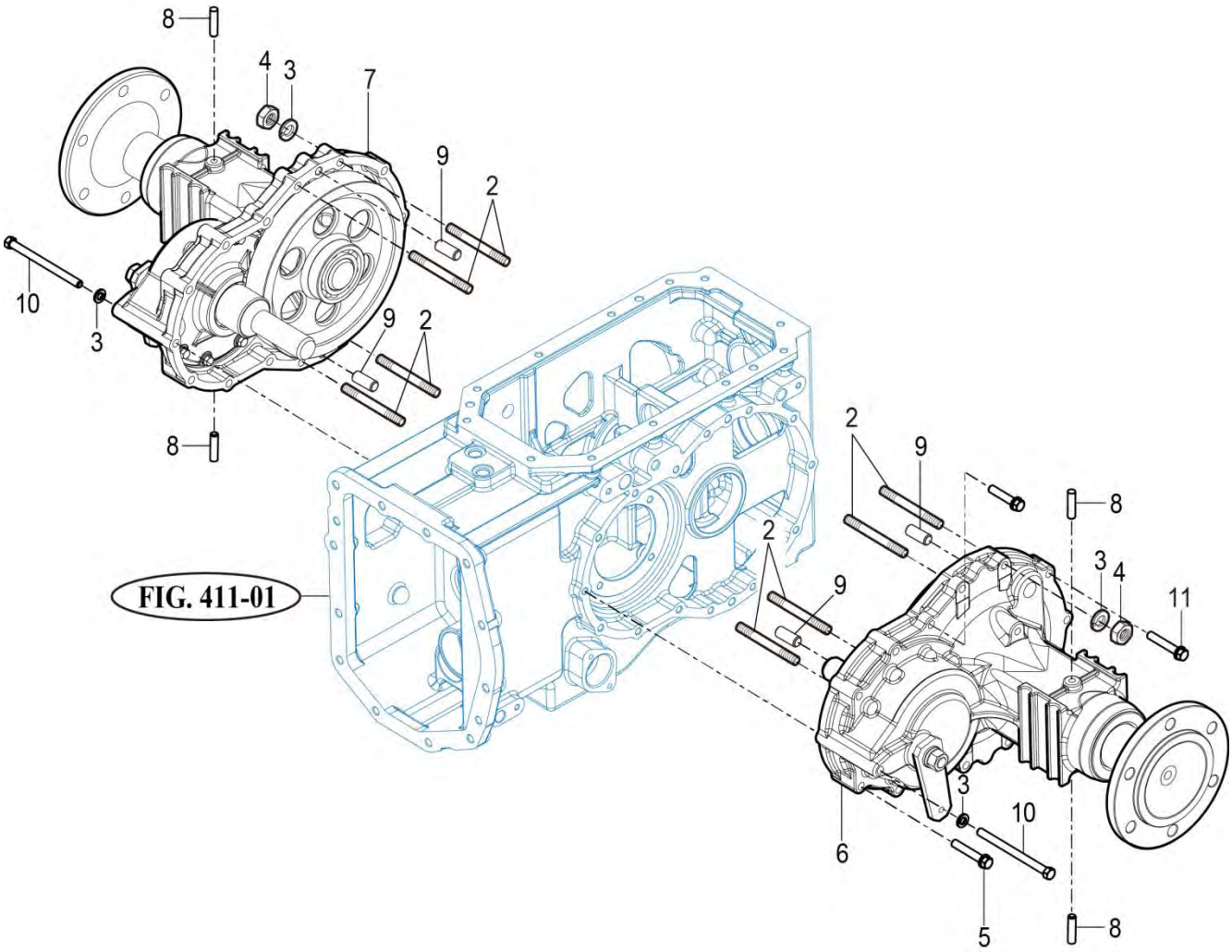

2538NH-E-412

NOTE	

https://truckmanualshub.com/

FIG 413 T394SH	REAR AXLE HOUSINGS (2)	P1	Year 2016	

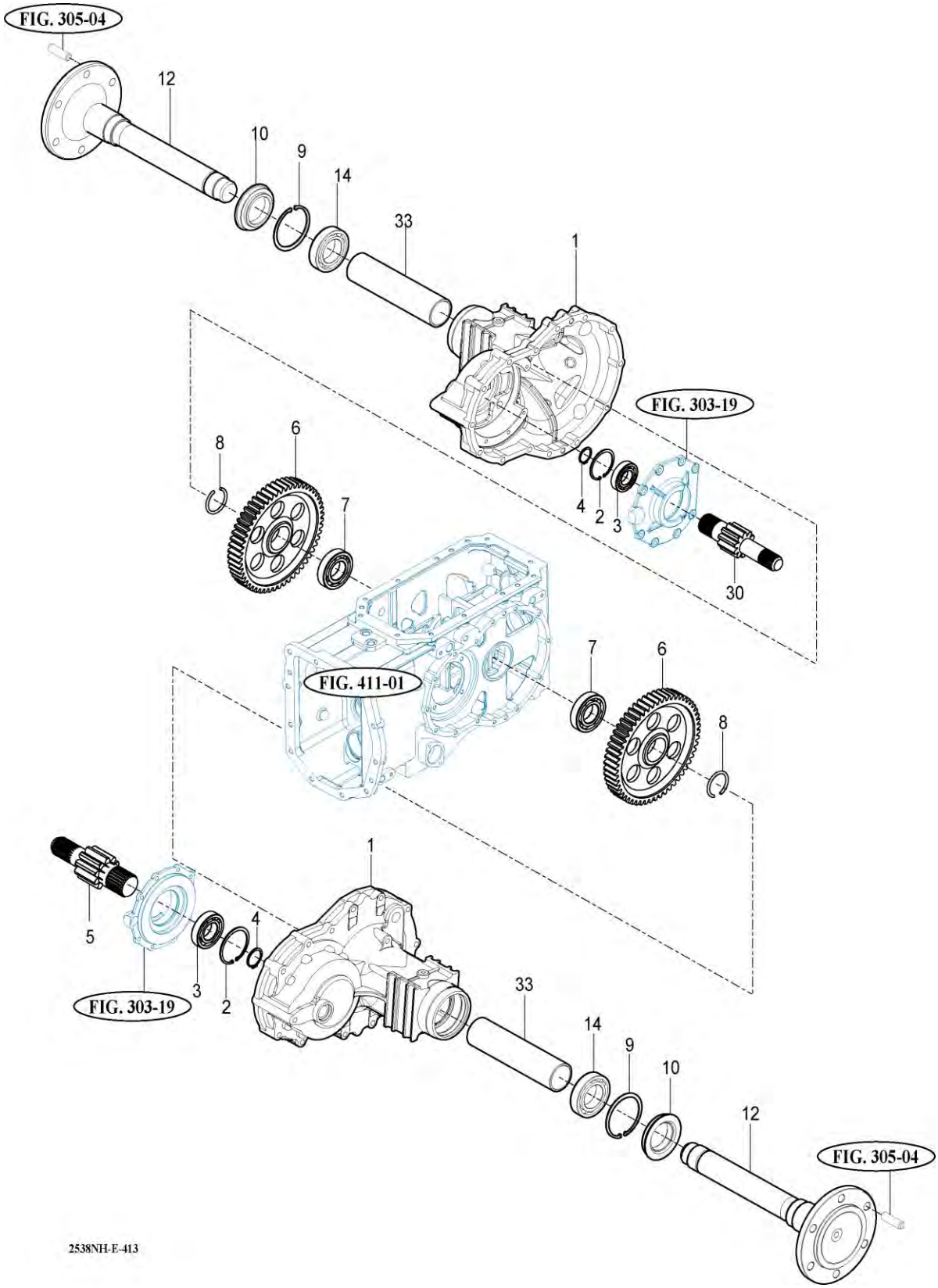

NOTE

https://truckmanualshub.com/

FIG 414 T394SH	MID P.T.O GEARS	P1	Year 2016	

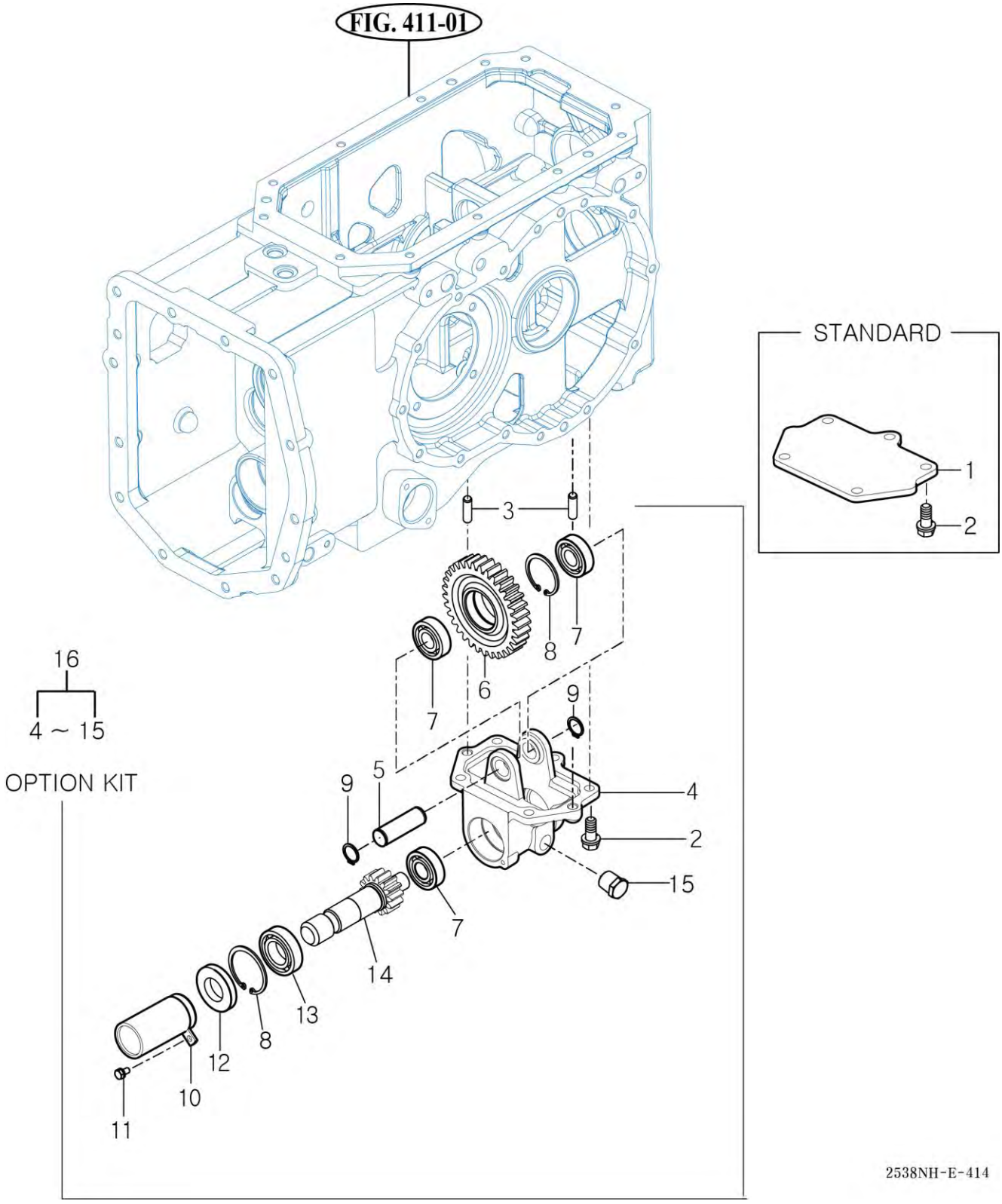

NOTE

https://truckmanualshub.com/

FIG 415 T394SH	SUB CHANGE LEVER	P1	Year 2016	

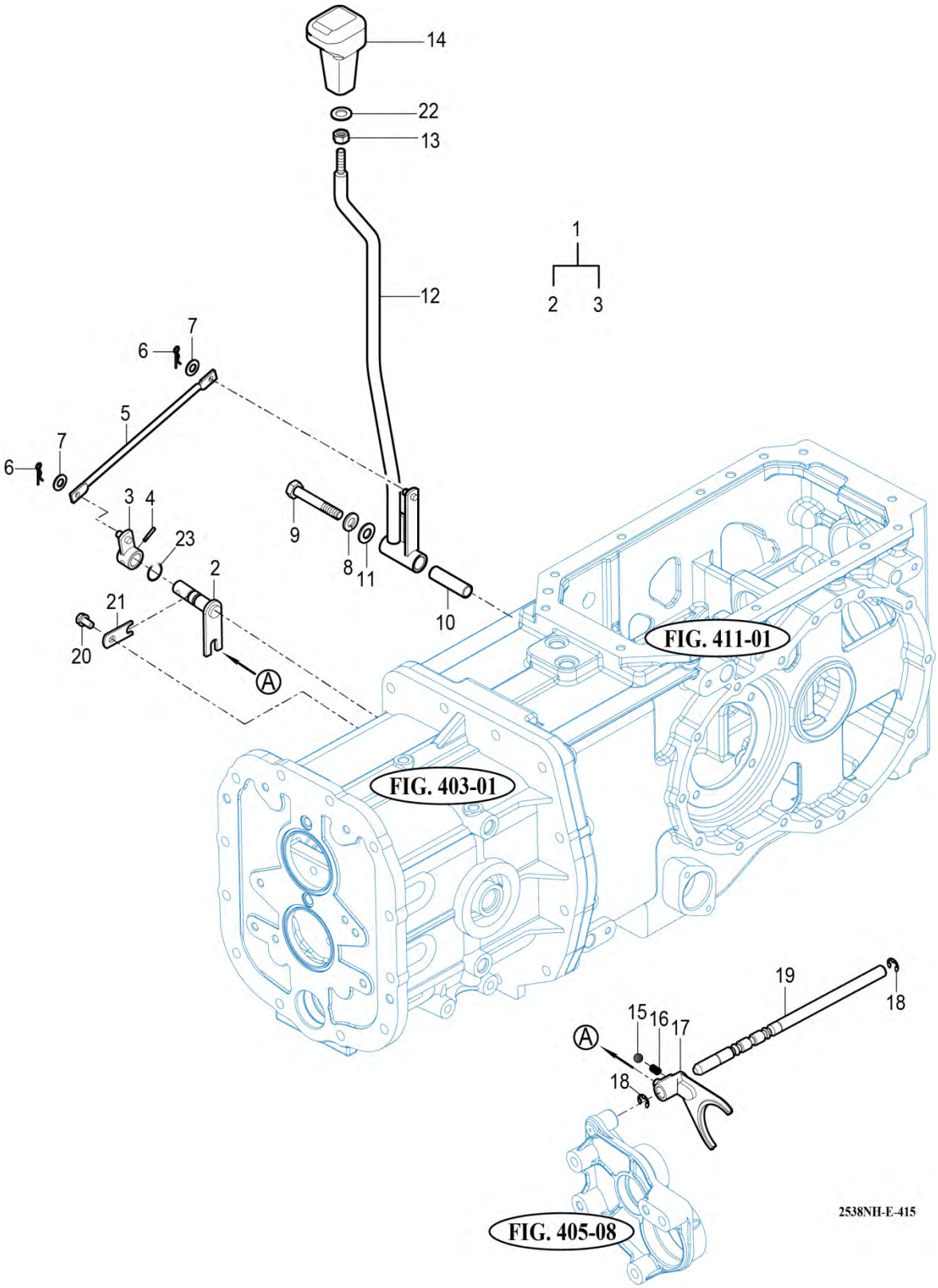

NOTE

https://truckmanualshub.com/

FIG 416 T394SH	FORWARD & REVERSE CONTROL LINKAGE	P1	Year 2016	

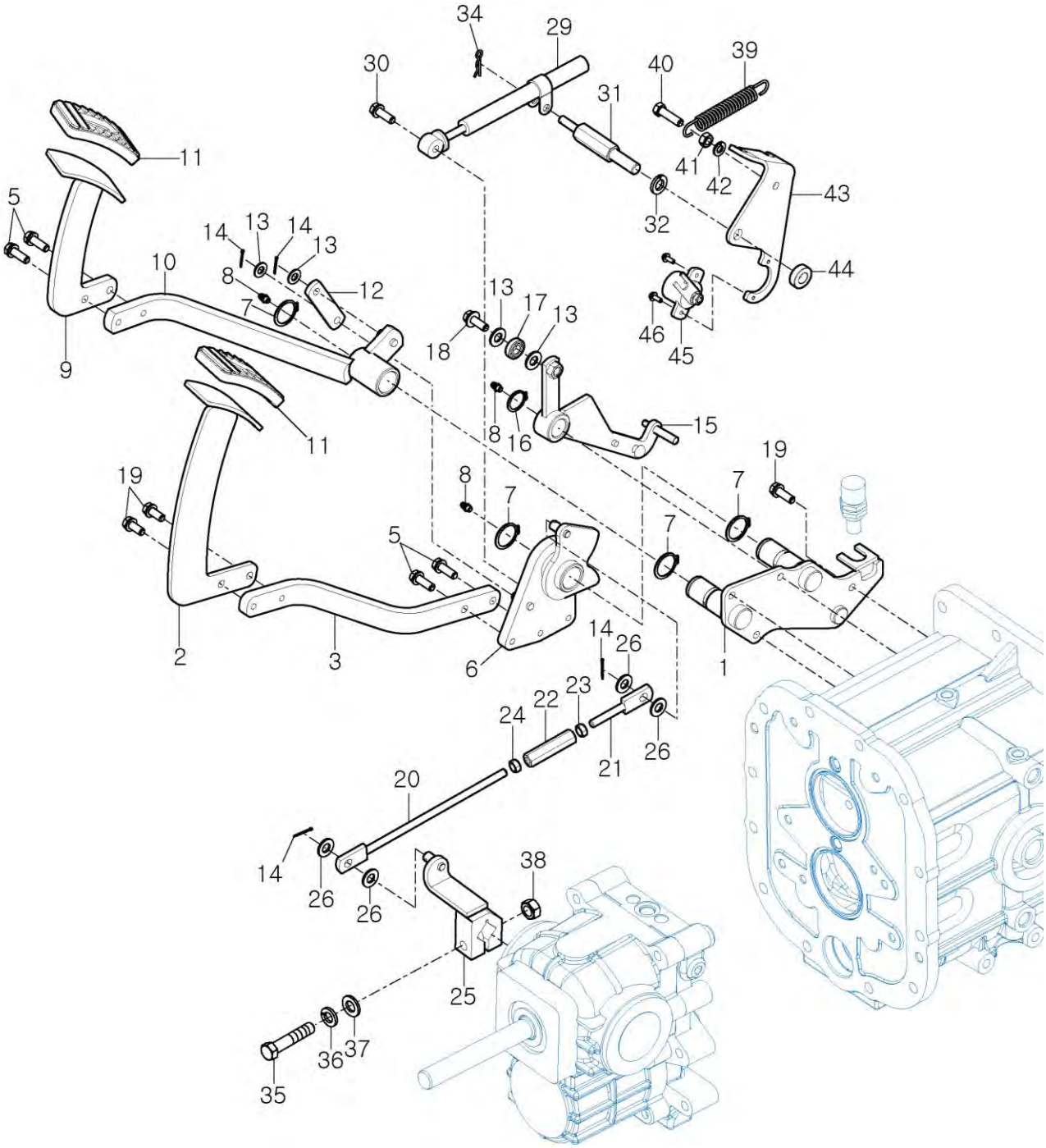

NOTE	

https://truckmanualshub.com/

FIG 417 T394SH	CRUISE CONTROL KIT (OPTION)	P1	Year 2016	

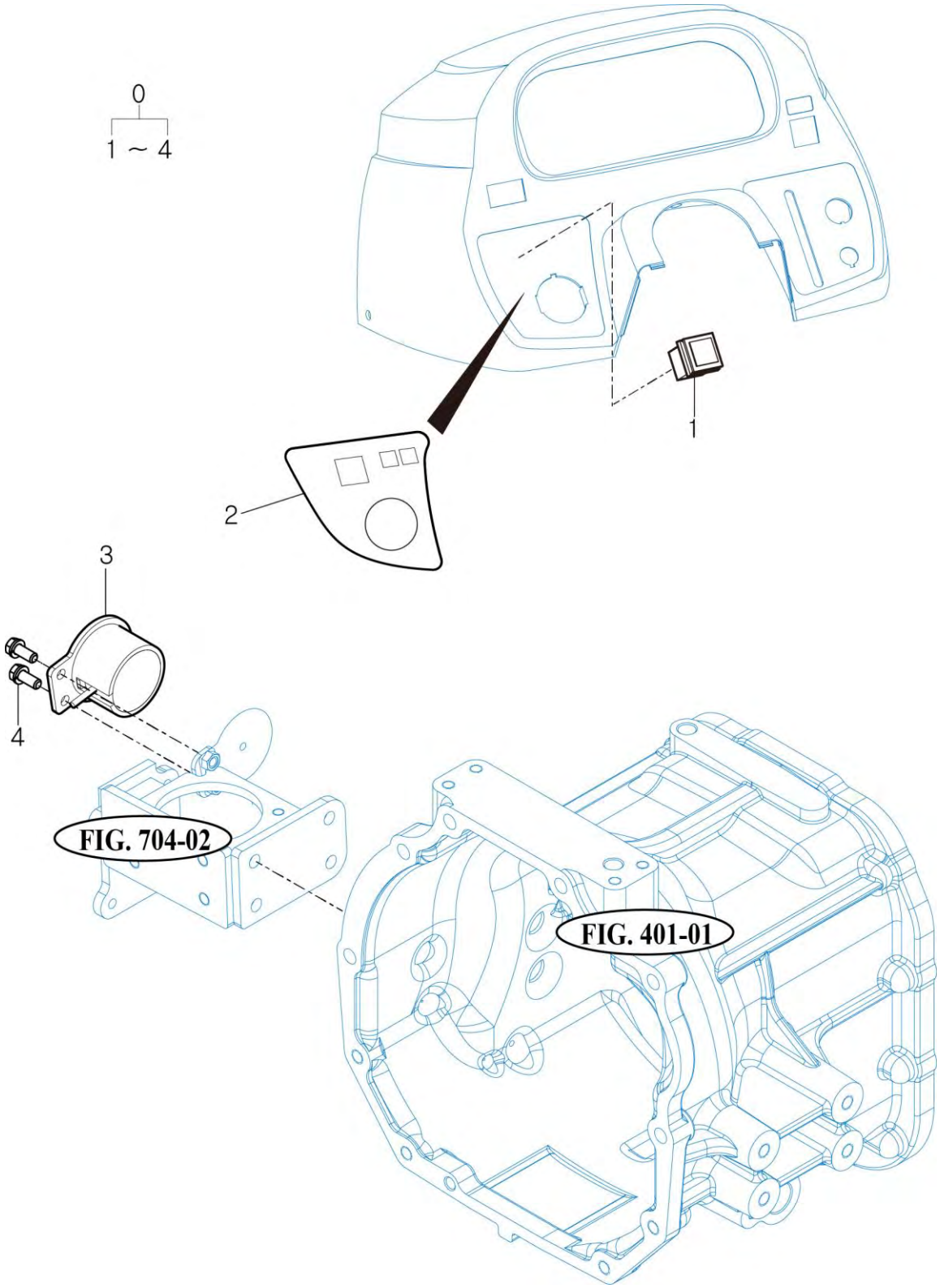

NOTE

https://truckmanualshub.com/

FIG 418 T394SH	4WD CHANGE LEVER	P1	Year 2016	

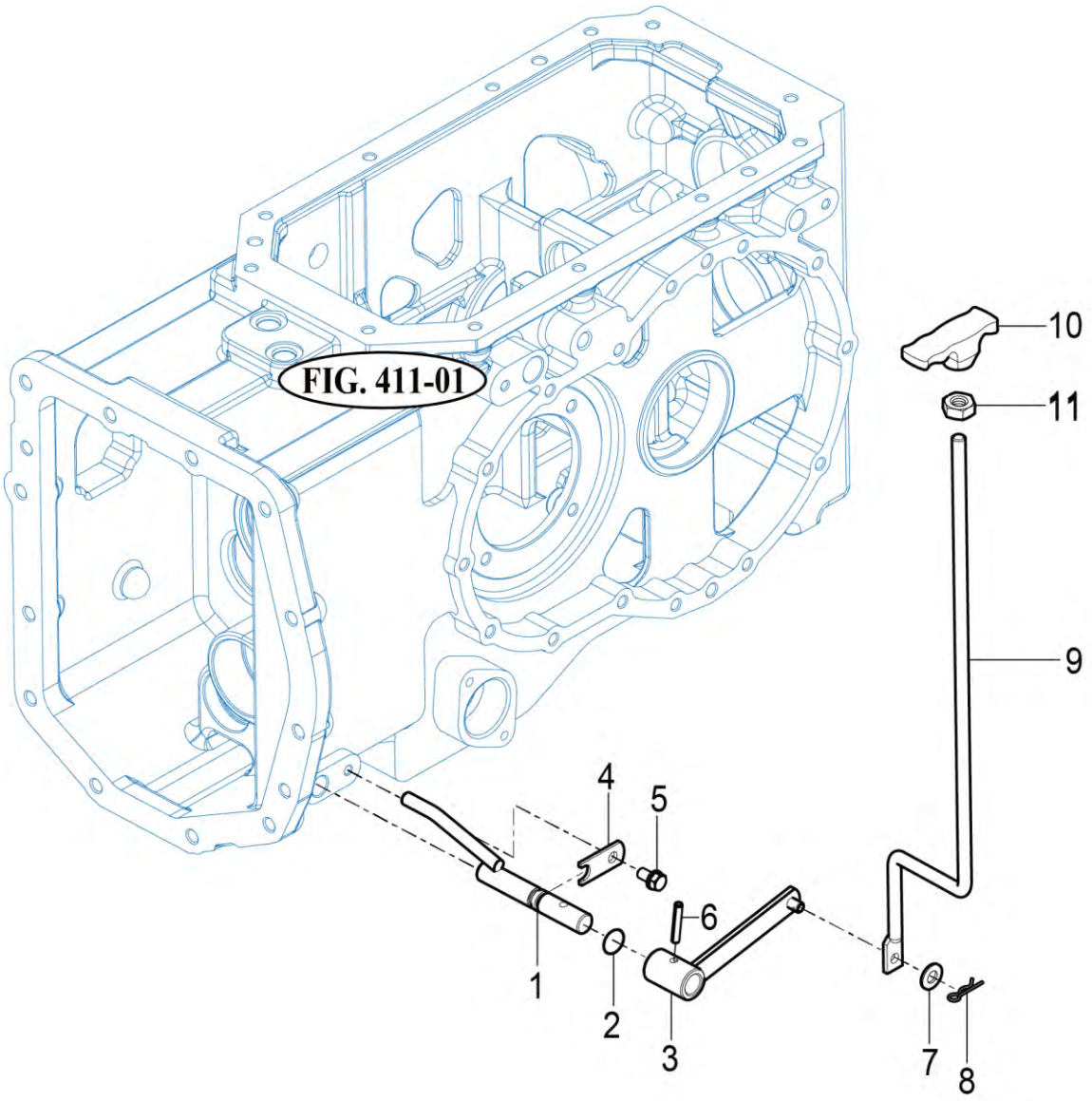

2538NH-K-418

NOTE

https://truckmanualshub.com/

FIG 501 T394SH	FRONT AXLE BRACKET	P1	Year 2016	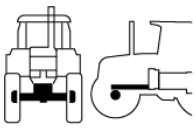

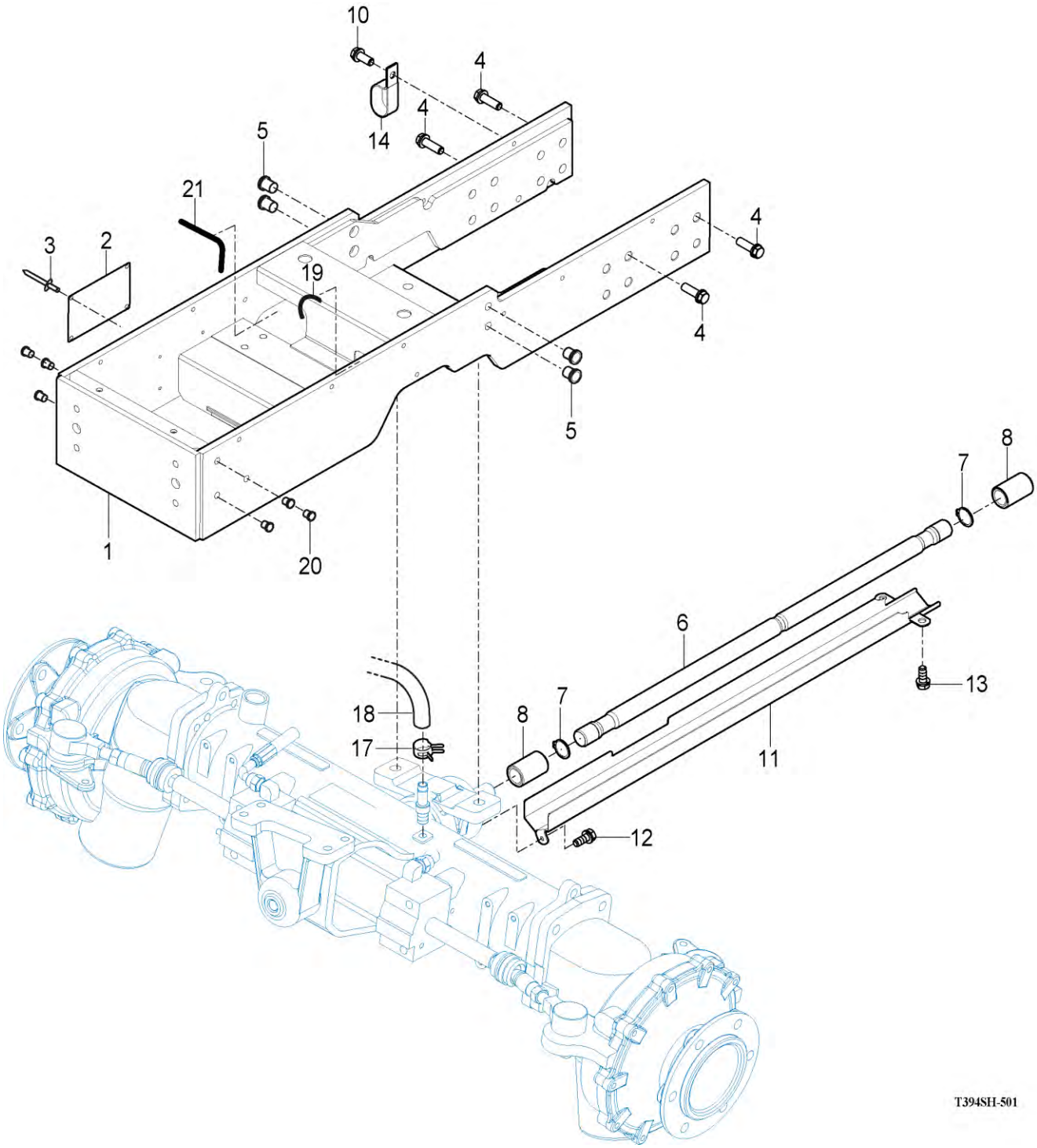

NOTE

https://truckmanualshub.com/

FIG 502 T394SH	FRONT DIFFERENTIAL GEARS	P1	Year 2016	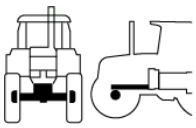

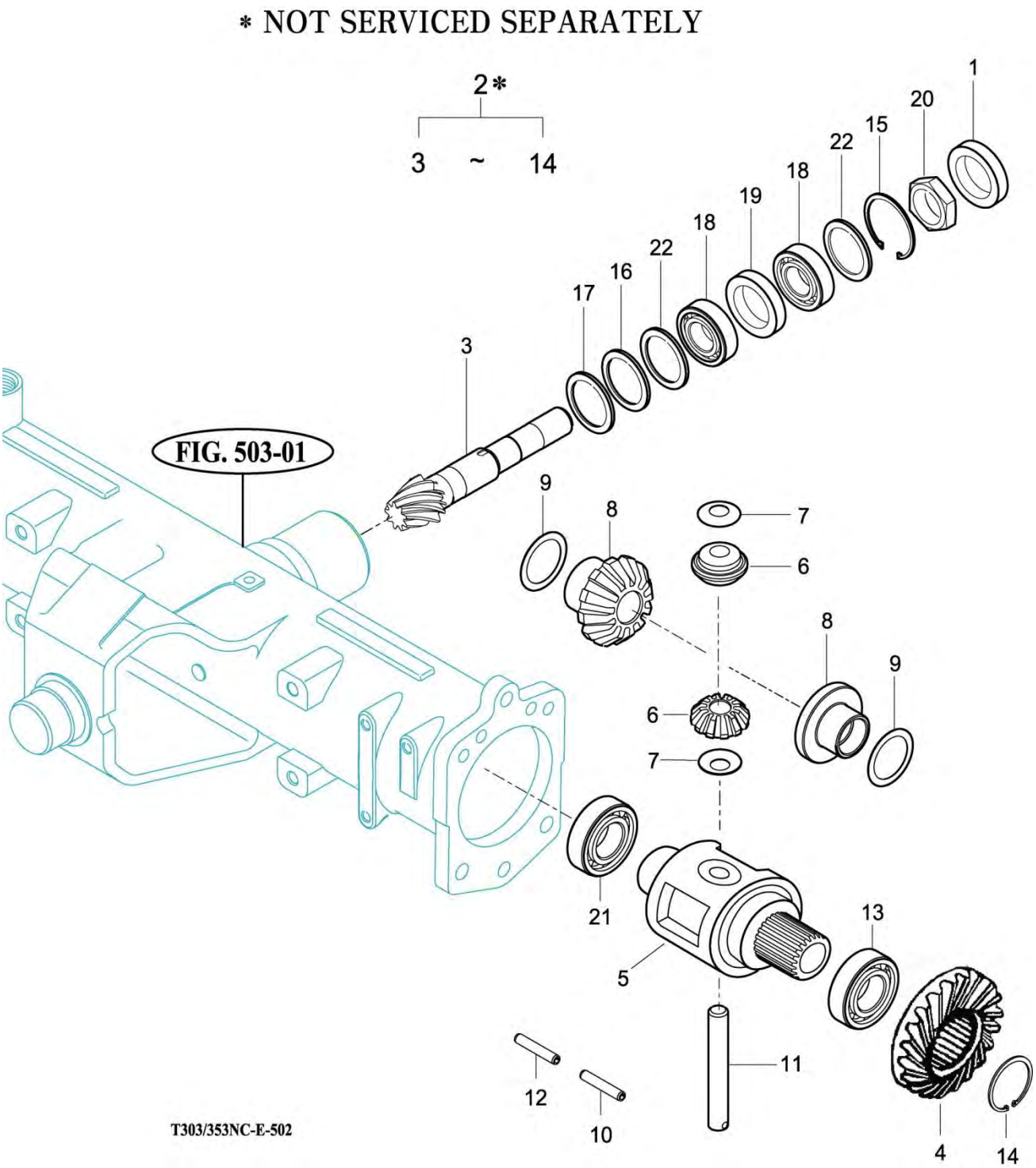

NOTE

https://truckmanualshub.com/

FIG 503 T394SH	FRONT AXLE HOUSING	P1	Year 2016	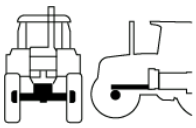

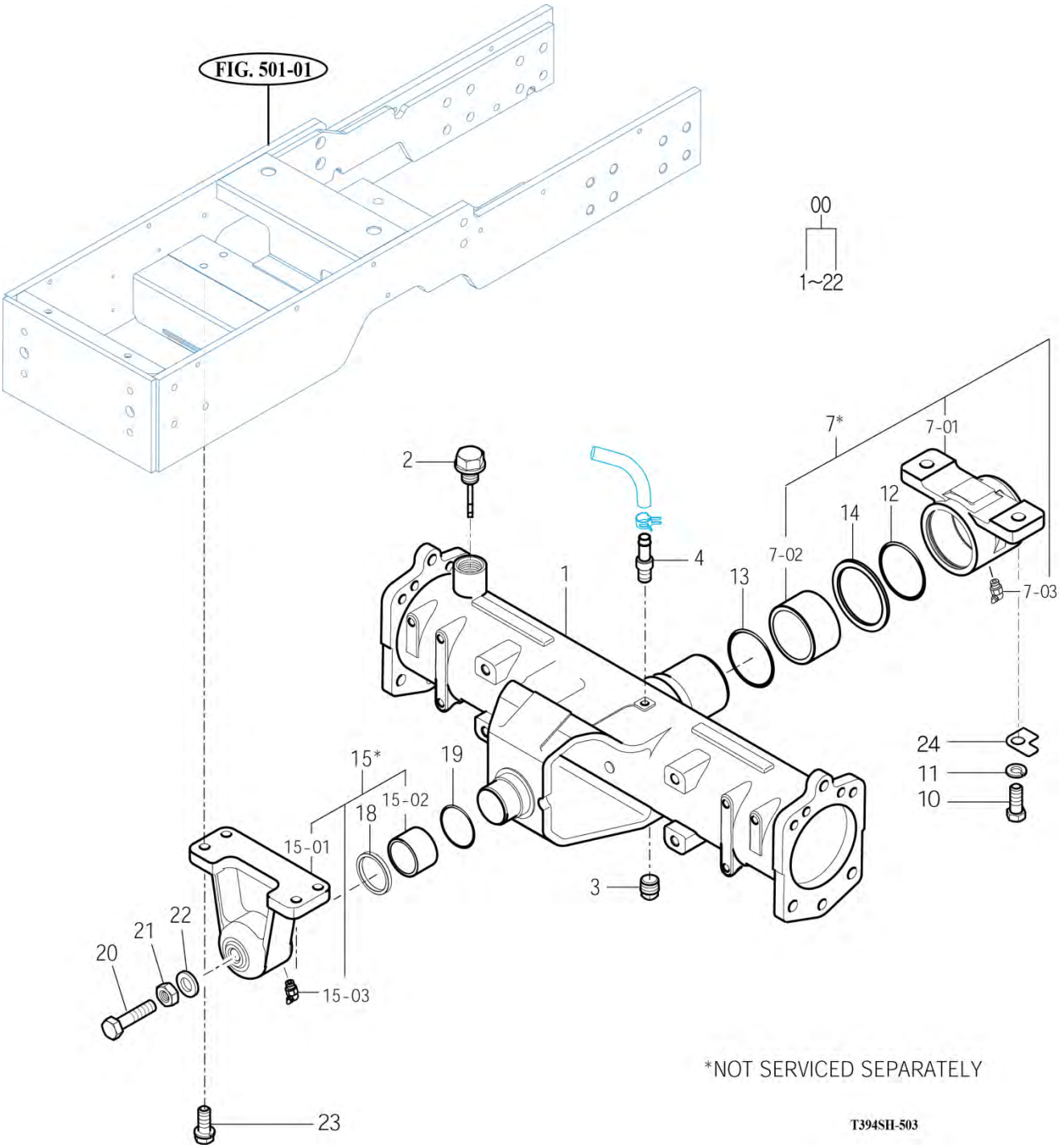

NOTE

https://truckmanualshub.com/

FIG 504 T394SH	FRONT GEAR CASE (1)	P1	Year 2016	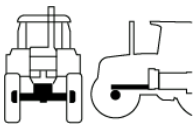

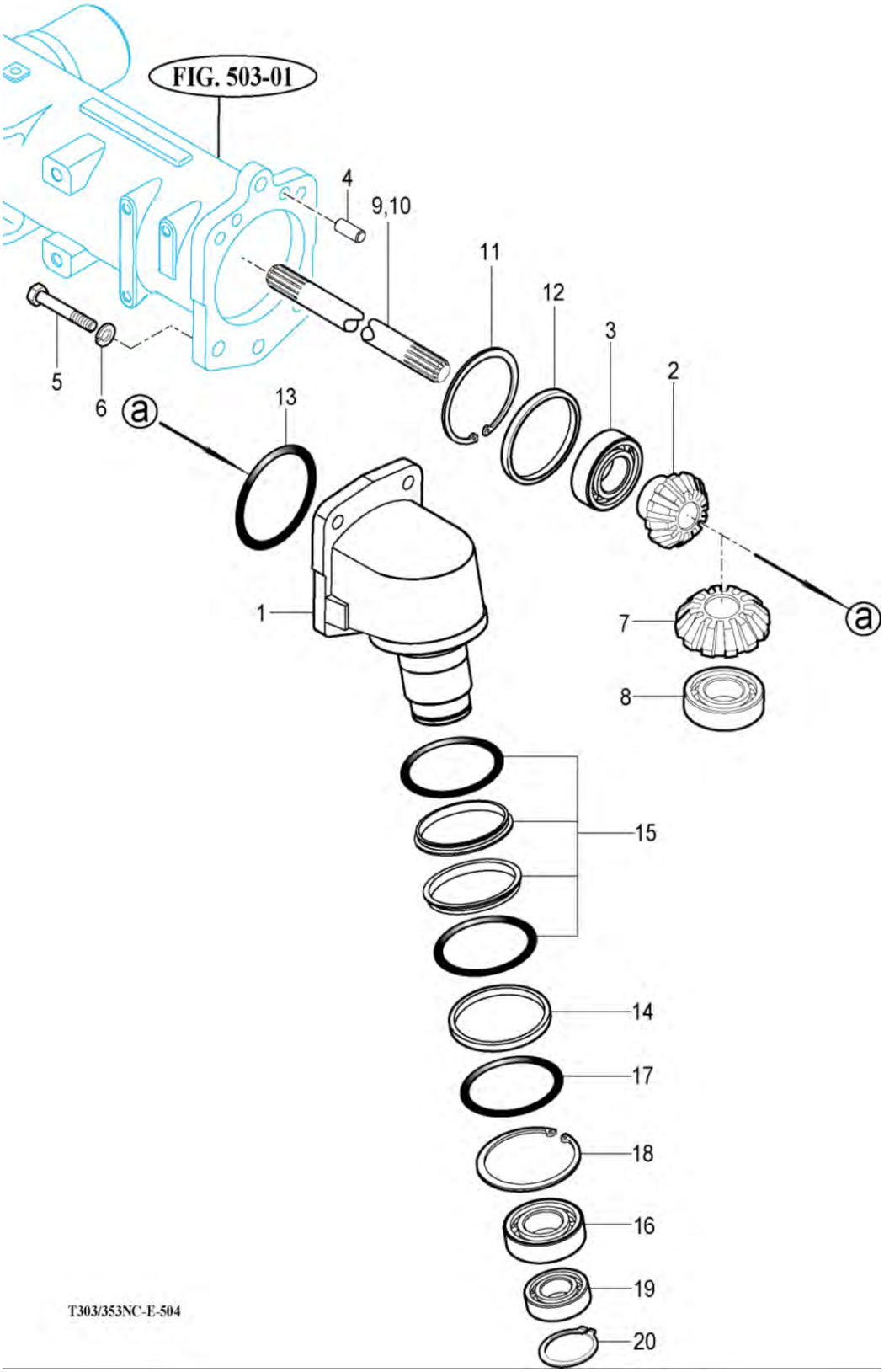

NOTE

https://truckmanualshub.com/

FIG 505 T394SH	FRONT GEAR CASE (2)	P1	Year 2016	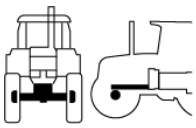

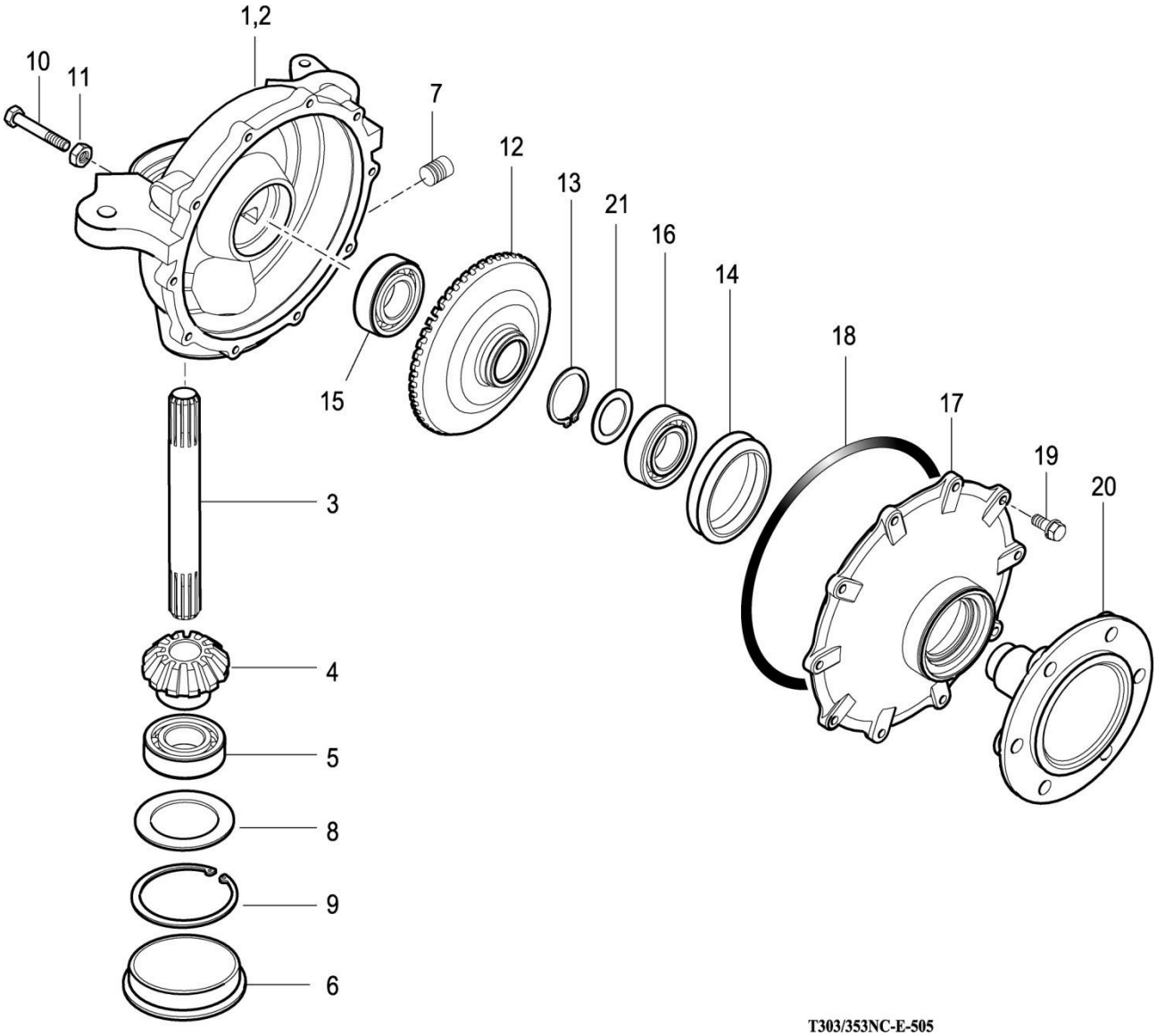

NOTE

https://truckmanualshub.com/

FIG 601 T394SH	GEAR PUMP	P1	Year 2016	

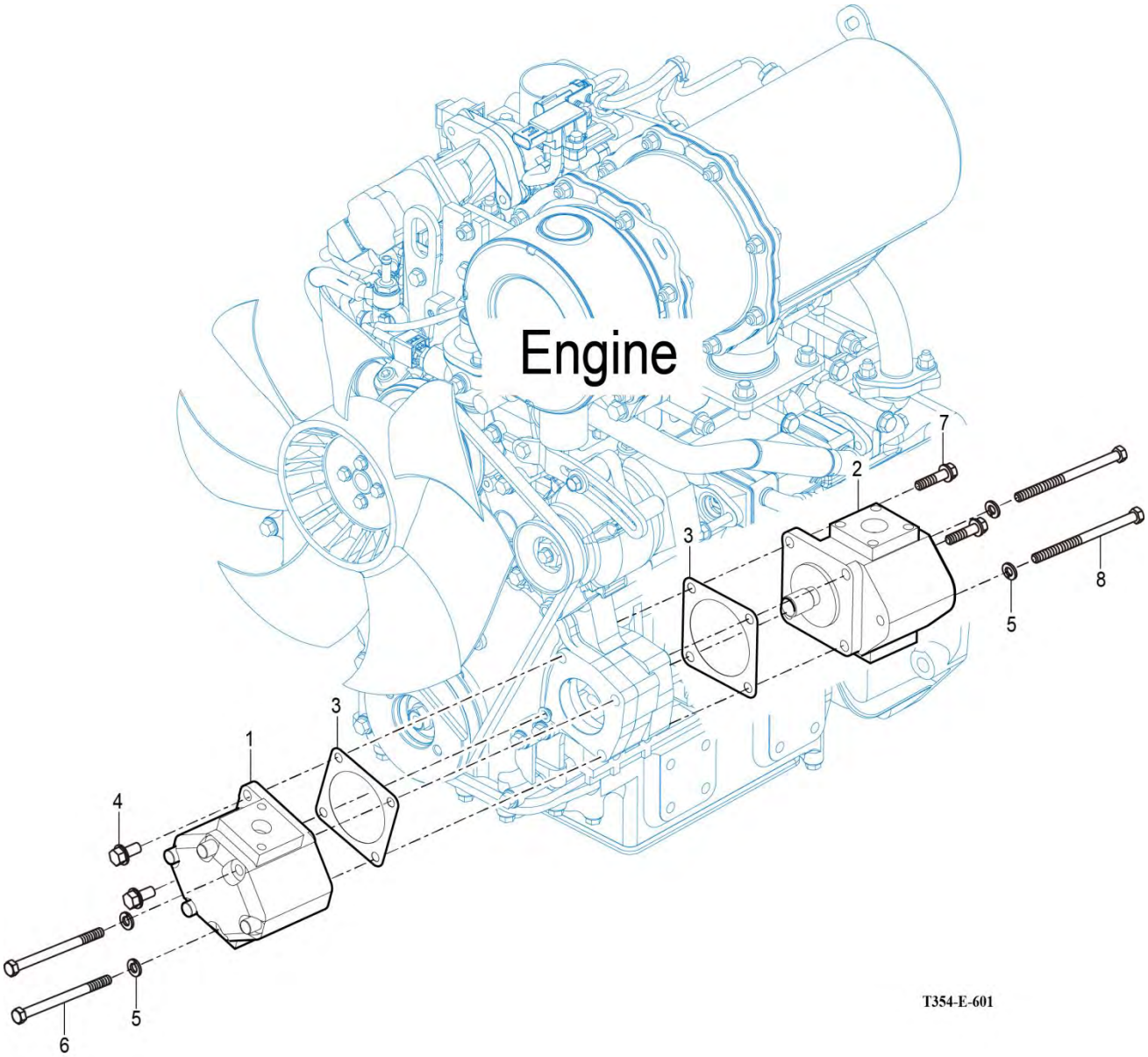

NOTE

https://truckmanualshub.com/

FIG 602 T394SH	CYLINDER CASE	P1	Year 2016	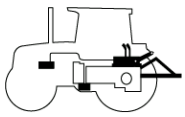

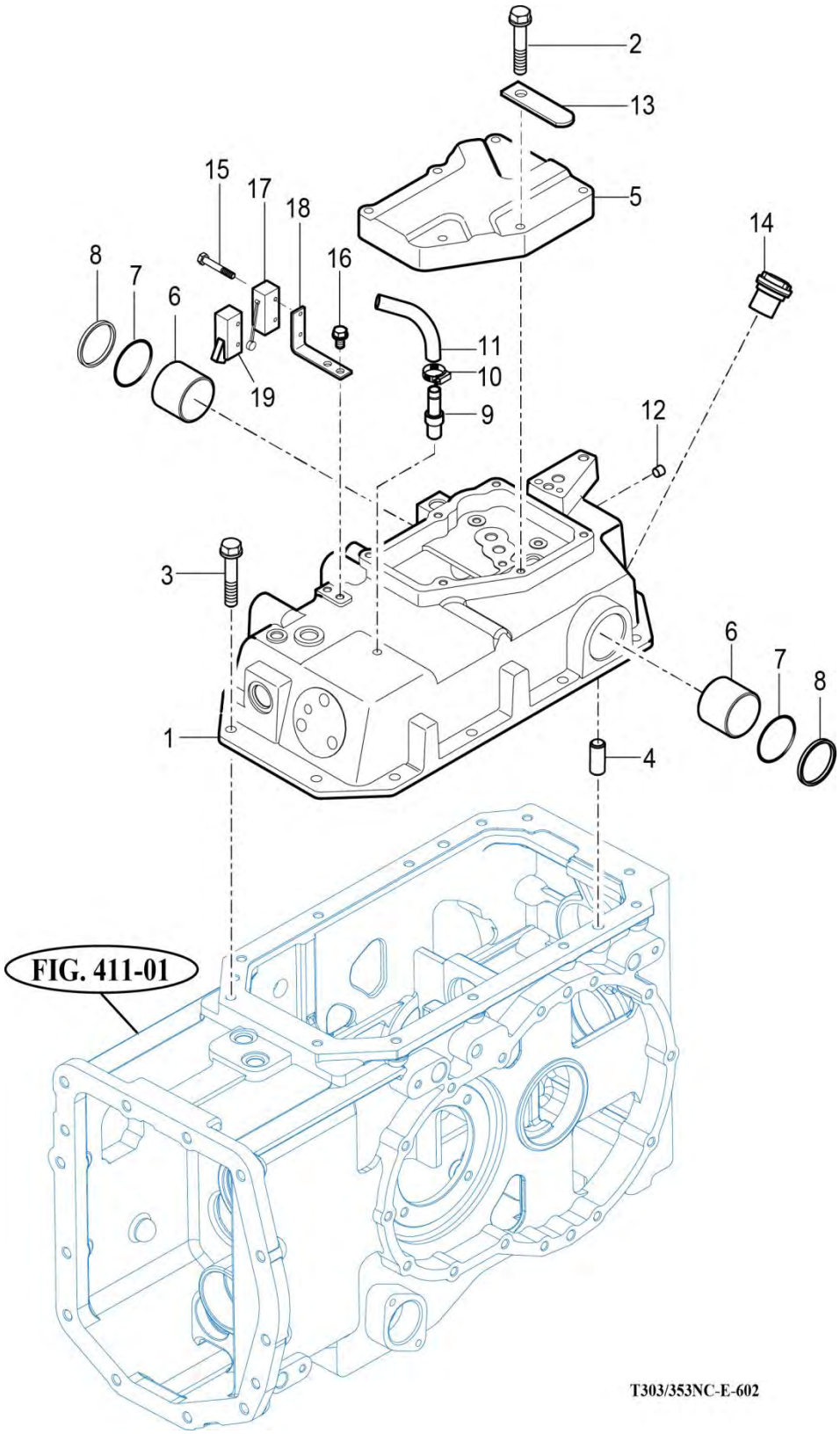

NOTE

FIG 603 T394SH	LIFT ARM	P1	Year 2016	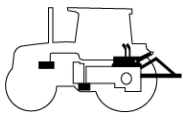

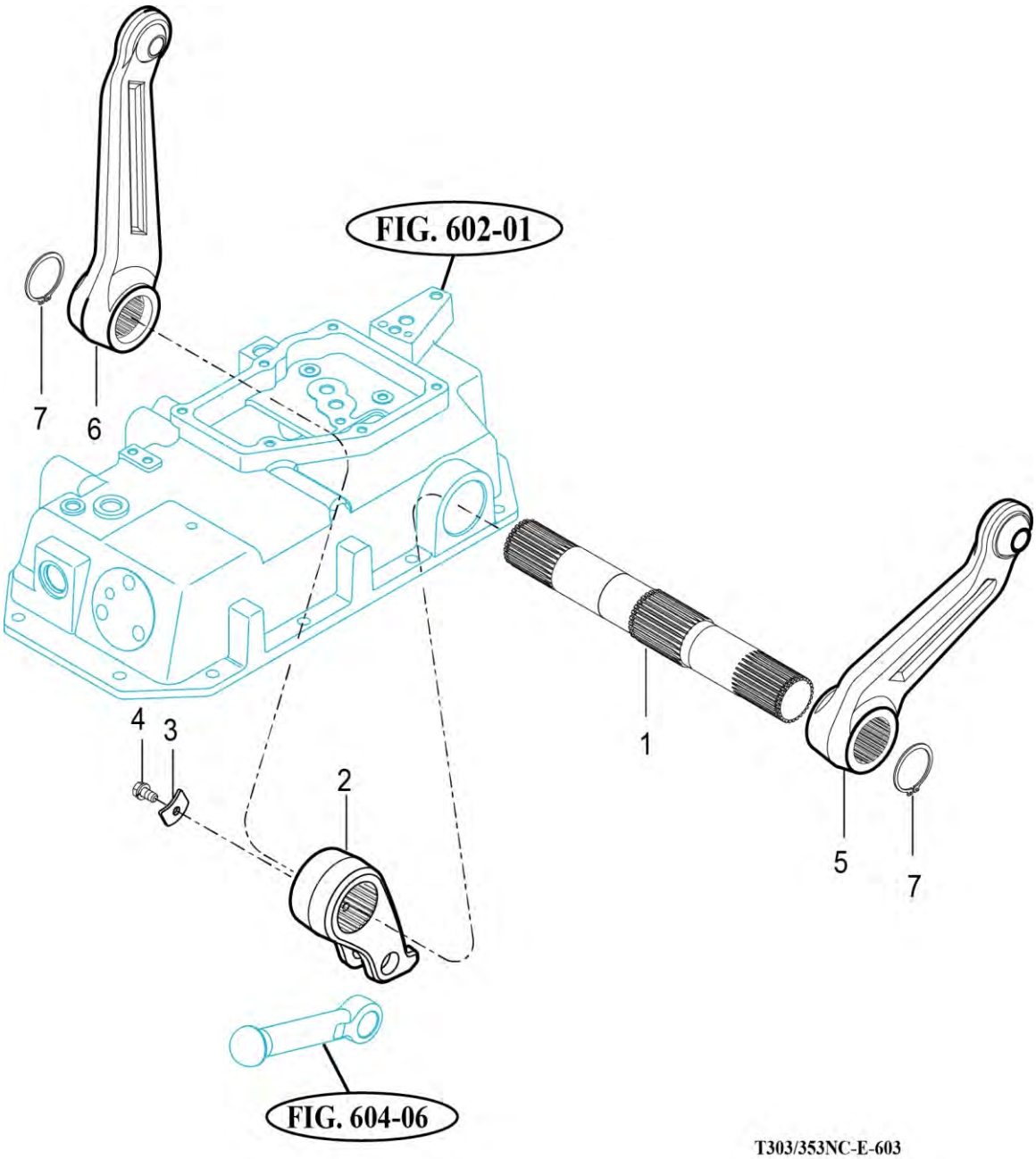

NOTE

FIG 604 T394SH	CYLINDER	P1	Year 2016	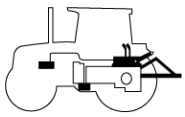

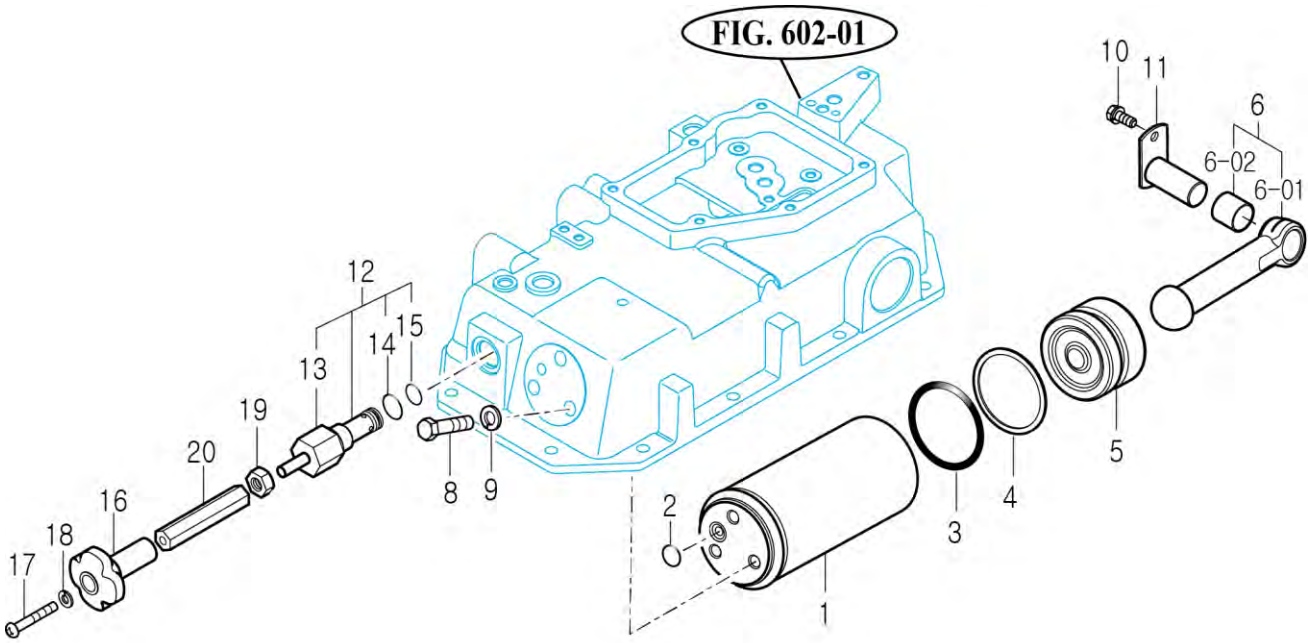

NOTE

https://truckmanualshub.com/

FIG 605 T394SH	POSITION LINK (1)	P1	Year 2016	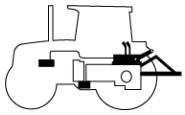

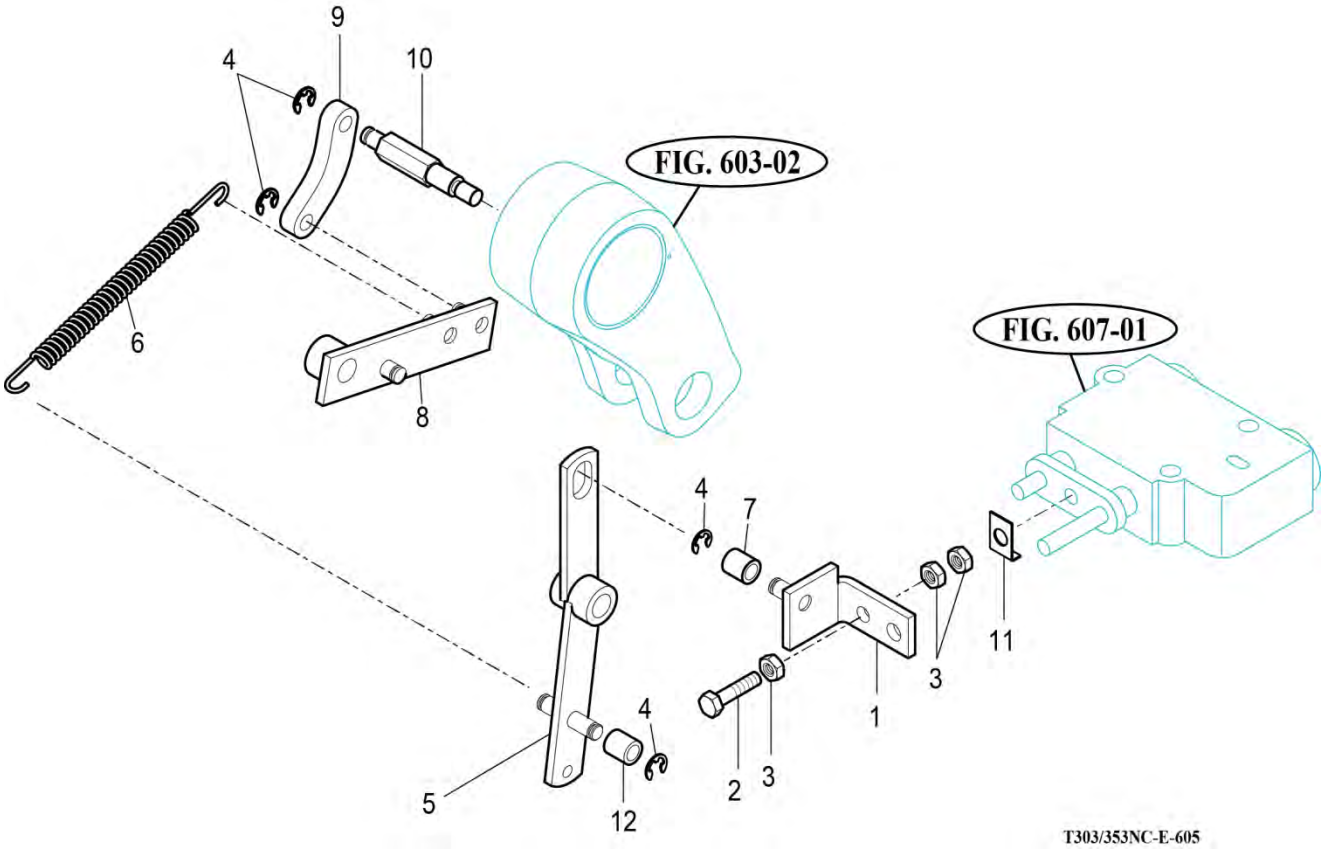

NOTE

https://truckmanualshub.com/

FIG 606 T394SH	POSITION LINK (2)	P1	Year 2016	

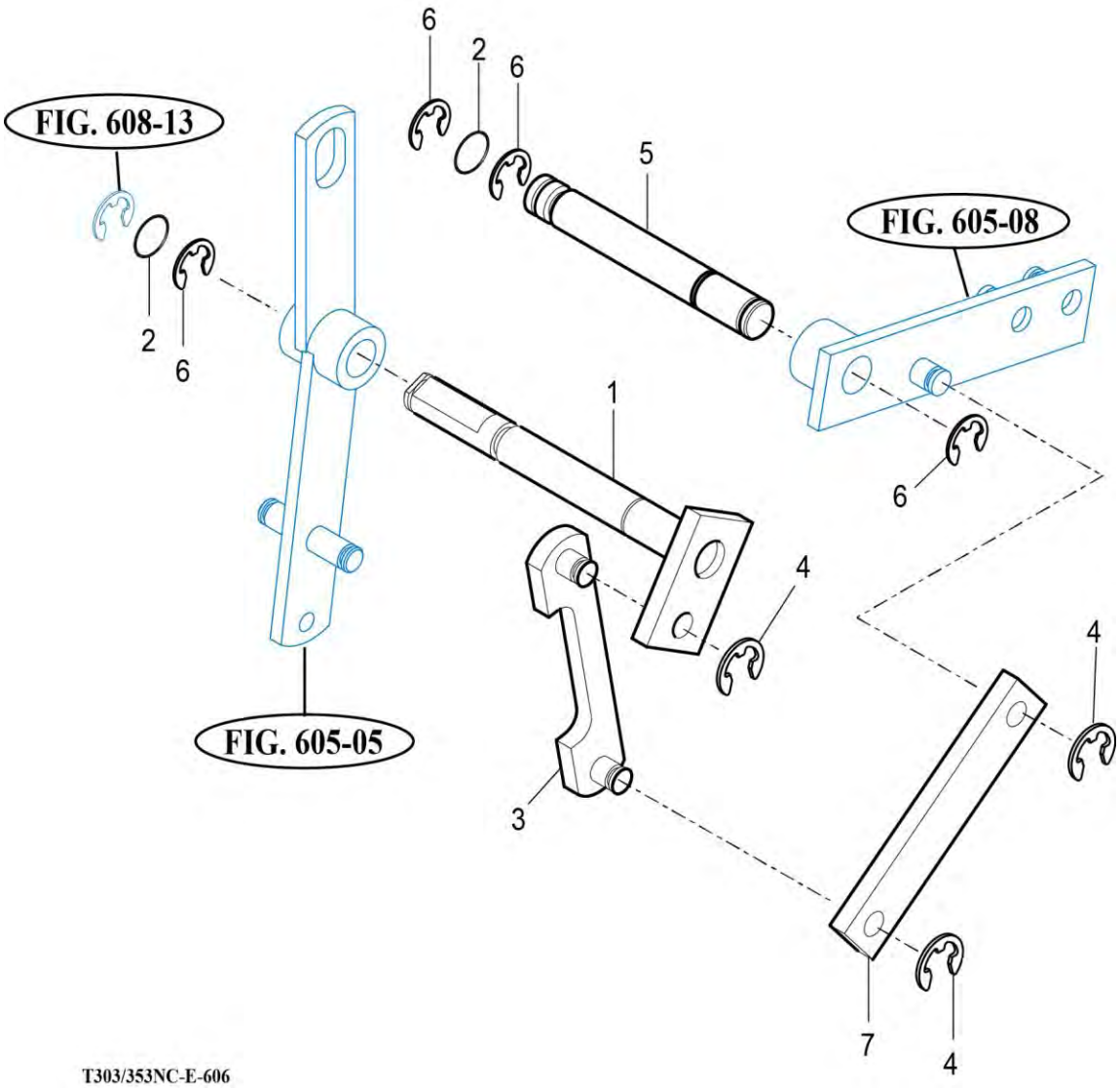

NOTE

https://truckmanualshub.com/

FIG 607 T394SH	CONTROL VALVE	P1	Year 2016	

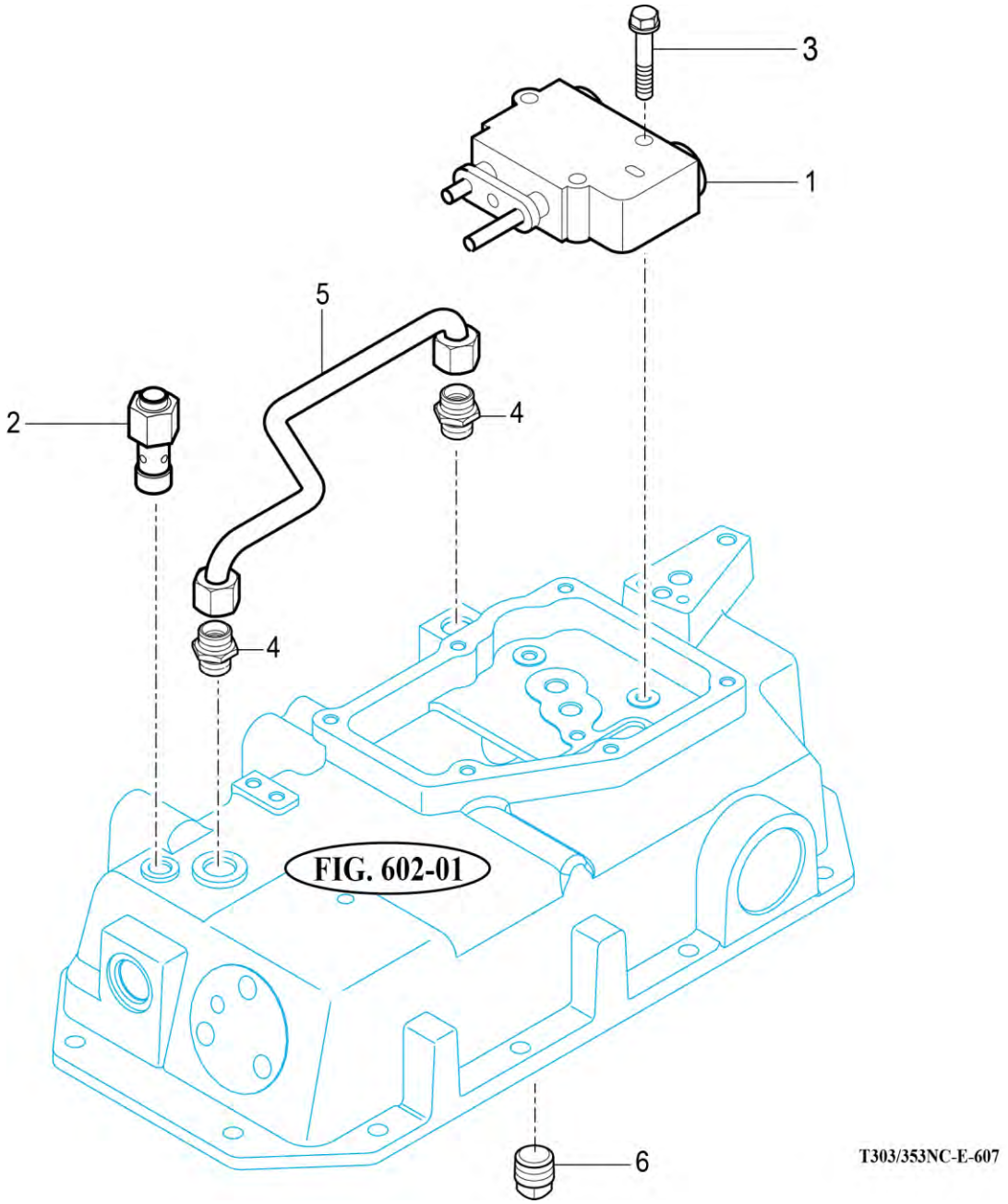

NOTE

https://truckmanualshub.com/

FIG 608 T394SH	POSITION LEVER	P2	Year 2016	

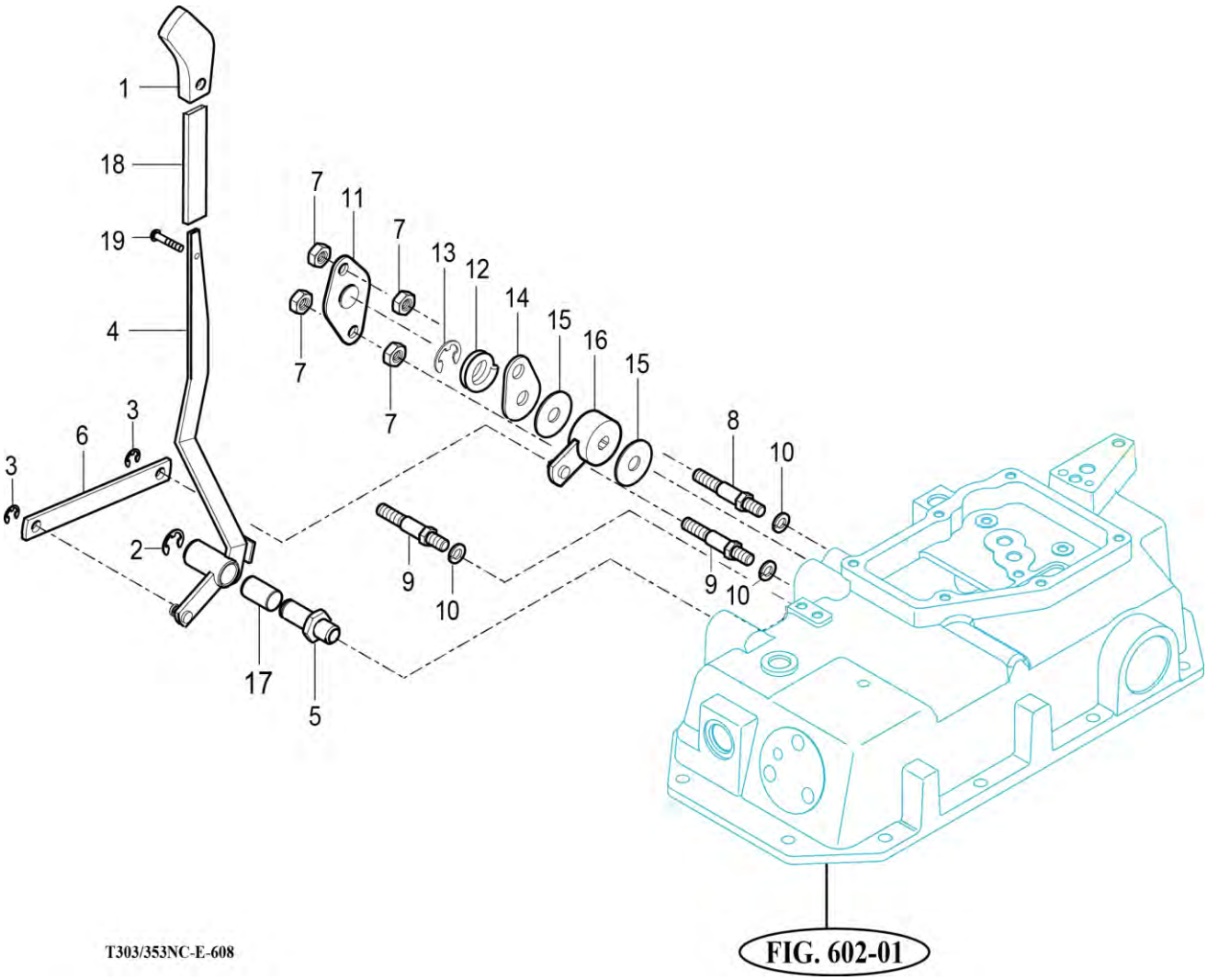

NOTE

https://truckmanualshub.com/

FIG 609 T394SH	HYDRAULIC PIPE (1)	P1	Year 2016	

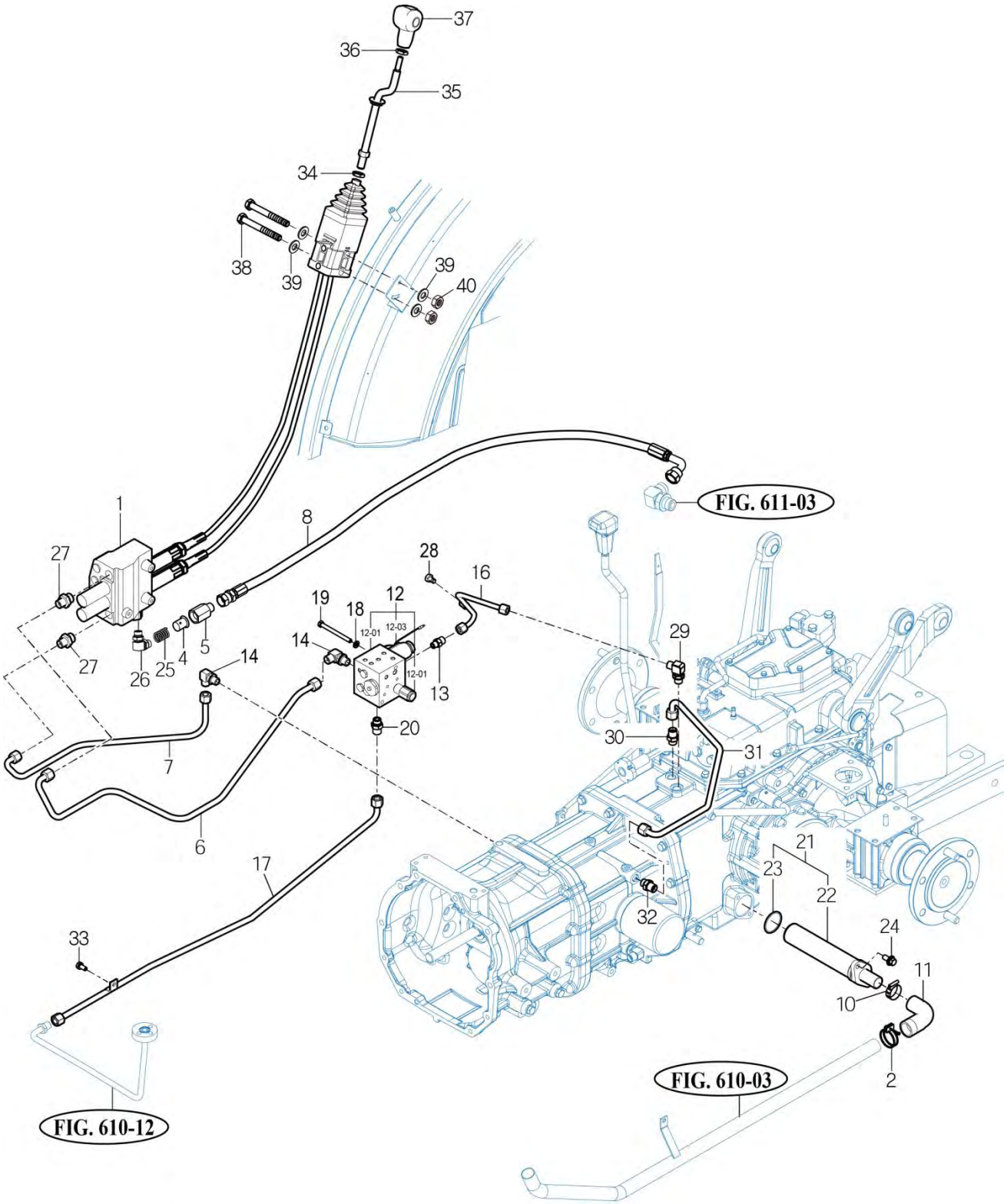

NOTE

https://truckmanualshub.com/

FIG 610 T394SH	HYDRAULIC PIPE (2)	P1	Year 2016	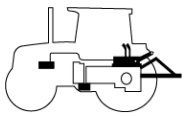

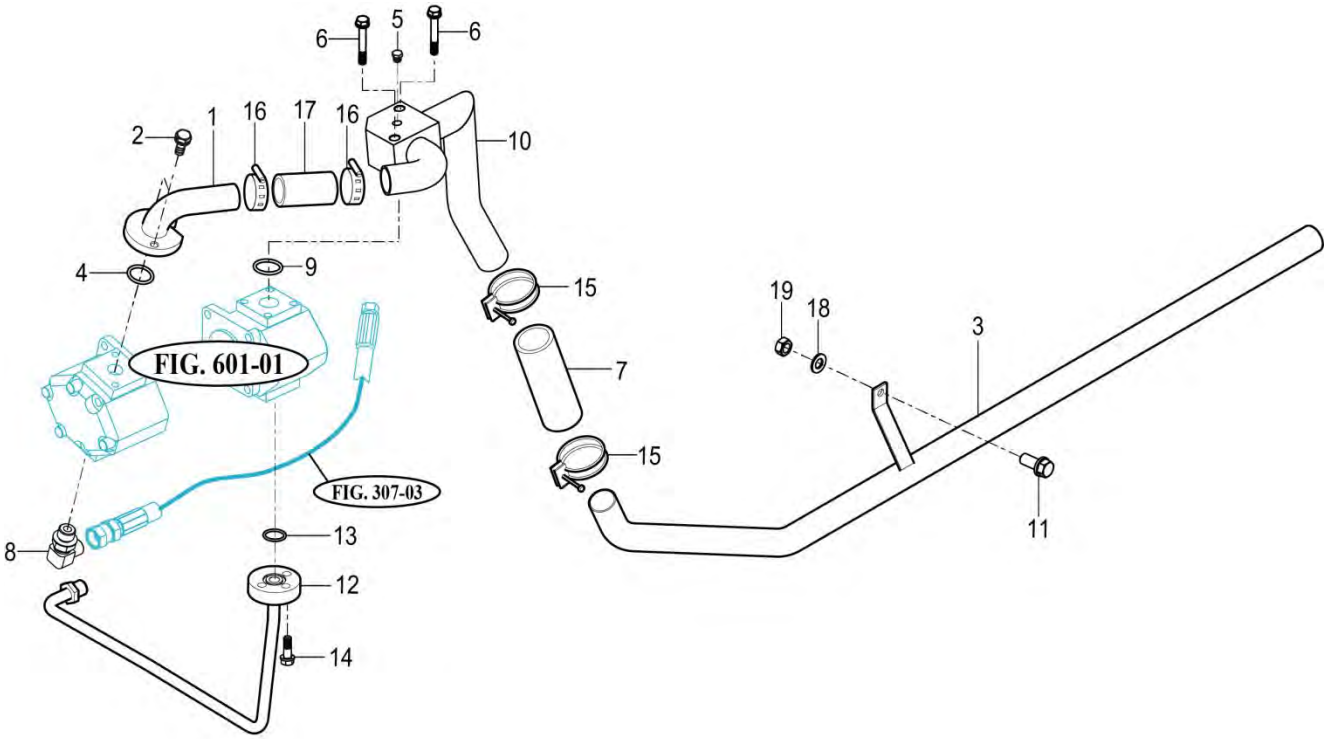

T394-E-606

NOTE

FIG 611 T394SH	EXTERIOR HYD. VALVE	P1	Year 2016	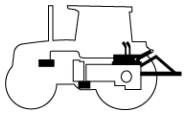

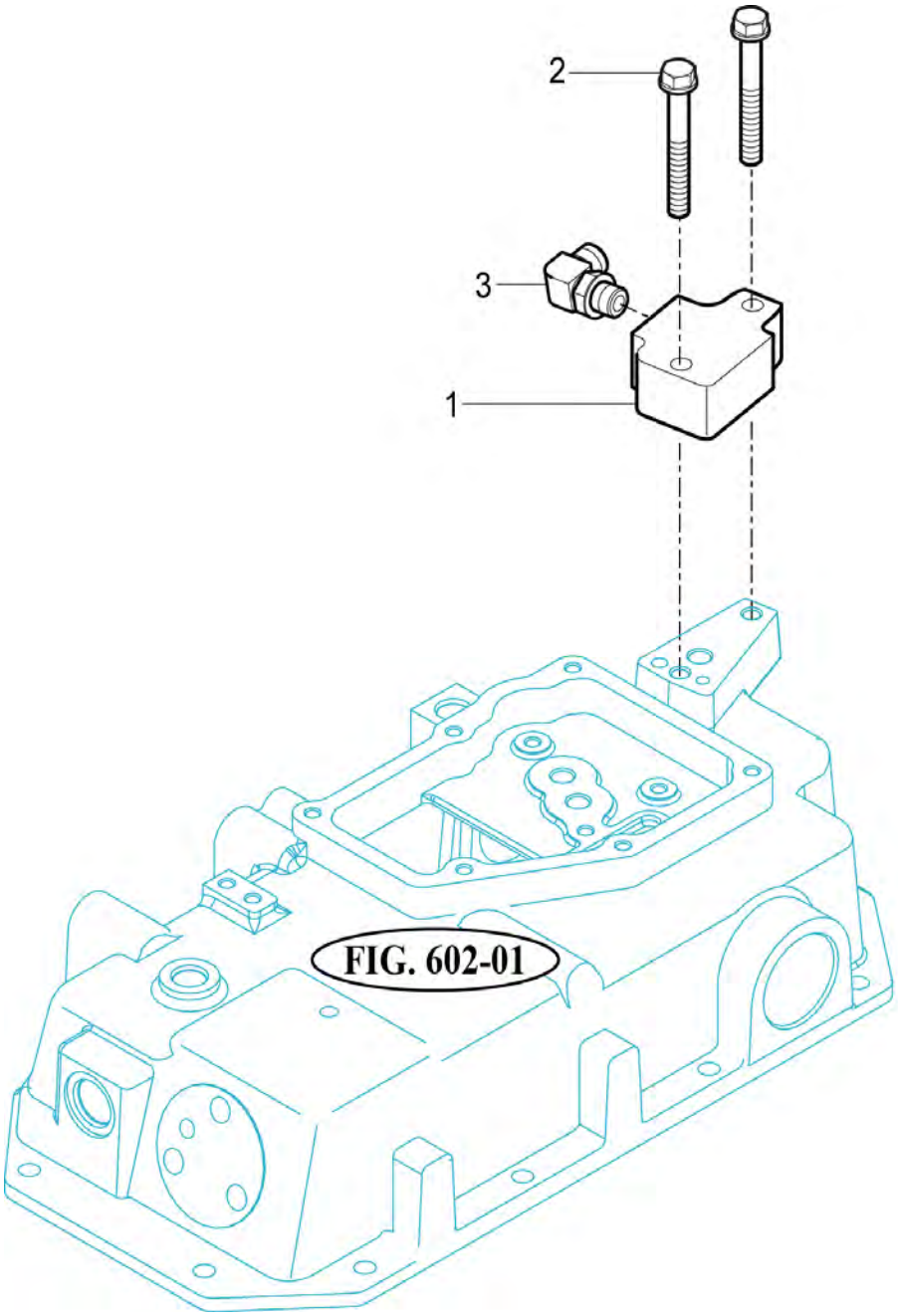

T303/353NC-E-611

NOTE	

https://truckmanualshub.com/

FIG 611-1 T394SH	VALVE Kit	P1	Year 2016	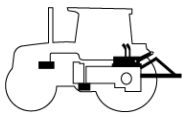

Kit PART NO. 12345082000

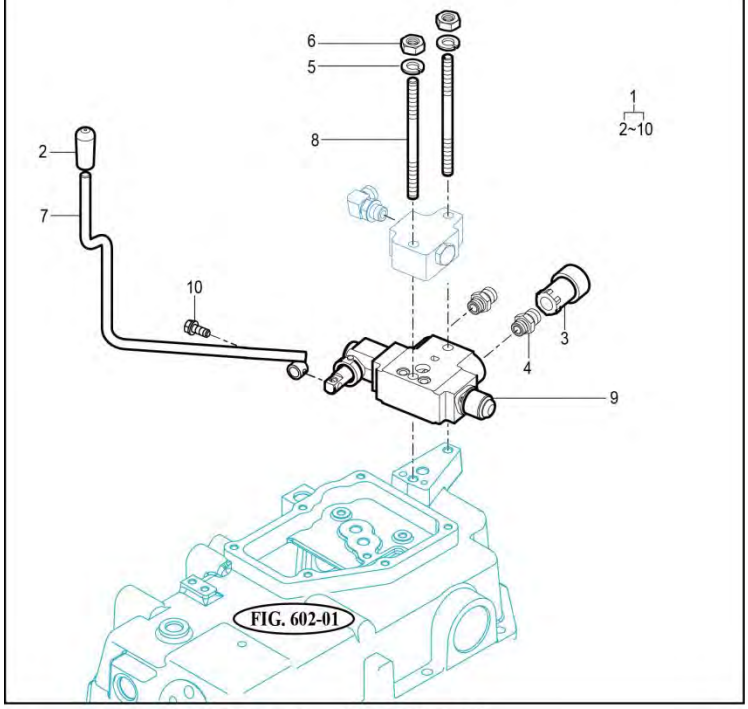

Kit PART NO. 12345084000

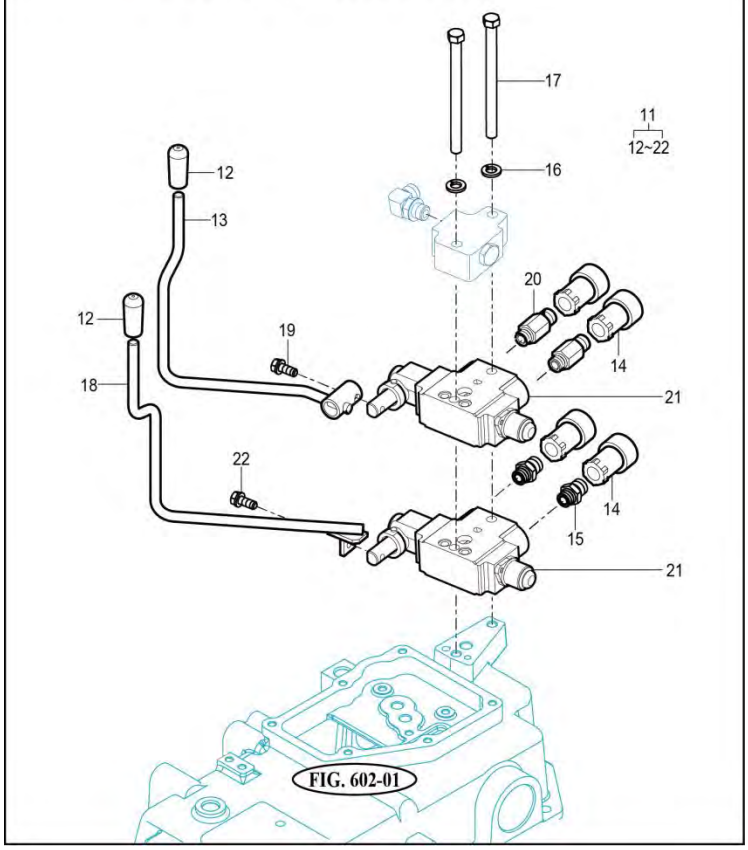

NOTE

https://truckmanualshub.com/

FIG 612 T394SH	3-POINT LINK	P1	Year 2016	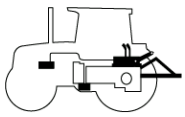

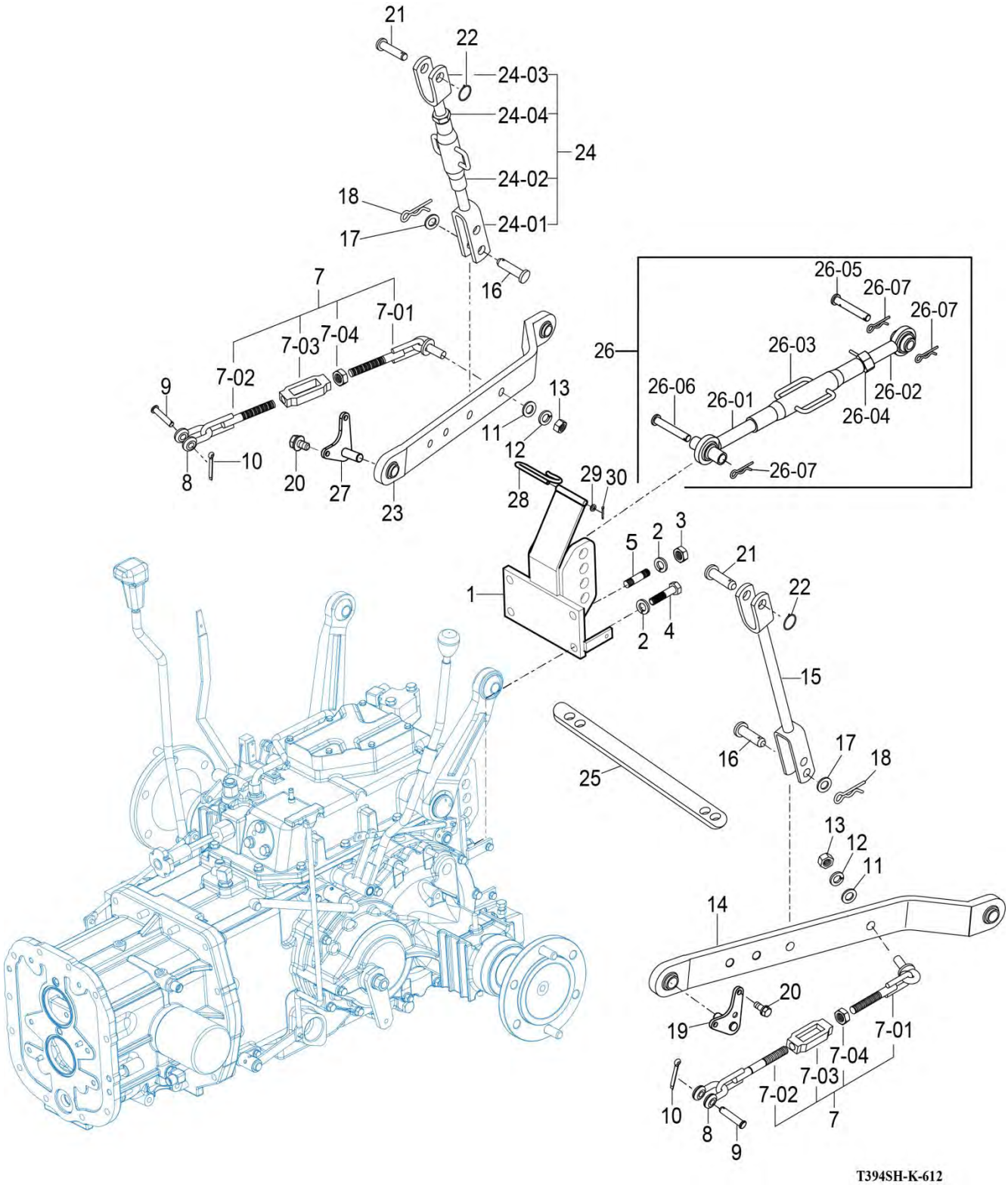

NOTE

https://truckmanualshub.com/

FIG 613 T394SH	HITCH & COVER	P1	Year 2016	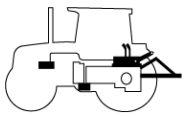

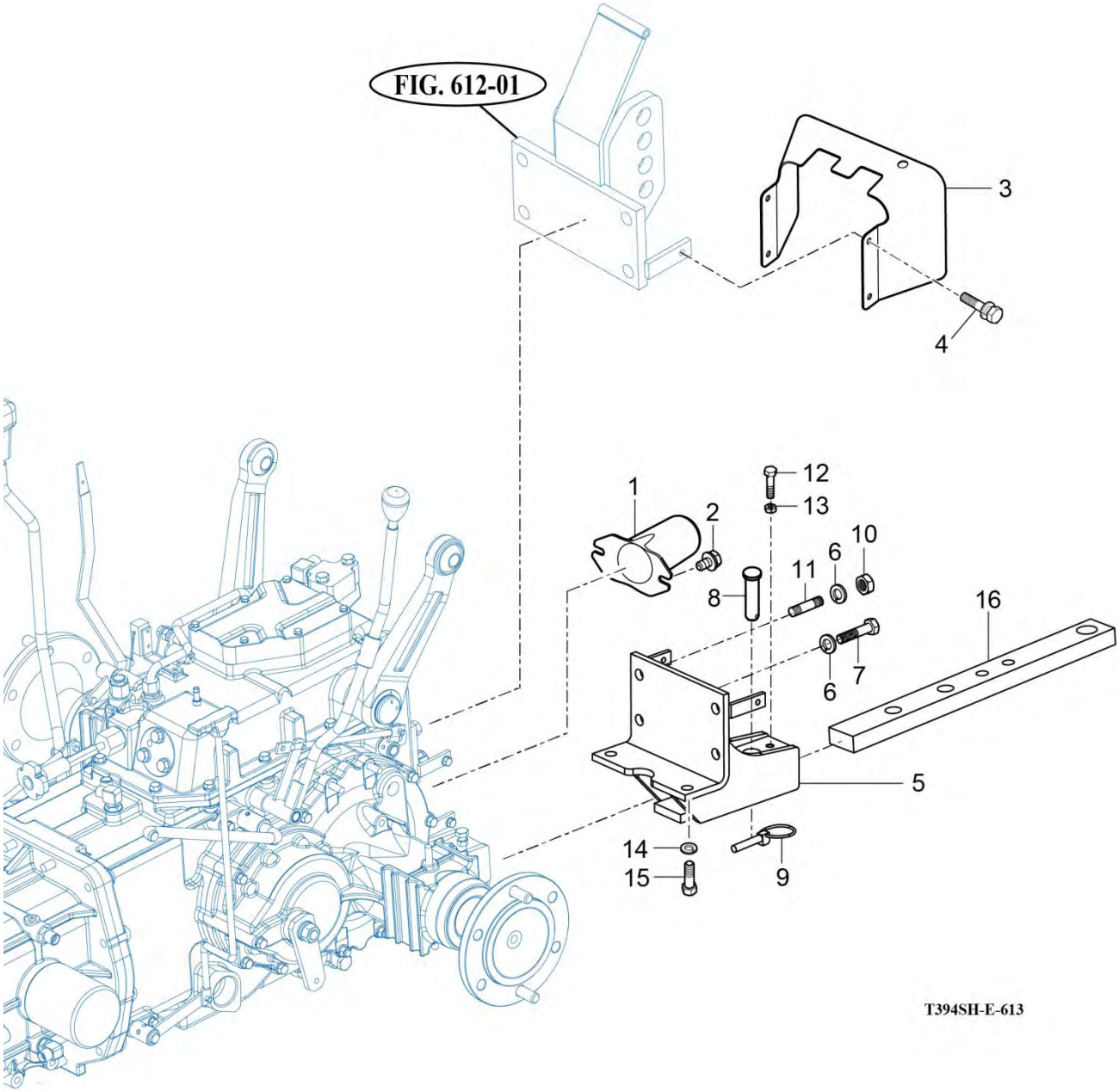

NOTE

https://truckmanualshub.com/

FIG 701 T394SH	HOOD (1)	P1	Year 2016	

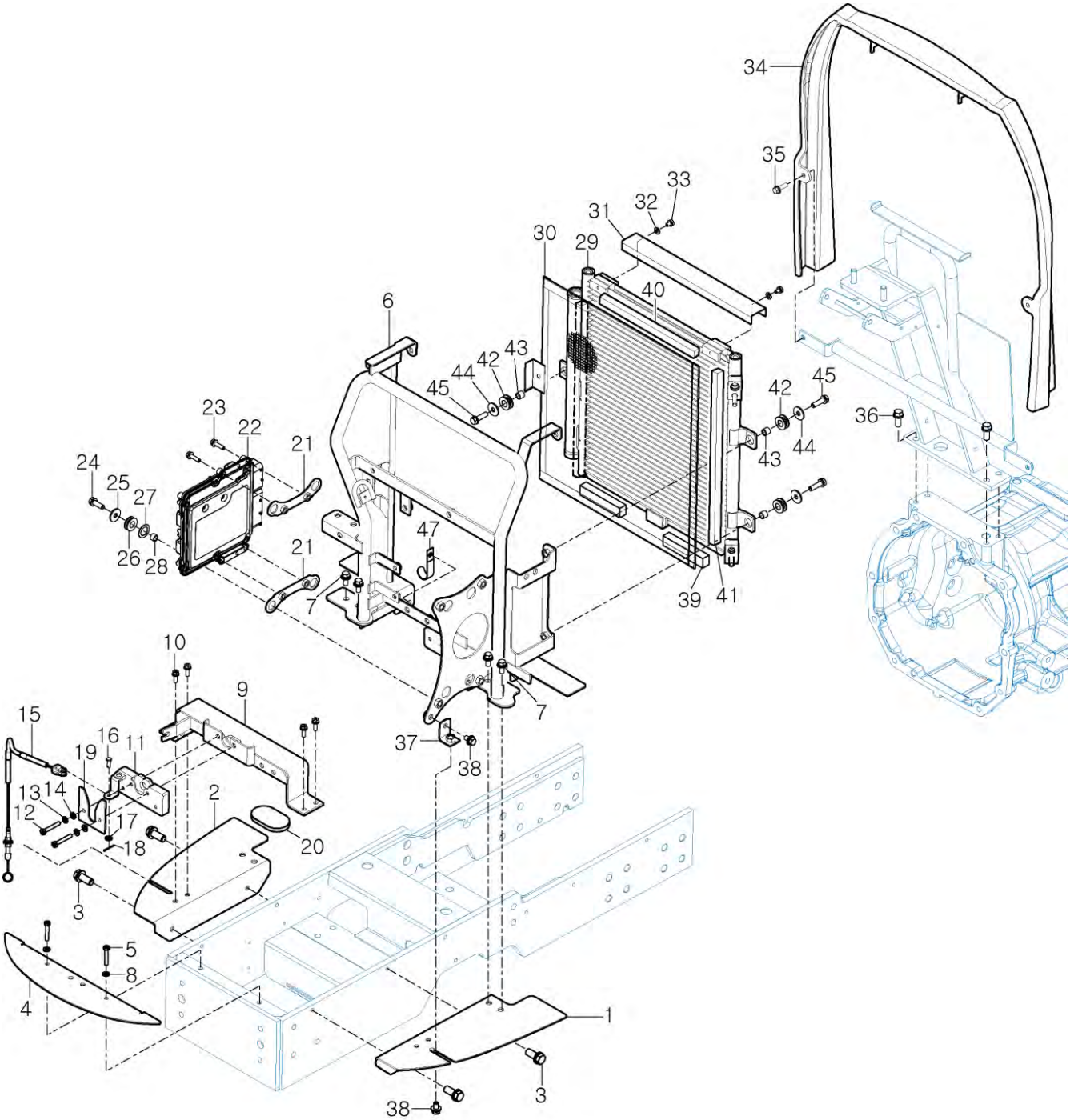

NOTE

https://truckmanualshub.com/

FIG 702 T394SH	HOOD (2)	P1	Year 2016	

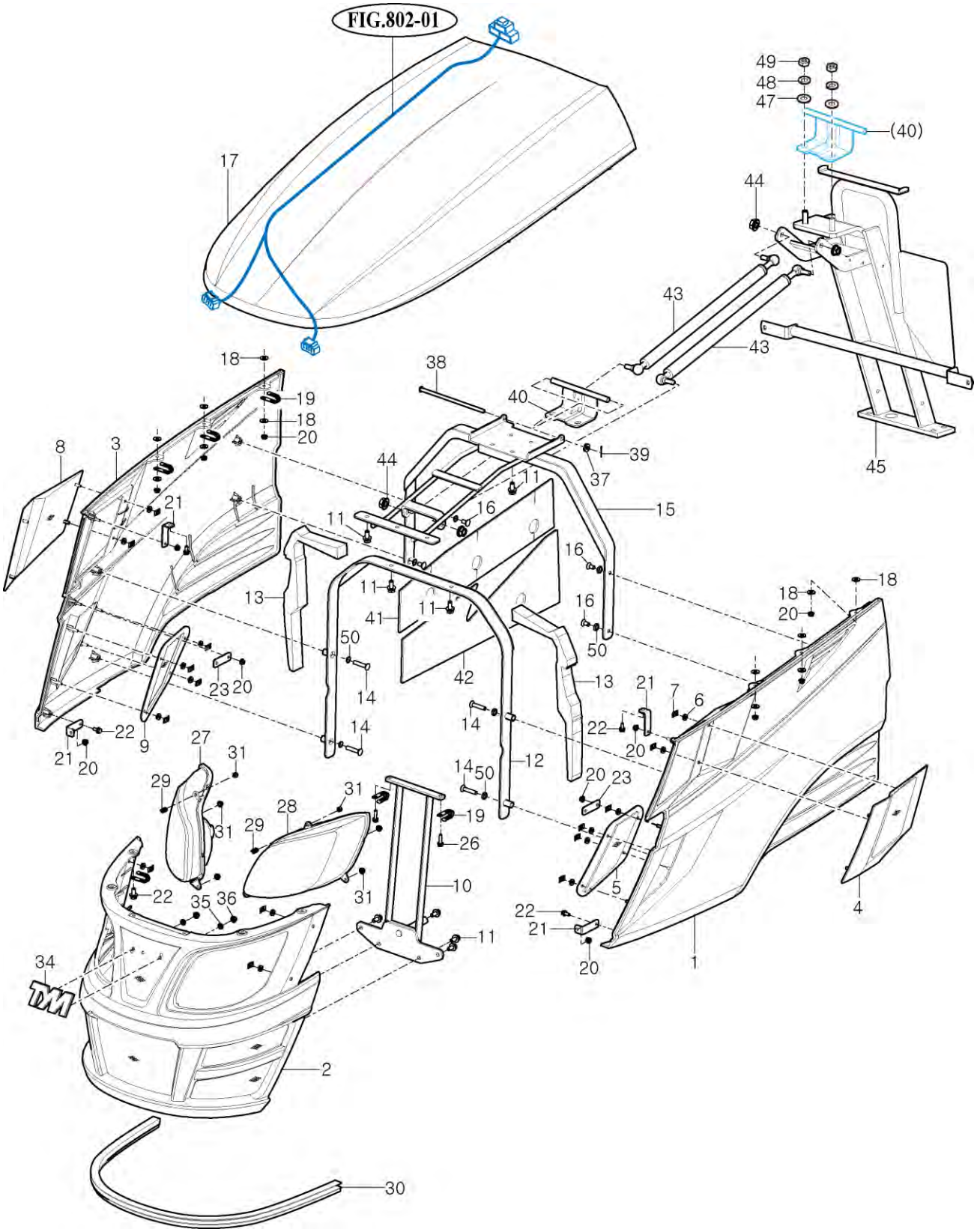

NOTE

https://truckmanualshub.com/

FIG 704 T394SH	FRONT & REAR MOUNTING	P1	Year 2016	

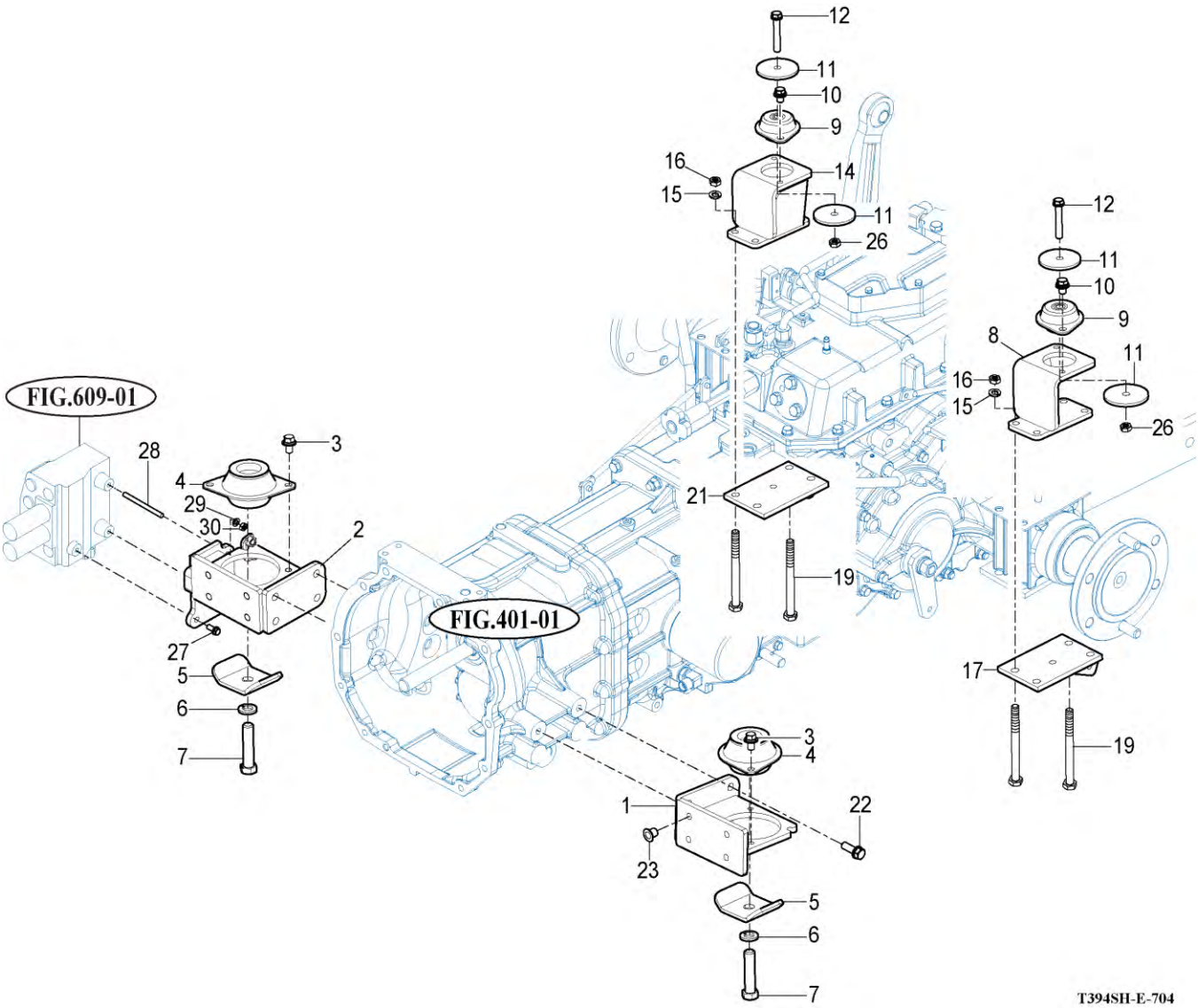

NOTE

https://truckmanualshub.com/

FIG 705 T394SH	DASHPANEL	P1	Year 2016	

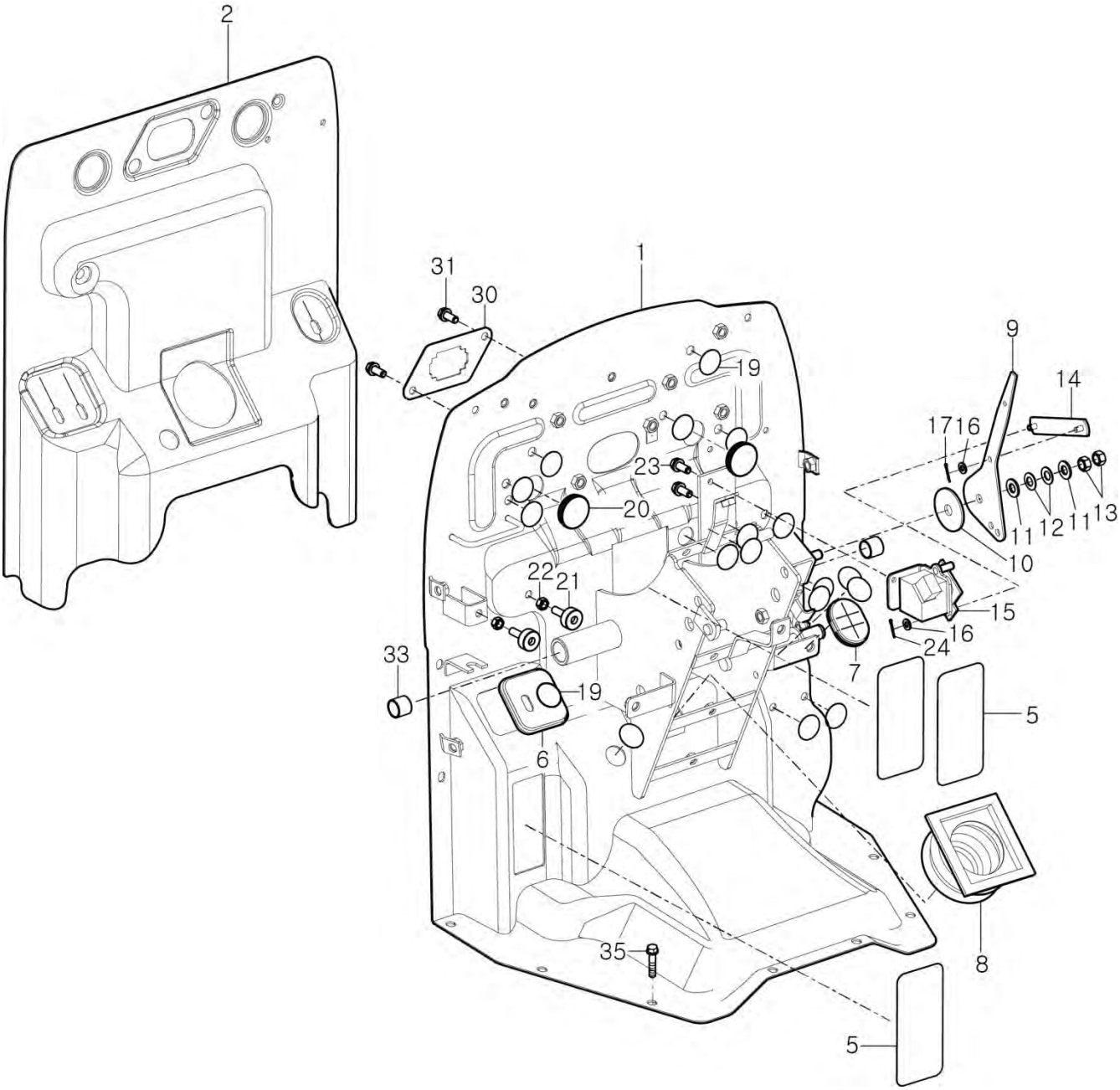

NOTE

https://truckmanualshub.com/

FIG 706 T394SH	SEAT & MAT	P1	Year 2016	

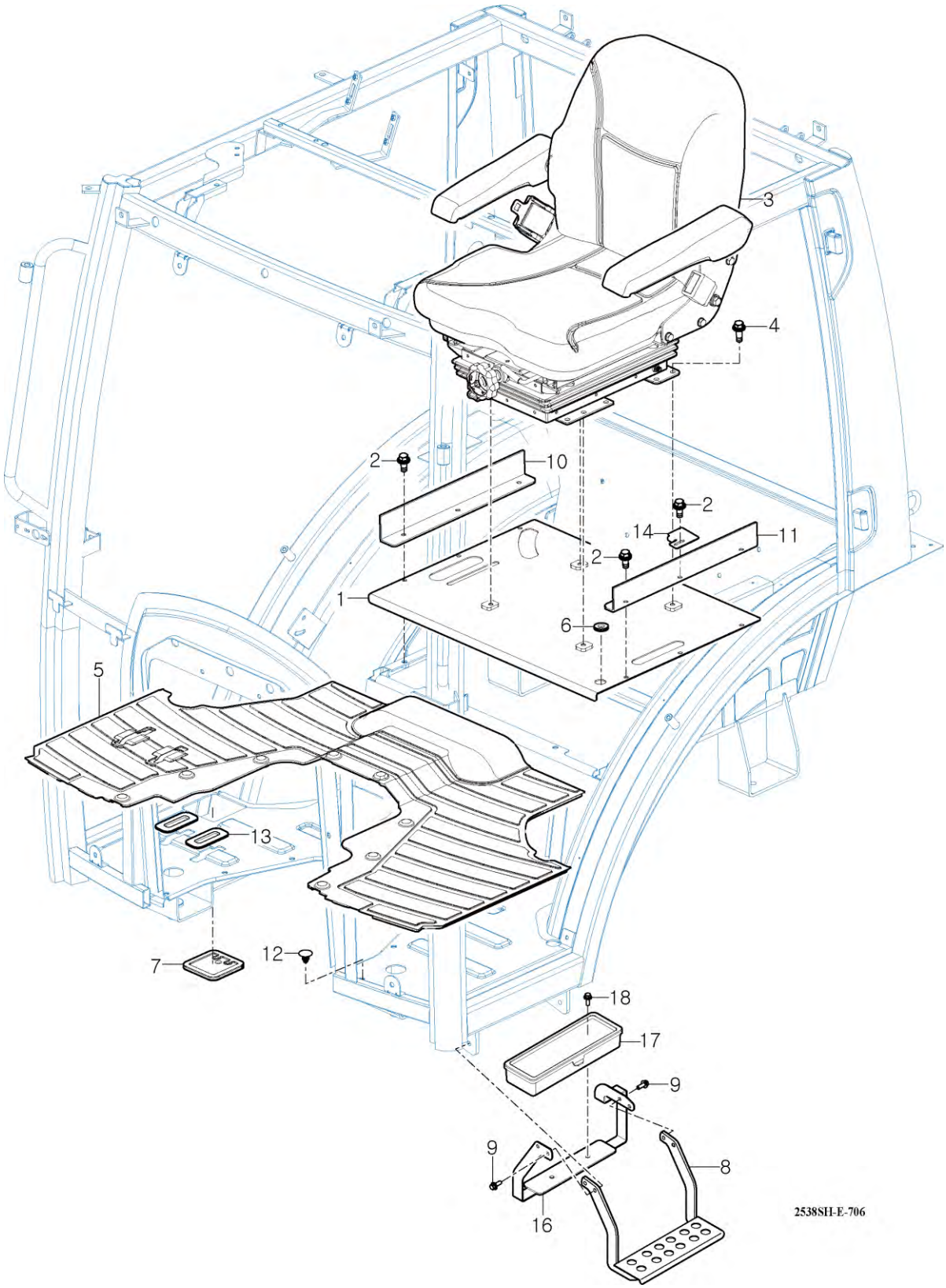

NOTE

https://truckmanualshub.com/

FIG 707 T394SH	DOOR	P1	Year 2016	

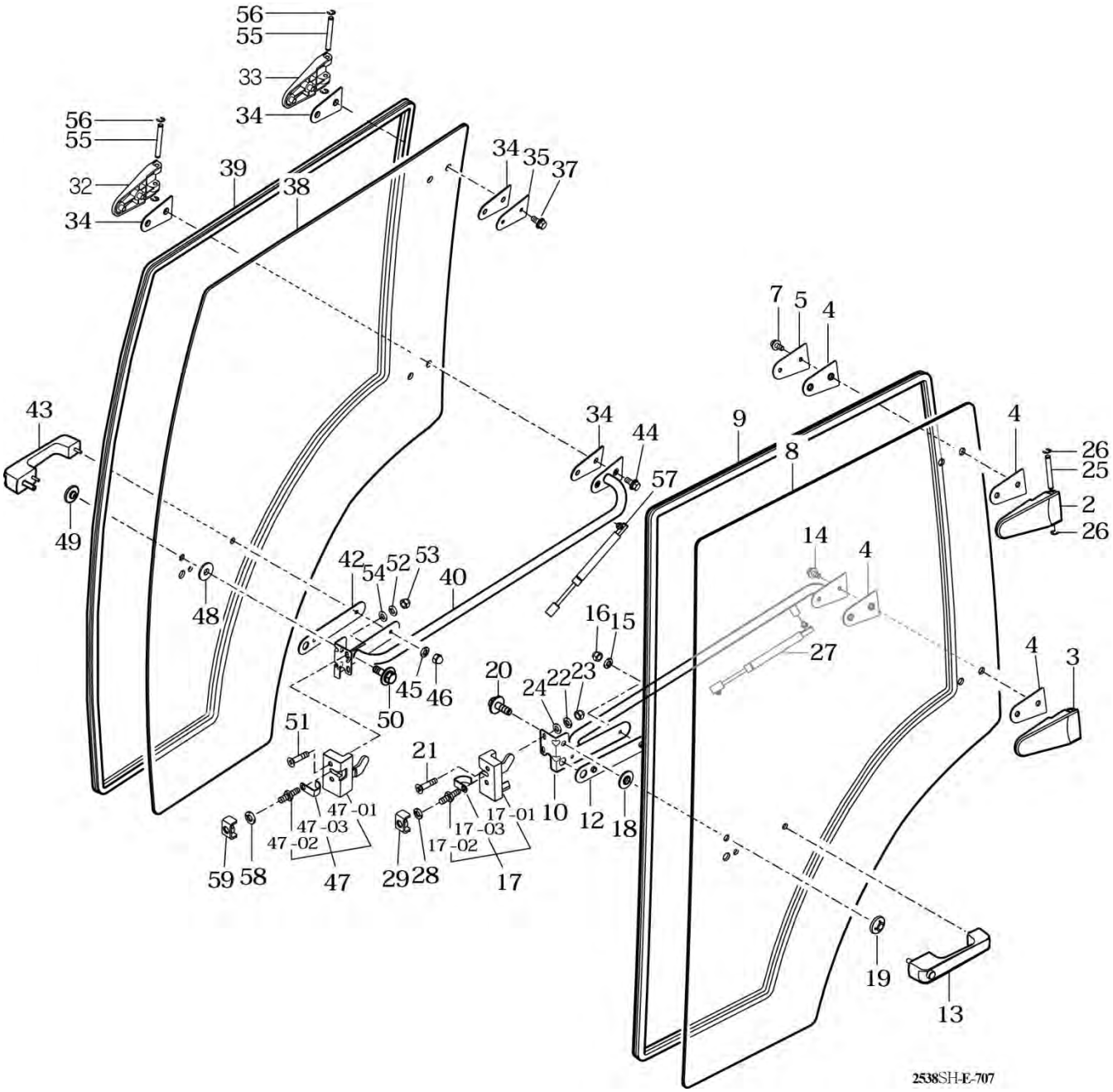

NOTE

https://truckmanualshub.com/

FIG 707 T394SH	DOOR	P2	Year 2016	

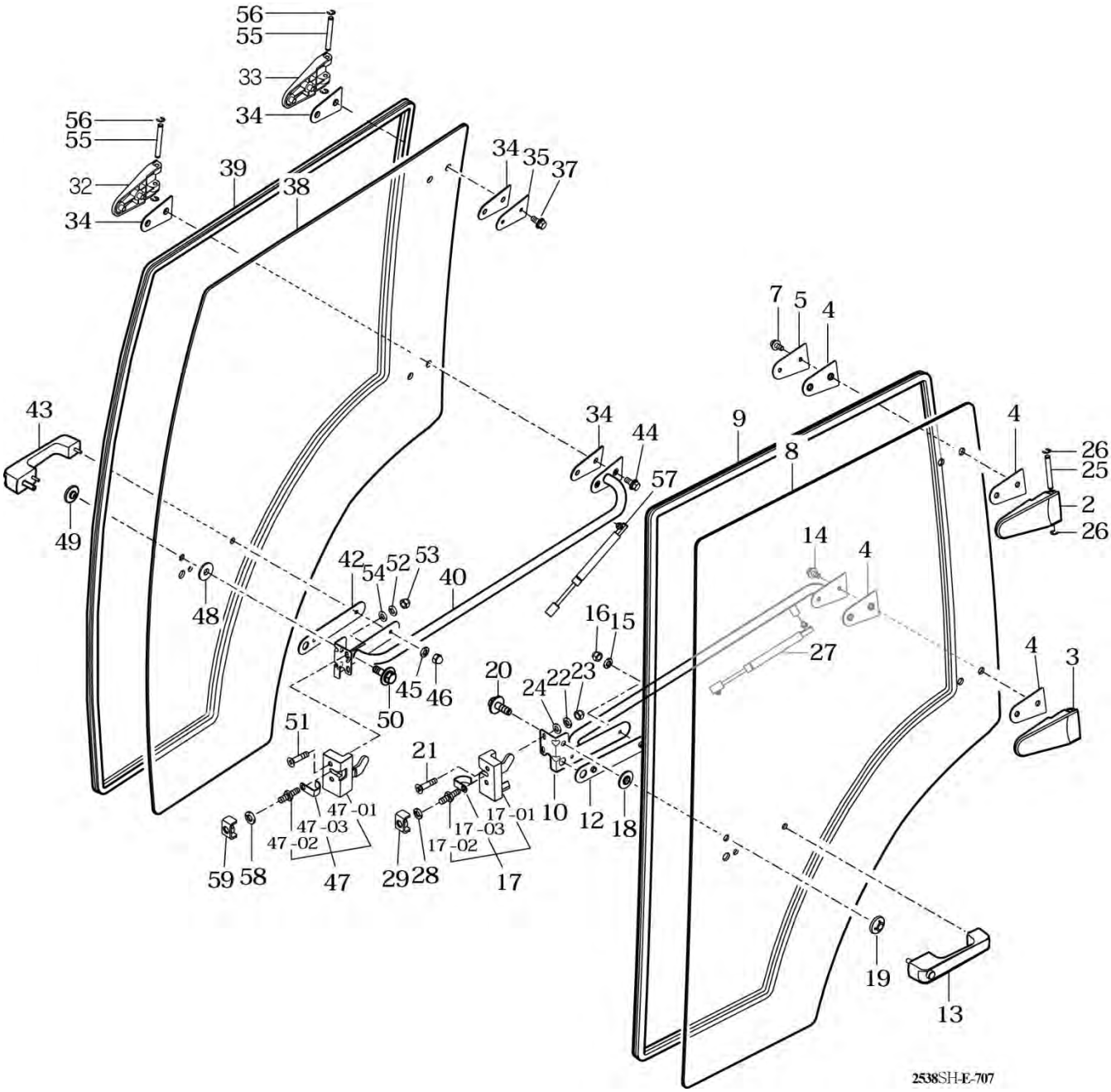

NOTE

https://truckmanualshub.com/

FIG 708 T394SH	FRONT GLASS	P1	Year 2016	

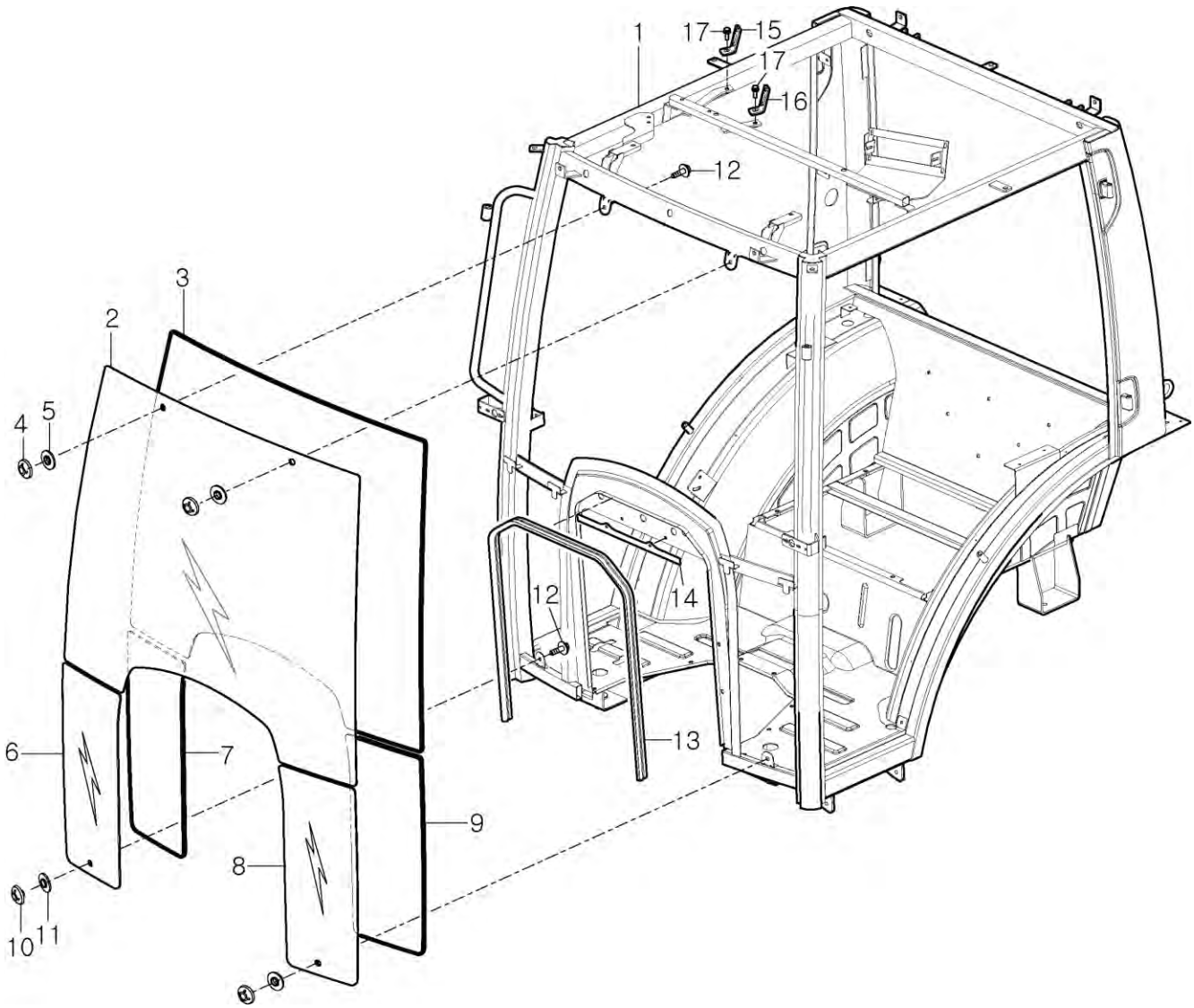

NOTE

https://truckmanualshub.com/

FIG 709

T394SH

REAR GLASS

P1

Year

2016

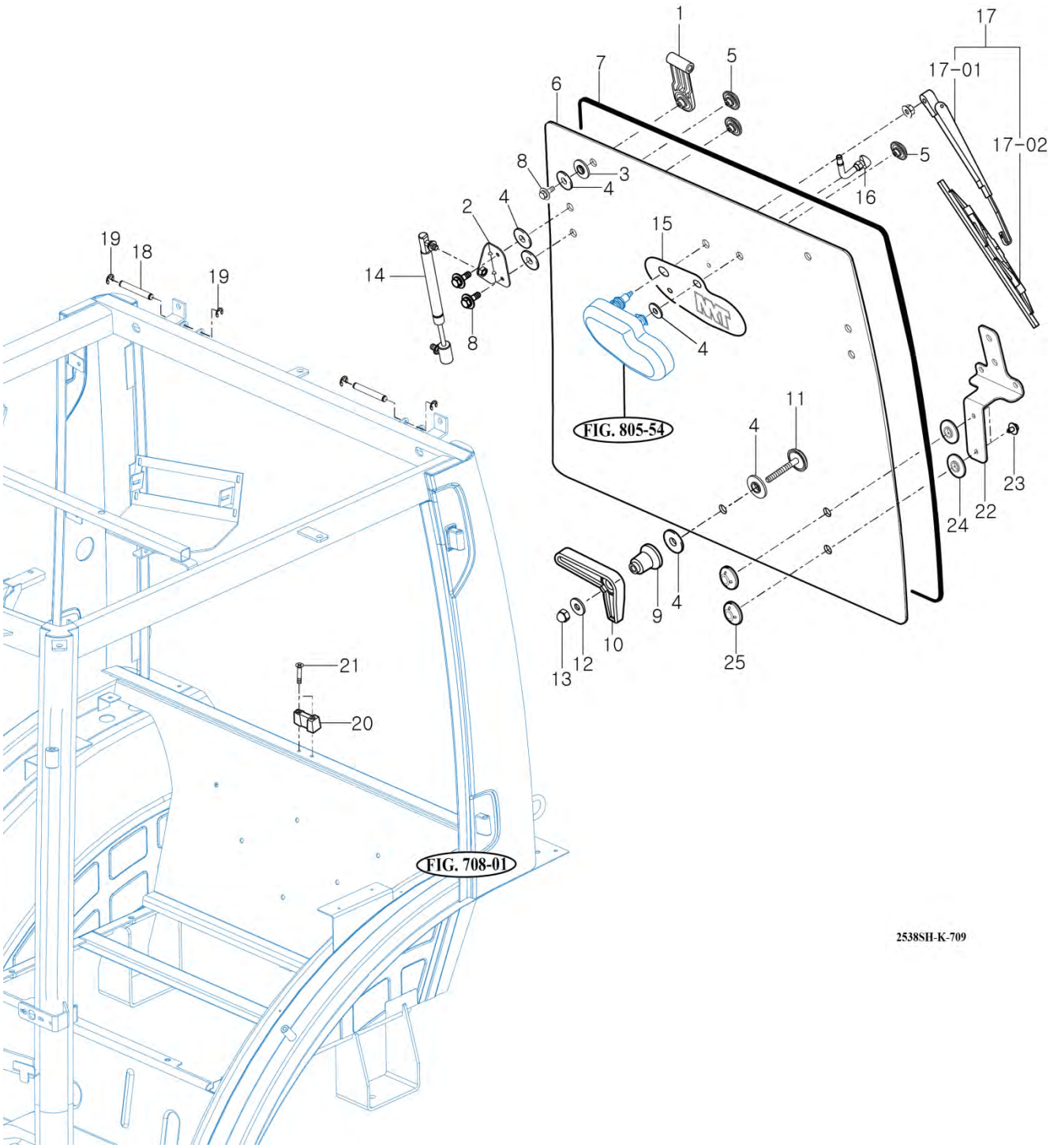

NOTE

https://truckmanualshub.com/

FIG 710 T394SH	SUB FENDER & COVER	P1	Year 2016	

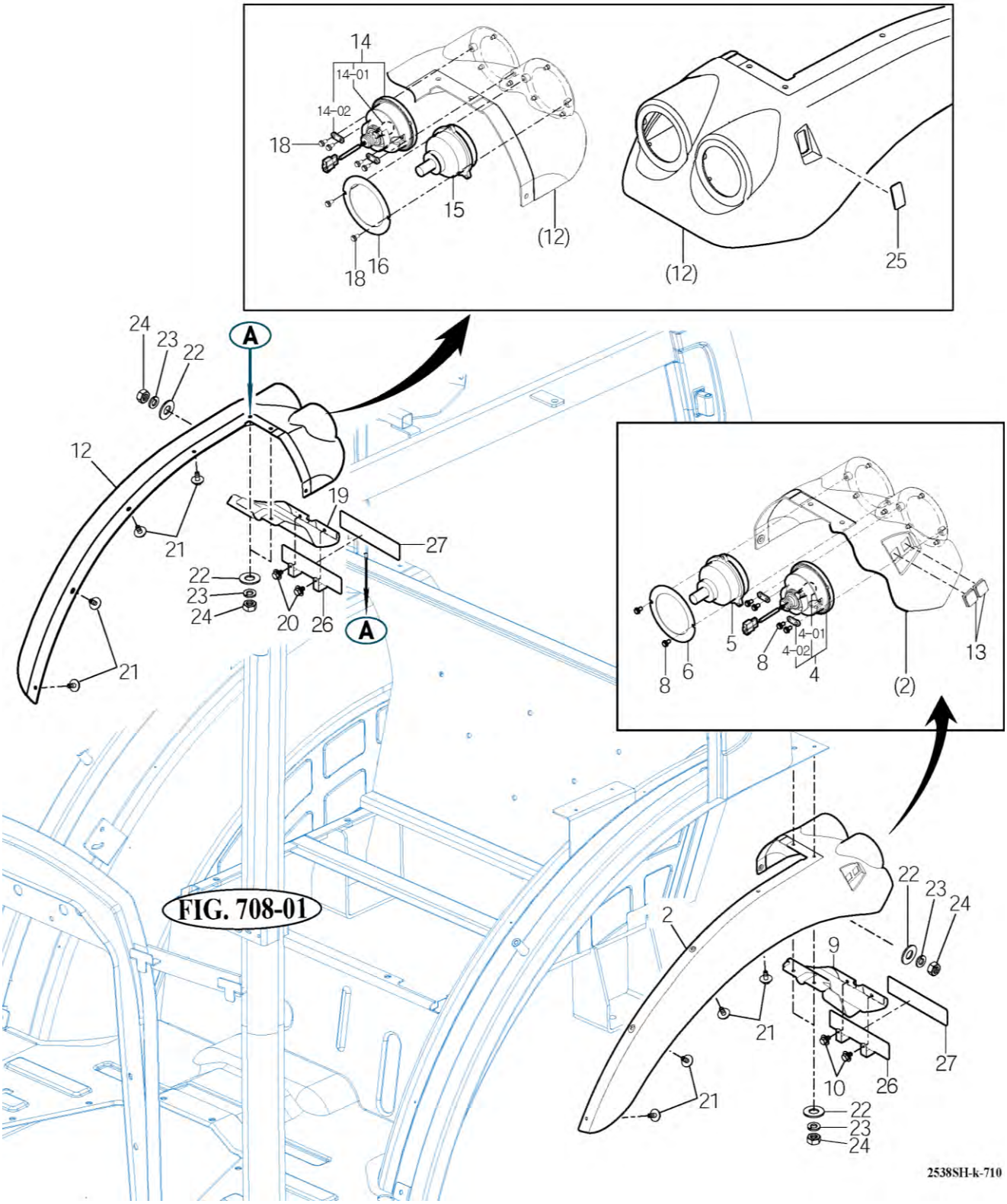

NOTE

https://truckmanualshub.com/

FIG 711

T394SH

MIRROR

P1

Year

2016

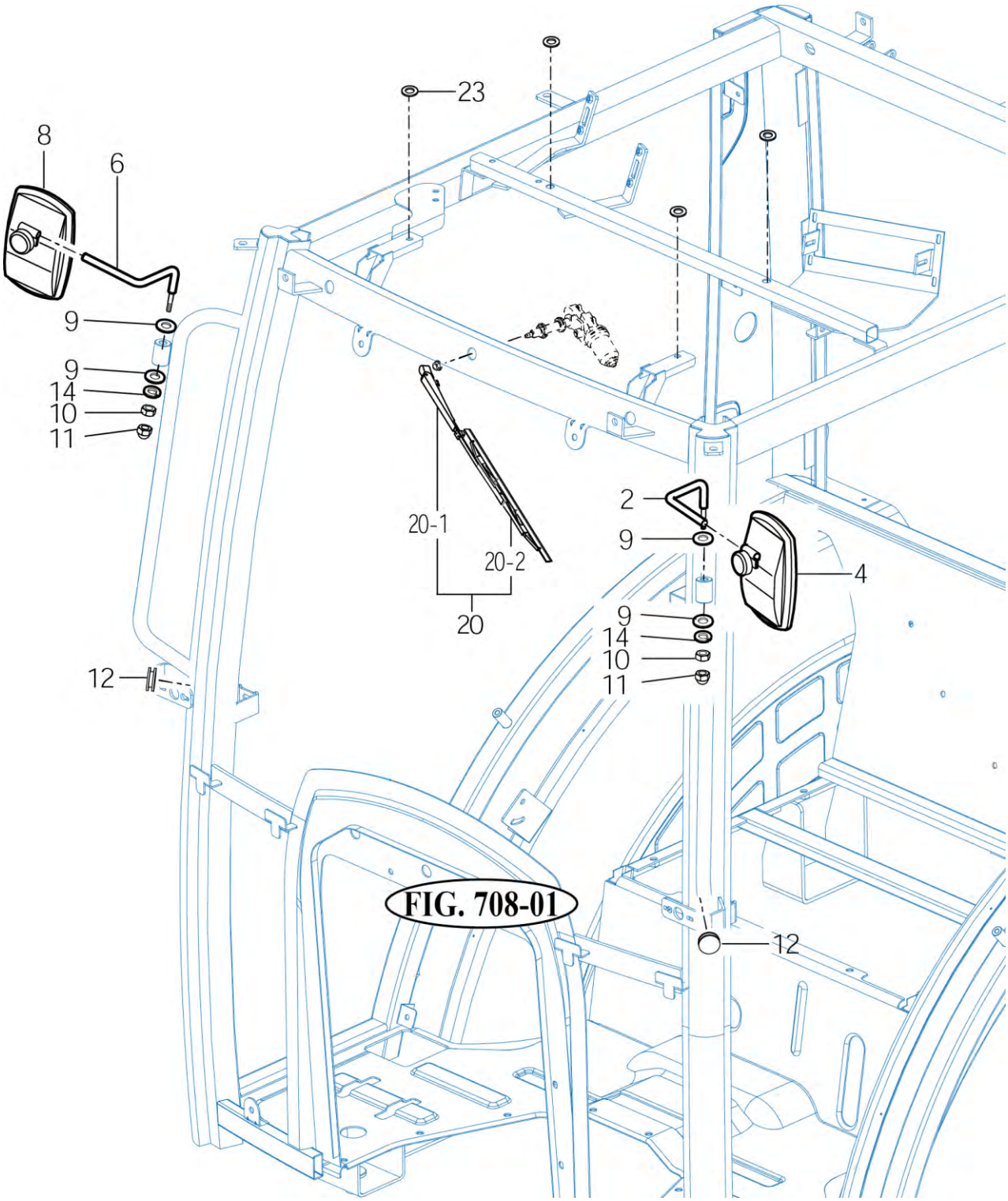

NOTE

FIG 712 T394SH	HEATER & AIR-CON	P1	Year 2016

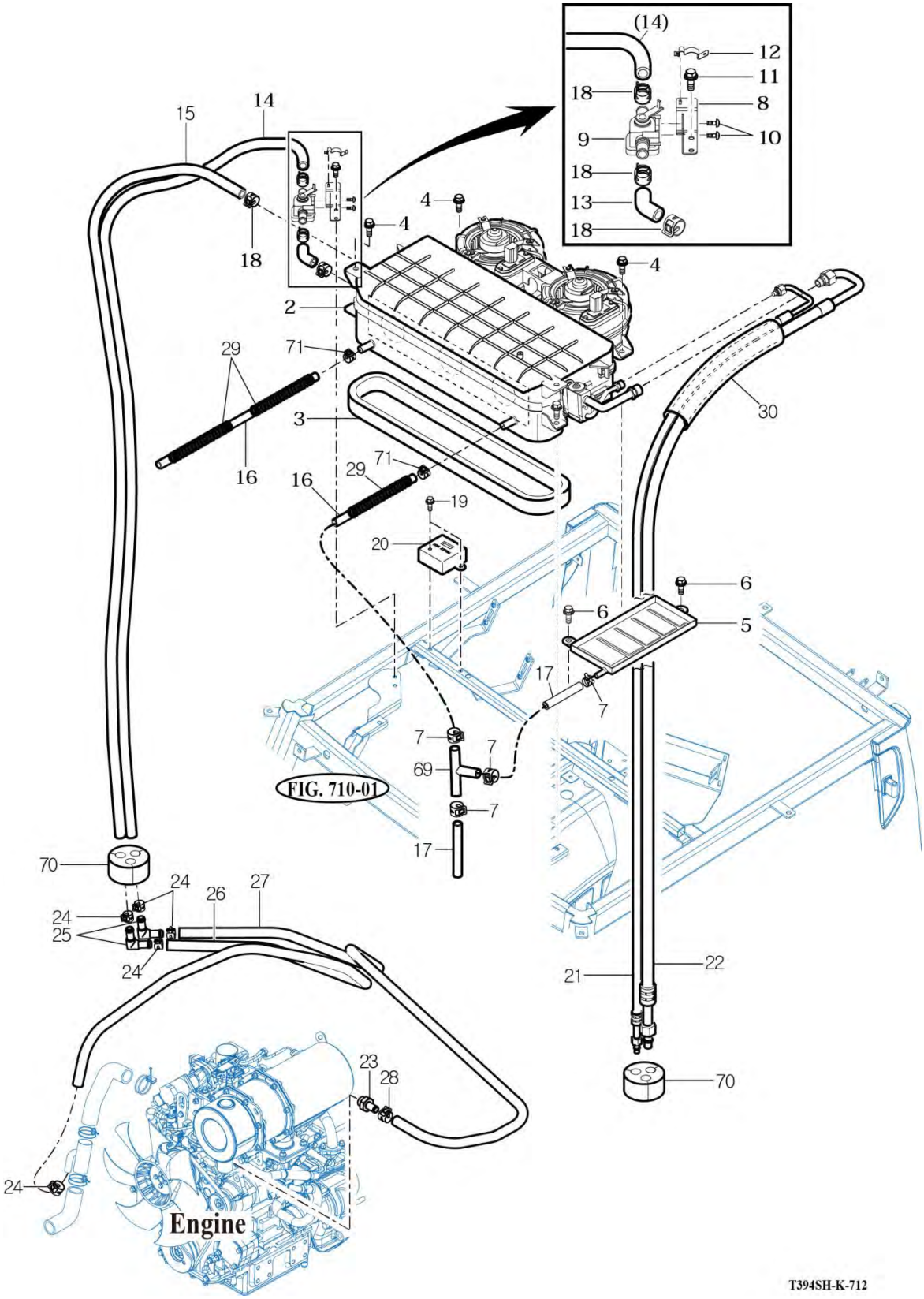

NOTE

FIG 712 T394SH	HEATER & AIR-CON	P2	Year 2016	

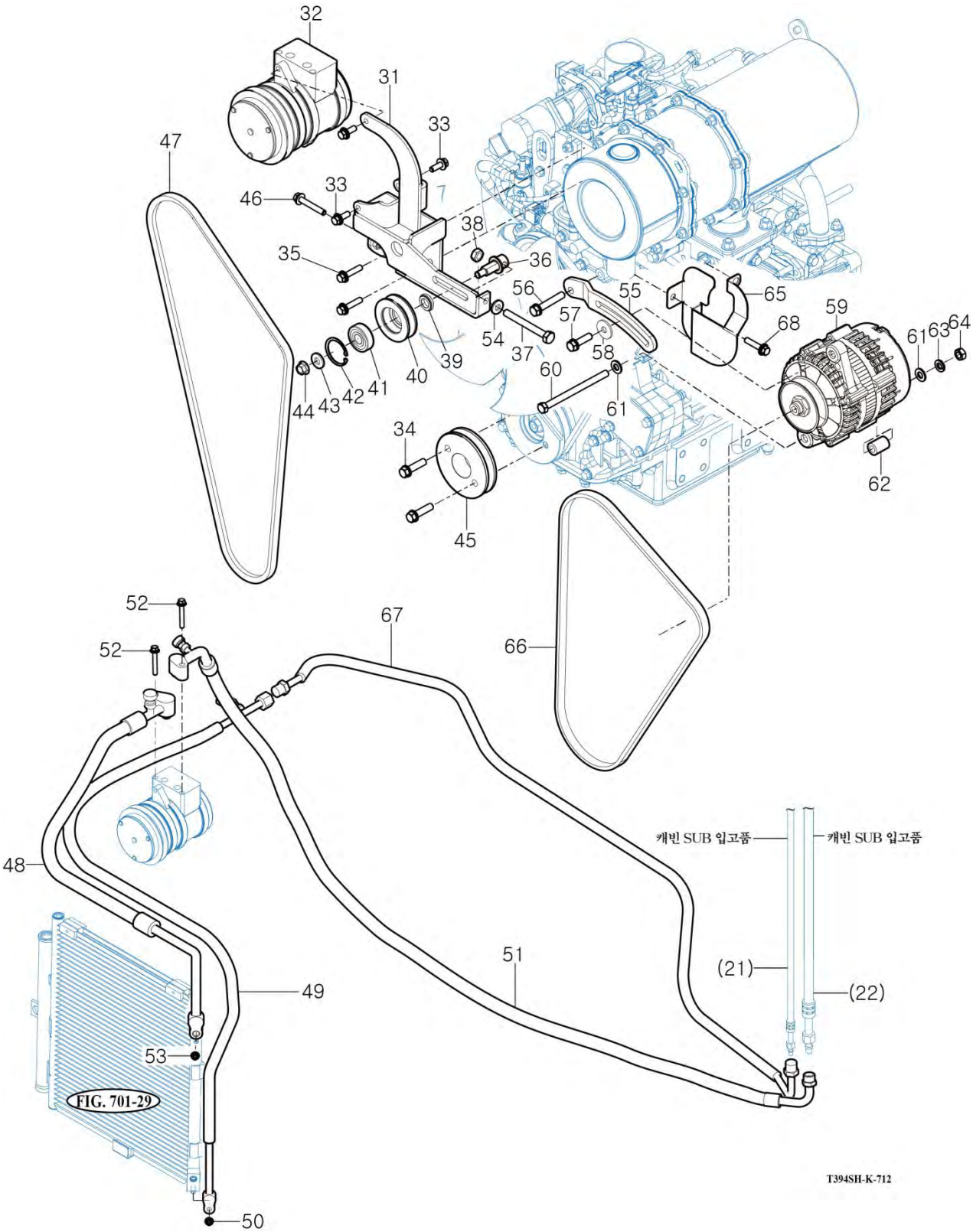

NOTE

https://truckmanualshub.com/

FIG 713 T394SH	FENDER COVER	P1	Year 2016	

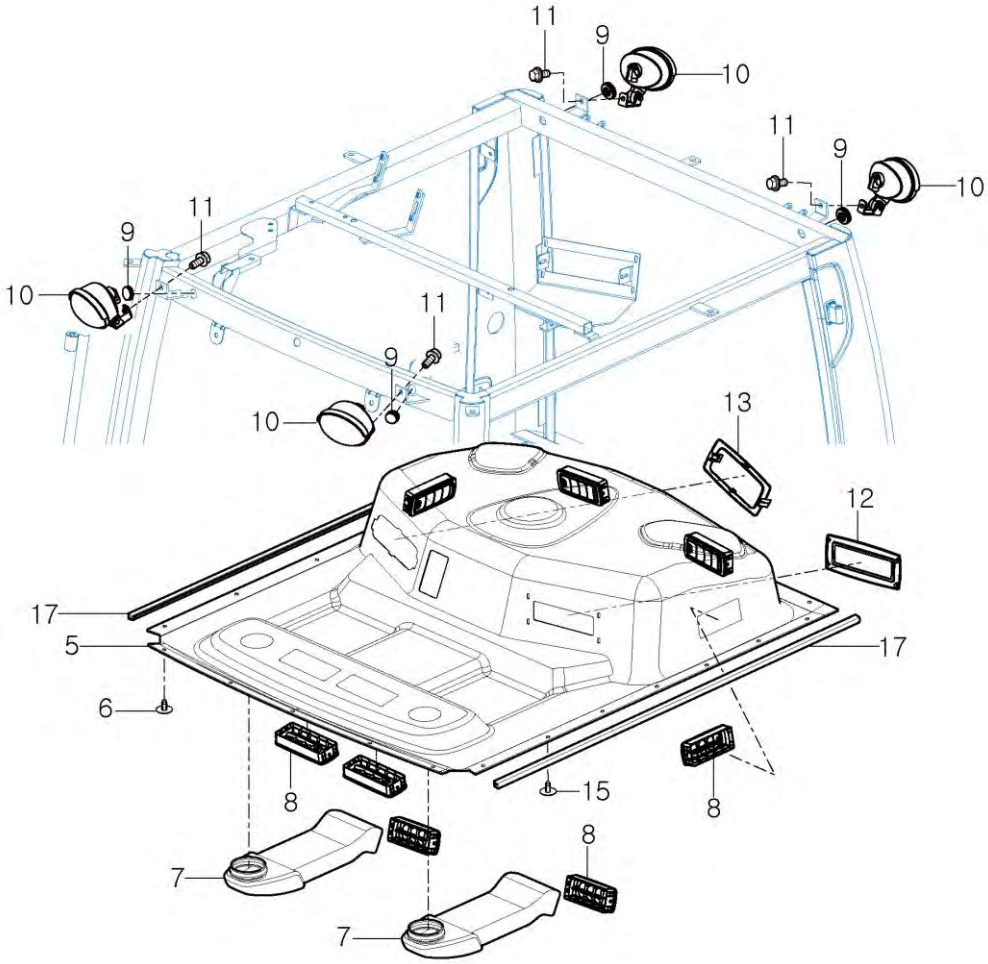

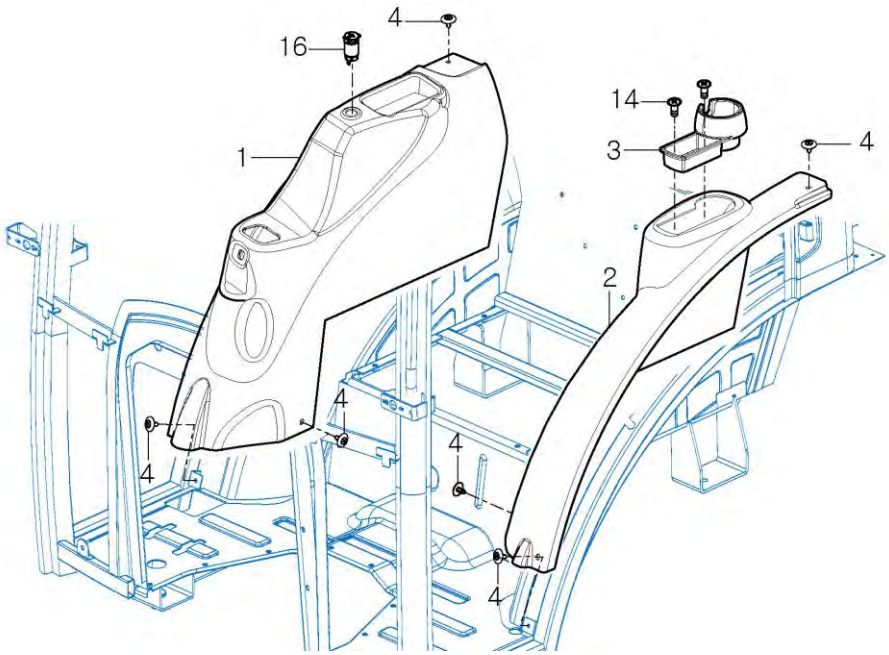

NOTE

https://truckmanualshub.com/

FIG 714 T394SH	ROOF	P1	Year 2016	

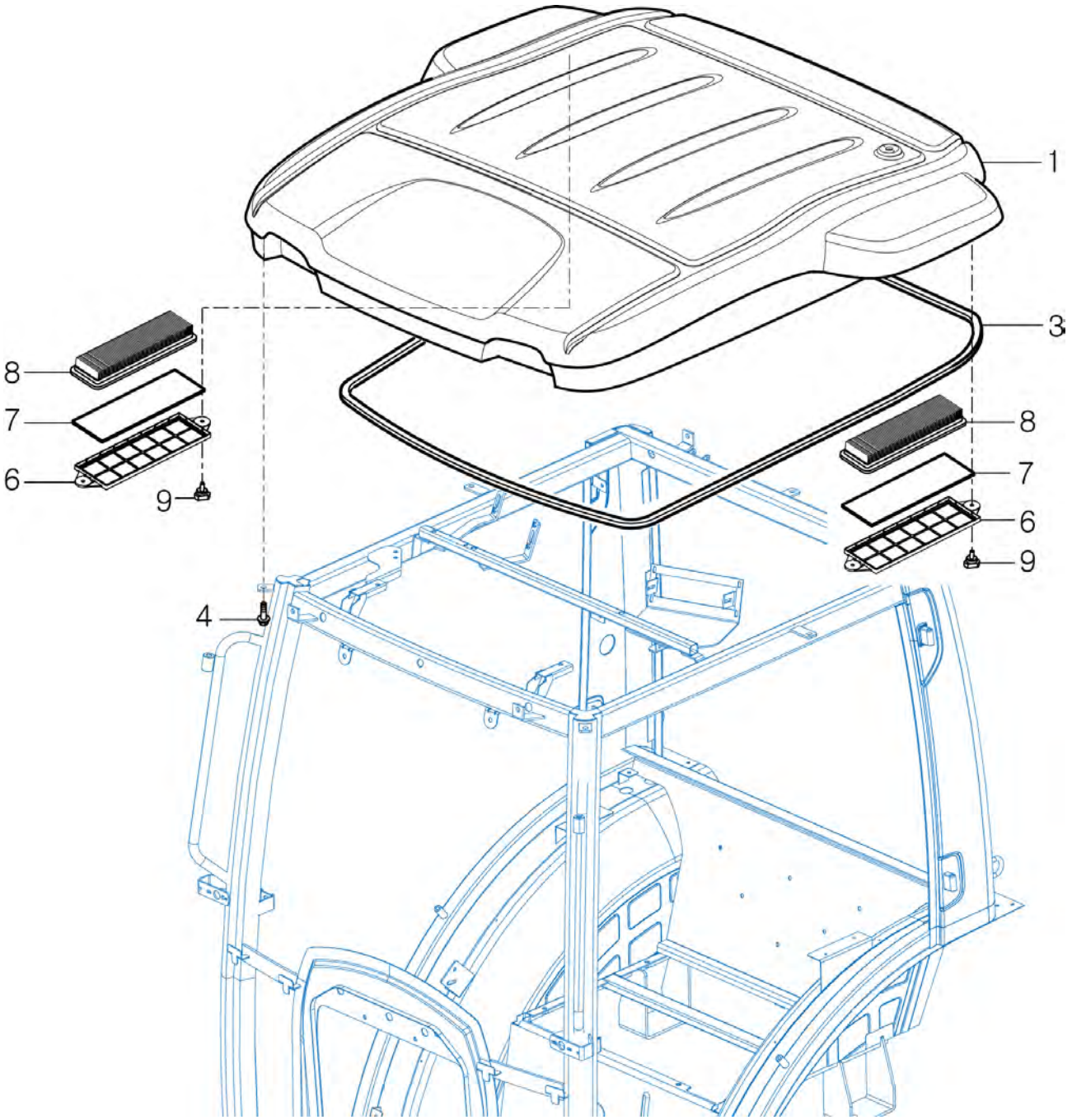

NOTE

https://truckmanualshub.com/

FIG 715 T394SH	CABIN INTERIOR	P1	Year 2016	

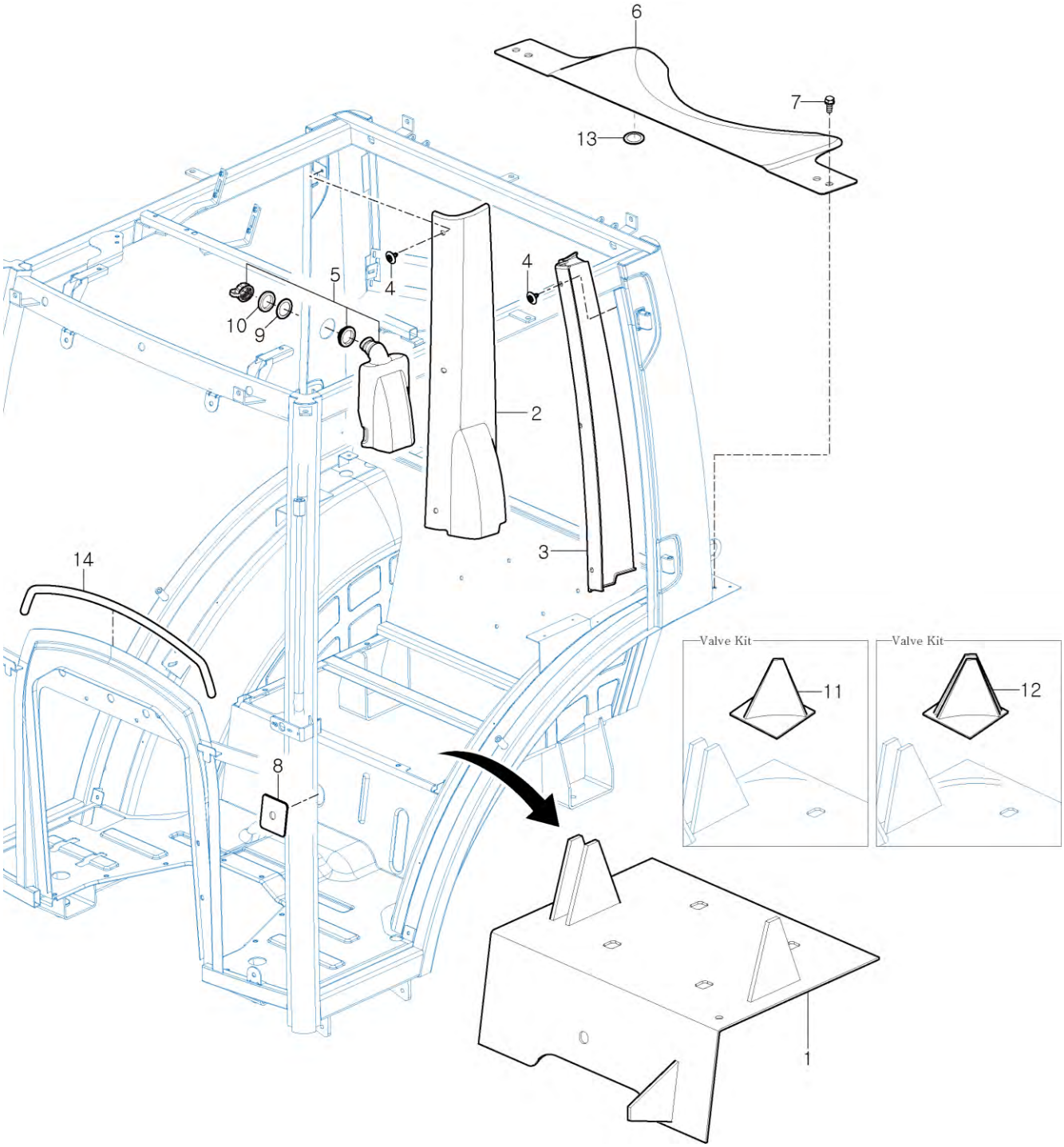

NOTE

https://truckmanualshub.com/

FIG 801 T394SH	BATTERY & MOUNTING	P1	Year 2016	

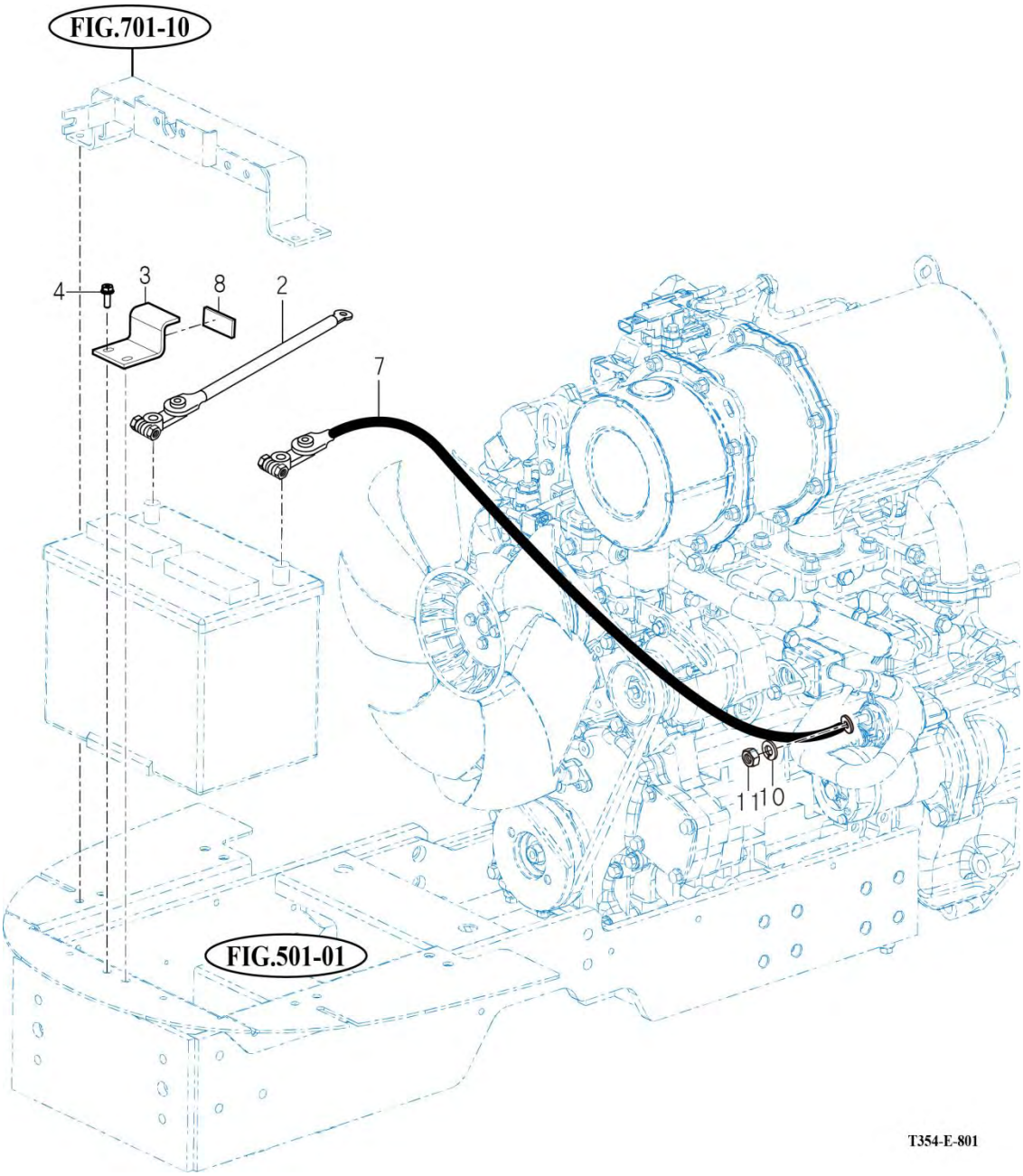

NOTE

FIG 802 T394SH	LIGHTS	P1	Year 2016	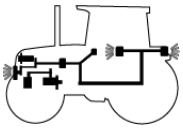

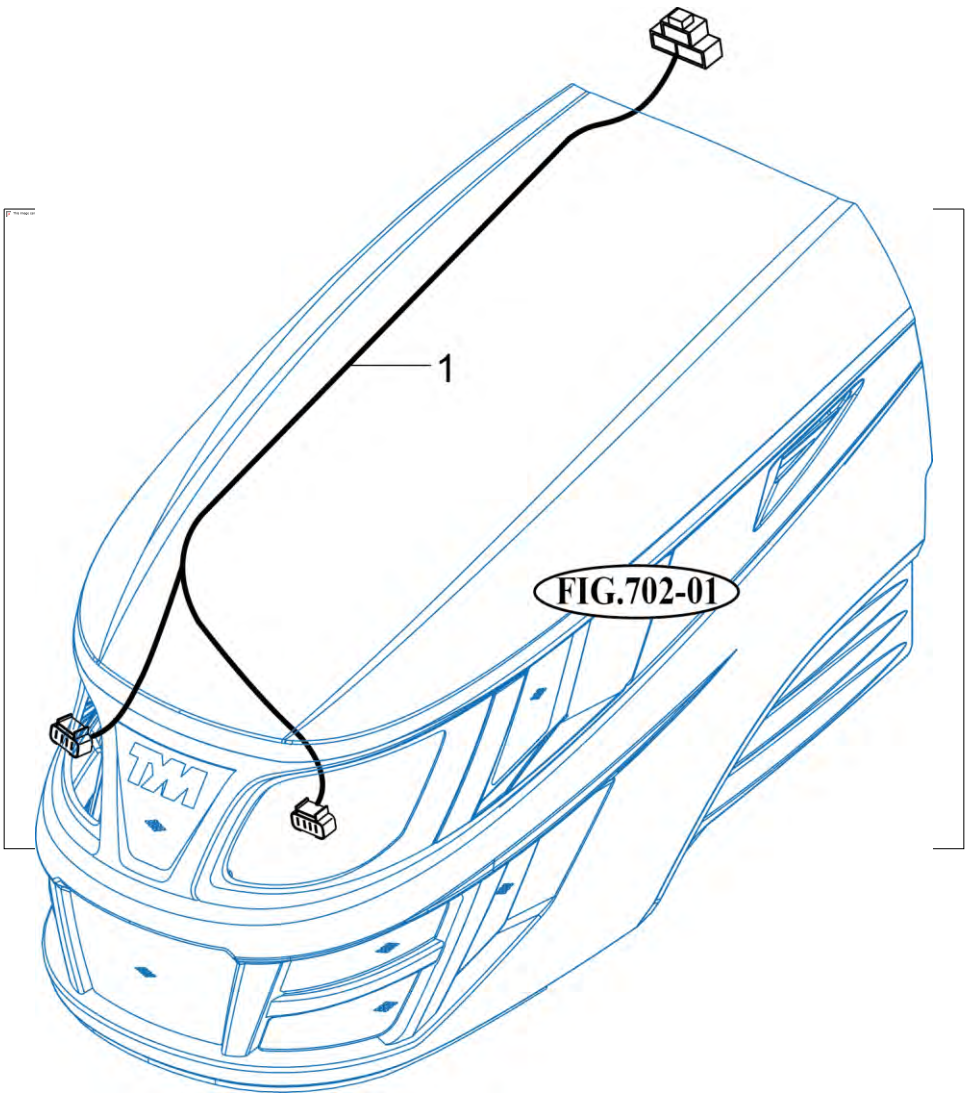

NOTE	

https://truckmanualshub.com/

FIG 803 T394SH	INSTRUMENT PANEL	P1	Year 2016	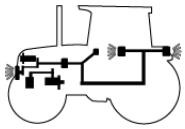

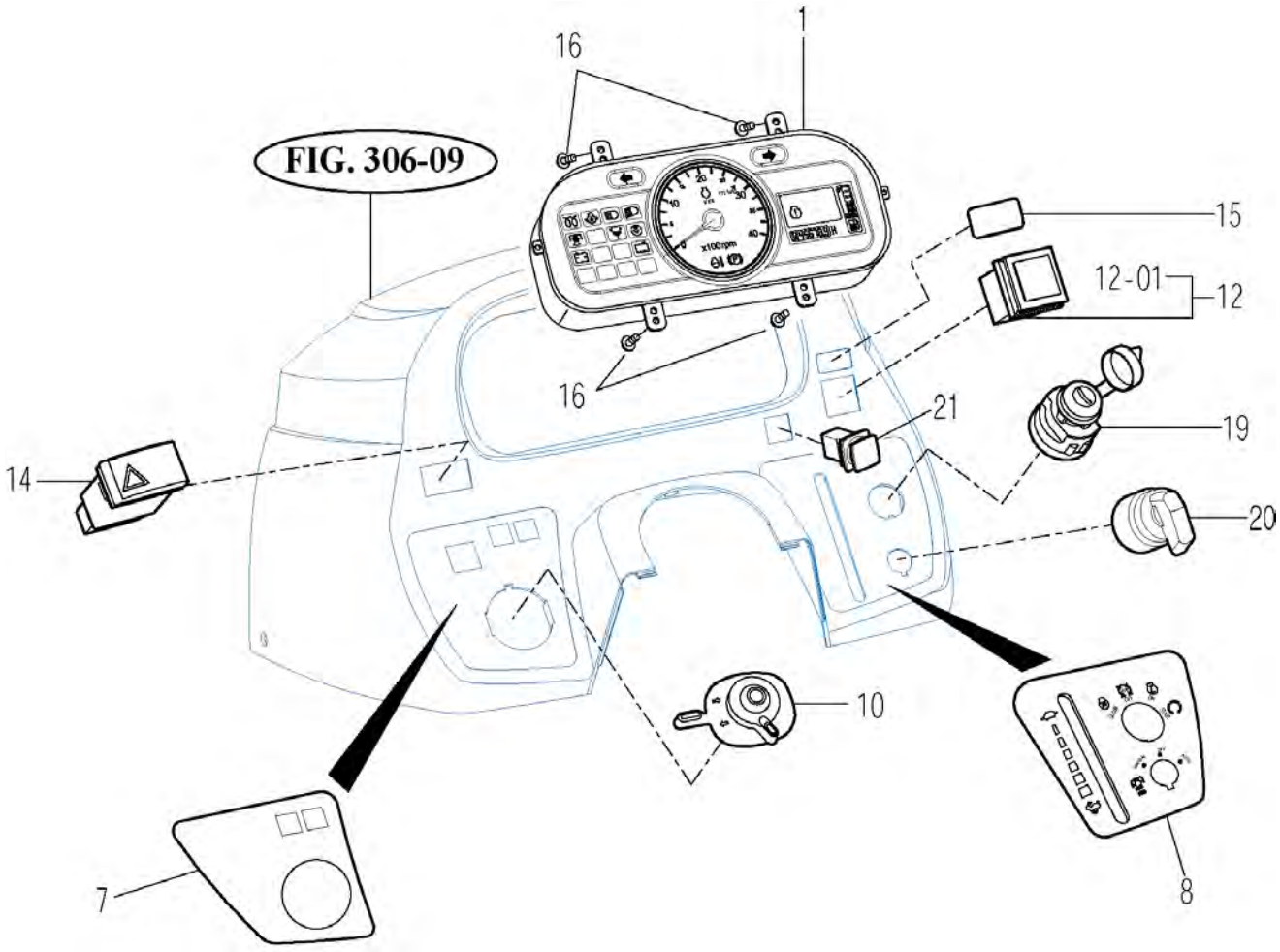

NOTE	

https://truckmanualshub.com/

FIG 804 T394SH	ELECTRIC SYSTEM	P1	Year 2016	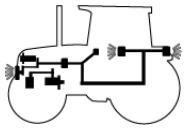

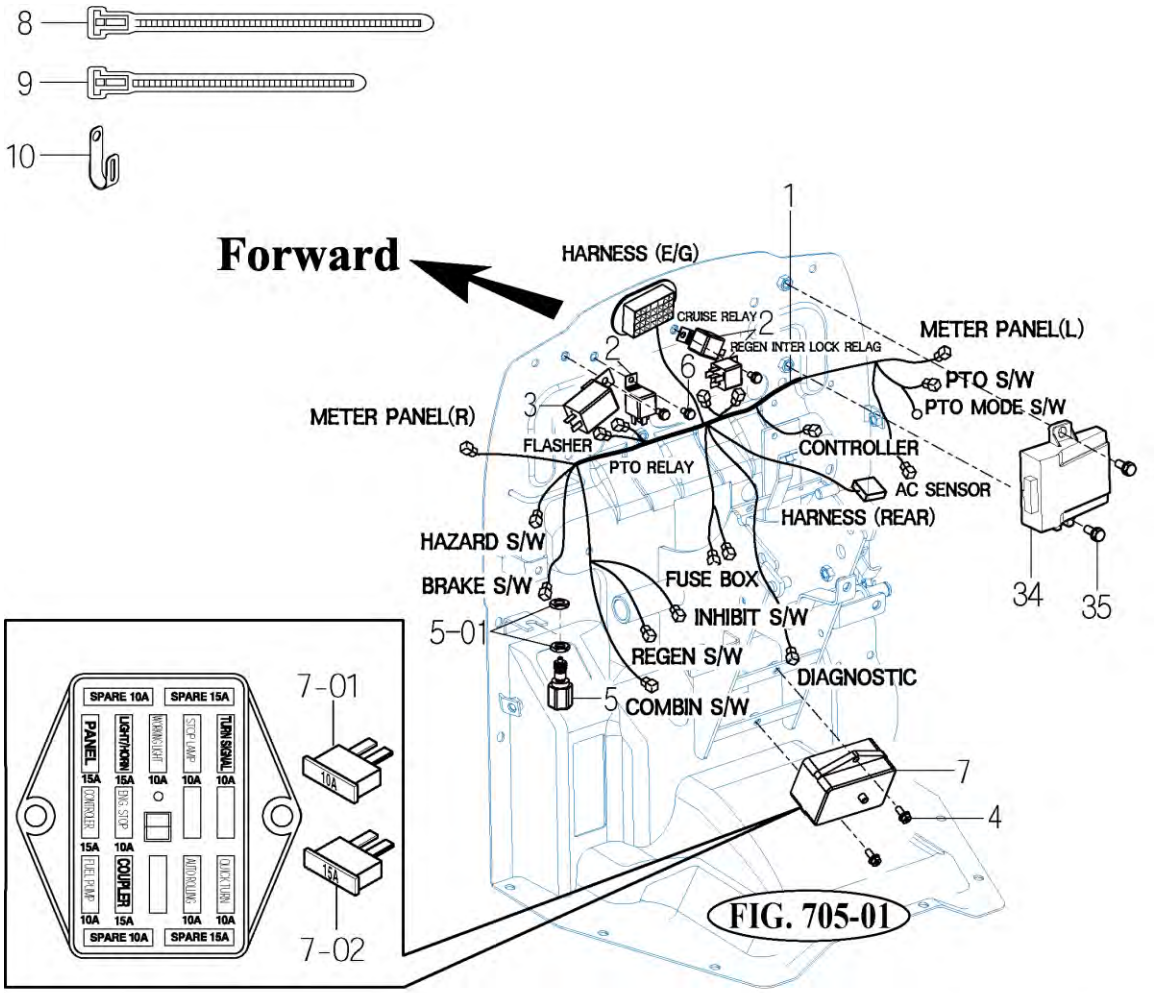

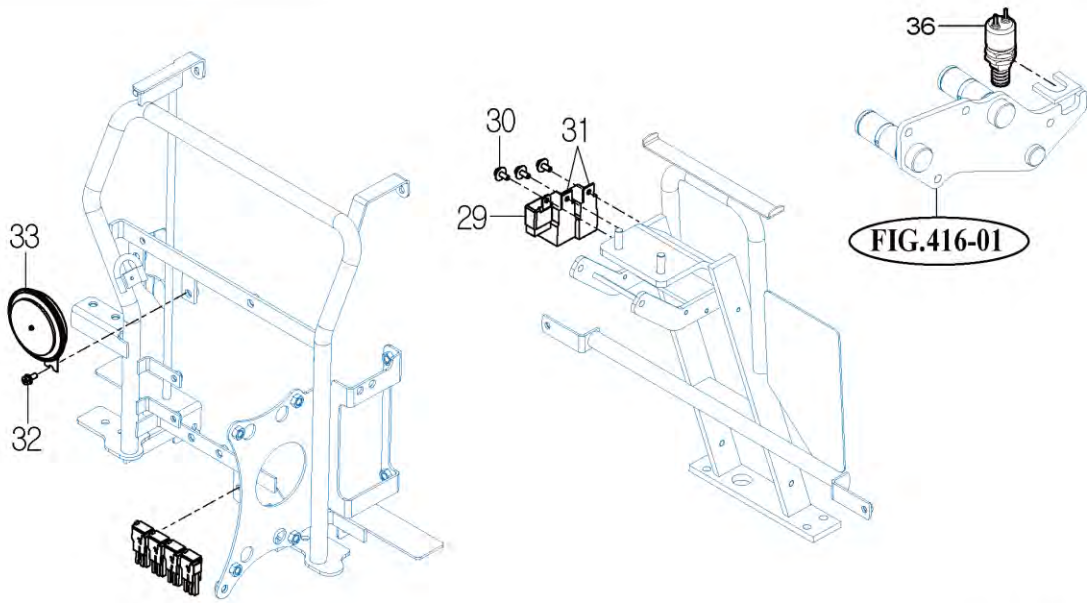

T394SH-E-804

NOTE

https://truckmanualshub.com/

FIG 805 T394SH	HARNESS (1)	P1	Year 2016	

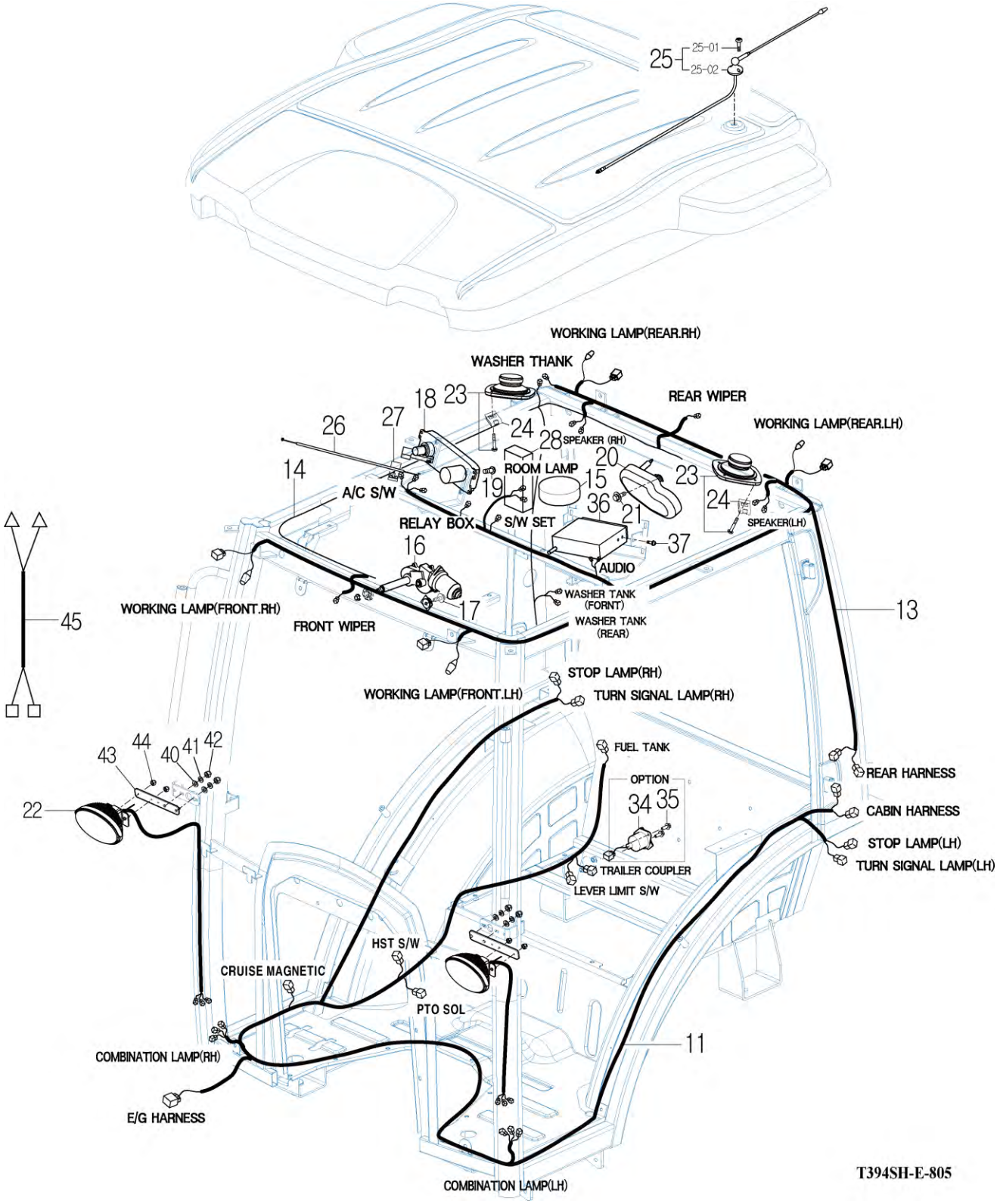

NOTE

https://truckmanualshub.com/

FIG 806 T394SH	HARNESS (2)	P1	Year 2016	

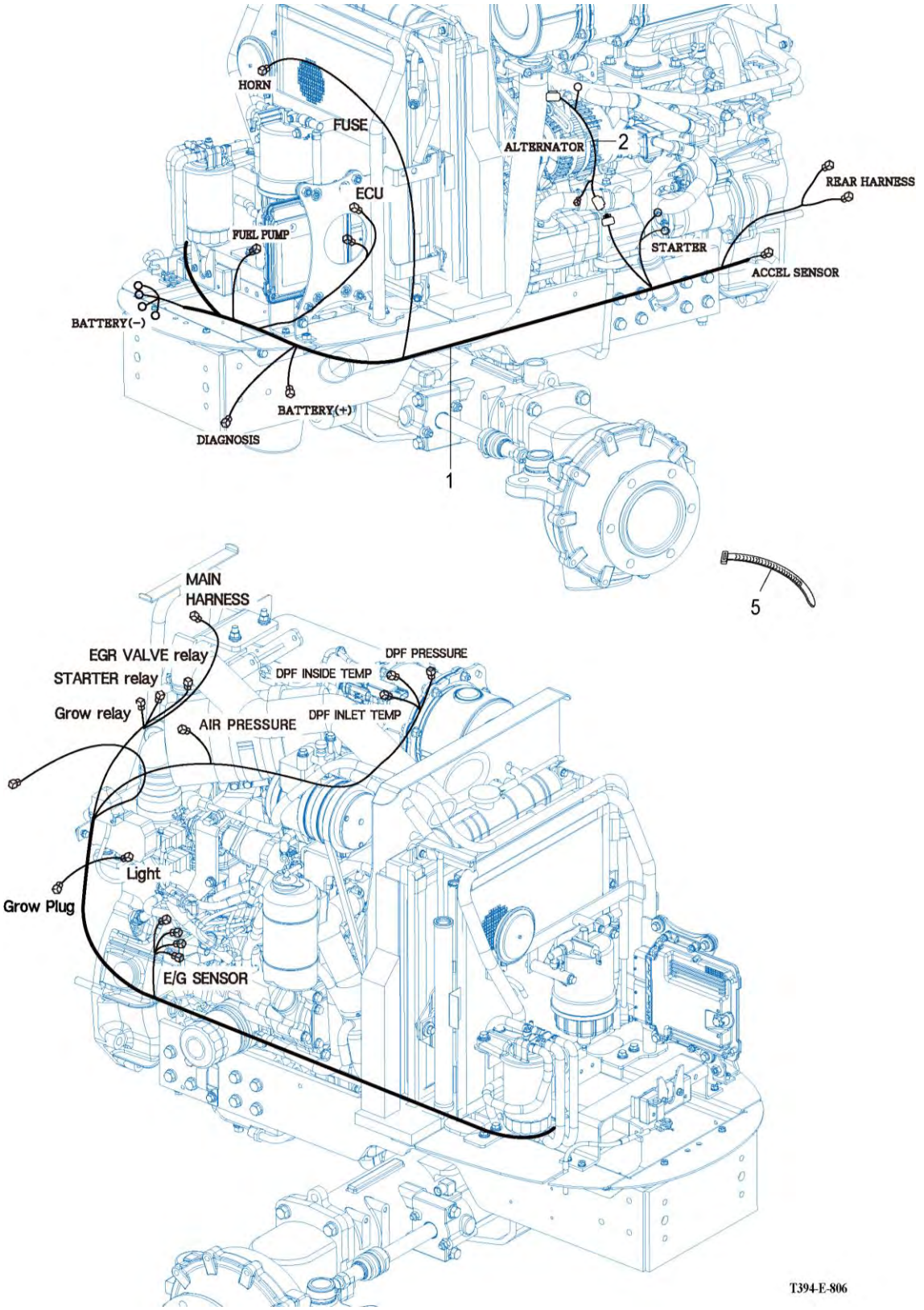

NOTE	

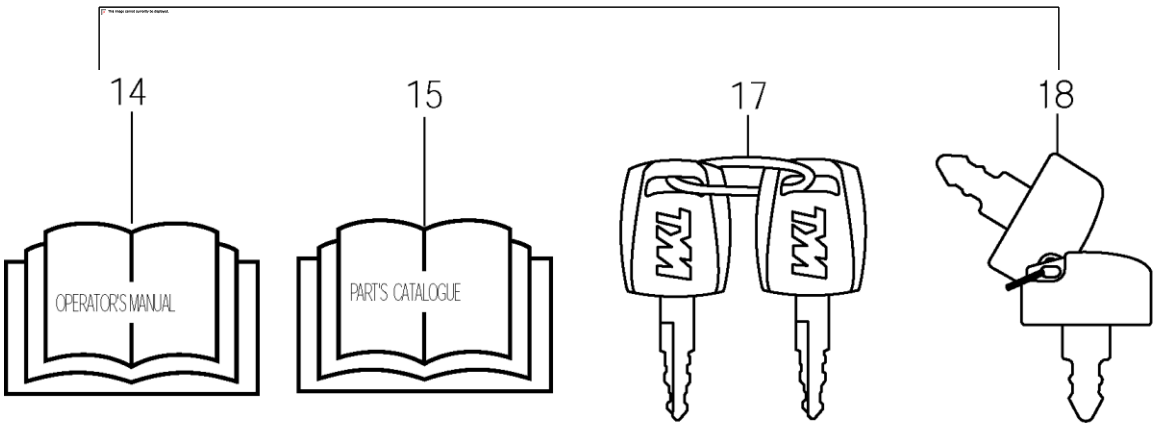

2538SH-E-901

NOTE

https://truckmanualshub.com/

FIG 902 T394SH	LABEL	P2	Year 2016	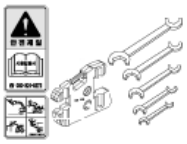

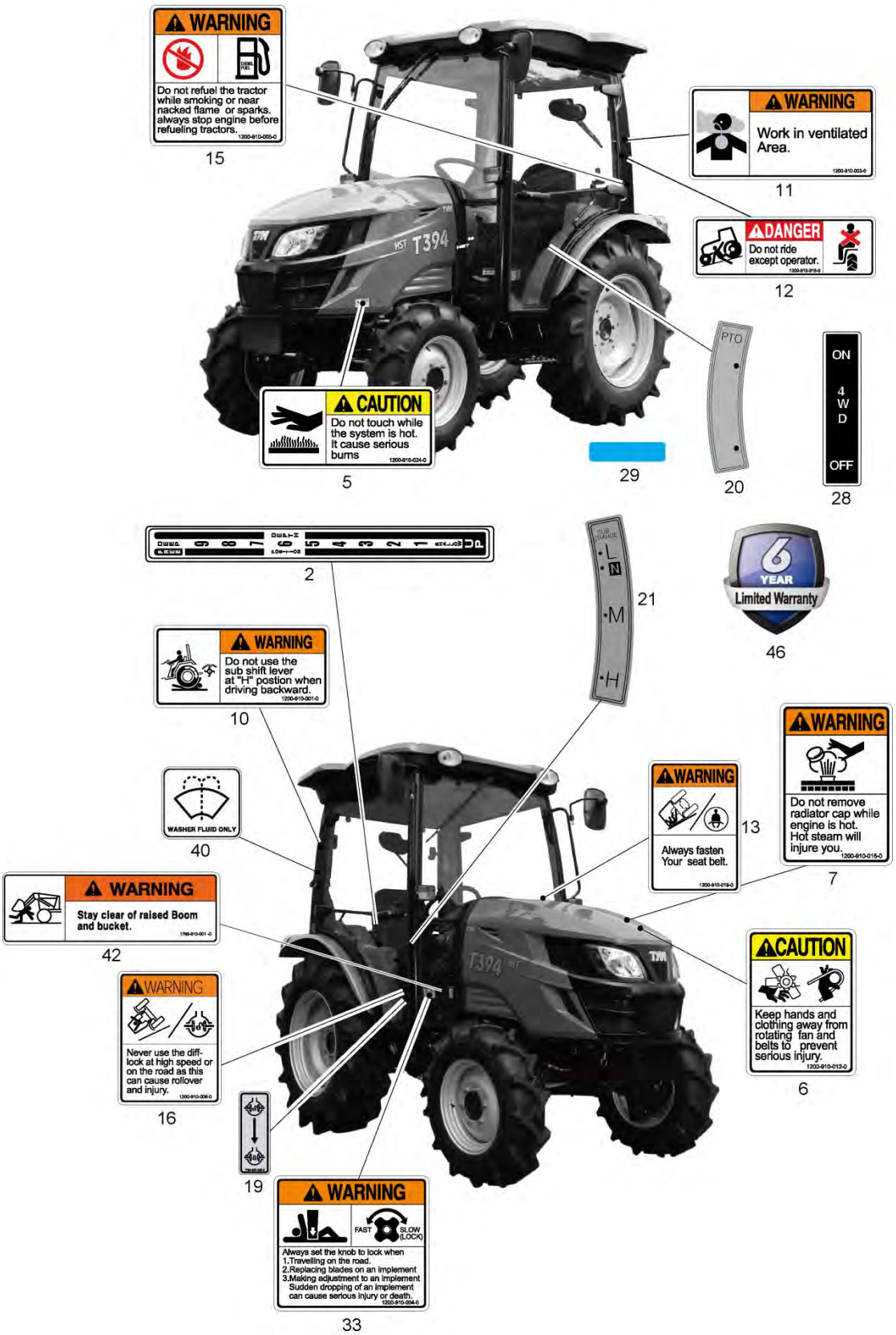

NOTE	

https://truckmanualshub.com/

FIG 902 T394SH	LABEL	P2	Year 2016	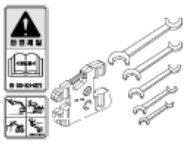

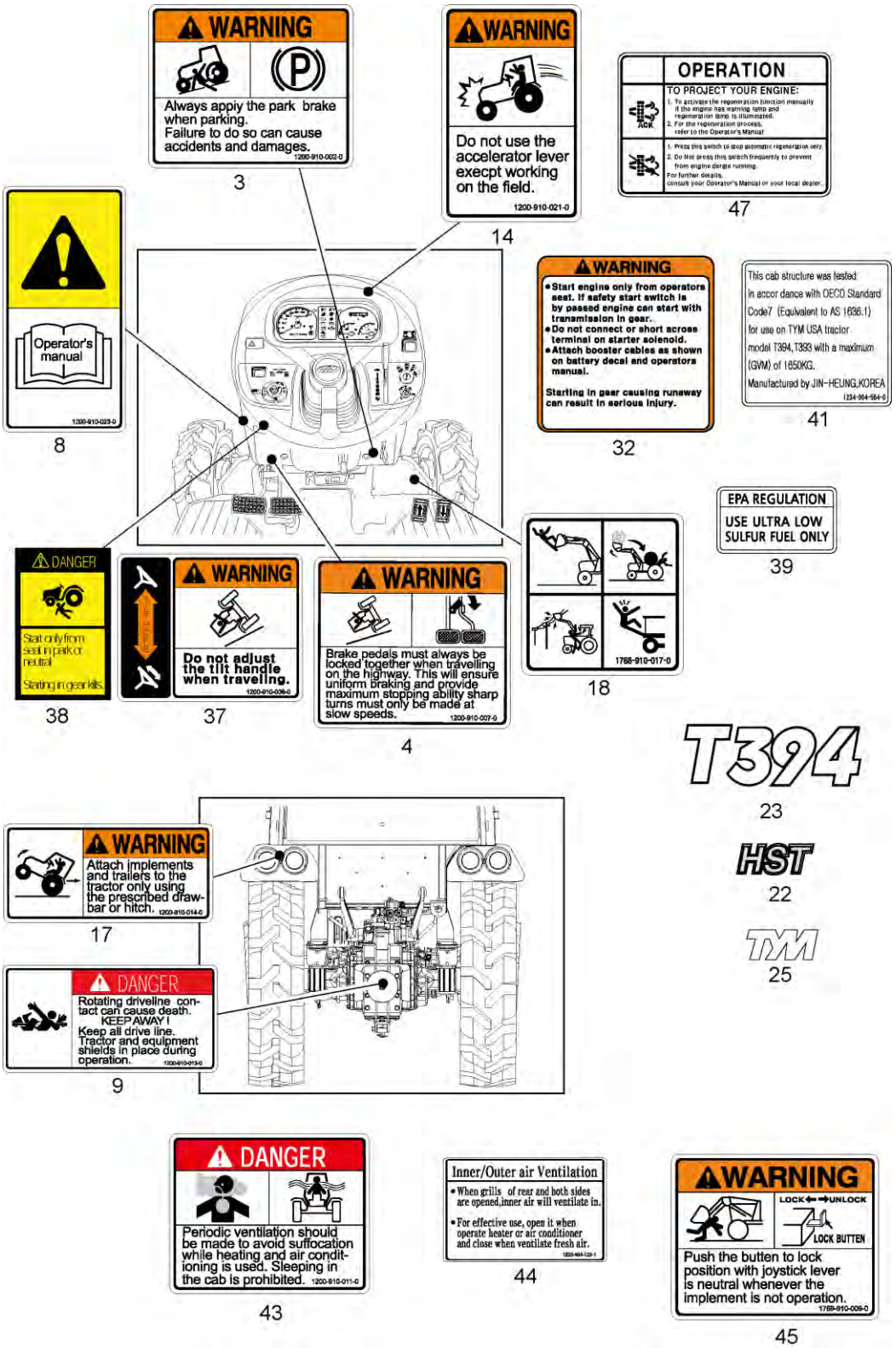

NOTE	

FIG 903 T394SH	WEIGHT	P1	Year 2016	

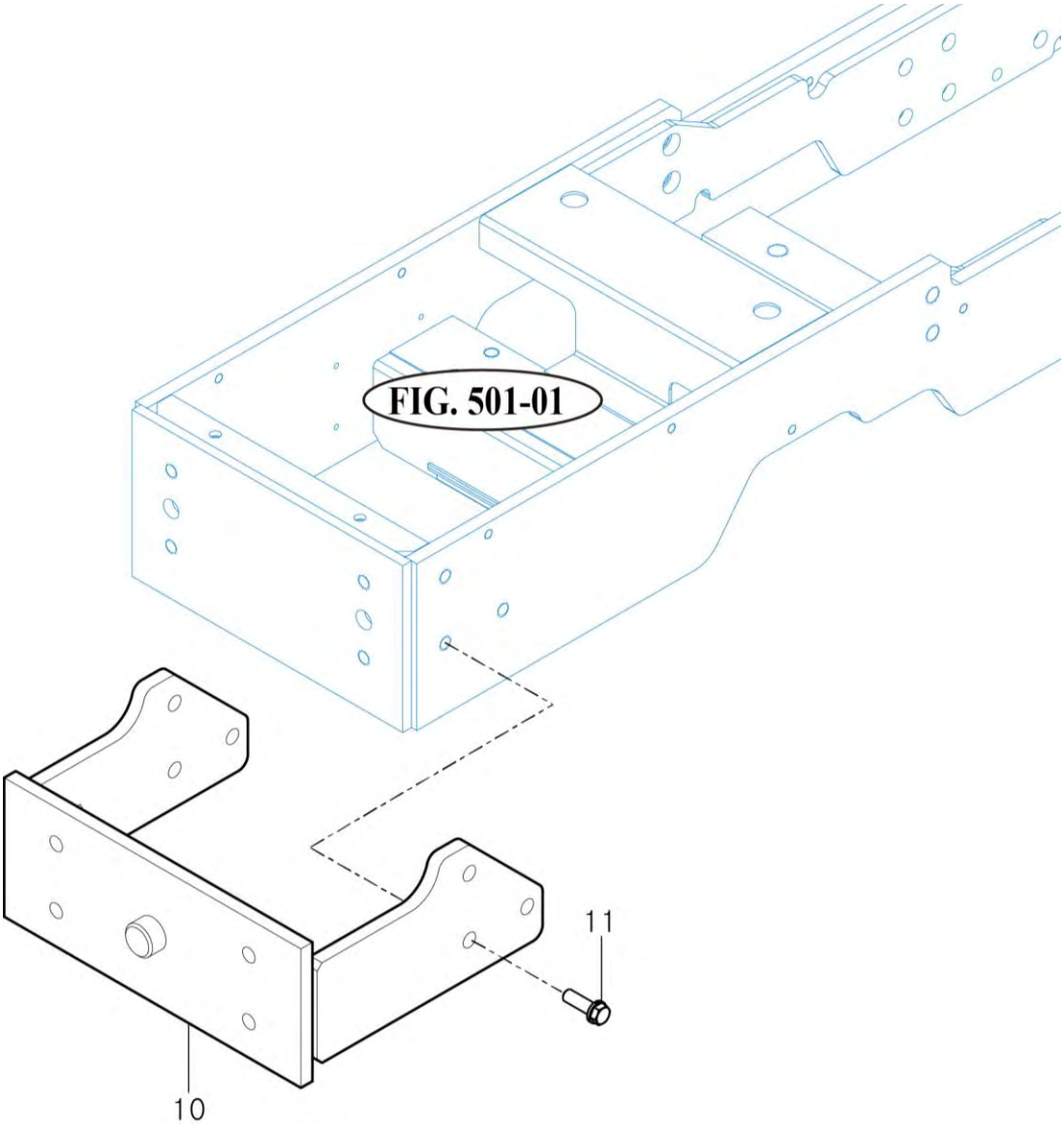

NOTE	

https://truckmanualshub.com/

KEY NO.		PART NO.
101	1	129A00-01560
101	4	129001-01250
101	5	171051-01921
101	6	129150-02020
101	9	129795-02412
101	10	27241-300000
101	11	124060-01050
101	12	124160-01910
101	13	124160-01910
101	14	27241-120000
101	24	129150-02931
101	27	129150-01200
101	28	129A00-01331
101	29	129001-02931
101	32	129150-02871
101	35	129150-02941
102	1	129C00-01500
102	2	129100-01580
102	3	124160-01751
102	4	129795-01950
102	5	119609-32040
102	6	119624-32040
102	7	24311-000320
102	8	26106-080162
102	9	124240-01871
102	10	129C26-01890
102	11	22190-080002
102	12	26106-080162
102	13	124240-01871
102	14	129C26-01890
102	15	22190-080002
102	16	26106-080142
102	17	26106-080352
102	18	129C00-01550
102	20	119934-01800
102	21	124240-01871
102	22	22190-080002
102	23	26106-080162
102	24	26106-080352
102	25	26106-080402
102	26	26106-080602
102	27	26106-080852
103	1	129100-01580
103	2	129A26-01600
103	3	119620-01750
103	4	26206-100252
103	5	129052-01551
103	6	129054-01640
103	8	22190-120002
103	9	129052-01692

KEY NO.		PART NO.
103	11	124160-01910
103	12	129555-01750
103	13	26106-080122
103	14	26106-080252
103	15	26106-080502
103	16	26106-081002
103	17	26106-081202
103	18	129100-01580
103	19	129100-01640
103	21	129795-01780
103	22	129486-01670
103	23	129A00-21710
103	24	26450-060162
104	1	129004-11241
104	2	129004-11251
104	4	119802-11260
104	5	119802-11270
104	6	119802-11280
104	7	129150-11280
104	8	129004-11650
104	9	129150-11230
104	11	129150-11750
104	12	129150-11370
104	13	129A00-11710
104	19	27241-400000
104	20	129005-11100
104	21	129100-11112
104	22	129795-11120
104	23	129795-11180
104	24	124460-11340
104	25	129A00-11340
104	26	27310-080001
104	28	129978-11871
104	29	129A00-11900
104	30	120270-54410
104	31	22351-060012
104	32	26106-080252
104	33	26106-080352
104	34	26106-080502
104	35	124160-01751
104	36	124160-11360
104	37	129A00-11360
104	38	129004-03010
104	39	129150-03070
104	40	123907-03100
104	41	123907-03110
104	42	123907-03120
104	43	123907-03140
104	45	129A00-11310
104	46	129A00-11330

KEY NO.		PART NO.
104	47	129978-12700
104	48	129A00-12780
104	49	129A00-13360
104	51	129A00-13380
104	52	119640-61400
104	53	22857-500100
104	54	22857-500100
104	55	26450-060162
104	56	24311-000120
104	57	24311-000320
104	58	129A00-07900
104	59	26106-080202
104	60	129A01-07900
104	61	129A01-16810
105	1	129005-03080
105	2	129410-03990
105	3	129A00-12110
105	4	129A00-12150
105	5	129A00-12100
105	6	26216-060202
105	7	129A00-12720
105	8	26106-080502
105	9	129A00-12810
105	10	129A00-12851
105	11	119660-01570
105	12	129A00-12711
105	13	129A00-12790
105	14	129A00-12830
105	15	129A00-59110
105	16	129A00-59120
105	17	22190-140002
105	18	26216-080302
105	19	26716-060002
105	20	26106-080502
105	21	26106-080752
105	22	26216-081052
105	23	26306-080002
105	24	129A00-12820
105	25	129A00-12900
105	26	129A00-12910
105	27	26106-060202
105	28	26106-060402
105	29	26106-060902
106	1	129A00-13100
106	2	129A00-13110
106	3	123900-13130
106	4	129A01-13601
106	5	129F01-13630
106	6	129A01-13700
106	7	129A00-13770

https://truckmanualshub.com/

KEY NO.		PART NO.
106	8	129A00-91200
106	9	26306-100002
106	10	129A00-13300
106	11	23297-080061
106	12	129A00-13350
106	13	23414-120000
106	14	26106-060122
106	15	129A00-13400
106	16	129A00-13410
106	17	129F01-13600
106	18	129E00-13620
106	19	129A00-13851
106	20	129A00-13861
106	21	129418-18320
106	22	26106-080502
106	23	129A00-13751
106	24	129A00-13800
106	25	129927-13810
106	26	26106-080252
106	27	26306-080002
106	28	129A00-13901
106	29	129A00-13910
106	30	129A00-13920
106	31	26306-080002
107	1	128300-13230
107	2	129A00-16820
107	3	129A00-16830
107	5	129C00-13940
107	6	129C00-13950
107	7	129A26-16000
107	8	129A00-16210
107	10	129A00-16410
107	12	129A00-16500
107	13	129A00-16600
107	14	129A00-16610
107	15	129C01-16690
107	16	129A00-16700
107	17	129A00-16720
107	18	129A00-16740
107	19	129A00-16750
107	20	26106-080142
107	21	26306-080002
107	23	129A00-13350
107	24	129A00-17311
107	25	129A00-17330
107	26	129A00-17360
107	27	129A00-17610
107	29	129A00-17520
107	30	129A00-17670
107	31	129A00-17570

KEY NO.		PART NO.
107	33	129978-17700
107	34	129A00-17780
107	35	26106-060162
107	36	26106-080202
107	37	129A00-91200
107	38	129C00-91200
107	39	129A00-91430
107	40	129A26-17360
107	41	26216-080202
107	42	26216-100552
107	43	129A23-17370
107	44	26106-080162
107	45	26106-080202
107	46	26106-100202
107	47	26306-080002
107	48	26306-080002
107	49	26306-100002
107	50	26306-100002
108	1	129150-14200
108	2	129150-14400
108	3	129A00-14580
108	4	129150-02450
108	6	129A00-14100
108	7	22512-070140
108	8	129A00-14700
108	9	26106-060102
108	10	26106-080142
108	11	129A00-14710
108	12	26450-060162
108	13	129A00-25050
108	14	129A00-25110
108	17	26106-080452
108	18	129A00-25900
108	19	22217-180000
108	20	26776-180002
108	21	129A00-25060
108	22	129A00-25120
108	25	129A00-25200
108	26	129A00-25210
108	27	26106-080402
108	28	129A26-26000
108	29	129555-26201
108	30	24105-060064
108	31	119802-25071
108	32	129A00-25080
109	1	129008-21000
109	2	129100-01580
109	4	119803-21200
109	5	22512-070140
109	7	22512-070140

KEY NO.		PART NO.
109	8	129055-21650
109	9	129795-21661
109	10	121850-21680
109	11	121111-21501
109	12	129A26-21580
109	14	119865-21600
109	16	129C00-22080
109	18	129A00-22500
109	24	129202-22300
109	25	22252-000260
109	26	729402-23100
109	30	121550-23200
109	31	129150-23601
109	33	129100-23910
109	34	129150-23611
109	36	129C00-22900
109	38	129A00-22950
110	1	129A00-32000
110	2	129486-32020
110	3	26450-060252
110	4	121520-34810
110	5	129263-34811
110	6	129052-35090
110	7	24311-000160
110	8	26106-060122
110	9	129508-33031
110	10	129508-33060
110	11	129417-33111
110	12	129006-35100
110	14	129417-35150
110	15	129150-35111
110	17	129122-44480
110	18	129508-49030
110	19	171008-03990
110	21	23080-015000
110	22	129006-49040
110	23	171008-03990
110	25	129642-49180
110	26	23080-015000
110	27	26106-080202
110	28	119761-39450
110	29	129150-35153
111	1	129A33-42001
111	3	129150-42059
111	4	129263-42120
111	8	129150-42301
111	10	129054-42320
111	11	129055-49300
111	12	129928-49420
111	13	129916-49740

KEY NO.		PART NO.
111	14	24358-240310
111	15	26106-060202

KEY NO.		PART NO.
114	7	23080-015000
114	8	129A00-59030

KEY NO.		PART NO.
115	34	129129-77460
115	35	26106-120252

111	16	26116-060162
111	17	26577-060162
111	18	129486-42050
111	19	23414-080000
111	20	26106-080122
111	21	26106-080552
111	22	26106-080602
111	23	129403-42380
111	24	25132-004000
111	25	129655-44740
111	26	129030-44760
111	27	26106-060502
111	28	129155-49801
111	29	129150-49811
111	30	129350-49530
111	31	129795-49551
111	32	26106-080222
111	33	129927-44900
111	34	22190-120002
111	35	129051-49310
111	36	129A23-49610
111	37	129960-03990
111	40	129A23-49640
111	42	129960-03990
112	1	129A00-51000
112	2	129A00-51100
112	3	129A00-51110
112	4	129A00-51120
112	5	129A00-51130
112	6	129A00-51200
112	7	129A00-51900
112	8	26106-080302
113	1	129A00-53100
113	4	129A00-53200
113	6	129A00-57000
113	7	129A00-57100
113	8	129A00-57200
113	9	129A00-57210
113	10	26106-080252
113	11	123372-59100
113	13	129A00-59700
113	15	129A00-59810
113	16	129A00-59820
113	17	129A00-59830
113	18	26366-060002
114	1	129A23-59500
114	3	23080-007000
114	4	129A00-59020

114	9	114270-59010
114	12	129A00-91200
114	15	114110-07761
114	16	129612-52100
114	17	129A00-55600
114	18	129A00-55610
114	19	129A00-55800
114	20	129E22-55700
114	21	129E00-55710
114	22	129A00-55750
114	23	129A00-55760
114	25	129A00-55720
114	26	129A00-55730
114	27	129242-55740
114	28	129A00-55740
114	29	129A00-55770
115	1	129407-77010
115	2	X0283060061
115	3	X9490561370
115	4	X9491200240
115	5	129407-77210
115	6	129407-77220
115	7	129129-77230
115	8	129129-77240
115	9	129407-77250
115	10	X0280210230
115	11	X0283270140
115	12	129407-77390
115	13	129129-77440
115	14	129129-77450
115	15	129129-77400
115	16	129129-77410
115	17	X9491703371
115	18	129129-77420
115	19	129129-77430
115	20	129129-77260
115	21	129129-77270
115	22	129407-77280
115	23	129407-77290
115	24	129407-77300
115	25	X9491730461
115	26	129407-77310
115	27	129129-77320
115	28	129407-77330
115	29	129129-77340
115	30	129129-77350
115	31	129129-77362
115	33	129129-77380

116	1	129795-01900
116	2	129052-77220
116	3	X9490561001
116	4	129052-77380
116	5	123501-79240
116	6	119620-79250
116	7	129052-77422
116	8	119620-79200
116	9	119620-79210
116	10	119620-79220
116	11	119620-79230
116	12	128401-77440
116	13	128401-77450
116	14	119620-77461
116	15	119620-77471
116	16	119620-77490
116	17	119620-77710
116	18	129052-79260
116	19	129052-79270
116	20	119620-79290
116	21	119620-79300
116	22	119620-79310
116	23	119620-79320
116	24	119620-79330
116	25	119620-79340
116	26	119620-79350
116	27	26306-100002
116	28	129602-77310
116	29	124732-77340
116	30	129972-77341
117	1	129A26-75040
117	9	129A00-75910
118	1	129A00-77930
118	2	129A00-91222
118	12	129A00-91231
118	17	129A00-91451
118	18	129A00-91600
118	19	26106-080122
118	20	26106-080122
118	21	29621-100000
118	22	29621-200000
118	23	172B02-17150
118	24	129938-77800
118	25	194990-22130
118	26	119060-61990
118	27	129054-77800
118	28	185100-50070
118	29	129054-77811