An Oshkosh Corporation Company

https://truckmanualshub.com/

Operation and Safety Manual

Original Instructions - Keep this manual with the machine at all times.

TOUCAN 10E
TOUCAN 26E

ANSI CE AS

English - Operation and Safety Manual

31210088
May 11, 2010

https://truckmanualshub.com/

https://truckmanualshub.com/

FOREWORD

This manual is a very important tool! Keep it with the machine at all times.

The purpose of this manual is to provide owners, users, operators, lessors, and lessees with the precautions and operating procedures essential for the safe and proper machine operation for its intended purpose.

Due to continuous product improvements, JLG Industries, Inc. reserves the right to make specification changes without prior notification. Contact JLG Industries, Inc. for updated information.

https://truckmanualshub.com/

SAFETY ALERT SYMBOLS AND SAFETY SIGNAL WORDS

This is the Safety Alert Symbol. It is used to alert you to the potential personal injury hazards. Obey all safety messages that follow this symbol to avoid possible injury or death.

DANGER

INDICATES AN IMMINENTLY HAZARDOUS SITUATION. IF NOT AVOIDED, WILL RESULT IN SERIOUS INJURY OR DEATH. THIS DECAL WILL HAVE A RED BACKGROUND.

WARNING

INDICATES A POTENTIALLY HAZARDOUS SITUATION. IF NOT AVOIDED, COULD RESULT IN SERIOUS INJURY OR DEATH. THIS DECAL WILL HAVE AN ORANGE BACKGROUND.

CAUTION

INDICATES A POTENTIALLY HAZARDOUS SITUATION. IF NOT AVOIDED, MAY RESULT IN MINOR OR MODERATE INJURY. IT MAY ALSO ALERT AGAINST UNSAFE PRACTICES. THIS DECAL WILL HAVE A YELLOW BACKGROUND.

NOTICE

INDICATES INFORMATION OR A COMPANY POLICY THAT RELATES DIRECTLY OR INDIRECTLY TO THE SAFETY OF PERSONNEL OR PROTECTION OF PROPERTY.

https://truckmanualshub.com/

⚠ WARNING

THIS PRODUCT MUST COMPLY WITH ALL SAFETY RELATED BULLETINS. CONTACT JLG INDUSTRIES, INC. OR THE LOCAL AUTHORIZED JLG REPRESENTATIVE FOR INFORMATION REGARDING SAFETY-RELATED BULLETINS WHICH MAY HAVE BEEN ISSUED FOR THIS PRODUCT.

NOTICE

JLG INDUSTRIES, INC. SENDS SAFETY RELATED BULLETINS TO THE OWNER OF RECORD OF THIS MACHINE. CONTACT JLG INDUSTRIES, INC. TO ENSURE THAT THE CURRENT OWNER RECORDS ARE UPDATED AND ACCURATE.

NOTICE

JLG INDUSTRIES, INC. MUST BE NOTIFIED IMMEDIATELY IN ALL INSTANCES WHERE JLG PRODUCTS HAVE BEEN INVOLVED IN AN ACCIDENT INVOLVING BODILY INJURY OR DEATH OF PERSONNEL OR WHEN SUBSTANTIAL DAMAGE HAS OCCURRED TO PERSONAL PROPERTY OR THE JLG PRODUCT.

For:

- Accident Reporting
- Product Safety Publications
- Current Owner Updates
- Questions Regarding Product Safety
- Standards and Regulations Compliance Information
- Questions Regarding Special Product Applications
- Questions Regarding Product Modifications

Contact:

Product Safety and Reliability Department
JLG Industries, Inc.
13224 Fountainhead Plaza
Hagerstown, MD 21742
USA
or Your Local JLG Office
(See addresses on inside of manual cover)

In USA:

Toll Free: 877-JLG-SAFE (877-554-7233)

Outside USA:

Phone: 240-420-2661
Fax: 301-745-3713
E-mail: ProductSafety@JLG.com

https://truckmanualshub.com/

REVISION LOG

Original Issue	- July 10, 2008
Manual Revised	- June 22, 2009
Manual Revised	- May 11, 2010

https://truckmanualshub.com/

SECTION - 1 - SAFETY PRECAUTIONS

1.1 GENERAL 1-1
1.2 PRE-OPERATION 1-1
Operator Training and Knowledge 1-1
Workplace Inspection 1-2
Machine Inspection. 1-2
1.3 OPERATION 1-3
General 1-3
Trip and Fall Hazards 1-4
Electrocution Hazards. 1-5
Tipping Hazards 1-6
Crushing and Collision Hazards. 1-8
1.4 TOWING, LIFTING, AND HAULING 1-8
1.5 ADDITIONAL HAZARDS / SAFETY. 1-9

SECTION - 2 - USER RESPONSIBILITIES, MACHINE PREPARATION, AND INSPECTION

2.1 PERSONNEL TRAINING. 2-1
Operator Training 2-1
Training Supervision 2-1
Operator Responsibility 2-1
2.2 PREPARATION, INSPECTION, AND MAINTENANCE 2-2
Pre-Start Inspection 2-4
General 2-6
Function Check. 2-7
Tilt Sensor Check 2-8
Overload Sensor Check (If Equipped) 2-9
Slack/Broken Chain Sensors Check 2-10

SECTION - 3 - MACHINE CONTROLS AND INDICATORS

3.1 GENERAL 3-2
3.2 CONTROLS AND INDICATORS 3-2
Ground Control Station 3-2
Platform Manual Descent Valves. 3-6
Mast Manual Descent Valve 3-6
Jib Manual Descent Valve 3-7
Manual Swinging Operating Devices 3-7
Platform Control Station 3-8
3.3 DECAL INSTALLATION 3-14

SECTION - 4 - MACHINE OPERATION

4.1 DESCRIPTION 4-1
4.2 OPERATING SPECIFICATIONS AND LIMITATIONS. . 4-1
Capacities 4-1
Stability 4-1
Grade and Side Slope 4-3
4.3 OPERATION 4-5
4.4 STEERING AND TRAVELLING (DRIVING) 4-5
Steering 4-6
Travelling (driving) 4-6
Drive Orientation System (DOS) 4-7

https://truckmanualshub.com/

4.5 RAISING AND LOWERING THE PLATFORM 4-7
Raising and lowering the mast 4-8
Raising and lowering the jib 4-8
4.6 SWINGING. 4-9
4.7 EMERGENCY CONTROL 4-9
4.8 ALARMS 4-10
Overload Warning Light/Alarm (If equipped) 4-10
Tilt Warning Light/Alarm 4-10
Slack Chain Warning Light/Alarm 4-11
Soft Touch Warning Light/Alarm (Option) . . 4-12
4.9 SHUT DOWN AND PARK 4-12
4.10 BATTERY CHARGING. 4-13
Battery Charger Fault Code. 4-14
4.11 TIE-DOWN/LIFT LUGS 4-15
Tie Down 4-15
Lifting 4-16
4.12 TOWING 4-16
Electric Brake Release. 4-17

SECTION - 5 - EMERGENCY PROCEDURES

5.1 GENERAL 5-1
5.2 INCIDENT NOTIFICATION 5-1
5.3 EMERGENCY OPERATION. 5-1
Operator Unable to Control Machine 5-1
Platform or Jib Caught Overhead 5-2
5.4 PLATFORM MANUAL DESCENT. 5-2
5.5 EMERGENCY TOWING 5-2

SECTION - 6 - GENERAL SPECIFICATIONS & OPERATOR MAINTENANCE

6.1 INTRODUCTION 6-1
Other Publications Available 6-1
6.2 OPERATING SPECIFICATIONS. 6-2
6.3 OPERATOR MAINTENANCE 6-9
6.4 CHASSIS HOOD REMOVAL 6-10
6.5 BATTERY MAINTENANCE. 6-10
Battery Maintenance and Safety Practices . . 6-10
Filling System Draining 6-12
Battery Voltage and Electrolyte Specific Gravity 6-14
Filling System Maintenance 6-15
Use of a Battery in a Cold Environment. 6-15
Battery Not Working Continuously or Inactive Battery 6-15
Battery Troubleshooting. 6-16
6.6 OIL LEVEL/OIL FILTER 6-17
Hydraulic Oil Check 6-17
Hydraulic Filter Replacement. 6-18
6.7 TIRES & WHEELS 6-19
Tire Wear and Damage 6-19
Wheel and Tire Replacement. 6-19
Wheel Installation 6-19

https://truckmanualshub.com/

6.8 LUBRICATION. 6-20
Overload System Spring Washer (If Equipped) 6-21
Swing Bearing Race 6-22
Swing Bearing Teeth. 6-23
Mast Profiles Races. 6-24
Lifting Chains 6-25
6.9 OVERLOAD SYSTEM VERIFICATION (IF EQUIPPED) 6-26
6.10 TILT SENSOR VERIFICATION 6-27
6.11 SUPPLEMENTAL INFORMATION 6-28
6.12 DIAGNOSTIC TROUBLE CODES (DTC) 6-28
Introduction 6-28
6.13 DTC INDEX 6-28
6.14 DTC CHECK TABLES 6-29
0-0 Help Comments 6-29
2-1 Power-Up 6-30
2-2 Platform Controls 6-31
2-3 Ground Controls 6-33
2-5 Function Prevented. 6-35
3-1 Line Contactor Open Circuit 6-37
3-2 Line Contactor Short Circuit 6-37
3-3 Ground Output Driver 6-38
4-2 Thermal Limit 6-41
4-4 Battery Supply. 6-43
4-6 Transmission and Drive System 6-45
6-6 Communication. 6-46
6-7 Accessory 6-46
7-7 Electric Motor. 6-47
8-1 Tilt Sensor 6-48
8-2 Platform Load Sense 6-49
8-6 Steering/Axle 6-49
9-9 Hardware 6-50

SECTION - 7 - INSPECTION AND REPAIR LOG

https://truckmanualshub.com/

LIST OF TABLES

TABLE NO.	TITLE	PAGE NO.
1-1	Minimum Approach Distance (M.A.D.)	1-5
1-2	Beaufort Scale (For Reference Only)	1-10
2-1	Inspection and Maintenance Table	2-3
3-1	T10E & T26E - Decal Installation	3-17
4-1	Battery Charger Fault Code	4-14
6-1	Operating Specifications And Dimensions	6-2
6-2	Dimensions	6-5
6-3	Tires Specifications	6-5
6-4	Drive Motors - Hydraulic Power Unit	6-6
6-5	Battery Specifications	6-7
6-6	Lubrication Specifications	6-7
6-7	Hydraulic Oil Specifications - Standard	6-7
6-8	Hydraulic Oil Specifications - Optional	6-8
6-9	Wheel Torque Chart	6-20
6-10	Recommended Viscosity Grade	6-25
7-1	Inspection and Repair Log	7-1

https://truckmanualshub.com/

LIST OF FIGURES

FIGURE NO.	TITLE	PAGE NO.
2-1.	Daily Walk-Around Inspection	2-5
2-2.	Tilt Sensor	2-8
2-3.	Overload Sensor	2-9
2-4.	Slack/Broken Chain Sensors	2-10
3-1.	Basic Nomenclature - Location of Machine Controls	3-1
3-2.	Ground Control Station	3-3
3-3.	Mast Manual Descent Valve	3-6
3-4.	Jib Manual Descent Valve	3-7
3-5.	Manual Swinging Operating Devices	3-8
3-6.	Platform Control Indicator Panel	3-10
3-7.	Decal Installation - Sheet 1	3-14
3-8.	Decal Installation - Sheet 2	3-15
3-9.	Decal Installation - Sheet 3	3-16
4-1.	Position of Least BACKWARD stability	4-2
4-2.	Position of Least FORWARD stability	4-2
4-3.	Grade and Side Slope	4-4
4-4.	Steer/Drive Controls	4-6
4-5.	Drive Orientation System (DOS)	4-7
4-6.	Lift Controls	4-7
4-7.	Swing Control	4-9
4-8.	Emergency Controls	4-10
4-9.	Machine Tie-Down	4-15
4-10.	Lifting the Machine	4-16
4-11.	Lifting the Machine Using a Fork Truck	4-16
4-12.	Electric Brake Release	4-17
6-1.	Range Diagram	6-4
6-2.	Operator Maintenance & Lubrication Diagram	6-9
6-3.	Chassis Hood Removal	6-10
6-4.	Level Indicators	6-11
6-5.	Adding Water to Batteries	6-11
6-6.	Filling System Draining	6-12
6-7.	Draining the Water	6-13
6-8.	Measuring Electrolyte Specific Gravity	6-14
6-9.	Hydraulic Oil Check	6-17
6-10.	Hydraulic Filter Replacement	6-18
6-11.	Wheel Lug Nut Tightening Sequence	6-19
6-12.	Overload System Spring Washer Lubrication	6-21
6-13.	Swing Bearing Race Lubrication	6-22
6-14.	Swing Bearing Teeth lubrication	6-23
6-15.	Mast Profiles Races Lubrication	6-24
6-16.	Overload System Verification	6-26
6-17.	Jacking Points	6-27

https://truckmanualshub.com/

NOTES:

https://truckmanualshub.com/

SECTION 1. SAFETY PRECAUTIONS

1.1 GENERAL

This section outlines the necessary precautions for proper and safe machine operation and maintenance. For proper machine use, it is mandatory that a daily routine is established based on the content of this manual. A maintenance program, using the information provided in this manual and the Service and Maintenance Manual, must also be established by a qualified person and followed to ensure the machine is safe to operate.

The owner/user/operator/lessor/lessee of the machine should not operate the machine until this manual has been read, training is accomplished, and operation of the machine has been completed under the supervision of an experienced and qualified operator.

If there are any questions with regard to safety, training, inspection, maintenance, application, and operation, please contact JLG Industries, Inc. (“JLG”).

⚠ WARNING

FAILURE TO COMPLY WITH THE SAFETY PRECAUTIONS LISTED IN THIS MANUAL COULD RESULT IN MACHINE DAMAGE, PROPERTY DAMAGE, PERSONAL INJURY OR DEATH.

1.2 PRE-OPERATION

Operator Training and Knowledge

- Read and understand this manual before operating the machine.

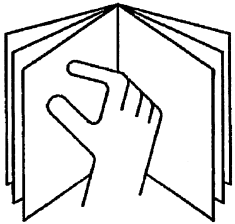

- Do not operate this machine until complete training is performed by authorized persons.
- Only authorized and qualified personnel can operate the machine.
- Read, understand, and obey all DANGERS, WARNINGS, CAUTIONS, and operating instructions on the machine and in this manual.
- Use the machine in a manner which is within the scope of its intended application set by JLG.

https://truckmanualshub.com/

- All operating personnel must be familiar with the emergency controls and emergency operation of the machine as specified in this manual.
- Read, understand, and obey all applicable employer, local, and governmental regulations as they pertain to operation of the machine.

Workplace Inspection

- The operator is to take safety measures to avoid all hazards in the work area prior to machine operation.
- Do not operate or raise the platform while on trucks, trailers, railway cars, floating vessels, scaffolds or other equipment unless approved in writing by JLG.
- Do not operate the machine in hazardous environments unless approved for that purpose by JLG.
- Be sure that the ground conditions are able to support the maximum load shown on the decals located on the machine.
- This machine can be operated in temperatures of 0° F to 104° F (-20° C to 40° C). Consult JLG for operation outside this range.
- This machine must be used in a sufficient ambient light.

Machine Inspection

- Before machine operation, perform inspections and functional checks. Refer to Section 2 of this manual for detailed instructions.
- Do not operate this machine until it has been serviced and maintained according to requirements specified in the Service and Maintenance Manual.
- Be sure the trigger control, platform enable button and all other safety devices are operating properly. Modification of these devices is a safety violation.

⚠ WARNING

MODIFICATION OR ALTERATION OF AN AERIAL WORK PLATFORM SHALL BE MADE ONLY WITH WRITTEN PERMISSION FROM THE MANUFACTURER.

- Do not operate any machine on which safety or instruction placards or decals are missing or illegible.
- Avoid any buildup of debris on the platform floor. Keep mud, oil, grease, and other slippery substances from footwear and platform floor.

https://truckmanualshub.com/

1.3 OPERATION

General

- Do not use the machine for any purpose other than positioning personnel, their tools and equipment.
- Never operate a machine that is not working properly. If a malfunction occurs, shut down the machine.
- Never slam a control switch or lever through neutral to an opposite direction. Always return switch to neutral and stop before moving the switch to the next function. Operate controls with slow and even pressure.
- Do not allow personnel to tamper with or operate the machine from the ground with personnel in the platform, except in an emergency.
- Do not carry materials directly on platform railing. Contact JLG for approved material handling accessories.
- When two persons are in the platform, the operator shall be responsible for all machine operations.
- Always ensure that power tools are properly stowed and never left hanging by their cord from the platform work area.
- Supplies or tools which extend outside the platform are prohibited unless approved by JLG.
- When driving, always position extending structure over rear axle in line with the direction of travel. Remember, if extending structure is over the front axle, steer and drive functions will be reversed.
- Do not assist a stuck or disabled machine by pushing, pulling, or by using extending structure functions. Only pull the unit from the tie-down lugs on the chassis.
- Do not place extending structure or platform against any structure to steady the platform or to support the structure.
- Stow extending structure and shut off all power before leaving machine.

https://truckmanualshub.com/

Trip and Fall Hazards

During operation, occupants in the platform must wear a full body harness with a lanyard attached to an authorized lanyard anchorage point. Attach only one (1) lanyard per lanyard anchorage point.

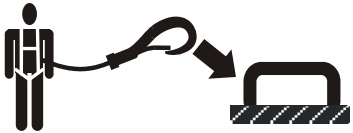

- Before operating the machine, make sure all gates are closed and fastened in their proper position.

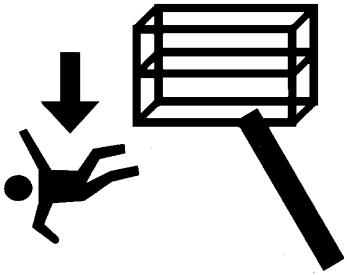

- Keep both feet firmly positioned on the platform floor at all times. Never use ladders, boxes, steps, planks, or similar items on platform to provide additional reach.
- Never use the extending structure to enter or leave the platform.
- Use extreme caution when entering or leaving platform. Be sure that the platform is fully lowered. Face the machine, maintain “three point contact” with the machine, using two hands and one foot or two feet and one hand during entry and exit.

https://truckmanualshub.com/

Electrocution Hazards

- This machine is not insulated and does not provide protection from contact or proximity to electrical current.

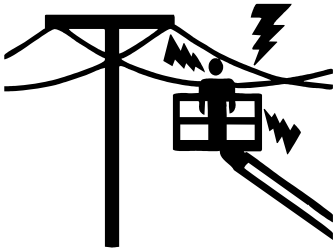

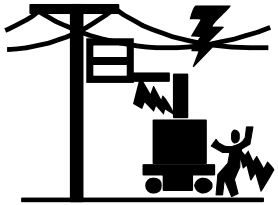

- Maintain distance from electrical lines, apparatus, or any energized (exposed or insulated) parts according to the Minimum Approach Distance (MAD) as shown in Table 1-1.
- Allow for machine movement and electrical line swaying.

Table 1-1. Minimum Approach Distance (M.A.D.)

Voltage Range (Phase to Phase)	MINIMUM APPROACH DISTANCE in Meters (Feet)
0 to 50 kV	3 (10)
Over 50 kV to 200 kV	5 (15)
Over 200kV to 350 kV	6 (20)
Over 350 kV to 500 KV	8 (25)
Over 500 kV to 750 kV	11 (35)
Over 750 kV to 1000 kV	14 (45)

NOTE: This requirement shall apply except where employer, local or governmental regulations are more stringent.

- Maintain a clearance of at least 3 m (10 ft.) between any part of the machine and its occupants, their tools and their equipment from any electrical line or apparatus carrying up to 50 000 volts. A 0,3 m (1 ft.) additional clearance is required for every additional 30 000 volts or less.
- The minimum approach distance may be reduced if insulating barriers are installed to prevent contact and the barriers are rated for the voltage of the line being guarded. These barriers shall not be part of (or attached to) the machine. The minimum approach distance shall be reduced to a distance within the designed working dimen-

https://truckmanualshub.com/

sions of the insulating barrier. This determination shall be made by a qualified person in accordance with employer, local or governmental requirements for work practices near energized equipment.

DANGER

DO NOT MANEUVER MACHINE OR PERSONNEL INSIDE PROHIBITED ZONE (MAD). ASSUME ALL ELECTRICAL PARTS AND WIRING ARE ENERGIZED UNLESS KNOWN OTHERWISE.

Tipping Hazards

- The user should be familiar with the surface before driving. Do not exceed the allowable sideslope and grade while driving.

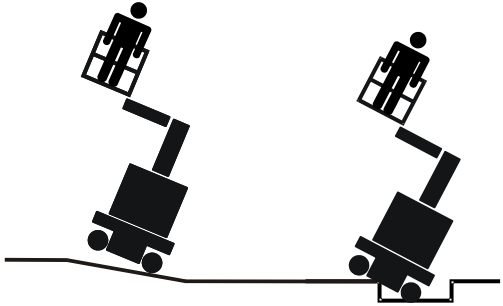

- Never exceed the maximum platform capacity. Distribute loads evenly on platform floor.
- Before driving on floors, bridges, trucks, and other surfaces, check allowable capacity of the surfaces.
- Do not elevate platform or drive with platform elevated while on a sloping, uneven, or soft surface.

https://truckmanualshub.com/

- Do not raise the platform or drive from an elevated position unless the machine is on firm, level and smooth surfaces.
- When travelling on grades (Refer to Section 4), the platform MUST be fully lowered. It is recommended to drive up the grade in FORWARD gear and to REVERSE down the slope.
- Keep the chassis of the machine at least 0,6 m (2 ft.) from holes, bumps, drop-offs, obstructions, debris, concealed holes, and other potential hazards on the floor/surface.
- Do not push or pull any object with the extending structure.
- Never attempt to use the machine as a crane. Do not tie-off machine to any adjacent structure.
- Do not operate the machine when wind conditions exceed 12.5 m/s (28 mph). Refer to Table 1-2, Beaufort Scale (For Reference Only).
- Do not increase the surface area of the platform or the load. Increase of the area exposed to the wind will decrease stability.
- Do not increase the platform size with unauthorized deck extensions or attachments.
- If extending structure assembly or platform is in a position that one or more wheels are off the ground, all persons must be removed before attempting to stabilize the machine. Use cranes, forklift trucks, or other appropriate equipment to stabilize machine.

https://truckmanualshub.com/

Crushing and Collision Hazards

- Approved head gear must be worn by all operating and ground personnel.
- Check work area for clearances overhead, on sides, and bottom of platform when lifting, swinging or lowering platform, and driving.

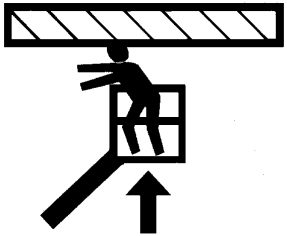

- During operation, keep all body parts inside platform railing.
- Always post a lookout when driving in areas where vision is obstructed.
- Keep non-operating personnel at least 2m (6 ft.) away from machine during all driving and swinging operations.
- Limit travel speed according to conditions of ground surface, congestion, visibility, slope, location of personnel, and other factors which may cause hazard of collision or injury to personnel.
- Be aware of stopping distances in all drive speeds. When driving in high speed, slow down the machine using the controller before stopping.
- Do not use high speed drive in restricted or close quarters or when driving in reverse.
- Exercise extreme caution at all times to prevent obstacles from striking or interfering with operating controls and persons in the platform.
- Be sure that operators of other overhead and floor level machines are aware of the aerial work platform's presence. Disconnect power to overhead cranes.
- Warn personnel not to work, stand, or walk under a raised extending structure or platform. Position barricades on floor if necessary.

1.4 TOWING, LIFTING, AND HAULING

- Never allow personnel in platform while towing, lifting, or hauling.
- This machine should not be towed, except in the event of emergency, malfunction, power failure, or loading/unloading. Refer to Emergency Towing Procedures Section of this Manual for emergency towing procedures.

https://truckmanualshub.com/

- Ensure extending structure is in the stowed position prior to towing, lifting or hauling. The platform and the tool tray must be completely empty of tools.
- When lifting machine, lift only at designated areas of the machine. Lift the unit with equipment of adequate capacity.
- Refer to the Machine Operation Section of this Manual for lifting information.

1.5 ADDITIONAL HAZARDS / SAFETY

- Do not use machine as a ground for welding.
- When performing welding or metal cutting operations, precautions must be taken to protect the chassis from direct exposure to weld and metal cutting spatter.
- Battery fluid is highly corrosive. Avoid contact with skin and clothing at all times.
- Charge batteries only in a well ventilated area.

https://truckmanualshub.com/

NOTICE

DO NOT OPERATE THE MACHINE WHEN WIND CONDITIONS EXCEED 28 MPH (12,5 M/S OR 45 KM/H).

Table 1-2. Beaufort Scale (For Reference Only)

Beaufort Number	Wind Speed		Description	Land Conditions
	mph	m/s		
0	0	0-0.2	Calm	Calm. Smoke rises vertically.
1	1-3	0.3-1.5	Light air	Wind motion visible in smoke.
2	4-7	1.6-3.3	Light breeze	Wind felt on exposed skin. Leaves rustle.
3	8-12	3.4-5.4	Gentle breeze	Leaves and smaller twigs in constant motion.
4	13-18	5.5-7.9	Moderate breeze	Dust and loose paper raised. Small branches begin to move.
5	19-24	8.0-10.7	Fresh breeze	Smaller trees sway.
6	25-31	10.8-13.8	Strong breeze	Large branches in motion. Whistling heard in overhead wires. Umbrella use becomes difficult.
7	32-38	13.9-17.1	Near Gale/Moderate Gale	Whole trees in motion. Effort needed to walk against the wind.
8	39-46	17.2-20.7	Fresh Gale	Twigs broken from trees. Cars veer on road.
9	47-54	20.8-24.4	Strong gale	Light structure damage.

https://truckmanualshub.com/

SECTION 2. USER RESPONSIBILITIES, MACHINE PREPARATION, AND INSPECTION

2.1 PERSONNEL TRAINING

The aerial platform is a personnel handling device; so it is necessary that it be operated and maintained only by trained personnel.

Persons under the influence of drugs or alcohol or who are subject to seizures, dizziness or loss of physical control must not operate this machine.

Operator Training

Operator training must cover:

1. Use and limitations of the controls in the platform and at the ground, emergency controls and safety systems.
2. Control labels, instructions, and warnings on the machine.
3. Rules of the employer and government regulations.
4. Use of approved fall protection device.
5. Enough knowledge of the mechanical operation of the machine to recognize a malfunction or potential malfunction.
6. The safest means to operate the machine where overhead obstructions, other moving equipment, and obstacles, depressions, holes or drop-offs exist.
7. Means to avoid the hazards of unprotected electrical conductors.
8. Specific job requirements or machine application.

Training Supervision

Training must be done under the supervision of a qualified person in an open area free of obstructions until the trainee has developed the ability to safely control and operate the machine.

Operator Responsibility

The operator must be instructed that he/she has the responsibility and authority to shut down the machine in case of a malfunction or other unsafe condition of either the machine or the job site.

https://truckmanualshub.com/

2.2 PREPARATION, INSPECTION, AND MAINTENANCE

The following table covers the periodic machine inspections and maintenance recommended by JLG Industries, Inc. Consult local regulations for further requirements for aerial work platforms. The frequency of inspections and maintenance must be increased as necessary when the machine is used in a harsh or hostile environment, if the machine is used with increased frequency, or if the machine is used in a severe manner.

NOTICE

JLG INDUSTRIES, INC. RECOGNIZES A FACTORY-TRAINED SERVICE TECHNICIAN AS A PERSON WHO HAS SUCCESSFULLY COMPLETED THE JLG SERVICE TRAINING SCHOOL FOR THE SPECIFIC JLG PRODUCT MODEL.

https://truckmanualshub.com/

Table 2-1.Inspection and Maintenance Table

Type	Frequency	Primary Responsibility	Service Qualification	Reference
Pre-Start Inspection	Before using each day; or whenever there's an Operator change.	User or Operator	User or Operator	Operator and Safety Manual
Pre-Delivery Inspection (See Note)	Before each sale, lease, or rental delivery.	Owner, Dealer or User	Qualified JLG Mechanic	Service and Maintenance Manual and applicable JLG inspection form
Frequent Inspection (See Note)	In service for 3 months or 150 hours, whichever comes first; or Out of service for a period of more than 3 months; or Purchased used.	Owner, Dealer or User	Qualified JLG Mechanic	Service and Maintenance Manual and applicable JLG inspection form
Annual Machine Inspection (See Note)	Annually, no later than 13 months from the date of prior inspection.	Owner, Dealer or User	Factory-Trained Service Technician (Recommended)	Service and Maintenance Manual and applicable JLG inspection form
Preventative Maintenance	At intervals as specified in the Service and Maintenance Manual.	Owner, Dealer or User	Qualified JLG Mechanic	Service and Maintenance Manual
NOTE: *Inspection forms are available from JLG. Use the Service and Maintenance Manual to perform inspections.*				

https://truckmanualshub.com/

Pre-Start Inspection

The Pre-Start Inspection must include each of the following:

1. **Cleanliness –** Check all surfaces for leakage (oil or battery fluid) or foreign objects. Report any leakage to the proper maintenance personnel.
2. **Structure –** Inspect the machine structure for dents, damage, weld or parent metal cracks or other discrepancies.

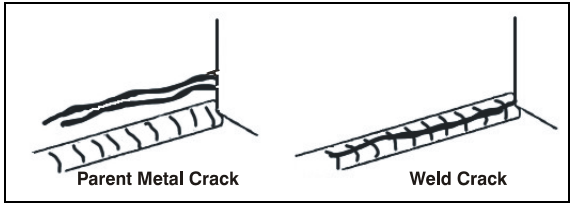

3. **Decals and Placards** – Check all for cleanliness and legibility. Make sure none of the decals and placards are missing. Make sure all illegible and missing decals and placards are cleaned or replaced.
4. **Operation and Safety Manuals** – Make sure a copy of the Operator and Safety manual, AEM Safety manual (ANSI markets only), and ANSI Manual of Responsibility (ANSI markets only) is enclosed in the weather resistant storage container.
5. **"Walk-Around" Inspection** – Refer to Figure 2-1.
6. **Battery –** Charge as required.
7. **Hydraulic Oil** – Check the hydraulic oil level in the reservoir. Ensure hydraulic oil is added as required.
8. **Accessories/Attachments** - Reference the Operator and Safety Manual of each attachment or accessory installed upon the machine for specific inspection, operation, and maintenance instructions.
9. **Function Check** – Once the "Walk-Around" Inspection is complete, perform a functional check of all systems in an area free of overhead and ground level obstructions. Refer to Section 4 for more specific operating instructions.

⚠ WARNING

IF THE MACHINE DOES NOT OPERATE PROPERLY, TURN OFF THE MACHINE IMMEDIATELY! REPORT THE PROBLEM TO THE PROPER MAINTENANCE PERSONNEL. DO NOT OPERATE THE MACHINE UNTIL IT IS DECLARED SAFE FOR OPERATION.

https://truckmanualshub.com/

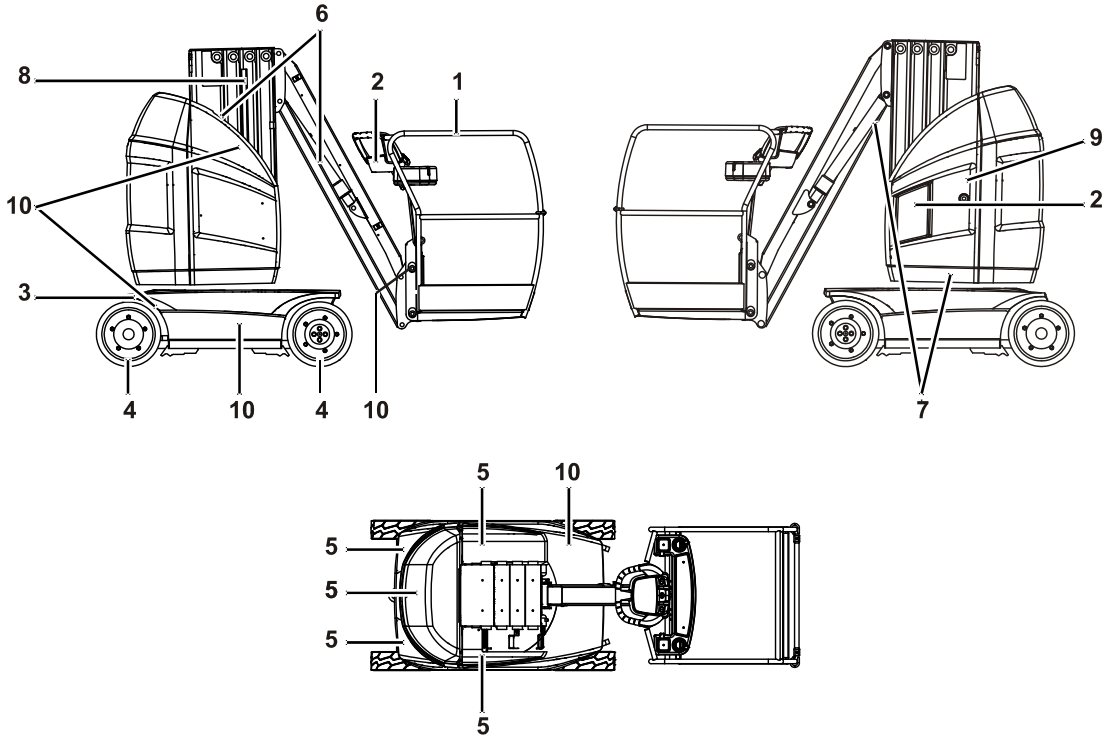

Figure 2-1. Daily Walk-Around Inspection

https://truckmanualshub.com/

General

Begin the "Walk-Around Inspection" at Item 1, as noted on the diagram. Continue checking each item in sequence for the conditions listed in the following checklist.

⚠ WARNING

TO AVOID POSSIBLE INJURY, BE SURE MACHINE POWER IS OFF. DO NOT OPERATE MACHINE UNTIL ALL MALFUNCTIONS HAVE BEEN CORRECTED.

***INSPECTION NOTE**: On all components, make sure there are no loose or missing parts, that they are securely fastened, and no visible damage, leaks or excessive wear exists in addition to any other criteria mentioned.*

1. **Platform Assembly and Gate** - Gate opens and closes properly, manual in storage container. See inspection note.
2. **Platform & Ground Control Consoles** - Placards secure and legible, control levers and switches return to neutral and emergency stop switches function properly.
3. **Steering Assembly** - See inspection note.
4. **Wheel/Tire Assemblies** - Properly secured, no missing lug nuts. Inspect for worn tread, cuts, tears or other discrepancies. Inspect wheels for damage and corrosion. See inspection note.
5. **Hood Assemblies** - See Inspection Note.
6. **Hydraulic Cylinders**- No visible damage, pivot pins and hydraulic hoses undamaged, no leakage (hose connections - valve block).
7. **Manual Descent -** See Inspection Note.
8. **Lifting Chains, Chain Yokes and Clevis Pins** - Must be installed and in good condition. Chains must be correctly tensioned and lubricated.
9. **Hydraulic Pump/Motor Control Valves Installation/Oil Level in Reservoir -** Swing needle valve fully closed. See Inspection Note.
10. **Limit Switches** - Mast limit switch(es), chain slack limit switches and overload sensor (if equipped) are properly installed and fastened. See inspection note.

https://truckmanualshub.com/

Function Check

Refer to Sections 3 & 4 for description and operation of machine functions.

Control Stations

1. From the Ground Control Console with no load in the platform:
   - **a.** Operate all functions to ensure proper operation.
   - **b.** While operating a mast lift-up movement, push in all other function buttons. Mast lift-up movement should continue and no other movement should occur.
   - **c.** Ensure that all machine functions are disabled when the emergency stop button is depressed.
   - **d.** Raise the mast about one meter (3 ft.), check if the manual descent valve lowers the mast properly (refer to Figure 3-3. for mast manual descent valve location).
   - **e.** Raise the jib about half a meter (2 ft.), check if the manual descent valve lowers the jib properly (Refer to Figure 3-4).
2. From the Platform Control Console:
   - **a.** Ensure that the platform control console is firmly secured.
   - **b.** Check that all guards protecting the switches are securely in place.
   - **c.** Operate all functions including horn button to ensure proper operation.
   - **d.** Ensure that all machine functions are disabled when the emergency stop button is depressed.
   - **e.** Ensure all mast and jib functions stop when the function enable button is released.
   - **f.** Ensure all drive functions stop when joystick trigger is released.
   - **g.** With the mast elevated half a meter (2 ft.), on a smooth, firm and level surface, drive the machine to check if the high drive cutout speed-limit is engaged. Drive speed will be reduced from a top speed of 5.5 km/h to 0.75 km/h (3.40 mph to 0.45 mph) (Approx.).
   - **h.** Toucan 10E only: With the mast elevated 4.50 m (14.8 ft.), on a smooth, firm and level surface, drive the machine to check if the extra drive cutout speed-limit is engaged. Drive speed will be reduced to 0.40 km/h (0.25 mph) (Approx.).

https://truckmanualshub.com/

i. Swing the superstructure either to the left or to the right: when the jib is no longer over the rear axle, the drive orientation system (DOS) indicator lights up (Yellow).
Actuate a drive function: the drive function is disabled. The DOS indicator blinks, and the DOS override button must be used for the drive function to operate.

j. With the machine in transport (stowed) position, drive the machine on a grade, not to exceed the rated gradeability and stop to ensure the brakes hold.

Tilt Sensor Check

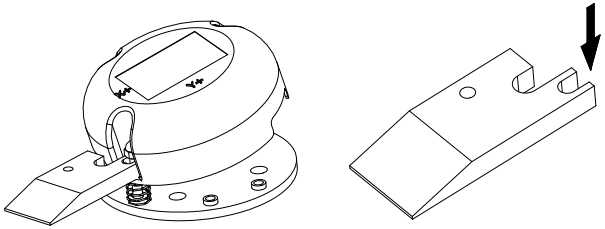

Figure 2-2. Tilt Sensor

Check the tilt indicator light/alarm to ensure proper operation. Wedge a block (P/N: ST2741 - located in the manual storage container) to activate the tilt sensor and keep it tilted. The tilt sensor is located on the chassis behind the right rear wheel. Refer to Figure 2-2.

1. From the platform console :

- Raise the mast by approximately 1m (3 ft.).

a. Confirm an audible alarm sounds.

b. Verify the tilt indicator (red) blinks.

c. Check that the following functions are affected :
- Drive function disabled.
- Mast/Jib lift-up and swinging movements can be performed only in creep mode.

https://truckmanualshub.com/

Overload Sensor Check (If Equipped)

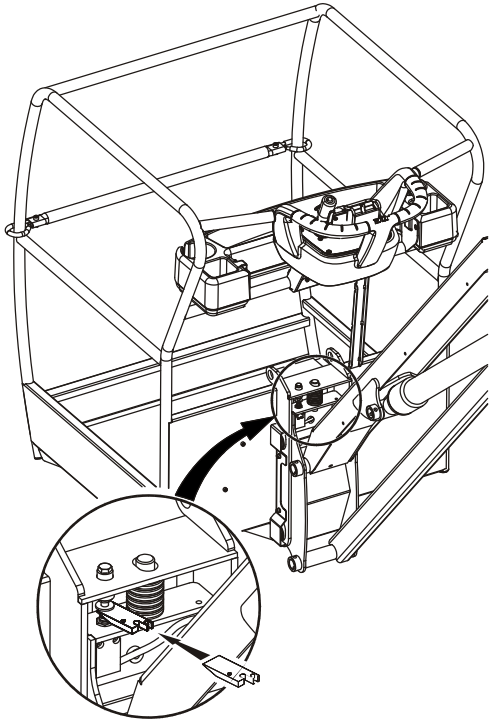

Figure 2-3. Overload Sensor

Check the overload indicator light/alarm to ensure proper operation. Wedge a block (P/N: ST2741 - located in the manual storage container) to activate the overload sensor and keep it activated. Refer to Figure 2-3.

1. From the Platform Control Console:
   - **a.** Confirm an audible alarm sounds.
   - **b.** Verify the overload indicator (Red) blinks.
   - **c.** Check that all functions are disabled.
2. From the Ground Control Panel:
   - **a.** Confirm an audible alarm sounds.
   - **b.** Verify the overload indicator (Red) blinks.

https://truckmanualshub.com/

Slack/Broken Chain Sensors Check

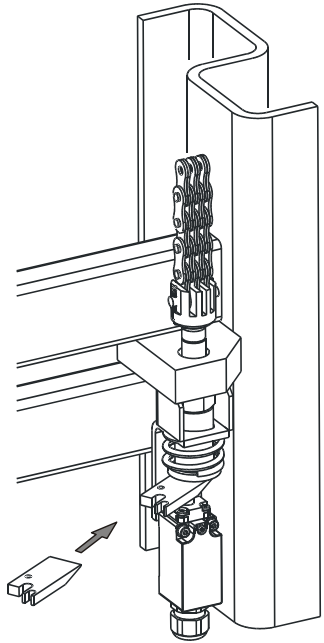

Figure 2-4. Slack/Broken Chain Sensors

Check the slack/broken chain indicator light/alarm and interlock to ensure proper operation. Refer to Figure 2-4. for chain sensors location (Qty:3). Wedge a block (P/N: ST2741 - located in the manual storage container) to activate a slack chain sensor and keep it activated.

1. From the Platform Control Console:
   - **a.** Confirm an audible alarm sounds.
   - **b.** Verify the slack chain indicator (Red) lights up.
   - **c.** Check when the slack chain indicator warning is activated, the following functions are disabled:
     - Mast/Jib lower
     - Swing
     - Drive
2. From the Ground Control Panel:
   - **a.** Confirm an audible alarm sounds.
   - **b.** Check when the slack chain indicator warning is activated, the following functions are disabled:
     - Mast/Jib lower
     - Swing
   - **c.** Repeat check for each chain sensor.

https://truckmanualshub.com/

SECTION 3. MACHINE CONTROLS AND INDICATORS

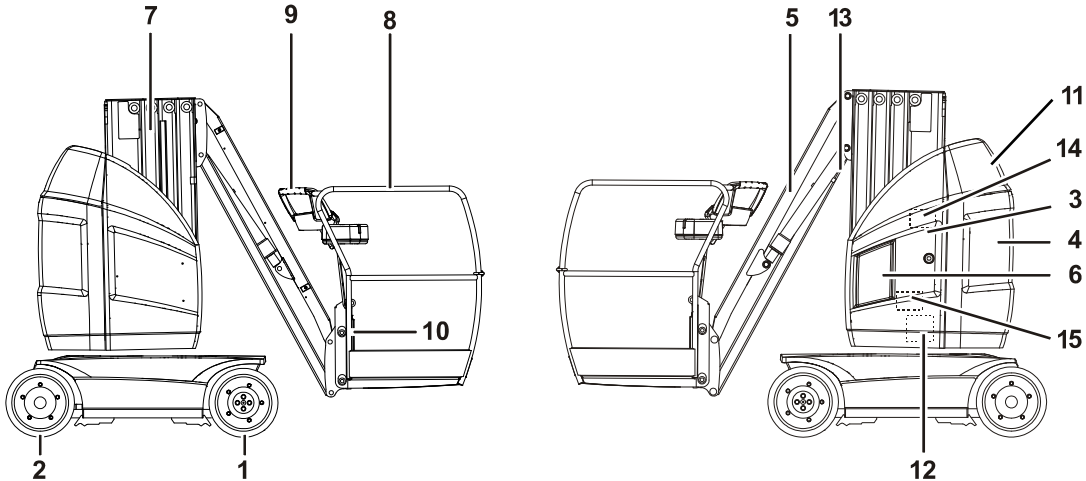

1- Driving wheels
2- Steering Wheels
3- Access door to Pump/Motor Control valves
4- Counterweight
5- Jib
6- Ground Control Panel
7- Telescopic mast
8- Platform
9- Platform Control console
10- Manual Storage Container
11- Access door to battery/charger
12- Mast manual descent valve
13- Jib manual descent valve
14- Swinging motor release valve
15- Manual swinging operating device

Figure 3-1. Basic Nomenclature - Location of Machine Controls

https://truckmanualshub.com/

3.1 GENERAL

This section provides the necessary information needed to understand controls and their functions.

NOTICE

THE MANUFACTURER HAS NO DIRECT CONTROL OVER MACHINE APPLICATION AND OPERATION. THE USER AND OPERATOR ARE RESPONSIBLE FOR CONFORMING WITH GOOD SAFETY PRACTICES.

3.2 CONTROLS AND INDICATORS

WARNING

TO AVOID SERIOUS INJURY, DO NOT OPERATE MACHINE IF ANY CONTROL LEVERS OR TOGGLE SWITCHES CONTROLLING PLATFORM MOVEMENT DO NOT RETURN TO THE OFF POSITION WHEN RELEASED.

Ground Control Station

WARNING

DO NOT OPERATE FROM GROUND CONTROL STATION WITH PERSONNEL IN THE PLATFORM EXCEPT IN AN EMERGENCY.

NOTICE

WHEN THE MACHINE IS SHUT DOWN FOR OVERNIGHT PARKING OR BATTERY CHARGING, THE PLATFORM/OFF/GROUND SELECTOR AND THE EMERGENCY STOP SWITCHES MUST BE POSITIONED TO OFF TO PREVENT DRAINING THE BATTERIES.

https://truckmanualshub.com/

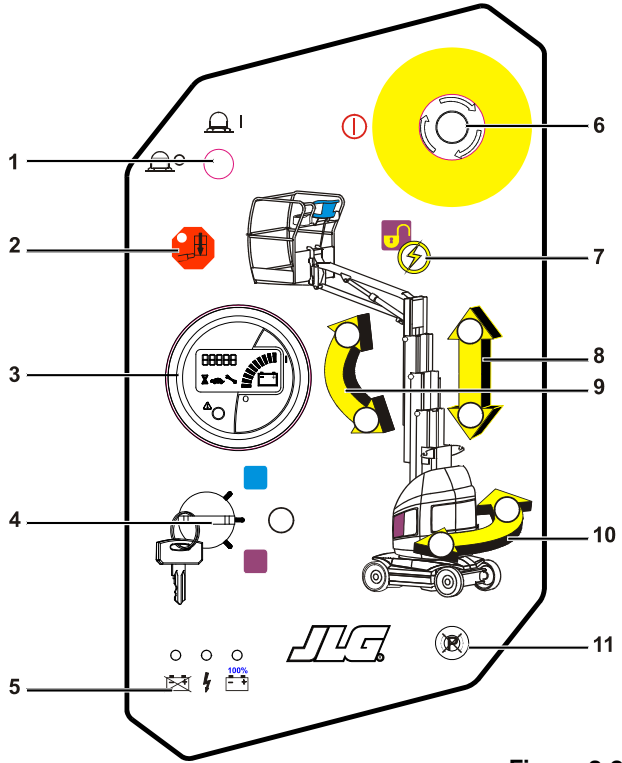

1- 5 Amp Circuit Breaker
2- Overload Warning Light (If equipped)
3- Multi-Display Indicator (MDI)
4- Platform/Off/Ground Selector Switch
5- Battery Charger Status Indicators (depending on equipment)
6- Emergency Stop Switch
7- Function Enable Button
8- Mast Lift/Lower Buttons
9- Jib Lift/Lower Buttons
10- Superstructure Swing Buttons
11- Brake Release Button

Figure 3-2. Ground Control Station

https://truckmanualshub.com/

1. **5 Amp. Circuit Breaker** - This circuit breaker protects the control circuit in case of a short circuit or other malfunction.
2. **Overload Warning Light (If equipped)** - This lamp (red), when blinking, indicates that the maximum rated load in the platform is exceeded. The platform must be safely unloaded until the alarm stops.
3. **Multi-Display Indicator (MDI)**

Hourmeter - The hourmeter symbol is lit when the number of operated hours is displayed.

Speed reduction - Indicates that the maximum drive speed is reduced when the platform is out of transport position.

The wrench symbol is lit when a DTC (Diagnosis Troubleshooting Code) is displayed.

Five Digits Display
In normal operating condition, displays the total amount of machine operation time accumulated.
In abnormal operating condition, displays a DTC (Diagnosis Troubleshooting Code).

Alarm LED
Illuminates in abnormal operating condition (when a DTC, other than 00xx DTC's exists).

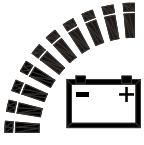

Battery Discharge Indicator (BDI).
This bar-graph is designed to let the operator know the condition of the battery before starting to use the machine.
The last bar flashes when the level of charge is less than 10%. The bar-graph is not displayed when the batteries are completely discharged.

https://truckmanualshub.com/

4. **Platform/Off/Ground Selector Switch** - A three-position, key-operated power select switch supplies power to the platform or ground controls and powers machine down in the off position.

5. **Battery Charger Status Indicators** - This panel is designed to give the operator an accurate reading on the status of the battery charger. DEPENDING ON THE CHARGER INSTALLED ON THE MACHINE THOSE LIGHTS MAY NOT BE USED. REFER TO SECTION 4-10 OF THIS MANUAL FOR FURTHER INFORMATION.

GREEN- Charge complete

YELLOW- Charging in process

RED- Charging abnormal

6. **Emergency Stop Switch** - Depress the switch to stop all functions of the machine. The switch must be turned clockwise to restore the machine functions.

7. **Function Enable Button** - A membrane switch that must be pushed in and held to enable the controls of the ground control station.

8. **Mast Lift/Lower Buttons** - Membrane switches that provide raising or lowering of the mast (with the Function Enable Switch (7) pushed in).

9. **Jib Lift/Lower Buttons** - Membrane switches that provide raising or lowering of the jib (with the Function Enable Switch (7) pushed in).

10. **Superstructure Swing Buttons** - Membrane switches that provide swinging of the superstructure to the right or to the left (with the Function Enable Switch (7) pushed in).

11. **Brake Release Switch**

⚠ WARNING

DO NOT MANUALLY DISENGAGE THE BRAKES UNLESS THE MACHINE:
- IS IN TRANSPORT (STOWED) POSITION.
- IS ON A SMOOTH, FIRM AND LEVEL SURFACE.
- WHEELS CHOCKED OR MACHINE POSITIVELY CONNECTED TO TOW VEHICLE.

The machine must be powered ON to Ground Control Mode at the Platform/Off/Ground selector switch to operate the brake release switch. Refer to section 4-12 of this manual for further information.

https://truckmanualshub.com/

Platform Manual Descent Valves

The platform manual descent valves are used in the event of total power failure to lower the platform using gravity.

1. Push on the remote push bar (1) to lower the mast. Release the bar when the platform is lowered to the desired level.
2. To lower the jib once the mast is fully retracted, push in the manual descent valve, override button (2). Release the button when the platform is lowered to the desired level.

⚠ WARNING

KEEP BODY, HANDS AND ARMS OUT OF THE PATH OF THE MAST, THE JIB AND THE PLATFORM WHILE LOWERING.

Mast Manual Descent Valve

- The mast manual descent valve remote **push bar (1)** (red) is located behind the access door to the pump/motor assembly.

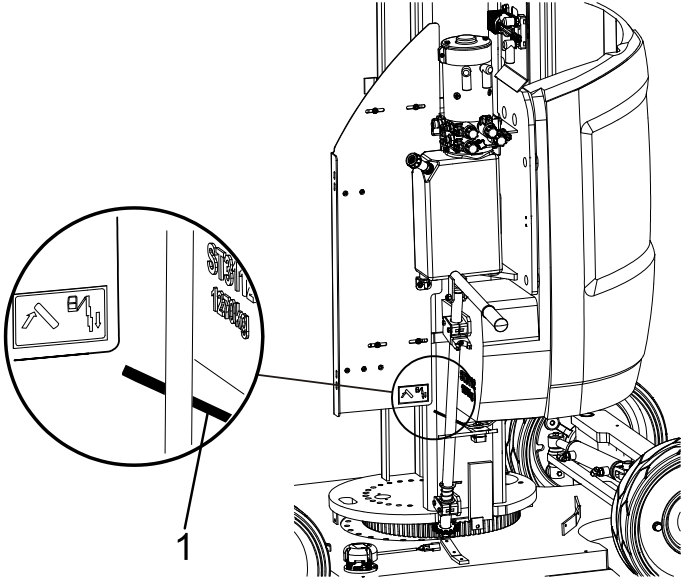

Figure 3-3. Mast Manual Descent Valve

https://truckmanualshub.com/

Jib Manual Descent Valve

- The jib manual **descent button (2)** is located on the jib cylinder valve.

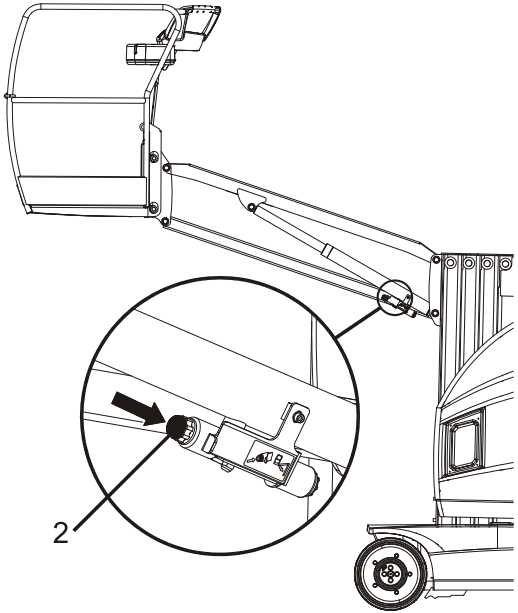

Figure 3-4. Jib Manual Descent Valve

Manual Swinging Operating Devices

The manual swinging operating devices are used in the event of total power failure to manually swing the superstructure. Those devices are composed of:

- a rotary valve (1) located on the pump/motor control valves assembly to release the swinging motor (Refer to Figure 3-5.).

- a pinion (2), located below the pump/motor control valves compartment, that can be operated using, depending on equipment, a square 1/2 inch ratchet wrench (a) or the folding lever (b).

https://truckmanualshub.com/

WARNING

DO NOT RELEASE THE SWINGING MOTOR UNLESS THE MACHINE IS ON A LEVEL SURFACE.

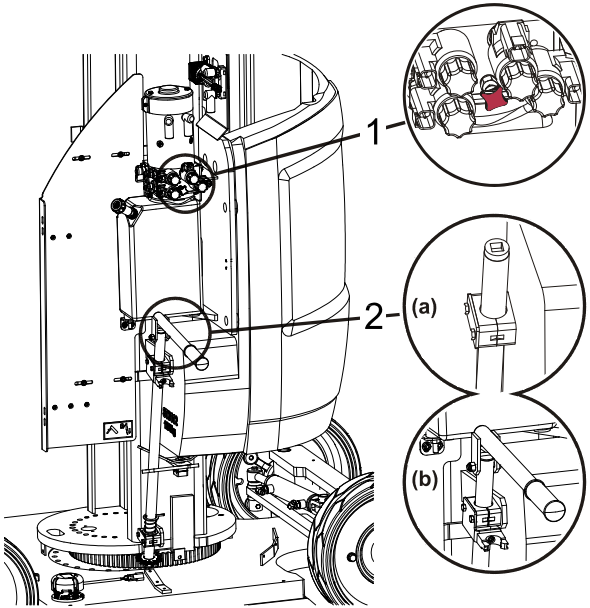

Figure 3-5. Manual Swinging Operating Devices

1. Open the access door to the pump/motor assembly.
2. Fully unscrew the rotary valve.
3. Depending on equipment, engage a square 1/2 inch ratchet wrench in the square hole on top of the pinion or lift the folding lever. Push on top of the pinion to engage it in the turntable bearing teeth. Turn the lever clockwise to swing the structure to the right or turn the lever counter-clockwise to swing the structure to the left.
4. When finished swinging, depending on equipment, remove the wrench from the pinion or fold back the lever until it is latched. Fully screw in the rotaty valve.

WARNING

NEVER LEAVE THE MACHINE WITH A WRENCH ENGAGED ON THE PINION, WITH THE LEVER UNFOLDED OR WITH THE ROTARY VALVE UNSCREWED.

Platform Control Station

WARNING

TO AVOID SERIOUS INJURY, DO NOT OPERATE MACHINE IF ANY CONTROL LEVERS OR SWITCHES CONTROLLING PLATFORM MOVEMENT DO NOT RETURN TO THE OFF OR NEUTRAL POSITION WHEN RELEASED.

https://truckmanualshub.com/

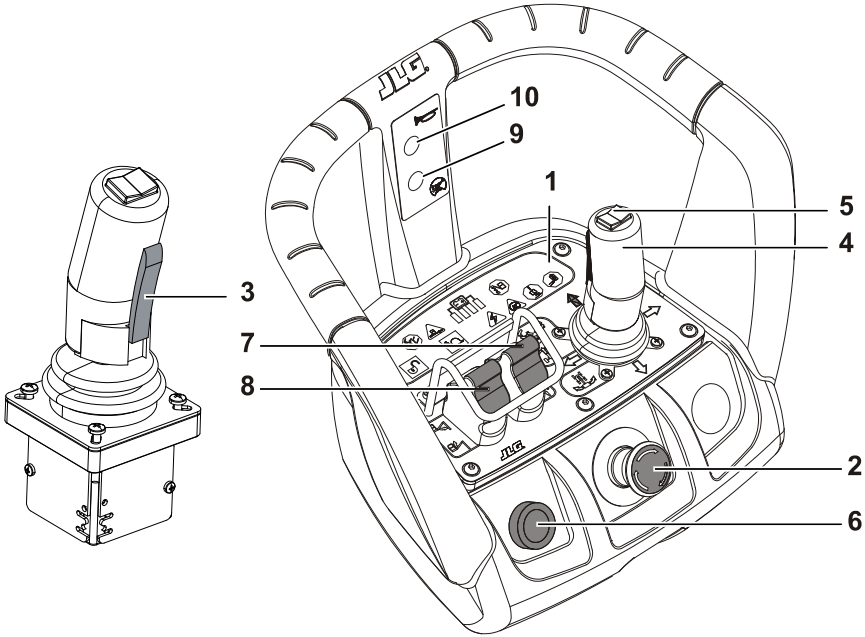

1. Indicator Panel
2. Emergency Stop Switch
3. Trigger Switch
4. Drive/Swing Functions Controller
5. Steer Switch
6. Mast/Jib Function Enable Button
7. Mast Lift Up/Down Joystick Controller
8. Jib Lift Up/Down Joystick Controller
9. Drive Orientation System (DOS) Override Button
10. Horn Button

https://truckmanualshub.com/

1. **Indicator panel**

NOTE: *The indicator panel uses different shaped symbols to alert the operator to different types of operational situations that could arise. The definition of those symbols are explained below.*

Indicates a potentially hazardous situation, which if not corrected, could result in serious injury or death. This indicator will be red.

Indicates an abnormal operating condition, which if not corrected, may result in machine interruption or damage. This indicator will be yellow.

Indicates important information regarding the operating condition, i.e. procedures essential for safe operation. This indicator will be green.

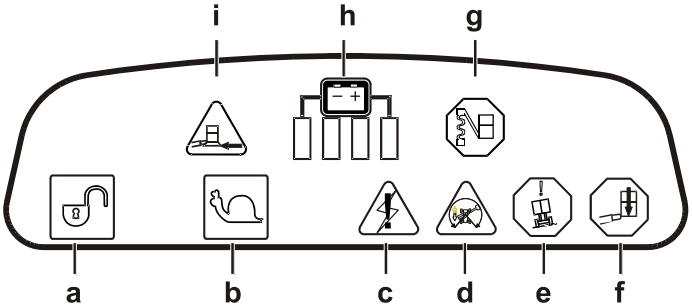

Figure 3-6. Platform Control Indicator Panel

a- Control Enable Indicator
b- Creep Speed Indicator
c- System Distress Indicator
d- Drive Orientation Indicator
e- Tilt Indicator Warning Light
f- Overload Indicator Warning Light (If equipped)
g- Slack Chain Indicator Warning Light
h- Battery Discharge Indicator (BDI)
i- Soft Touch Indicator (Optional)

https://truckmanualshub.com/

Green

a. When lit, indicates that the controls are enabled. If a function is not actuated within seven seconds, or a seven seconds lapse between ending one function and beginning the next function occurs, the enable light will go out and the enable must be released and activated again to enable the controls.
When blinking, indicates that the machine is in a configuration where the current activated function is not permitted.

Green

b. Indicates that the high drive cutout limit-speed is engaged (the mast is out of transport (stowed) position).

Yellow

c. This light indicates that the control system has detected an abnormal condition. This lamp when actuated is flashing a DTC (Diagnostic Troubleshooting Code). For an explanation of these codes and items, the operator can or cannot correct, see Section 6 Diagnostic Trouble Codes (DTC).

Yellow

d. When the structure is swung beyond the rear tires or further in either direction, the Drive Orientation indicator will illuminate. This is a signal for the operator to verify that the drive control is being operated in the proper direction (i.e. controls reversed situations).

Red

e. Indicates that the chassis is out of level (refer to machine specifications for max. allowable slope angle). If the mast is out of the transport (stowed) position and the chassis is out of level, an audible alarm will sound.

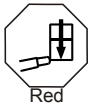
Red

f. (If equipped) - Indicates that the maximum rated load in the platform is exceeded. In addition to the warning indicator, an audible alarm sounds. The platform must be unloaded until the alarm stops.

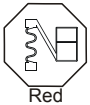
Red

g. Indicates that a slack chain condition has been detected. In addition to the warning indicator, an audible alarm will sound as long as the chain slack chain condition exists.

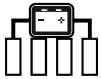

h. This set of lights indicates the charge level of the battery.

Yellow

i. (If equipped) - Indicates the Soft Touch frame is against an obstacle. In addition to the warning indicator, an audible alarm sounds. Once illuminated, only the reverse movement to the one that caused the contact with the obstacle can be operated in Creep mode.

https://truckmanualshub.com/

2. **Emergency Stop Switch** - A two-position, red, emergency stop switch, when positioned to ON furnishes operating power to the platform control station. In addition, the switch can be used to turn off power to the function controls in the event of an emergency. Power is turned off by depressing the switch and power is turned on by turning the switch clockwise to pull it out.

3. **Trigger Switch** - This switch located at the front of the controller acts as an enable and must be depressed before operating the drive, steer and swinging functions. When released, the function being operated will stop.

4. **Drive/Swing Functions Controller** - This dual axis joystick controls drive and swinging functions. The speed of both functions is proportionally controlled by the distance of travel of the hand joystick.
   Drive - Engage the trigger switch lever (3) with the joystick in neutral position then move the control handle forward to drive the machine forward or move the control handle backward to drive the machine backward.
   Swing - Engage the trigger switch lever (3) with the joystick in neutral position then toggle the control handle to the left to swing the superstructure to the left or toggle the control handle to the right to swing to the right.

5. **Steer Switch** - The thumb-operated steer switch on top of the control handle activates the steer wheels in the direction activated (right or left).

6. **Mast/Jib Function Enable Button** - This button is used to enable mast and jib functions. It must be depressed and held before actuating a mast or jib function. When released, the function being operated will stop.

7. **Mast Lift Up/Down Joystick Controller** - This fingertip, single axis, joystick controller operates Mast Lift Up and Lift Down functions.
   With the joystick controller in neutral position, push-in and hold the Mast/Jib Function Enable Button (6), moving the joystick backward will raise the mast and moving the joystick forward will lower the mast. The speed of the movements is proportionally controlled by the distance of travel of the joystick.

8. **Jib Lift Up/Down Joystick Controller** - This fingertip, single axis, joystick controller operates Jib Lift Up and Jib Lift Down functions.
   With the joystick controller in neutral position, push-in and hold the Mast/Jib Function Enable Button (6), moving the joystick backward will raise the jib and moving the joystick forward will lower the jib. The speed of the movements is proportionally controlled by the distance of travel of the joystick.

https://truckmanualshub.com/

9. **Drive Orientation Override Button -** When the jib is swung beyond the rear tires or further in either direction, the Drive Orientation indicator will illuminate. Before driving, locate the black/white orientation arrows on both the chassis and the platform controls. Push and release the override switch and within 3 seconds slowly move the Drive/Steer control to actuate drive or steer. Move the drive control toward the arrow matching the intended direction of machine travel.

10. **Horn** - This button, when activated, permits the operator to warn job site personnel when the machine is operating in the area.

https://truckmanualshub.com/

3.3 DECAL INSTALLATION

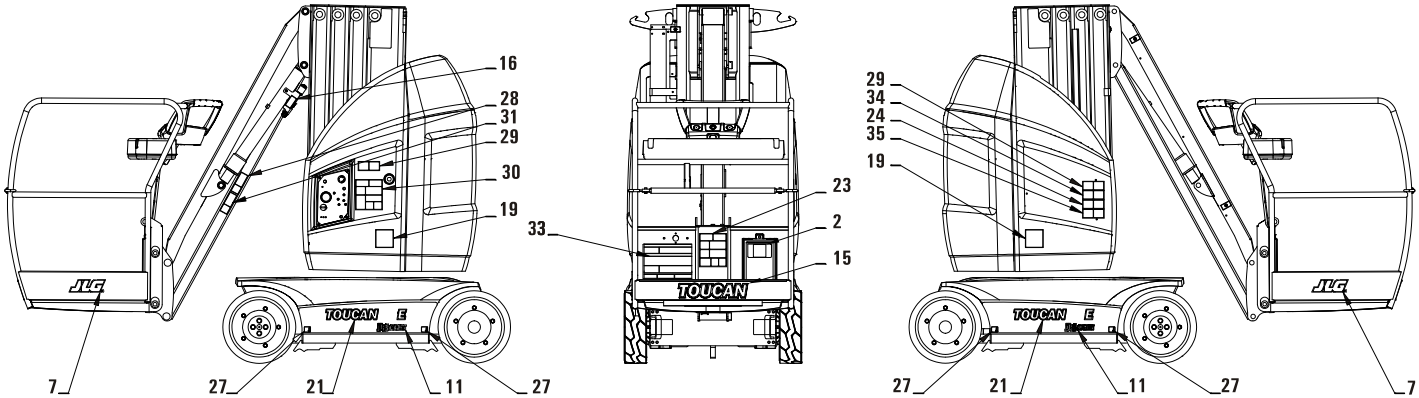

Figure 3-7. Decal Installation - Sheet 1

https://truckmanualshub.com/

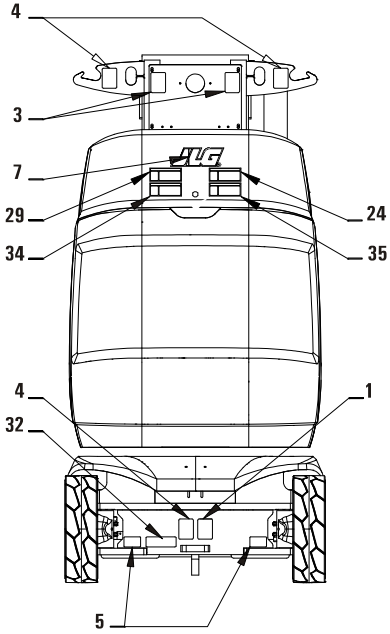

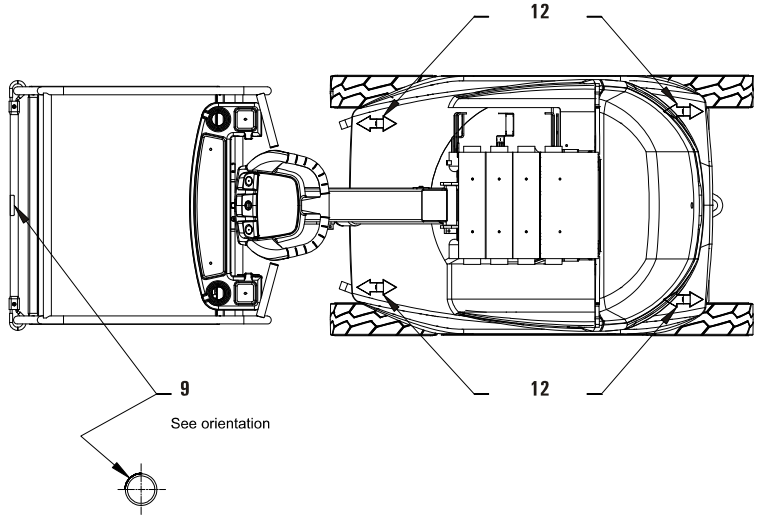

Figure 3-8. Decal Installation - Sheet 2

https://truckmanualshub.com/

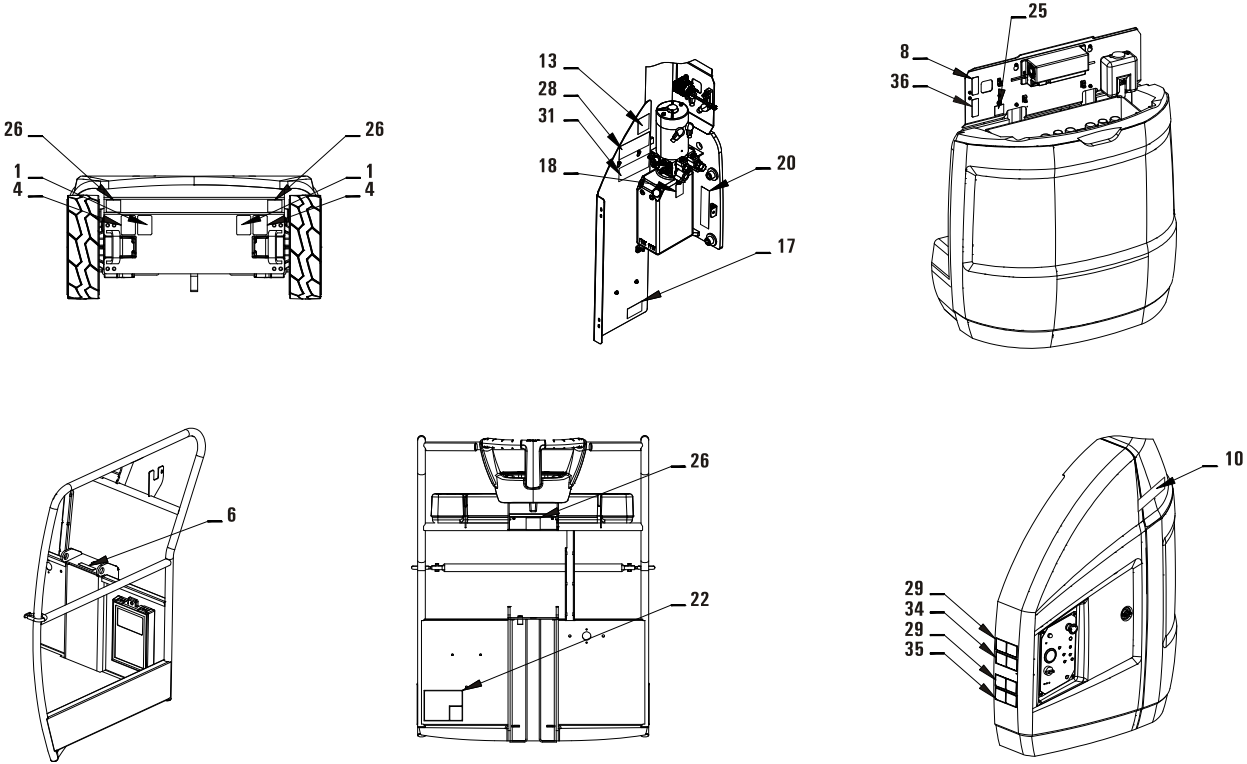

Figure 3-9. Decal Installation - Sheet 3

https://truckmanualshub.com/

Table 3-1. T10E & T26E - Decal Installation

Item #	T10E	T26E ANSI	T26E CSA	T26E Spanish	T26E Portuguese	Item #	T10E	T26E ANSI	T26E CSA	T26E Spanish	T26E Portuguese
1	1701499	1701499	1701499	1701499	1701499	19	AU2098	AU2098	AU2098	AU2098	AU2098
2	1701640	1701640	1701640	1701640	1701640	20	AU2099	AU2099	AU2099	AU2099	AU2099
3	1703811	1703811	1703811	1703811	1703811	21	AU2100	AU2122	AU2122	AU2122	AU2122
4	1703814	1703814	1703814	1703814	1703814	22	AU2101	AU2101	AU2101	AU2101	AU2101
5	1704016	1704016	1704016	1704016	1704016	23	AU2102	AU2120	AU2120	AU2120	AU2148
6	1704277	1704277	1704277	1704277	1704277	24	AU2103	AU2118	AU2118	AU2118	AU2150
7	1705781	1705781	1705781	1705781	1705781	25	AU2104	AU2104	AU2104	AU2104	AU2104
8	1705803	1703785	1703785	1703785	1704031	26	AU2105	AU2105	AU2105	AU2105	AU2105
9	1706493	--	--	--	--	27	AU2106	AU2116	AU2116	AU2116	AU2116
10	1706740	1706740	1706740	1706740	1706740	28	AU2107	AU2119	AU2119	AU2119	AU2147
11	1706764	1704885	1704885	1704885	1704885	29	AU2108	AU2117	AU2117	AU2117	AU2149
12	AU0149	AU0149	AU0149	AU0149	AU0149	30	AU2109	AU2121	AU2142	AU2146	AU2151
13	AU1423	AU1423	AU1423	AU1423	AU1423	31	--	--	AU2140	AU2147	AU2152
14	--	--	--	--	--	32	--	--	1705514	--	--
15	AU1825	AU1825	AU1825	AU1825	AU1825	33	--	--	AU2141	AU2148	AU2153
16	AU2095	AU2095	AU2095	AU2095	AU2095	34	--	--	AU2143	AU2149	AU2154
17	AU2096	AU2096	AU2096	AU2096	AU2096	35	--	--	AU2144	AU2150	AU2155
18	AU2097	AU2097	AU2097	AU2097	AU2097	36	--	--	AU2145	1704031	1704023

https://truckmanualshub.com/

NOTES:

https://truckmanualshub.com/

SECTION 4. MACHINE OPERATION

4.1 DESCRIPTION

This machine is a self-propelled hydraulic lift equipped with a work platform on the end of an elevating and rotating mast.

The primary operator control station is in the platform. From this control station, the operator can drive and steer the machine in both forward and reverse directions. The operator can raise or lower the mast and the jib or swing the mast to the left or right. Standard mast swing is 172.5 degree left and right of the stowed position. The machine has a Ground Control Station which will override the Platform Control Station. Ground Controls operate mast and jib lift and swing and are to be used in an emergency to lower the platform to the ground should the operator in the platform be unable to do so. The Ground Control is also to be used in Pre-Start Inspection.

4.2 OPERATING SPECIFICATIONS AND LIMITATIONS

Capacities

The mast and the jib can be raised above horizontal with or without any load in the platform if:

1. Machine is positioned on a smooth, firm and level surface.
2. Load is within manufacturer's rated design capacity.
3. All machine systems are functioning properly.
4. Machine is as originally equipped from JLG.

Stability

Machine stability is based on two (2) conditions which are called FORWARD and BACKWARD stability. The machine's position of least FORWARD stability is shown in (See Figure 4-2.) and its position of least BACKWARD stability is shown in (See Figure 4-1.).

⚠ WARNING

TO AVOID FORWARD OR BACKWARD TIPPING, DO NOT OVERLOAD MACHINE OR OPERATE THE MACHINE ON AN OUT-OF-LEVEL SURFACE.

https://truckmanualshub.com/

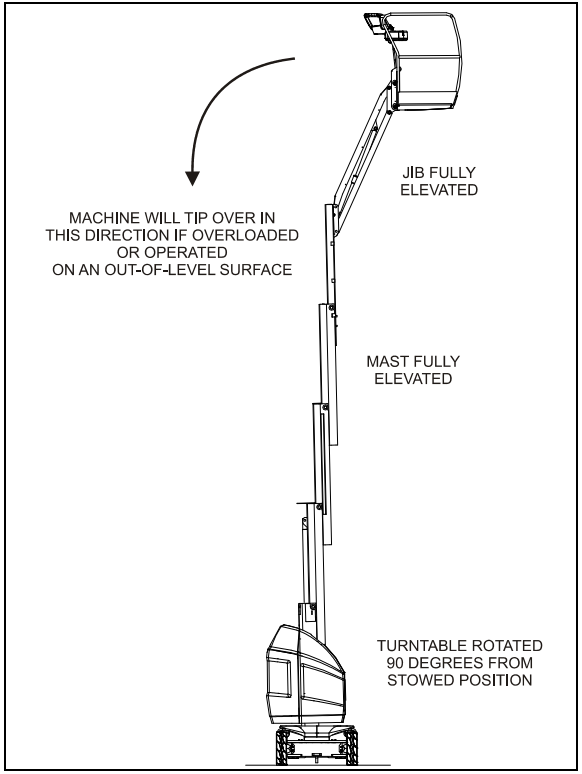

Figure 4-1. Position of Least BACKWARD stability

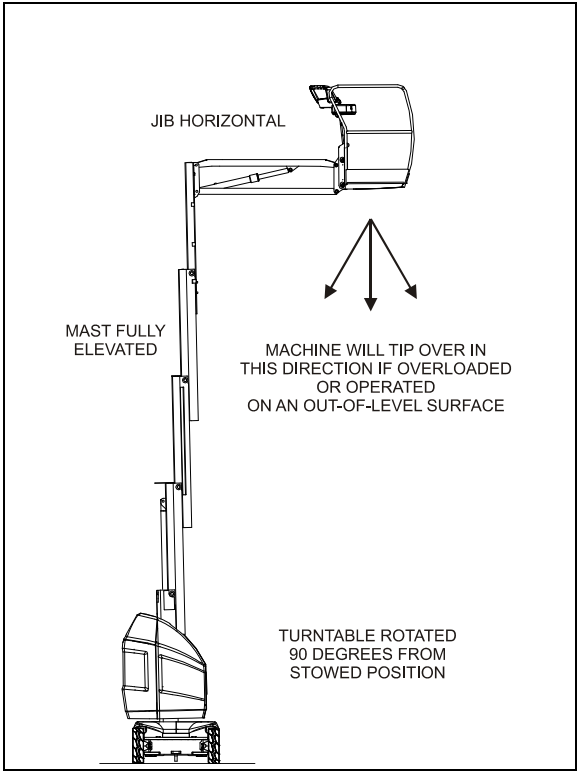

Figure 4-2. Position of Least FORWARD stability

https://truckmanualshub.com/

Grade and Side Slope

With the machine in transport mode, travelling is limited by two factors: gradeability and side slope (Refer to Figure 4-3.). Gradeability is the percent of grade of the incline the machine can climb. Side slope is the angle of the surface the machine can be driven across. Refer to Table 6-1.

With the mast out of transport (stowed) position, the machine must not be operated on grade or side slopes greater than that is specified in Table 6-1.

https://truckmanualshub.com/

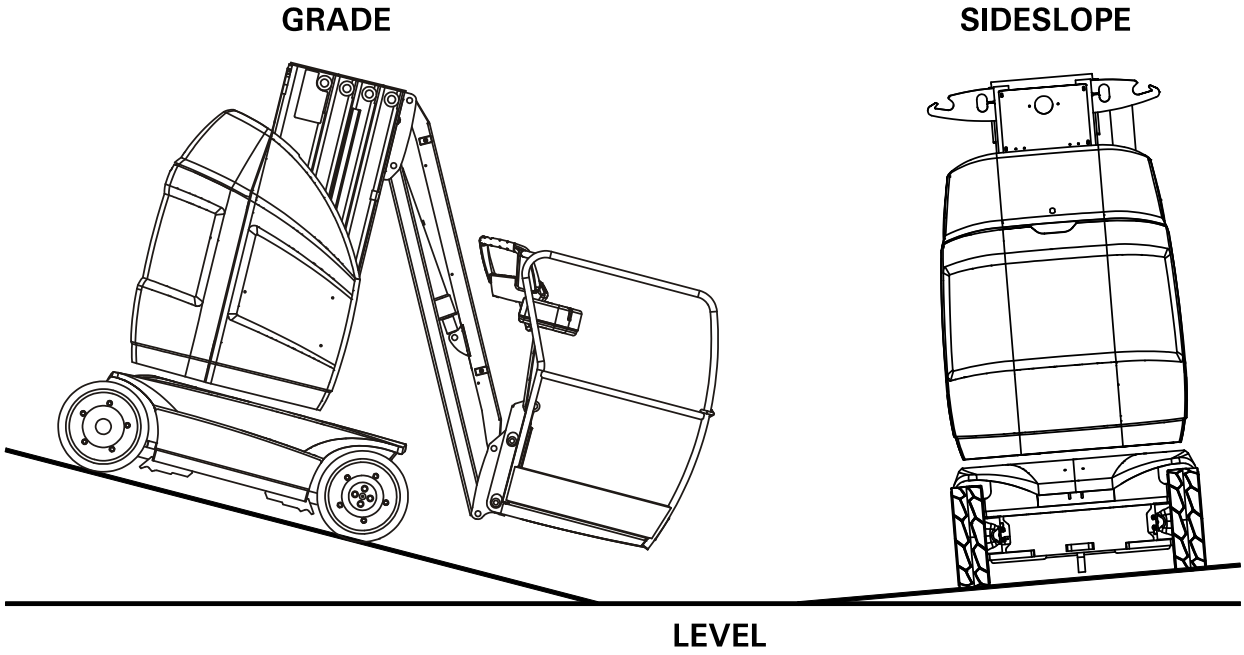

Figure 4-3. Grade and Side Slope

https://truckmanualshub.com/

4.3 OPERATION

1. At ground control station, position the key-select switch to PLATFORM.
2. Position the emergency stop switch to the on (out) position by turning it clockwise.
3. At platform control station, position the emergency stop switch to the on (out) position by turning it clockwise.

NOTE: *If at any time during operation, the machine remains idle for a period exceeding 2 hours, machine power will be shut down. The emergency stop switch(es) must be recycled to start machine again.*

⚠ WARNING

TO AVOID SERIOUS INJURY, DO NOT OPERATE MACHINE IF ANY CONTROL LEVERS OR SWITCHES CONTROLLING THE PLATFORM MOVEMENT DOES NOT RETURN TO THE OFF OR NEUTRAL POSITION WHEN RELEASED.
IF THE PLATFORM DOES NOT STOP WHEN CONTROL LEVER OR THE ENABLE BUTTON/TRIGGER SWITCH IS RELEASED, USE THE EMERGENCY STOP SWITCH TO STOP THE MACHINE.

4.4 STEERING AND TRAVELLING (DRIVING)

⚠ WARNING

DO NOT DRIVE WITH MAST OUT OF TRANSPORT (STOWED) POSITION EXCEPT ON A SMOOTH, FIRM AND LEVEL SURFACE FREE OF OBSTRUCTIONS AND HOLES.

TO AVOID LOSS OF TRAVEL CONTROL OR "TIP OVER", DO NOT DRIVE MACHINE ON GRADES OR SIDE SLOPES EXCEEDING THOSE SPECIFIED IN SECTION 6.

USE EXTREME CAUTION WHEN DRIVING IN REVERSE AND AT ALL TIMES WHEN THE PLATFORM IS ELEVATED.

BEFORE DRIVING, LOCATE THE BLACK/WHITE ORIENTATION ARROWS ON BOTH THE CHASSIS AND THE PLATFORM CONTROLS. MOVE THE DRIVE CONTROLS IN A DIRECTION MATCHING THE DIRECTIONAL ARROW FOR THE INTENDED DIRECTION OF TRAVEL.

https://truckmanualshub.com/

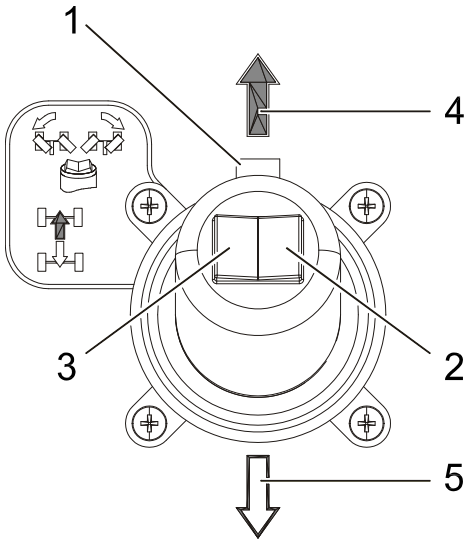

Figure 4-4. Steer/Drive Controls

Steering

1. Squeeze and hold the **trigger switch (1)** on front of the joystick.
2. Activate the thumb switch on top of the joystick to **right (2)** for travelling right or to **left (3)** for travelling left. When released, the thumb switch will return to the center-off position and the wheels will remain in the previously selected position. To return the wheels to the straightened position, the switch must be activated in the opposite direction until the wheels are centered.

Travelling (driving)

1. With all control levers in neutral position, squeeze and hold the **trigger switch (1)** on front of the joystick.
2. Move the joystick **forward (4)** (within 7 seconds after the trigger has been actuated) to drive forward or move the joystick **backward (5)** to drive in reverse. The speed of the movement is proportionally controlled by the distance of travel of the joystick.
3. Return the controller to its centered (neutral) position to stop, then release the trigger.

⚠ WARNING

IF THE TILT INDICATOR WARNING LIGHT/ALARM IS ACTIVATED WHILE DRIVING WITH THE MAST RAISED, LOWER THE MAST COMPLETELY AND DRIVE TO A SMOOTH, FIRM AND LEVEL SURFACE.

https://truckmanualshub.com/

Drive Orientation System (DOS)

When the structure is swung beyond the rear wheels or further in either direction, the **drive orientation indicator (1)** will illuminate and drive will be disabled.

1. Push and release the **override button (2)**, and within 3 seconds move the drive/steer controls to activate drive or steer.
2. Before driving, locate the black/white directional arrows on both the chassis and the platform controls (3). Move the drive control joystick in a direction matching the directional arrow, for the intended direction of travel.

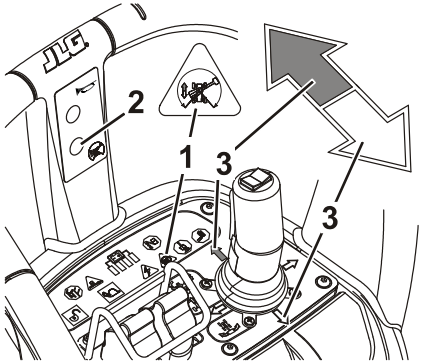

Figure 4-5. Drive Orientation System (DOS)

4.5 RAISING AND LOWERING THE PLATFORM

⚠ WARNING

DO NOT RAISE THE PLATFORM EXCEPT ON A SMOOTH, FIRM AND LEVEL SURFACE FREE OF OBSTRUCTIONS AND HAZARDS.
ENSURE THE AREA BENEATH THE PLATFORM IS FREE FROM PERSONNEL PRIOR TO LOWERING THE PLATFORM.

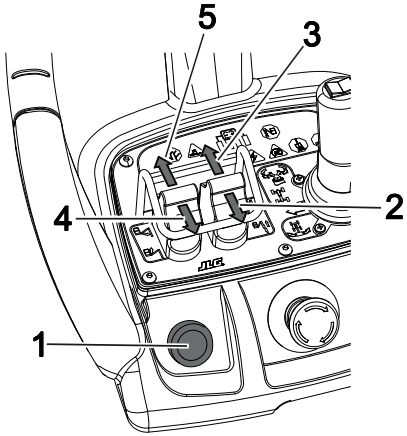

Figure 4-6. Lift Controls

https://truckmanualshub.com/

Raising and lowering the mast

1. With all control levers in neutral position, push in and hold the **green enable button (1)** on the left hand side of the console.
2. To raise the mast, move the **mast controller backward (2)**. The speed of the movement is proportionally controlled by the distance of travel of the joystick.
3. Return the controller to its centered (neutral) position to stop.
4. To lower the mast, move the **mast controller forward (3)**. The speed of the movement is proportionally controlled by the distance of travel of the joystick.
5. Return the controller to its centered (neutral) position to stop, then release the enable button.

Raising and lowering the jib

1. With all control levers in neutral position, push in and hold the **green enable button (1)** on the left hand side of the console.
2. To raise the jib, move the **jib controller backward (4)**. The speed of the movement is proportionally controlled by the distance of travel of the joystick.
3. Return the controller to its centered (neutral) position to stop.
4. To lower the jib, move the **jib controller forward (5)**. The speed of the movement is proportionally controlled by the distance of travel of the joystick.
5. Return the controller to its centered (neutral) position to stop, then release the enable button.

https://truckmanualshub.com/

4.6 SWINGING

⚠ WARNING

DO NOT SWING THE SUPERSTRUCTURE EXCEPT ON A SMOOTH, FIRM AND LEVEL SURFACE, FREE OF OBSTRUCTIONS AND HOLES.

⚠ CAUTION

WHEN SWINGING, MAKE SURE THERE IS AMPLE ROOM FOR THE JIB TO CLEAR SURROUNDING WALLS, PARTITIONS AND EQUIPMENT.

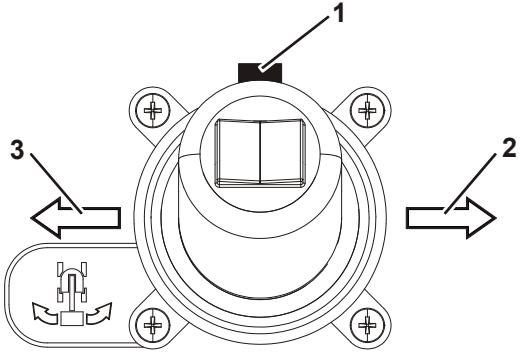

Figure 4-7. Swing Control

1. With all control levers in neutral position, squeeze and hold the **trigger switch (1)** on front of the joystick.
2. Move the joystick to the desired direction: **right (2)** or **left (3)**. The speed of the movement is proportionally controlled by the distance of travel of the joystick.
3. Return the controller to its centered (neutral) position to stop, then release the trigger.

4.7 EMERGENCY CONTROL

The machine has a Ground Control Station which will override the Platform Control Station. Ground controls operate Lift and Swing, and are to be used in an emergency to lower the platform to the ground, should the operator in the platform be unable to do so.

⚠ WARNING

DO NOT OPERATE FROM GROUND CONTROL STATION WITH PERSONNEL IN THE PLATFORM EXCEPT IN AN EMERGENCY.
ENSURE THE AREA BENEATH THE PLATFORM IS FREE OF PERSONNEL OR OBSTACLES PRIOR TO LOWERING.

https://truckmanualshub.com/

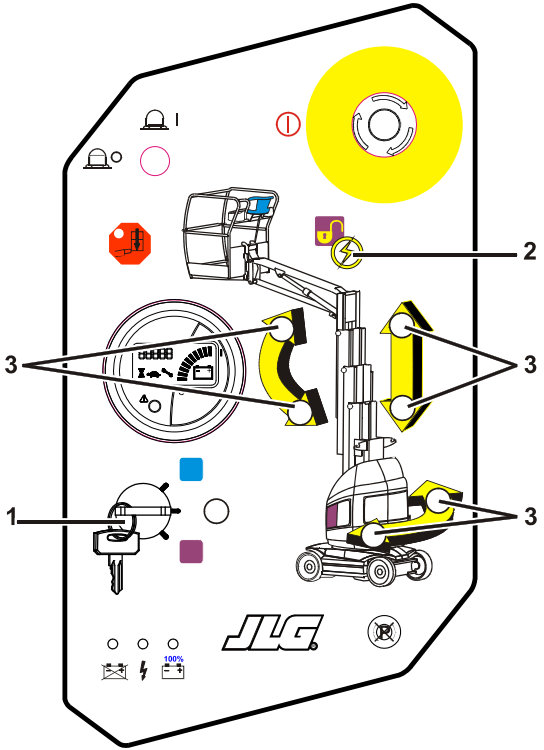

Figure 4-8. Emergency Controls

1. Position the **key-select switch (1)** to GROUND.
2. Push and hold the **enable button (2)**.
3. Actuate the appropriate **function button (3)** until the desired elevation or position of the platform is achieved.

4.8 ALARMS

Overload Warning Light/Alarm (If equipped)

When the maximum rated load in the platform is exceeded, RED light indicators at both the ground and the platform control stations will blink and an audible alarm will sound. When the overload indicator warning is activated, all machine functions are disabled. The platform must be safely unloaded until the alarm stops.

Tilt Warning Light/Alarm

When the chassis is out of level (Refer to Table 6-1), the RED light indicator at platform control station will illuminate. If the mast is out of transport (stowed) position, and the chassis is out of level an audible alarm will sound.

WARNING

IF THE WARNING LIGHT IS ILLUMINATED WHEN THE MAST IS RAISED, LOWER THE MAST AND REPOSITION MACHINE SO THAT IT IS LEVEL BEFORE ELEVATING THE MAST.

https://truckmanualshub.com/

When the tilt indicator warning is activated, the following functions are affected:

-The Drive function is disabled out of stowed position.

-Mast/Jib Lift and Swinging movements switch to Creep mode.

When the tilt indicator warning is activated, control the machine as follows:

1. Lower the mast.
2. Return the platform in line with the chassis.
3. Lower the Jib.
4. Drive the machine to a smooth, firm and level surface.

WARNING

AVOID RAISING THE MAST, OPERATING THE JIB OR SWINGING WITH THE MAST RAISED WHEN THE MACHINE IS OUT OF LEVEL. ALWAYS LOWER THE MAST AS MUCH AS POSSIBLE BEFORE OPERATING THE JIB OR SWINGING.

Slack Chain Warning Light/Alarm

When the system detects a slack chain condition, the RED light indicator at platform control station will illuminate and an audible alarm will sound.

Slack chain condition is generally caused by the platform or the jib coming to rest on an obstacle while lowering.

When the slack chain indicator warning is activated, all machine functions, except mast and jib raising movements are disabled.

Procedure to follow in case the slack chain indicator warning is activated:

1. Raise the mast or the jib (generally the reverse movement to the one that caused the alarm to be activated). This will re-tension the chain(s) and stop the alarm.
2. Examine surroundings to identify the cause.
3. Perform the movement which will clear the machine and prevent contact with the obstacle.

WARNING

IF THE EXAMINATION OF THE SURROUNDINGS DOES NOT REVEAL ANY POSSIBLE OBSTACLE, DISCONTINUE OPERATION IMMEDIATELY.
DO NOT USE MANUAL DESCENT CONTROLS.
PLATFORM OCCUPANTS MUST BE RESCUED AND THE MAST MECHANISM SERVICED BY A QUALIFIED TECHNICIAN.

https://truckmanualshub.com/

Soft Touch Warning Light/Alarm (Option)

When the bumper under the work platform is against an obstacle, the YELLOW light indicator at platform control station will illuminate and an audible alarm will sound. Only the reverse movement to the one that caused the contact with the obstacle can be controlled in the Creep mode.

NOTE: *This feature is only operational when the machine is controlled from the platform control station.*

4.9 SHUT DOWN AND PARK

Shut down and park the machine as follows:

1. Drive the machine to a reasonably well-protected and well-ventilated area.
2. Ensure the platform is fully lowered.
3. Turn the platform/ground selector switch to off and remove the key to disable the machine and prevent unauthorized use.
4. At the ground control station, position the emergency stop switch to the off (pushed in) position.
5. If necessary, cover the platform console, the instruction placards, caution and warning decals so that they will be protected from hostile environment.
6. If necessary, charge the battery.

https://truckmanualshub.com/

4.10 BATTERY CHARGING

NOTE: *Be sure that the machine is parked in a well-ventilated area before charging begins.*

⚠ WARNING

ONLY PLUG THE CHARGER INTO A PROPERLY INSTALLED AND GROUNDED OUTLET. DO NOT USE GROUND ADAPTORS OR MODIFY PLUG. DO NOT TOUCH NON-INSULATED PORTION OF OUTPUT CONNECTOR OR NON-INSULATED BATTERY TERMINAL.

DO NOT OPERATE CHARGER IF THE AC SUPPLY CORD IS DAMAGED OR IF THE CHARGER HAS RECEIVED A SHARP BLOW, BEEN DROPPED OR OTHERWISE DAMAGED IN ANY WAY.

ALWAYS DISCONNECT THE AC SUPPLY BEFORE MAKING OR BREAKING THE (POS/NEG) CONNECTIONS TO THE BATTERY.

DO NOT OPEN OR DISASSEMBLE CHARGER.

NOTE: *It is not necessary to charge the battery if the electrolyte specific gravity has not dropped under 1.240kg/l. Doing so regularly, will greatly reduce battery life.*

The battery charger **AC input plug (1)** is located on the battery compartment.

1. Connect the **AC input plug (1)** to a grounded outlet.

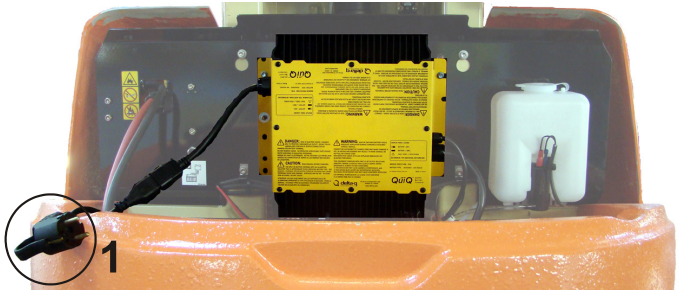

2. When first powered up, the charger will go through a short LED indicator self-test. The battery charger light's on the Ground Control Station will flash in sequence for two seconds.
3. The batteries are fully charged when the green light on the battery charger status panel (Ground Control Station) is illuminated.

NOTE: *If the charger is left plugged in, the charger will automatically restart a complete charge cycle if the batteries voltage drops below a minimum voltage or 30 days has elapsed.*

https://truckmanualshub.com/

Battery Charger Fault Code

If a fault occured during charging, the red (Fault LED located on the Ground Control Station panel) will flash with a code corresponding to the error. Refer to the table following for the flash codes and their removal.
If required, further general and troubleshooting information about the battery charger can be found in the charger manufacturers Owner's Guide included in the manual storage box mounted on the machine.

Table 4-1. Battery Charger Fault Code

Flash(s)	Fault	Remedy
1	Battery voltage high	Auto-recover - Indicates a high battery pack voltage.
2	Battery voltage low	Auto-recover - Indicates either a battery pack failure, battery pack not connected to charger or battery volts per cell is less than 0.5 VDC. Check the battery pack and connections.
3	Charge time-out	Indicates the batteries did not charge in the allowed time. This could occur if the batteries are a larger capacity than the algorithm is intended for or if the batteries are damaged, old, or in poor condition.
4	Check battery	Indicates the batteries could not be trickle charged up to the minimum voltage per cell level required for the charge to be started.
5	Over-temperature	Auto-recover - Indicates charger has shut down due to high internal temp.
6	Charger Internal Fault	Indicates that the battery will not accept charge current, or an internal fault has been detected in the charger. This fault will nearly always be set within the first 30 seconds of operation. Once it has been determined that the batteries and connections are not faulty and fault 6 is again displayed after interrupting AC power for at least 10 seconds, the charger must be brought to a qualified service depot.

https://truckmanualshub.com/

4.11 TIE-DOWN/LIFT LUGS

Tie Down

When transporting the machine:

- Platform must be fully lowered in the stowed position.
- Machine must be tied down to the truck bed or trailer deck as shown in Figure 4-9.

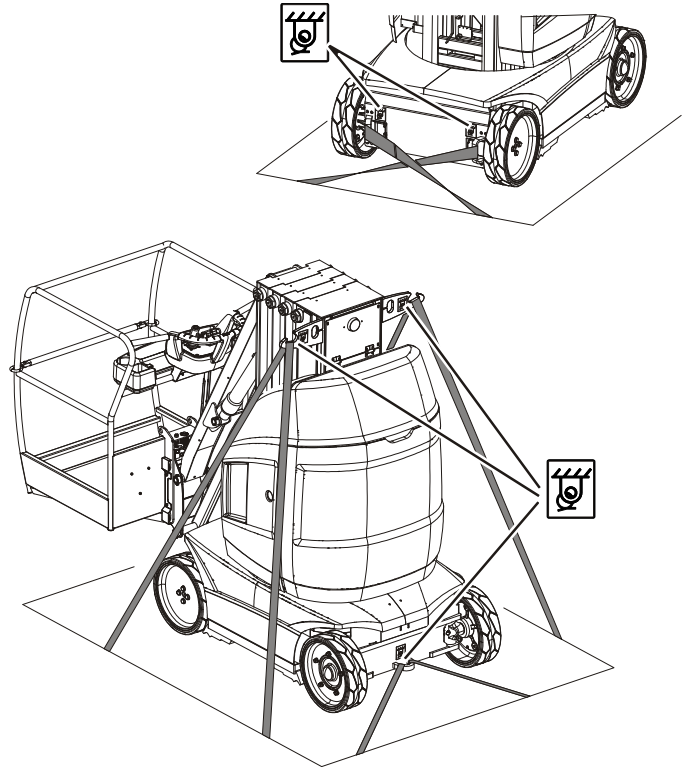

Figure 4-9. Machine Tie-Down

https://truckmanualshub.com/

Lifting

When lifting the machine:

- Platform must be fully lowered in the stowed position.
- Remove all loose items from the machine.
- Attach lifting straps/chains at BOTH lifting lugs as shown in Figure 4-10.

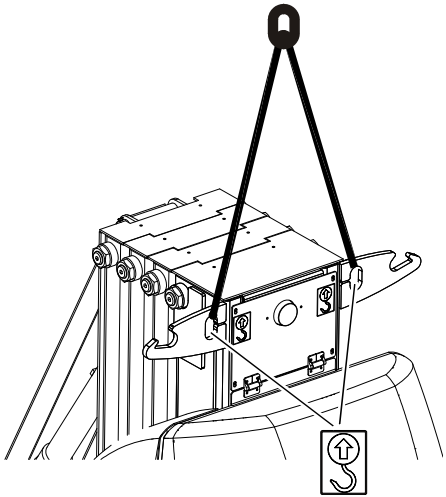

Figure 4-10. Lifting the Machine

The machine may also be lifted using a fork truck:

- Fully lower the mast and the jib.
- Position the platform in line with the chassis with the jib over the rear axle.
- Fork lift as shown in Figure 4-11.

⚠ WARNING

VERIFY THE CAPACITY OF THE FORK TRUCK AND OF ITS EQUIPMENT. FORK LIFT ONLY AT THE DESIGNATED POINTS.
WHEN DRIVING THE FORK TRUCK, KEEP THE WORK PLATFORM AS NEAR TO THE GROUND AS POSSIBLE (BUT WITH A SUFFICIENT CLEARANCE FOR THE WHEELS NOT TO CONTACT THE GROUND).

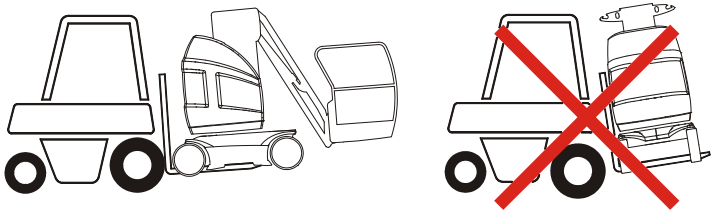

Figure 4-11. Lifting the Machine Using a Fork Truck

4.12 TOWING

It is not recommended that this machine be towed, except in the event of an emergency or a machine power failure.

https://truckmanualshub.com/

Electric Brake Release

NOTE: *Electrical release of the brakes requires enough battery power to hold the brakes in released mode until destination is reached.*

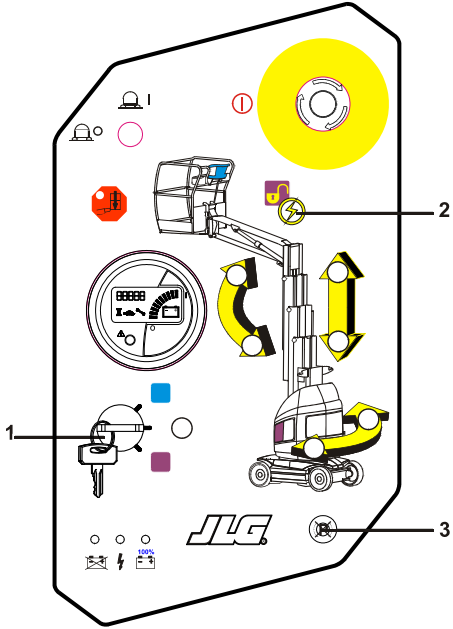

Figure 4-12. Electric Brake Release

1. Chock wheels or secure machine with tow vehicle.
2. Position the key-select-switch to **ground control station (1)**.
3. Push and hold the **enable push button (2)**.
4. Depress the **brake release button (3)** for one second to release the brakes. Once the brakes are released, an acoustic (discontinuous sound) alarm is triggered.
5. When finished towing depress and hold both the **enable push button (2)** and the **brake release button (3)** again or power the machine down at the ground control station to re-engage the brakes.

NOTE: *Any action to remove electrical power from the brakes such as, depressing the ground control emergency stop switch, or switching the key switch to OFF or PLATFORM MODE will re-engage the brakes.*

https://truckmanualshub.com/

NOTES:

https://truckmanualshub.com/

SECTION 5. EMERGENCY PROCEDURES

5.1 GENERAL

This section explains the steps to be taken in case of an emergency situation during operation.

5.2 INCIDENT NOTIFICATION

JLG Industries, Inc. must be notified immediately of any incident involving a JLG product. Even if no injury or property damage is evident, the factory should be contacted by telephone and provided with all necessary details.

In USA:
JLG Phone: 877-JLG-SAFE (554-7233)

Outside USA: 240-420-2661

E-mail: ProductSafety@JLG.com

Failure to notify the manufacturer of an incident involving a JLG Industries product within 48 hours of such an occurrence may void any warranty consideration on that particular machine.

NOTICE

FOLLOWING ANY INCIDENT, THOROUGHLY INSPECT THE MACHINE AND TEST ALL FUNCTIONS FIRST FROM THE GROUND CONTROLS, THEN FROM THE PLATFORM CONTROLS. DO NOT LIFT ABOVE 3 M (10 FT.) UNTIL YOU ARE SURE THAT ALL DAMAGE HAS BEEN REPAIRED, IF REQUIRED, AND THAT ALL CONTROLS ARE OPERATING CORRECTLY.

5.3 EMERGENCY OPERATION

Operator Unable to Control Machine

IF THE PLATFORM OPERATOR IS PINNED, TRAPPED OR UNABLE TO OPERATE OR CONTROL MACHINE:

1. Other personnel should operate the machine from ground controls only as required.
2. Other qualified personnel in the platform may use the platform controls. DO NOT CONTINUE OPERATION IF CONTROLS DO NOT FUNCTION PROPERLY.
3. Cranes, forklift trucks or other equipment can be used to stabilize motion of the machine.

https://truckmanualshub.com/

Platform or Jib Caught Overhead

If the platform or the jib become jammed or snagged in overhead structures or equipment, rescue platform occupants prior to freeing the machine.

5.4 PLATFORM MANUAL DESCENT

The platform manual descent valves are used in the event of a total power failure to retract and lower the platform using gravity. Refer to Section 3-2 PLATFORM MANUAL DESCENT AND SWING.

5.5 EMERGENCY TOWING

Towing this machine is discouraged. However provisions for towing the machine in emergency situations have been incorporated. Refer to Section 4-12 TOWING.

https://truckmanualshub.com/

SECTION 6. GENERAL SPECIFICATIONS & OPERATOR MAINTENANCE

6.1 INTRODUCTION

This section of the manual provides additional necessary information to the operator for proper operation and maintenance of this machine.

The maintenance portion of this section is intended as information to assist the machine operator to perform daily maintenance tasks only, and does not replace the more thorough Preventive Maintenance and Inspection Schedule included in the Service and Maintenance Manual.

Other Publications Available

Service and Maintenance Manual..... 31210090

Illustrated Parts Manual..... 31210091

Hydraulic Schematic FL0153

Electrical Schematic.....ELE251

https://truckmanualshub.com/

6.2 OPERATING SPECIFICATIONS

Table 6-1. Operating Specifications And Dimensions

Model	TOUCAN 10E (CE)	TOUCAN 26E (ANSI)
Maximum Work Load	200 kg (2 persons + 40 kg material)	500 lbs (227 kg)
Maximum Manual Force	400 N	150 lbf (667 N)
Maximum Operating Wind Speed	45 km/h (12.5 m/s)	28 mph
Maximum Elevated Travel Grade(Gradeability and Side slope)	3.5% (2°)	0°
Maximum Stowed Travel Grade (Gradeability)(Reference Figure 4.3)	25% (14°)	25% (14°)
Maximum Stowed Travel Grade (Side slope)(Reference Figure 4.3)	8.7% (5°)	8.7% (5°)
Maximum Drive Speed Stowed Mast Elevated (1) Mast Fully Elevated (2)	 5.50 km/h 0.75 km/h 0.40 km/h	 3.4 mph (5.5 km/h) 0.47 mph (0.75 km/h) 0.47 mph (0.75 km/h)
Inside Turning Radius Outside Turning Radius	0.55 m 1.99 m	21.7” (0.55 m) 82.7” (2.10 m)
Maximum Platform Height	8.10m	26.5’ (8.10m)
Horizontal Reach From centerline of machine From rear wheel edge From side wheel edge	 2.58 m 1.78 m 2.08 m	 8.67’ (2.64 m) 6.04’ (1.84 m) 6.76’ (2.06 m)
Up and Over Clearance	6.50 m	21.3’ (6.50 m)

https://truckmanualshub.com/

Table 6-1. Operating Specifications And Dimensions

Approximate Gross Machine Weight	2990 kg	6834 lbs (3100 kg)
Maximum Tire Load (per wheel)	1680 kg	3485 lbs (1580 kg)
Maximum Hydraulic Pressure	18 MPa	2600 psi
Maximum Ground Bearing Pressure	21 kg/cm^2	285 psi
Electrical System Voltage	24V	24V

(1) Up to 7.20 m (23.6') - Platform height with the jib fully raised

(2) Above 7.20 m (23,6') - Platform height with the jib fully raised - Toucan 10E only.

https://truckmanualshub.com/

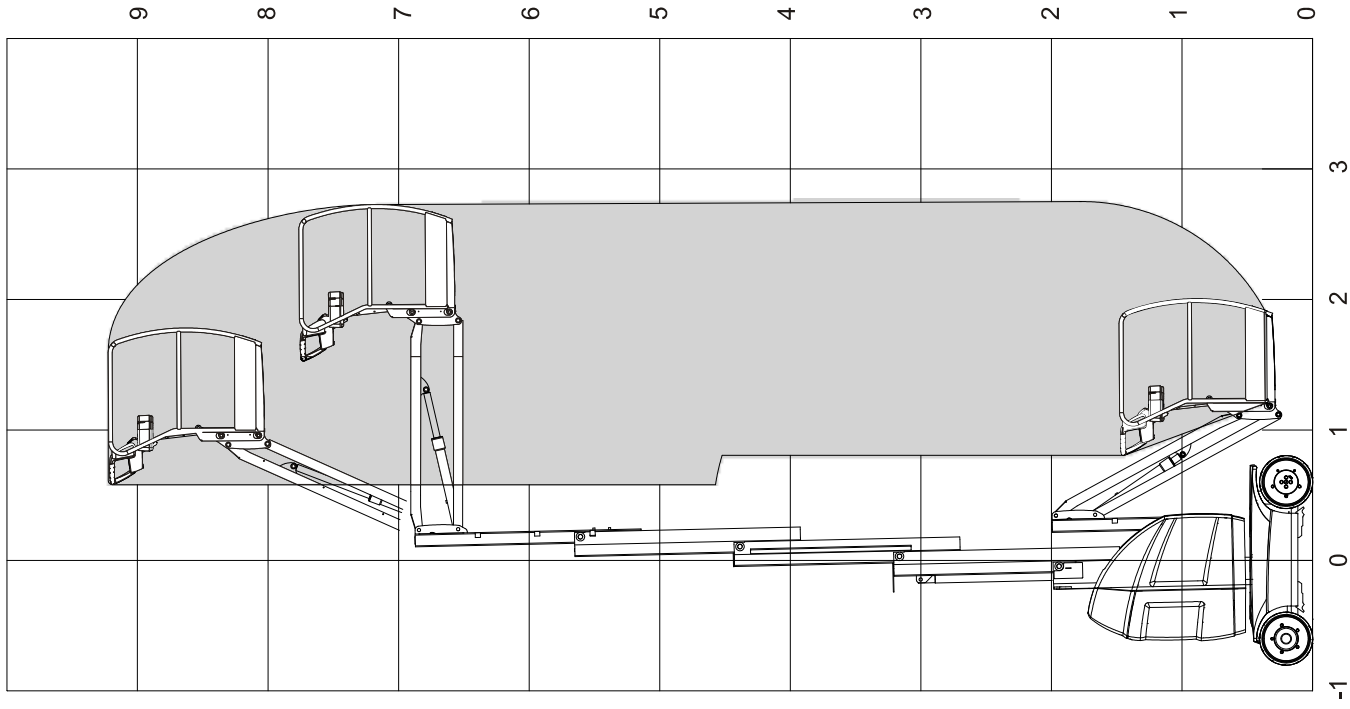

Figure 6-1. Range Diagram

https://truckmanualshub.com/

Table 6-2. Dimensions

DESCRIPTION	Model TOUCAN 10E	Model TOUCAN 26E
Platform Height - Stowed	0.35 m	14” (0.35 m)
Platform Height - Elevated	8.10 m	26.5’ (8.10 m)
Working Height	10.10 m	32.5’ (10.10 m)
Overall Stowed Machine Height	1.99 m	78.5” (1.99 m)
Overall Machine Width	0.99 m	45” (1.14 m)
Overall Machine Length	2.82 m	109” (2.77 m)
Platform Size - Length	0.70 m	27.5” (0.70 m)
Platform Size - Width	0.90 m	35.4” (0.90 m)

Table 6-3. Tires Specifications

DESCRIPTION	Model TOUCAN 10E	Model TOUCAN 26E
Size	Ø406 x 125 mm	Ø406 x 125 mm
Wheel Bolts Torque	142-163 Nm	105-120 ft.lbs

https://truckmanualshub.com/

Table 6-4. Drive Motors - Hydraulic Power Unit

DESCRIPTION			Model TOUCAN 10E - TOUCAN 26E
Drive Motor		Voltage	15 VAC
		Power	0.85 kW
Hydraulic Power Unit	Motor	Voltage	24 VDC
		Power	3 kW
	Pump	Displacement	3.1 cc/rev - (0.19 cu.in/rev)
		Flow Rate	9.6 l/mn @ 13 MPa - (2.54 gal/min @ 1900 psi)
	Capacity	Tank	6 l (5.5 l usable) - (1.59 gal (1.46 gal usable))
		Hydraulic System (1)	Approx. 9 l - (2.38 gal)

(1) - Including Tank

https://truckmanualshub.com/

Table 6-5. Battery Specifications

DESCRIPTION	Model TOUCAN 10E - TOUCAN 26E
Voltage (24 VDC)	12 cells of 2 V
Amp Hour (Standard battery)	240 Amp Hour @ 5 HR. Rate
Battery Weight (Approx.)	220 kg (485 lbs)

Table 6-6. Lubrication Specifications

KEY	SPECIFICATIONS	e.g.
A	Extreme Pressure - Multi Purpose Grease	MOBILUX EP2 COMPLEX EP2
B	Open Gear Lube	MOBILTAC 81
C	Non Detergent Mineral Oil (*)	MOBIL DTE 16M
D	Synthetic Chain Oil	Fuchs VT 800

(*) To be adapted to the machine's operating conditions. See Table 6-10

NOTE: *Aside from JLG recommendations, it is not advisable to mix oils of different brands or types, as they may not contain the same required additives or be of comparable viscosities.*

Table 6-7. Hydraulic Oil Specifications - Standard

SPECIFICATION	NERVOFLUID VG 32	MOBIL DTE 13M
ISO Viscosity grade	32	32
Cinematic Viscosity @ -20°C (-4°F)	1213 mm²/s (cSt)	1213 mm²/s (cSt)
Cinematic Viscosity @ 0°C (32°F)	254 mm²/s (cSt)	250 mm²/s (cSt)
Cinematic Viscosity @ +40°C (104°F)	34 mm²/s (cSt)	33.3 mm²/s (cSt)
Pour Point, Max.	-41°C (-42°F)	-46°C (-50°F)
Flash Point, Min.	225°C (437°F)	166°C (330°F)
Viscosity Index	148	144
ISO 6743-4 Classification	HV	HV

https://truckmanualshub.com/

Table 6-8. Hydraulic Oil Specifications - Optional

SPECIFICATIONS	PANOLIN HLP SYNTH 3504	NERVOL EQUIVIS XV32	NERVOL AGROFLUID 32
Oil Type	Synthetic Biodegradable	Low Temperature	Synthetic Food Compatible
ISO Viscosity Grade	32 cSt	32 cSt	32 cSt
Cinematic Viscosity @ -20°C (-4°F)	1150 cSt	428 cSt	795 cSt
Cinematic Viscosity @ 0°C (32°F)	280 cSt	127 cSt	198 cSt
Cinematic Viscosity @ +40°C (104°F)	30.6 cSt	32.3 cSt	31 cSt
Pour Point, Max.	-58°C (-72.4°F)	-39°C (-38.2°F)	-60°C (-76°F)
Flash Point, Min.	240°C (464°F)	208°C (406.4°F)	230°C (446°F)
Viscosity Index	140	-	143
ISO 6743-4 Classification	-	HV	-

https://truckmanualshub.com/

6.3 OPERATOR MAINTENANCE

1. Battery
2. Oil Level / Oil Filter
3. Tires & Wheels
4. Overload System Spring Washers (If Equipped)
5. Turntable Bearing Lubrication
6. Telescopic Mast Lubrication
7. Lifting Chains Lubrication
8. Overload System Verification (If Equipped)
9. Tilt Sensor Verification

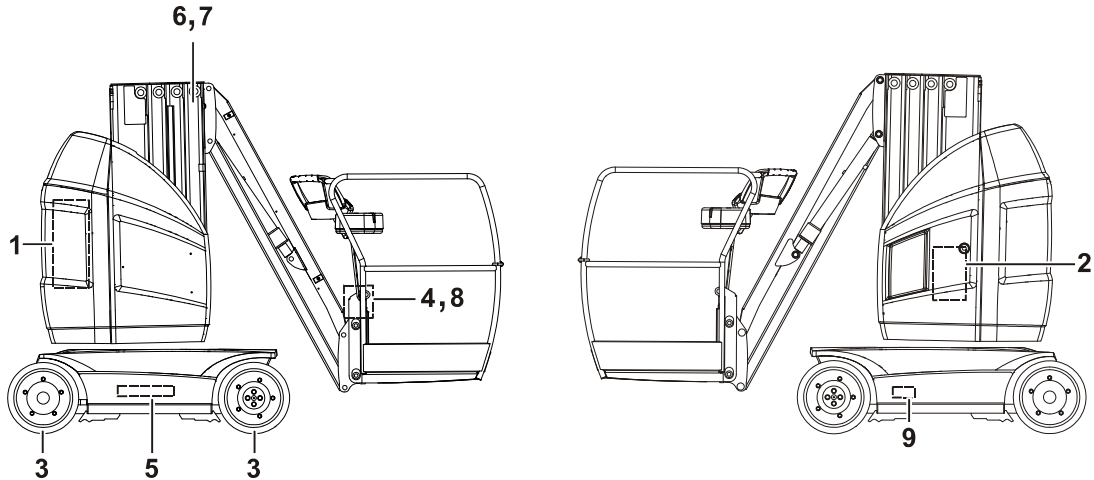

Figure 6-2. Operator Maintenance & Lubrication Diagram

https://truckmanualshub.com/

6.4 CHASSIS HOOD REMOVAL

- Unscrew the four (4) retaining screws (a);
- Remove first the left chassis cover (b) : Slide the cover to the rear of the machine (1) by approx. 20 mm (1”), then lift the covers to remove it completely;
- Remove the right chassis cover (c) : Proceed as for the left cover.

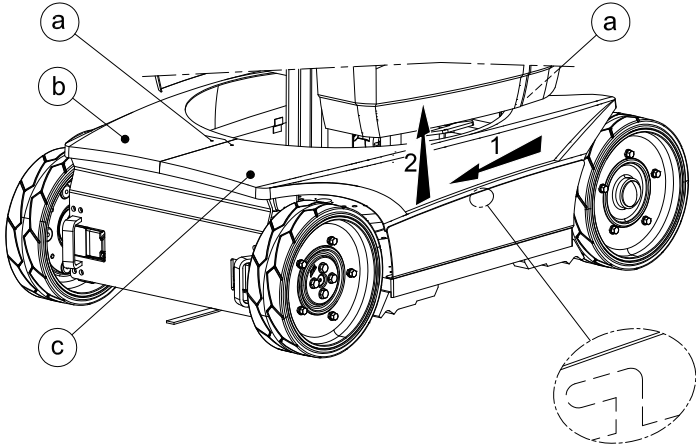

Figure 6-3. Chassis Hood Removal

6.5 BATTERY MAINTENANCE

Battery Maintenance and Safety Practices

⚠ CAUTION

ENSURE THAT BATTERY ACID DOES NOT COMES INTO CONTACT WITH SKIN OR CLOTHING. WEAR PROTECTIVE CLOTHING AND EYEWEAR WHEN WORKING WITH BATTERIES. NEUTRALIZE ANY BATTERY ACID SPILLS WITH BAKING SODA AND WATER.
BATTERY ACID RELEASES AN EXPLOSIVE GAS WHILE CHARGING, ALLOW NO OPEN FAMES, SPARKS OR LIGHTED TOBACCO PRODUCTS IN THE AREA WHILE CHARGING BATTERIES. CHARGE BATTERIES ONLY IN A WELL VENTILATED AREA.

https://truckmanualshub.com/

As with any wet cell battery, check the electrolyte level of the batteries often, using the floats in the center of each cell filling.

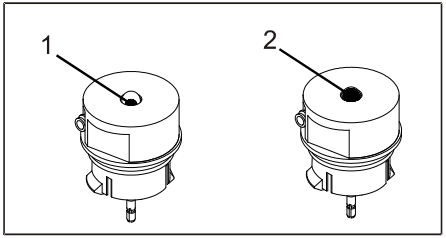

Figure 6-4. Level Indicators

1. Float does not emerge - Insufficient Level
2. Float emerges - Correct Level

Add distilled water only when required.

NOTICE

ADD ONLY DISTILLED WATER TO BATTERIES. FILL BATTERIES ONLY AFTER CHARGING (DURING CHARGE, ELECTROLYTE LEVEL INCREASES AND CAN OVERFLOW).

- Fill the **reservoir (1)** with distilled water.
- Depress and hold the filling **pump activation button (2)**.
- Release the button when the **flow indicator (3)** slows down.
- Ensure the level is correct in each cell.

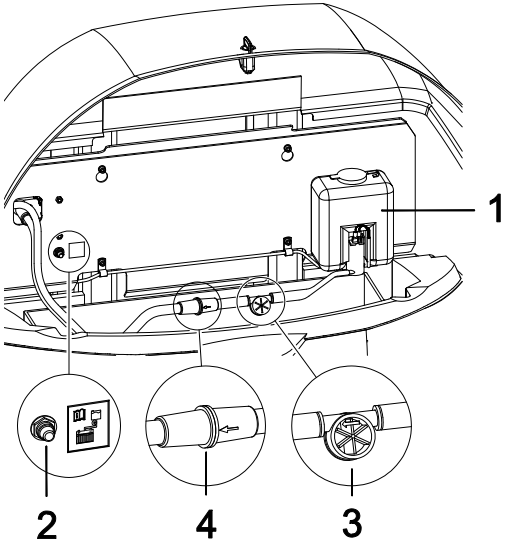

Figure 6-5. Adding Water to Batteries

1. Water Reservoir
2. Pump Activation Button
3. Flow Indicator
4. Filter

https://truckmanualshub.com/

Filling System Draining (If equipped)

Frequency - Prior to extended use in cold chamber or outdoor storage when temperatures could fall below freezing.

1. Battery Filling Network Draining

   - Disconnect the can (c) from the battery filling network (1).

   - Connect the pipe (b) on the battery filling network outlet (2).

   - Connect the bulb (a) on the battery filling network inlet (1).

   - Press the bulb to drain the filling circuit.

   - Disconnect the bulb (a) while maintaining it pressed.

   - Squeeze valve (3) to let the bulb (a) blow up again.

   - Repeat the last 4 steps untill complete draining of the circuit.

   - Disconnect the bulb (a) and the pipe (b).

2. Can Draining

   - Connect the pipe (b) on the can (c).

   - Press on the battery filling system button until the can is empty.

   - Disconnect the pipe (b) from the can (c).

3. Reconnect the can (c) on the battery filling network (1).

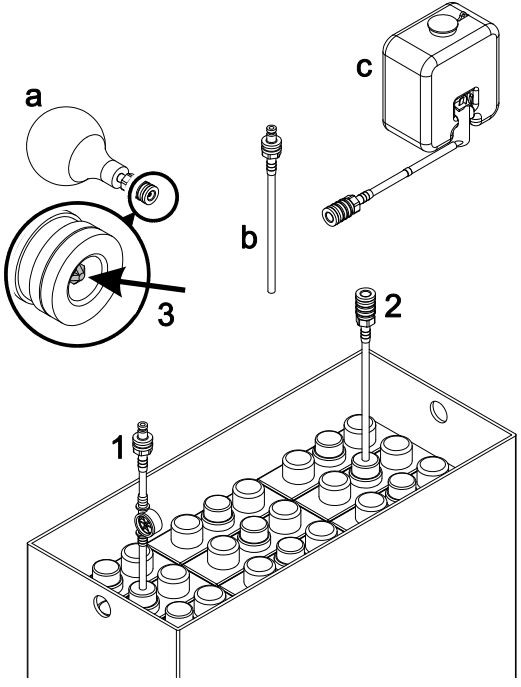

Figure 6-6. Filling System Draining

https://truckmanualshub.com/

Regularly:

- Clean and dry the battery top.
- Ensure the connections are clean and tight.
- Drain the water that can accumulate at the bottom of the container (electrolyte overflow, leak in the filling circuit, battery cleaning…). Use the bulb supplied with the machine to drain the water as shown in the Figure 6-7.

⚠ CAUTION

DRAINED WATER MAY HAVE BEEN IN CONTACT WITH ACID AND MAY HAVE BECOME CORROSIVE. ENSURE THAT DRAINED WATER DOES NOT COME INTO CONTACT WITH SKIN OR CLOTHING. WEAR PROTECTIVE CLOTHING AND EYEWEAR WHEN WORKING WITH BATTERIES. NEUTRALIZE ANY BATTERY ACID SPILLS WITH BAKING SODA AND WATER.

NOTE: *The water that contacted a battery is classified as industrial waste and must be disposed of according to regulations in force.*

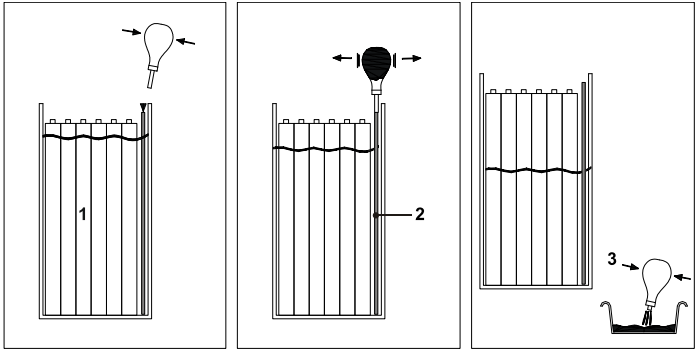

Figure 6-7. Draining the Water

1. Battery Container
2. Plunger
3. Bulb

https://truckmanualshub.com/

Battery Voltage and Electrolyte Specific Gravity

NOTE: *Voltage and specific gravity measures should not be performed after battery cells have been filled. These measures must be done after a complete charge, once the charger has been unplugged and after the battery has been standing for at least 15 minutes.*

- Open the filling cap of the cell on which the red cable is connected (B+).
- Using the hydrometer (supplied with the machine), take a quantity of electrolyte sufficient so that the float emerges. Ensure that the float top does not touch the rubber bulb or that the float does not stick by capillarity to the glass wall.
- Read the value as indicated in Figure 6-8.
- Return electrolyte in the cell and record the value in the battery service log.
- Measure the cell voltage and record the value in the battery service log.
- Repeat operation for each cell in sequence from B+ (Red Cable) to B- (Black cable).

NOTE: *If important disparities are noticed between gravity/voltage of different cells or if the gravity values are lower than 1.240kg/l (after a complete charge) contact JLG Product Support.*

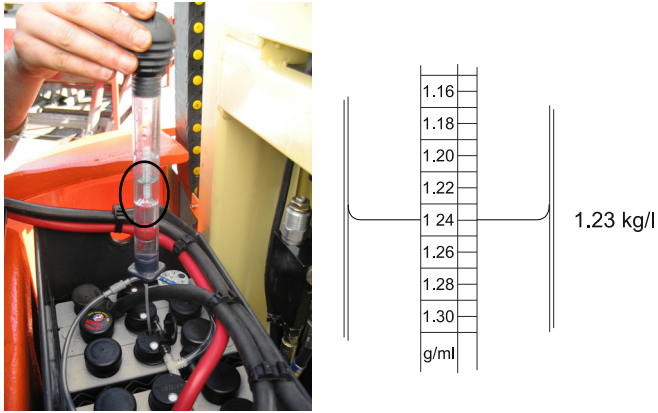

Figure 6-8. Measuring Electrolyte Specific Gravity

https://truckmanualshub.com/

Filling System Maintenance

Batteries filling circuit must be serviced once a year. Cleaning frequency must be increased in case of premature clogging of the filter or a reduction of water flow.

- Disconnect and clean the **filter (4)** (See Figure 6-5.) by reversing the water flow from the normal direction.
- Check hoses for flexibility. In case of hardening in the connections area, replace the hose.
- Check every fittings and connections for leakage.
- Check the caps individually. Ensure perfect mobility of the floats. In case of clogging, replace the cap.
- In any case, it is recommended to replace the caps every 2 or 3 years.

Use of a Battery in a Cold Environment

Low temperatures decrease battery capacity. The battery must be fully charged when the machine is operated in a cold environment.

Battery Not Working Continuously or Inactive Battery

A battery that is not used or used intermittently must be stored charged in a dry area away from freezing temperatures. A charge must be performed once a month.

- Disconnect the battery to insulate it electrically.
- Keep the top of the battery clean and dry to prevent self-discharge.

NOTICE

IF THE BATTERY IS NOT USED CONTINUOUSLY, IT MUST BE RECHARGED BEFORE USE AND AT LEAST ONCE A MONTH (EVEN IF THE ELECTROLYTE SPECIFIC GRAVITY MEASURES ARE HIGH).

BEFORE RETURNING TO SERVICE A BATTERY THAT REMAIN INACTIVE FOR A LONG PERIOD OF TIME, CHARGE THE BATTERY AND CHECK ELECTROLYTE LEVEL IN THE CELLS.

https://truckmanualshub.com/

Battery Troubleshooting

Symptoms	Probable causes	Solutions
Electrolyte overflow.	Filling done before the charge. Cells overfilled. Overcharge.	Fill battery cells after the charge. Never charge battery if electrolyte specific gravity is above 1,240 kg/l.
Inequal electrolyte specific gravity or electrolyte specific gravity too low.	Filling done before the charge. Loss of electrolyte due to overflow. Stratification of the electrolyte.	Fill battery cells after the charge. Perform an equalization charge. Contact your JLG Distributor/Product Support.
Low voltage in the cells in open circuit.	Electrolyte specific gravity too low. Short-circuit.	Refer to "electrolyte specific gravity too low". Clean battery top.
Battery cells temperature too high (over 113°F (45°C)).	Problem with the charger. Bad air circulation during charge. Cell weak or faulty Cells shorted.	Get the charger checked by a technician. Open access doors to batteries during charge. Reduce temperature of the area where the battery is charged (artificial ventilation). Change battery cell.
Battery incapable of supporting regular operation.	Battery under charged. Cell faulty. Faulty cable or connection. Battery at the end of its service life.	Perform an equalization charge. Replace faulty cell. Check wire condition and connection. Replace the battery.

https://truckmanualshub.com/

6.6 OIL LEVEL/OIL FILTER

NOTE: *Care should be taken not to introduce any impurities (dirt, water etc.) while cap or plug is removed.*

Hydraulic Oil Check

Lube Point - Hydraulic Tank
Reservoir Capacity: 6 liters
Lube - Hydraulic Oil (See Table 6-7)
Interval - Check Daily

NOTE: *Check oil level with the wheels fully steered to the left.*

1. Open the access door to the **hydraulic power unit (1)**.
2. Locate the **decal (2)** on the **tank (3)**.
3. The oil level in the tank must be within the MIN (minimum) and Max (maximum) **markings (4)** of the decal.
4. If additional oil is required, wipe all dirt and debris from the **filler**/**breather cap (5)** area, add proper grade of oil by using a funnel. Fill until oil level is between the MIN and MAX **markings (4)**.

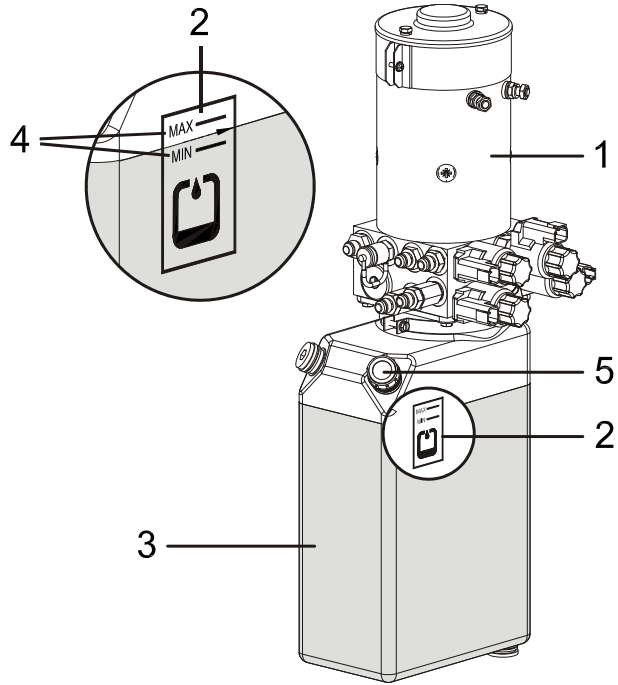

Figure 6-9. Hydraulic Oil Check

https://truckmanualshub.com/

Hydraulic Filter Replacement

Lube Point - Replaceable Element (JLG P/N: 930134)
Interval - After first 50 hours of operation and every 250 hours thereafter.

1. Turn machine power off at ground control station.
2. Open the access door to the **hydraulic power unit (1)**.
3. Wipe all dirt and debris from the **filter plug (2)** area.
4. Unscrew the **filter plug (2)**.
5. Install a screw (M6) in the **threaded hole (3)** of the filter and extract the **filter (4)**. Use a container to collect oil that can spill from the filter cavity.
6. Install a new filter (oil the filter O-ring before insertion) and the filter plug.
7. Perform a few swinging movements from the ground control station to bleed the air from the circuit.
8. Check oil level in the reservoir and adjust accordingly.

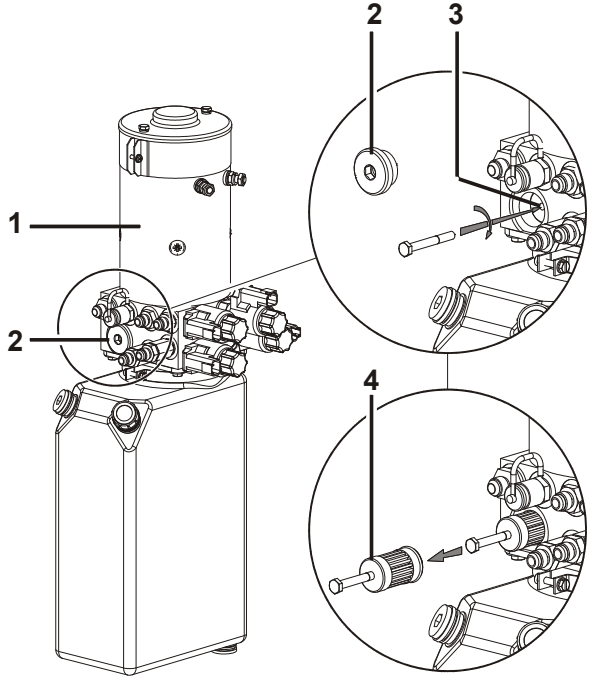

Figure 6-10. Hydraulic Filter Replacement

https://truckmanualshub.com/

6.7 TIRES & WHEELS

Tire Wear and Damage

Inspect tires periodically for wear or damage. Tires with worn edges or distorted profiles require replacement. Tires with significant damage in the tread area or side wall, require immediate evaluation before replacing machine into service.

Wheel and Tire Replacement

Replacement wheels must have the same diameter and profile as the original. Replacement tires must be the same size and rating as the tire being replaced.
Use of genuine parts is recommended.

Wheel Installation

It is extremely important to apply and maintain proper mounting torque.

⚠ WARNING

WHEEL LUG NUTS MUST BE INSTALLED AND MAINTAINED AT THE PROPER TORQUE TO PREVENT LOOSE WHEELS, BROKEN LUG NUTS, AND POSSIBLE SEPARATION OF WHEEL FROM THE AXLE. BE SURE TO USE ONLY THE LUG NUTS THAT MATCHED TO THE CONE ANGLE OF THE WHEEL.

Tighten the lug nuts to the proper torque to prevent wheels from coming loose. Use a torque wrench to tighten the fasteners. Over-tightening will result in breaking the lug nuts or permanently deforming the mounting holes in the wheels. The proper procedure for attaching wheels is as follow:

1. Start all lug nuts by hand to prevent cross threading. DO NOT use a lubricant on threads or nuts.
2. Tighten lug nuts in the following sequence.

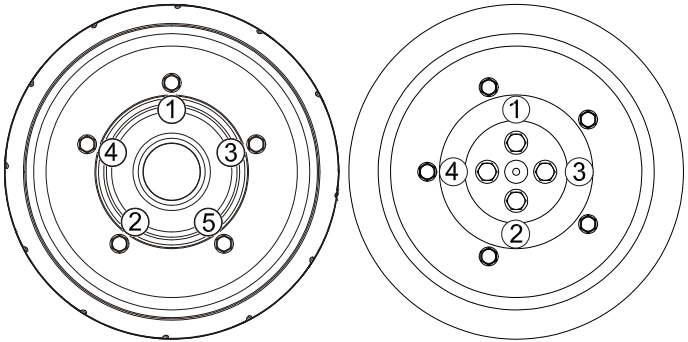

Studs A **Studs B**

Figure 6-11. Wheel Lug Nut Tightening Sequence

https://truckmanualshub.com/

3. The tightening of the lug nuts should be done in stages. Following the recommended sequence, tighten lug nut per wheel torque.

Table 6-9. Wheel Torque Chart

Torque Sequence Studs A		
1st Stage	2nd Stage	3rd Stage
28-42 N.m (20-30 ft.lbs)	91-112 N.m (65-80 ft.lbs)	142-163 N.m (105-120 ft.lbs)

Torque Sequence - Studs B		
1st Stage	2nd Stage	3rd Stage
25-35 N.m (18-25 ft.lbs)	70-84 N.m (51-62 ft.lbs)	120-140 N.m (88-103 ft.lbs)

4. Wheel lug nuts should be torqued after the first 50 hours of operation and after each wheel removal. Check torque every 3 month or 125 hours of operation.

6.8 LUBRICATION

NOTE: *Recommended lubricating intervals are based on machine operation under normal conditions. For machines used in multi-shift operations and/or exposed to hostile environments or conditions, lubrication frequencies must be increased accordingly.*

https://truckmanualshub.com/

Overload System Spring Washer (If Equipped)

Spring washer stack lubrication is important to maintain overload system accuracy. Coat the spring washers using a brush or by spraying.

Lube Points - Spring Washers
Capacity: A/R
Lube - D (See Table 6-6)
Interval - Every 125 hours of operation or after each cleaning.

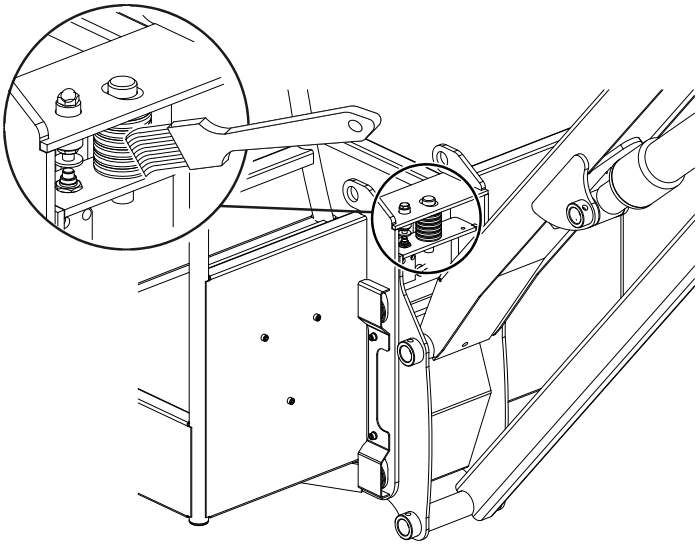

Figure 6-12. Overload System Spring Washer Lubrication

https://truckmanualshub.com/

Swing Bearing Race

Lube Points - 2 grease fittings
Capacity: A/R
Lube - A (See Table 6-6)
Interval - Every 250 hours of operation

1. Remove chassis hoods.
2. From ground control station, raise the mast to gain access to the turntable plate.
3. Locate the **access hole (1)** on the turntable plate.
4. Swing the structure to the right to gain access to the first **grease fitting (2)**.
5. Lubricate using a grease gun.
6. Swing the structure 180° to the left to gain access to the second grease fitting and lubricate.

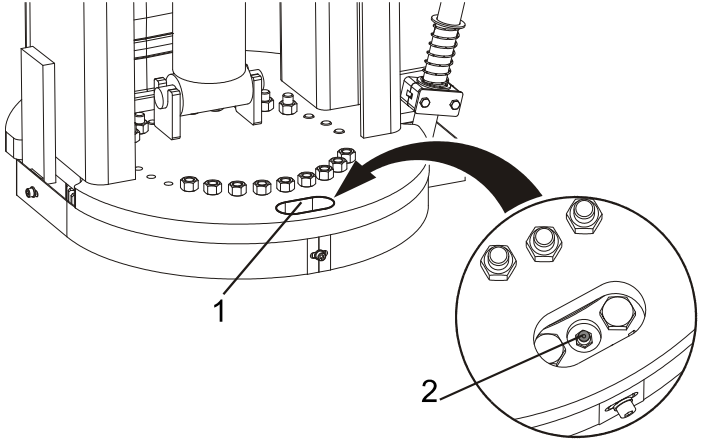

Figure 6-13. Swing Bearing Race Lubrication

https://truckmanualshub.com/

Swing Bearing Teeth

Lube Points - Coat each tooth
Capacity: A/R
Lube - B (See Table 6-6)
Interval - Every 1000 hours of operation

1. Remove chassis hoods.
2. From ground control station, raise the mast to gain access to the turntable plate.
3. Remove **bearing teeth covers (1)**.
4. Apply grease on teeth using a **brush (2)**.

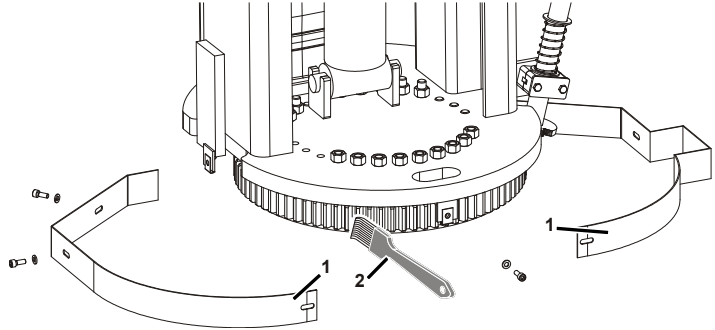

Figure 6-14. Swing Bearing Teeth lubrication

https://truckmanualshub.com/

Mast Profiles Races

Lube Points - Bronze spacers tracks
Capacity: A/R
Lube - A (See Table 6-6)
Interval - Every 125 hours of operation or after each cleaning

1. From ground control station, fully raise the mast.
2. Clean the inside walls of the mast profiles to remove the old grease.
3. Using a brush, lubricate the bronze spacer track.
4. Cycle the mast and complete lubrication as necessary.

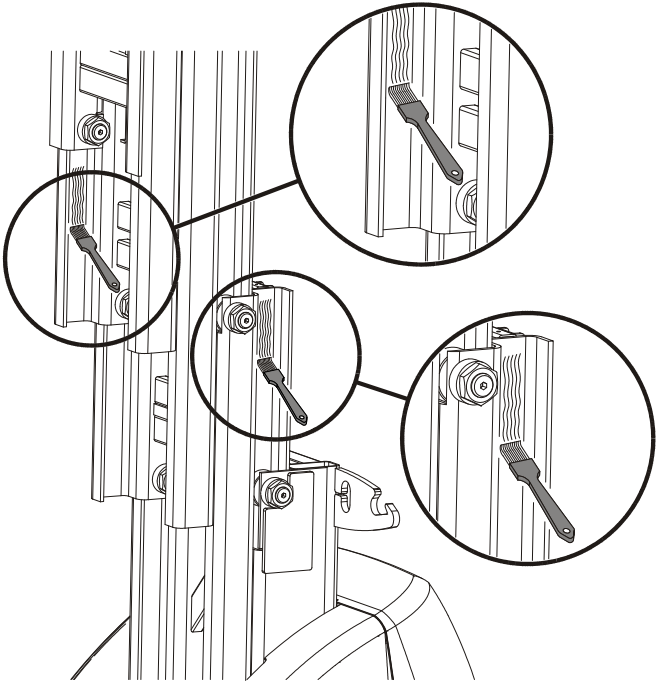

Figure 6-15. Mast Profiles Races Lubrication

https://truckmanualshub.com/

Lifting Chains

Lube Points - 6 chains
Capacity: A/R
Lube - C (See Table 6-6)
Interval - After the first 50 hours of operation and every 125 hours of operation (or every 30 days) thereafter.

Lubricant can be applied manually with a brush or by spraying. Apply lubricant longitudinally and transversally for the lubricant to reach the joints between the plates.

Table 6-10. Recommended Viscosity Grade

TEMPERATURE	ISO VISCOSITY GRADE
-15°C to 0°C (5°F to 32°F)	15 to 32 mm²/s (cSt)
0°C to 50°C (32°F to 122°F)	46 to 150 mm²/s (cSt)

https://truckmanualshub.com/

6.9 OVERLOAD SYSTEM VERIFICATION (IF EQUIPPED)

Interval - At least every 6 month of operation.

1. Turn machine power on at ground control station.
2. Place a 200kg load evenly distributed on platform floor:
   - No alarm should be triggered.
3. Add weight on platform (additional load not to exceed 30kg) until the overload warning is activated:
   - RED light indicators at both the ground and the platform control stations blink.
   - An audible alarm sounds.
   - All functions are disabled.
4. Remove additional load. Apply a slight force (**F**) on the platform:
   - Alarms stop.
5. If the overload warning is not activated after the addition of 30kg, have the overload system calibrated by a qualified technician before replacing machine into service.

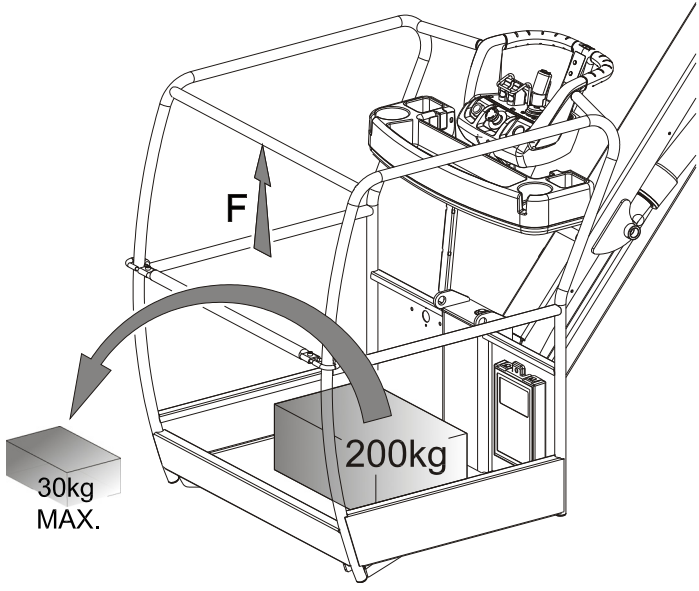

Figure 6-16. Overload System Verification

https://truckmanualshub.com/

6.10 TILT SENSOR VERIFICATION

Interval - At least every 6 month of operation.

1. Drive the machine on a known level surface.
2. Chock both rear wheels.
3. Remove chassis hoods and place a spirit level (digital display) on the chassis positioned in line w/chassis.
4. Using a jack of appropriate capacity, lift the front on the chassis. The tilt alarm must be activated within 0.2° below the value in Table 6-1.
5. Place the spirit level perpendicular to the chassis and lift either the left or the right side of the chassis. The tilt alarm must be activated within 0.2° below the value in Table 6-1.
6. If the tilt warning is not activated within the indicated angle values, the tilt sensor must be recalibrated by a qualified technician before replacing machine into service.

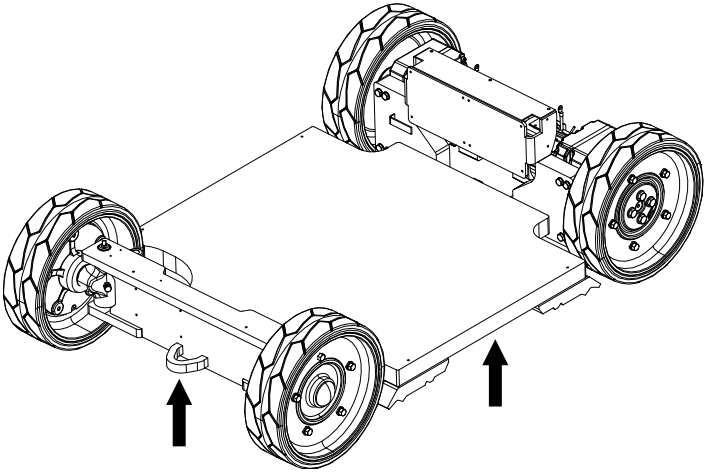

Figure 6-17. Jacking Points

https://truckmanualshub.com/

6.11 SUPPLEMENTAL INFORMATION

Vibrations emitted by these machines are not hazardous to an operator in the work platform. The equivalent continuous A-weighted sound pressure level at the work platform is less than 70dB(A).

6.12 DIAGNOSTIC TROUBLE CODES (DTC)

Introduction

This sub-section provides a reference for Diagnostic Trouble Codes (DTC) read from the Multifunction Digital Indicator (MDI). For more information on the MDI, refer to Section 3. For information on the locations of any limit switches/sensors, refer to Section 2.

DTC's are sorted in groups by the first two digits, which is also the system distress lamp flash code. To troubleshoot mutiple DTCs, start with the DTC with the higher first two digits. **If a correction is made during a check, conclude the check by cycling the machine power, using the emergency stop switch.**

6.13 DTC INDEX

DTC TABLE		PAGE
0-0	Help Comments	6-29
2-1	Power-Up	6-30
2-2	Platform Controls	6-31
2-3	Ground Controls	6-33
2-5	Function Prevented	6-35
3-1	Line Contactor Open Circuit	6-37
3-2	Line Contactor Short Circuit	6-37
3-3	Ground Output Driver	6-38
4-2	Thermal Limit	6-41
4-4	Battery Supply	6-43
4-6	Transmission and Drive System	6-45
6-6	Communication	6-46
6-7	Accessory	6-46
7-7	Electric Motor	6-47
8-1	Tilt Sensor	6-48
8-2	Platform Load Sense	6-49
8-6	Steering / Axle	6-49
9-9	Hardware	6-50

https://truckmanualshub.com/

6.14 DTC CHECK TABLES

0-0 Help Comments

DTC	FAULT MESSAGE	DESCRIPTION	CHECK
001	EVERYTHING OK	The normal help message in Platform Mode. Displays on the analyzer only.	
002	GROUND MODE OK	The normal help message in Ground Mode. Displays on the analyzer only.	
008	FUNCTIONS LOCKED OUT - SYSTEM POWERED DOWN	After 2 hours without activity, the Control System enters a low-power state to preserve battery charge. Displays on the analyzer only; the MDI's LED is blinking with the display Off.	• Normal operation should resume after a power cycle. Refer problem to a qualified JLG mechanic.
0010	RUNNING AT CUTBACK - OUT OF TRANSPORT POSITION	Drive speed is limited while the mast is elevated. Displays on the analyzer only.	• Fully stow the platform. • Check that the mast switches are securely mounted. Refer problem to a qualified JLG mechanic.
0022	DIFFERENT FUNCTION SELECTED & IGNORED	Two hydraulically powered movements simultaneously controlled.	• Release joysticks and allow to center. Refer problem to a qualified JLG mechanic.
0023	FUNCTION SELECTED BUT TRIGGER SWITCH OPEN	One of the drive joystick functions was activated, but the trigger switch was not.	• Release joystick and allow to center. • Check if the joystick is obstructed or jammed. • Check if the trigger switch is damaged. Refer problem to a qualified JLG mechanic.

https://truckmanualshub.com/

DTC	FAULT MESSAGE	DESCRIPTION	CHECK
0027	FUNCTION SELECTED BUT LIFT ENABLE SWITCH OPEN	The Mast or the Jib joystick was activated, but the enable switch was not.	• Release joystick and allow to center. • Check if the joystick is obstructed or jammed. • Check if the enable switch is damaged. Refer problem to a qualified JLG mechanic.
0028	DRIVE PREVENTED - TILTED & ELEVATED	Drive is prevented while the platform is not in transport position and the chassis is not level.	• Check that the machine is tilted. If so, lower the platform and reposition the machine to a level surface. • Fully stow the platform. • Check that the tilt sensor is securely mounted and its wire connected. Refer problem to a qualified JLG mechanic.
0029	RUNNING AT CREEP - MAX ELEVATION	Drive speed is limited while the mast if fully extended. Displays on the analyzer only.	• Fully stow the platform. • Check that the mast switches are securely mounted. Refer problem to a qualified JLG mechanic.

2-1 Power-Up

DTC	FAULT MESSAGE	DESCRIPTION	CHECK
211	POWER CYCLE	The normal help message is issued at each power cycle. Displays on the analyzer only.	Normal operation. No check necessary.
212	KEYSWITCH FAULTY	Both Platform and Ground Modes are selected simultaneously. Defaults to Ground Mode.	Refer problem to a qualified JLG mechanic.

https://truckmanualshub.com/

2-2 Platform Controls

DTC	FAULT MESSAGE	DESCRIPTION	CHECK
221	FUNCTION PROBLEM - HORN PERMANENTLY SELECTED	The horn switch was closed during power-up in platform mode.	• Check if the horn switch is damaged, obstructed or jammed. Refer problem to a qualified JLG mechanic.
224	FUNCTION PROBLEM - STEER LEFT PERMANENTLY SELECTED	The Steer Left Switch was closed during power-up in platform mode.	• Check if the steer left switch is obstructed or jammed. Refer problem to a qualified JLG mechanic.
225	FUNCTION PROBLEM - STEER RIGHT PERMANENTLY SELECTED	The Steer Right Switch was closed during power-up in platform mode.	• Check if the steer right switch is obstructed or jammed. Refer problem to a qualified JLG mechanic.
226	ACCELERATOR FAULTY - WIPER OUT OF RANGE	The joystick wiper signal input is outside the acceptable voltage range.	• Center joystick and check to see if a power cycle will clear DTC. Refer problem to a qualified JLG mechanic.
227	STEER SWITCHES FAULTY	The steer left and steer right inputs were closed simultaneously.	• Check if the steer switches are damaged, obstructed or jammed. Refer problem to a qualified JLG mechanic.
228	FUNCTION LOCKED OUT - ACCELERATOR NOT CENTERED	The joystick was not centered at power-up in platform mode.	• Release joystick and allow to center. • Check if the joystick is obstructed or jammed. Refer problem to a qualified JLG mechanic.

https://truckmanualshub.com/

DTC	FAULT MESSAGE	DESCRIPTION	CHECK
229	FUNCTION PROBLEM - TRIGGER PERMANENTLY CLOSED	The trigger switch was closed during power-up in platform mode.	• Check if the trigger switch is obstructed or jammed. Refer problem to a qualified JLG mechanic.
2210	TRIGGER CLOSED TOO LONG WHILE IN NEUTRAL	The trigger switch was closed for more than seven seconds while the joystick was centered.	• Check if the trigger switch is obstructed or jammed. Refer problem to a qualified JLG mechanic.
2233	FUNCTION ENABLE RELAY - INVALID SIGNAL	There is a problem with the Function Enable Relay.	Refer problem to a qualified JLG mechanic.
2240	LIFT ENABLE SWITCH PERMANENTLY SELECTED	The Lift Enable Switch was closed during power-up in platform mode.	• Check if the lift enable switch is obstructed or jammed. Refer problem to a qualified JLG mechanic.
2241	LIFT ENABLE SWITCH PERMANENTLY SELECTED	The Lift Enable Switch was closed during power-up in platform mode.	• Check if the lift enable switch is obstructed or jammed. Refer problem to a qualified JLG mechanic.
2242	FUNCTION LOCKED OUT - MAST JOYSTICK NOT CENTERED	The Mast Joystick was not centered at power-up in platform mode.	• Release joystick and allow to center. • Check if the joystick is obstructed or jammed. Refer problem to a qualified JLG mechanic.
2243	FUNCTION LOCKED OUT - JIB JOYSTICK NOT CENTERED	The Jib Joystick was not centered at power-up in platform mode.	• Release joystick and allow to center. • Check if the joystick is not obstructed or jammed. Refer problem to a qualified JLG mechanic.
2244	GATE LIMIT SWITCH - FAULTY	This DTC does not apply to the Toucan 10E.	Refer problem to a qualified JLG mechanic.

https://truckmanualshub.com/

2-3 Ground Controls

DTC	FAULT MESSAGE	DESCRIPTION	CHECK
233	FUNCTION PROBLEM - BRAKE RELEASE PERMANENTLY SELECTED	The Brake Release Switch was closed during power-up in ground mode.	• Check if the concerned switch is damaged, obstructed or jammed. Refer problem to a qualified JLG mechanic.
2310	FUNCTION PROBLEM - GROUND ENABLE PERMANENTLY SELECTED	The Ground Enable Switch was closed during power-up in ground mode.	• Check if the concerned switch is damaged, obstructed or jammed. Refer problem to a qualified JLG mechanic.
2368	FUNCTION PROBLEM - MAST LIFT UP PERMANENTLY SELECTED	The Mast Lift Up Switch was closed during power-up in ground mode.	• Check if the concerned switch is damaged, obstructed or jammed. Refer problem to a qualified JLG mechanic.
2369	FUNCTION PROBLEM - MAST LIFT DOWN PERMANENTLY SELECTED	The Mast Lift Down Switch was closed during power-up in ground mode.	• Check if the concerned switch is damaged, obstructed or jammed. Refer problem to a qualified JLG mechanic.
2370	FUNCTION PROBLEM - JIB LIFT UP PERMANENTLY SELECTED	The Jib Lift Up Switch was closed during power-up in ground mode.	• Check if the concerned switch is damaged, obstructed or jammed. Refer problem to a qualified JLG mechanic.
2371	FUNCTION PROBLEM - JIB LIFT DOWN PERMANENTLY SELECTED	The Jib Lift Down Switch was closed during power-up in ground mode.	• Check if the concerned switch is damaged, obstructed or jammed. Refer problem to a qualified JLG mechanic.

https://truckmanualshub.com/

DTC	FAULT MESSAGE	DESCRIPTION	CHECK
2372	FUNCTION PROBLEM - SWING LEFT PERMANENTLY SELECTED	The Swing Left Switch was closed during power-up in ground mode.	• Check if the concerned switch is damaged, obstructed or jammed. Refer problem to a qualified JLG mechanic.
2373	FUNCTION PROBLEM - SWING RIGHT PERMANENTLY SELECTED	The Swing Right Switch was closed during power-up in ground mode.	• Check if the concerned switch is damaged, obstructed or jammed. Refer problem to a qualified JLG mechanic.
2374	MAST SWITCH FAULTY	The Mast Lift Up and Down Switches are active simultaneously.	• Check if one of the concerned switches is damaged, obstructed or jammed. Refer problem to a qualified JLG mechanic.
2375	JIB SWITCH FAULTY	The Jib Lift Up and Down Switches are active simultaneously.	• Check if one of the concerned switches is damaged, obstructed or jammed. Refer problem to a qualified JLG mechanic.
2376	SWING SWITCH FAULTY	The Swing Right and Left Switches are active simultaneously.	• Check if one of the concerned switches is damaged, obstructed or jammed. Refer problem to a qualified JLG mechanic.
2377	CHAIN SLACK SWITCH DISAGREEMENT	A problem has been detected in this function.	Refer problem to a qualified JLG mechanic.
2378	MAIN MAST LIMIT SWITCH - DECOUPLED	The information from the Mast Limit Switches is not consistent.	• Check if one of the concerned limit switches is damaged, obstructed or jammed. Refer problem to a qualified JLG mechanic.

https://truckmanualshub.com/

DTC	FAULT MESSAGE	DESCRIPTION	CHECK
2379	MAIN MAST LIMIT SWITCH - NOT RESPONDING	The status of the Main Mast Limit Switch does not change while raising the mast.	• Check if the Main Mast limit switch (left switch) is damaged, obstructed or jammed. Refer problem to a qualified JLG mechanic.
2380	MAIN MAST LIMIT SWITCH - FAULTY	A problem has been detected in this function.	Refer problem to a qualified JLG mechanic.
2381	MAST LIMIT SWITCH 2 - FAULTY	A problem has been detected in this function.	Refer problem to a qualified JLG mechanic.
2382	FUNCTION PREVENTED - OVERSWING DETECTED	The structure is swung beyond the rear tires or further in either direction.	• If the structure is in line with the chassis, check the Drive Orientation Switch (on the turntable) for damage. Refer problem to a qualified JLG mechanic.

2-5 Function Prevented

DTC	FAULT MESSAGE	DESCRIPTION	CHECK
259	MODEL CHANGED - HYDRAULICS SUSPENDED - CYCLE EMS	The model selection has been changed.	Refer problem to a qualified JLG mechanic.
2516	DRIVE PREVENTED - ABOVE ELEVATION	DRIVE CUTOUT set to 1 (YES), and the mast is elevated.	• Fully stow the platform. Refer problem to a qualified JLG mechanic.

https://truckmanualshub.com/

DTC	FAULT MESSAGE	DESCRIPTION	CHECK
2538	FUNCTION PREVENTED - CHARGER CONNECTED	Functions are prevented while the vehicle is charging.	• Check if the charger is connected to off board power source and disconnect if desired. Refer problem to a qualified JLG mechanic.
2542	FUNCTION PREVENTED - BRAKES ELECTRONICALLY RELEASED FOR TOWING	Manual brake release mode is activated. Drive or lift is not possible.	• Push manual brake release switch again or cycle power to clear manual brake release mode. • Check if the brake release switch is damaged, obstructed or jammed. Refer problem to a qualified JLG mechanic.
2543	FUNCTION PREVENTED - CHAIN SLACK DETECTED	Slack was detected in the mast chain.	• Refer to section 4 for the required operations to clear the fault. • Check if the Chain Slack Limit Switches are damaged, obstructed or jammed. Refer problem to a qualified JLG mechanic.
2544	ALL FUNCTIONS PREVENTED - FAULTY MASTER VALVE ENABLE	A problem has been detected in this function.	Refer problem to a qualified JLG mechanic.
2545	ALL FUNCTION S PREVENTED - FAULTY SLAVE VALVE ENABLE	A problem has been detected in this function.	Refer problem to a qualified JLG mechanic.
2548	SYSTEM TEST MODE ACTIVE	The system is in test mode.	• Cycle power to clear test mode. Refer problem to a qualified JLG mechanic.

https://truckmanualshub.com/

3-1 Line Contactor Open Circuit

DTC	FAULT MESSAGE	DESCRIPTION	CHECK
311	OPEN CIRCUIT LINE CONTACTOR	There is a problem with the line contactor.	Refer problem to a qualified JLG mechanic.
312	CONTACTOR DRIVER PERMANENTLY OFF	There is a problem with the power module line contactor control.	Refer problem to a qualified JLG mechanic.

3-2 Line Contactor Short Circuit

DTC	FAULT MESSAGE	DESCRIPTION	CHECK
321	LINE CONTACTOR MISWIRED ON OR WELDED	There is a problem with the line contactor.	Refer problem to a qualified JLG mechanic.
322	CONTACTOR DRIVER PERMANENTLY ON	There is a problem with the power module line contactor control	Refer problem to a qualified JLG mechanic.
324	VALVE ENABLE DRIVER PERMANENTLY ON	A problem has been detected in this function.	Refer problem to a qualified JLG mechanic.

https://truckmanualshub.com/

3-3 Ground Output Driver

DTC	FAULT MESSAGE	DESCRIPTION	CHECK
3312	LEFT BRAKE - SHORT TO BATTERY	A problem has been detected in this function.	Refer problem to a qualified JLG mechanic.
3313	RIGHT BRAKE - SHORT TO BATTERY	A problem has been detected in this function.	Refer problem to a qualified JLG mechanic.
3314	LEFT BRAKE - OPEN CIRCUIT	A problem has been detected in this function.	Refer problem to a qualified JLG mechanic.
3315	RIGHT BRAKE - OPEN CIRCUIT	A problem has been detected in this function.	Refer problem to a qualified JLG mechanic.
33100	JIB LIFT UP VALVE - SHORT TO GROUND	A problem has been detected in this function.	Refer problem to a qualified JLG mechanic.
33101	JIB LIFT UP VALVE - OPEN CIRCUIT	A problem has been detected in this function.	Refer problem to a qualified JLG mechanic.
33102	JIB LIFT UP VALVE - SHORT TO BATTERY	A problem has been detected in this function.	Refer problem to a qualified JLG mechanic.
33103	JIB LIFT DOWN VALVE - SHORT TO GROUND	A problem has been detected in this function.	Refer problem to a qualified JLG mechanic.
33104	JIB LIFT DOWN VALVE - OPEN CIRCUIT	A problem has been detected in this function.	Refer problem to a qualified JLG mechanic.

https://truckmanualshub.com/

DTC	FAULT MESSAGE	DESCRIPTION	CHECK
33105	JIB LIFT DOWN VALVE - SHORT TO BATTERY	A problem has been detected in this function.	Refer problem to a qualified JLG mechanic.
33297	LEFT BRAKE - SHORT TO GROUND	A problem has been detected in this function.	Refer problem to a qualified JLG mechanic.
33304	RIGHT BRAKE - SHORT TO GROUND	A problem has been detected in this function.	Refer problem to a qualified JLG mechanic.
33355	STEER VALVE - SHORT TO GROUND	A problem has been detected in this function.	Refer problem to a qualified JLG mechanic.
33356	STEER VALVE - OPEN CIRCUIT	A problem has been detected in this function.	Refer problem to a qualified JLG mechanic.
33358	FLOW DIRECTION VALVE - SHORT TO GROUND	A problem has been detected in this function.	Refer problem to a qualified JLG mechanic.
33359	FLOW DIRECTION VALVE - OPEN CIRCUIT	A problem has been detected in this function.	Refer problem to a qualified JLG mechanic.
33362	SWING VALVE - OPEN CIRCUIT	A problem has been detected in this function.	Refer problem to a qualified JLG mechanic.
33365	MAST VALVE - OPEN CIRCUIT	A problem has been detected in this function.	Refer problem to a qualified JLG mechanic.
33366	PROPORTIONAL RELIEF VALVE - SHORT TO BATTERY	A problem has been detected in this function.	Refer problem to a qualified JLG mechanic.

https://truckmanualshub.com/

DTC	FAULT MESSAGE	DESCRIPTION	CHECK
33367	PROPORTIONAL RELIEF VALVE - SHORT TO GROUND	A problem has been detected in this function.	Refer problem to a qualified JLG mechanic.
33368	PROPORTIONAL RELIEF VALVE - OPEN CIRCUIT	A problem has been detected in this function.	Refer problem to a qualified JLG mechanic.
33376	MASTER MODULE OUTPUTS - SHORT TO GROUND	A problem has been detected in this function.	Refer problem to a qualified JLG mechanic.
33380	OVERLOAD LIGHTS - SHORT TO BATTERY	A problem has been detected in this function.	Refer problem to a qualified JLG mechanic.
33381	MASTER MODULE OUTPUTS - SHORT TO BATTERY	A problem has been detected in this function.	Refer problem to a qualified JLG mechanic.
33382	SLAVE MODULE OUTPUTS - SHORT TO BATTERY	A problem has been detected in this function.	Refer problem to a qualified JLG mechanic.
33383	BEACON LIGHT - OPEN CIRCUIT	A problem has been detected in this function.	Refer problem to a qualified JLG mechanic.
33384	BEACON LIGHT - SHORT TO GROUND	A problem has been detected in this function.	Refer problem to a qualified JLG mechanic.
33386	SLAVE MODULE OUTPUTS - SHORT TO GROUND	A problem has been detected in this function.	Refer problem to a qualified JLG mechanic.

https://truckmanualshub.com/

DTC	FAULT MESSAGE	DESCRIPTION	CHECK
33387	OVERLOAD LIGHT - SHORT TO GROUND	A problem has been detected in this function.	Refer problem to a qualified JLG mechanic.
33388	OVERLOAD LIGHT - OPEN CIRCUIT	A problem has been detected in this function.	Refer problem to a qualified JLG mechanic.
33389	RIGHT BRAKE RETURN - SHORT TO GROUND	A problem has been detected in this function.	Refer problem to a qualified JLG mechanic.
33390	LEFT BRAKE RETURN - SHORT TO GROUND	A problem has been detected in this function.	Refer problem to a qualified JLG mechanic.
33391	RIGHT BRAKE RETURN - SHORT TO BATTERY	A problem has been detected in this function.	Refer problem to a qualified JLG mechanic.
33392	LEFT BRAKE RETURN - SHORT TO BATTERY	A problem has been detected in this function.	Refer problem to a qualified JLG mechanic.

4-2 Thermal Limit

DTC	FAULT MESSAGE	DESCRIPTION	CHECK
426	MASTER MODULE TEMPERATURE - OUT OF RANGE	The Master Module (right controller) temperature sensor is out of the permitted range.	Refer problem to a qualified JLG mechanic.

https://truckmanualshub.com/

DTC	FAULT MESSAGE	DESCRIPTION	CHECK
427	SLAVE MODULE TEMPERATURE - OUT OF RANGE	The Slave Module (left controller) temperature sensor is out of the permitted range.	Refer problem to a qualified JLG mechanic.
428	MASTER MODULE TOO HOT - PLEASE WAIT	The Master Module (right controller) has reached thermal cutout.	• Power down and allow to cool. • Do not operate in ambients over 60°C (140°F). Refer problem to a qualified JLG mechanic.
429	SLAVE MODULE TOO HOT - PLEASE WAIT	The Slave Module (left controller) has reached thermal cutout.	• Power down and allow to cool. • Do not operate in ambients over 60°C (140°F). Refer problem to a qualified JLG mechanic.
4210	RIGHT DRIVE MOTOR TOO HOT - PLEASE WAIT	The right drive motor temperature is too high.	• Power down and allow to cool. • Do not operate in ambients over 60°C (140°F). Refer problem to a qualified JLG mechanic.
4211	LEFT DRIVE MOTOR TOO HOT - PLEASE WAIT	The left drive motor temperature is too high.	• Power down and allow to cool. • Do not operate in ambients over 60°C (140°F). Refer problem to a qualified JLG mechanic.
4212	RIGHT DRIVE MOTOR TEMPERATURE - OUT OF RANGE	A problem has been detected in this function.	Refer problem to a qualified JLG mechanic.

https://truckmanualshub.com/

DTC	FAULT MESSAGE	DESCRIPTION	CHECK
4213	LEFT DRIVE MOTOR TEMPERATURE - OUT OF RANGE	A problem has been detected in this function.	Refer problem to a qualified JLG mechanic.

4-4 Battery Supply

DTC	FAULT MESSAGE	DESCRIPTION	CHECK
441	BATTERY VOLTAGE TOO LOW - SYSTEM SHUTDOWN	A problem has been detected with the batteries or power module.	• Recharge batteries. • Check for damaged batteries, battery cables or connections. • Check battery charger function. Be sure to observe indicators for at least 30 seconds. Refer problem to a qualified JLG mechanic.
442	BATTERY VOLTAGE TOO HIGH - SYSTEM SHUTDOWN	A problem has been detected with the batteries or the power module.	May be due to improper battery charging or incorrect voltage batteries being used. Refer problem to a qualified JLG mechanic.

https://truckmanualshub.com/

DTC	FAULT MESSAGE	DESCRIPTION	CHECK
4417	BATTERY POWER LOW	The batteries are discharged.	• Recharge batteries. • Check for damaged batteries, battery cables or connections. • Check battery charger function. Be sure to observe indicators for at least 30 seconds. Refer problem to a qualified JLG mechanic.
4418	MASTER MODULE VOLTAGE OUT OF RANGE	A problem has been detected with the batteries or power module.	• Recharge batteries. • Check for damaged batteries, battery cables or connections. • Check battery charger function. Be sure to observe indicators for at least 30 seconds. Refer problem to a qualified JLG mechanic.
4419	SLAVE MODULE VOLTAGE OUT OF RANGE	A problem has been detected with the batteries or power module.	• Recharge batteries. • Check for damaged batteries, battery cables or connections. • Check battery charger function. Be sure to observe indicators for at least 30 seconds. Refer problem to a qualified JLG mechanic.

https://truckmanualshub.com/

DTC	FAULT MESSAGE	DESCRIPTION	CHECK
4420	BATTERY DEEPLY DISCHARGED	The batteries are deeply discharged.	• Recharge batteries. • Check for damaged batteries, battery cables or connections. • Check battery charger function. Be sure to observe indicators for at least 30 seconds. Refer problem to a qualified JLG mechanic.

4-6 Transmission and Drive System

DTC	FAULT MESSAGE	DESCRIPTION	CHECK
4610	RIGHT SPEED SENSOR - NOT RESPONDING PROPERLY	A problem has been detected with the right drive motor speed sensor (encoder).	Refer problem to a qualified JLG mechanic.
4611	LEFT SPEED SENSOR - NOT RESPONDING PROPERLY	A problem has been detected with the left drive motor speed sensor (encoder).	Refer problem to a qualified JLG mechanic.
4612	RIGHT SPEED SENSOR - RPM HIGH	Machine overspeed has been detected on the right motor.	• The machine should be driven at limited speed in ramps. Refer problem to a qualified JLG mechanic.
4613	LEFT SPEED SENSOR - RPM HIGH	Machine overspeed has been detected on the left motor.	• The machine should be driven at limited speed in ramps. Refer problem to a qualified JLG mechanic.

https://truckmanualshub.com/

6-6 Communication

DTC	FAULT MESSAGE	DESCRIPTION	CHECK
6632	CANBUS FAILURE - MASTER MODULE	The control system failed to receive messages from the Master Module (right controller).	Refer problem to a qualified JLG mechanic.
6633	CANBUS FAILURE - SLAVE MODULE	The control system failed to receive messages from the Slave Module (left controller).	Refer problem to a qualified JLG mechanic.
6634	CANBUS COMM LOST	The platform module failed to receive messages from both the master and the slave modules.	Refer problem to a qualified JLG mechanic.

6-7 Accessory

DTC	FAULT MESSAGE	DESCRIPTION	CHECK
672	FUNCTIONS CUTOUT - SOFT TOUCH DETECTED	An obstacle has been detected by the soft touch device (if equipped).	• Clear the obstacle. Refer problem to a qualified JLG mechanic.
673	FUNCTIONS CUTOUT - GATE OPEN DETECTED	This DTC does not apply to the Toucan 10E.	Refer problem to a qualified JLG mechanic.

https://truckmanualshub.com/

7-7 Electric Motor

DTC	FAULT MESSAGE	DESCRIPTION	CHECK
7721	MASTER MODULE CAPACITOR BANK FAULT	There is a problem with the Master Module (right controller).	Refer problem to a qualified JLG mechanic.
7722	SLAVE MODULE CAPACITOR BANK FAULT	There is a problem with the Slave Module (left controller).	Refer problem to a qualified JLG mechanic.
7723	RIGHT MOTOR FEEDBACK FAILURE	The right motor voltage feedback circuits are damaged (Master Module).	Refer problem to a qualified JLG mechanic.
7724	LEFT MOTOR FEEDBACK FAILURE	The left motor voltage feedback circuits are damaged (Slave Module).	Refer problem to a qualified JLG mechanic.
7725	PUMP MOTOR - NOT RESPONDING	The pump motor feedback is not responding when the pump is being driven (by the Master Module).	Refer problem to a qualified JLG mechanic.
7726	RIGHT MOTOR OUTPUT-OUT OF RANGE HIGH	The right motor voltage output is higher than expected (Master Module).	Refer problem to a qualified JLG mechanic.
7727	LEFT MOTOR OUTPUT-OUT OF RANGE HIGH	The left motor voltage output is higher than expected (Slave Module).	Refer problem to a qualified JLG mechanic.
7728	RIGHT MOTOR OUTPUT-OUT OF RANGE LOW	The right motor voltage output is lower than expected (Master Module).	Refer problem to a qualified JLG mechanic.

https://truckmanualshub.com/

DTC	FAULT MESSAGE	DESCRIPTION	CHECK
7729	LEFT MOTOR OUTPUT-OUT OF RANGE LOW	The left motor voltage output is lower than expected (Slave Module).	Refer problem to a qualified JLG mechanic.
7730	PUMP MOTOR OUTPUT-OUT OF RANGE HIGH	The pump motor voltage output is higher than expected (driven by the Master Module).	Refer problem to a qualified JLG mechanic.
7731	PUMP MOTOR OUTPUT-OUT OF RANGE LOW	The pump motor voltage output is lower than expected (driven by the Master Module).	Refer problem to a qualified JLG mechanic.
7732	STALLED RIGHT MOTOR	The right motor has been detected stalled.	• Ensure vehicle is not stuck on something preventing movement. Refer problem to a qualified JLG mechanic.
7733	STALLED LEFT MOTOR	The left motor has been detected stalled.	• Ensure vehicle is not stuck on something preventing movement. Refer problem to a qualified JLG mechanic.

8-1 Tilt Sensor

DTC	FAULT MESSAGE	DESCRIPTION	CHECK
815	CHASSIS TILT SENSOR DISAGREEMENT	Tilt sensor inputs to the control system are not the same state.	Refer problem to a qualified JLG mechanic.

https://truckmanualshub.com/

8-2 Platform Load Sense

DTC	FAULT MESSAGE	DESCRIPTION	CHECK
825	LLS HAS NOT BEEN CALIBRATED	The Load Sensing System has not been calibrated.	Refer problem to a qualified JLG mechanic.
829	FUNCTIONS CUTOUT - PLATFORM OVERLOADED	The platform is overloaded and functions are restricted.	• Unload the platform. • Check if the overload switch is obstructed or jammed. Refer problem to a qualified JLG mechanic.
8210	OVERLOAD SENSOR ERROR	Inconsistency in the overload sensor information.	• Check if the overload switch is damaged. Refer problem to a qualified JLG mechanic.

8-6 Steering/Axle

DTC	FAULT MESSAGE	DESCRIPTION	CHECK
8664	STEER SENSOR - OUT OF RANGE HIGH	Invalid signal from the steer sensor.	• Check the steer sensor for damage. Refer problem to a qualified JLG mechanic.
8665	STEER SENSOR - OUT OF RANGE LOW	Invalid signal from the steer sensor.	• Check the steer sensor for damage. • Check the steer sensor is securely mounted. Refer problem to a qualified JLG mechanic.

https://truckmanualshub.com/

DTC	FAULT MESSAGE	DESCRIPTION	CHECK
8666	STEER SENSOR - DECOUPLED	Invalid signal from the steer sensor.	• Check the steer sensor for damage. • Check that the steer sensor is securely mounted. Refer problem to a qualified JLG mechanic.
8667	STEER SENSOR - NOT RESPONDING	Invalid signal from the steer sensor.	• Check the steer sensor for damage. • Check that the steer sensor is securely mounted. Refer problem to a qualified JLG mechanic.
8668	STEER SENSOR - NOT CALIBRATED	The steering sensor has not been calibrated.	Refer problem to a qualified JLG mechanic.

9-9 Hardware

DTC	FAULT MESSAGE	DESCRIPTION	CHECK
9992	MASTER MODULE A/D FAILURE	There is an internal error in the Master Module (right controller).	• Cycle power to clear the fault. Refer problem to a qualified JLG mechanic.
9993	SLAVE MODULE A/D FAILURE	There is an internal error in the Slave Module (left controller).	• Cycle power to clear the fault. Refer problem to a qualified JLG mechanic.
9994	MASTER MODULE EEPROM FAILURE	There is an internal error in the Master Module (right controller).	• Cycle power to clear the fault. Refer problem to a qualified JLG mechanic.

https://truckmanualshub.com/

DTC	FAULT MESSAGE	DESCRIPTION	CHECK
9995	SLAVE MODULE EEPROM FAILURE	There is an internal error in the Slave Module (left controller).	• Cycle power to clear the fault. Refer problem to a qualified JLG mechanic.
9996	MASTER MODULE MEMORY FAILURE	There is an internal error in the Master Module (right controller).	• Cycle power to clear the fault. Refer problem to a qualified JLG mechanic.
9997	SLAVE MODULE MEMORY FAILURE	There is an internal error in the Slave Module (left controller).	• Cycle power to clear the fault. Refer problem to a qualified JLG mechanic.
9998	MASTER MODULE PROTECTION FAILURE	There is an internal error in the Master Module (right controller).	• Cycle power to clear the fault. Refer problem to a qualified JLG mechanic.
9999	SLAVE MODULE PROTECTION FAILURE	There is an internal error in the Slave Module (left controller).	• Cycle power to clear the fault. Refer problem to a qualified JLG mechanic.
99100	MASTER MODULE FAILURE - CHECK POWER CIRCUITS OR MOSFET SHORT CIRCUIT	A short circuit on the power outputs of the Master Module (right controller) has been detected.	• Cycle power to clear the fault. Refer problem to a qualified JLG mechanic.
99101	SLAVE MODULE FAILURE - CHECK POWER CIRCUITS OR MOSFET SHORT CIRCUIT	A short circuit on the power outputs of the Slave Module (left controller) has been detected.	• Cycle power to clear the fault. Refer problem to a qualified JLG mechanic.
99102	MASTER MODULE WATCHDOG RESET	There is an internal error in the Master Module (right controller).	• Cycle power to clear the fault. Refer problem to a qualified JLG mechanic.

https://truckmanualshub.com/

DTC	FAULT MESSAGE	DESCRIPTION	CHECK
99103	SLAVE MODULE WATCHDOG RESET	There is an internal error in the Slave Module (left controller).	• Cycle power to clear the fault. Refer problem to a qualified JLG mechanic.
99104	MASTER MODULE WATCHDOG2 RESET	There is an internal error in the Master Module (right controller).	• Cycle power to clear the fault. Refer problem to a qualified JLG mechanic.
99105	SLAVE MODULE WATCHDOG2 RESET	There is an internal error in the Slave Module (left controller).	• Cycle power to clear the fault. Refer problem to a qualified JLG mechanic.
99106	MASTER MODULE RAM FAILURE	There is an internal error in the Master Module (right controller).	• Cycle power to clear the fault. Refer problem to a qualified JLG mechanic.
99107	SLAVE MODULE RAM FAILURE	There is an internal error in the Slave Module (left controller).	• Cycle power to clear the fault. Refer problem to a qualified JLG mechanic.
99108	MASTER MODULE - INTERNAL ERROR	There is an internal error in the Master Module (right controller).	• Cycle power to clear the fault. Refer problem to a qualified JLG mechanic.
99109	SLAVE MODULE - INTERNAL ERROR	There is an internal error in the Slave Module (left controller).	• Cycle power to clear the fault. Refer problem to a qualified JLG mechanic.
99110	MASTER MODULE - INTERNAL ERROR	There is an internal error in the Master Module (right controller).	• Cycle power to clear the fault. Refer problem to a qualified JLG mechanic.
99111	SLAVE MODULE - INTERNAL ERROR	There is an internal error in the Slave Module (left controller).	• Cycle power to clear the fault. Refer problem to a qualified JLG mechanic.

https://truckmanualshub.com/

DTC	FAULT MESSAGE	DESCRIPTION	CHECK
99112	MASTER MODULE - INTERNAL ERROR	There is an internal error in the Master Module (right controller).	• Cycle power to clear the fault. Refer problem to a qualified JLG mechanic.
99114	MASTER MODULE - INTERNAL ERROR	There is an internal error in the Master Module (right controller).	• Cycle power to clear the fault. Refer problem to a qualified JLG mechanic.
99115	SLAVE MODULE - INTERNAL ERROR	There is an internal error in the Slave Module (left controller).	• Cycle power to clear the fault. Refer problem to a qualified JLG mechanic.
99116	MASTER MODULE - INTERNAL ERROR	There is an internal error in the Master Module (right controller).	• Cycle power to clear the fault. Refer problem to a qualified JLG mechanic.
99117	SLAVE MODULE - INTERNAL ERROR	There is an internal error in the Slave Module (left controller).	• Cycle power to clear the fault. Refer problem to a qualified JLG mechanic.
99118	MASTER MODULE - INTERNAL ERROR	There is an internal error in the Master Module (right controller).	• Cycle power to clear the fault. Refer problem to a qualified JLG mechanic.
99119	SLAVE MODULE - INTERNAL ERROR	There is an internal error in the Slave Module (left controller).	• Cycle power to clear the fault. Refer problem to a qualified JLG mechanic.
99120	MASTER MODULE - INTERNAL ERROR	There is an internal error in the Master Module (right controller).	• Cycle power to clear the fault. Refer problem to a qualified JLG mechanic.
99121	SLAVE MODULE - INTERNAL ERROR	There is an internal error in the Slave Module (left controller).	• Cycle power to clear the fault. Refer problem to a qualified JLG mechanic.

https://truckmanualshub.com/

DTC	FAULT MESSAGE	DESCRIPTION	CHECK
99122	MASTER MODULE - INTERNAL ERROR	There is an internal error in the Master Module (right controller).	• Cycle power to clear the fault. Refer problem to a qualified JLG mechanic.
99123	SLAVE MODULE - INTERNAL ERROR	There is an internal error in the Slave Module (left controller).	• Cycle power to clear the fault. Refer problem to a qualified JLG mechanic.
99124	MASTER MODULE - INTERNAL ERROR	There is an internal error in the Master Module (right controller).	• Cycle power to clear the fault. Refer problem to a qualified JLG mechanic.
99125	MASTER MODULE - INTERNAL ERROR	There is an internal error in the Master Module (right controller).	• Cycle power to clear the fault. Refer problem to a qualified JLG mechanic.
99126	MASTER MODULE - INTERNAL ERROR	There is an internal error in the Master Module (right controller).	• Cycle power to clear the fault. Refer problem to a qualified JLG mechanic.
99127	MASTER MODULE - INTERNAL ERROR	There is an internal error in the Master Module (right controller).	• Cycle power to clear the fault. Refer problem to a qualified JLG mechanic.
99128	MASTER MODULE - INTERNAL ERROR	There is an internal error in the Master Module (right controller).	• Cycle power to clear the fault. Refer problem to a qualified JLG mechanic.
99129	MASTER MODULE - INTERNAL ERROR	There is an internal error in the Master Module (right controller).	• Cycle power to clear the fault. Refer problem to a qualified JLG mechanic.
99130	MASTER MODULE - INTERNAL ERROR	There is an internal error in the Master Module (right controller).	• Cycle power to clear the fault. Refer problem to a qualified JLG mechanic.

https://truckmanualshub.com/

DTC	FAULT MESSAGE	DESCRIPTION	CHECK
99131	MASTER MODULE - INTERNAL ERROR	There is an internal error in the Master Module (right controller).	• Cycle power to clear the fault. Refer problem to a qualified JLG mechanic.
99132	MASTER MODULE - INTERNAL ERROR	There is an internal error in the Master Module (right controller).	• Cycle power to clear the fault. Refer problem to a qualified JLG mechanic.
99133	MASTER MODULE - INTERNAL ERROR	There is an internal error in the Master Module (right controller).	• Cycle power to clear the fault. Refer problem to a qualified JLG mechanic.

https://truckmanualshub.com/

https://truckmanualshub.com/

SECTION 7. INSPECTION AND REPAIR LOG

Type of machine: _____ Machine Serial Number: _____

Table 7-1. Inspection and Repair Log

Date	Comments

https://truckmanualshub.com/

Table 7-1. Inspection and Repair Log

Date	Comments

Name: _____

Signature: _____

https://truckmanualshub.com/

PROPOSITION 65 WARNING

- **Battery posts, terminals and related accessories contain lead and lead compounds, chemicals known to the State of California to cause cancer and reproductive harm.**
- **Batteries also contain other chemicals known to the State of California to cause cancer.**
- **Wash hands after handling.**

https://truckmanualshub.com/

An Oshkosh Corporation Company

Corporate Office
JLG Industries, Inc.
1 JLG Drive
McConnellsburg PA. 17233-9533
USA
(717) 485-5161
(717) 485-6417

JLG Worldwide Locations

JLG Industries (Australia) P.O. Box 5119 11 Bolwarra Road Port Macquarie N.S.W. 2444 Australia +61 2 65 811111 +61 2 65 810122	JLG Latino Americana Ltda. Rua Eng. Carlos Stevenson, 80-Suite 71 13092-310 Campinas-SP Brazil +55 19 3295 0407 +55 19 3295 1025	JLG Industries (UK) Ltd Bentley House Bentley Avenue Middleton Greater Manchester M24 2GP - England +44 (0)161 654 1000 +44 (0)161 654 1001	JLG France SAS Z.I. Guillaume mon Amy BP 20 47400 Fauillet France +33 (0)5 53 88 31 70 +33 (0)5 53 88 31 79
JLG Deutschland GmbH Max-Planck-Str. 21 D - 27721 Ritterhude - Ihlpohl Germany +49 (0)421 69 350 20 +49 (0)421 69 350 45	JLG Equipment Services Ltd. Rm 1107 Landmark North 39 Lung Sum Avenue Sheung Shui N. T. Hong Kong (852) 2639 5783 (852) 2639 5797	JLG Industries (Italia) s.r.l. Via Po. 22 20010 Pregnana Milanese - MI Italy +39 029 359 5210 +39 029 359 5845	Oshkosh-JLG Singapore Technology Equipment Pte Ltd 29 Tuas Ave 4, Jurong Industrial Estate Singapore, 639379 +65-6591 9030 +65-6591 9031
JLG Polska Ul. Krolewska 00-060 Warsawa Poland +48 (0)914 320 245 +48 (0)914 358 200	JLG Industries (Scotland) Wright Business Centre 1 Lonmay Road Queenslie, Glasgow G33 4EL Scotland +44 (0)141 781 6700 +44 (0)141 773 1907	Plataformas Elevadoras JLG Iberica, S.L. Trapadella, 2 P.I. Castellbisbal Sur 08755 Castellbisbal, Barcelona Spain +34 93 772 4700 +34 93 771 1762	JLG Sverige AB Enkopingsvagen 150 Box 704 SE - 176 27 Jarfalla Sweden +46 (0)850 659 500 +46 (0)850 659 534

www.jlg.com