https://truckmanualshub.com/

LM180E

3-Unit Reel Mower

Parts catalog

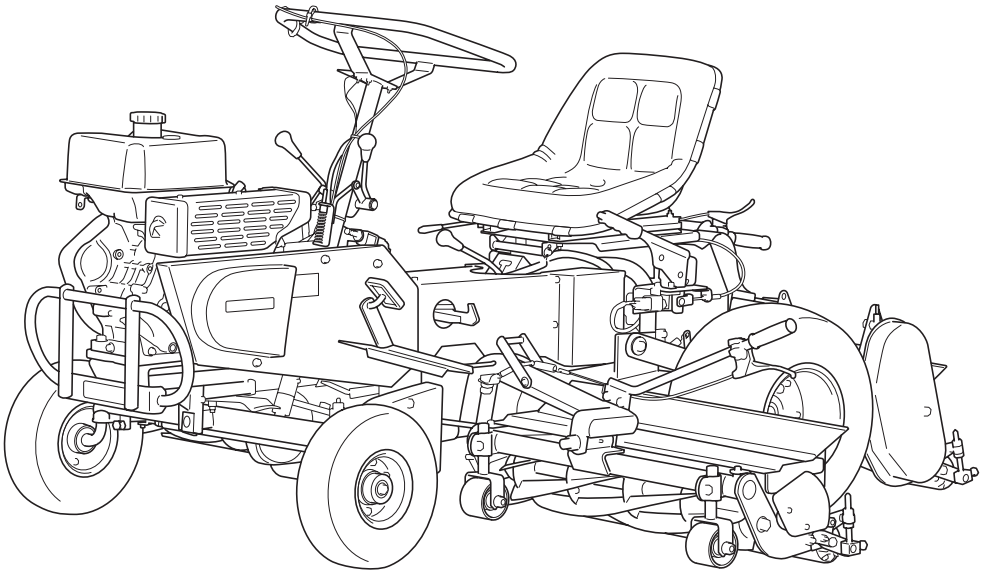

BARONESS®

Quality on Demand

Serial No.LM180E : 21021-

Ver.1.2

https://truckmanualshub.com/

Greeting

Thank you for purchasing Baroness machine.
This machine has been shipped from the factory after comprehensive test runs and inspections. However, the optimum performance of the machine depends on how you use and maintain it, including routine inspections, adjustments, and fuel supplies before and after the operation.
We hope you will use the machine safely, and take advantage of its best performance.

Note

(For inquiry about this machine)
Since the type of machine may be changed sequentially, inform us of the type and the serial number.
The information described in this manual is subject to change without prior notice.
When replacing parts, be sure to use Baroness parts or parts designated by Kyoeisha.
Note that the Baroness product warranty may not apply to defects caused by the use of parts from other companies.
(For ordering parts)
For prevention of delivery of wrong parts, be sure to inform us of the code number and the part name.

Example:	Code No.	Part Name	Qty
	K0200100002	WASHER, SPRING M10	8

<Indication of the connecting point shown on the other page>

(Example and description)
The following indication shows the connecting point of the part shown on the other page.

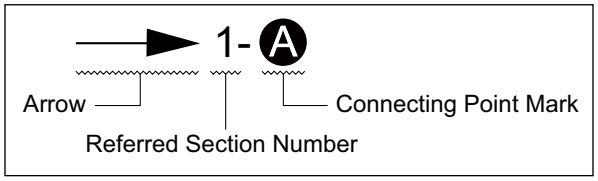

→ 1- Ⓐ : Refer to the point Ⓐ in the illustration of the section No.1

→ 2- Ⓑ : Refer to the point Ⓑ in the illustration of the section No.2

https://truckmanualshub.com/

Contents

1.Frame section A.....3

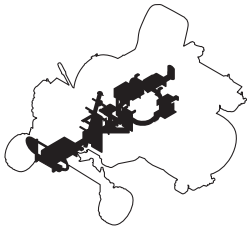

2.Frame section B (Seat).....4

3.Frame section C 5

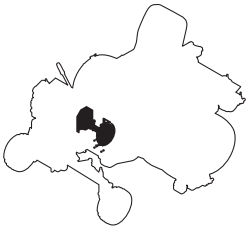

4.Frame section D 6

5.Tension pulley section A 8

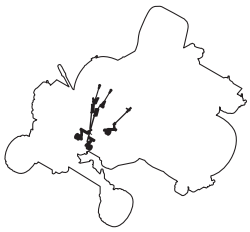

6.Tension pulley section B ...10

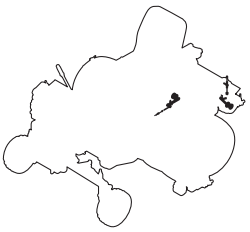

7.Handle section.....11

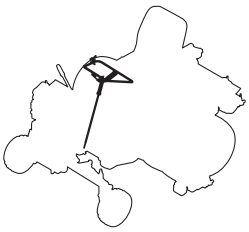

8.Belt cover section 12

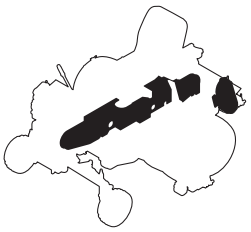

9.Front wheel section 14

10.Rear wheel & Transmission section 16

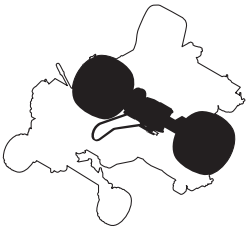

11.Transmission section A ...17

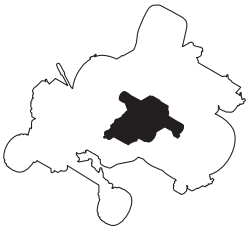

12.Transmission section B...19

13.Engine section 21

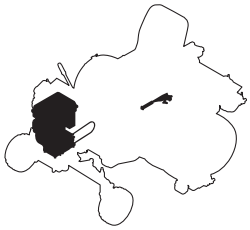

14.Left & Right mower lifting arm section 23

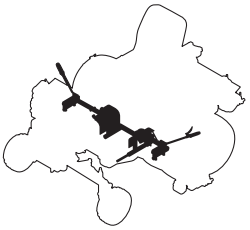

15.Rear mower lifting arm section 25

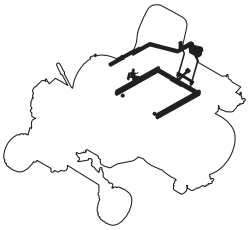

16.Left mower section A 27

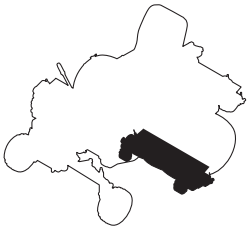

17.Left mower section B 28

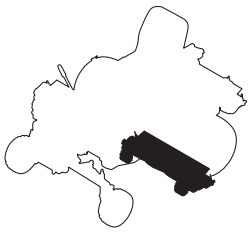

18.Left mower section C.....30

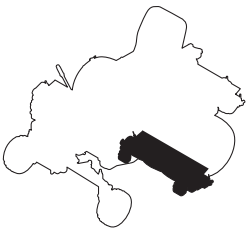

19.Left mower section D.....31

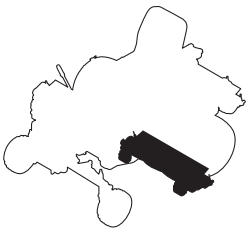

20.Right mower section A....32

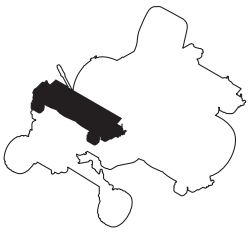

https://truckmanualshub.com/

21.Right mower section B....33

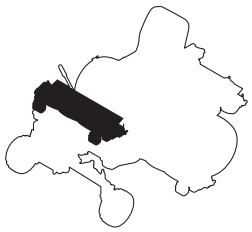

22.Right mower section C ...35

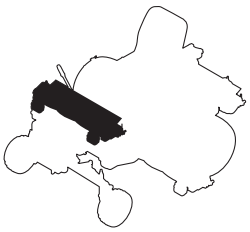

23.Right mower section D ...36

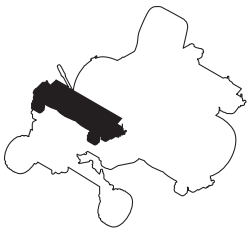

24.Rear mower section A.....37

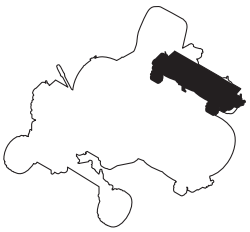

25.Rear mower section B 38

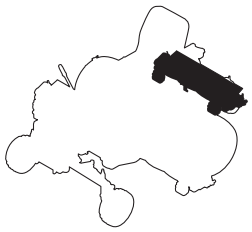

26.Rear mower section C 40

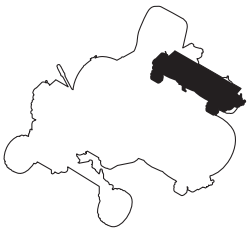

27.Rear mower section D 41

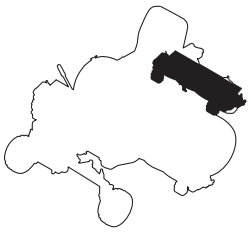

28.Rear mower section E 42

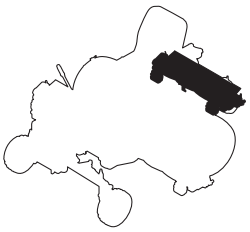

29.Accessories 43

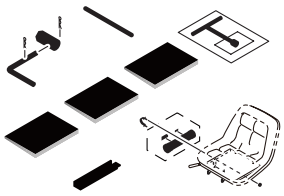

https://truckmanualshub.com/

1.Frame section A

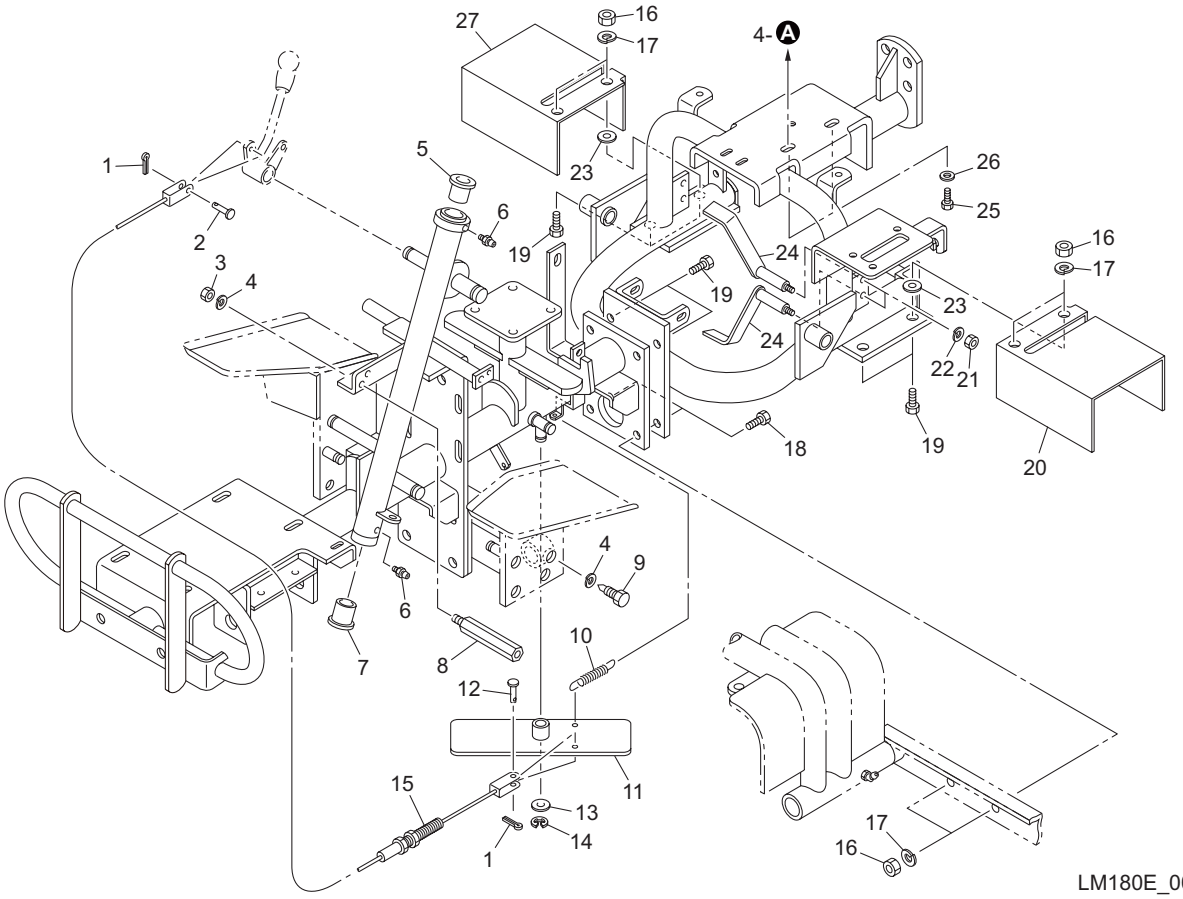

LM180E_001_z00

Cat No.	Code No.	Part name	Qty	Remark	SN of application
1-1	K0300020122	PIN, COTTER M2-12	2		
1-2	K6030050122	PIN, FLAT HEAD M5-12	1		
1-3	K0100100002	NUT, M10	1		
1-4	K0200100002	WASHER, SPRING M10	3		
1-5	K6010000080	BUSH, COPPER W/HOLE 17.3-22-22	1		
1-6	K1440000010	GREASE NIPPLE, STRAIGHT TYPE A	2		
1-7	K6010000070	BUSH, COPPER 17.3-22-22	1		
1-8	LM180A-1003A2	SHAFT, FIXING COVER	1		
1-9	LM180A-0308Z2	BOLT, AXIS	2		
1-10	K1030000038	SPRING, W/U HOOK M1.2-10.4-56	1		
1-11	LM180C-0302ZD	STOPPER	1		
1-12	K6030050152	PIN, FLAT HEAD M5-15	1		
1-13	K5051016240	WASHER, C5191P 1-16-24	1		
1-14	K0400012002	RING, RETAINING E M12	1		
1-15	K1160090000	WIRE, ADJUSTING 900	1		
1-16	K0100120002	NUT, M12	8		
1-17	K0200120002	WASHER, SPRING M12	8		
1-18	K0000120402	BOLT, M12-40	2		
1-19	K0000120352	BOLT, M12-35	6		
1-20	LM180BS2104AD	COVER, REAR WHEEL (LH)	1		
1-21	K0100080002	NUT, M8	2		
1-22	K0200080002	WASHER, SPRING M8	2		
1-23	K5074512252	WASHER, SPHC 4.5-12-25	4		
1-24	LM180A-0450Z2	STOPPER, BELT (UPPER)	2		
1-25	K0000100202	BOLT, M10-20	2		
1-26	K5000100002	WASHER, M10	2		
1-27	LM180BS2105AD	COVER, REAR WHEEL (RH)	1		

https://truckmanualshub.com/

2.Frame section B (Seat)

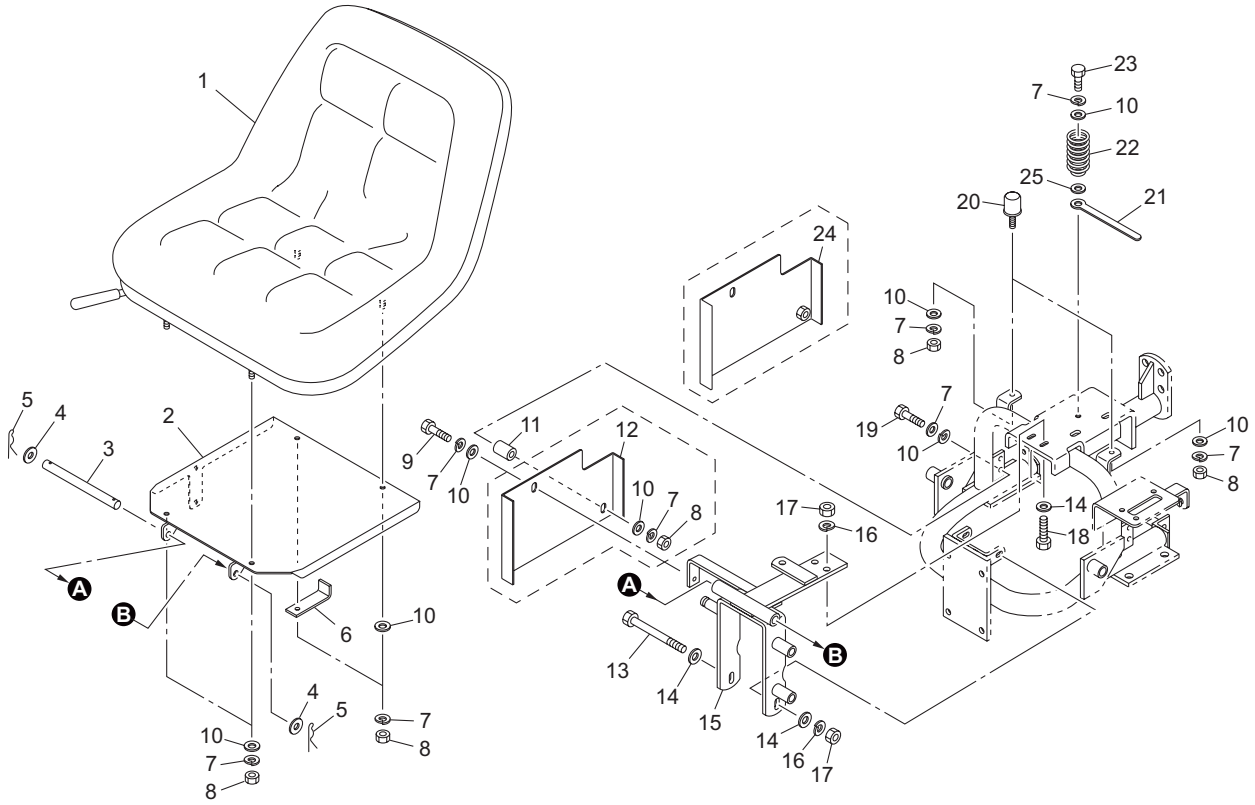

LM180E_002_z01

Cat No.	Code No.	Part name	Qty	Remark	SN of application
2-1	K1700000520	LEVER ASSY, W/K-4 SEAT RAIL (RH)	1		
2-2	LM180C-0415AD	MOUNT, SEAT	1		
2-3	K6151000162	SHAFT, W/HOLE M10-180	1		
2-4	K5011010202	WASHER, SPCC 1-10-20	2		
2-5	K0331000008	PIN, SNAP M10	2		
2-6	LM180C-0416ZD	STOPPER, SEAT	1		
2-7	K0200080002	WASHER, SPRING M8	10		21001-21010
2a-7	K0200080002	WASHER, SPRING M8	9		21011-
2-8	K0100080002	NUT, M8	7		21001-21010
2a-8	K0100080002	NUT, M8	6		21011-
2-9	K0000080152	BOLT, M8-15	1		
2-10	K5000080002	WASHER, M8	5		21001-21010
2a-10	K5000080002	WASHER, M8	8		21011-
2-11	K6211000432	COLLAR, SGP 9.2-13.8-33	1		
2-12	LM180C-1037ZR	COVER, BRAKE	1		21001-21010
2-13	K0003101302	BOLT, M10-130	1		
2-14	K5000100002	WASHER, M10	4		
2-15	LM180C-0404ZD	BASE, SEAT	1		
2-16	K0200100002	WASHER, SPRING M10	3		
2-17	K0100100002	NUT, M10	3		
2-18	K0000100302	BOLT, M10-30	2		
2-19	K0000080502	BOLT, M8-50	1		
2-20	K4049040000	RUBBER, STOPPER KI-40	2		
2-21	K4281000020	CLAMP, HARNESS 8.5 80	1		
2-22	K100000085D	SPRING, COMPRESSION M4.5-34.5-50	1		
2-23	K0000080202	BOLT, M8-20	1		21001-21010
2a-23	K0000080252	BOLT, M8-25	1		21011-
2-24	LM180C-1037AR	COVER, BRAKE	1		21011-
2-25	K5073208202	WASHER, SPHC 3.2-8-20	1		21011-

LM180E_002_z02

https://truckmanualshub.com/

3.Frame section C

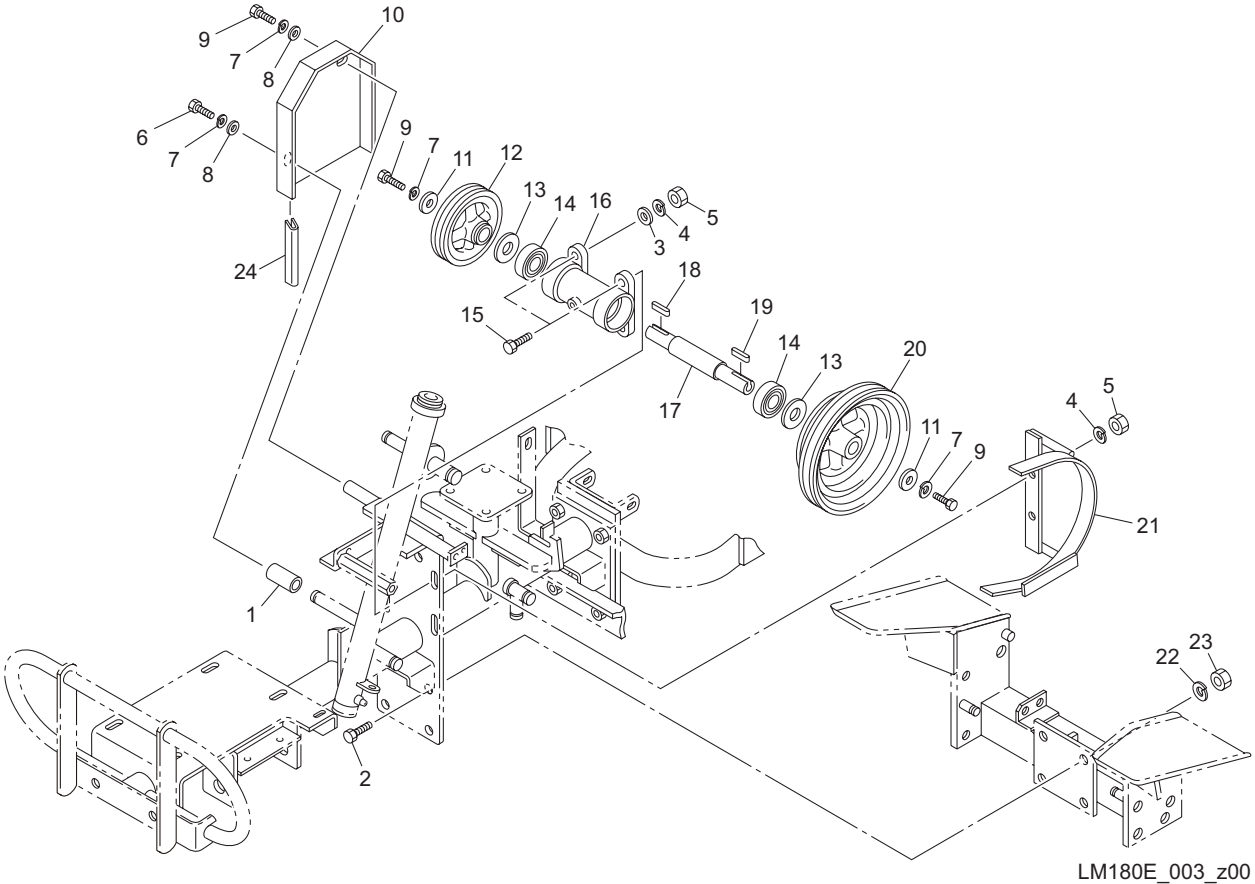

LM180E_003_z00

Cat No.	Code No.	Part name	Qty	Remark	SN of application
3-1	K6211000272	COLLAR, SGP 9.2-13.8-40	1		
3-2	K0000120352	BOLT, M12-35	4		
3-3	K5000100002	WASHER, M10	2		
3-4	K0200100002	WASHER, SPRING M10	4		
3-5	K0100100002	NUT, M10	4		
3-6	K0000080502	BOLT, M8-50	1		
3-7	K0200080002	WASHER, SPRING M8	4		
3-8	K5000080002	WASHER, M8	2		
3-9	K0000080202	BOLT, M8-20	3		
3-10	LM180B-1035BR	COVER, BELT F	1		
3-11	K5073208352	WASHER, SPHC 3.2-8-35	2		
3-12	K2420000022	PULLEY, V B1-20-134	1		
3-13	K5030520430	WASHER, C2801P 0.5-20-43	2		
3-14	K0612062040	BEARING, BALL SEAL 2RD 6204	2		
3-15	K0000100402	BOLT, M10-40	4		
3-16	LM180A-0319AD	HOUSING, COUNTERSHAFT	1		
3-17	LM180A-0312C0	COUNTERSHAFT	1		
3-18	K0500505250	KEY, BOTH ROUND M5-525	1		
3-19	K0500505350	KEY, BOTH ROUND M5-535.5	1		
3-20	LM180A-0316Z2	PULLEY, DOUBLE COUNTERSHAFT	1		
3-21	LM180B-0335Z2	STOPPER, BELT	1		
3-22	K0200120002	WASHER, SPRING M12	4		
3-23	K0100120002	NUT, M12	4		
3-24	K3197002300	TRIM, SEAL 75-16-230	1		

https://truckmanualshub.com/

4.Frame section D

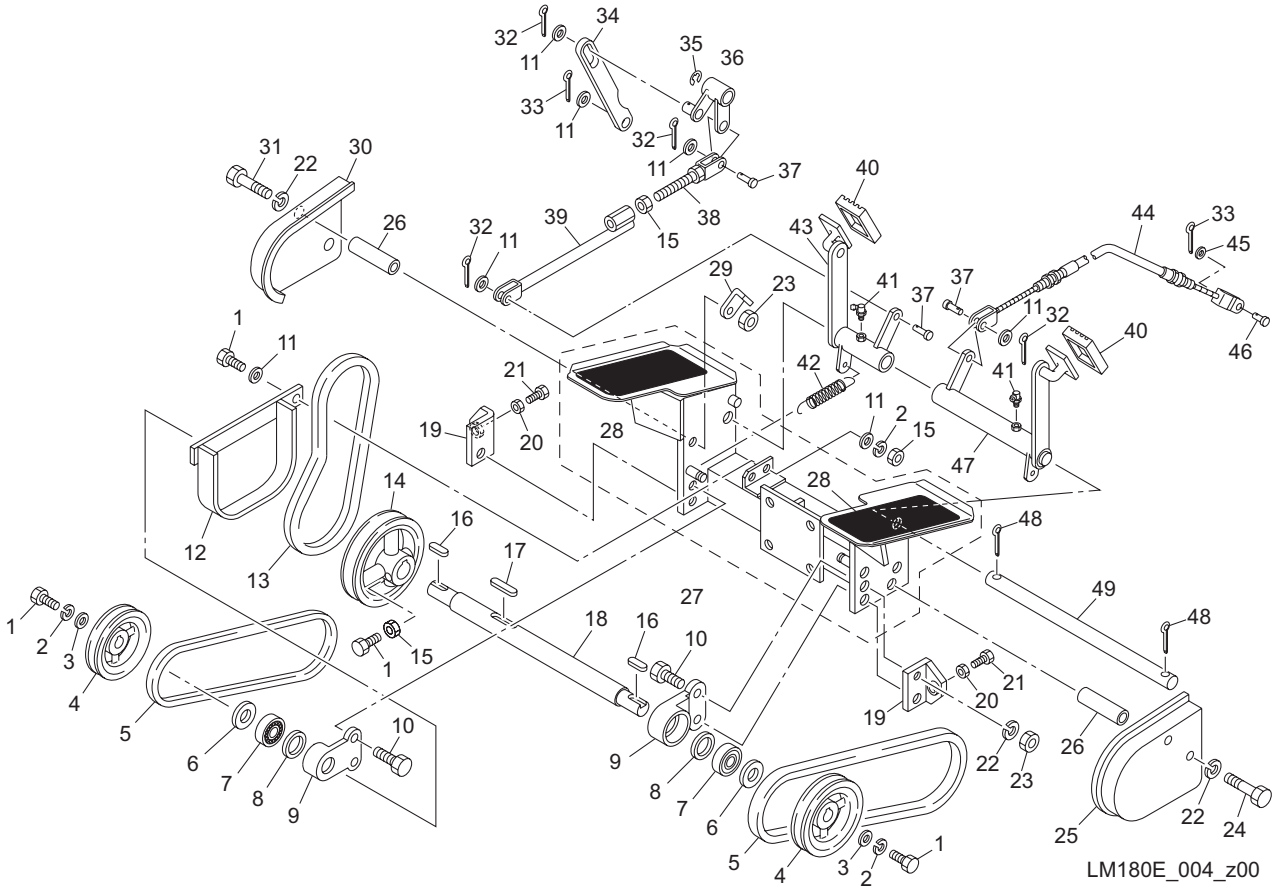

Cat No.	Code No.	Part name	Qty	Remark	SN of application
4-1	K0000080202	BOLT, M8-20	4		
4-2	K0200080002	WASHER, SPRING M8	3		
4-3	K5073208352	WASHER, SPHC 3.2-8-35	2		
4-4	K242000002D	PULLEY, V B1-20-124	2		
4-5	K2342041000	BELT, V OLB41	2		
4-6	K5051020350	WASHER, C5191P 1-20-35	2		
4-7	K0612062040	BEARING, BALL SEAL 2RD 6204	2		
4-8	K0822242070	OIL SEAL, MHSA22427	2		
4-9	LM180B-0330Z2	RETAINER, LOWER COUNTERSHAFT	2		
4-10	K0000100352	BOLT, M10-35	4		
4-11	K5000080002	WASHER, M8	7		
4-12	LM180B-0337ZD	STOPPER, BELT	1		
4-13	K2342031000	BELT, V OLB31	1		
4-14	LM180A-0328A2	PULLEY, LOWER COUNTERSHAFT	1		
4-15	K0100080002	NUT, M8	3		
4-16	K0500505250	KEY, BOTH ROUND M5-525	2		
4-17	K0500505350	KEY, BOTH ROUND M5-535.5	1		
4-18	LM180A-0325A0	COUNTERSHAFT, LOWER	1		
4-19	LM180A-1024A2	SCRAPER, SIDE MOWERS	2		
4-20	K0100060002	NUT, M6	2		
4-21	K0000060402	BOLT, M6-40	2		
4-22	K0200100002	WASHER, SPRING M10	8		
4-23	K0100100002	NUT, M10	5		
4-24	K0000100802	BOLT, M10-80	3		
4-25	LM180A-1021AD	COVER, PULLEY (LH)	1		
4-26	K6212003332	COLLAR, STKM 10.2-16-62	4		
4-27	LM180E-0360Z0	FRAME COMP, FRONT	1		
4-28	LM180E-0304Z0	SHEET, NONSKID 240110	2		
4-29	LM180B-0390Z2	STOPPER, BRAKE PEDAL	1		
4-30	LM180A-1022AD	COVER, PULLEY (RH)	1		

https://truckmanualshub.com/

4.Frame section D

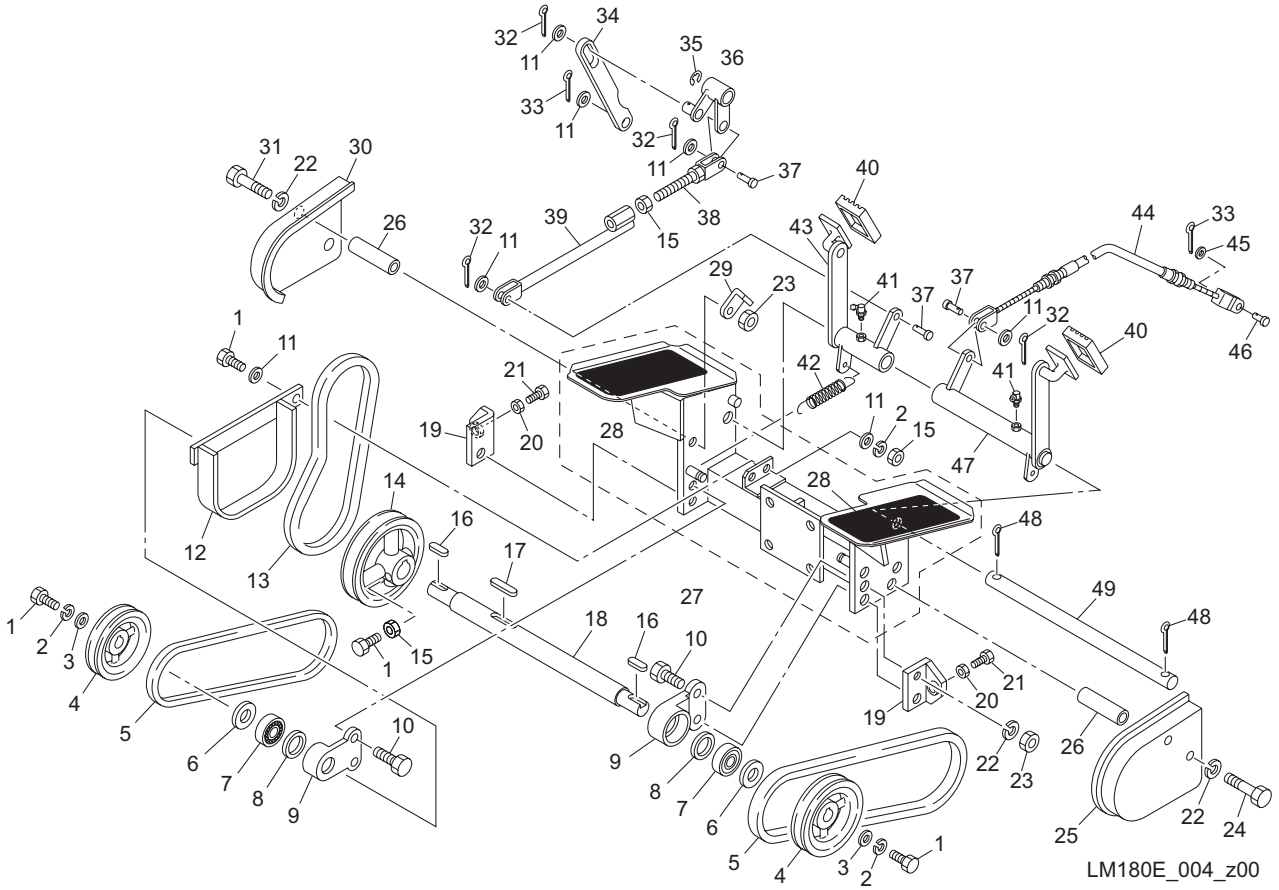

Cat No.	Code No.	Part name	Qty	Remark	SN of application
4-31	K0003100902	BOLT, M10-90	1		
4-32	K0300025202	PIN, COTTER M2.5-20	4		
4-33	K0300020202	PIN, COTTER M2-20	2		
4-34	LM180A-0430A2	METAL, CONNECTING	1		
4-35	K0400012002	RING, RETAINING E M12	1		
4-36	LM180A-0425A2	JOINT, POWER CONVERSION	1		
4-37	K6030080172	PIN, FLAT HEAD M8-17	3		
4-38	LM180C-0481A2	ROD, BRAKE (REAR)	1		
4-39	LM180C-0480Z2	ROD, BRAKE (FRONT)	1		
4-40	K4050000010	RUBBER, FOR PEDAL 5575	2		
4-41	K1440000030	GREASE NIPPLE, 67.5 TYPE B	2		
4-42	K1030000048	SPRING, W/U HOOK M2-14-80	2		
4-43	LM180C-0309Z2	PEDAL, BRAKE	1		
4-44	K1190070000	WIRE, DIFF-LOCK 700	1		
4-45	K5000050002	WASHER, M5	1		
4-46	K6030050152	PIN, FLAT HEAD M5-15	1		
4-47	LM180C-0310Z2	PEDAL, DIFF LOCK	1		
4-48	K0300032252	PIN, COTTER M3.2-25	2		
4-49	LM180A-0306A2	SHAFT, BRAKE	1		

https://truckmanualshub.com/

5.Tension pulley section A

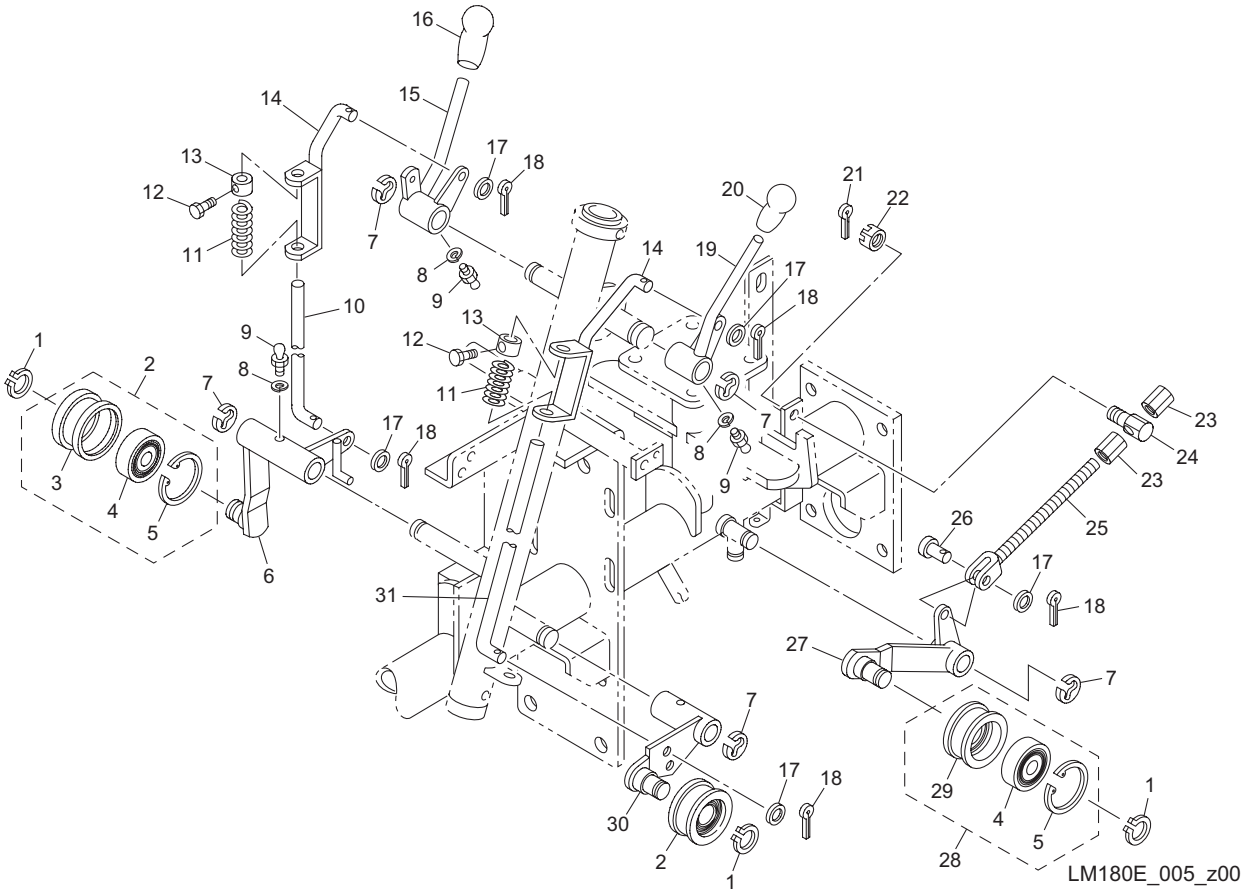

Cat No.	Code No.	Part name	Qty	Remark	SN of application
5-1	K0401017001	RING, RETAINING S M17	3		
5-2	K8030000070	PULLEY ASSY, TENSION 1846	2		
5-3	K2471180462	PULLEY, TENSION 1846	2		
5-4	K0612062030	BEARING, BALL SEAL 2RD 6203	3		
5-5	K0402040001	RING, RETAINING R M40	3		
5-6	LM180B-0507B2	LEVER, TENSION	1		
5-7	K0400012002	RING, RETAINING E M12	5		
5-8	K0200060002	WASHER, SPRING M6	3		
5-9	K1440000010	GREASE NIPPLE, STRAIGHT TYPE A	3		
5-10	LM180A-0527Z2	ROD, TENSION (RH)	1		
5-11	K1000000048	SPRING, COMPRESSION M3.2-16.9-60	2		
5-12	K0000080152	BOLT, M8-15	2		
5-13	K6218000022	COLLAR, TAPPED 8.5-19-15	2		
5-14	LM180B-0522Z2	FITTING, ROD TENSION	2		
5-15	LM180C-0515Z2	LEVER, REEL ROTATION	1		
5-16	K1300000050	GRIP, RUBBER RED 9-35.5	1		
5-17	K5000080002	WASHER, M8	5		
5-18	K0300025202	PIN, COTTER M2.5-20	5		
5-19	LM180C-0513Z2	LEVER, TRAVELING CLUTCH	1		
5-20	K1300000040	GRIP, RUBBER BLACK 9-35.5	1		
5-21	K0300032252	PIN, COTTER M3.2-25	1		
5-22	K0124120002	NUT, THIN SLOTTED M12	1		
5-23	K0149083202	NUT, HIGH M8-13-20	2		
5-24	K6084000012	FIXTURE	1		
5-25	LM180B-0509A2	SHAFT, TIGHTENING BELT	1		
5-26	K6030080172	PIN, FLAT HEAD M8-17	1		
5-27	LM180B-0546Z2	LEVER, TENSION	1		
5-28	K8030000080	PULLEY ASSY, TENSION 22150	1		
5-29	K2471221502	PULLEY, TENSION 22150	1		
5-30	LM180B-0501B2	LEVER, TENSION	1		

LM180E_005_z02

https://truckmanualshub.com/

5.Tension pulley section A

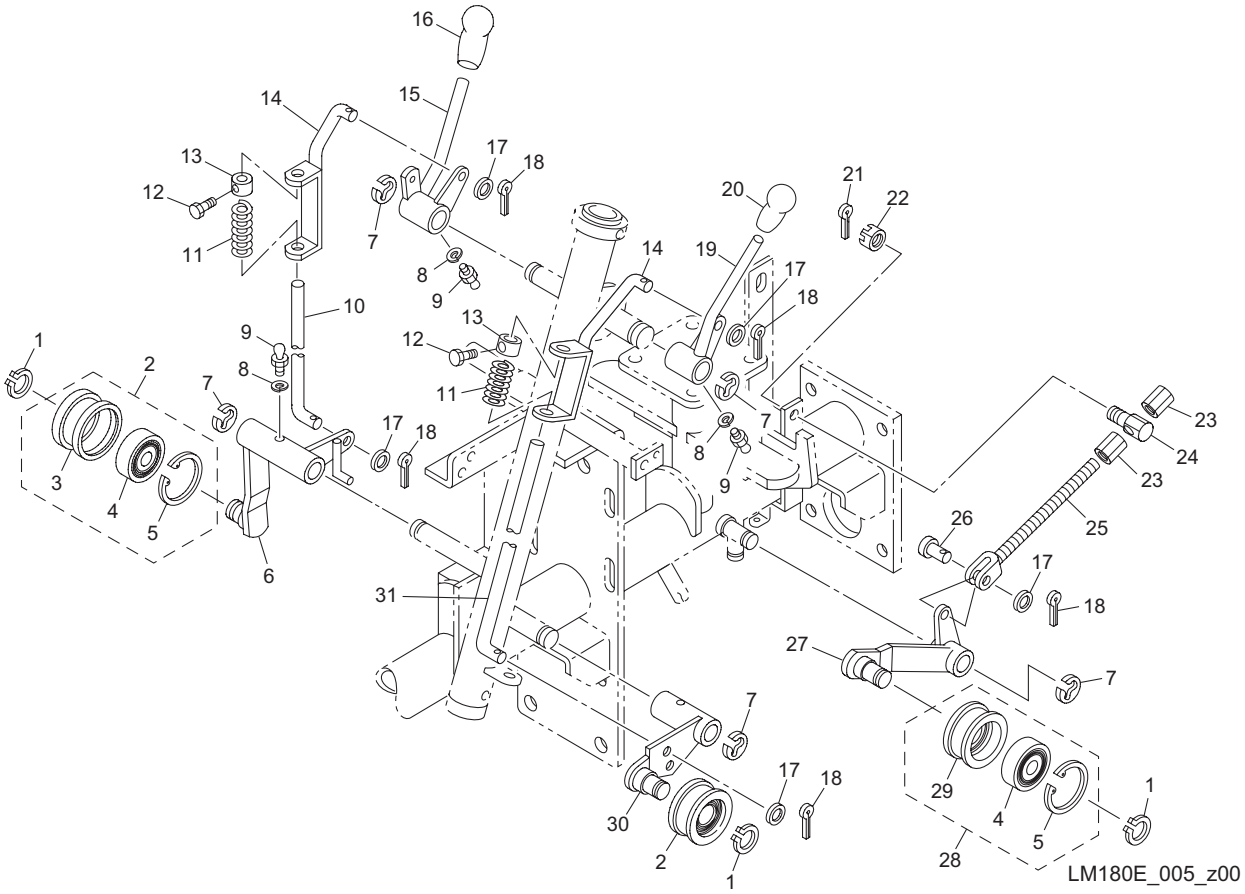

Cat No.	Code No.	Part name	Qty	Remark	SN of application
5-31	K6171000362	ROD, TENSION	1		

LM180E_005_z02

https://truckmanualshub.com/

6.Tension pulley section B

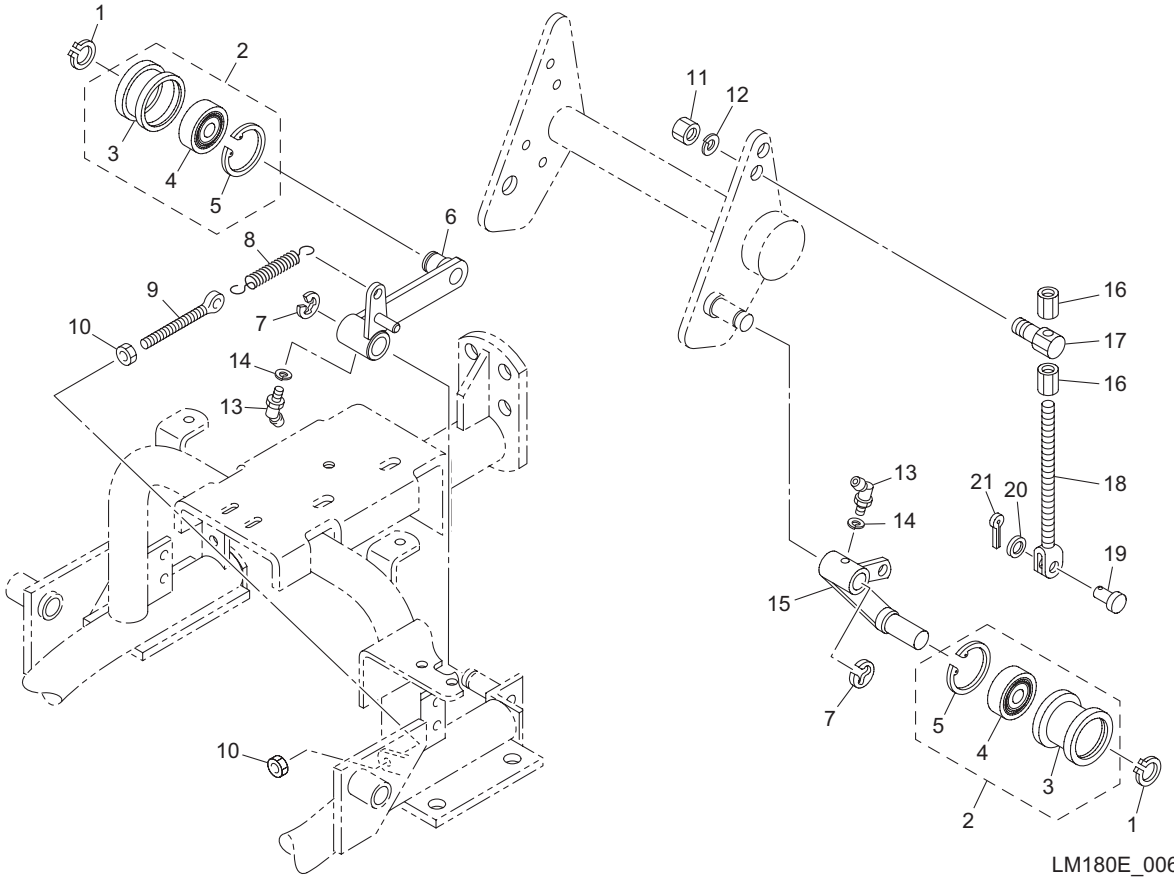

LM180E_006_z00

Cat No.	Code No.	Part name	Qty	Remark	SN of application
6-1	K0401017001	RING, RETAINING S M17	2		
6-2	K8030000090	PULLEY ASSY, TENSION 30150	2		
6-3	K2471301502	PULLEY, TENSION 30150	2		
6-4	K0612062030	BEARING, BALL SEAL 2RD 6203	2		
6-5	K0402040001	RING, RETAINING R M40	2		
6-6	LM180C-0547Z2	LEVER, TENSION	1		
6-7	K0400012002	RING, RETAINING E M12	2		
6-8	K1020000198	SPRING, W/ROUND HOOK M2.6-15.5-84	1		
6-9	K6122000142	SHAFT, TAPPED W/HOLE M8-70	1		
6-10	K0100080002	NUT, M8	2		
6-11	K0100120002	NUT, M12	1		
6-12	K0200120002	WASHER, SPRING M12	1		
6-13	K1440000030	GREASE NIPPLE, 67.5 TYPE B	2		
6-14	K0200060002	WASHER, SPRING M6	2		
6-15	LM180B-0548Z2	LEVER, TENSION	1		
6-16	K0160000352	NUT, HIGH M8	2		
6-17	LM180A-0537B2	FIXTURE	1		
6-18	LM180B-0509A2	SHAFT, TIGHTENING BELT	1		
6-19	K6030080172	PIN, FLAT HEAD M8-17	1		
6-20	K5000080002	WASHER, M8	1		
6-21	K0300025202	PIN, COTTER M2.5-20	1		

LM180E_006_z01

https://truckmanualshub.com/

7.Handle section

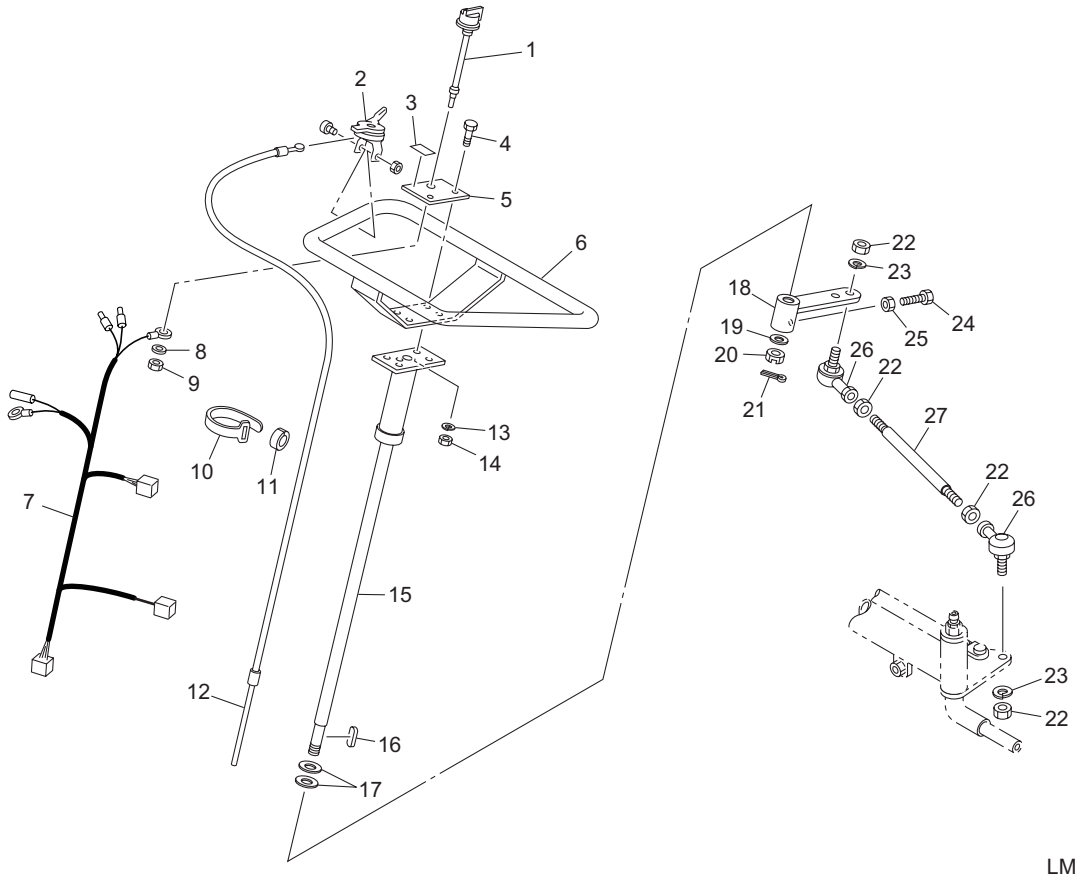

LM180E_007_z00

Cat No.	Code No.	Part name	Qty	Remark	SN of application
7-1	K3662000050	SWITCH, TOGGLE FOR ENGINE	1		
7-2	K1203521000	LEVER, THROTTLE E352100	1		
7-3	K4203000670	DECAL, ENGINE SWITCH	1		
7-4	K0010060202	BOLT, HT M6-20	4		
7-5	LM180B-0721ZD	MOUNT, STOP SWITCH	1		
7-6	LM180B-0701ZD	HANDLE	1		
7-7	LM180E-0901Z0	HARNESS	1		
7-8	K0210080002	SPRING, CONICAL DISC L M8	1		
7-9	K0102080002	NUT, M8-3	1		
7-10	K4241000010	BAND, NYLON 140	1		
7-11	K4241000070	TUBE, URETHANE 7	1		
7-12	K1110135000	WIRE, THROTTLE 1350	1		
7-13	K0200060002	WASHER, SPRING M6	4		
7-14	K0100060002	NUT, M6	4		
7-15	LM180A-0702CD	SHAFT, HANDLE	1		
7-16	K0500404310	KEY, BOTH ROUND M4-431.5	1		
7-17	K5051017300	WASHER, C5191P 1-17-30	2		
7-18	LM180A-0706A2	ARM, PITMAN	1		
7-19	K5000120002	WASHER, M12	1		
7-20	K0124120002	NUT, THIN SLOTTED M12	1		
7-21	K0300032252	PIN, COTTER M3.2-25	1		
7-22	K0100120002	NUT, M12	4		
7-23	K0200120002	WASHER, SPRING M12	2		
7-24	K0000080202	BOLT, M8-20	1		
7-25	K0100080002	NUT, M8	1		
7-26	K1604120000	JOINT, SPHERICAL LHSA12	2		
7-27	LM180A-0713Z2	ROD, RELAY	1		

LM180E_007_z00

https://truckmanualshub.com/

8.Belt cover section

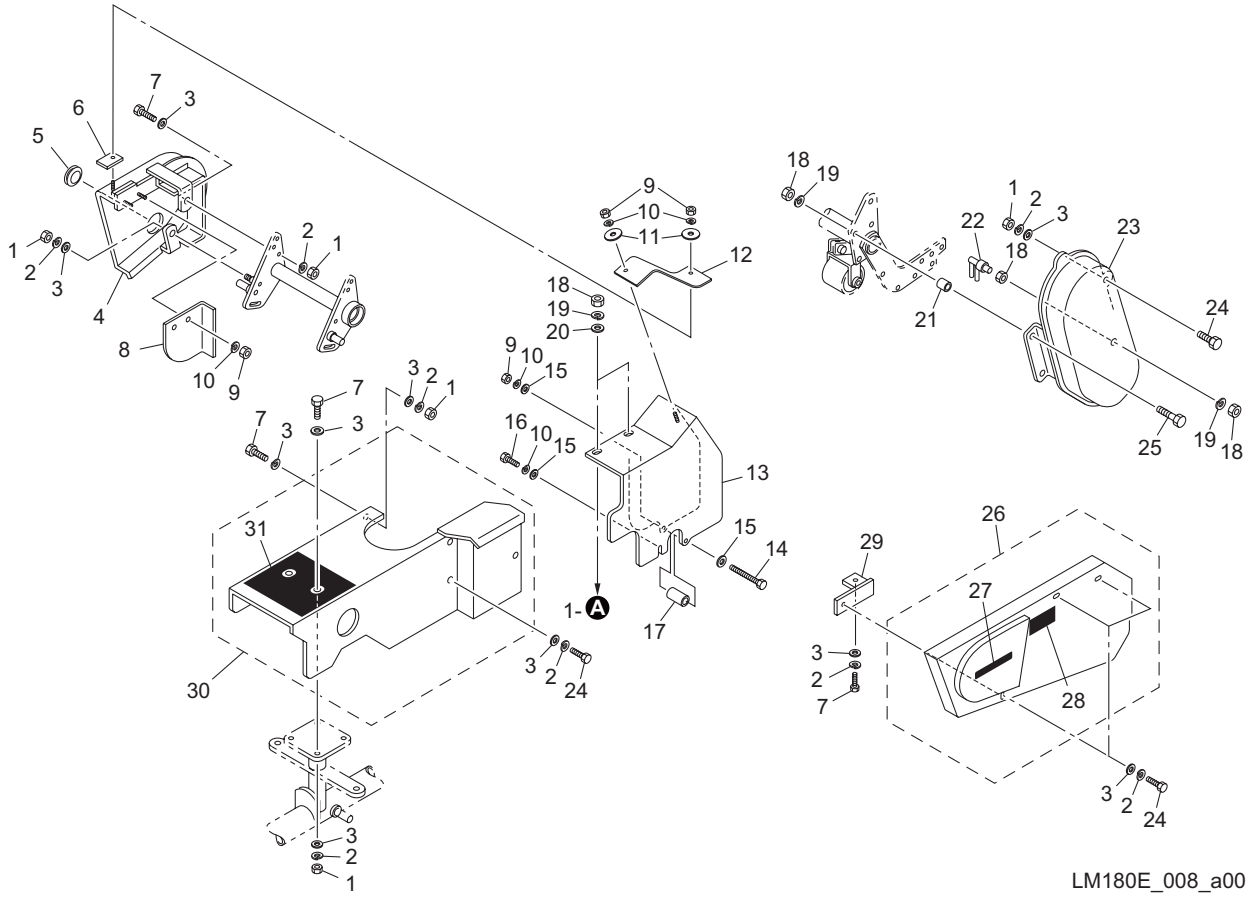

LM180E_008_a00

Cat No.	Code No.	Part name	Qty	Remark	SN of application
8-1	K0100080002	NUT, M8	6		
8-2	K0200080002	WASHER, SPRING M8	14		
8-3	K5000080002	WASHER, M8	17		
8-4	LM180C-1018AR	COVER, BELT D	1		
8-5	K0901000010	GROMMET, W/SEALING GB-42	1		
8-6	K514400163D	PLATE, 25 W/HOLE 8.5	1		
8-7	K0000080202	BOLT, M8-20	5		
8-8	LM180C-0201AR	COVER	1		
8-9	K0100060002	NUT, M6	5		
8-10	K0200060002	WASHER, SPRING M6	6		
8-11	K5012306252	WASHER, SPCC 2.3-6-25	2		
8-12	K4033000570	RUBBER, PLATE 2-65250	1		
8-13	LM180C-1019AR	COVER, BELT E	1		
8-14	K0000060702	BOLT, M6-70	1		
8-15	K5000060002	WASHER, M6	3		
8-16	K0000060152	BOLT, M6-15	1		
8-17	K6212001893	COLLAR, STKM M8.2-12.7-55	1		
8-18	K0100100002	NUT, M10	4		
8-19	K0200100002	WASHER, SPRING M10	3		
8-20	K5000100002	WASHER, M10	1		
8-21	K6211000052	COLLAR, SGP 12.7-17.3-16.3	2		
8-22	LM180A-1025Z2	SCRAPER	1		
8-23	LM180B-1026ZR	COVER, BELT C	1		
8-24	K0000080152	BOLT, M8-15	6		
8-25	K0000100402	BOLT, M10-40	2		
8-26	LM180E-1039Z0	COVER COMP, BELT A	1		
8-27	K4201000120	STICKER, BARONESS 121	1		
8-28	K4205001530	DECAL, CAUTION ROTATING OBJECT	1		
8-29	LM180E-1002Z2	BRACKET, COVER	1		
8a-30	LM180E-1003Z0	COVER COMP, BELT B	1		

LM180E_008_a00

https://truckmanualshub.com/

8.Belt cover section

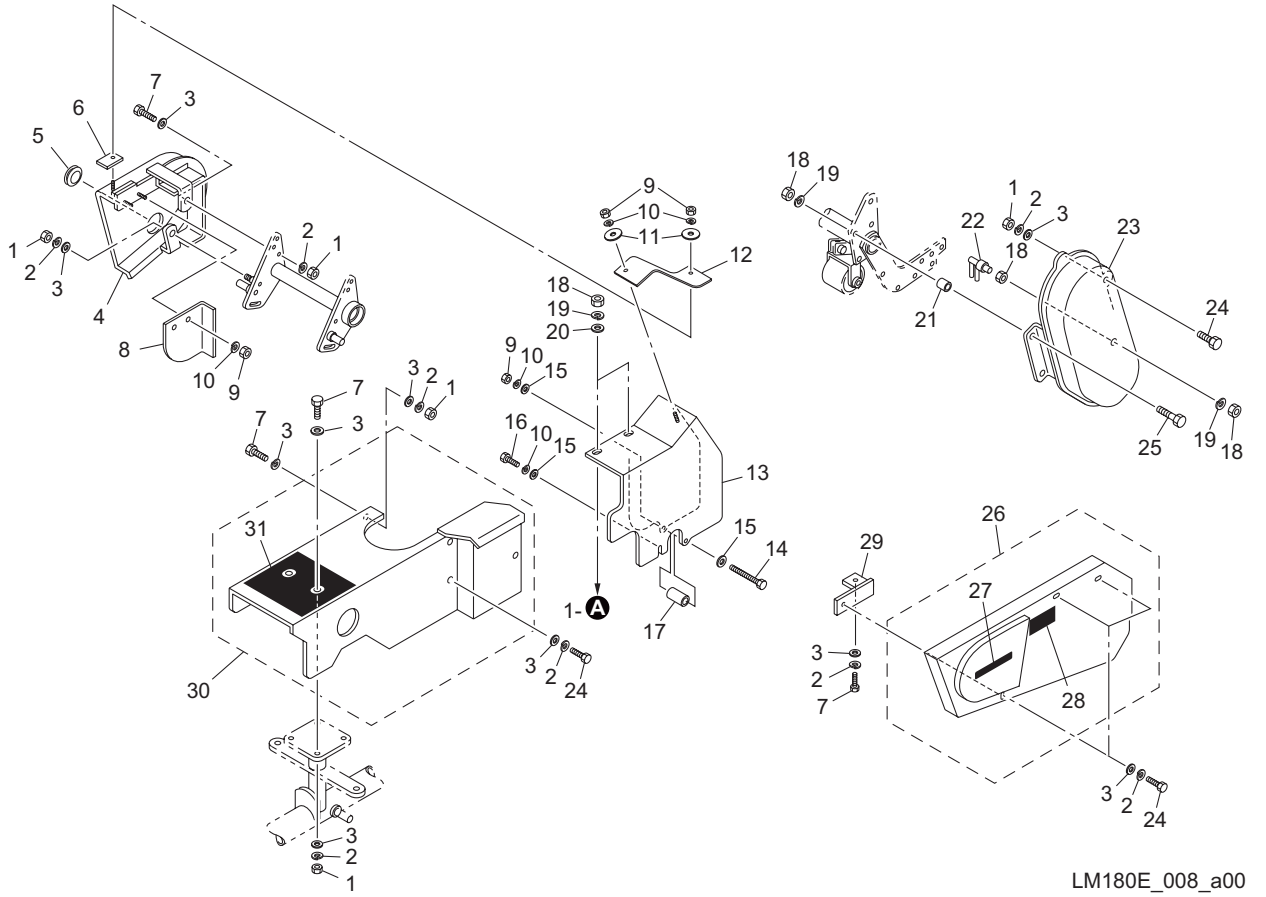

LM180E_008_a00

Cat No.	Code No.	Part name	Qty	Remark	SN of application
8-31 8a-32 8-33	LM180E-1001Z0	STICKER, OPERATION	1		

https://truckmanualshub.com/

9.Front wheel section

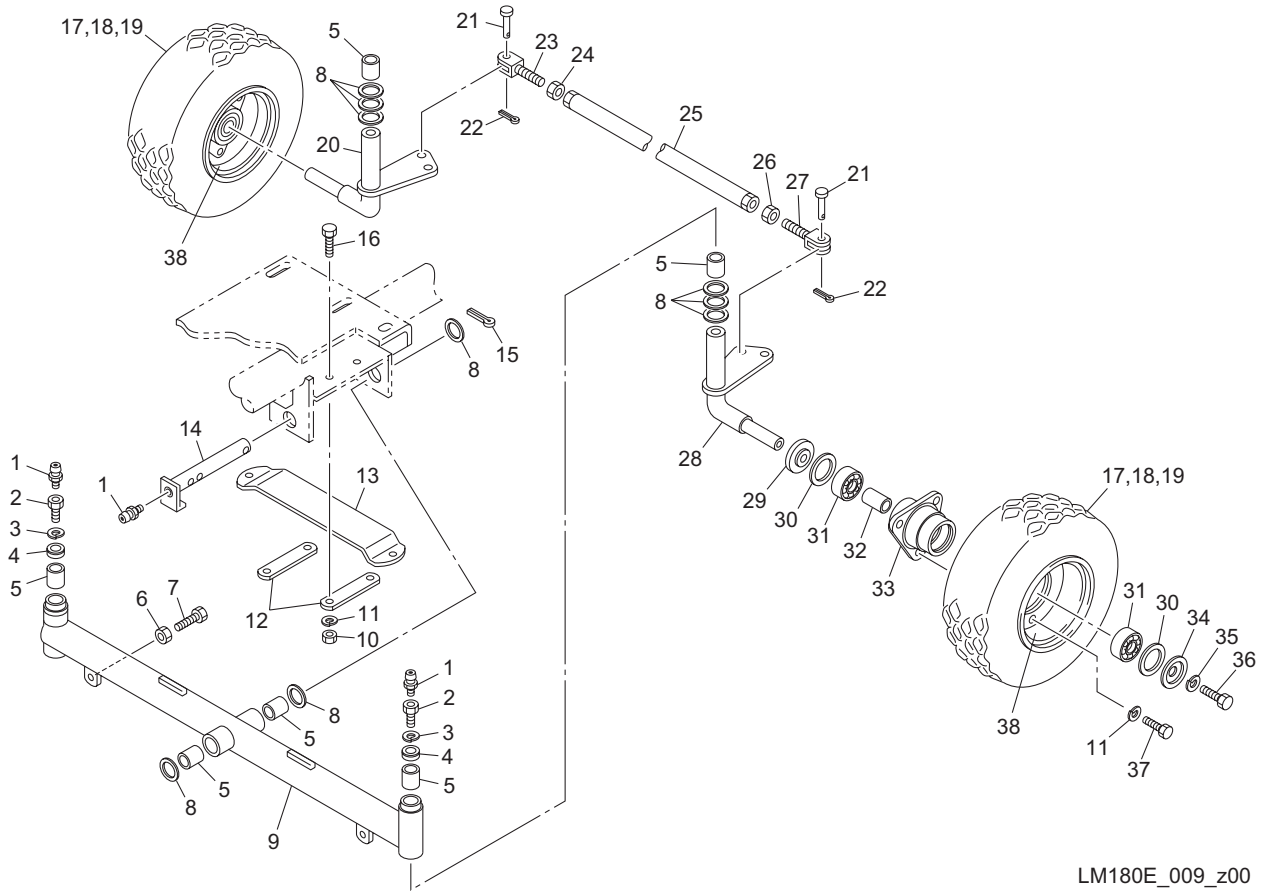

LM180E_009_z00

Cat No.	Code No.	Part name	Qty	Remark	SN of application
9-1	K1440000010	GREASE NIPPLE, STRAIGHT TYPE A	3		
9-2	K0071000082	BOLT, W/NIPPLE HOLE M12-15	2		
9-3	K0200120002	WASHER, SPRING M12	2		
9-4	LM180A-0616Z2	COVER, DUSTPROOF	2		
9-5	K6000000050	BUSH, COPPER 22.3-26-20	6		
9-6	K0100100002	NUT, M10	2		
9-7	K0000100402	BOLT, M10-40	2		
9-8	K5051022350	WASHER, C5191P 1-22-35	9		
9-9	LM180C-0601ZD	AXLE, FRONT	1		
9-10	K0100080002	NUT, M8	4		
9-11	K0200080002	WASHER, SPRING M8	10		
9-12	LM180A-0621Z2	MOUNT, PLATE SPRING	2		
9-13	LM180A-0620ZD	SPRING, PLATE	1		
9-14	LM180A-0603Z2	PIN, FRONT	1		
9-15	K0300040322	PIN, COTTER M4-32	1		
9-16	K0000080302	BOLT, M8-30	4		
9-17	K2060000010	TIRE ASSY, 4.00-5	2		
9-18	K2061000010	TIRE, 4.00-5GC	2		
9-19	K2091000070	TUBE, 4.00-5TR87S	2		
9-20	LM180BS0607Z8	AXLE, WHEEL (RH)	1		
9-21	K6031100258	PIN, FLAT HEAD HT M10-25	2		
9-22	K0300025202	PIN, COTTER M2.5-20	2		
9-23	LM180A-0716Z2	ADJUSTER (RH)	1		
9-24	K0100120002	NUT, M12	1		
9-25	LM180A-0712Z2	ROD, TIE	1		
9-26	K0180120002	NUT, LEFT-HANDED M12	1		
9-27	LM180A-0715Z2	ADJUSTER (LH)	1		
9-28	LM180BS0606Z8	AXLE, WHEEL (LH)	1		
9-29	K5090000232	CAP, WHEEL MOUNT (INNER)	2		
9-30	K4010132500	PACKING, OIL-SHEET 1-32-50	4		

LM180E_009_z01

https://truckmanualshub.com/

9.Front wheel section

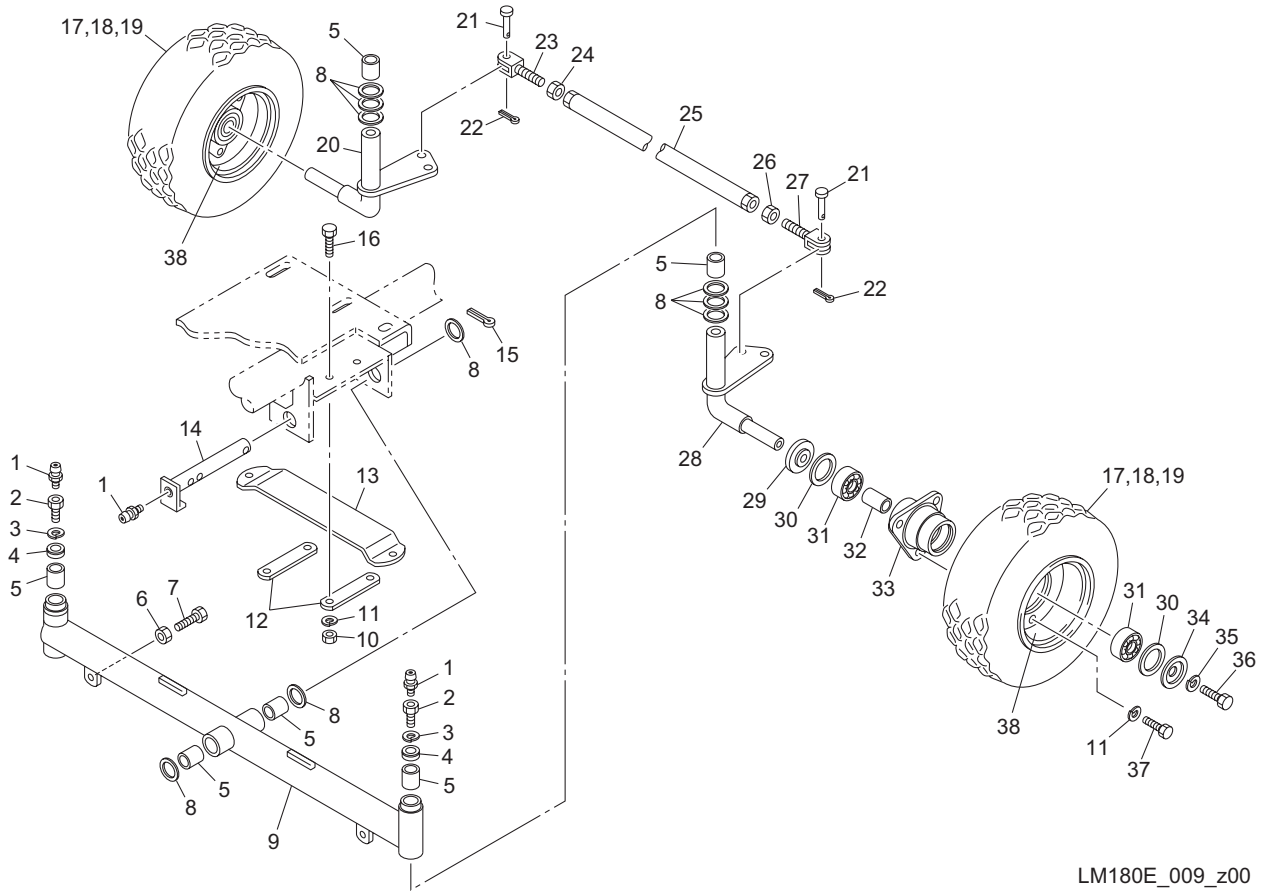

LM180E_009_z00

Cat No.	Code No.	Part name	Qty	Remark	SN of application
9-31	K0606062040	BEARING, BALL SEAL RS 6204	4		
9-32	K6212000180	COLLAR, STKM 20.2-25.4-40	2		
9-33	K2160000072	HOUSING, WHEEL	2		
9-34	K5090000222	CAP, WHEEL MOUNT (OUTER)	2		
9-35	K0200100002	WASHER, SPRING M10	2		
9-36	K0000100252	BOLT, M10-25	2		
9-37	K0000080202	BOLT, M8-20	6		
9-38	K209000003L-SET	WHEEL SET, 3.00 SP-5 (FOR 1 TIRE)	2		

LM180E_009_z01

https://truckmanualshub.com/

10.Rear wheel & Transmission section

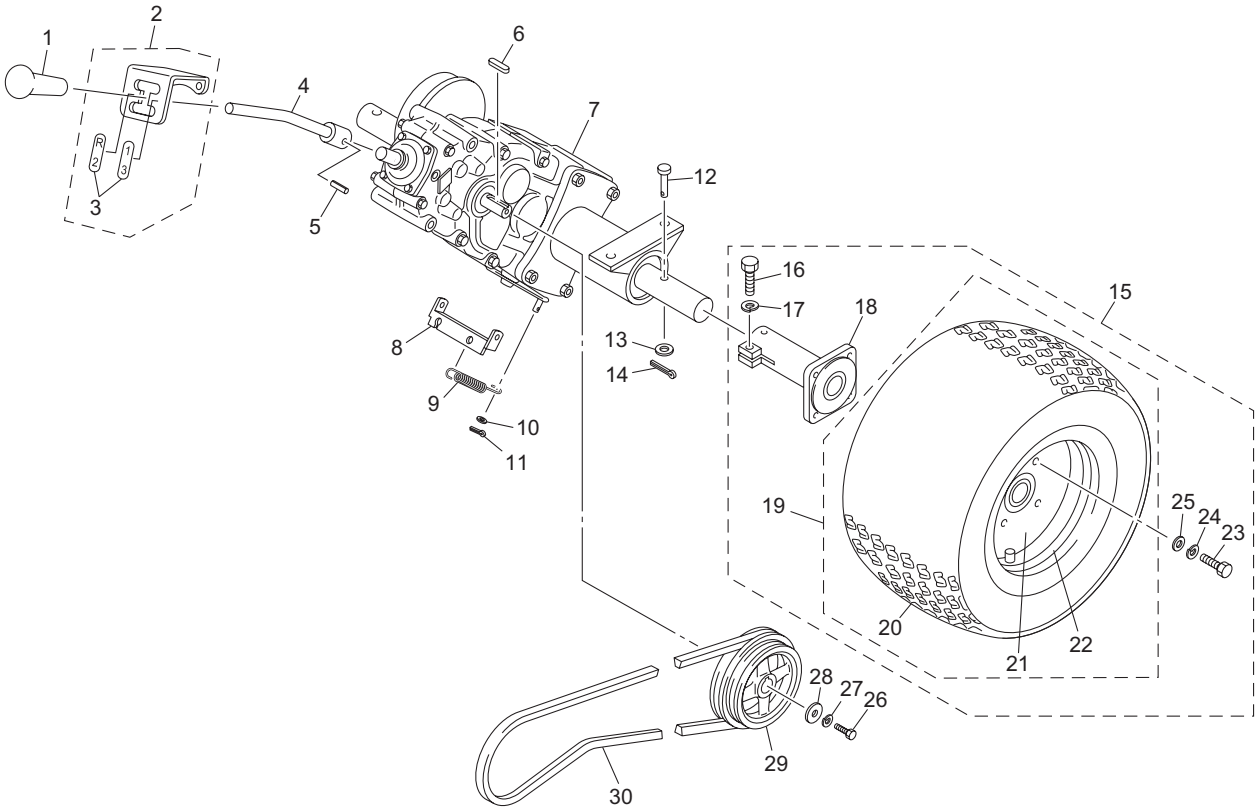

LM180E_010_z00

Cat No.	Code No.	Part name	Qty	Remark	SN of application
10-1	K1300000030	GRIP, RUBBER BLACK 11-36	1		
10-2	LM180E-0801Z0	GUIDE, W/ MARK	1		
10-3	LM180E-0802Z0	DECAL, SHIFTING	1		
10-4	LM180C-0806Z2	LEVER, GEARSHIFT	1		
10-5	K0320050251	PIN, SPRING M5-25	1		
10-6	K0500505250	KEY, BOTH ROUND M5-525	1		
10-7	K2700000210	TRANSMISSION, MC81GA07	1		
10-8	K7350000032	BRACKET, WIRE	1		
10-9	K104000003D	SPRING, W/HOOK M2-16-104.5	1		
10-10	K5000060002	WASHER, M6	1		
10-11	K0300020202	PIN, COTTER M2-20	1		
10-12	K6041110638	PIN, ROUND HEAD HT M11.5-63.5	2		
10-13	K5000120002	WASHER, M12	2		
10-14	K0300032252	PIN, COTTER M3.2-25	2		
10-15	LM180B-0836Z0	TIRE & WHEEL ASSY, REAR	2		
10-16	K0000120352	BOLT, M12-35	2		
10-17	K0200120002	WASHER, SPRING M12	2		
10-18	LM180B-0835B2	MOUNT, WHEEL	2		
10-19	K2040000030	TIRE ASSY, PD3 18*8.50-8	2		
10-20	K2041000020	TIRE ASSY, PD3 18*8.50-8	2		
10-21	K2095000010	PACKING, F-8P-D	2		
10-22	K209000015L-SET	WHEEL SET, 7.00SP*8 (FOR 1 TIRE)	2		
10-23	K0010100252	BOLT, HT M10-25	8		
10-24	K0200100002	WASHER, SPRING M10	8		
10-25	K5000100002	WASHER, M10	8		
10-26	K0010060152	BOLT, HT M6-15	1		
10-27	K0200060002	WASHER, SPRING M6	1		
10-28	K5012306252	WASHER, SPCC 2.3-6-25	1		
10-29	LM180A-0802Z2	PULLEY, TRANSMISSION	1		
10-30	K2342066000	BELT, V OLB66	1		

LM180E_010_z00

https://truckmanualshub.com/

11.Transmission section A

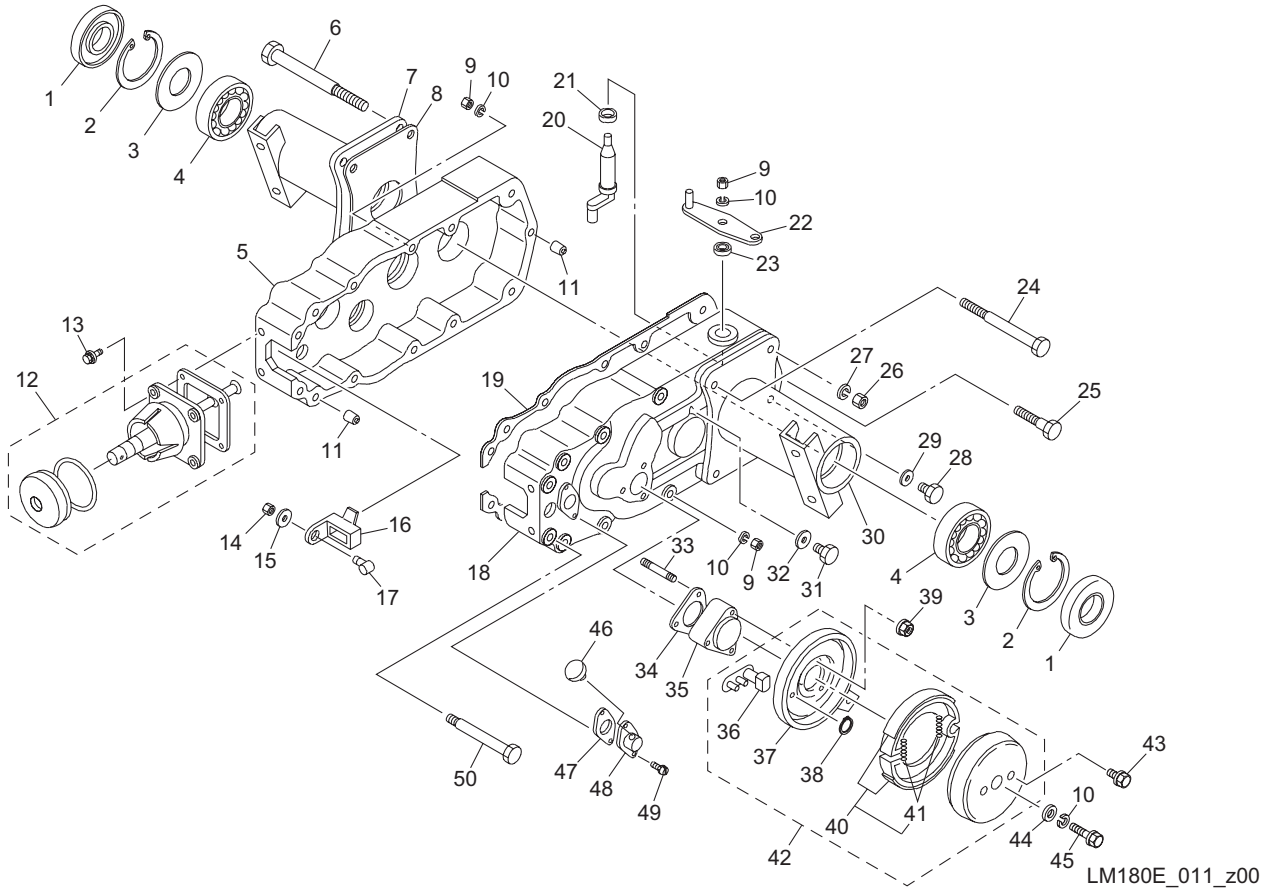

Cat No.	Code No.	Part name	Qty	Remark	SN of application
11-1	P2104-419001	OIL SEAL, 357213	2		
11-2	K0402072001	RING, RETAINING R M72	2		
11-3	P2102-426203	WASHER, 35720.8	2		
11-4	K0600062070	BEARING, BALL 6207	2		
11-5	P2111-803318	CASE, (R)	1		
11-6	P2101-404907	BOLT, 10-160	4		
11-7	P2310-605108	CASE COMP, AXLE (R)	1		
11-8	P2153-407307	CASE, AXLE (PK)	2		
11-9	P0304-082000	NUT, M8	8		
11-10	P0410-080000	WASHER, SPRING M8	11		
11-11	P2155-401709	PIPE, KNOCK	2		
11-12	P2440-005700	SHIFT ASSY, GEAR	1		
11-13	P0157-080200	BOLT, FLANGED M8	4		
11-14	P0304-083000	NUT, M8	1		
11-15	P2102-408409	WASHER, 8221	1		
11-16	P2340-404001	STOPPER COMP	1		
11-17	P2154-402400	PIN, STOPPER	1		
11-18	P2111-803220	CASE, (L)	1		
11-19	P2153-700509	CASE, PK	1		
11-20	P2144-405305	SHIFTER, (DIFF)	1		
11-21	P2103-405407	COLLAR, 15206.5	1		
11-22	P2340-408713	LEVER COMP, DIFF-LOCK	1		
11-23	P2104-400401	OIL SEAL, 14248	1		
11-24	P0157-081200	BOLT, FLANGED M8	1		
11-25	P0157-081150	BOLT, FLANGED M8	2		
11-26	P0304-102000	NUT, M10	4		
11-27	P0410-100000	WASHER, SPRING M10	4		
11-28	P2105-400806	PLUG ,14	1		
11-29	P2105-400905	GASKET, 14	1		
11-30	P2310-605009	CASE COMP, AXLE (LH)	1		

https://truckmanualshub.com/

11.Transmission section A

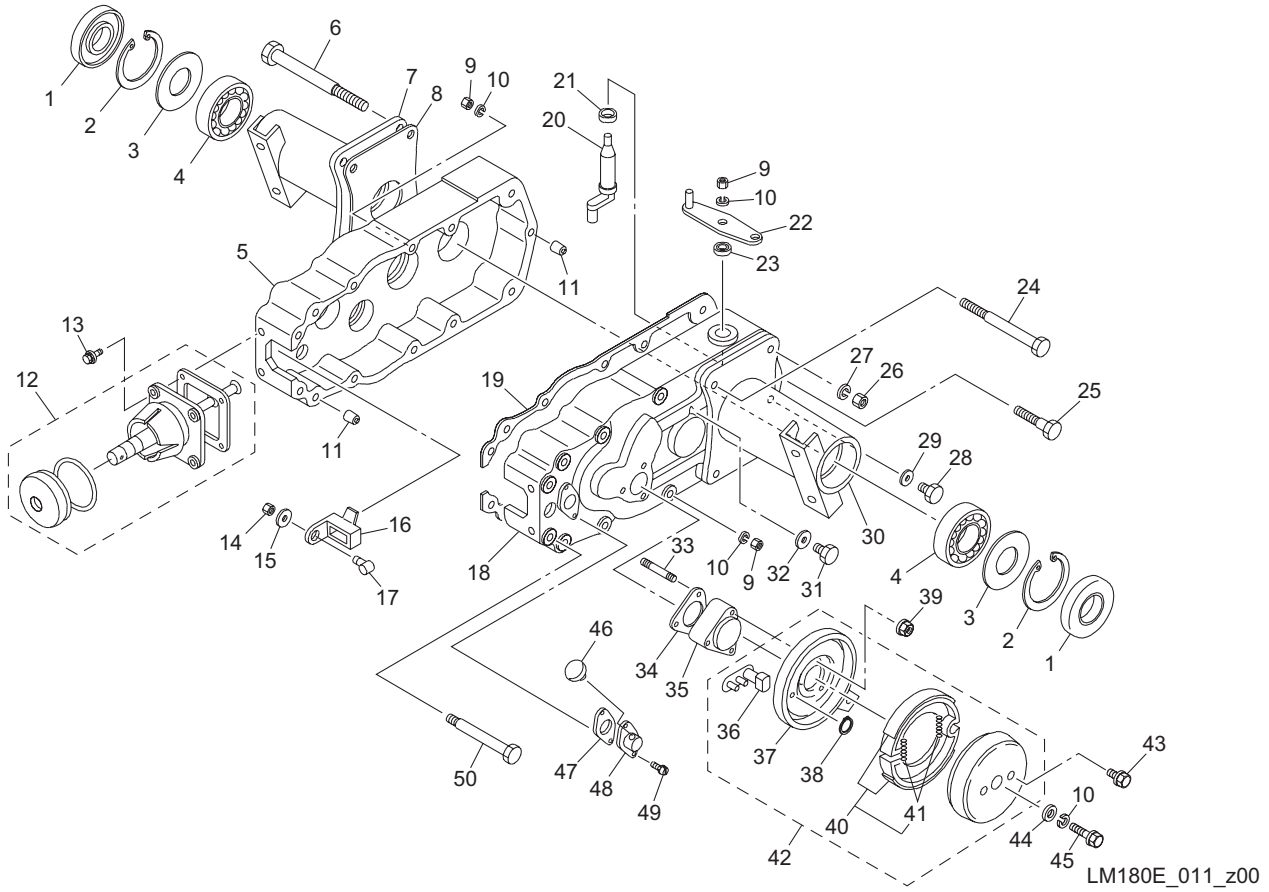

Cat No.	Code No.	Part name	Qty	Remark	SN of application
11-31	P2105-400103	PLUG, 8	1		
11-32	P2105-400202	GASKET, 8	1		
11-33	P0176-080503	STUD, M8-50	3		
11-34	P2153-407000	BRAKE, PK	1		
11-35	P2114-401009	HOLDER, BK	1		
11-36	P2150-001205	LEVER COMP, BRAKE	1		
11-37	P2150-001106	COVER COMP, BRAKE	1		
11-38	K0401018001	RING, RETAINING S M18	1		
11-39	P2101-432506	NUT, FLANGED M8	3		
11-40	P2150-001304	SHOE, BRAKE	1		
11-41	P2150-001502	SPRING	2		
11-42	P2435-606437	BRAKE ASSY	1		
11-43	P0157-080140	BOLT, FLANGED M8	2		
11-44	P2102-427309	WASHER, 8283.2	1		
11-45	P0157-080250	BOLT, FLANGED M8	1		
11-46	P2105-404002	PLUG, G20	1		
11-47	P2153-404801	PORT, FILLING OIL (PK)	1		
11-48	P2157-401905	PORT, FILLING OIL	1		
11-49	P0030-060160	SCREW, ROUND HEAD M6 S16	2		
11-50	P0157-080900	BOLT, FLANGED M8	4		

https://truckmanualshub.com/

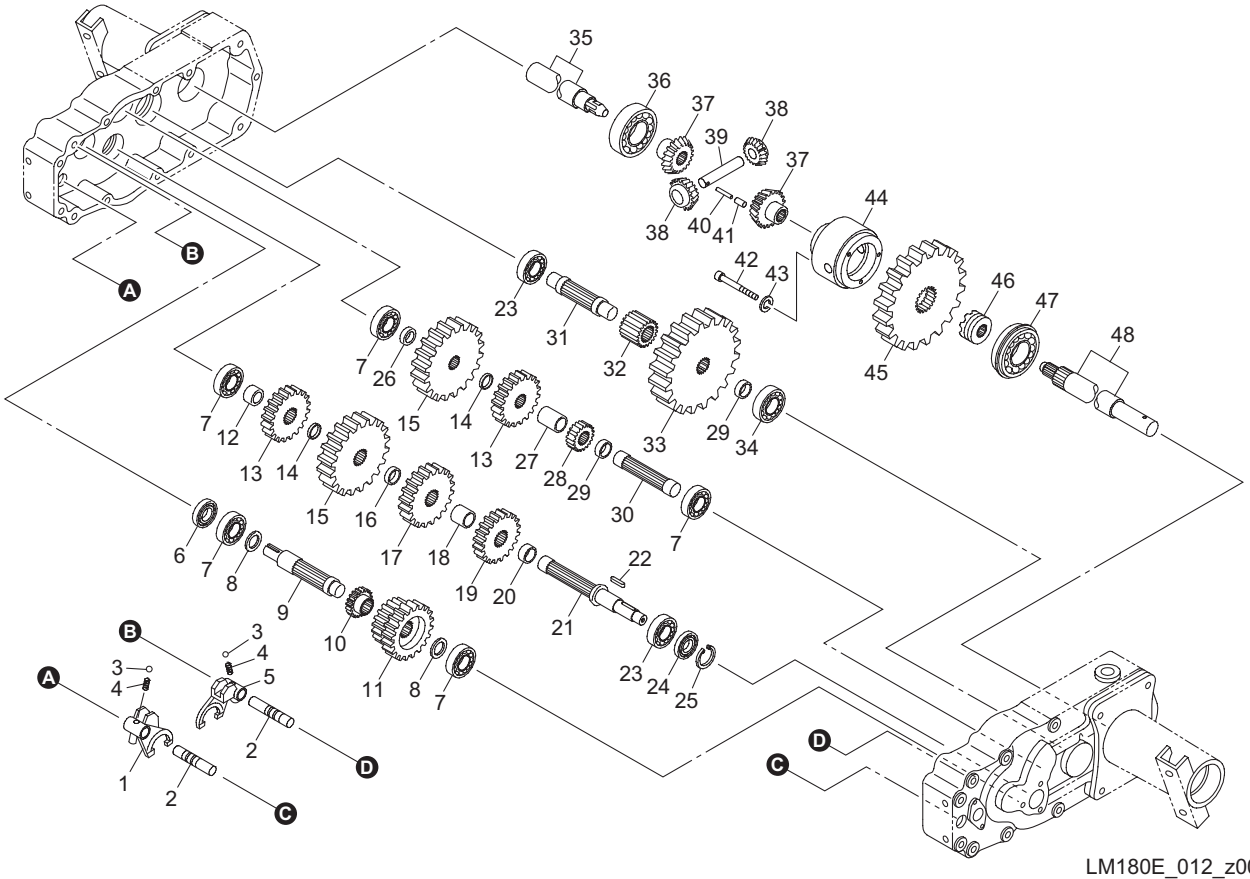

LM180E_012_z00

Cat No.	Code No.	Part name	Qty	Remark	SN of application
12-1	P2144-404001	SHIFTER, FORK A	1		
12-2	P2141-400501	SHIFTER, SHAFT A	2		
12-3	P0650-050160	BALL, STEEL 5/16	2		
12-4	P2152-400200	SPRING, FOR FORK	2		
12-5	P2144-408108	SHIFTER, FORK BC	1		
12-6	P2104-406809	OIL SEAL, 17407	1		
12-7	K0600063030	BEARING, BALL 6303	5		
12-8	P0701-172000	WASHER	2		
12-9	P2133-403503	SHAFT, A	1		
12-10	P2122-403815	GEAR, A16	1		
12-11	P2122-403903	GEAR, BC25-31	1		
12-12	P2103-411808	COLLAR, 172515.5	1		
12-13	P2122-403507	GEAR, S29	2		
12-14	P0701-201000	WASHER	2		
12-15	P2122-404009	GEAR, D43	2		
12-16	P2103-412201	COLLAR, 20257.5	1		
12-17	P2122-404108	GEAR, E33	1		
12-18	P2103-411402	COLLAR, 202524	1		
12-19	P2122-403309	GEAR, F28	1		
12-20	P2103-412003	COLLAR, 202511.5	1		
12-21	P2133-426500	SHAFT, B	1		
12-22	P0480-050250	KEY, 5-525	1		
12-23	K0600062040	BEARING, BALL 6204	2		
12-24	P2104-400500	OIL SEAL, 20407	1		
12-25	P2152-400309	RING, RETAINING 20	1		
12-26	P2103-411907	COLLAR, 17257.5	1		
12-27	P2103-412300	COLLAR, 202534	1		
12-28	P2122-403408	GEAR, 115	1		
12-29	P2103-412102	COLLAR, 20259	2		
12-30	P2132-404402	SHAFT, C	1		

https://truckmanualshub.com/

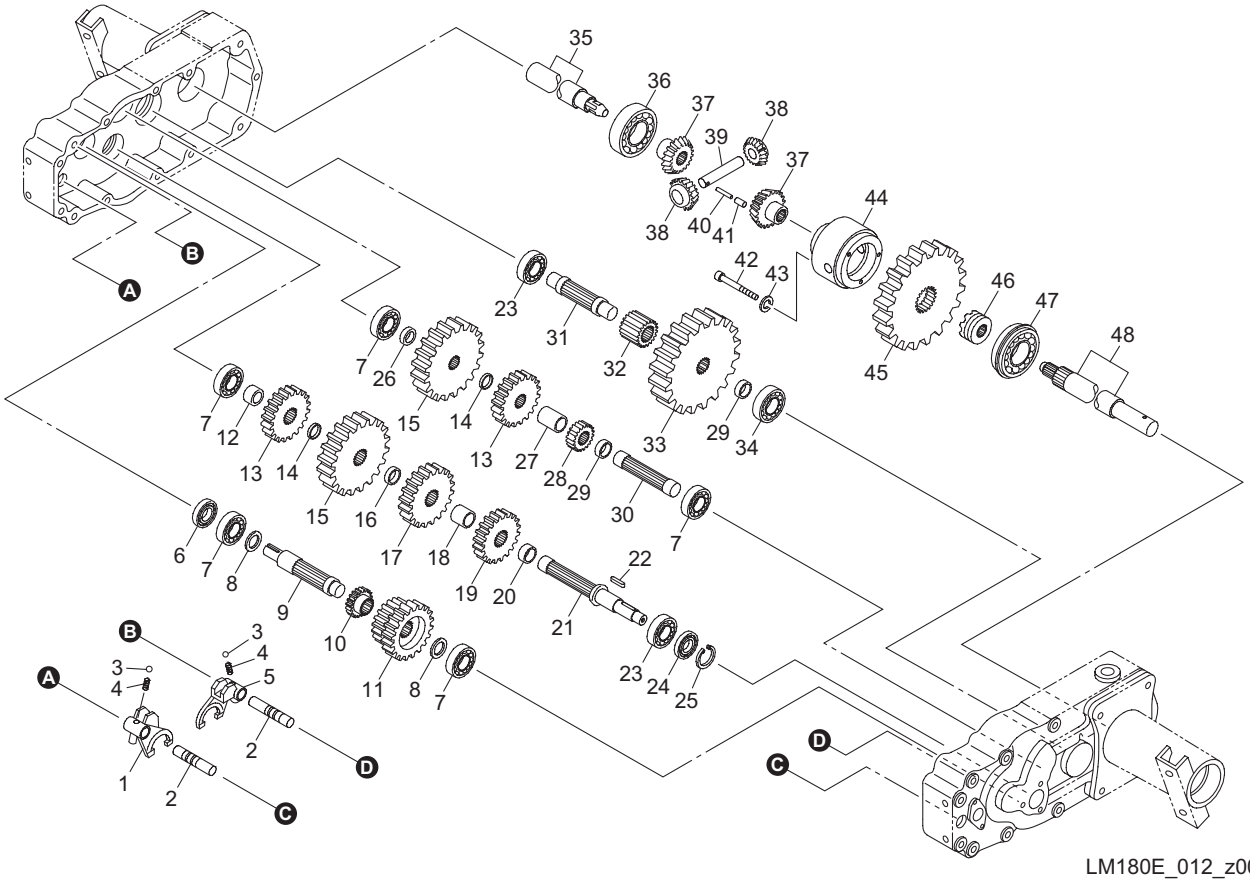

LM180E_012_z00

Cat No.	Code No.	Part name	Qty	Remark	SN of application
12-31	P2132-404501	SHAFT, D	1		
12-32	P2122-404306	GEAR, K15	1		
12-33	P2122-404207	GEAR, J54	1		
12-34	K0600063040	BEARING, BALL 6304	1		
12-35	P2133-672004	SHAFT, G (RIGHT)	1		
12-36	K0600062060	BEARING, BALL 6206	1		
12-37	P2120-414301	GEAR, DIFF SIDE	2		
12-38	P2120-401880	PINION, BEVEL	2		
12-39	P2131-405004	SHAFT, DIFF LOCK	1		
12-40	K0320050281	PIN, SPRING M5-28	1		
12-41	P0452-080160	PIN, 8-16	1		
12-42	P2101-437303	BOLT, FRANGED M8-55	1		
12-43	P0410-080000	WASHER, SPRING M8	4		
12-44	P2136-600303	CASE, DIFF-LOCK	1		
12-45	P2129-405724	GEAR, L48	1		
12-46	P2135-403204	CLUTCH	1		
12-47	P0501-620660	BEARING, BALL 6206 NR	1		
12-48	P2133-671908	SHAFT, G (LEFT)	1		

https://truckmanualshub.com/

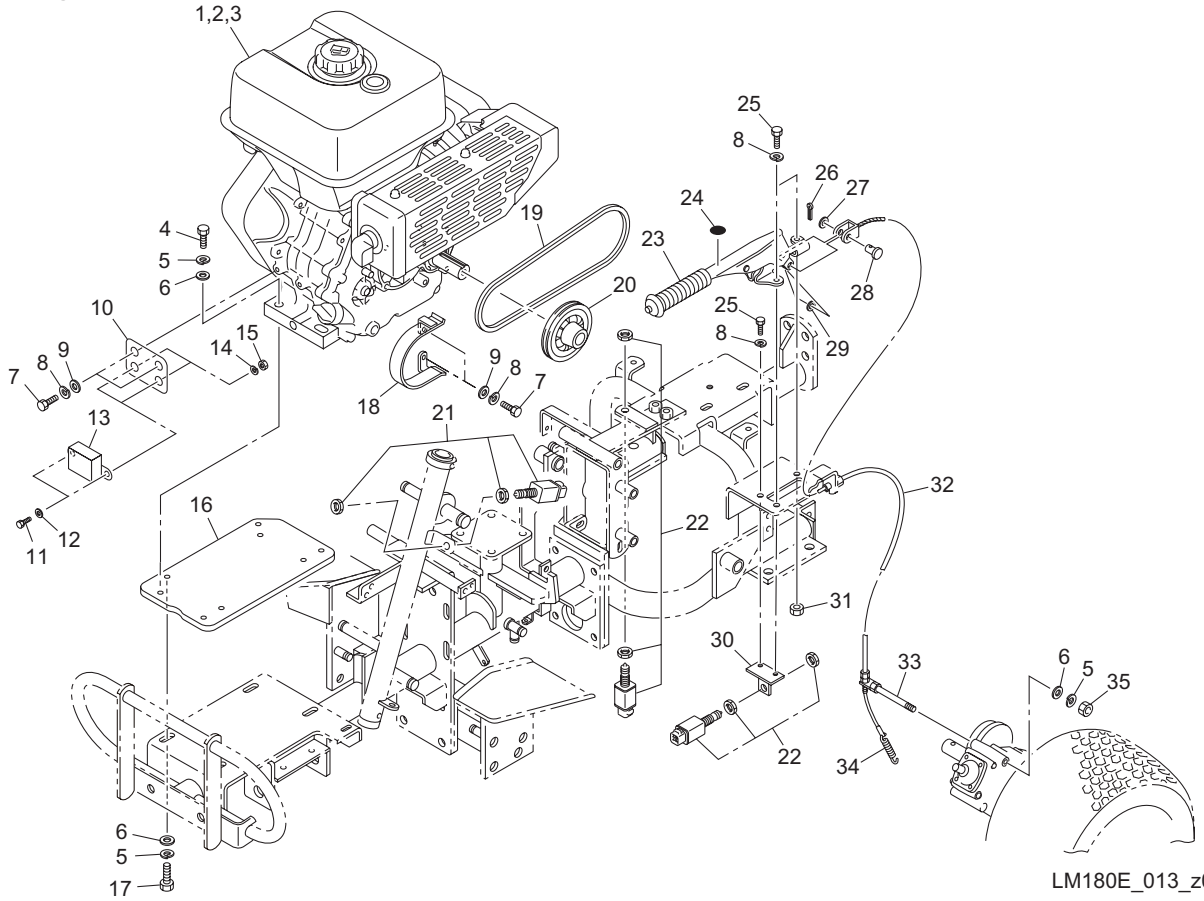

LM180E_013_z00

Cat No.	Code No.	Part name	Qty	Remark	SN of application
13a-1	K2600000600	ENGINE, MITSUBISHI GB300LN	1		
13-2	R255-32601-07	ELEMENT SET	1		
13-3	R065-01405-80	PLUG, SPARK BR6ES	1		
13-4	K0000100352	BOLT, M10-35	4		
13-5	K0200100002	WASHER, SPRING M10	9		
13-6	K5000100002	WASHER, M10	9		
13-7	K0000080152	BOLT, M8-15	2		
13-8	K0200080002	WASHER, SPRING M8	5		
13-9	K5000080002	WASHER, M8	2		
13-10	LM180E-0904Z2	PLATE, MOUNTING UNIT	1		
13-11	K0000050152	BOLT, M5-15	2		
13-12	K5000050002	WASHER, M5	2		
13-13	KE34004AA	UNIT	1		
13-14	K0200050002	WASHER, SPRING M5	2		
13-15	K0100050002	NUT, M5	2		
13-16	LM180E-0903ZD	BASE, ENGINE	1		
13-17	K0000100202	BOLT, M10-20	4		
13-18	LM180E-0902Z2	STOPPER, BELT	1		
13-19	K2371600500	BELT, V W6SB50	1		
13-20	LM180A-1602Z2	PULLEY, FOR ENGINE	1		
13-21	K3671000160	SWITCH, LIMIT 2 CIRCUIT NO	1		
13-22	K3671000110	SWITCH, LIMIT 2 CIRCUIT NC	2		
13-23	K1724000020	LEVER ASSY, SIDE BRAKE	1		
13-24	K4209001200	DECAL, BRAKE	1		
13-25	K0000080202	BOLT, M8-20	3		
13-26	K0300020202	PIN, COTTER M2-20	1		
13-27	K5000120002	WASHER, M12	1		
13-28	K6030120242	PIN, FLAT HEAD M12-24	1		
13-29	K5073212352	WASHER, SPHC 3.2-12-35	1		
13-30	LM185BW0165AD	MOUNT, SWITCH	1		

LM180E_013_a01

https://truckmanualshub.com/

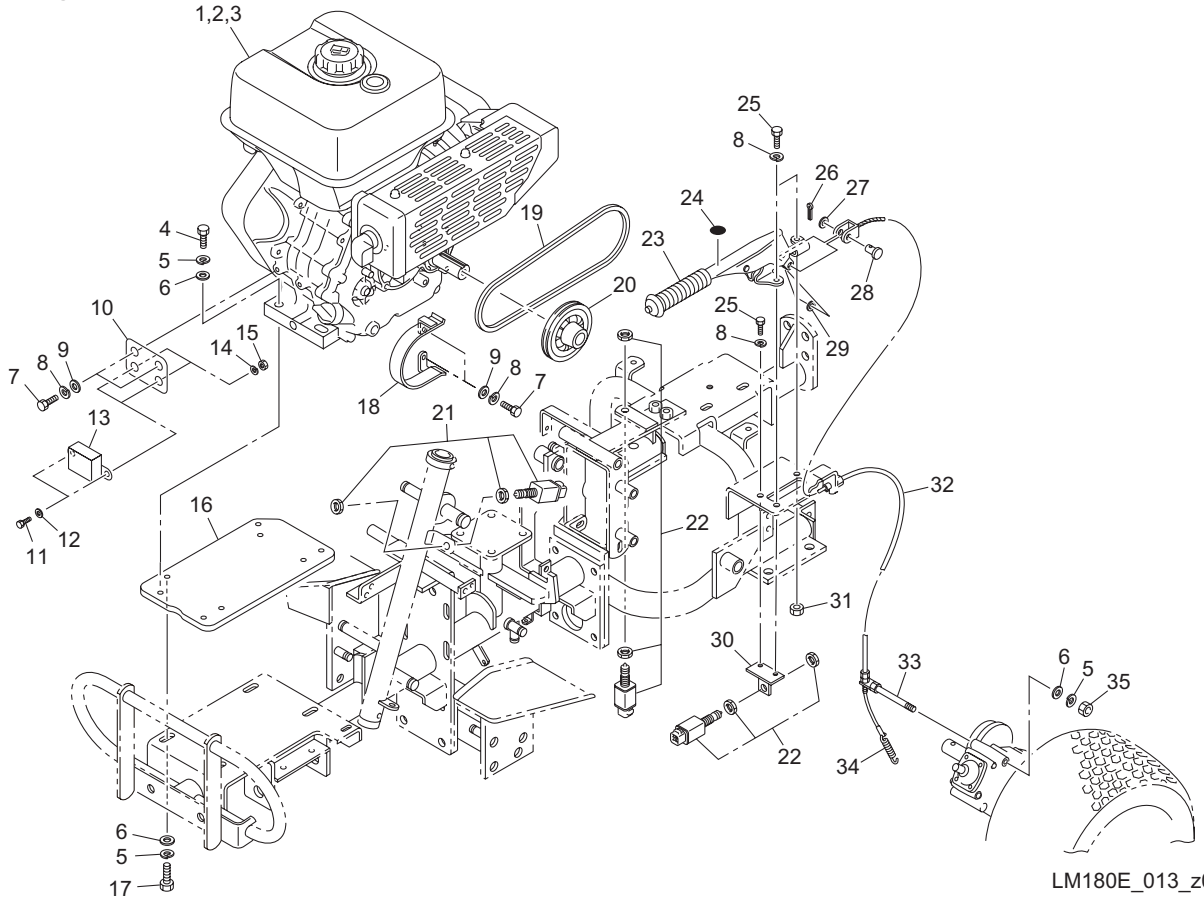

LM180E_013_z00

Cat No.	Code No.	Part name	Qty	Remark	SN of application
13-31	K0100080002	NUT, M8	1		
13-32	K1120085010	WIRE, BRAKE 850	1		
13-33	LM180B-0477Z2	FITTING, TAPPED FIXING WIRE	1		
13-34	K103000002D	SPRING, W/U HOOK M2.9-15.2-88	1		
13-35	K0100100002	NUT, M10	1		
13-36					
13-37					

LM180E_013_a01

https://truckmanualshub.com/

14.Left & Right mower lifting arm section

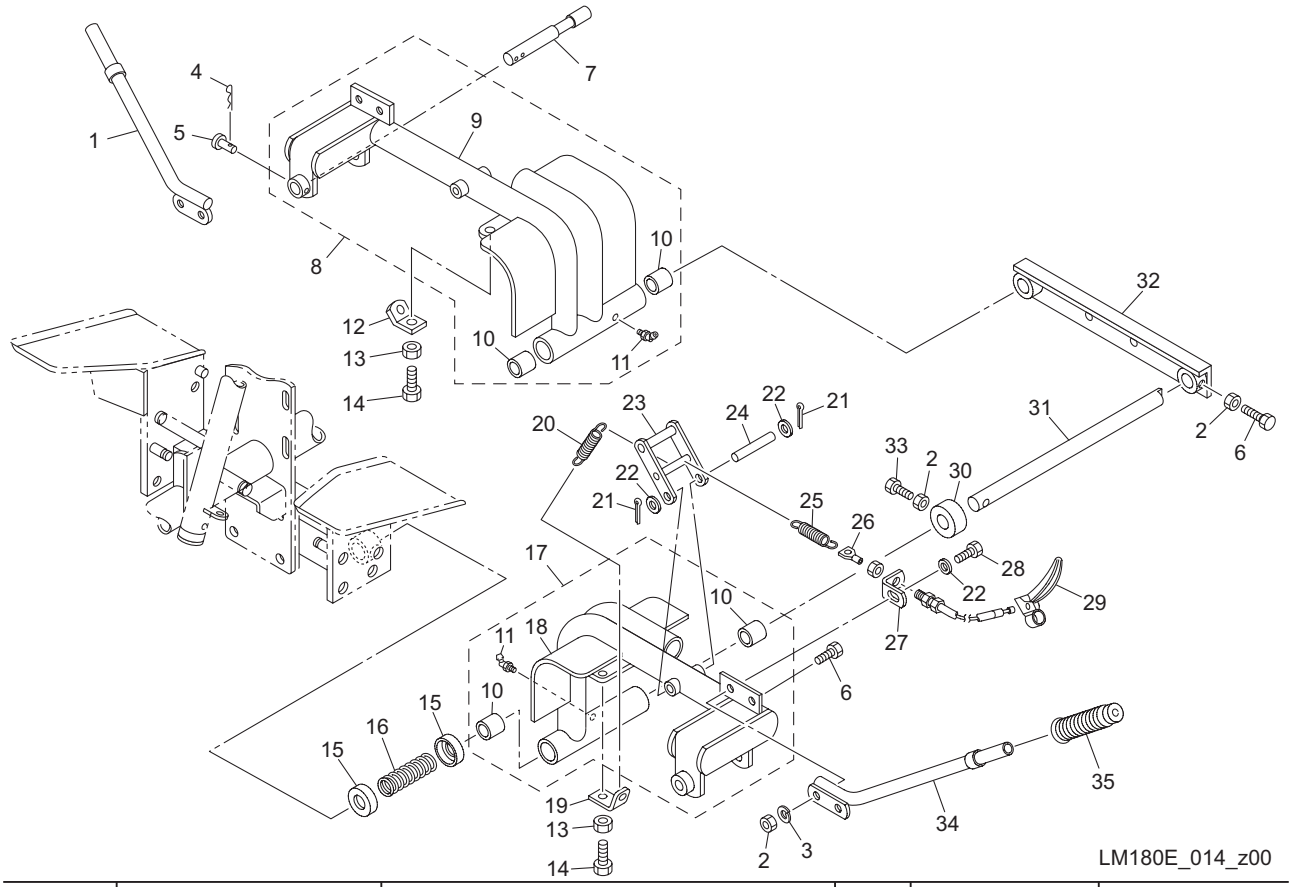

Cat No.	Code No.	Part name	Qty	Remark	SN of application
14-1	LM180A-0359AD	LEVER, HOISTING (RH)	1		
14-2	K0100100002	NUT, M10	8		
14-3	K0200100002	WASHER, SPRING M10	4		
14-4	K0340800002	PIN, SNAP W/RETAINER M8	2		
14-5	K6040080402	PIN, ROUND HEAD M8-40	2		
14-6	K0000100252	BOLT, M10-25	4		
14-7	LM180B-0384A2	SHAFT, OSCILLATING MOWER	2		
14-8	LM180B-0350Z0	ARM COMP, LIFTING MOWER (RH)	1		
14-9	LM180B-0348AD	ARM, LIFTING MOWER (RH)	1		
14-10	K6000000320	BUSH, COPPER 22.3-30-25	4		
14-11	K1440000030	GREASE NIPPLE, 67.5 TYPE B	2		
14-12	LM180A-0385Z2	CLAMPER, SPRING (RH)	1		
14-13	K0100120002	NUT, M12	2		
14-14	K0000120302	BOLT, M12-30	2		
14-15	LM180A-0345Z2	BRACKET, SPRING	4		
14-16	K1000000298	SPRING, COMPRESSION M5-38-130	2		
14-17	LM180B-0349Z0	ARM COMP, LIFTING MOWER (LH)	1		
14-18	LM180B-0347AD	ARM, LIFTING MOWER (LH)	1		
14-19	LM180A-0379Z2	CLAMPER, SPRING (LH)	1		
14-20	K1030000038	SPRING, W/U HOOK M1.2-10.4-56	2		
14-21	K0300032252	PIN, COTTER M3.2-25	4		
14-22	K5000100002	WASHER, M10	6		
14-23	LM180A-0374BD	CLAMPER, ARM	2		
14-24	K6151000062	SHAFT, W/HOLE M10-77	2		
14-25	K1030000048	SPRING, W/U HOOK M2-14-80	2		
14-26	K1170051600	WIRE, HOOK 516	2		
14-27	LM180B-0380A2	PLATE, MOUNTING WIRE	2		
14-28	K0000100302	BOLT, M10-30	2		
14-29	K1211260120	LEVER, CLUTCH E126012	2		
14-30	K6218000082	COLLAR, TAPPED 22.5-38-20	2		

LM180E_014_z01

https://truckmanualshub.com/

14.Left & Right mower lifting arm section

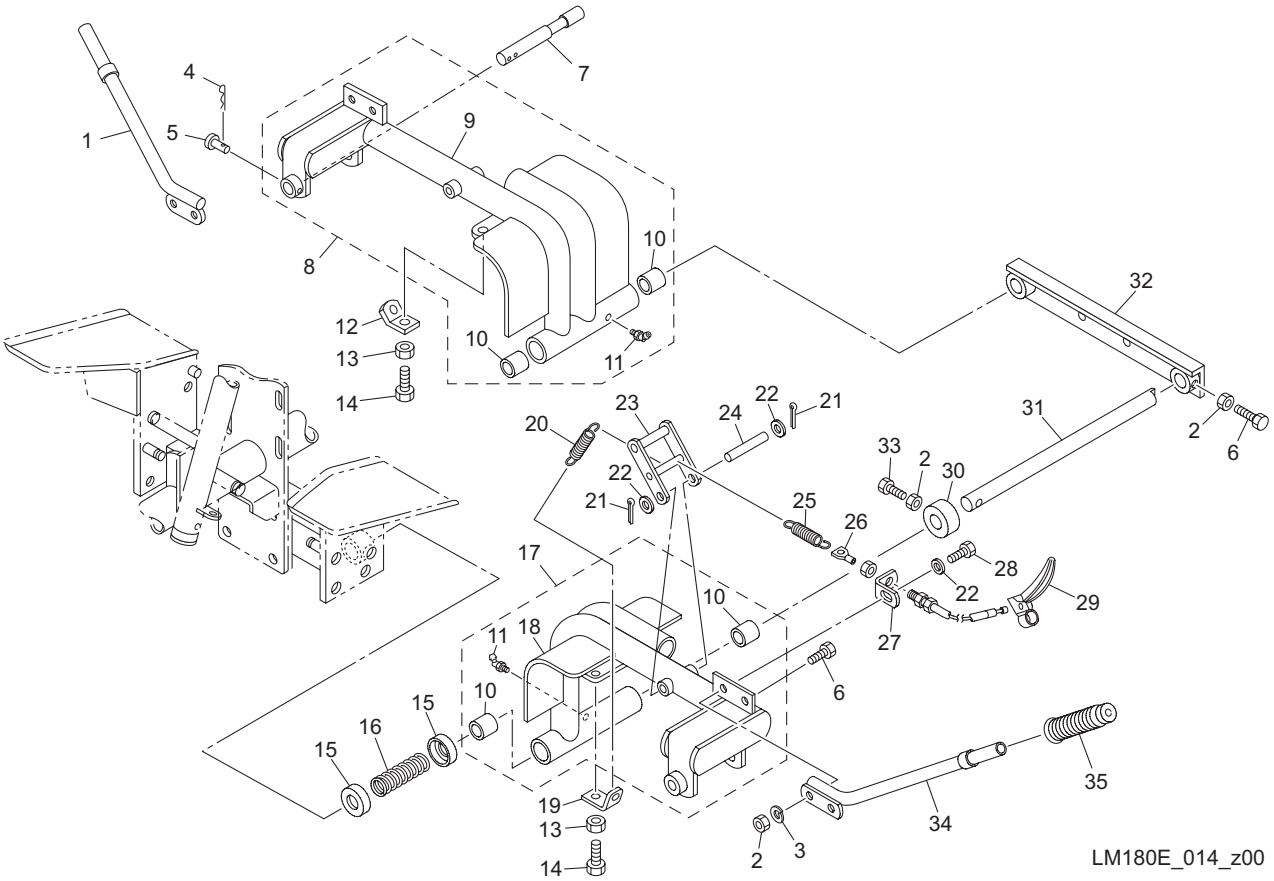

Cat No.	Code No.	Part name	Qty	Remark	SN of application
14-31	LM180A-0343Z2	SHAFT, SUPPORT SIDE MOWING UNITS	2		
14-32	LM180A-0305AD	FRAME, LOWER (REAR)	1		
14-33	K0000100202	BOLT, M10-20	2		
14-34	LM180A-0358AD	LEVER, HOISTING (LH)	1		
14-35	K1300000080	GRIP, RUBBER 15.5	2		

LM180E_014_z01

https://truckmanualshub.com/

15.Rear mower lifting arm section

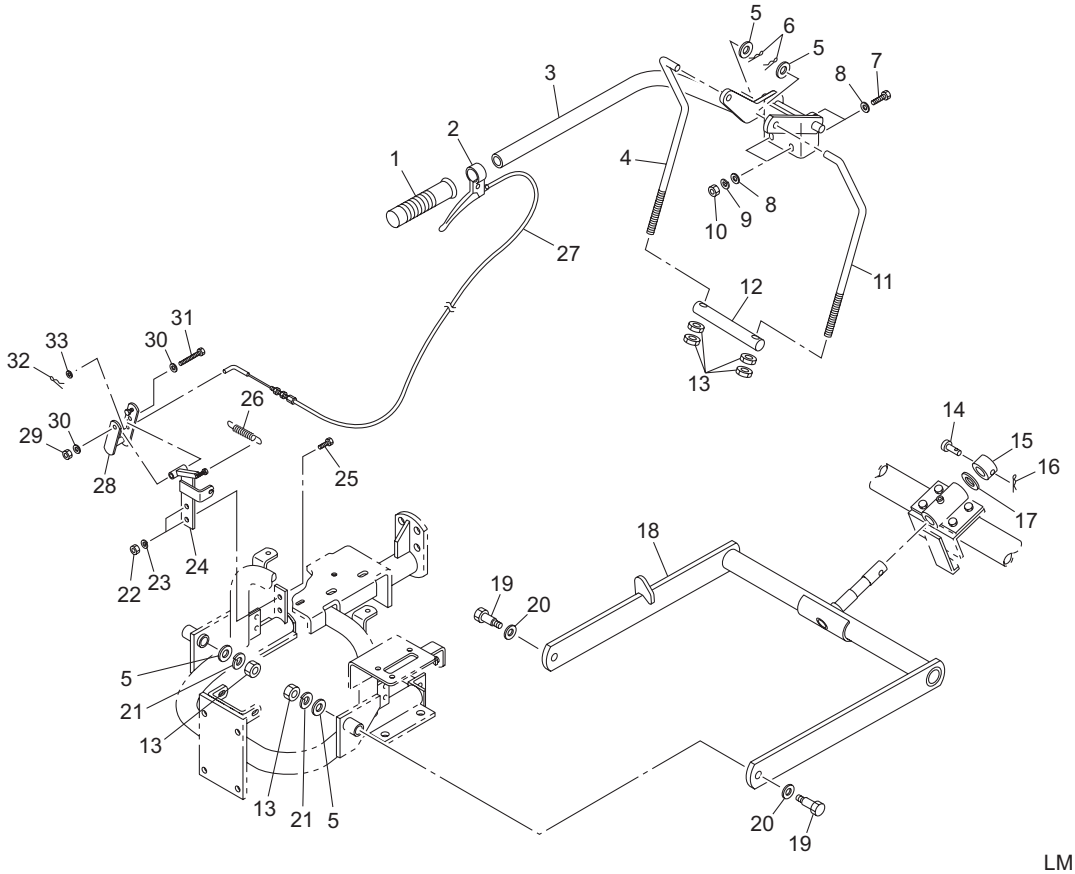

LM180E_015_z00

Cat No.	Code No.	Part name	Qty	Remark	SN of application
15-1	K1300000020	GRIP, RUBBER HANDLE 25.4	1		
15-2	K1211260120	LEVER, CLUTCH E126012	1		
15-3	LM180C-0408CD	LEVER, HOISTING	1		
15-4	LM180B-0411Z2	SHAFT, CONNECTED TO LIFTING FUNCTION (RH)	1		
15-5	K5000120002	WASHER, M12	4		
15-6	K0331300008	PIN, SNAP M13	2		
15-7	K0000100302	BOLT, M10-30	4		
15-8	K5000100002	WASHER, M10	8		
15-9	K0200100002	WASHER, SPRING M10	4		
15-10	K0100100002	NUT, M10	4		
15-11	LM180B-0409Z2	SHAFT, CONNECTED TO LIFTING FUNCTION (LH)	1		
15-12	LM180A-0410Z2	SHAFT, LIFTING	1		
15-13	K0100120002	NUT, M12	6		
15-14	K6040080402	PIN, ROUND HEAD M8-40	1		
15-15	K6215000572	COLLAR, STKM W/HOLE 25.2-32-18	1		
15-16	K0330800008	PIN, SNAP M8	1		
15-17	K5051025350	WASHER, C5191P 1-25-35	1		
15-18	LM180C-0461AD	ARM, LIFTING REAR MOWER	1		
15-19	LM180A-0476Z2	PIN, SUPPORTING SHAFT	2		
15-20	K5074516402	WASHER, SPHC 4.5-16-40	2		
15-21	K0200120002	WASHER, SPRING M12	2		
15-22	K0100080002	NUT, M8	2		
15-23	K0200080002	WASHER, SPRING M8	2		
15-24	LM180C-0410ZD	FITTING, LEVER	1		
15-25	K0000080202	BOLT, M8-20	2		
15-26	K1030000038	SPRING, W/U HOOK M1.2-10.4-56	1		
15-27	K1170107010	WIRE, HOOK 1070	1		
15-28	LM180C-0409ZD	HOOK	1		
15-29	K0144080002	NUT, W/F-RING M8	1		
15-30	K5000080002	WASHER, M8	2		

LM180E_015_z01

https://truckmanualshub.com/

15.Rear mower lifting arm section

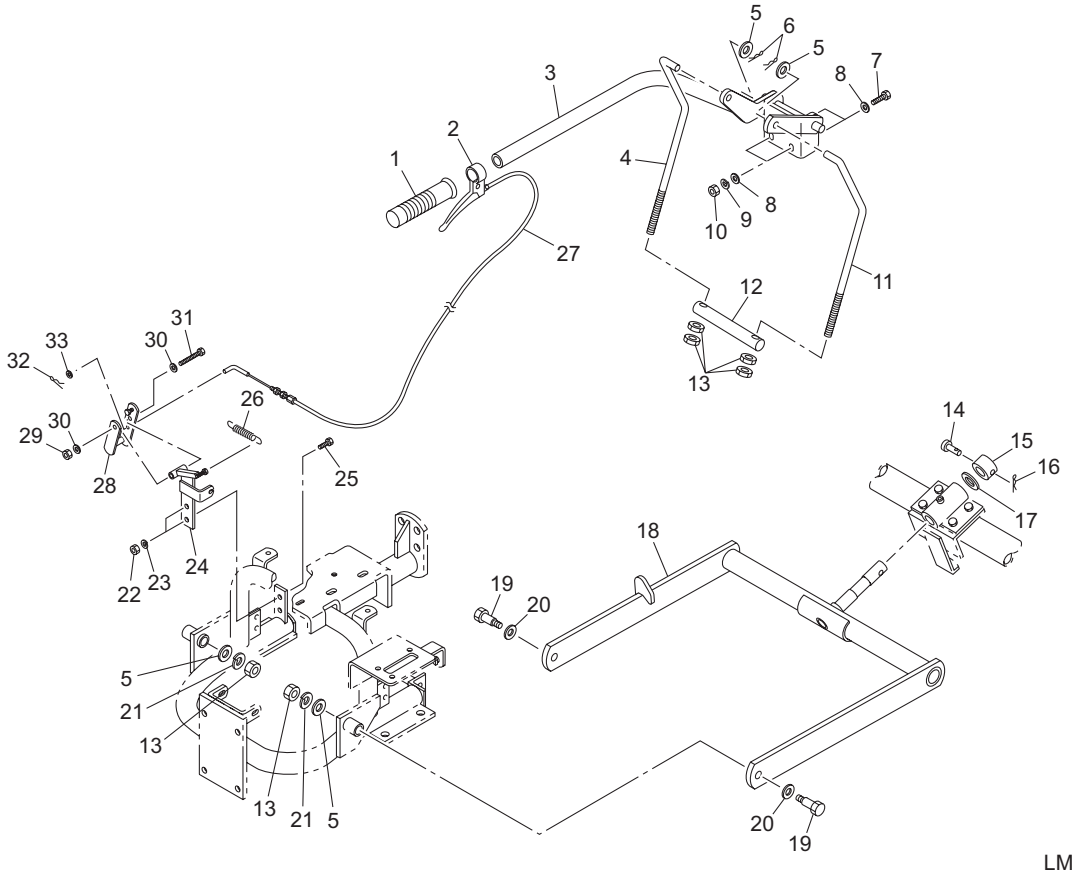

LM180E_015_z00

Cat No.	Code No.	Part name	Qty	Remark	SN of application
15-31	K0000080602	BOLT, M8-60	1		
15-32	K0340800002	PIN, SNAP W/RETAINER M8	1		
15-33	K5000060002	WASHER, M6	1		

LM180E_015_z01

https://truckmanualshub.com/

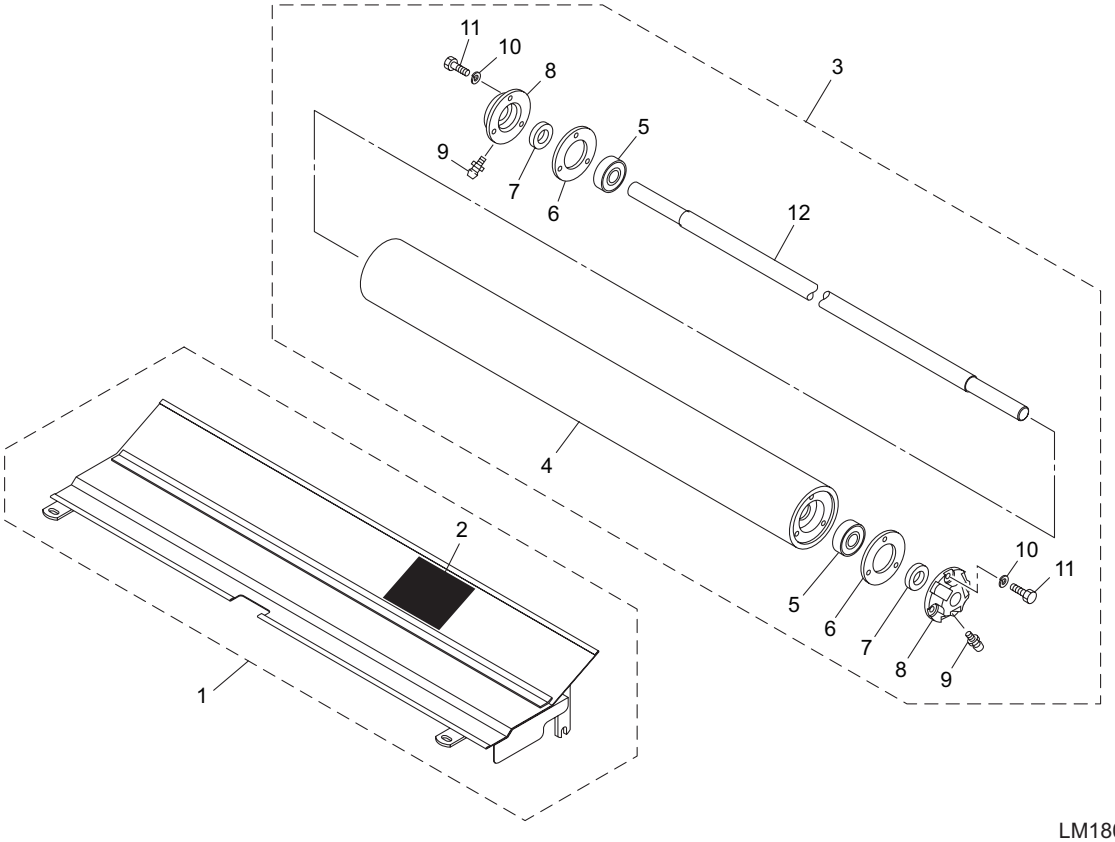

LM180E_016_z00

Cat No.	Code No.	Part name	Qty	Remark	SN of application
16-1	LM180C-0165A0	COVER, REEL W/DECAL(LH)	1		
16-2	K4205001600	DECAL, CAUTION CUTTING HANDS/FEET	1		
16-3	LM180B-0158A0	ROLLER ASSY	1		
16-4	K740000024D	ROLLER, 76.2-674	1		
16-5	K0602062030	BEARING, BALL SHIELD Z 6203	2		
16-6	K4015136650	PACKING, FIBER 1-36-65	2		
16-7	K0821730080	OIL SEAL, MHSA17308	2		
16-8	K6810000070	HOUSING, SEAL	2		
16-9	K1440000010	GREASE NIPPLE, STRAIGHT TYPE A	2		
16-10	K0200060002	WASHER, SPRING M6	6		
16-11	K0000060102	BOLT, M6-10	6		
16-12	LM180B-0159Z0	SHAFT, ROLLER	1		

https://truckmanualshub.com/

17.Left mower section B

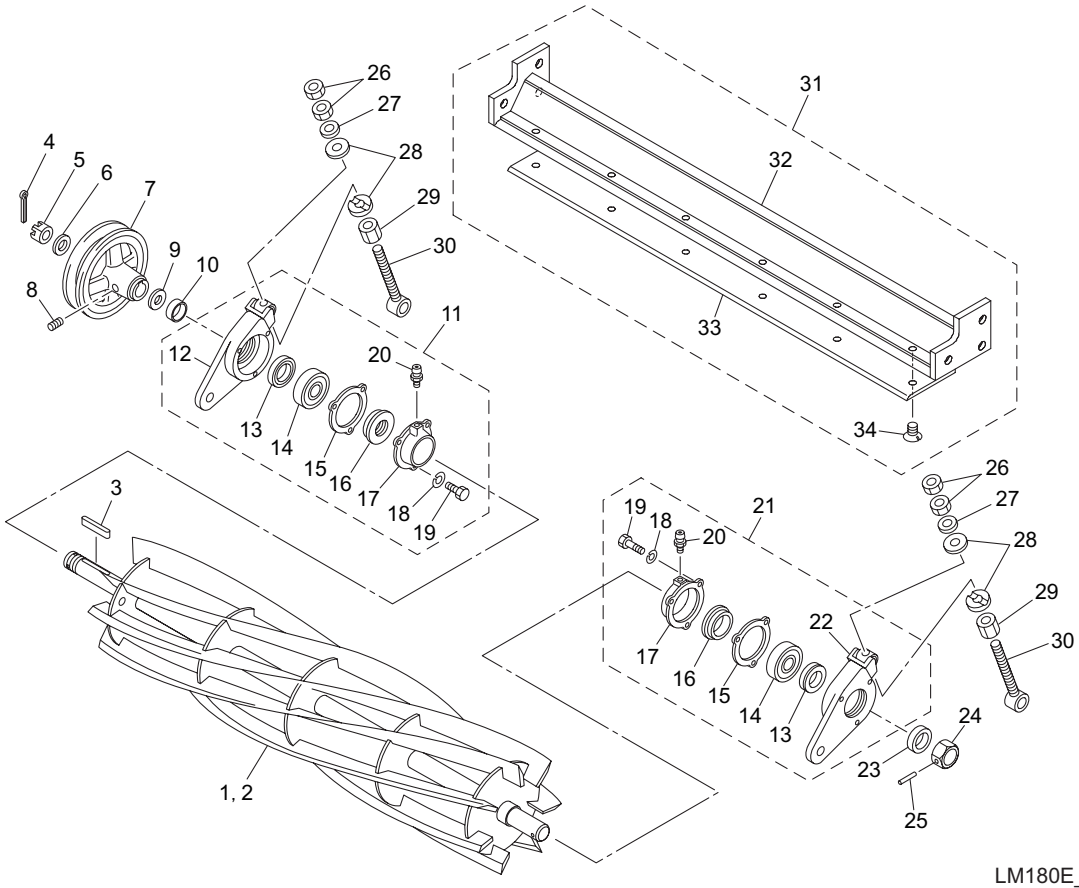

LM180E_017_z01

Cat No.	Code No.	Part name	Qty	Remark	SN of application
17-1	K281850L7AR	REEL CUTTER, 660-7L	1		
17-2	K281850L5AR	REEL CUTTER, 660-5L	1		
17-3	K0550000050	KEY, SPECIAL 5-5-42	1		
17-4	K0300032402	PIN, COTTER M3.2-40	1		
17-5	K0170000012	NUT, SPECIAL M20	1		
17-6	K5000200002	WASHER, M20	1		
17-7	K242000001D	PULLEY, V B1-20-134	1		
17-8	K0023080061	SETSCREW, M8-6	2		
17-9	K5030520400	WASHER, C2801P 0.5-20-40	1		
17-10	K6212000160	COLLAR, STKM 20.2-25.4-75	1		
17-11	LM180B-0113Z0	HOUSING ASSY, REEL A (RH)	1		
17-12	LM180A-0110Z2	HOUSING, REEL A (RH)	1		
17-13	K0860000050	SEAL, DUST PROOF	2		
17-14	K0602063040	BEARING, BALL SHIELD Z 6304	2		
17-15	K4011000150	PACKING, OIL-SHEET	2		
17-16	K0822542080	OIL SEAL, MHSA25428	2		
17-17	K6903000042	CAP, HOUSING	2		
17-18	K0200060002	WASHER, SPRING M6	6		
17-19	K0000060152	BOLT, M6-15	6		
17-20	K1440000010	GREASE NIPPLE, STRAIGHT TYPE A	2		
17-21	LM180B-0106Z0	HOUSING ASSY, REEL B (LH)	1		
17-22	LM180A-0109A2	HOUSING, REEL B (LH)	1		
17-23	K4031000240	RUBBER, WATERPROOF CAP	1		
17-24	K6080000032	SHAFT, FOR LAPPING	1		
17-25	K0320030251	PIN, SPRING M3-25	1		
17-26	K0106100002	NUT, P1 M10	4		
17-27	K5051010160	WASHER, C5191P 1-10-16	2		
17-28	K6500000102	WASHER, SS41 M5-10.5-22	4		
17-29	LM180A-0135Z2	NUT, FINE P1 H12 M10	2		
17-30	K6511000092	BOLT, FOR ADJUSTING CUTTER 100	2		

LM180E_017_z00

https://truckmanualshub.com/

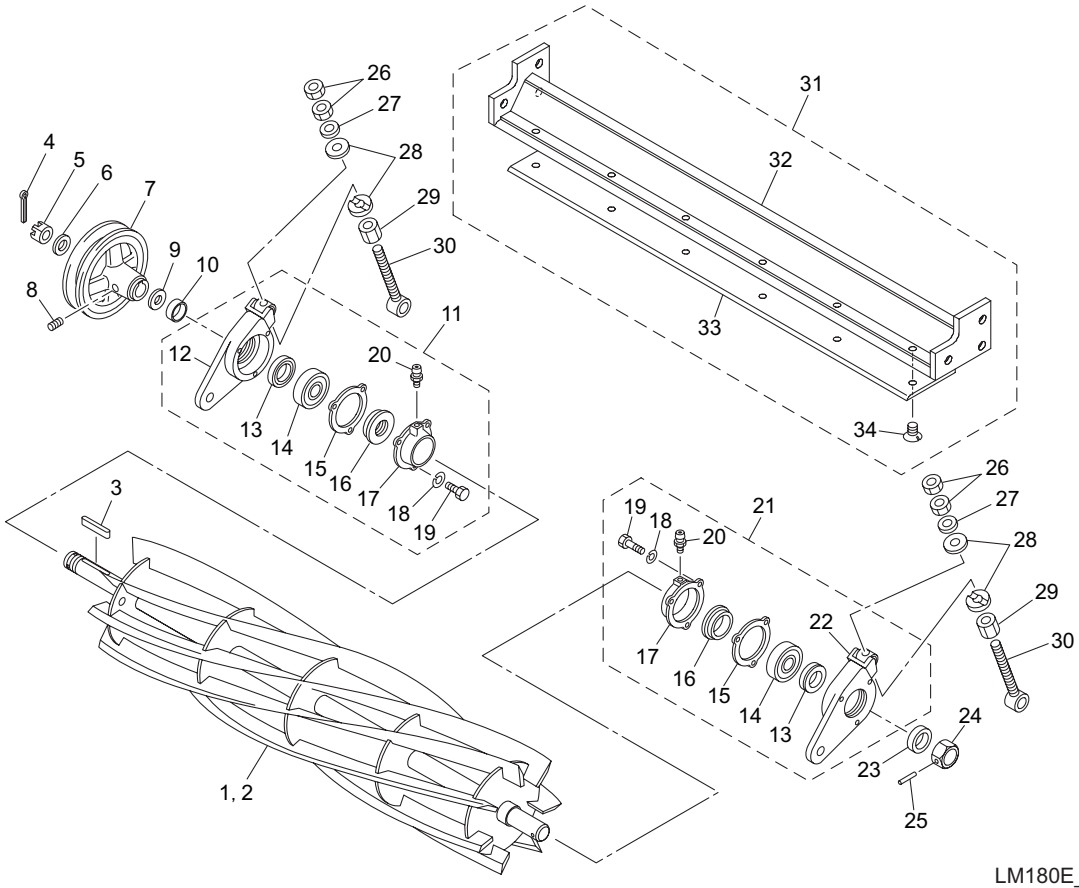

LM180E_017_z01

Cat No.	Code No.	Part name	Qty	Remark	SN of application
17-31	K8022000020	BEDKNIFE & BASE ASSY	1		
17-32	K744200006R	BASE, BEDKNIFE 732	1		
17-33	K2510000030	BEDKNIFE, TIPPED 7.0-26	1		
17-34	K0071001182	SCREW, HT FLAT HEAD M10-16	6		

LM180E_017_z00

https://truckmanualshub.com/

18.Left mower section C

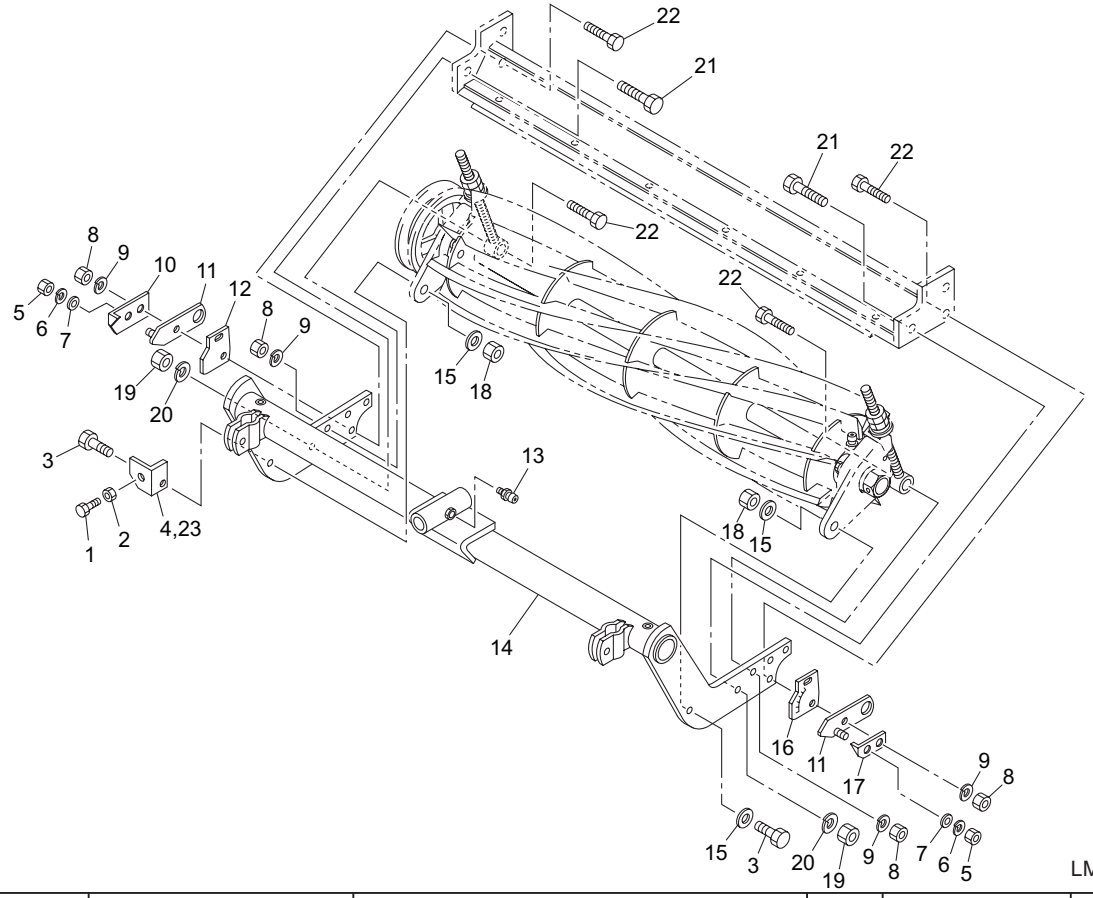

LM180E_018_z00

Cat No.	Code No.	Part name	Qty	Remark	SN of application
18-1	K0000060402	BOLT, M6-40	1		
18-2	K0100060002	NUT, M6	1		
18-3	LM180A-0120Z2	BOLT, AXIS	2		
18-4	LM180C-1015A2	SCRAPER, MOWING UNIT (LH)	1		
18-5	K0100080002	NUT, M8	2		
18-6	K0200080002	WASHER, SPRING M8	2		
18-7	K5000080002	WASHER, M8	2		
18-8	K0100100002	NUT, M10	4		
18-9	K0200100002	WASHER, SPRING M10	4		
18-10	LM180A-0252Z2	PLATE, INDICATING HOC (RH)	1		
18-11	LM180B-0150A2	PLATE, ADJUSTING HOC	2		
18-12	LM180B-0162Z0	SCALE, HOC (RH)	1		
18-13	K1440000010	GREASE NIPPLE, STRAIGHT TYPE A	1		
18-14	LM180B-0140BR	FRAME, MOWER (LH)	1		
18-15	K5073215302	WASHER, SPHC 3.2-14.5-30	3		
18-16	LM180B-0160Z0	SCALE, HOC (LH)	1		
18-17	LM180A-0251Z2	PLATE, INDICATING HOC (LH)	1		
18-18	K0145140002	NUT, W/F-RING M14 P1.5	2		
18-19	K0100120002	NUT, M12	2		
18-20	K0200120002	WASHER, SPRING M12	2		
18-21	K0000120352	BOLT, M12-35	2		
18-22	K0000100352	BOLT, M10-35	4		
18-23	LM180C-1015Z2	SCRAPER, MOWING UNIT (LH)	1		

LM180E_018_z00

https://truckmanualshub.com/

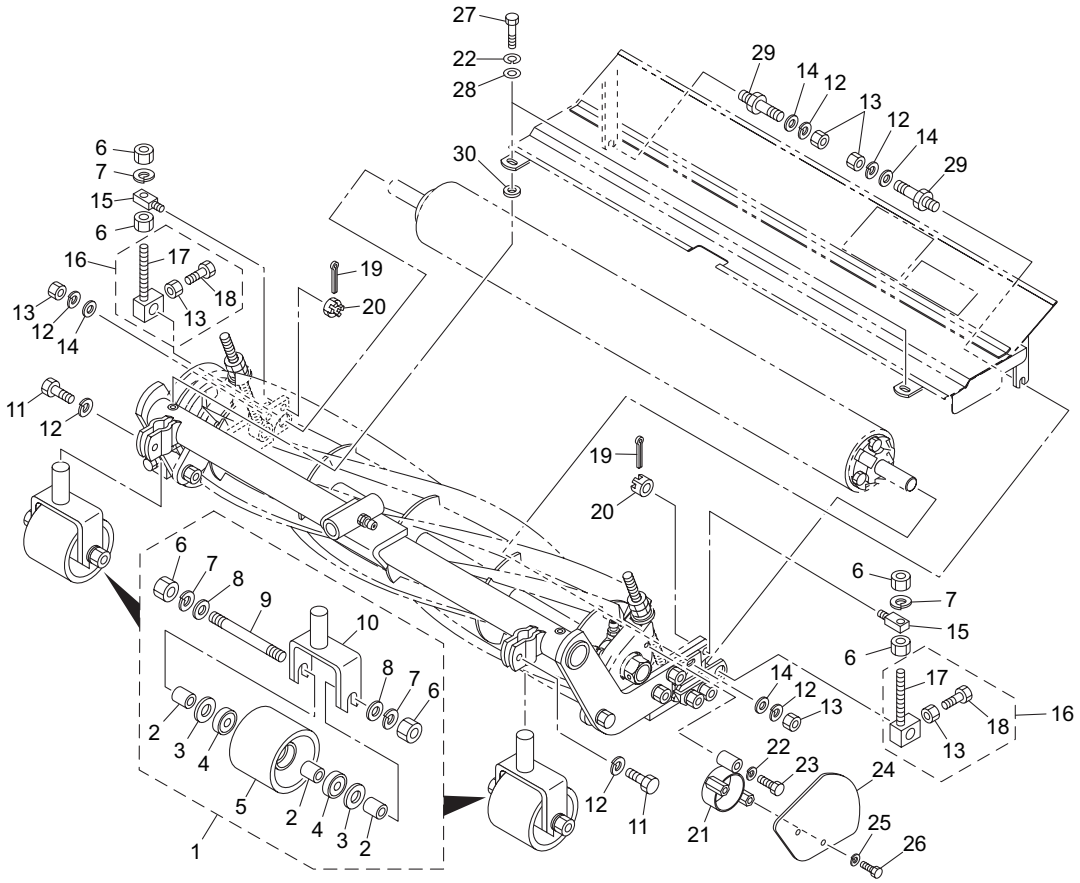

LM180E_019_z00

Cat No.	Code No.	Part name	Qty	Remark	SN of application
19-1	LM180B-1201Z0	ROLLER ASSY, FRONT	2		
19-2	K6211000052	COLLAR, SGP 12.7-17.3-16.3	6		
19-3	K5030512300	WASHER, C2801P 0.5-12-30	4		
19-4	K0612062010	BEARING, BALL SEAL 2RD 6201	4		
19-5	K6809000020	ROLLER, 76-66	2		
19-6	K0100120002	NUT, M12	8		
19-7	K0200120002	WASHER, SPRING M12	6		
19-8	K5000120002	WASHER, M12	4		
19-9	K0070000032	BOLT, DOUBLE-ENDED M12-115	2		
19-10	LM180A-1204Z2	BRACKET, FRONT WHEEL	2		
19-11	K0010100252	BOLT, HT M10-25	2		
19-12	K0200100002	WASHER, SPRING M10	6		
19-13	K0100100002	NUT, M10	6		
19-14	K5000100002	WASHER, M10	4		
19-15	LM180B-0156Z2	FIXTURE	2		
19-16	LM180B-0153Z0	SCREW ASSY, ADJ HOC	2		
19-17	LM180B-0154Z2	SCREW, ADJ HOC	2		
19-18	K0000100252	BOLT, M10-25	2		
19-19	K0300032252	PIN, COTTER M3.2-25	2		
19-20	K0124120002	NUT, THIN SLOTTED M12	2		
19-21	LM180B-0164A2	GUIDE, REEL SHAFT	1		
19-22	K0200080002	WASHER, SPRING M8	3		
19-23	K0000080402	BOLT, M8-40	1		
19-24	LM180C-0150ZR	COVER, SIDE MOWER	1		
19-25	K0200060002	WASHER, SPRING M6	2		
19-26	K0000060102	BOLT, M6-10	2		
19-27	K0000080202	BOLT, M8-20	2		
19-28	K5000080002	WASHER, M8	2		
19-29	LM180A-0147Z2	BOLT, FIXING REEL COVER	2		
19-30	K6210000202	COLLAR, SS41 8.2-16-5.2	2		

LM180E_019_z00

https://truckmanualshub.com/

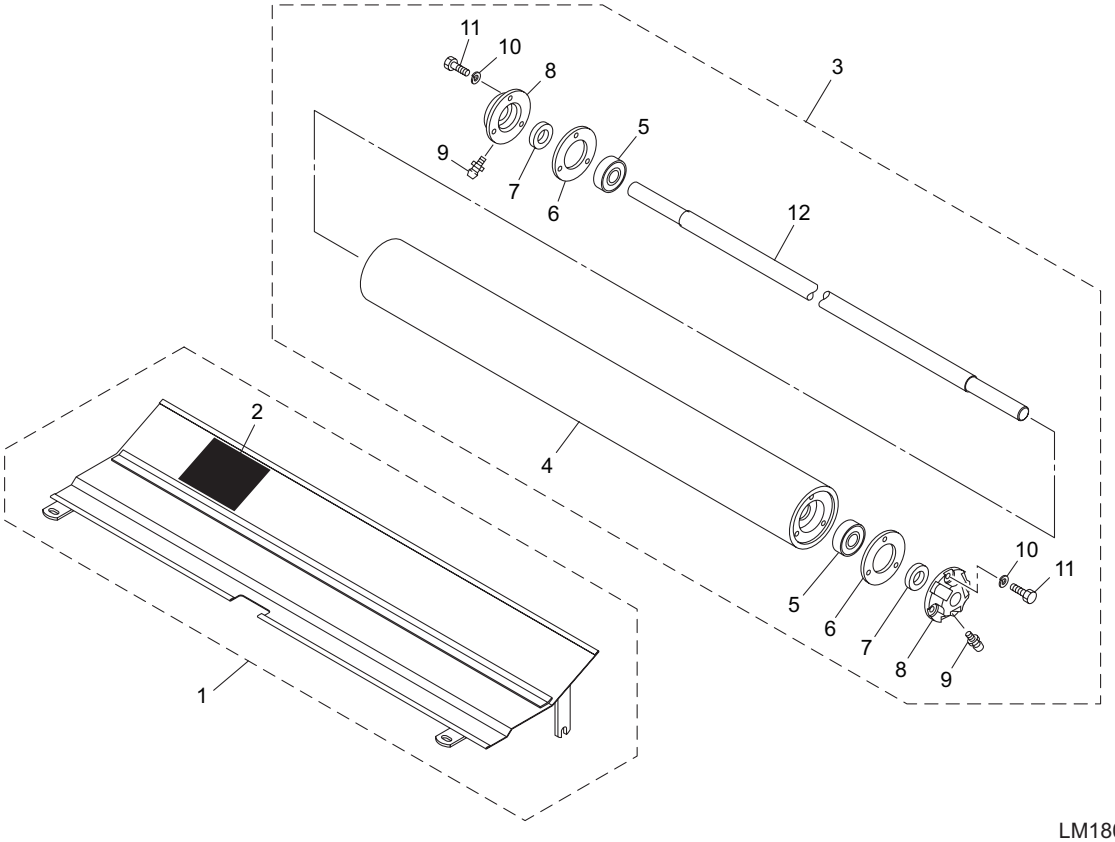

LM180E_020_z00

Cat No.	Code No.	Part name	Qty	Remark	SN of application
20-1	LM180C-0166A0	COVER, REEL W/DECAL(RH)	1		
20-2	K4205001600	DECAL, CAUTION CUTTING HANDS/FEET	1		
20-3	LM180C-0158Z0	ROLLER ASSY	1		
20-4	K740000024D	ROLLER, 76.2-674	1		
20-5	K0602062030	BEARING, BALL SHIELD Z 6203	2		
20-6	K4015136650	PACKING, FIBER 1-36-65	2		
20-7	K0821730080	OIL SEAL, MHSA17308	2		
20-8	K6810000070	HOUSING, SEAL	2		
20-9	K1440000010	GREASE NIPPLE, STRAIGHT TYPE A	2		
20-10	K0200060002	WASHER, SPRING M6	6		
20-11	K0000060102	BOLT, M6-10	6		
20-12	LM180B-0159Z0	SHAFT, ROLLER	1		

https://truckmanualshub.com/

21.Right mower section B

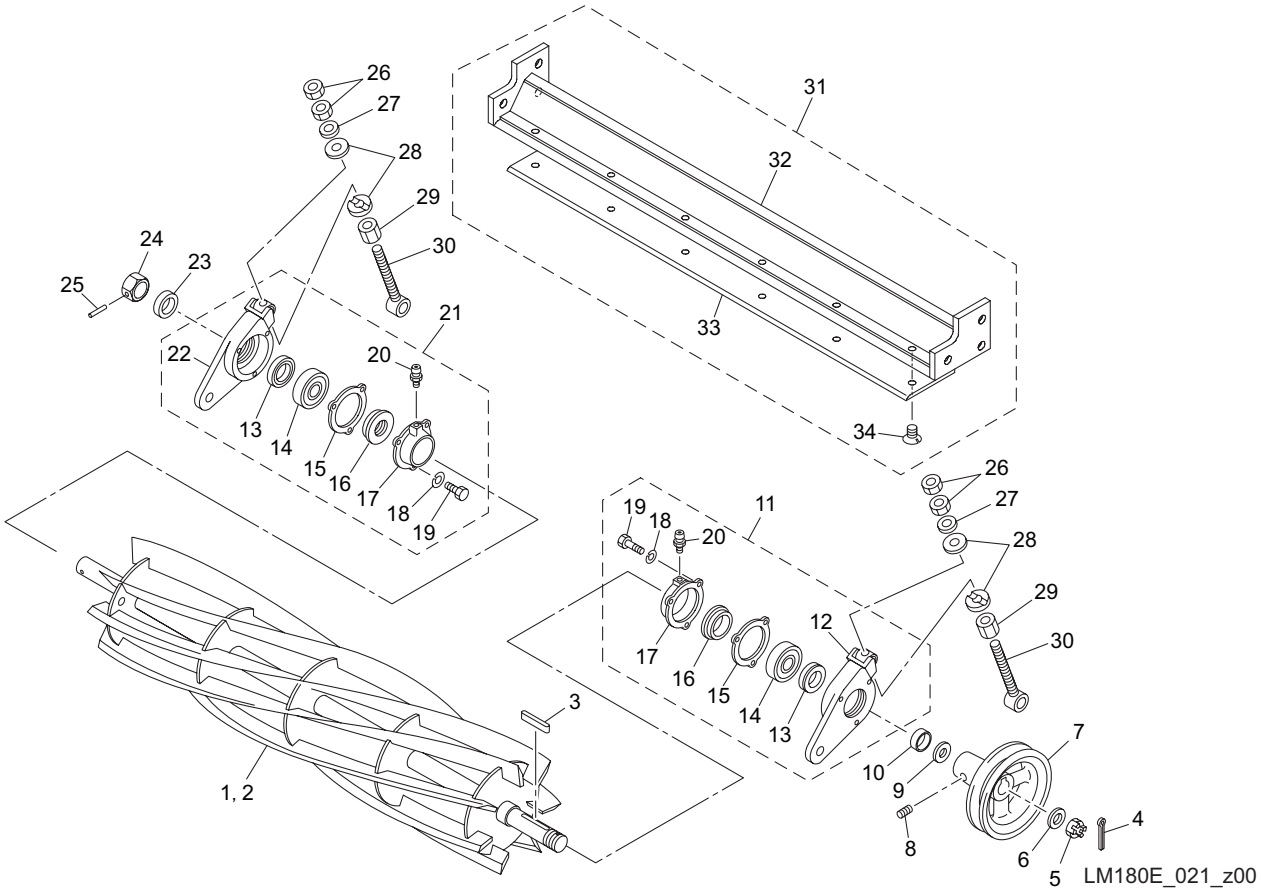

Cat No.	Code No.	Part name	Qty	Remark	SN of application
21-1	K281850R7AR	REEL CUTTER, 660-7R	1		
21-2	K281850R5AR	REEL CUTTER, 660-5R	1		
21-3	K0550000050	KEY, SPECIAL 5-5-42	1		
21-4	K0300032402	PIN, COTTER M3.2-40	1		
21-5	K0170000012	NUT, SPECIAL M20	1		
21-6	K5000200002	WASHER, M20	1		
21-7	K242000001D	PULLEY, V B1-20-134	1		
21-8	K0023080061	SETSCREW, M8-6	2		
21-9	K5030520400	WASHER, C2801P 0.5-20-40	1		
21-10	K6212000160	COLLAR, STKM 20.2-25.4-75	1		
21-11	LM180B-0107Z0	HOUSING ASSY, REEL A (LH)	1		
21-12	LM180A-0108Z2	HOUSING, REEL A (LH)	1		
21-13	K0860000050	SEAL, DUST PROOF	2		
21-14	K0602063040	BEARING, BALL SHIELD Z 6304	2		
21-15	K4011000150	PACKING, OIL-SHEET	2		
21-16	K0822542080	OIL SEAL, MHSA25428	2		
21-17	K6903000042	CAP, HOUSING	2		
21-18	K0200060002	WASHER, SPRING M6	6		
21-19	K0000060152	BOLT, M6-15	6		
21-20	K1440000010	GREASE NIPPLE, STRAIGHT TYPE A	2		
21-21	LM180B-0112Z0	HOUSING ASSY, REEL B (RH)	1		
21-22	LM180A-0111A2	HOUSING, REEL B (RH)	1		
21-23	K4031000240	RUBBER, WATERPROOF CAP	1		
21-24	K6080000032	SHAFT, FOR LAPPING	1		
21-25	K0320030251	PIN, SPRING M3-25	1		
21-26	K0106100002	NUT, P1 M10	4		
21-27	K5051010160	WASHER, C5191P 1-10-16	2		
21-28	K6500000102	WASHER, SS41 M5-10.5-22	4		
21-29	LM180A-0135Z2	NUT, FINE P1 H12 M10	2		
21-30	K6511000092	BOLT, FOR ADJUSTING CUTTER 100	2		

LM180E_021_z00

https://truckmanualshub.com/

21.Right mower section B

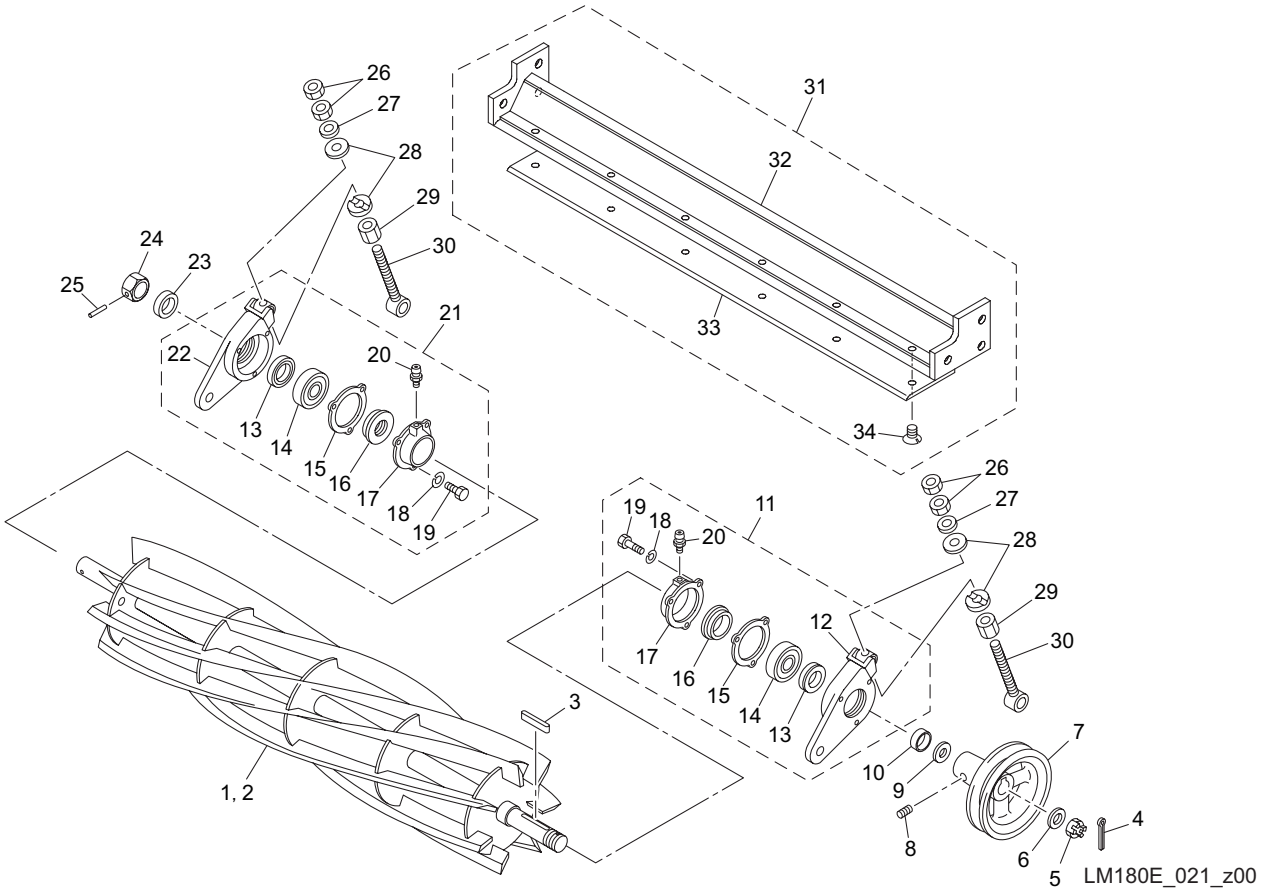

Cat No.	Code No.	Part name	Qty	Remark	SN of application
21-31	K8022000020	BEDKNIFE & BASE ASSY	1		
21-32	K744200006R	BASE, BEDKNIFE 732	1		
21-33	K2510000030	BEDKNIFE, TIPPED 7.0-26	1		
21-34	K0071001182	SCREW, HT FLAT HEAD M10-16	6		

https://truckmanualshub.com/

22.Right mower section C

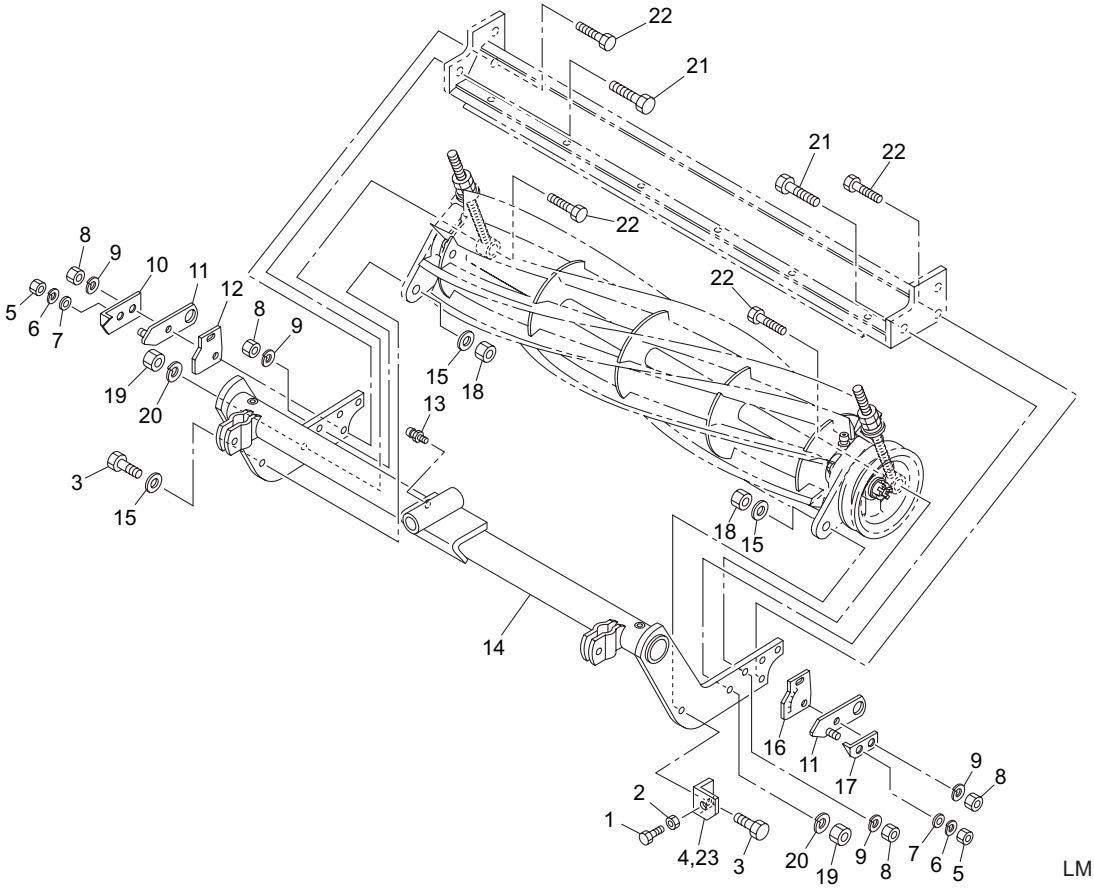

LM180E_022_z00

Cat No.	Code No.	Part name	Qty	Remark	SN of application
22-1	K0000060402	BOLT, M6-40	1		
22-2	K0100060002	NUT, M6	1		
22-3	LM180A-0120Z2	BOLT, AXIS	2		
22-4	LM180C-1023Z2	SCRAPER, MOWING UNIT (RH)	1		
22-5	K0100080002	NUT, M8	2		
22-6	K0200080002	WASHER, SPRING M8	2		
22-7	K5000080002	WASHER, M8	2		
22-8	K0100100002	NUT, M10	4		
22-9	K0200100002	WASHER, SPRING M10	4		
22-10	LM180A-0252Z2	PLATE, INDICATING HOC (RH)	1		
22-11	LM180B-0150A2	PLATE, ADJUSTING HOC	2		
22-12	LM180B-0162Z0	SCALE, HOC (RH)	1		
22-13	K1440000010	GREASE NIPPLE, STRAIGHT TYPE A	1		
22-14	LM180B-0141BR	FRAME, MOWER (RH)	1		
22-15	K5073215302	WASHER, SPHC 3.2-14.5-30	3		
22-16	LM180B-0160Z0	SCALE, HOC (LH)	1		
22-17	LM180A-0251Z2	PLATE, INDICATING HOC (LH)	1		
22-18	K0145140002	NUT, W/F-RING M14 P1.5	2		
22-19	K0100120002	NUT, M12	2		
22-20	K0200120002	WASHER, SPRING M12	2		
22-21	K0000120352	BOLT, M12-35	2		
22-22	K0000100352	BOLT, M10-35	4		
22-23	LM180C-1023Z2	SCRAPER, MOWING UNIT (RH)	1		

LM180E_022_z00

https://truckmanualshub.com/

23.Right mower section D

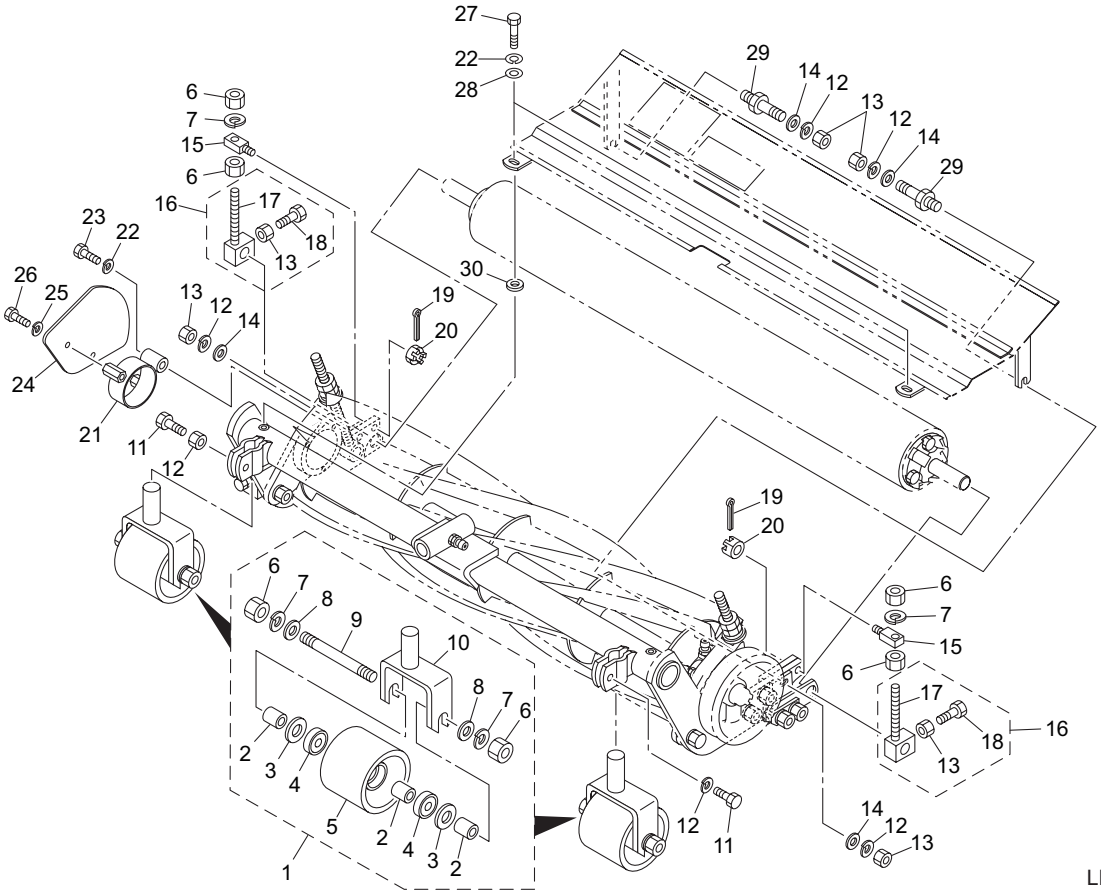

LM180E_023_z00

Cat No.	Code No.	Part name	Qty	Remark	SN of application
23-1	LM180B-1201Z0	ROLLER ASSY, FRONT	2		
23-2	K6211000052	COLLAR, SGP 12.7-17.3-16.3	6		
23-3	K5030512300	WASHER, C2801P 0.5-12-30	4		
23-4	K0612062010	BEARING, BALL SEAL 2RD 6201	4		
23-5	K6809000020	ROLLER, 76-66	2		
23-6	K0100120002	NUT, M12	8		
23-7	K0200120002	WASHER, SPRING M12	6		
23-8	K5000120002	WASHER, M12	4		
23-9	K0070000032	BOLT, DOUBLE-ENDED M12-115	2		
23-10	LM180A-1204Z2	BRACKET, FRONT WHEEL	2		
23-11	K0010100252	BOLT, HT M10-25	2		
23-12	K0200100002	WASHER, SPRING M10	6		
23-13	K0100100002	NUT, M10	6		
23-14	K5000100002	WASHER, M10	4		
23-15	LM180B-0156Z2	FIXTURE	2		
23-16	LM180B-0153Z0	SCREW ASSY, ADJ HOC	2		
23-17	LM180B-0154Z2	SCREW, ADJ HOC	2		
23-18	K0000100252	BOLT, M10-25	2		
23-19	K0300032252	PIN, COTTER M3.2-25	2		
23-20	K0124120002	NUT, THIN SLOTTED M12	2		
23-21	LM180B-0164A2	GUIDE, REEL SHAFT	1		
23-22	K0200080002	WASHER, SPRING M8	3		
23-23	K0000080402	BOLT, M8-40	1		
23-24	LM180C-0150ZR	COVER, SIDE MOWER	1		
23-25	K0200060002	WASHER, SPRING M6	2		
23-26	K0000060102	BOLT, M6-10	2		
23-27	K0000080202	BOLT, M8-20	2		
23-28	K5000080002	WASHER, M8	2		
23-29	LM180A-0147Z2	BOLT, FIXING REEL COVER	2		
23-30	K6210000202	COLLAR, SS41 8.2-16-5.2	2		

LM180E_023_z00

https://truckmanualshub.com/

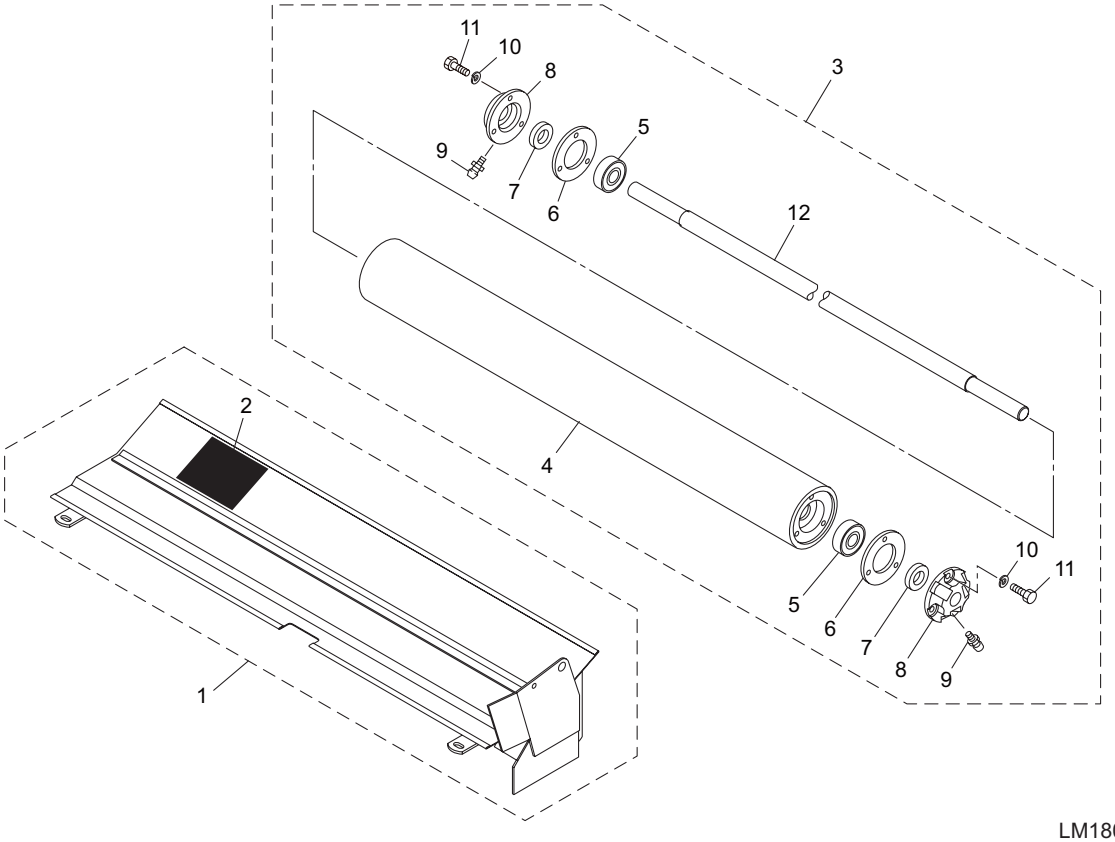

LM180E_024_z00

Cat No.	Code No.	Part name	Qty	Remark	SN of application
24-1	LM180C-0297B0	COVER, REEL (REAR) W/ DECAL	1		
24-2	K4205001600	DECAL, CAUTION CUTTING HANDS/FEET	1		
24-3	LM180C-0258Z0	ROLLER ASSY, REAR	1		
24-4	K740000025D	ROLLER, 76.2-782	1		
24-5	K0602062030	BEARING, BALL SHIELD Z 6203	2		
24-6	K4015136650	PACKING, FIBER 1-36-65	2		
24-7	K0821730080	OIL SEAL, MHSA17308	2		
24-8	K6810000070	HOUSING, SEAL	2		
24-9	K1440000010	GREASE NIPPLE, STRAIGHT TYPE A	2		
24-10	K0200060002	WASHER, SPRING M6	6		
24-11	K0000060152	BOLT, M6-15	6		
24-12	LM180B-0259Z0	SHAFT, REAR ROLLER	1		

https://truckmanualshub.com/

25.Rear mower section B

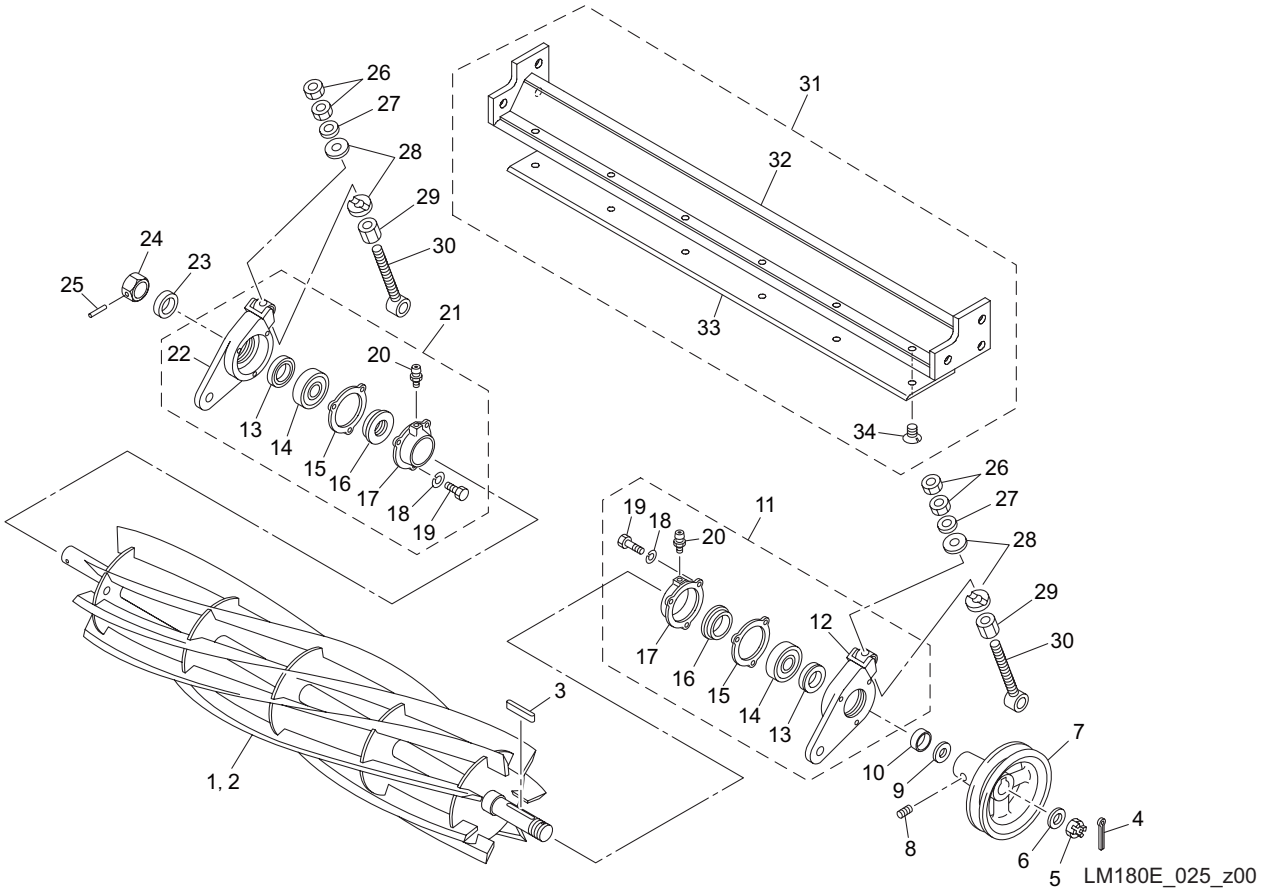

Cat No.	Code No.	Part name	Qty	Remark	SN of application
25-1	K28180207BR	REEL CUTTER, 766-7	1		
25-2	K28180205BR	REEL CUTTER, 766-5	1		
25-3	K0550000050	KEY, SPECIAL 5-5-42	1		
25-4	K0300032402	PIN, COTTER M3.2-40	1		
25-5	K0170000012	NUT, SPECIAL M20	1		
25-6	K5000200002	WASHER, M20	1		
25-7	LM180A-0225BD	PULLEY, REAR MOWER	1		
25-8	K0023080061	SETSCREW, M8-6	2		
25-9	K5030520400	WASHER, C2801P 0.5-20-40	1		
25-10	K6212000160	COLLAR, STKM 20.2-25.4-75	1		
25-11	LM180B-0107Z0	HOUSING ASSY, REEL A (LH)	1		
25-12	LM180A-0108Z2	HOUSING, REEL A (LH)	1		
25-13	K0860000050	SEAL, DUST PROOF	2		
25-14	K0602063040	BEARING, BALL SHIELD Z 6304	2		
25-15	K4011000150	PACKING, OIL-SHEET	2		
25-16	K0822542080	OIL SEAL, MHSA25428	2		
25-17	K6903000042	CAP, HOUSING	2		
25-18	K0200060002	WASHER, SPRING M6	6		
25-19	K0000060152	BOLT, M6-15	6		
25-20	K1440000010	GREASE NIPPLE, STRAIGHT TYPE A	2		
25-21	LM180B-0112Z0	HOUSING ASSY, REEL B (RH)	1		
25-22	LM180A-0111Z2	HOUSING, REEL B (RH)	1		
25-23	K4031000240	RUBBER, WATERPROOF CAP	1		
25-24	K6080000032	SHAFT, FOR LAPPING	1		
25-25	K0320030251	PIN, SPRING M3-25	1		
25-26	K0106100002	NUT, P1 M10	4		
25-27	K5051010160	WASHER, C5191P 1-10-16	2		
25-28	K6500000102	WASHER, SS41 M5-10.5-22	4		
25-29	LM180A-0135Z2	NUT, FINE P1 H12 M10	2		
25-30	K6511000092	BOLT, FOR ADJUSTING CUTTER 100	2		

LM180E_025_z00

https://truckmanualshub.com/

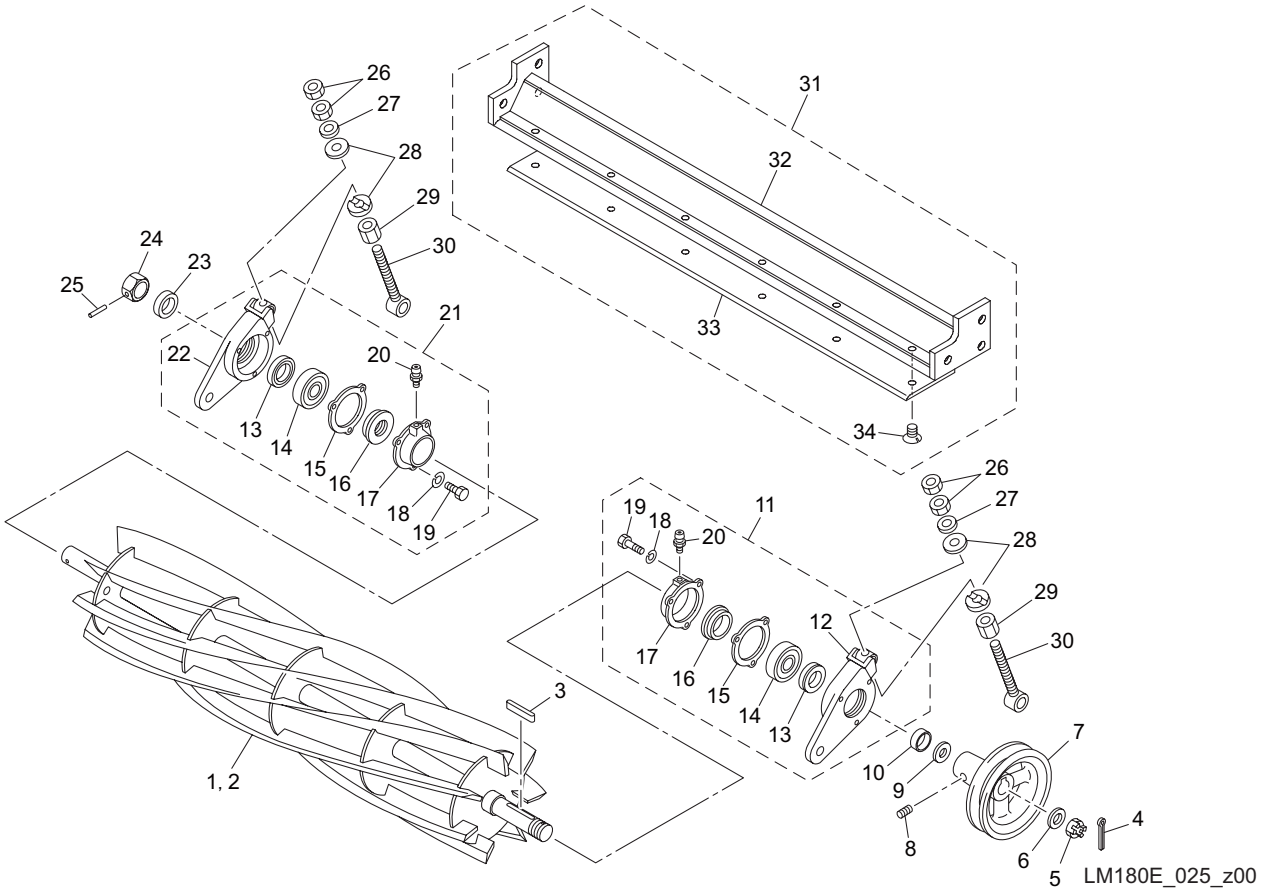

Cat No.	Code No.	Part name	Qty	Remark	SN of application
25-31	K8022000030	BEDKNIFE & BASE ASSY	1		
25-32	K744200007R	BASE, BEDKNIFE 840	1		
25-33	K2510000020	BEDKNIFE, TIPPED 7.0-30	1		
25-34	K0071001182	SCREW, HT FLAT HEAD M10-16	7		

https://truckmanualshub.com/

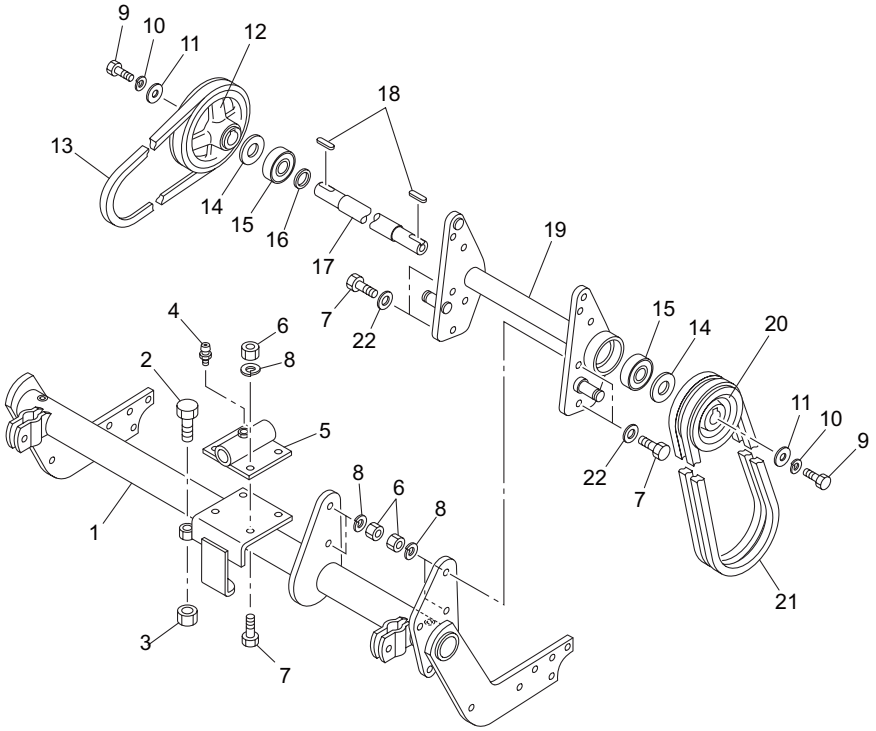

LM180E_026_z00

Cat No.	Code No.	Part name	Qty	Remark	SN of application
26-1	LM180B-0241CR	FRAME, MOWER (REAR)	1		
26-2	K0000120402	BOLT, M12-40	1		
26-3	K0100120002	NUT, M12	1		
26-4	K1440000010	GREASE NIPPLE, STRAIGHT TYPE A	1		
26-5	LM180A-0296AR	BRACKET, OSCILLATING REAR MOWER	1		
26-6	K0100100002	NUT, M10	8		
26-7	K0000100302	BOLT, M10-30	8		
26-8	K0200100002	WASHER, SPRING M10	8		
26-9	K0000080152	BOLT, M8-15	2		
26-10	K0200080002	WASHER, SPRING M8	2		
26-11	K5073208352	WASHER, SPHC 3.2-8-35	2		
26-12	LM180A-0275Z2	PULLEY, TRANSMISSION (REAR MOWER)	1		
26-13	K2342058000	BELT, V OLB58	1		
26-14	K5030520430	WASHER, C2801P 0.5-20-43	2		
26-15	K0612062040	BEARING, BALL SEAL 2RD 6204	2		
26-16	K5010520282	WASHER, SPCC 0.5-2028	1		
26-17	LM180A-0272A0	SHAFT, TRANSMISSION (REAR MOWER)	1		
26-18	K0500505250	KEY, BOTH ROUND M5-525	2		
26-19	LM180C-0271ZR	RECEIVER, REAR MOWER SHAFT	1		
26-20	LM180A-0276ZD	PULLEY, TRANSMISSION (REAR MOWER)	1		
26-21	K2325029000	BELT, V LA29AG-6A	2		
26-22	K5000100002	WASHER, M10	4		

https://truckmanualshub.com/

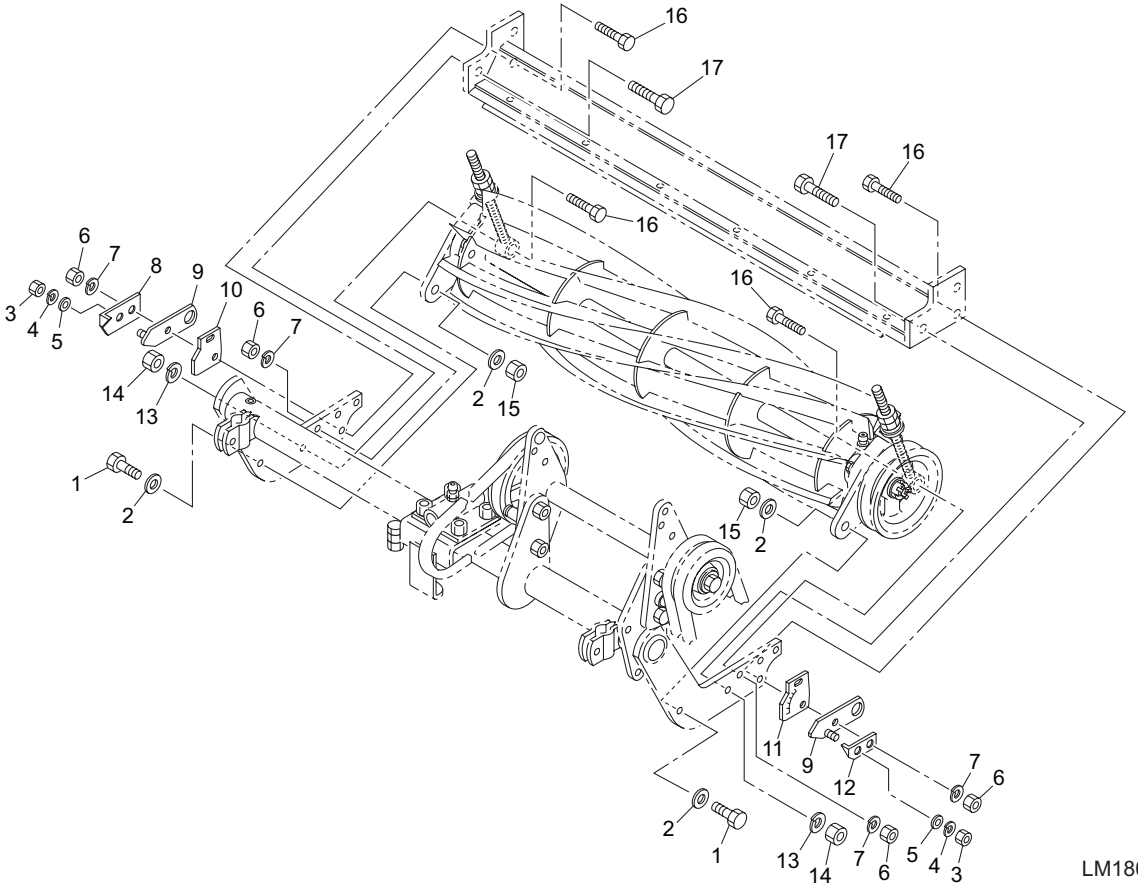

LM180E_027_z00

Cat No.	Code No.	Part name	Qty	Remark	SN of application
27-1	LM180A-0120Z2	BOLT, AXIS	2		
27-2	K5073215302	WASHER, SPHC 3.2-14.5-30	4		
27-3	K0100080002	NUT, M8	2		
27-4	K0200080002	WASHER, SPRING M8	2		
27-5	K5000080002	WASHER, M8	2		
27-6	K0100100002	NUT, M10	4		
27-7	K0200100002	WASHER, SPRING M10	4		
27-8	LM180A-0252Z2	PLATE, INDICATING HOC (RH)	1		
27-9	LM180B-0263A2	PLATE, ADJ HOC (REAR)	2		
27-10	LM180B-0162Z0	SCALE, HOC (RH)	1		
27-11	LM180B-0160Z0	SCALE, HOC (LH)	1		
27-12	LM180A-0251Z2	PLATE, INDICATING HOC (LH)	1		
27-13	K0200120002	WASHER, SPRING M12	2		
27-14	K0100120002	NUT, M12	2		
27-15	K0145140002	NUT, W/F-RING M14 P1.5	2		
27-16	K0000100352	BOLT, M10-35	4		
27-17	K0000120352	BOLT, M12-35	2		

https://truckmanualshub.com/

28.Rear mower section E

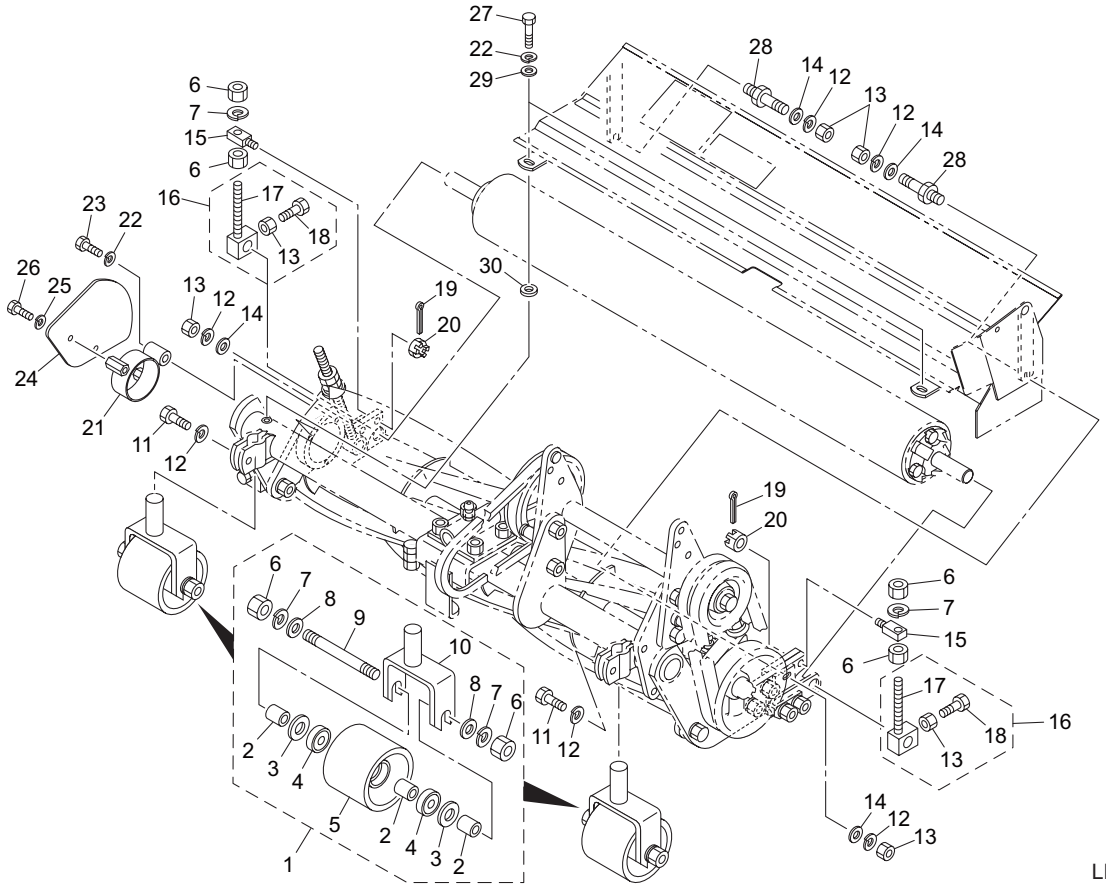

LM180E_028_z00

Cat No.	Code No.	Part name	Qty	Remark	SN of application
28-1	LM180B-1201Z0	ROLLER ASSY, FRONT	2		
28-2	K6211000052	COLLAR, SGP 12.7-17.3-16.3	6		
28-3	K5030512300	WASHER, C2801P 0.5-12-30	4		
28-4	K0612062010	BEARING, BALL SEAL 2RD 6201	4		
28-5	K6809000020	ROLLER, 76-66	2		
28-6	K0100120002	NUT, M12	8		
28-7	K0200120002	WASHER, SPRING M12	6		
28-8	K5000120002	WASHER, M12	4		
28-9	K0070000032	BOLT, DOUBLE-ENDED M12-115	2		
28-10	LM180A-1204Z2	BRACKET, FRONT WHEEL	2		
28-11	K0010100252	BOLT, HT M10-25	2		
28-12	K0200100002	WASHER, SPRING M10	6		
28-13	K0100100002	NUT, M10	6		
28-14	K5000100002	WASHER, M10	4		
28-15	LM180B-0156Z2	FIXTURE	2		
28-16	LM180B-0153Z0	SCREW ASSY, ADJ HOC	2		
28-17	LM180B-0154Z2	SCREW, ADJ HOC	2		
28-18	K0000100252	BOLT, M10-25	2		
28-19	K0300032252	PIN, COTTER M3.2-25	2		
28-20	K0124120002	NUT, THIN SLOTTED M12	2		
28-21	LM180B-0164A2	GUIDE, REEL SHAFT	1		
28-22	K0200080002	WASHER, SPRING M8	3		
28-23	K0000080402	BOLT, M8-40	1		
28-24	LM180C-0150ZR	COVER, SIDE MOWER	1		
28-25	K0200060002	WASHER, SPRING M6	2		
28-26	K0000060102	BOLT, M6-10	2		
28-27	K0000080202	BOLT, M8-20	2		
28-28	LM180A-0147Z2	BOLT, FIXING REEL COVER	2		
28-29	K5000080002	WASHER, M8	2		
28-30	K6210000202	COLLAR, SS41 8.2-16-5.2	2		

LM180E_028_z00

https://truckmanualshub.com/

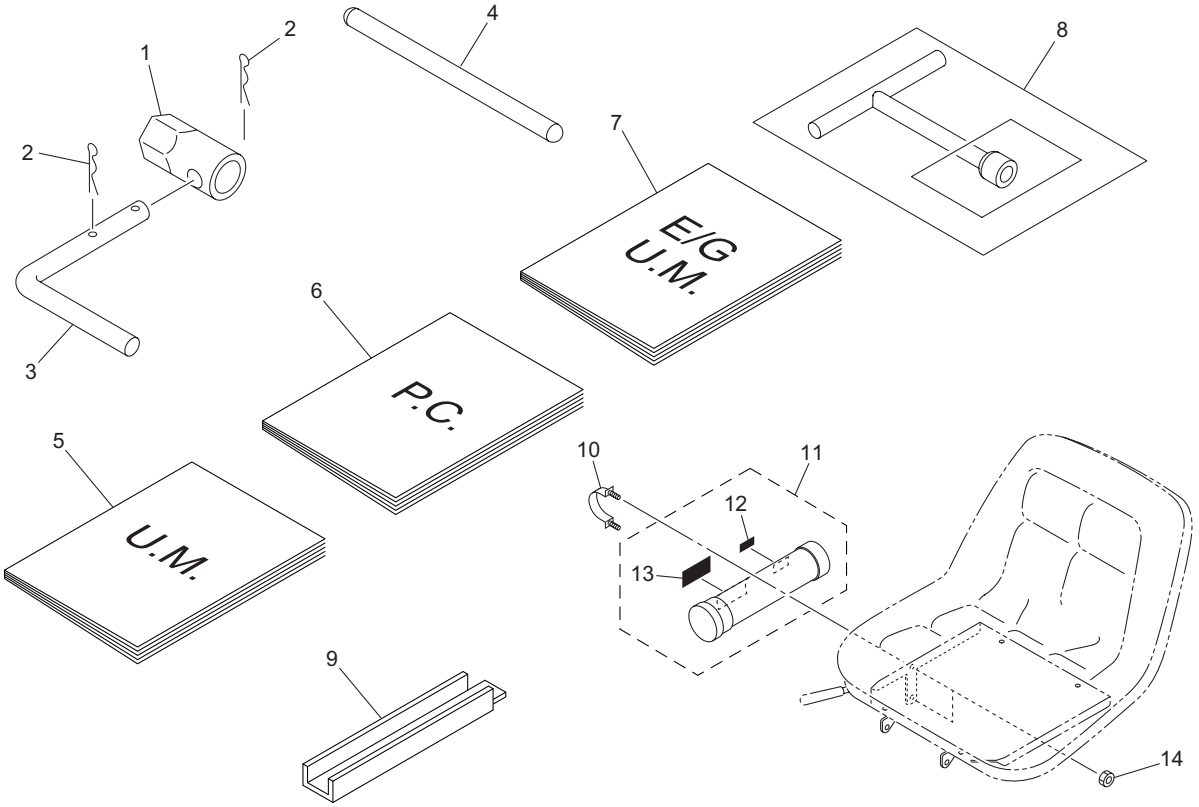

LM180E_029_a00

Cat No.	Code No.	Part name	Qty	Remark	SN of application
29-1	K4812270002	SPANNER, BOX M27	1		
29-2	K0331300008	PIN, SNAP M13	2		
29-3	K6173000022	HANDLE, LAPPING	1		
29-4	K4802000062	SHAFT, BOX SPANNER	1		
29b-5	750101-168-A	OWNERS OPERATING MANUAL, LM180E	1		
29b-6	750101-168-B	PARTS CATALOG, LM180E	1		
29-7	R277-99901-75	OPERATING MANUAL, ENGINE	1		
29-8	R20B-90301-J0	TOOL KIT, ACCESSORY	1		
29-9	GM65A--0702Z2	GUTTER, DRAIN OIL	1		
29a-10	SP05---2125Z2	BAND	1		
29a-11	K5920000130	CASE, FOR MANUALS	1		
29a-12	K4209001300	DECAL, OWNERS MANUAL	1		
29a-13	K4205001560	DECAL, READ OWNERS MANUAL	1		
29a-14	K0144080002	NUT, W/F-RING M8	2		

LM180E_029_b01

https://truckmanualshub.com/

BARONESS®

Quality on Demand

KYOEISHA CO.,LTD.

Head Office 1-26, Miyuki-cho, Toyokawa-city, Aichi-pref, 442-8530 JAPAN

Tel :+81-533-84-1390
Fax :+81-533-84-1220