https://truckmanualshub.com/

60ZT

Concrete solutions. Always.

Engine V2607-CR-T

Engine power 44,3 kW - 60,2 HP

Transport weight 5.740 kg

EUROCOMACH®

https://truckmanualshub.com/

60ZT

Transport weight with cabin (without bucket and operator)	kg	5.740
Operating weight ISO 6016 with cabin (with bucket 155 kg and operator 75 kg)	kg	5.970
Travelling speed (AUTO TWO SPEED)	km/h	1a : 0 ÷ 2,3 / 2a : 0 ÷ 4,5
Slew speed	rpm	11
ENGINE		
Type	KUBOTA V2607-CR-T - STAGE 5	
Max. Power (2.200 rpm)	kW - HP	44,3 - 60,2
Displacement	cc	2.615
Number of cylinders	n°	4
Cooling	Liquid	
Consumption	lt/h	7,6
Alternator	V (A)	12 (60)
Battery	V (Ah)	12 (95)
HYDRAULIC SYSTEM		
Circuit Type	Load Sensing closed center system with "Flow Sharing" control valve	
Pump type	1 LS variable pump + 1 gear pump	
Pump displacement	cc	71 + 14
Pump capacity	lt/min	141 + 27,8
Max. circuit calibration pressure	bar	280
Auxiliary systems (max pressure): AUX 1 single or double effect with priority AUX 2 double effect AUX 3 double effect (optional)	lt/min (bar)	 85 (200) 65/90 (280) 45 (280)
PERFORMANCES		
Max. digging depth with standard arm (optional arm)	mm	3.700 (3.980)
Max. dumping height with standard arm (optional arm)	mm	4.090 (4.240)
Bucket breaking force (standard arm) ISO 6015	daN	5.300
Arm breaking force (standard arm) ISO 6015	daN	3.300 (3.000)
Traction force	daN	6.500
Specific ground pressure	kg/cm²	0,33
Max. slope	60% - 30°	
DIMENSIONS		
Maximum width	mm	1.980
Total height	mm	2.620
Rear rotation radius	mm	1.000
Digging arm length std (optional)	mm	1.650 (1.900)
Tracks width	mm	400
Rollers number (for each side)	n°	5/1
FILLINGS		
Fuel tank	lt	85
Hydraulic oil tank	lt	60
Hydraulic circuit capacity	lt	80
Cooling system capacity	lt	12
Engine oil	lt	10,2
CONTROLS		
Boom, dipper stick, bucket and turret swing	2 pilot joysticks	
Tracks mouvement (included counter rotation)	2 pilot levers	
Dozer blade	pilot lever	
High priority auxiliary system with holding function AUX 1 (single or double effect)	electroproportional switch on right joystick	
Auxiliary system AUX 2 (double effect)	electroproportional switch on right joystick	
Low priority auxiliary system AUX 3 (double effect)	electroproportional switch on left joystick	
Boom swing	electroproportional switch on left joystick	

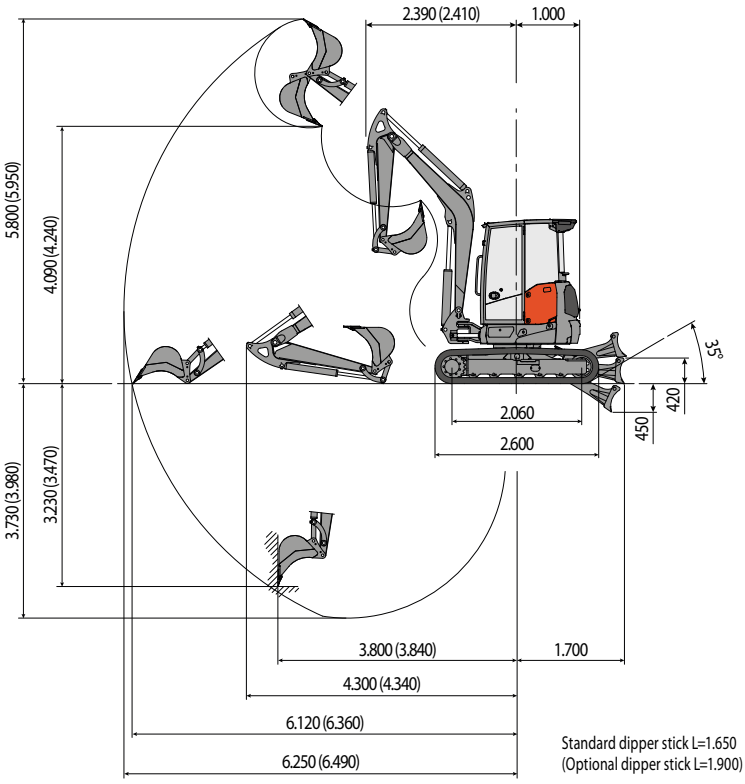

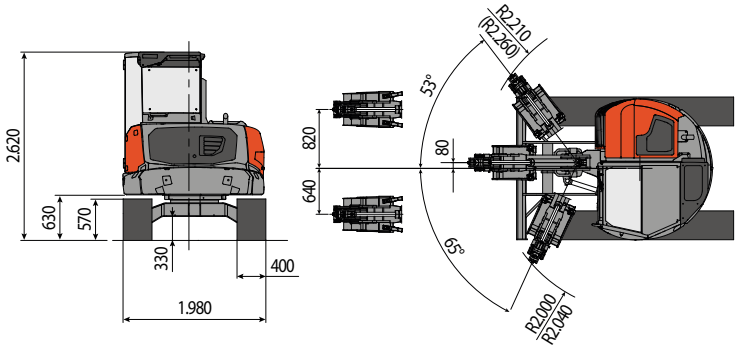

LIFTING CAPACITY
Opening arm from the rotation's center (m)Lifting capacity (kg) at 1.0 m height

	3	4	5	MAX
Frontal and lowered dozer blade	*3.310	*2.200	*1.740	*1.620
Frontal and lifted dozer blade	1.710	1.110	800	720
Lateral	1.190	800	580	520

* Indicates the hydraulic load limit.

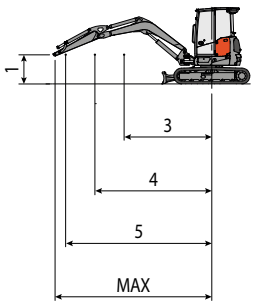

The lifting capacity is based on the ISO 10567 and it does not exceed more than the 75% of static tipping load or more than the 87% of the hydraulic lifting capacity of the machine.

EUROCOMACH®

These pictures may include optional rather than standard settings. Technical features are not binding and may be modified without notice in any moment.