https://truckmanualshub.com/

Genie Industries

Technical Publications

Genie® S-60
Genie® S-65

Service Manual

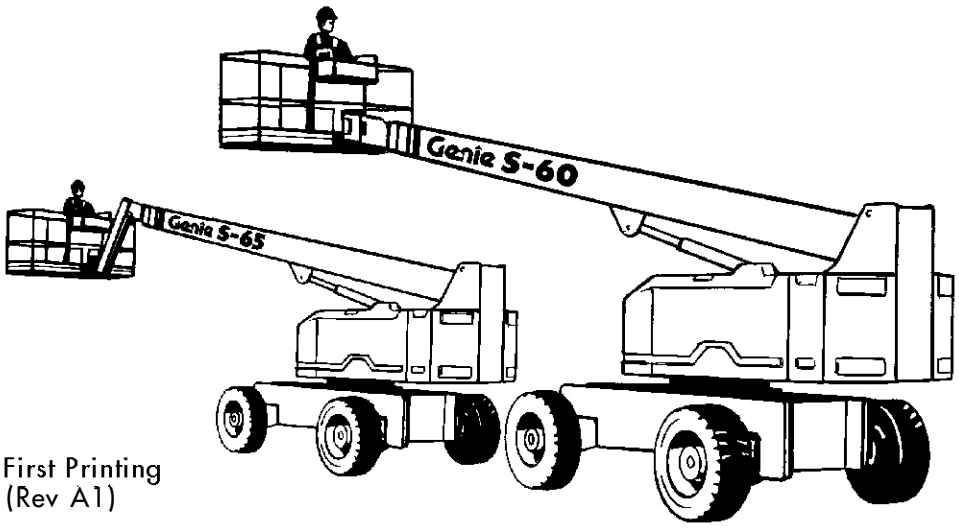

Second Edition, First Printing
Part No. 48412 (Rev A1)
July 2008

https://truckmanualshub.com/

Genie® S-60
Genie® S-65

Important

Read, understand and obey the safety rules and operating instructions in the appropriate *Genie S-60 & Genie S-65 Operator's Manual* before attempting any maintenance or repair procedure.

This service manual covers the Genie S-60 and Genie S-65 2WD and 4WD models.

This manual provides detailed scheduled maintenance information for the machine owner and user. It also provides troubleshooting and repair procedures for qualified service professionals.

Basic mechanical, hydraulic and electrical skills are required to perform most procedures. However, several procedures require specialized skills, tools, lifting equipment and a suitable workshop. In these instances, we strongly recommend that maintenance and repair be performed at a Genie dealer service center.

Genie Industries has endeavored to deliver the highest degree of accuracy possible. However, continuous improvement of our products is a Genie policy. Therefore product specifications are subject to change without notice.

Readers are encouraged to notify Genie of errors and send in suggestions for improvement. All communications will be carefully considered for future printings of this and other manuals. Please write to the technical publications team in care of Genie Industries, PO Box 69, Redmond WA 98073-0069 U.S.A.

If you have any questions, please call Genie Industries.

Genie North America

Telephone (425) 881-1800
Toll Free 800 536-1800 in U.S.A.
Toll Free 800 426-8089 in Canada
Fax (425) 556-8649

Genie Europe

Office Telephone (44) 01636-605030
Office FaxFax (44) 01636-611090
Parts Telephone (44) 01636-605002
Parts Fax (44) 01636-611091

Genie® Industries

Copyright © 1998 by Genie Industries

Second Edition: First Printing, June 1998

"Genie" and "S" are Registered Trademarks of Genie Industries in the USA and many other countries.

These machines comply with ANSI/SIA 92.5-1992.

Printed on recycled paper

Printed in U.S.A.

https://truckmanualshub.com/

Safety Rules

Danger

Failure to obey the instructions and safety rules in this manual, and the *Genie S-60 & Genie S-65 Operator's Manual* will result in death or serious injury.

Many of the hazards identified in the operator's manual are also safety hazards when maintenance and repair procedures are performed.

Do Not Perform Maintenance Unless:

- ☑ You are trained and qualified to perform maintenance on this machine.
- ☑ You read, understand and obey:
  - manufacturer’s instructions and safety rules
  - employer’s safety rules and worksite regulations
  - applicable governmental regulations
- ☑ You have the appropriate tools, lifting equipment and a suitable workshop.

https://truckmanualshub.com/

SAFETY RULES

Personal Safety

Any person working on or around a machine must be aware of all known safety hazards. Personal safety and the continued safe operation of the machine should be your top priority.

Read each procedure thoroughly. This manual and the decals, on the machine, use signal words to identify the following:

DANGER Indicates the presence of a hazard that **will** cause death or serious injury.

WARNING Indicates the presence of a hazard that **may** cause death or serious injury.

CAUTION Indicates the presence of a hazard that **will** or **may** cause serious injury or damage to the machine.

NOTICE Indicates special operation or maintenance information.

Be sure to wear protective eye wear and other protective clothing if the situation warrants it.

Be aware of potential crushing hazards such as moving parts, free swinging or unsecured components, and lifting or placing loads. Always wear approved steel-toed shoes.

Workplace Safety

Be sure to keep sparks, flames and lighted tobacco away from flammable and combustible materials like battery gases and engine fuels. Always have an approved fire extinguisher within easy reach.

Be sure that all tools and working areas are properly maintained and ready for use. Keep work surfaces clean and free of debris that could get into machine components and cause damage.

Be sure that your workshop or work area is properly ventilated and well lit.

Be sure any forklift, overhead crane or other lifting or supporting device is fully capable of supporting and stabilizing the weight to be lifted. Use only chains or straps that are in good condition and of ample capacity.

Be sure that fasteners intended for one time use (i.e., cotter pins and self-locking nuts) are not reused. These components may fail if they are used a second time.

Be sure to properly dispose of old oil or other fluids. Use an approved container. Please be environmentally safe.

https://truckmanualshub.com/

Table of Contents

Introduction

Important Information ..... *ii*

Section One **Safety Rules**

General Safety Rules ..... *iii*

Section Two **Specifications**

Machine Specifications ..... 2 - 1
Performance Specifications ..... 2 - 2
Hydraulic Specifications ..... 2 - 3
Ford LRG 423 Engine Specifications ..... 2 - 4
Deutz F4L 1011F Engine Specifications ..... 2 - 6
Hydraulic Hose and Fitting Torque Specifications ..... 2 - 8
Bolt Torque Specifications ..... 2 - 9

Section Three **Scheduled Maintenance Inspections**

Introduction ..... 3 - 1
Table A ..... 3 - 2
Table B ..... 3 - 3
Table C ..... 3 - 5
Table D ..... 3 - 6
Maintenance Inspection Report ..... 3 - 7

Section Four **Scheduled Maintenance Procedures**

Introduction ..... 4 - 1
A-1 Inspect the Manuals ..... 4 - 2
A-2 Inspect the Decals and Placards ..... 4 - 2
A-3 Inspect for Damage, Loose or Missing Parts ..... 4 - 2
A-4 Check the Engine Oil Level ..... 4 - 3
A-5 Check the Engine Coolant Level - Gasoline/LPG Models ..... 4 - 3
A-6 Check for Fuel Leaks ..... 4 - 3
A-7 Check the Hydraulic Oil Level ..... 4 - 4
A-8 Check for Hydraulic Leaks ..... 4 - 4

https://truckmanualshub.com/

TABLE OF CONTENTS

Section Four **Scheduled Maintenance Procedures,** continued

A-9 Check the Tire Pressure ..... 4 - 5
A-10 Test the Oscillate Axle (if equipped) ..... 4 - 5
A-11 Test the Platform and Ground Controls ..... 4 - 6
A-12 Test the Auxiliary Power Operation ..... 4 - 6
A-13 Test the Tilt Sensor ..... 4 - 7
A-14 Test the Limit Switches ..... 4 - 8
A-15 Replace the Engine Oil and Filter - Gasoline/LPG Models ..... 4 - 10
A-16 Drain the Fuel Filter/Water Separator - Deutz Diesel Models ..... 4 - 11
A-17 Replace the Engine Air Filter ..... 4 - 12
B-1 Check the Engine Belt ..... 4 - 13
B-2 Check the Radiator - Gasoline/LPG Models ..... 4 - 14
B-3 Check the Oil Cooler and Cooling Fins - Deutz Diesel Models ..... 4 - 14
B-4 Check the Exhaust System ..... 4 - 15
B-5 Check the Battery ..... 4 - 16
B-6 Check the Hydraulic Tank Filter Condition Indicator ..... 4 - 16
B-7 Inspect the Electrical Wiring ..... 4 - 17
B-8 Inspect the Tires and Wheels (including lug nut torque) ..... 4 - 17
B-9 Confirm the Proper Brake Configuration ..... 4 - 18
B-10 Check the Oil Level in the Torque Hubs ..... 4 - 18
B-11 Check and Adjust the Engine Idle Mixture - Gasoline/LPG Models ..... 4 - 19
B-12 Check and Adjust the Engine RPM ..... 4 - 19
B-13 Test the Key Switch ..... 4 - 21
B-14 Test the Emergency Stop Buttons ..... 4 - 21
B-15 Test the Ground Control Override ..... 4 - 22
B-16 Check the Directional Valve Linkage ..... 4 - 22
B-17 Test the Platform Self-leveling ..... 4 - 23
B-18 Test the Horn ..... 4 - 23
B-19 Test the Foot Switch ..... 4 - 23
B-20 Test the Engine Idle Select ..... 4 - 24
B-21 Test the Fuel Select Operation - Gasoline/LPG Models ..... 4 - 24
B-22 Test the Drive Enable System ..... 4 - 25

https://truckmanualshub.com/

TABLE OF CONTENTS

Section Four **Scheduled Maintenance Procedures**, continued

B-23 Test the Drive Brakes ..... 4 - 25
B-24 Test the Drive Speed - Stowed Position ..... 4 - 26
B-25 Test the Alarm Package - Optional Equipment ..... 4 - 27
B-26 Perform Hydraulic Oil Analysis ..... 4 - 27
B-27 Replace the Engine Oil and Filter - Deutz Diesel Models ..... 4 - 27
C-1 Check the Boom Wear Pads ..... 4 - 29
C-2 Check the Turntable Rotation Bearing Bolts ..... 4 - 29
C-3 Check the Free-wheel Configuration ..... 4 - 30
C-4 Grease the Turntable Rotation Bearing and Rotate Gear ..... 4 - 31
C-5 Replace the Torque Hub Oil ..... 4 - 31
C-6 Replace the Hydraulic Tank Filter ..... 4 - 33
C-7 Replace the Drive Loop Hydraulic Filter ..... 4 - 33
C-8 Replace the Diesel Fuel Filter/Water Separator - Deutz Diesel Models ..... 4 - 34
C-9 Replace the Gasoline Fuel Filter - Gasoline/LPG Models ..... 4 - 34
C-10 Replace the PCV Valve - Gasoline/LPG Models ..... 4 - 36
C-11 Replace the Spark Plugs - Gasoline/LPG Models ..... 4 - 37
C-12 Check and Adjust the Air/LPG Mixture - Gasoline/LPG Models ..... 4 - 37
C-13 Check and Adjust the Ignition Timing - Gasoline/LPG Models ..... 4 - 38
C-14 Check the Engine Valve Clearances - Deutz Diesel Models ..... 4 - 38
C-15 Check the Turntable Rotation Gear Backlash ..... 4 - 38
D-1 Test or Replace the Hydraulic Oil ..... 4 - 39
D-2 Change or Recondition the Engine Coolant - Gasoline/LPG Models ..... 4 - 39
D-3 Change the Fuel Lines ..... 4 - 41
D-4 Check the Engine Valve Clearance - Gasoline/LPG Models ..... 4 - 42
D-5 Check the Engine Cylinder Compression - Gasoline/LPG Models ..... 4 - 42
D-6 Clean the PCV Hoses and Fittings - Gasoline/LPG Models ..... 4 - 42
D-7 Check the Fuel Injection Pumps and Injectors - Deutz Diesel Models ..... 4 - 43
D-8 Check the Toothed Belt - Deutz Diesel Models ..... 4 - 43
D-9 Replace the Timing Belt - Gasoline/LPG Models ..... 4 - 43
D-10 Grease the Steer Axle Wheel Bearings - 2WD Models ..... 4 - 44

https://truckmanualshub.com/

TABLE OF CONTENTS

Section Five **Troubleshooting Flow Charts**

Introduction ..... 5 - 1

1 Engine Will Not Crank Over ..... 5 - 3

2 Engine Cranks Over But Will Not Start - Gasoline/LPG Models ..... 5 - 5

2A Engine Cranks Over But Will Not Start OR Engine Runs While Cranking The Dies- Gasoline/LPG Models ..... 5 - 8

2B Engine Runs While Cranking Then Dies ..... 5 - 11

3 Engine Cranks Over But Will Not Start - Deutz Diesel Models ..... 5 - 12

4 Engine Will Not Start On LPG, But Will Start On Gasoline - Gasoline/LPG Models ..... 5 - 15

5 Engine Will Not Start On Gasoline, But Will Start On LPG - Gasoline/LPG Models ..... 5 - 17

6 Engine High Idle Inoperative - Gasoline/LPG Models ..... 5 - 19

7 Engine Low Idle Inoperative - Gasoline/LPG Models ..... 5 - 22

8 Engine High Idle Inoperative - Deutz Diesel Models ..... 5 - 23

9 Engine Low Idle Inoperative - Deutz Diesel Models ..... 5 - 25

10 All Functions Inoperative, Engine Starts and Runs ..... 5 - 26

11 All Lift and Steer Functions Inoperative, Drive Functions Operational ..... 5 - 27

12 Ground Controls Inoperative, Platform Controls Operate Normally ..... 5 - 28

13 Platform Controls Inoperative, Ground Controls Operate Normally ..... 5 - 29

14 Boom Up Function Inoperative ..... 5 - 30

15 Boom Down Function Inoperative ..... 5 - 33

16 Boom Extend Function Inoperative ..... 5 - 36

17 Boom Retract Function Inoperative ..... 5 - 39

18 Turntable Rotate Left Function Inoperative ..... 5 - 42

19 Turntable Rotate Right Function Inoperative ..... 5 - 46

20 All Platform Leveling Functions Inoperative ..... 5 - 50

21 Platform Level Up Function Inoperative ..... 5 - 51

22 Platform Level Down Function Inoperative ..... 5 - 53

23 Platform Rotate Left Function Inoperative ..... 5 - 55

24 Platform Rotate Right Function Inoperative ..... 5 - 58

25 Jib Boom Up Inoperative, S-65 Models ..... 5 - 61

26 Jib Boom Down Inoperative, S-65 Models ..... 5 - 63

https://truckmanualshub.com/

TABLE OF CONTENTS

Section Five **Troubleshooting Flow Charts,** continued

27 Oscillate Function Inoperative ..... 5 - 65
28 Steer Left Function Inoperative ..... 5 - 66
29 Steer Right Function Inoperative ..... 5 - 68
30 All Drive Functions Inoperative, All Other Functions Operate Normally ..... 5 - 70
31 Drive Forward Or Reverse Function Inoperative ..... 5 - 73
32 Traction Function Inoperative ..... 5 - 74
33 Machine Will Not Drive At Full Speed ..... 5 - 75
34 Machine Drives At Full Speed With Platform Raised or Extended ..... 5 - 76
35 Drive Enable System Is Malfunctioning ..... 5 - 77
36 Auxiliary Functions Inoperative ..... 5 - 78

Section Six **Schematics**

Introduction ..... 6 - 1
Electrical Components ..... 6 - 2
Electrical Symbols Legend ..... 6 - 4
Abbreviation Legend ..... 6 - 5
Electrical Schematic - Gasoline/LPG Models (Rev B) ..... 6 - 7
Ground Control Box Legend - Gasoline/LPG Models ..... 6 - 9
Ground Control Box Wiring Diagram - Gasoline/LPG Models ..... 6 - 10
Platform Control Box Legend - Gasoline/LPG Models ..... 6 - 11
Platform Control Box Wiring Diagram - Gasoline/LPG Models ..... 6 - 12
Electrical Schematic - Deutz Diesel Models ..... 6 - 13
Ground Control Box Legend - Deutz Diesel Models ..... 6 - 15
Ground Control Box Wiring Diagram - Deutz Diesel Models ..... 6 - 16
Platform Control Box Legend - Deutz Diesel Models ..... 6 - 17
Platform Control Box Wiring Diagram - Deutz Diesel Models ..... 6 - 18
Hydraulic Symbols Legend ..... 6 - 20
2WD Hydraulic Schematic - Non-oscillating axle ..... 6 - 21
2WD Hydraulic Schematic - Oscillating axle ..... 6 - 22
4WD Hydraulic Schematic - Non-oscillating axle ..... 6 - 23
4WD Hydraulic Schematic - Oscillating axle ..... 6 - 24

https://truckmanualshub.com/

TABLE OF CONTENTS

Section Seven **Repair Procedures**

Introduction ..... 7 - 1

Platform Controls

1-1 Joystick Controllers ..... 7 - 2
1-2 Horsepower Limiter Board ..... 7 - 6
1-3 Foot Switch ..... 7 - 8
1-4 Resistors ..... 7 - 9
1-5 Toggle Switches ..... 7 - 9
1-6 Control Relays ..... 7 - 10

Platform Components

2-1 Platform ..... 7 - 11
2-2 Platform Leveling Slave Cylinder ..... 7 - 11
2-3 Platform Rotator ..... 7 - 12

Jib Boom Components, S-65 Models

3-1 Jib Boom, S-65 Models ..... 7 - 15
3-2 Jib Boom Lift Cylinder, S-65 Models ..... 7 - 16
3-3 Jib Boom / Platform Rotate Manifold Components, S-65 Models ..... 7 - 17

Boom Components

4-1 Boom Cable Track ..... 7 - 18
4-2 Boom ..... 7 - 20
4-3 Boom Lift Cylinder ..... 7 - 23
4-4 Extension Cylinders ..... 7 - 24
4-5 Platform Leveling Master Cylinder ..... 7 - 25

Turntable Covers

5-1 Turntable Covers ..... 7 - 26

Deutz Engine F4L 1011F

6-1 RPM Adjustment ..... 7 - 27
6-2 Flex Plate ..... 7 - 27
6-3 Oil Temperature and Oil Pressure Gauges ..... 7 - 27

Ford LRG-423 Engine

7-1 Governor Actuator ..... 7 - 28
7-2 Choke Adjustments ..... 7 - 29

https://truckmanualshub.com/

TABLE OF CONTENTS

Section Seven **Repair Procedures, Ford LRG-423 Engine**, continued

7-3 Timing Adjustment ..... 7 - 30
7-4 Carburetor Adjustment ..... 7 - 30
7-5 RPM Adjustment ..... 7 - 30
7-6 Flex Plate ..... 7 - 30
7-7 Water Temperature and Oil Pressure Gauges ..... 7 - 31
7-8 Vacuum Switch ..... 7 - 32

Ground Controls

8-1 Control Relays ..... 7 - 33
8-2 Toggle Switches, See 1-5, *Toggle Switches* ..... 7 - 9
8-3 Wago® Components ..... 7 - 33
8-4 Resistors ..... 7 - 33
8-5 Power Relay ..... 7 - 34

Hydraulic Pumps

9-1 Lift/Steer Pump ..... 7 - 35
9-2 Drive Pump ..... 7 - 35

Manifolds

10-1 Function Manifold Components ..... 7 - 38
10-2 Valve Adjustments - Function Manifold ..... 7 - 42
10-3 Turntable Rotation Manifold Components ..... 7 - 45
10-4 Oscillate Manifold Components ..... 7 - 46
10-5 Valve Adjustments - Oscillate Manifold ..... 7 - 47
10-6 Directional Valve Manifold Components ..... 7 - 48
10-7 Steer Manifold Components, S-60/65 Oscillating Models ..... 7 - 50
10-8 2WD Drive Manifold Components ..... 7 - 52
10-9 Valve Adjustments, 2WD Drive Manifold ..... 7 - 54
10-10 4WD Drive Manifold Components ..... 7 - 56
10-11 Valve Adjustments, 4WD Drive Manifold ..... 7 - 58

. **Fuel and Hydraulic Tanks**

11-1 Fuel Tank ..... 7 - 59
11-2 Hydraulic Tank ..... 7 - 59

https://truckmanualshub.com/

TABLE OF CONTENTS

Section Seven **Repair Procedures**, continued

Turntable Rotation Components

12-1 Rotation Hydraulic Motor ..... 7 - 62

2WD Steering Axle Components

13-1 Yoke and Hub ..... 7 - 65

13-2 Steering Cylinders ..... 7 - 66

13-3 Tie Rod ..... 7 - 67

4WD Steering Axle Components

14-1 Yoke and Hub ..... 7 - 68

14-2 Steering Cylinders ..... 7 - 69

14-3 Tie Rod ..... 7 - 69

Oscillating Axle Components

15-1 Oscillating Axle Lock-out Cylinders ..... 7 - 70

Non-steering Axle Components

16-1 Drive Motor ..... 7 - 71

16-2 Torque Hub ..... 7 - 71

https://truckmanualshub.com/

Specifications

Machine Specifications

Stowed dimensions	S-60	S-65
Length	27 ft 2 in 8.3 m	30 ft 10 in 9.4 m
Width	8 ft 2.43 m	8 ft 2.43 m
Height	9 ft 2.74 m	9 ft 2.74 m
Weight	26,060 lbs 11,821 kg	28,400 lbs 12,882 kg
Ground clearance	12 in 30 cm	12 in 30 cm
Operational dimensions		
Maximum platform height	60 ft 18.3 m	65 ft 19.8 m
Maximum horizontal reach	51 ft 3 in 15.6 m	56 ft 4 in 17.2 m
Maximum turntable tailswing	3 ft 3 1/2 in 100 cm	3 ft 3 1/2 in 100 cm
Wheelbase	9 ft 0 in 2.7 m	9 ft 0 in 2.7 m
Minimum turning radius, inside	12 ft 1 in 3.7 m	12 ft 1 in 3.7 m
Minimum turning radius, outside	22 ft 2 in 6.76 m	22 ft 2 in 6.76 m
Turntable rotation	continuous	continuous
Platform rotation	160°	160°
Maximum capacity 6 foot platform	600 lbs 272 kg	500 lbs 227 kg
Maximum capacity 8 foot platform	500 lbs 227 kg	500 lbs 227 kg
Maximum allowable side force (ANSI and CSA)	150 lbs 68 kg	150 lbs 68 kg

Continuous improvement of our products is a Genie policy. Product specifications are subject to change without notice.

Platform dimensions	6 ft (Standard)	8 ft (Optional)
Length	6 ft 1.83 m	8 ft 2.44 m
Width	30 in 76.2 cm	36 in 91.4 cm
Tires and wheels		
Tire size		15-19.5 NHS
Tire ply rating		12
Tire contact area		71 sq in 458 sq cm
Overall tire diameter		40 in 102 cm
Tire pressure		85 psi 5.86 bar
Wheel diameter		19 1/2 in 49.5 cm
Wheel width		12 1/4 in 31 cm
Wheel lugs		10 @ 3/4 -16
Lug nut torque, dry bolts		420 ft-lbs 569.5 Nm
Lug nut torque, lubricated bolts		320 ft-lbs 433.9 Nm
Fluid capacities		
Fuel tank		30 gallons 114 liters
LPG tank		33.5 pounds 15.2 kg
Hydraulic tank		45 gallons 170 liters
Hydraulic system (including tank)		55 gallons 208 liters
Drive torque hubs		44 fl oz 1.30 liters
Turntable rotation torque hub		17 fl oz 0.51 liters

https://truckmanualshub.com/

SPECIFICATIONS

Performance Specifications

Drive speeds, maximum	2WD	4WD
Drive speed, stowed Gasoline/LPG models	4.4 mph 7.1 km/h 40 ft/6.2 sec 12.2 m/6.2 sec	3.0 mph 4.8 km/h 40 ft/9.1 sec 12.2 m/9.1 sec
Drive speed, stowed Deutz Diesel models	4.0 mph 6.4 km/h 40 ft/6.8 sec 12.2 m/6.8 sec	2.8 mph 4.5 km/h 40 ft/9.7 sec 12.2 m/9.7 sec
Drive speed, raised or extended - all models	0.6 mph 1.0 km/h 40 ft/40 sec 12.2 m/40 sec	0.6 mph 1.0 km/h 40 ft/40 sec 12.2 m/40 sec

Gradeability (boom stowed)	2WD	4WD
Rough terrain	28%	40%

Boom function speeds, maximum from platform controls	
Jib boom up	40 to 60 seconds
Jib boom down	50 to 80 seconds
Boom up	55 to 85 seconds
Boom down	90 to 120 seconds
Boom extend	60 to 80 seconds
Boom retract	55 to 85 seconds
Turntable rotate - 360° boom fully stowed	80 to 100 seconds
Turntable rotate - 360° boom extended	130 to 160 seconds
Platform rotate - 160°	10 to 20 seconds
Platform level up	35 to 65 seconds
Platform level down	25 to 55 seconds

https://truckmanualshub.com/

SPECIFICATIONS

Hydraulic Specifications

Hydraulic fluid	Dexron equivalent
Drive pump	
Type: bi-directional variable displacement piston pump	
Displacement - 2500 rpm	0 to 30.3 gallons per minute 0 to 114.7 liters per minute
Maximum drive pressure	3500 psi 241.3 bar
Charge pressure neutral position drive position	 290 psi 20 bar 250 psi 17 bar
Medium pressure filter	3 micron
Medium pressure filter bypass pressure	50 psi 3.4 bar
Drive manifold	
Brake relief pressure	250 psi 17.2 bar
Steer end drive motors	**4WD models**
Displacement per revolution	1.52 cu in 25 cc
Non-steer end drive motors	
Displacement per revolution, variable 4WD (2 speed motor)	0.16 to 2.8 cu in 2.62 to 45.9 cc
Displacement per revolution, variable 2WD	1.12 to 2.8 cu in 18.4 to 45.9 cc

Function pump	
Type: pressure balanced gear	
Displacement - static	1.14 cu in 19 cc
Displacement - 2500 rpm	0 to 12.3 gallons per minute 0 to 46.6 liters per minute
Hydraulic tank circuit return line filter	10 micron with 25 psi (1.7 bar) bypass

Function manifold		
Function relief valve pressure S60 S65	 2600 psi 2900 psi	 179 bar 200 bar
Boom down relief valve pressure		2100 psi 145 bar
Boom extend		2500 psi 172 bar
Oscillate axle		950 psi 65 bar
Steer regulator Oscillate models Non-oscillate models	 5 gpm 3.5 gpm	 18.9 liters/min 13.2 liters/min
Auxiliary pump		
Type: fixed displacement gear pump		
Displacement - static		0.152 cu in 2.5 cc
Displacement		1.4 gallons per minute 5.3 liters per minute
Auxiliary pump relief pressure		2500 psi 172 bar

https://truckmanualshub.com/

SPECIFICATIONS

Ford Engine LRG-423

Displacement	140 cu in 2.3 liters
Number of cylinders	4
Bore & stroke	3.781 x 3.126 inches 96.04 x 79.4 mm
Horsepower	63 @ 4000 rpm
Firing order	1 - 3 - 4 - 2
Low idle - carburetor	900 rpm
Low idle - electronic governor	1600 rpm
High idle	2500 rpm
Governor	electronic
Compression ratio	9.4:1
Compression pressure (approx.) Pressure (psi) of lowest cylinder must be at least 75% of highest cylinder	
Valve clearances - collapsed tappet	0.035 to 0.055 inches 0.889 to 1.397 mm
Lubrication system	
Oil pressure (operating temp. @ 2000 rpm)	40 to 60 psi 2.75 to 4.1 bar
Oil capacity (including filter)	5 quarts 4.7 liters
Oil viscosity requirements	
Temperature below 60°F / 15.5°C	5W-30
-10°F to 90°F / -23°C to 32°C	10W-30
Temperature above -10°F / -23°C	10W-40 to 10W-50
Temperature above 20°F / -6.6°C	20W-40 or 20W-50
Use oils meeting API classification SG (labeled SG/CC or SG/CD) as they offer improved wear protection. Units ship with 10W-40 SG/CC.	

Starter motor	
Normal engine cranking speed	200 to 250 rpm
Current draw, normal load	170A
Current draw, maximum load	200A
Current draw, minimum	140A
Maximum circuit voltage drop while starting (normal temperature)	0.5V DC
Brush length, new	0.66 in 16.8 mm
Brush length wear limit	0.25 in 6.35 mm
Brush spring tension	64 ounces 18 Newtons
Bolt torque through brush	45 to 84 inch-pounds 5.08 to 9.5 Nm
Brush mounting bolt torque	15 to 20 foot-pounds 20 to 27 Nm
Maximum commutator run-out	0.005 inches 0.127 mm
Battery	
Type	12V, Group 31
Quantity	1
Cold cranking ampere	1000A
Reserve capacity @ 25A rate	200 minutes
Fuel pump	
Electronic solenoid	7 psi 0.48 bar

https://truckmanualshub.com/

SPECIFICATIONS

Ignition System	
Spark plug type	Motorcraft AWSF-52C
Spark plug gap	0.042 to 0.046 inches 1.07 to 1.18 mm

Engine coolant	
Capacity	11 1/2 quarts 10.9 liters

Alternator	
Output	95A, 14.5V

Bolt torque specifications

Bolt description (size)	torque ft-lbs	torque Nm
Timing belt tensioner pivot bolt (M-10)	29 to 40	40 to 55
Timing belt tensioner adjusting bolt (M-8)	25 to 29	35 to 40
Camshaft gear bolt (M-12)	52 to 66	70 to 90
Camshaft thrust plate bolt (M-6)	6 to 9	8 to 12
Carburetor to spacer stud (M-8)	7.5 to 15	10 to 20
Carburetor spacer to manifold bolt (M-8)	10 to 14	14 to 19
Crankshaft damper bolt (M-14)	92 to 122	125 to 165
Cylinder head bolt (M-12): torque in sequence		
first step	50 to 60	68 to 81
second step	80 to 90	108 to 122

Bolt torque specifications

Bolt description (size)	torque ft-lbs	torque Nm
Exhaust manifold to cylinder head bolt or nut (M-10): torque in sequence		
first step	14 to 19	19 to 26
second step	35 to 50	47 to 68
Flywheel to crankshaft bolt (M-10)	54 to 64	73 to 87
Intake manifold to cylinder head bolt or nut (M-8)	15 to 22	20 to 30
Oil pressure sending unit to block	8 to 18	11 to 24
Oil pan drain plug to pan (M-14)	15 to 25	20 to 34
Oil pan to block (M-6)	10 to 13.5	14 to 18
Oil filter insert to block	21 to 26	28 to 35
Rocker arm cover to cylinder head (M-6)	7 to 10	9 to 13
Spark plug to cylinder head (M-14)	7 to 15	9 to 20
Temperature sending unit to block (M-14)	8 to 18	11 to 24
Water jacket drain plug to block	12 to 18	16 to 24
Water pump to block bolt (M-8)	15 to 22	20 to 30
Water outlet connection bolt (M-8)	15 to 22	20 to 30
Cylinder front cover bolt (M-6)	10 to 12	13 to 16
Inner timing belt cover stud (M-8)	15 to 22	20 to 30
Outer timing belt cover bolt (M-6)	6 to 9	8 to 12

https://truckmanualshub.com/

SPECIFICATIONS

Deutz Engine F4L 1011F

Displacement	166.7 cu in 2.732 liters
Number of cylinders	4
Bore and stroke	3.58 x 4.13 inches 91 x 105 mm
Horsepower	56 @ 3000 rpm
Firing order	1 - 3 - 4 - 2
Compression ratio	18.5:1
Compression pressure	362 to 435 psi 25 to 30 bar
Low idle	1300 rpm
High idle	2300 rpm
Governor	centrifugal mechanical
Valve clearance, cold	
Intake	0.012 in 0.3 mm
Exhaust	0.020 in 0.5 mm
Lubrication system	
Oil pressure	26 to 87 psi 1.8 to 6.0 bar
Oil capacity (including filter)	11 quarts 10.5 liters
Oil viscosity requirements	
Temperature below 60°F / 15.5°C (synthetic)	5W-30
-10°F to 90°F / -23°C to 32°C	10W-40
Temperature above -4°F / -34°C	15W-40
Engine oil should have properties of API classification CC/SG or CD/SG grades. Units ship with 10W-40 SG/CC.	
Injection system	
Injection pump make	OMAP
Injection pump pressure	4351 psi 300 bar
Injector opening pressure	3626 psi 250 bar
Fuel requirement	diesel number 2-D
Alternator output	55A, 14V
Starter motor	
Current draw, no load	90A
Brush length, new	0.7480 in 19 mm
Brush length, minimum	0.5 in 12.7 mm
Battery	
Type	12V, Group 31
Quantity	1
Cold cranking ampere	1000A
Reserve capacity @ 25A rate	200 minutes
Fan belt deflection	3/8 to 1/2 inch 9 to 12 mm

Bolt tightening specifications

Bolt description (size, grade)	torque ft-lbs	torque Nm
Camshaft/thrust bearing bolt (M-8 x 35, 8.8)	15 to 18	20 to 24
Rocker arm bolts (M-8 x 45, 8.8)	15 to 18	20 to 24
Rocker arm set screw nut	15 to 18	20 to 24
Cylinder head cover	6 to 7	8 to 10
Blower rotor nut (M-17 Valeo or M-18 Bosch)	33 to 41	45 to 55
Blower carrier bolts (M-8 x 50 Torx, 8.8)	15 to 18	20 to 24
V-belt pulley bolts (M-10 x 16, 8.8)	28 to 34	38 to 46

https://truckmanualshub.com/

SPECIFICATIONS

Bolt tightening specifications, continued

Bolt description (size, grade)	torque ft-lbs	torque Nm
Idler pulley/V-belt pulley bolt (M-10 x 25, 8.8)	27 to 32	36 to 44
Idler pulley for toothed belt (M-10 x 50, 8.8)	30 to 36	41 to 49
Oil pump bolts (M-8 x 35 Torx)	15 to 18	20 to 24
Oil filter bracket bolts (M-8 x 20 Torx, 8.8)	7 to 8	9 to 11
Oil intake housing bolts (M-8 x 75 Torx)	15 to 18	20 to 24
Fuel pump bolts	15 to 18	20 to 24
Injection pump bolts	15 to 18	20 to 24
Injector cap nut	30 to 37	40 to 50
Injector fastening bolt	15 to 18	20 to 24
Injection line	10 to 12	13.5 to 16.5
Air intake manifold bolts (M-8 x 30, 8.8)	15 to 18	20 to 24
Air intake manifold, 3-hole flange bolts (M-8 x 35 Torx, 8.8)	15 to 18	20 to 24
Exhaust manifold bolts (M-10 x 30 Torx, 10.9)	27 to 32	36 to 44
Starter fastening bolts (M-10 x 28, 8.8)	28 to 34	38 to 46
Starter carrier bolts (M-12 x 28, 8.8)	50 to 60	68 to 82
Oil pan bolts (M-8 x 16 Torx, 8.8)	15 to 18	20 to 24
Oil drain bolts	37 to 44	50 to 60
Oil thermostat housing screw plug (M-38 x 1.5)	37 to 44	50 to 60
Oil thermostat housing bolts (M-6 x 35 Torx, 8.8)	5.5 to 7	7.5 to 9
Oil thermostat housing bolts (M-6 x 80 Torx, 8.8)	5.5 to 7	7.5 to 9
Oil thermostat housing bolts (M-6 x 105 Torx, 8.8)	14 to 16	19 to 22
Valve plunger housing bolts (M-8 x 30 Torx, 8.8)	14 to 16	19 to 22
Alternator nuts (M-5)	3	4
Fuel bracket bolts (M-8 x 20, 8.8)	15	20
Adapter housing bolts (M-12 x 35, 10.9 or M-12 x 75, 10.9)	70 to 77	95 to 105

		first step tightening torque		second step tightening angles	
		ft-lbs	Nm	1st	2nd
Main bearing bolts		37	50	60°	45°
Big end bolts		22	30	60°	60°
Flywheel bolts		22	30	60°	30°
Cylinder head studs	step 1	22	30		
	step 2	59	80		
	step 3	118	160	120°	NA
Camshaft/central bolt		22	30	150°	NA
Crankshaft/central bolt		96	130	210°	NA

https://truckmanualshub.com/

SPECIFICATIONS

Hydraulic Hose and Fitting Torque Specifications

Your machine is equipped with Parker Seal-Lok® O-ring face seal fittings and hose ends. Machines that utilize Parker Seal-Lok® O-ring face seal fittings and hose ends require that the fittings and hose ends be torqued to specification when they are removed and installed or when new hoses or fittings are installed.

Hydraulic Hose and Fitting Torque Specifications						
SAE O-ring Boss Port - tube fitting				**Seal-Lok® -** hose end		
SAE Dash Size	Installing into...	ft. lbs.	Nm	SAE Dash Size	ft. lbs.	Nm
-4	Aluminum	11	14.9	-4	18	24.4
	Steel	16	21.7	-6	27	36.6
-6	Aluminum	23	31.2	-8	40	54.2
	Steel	35	47.5	-10	63	85.4
-8	Aluminum	40	54.2	-12	90	122
	Steel	60	81.3	-16	120	162.7
-10	Aluminum	69	93.6	-20	140	190
	Steel	105	142.4	-24	165	223.7
-12	Aluminum	93	126.1			
	Steel	140	190			
-16	Aluminum	139	188.5			
	Steel	210	284.7			
-20	Aluminum	172	233.2			
	Steel	260	352.5			
-24	Aluminum	208	282			
	Steel	315	427.1			

Torque Procedure

1 Replace the O-ring. The O-ring must be replaced anytime the seal has been broken. The O-ring cannot be re-used if the fitting or hose end has been tightened beyond finger tight.

NOTICE The O-rings used in the Parker Seal Lok® fittings and hose ends are a custom-size O-ring. They are not a standard SAE size O-ring. They are available in the O-ring field service kit (Genie pn. 49612).

2 Lubricate the O-ring before installation.

3 Be sure that the face seal O-ring is seated and retained properly.

4 Position the tube and nut squarely on the face seal end of the fitting and tighten the nut finger tight.

5 Tighten the nut or fitting to the appropriate torque per given size as shown in the table above.

6 Operate all machine functions and inspect the hoses and fittings and related components to be sure that there are no leaks.

https://truckmanualshub.com/

SPECIFICATIONS

Bolt Torque Specifications

Size	Threads	SAE Grade 5 Bolts			SAE Grade 8 Bolts		
		Torque - Dry inch-pounds	Torque - Dry foot-pounds	Torque - Dry Newton meters	Torque - Dry inch-pounds	Torque - Dry foot-pounds	Torque - Dry Newton meters
No. 10	24	43		5	60		7
	32	49		6	68		8
1/4 inch	20	96		11	144		16
	28	120		14	168		19
5/16 inch	18		17	23		25	34
	24		19	28		25	34
3/8 inch	16		30	41		45	61
	24		35	48		50	68
7/16 inch	14		50	68		70	95
	20		55	75		80	109
1/2 inch	13		75	102		110	149
	20		90	122		120	163
9/16 inch	12		110	149		150	204
	18		120	163		170	231
5/8 inch	11		150	204		220	298
	18		170	231		240	326
3/4 inch	10		260	353		380	515
	16		300	407		420	570
7/8 inch	9		430	583		600	814
	14		470	637		660	895
1 inch	8		640	868		900	1221
	12		700	949		1000	1356

Torque specifications for lubricated bolts are 25% less than dry torque specifications for each bolt size.

These bolt torque specifications are for general use only. Specification may vary depending on application of bolt.

https://truckmanualshub.com/

This page intentionally left blank.

https://truckmanualshub.com/

Scheduled Maintenance Inspections

Observe and Obey:

- ☑ Maintenance inspections shall be completed by a person trained and qualified on the maintenance of this machine.
- ☑ Scheduled maintenance inspections shall be completed daily, quarterly, annually and every 2 years as specified on the *Maintenance Inspection Report.*

WARNING Failure to properly complete each inspection when required may cause death, serious injury or substantial damage.

- ☑ Immediately tag and remove from service a damaged or malfunctioning machine.
- ☑ Repair any machine damage or malfunction before operating machine.
- ☑ Keep records on all inspections for three years.
- ☑ Machines that have been out of service for a period longer than 3 months must complete the quarterly inspection.

About This Section

The Schedule

There are four types of maintenance inspections that must be performed according to a schedule–daily, quarterly, annual, two year. To account for repeated procedures, the *Maintenance Tables* and the *Maintenance Inspection Report* have been divided into four subsections–A, B, C, D. Use the following chart to determine which group(s) of procedures are required to perform a scheduled inspection.

Inspection	Table or Checklist
Daily	A
Quarterly	A + B
Annual	A + B + C
Two year	A + B + C + D

Maintenance Tables

The maintenance tables contained in this section provide summary information on the specific physical requirements for each inspection.

Complete step-by-step instructions for each scheduled maintenance procedure are provided in section 4, *Scheduled Maintenance Procedures*.

Maintenance Inspection Report

The maintenance inspection report contains checklists for each type of scheduled inspection.

Make copies of the *Maintenance Inspection Report* to use for each inspection. Store completed forms for three years.

https://truckmanualshub.com/

Maintenance Tables

Table A		Tools are required	New parts required	Warm engine required	Cold engine required	Dealer service suggested
A-1	Inspect the Manuals					
A-2	Inspect the Decals and Placards					
A-3	Inspect for Damage, Loose or Missing Parts	✓			✓	
A-4	Check the Engine Oil Level					
A-5	Check the Engine Coolant Level - Gasoline/LPG Models				✓	
A-6	Check for Fuel Leaks					
A-7	Check the Hydraulic Oil Level					
A-8	Check for Hydraulic Leaks					
A-9	Check the Tire Pressure	✓				
A-10	Test the Oscillate Axle (if equipped)					
A-11	Test the Platform and Ground Controls					
A-12	Test the Auxiliary Power Operation					
A-13	Test the Tilt Sensor					
A-14	Test the Limit Switches					
Every 100 hours, perform the following three engine maintenance procedures.						
A-15	Replace the Engine Oil and Filter Gasoline/LPG Models	✓	✓	✓		

https://truckmanualshub.com/

MAINTENANCE TABLES

Table A, continued		Tools are required	New parts required	Warm engine required	Cold engine required	Dealer service suggested
A-16	Drain the Fuel Filter/Water Separator - Deutz Diesel Models					
A-17	Replace the Engine Air Filter				✓	
Table B		✓	✓			
B-1	Check the Engine Belt	✓				
B-2	Check the Radiator - Gasoline/LPG Models	✓	✓		✓	
B-3	Check the Oil Cooler and Cooling Fins - Deutz Diesel Models	✓			✓	
B-4	Check the Exhaust System	✓			✓	
B-5	Check the Battery	✓	✓			
B-6	Check the Hydraulic Tank Filter Condition Indicator					
B-7	Inspect the Electrical Wiring					
B-8	Inspect the Tires and Wheels (including lug nut torque)	✓				
B-9	Confirm the Proper Brake Configuration	✓				
B-10	Check the Oil Level in the Torque Hubs	✓				
B-11	Check and Adjust the Engine Idle Mixture - Gasoline/LPG Models	✓		✓		✓
B-12	Check and Adjust the Engine RPM	✓		✓		✓

https://truckmanualshub.com/

MAINTENANCE TABLES

Table B, continued		Tools are required	New parts required	Warm engine required	Cold engine required	Dealer service suggested
B-13	Test the Key Switch					
B-14	Test the Emergency Stop Buttons					
B-15	Test the Ground Control Override					
B-16	Check the Directional Valve Linkage	✓				
B-17	Test the Platform Self-leveling	✓				
B-18	Test the Horn					
B-19	Test the Foot Switch					
B-20	Test the Engine Idle Select					
B-21	Test the Fuel Select Operation - Gasoline/LPG Models			✓		
B-22	Test the Drive Enable System					
B-23	Test the Drive Brakes	✓				
B-24	Test the Drive Speed - Stowed Position	✓				
B-25	Test the Alarm Package - Optional Equipment					✓
B-26	Perform Hydraulic Oil Anaysis See D-1 *Test or Replace the Hydraulic Oil*	✓	✓		✓	
Every 500 hours, perform the following engine maintenance procedure.						
B-27	Replace the Engine Oil and Filter - Deutz Diesel Models	✓	✓	✓		

https://truckmanualshub.com/

MAINTENANCE TABLES

Table C

		Tools are required	New parts required	Warm engine required	Cold engine required	Dealer service suggested
C-1	Check the Boom Wear Pads	✓	✓			✓
C-2	Check the Turntable Rotation Bearing Bolts	✓	✓			✓
C-3	Check the Free-wheel Configuration	✓				
C-4	Grease the Turntable Rotation Bearing and Rotate Gear	✓	✓			
C-5	Replace the Torque Hub Oil	✓	✓			
C-6	Replace the Hydraulic Tank Filter	✓	✓		✓	✓
C-7	Replace the Drive Loop Hydraulic Filter	✓	✓		✓	
C-8	Replace the Diesel Fuel Filter/Water Separator Deutz Diesel Models	✓	✓		✓	
C-9	Replace the Gasoline Fuel Filter - Gasoline/LPG Models	✓	✓		✓	
C-10	Replace the PCV Valve - Gasoline/LPG Models	✓	✓		✓	
C-11	Replace the Spark Plugs - Gasoline/LPG Models	✓	✓		✓	
C-12	Check and Adjust the Air/LPG Mixture - Gasoline/LPG Models	✓		✓		
C-13	Check and Adjust the Ignition Timing - Gasoline/LPG Models	✓		✓		
C-14	Check the Engine Valve Clearances - Deutz Diesel Models	✓			✓	✓
C-15	Check the Turntable Rotation Gear Backlash	✓				

https://truckmanualshub.com/

MAINTENANCE TABLES

Table D		Tools are required	New parts required	Warm engine required	Cold engine required	Dealer service suggested
D-1	Test or Replace the Hydraulic Oil	✓	✓		✓	✓
D-2	Change or Recondition the Engine Coolant - Gasoline/LPG Models	✓	✓		✓	
D-3	Change the Fuel Lines	✓	✓		✓	
D-4	Check the Engine Valve Clearance - Gasoline/LPG Models	✓		✓		✓
D-5	Check the Engine Cylinder Compression - Gasoline/LPG Models	✓				✓
D-6	Clean the PCV Hoses and Fittings - Gasoline/LPG Models	✓				
D-7	Check the Fuel Injection Pumps and Injectors - Deutz Diesel Models	✓				✓
D-8	Check the Toothed Belt - Deutz Diesel Models	✓				✓
D-9	Replace the Timing Belt - Gasoline/LPG Models	✓	✓		✓	✓
D-10	Grease the Steer Axle Wheel Bearings - 2WD Models	✓	✓			

https://truckmanualshub.com/

Maintenance Inspection Report

Model

Serial number

Date

Hour meter

Machine owner

Inspected by (print)

Inspector signature

Inspector title

Inspector company

Instructions

· Make copies of this page to use for each inspection.

· Select the appropriate checklist(s) for the type of inspection to be performed.

- ☐ **Daily Inspection: A**
- ☐ **Quarterly Inspection: A+B**
- ☐ **Annual Inspection: A+B+C**
- ☐ **2 Year Inspection: A+B+C+D**

· Place a check in the appropriate box after each inspection procedure is completed.

· Use the maintenance tables in this section and the step-by-step procedures in section 4 to learn how to perform these inspections.

· If any inspection receives an “N”, tag and remove the machine from service, repair and re-inspect it. After repair, place a check in the “R” box.

Legend

Y = yes, acceptable

N = no, remove from service

R = repaired

Comments

Checklist A	**Y**	**N**	**R**
Refer to Table A			
A-1 Manuals			
A-2 Decals and placards			
A-3 Damage, loose or missing parts			
A-4 Engine oil level			
A-5 Engine coolant-Gas/LPG			
A-6 Fuel leaks			
A-7 Hydraulic oil level			
A-8 Hydraulic leaks			
A-9 Tire pressure			
A-10 Oscillate axle			
A-11 Platform and ground controls			
A-12 Auxiliary power			
A-13 Tilt sensor			
A-14 Limit switches			
Perform every 100 hours:			
A-15 Replace engine oil and filter-Gas/LPG Models			
A-16 Drain filter/separator Deutz Diesel			
A-17 Replace air filter			

Checklist B	**Y**	**N**	**R**
Refer to Table B			
B-1 Engine belt			
B-2 Engine radiator-Gas/LPG			
B-3 Oil cooler and fins-Diesel			
B-4 Exhaust system			
B-5 Battery			
B-6 Hydraulic tank filter			
B-7 Electrical wiring			
B-8 Tires and wheels			
B-9 Brake configuration			
B-10 Torque hub oil level			
B-11 Idle mixture-Gas/LPG			
B-12 Engine RPM			
B-13 Key switch			
B-14 Emergency Stop			
B-15 Ground control override			
B-16 Directional valve			
B-17 Platform leveling			
B-18 Horn			
B-19 Foot switch			
B-20 Engine idle select			
B-21 Fuel select-Gas/LPG			
B-22 Drive enable system			
B-23 Drive brakes			
B-24 Drive speed-stowed			
B-25 Alarm package			
B-26 Hydraulic oil analysis			
Perform every 500 hours:			
B-27 Replace engine oil and filter-Deutz Diesel			

Checklist C	**Y**	**N**	**R**
Refer to Table C			
C-1 Boom wear pads			
C-2 Turntable bearing bolts			
C-3 Free-wheel configuration			
C-4 Grease rotation bearing			
C-5 Torque hub oil			
C-6 Hydraulic tank filter			
C-7 Drive loop hydraulic filter			
C-8 Fuel filter-Deutz Diesel			
C-9 Fuel filter-Gas/LPG			
C-10 PCV valve-Gas/LPG			
C-11 Spark plugs-Gas/LPG			
C-12 Air/LPG mixture			
C-13 Ignition timing-Gas/LPG			
C-14 Valves-Deutz Diesel			
C-15 Turntable backlash			

Checklist D	**Y**	**N**	**R**
Refer to Table D			
D-1 Hydraulic oil			
D-2 Engine coolant-Gas/LPG			
D-3 Change fuel lines			
D-4 Valves-Gas/LPG			
D-5 Compression-Gas/LPG			
D-6 PCV hoses-Gas/LPG			
D-7 Fuel injection-Diesel			
D-8 Toothed belt-Diesel			
D-9 Timing belt-Gas/LPG			
D-10 Wheel bearings			

https://truckmanualshub.com/

This page intentionally left blank.

https://truckmanualshub.com/

Scheduled Maintenance Procedures

Observe and Obey:

- ☑ Maintenance inspections shall be completed by a person trained and qualified on the maintenance of this machine.
- ☑ Scheduled maintenance inspections shall be completed daily, quarterly, annually and every 2 years as specified on the *Maintenance Inspection Report.*

⚠WARNING Failure to perform each procedure as presented and scheduled may cause death, serious injury or substantial damage.

- ☑ Immediately tag and remove from service a damaged or malfunctioning machine.
- ☑ Repair any machine damage or malfunction before operating machine.
- ☑ Keep records on all inspections for three years.
- ☑ Unless otherwise specified, perform each maintenance procedure with the machine in the following configuration:
  - Machine parked on a flat, level surface
  - Boom in stowed position
  - Turntable rotated with the boom between the non-steering wheels
  - Turntable secured with the turntable rotation lock pin
  - Key switch in the OFF position with the key removed
  - Wheels chocked

About This Section

This section contains detailed procedures for each scheduled maintenance inspection.

Each procedure includes a description, safety information and step-by-step instructions.

Symbols Legend

⚠DANGER Indicates the presence of a hazard that **will** cause death or serious injury.

⚠WARNING Indicates the presence of a hazard that **may** cause death or serious injury.

⚠CAUTION Indicates the presence of a hazard that **will** or **may** cause serious injury or damage to the machine.

NOTICE Indicates special operation or maintenance information.

⊙ Indicates that a specific result is expected after performing a step.

https://truckmanualshub.com/

Table A Procedures

A-1
Inspect the Manuals

Maintaining the operator's and safety manuals in good condition is essential to safe machine operation. Manuals are included with each machine and should be stored in the container provided in the platform. An illegible or missing manual will not provide safety and operational information necessary for a safe operating condition.

1 Check to be sure that the storage container is present and in good condition.

2 Check to make sure that the operator's, responsibilities and safety manual are present and complete in the storage container in the platform.

3 Examine the pages of each manual to be sure that they are legible and in good condition.

4 Always return the manuals to the storage container after use.

NOTICE Contact your authorized Genie distributor or Genie Industries if replacement manuals are needed.

A-2
Inspect the Decals and Placards

Maintaining all of the safety and instructional decals and placards in good condition is mandatory for safe machine operation. Decals alert operators and personnel to the many possible hazards associated with using this machine. They also provide users with operation and maintenance information. An illegible decal will fail to alert personnel of a procedure or hazard and could result in unsafe operating conditions.

1 Refer to the *Decals* section in the *Genie S-60 & Genie S-65 Operator's Manual* and use the decal list and illustrations to determine that all decals and placards are in place.

2 Inspect all decals for legibility and damage. Replace any damaged or illegible decal immediately.

NOTICE Contact your authorized Genie distributor or Genie Industries if replacement decals are needed.

A-3
Inspect for Damage, Loose or Missing Parts

Daily machine condition inspections are essential to safe machine operation and good machine performance. Failure to locate and repair damage, and discover loose or missing parts may result in an unsafe operating condition.

1 Inspect the entire machine for damage and improperly installed or missing parts including:

- Electrical components, wiring and electrical cables
- Hydraulic hoses, fittings, cylinders and manifolds
- Fuel and hydraulic tanks
- Drive and turntable rotation motors and torque hubs
- Axle components
- Boom components and wear pads
- Dents or damage to machine
- Tires and wheels
- Engine and related components
- Limit switches
- Alarms, horn and beacon (if equipped)
- Nuts, bolts and other fasteners
- Platform entry mid-rail or gate
- Cracks in welds or structural components
- Compartment covers and latches

https://truckmanualshub.com/

TABLE A PROCEDURES

A-4
Check the Engine Oil Level

Maintaining the proper engine oil level is essential to good engine performance and service life. Operating the machine with an improper oil level can damage engine components.

NOTICE Check the oil level with the engine off.

1 Check the oil dipstick. Add oil as needed.

⊙ Result: The oil level should be in the "safe" zone.

Ford LRG-423 Engine Oil capacity (including filter)	5 quarts 4.7 liters
Ford LRG-423 Engine Oil viscosity requirements	
below 60°F / 15.5°C	5W-30
-10° to 90°F / -23° to 32°C	10W-30
above -10°F / -23°C	10W-40 or 10W-50
above 25°F / -4°C	20W-40 or 20W-50
Use oils meeting API classification SF (labeled SF/CC or SF/CD) as they offer improved wear protection.	
Deutz Engine F4L 1011F Oil capacity (including filter)	11 quarts 10.5 liters
Deutz Engine F4L 1011F Oil viscosity requirements	
below 60°F / 15.5°C (synthetic)	5W-30
-10°F to 90°F / -23°C to 32°C	10W-40
above -4°F / -34°C	15W-40
Engine oil should have properties of API classification CC/SE, CD/SE, SF/CC or SF/CD grades.	

A-5
Check the Engine Coolant Level - Gasoline/LPG Models

Maintaining the engine coolant at the proper level is essential to engine service life. Improper coolant level will affect the engine's cooling capability and damage engine components. Daily checks will allow the inspector to identify changes in coolant level that might indicate cooling system problems.

1 Check the fluid level in the coolant recovery tank. Add fluid as needed.

⊙ Result: The fluid level should be in the NORMAL range.

⚠WARNING Fluids in the radiator are under pressure and extremely hot. Use caution when removing cap and adding fluids.

A-6
Check for Fuel Leaks

Failure to detect and correct fuel leaks will result in an unsafe condition. An explosion or fuel fire may cause death or serious injury.

⚠DANGER Engine fuels are combustible. Inspect the machine in an open, well-ventilated area away from heaters, sparks, flames and lighted tobacco. Always have an approved fire extinguisher within easy reach.

1 Open the shutoff valve on the liquid petroleum gas (LPG) tank by turning it counterclockwise.

2 Perform a visual inspection around the following areas. (An LPG detector may be necessary to locate LPG leaks.)

https://truckmanualshub.com/

TABLE A PROCEDURES

Gasoline/LPG models:

- LPG tank, hoses and fittings, solenoid shutoff valve, LPG regulator and carburetor
- Gasoline tank, manual shutoff valve, fuel pump solenoid shutoff valve, hoses and fittings and carburetor

Deutz Diesel models:

- Fuel tank, shutoff valve, hoses and fittings, fuel pump, fuel filter, fuel injection pumps and fuel injectors

DANGER If a fuel leak is discovered, keep any additional personnel from entering the area and do not operate the machine. Repair the leak immediately.

A-7
Check the Hydraulic Oil Level

Maintaining the hydraulic oil at the proper level is essential to machine operation. Improper hydraulic oil levels can damage hydraulic components. Daily checks allow the inspector to identify changes in oil level that might indicate the presence of hydraulic system problems.

1 Be sure that the boom is in the stowed position, then visually inspect the sight gauge located on the side of the hydraulic oil tank.

⊙ Result: The hydraulic oil level should be within the top 2 inches (5 cm) of the sight gauge.

Hydraulic oil specifications	
Hydraulic oil type	Dexron equivalent
Tank capacity	45 gallons 170 liters
Hydraulic system (including tank)	55 gallons 208 liters

A-8
Check for Hydraulic Leaks

Detecting hydraulic fluid leaks is essential to operational safety and good machine performance. Undiscovered leaks can develop into hazardous situations, impair machine functions and damage machine components.

1 Inspect for hydraulic oil puddles, dripping or residue on or around the following areas:

- Hydraulic tank–filter, fittings, hoses, auxiliary power unit and turntable surface
- Engine compartment–fittings, hoses, pumps, filter and turntable surface
- All hydraulic cylinders
- All hydraulic manifolds
- Boom(s)
- The underside of the turntable
- The underside of the drive chassis
- Ground area under the machine

https://truckmanualshub.com/

A-9
Check the Tire Pressure

NOTICE This procedure does not need to be performed on machines equipped with the foam-filled tire option.

⚠WARNING An over-inflated tire can explode and may cause death or serious injury.

To safeguard maximum stability, achieve optimum machine handling and minimize tire wear, it is essential to maintain proper pressure in all air-filled tires.

1 Check each tire with an air pressure gauge and add air as needed.

Tire specifications	
Tire size	15-19.5 NHS
Pressure	85 psi 5.86 bar

A-10
Test the Oscillate Axle (if equipped)

Proper axle oscillation is essential to safe machine operation. If the axle oscillation system is not operating correctly, the stability of the machine is compromised and it may tip over.

1 Start the engine from the platform controls.

2 Drive the right steer tire up onto a 6 inch (15.2 cm) block or curb.

⊙ Result: The three remaining tires should stay in firm contact with the ground and the chassis should remain level at all times.

3 Drive the left steer tire up onto a 6 inch (15.2 cm) block or curb.

⊙ Result: The three remaining tires should stay in firm contact with the ground and the chassis should remain level at all times.

4 Drive both steer tires up onto a 6 inch (15.2 cm) block or curb.

⊙ Result: The non-steer tires should stay in firm contact with the ground.

NOTICE If the chassis does not remain level during test, see Repair Procedure 10-6, *How to Set Up the Directional Valve Linkage* OR see Repair Procedure 10-5, *How to Adjust the Sequence Valve Pressure.*

https://truckmanualshub.com/

TABLE A PROCEDURES

A-11
Test the Platform and Ground Controls

Testing the machine functions and the Emergency Stop buttons for malfunctions is essential for safe machine operation. An unsafe working condition exists if any function fails to operate properly or either Emergency Stop button fails to stop all the machine functions and shut off the engine. Each function should activate, operate smoothly and be free of hesitation, jerking and unusual noise.

1 Pull out the Emergency Stop button at the ground controls to the ON position.

2 Start the engine from the ground controls.

3 Do not hold the function enable switch to either side. Attempt to activate each boom and platform function toggle switch.

⊙ Result: All boom and platform functions should **not** operate.

4 Hold the function enable switch to either side and activate each boom and platform function toggle switch.

⊙ Result: All boom and platform functions should operate through a full cycle. Descent alarm (if equipped) should sound while the boom is lowering.

5 Push in the Emergency Stop button to the OFF position.

⊙ Result: No function should operate, the engine should stop.

NOTICE Machines equipped with Platform Level Control Disable Function: The platform level function will not operate when the boom is raised or extended past the drive speed limit switches.

NOTICE Deutz Diesel models: All functions should stop immediately. The engine will shut off after 2 to 3 seconds.

6 Start the engine from the platform controls.

7 Do not press down on the footswitch.

8 Attempt to operate all machine functions.

⊙ Result: All machine functions should **not** operate.

9 Press down on the footswitch and activate each machine function.

⊙ Result: All machine functions should operate through a full cycle.

10 Push in the Emergency Stop button to the OFF position at the platform controls.

⊙ Result: No function should operate, the engine should stop.

NOTICE As a safety feature, selecting and operating the ground controls will override the platform controls, including the Emergency Stop switch.

NOTICE Deutz Diesel models: All functions should stop immediately. The engine will shut off after 2 to 3 seconds.

A-12
Test the Auxiliary Power Operation

Detection of auxiliary power system malfunctions is essential for safe machine operation. An unsafe working condition exists if the auxiliary powered functions do not operate in the event of a main power loss. When operating the machine on engine power, selecting auxiliary power will stop the engine immediately. Auxiliary power is designed for short term emergency use only, and excessive use will result in battery drain and component damage.

1 Turn the key switch to ground control and pull out the Emergency Stop button to the ON position at the ground controls.

https://truckmanualshub.com/

2 Lift the red auxiliary power switch cover.

3 Simultaneously hold the auxiliary power switch ON and activate each boom function toggle switch.

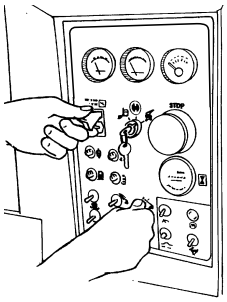

NOTICE To conserve battery power, test each function through a partial cycle.

⊙ Result: All boom functions should operate.

4 Turn the key switch to platform control.

5 Pull out the Emergency Stop switch to the ON position at the platform controls, then press down the foot switch.

6 Lift the red auxiliary power switch cover.

7 Simultaneously hold the auxiliary power switch ON and activate each function control handle or toggle switch

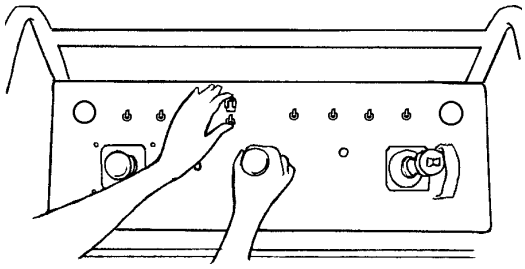

NOTICE To conserve battery power, test each function through a partial cycle.

⊙ Result: All boom and steer functions should operate. Drive functions should not operate with auxiliary power.

A-13
Test the Tilt Sensor

The tilt sensor sounds an alarm located in the platform when the incline of the turntable exceeds 4.5 degrees.

NOTICE Select a level test area. The tilt alarm should not be sounding prior to the test.

1 Start the engine from the platform controls.

2 Open the tank side turntable cover and press down on one side of the tilt sensor.

⊙ Result: After a 1.5 second delay, the alarm in the platform should sound.

⚠WARNING Tip-over hazard. The alarm should be audible at the ground controls. If the alarm is not audible at the ground controls, replace the alarm.

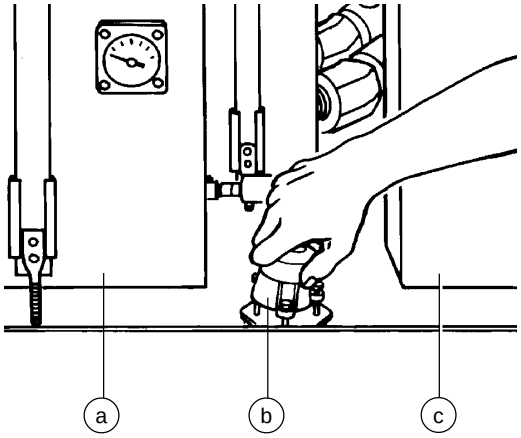

a fuel tank
b tilt sensor
c ground control box

https://truckmanualshub.com/

TABLE A PROCEDURES

A-14
Test the Limit Switches

Drive Limit Switches

Detecting limit switch malfunctions is essential to safe machine operation. The drive limit switches are used to restrict drive speed when the boom is raised or extended. An improperly functioning drive limit switch will allow the machine to operate at an unsafe drive speed.

1 Remove the cover from the rear of the turntable to access the drive limit switch.

2 Visually inspect the drive limit switch mounted to the turntable side plate at the pivot end of the boom. Inspect for the following:

· Broken or missing roller or roller head

· Missing fasteners

· Loose wiring

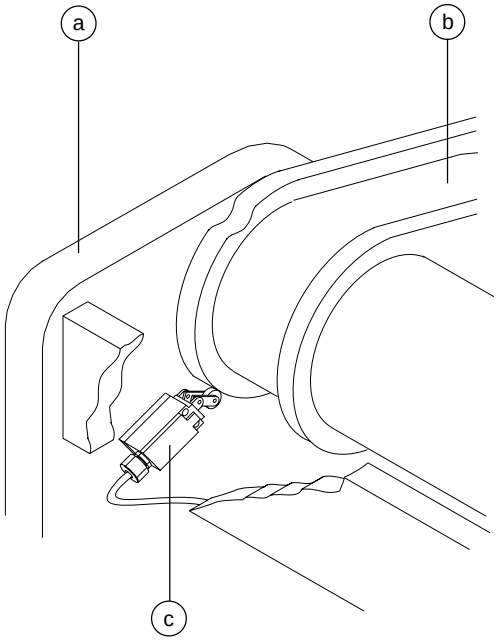

a turntable riser
b boom
c boom drive limit switch

3 Visually inspect the boom extend drive limit switch located on the end of the cable track on the boom. Inspect for the following:

· Broken or missing roller or arm

· Missing fasteners

· Loose wiring

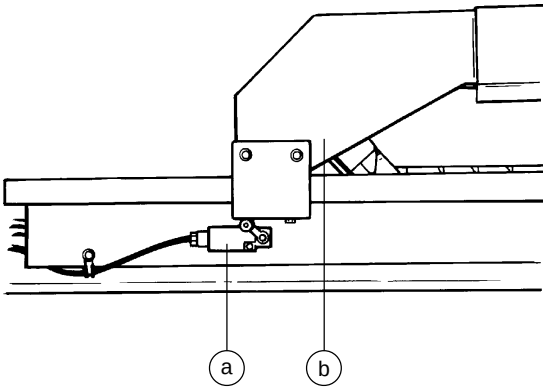

a boom extend drive limit switch
b cable track

4 Start the engine from the ground controls.

5 Extend the boom approximately 3 feet (0.9 m).

6 Manually activate the boom extend drive limit switch.

⊙ Result: The boom extend drive limit switch arm should move freely and spring return to center. A distinct click should be felt and heard.

7 Turn the keyswitch to platform control.

8 Fully retract the boom.

9 Slowly move the drive control handle off center.

⊙ Result: The machine should move at normal drive speeds.

10 Raise the boom to just above horizontal.

11 Slowly move the drive control handle off center.

⊙ Result: The machine should move at a reduced drive speed.

https://truckmanualshub.com/

TABLE A PROCEDURES

12 Lower the boom to the stowed position, then extend the boom 3 feet (91 cm).

13 Slowly move the drive control handle off center.

⊙ Result: The machine should move at a reduced drive speed.

Drive speed, maximum, raised or extended	
All models	1 foot per second 0.31 meter per second

Drive Enable Limit Switch

1 With the engine off and the boom in between the steer and non-steer tires, visually inspect the drive enable limit switch for the following:

· Broken or missing roller or arm

· Missing fasteners

· Loose wiring

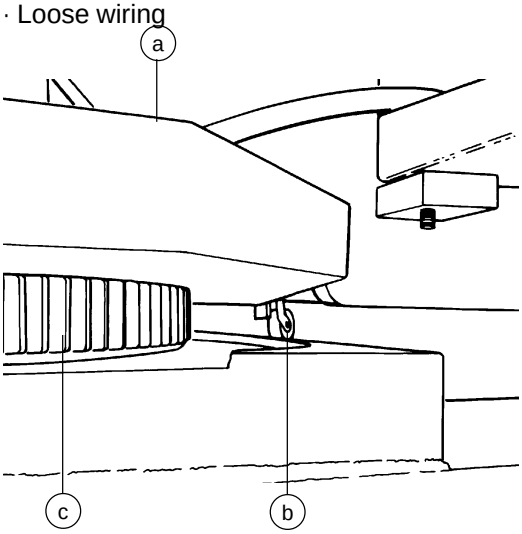

a turntable
b drive enable limit switch
c turntable rotation bearing

2 Manually activate the drive enable limit switch.

⊙ Result: The drive enable limit switch roller should move freely and spring return to center. A distinct click should be felt and heard.

3 Start the engine from the platform controls and rotate the turntable so the boom is between the non-steer tires.

4 Rotate the turntable to the left until the boom is past the left non-steer wheel.

⊙ Result: The drive enable indicator light should be on. Drive function should not operate until the drive enable toggle switch is activated.

5 Rotate the turntable to the right until the boom is past the right non-steer wheel.

⊙ Result: The drive enable indicator light should be on. Drive function should not operate until the drive enable toggle switch is activated.

https://truckmanualshub.com/

TABLE A PROCEDURES

A-15
Replace the Engine Oil and Filter - Gasoline/LPG Models

NOTICE Ford engine specifications require that this procedure be performed every 100 hours. Perform this procedure more often if dusty conditions exist or the machine is subjected to extended low idle operation.

Periodic replacement of the engine oil and filter is essential to good engine performance. Operating the machine with an improper oil level or neglecting periodic oil and filter changes can damage engine components. A daily check of elapsed machine hours against the hours noted on the oil filter will allow the inspector to anticipate and perform oil and filter changes at the 100 hour interval.

NOTICE Perform this procedure after warming the engine to normal operating temperature.

⚠CAUTION Beware of hot engine parts and oil. Contact with hot engine oil and/or engine parts may cause severe burns.

1 Remove the oil filler cap located on the valve cover.

2 Place a suitable container under the engine pivot plate directly below the oil pan drain plug.

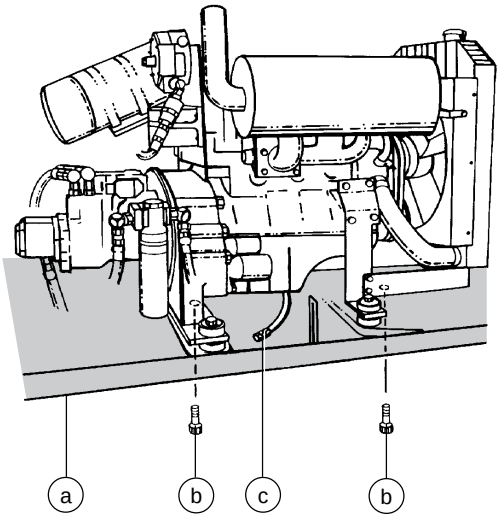

a engine pivot plate
b pivot plate retaining bolts
c oil drain hose

3 Remove the plug from the oil pan and allow all of the oil from the engine to drain into a suitable container. See capacity specifications below.

4 Install the plug into the oil pan.

5 Remove the 2 engine pivot plate retaining bolts from under the engine pivot plate. Swing the engine pivot plate away from the machine to access the oil filter.

6 Use an oil filter wrench and remove the filter.

7 Apply a thin layer of oil to the new oil filter gasket (Genie part no. 28656). Then install the filter and tighten it securely by hand.

8 Use a permanent ink marker to write the date and number of hours from the hour meter on the oil filter.

9 Fill the engine with new oil per specifications and install the filler cap. See capacity specifications below.

10 Start the engine from the ground controls. Allow the engine to run for 30 seconds, then turn the engine off.

https://truckmanualshub.com/

11 Check the oil filter and the oil pan drain plug for leaks.

12 Swing the engine pivot plate back to its original position and replace the two pivot plate retaining bolts.

13 Check the engine oil level dipstick. Add oil if needed.

Ford LRG-423 Engine Oil capacity (including filter)	5 quarts 4.7 liters

Ford LRG-423 Engine Oil viscosity requirements	
below 60°F / 15.5°C	5W-30
-10° to 90°F / -23° to 32°C	10W-30
above -10°F / -23°C	10W-40 or 10W-50
above 25°F / -4°C	20W-40 or 20W-50

Use oils meeting API classification SF (labeled SF/CC or SF/CD) as they offer improved wear protection.

A-16
Drain the Fuel Filter/ Water Separator - Deutz Diesel Models

NOTICE Engine specifications require that this procedure be performed every 100 hours. Poor fuel quality or very wet conditions may necessitate performing this procedure more often.

Proper maintenance of the fuel filter/water separator is essential for good engine performance. Failure to perform this procedure can lead to poor engine performance and component damage.

DANGER Engine fuels are combustible. Perform this procedure in an open, well-ventilated area away from heaters, sparks, flames and lighted tobacco. Always have an approved fire extinguisher within easy reach.

NOTICE Perform this procedure with the engine off.

1 Loosen the drain plug located at the bottom of the filter. Allow the water to drain into a suitable container until fuel starts to come out. Immediately tighten the drain plug.

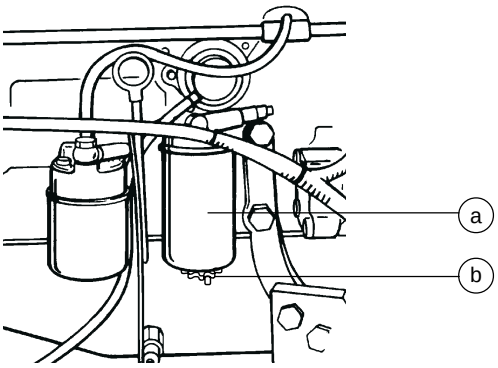

a fuel filter
b drain plug

https://truckmanualshub.com/

TABLE A PROCEDURES

2 Clean up any fuel that may have spilled.

NOTICE If the fuel filter is completely drained, you must prime the fuel filter/water separator before starting the engine. Refer to C-8 in this section, *Replace The Diesel Fuel Filter/Water Separator,* for instructions on how to prime the fuel filter/water separator.

3 Start the engine from the ground controls and check the fuel filter/water separator for leaks.

A-17
Replace the Engine Air Filter

NOTICE Engine specifications require that this procedure be performed every 100 hours. Perform this procedure more often if dusty conditions exist.

Maintaining the engine air filter in good condition is essential to good engine performance and service life. Failure to perform this procedure can lead to poor engine performance and component damage.

NOTICE Perform this procedure with the engine off.

1 Remove the retaining ring from the end cap of the air filter canister.

2 Remove the end cap from the air cleaner canister.

3 Remove the air filter retaining fastener, then remove the filter.

4 Clean the inside of the canister and the gasket with a damp cloth.

5 Insert the new filter and replace the mounting fastener.

6 Replace the end cap on the canister, then replace the retaining ring.

Air filters - Genie part numbers	
Ford LRG-423 Engine	27916
Deutz F4L 1011F Engine	27916

https://truckmanualshub.com/

Table B Procedures

B-1
Check the Engine Belt

Maintaining the engine belt(s) is essential to good engine performance and service life. The machine will not operate properly with a loose or defective belt and continued use may cause component damage.

⚠WARNING Do not inspect while the engine is running. Remove the key to secure from operation.

⚠CAUTION Beware of hot engine components. Contact with hot engine components may cause severe burns.

1 **Deutz Diesel models:** Remove the 2 bolts from under the engine pivot plate. Swing the engine pivot plate away from the machine to access the front engine access cover mounting fasteners.

2 Remove the front engine access cover mounting fasteners.

3 **All models:** Inspect the engine belt for:

· Cracking

· Glazing

· Separation

· Breaks

4 Replace belt if any damage is found.

5 Check the engine belt for proper tension.

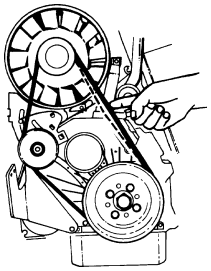

Deutz Diesel engine

NOTICE Ford LRG-423 engines are equipped with a serpentine belt and incorporate a self adjusting pulley tensioner. No adjustment is required.

Belt deflection - Deutz Diesel models	3/8 inch to 1/2 inch 9 mm to 12 mm

https://truckmanualshub.com/

TABLE B PROCEDURES

B-2
Check the Radiator - Gasoline/LPG Models

Maintaining the radiator in good condition is essential for good engine performance. Operating a machine with a damaged or leaking radiator may result in engine damage. Also, restricting air flow through the radiator (i.e., dirt or debris) will affect the performance of the cooling system. A frequent check allows the inspector to identify changes in the condition of the radiator that might indicate cooling system problems.

⚠WARNING Do not inspect while the engine is running. Remove the key to secure from operation.

⚠CAUTION Beware of hot engine parts and coolant. Contact with hot engine parts and/or coolant may cause severe burns.

1 Remove the 2 engine pivot plate retaining bolts from under the engine pivot plate. Swing the engine pivot plate away from the machine to access the radiator.

2 Inspect the radiator for leaks and physical damage.

3 Clean the radiator fins of debris and foreign materials.

B-3
Check the Oil Cooler and Cooling Fins - Deutz Diesel Models

Maintaining the oil cooler in good condition is essential for good engine performance. Operating a machine with a damaged oil cooler may result in engine damage. Also, restricting air flow through the oil cooler will affect the performance of the cooling system.

⚠WARNING Do not inspect while the engine is running. Remove the key to secure from operation.

⚠CAUTION Beware of hot engine components. Contact with hot engine components may cause severe burns.

Oil Cooler

1 Remove the fasteners from the engine side cover, then remove the cover.

2 Inspect the oil cooler for leaks and physical damage.

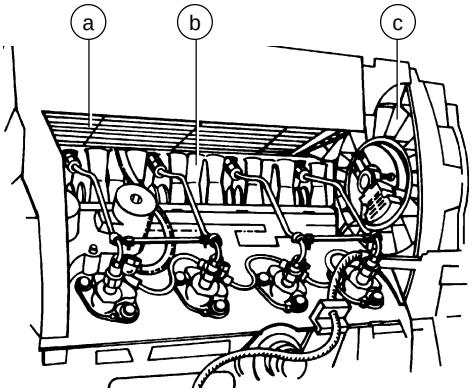

a oil cooler
b cylinder head cooling fins
c fan blower fins

3 Clean the oil cooler of debris and foreign material.

https://truckmanualshub.com/

TABLE B PROCEDURES

Cooling and Fan Blower Fins

4 Inspect the fan blower fins for physical damage.

5 Clean the fan blower fins of debris and foreign material.

6 Inspect the head cooling passages and fins for physical damage or foreign material, using a flashlight.

7 Clean the cylinder head cooling passages of debris and foreign material.

B-4
Check the Exhaust System

Maintaining the exhaust system is essential to good engine performance and service life. Running the engine with a damaged or leaking exhaust system can cause component damage and unsafe operating conditions.

WARNING Do not inspect while the engine is running. Remove the key to secure from operation.

CAUTION Beware of hot engine components. Contact with hot engine components may cause severe burns.

1 **Deutz Diesel models:** Remove the 2 bolts from under the engine pivot plate. Swing the engine pivot plate away from the machine to access the exhaust system.

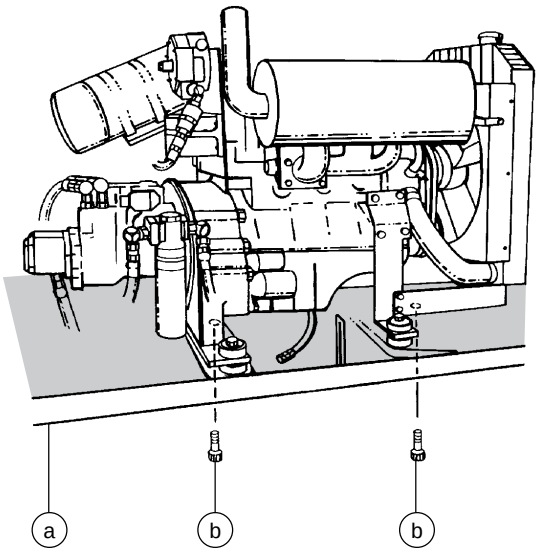

a engine pivot plate
b pivot plate retaining bolts

2 **All models:** Be sure that all nuts and bolts are tight.

3 Inspect all welds for cracks.

4 Inspect for exhaust leaks; i.e., carbon buildup around seams and joints.

https://truckmanualshub.com/

TABLE B PROCEDURES

B-5
Check the Battery

Proper battery condition is essential to good engine performance and operational safety. Improper fluid levels or damaged cables and connections can result in engine component damage and hazardous conditions.

⚠WARNING Electrocution hazard. Contact with hot or live circuits may result in death or serious injury. Remove all rings, watches and other jewelry.

⚠WARNING Batteries contain acid. Avoid spilling or contacting battery acid. Neutralize battery acid spills with baking soda and water.

1 Put on protective clothing and eye wear.

2 Be sure that the battery cable connections are free of corrosion.

3 Be sure that the battery hold downs and cable connections are tight.

4 Remove the battery vent caps and check the specific gravity with a hydrometer.

5 Check the battery acid level. If needed, replenish with distilled water to the bottom of the battery fill tube. Do not overfill.

6 Install the vent caps.

NOTICE Adding terminal protectors and a corrosion preventative sealant will help eliminate corrosion on the battery terminals and cables.

B-6
Check the Hydraulic Tank Filter Condition Indicator

Maintaining the hydraulic tank filter in good condition is essential to good system performance and safe machine operation. The filter condition indicator will show when the hydraulic flow is bypassing a clogged filter. If the filter is not frequently checked and replaced, impurities will remain in the hydraulic system and cause component damage.

1 Start the engine from the platform controls.

2 Move the engine speed control switch to high idle (rabbit symbol).

3 Inspect the filter condition indicator.

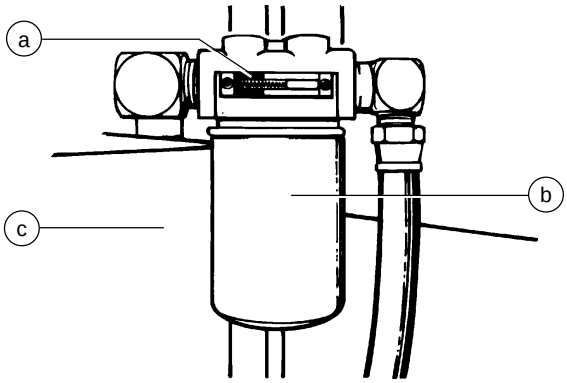

a filter condition indicator
b filter
c hydraulic tank

⊙ Result: The filter should be operating with the plunger in the green area. If the display shows the plunger in the red area, this indicates that the hydraulic filter is being bypassed and the filter should be replaced. See C-6, *Replace the Hydraulic Tank Filter.*

https://truckmanualshub.com/

B-7
Inspect the Electrical Wiring

Maintaining electrical wiring in good condition is essential to safe operation and good machine performance. Failure to find and replace burnt, chafed, corroded or pinched wires could result in unsafe operating conditions and may cause component damage.

WARNING Electrocution hazard. Contact with hot or live circuits may result in death or serious injury. Remove all rings, watches and other jewelry.

1 Inspect the following areas for burnt, chafed, corroded and loose wires:
- Engine compartment electrical panel (Gasoline/LPG models)
- Engine wiring harness
- Inside of the ground control box
- Turntable manifold wiring

2 Start the engine from the ground controls and raise the boom above the turntable covers.

3 Inspect the turntable area for burnt, chafed and pinched cables.

4 Lower the boom into the stowed position and turn the engine off.

5 Inspect the following areas for burnt, chafed, corroded, pinched and loose wires:
- Cable track on the boom
- Boom to platform cable harness
- Inside of the platform control box
- Jib boom cable cover (S-65 models)

B-8
Inspect the Tires and Wheels (including lug nut torque)

Maintaining the tires and wheels in good condition is essential to safe operation and good performance. Tire and/or wheel failure could result in a machine tip-over. Component damage may also result if problems are not discovered and repaired in a timely fashion.

WARNING An over-inflated tire can explode and may cause death or serious injury.

WARNING Tip-over hazard. Do not use temporary flat tire repair products.

1 Check all tire treads and sidewalls for cuts, cracks, punctures and unusual wear.

2 Check each wheel for damage, bends and cracked welds.

3 Check each lug nut for proper torque.

4 Check the pressure in each air-filled tire.

Tires and wheels	
Tire size	15-19.5 NHS
Tire ply rating	12
Tire pressure	85 psi 5.86 bar
Wheel lugs	10 @ 3/4 -16
Lug nut torque, dry	420 ft-lbs 569.5 Nm
Lug nut torque, lubricated	320 ft-lbs 433.9 Nm

https://truckmanualshub.com/

TABLE B PROCEDURES

B-9
Confirm the Proper Brake Configuration

Proper brake configuration is essential to safe operation and good machine performance. Hydrostatic brakes and hydraulically-released, spring-applied individual wheel brakes can appear to operate normally when they are actually not fully operational.

1 Check each torque hub disconnect cap to be sure it is in the engaged position.

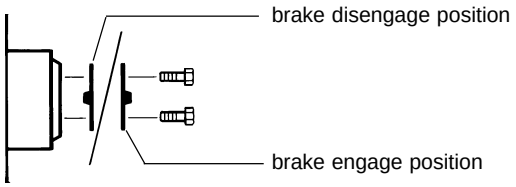

2 Be sure the free-wheel valve on the drive pump is closed (clockwise).

NOTICE The free-wheel valve is located on the bottom of the drive pump.

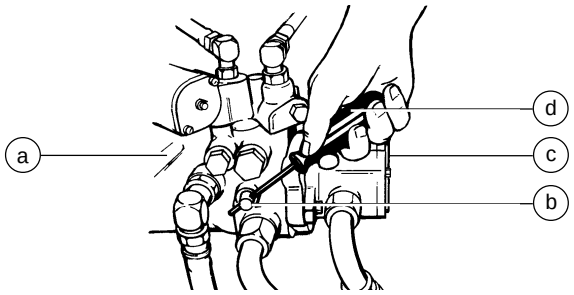

a drive pump
b free-wheel valve
c lift pump
d screwdriver

NOTICE The free-wheel valve should always remain closed.

B-10
Check the Oil Level in the Torque Hubs

Failure to maintain proper torque hub oil levels may cause the machine to perform poorly and continued use may cause component damage.

Drive Torque Hubs

1 Drive the machine to rotate the hub until the plugs are located one on top and the other at 90 degrees.

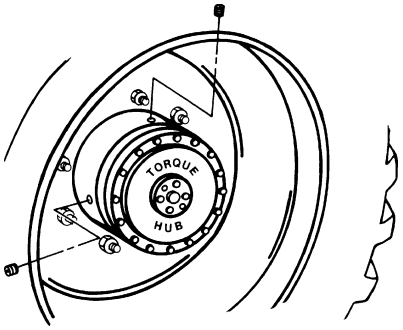

2 Remove the plug located at 90 degrees and check the oil level.

⊙ Result: The oil level should be even with the bottom of the plug hole.

3 If necessary, remove the top plug and add oil until the oil level is even with the bottom of the side plug hole.

4 Apply pipe thread sealant to the plug, and then install it in the torque hub.

5 Repeat this procedure for each drive torque hub.

Drive torque hub oil	
Capacity	44 fl oz 1.30 liters
Type: SAE 90 multipurpose hypoid gear oil - API service classification GL5	

https://truckmanualshub.com/

Turntable Rotate Torque Hub

1 Remove the plug located on the side of the hub and check the oil level.

⊙ Result: The oil level should be even with the bottom of the plug hole.

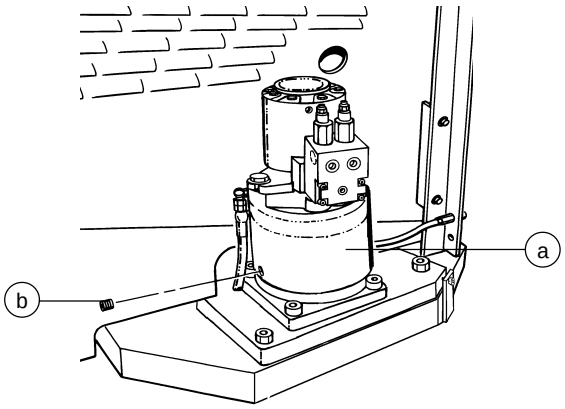

a torque hub
b plug

2 If necessary, add oil until the oil level is even with the bottom of the side plug hole.

3 Apply pipe thread sealant to the plug, and then install it in the torque hub.

Turntable rotate torque hub oil	
Capacity	17 fluid ounces 0.51 liters
Type SAE 90 multipurpose hypoid gear oil - API service classification GL5	

B-11
Check and Adjust the Engine Idle Mixture - Gasoline/LPG Models

Complete information to perform this procedure is available in the *Ford LRG-423 2.3 Liter Industrial Engine Service Manual* (Ford number: PPD-194-287). Genie part number 33907.

B-12
Check and Adjust the Engine RPM

Maintaining the engine rpm at the proper setting for both low and high idle is essential to good engine performance and service life. The machine will not operate properly if the rpm is incorrect and continued use may cause component damage.

Gasoline/LPG Models:

NOTICE Perform this procedure in gasoline mode with the engine at normal operating temperature.

1 Disconnect the blue/black wire from the governor actuator.

2 Connect an rpm gauge to the engine, then start the engine from the ground controls.

⊙ Result: Carburetor low idle should be 900 rpm.

Skip to step 4 if the low idle rpm is correct.

3 Turn the idle adjustment screw on the carburetor clockwise to increase rpm or counterclockwise to decrease rpm.

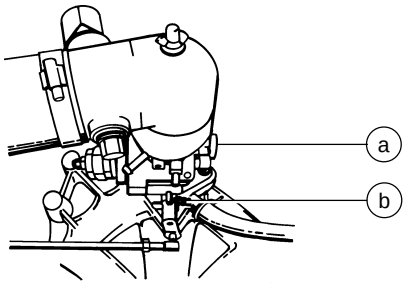

a carburetor
b adjustment screw

4 Turn the engine off and reconnect the blue/black wire to the governor actuator.

5 Start the engine from the ground controls.

⊙ Result: Electronic governor low idle should be 1600 rpm.

https://truckmanualshub.com/

TABLE B PROCEDURES

6 Move the function enable toggle switch to the high idle (rabbit symbol) at the ground controls.

⊙ Result: High idle should be 2500 rpm.

7 Turn the engine off.

If low and high idle rpm's are correct, disregard adjustment steps 8 and 9.

8 Remove the mounting fasteners from the electronic governor located on the engine side bulkhead, then remove the back panel from the governor.

9 Restart the engine, turn the low or high speed trimpot screw clockwise to increase the rpm or counterclockwise to decrease the rpm.

NOTICE Do not adjust any trimpot other than specified in this procedure.

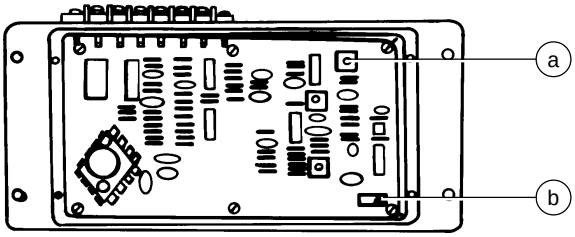

a low idle adjustment
b high idle adjustment

10 Apply a drop of silicone to the top of the trimpot screw. Apply a bead of silicone to the surface of the back panel prior to re-assembly.

11 Re-assemble the governor and recheck low and high idle.

Gasoline/LPG models	
Low idle - carburetor	900 rpm
Low idle - electronic governor	1600 rpm
High idle	2500 rpm

Deutz Diesel models:

1 Connect an rpm gauge to the engine, and then start the engine from the ground controls.

⊙ Result: Low idle should be 1300 rpm.

Skip to step 3 if the low idle rpm is correct.

2 Loosen the low idle lock nut, then turn the low idle adjustment screw clockwise to increase the rpm or counterclockwise to decrease the rpm. Tighten the low idle lock nut and recheck the rpm.

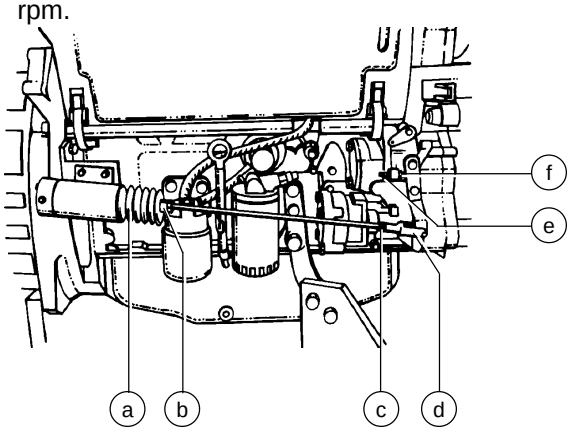

a solenoid boot
b high idle adjustment nut
c yoke lock nut
d yoke
e low idle adjustment screw
f low idle lock nut

3 Move the function enable toggle switch to the high idle (rabbit symbol) position at the ground controls.

⊙ Result: High idle should be 2300 rpm.

If high idle rpm is correct, disregard adjustment step 4.

https://truckmanualshub.com/

4 Loosen the yoke lock nut, then turn the high idle adjustment nut and solenoid boot counterclockwise to increase the rpm or clockwise to decrease the rpm. Tighten the yoke lock nut and recheck the rpm.

NOTICE Be sure the solenoid fully retracts when activating high idle.

Deutz Diesel models	
Low idle	1300 rpm
High idle	2300 rpm

B-13 Test the Key Switch

Proper key switch action and response is essential to safe machine operation. The machine can be operated from the ground or platform controls and the activation of one or the other is accomplished with the key switch. Failure of the key switch to activate the appropriate control panel could cause a hazardous operating situation.

1 Pull out the Emergency Stop button to the ON position at both the ground and platform controls.

2 Turn the key switch to ground control, start the engine and then turn the key switch to **platform control**.

3 Check any machine function from the **ground controls**.

⊙ Result: The machine functions should **not** operate.

4 Turn the key switch to ground control.

5 Check any machine function from the **platform controls**.

⊙ Result: The machine functions should **not** operate.

6 Turn the key switch to the OFF position.

⊙ Result: The engine should stop and no functions should operate.

NOTICE Deutz Diesel models: All functions should stop immediately. The engine will shut off after 2 to 3 seconds.

B-14 Test the Emergency Stop Buttons

Properly functioning Emergency Stop buttons are essential for safe machine operation. An improperly operating Emergency Stop button will fail to shut off power and stop all machine functions, resulting in a hazardous situation for ground and platform personnel.

NOTICE As a safety feature, selecting and operating the ground controls will override the platform controls, including the Emergency Stop button.

1 Start the engine from the ground controls.

2 Push down the Emergency Stop button to the OFF position.

⊙ Result: The engine should shut off and no machine functions should operate.

NOTICE **Deutz Diesel models:** All functions should stop immediately. The engine will shut off after 2 to 3 seconds.

3 Start the engine from the platform controls.

4 Push down the Emergency Stop button to the OFF position.

⊙ Result: The engine should shut off and no machine functions should operate.

NOTICE The ground Emergency Stop button will stop all machine operation, even if the key switch is switched to platform control.

https://truckmanualshub.com/

TABLE B PROCEDURES

B-15
Test the Ground Control Override

A properly functioning ground control override is essential to safe machine operation. The ground control override function is intended to allow ground personnel to operate the machine from the ground controls whether or not the Emergency Stop button on the platform controls is in the ON or OFF position. This function is particularly useful if the operator at the platform controls cannot return the boom to the stowed position.

1 Push in the platform Emergency Stop button to the OFF position.

2 Start the engine from the ground controls.

3 Operate each boom function through a partial cycle.

⊙ Result: All boom functions should operate.

B-16
Check the Directional Valve Linkage

NOTICE Perform this test only on models equipped with a oscillating axle.

Proper axle oscillation is essential to safe machine operation. If the directional valve linkage is not operating correctly, the stability of the machine is compromised and it may tip over.

1 Remove the drive chassis cover from the non-steer end.

2 Inspect the linkage for the following:

- Lock nut is tight against yoke
- Yoke clevis pins are installed
- Cotter pins are installed through clevis pins
- Linkage is properly attached to directional valve

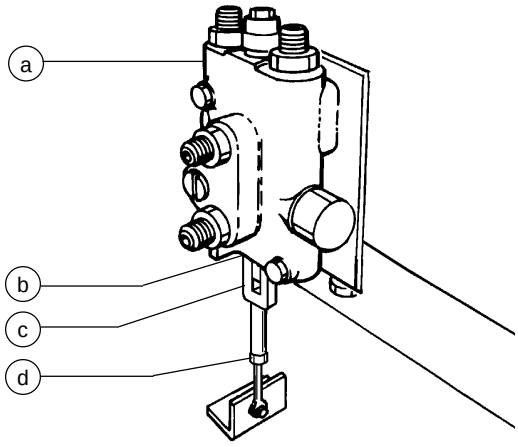

a directional valve
b clevis pin with cotter pin (hidden)
c yoke
d lock nut

https://truckmanualshub.com/

B-17
Test the Platform Self-leveling

Automatic platform self-leveling throughout the full cycle of boom raising and lowering is essential for safe machine operation. The platform is maintained at level by the platform leveling slave cylinder which operates in a closed loop hydraulic circuit with the master cylinder located at the base of the boom. A platform self-leveling failure creates an unsafe working condition for platform and ground personnel.

1 Start the engine from the ground controls and lower the boom into the stowed position.

2 Hold the function enable toggle switch to either side and adjust the platform to a level position using the platform level toggle switch.

3 Raise and lower the boom through a full cycle.

⊙ Result: The platform should remain level at all times to within ±5 degrees.

B-18
Test the Horn

A functional horn is essential to safe machine operation. The horn is activated at the platform controls and sounds at the ground as a warning to ground personnel. An improperly functioning horn will prevent the operator from alerting ground personnel of hazards or unsafe conditions.

1 Turn the key switch to platform control and pull out the Emergency Stop button to the ON position at both the ground and platform controls.

2 Push down the horn button at the platform controls.

⊙ Result: The horn should sound.

NOTICE If necessary, the horn can be adjusted to obtain the loudest volume by turning the adjustment screw near the wire terminals on the horn.

B-19
Test the Foot Switch

A properly functioning foot switch is essential to safe machine operation. Machine functions should activate and operate smoothly as long as the foot switch is pressed down, and promptly stop when the foot switch is released. The foot switch will also shift the engine into high idle if the idle select is switched to the rabbit and foot switch symbol. An improperly functioning foot switch can cause an unsafe working condition and endanger platform and ground personnel.

NOTICE The engine should not start if the foot switch is pressed down.

1 Turn the keyswitch to platform controls and pull out the Emergency Stop button to the ON position at both the ground and platform controls.

2 Press down the footswitch and attempt to start the engine by moving the start toggle switch to either side.

⊙ Result: The engine should **not** start.

3 Do not press down the footswitch and start the engine.

4 Do not press down the footswitch. Check the machine functions.

⊙ Result: The machine functions should **not** operate.

5 Press down the foot switch and operate the machine functions.

⊙ Result: The machine functions should operate.

https://truckmanualshub.com/

TABLE B PROCEDURES

B-20
Test the Engine Idle Select

A properly operating engine idle select switch is essential to good engine performance and safe machine operation. There are three settings.

Low idle (turtle symbol) allows the operator to control individual boom functions only. Drive functions do not operate at low idle.

High idle (rabbit symbol) allows the operator to control multiple boom and/or drive functions simultaneously. This setting maintains a consistent high idle and is usually selected only when the generator option is being used.

Foot switch activated high idle (rabbit and foot switch symbols) should be used for normal machine operation. This selection activates high idle only when the foot switch is pressed down.

1 Pull out the Emergency Stop button to the ON position at both the ground and platform controls.

2 Start the engine from the ground controls. Then move the function enable toggle switch to the high idle (rabbit symbol) position and hold in the ON position.

⊙ Result: The engine should change to high idle.

3 Release the function enable toggle switch.

⊙ Result: The engine should return to low idle.

4 Turn the key switch to platform controls.

5 At the platform controls, move the engine idle control switch to high idle (rabbit symbol).

⊙ Result: The engine should change to high idle.

6 Move the engine idle control switch to low idle (turtle symbol).

⊙ Result: The engine should change to low idle.

7 Move the engine idle control switch to foot switch activated high idle (rabbit and foot switch symbol).

⊙ Result: The engine should **not** change to high idle.

8 Press down the foot switch.

⊙ Result: The engine should change to high idle.

B-21
Test the Fuel Select Operation - Gasoline/LPG Models

The ability to select and switch between gasoline and LPG fuels as needed is essential to safe machine operation. A fuel selection can be made when the engine is running or not. Switching malfunctions and/or the failure of the engine to start and run properly in both fuel modes and through all idle speeds can indicate fuel system problems that could develop into a hazardous situation.

NOTICE Perform this test after checking the gasoline and LPG fuel levels, and warming the engine to normal operating temperature.

1 Move the fuel select switch to gasoline and then move the engine idle control switch to foot switch activated high idle (rabbit and foot switch symbol).

2 Start the engine from the platform controls and allow it to run at low idle.

3 Press down the foot switch to allow the engine to run at high idle.

⊙ Result: The engine should start promptly and operate smoothly in low and high idle.

4 Release the foot switch and shut the engine off by pushing the Emergency Stop button in to the OFF position.

5 Move the fuel select switch to LPG.

https://truckmanualshub.com/

6 Restart the engine and allow it to run at low idle.

7 Press down the foot switch to allow the engine to run at high idle.

⊙ Result: The engine should start promptly and operate smoothly in low and high idle.

NOTICE The engine may hesitate momentarily and then continue to run on the selected fuel if the fuel source is switched while the engine is running.

B-22
Test the Drive Enable System

Proper drive enable system operation is essential to safe machine operation. When the boom is past the non-steering wheels, drive movement is stopped and the indicator light turns on. The drive enable switch must be to either side to reactivate the drive function and should inform the operator that the machine will move in the opposite direction that the drive and steer controls are moved. An improperly functioning drive enable system may allow the machine to be moved into an unsafe position.

1 Start the engine from the platform controls.

2 Rotate the turntable to the right until the boom is past the right non-steering wheel.

⊙ Result: The drive enable indicator light should turn on.

3 Slowly move the drive control handle off center.

⊙ Result: The drive function should **not** operate.

4 Hold the drive enable toggle switch to either side and slowly move the drive control handle off center.

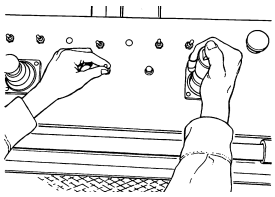

⚠CAUTION Always use the color-coded direction arrows on the platform control panel and the drive chassis to identify which direction the machine will travel.

⊙ Result: The drive function should operate.

5 Rotate the turntable to the left until the boom is past the left non-steering wheel.

⊙ Result: The drive enable indicator light should come on.

6 Repeat steps 3 and 4.

B-23
Test the Drive Brakes

Proper brake action is essential to safe machine operation. The drive brake function should operate smoothly, free of hesitation, jerking and unusual noise. Hydrostatic brakes and hydraulically-released individual wheel brakes can appear to operate normally when they are actually not fully operational.

⚠WARNING Be sure that the machine is not in free-wheel or partial free-wheel configuration. Refer to B-9 in this section, *Confirm the Proper Brake Configuration*.

NOTICE Select a test area that is firm, level and free of obstructions.

1 Mark a test line on the ground for reference.

2 Start the engine from the platform controls.

https://truckmanualshub.com/

TABLE B PROCEDURES

3 Move the engine idle control switch to foot switch activated high idle (rabbit and foot switch), then lower the boom into the stowed position.

4 Choose a point on the machine; i.e., contact patch of a tire, as a visual reference for use when crossing the test line.

5 Bring the machine to top drive speed before reaching the test line. Release the drive joystick when your reference point on the machine crosses the test line.

6 Measure the distance between the test line and your machine reference point.

Braking: paved surface	**2WD**	**4WD**
Stopping distance	3 to 5 ft 0.9 to 1.5 m	3 to 5 ft 0.9 to 1.5 m

NOTICE The brakes must be able to hold the machine on any slope it is able to climb.

B-24
Test the Drive Speed - Stowed Position

Proper drive function movement is essential to safe machine operation. The drive function should respond quickly and smoothly to operator control. Drive performance should also be free of hesitation, jerking and unusual noise over the entire proportionally controlled speed range.

NOTICE Select a test area that is firm, level and free of obstructions.

1 Create start and finish lines by marking two lines on the ground 40 feet (12.2 m) apart.

2 Start the engine from the platform controls.

3 Move the engine idle control switch to foot switch activated high idle (rabbit and foot switch), then lower the boom into the stowed position.

4 Choose a point on the machine; i.e., contact patch of a tire, as a visual reference for use when crossing the start and finish lines.

5 Bring the machine to top drive speed before reaching the start line. Begin timing when your reference point on the machine crosses the start line.

6 Continue at full speed and note the time when the machine reference point crosses the finish line.

Drive speed: stowed position	**2WD**	**4WD**
Gasoline/LPG models	40 ft/6.2 sec 12.2 m/6.2 sec	40 ft/9.1 sec 12.2 m/9.1 sec
Deutz Diesel models	40 ft/6.8 sec 12.2 m/6.8 sec	40 ft/9.1 sec 12.2 m/9.1 sec

https://truckmanualshub.com/

B-25
Test the Alarm Package - Optional Equipment

The alarm package includes:

- Travel alarm
- Descent alarm
- Flashing beacon

Alarms and a beacon are installed to alert operators and ground personnel of machine proximity and motion. The alarm package is installed on the turntable covers.

NOTICE The alarms and beacon will operate with the engine running or not running.

1 Turn the key switch to ground control and pull out the Emergency Stop button to the ON position at both the ground and platform controls.

⊙ Result: The flashing beacon should be on and flashing.

2 Move the function enable toggle switch to either side and activate the boom toggle switch in the DOWN position, hold for a moment and then release it.

⊙ Result: The descent alarm should sound when the switch is held down.

3 Turn the key switch to platform control.

⊙ Result: The flashing beacon should be on and flashing.

4 Press down the foot switch. Move the boom control handle to the DOWN position, hold for a moment and then release it.

⊙ Result: The descent alarm should sound when the control handle is held down.

5 Press down the foot switch. Move the drive control handle off center, hold for a moment and then release it. Move the drive control handle off center in the opposite direction, hold for a moment and then release it.

⊙ Result: The travel alarm should sound when the drive control handle is moved off center in either direction.

B-26
Perform Hydraulic Oil Analysis

See D-1, *Test or Replace the Hydraulic Oil.*

B-27
Replace the Engine Oil and Filter - Deutz Diesel Models

NOTICE Engine specifications require that this procedure be performed every 500 hours. Perform this procedure more often if dusty conditions exist.

Periodic replacement of the engine oil and filter is essential to good engine performance. Operating the machine with an improper oil level or neglecting periodic oil and filter changes can damage engine components. A frequent check of elapsed machine hours against the hours noted on the oil filter will allow the inspector to anticipate and perform oil and filter changes at the 500 hour interval.

NOTICE Perform this procedure after warming the engine to normal operating temperature.

⚠CAUTION Beware of hot engine parts and oil. Contact with hot engine oil and/or engine parts may cause severe burns.

1 Remove the oil filler cap located above the dipstick.

https://truckmanualshub.com/

TABLE B PROCEDURES

2 Pull the end of the drain hose out from under the engine.

3 Remove the plug from the end of the drain hose and allow all of the oil from the engine to drain into a suitable container. See capacity specifications below.

4 Install the plug into the drain hose.

5 Use an oil wrench and remove the oil filter.

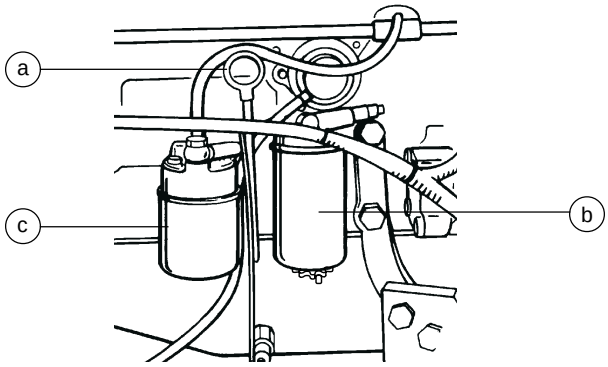

a engine oil level dipstick
b fuel filter
c oil filter

6 Apply a thin layer of oil to the new filter gasket (Genie part no. 49924). Then install the filter and tighten it securely by hand.

7 Use a permanent ink marker to write the date and number of hours from the hour meter on the oil filter.

8 Fill the engine with new oil per specifications and install the oil filler cap.

9 Start the engine from the ground controls. Allow the engine to run for 30 seconds then turn the engine off.

10 Check the oil filter and oil drain hose for leaks.

11 Check the engine oil level dipstick. Add oil if needed.

Deutz Engine F4L 1011F	11 quarts
Oil capacity (including filter)	10.5 liters

Deutz Engine F4L 1011F Oil viscosity requirements	
Temperature below 60°F / 15.5°C (synthetic)	5W-30
-10°F to 90°F / -23°C to 32°C	10W-40
Temperature above -4°F / -34°C	15W-40
Engine oil should have properties of API classification CC/SE, CD/SE, CC/SF or CD/SF grades.	

2 Clean up any fuel that may have spilled.

https://truckmanualshub.com/

Table C Procedures

C-1 Check the Boom Wear Pads

Maintaining the boom wear pads in good condition is essential to safe machine operation. Wear pads are placed on boom tube surfaces to provide a low friction, replaceable wear pad between moving parts. Improperly shimmed wear pads or continued use of worn out wear pads may result in component damage and unsafe operating conditions.

NOTICE If the wear pads are not worn below specification but are still within specification, see Repair Procedure 4-2, *How to Shim the Boom.*

1 Start the engine from the ground controls.

2 Raise the end of the boom to a comfortable working height (chest high), then extend the boom 1 foot (30 cm).

3 Measure each wear pad. Replace the wear pad if it is less than specification. If the wear pad is not less than specification, shim as necessary to obtain zero clearance and zero drag.

4 Extend and retract the boom through the entire range of motion to check for tight spots that may cause binding or scraping of the boom.

NOTICE Always maintain squareness between the boom outer and inner tubes.

Wear pad specifications

Upper wear pads	9/16 inch	14.3 mm
Bottom and side wear pads	11/16 inch	17.5 mm

C-2 Check the Turntable Rotation Bearing Bolts

Maintaining proper torque on the turntable bearing bolts is essential to safe machine operation. Improper bolt torque could result in an unsafe operating condition and component damage.

1 Raise the boom and place a safety chock on the lift cylinder rod. Carefully lower the boom onto the lift cylinder safety chock.

⚠WARNING Crushing hazard. Keep hands away from cylinder and all moving parts when lowering the boom.

NOTICE The lift cylinder safety chock is available through Genie (part no. 33484).

2 Be sure that each turntable mounting bolt is torqued in sequence to 210 foot-pounds (285 Newton meters).

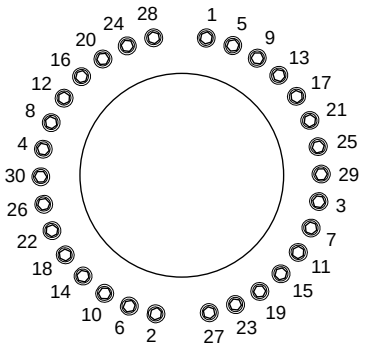

Bolt torque sequence

https://truckmanualshub.com/

TABLE C PROCEDURES

3 Lower the boom to the stowed position.

4 Check to ensure that each bearing mounting bolt under the drive chassis is torqued in sequence to 210 foot-pounds (285 Newton meters).

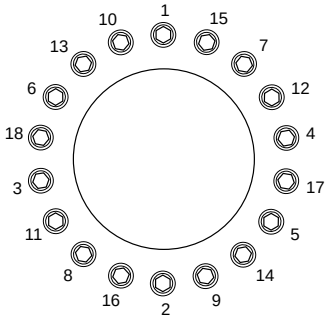

Bolt torque sequence

C-3 Check the Free-wheel Configuration

Proper use of the free-wheel configuration is essential to safe machine operation. The free-wheel configuration is used primarily for towing. A machine configured to free-wheel without operator knowledge may cause death or serious injury and property damage.

⚠WARNING Collision hazard. Select a work site that is firm and level.

Non-steering wheels: All models

1 Chock the steer wheels to prevent the machine from rolling.

2 Center a lifting jack of ample capacity (20,000 lbs/9072 kg) under the drive chassis between the non-steer tires.

3 Lift the wheels off the ground and then place jack stands under the drive chassis for support.

4 Disengage the torque hubs by turning over the torque hub disconnect caps on each non-steering wheel hub.

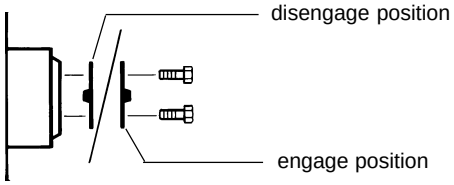

5 Manually rotate each non-steering wheel.

⊙ Result: Each non-steering wheel should rotate with minimum effort.

6 Re-engage the torque hubs by turning over the hub disconnect caps. Rotate each wheel to check for engagement. Lift the machine and remove the jack stands.

⚠WARNING Collision hazard. Failure to re-engage the torque hubs may cause death or serious injury and property damage.

Steer wheels: 4WD models

7 Chock the non-steering wheels to prevent the machine from rolling.

8 Center a lifting jack of ample capacity (20,000 lbs/9072 kg) under the drive chassis between the non-steer tires.

9 Lift the wheels off the ground and then place jack stands under the drive chassis for support.

10 Disengage the torque hubs by turning over the torque hub disconnect caps on each steer wheel hub.

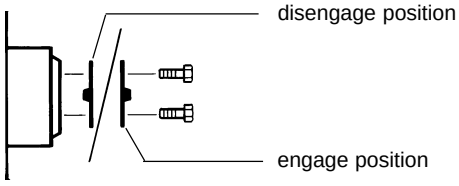

11 Manually rotate each steer wheel.

⊙ Result: Each steer wheel should rotate with minimum effort.

https://truckmanualshub.com/

12 Re-engage the torque hubs by turning over the hub disconnect caps. Rotate each wheel to check for engagement. Lift the machine and remove the jack stands.

WARNING Collision hazard. Failure to re-engage the torque hubs may cause death or serious injury and property damage.

All models:

13 Be sure the free-wheel valve on the drive pump is closed (clockwise).

NOTICE The free-wheel valve is located on the bottom of the drive pump.

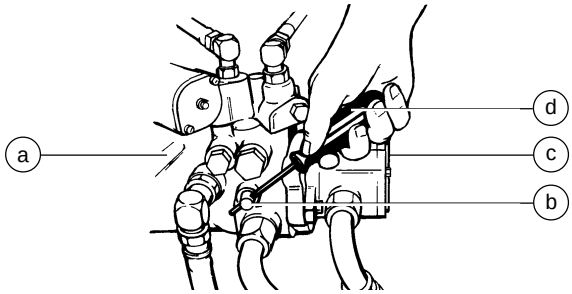

a drive pump
b free-wheel valve
c lift pump
d screwdriver

NOTICE The free-wheel valve should always remain closed.

C-4
Grease the Turntable Rotation Bearing and Rotate Gear

Yearly application of lubrication to the turntable bearing and rotate gear is essential to good machine performance and service life. Continued use of an improperly greased bearing and gear will result in component damage.

1 Locate the grease fitting on the platform end of the tank side bulkhead.

2 Pump grease into the turntable rotation bearing. Rotate the turntable in increments of 4 to 5 inches (10 to 13 cm) at a time and repeat this step until the entire bearing has been greased.

3 Apply grease to each tooth of the drive gear, located under the turntable.

Grease type	Multipurpose grease

C-5
Replace the Torque Hub Oil

Replacing the torque hub oil is essential for good machine performance and service life. Failure to replace the torque hub oil at yearly intervals may cause the machine to perform poorly and continued use may cause component damage.

Drive Torque Hubs:

1 Select the torque hub to be serviced. Then drive the machine until one of the two plugs is at the lowest point.

2 Remove both plugs and drain the oil.

https://truckmanualshub.com/

TABLE C PROCEDURES

3 Drive the machine until one plug is at the top and the other is at 90 degrees.

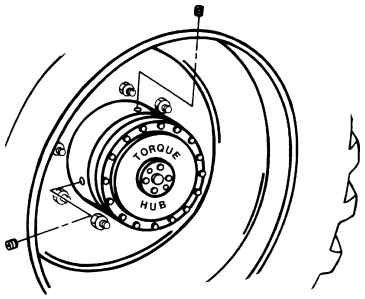

4 Fill the hub with oil from the top hole until the oil level is even with the bottom of the side hole. Apply pipe thread sealant to the plugs, and then install the plugs.

5 Repeat steps 1 through 4 for all the other drive torque hubs.

Oil capacity per hub	44 fl oz 1.30 liters

Type: SAE 90 multipurpose hypoid gear oil - API service classification GL5

Turntable Rotate Torque Hub:

1 Secure the turntable from rotating with the turntable rotation lock pin.

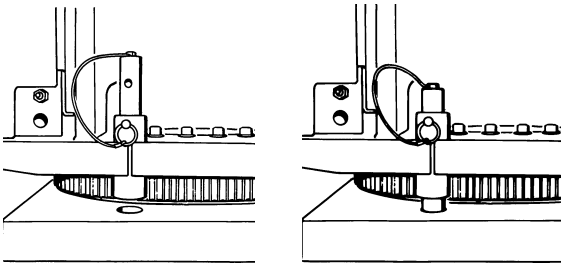

unlocked locked

2 Remove the motor/brake mounting bolts, and then remove the motor and brake from the torque hub and set them to the side.

CAUTION Component damage hazard. Hoses can be damaged if they are kinked or pinched.

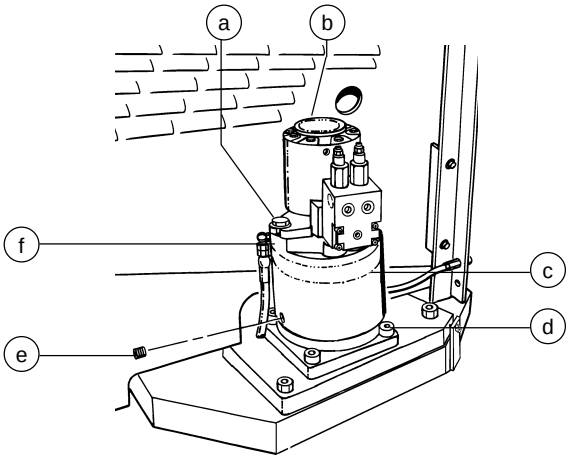

a motor/brake mounting bolt
b motor
c torque hub
d torque hub mounting bolt
e plug
f brake

3 Remove the torque hub mounting bolts, and then use a lifting device to remove the torque hub from the machine.

https://truckmanualshub.com/

4 Remove the plug from the side of the torque hub. Then drain the oil from the hub.

5 Install the torque hub. Torque the hub mounting bolts to 180 foot-pounds (244 Newton meters).

6 Install the brake and motor onto the torque hub.

7 Fill the hub with oil from the side hole until the oil level is even with the bottom of the hole. Apply pipe thread sealant to the plugs, and then install the plugs.

8 Adjust turntable rotation gear backlash. See Repair Procedure 12-1, *How to Adjust the Turntable Rotation Gear Backlash.*

Turntable rotate torque hub	
Oil capacity	17 fluid ounces 0.51 liters
Type: SAE 90 multipurpose hypoid gear oil - API service classification GL5	

C-6
Replace the Hydraulic Tank Filter

Replacement of the hydraulic tank filter is essential for good machine performance and service life. A dirty or clogged filter may cause the machine to perform poorly and continued use may cause component damage. Extremely dirty conditions may require that the filter be replaced more often.

⚠CAUTION Beware of hot oil. Contact with hot oil may cause severe burns.

NOTICE Perform this procedure with the engine off.

1 Remove the filter with an oil filter wrench.

2 Apply a thin layer of oil to the new oil filter gasket.

3 Install the new filter (Genie part no. 46014) and tighten it securely by hand. Clean up any oil that may have spilled during the installation procedure.

4 Use a permanent ink marker to write the date and number of hours from the hour meter on the oil filter.

5 Start the engine from the ground controls.

6 Inspect the filter and related components to be sure that there are no leaks.

C-7
Replace the Drive Loop Hydraulic Filter

Replacing the drive loop hydraulic filter is essential to good machine performance and service life. A dirty or clogged filter may cause the machine to perform poorly and continued use may cause component damage. Extremely dirty conditions may require that the filter be replaced more often.

⚠CAUTION Beware of hot oil. Contact with hot oil may cause severe burns.

NOTICE Perform this procedure with the engine off.

1 Open the engine side turntable cover and locate the drive loop hydraulic filter mounted on the engine near the main pump.

2 Remove the filter housing by using a wrench on the nut provided on the bottom of the housing.

3 Remove the filter element from the housing.

4 Inspect the housing seal and replace it if necessary.

5 Install the new filter (Genie part no. 20880) and hand tighten the housing onto the filter head. Clean up any oil that may have spilled during the installation procedure.

6 Start the engine from the ground controls.

7 Inspect the filter assembly to be sure that there are no leaks.

8 Clean up any oil that may have spilled.

https://truckmanualshub.com/

TABLE C PROCEDURES

C-8
Replace the Diesel Fuel Filter/Water Separator - Deutz Diesel Models

Replacing the diesel fuel filter is essential to good engine performance and service life. A dirty or clogged filter may cause the engine to perform poorly and continued use may cause component damage. Extremely dirty conditions may require that the filter be replaced more often.

DANGER Engine fuels are combustible. Replace the fuel filter in an open, well-ventilated area away from heaters, sparks, flames and lighted tobacco. Always have an approved fire extinguisher within easy reach.

NOTICE Perform this procedure with the engine off.

1 Turn the manual fuel shutoff valve, located at the fuel tank, to the CLOSED position.

2 Remove the fuel filter with a filter wrench.

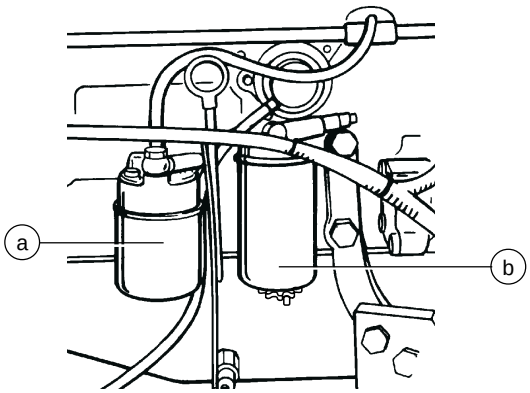

a oil filter
b fuel filter/water separator

3 Fill the new filter (Genie part no. 29560) with fresh diesel fuel and apply a thin layer of oil or diesel fuel to the new fuel filter gasket.

4 Install the new filter and tighten it securely by hand. Clean up any diesel fuel that might have spilled during the procedure.

5 Turn the manual fuel shutoff valve, located at the fuel tank, to the OPEN position.

6 Start the engine from the ground controls, then inspect the fuel filter for leaks.

DANGER If a fuel leak is discovered, keep any additional personnel from entering the area and do not operate the machine. Repair the leak immediately.

C-9
Replace the Gasoline Fuel Filter - Gasoline/LPG Models

Replacing the gasoline fuel filter is essential to good engine performance and service life. A dirty or clogged filter may cause the engine to perform poorly and continued use may cause component damage. Extremely dirty conditions may require that the filter be replaced more often.

DANGER Engine fuels are combustible. Replace the fuel filter in an open, well-ventilated area away from heaters, sparks, flames and lighted tobacco. Always have an approved fire extinguisher within easy reach.

NOTICE Perform this procedure with the engine off.

https://truckmanualshub.com/

TABLE C PROCEDURES

1 Remove the 2 bolts from under the engine pivot plate. Swing the engine pivot plate away from the machine to access the fuel filter, located near the carburetor.

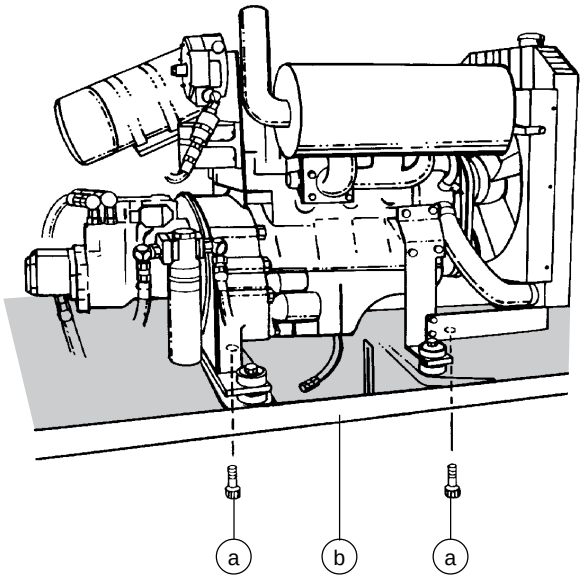

a pivot plate retaining bolts
b engine pivot plate

2 Disconnect the fuel hose from the filter, then remove the filter from the fitting.

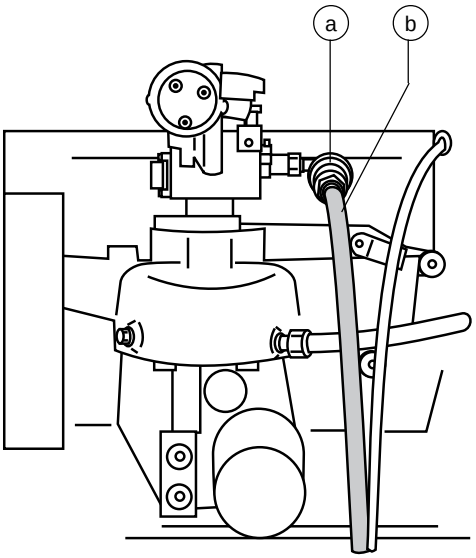

a fuel filter
b hose from the fuel pump to the fuel filter

3 Install the new fuel filter (Genie part no. 33971) into the fitting on the carburetor.

4 Connect the fuel hose to the filter.

5 Clean up any fuel that may have spilled during the installation procedure.

6 Start the machine from the ground controls, then inspect the fuel filter and hose for leaks.

DANGER If a fuel leak is discovered, keep any additional personnel from entering the area and do not operate the machine. Repair the leak immediately.

7 Swing the engine pivot plate back to its original position and replace the two retaining bolts.

https://truckmanualshub.com/

TABLE C PROCEDURES

C-10
Replace the PCV Valve - Gasoline/LPG Models

Yearly replacement of the PCV valve is essential to good engine performance. A malfunctioning PCV valve can impair crankcase ventilation and may cause engine damage.

NOTICE Perform this procedure with the engine off.

1 Remove the 2 engine pivot plate retaining bolts from under the engine pivot plate. Swing the engine pivot plate away from the machine to access the PCV valve.

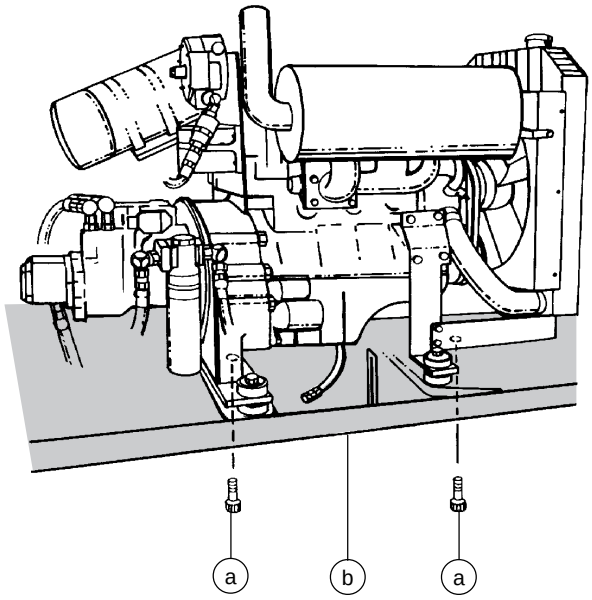

a pivot plate retaining bolts
b engine pivot plate

2 Remove the hose from the PCV valve, then remove the valve.

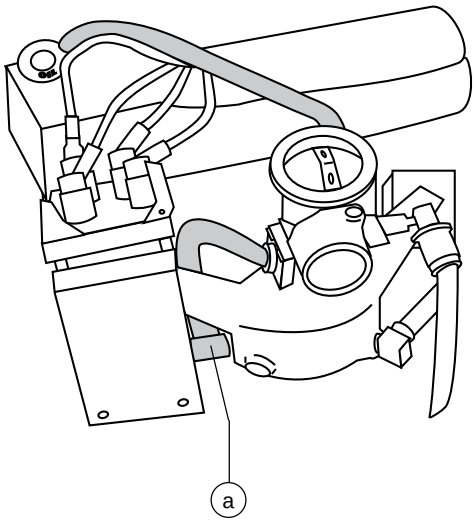

a PCV valve

3 Install the new PCV valve. Connect the hoses.

4 Swing the engine pivot plate back to its original position and replace the two retaining bolts.

https://truckmanualshub.com/

C-11
Replace the Spark Plugs - Gasoline/LPG Models

Periodic replacement of the spark plugs is essential to good engine performance and service life. Worn, loose or corroded spark plugs will cause the engine to perform poorly and may result in component damage.

NOTICE Perform this procedure with the engine off.

1 Label, then disconnect the plug wires from the spark plugs by grasping the molded boot. Do not pull on the plug wire.

2 Blow out any debris around spark plugs.

3 Remove all the spark plugs from the engine.

4 Adjust the gap on each new spark plug.

5 Install the new spark plugs, then connect the wires. Be sure that each spark plug wire is attached to the correct spark plug.

Spark plug specifications	
Spark plug type	Motorcraft AWSF-52C
Spark plug gap	0.042 to 0.046 inches 1.07 to 1.18 mm
Spark plug torque	5 to 10 foot-pounds 7 to 14 Nm

C-12
Check and Adjust the Air/LPG Mixture - Gasoline/LPG Models

Maintaining the proper air-to-fuel mixture during LPG operation is essential to good engine performance.

DANGER Engine fuels are combustible. Perform this procedure in an open, well-ventilated area away from heaters, sparks, flames and lighted tobacco. Always have an approved fire extinguisher within easy reach.

NOTICE The engine rpm needs to be preset for gasoline fuel operation before adjusting the LPG idle mixture. Refer to B-12, *Check and Adjust the Engine RPM.*

NOTICE The engine should be warmed to normal operating temperature before performing this procedure.

1 Move the fuel select switch to LPG fuel and start the engine from the ground controls.

2 Loosen the high idle mixture adjustment lock nut.

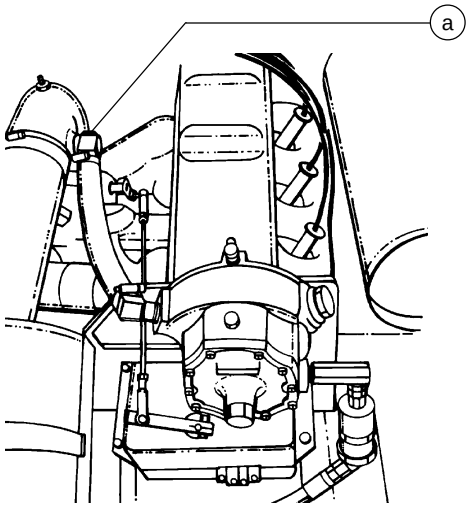

a high idle mixture adjustment screw

https://truckmanualshub.com/

TABLE C PROCEDURES

3 Load the system by activating the boom retract function, then move the function enable toggle switch to the high idle (rabbit symbol) position.

4 Adjust the high idle adjustment screw to obtain an air-to-fuel mixture ratio of 13.0:1 to 13.2:1, using an exhaust gas analyzer.

NOTICE Preliminary setting is 1/4 inch of threads showing. Measure from top of lock nut to top of adjustment screw.

NOTICE If an exhaust gas analyzer is not available, adjust to obtain peak or optimum rpm.

5 Hold the adjustment screw and tighten the lock nut.

6 Move the engine idle control switch to low idle (turtle symbol) and adjust the low idle screw to obtain an air-to-fuel mixture ratio of 13.0:1 to 13.2:1.

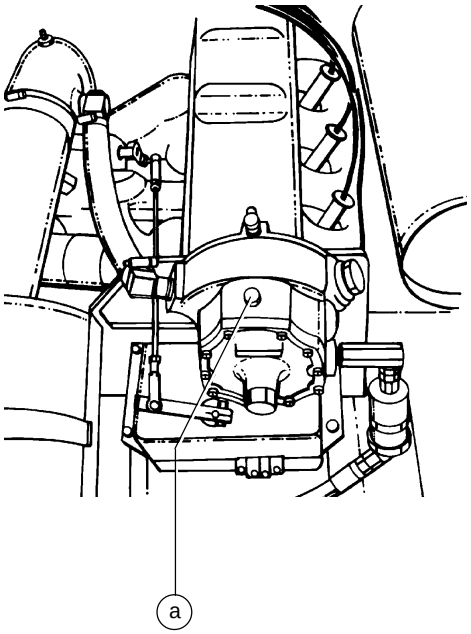

a low idle mixture adjustment screw

NOTICE Preliminary setting: turn low idle adjustment screw clockwise all the way in. Turn low idle adjustment screw counterclockwise 2 3/4 turns.

C-13
Check and Adjust the Ignition Timing - Gasoline/LPG Models

Complete information to perform this procedure is available in the *Ford LRG-423 2.3 Liter Industrial Engine Service Manual* (Ford number: PPD-194-287). Genie part number 33907.

C-14
Check the Engine Valve Clearances - Deutz Diesel Models

Complete information to perform this procedure is available in the *Deutz FL 1011F Workshop Manual* (Deutz Number 0297 7195).
Genie part number 52229.

C-15
Check the Turntable Rotation Gear Backlash

The turntable rotation torque hub is mounted on an adjustable plate that controls the gap between the rotation motor gear and the turntable bearing. Maintaining proper backlash of the turntable bearing is essential to safe machine operation. Improper backlash could result in an unsafe operating condition and component damage.

NOTICE See 12-1, *How to Adjust the Turntable Rotation Gear Backlash.*

https://truckmanualshub.com/

Table D Procedures

D-1
Test or Replace the Hydraulic Oil

Replacement or testing of the hydraulic oil is essential for good machine performance and service life. Dirty oil and suction strainers may cause the machine to perform poorly and continued use may cause component damage. Extremely dirty conditions may require oil changes to be performed more often.

NOTICE The machine uses Dexron equivalent hydraulic oil. Before replacing the hydraulic oil, the oil may be tested by an oil distributor for specific levels of contamination to verify that changing the oil is necessary. **If the hydraulic oil is not replaced at the two year inspection, test the oil quarterly. Replace the oil when it fails the test.**

NOTICE Perform this procedure with the boom in the stowed position.

1 Remove the hydraulic tank. See Repair Procedure 11-2, *How to Remove the Hydraulic Tank.*

NOTICE The pump needs to primed before starting the engine. See Repair Procedure 11-2, *How to Remove the Hydraulic Tank.*

⚠CAUTION Component damage hazard. Be sure that the hydraulic tank shutoff valves are in the OPEN position before priming the pump. The engine must not be started with the hydraulic tank shutoff valves in the CLOSED position or component damage will occur. If the tank valves are closed, remove the key from the key switch and tag the machine to inform personnel of the condition.

D-2
Change or Recondition the Engine Coolant - Gasoline/LPG Models

Replacing or reconditioning the engine coolant is essential to good engine performance and service life. Old or dirty coolant may cause the engine to perform poorly and continued use may cause engine damage. Extremely dirty conditions may require coolant to be changed more frequently.

⚠CAUTION Beware of hot engine parts and coolant. Contact with hot engine parts and/or coolant will cause severe burns.

NOTICE Perform this procedure with the engine off and cooled.

1 Put on protective clothing and eye wear.

2 Disconnect the coolant return hose at the radiator and drain the coolant return tank into a suitable container.

3 Slowly remove the radiator cap from the radiator.

⚠CAUTION Bodily injury hazard. Allow any pressure to dissipate gradually before removing the radiator cap.

https://truckmanualshub.com/

TABLE D PROCEDURES

4 Remove the 2 engine pivot plate retaining bolts from under the engine pivot plate. Swing the engine pivot plate away from the machine to access the radiator drain valve.

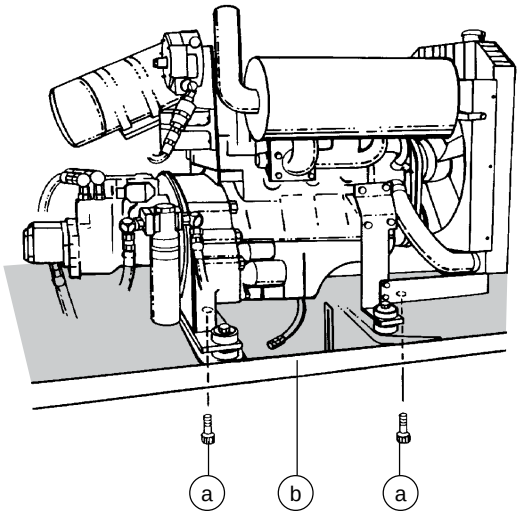

a pivot plate retaining bolts
b engine pivot plate

5 Open the drain valve on the radiator and allow all the coolant to drain into a suitable container.

6 After all the coolant has drained, close the drain valve. Connect the coolant return hose to the radiator.

7 Open the drain valve on the engine block and allow the coolant to drain into a container. After the fluid is drained, close the drain valve.

8 Replace all coolant hoses and clamps.

9 Pour the proper coolant mixture (anti-freeze and water) for your climate into the radiator until it is full.

10 Disconnect the hose coupler at the fan end from the tube that is connected to the water pump and hold it until coolant starts to come out of the open hose. Then immediately reconnect the hose.

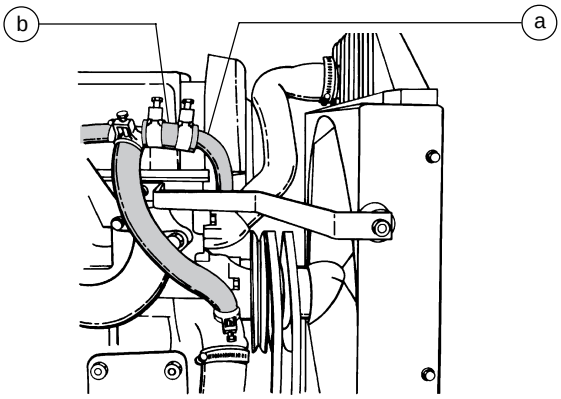

a tube connected to water pump
b hose coupler

11 Fill the radiator and then fill the coolant recovery tank to the NORMAL range.

12 Clean up any coolant spilled during this procedure.

13 Start the engine from the ground controls, run it for 30 seconds, and then turn it off.

14 Inspect for leaks and then check the fluid level in the coolant recovery tank. Add water if needed.

15 Start the engine from the ground controls and run it until reaching normal operating temperature.

16 Allow engine to cool and check the fluid level in the coolant recovery tank. Add water if needed.

Ford Engine	11.5 quarts
Coolant capacity	10.9 liters

https://truckmanualshub.com/

TABLE D PROCEDURES

D-3
Change the Fuel Lines

Maintaining the fuel lines in good condition is essential to safe operation and good engine performance. Failure to detect a worn, cracked or leaking fuel line may cause an unsafe operating condition.

DANGER Engine fuels are combustible. Replace the fuel lines in an open, well-ventilated area away from heaters, sparks, flames and lighted tobacco. Always have an approved fire extinguisher within easy reach.

NOTICE Perform this procedure with the engine off.

1 Close the manual fuel shutoff valve, located next to the fuel tank.

2 Remove and replace the fuel line hoses and clamps according to the following illustrations:

DANGER Fuel may be expelled under pressure. Wrap a cloth around fuel hoses to absorb leaking fuel before disconnecting them.

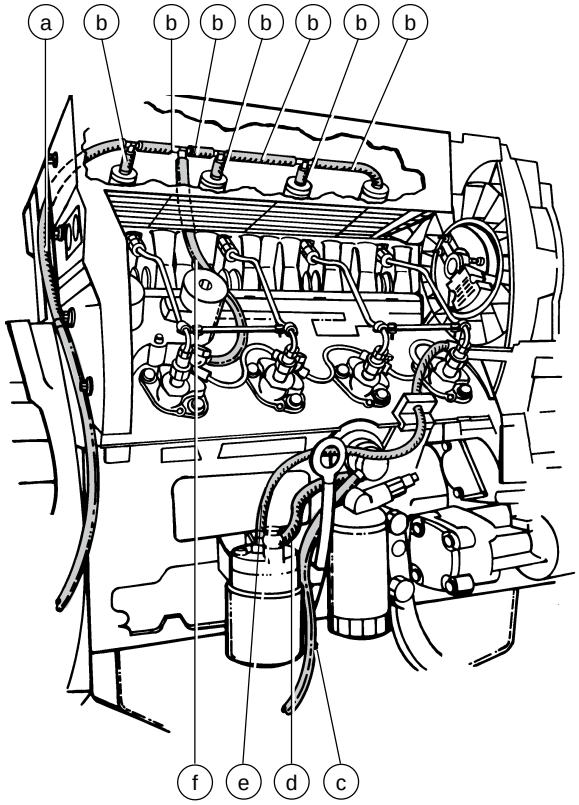

Deutz Diesel models

a hose from the injector to the fuel tank
b hoses connecting injectors
c hose from the fuel shutoff valve to the fuel pump
d hose from the fuel pump to the fuel filter
e hose from the fuel filter to the injection pump
f hose from the injection pump to the injectors

https://truckmanualshub.com/

TABLE D PROCEDURES

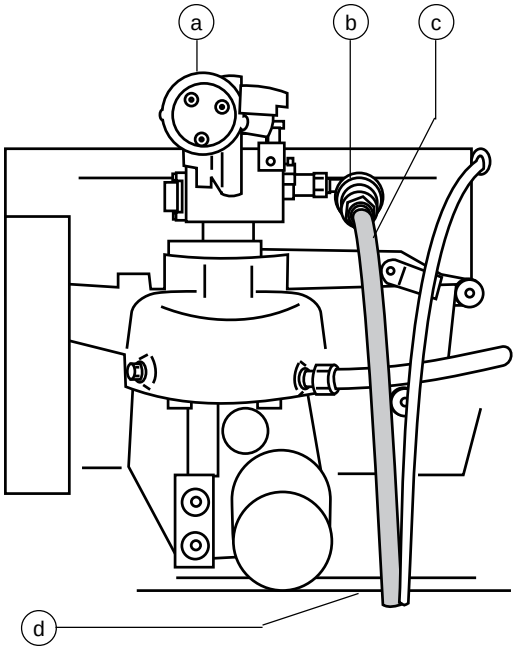

Gasoline/LPG
a carburetor
b fuel filter
c hose from the fuel filter to the fuel pump
d hose from the fuel pump to the fuel tank (not shown)

3 Clean up any fuel that may have spilled during this procedure.

4 Start the engine from the ground controls, then inspect the fuel filter and hoses for leaks.

DANGER If a fuel leak is discovered, keep any additional personnel from entering the area and do not operate the machine. Repair the leak immediately.

D-4
Check the Engine Valve Clearance - Gasoline/LPG Models

Complete information to perform this procedure is available in the *Ford LRG-423 2.3 Liter Industrial Engine Service Manual* (Ford number: PPD-194-287). Genie part number 33907.

D-5
Check the Engine Cylinder Compression - Gasoline/LPG Models

Complete information to perform this procedure is available in the *Ford LRG-423 2.3 Liter Industrial Engine Service Manual* (Ford number: PPD-194-287). Genie part number 33907.

D-6
Clean the PCV Hoses and Fittings - Gasoline/LPG Models

Maintaining PCV hoses is essential to good engine performance. Improperly functioning PCV hoses will fail to ventilate the crankcase and continued use of neglected hoses could result in component damage.

NOTICE Perform this procedure with the engine off.

https://truckmanualshub.com/

1 Remove the 2 engine pivot plate retaining bolts from under the engine pivot plate. Swing the engine pivot plate away from the machine to access the PCV hoses.

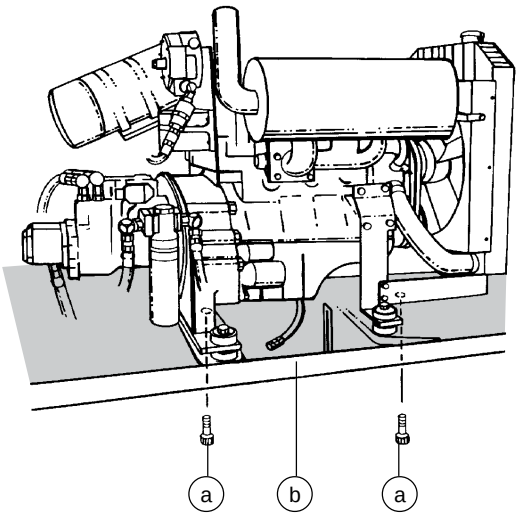

a pivot plate retaining bolts
b engine pivot plate

2 Disconnect the hose from the PCV valve, then disconnect the hose from the engine.

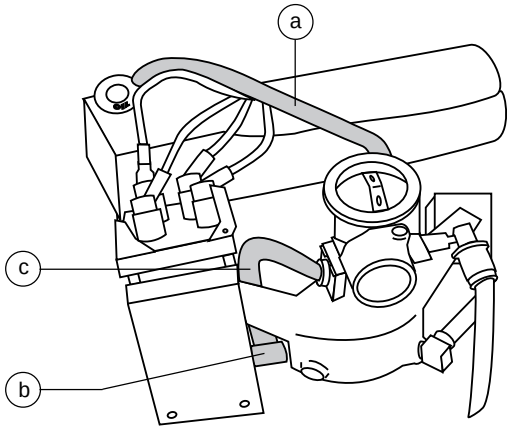

a carburetor to valve cover hose
b PCV valve
c PCV valve to carburetor hose

3 Disconnect the hose from the carburetor, then disconnect the hose from the valve cover.

4 Clean the hoses with a mild cleaning solvent.

5 Dry both hoses and inspect them for cracks and damage. Replace the hoses if they are damaged.

D-7
Check the Fuel Injection Pump and Injectors - Deutz Diesel Models

Complete information to perform this procedure is available in the *Deutz FL 1011F Workshop Manual* (Deutz number: 0297 7195).
Genie part number 52229.

D-8
Check the Toothed Belt - Deutz Diesel Models

Complete information to perform this procedure is available in the *Deutz FL 1011 Operation Manual* (Deutz number: 0297 4706 EN).
Genie part number 29790.

D-9
Replace the Timing Belt - Gasoline/LPG Models

Complete information to perform this procedure is available in the *Ford LRG-423 2.3 Liter Industrial Engine Service Manual* (Ford number: PPD-194-287). Genie part number 33907.

https://truckmanualshub.com/

TABLE D PROCEDURES

D-10
Grease the Steer Axle Wheel Bearings - 2WD Models

Maintaining the steer axle wheel bearings is essential for safe machine operation and service life. Operating the machine with loose or worn wheel bearings may cause an unsafe operating condition and continued use may result in component damage. Extremely wet or dirty conditions or regular steam cleaning and pressure washing of the machine may require that this procedure be performed more often.

1 Loosen the wheel lug nuts. Do not remove them.

2 Block the non-steering wheels, then center a lifting jack under the steer axle.

3 Raise the machine 6 inches (15 cm) and place blocks under the drive chassis for support.

4 Remove the lug nuts, then remove the tire and wheel assembly.

5 Check for wheel bearing wear by attempting to move the wheel hub side to side, then up and down.

⊙ Result: There should not be any side to side or up and down movement.

Skip to step 10 if there is no movement.

6 Remove the dust cap from the hub, then remove the cotter pin from the castle nut.

7 Tighten the castle nut to 35 foot-pounds (47 Nm) to seat the bearings.

8 Loosen the castle nut, then re-tighten to 8 foot-pounds (11 Nm).

9 Check for wheel bearing wear by attempting to move the wheel hub side to side, then up and down.

⊙ Result: If there is side to side or up and down movement, proceed to step 10 to replace the wheel bearings with new ones.

NOTICE When replacing a wheel bearing, both the inner and outer bearings, including the pressed-in races, must be replaced.

⊙ Result: If there is no side to side or up and down movement, grease the wheel bearings.

10 Remove the castle nut.

11 Pull the hub off of the spindle. The washer and outer bearing should fall loose from the hub.

12 Place the hub on a flat surface and gently pry the bearing seal out of the hub. Remove the rear bearing.

13 Pack both bearings with clean, fresh grease.

14 Place the large inner bearing into the rear of the hub.

15 Install a new bearing grease seal into the hub by pressing it evenly into the hub until it is flush.

NOTICE Always replace the bearing grease seal when removing the hub.

16 Slide the hub onto the yoke spindle.

⚠CAUTION Component damage. Do not apply excessive force or damage to the lip of the seal may occur.

17 Place the outer bearing into the hub.

18 Install the washer and slotted nut.

19 Tighten the slotted nut to 35 foot-pounds (47 Nm) to seat the bearings.

20 Loosen the slotted nut, then re-tighten to 8 foot-pounds (11 Nm).

21 Install a new cotter pin. Bend the cotter pin to lock it in.

22 Install the dust cap, then the tire and wheel assembly. Torque the wheel lug nuts to 420 foot-pounds (569.5 Nm).

https://truckmanualshub.com/

Troubleshooting Flow Charts

Observe and Obey:

- ☑ Troubleshooting and repair procedures shall be completed by a person trained and qualified on the repair of this machine.
- ☑ Immediately tag and remove from service a damaged or malfunctioning machine.
- ☑ Repair any machine damage or malfunction before operating the machine.
- ☑ Unless otherwise specified, perform each repair procedure with the machine in the following configuration:
  - · Machine parked on a flat level surface
  - · Boom in stowed position
  - · Turntable rotated with the boom between the non-steering wheels
  - · Turntable secured with the turntable rotation lock pin
  - · Key switch in the OFF position with the key removed
  - · Wheels chocked

Before Troubleshooting:

- ☑ Read, understand and obey the safety rules and operating instructions printed in the *Genie S-60 & Genie S-65 Operator's Manual.*
- ☑ Be sure that all necessary tools and test equipment are available and ready for use.
- ☑ Read each appropiate flow chart thoroughly. Attempting shortcuts may produce hazardous conditions.
- ☑ Be aware of the following hazards and follow generally accepted safe workshop practices.

DANGER Crushing hazard. When testing or replacing any hydraulic component, always support the structure and secure it from movement.

DANGER Electrocution hazard. Contact with electrically charged circuits may result in death or serious injury. Remove all rings, watches and other jewelry.

WARNING Bodily injury hazard. Spraying hydraulic oil can penetrate and burn skin. Loosen hydraulic connections very slowly to allow the oil pressure to dissipate gradually. Do not allow oil to squirt or spray.

NOTICE Perform all troubleshooting on a firm level surface.

NOTICE Two persons will be required to safely perform some troubleshooting procedures.

https://truckmanualshub.com/

TROUBLESHOOTING FLOW CHARTS

About This Section

When a malfunction is discovered, the flow charts in this section will help a service professional pinpoint the cause of the problem. To use this section, basic hand tools and certain pieces of test equipment are required–voltmeter, ohmmeter, pressure gauges.

The location of terminals mentioned in this section can be found on the appropriate electrical or hydraulic schematics provided in Section 6, *Schematics*.

Since various degrees of a particular function loss may occur, selecting the appropriate flow chart may be troublesome. When a function will not operate with the same speed or power as a machine in good working condition, refer to the flow chart which most closely describes the problem.

General Repair Process

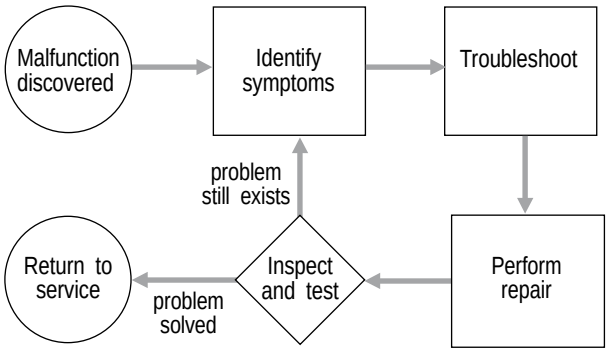

https://truckmanualshub.com/

Chart 1

Engine Will Not Crank Over

Be sure the key switch is in the appropriate position.

Be sure that both Emergency Stop buttons are pulled out to the ON position.

Be sure the circuit breakers are not tripped.

Be sure the battery is fully charged.

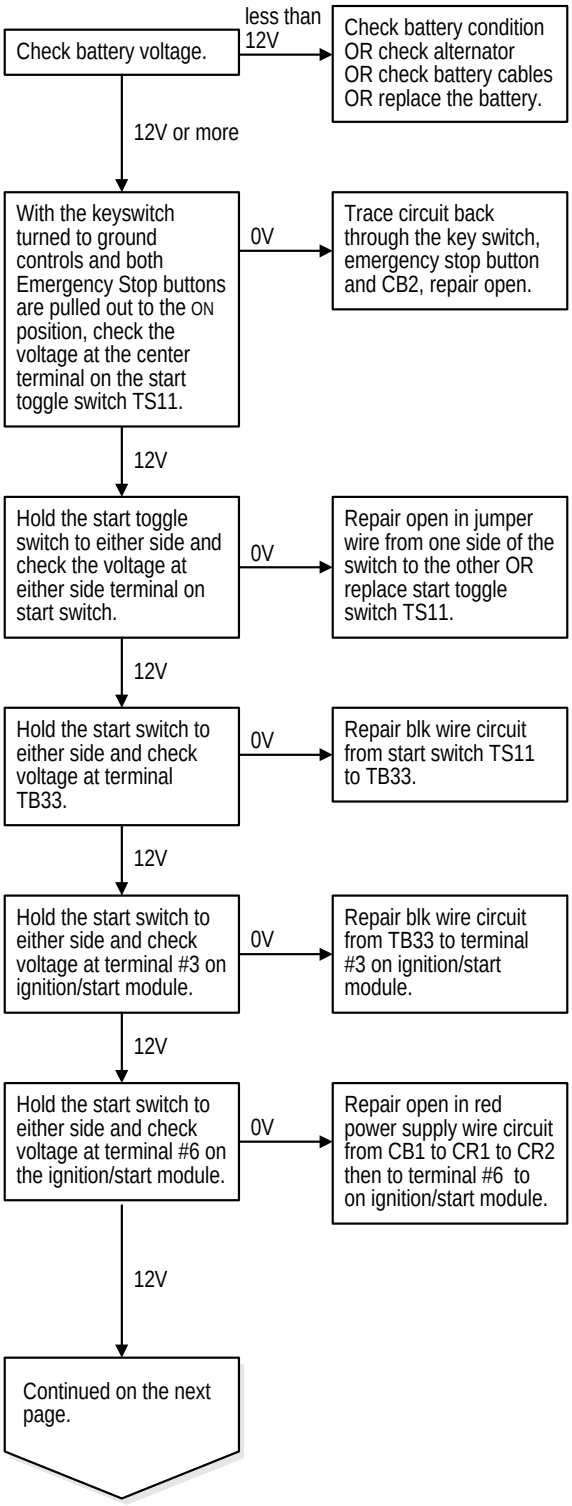

https://truckmanualshub.com/

CHART 1

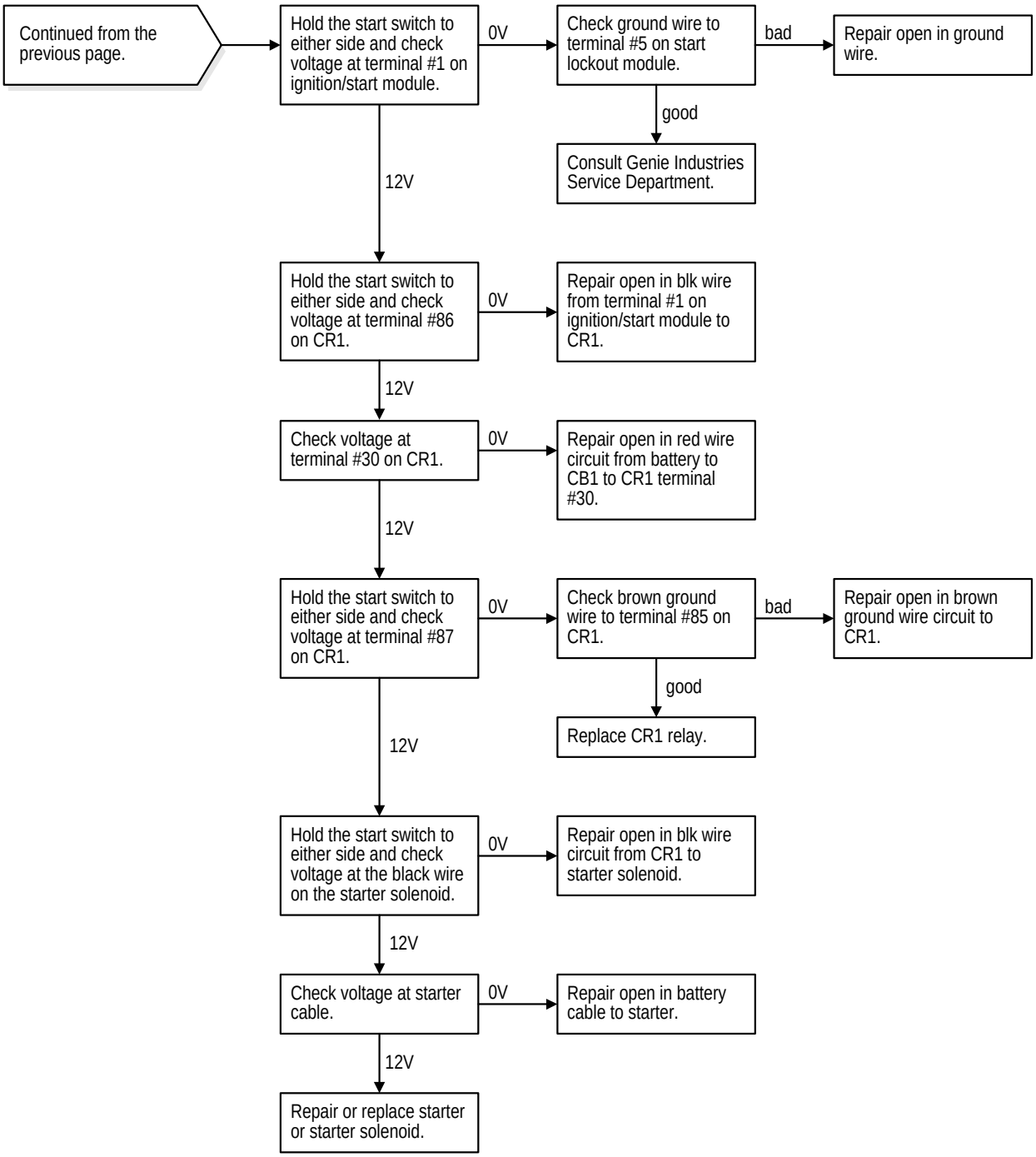

https://truckmanualshub.com/

Chart 2

Engine Cranks Over But Will Not Start - Gasoline/LPG Models

Be sure to check the engine oil level and fill as needed.

Be sure to check fuel levels and engine coolant level.

Be sure the gasoline shut-off valve is in the ON or OPEN position.

Be sure that automatic choke is not sticking closed.

Perform following tests in gasoline mode only.

Be sure that the water temperature gauge does not show an overheated condition.

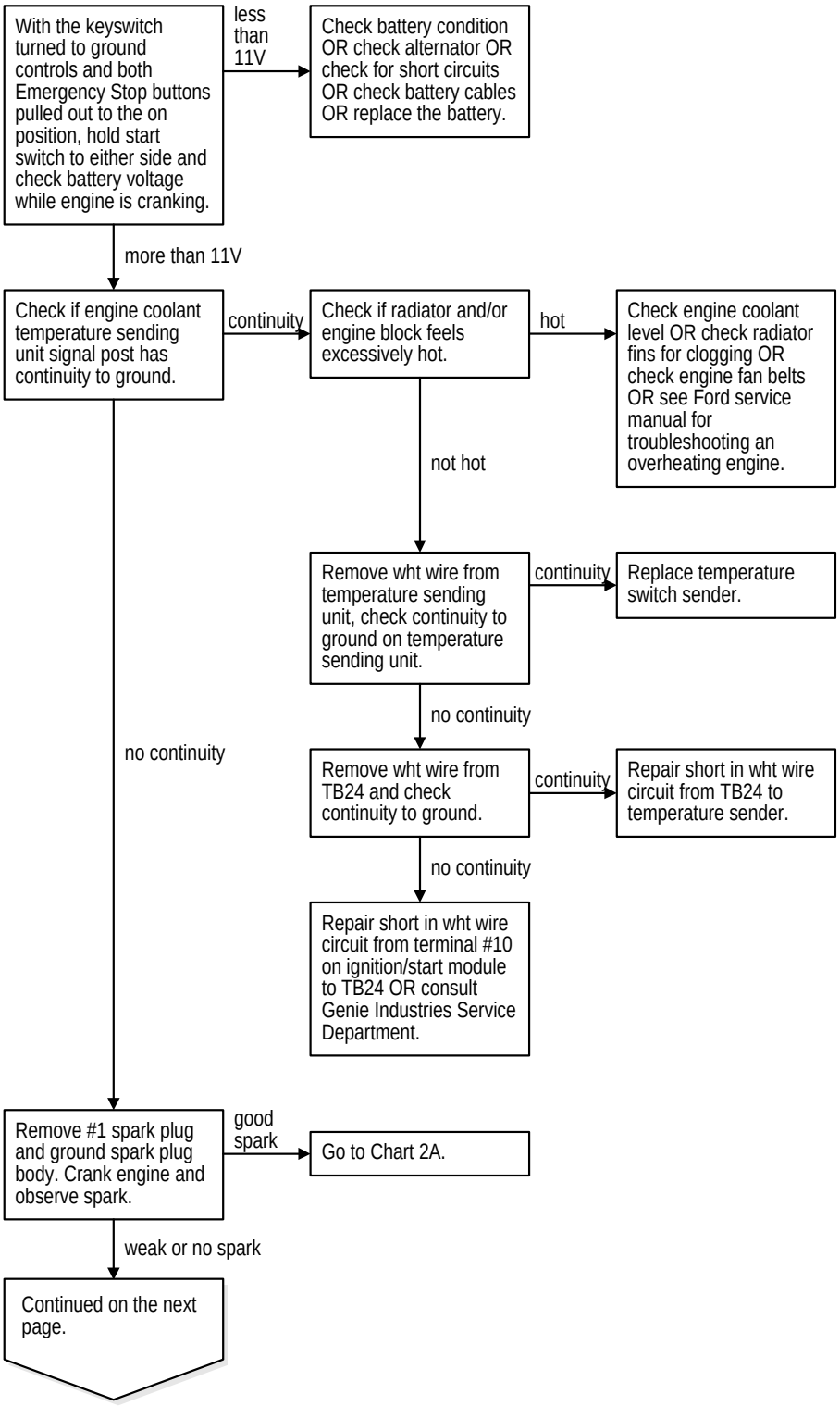

https://truckmanualshub.com/

CHART 2

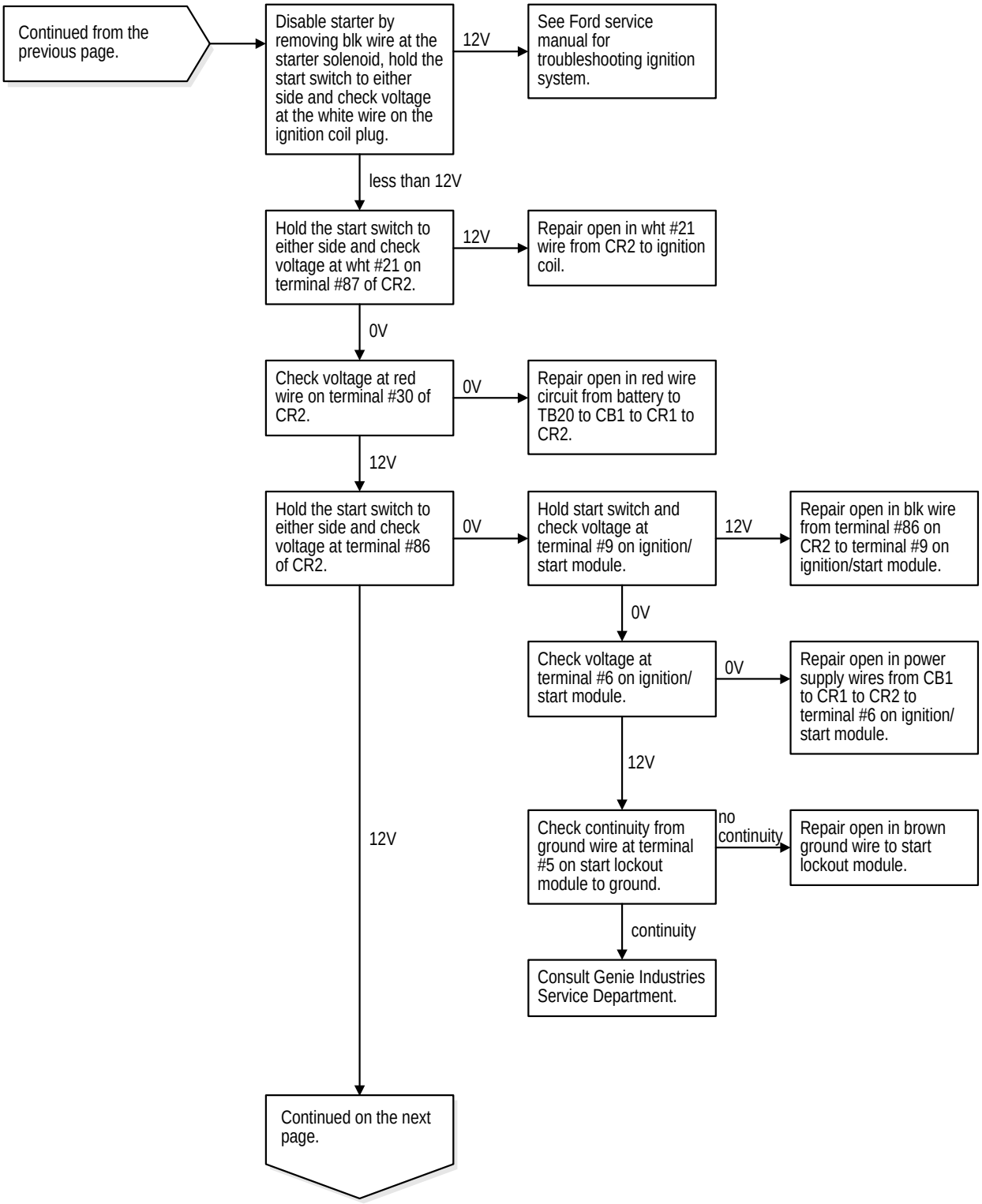

https://truckmanualshub.com/

CHART 2

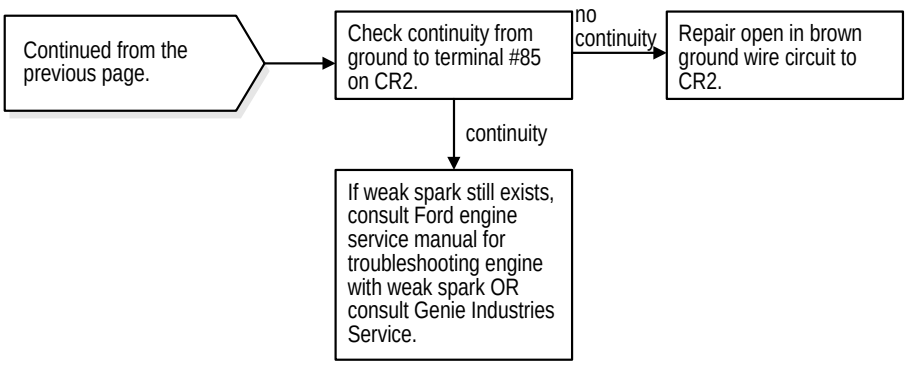

https://truckmanualshub.com/

Chart 2A

Engine Cranks Over But Will Not Start - Gasoline/LPG Models

or

Engine Runs While Cranking Then Dies

Perform these tests in gasoline mode only.

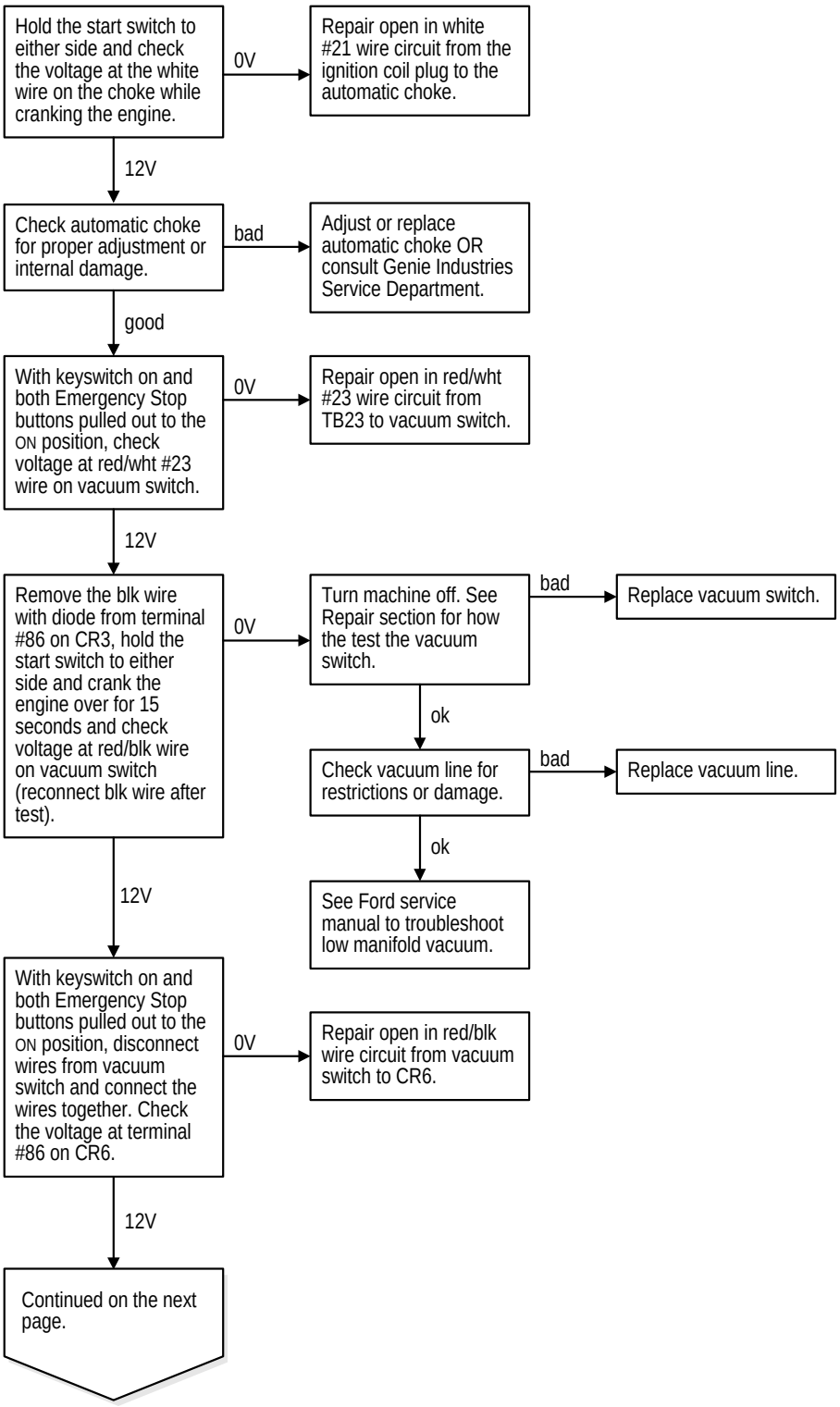

https://truckmanualshub.com/

CHART 2A

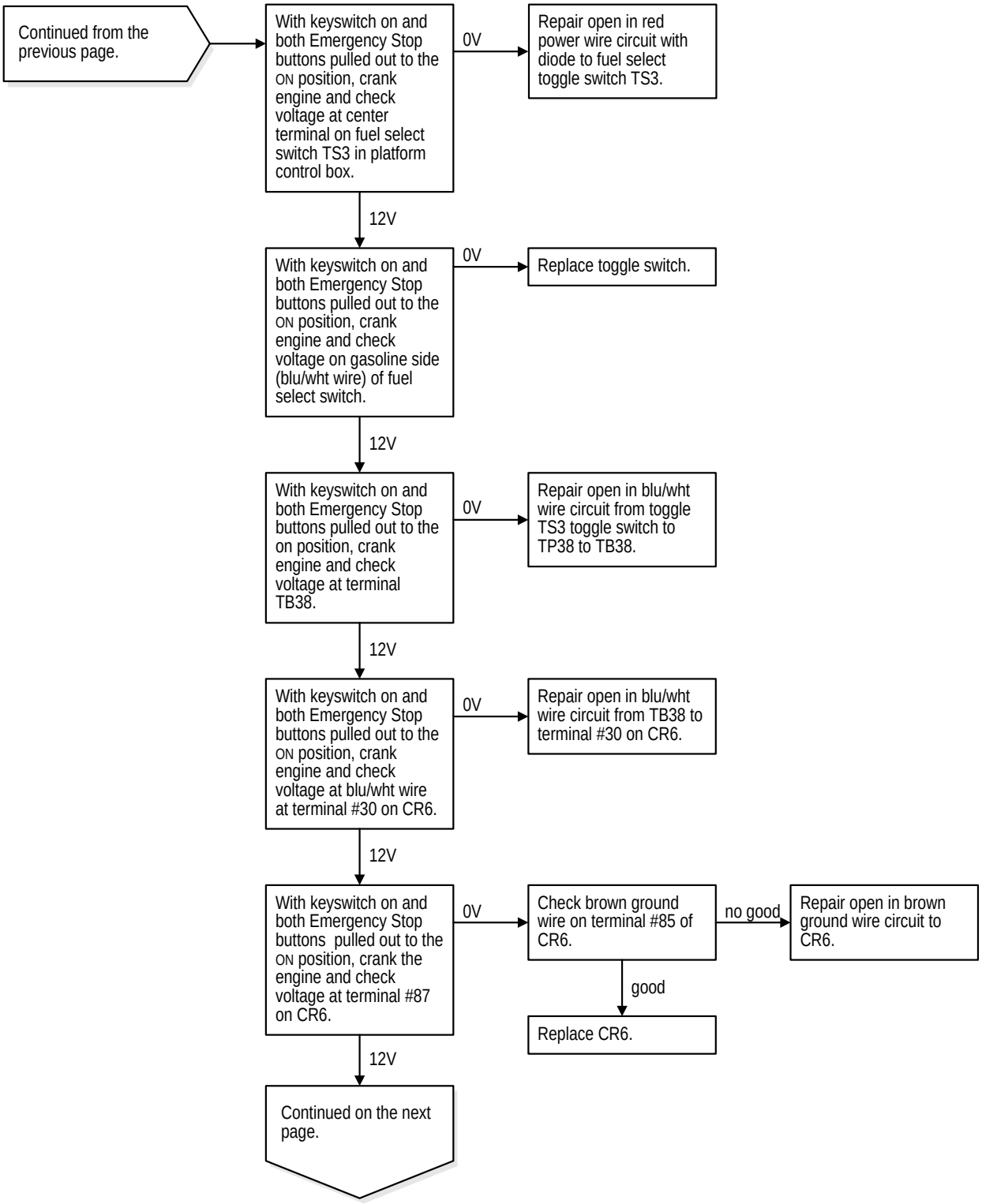

https://truckmanualshub.com/

CHART 2A

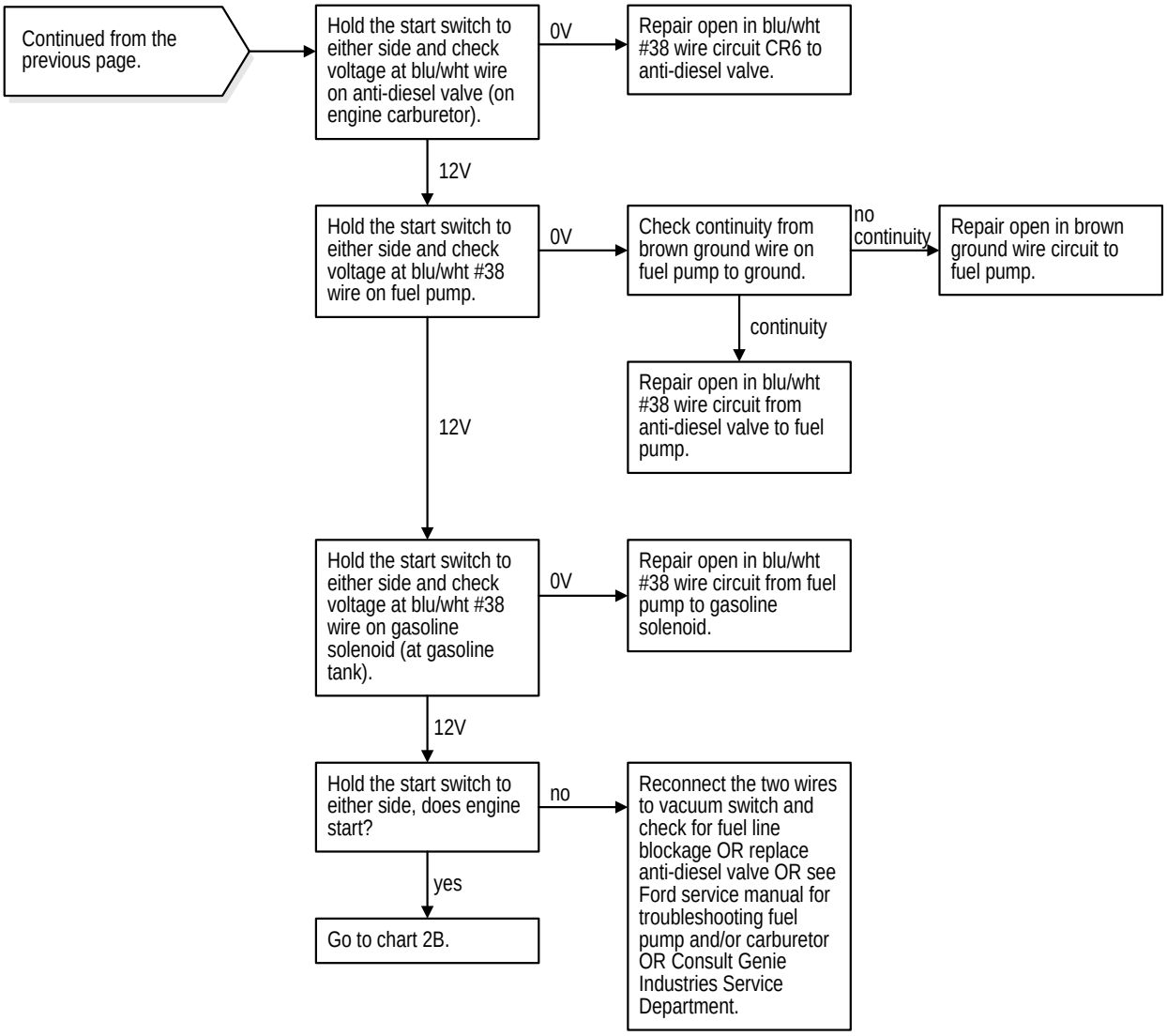

https://truckmanualshub.com/

Chart 2B

Engine Runs While Cranking Then Dies

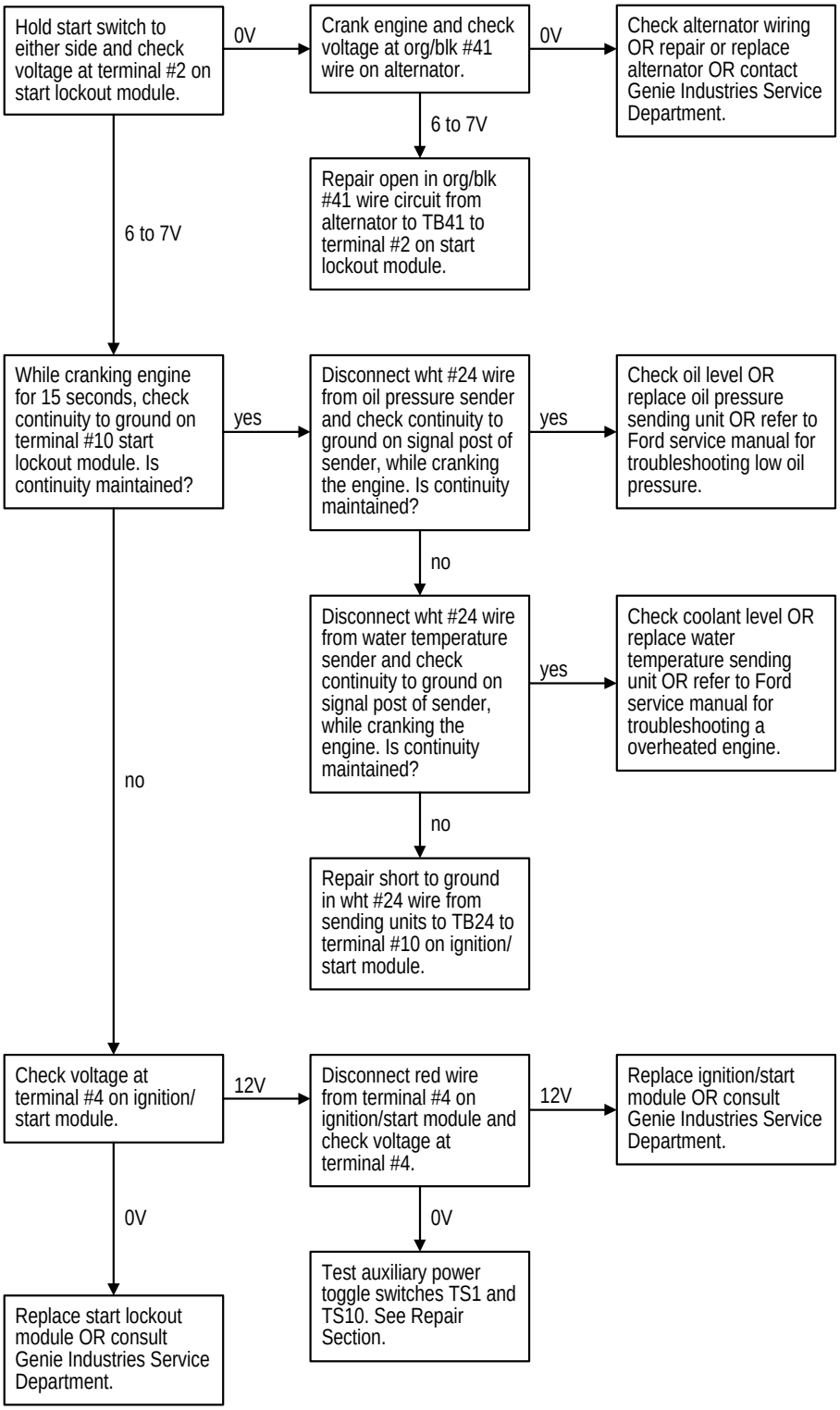

https://truckmanualshub.com/

Chart 3

Engine Cranks Over But Will Not Start - Deutz Diesel Models

Be sure to check the engine oil level and fill as needed.

Be sure to check fuel level.

Be sure the diesel fuel shut-off valve is in the on position.

Be sure that the battery is fully charged.

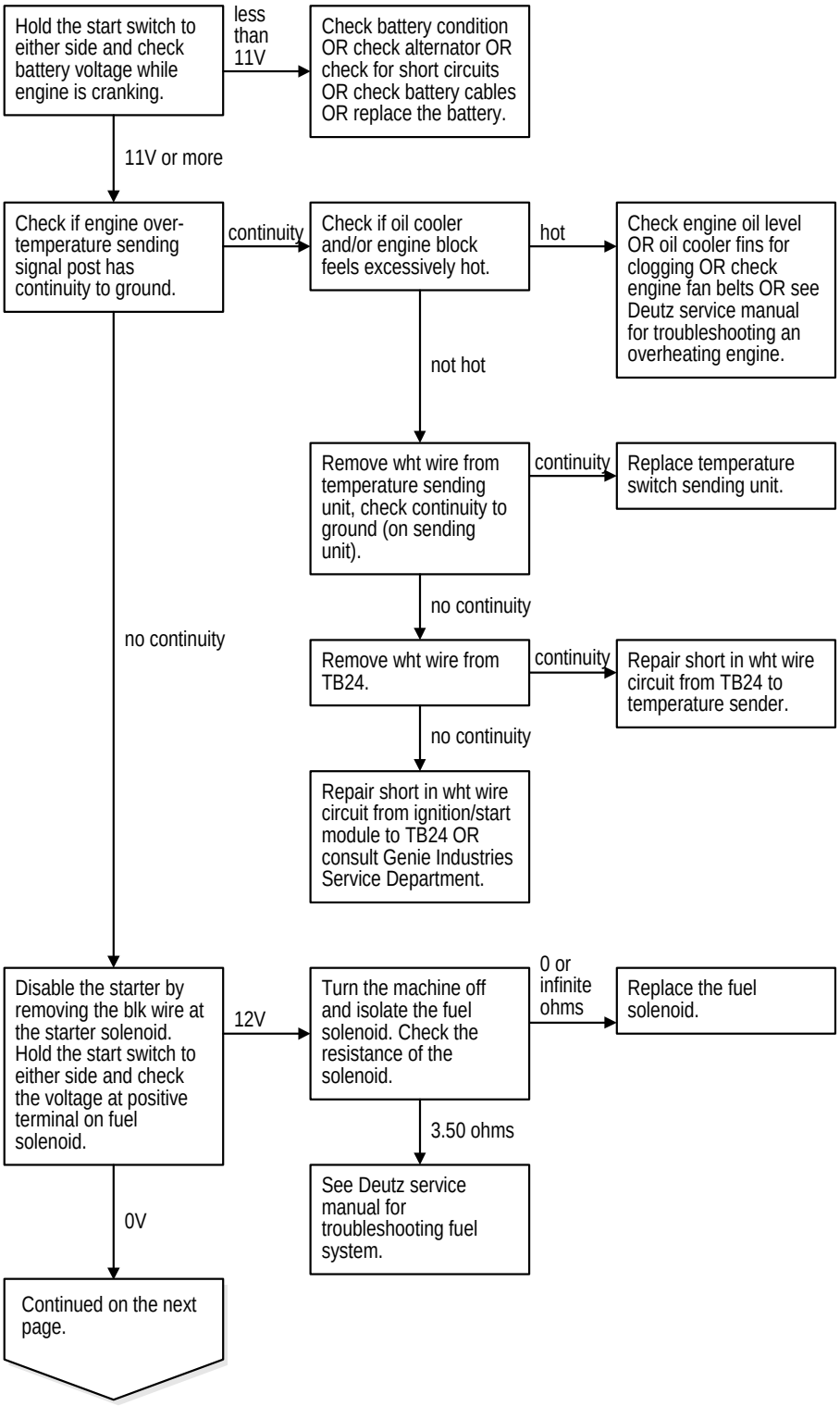

https://truckmanualshub.com/

CHART 3

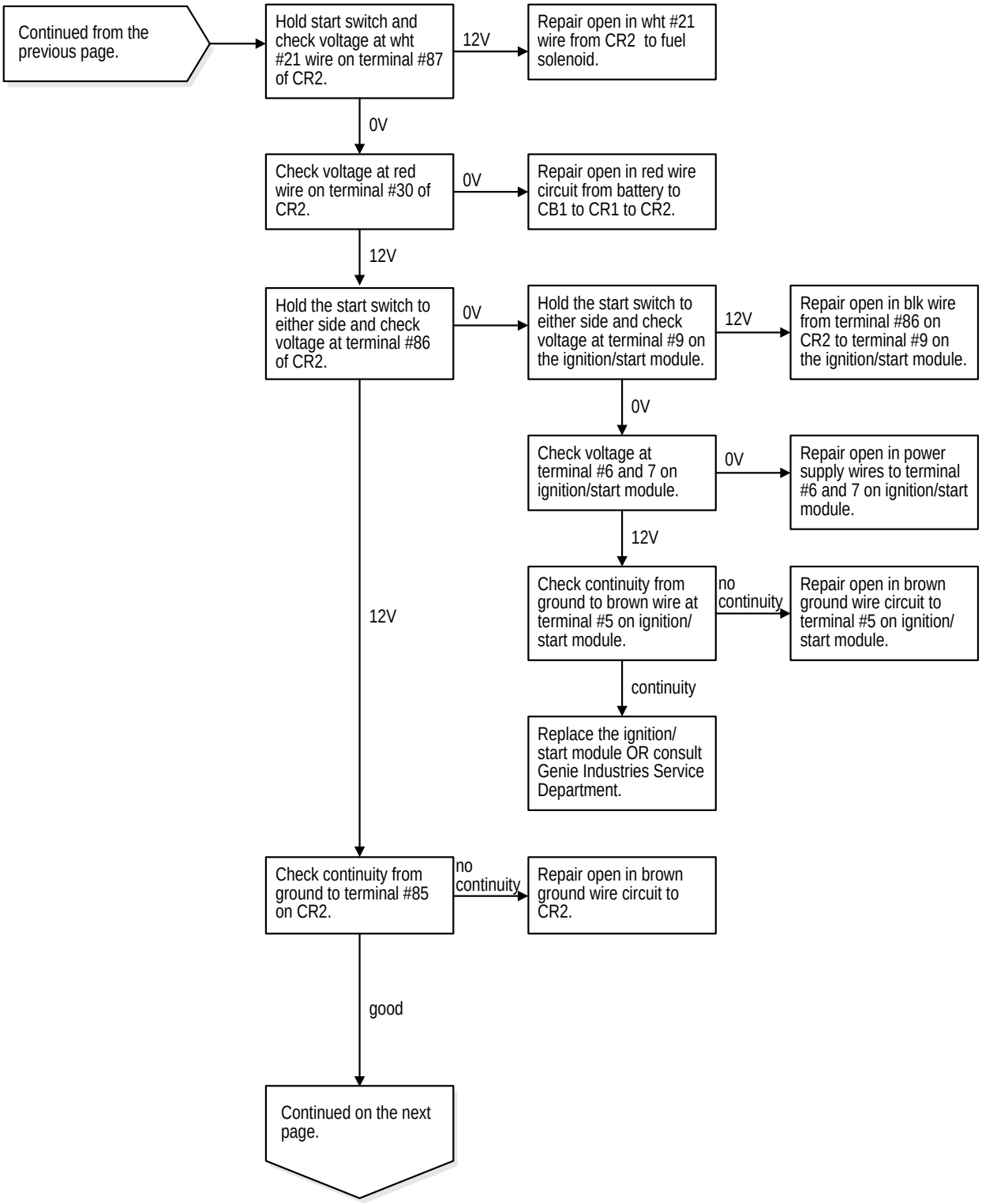

https://truckmanualshub.com/

CHART 3

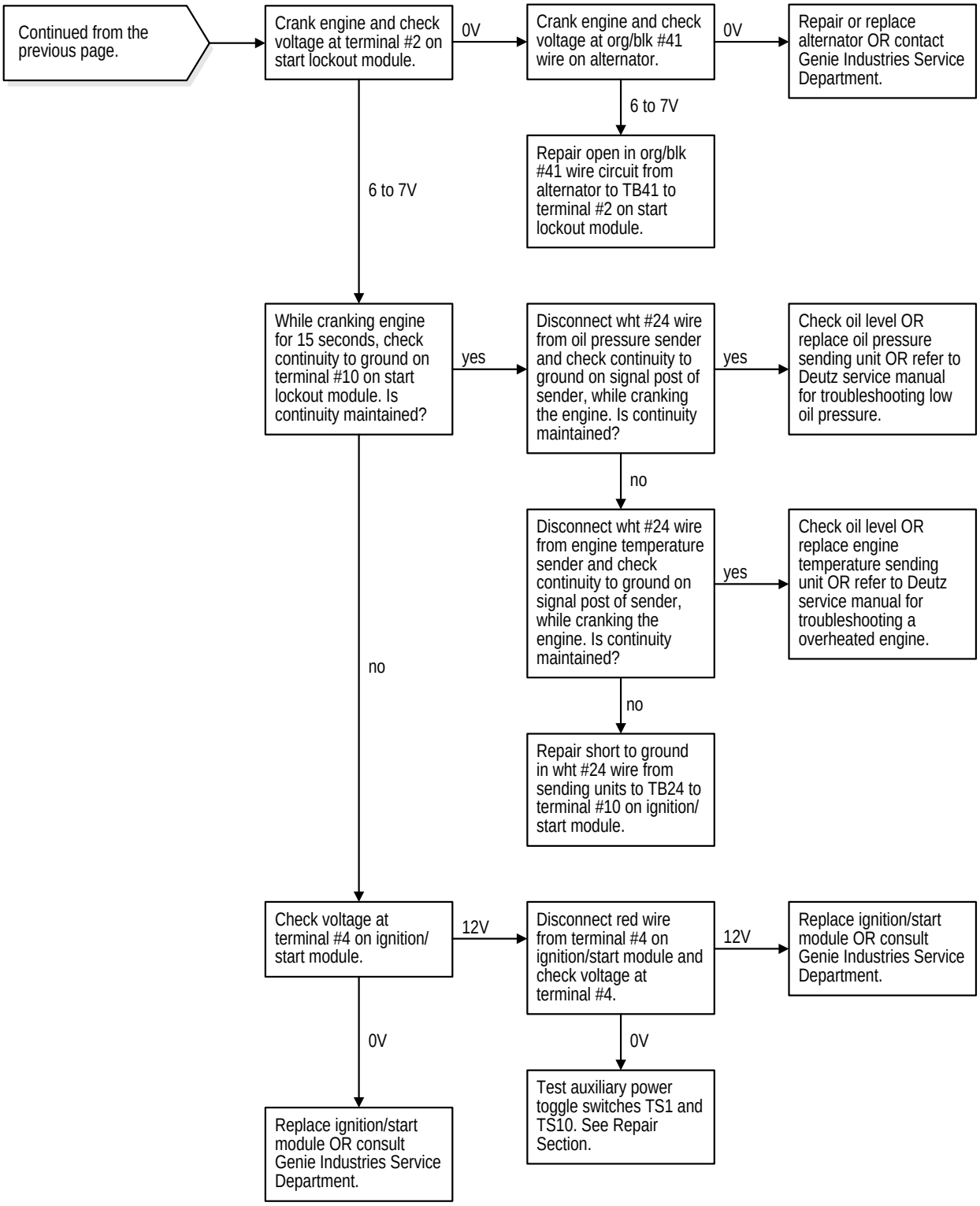

https://truckmanualshub.com/

Chart 4

Engine Will Not Start On LPG, But Will Start On Gasoline - Gasoline/LPG Models

Be sure fuel select switch is switched to LPG.

Be sure to check LPG fuel level.

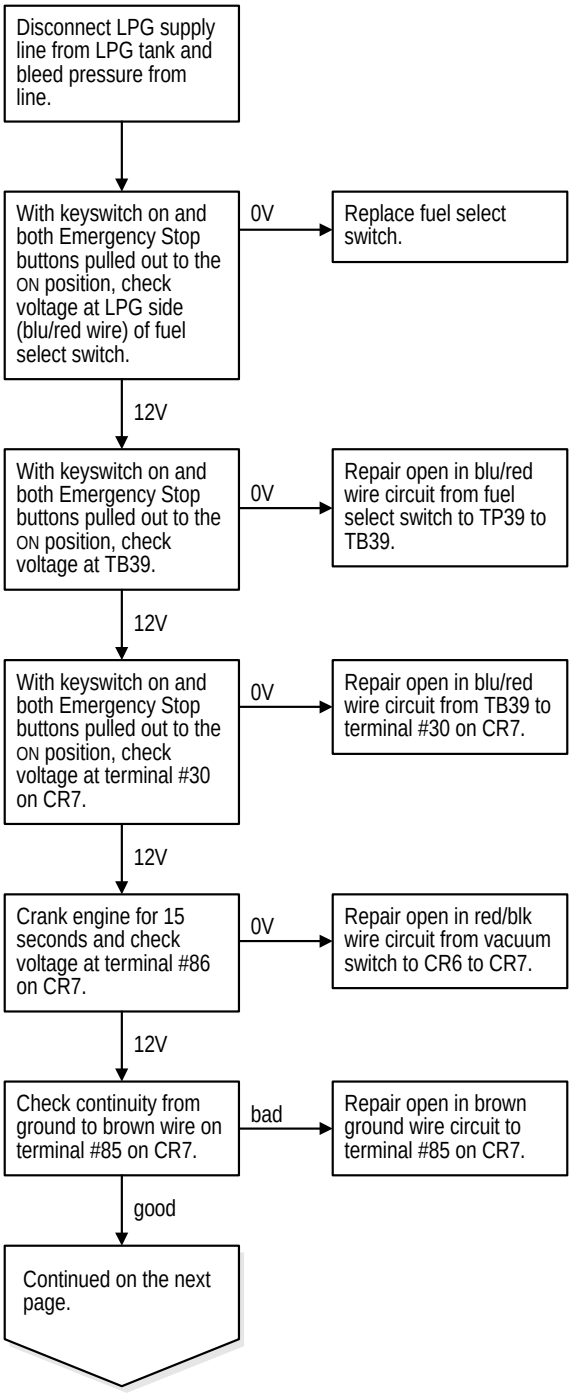

https://truckmanualshub.com/

CHART 4

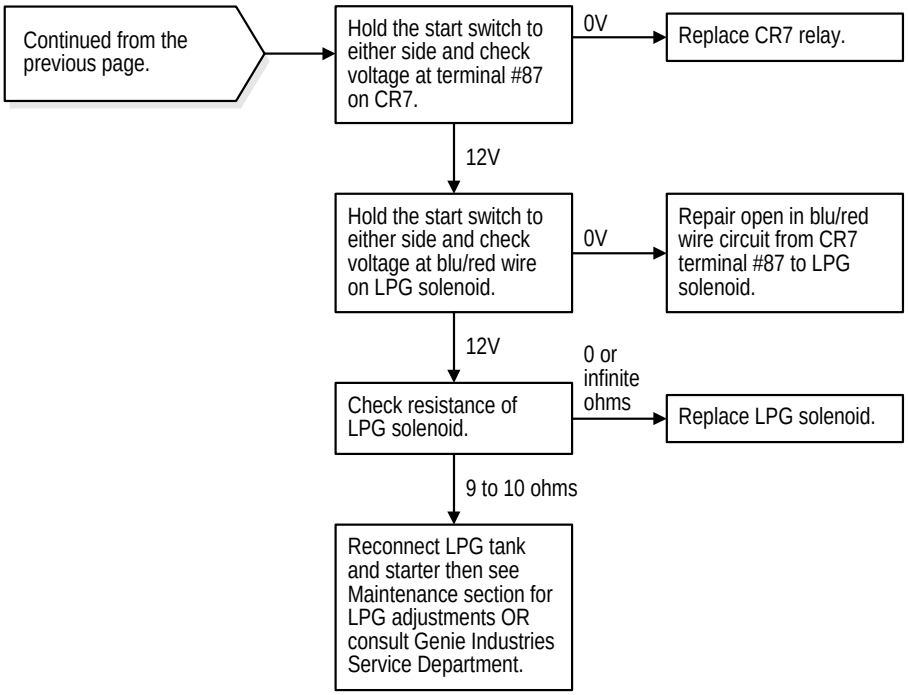

https://truckmanualshub.com/

Chart 5

Engine Will Not Start On Gasoline, But Will Start On LPG - Gasoline/LPG Models

Be sure fuel select switch is switched to gasoline.

Be sure to check gasoline fuel level.

Be sure that engine choke is operating properly.

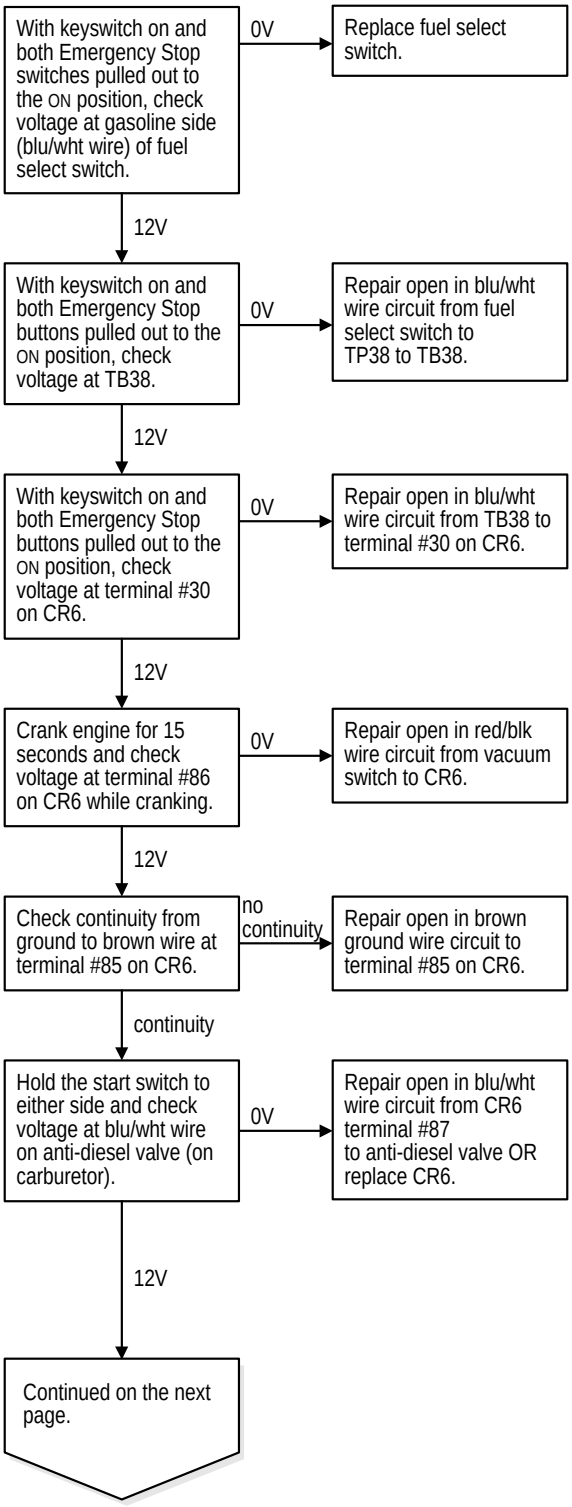

https://truckmanualshub.com/

CHART 5

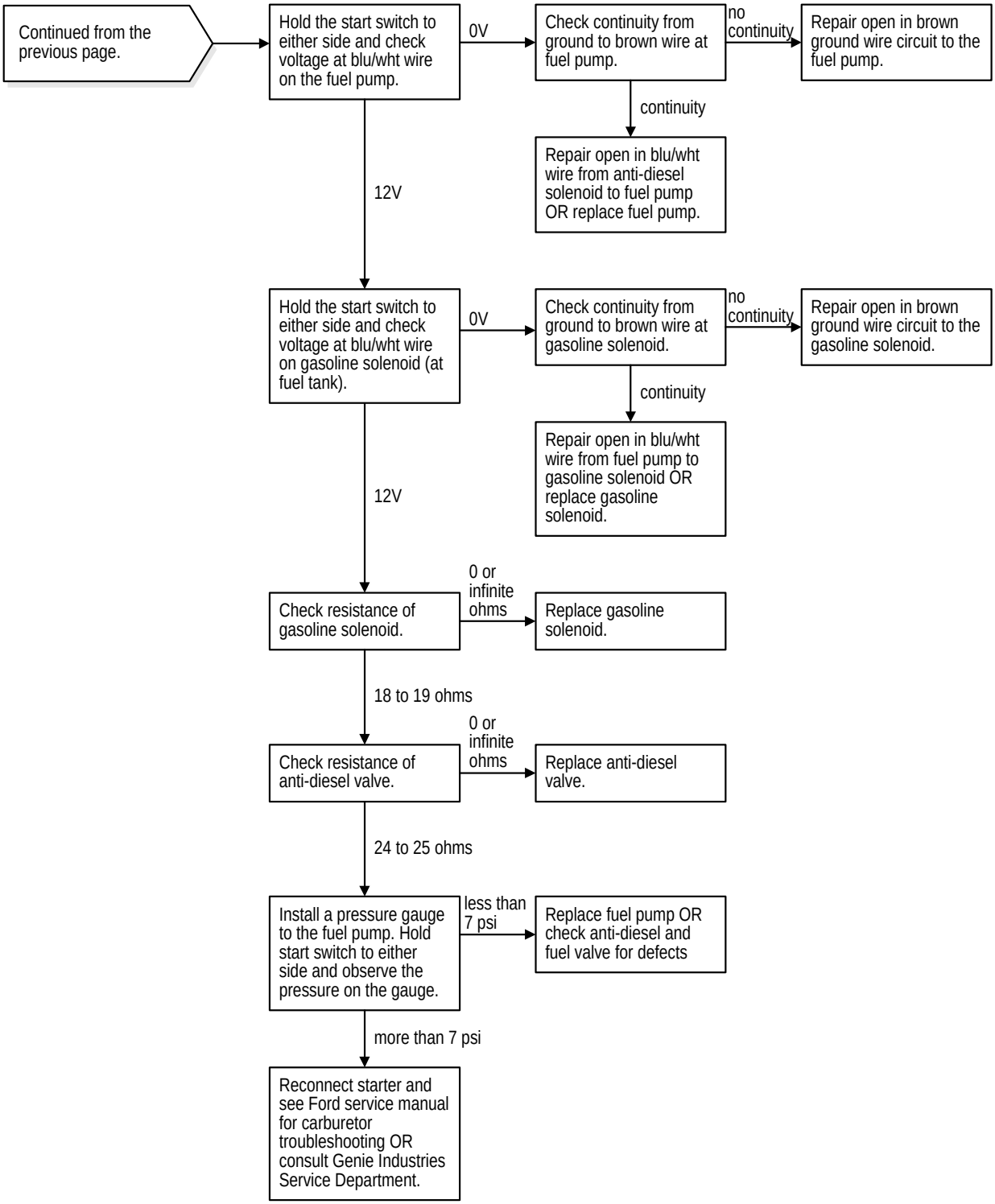

https://truckmanualshub.com/

Chart 6

Engine High Idle Inoperative - Gasoline/LPG Models

If high idle operates on LPG but not on gasoline, see Ford service manual for carburetor troubleshooting.

If high idle operates on gasoline but not on LPG, see Repair section for LPG regulator adjustments.

Be sure throttle linkage from governor to carburetor is not binding.

Be sure high idle can be achieved by grasping the governor actuator arm and momentarily pulling to throttle the carburetor.

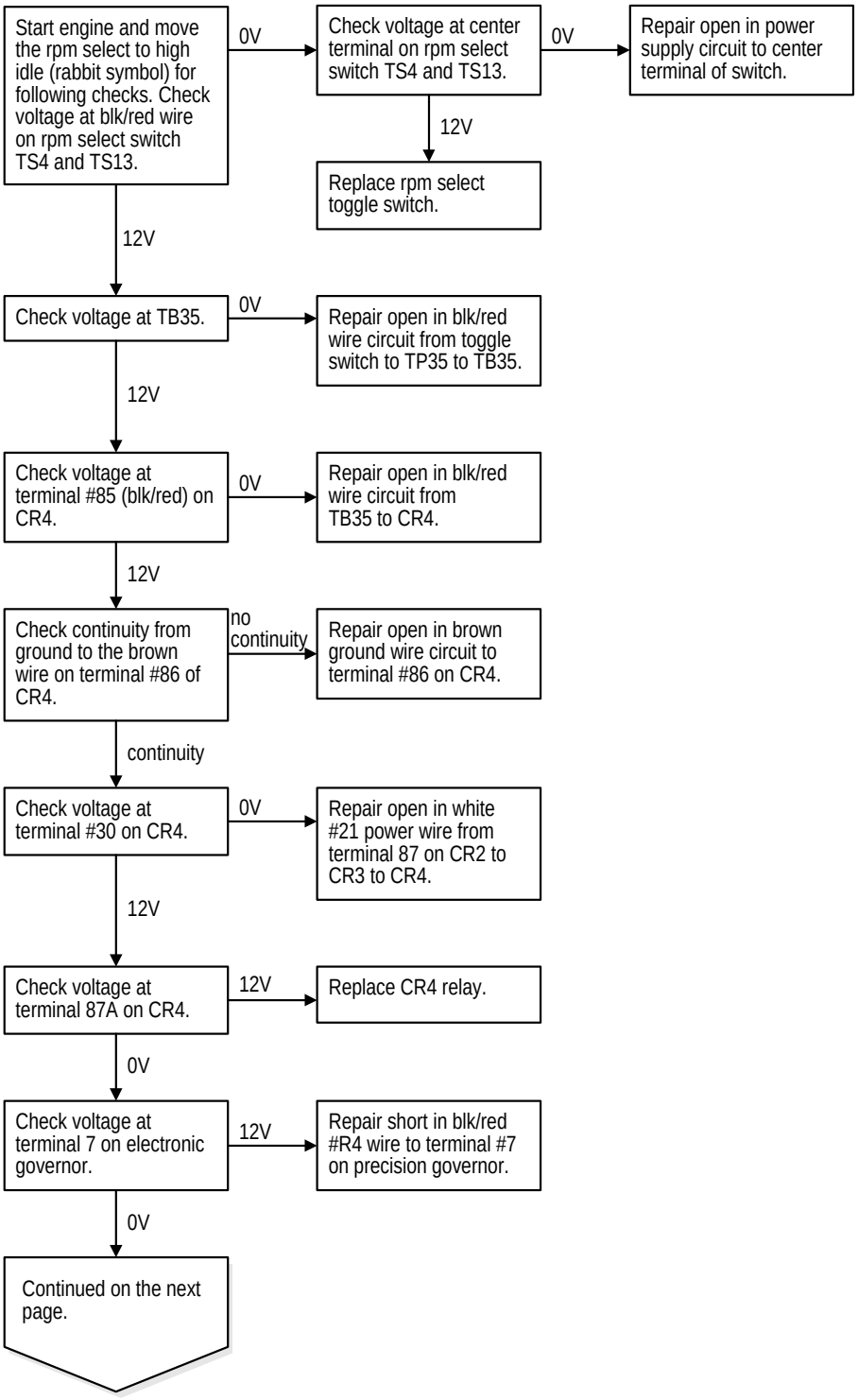

https://truckmanualshub.com/

CHART 6

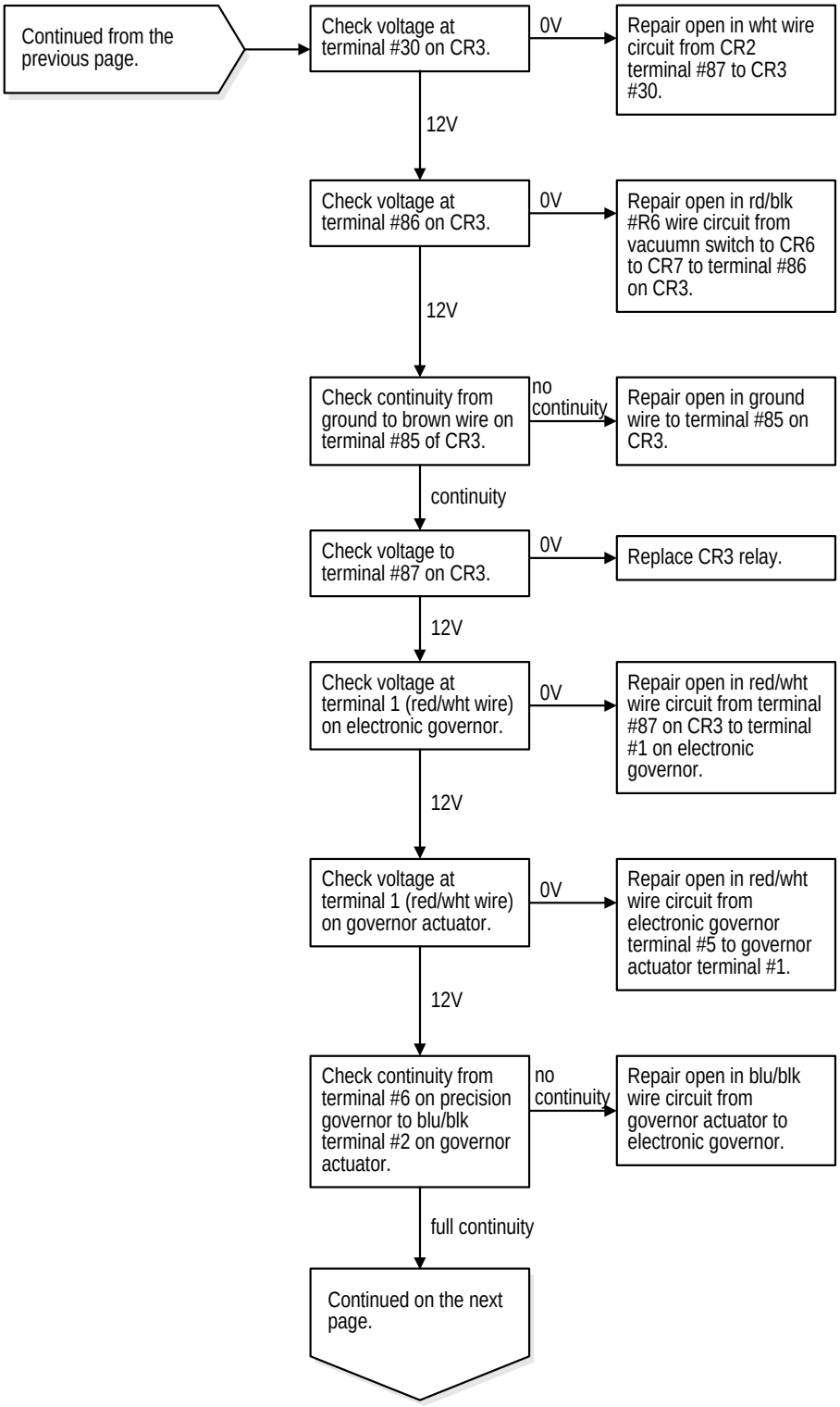

https://truckmanualshub.com/

CHART 6

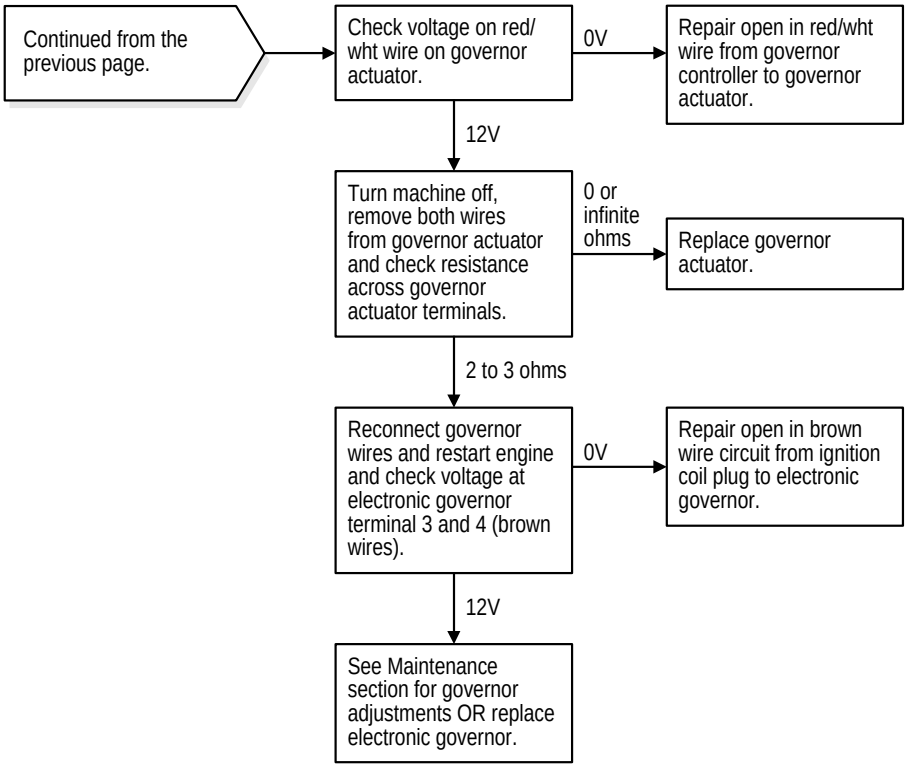

https://truckmanualshub.com/

Chart 7

Engine Low Idle Inoperative - Gasoline/LPG Models

If low idle operates on LPG but not on gasoline, see Ford service manual for carburetor troubleshooting.

If low idle operates on gasoline but not on LPG, see Repair section for LPG regulator adjustments.

Be sure throttle linkage from governor to carburetor is not binding, see Repair section.

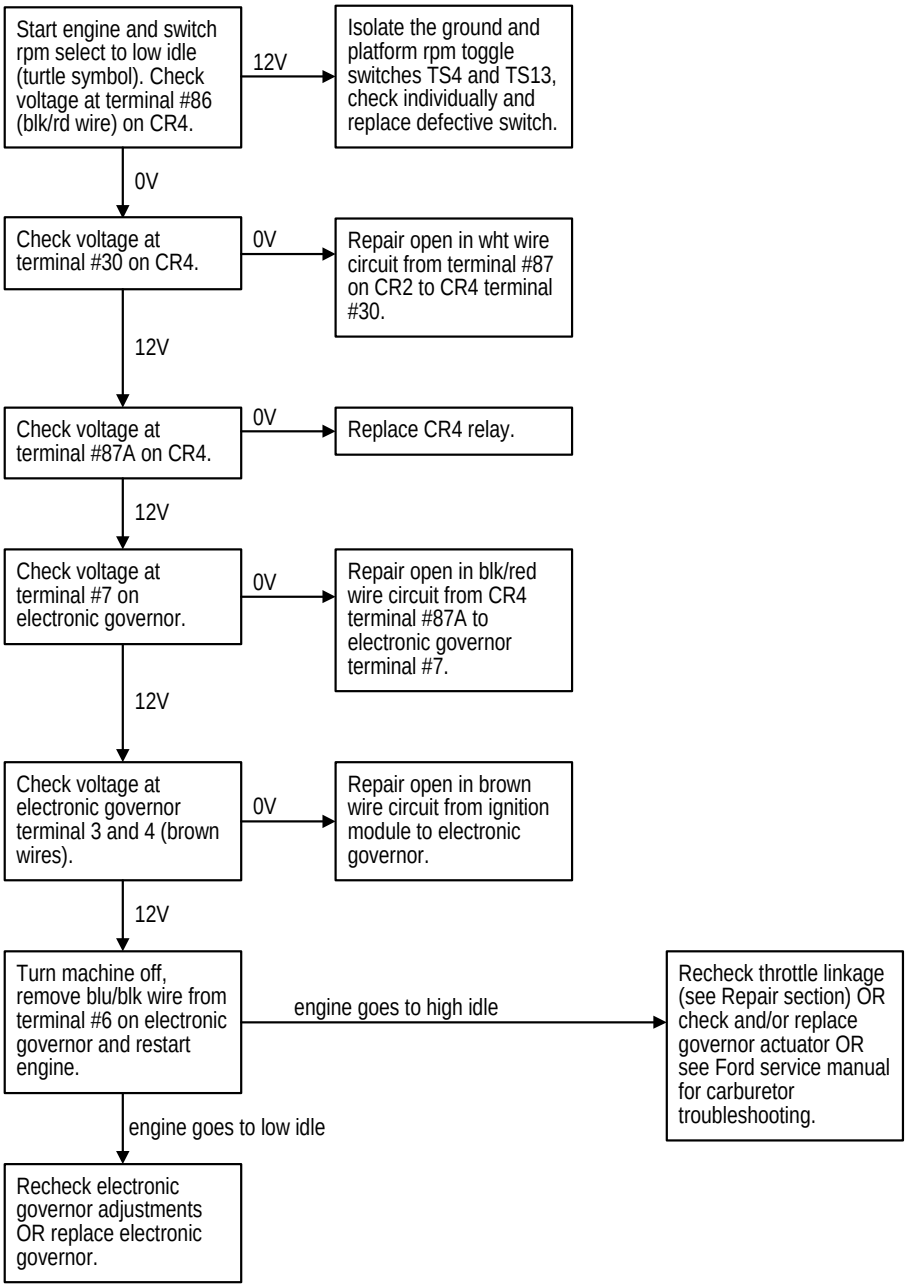

https://truckmanualshub.com/

Chart 8

Engine High Idle Inoperative - Deutz Diesel Models

Be sure mechanical linkage is not binding or defective.

Be sure 2-speed solenoid grounding wires are free of corrosion and have full continuity to ground.

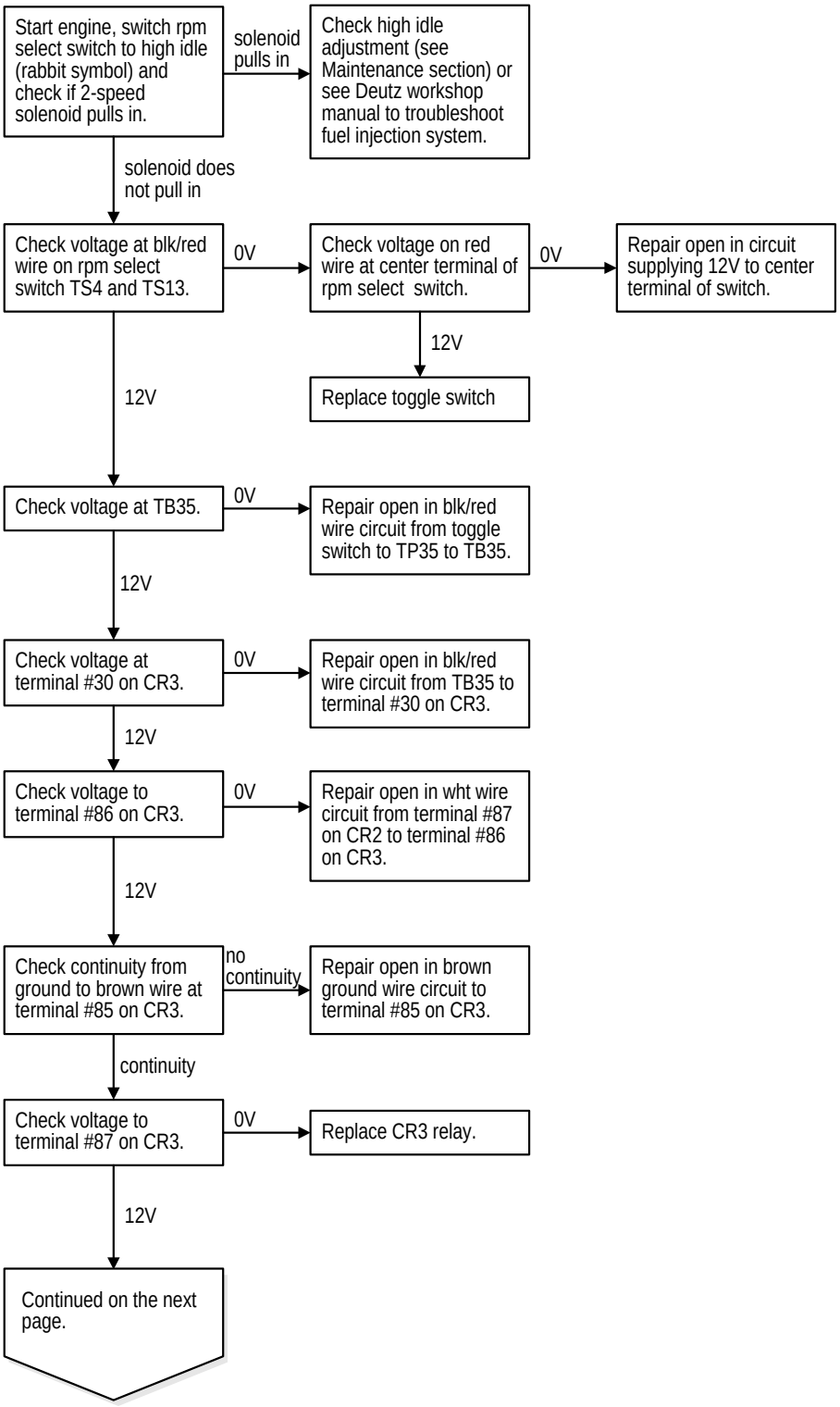

https://truckmanualshub.com/

CHART 8

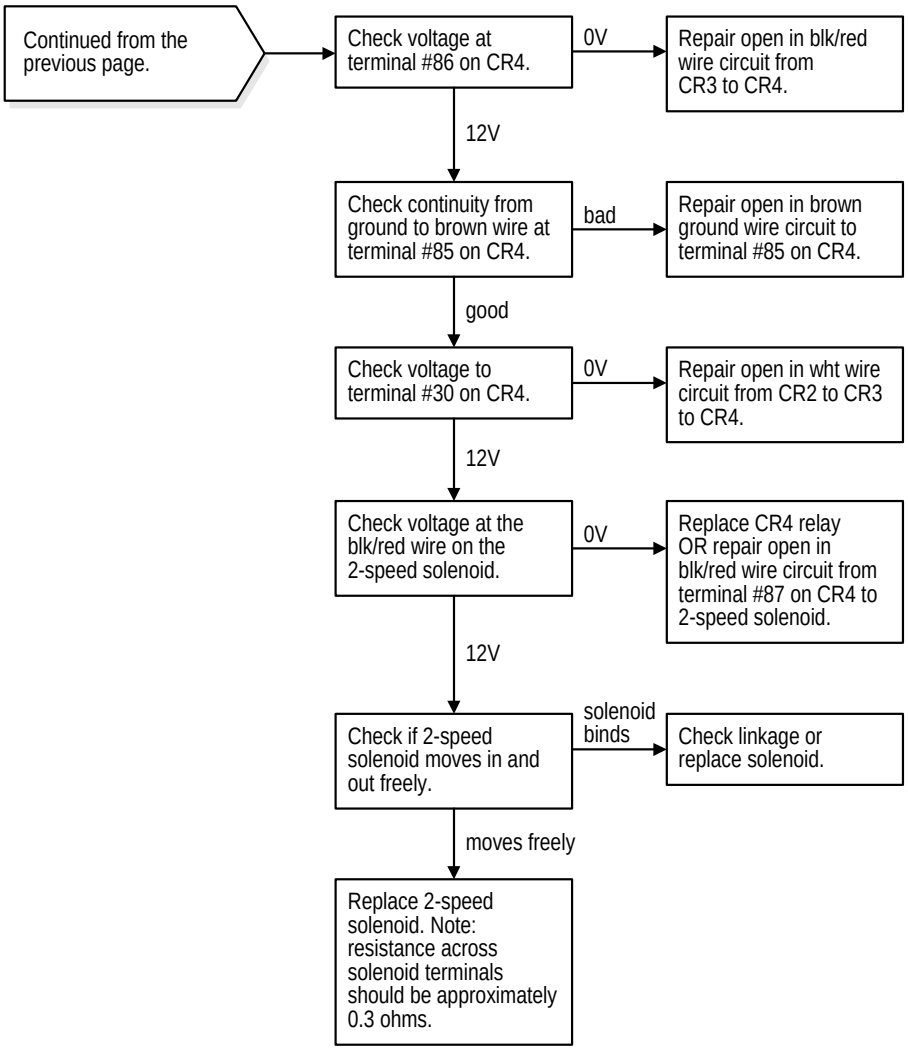

https://truckmanualshub.com/

Chart 9

Engine Low Idle Inoperative - Deutz Diesel Models

Check if mechanical linkage from 2-speed solenoid to fuel injection system is binding or defective.

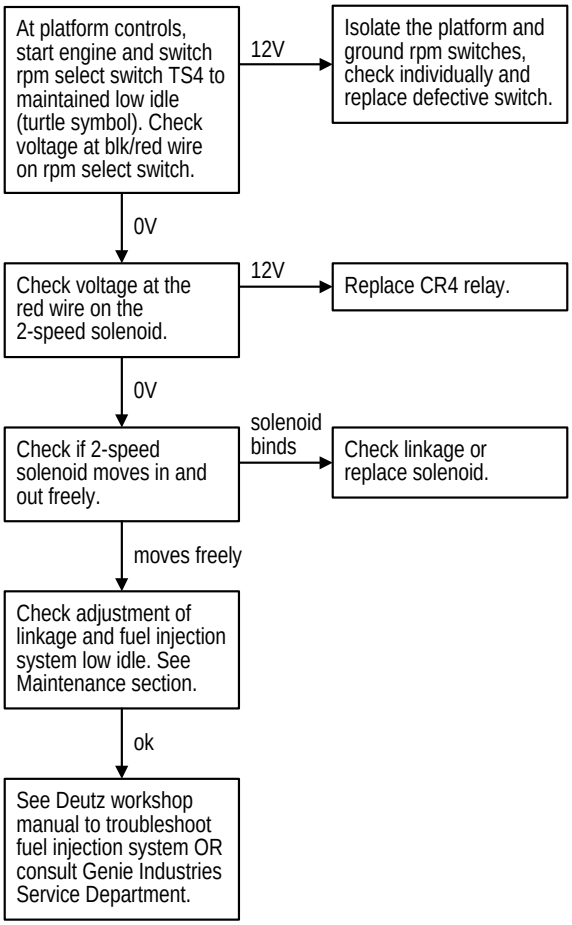

https://truckmanualshub.com/

Chart 10

All Functions Inoperative, Engine Starts and Runs

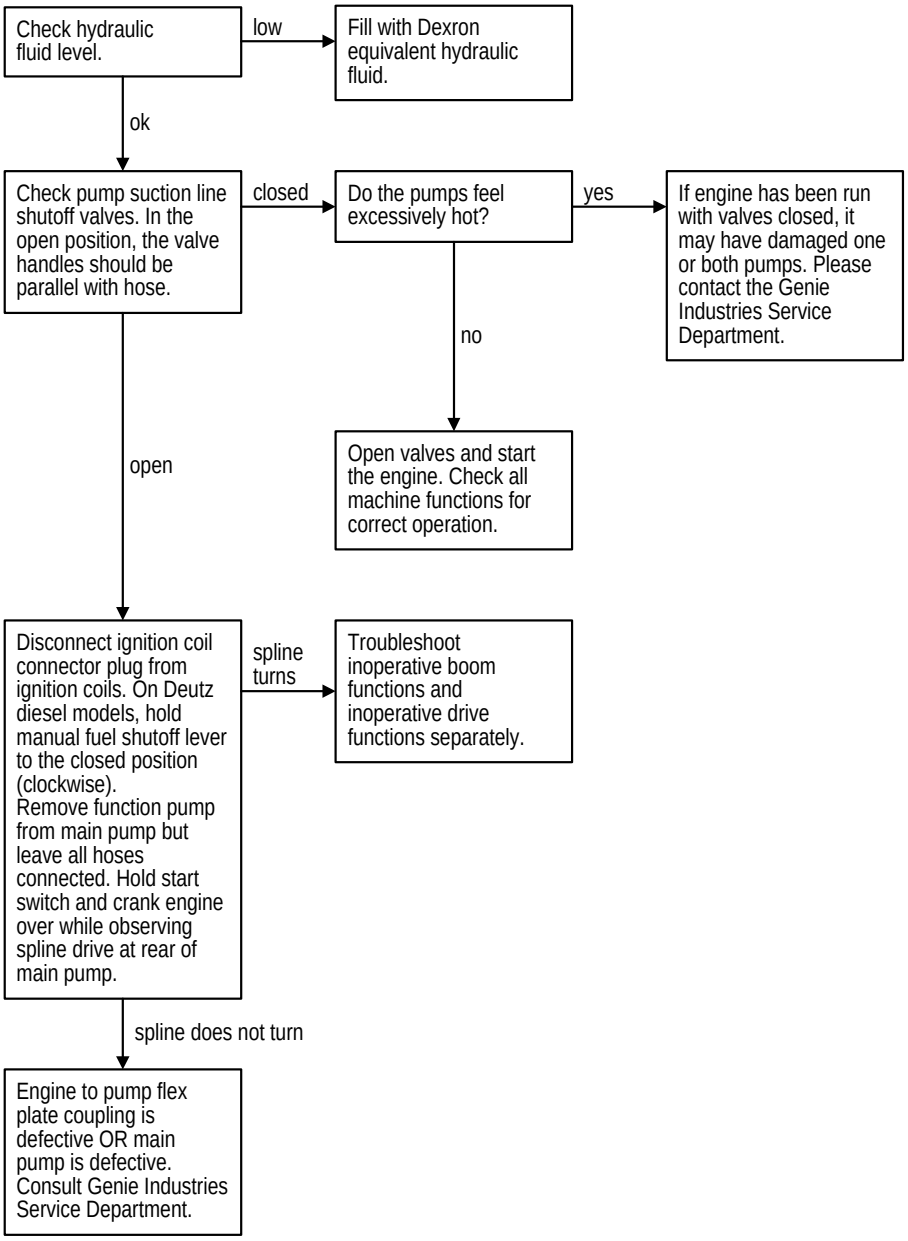

https://truckmanualshub.com/

Chart 11

All Lift and Steer Functions Inoperative, Drive Functions Operational

Be sure the hydraulic suction line shutoff valve for the lift/steer pump is in the open position.

Be sure all grounding wires for the hydraulic manifold valves are free of corrosion and have full continuity to ground.

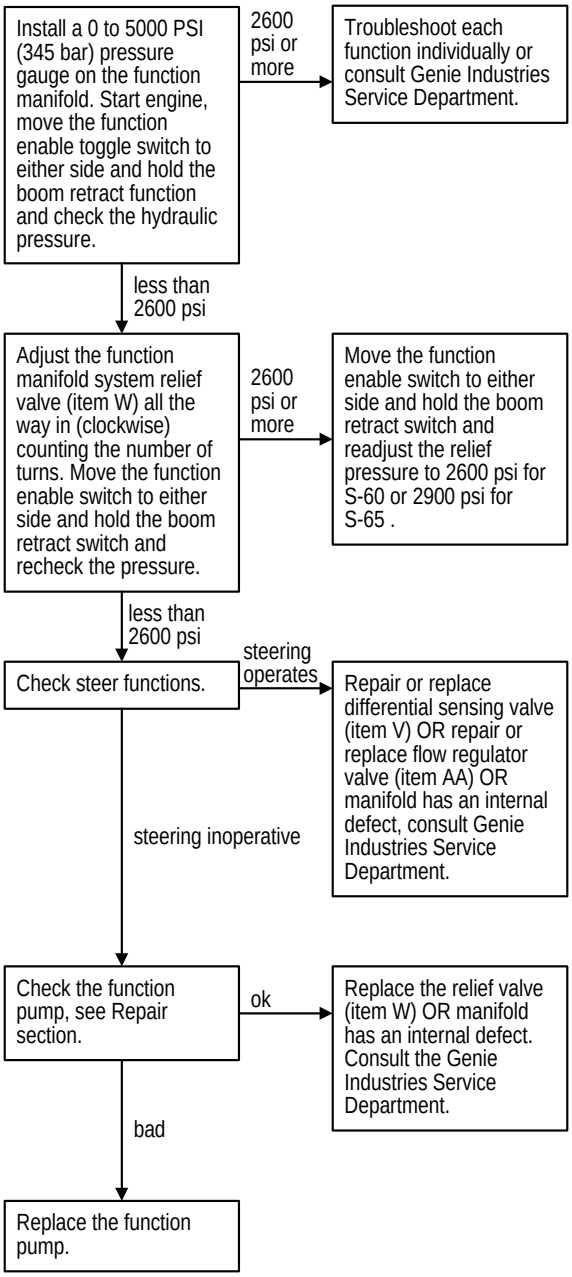

https://truckmanualshub.com/

Chart 12

Ground Controls Inoperative, Platform Controls Operate Normally

Be sure all other functions operate normally, including the platform controls.

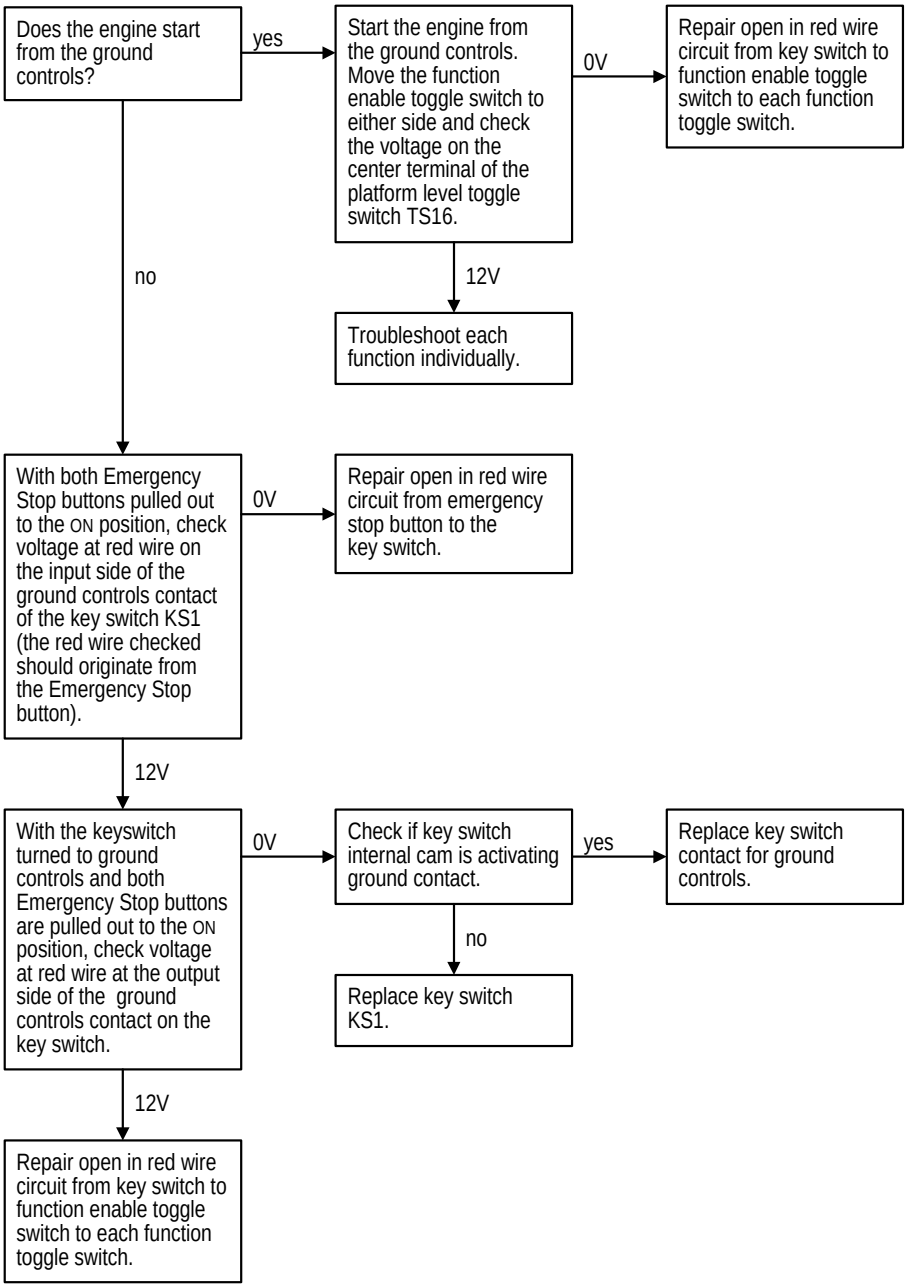

https://truckmanualshub.com/

Chart 13

Platform Controls Inoperative, Ground Controls Operate Normally

Be sure all cables from chassis through the cable track are in good condition with no kinks or abrasions.

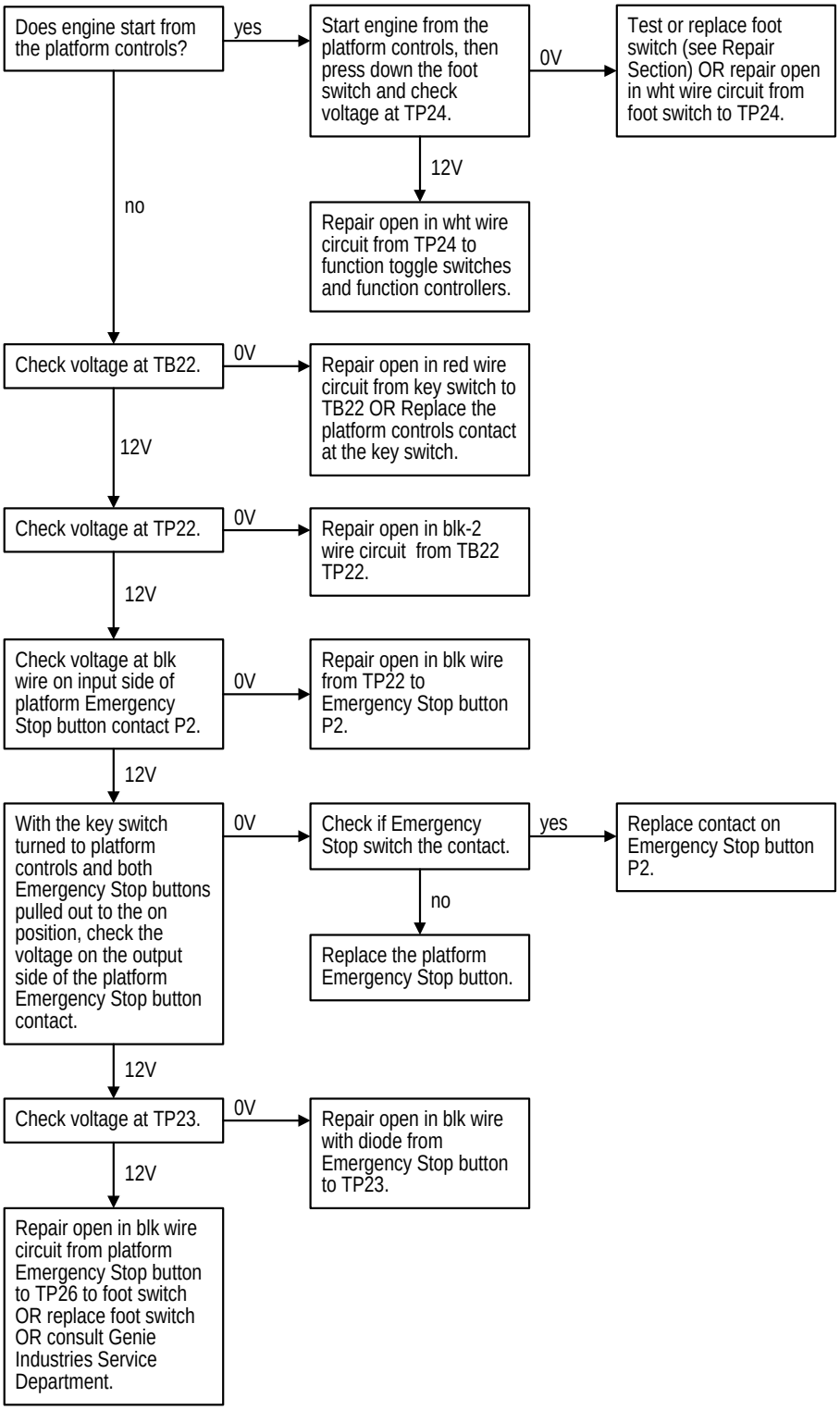

https://truckmanualshub.com/

Chart 14

Boom Up Function Inoperative

Be sure all other functions operate normally.

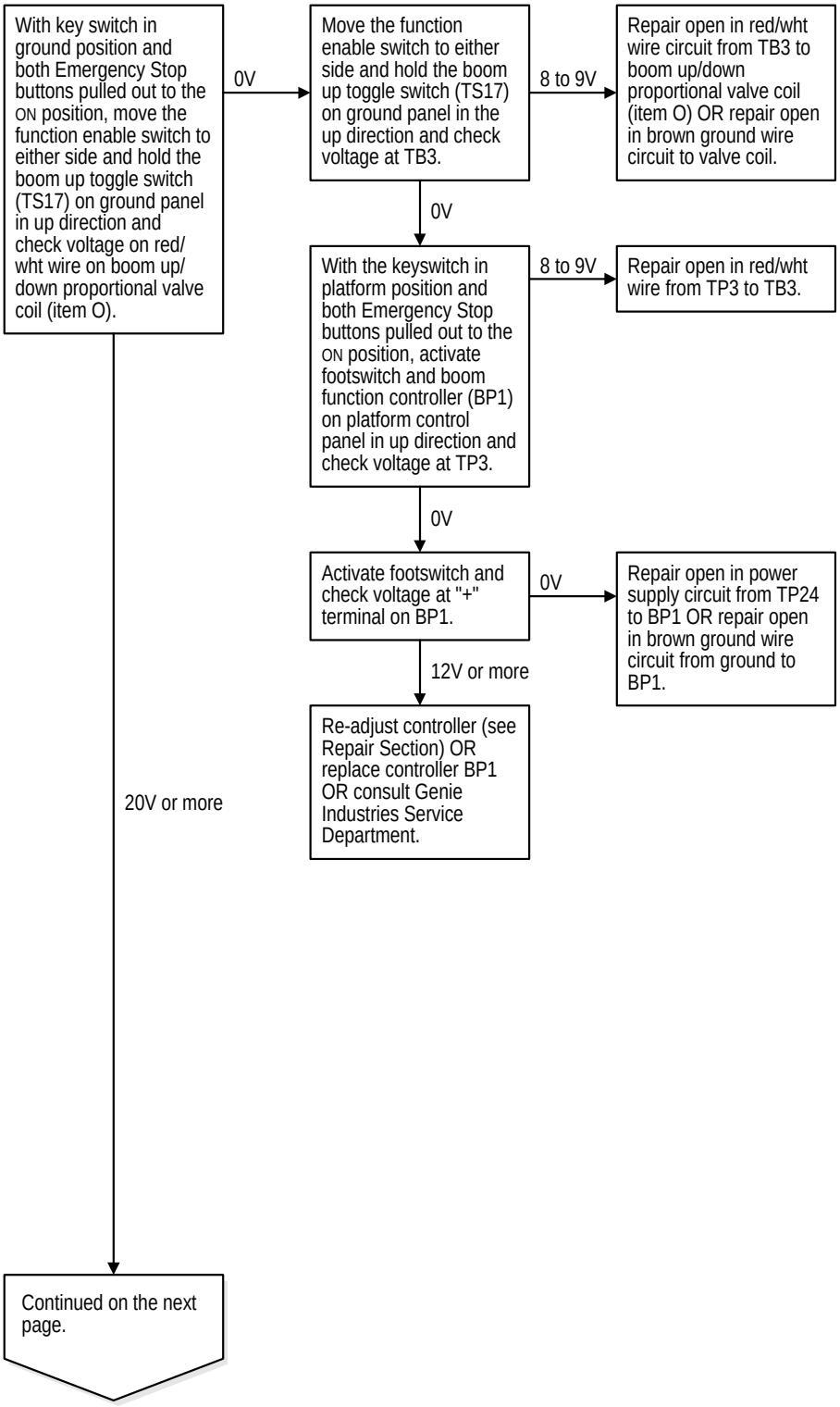

https://truckmanualshub.com/

CHART 14

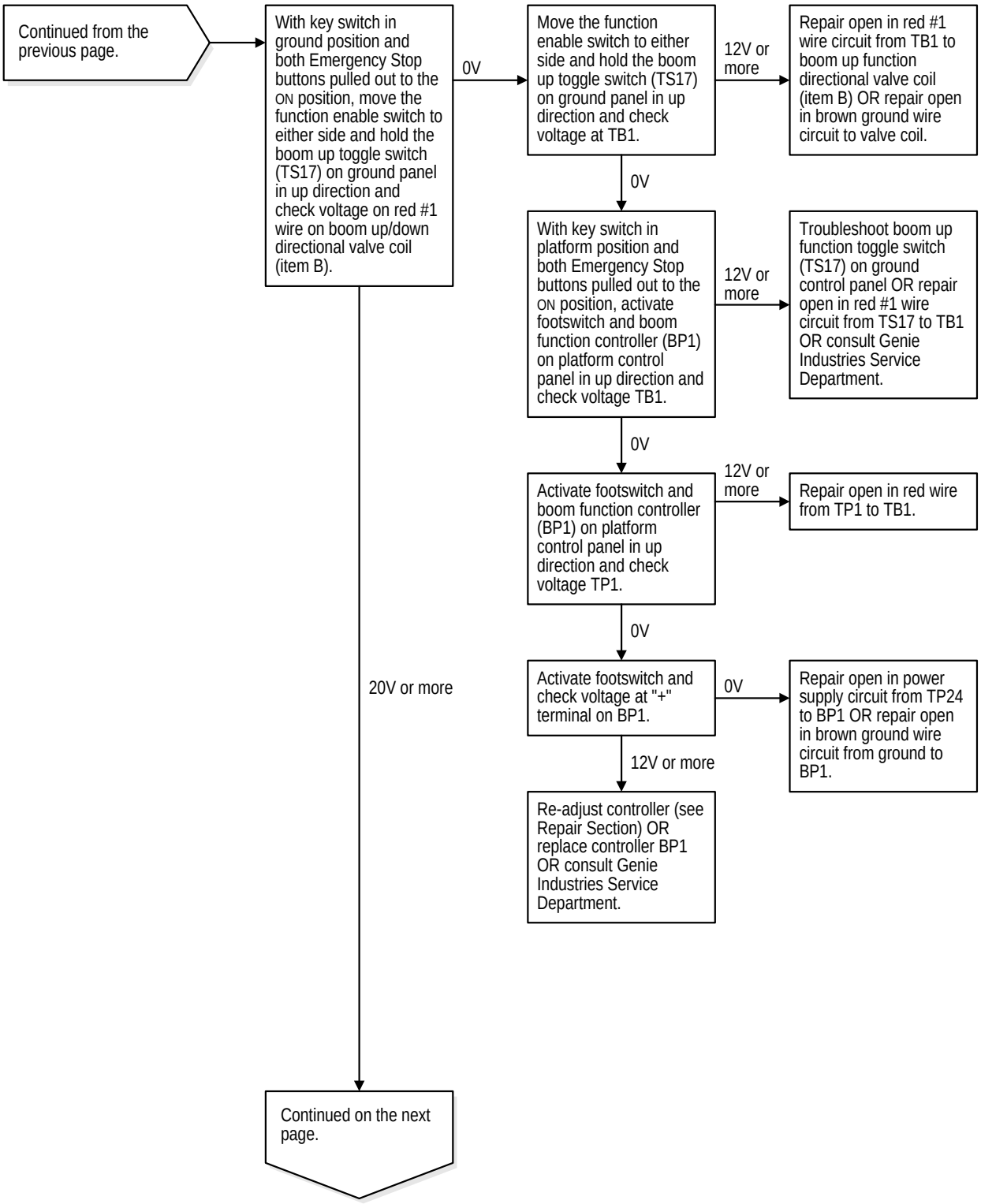

https://truckmanualshub.com/

CHART 14

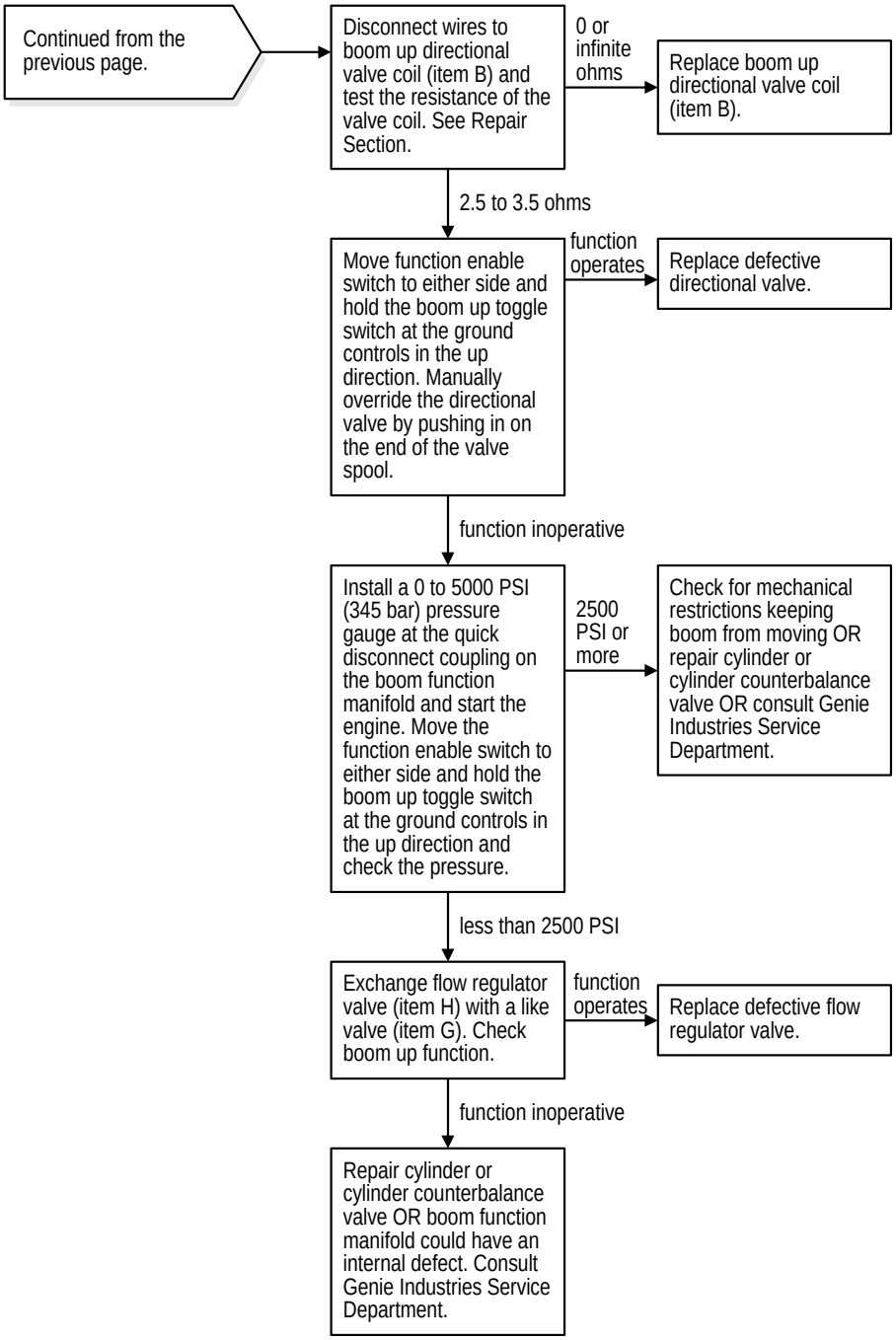

https://truckmanualshub.com/

Chart 15

Boom Down Function Inoperative

Be sure all other functions operate normally.

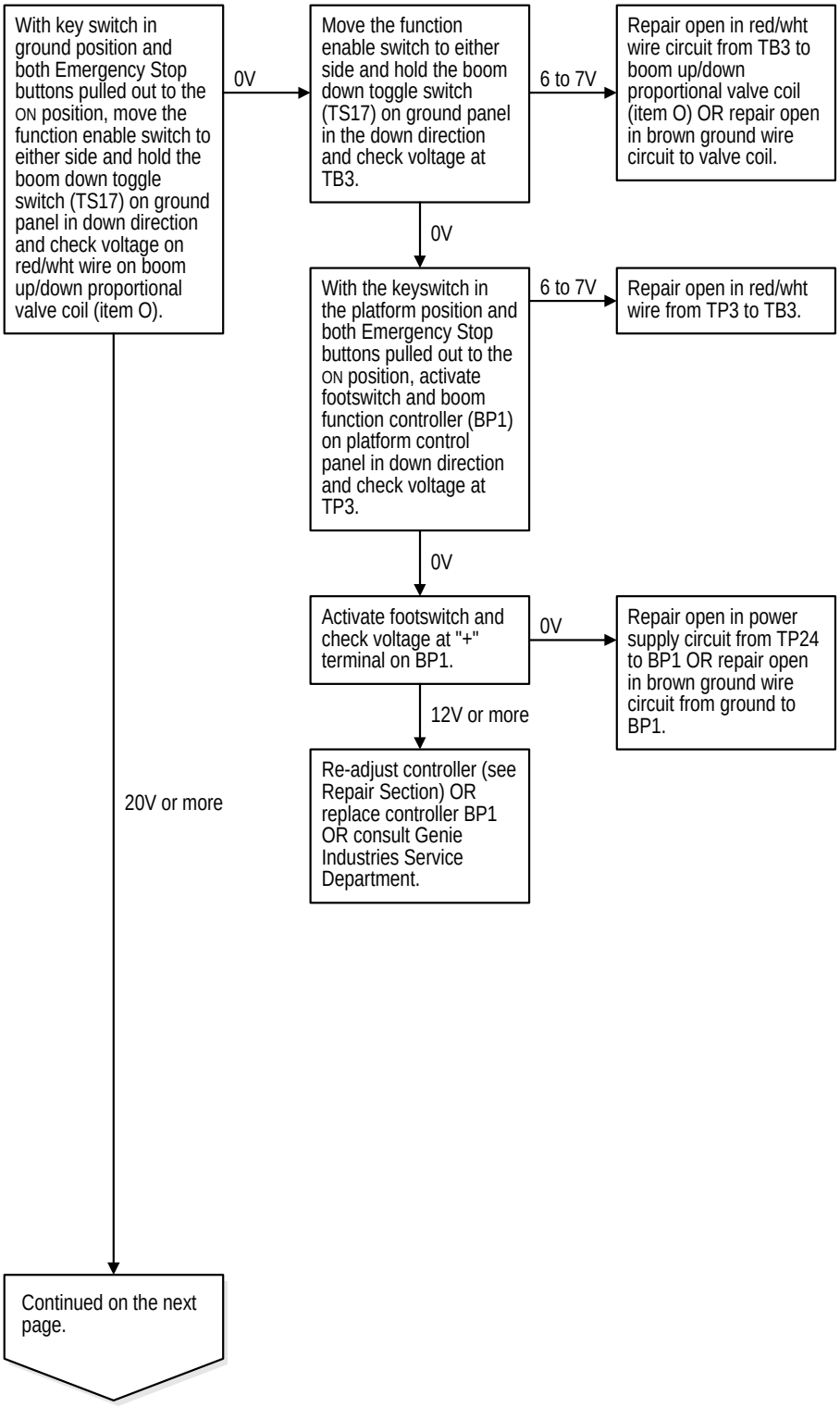

https://truckmanualshub.com/

CHART 15

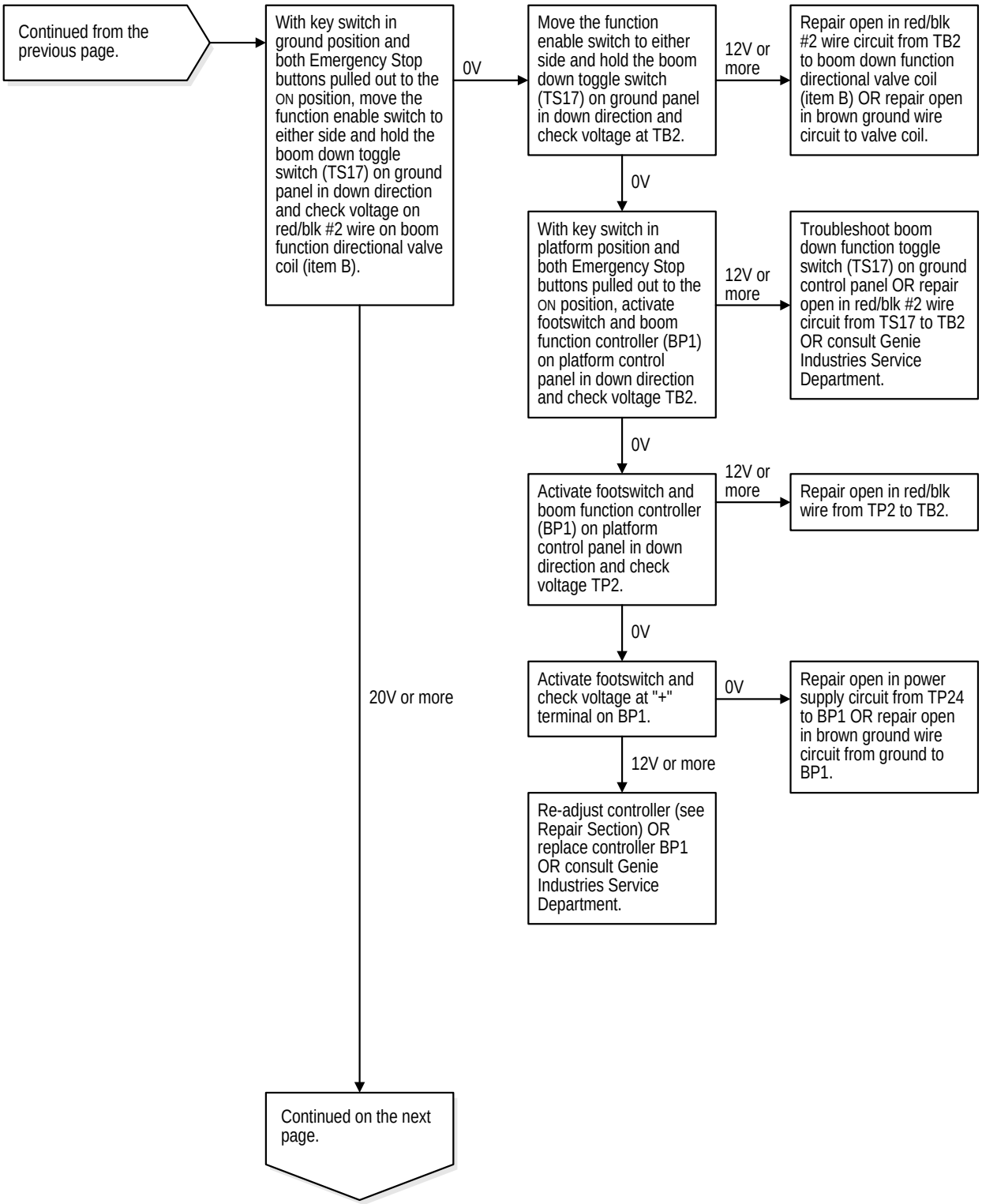

https://truckmanualshub.com/

CHART 15

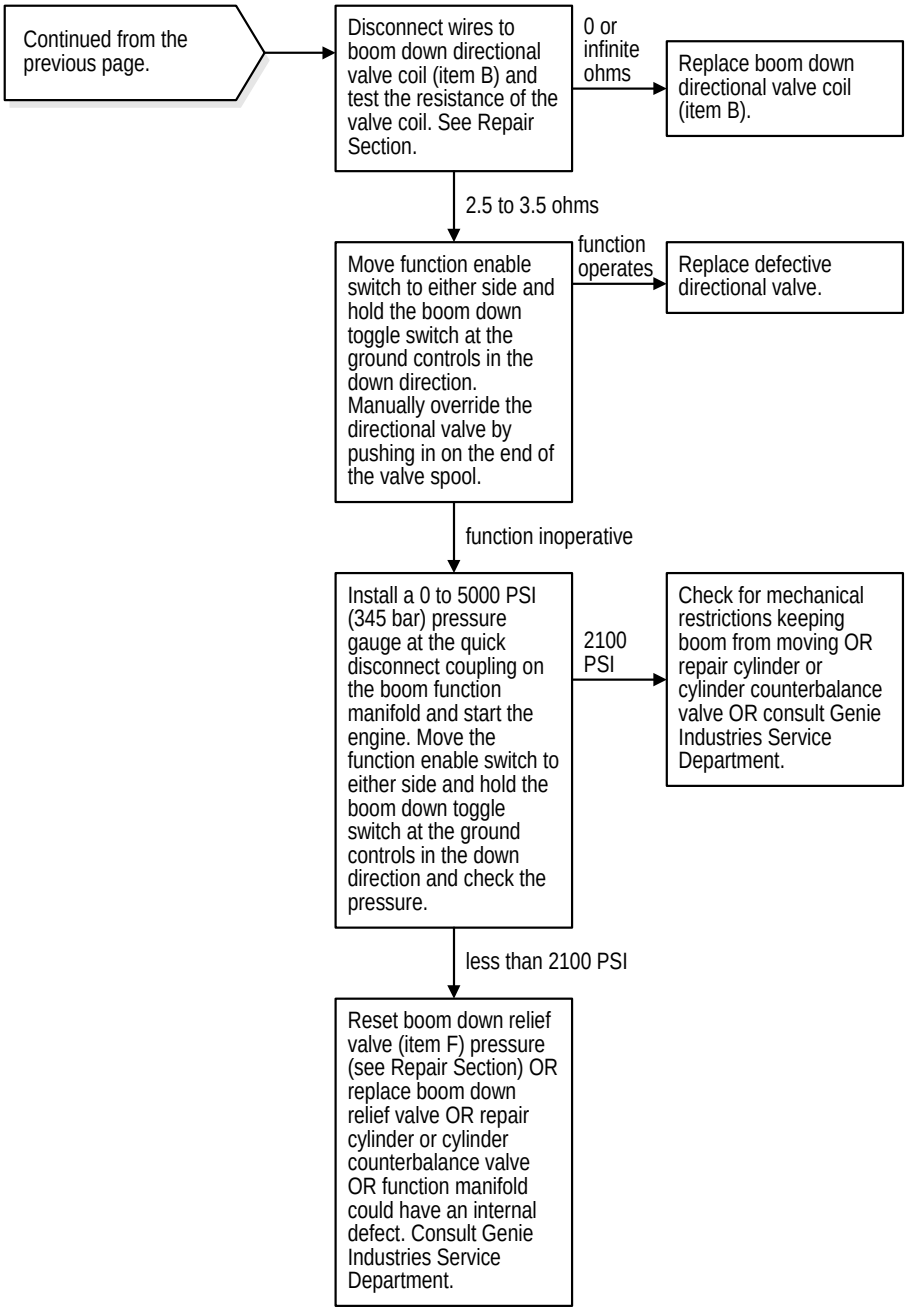

https://truckmanualshub.com/

Chart 16

Boom Extend Function Inoperative

Be sure all other functions operate normally.

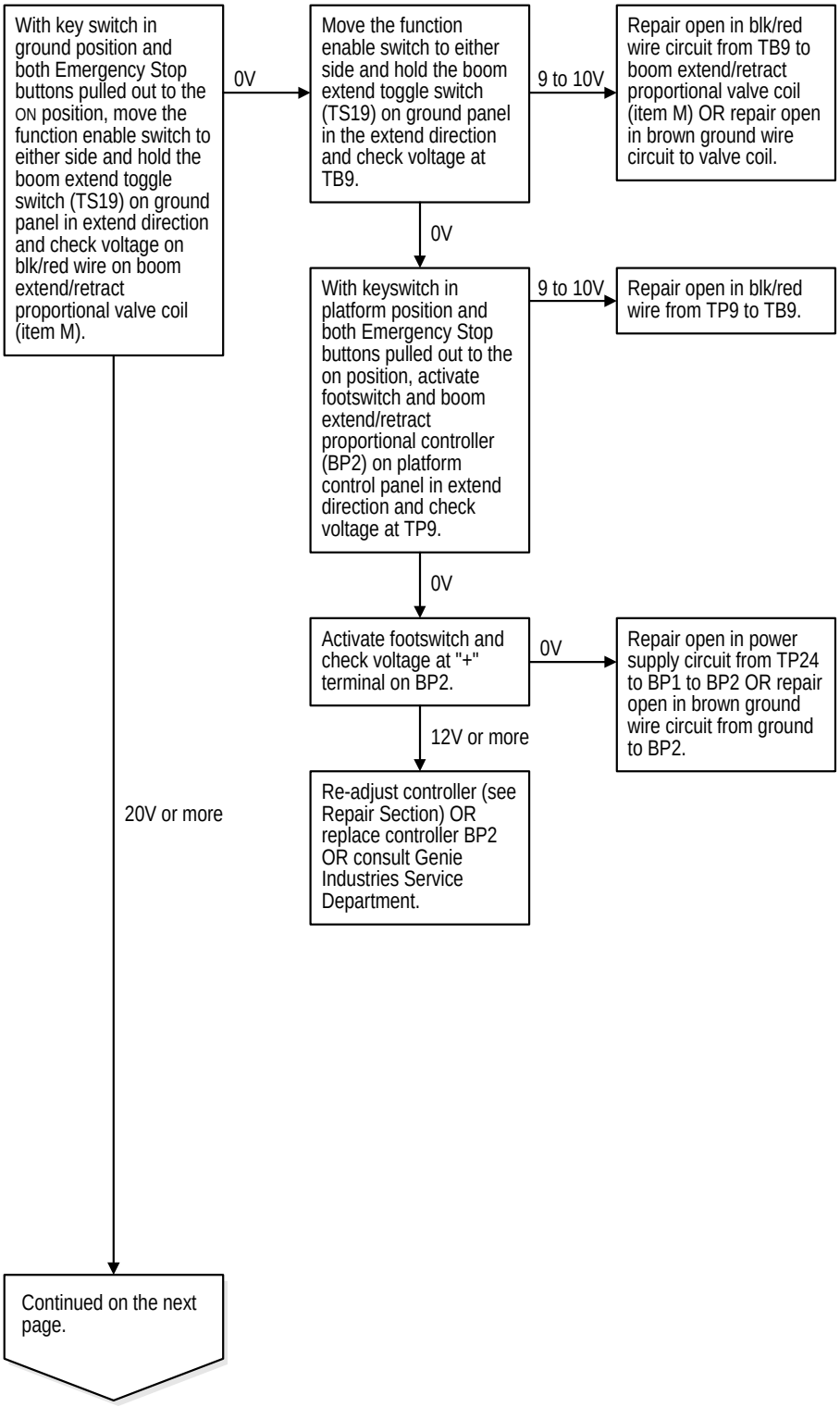

https://truckmanualshub.com/

CHART 16

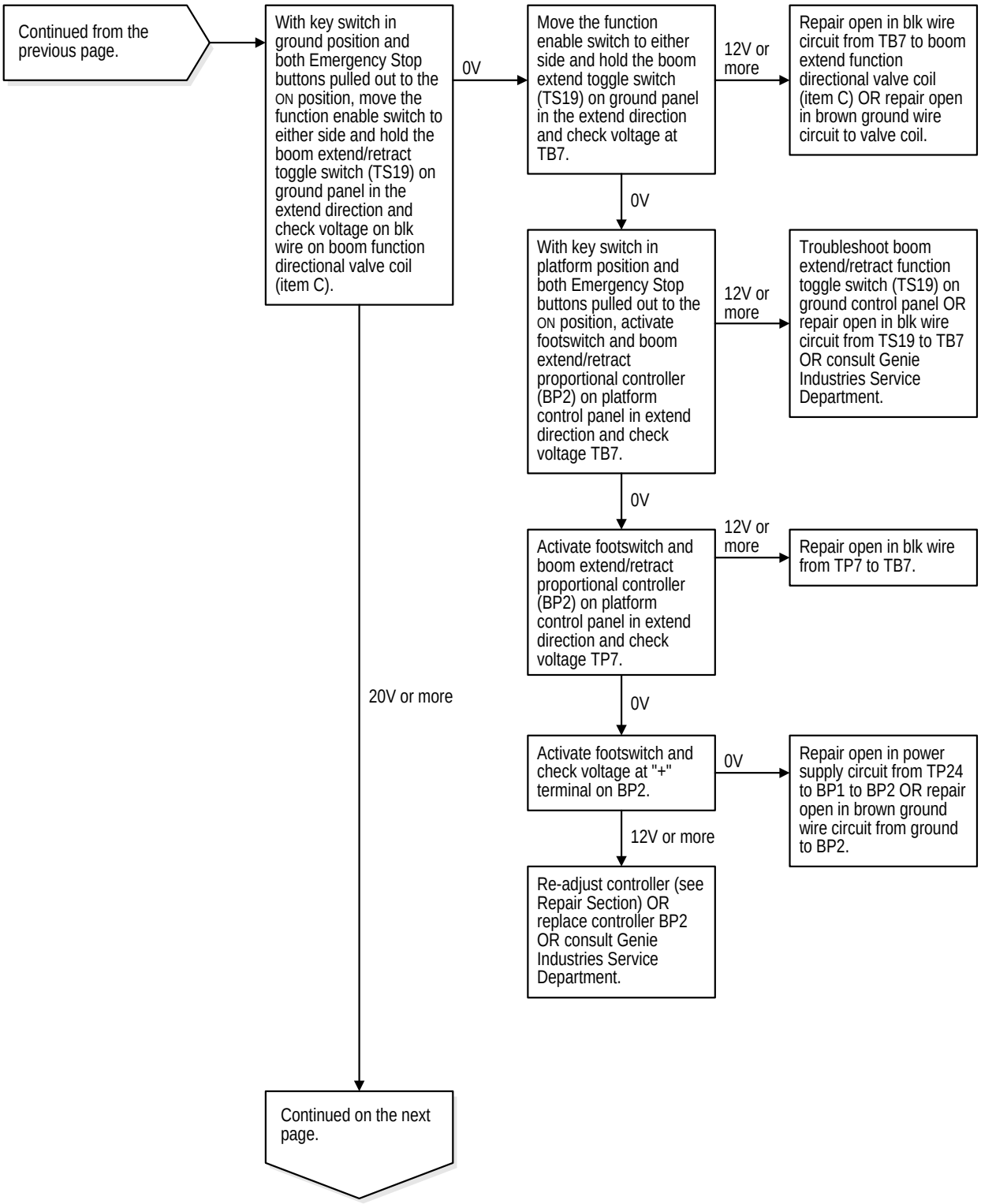

https://truckmanualshub.com/

CHART 16

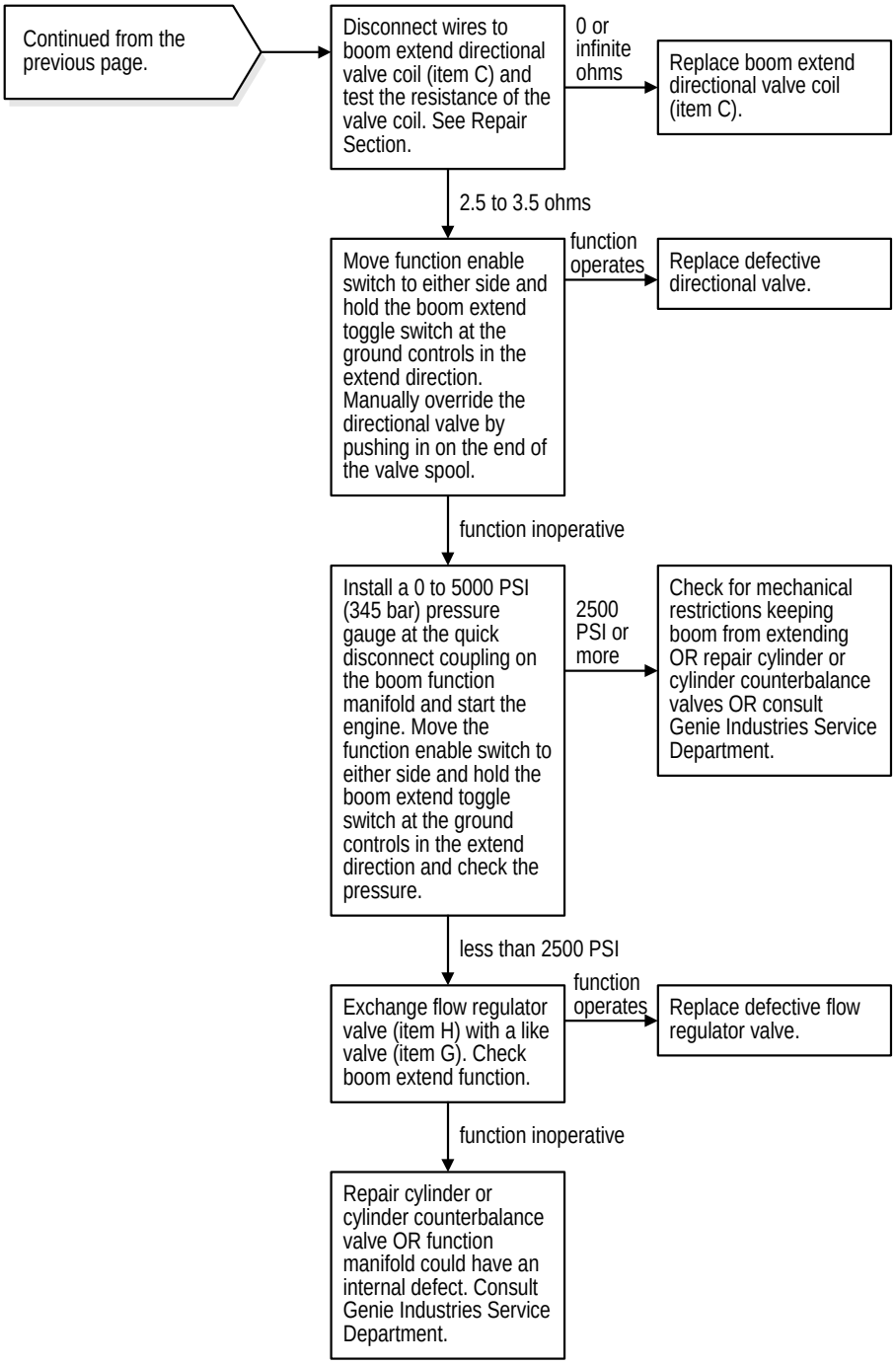

https://truckmanualshub.com/

Chart 17

Boom Retract Function Inoperative

Be sure all other functions operate normally.

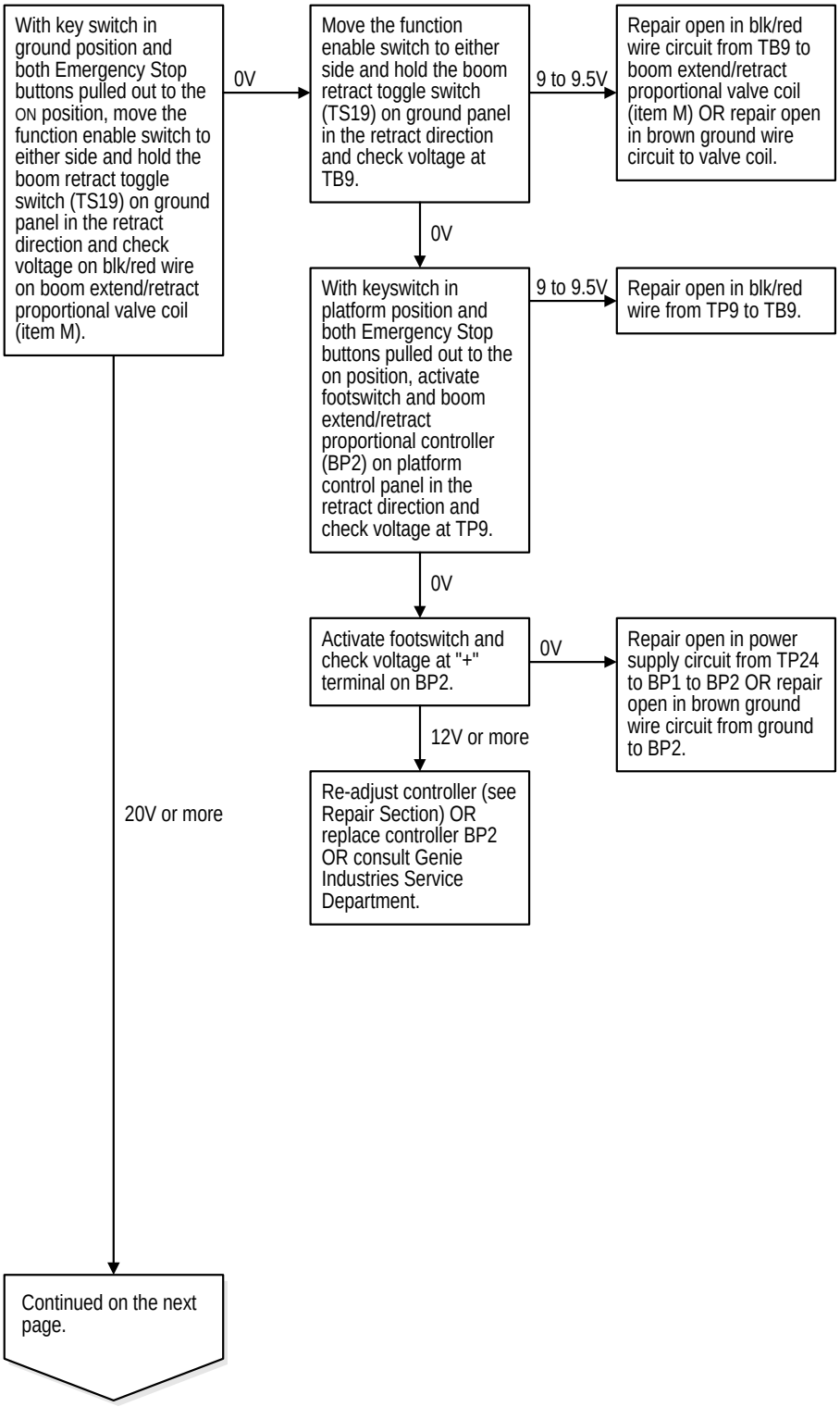

https://truckmanualshub.com/

CHART 17

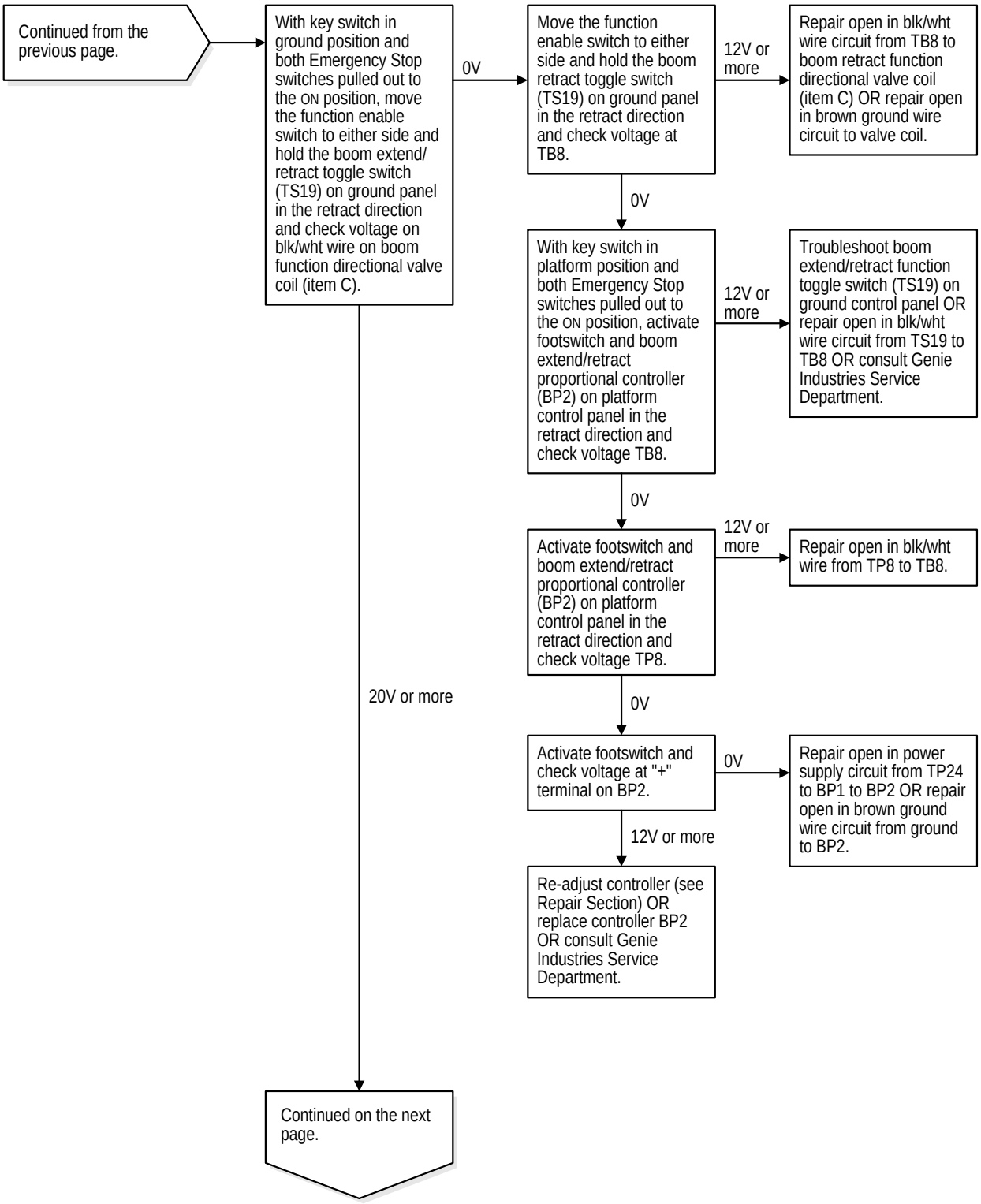

https://truckmanualshub.com/

CHART 17

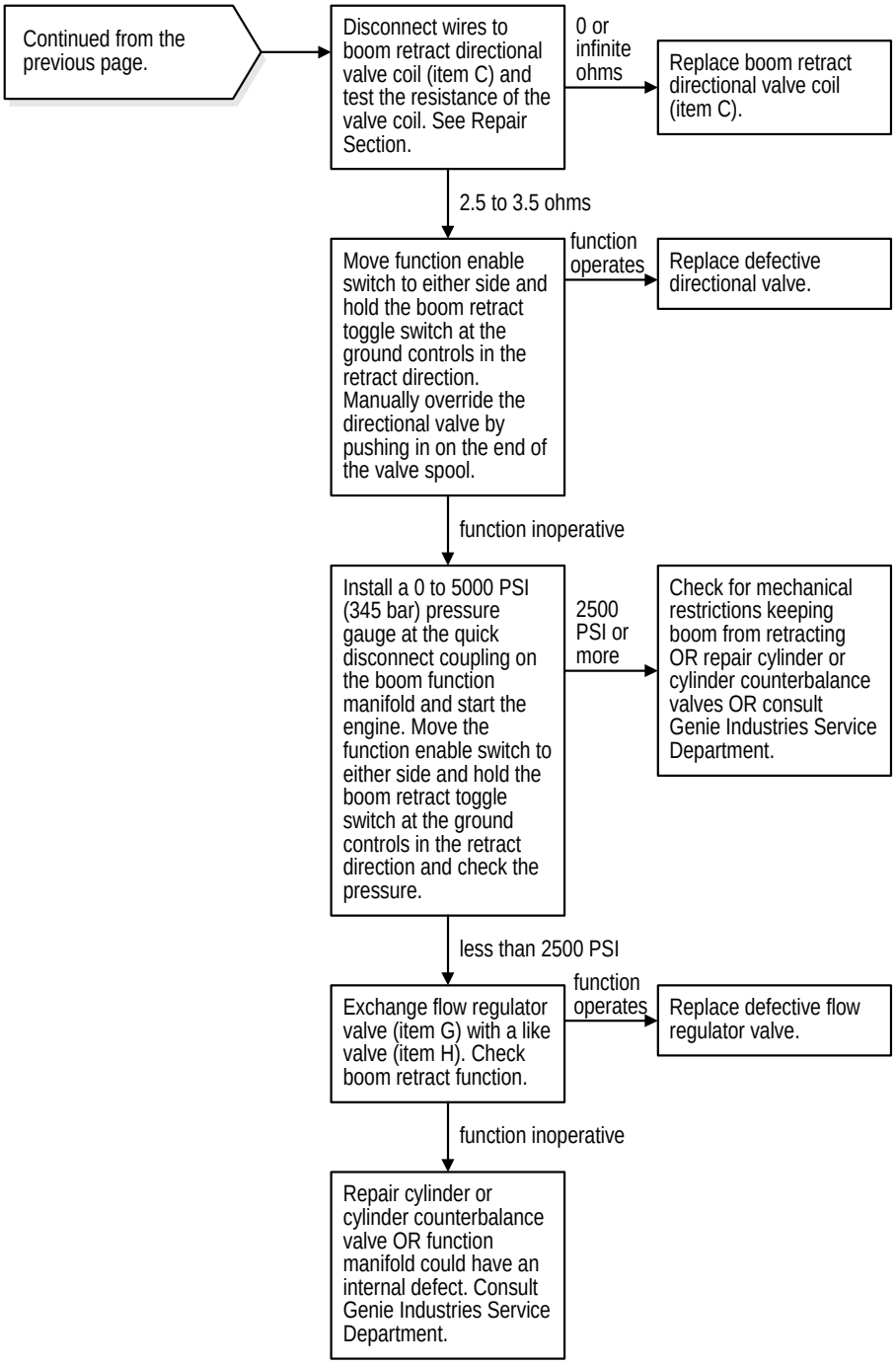

https://truckmanualshub.com/

Chart 18

Turntable Rotate Left Function Inoperative

Be sure all other functions operate normally.

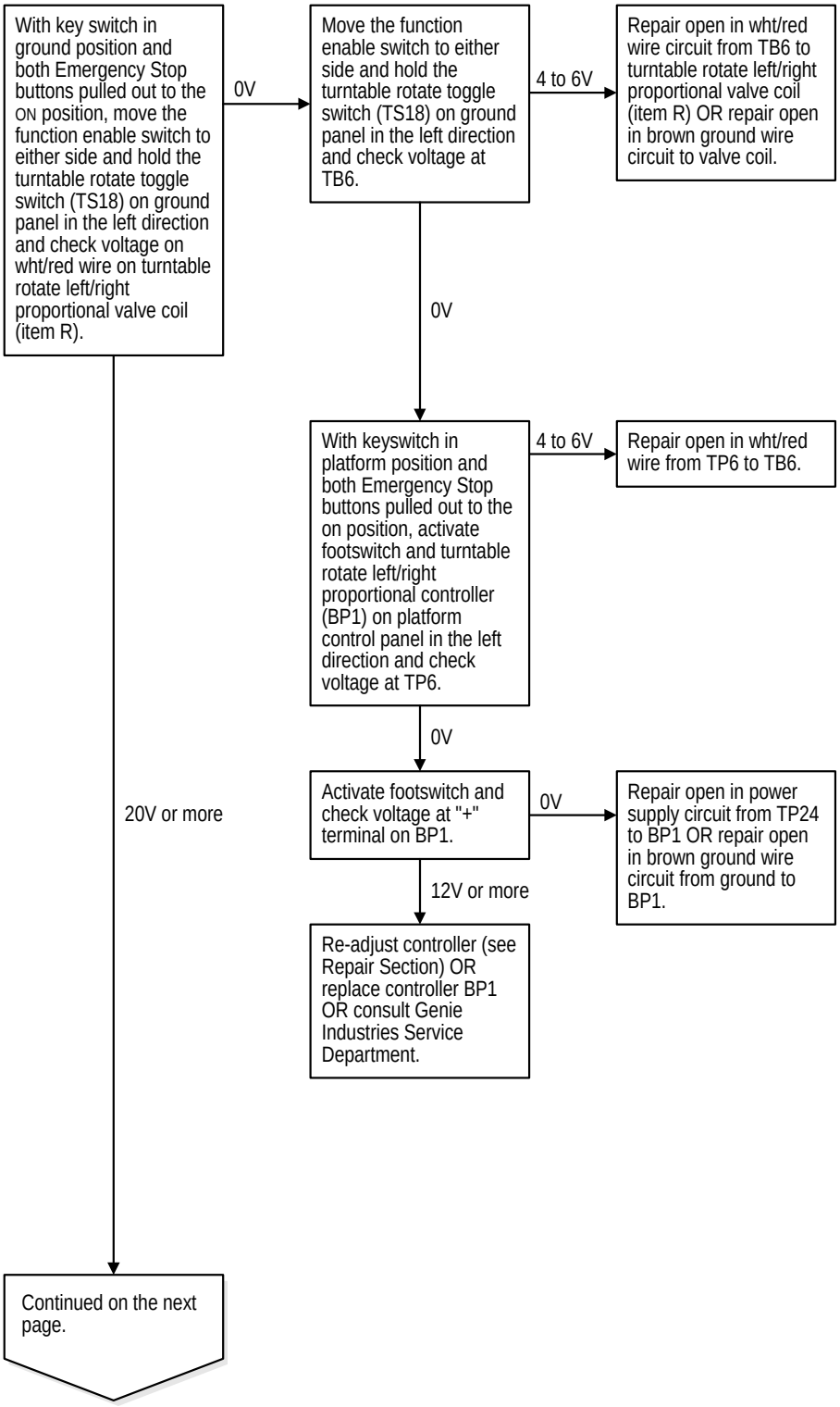

https://truckmanualshub.com/

CHART 18

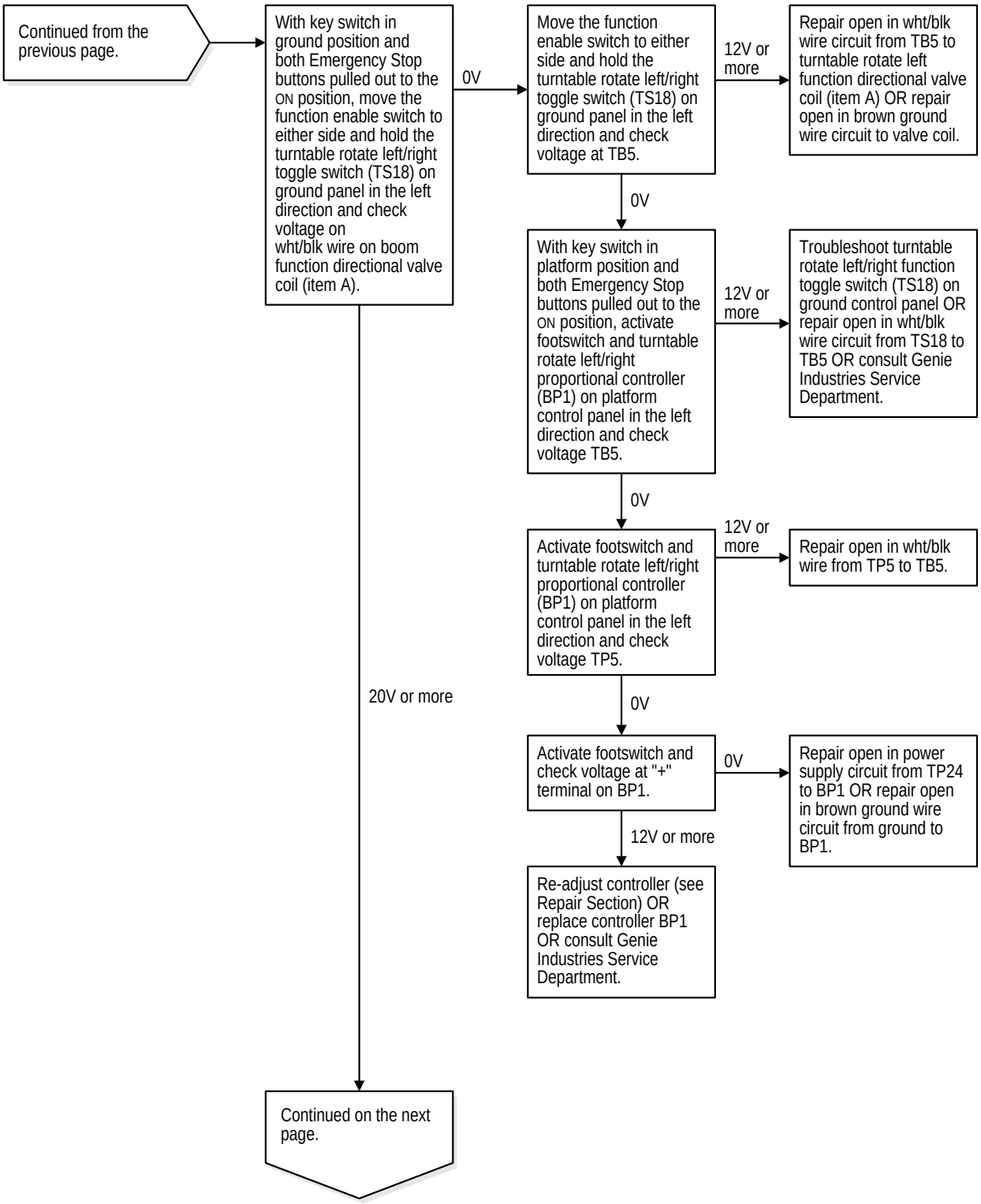

https://truckmanualshub.com/

CHART 18

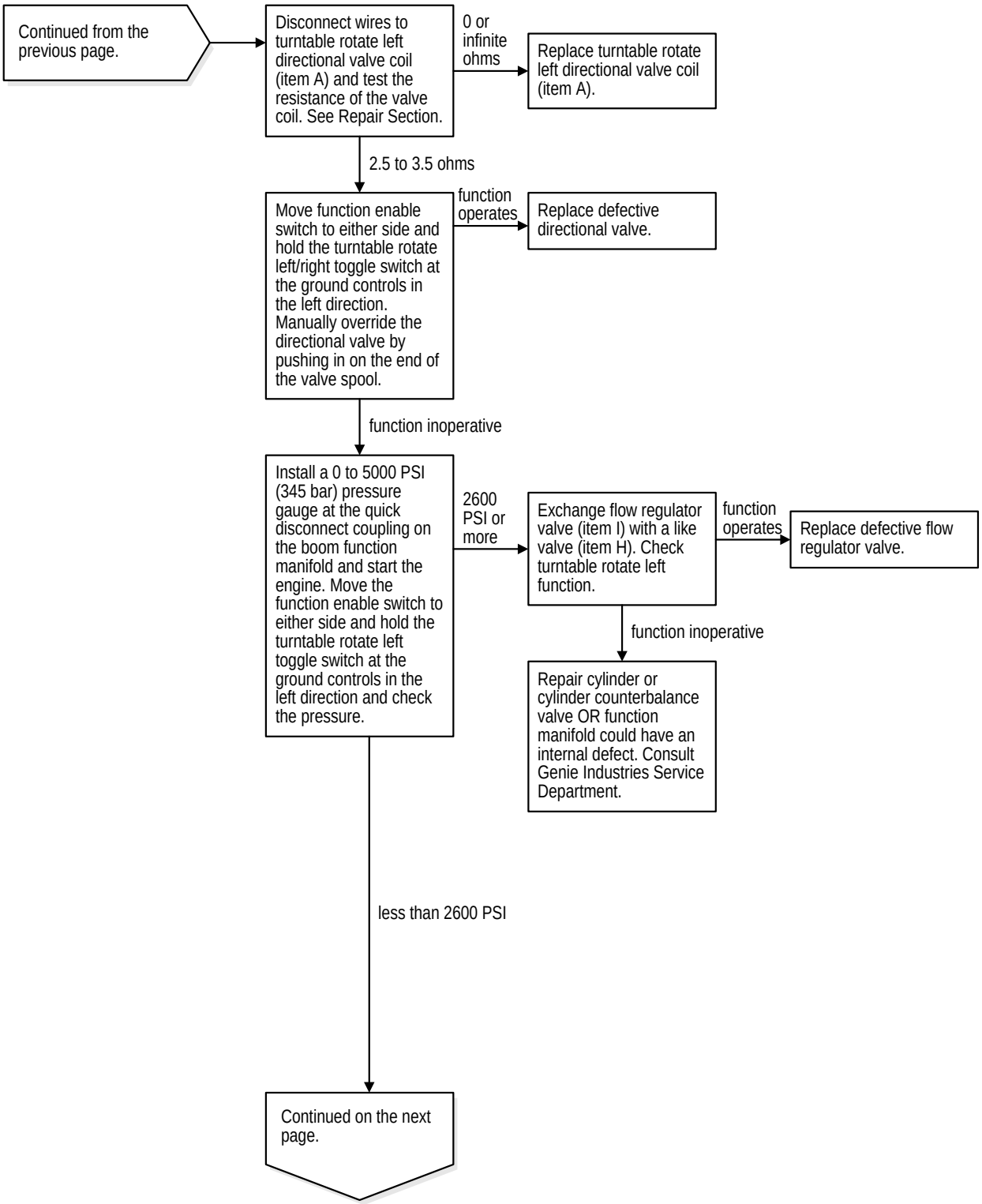

https://truckmanualshub.com/

CHART 18

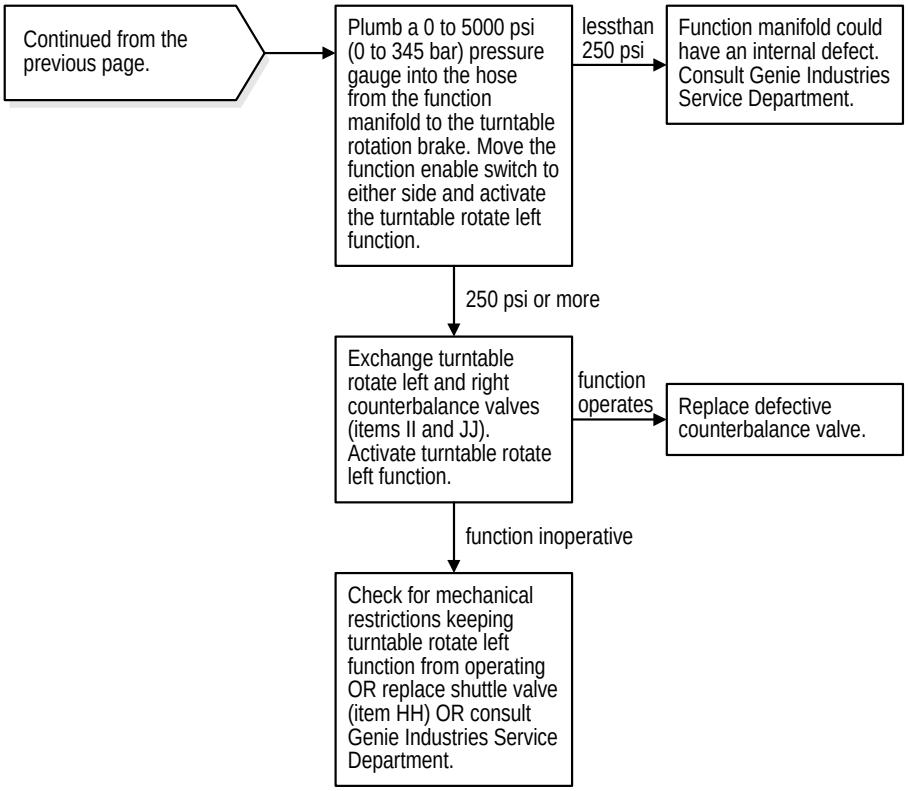

https://truckmanualshub.com/

Chart 19

Turntable Rotate Right Function Inoperative

Be sure all other functions operate normally.

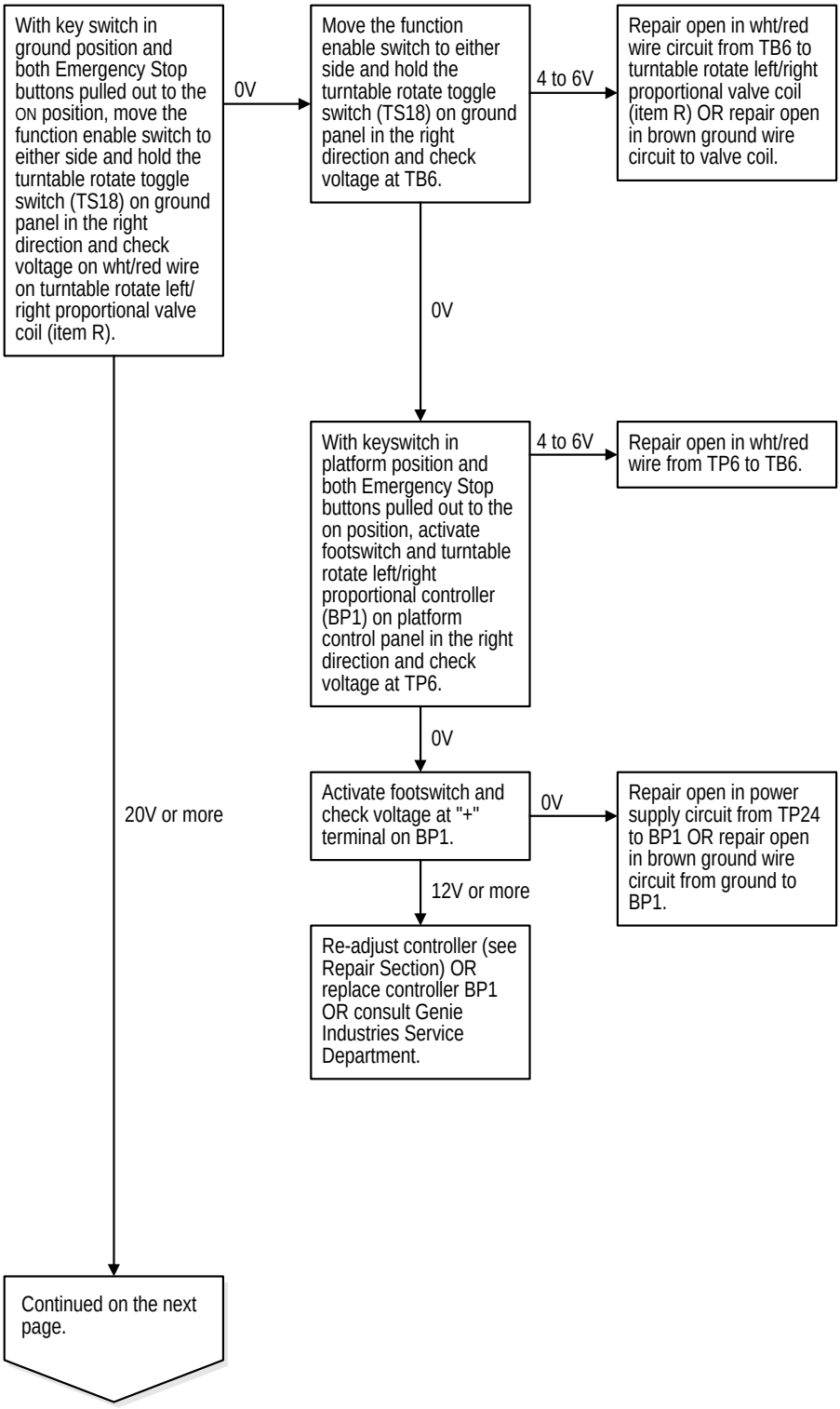

https://truckmanualshub.com/

CHART 19

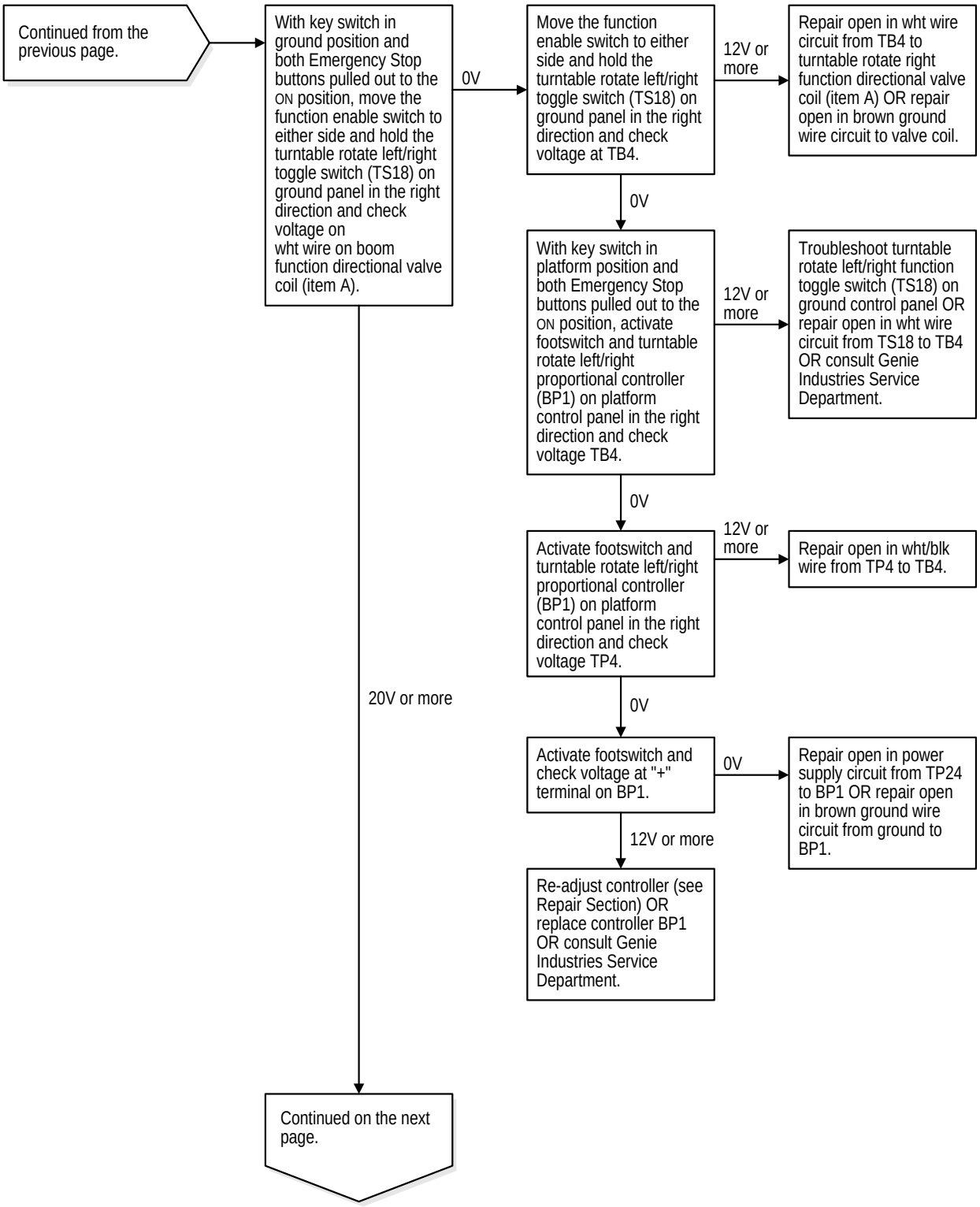

https://truckmanualshub.com/

CHART 19

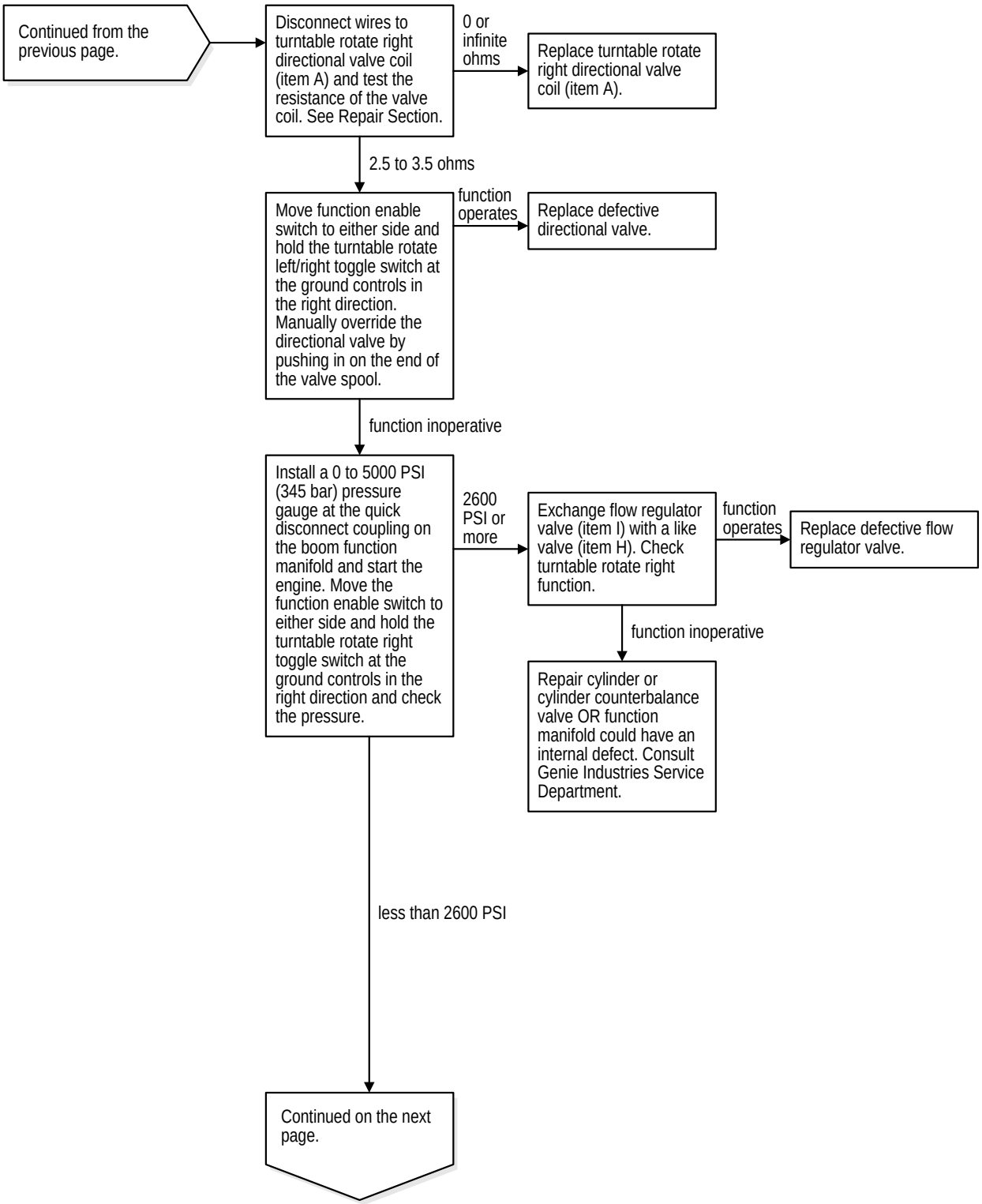

https://truckmanualshub.com/

CHART 19

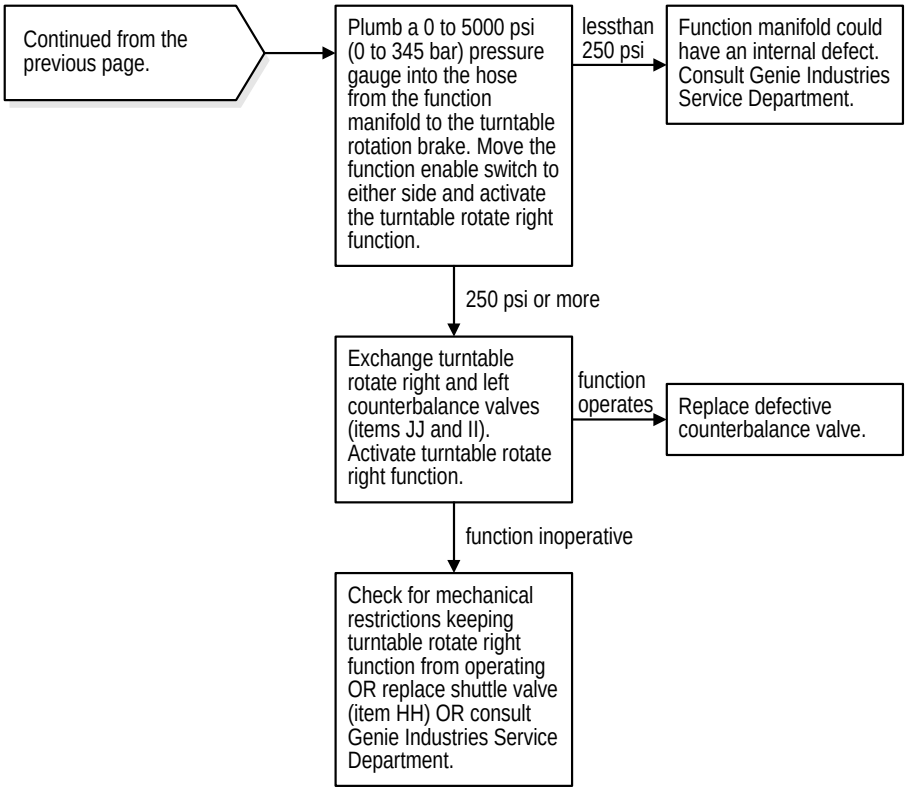

https://truckmanualshub.com/

Chart 20

All Platform Leveling Functions Inoperative

Be sure all other functions operate normally.

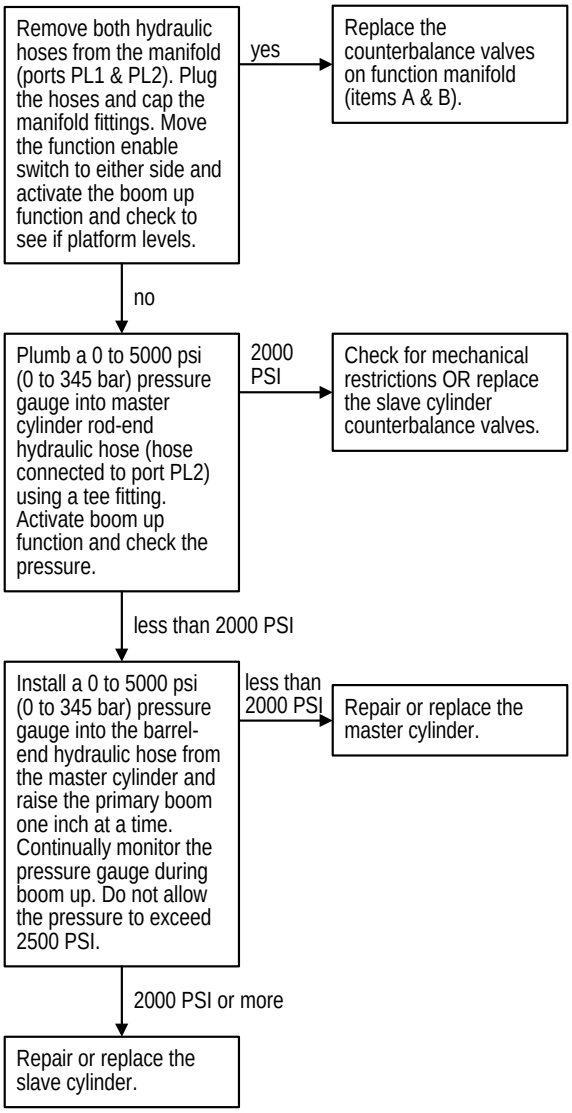

https://truckmanualshub.com/

Chart 21

Platform Level Up Function Inoperative

Be sure all other functions operate normally.

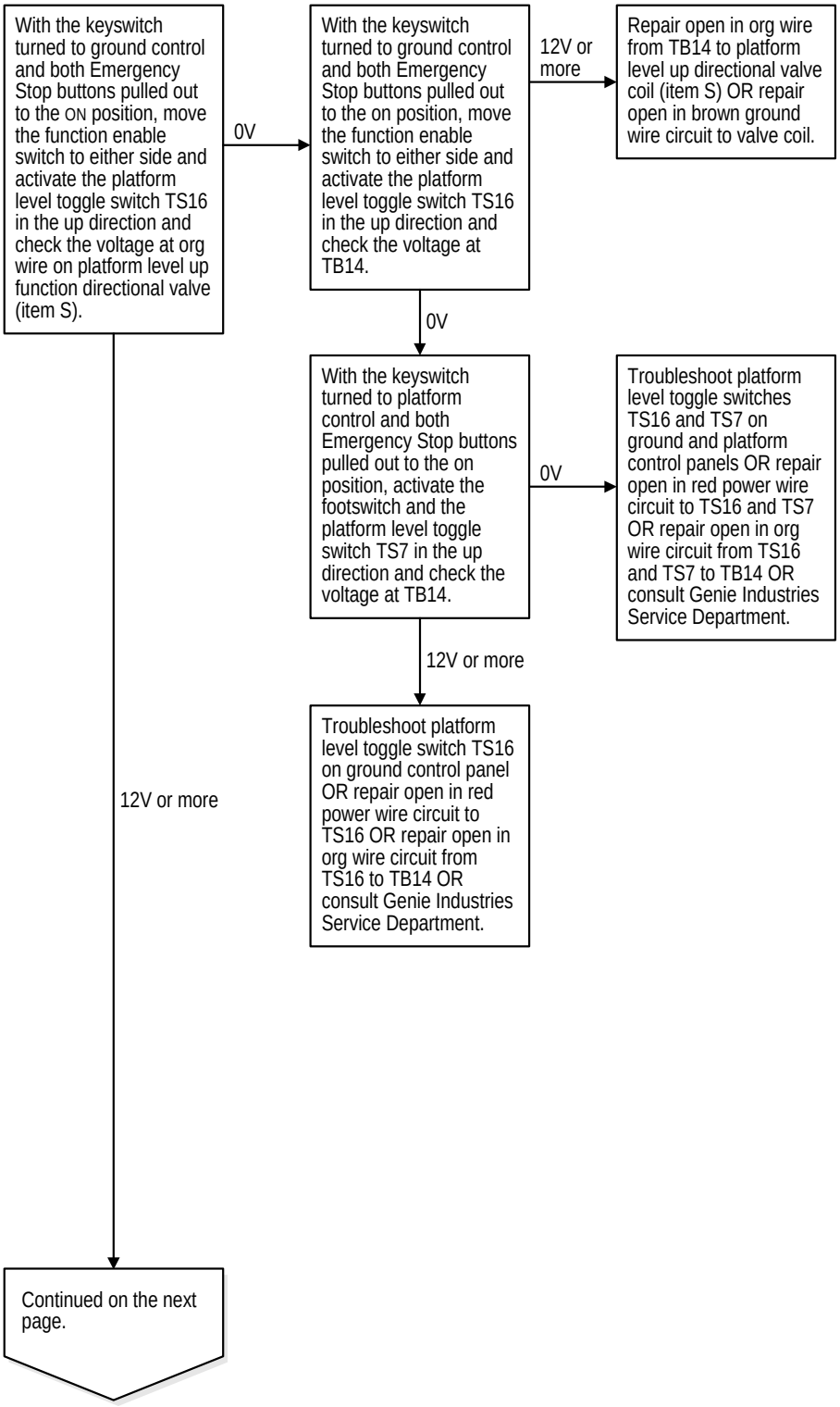

https://truckmanualshub.com/

CHART 21

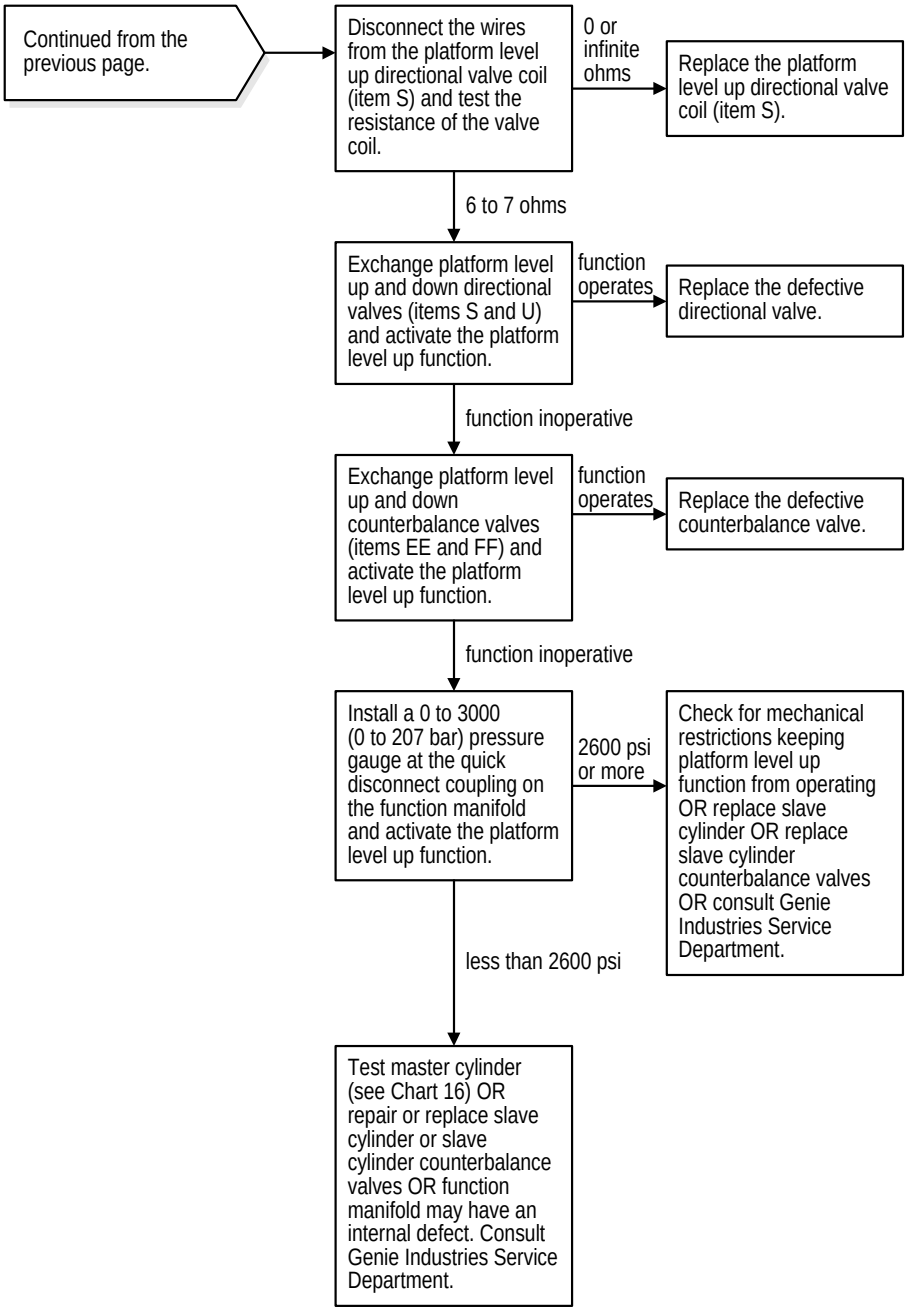

https://truckmanualshub.com/

Chart 22

Platform Level Down Function Inoperative

Be sure all other functions operate normally.

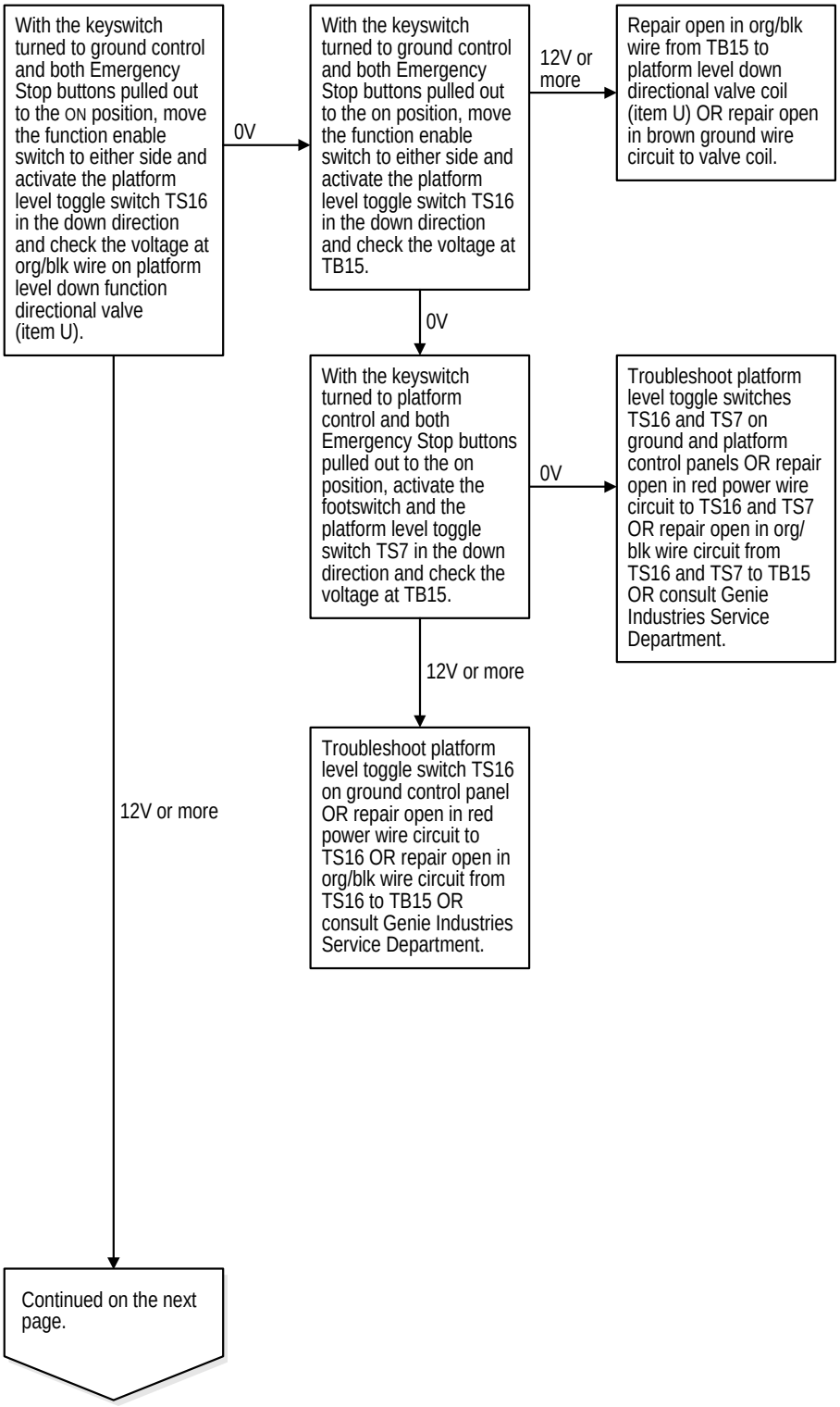

https://truckmanualshub.com/

CHART 22

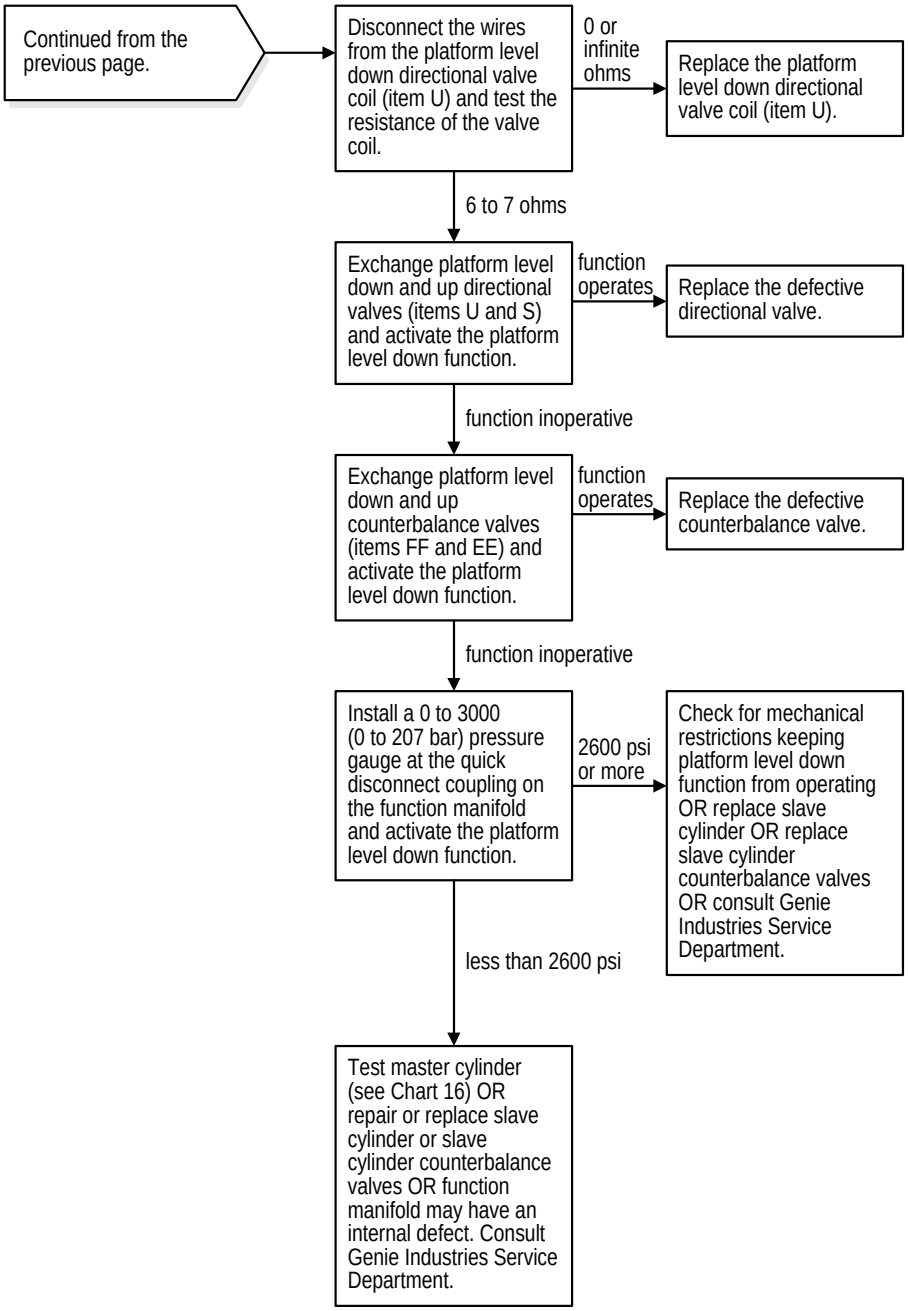

https://truckmanualshub.com/

Chart 23

Platform Rotate Left Function Inoperative

Be sure all other functions operate normally.

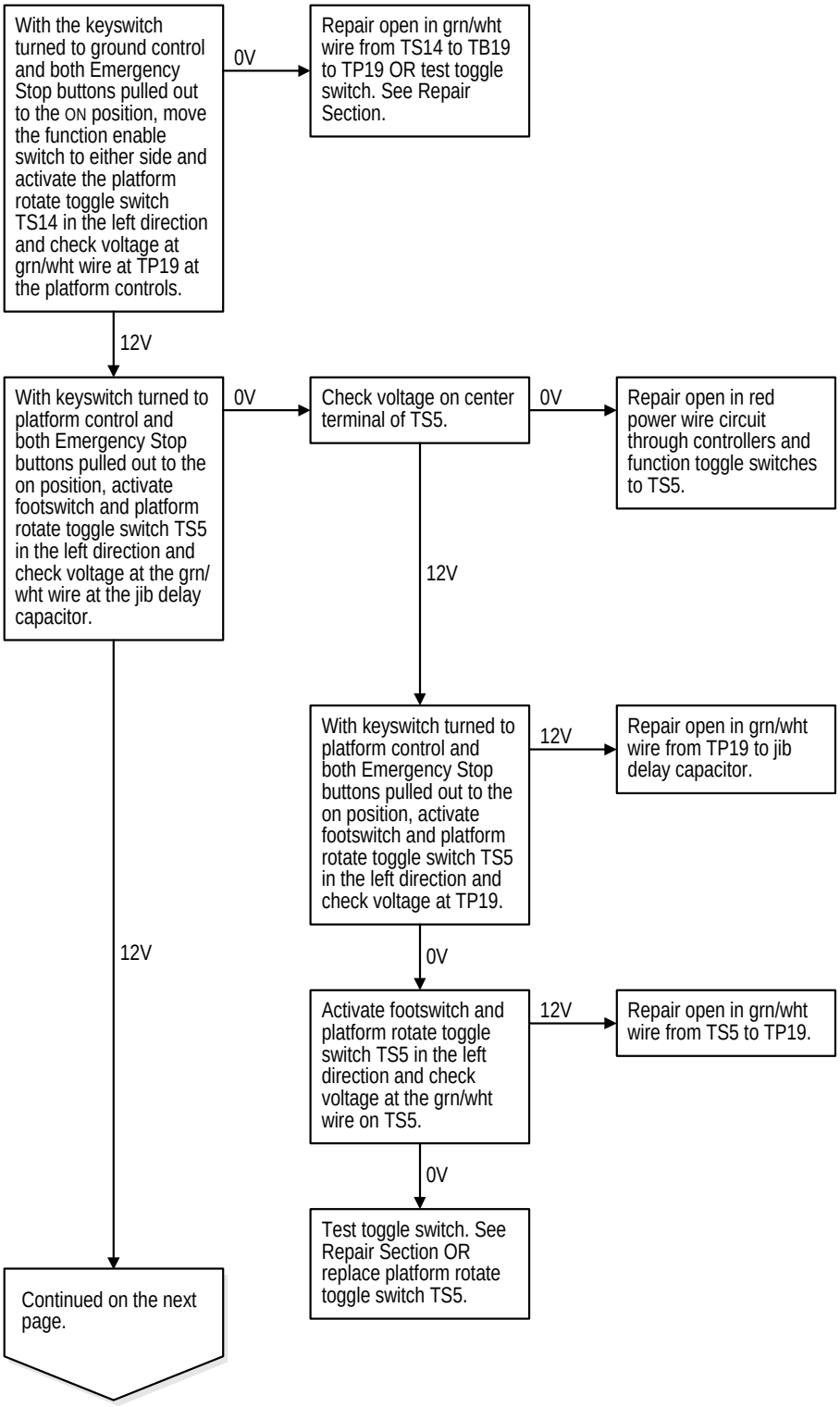

https://truckmanualshub.com/

CHART 23

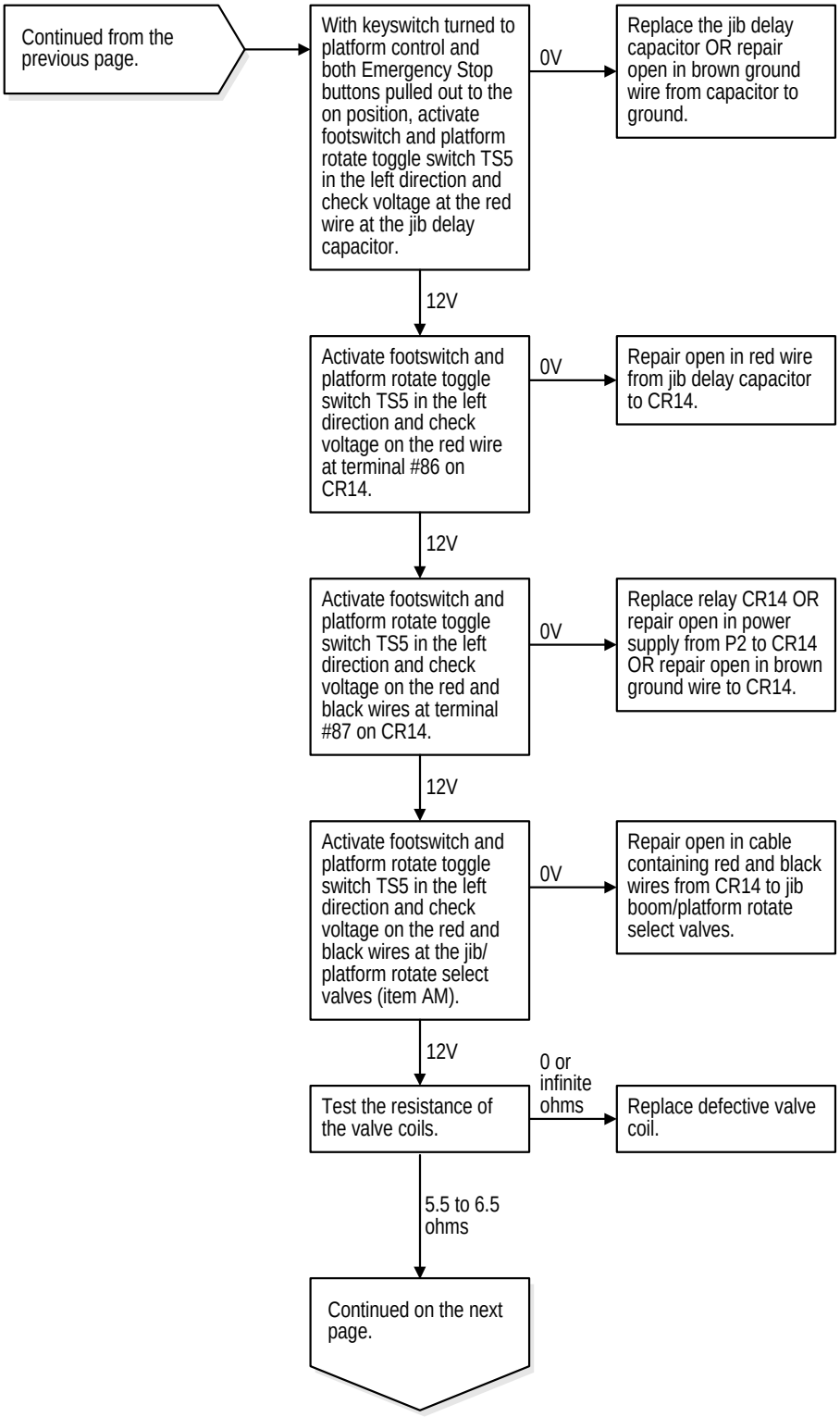

https://truckmanualshub.com/

CHART 23

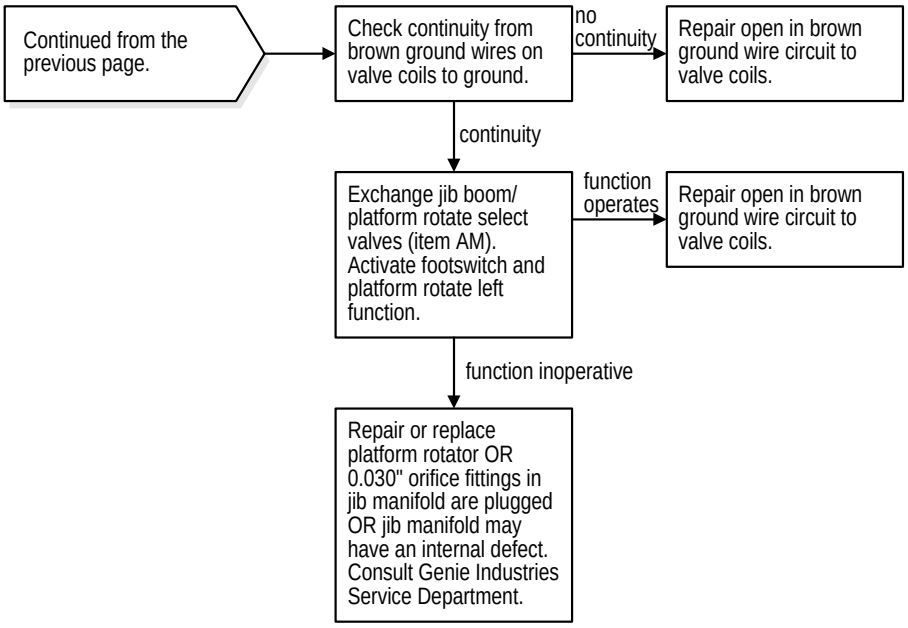

https://truckmanualshub.com/

Chart 24

Platform Rotate Right Function Inoperative

Be sure all other functions operate normally.

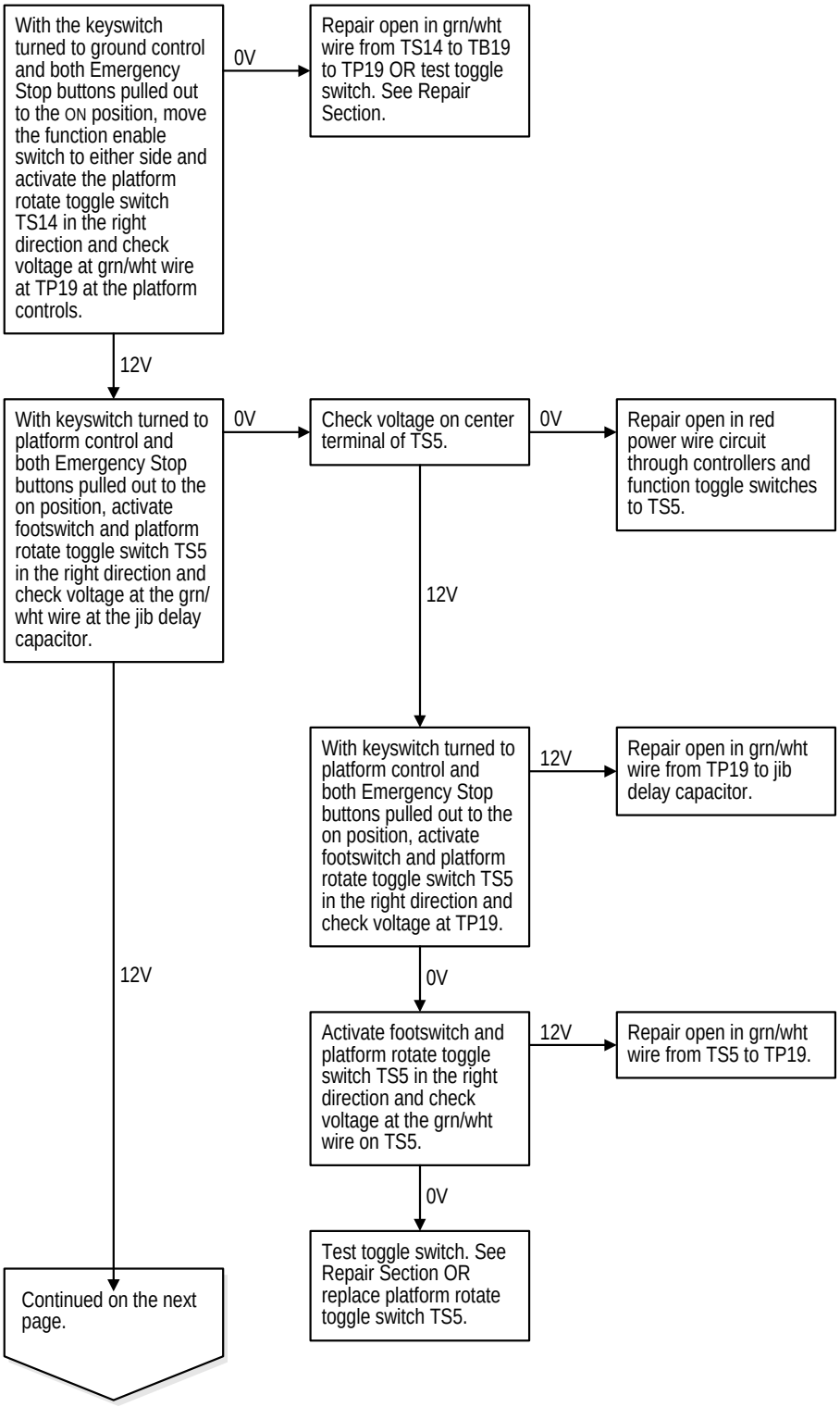

https://truckmanualshub.com/

CHART 24

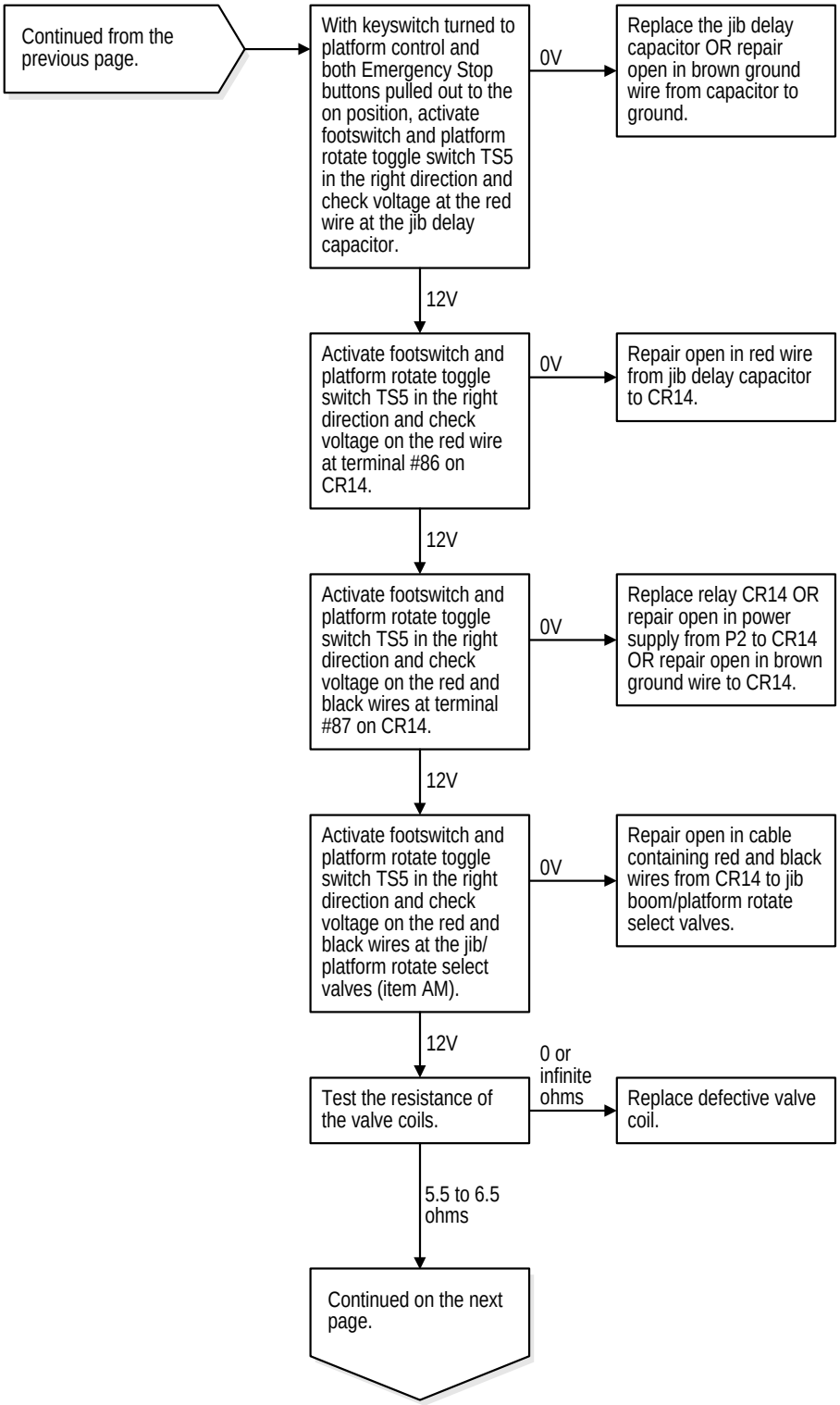

https://truckmanualshub.com/

CHART 24

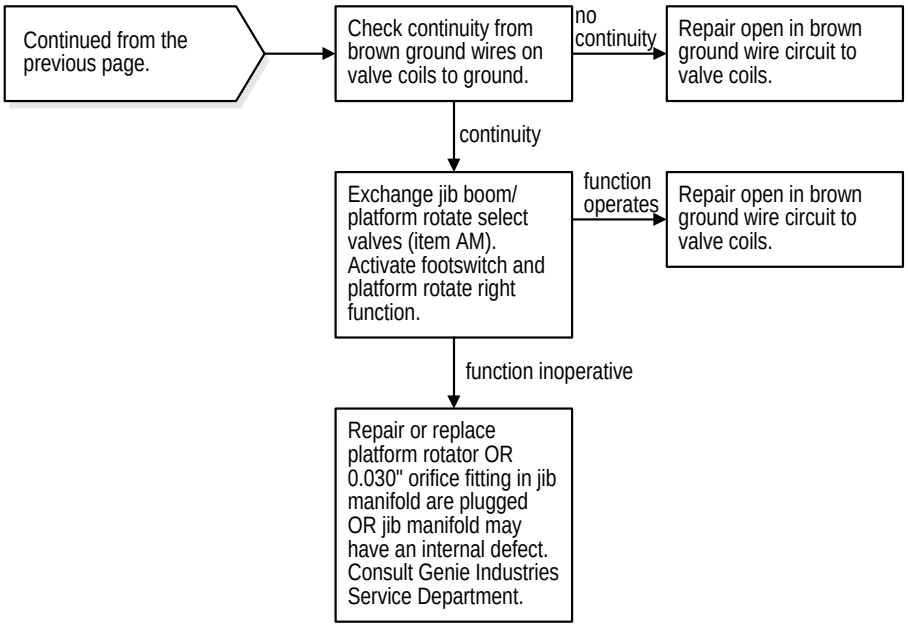

https://truckmanualshub.com/

Chart 25

Jib Boom Up Function Inoperative, S-65 Models

Be sure all other functions operate normally.

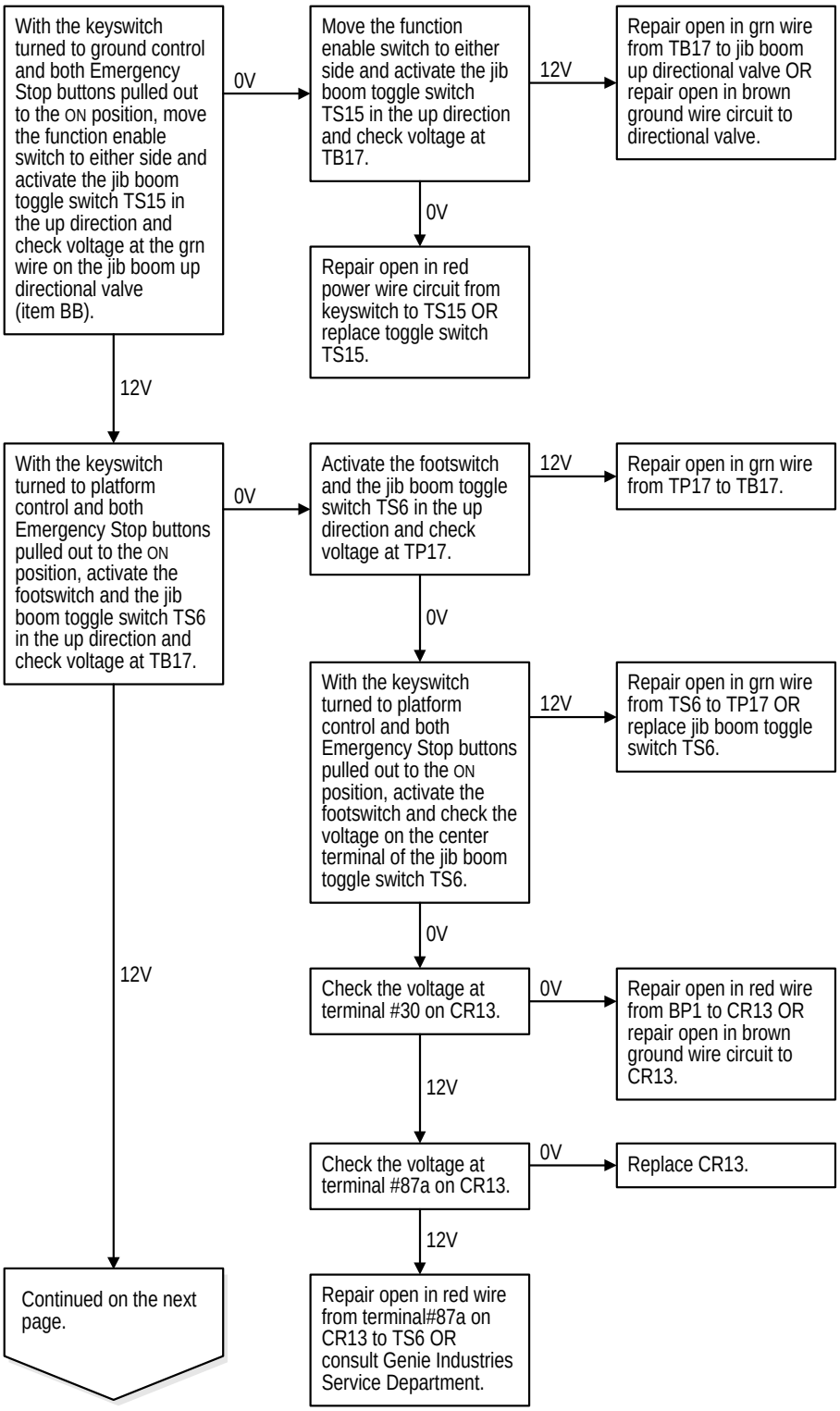

https://truckmanualshub.com/

CHART 25

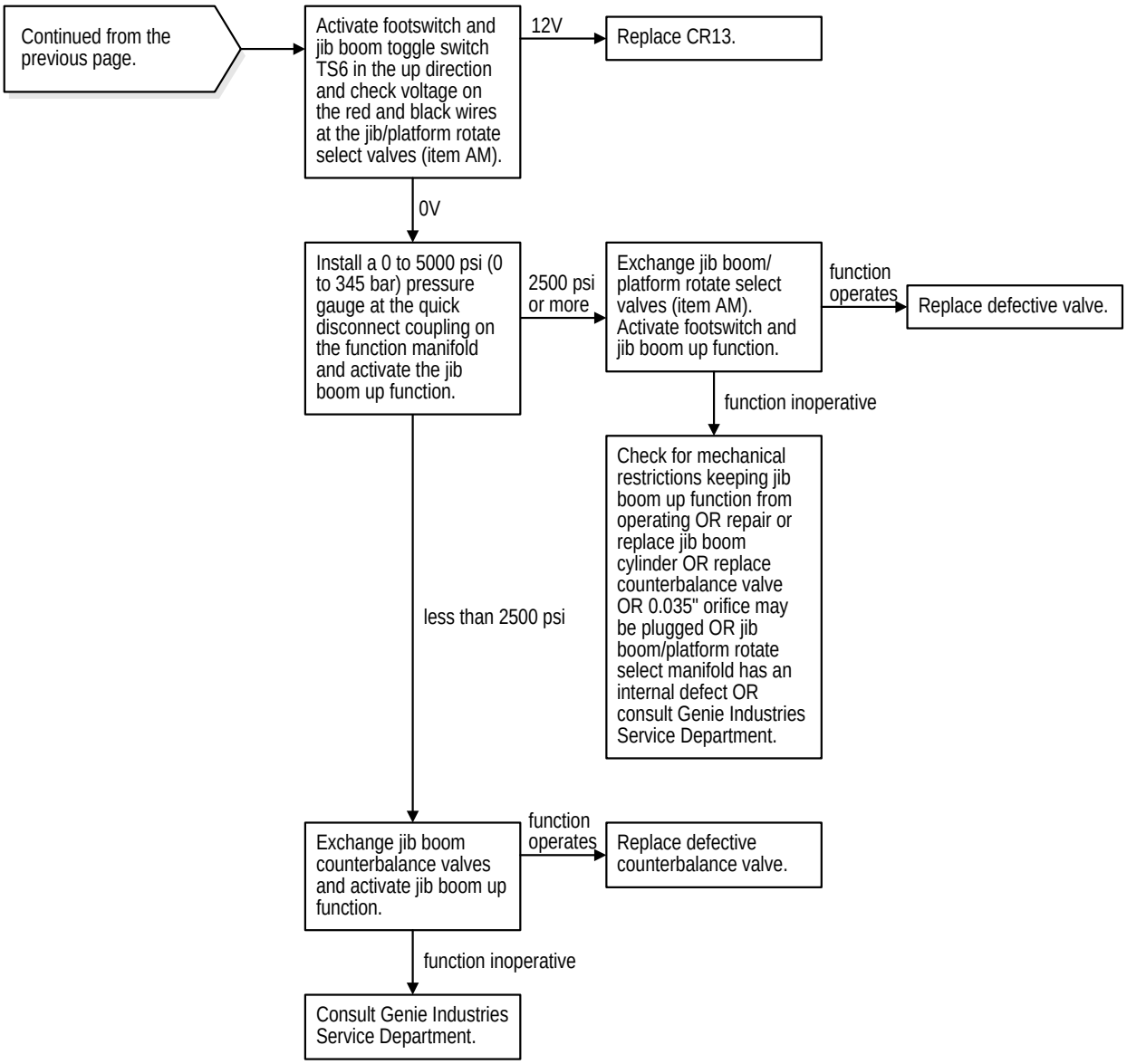

https://truckmanualshub.com/

Chart 26

Jib Boom Down Function Inoperative, S-65 Models

Be sure all other functions operate normally.

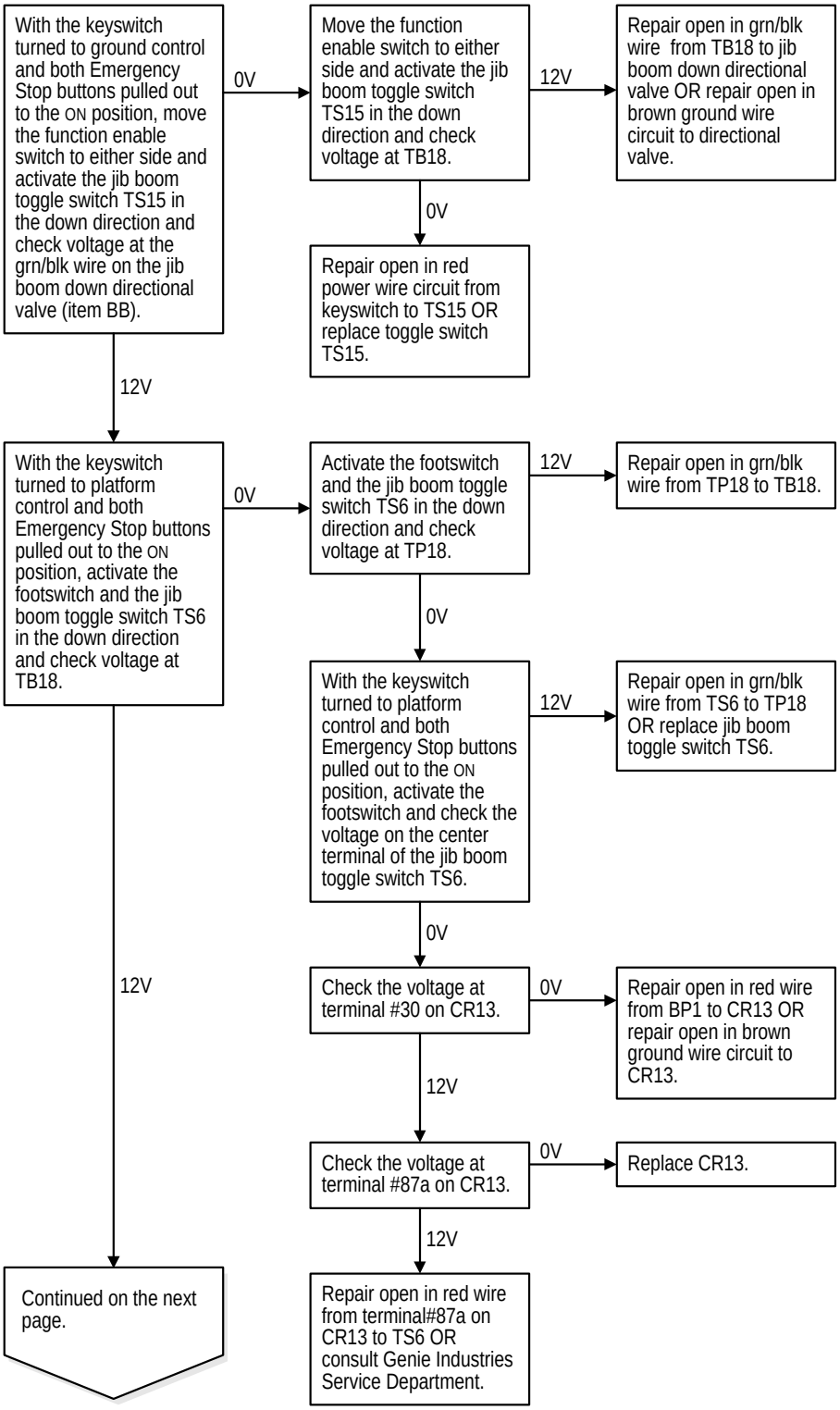

https://truckmanualshub.com/

CHART 26

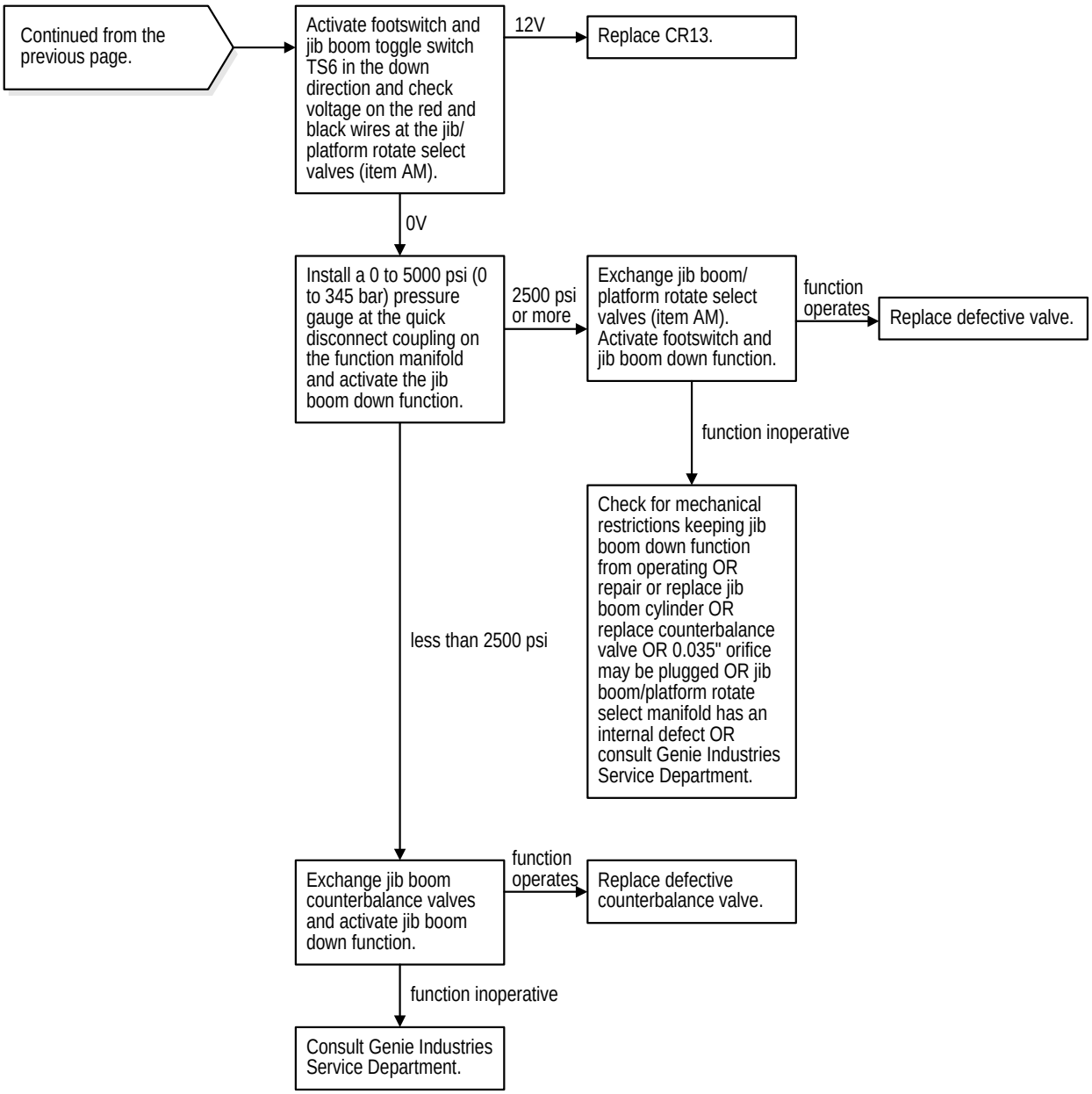

https://truckmanualshub.com/

Chart 27

Oscillate Function Inoperative

Be sure all other function operate normally.

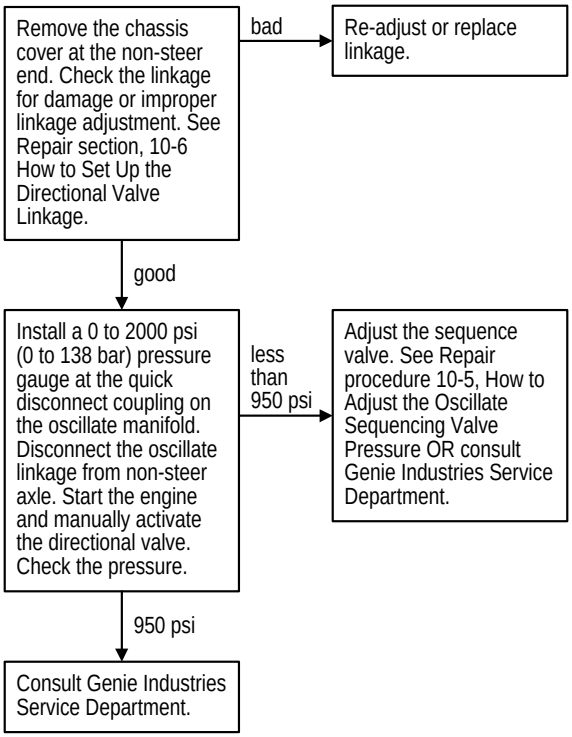

https://truckmanualshub.com/

Chart 28

Steer Left Function Inoperative

Be sure all other functions operate normally.

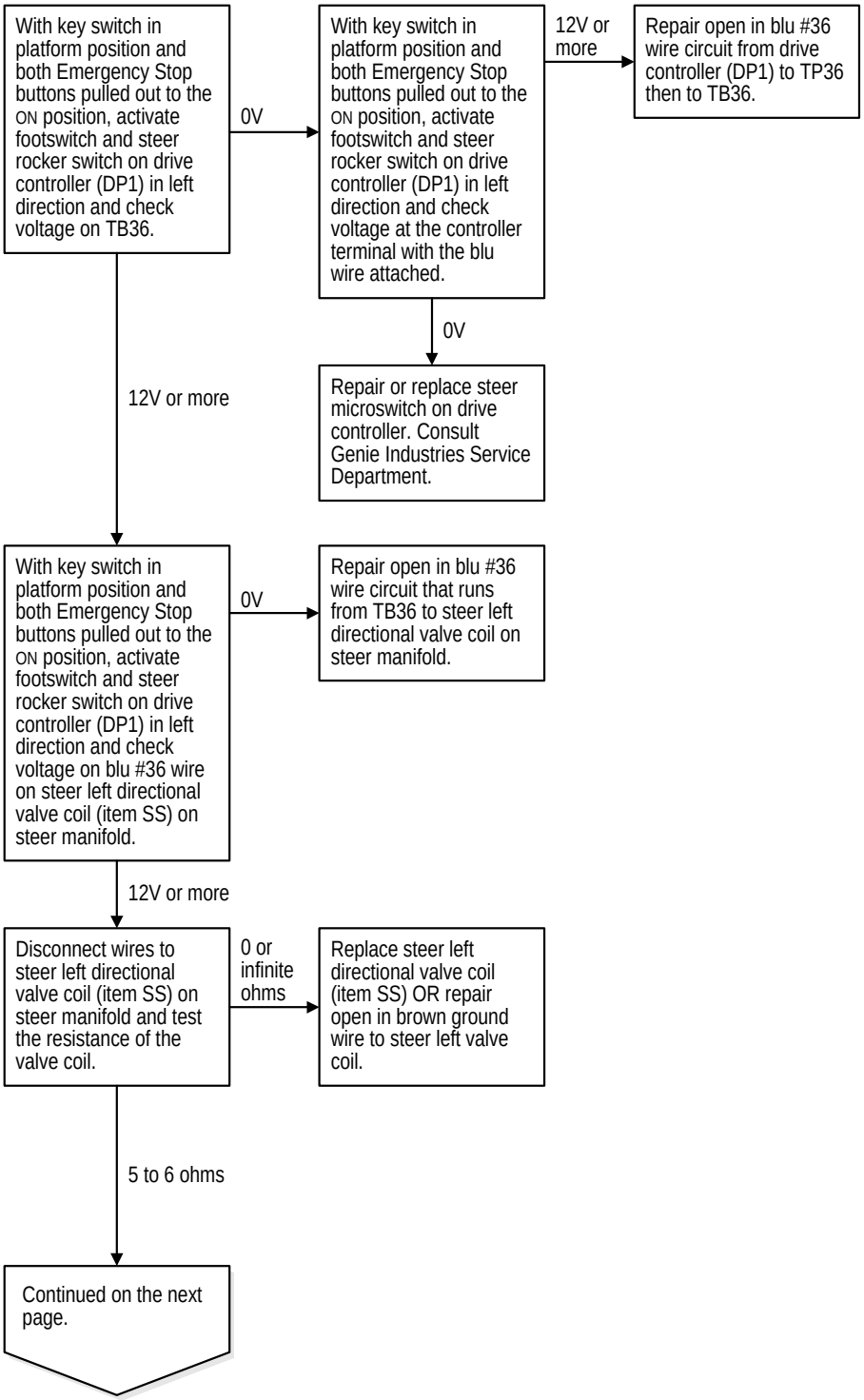

https://truckmanualshub.com/

CHART 28

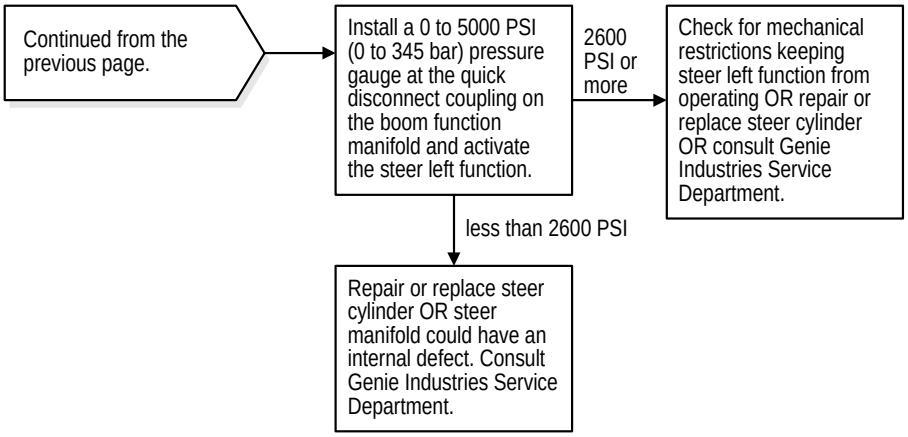

https://truckmanualshub.com/

Chart 29

Steer Right Function Inoperative

Be sure all other functions operate normally.

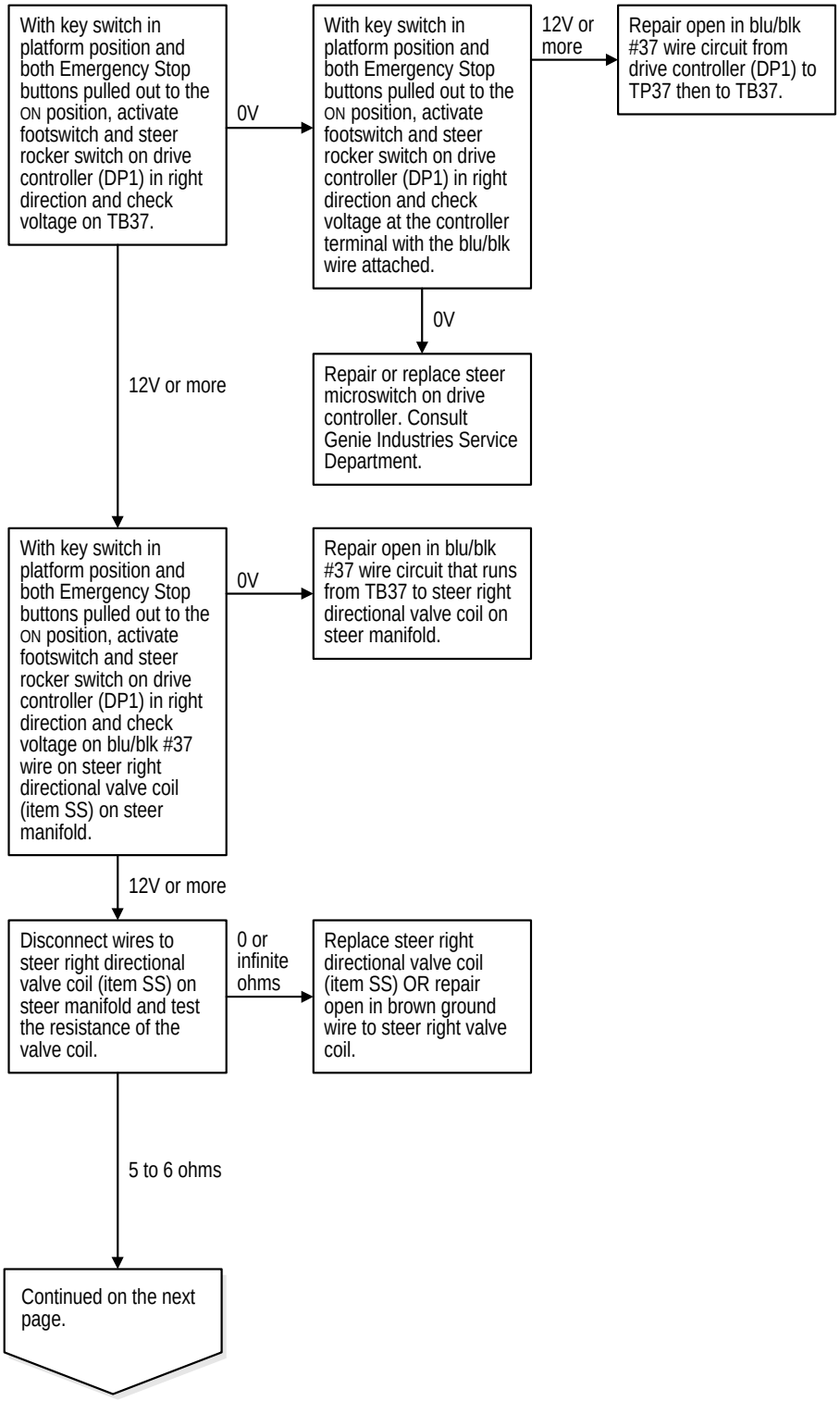

https://truckmanualshub.com/

CHART 29

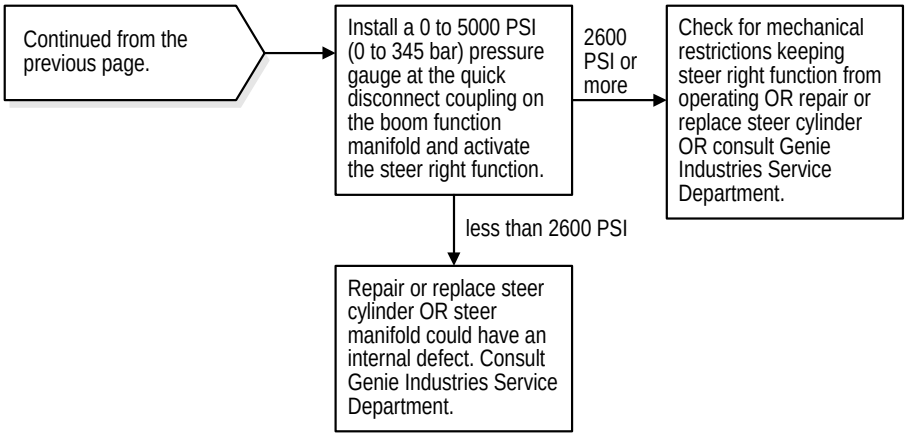

https://truckmanualshub.com/

Chart 30

All Drive Functions Inoperative, All Other Functions Operate Normally

Be sure the rpm toggle switch is in the footswitch activated high idle position.

Be sure the hydraulic tank shut off valves are in the OPEN position.

Be sure machine is not in the free wheel configuration.

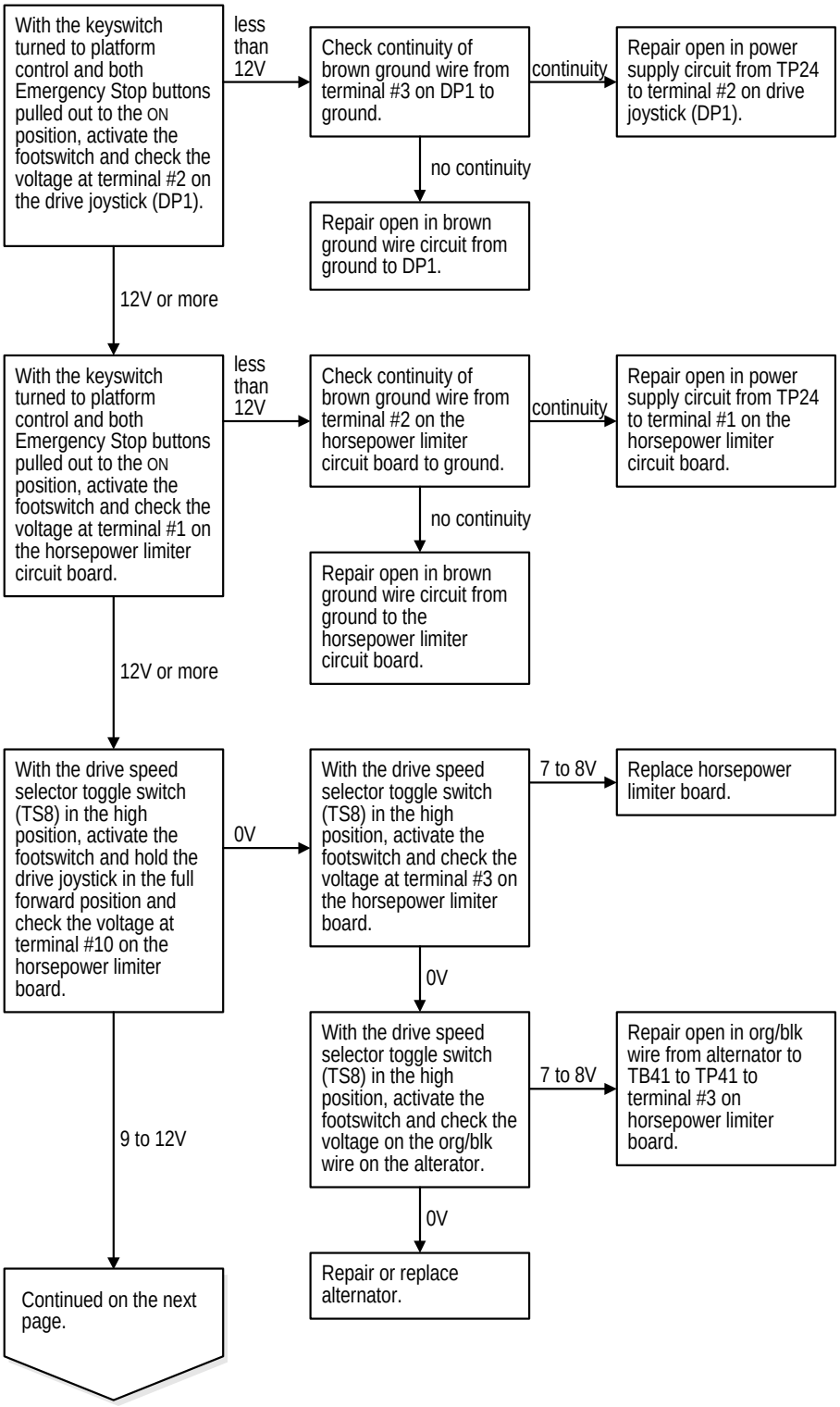

https://truckmanualshub.com/

CHART 30

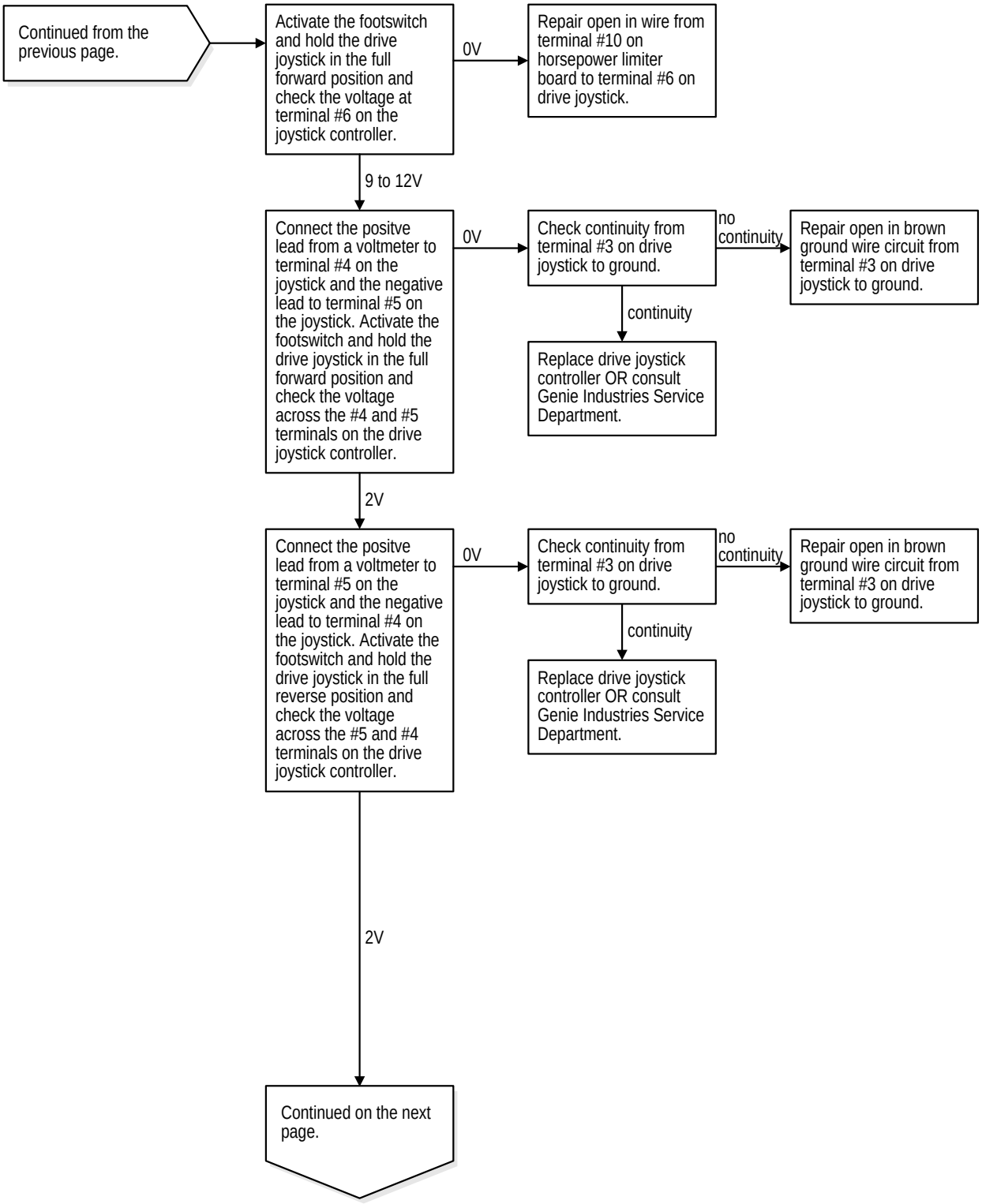

https://truckmanualshub.com/

CHART 30

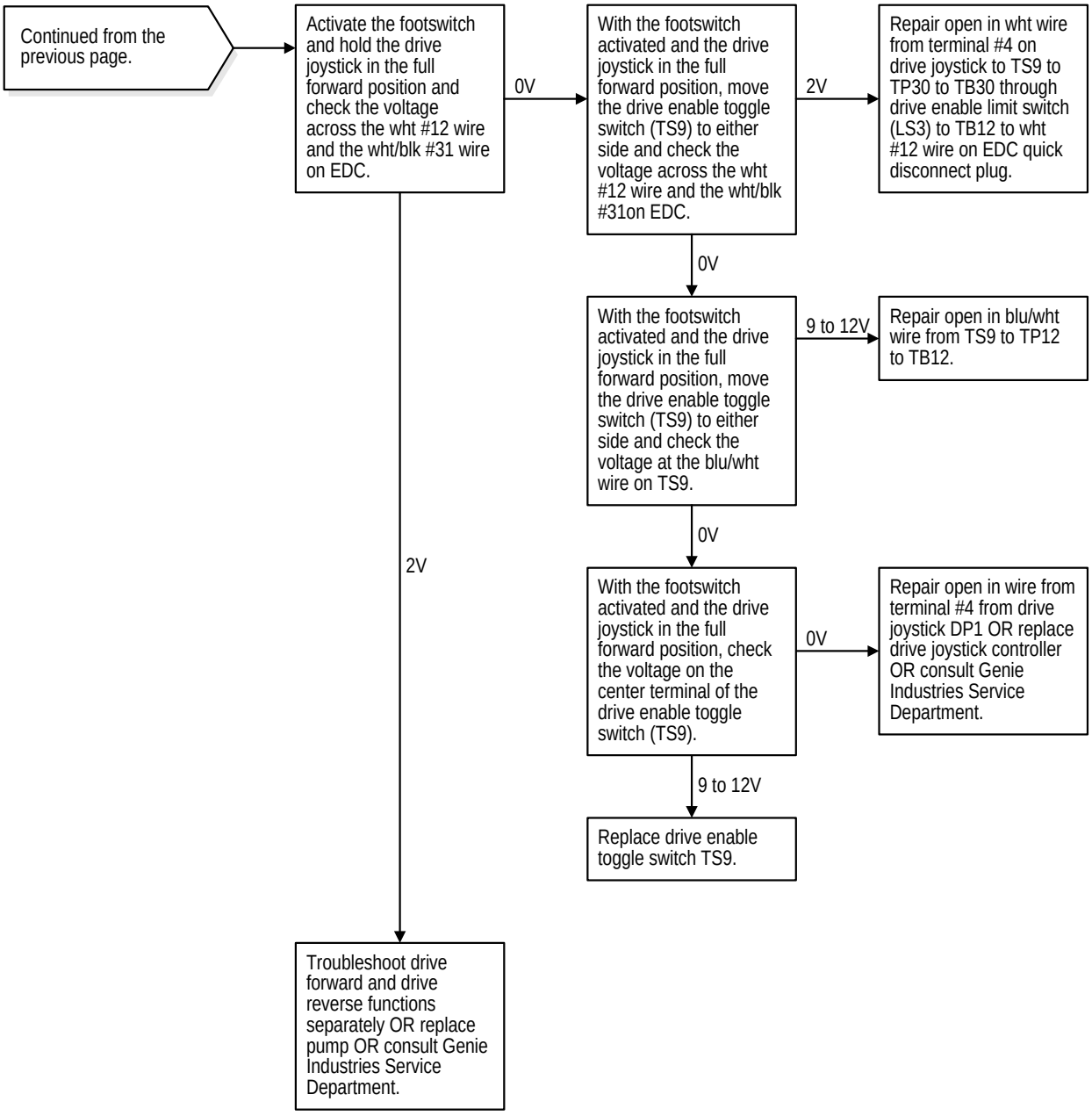

https://truckmanualshub.com/

Chart 31

Drive Forward Or Reverse Function Inoperative

Be sure all other functions operate normally including drive in opposite direction of malfunction.

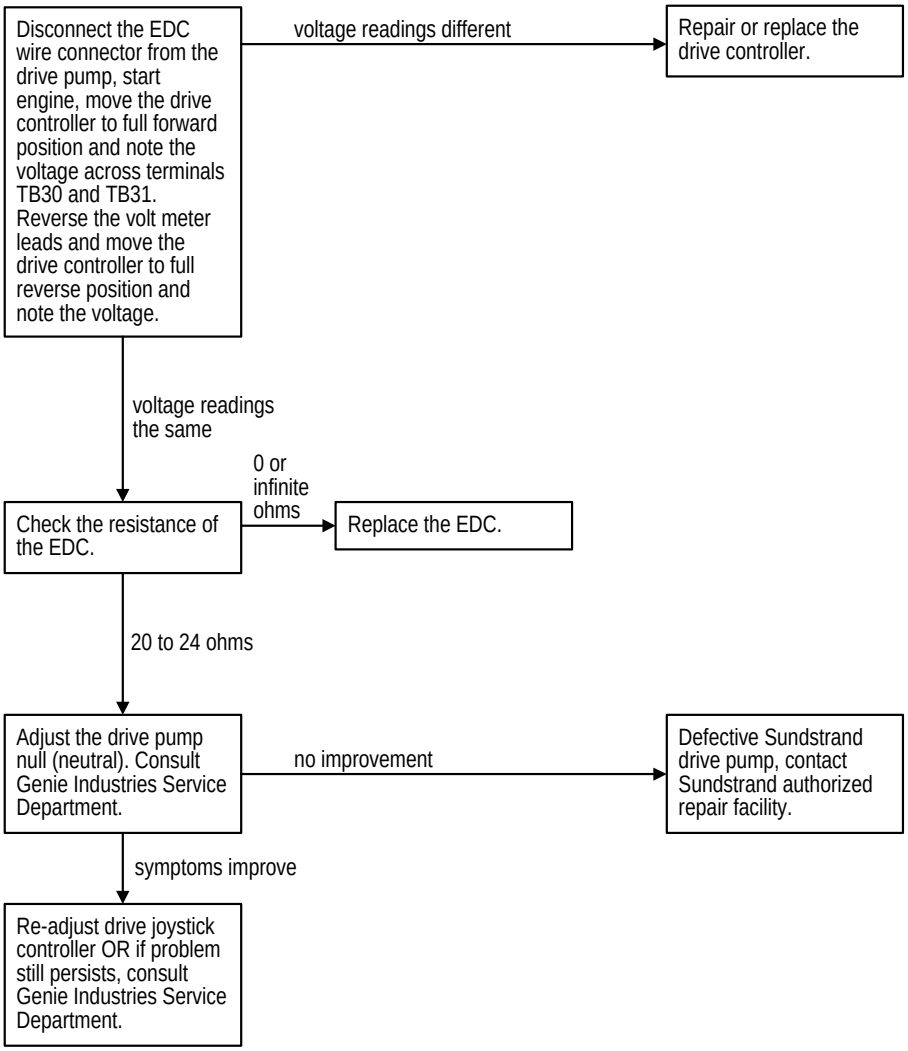

https://truckmanualshub.com/

Chart 32

Traction Function Inoperative

Be sure all other functions operate normally.

Any type of traction problem, consult Genie Industries Service Department.

https://truckmanualshub.com/

Chart 33

Machine Will Not Drive At Full Speed

Be sure all other functions operate normally.

Be sure the machine is not raised above or extended beyond the drive limit switches.

Be sure the boom drive limit switch is clear of any debris and is not activated when the boom is in the stowed position.

Be sure that the boom extend drive limit switch arm is being held down when the boom is retracted.

Be sure the wiring to limit switches is intact and show no sign of damage or corrosion.

Be sure the free-wheel valve is closed on the drive pump.

Be sure the drive speed select switch is on high range (machine on level surface symbol).

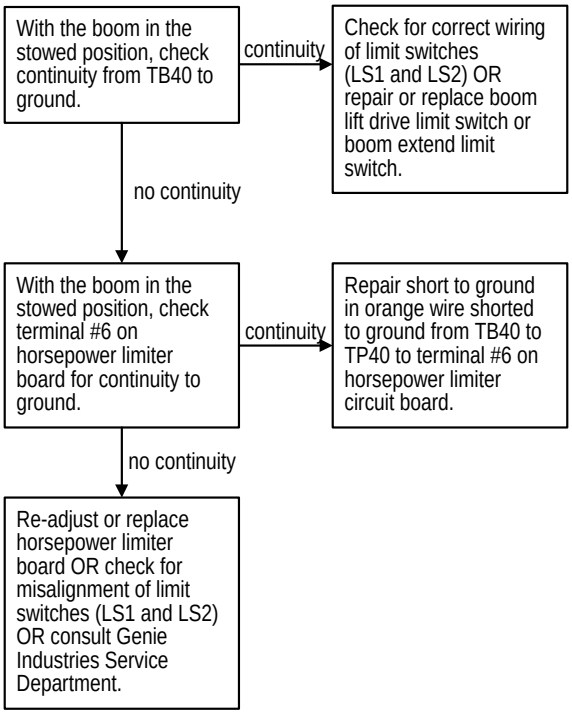

https://truckmanualshub.com/

Chart 34

Machine Drives At Full Speed With Platform Raised or Extended

Be sure boom drive limit switch is being activated by the cam on the boom when the boom is raised.

Be sure that the boom extend drive limit switch is not being held down or being activated when the boom is extended.

Be sure the wiring to limit switches is intact and show no sign of damage or corrosion.

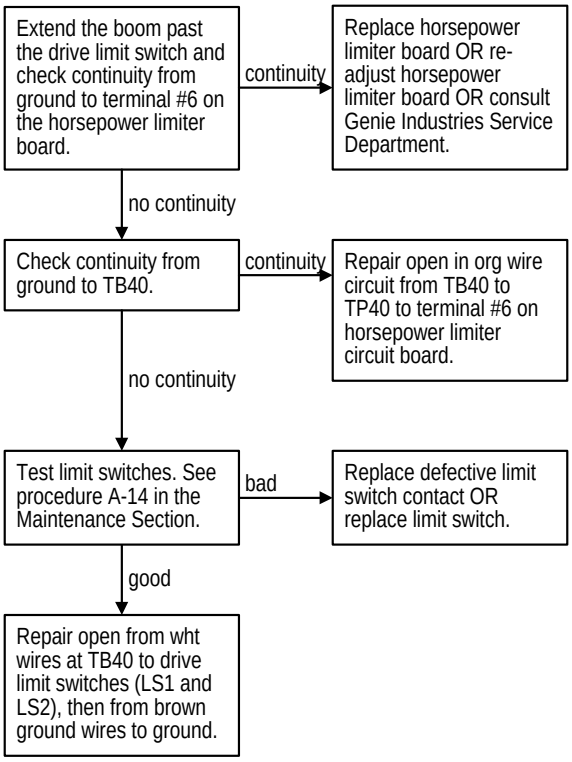

https://truckmanualshub.com/

Chart 35

Drive Enable System Is Malfunctioning

Be sure the boom is in the stowed position.

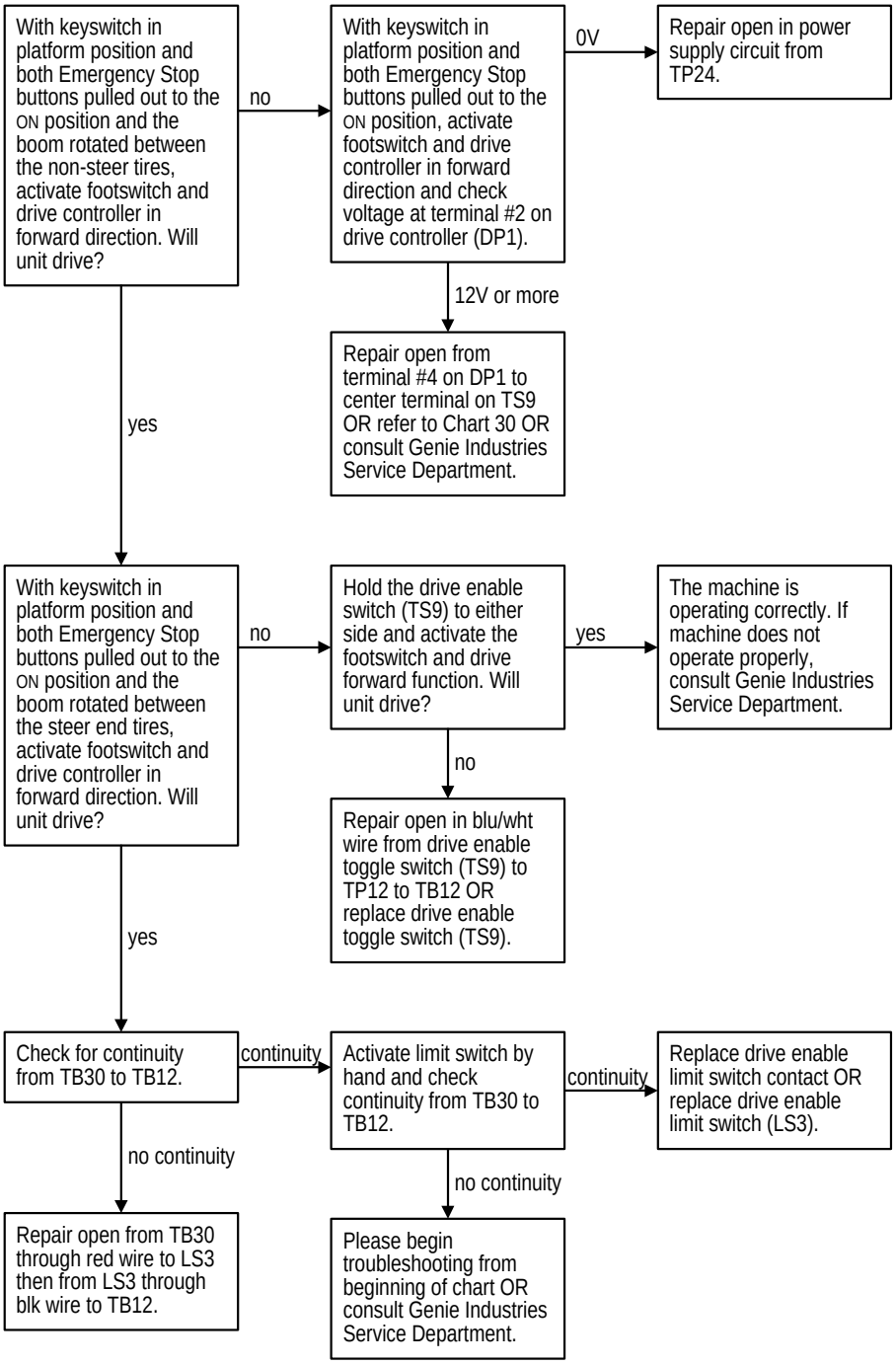

https://truckmanualshub.com/

Chart 36

Auxiliary Functions Inoperative

Be sure all other functions operate normally.

Be sure key switch is in the appropriate position and the Emergency Stop buttons are pulled out to the ON position.

Be sure engine is not running when using auxiliary power.

Note: Operating auxiliary power with the engine running should immediately kill the engine.

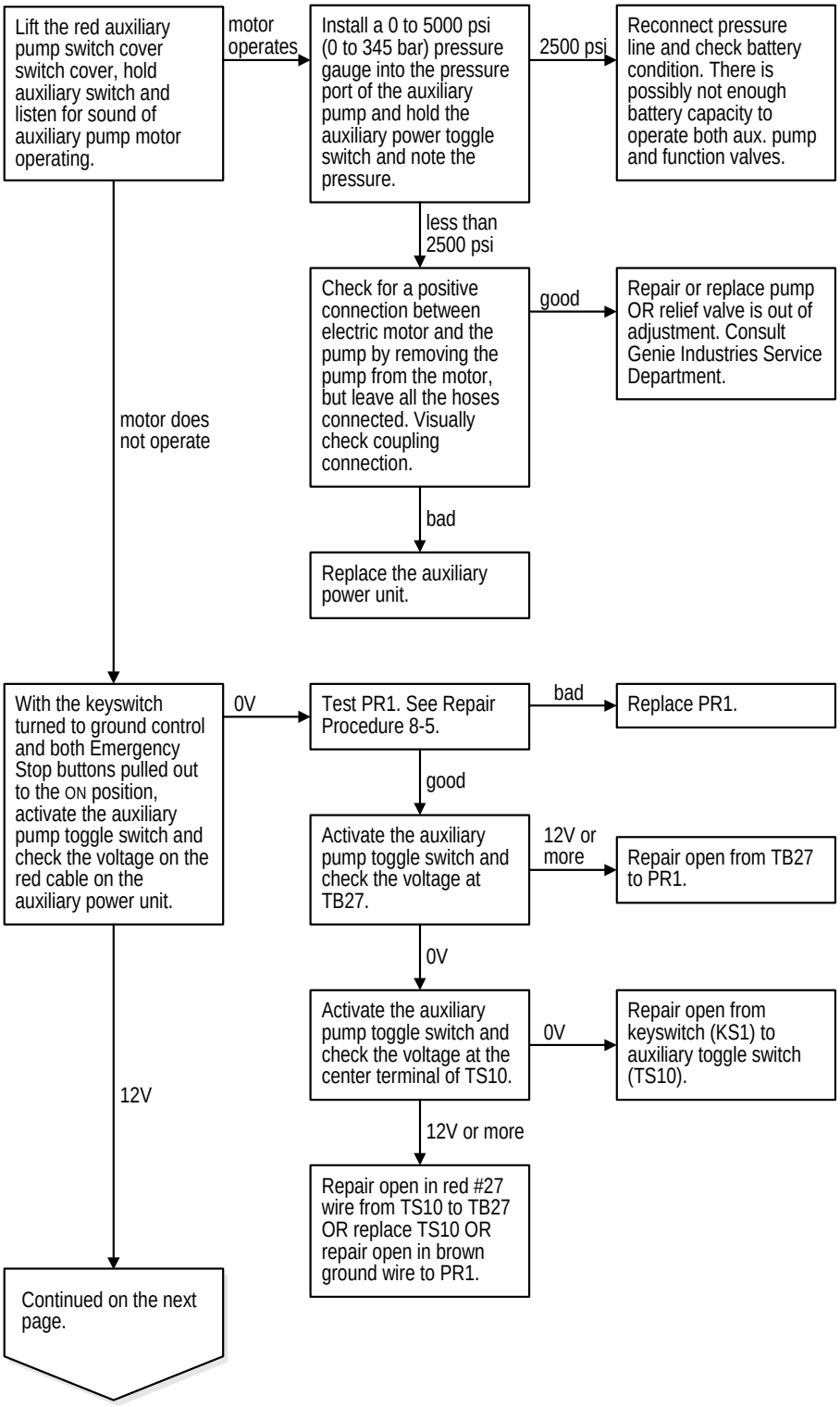

https://truckmanualshub.com/

CHART 36

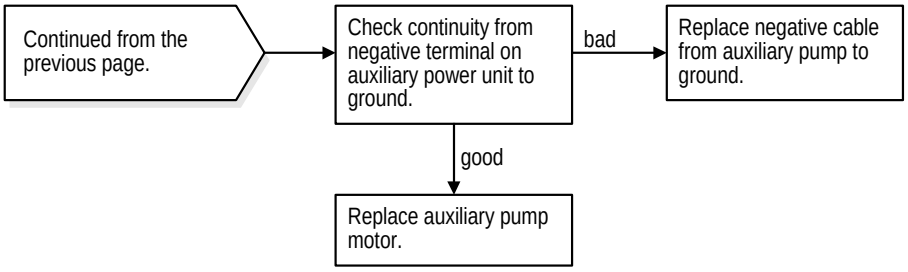

https://truckmanualshub.com/

This page intentionally left blank.

https://truckmanualshub.com/

Schematics

Observe and Obey:

- ☑ Troubleshooting and repair procedures shall be completed by a person trained and qualified on the repair of this machine.
- ☑ Immediately tag and remove from service a damaged or malfunctioning machine.
- ☑ Repair any machine damage or malfunction before operating the machine.

Before Troubleshooting:

- ☑ Read, understand and obey the safety rules and operating instructions printed in the *Genie S-60 and Genie S-65 Operator's Manual.*
- ☑ Be sure that all necessary tools and test equipment are available and ready for use.

About This Section

There are two groups of schematics in this section. An illustration legend precedes each group of drawings.

Electrical Schematics

⚠WARNING Electrocution hazard. Contact with electrically charged circuits may result in death or serious injury. Remove all rings, watches and other jewelry.

Hydraulic Schematics

⚠WARNING Bodily injury hazard. Spraying hydraulic oil can penetrate and burn skin. Loosen hydraulic connections very slowly to allow the oil pressure to dissipate gradually. Do not allow oil to squirt or spray.

General Repair Process

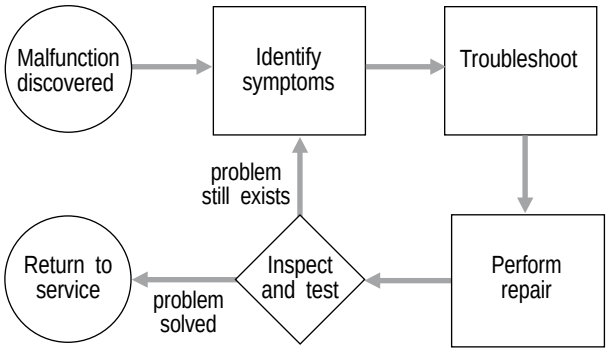

https://truckmanualshub.com/

Electrical Components

Item	Description	Genie Part Number	Manufacturer	Manufacturer Part Number	Qty
BAT	Battery, 1000 CCA, 12V DC	30143	Trojan	C31XH-2	1
BP1	Joystick controller Single axis, up/down	24495	OEM Controls	EMS4M6883	1
BP2	Joystick controller Dual axis, Swing/extend	40613	OEM Controls	EJS5M10089	1
CB1, CB2	Circuit breaker	24018	ETA	45-700-IG1-P10	2
CR1 through CR7	Relay, SPDT, 12V DC	34052	Potter-Brumfield	VF4-15F11-CO5	6
CR13, 14, 17 and 18	Relay, SPDT, 12V DC	19274	Potter-Brumfield	VF4-45F11-CO5	4
Diode	Diode, 6 amp, 200 PIV	45782	Motorola	MOTMR752	43
DP1	Joystick controller-Drive	20424	OEM Controls	MCH1159AD1386	1
FB	Flashing beacon	20189	ECCO Electronic Controls	6400X	2
FS1	Footswitch	13482	Linemaster Switch Corp.	632-S	1
G1	Gauge - Voltage	30789	VDO	332-502	1
G2	Gauge - Oil Pressure	30786	VDO	350-516	1
G3	Gauge - Water Temp.	30787	VDO	310-502	1
H1	Alarm, Warble tone	19270	Floyd Bell Inc.	MW-09-616-Q	1
H2	Horn, 12V DC, 130 dB	19145	Sparton Engineered Prod.	7431A-24823-5	1
H3	Alarm, intermittent	18963	Floyd Bell Inc.	XB-09-630-Q	1
H4	Alarm, chime tone	45462	Floyd Bell Inc.	CH-09-525-Q	1
HM	Hourmeter	19506	ENM Corporation	T40A4508	1
KS1	Contact - Keyswitch, N.O.	45081	Telemecanique	ZB2-BE101	2
L1	LED - Red, 12V DC	32335	Arctolectric Corp.	LE177C39007	1
LS1, 2, 3	Contact - Limit switch, N.C.H.O.	19491	Telemecanique	XESP2051	3
Level sensor	Level sensor, 4.5°	44586	Power Comp. of Midwest	LS36	1

This list continues on the next page.

https://truckmanualshub.com/

ELECTRICAL COMPONENTS

Item	Description	Genie Part Number	Manufacturer	Manufacturer Part Number	Qty
P1, P2	Contact, N.C.	29732	Telemecanique	ZB2-BE102	4
P3	Contact, N.O.	45081	Telemecanique	ZB2-BE101	1
PR1	Relay, 12V DC continuous	27155	Stancor	70-902	1
R1	Resistor, 100Ω 25 watt	27116	Dale	RH25-100R-1%	1
	Resistor, 150Ω 25 watt	34798	Dale	RH25-150-1%	1
R2	Resistor, 10Ω 25 watt	27287	Dale	RH25-10R-1%	1
TS1, TS10	Toggle switch, DPST 2 position momentary	13480	Microswitch Control Inc.	2NT1-8	2
TS2, 6, 9, 11, 13, 15	Toggle switch, SPDT 3 position momentary	13037	Microswitch Control Inc.	1NT1-7	6
TS3, 8, 12, 20	Toggle switch, DPST 2 position maintained	27378	Microswitch Control Inc.	2NT1-3	4
TS4	Toggle switch, DPDT 3 position maintained	13038	Microswitch Control Inc.	2NT1-1	1
TS5,7,14,16, 17,18, 19	Toggle switch, DPDT 3 position momentary	16397	Microswitch Control Inc.	2NT1-7	7
VAC	Vacuum switch	22278	Peterson Industrial	1501-L	1

https://truckmanualshub.com/

Electrical Symbols Legend

Wire color with cable number

Terminal
TB=Terminal base
TP=Terminal platform

Quick disconnect terminal

T-circuits connect at terminal

T-circuits connect

Connection no terminal

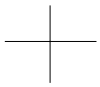

Circuits crossing no connection

Diode

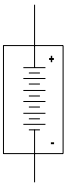

Battery

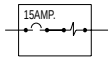

Circuit breaker

Solenoid or relay coil

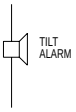

Horn

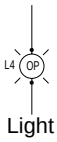

Light

Resistor

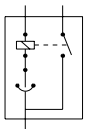

Tilt sensor

Spark plug

Glow plug

Limit switch normally open held closed

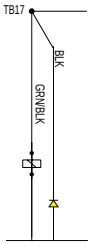

Ground supression circuit

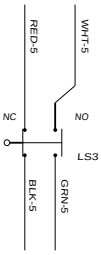

Limit switch

Limit switch normally closed held open

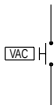

Vacuum switch

Oil pressure switch normally closed

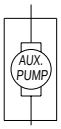

Auxiliary pump

Water temperature switch normally open

Foot switch

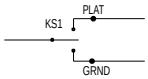

Key switch

Horn button normally open

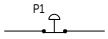

Emergency Stop button normally closed

Relay contact normally open

Relay panel contactor

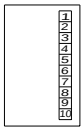

Horsepower limiter board

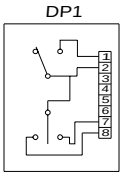

Single axis drive controller

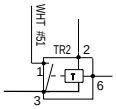

Time delay relay

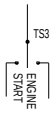

Toggle switch SPDT

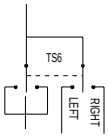

Toggle switch DPDT

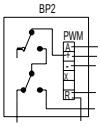

Single axis proportional controller

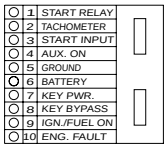

Ignition start module

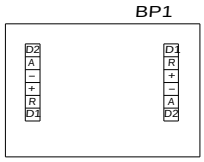

Dual axis Ramp up and down proportional controller

https://truckmanualshub.com/

Abbreviation Legend

LABEL	DESCRIPTION
BAT	Battery
BP	Proportional controller
CB	Circuit breaker
CR	Control relay
DP	Drive proportional controller
FB	Flashing beacon
FS	Foot switch
G	Gauge
H	Horn or Alarm
HM	Hour meter
KS	Keyswitch
L	LED
LS	Limit switch
P	Power switch
PR	Power relay
R	Resistor
TB	Terminal base location
TP	Terminal platform location
TS	Toggle switch
VAC	Vacuum switch

https://truckmanualshub.com/

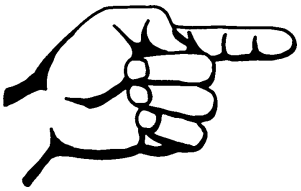

https://truckmanualshub.com/

Electrical Schematic- Gasoline/LPG Models

REV B

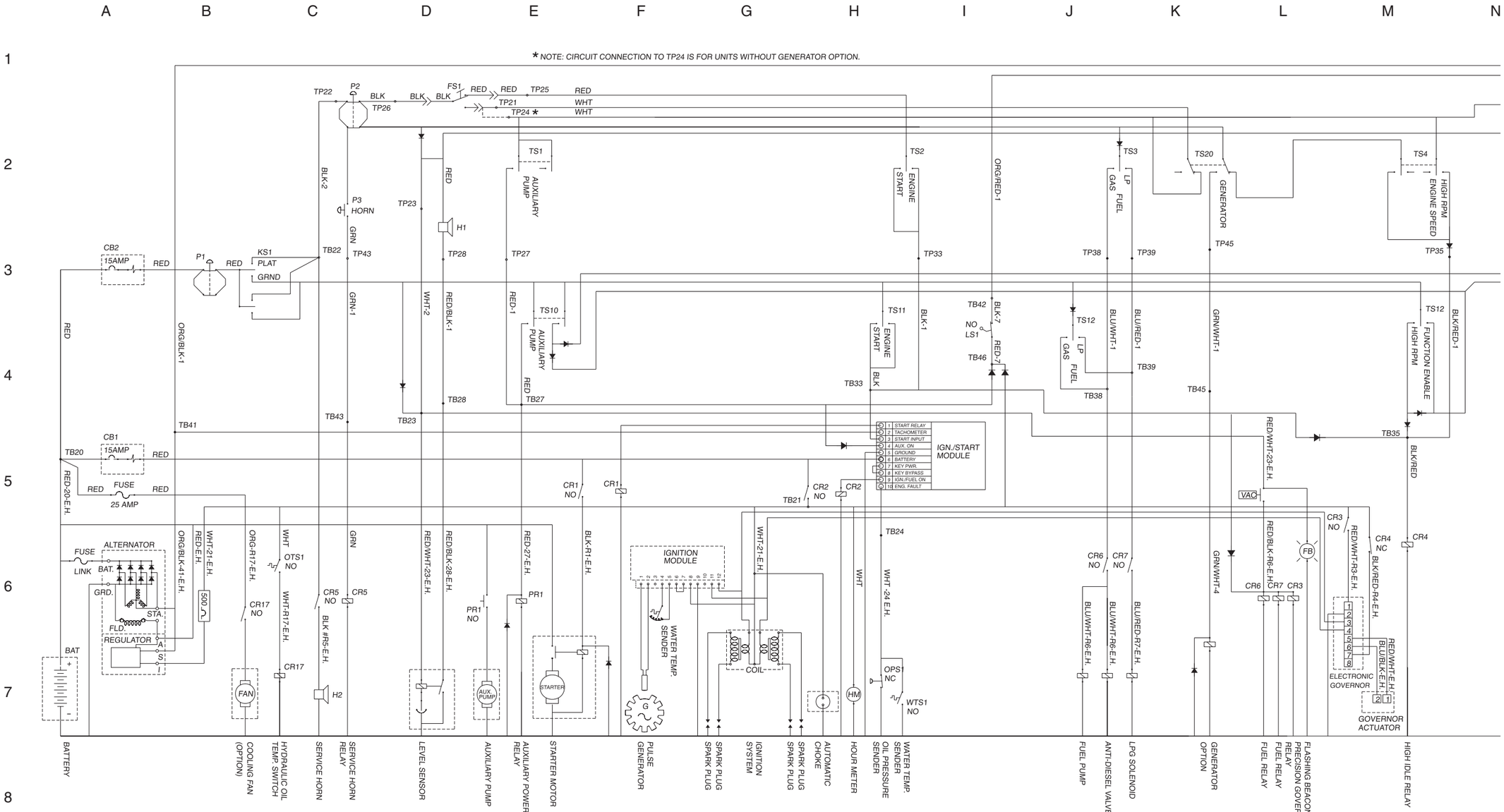

https://truckmanualshub.com/

REV B

Electrical Schematic- Gasoline/LPG Models

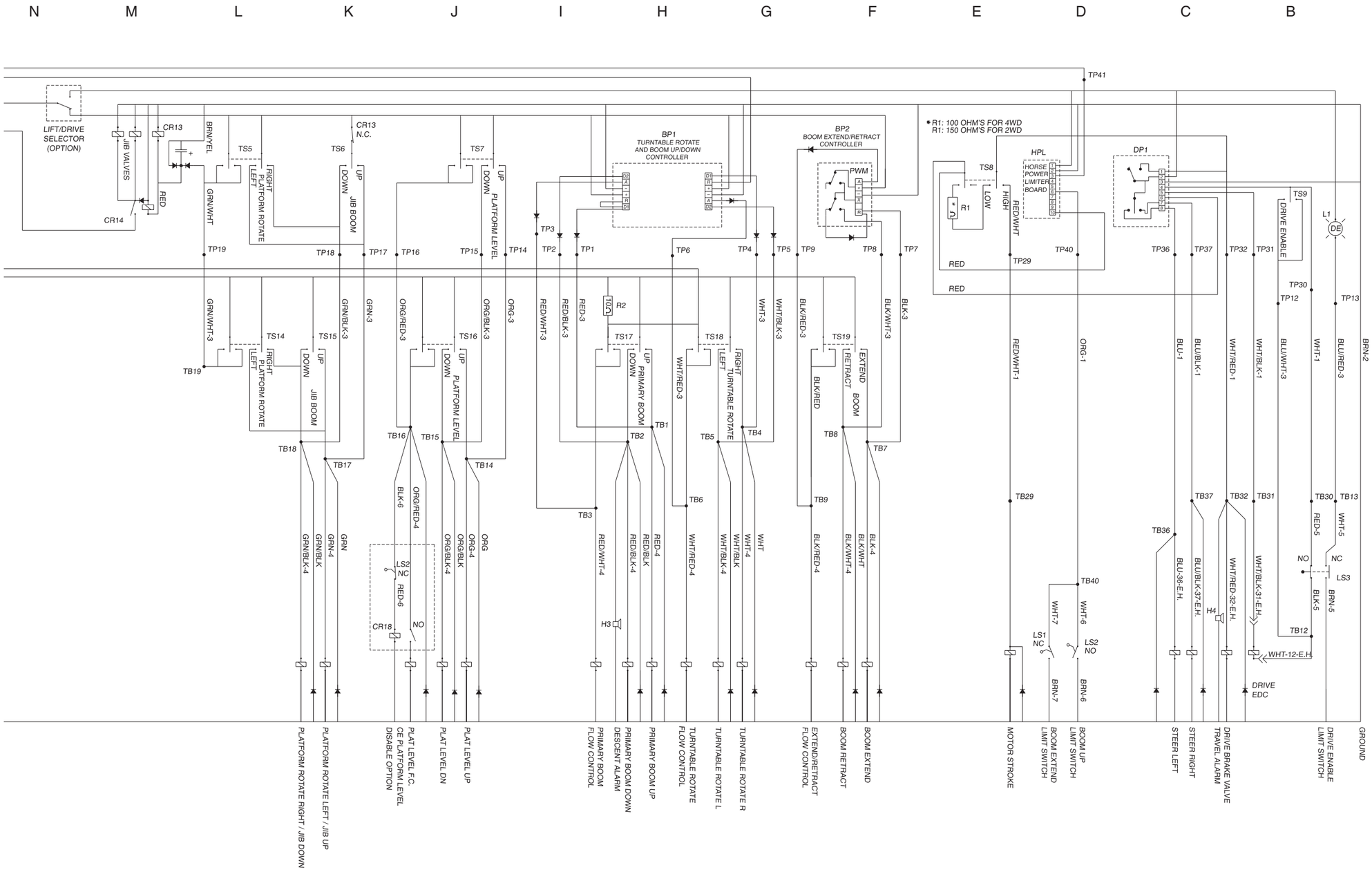

https://truckmanualshub.com/

Ground Control Box Legend-Gasoline/LPG Models

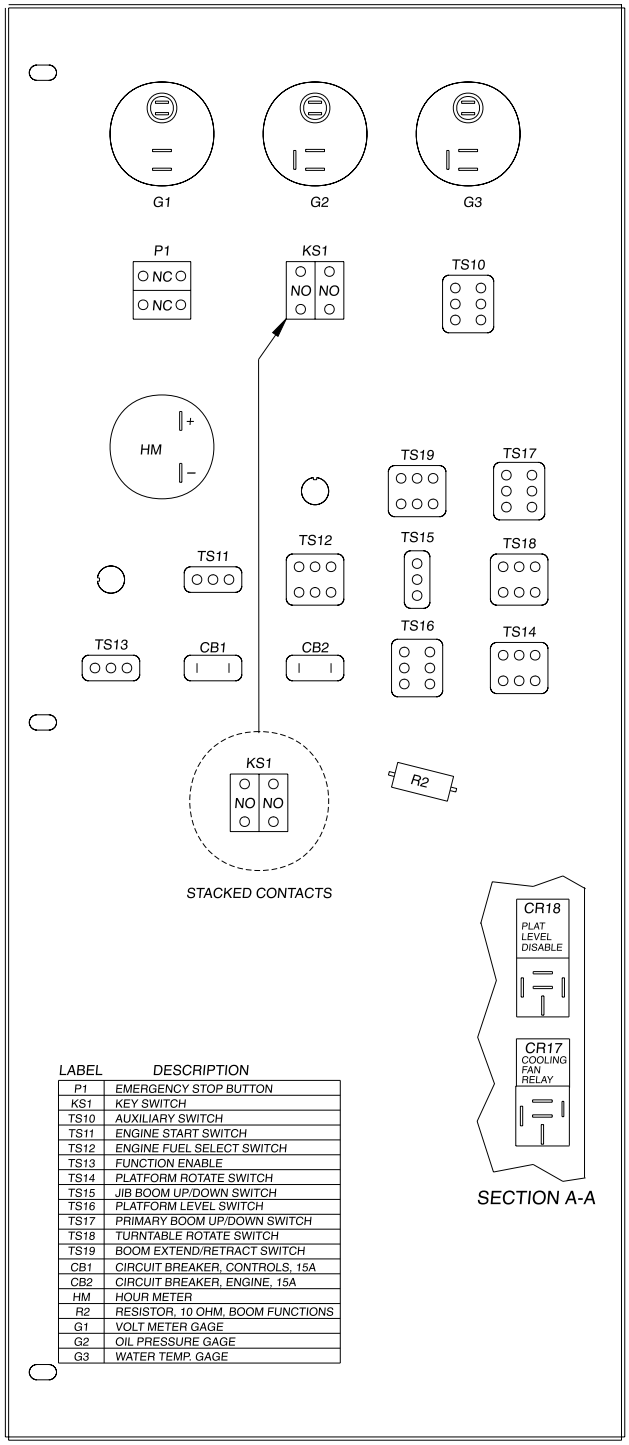

LABEL	DESCRIPTION
P1	EMERGENCY STOP BUTTON
KS1	KEY SWITCH
TS10	AUXILIARY SWITCH
TS11	ENGINE START SWITCH
TS12	ENGINE FUEL SELECT SWITCH
TS13	FUNCTION ENABLE
TS14	PLATFORM ROTATE SWITCH
TS15	JIB BOOM UP/DOWN SWITCH
TS16	PLATFORM LEVEL SWITCH
TS17	PRIMARY BOOM UP/DOWN SWITCH
TS18	TURNTABLE ROTATE SWITCH
TS19	BOOM EXTEND/RETRACT SWITCH
CB1	CIRCUIT BREAKER, CONTROLS, 15A
CB2	CIRCUIT BREAKER, ENGINE, 15A
HM	HOUR METER
R2	RESISTOR, 10 OHM, BOOM FUNCTIONS
G1	VOLT METER GAGE
G2	OIL PRESSURE GAGE
G3	WATER TEMP. GAGE

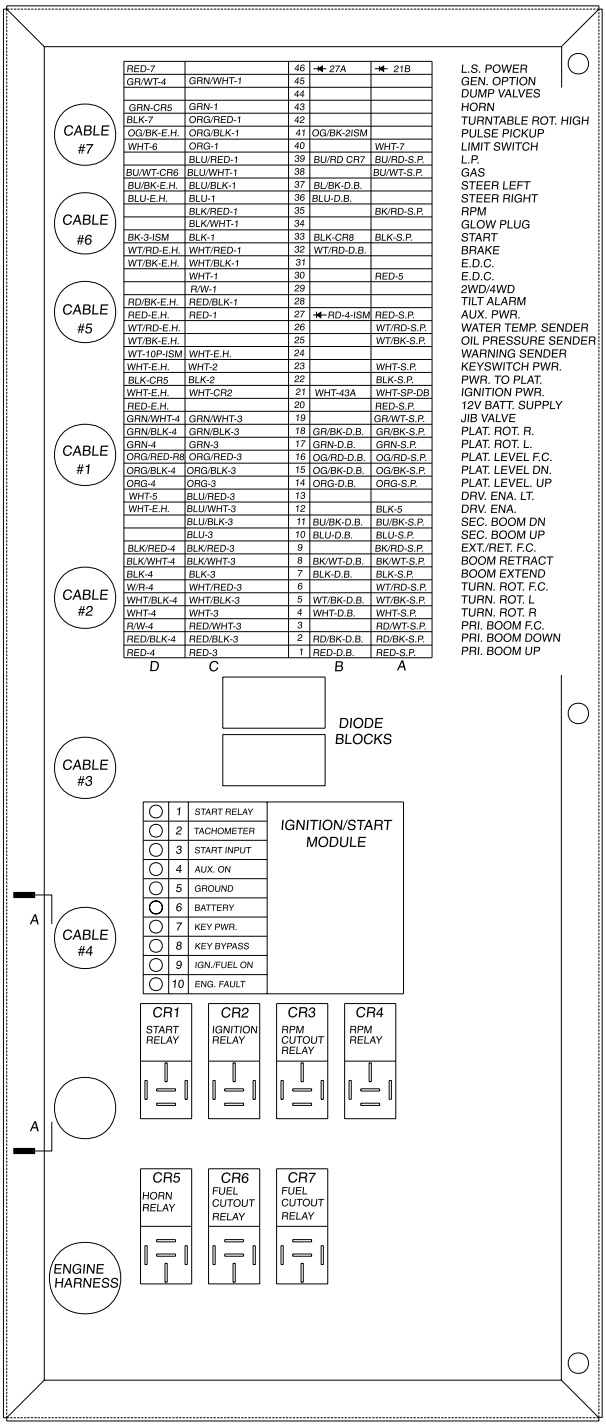

D	C		B	A	
RED-7		46	27A	21B	L.S. POWER
GR/WT-4	GRN/WHT-1	45			GEN. OPTION
		44			DUMP VALVES
GRN-CR5	GRN-1	43			HORN
BLK-7	ORG/RED-1	42			TURNTABLE ROT. HIGH
OG/BK-E.H.	ORG/BLK-1	41	OG/BK-2ISM		PULSE PICKUP
WHT-6	ORG-1	40		WHT-7	LIMIT SWITCH
	BLU/RED-1	39	BU/RD CR7	BU/RD-S.P.	L.P.
BU/WT-CR6	BLU/WHT-1	38		BU/WT-S.P.	GAS
BU/BK-E.H.	BLU/BLK-1	37	BU/BK-D.B.		STEER LEFT
BLU-E.H.	BLU-1	36	BLU-D.B.		STEER RIGHT
	BLK/RED-1	35		BK/RD-S.P.	RPM
	BLK/WHT-1	34			GLOW PLUG
BK-3-ISM	BLK-1	33	BLK-CR8	BLK-S.P.	START
WT/RD-E.H.	WHT/RED-1	32	WT/RD-D.B.		BRAKE
WT/BK-E.H.	WHT/BLK-1	31			E.D.C.
	WHT-1	30		RED-5	E.D.C.
	R/W-1	29			2WD/4WD
RD/BK-E.H.	RED/BLK-1	28			TILT ALARM
RED-E.H.	RED-1	27	RD-4-ISM	RED-S.P.	AUX. PWR.
WT/RD-E.H.		26		WT/RD-S.P.	WATER TEMP. SENDER
WT/BK-E.H.		25		WT/BK-S.P.	OIL PRESSURE SENDER
WT-10P-ISM	WHT-E.H.	24			WARNING SENDER
WHT-E.H.	WHT-2	23		WHT-S.P.	KEYSWITCH PWR.
BLK-CR5	BLK-2	22		BLK-S.P.	PWR. TO PLAT.
WHT-E.H.	WHT-CR2	21	WHT-43A	WHT-SP-DB	IGNITION PWR.
RED-E.H.		20		RED-S.P.	12V BATT. SUPPLY
GRN/WHT-4	GRN/WHT-3	19		GR/WT-S.P.	JIB VALVE
GRN/BLK-4	GRN/BLK-3	18	GR/BK-D.B.	GR/BK-S.P.	PLAT. ROT. R.
GRN-4	GRN-3	17	GRN-D.B.	GRN-S.P.	PLAT. ROT. L.
ORG/RED-R8	ORG/RED-3	16	OG/RD-D.B.	OG/RD-S.P.	PLAT. LEVEL F.C.
ORG/BLK-4	ORG/BLK-3	15	OG/BK-D.B.	OG/BK-S.P.	PLAT. LEVEL DN.
ORG-4	ORG-3	14	ORG-D.B.	ORG-S.P.	PLAT. LEVEL. UP
WHT-5	BLU/RED-3	13			DRV. ENA. LT.
WHT-E.H.	BLU/WHT-3	12		BLK-5	DRV. ENA.
	BLU/BLK-3	11	BU/BK-D.B.	BU/BK-S.P.	SEC. BOOM DN
	BLU-3	10	BLU-D.B.	BLU-S.P.	SEC. BOOM UP
BLK/RED-4	BLK/RED-3	9		BK/RD-S.P.	EXT./RET. F.C.
BLK/WHT-4	BLK/WHT-3	8	BK/WT-D.B.	BK/WT-S.P.	BOOM RETRACT
BLK-4	BLK-3	7	BLK-D.B.	BLK-S.P.	BOOM EXTEND
W/R-4	WHT/RED-3	6		WT/RD-S.P.	TURN. ROT. F.C.
WHT/BLK-4	WHT/BLK-3	5	WT/BK-D.B.	WT/BK-S.P.	TURN. ROT. L
WHT-4	WHT-3	4	WHT-D.B.	WHT-S.P.	TURN. ROT. R
R/W-4	RED/WHT-3	3		RD/WT-S.P.	PRI. BOOM F.C.
RED/BLK-4	RED/BLK-3	2	RD/BK-D.B.	RD/BK-S.P.	PRI. BOOM DOWN
RED-4	RED-3	1	RED-D.B.	RED-S.P.	PRI. BOOM UP

https://truckmanualshub.com/

Ground Control Box Wiring Diagram- Gasoline/LPG Models

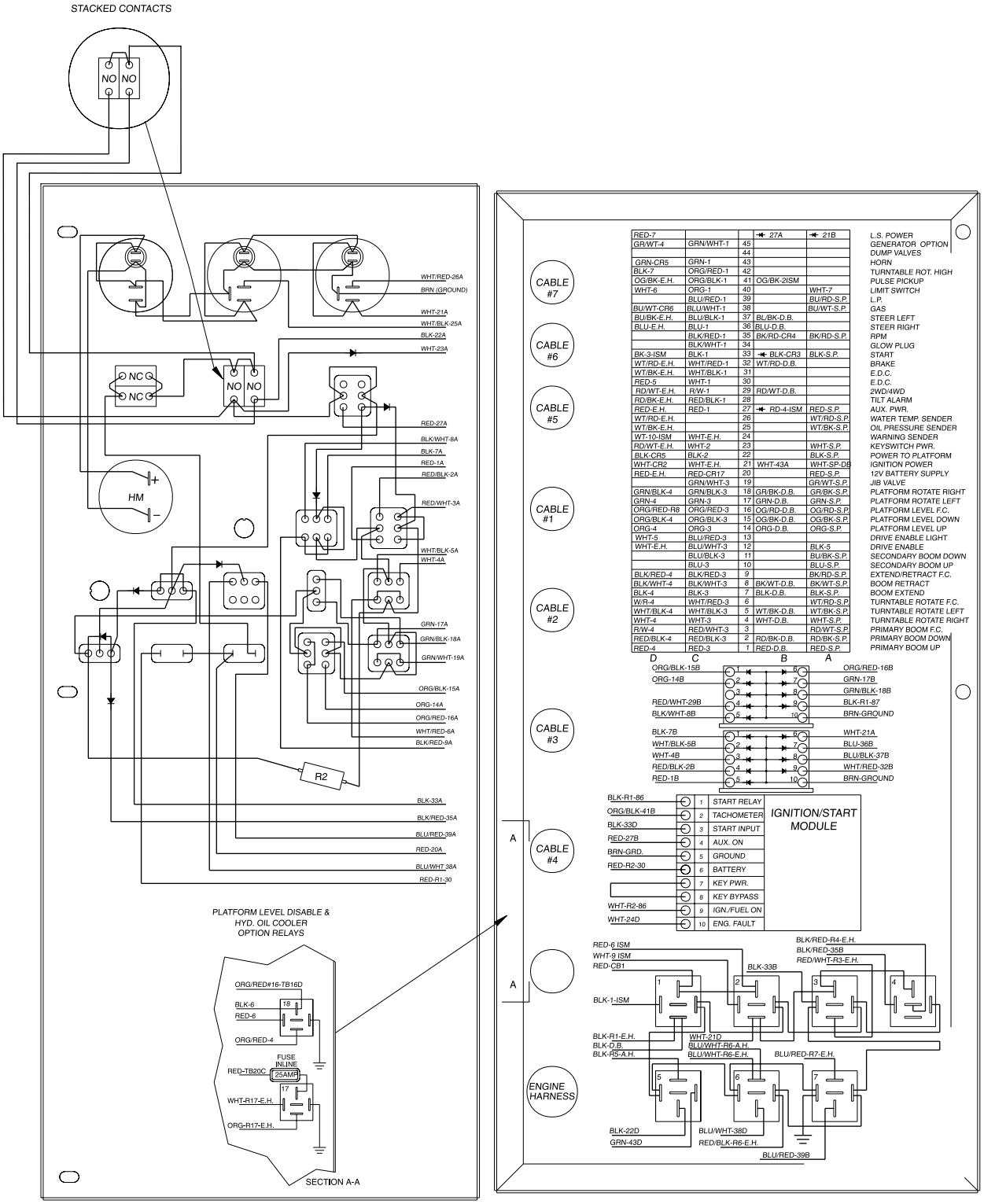

https://truckmanualshub.com/

Platform Control Box Legend-Gasoline/LPG Models

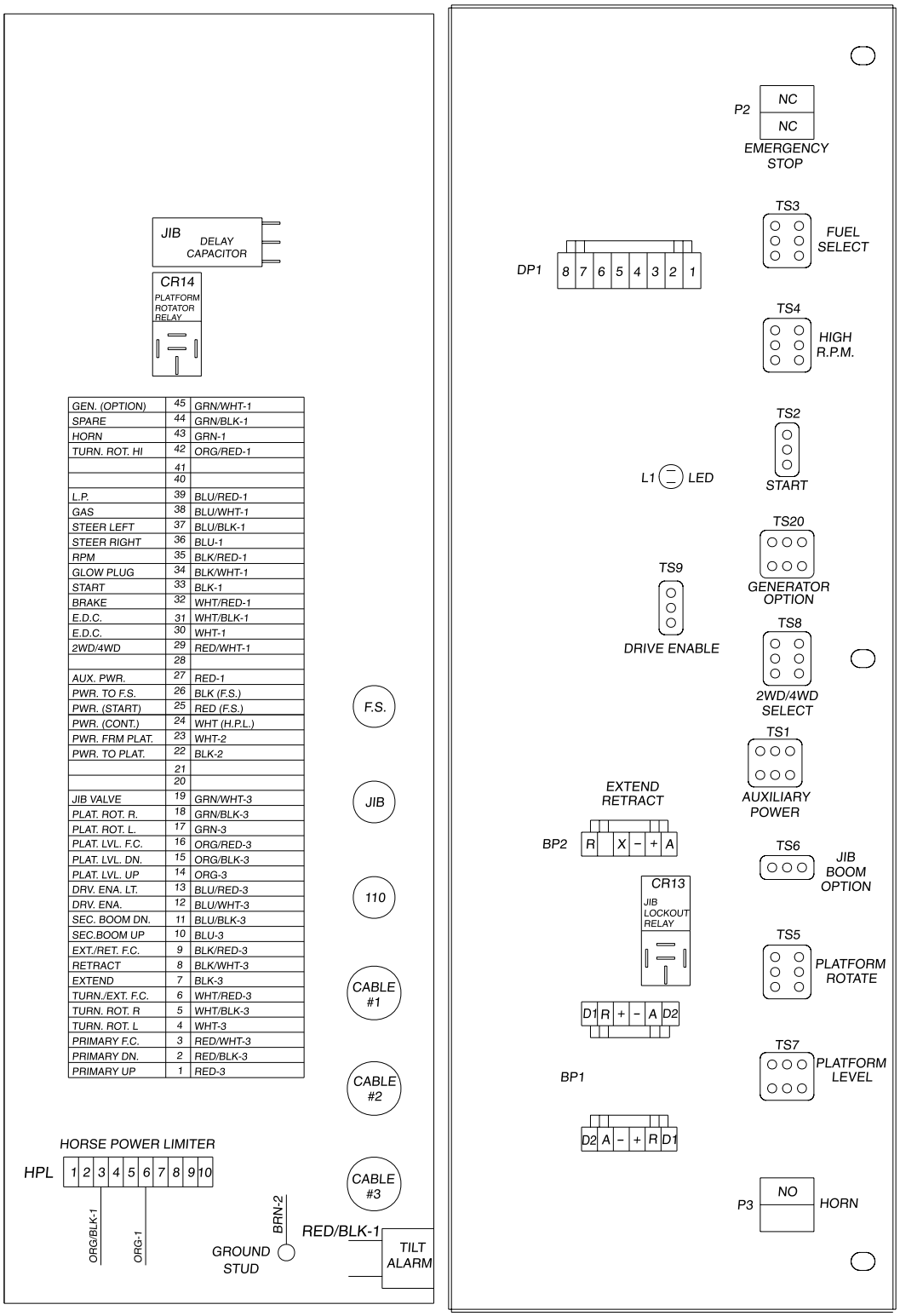

https://truckmanualshub.com/

Platform Control Box Wiring Diagram- Gasoline/LPG Models

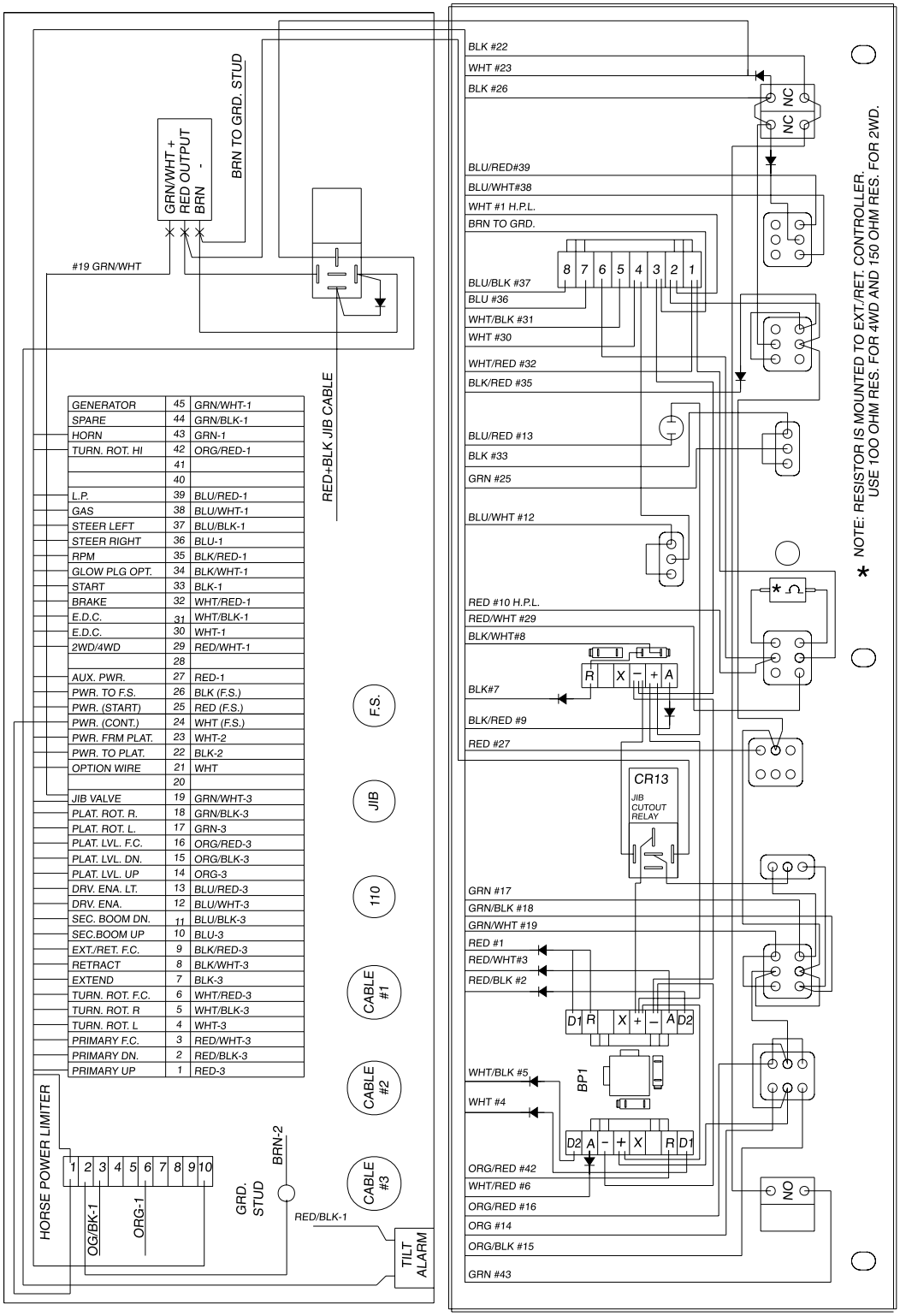

https://truckmanualshub.com/

Electrical Schematic-
Diesel Models

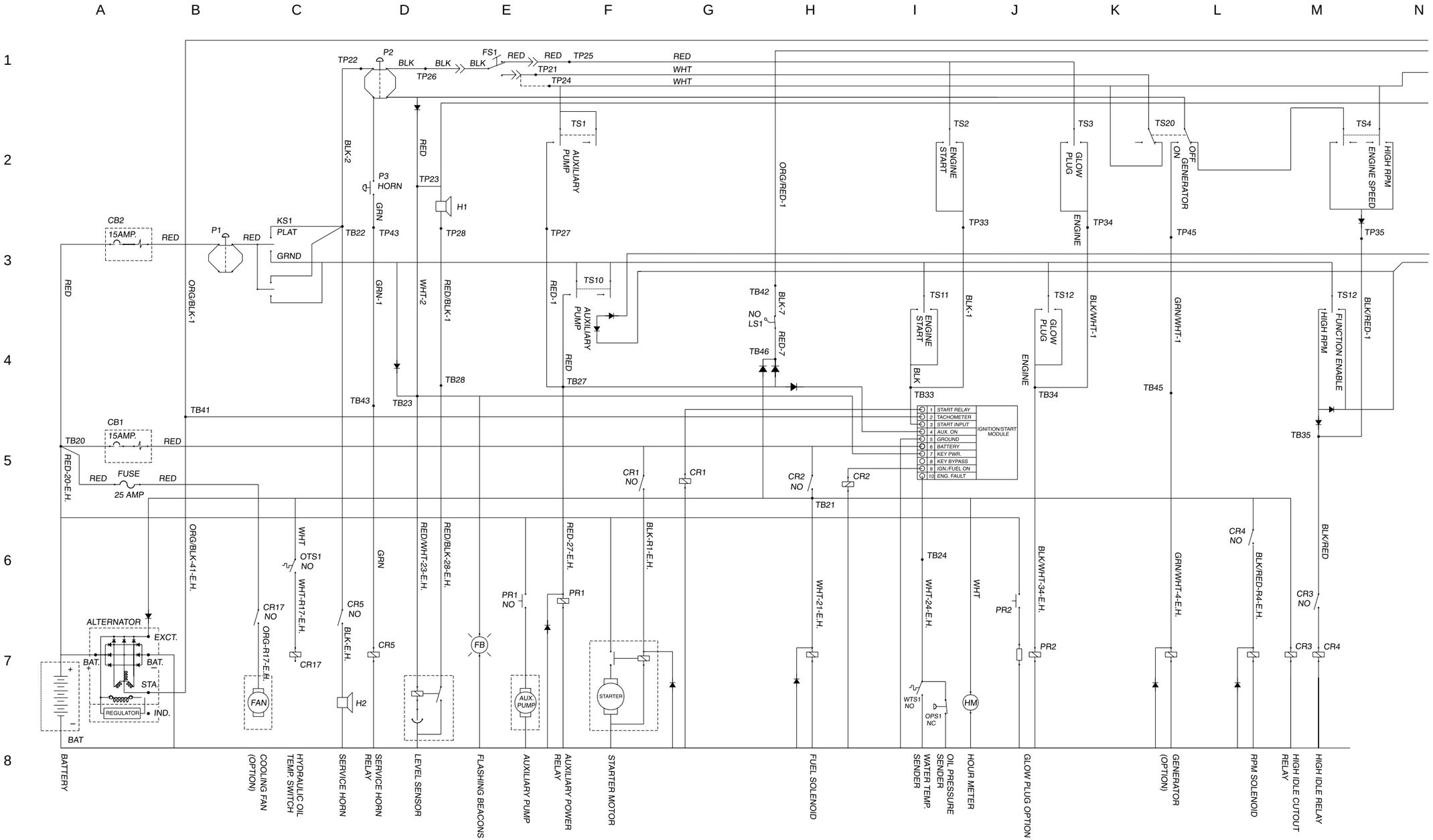

https://truckmanualshub.com/

Electrical Schematic- Diesel Models

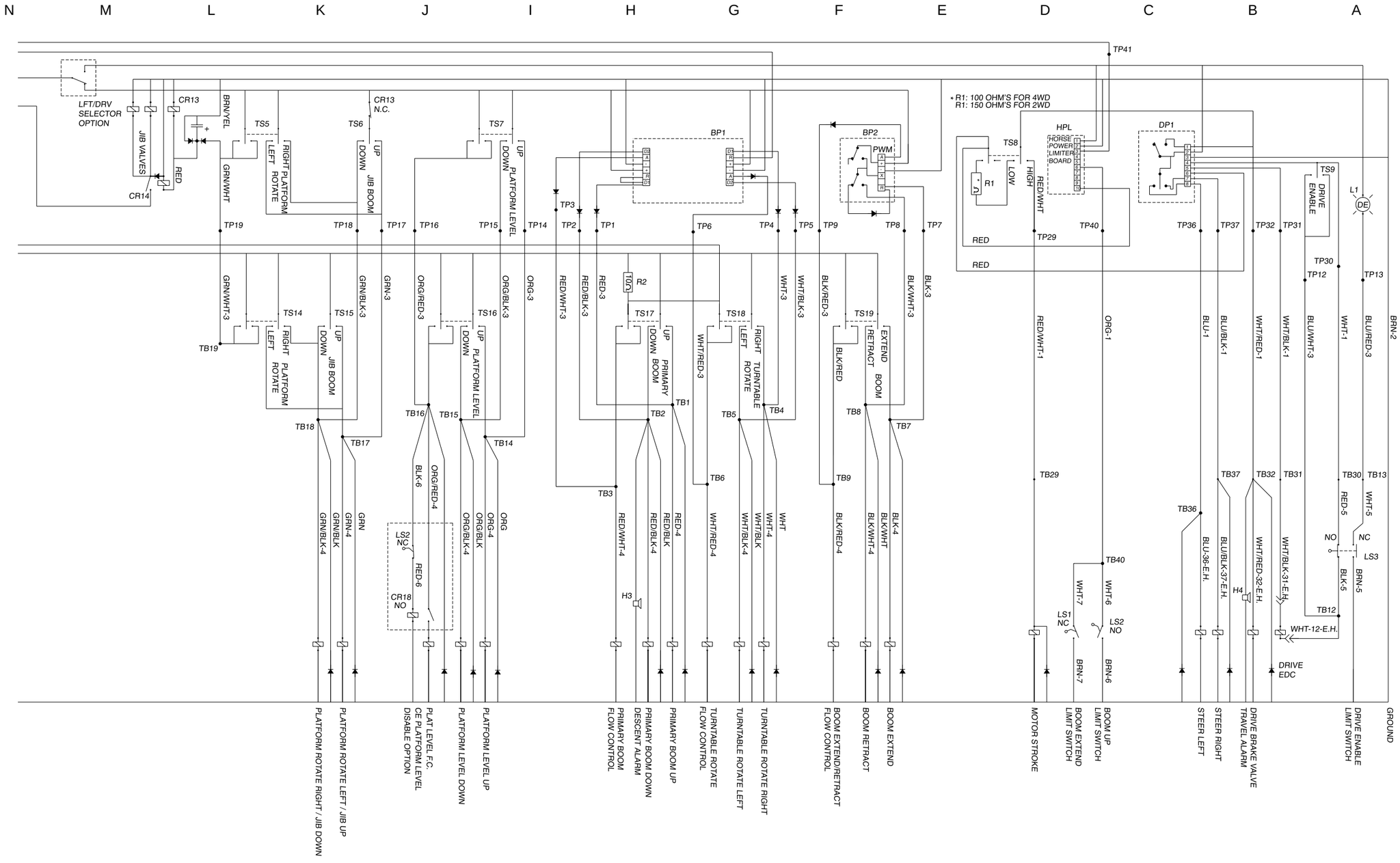

https://truckmanualshub.com/

Ground Control Box Legend-Diesel Models

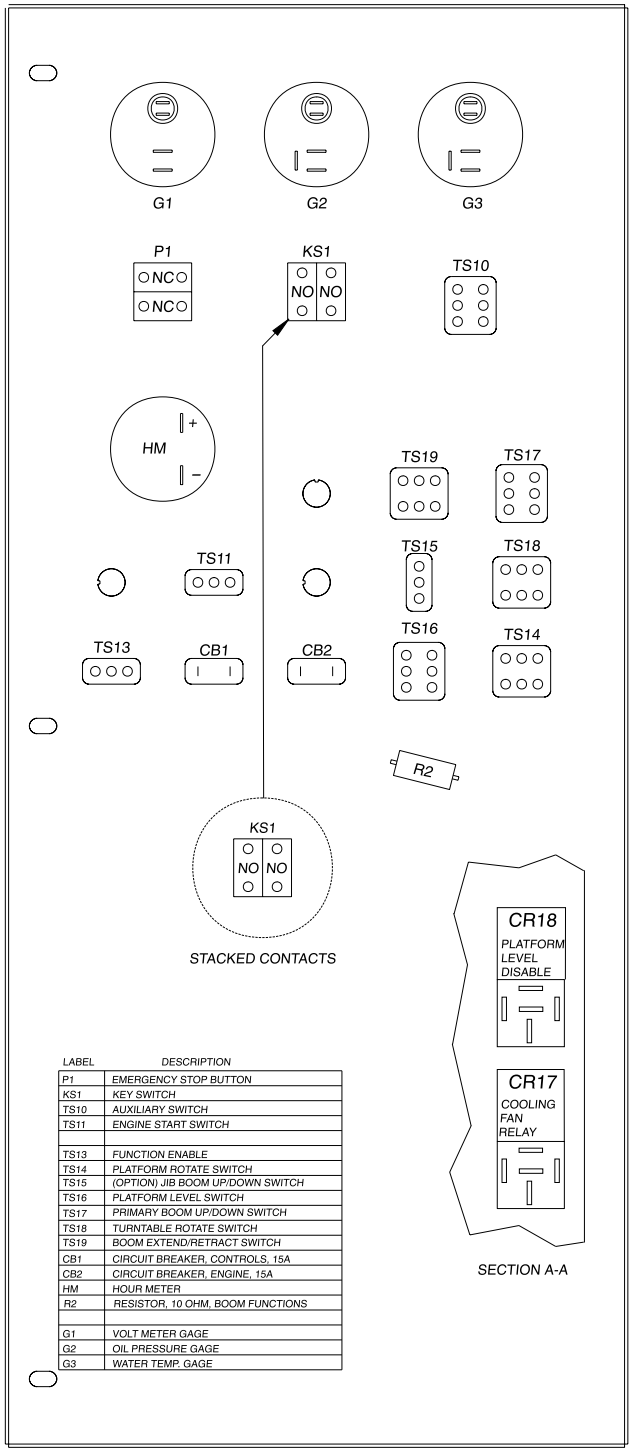

LABEL	DESCRIPTION
P1	EMERGENCY STOP BUTTON
KS1	KEY SWITCH
TS10	AUXILIARY SWITCH
TS11	ENGINE START SWITCH
TS13	FUNCTION ENABLE
TS14	PLATFORM ROTATE SWITCH
TS15	(OPTION) JIB BOOM UP/DOWN SWITCH
TS16	PLATFORM LEVEL SWITCH
TS17	PRIMARY BOOM UP/DOWN SWITCH
TS18	TURNTABLE ROTATE SWITCH
TS19	BOOM EXTEND/RETRACT SWITCH
CB1	CIRCUIT BREAKER, CONTROLS, 15A
CB2	CIRCUIT BREAKER, ENGINE, 15A
HM	HOUR METER
R2	RESISTOR, 10 OHM, BOOM FUNCTIONS
G1	VOLT METER GAGE
G2	OIL PRESSURE GAGE
G3	WATER TEMP. GAGE

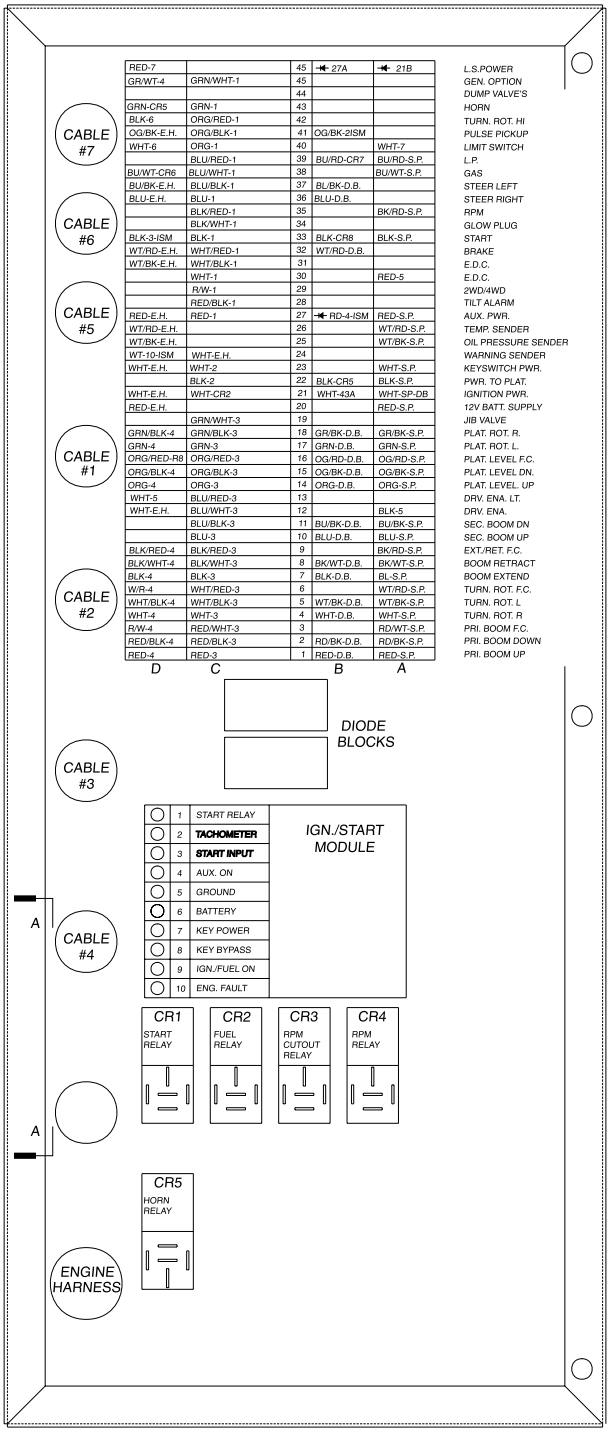

RED-7		45	27A	21B	L.S.POWER
GR/WT-4	GRN/WHT-1	45			GEN. OPTION
		44			DUMP VALVE'S
GRN-CR5	GRN-1	43			HORN
BLK-6	ORG/RED-1	42			TURN. ROT. HI
OG/BK-E.H.	ORG/BLK-1	41	OG/BK-2ISM		PULSE PICKUP
WHT-6	ORG-1	40		WHT-7	LIMIT SWITCH
	BLU/RED-1	39	BU/RD-CR7	BU/RD-S.P.	L.P.
BU/WT-CR6	BLU/WHT-1	38		BU/WT-S.P.	GAS
BU/BK-E.H.	BLU/BLK-1	37	BL/BK-D.B.		STEER LEFT
BLU-E.H.	BLU-1	36	BLU-D.B.		STEER RIGHT
	BLK/RED-1	35		BK/RD-S.P.	RPM
	BLK/WHT-1	34			GLOW PLUG
BLK-3-ISM	BLK-1	33	BLK-CR8	BLK-S.P.	START
WT/RD-E.H.	WHT/RED-1	32	WT/RD-D.B.		BRAKE
WT/BK-E.H.	WHT/BLK-1	31			E.D.C.
	WHT-1	30		RED-5	E.D.C.
	R/W-1	29			2WD/4WD
	RED/BLK-1	28			TILT ALARM
RED-E.H.	RED-1	27	RD-4-ISM	RED-S.P.	AUX. PWR.
WT/RD-E.H.		26		WT/RD-S.P.	TEMP. SENDER
WT/BK-E.H.		25		WT/BK-S.P.	OIL PRESSURE SENDER
WT-10-ISM	WHT-E.H.	24			WARNING SENDER
WHT-E.H.	WHT-2	23		WHT-S.P.	KEYSWITCH PWR.
	BLK-2	22	BLK-CR5	BLK-S.P.	PWR. TO PLAT.
WHT-E.H.	WHT-CR2	21	WHT-43A	WHT-SP-DB	IGNITION PWR.
RED-E.H.		20		RED-S.P.	12V BATT. SUPPLY
	GRN/WHT-3	19			JIB VALVE
GRN/BLK-4	GRN/BLK-3	18	GR/BK-D.B.	GR/BK-S.P.	PLAT. ROT. R.
GRN-4	GRN-3	17	GRN-D.B.	GRN-S.P.	PLAT. ROT. L.
ORG/RED-R8	ORG/RED-3	16	OG/RD-D.B.	OG/RD-S.P.	PLAT. LEVEL F.C.
ORG/BLK-4	ORG/BLK-3	15	OG/BK-D.B.	OG/BK-S.P.	PLAT. LEVEL DN.
ORG-4	ORG-3	14	ORG-D.B.	ORG-S.P.	PLAT. LEVEL. UP
WHT-5	BLU/RED-3	13			DRV. ENA. LT.
WHT-E.H.	BLU/WHT-3	12		BLK-5	DRV. ENA.
	BLU/BLK-3	11	BU/BK-D.B.	BU/BK-S.P.	SEC. BOOM DN
	BLU-3	10	BLU-D.B.	BLU-S.P.	SEC. BOOM UP
BLK/RED-4	BLK/RED-3	9		BK/RD-S.P.	EXT./RET. F.C.
BLK/WHT-4	BLK/WHT-3	8	BK/WT-D.B.	BK/WT-S.P.	BOOM RETRACT
BLK-4	BLK-3	7	BLK-D.B.	BL-S.P.	BOOM EXTEND
W/R-4	WHT/RED-3	6		WT/RD-S.P.	TURN. ROT. F.C.
WHT/BLK-4	WHT/BLK-3	5	WT/BK-D.B.	WT/BK-S.P.	TURN. ROT. L
WHT-4	WHT-3	4	WHT-D.B.	WHT-S.P.	TURN. ROT. R.
R/W-4	RED/WHT-3	3		RD/WT-S.P.	PRI. BOOM F.C.
RED/BLK-4	RED/BLK-3	2	RD/BK-D.B.	RD/BK-S.P.	PRI. BOOM DOWN
RED-4	RED-3	1	RED-D.B.	RED-S.P.	PRI. BOOM UP

https://truckmanualshub.com/

Ground Control Box Wiring Diagram-Diesel Models

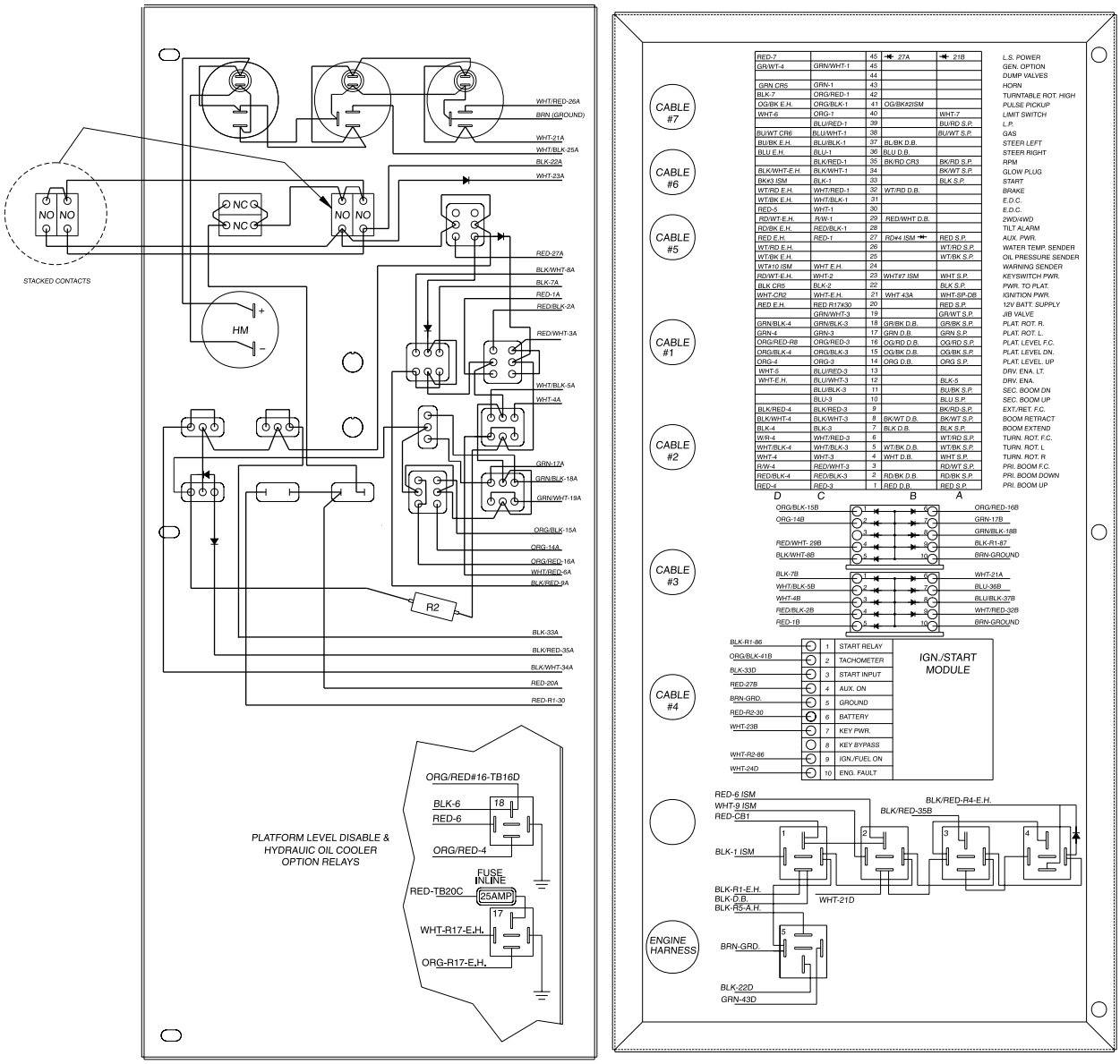

https://truckmanualshub.com/

Platform Control Box Legend-Diesel Models

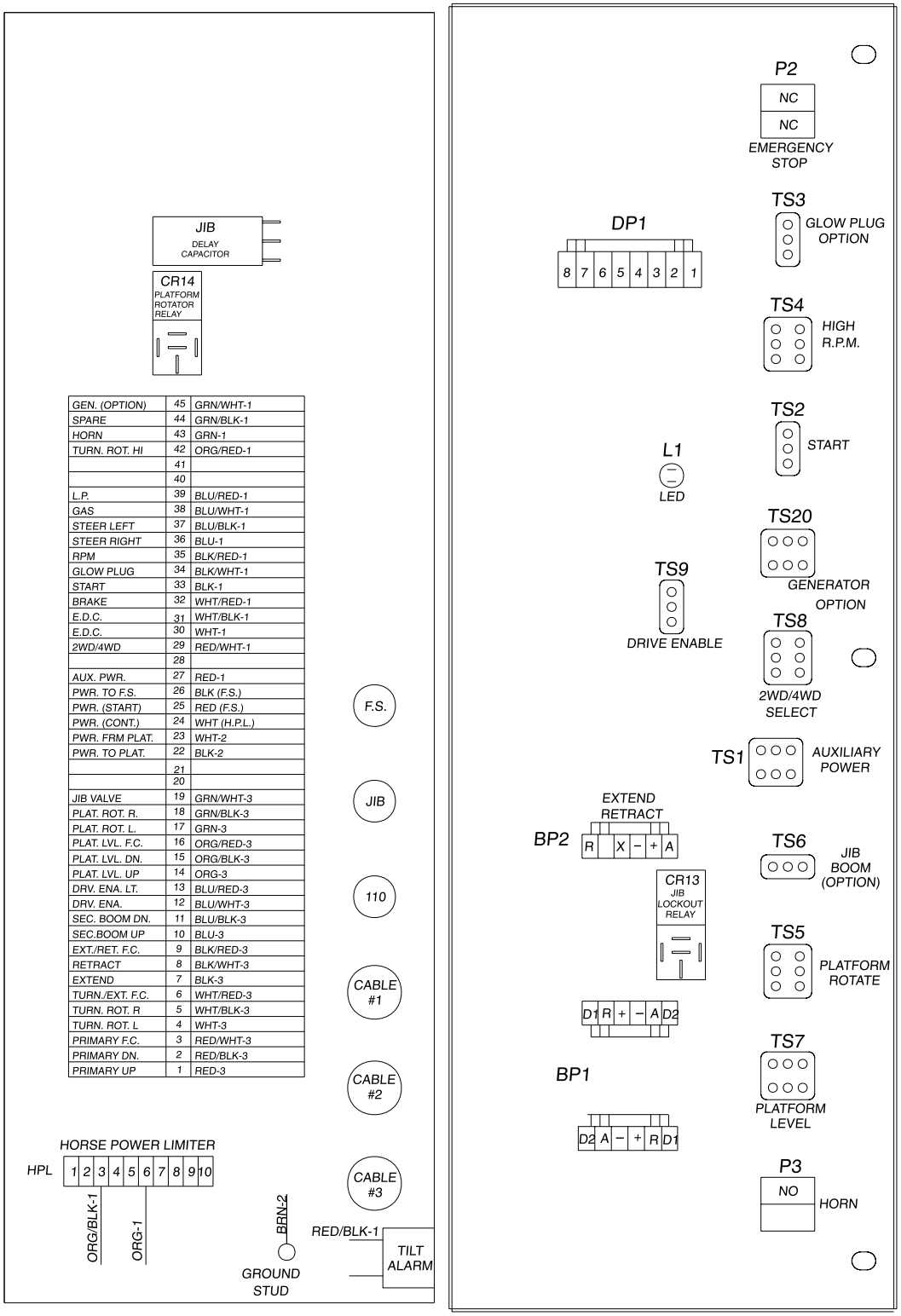

GEN. (OPTION)	45	GRN/WHT-1
SPARE	44	GRN/BLK-1
HORN	43	GRN-1
TURN. ROT. HI	42	ORG/RED-1
	41	
	40	
L.P.	39	BLU/RED-1
GAS	38	BLU/WHT-1
STEER LEFT	37	BLU/BLK-1
STEER RIGHT	36	BLU-1
RPM	35	BLK/RED-1
GLOW PLUG	34	BLK/WHT-1
START	33	BLK-1
BRAKE	32	WHT/RED-1
E.D.C.	31	WHT/BLK-1
E.D.C.	30	WHT-1
2WD/4WD	29	RED/WHT-1
	28	
AUX. PWR.	27	RED-1
PWR. TO F.S.	26	BLK (F.S.)
PWR. (START)	25	RED (F.S.)
PWR. (CONT.)	24	WHT (H.P.L.)
PWR. FRM PLAT.	23	WHT-2
PWR. TO PLAT.	22	BLK-2
	21	
	20	
JIB VALVE	19	GRN/WHT-3
PLAT. ROT. R.	18	GRN/BLK-3
PLAT. ROT. L.	17	GRN-3
PLAT. LVL. F.C.	16	ORG/RED-3
PLAT. LVL. DN.	15	ORG/BLK-3
PLAT. LVL. UP	14	ORG-3
DRV. ENA. LT.	13	BLU/RED-3
DRV. ENA.	12	BLU/WHT-3
SEC. BOOM DN.	11	BLU/BLK-3
SEC.BOOM UP	10	BLU-3
EXT./RET. F.C.	9	BLK/RED-3
RETRACT	8	BLK/WHT-3
EXTEND	7	BLK-3
TURN./EXT. F.C.	6	WHT/RED-3
TURN. ROT. R	5	WHT/BLK-3
TURN. ROT. L	4	WHT-3
PRIMARY F.C.	3	RED/WHT-3
PRIMARY DN.	2	RED/BLK-3
PRIMARY UP	1	RED-3

https://truckmanualshub.com/

Platform Control Box Wiring Diagram- Diesel Models

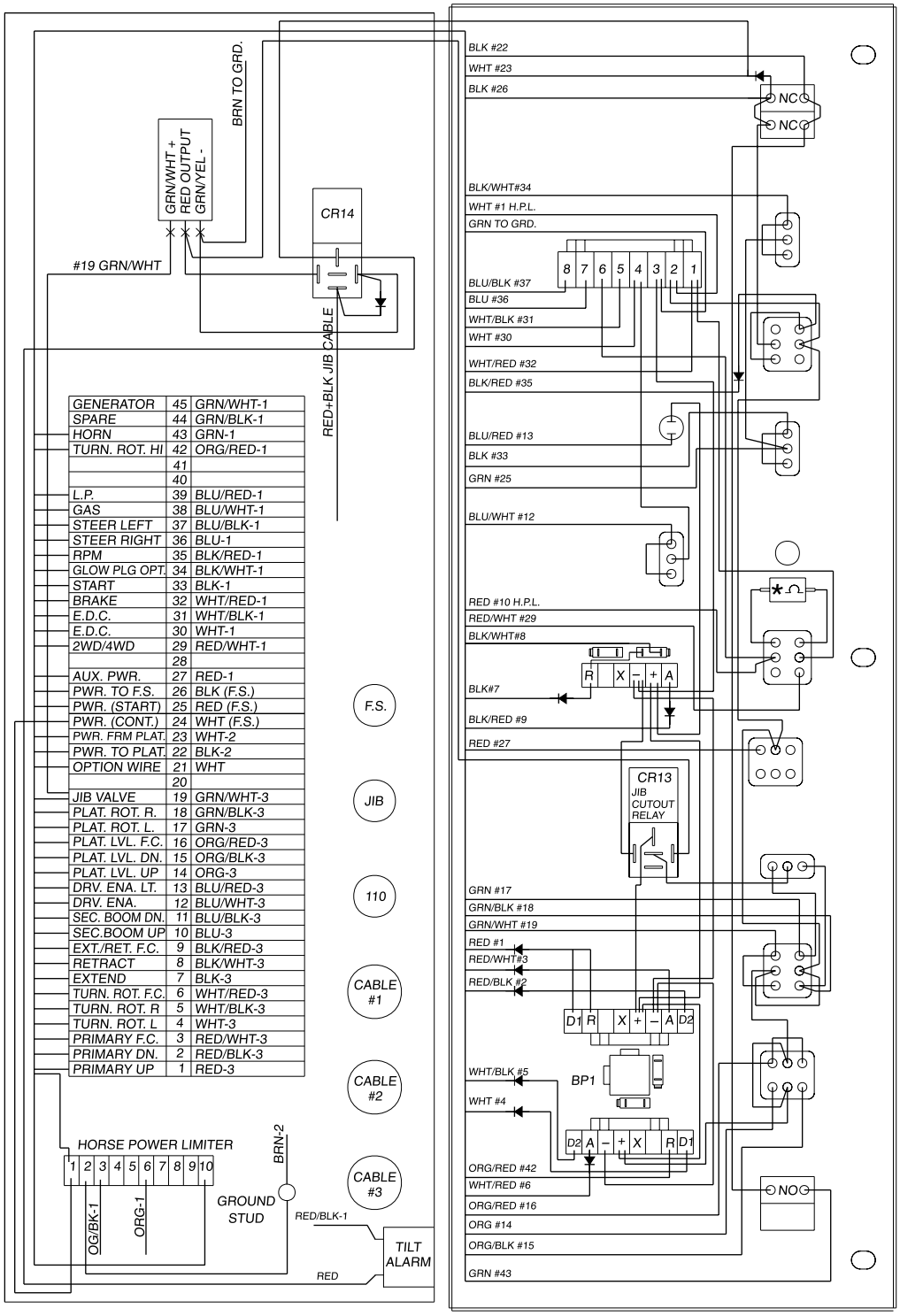

* NOTE: RESISTOR IS MOUNTED TO EXT./RET. CONTROLLER. USE 100 OHM RES. FOR 4WD AND 150 OHM RES. FOR 2WD.

https://truckmanualshub.com/

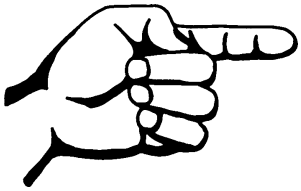

https://truckmanualshub.com/

Hydraulic Symbols Legend

Pressure gauge

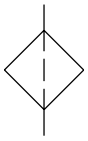
Filter

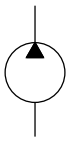
Fixed displacement pump

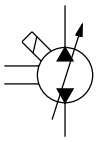
Bi-directional, variable displacement pump

Bi-directional motor

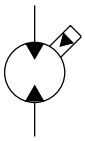
2-speed, bi-directional motor

Pump prime mover (engine or motor)

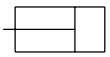
Cylinder

Accumulator

Orifice with size

Variable orifice or shut-off valve

Check valve

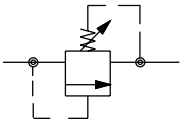
Relief valve

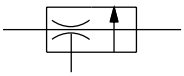
Priority flow divider

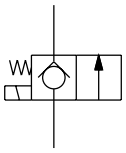
Solenoid operated dump valve

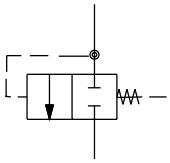
Differential sensing valve

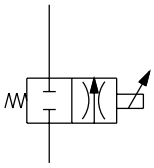
Solenoid operated proportional valve

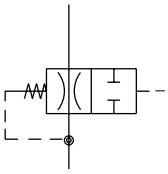
Flow regulator valve

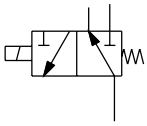
Solenoid operated 2 pos., 3 way, directional valve

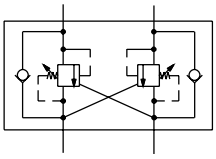
Counterbalance valve

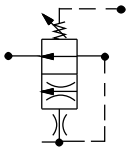
Pilot operated flow control valve

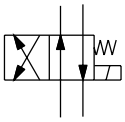
Solenoid operated 2 pos., 4 way, directional valve

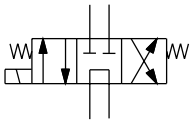
Solenoid operated 3 pos., 4 way, directional valve (DO1)

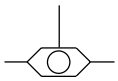
2 pos., 3 way, shuttle valve

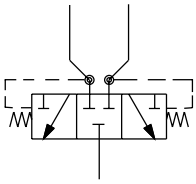
3 pos., 4 way, directional valve

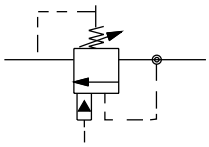
Sequencing valve

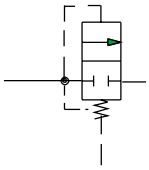
Unloader valve

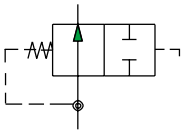
Pressure compensating valve

https://truckmanualshub.com/

2WD Hydraulic Schematic
Non-Oscillating Axle

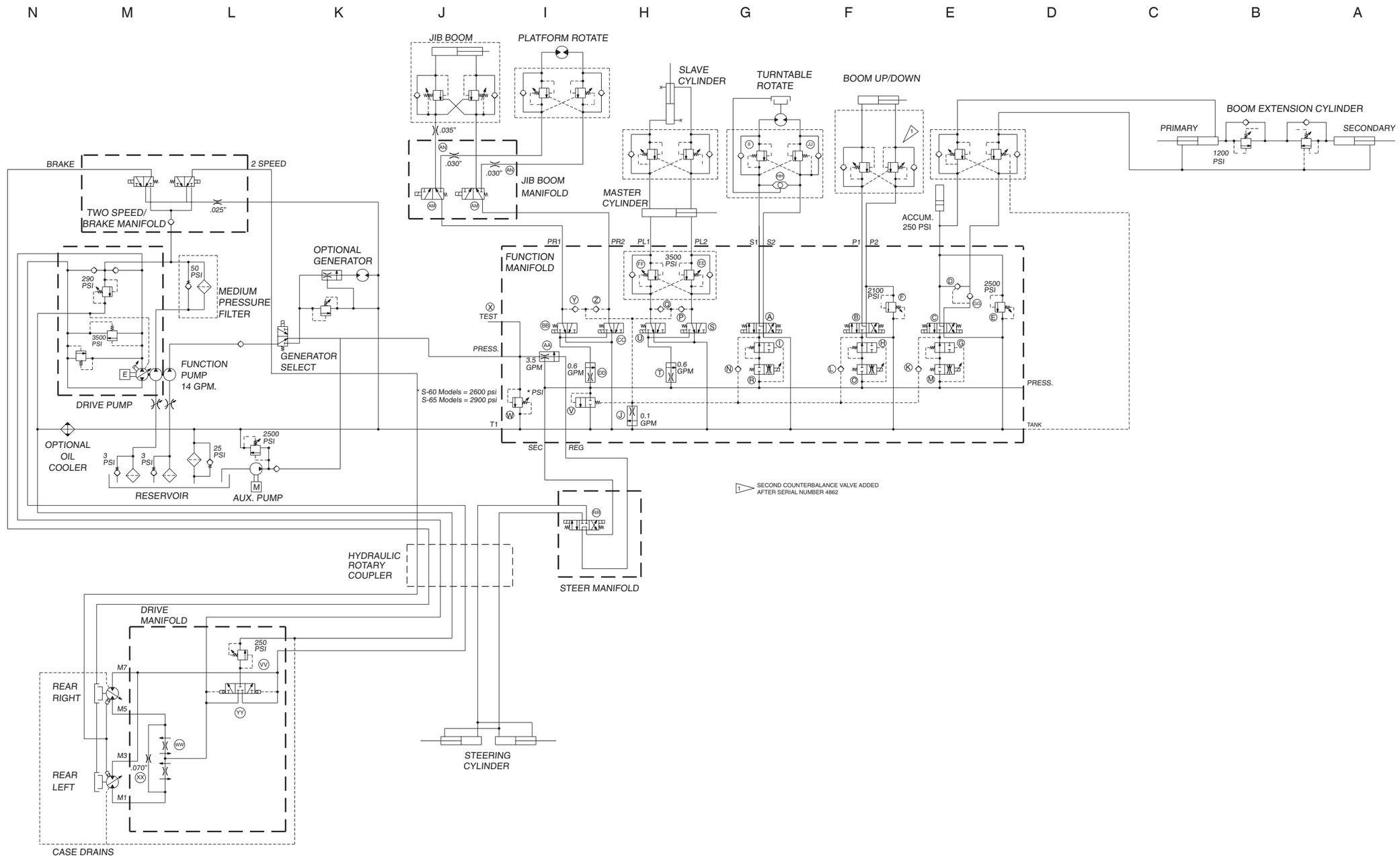

https://truckmanualshub.com/

2WD Hydraulic Schematic Oscillating Axle

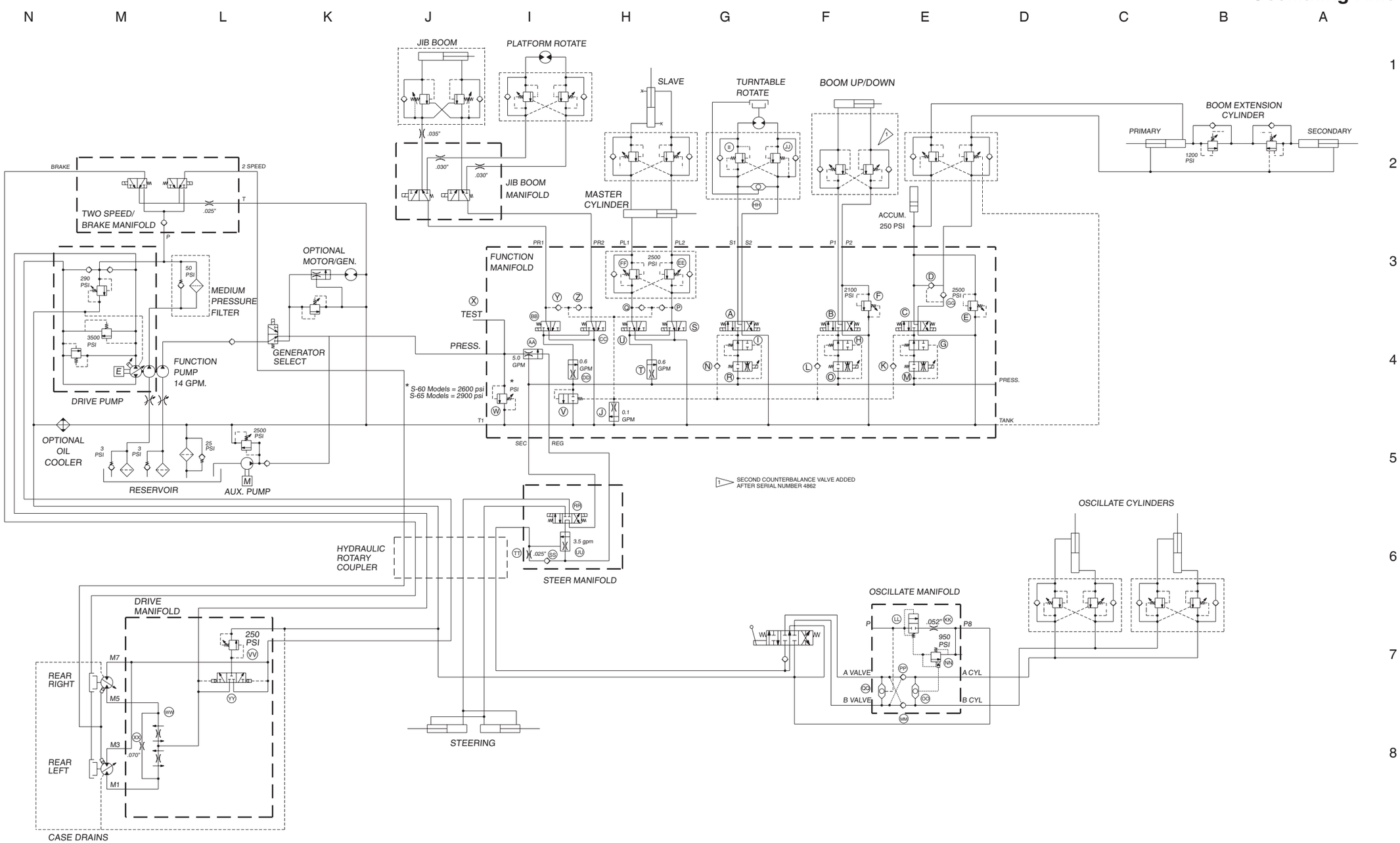

https://truckmanualshub.com/

4WD Hydraulic Schematic Non-Oscillating Axle

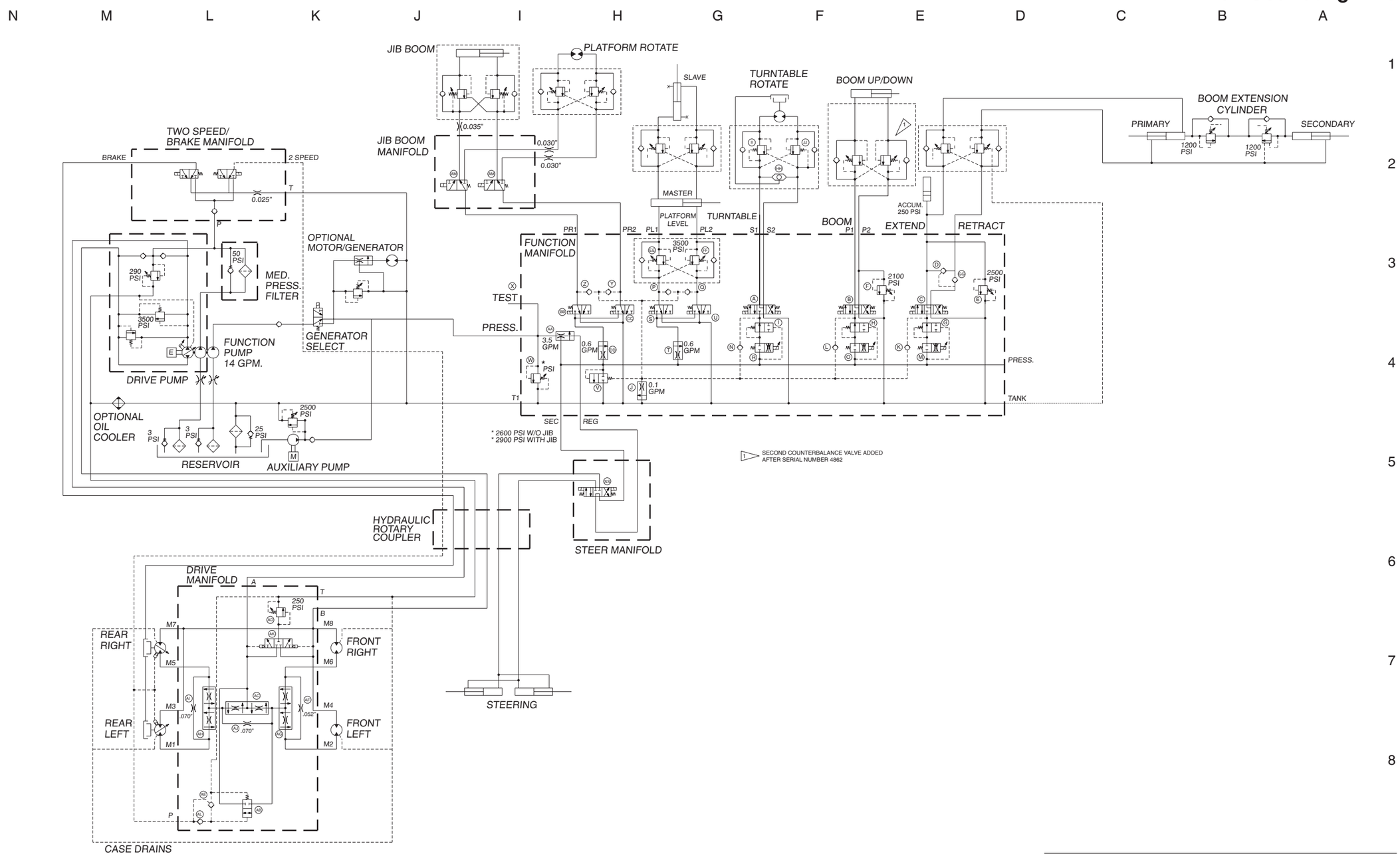

https://truckmanualshub.com/

4WD Hydraulic Schematic Oscillating Axle

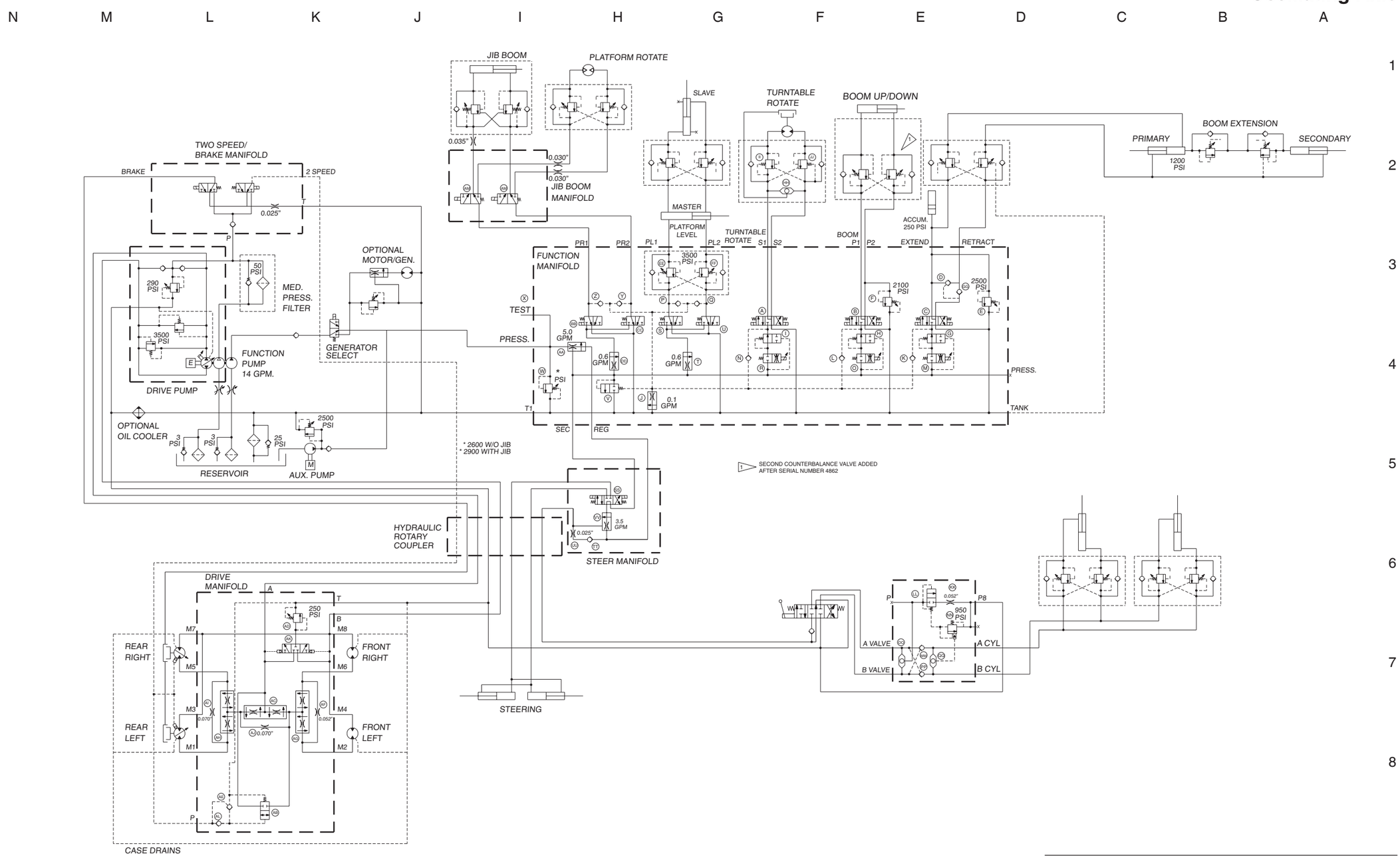

https://truckmanualshub.com/

Repair Procedures

Observe and Obey:

- ☑ Repair procedures shall be completed by a person trained and qualified on the repair of this machine.
- ☑ Immediately tag and remove from service a damaged or malfunctioning machine.
- ☑ Repair any machine damage or malfunction before operating the machine.

Before Repairs Start:

- ☑ Read, understand and obey the safety rules and operating instructions in the *Genie S-60 & Genie S-65 Operator's Manual.*
- ☑ Be sure that all necessary tools and parts are available and ready for use.
- ☑ Read each procedure completely and adhere to the instructions. Attempting shortcuts may produce hazardous conditions.
- ☑ Unless otherwise specified, perform each repair procedure with the machine in the following configuration:
  - · Machine parked on a flat, level surface
  - · Boom in stowed position
  - · Turntable rotated with the boom between the non-steering wheels
  - · Turntable secured with the turntable rotation lock pin
  - · Key switch in the OFF position with the key removed
  - · Wheels chocked

About This Section

Most of the procedures in this section should only be performed by a trained service professional in a suitably equipped workshop. Select the appropriate repair procedure after troubleshooting the problem.

Perform disassembly procedures to the point where repairs can be completed. Then to re-assemble, perform the disassembly steps in reverse order.

General Repair Process

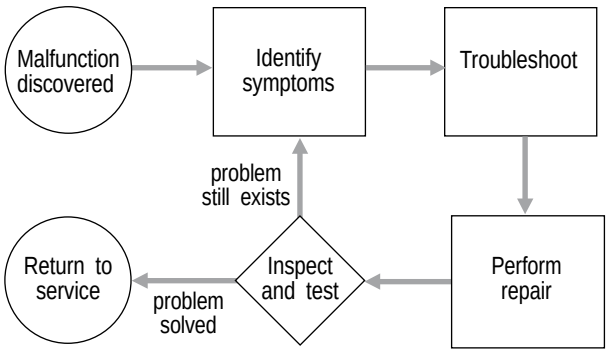

Symbols Legend

DANGER Indicates the presence of a hazard that **will** cause death or serious injury.

WARNING Indicates the presence of a hazard that **may** cause death or serious injury.

CAUTION Indicates the presence of a hazard that **will** or **may** cause serious personal injury or damage to the machine.

NOTICE Indicates special operation or maintenance information.

⊙ Indicates that a specific result is expected after performing a series of steps.

https://truckmanualshub.com/

Platform Controls

1-1 Joystick Controllers

Maintaining joystick controllers at the proper settings is essential to safe machine operation. Every joystick controller should operate smoothly and provide proportional speed control over its entire range of motion.

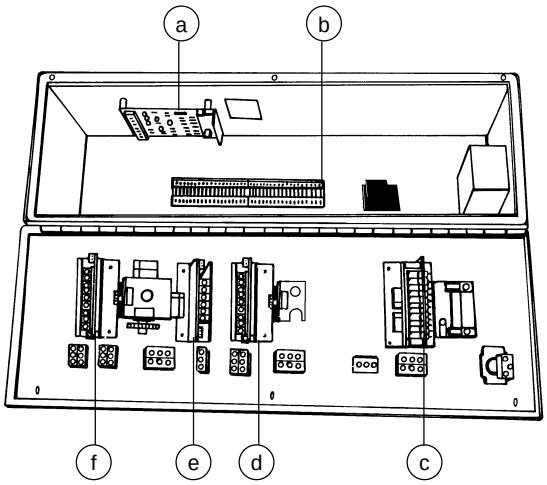

Platform control box
- a horsepower limiter board
- b terminals
- c drive proportional controller
- d extend/retract proportional controller
- e boom proportional controller
- f turntable rotate proportional controller

Boom Up/Down Controller Adjustments

NOTICE Do not adjust the joystick controllers unless the static battery voltage is above 12V DC and the alternator is operating properly with 13.6 to 14.5V DC output.

⚠WARNING Electrocution hazard. Contact with electrically charged circuits may result in death or serious injury. Remove all rings, watches and other jewelry.

1 Check the battery condition with a volt meter. The reading should be 12V DC or more to accurately adjust the controller.

2 Turn the key switch to platform control and pull out the Emergency Stop button to the ON position at both the ground and platform controls. Do not start the engine.

3 Open the platform control box lid and locate the boom up/down controller.

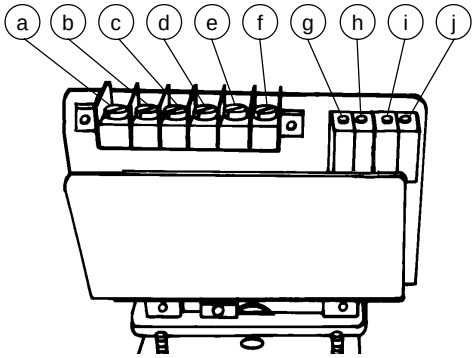

- a terminal "D2" directional output
- b terminal "A" proportional output
- c terminal "-" ground
- d terminal "+" positive
- e terminal "R" activates max-out range
- f terminal "D1" directional output
- g ramp rate adjustable trimpot
- h lo range adjustable trimpot
- i threshold adjustable trimpot
- j hi range adjustable trimpot

4 Set the preliminary ramp rate: Turn the trimpot adjustment screw counterclockwise 15 turns or until you hear a repeated click.

5 Connect the red(+) lead from a volt meter to the “A” terminal on the controller printed circuit board. Connect the black(-) lead to ground.

6 Set the threshold: Press down the foot switch, then slowly move the control handle off center until the moment a voltage reading appears. Adjust the voltage to 3.5V DC. Turn the threshold trimpot adjustment screw clockwise to increase the voltage or counterclockwise to decrease the voltage.

https://truckmanualshub.com/

7 Set the hi range: Press down the foot switch, then move the control handle all the way to the UP position. Adjust the voltage to 8.5V DC. Turn the max-out trimpot adjustment screw clockwise to increase the voltage or counterclockwise to decrease the voltage.

8 Set the lo range: Press down the foot switch, then move the control handle all the way to the DOWN position. Adjust the voltage to 6.2V DC. Turn the dual range trimpot adjustment screw clockwise to increase the voltage or counterclockwise to decrease the voltage.

9 Start the engine and move the engine idle control switch to foot switch activated high idle (rabbit and foot switch symbol). Lower the boom to the stowed position.

NOTICE Engine should be at normal operating temperature.

10 Start a timer and record how long it takes for the boom to fully raise. Adjust the max-out trimpot to achieve a 55 to 85 second cycle time.

11 Start a timer and record how long it takes for the boom to fully lower. Adjust the dual range trimpot to achieve an 90 to 120 second cycle time.

NOTICE If the function cycle time is not achievable, check the relief valve pressure. See 10-2, *Valve Adjustments - Function Manifold.*

12 Turn the engine off and re-connect the volt meter.

13 Pull out the Emergency Stop button to the ON position.

14 Press down the foot switch and then move the control handle all the way to the UP position. Record the maximum voltage reading.

15 Start the engine.

16 Start a timer and simultaneously move the control handle all the way to the UP position. Note how long it takes to reach the maximum voltage recorded in step 14. This is the ramp rate.

17 Set the ramp rate: turn the trimpot to obtain a 3 to 4 second ramp speed. Turn the trimpot clockwise to increase the time or counterclockwise to decrease the time.

Boom up/down specifications	
Threshold	3.5V DC
Boom up - hi range	8.5V DC
Cycle time	55 to 85 seconds
Boom down - lo range	6.2V DC
Cycle time	90 to 120 seconds
Ramp rate	3 to 4 seconds

Turntable Rotation Controller Adjustments

NOTICE Do not adjust the joystick controllers unless the static battery voltage is above 12V DC and the alternator is operating properly with 13.6 to 14.5V DC output.

WARNING Electrocution hazard. Contact with electrically charged circuits may result in death or serious injury. Remove all rings, watches and other jewelry.

1 Check the battery condition with a volt meter. The reading should be 12V DC or more to accurately adjust the controller.

2 Turn the key switch to platform control and pull out the Emergency Stop button to the ON position at both the ground and platform controls. Do not start the engine.

https://truckmanualshub.com/

PLATFORM CONTROLS

3 Open the platform control box lid and locate the turntable rotation controller. Refer to the platform control box illustration, page 7-2.

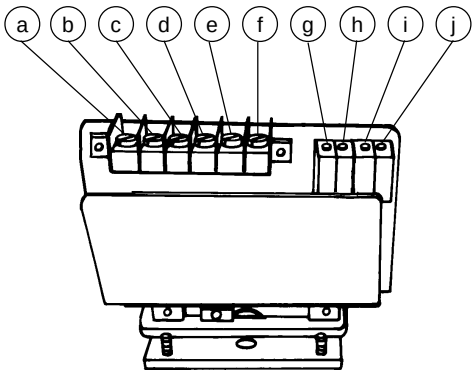

a terminal "D2" directional output
b terminal "A" proportional output
c terminal "-" ground
d terminal "+" positive
e terminal "R" activates max-out range
f terminal "D1" directional output
g ramp rate adjustable trimpot
h lo range adjustable trimpot
i threshold adjustable trimpot
j hi range adjustable trimpot

4 Set the preliminary ramp rate: Turn the trimpot adjustment screw counterclockwise 15 turns or until you hear a repeated click.

5 Connect the red(+) lead from a volt meter to the “A” terminal on the controller printed circuit board. Connect the black(-) lead to ground.

6 Set the threshold: Press down the foot switch, then slowly move the control handle off center until the moment a voltage reading appears. Adjust the voltage to 3.5V DC. Turn the threshold trimpot adjustment screw clockwise to increase the voltage or counterclockwise to decrease the voltage.

7 Set the hi range: Press down the foot switch, fully retract the boom, then move the control handle all the way to the left or right. Adjust the voltage to 5.5V DC. Turn the max-out trimpot adjustment screw clockwise to increase the voltage or counterclockwise to decrease the voltage.

8 Set the lo range: Press down the foot switch, extend the boom 3 feet, then move the control handle all the way to the left or right. Adjust the voltage to 4.5V DC. Turn the lo range trimpot adjustment screw clockwise to increase the voltage or counterclockwise to decrease the voltage.

9 Start the engine and move the engine idle control switch to foot switch activated high idle (rabbit and foot switch symbol).

NOTICE Engine should be at normal operating temperature.

10 Fully retract the boom, then start a timer and record how long it takes the turntable to rotate through a complete circle. Adjust the max-out trimpot to achieve a 80 to 100 second cycle time.

11 Extend the boom, then start a timer and record how long it takes the turntable to rotate through a complete circle. Adjust the lo range trimpot to achieve a 130 to 160 second cycle time.

12 Turn the engine off and re-connect the volt meter.

13 Pull out the Emergency Stop button to the ON position.

14 Press down the foot switch and then move the control handle all the way to the left or right. Record the maximum voltage reading.

15 Start the engine.

https://truckmanualshub.com/

16 Start a timer and simultaneously move the control handle all the way to the left or right. Note how long it takes to reach the maximum voltage recorded in step 14. This is the ramp rate.

17 Set the ramp rate: Turn the trimpot to obtain a 5 second ramp speed. Turn the trimpot clockwise to increase the time or counterclockwise to decrease the time.

Turntable rotation specifications	
Threshold	3.5V DC
Turntable rotation -	
hi range (boom retracted)	5.5V DC
Cycle time	80 to 100 seconds
lo range (boom extended)	4.5V DC
Cycle time	130 to 160 seconds
Ramp rate	5 seconds

Boom Extend/Retract Controller Adjustments

NOTICE Do not adjust the joystick controllers unless the static battery voltage is above 12V DC and the alternator is operating properly with 13.6 to 14.5V DC output.

⚠WARNING Electrocution hazard. Contact with electrically charged circuits may result in death or serious injury. Remove all rings, watches and other jewelry.

1 Check the battery condition with a volt meter. The reading should be 12V DC or more to accurately adjust the controller.

2 Turn the key switch to platform control and pull out the Emergency Stop button to the ON position at both the ground and platform controls. Do not start the engine.

3 Open the platform control box lid and locate the boom extend/retract controller.

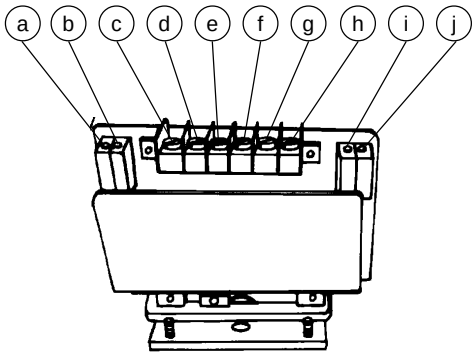

a ramp rate adjustable trimpot
b dual (lo) range adjustable trimpot
c terminal "R", activates max-out range
d terminal unused
e terminal "X", auxiliary
f terminal "-", ground
g terminal "+", battery, positive
h terminal "A", proportional output
i threshold adjustable trimpot
j max-out adjustable trimpot

4 Set the preliminary ramp rate: Turn the trimpot adjustment screw counterclockwise 15 turns or until you hear a repeated click.

5 Connect the red(+) lead from a volt meter to the “A” terminal on the controller printed circuit board. Connect the black(-) lead to ground.

6 Set the threshold: Press down the foot switch, then slowly move the control handle off center until the moment a voltage reading appears. Adjust the voltage to 3.5V DC. Turn the threshold trimpot adjustment screw clockwise to increase the voltage or counterclockwise to decrease the voltage.

7 Set the max-out: Press down the foot switch, then move the control handle all the way to the EXTEND position. Adjust the voltage to 9.75V DC. Turn the max-out trimpot adjustment screw clockwise to increase the voltage or counterclockwise to decrease the voltage.

https://truckmanualshub.com/

PLATFORM CONTROLS

8 Set the dual (lo) range: Press down the foot switch, then move the control handle all the way to the RETRACT position. Adjust the voltage to 9.2V DC. Turn the dual range trimpot adjustment screw clockwise to increase the voltage or counterclockwise to decrease the voltage.

9 Start the engine and move the engine idle control switch to foot switch activated high idle (rabbit and foot switch symbol). Lower the boom to the stowed position.

⚠WARNING Engine should be at normal operating temperature.

10 Start a timer and record how long it takes for the boom to fully extend. Adjust the max-out trimpot to achieve a 60 to 80 second cycle time.

11 Start a timer and record how long it takes for the boom to fully retract. Adjust the dual range trimpot to achieve an 55 to 85 second cycle time.

NOTICE If the function cycle time is not achievable, check the relief valve pressure. See 10-2, *Valve Adjustments - Function Manifold.*

12 Turn the engine off and re-connect the volt meter.

13 Pull out the Emergency Stop button to the ON position.

14 Press down the foot switch and then move the control handle all the way to the EXTEND position. Record the maximum voltage reading.

15 Start the engine.

16 Start a timer and simultaneously move the control handle all the way to the EXTEND position. Note how long it takes to reach the maximum voltage recorded in step 14. This is the ramp speed.

17 Set the ramp rate: turn the trimpot to obtain a 3 second ramp speed. Turn the trimpot clockwise to increase the time or counterclockwise to decrease the time.

Boom extend/retract specifications	
Threshold	3.5V DC
Boom extend - Max-out	9.75V DC
Cycle time	60 to 80 seconds
Boom retract - Dual (lo) range	9.2V DC
Cycle time	55 to 85 seconds
Ramp rate	3 seconds

1-2 Horsepower Limiter Board

The horsepower limiter board is responsible for governing drive pump output. It senses engine rpm from the alternator. The horsepower limiter board senses drops in rpm normally due to increased drive resistance (rough terrain or incline), and decreases voltage to the drive controller which in turn decreases voltage to the drive pump, thereby reducing pump output to maintain optimum engine rpm and horsepower. Three adjustments are required for optimum performance.

How to Adjust the Horsepower Limiter Board

NOTICE The engine rpm must be correct before performing this procedure. See Maintenance Procedure B-12, *Check and Adjust the Engine RPM.*

NOTICE Do not adjust the horsepower limiter board unless the static battery voltage is above 12V DC and the alternator is operating properly with 12.5 to 14.5V DC output.

NOTICE **Gasoline/LPG models:** Perform this procedure in gasoline mode.

https://truckmanualshub.com/

PLATFORM CONTROLS

1 Remove the fasteners from the platform control box lid.

2 Open the control box lid and locate the horsepower limiter board.

WARNING Electrocution hazard. Contact with electrically charged circuits may result in death or serious injury. Remove all rings, watches and other jewelry.

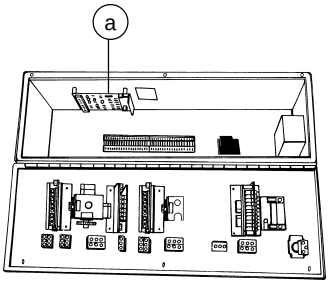

Platform control box
a horsepower limiter board

3 Connect the black(-) lead from a DC volt meter to the no. 2 terminal, and the red(+) lead to the no. 10 terminal.

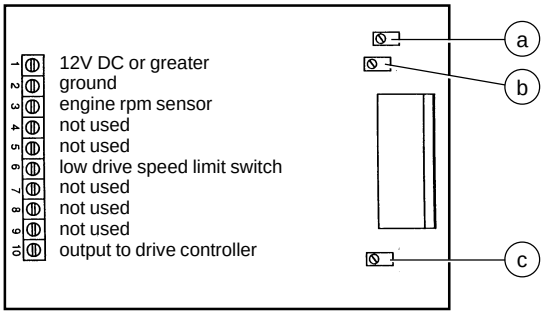

Horsepower limiter board

a "A" potentiometer maximum voltage output to the controller in the stowed position

b "B" potentiometer maximum voltage output to the drive controller in the boom raised position

c "C" potentiometer reaction rate or how fast the voltage output reacts to the change in engine rpm

4 Start the engine from the platform controls.

5 Move the engine idle control switch to foot switch activated high idle (rabbit and foot switch symbol).

6 Press down the foot switch and adjust the "A" potentiometer counterclockwise to increase voltage or clockwise to decrease voltage.

"A" potentiometer specifications - all models	
Voltage setting	10.5 to 11.5V DC

7 Move the engine idle control switch to low idle (turtle symbol).

8 Press down the foot switch and then adjust the "C" potentiometer to obtain a 0.01V DC to 0.03V DC voltage reading.

9 Move the engine idle control switch to foot switch activated high idle (rabbit and foot switch symbol).

10 Press down the foot switch and re-adjust the "A" potentiometer to the previous voltage setting in step 6.

11 Be sure that the boom is in the stowed position, then drive the machine and observe how the engine rpm reacts to drive control handle movement. If the engine surges or hunts, adjust the "C" potentiometer counterclockwise until surging is minimized.

NOTICE Under an extreme load, an excessive counterclockwise adjustment to the "C" potentiometer will cause the engine to stall. The "C" potentiometer adjustment is a compromise between engine stability (surging) and engine rpm droop.

12 Disconnect the volt meter.

https://truckmanualshub.com/

PLATFORM CONTROLS

13 Raise the boom above horizontal.

14 Drive the machine for 40 feet (12 m) and record the elapsed time. Repeat this step in the opposite drive direction.

15 Adjust the "B" potentiometer to obtain the correct raised drive speed of 1 foot per second (0.31 m per second). Turn the "B" potentiometer counterclockwise to increase voltage or clockwise to decrease voltage.

16 Close the platform control box lid and install the fasteners.

Drive speed specifications		
Stowed position	distance: 40 ft / 12 m	
	2WD	**4WD**
Gasoline/LPG models	40 ft/6.2 sec 12.2 m/6.2 sec	40 ft/9.1 sec 12.2 m/9.1 sec
Deutz Diesel models	40 ft/6.8 sec 12.2 m/6.8 sec	40 ft/9.1 sec 12.2 m/9.1 sec
Boom raised or extended All models	distance: 40 ft / 12 m 1 foot per second 30.5 cm per second	

1-3 Foot Switch

How to Test the Foot Switch

1 Turn the key switch to the OFF position and separate the wiring quick disconnect plug from the platform toe board.

2 Do not press down the foot switch. Connect the leads from an ohmmeter or continuity tester to each wire combination listed below and check for continuity.

Test	Desired result
red to black	continuity (zero Ω)
red to white	no continuity (infinite Ω)
black to white	no continuity

NOTICE Do not use the color of the connector as a guide for these tests. Use the actual wire color to identify which wire to use for testing.

3 Press down the foot switch. Connect the leads from an ohmmeter or continuity tester to each wire combination listed below and check for continuity.

Test	Desired result
red to black	no continuity (infinite Ω)
red to white	no continuity
black to white	continuity (zero Ω)

https://truckmanualshub.com/

PLATFORM CONTROLS

1-4 Resistors

The resistors are used on 4WD machines to maintain low range drive speed. The resistors are located in the platform control box.

NOTICE Refer to the schematic legends for resistor locations and values.

How to Test the Resistors

1 Turn the key switch to the OFF position.

2 Disconnect either end of one of the wires connected to the resistor to be tested.

3 Connect the leads from an ohmmeter to each end or wiring of the resistor being tested.

4 Compare the ohmmeter reading with the resistance rating printed on the resistor.

1-5 Toggle Switches

Toggle switches used for single function switching are single pole double throw (SPDT) switches. Dual function switching requires a double pole double throw (DPDT) switch.

How to Test a Toggle Switch

NOTICE Continuity is the equivalent of 0 to 3 ohms. A simple continuity tester may not accurately test the switch.

This procedure covers fundamental switch testing and does not specifically apply to all varieties of toggle switches.

1 Turn the key switch to the OFF position. Tag and disconnect all wiring from the toggle switch to be tested.

2 Connect the leads of an ohmmeter to the switch terminals in the following combinations listed below to check for continuity.

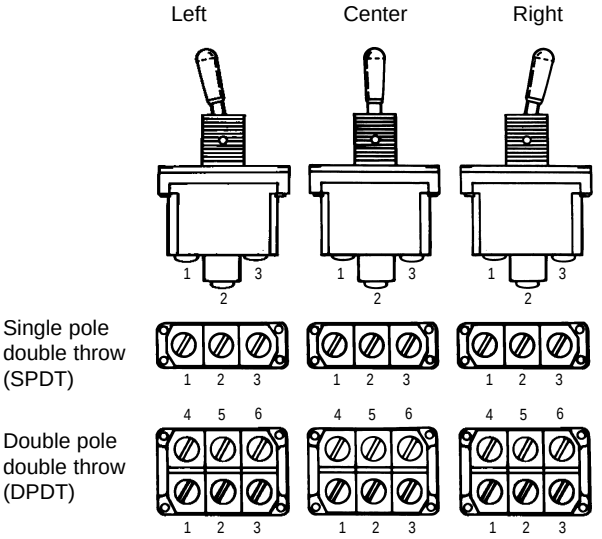

Test	Desired result
Left position	
terminal 1 to 2, 3, 4, 5 & 6	no continuity (infinite Ω)
terminal 2 to 3	continuity (zero Ω)
terminal 2 to 4, 5 & 6	no continuity
terminal 3 to 4, 5 & 6	no continuity
terminal 4 to 5 & 6	no continuity
terminal 5 to 6	continuity
Center position	There are no terminal combinations that will produce continuity (infinite Ω)
Right position	
terminal 1 to 2	continuity (zero Ω)
terminal 1 to 3, 4, 5 & 6	no continuity (infinite Ω)
terminal 2 to 3, 4, 5 & 6	no continuity
terminal 3 to 4, 5 & 6	no continuity
terminal 4 to 5	continuity
terminal 4 to 6	no continuity
terminal 5 to 6	no continuity

https://truckmanualshub.com/

PLATFORM CONTROLS

1-6 Control Relays

Relays used for single function switching are single pole double throw (SPDT) relays.

How to Test a Single Pole Double Throw Relay

⚠WARNING Electrocution hazard. Contact with electrically charged circuits may cause death or serious injury. Remove all rings, watches and other jewelry.

Direct Connection Relay

1 Label and then disconnect all the wiring from the relay to be tested.

2 Connect the leads from an ohmmeter or continuity tester to each terminal combination and check for continuity. Terminals 85 and 86 represent the coil and should not be tested in any other combination.

Test	Desired result
terminal 85 to 86 without resistor	85 to 95Ω
terminal 85 to 86 with resistor	75 to 85Ω
terminal 87 to 87a & 30	no continuity (infinite Ω)
terminal 87a to 30	continuity (zero Ω)

3 Connect 12V DC to terminal 85 and a ground wire to terminal 86, then test the following terminal combinations.

Test	Desired result
terminal 87 to 87a & 30	no continuity (infinite Ω)
terminal 87 to 30	continuity (zero Ω)

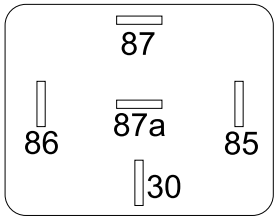

terminal no. 87a - N.C.
terminal no. 85 - ground
terminal no. 30 - common
terminal no. 86 - coil
terminal no. 87 - N.O.

Control Relay Schematic - without resistor

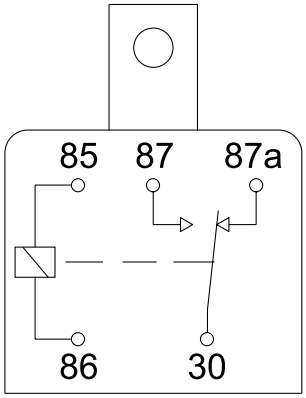

Control Relay Schematic - with resistor

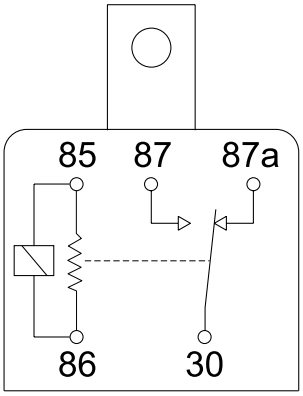

https://truckmanualshub.com/

Platform Components

2-1 Platform

How to Remove the Platform

1 Separate the foot switch quick disconnect plug.

2 Support the platform support weldment with a appropriate lifting device.

3 Open the platform control box and remove the platform control box mounting fasteners. Then lower the control box and set it aside.

NOTICE If your machine is equipped with an airline to platform option, the airline must be disconnected from the platform before removal.

4 Remove the platform mounting fasteners and remove the platform from the machine.

⚠WARNING Crushing hazard. The platform may become unstable and fall if it is not properly supported.

2-2 Platform Leveling Slave Cylinder

The slave cylinder and the rotator pivot are the two primary supports for the platform. The slave cylinder keeps the platform level through the entire range of boom motion. It operates in a closed-circuit hydraulic loop with the master cylinder. The slave cylinder is equipped with counterbalance valves to prevent movement in the event of a hydraulic line failure.

How to Remove the Platform Leveling Slave Cylinder

NOTICE Before cylinder removal is considered, bleed the slave cylinder to be sure there is no air in the closed loop.

NOTICE When removing a hose assembly or fitting, the O-ring on the fitting and/or hose end must be replaced and then torqued to specification during installation.
Refer to Section Two, *Hydraulic Hose and Fitting Torque Specifications.*

1 Extend the boom until the slave cylinder barrel-end pivot pin is accessible.

2 Raise the boom slightly and place blocks under the platform.

3 Lower the boom until the platform is resting on the blocks just enough to support the platform.

NOTICE Do not rest the entire weight of the boom on the blocks.

https://truckmanualshub.com/

4 Tag, disconnect and plug the hydraulic hoses from the slave cylinder at the union located near the platform rotate counterbalance valve manifold and connect them together using a connector. Cap the fittings on the cylinder.

WARNING Bodily injury hazard. Spraying hydraulic oil can penetrate and burn skin. Loosen hydraulic connections very slowly to allow the oil pressure to dissipate gradually. Do not allow oil to squirt or spray.

5 Pull the slave cylinder hoses through the platform rotator.

6 Remove the pin retaining fastener from the slave cylinder rod-end pivot pin. Do not remove the pin.

7 Remove the external retaining ring from the barrel-end pivot pin.

8 Use a soft metal drift to drive the rod-end pivot pin out.

9 Use a soft metal drift and drive the barrel-end pin out.

10 Carefully pull the cylinder out of the boom.

CAUTION Component damage hazard. Hoses can be damaged if they are kinked or pinched.

How to Bleed the Slave Cylinder

NOTICE Do not start the engine. Use auxiliary power for all machine functions in this procedure.

1 Raise the boom to a horizontal position.

2 Move the platform level switch up and down through two platform leveling cycles to remove any air that might be in the system.

2-3 Platform Rotator

The platform rotator is a hydraulically activated helical gear assembly used to rotate the platform 160 degrees.

How to Remove the Platform Rotator

CAUTION Component damage hazard. Mark the platform mounting weldment and the rotator flange before removing the platform mounting weldment. The platform mounting weldment must be replaced in the exact same position on the rotator flange as it was before removal. If a new rotator is installed or the rotator is disassembled, proper alignment can be achieved by rotating the rotator all the way to the left and then installing the platform mounting weldment all the way in the left position.

NOTICE When removing a hose assembly or fitting, the O-ring on the fitting and/or hose end must be replaced and then torqued to specification during installation.
Refer to Section Two, *Hydraulic Hose and Fitting Torque Specifications.*

1 Remove the platform. See 2-1, *How to Remove the Platform*.

https://truckmanualshub.com/

2 **S-60 models:** Tag, disconnect and plug the hydraulic hoses from the platform rotator manifold. Cap the fittings on the rotator.

⚠WARNING Bodily injury hazard. Spraying hydraulic oil can penetrate and burn skin. Loosen hydraulic connections very slowly to allow the oil pressure to dissipate gradually. Do not allow oil to squirt or spray.

S-65 models: Tag, disconnect and plug the hydraulic hoses from the "V1" and "V2" ports on platform rotator manifold. Cap the fittings on the manifold.

⚠WARNING Bodily injury hazard. Spraying hydraulic oil can penetrate and burn skin. Loosen hydraulic connections very slowly to allow the oil pressure to dissipate gradually. Do not allow oil to squirt or spray.

3 Support the platform mounting weldment, but do not apply any lifting pressure.

4 Remove the six mounting bolts from the platform mounting weldment, then remove the center bolt and slide the platform mounting weldment off of the platform rotator.

⚠WARNING Crushing hazard. The platform mounting weldment may become unbalanced and fall if it is not properly supported.

5 Support the platform rotator. Do not apply any lifting pressure.

S-60 Models:

6 Support the rod end of the platform leveling slave cylinder.

7 Remove the pin retainer from the slave cylinder rod-end pivot pin and the rotator pivot pin.

8 Use a soft metal drift to drive both pins out, then remove the platform rotator from the machine.

⚠WARNING Crushing hazard. The platform rotator may become unbalanced and fall if it is not properly supported.

S-65 Models:

6 Remove the pin retaining fasteners from the jib boom and jib boom leveling arms to platform rotator pivot pins. Do not remove the pins.

7 Support the jib boom and leveling arms.

8 Use a soft metal drift to drive both pins out, then remove the platform rotator from the machine.

⚠WARNING Crushing hazard. The platform rotator may become unbalanced and fall if it is not properly supported.

https://truckmanualshub.com/

PLATFORM COMPONENTS

How to Bleed the Platform Rotator

NOTICE Do not start the engine. Use auxiliary power for all machine functions in this procedure.

1 Move the function enable toggle switch to either side and activate the platform rotate toggle switch to the right then the left through two platform rotation cycles, then hold the switch to the RIGHT position until the platform is fully rotated to the right.

2 Connect a clear hose to the top bleed valve. Place the other end of the hose in a container to collect any drainage. Secure the container to the boom.

3 Open the top bleed valve on the rotator, but do not remove it.

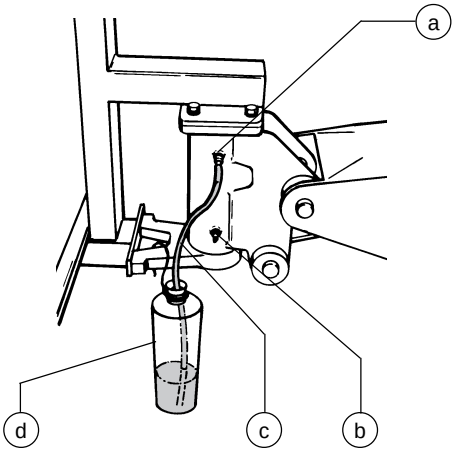

a top bleed valve
b bottom bleed valve
c clear hose
d container

4 Move the function enable toggle switch to either side and activate and hold the platform rotate switch to the LEFT position until the platform is fully rotated. Continue holding the switch until air stops coming out of the bleed valve. Then close
the bleed valve.

WARNING Crushing hazard. Keep clear of the platform during rotation.

5 Connect the clear hose to the bottom bleed valve and open the valve. Do not remove the bleed valve.

6 Move the function enable toggle switch to either side and activate and hold the platform rotate switch to the RIGHT position until the platform is fully rotated. Continue holding the switch until air stops coming out of the bleed valve. Then close the bleed valve.

WARNING Crushing hazard. Keep clear of the platform during rotation.

7 Remove the hose from the bleed valve and clean up any hydraulic oil that may have spilled.

8 Rotate the platform full right then left and inspect the bleed valves for leaks.

https://truckmanualshub.com/

Jib Boom Components, S-65 Models

3-1
Jib Boom, S-65 Models

How to Remove the Jib Boom

NOTICE Perform this procedure with the boom in the stowed position.

NOTICE When removing a hose assembly or fitting, the O-ring on the fitting and/or hose end must be replaced and then torqued to specification during installation.
Refer to Section Two, *Hydraulic Hose and Fitting Torque Specifications.*

1 Remove the platform. See 2-1, *How to Remove the Platform*.

2 Remove the platform mounting weldment and the platform rotator. See 2-3, *How to Remove the Platform Rotator*.

3 Remove the cable tray from the side of the jib boom.

4 Support the jib boom with a lifting device.

5 Tag, disconnect and plug the jib boom lift cylinder hydraulic hoses. Cap the fittings on the cylinder.

⚠WARNING Bodily injury hazard. Spraying hydraulic oil can penetrate and burn skin. Loosen hydraulic connections very slowly to allow the oil pressure to dissipate gradually. Do not allow oil to squirt or spray.

6 Support the barrel end of the cylinder with a lifting device.

7 Remove the pin retaining fastener from the jib boom lift cylinder barrel-end pivot pin.

8 Use a soft metal drift to remove the pin and lay the cylinder onto the ground.

9 Tag, disconnect and plug all the hydraulic hoses from the jib boom manifold.

⚠WARNING Bodily injury hazard. Spraying hydraulic oil can penetrate and burn skin. Loosen hydraulic connections very slowly to allow the oil pressure to dissipate gradually. Do not allow oil to squirt or spray.

10 Attach a lifting strap from an overhead crane to the jib boom.

11 Remove the pin retaining fastener from the jib boom pivot pin. Use a soft metal drift to remove the pin, then remove the jib boom from the primary boom.

⚠WARNING Crushing hazard. If the overhead crane is not properly attached, the jib boom may become unbalanced and fall when it is removed from the machine.

12 Remove the pin retaining fastener from the jib boom lift cylinder rod-end pivot pin. Do not remove the pin.

13 Slide both of the jib boom leveling arms off of the jib boom pivot pin.

14 Support the rod end of the jib boom lift cylinder with a lifting device.

15 Use a soft metal drift to remove the jib boom lift cylinder rod-end pivot pin, then remove the jib boom lift cylinder from the jib boom mounting weldment.

⚠WARNING Crushing hazard. If the overhead crane is not properly attached, the jib boom lift cylinder may become unbalanced and fall when it is removed from the machine.

https://truckmanualshub.com/

JIB BOOM COMPONENTS, S-65 MODELS

3-2 Jib Boom Lift Cylinder, S-65 Models

How to Remove the Jib Boom Lift Cylinder

NOTICE Perform this procedure with the boom in the stowed position.

NOTICE When removing a hose assembly or fitting, the O-ring on the fitting and/or hose end must be replaced and then torqued to specification during installation.
Refer to Section Two, *Hydraulic Hose and Fitting Torque Specifications.*

1 Raise the jib boom slightly and place blocks under the platform mounting weldment. Then lower the jib boom until the platform is resting on the blocks just enough to support the platform.

NOTICE Do not rest the entire weight of the boom on the blocks.

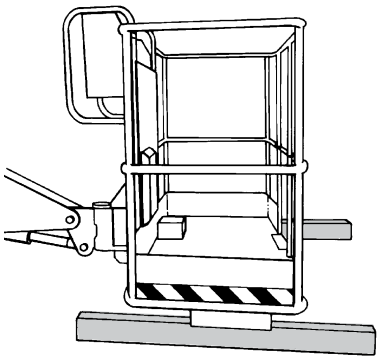

2 Tag, disconnect and plug the jib boom lift cylinder hydraulic hoses. Cap the fittings on the cylinder.

WARNING Bodily injury hazard. Spraying hydraulic oil can penetrate and burn skin. Loosen hydraulic connections very slowly to allow the oil pressure to dissipate gradually. Do not allow oil to squirt or spray.

3 Remove the pin retaining fasteners from the jib boom lift cylinder rod-end pivot pin. Do not remove the pin.

4 Use a soft metal drift to tap the jib boom lift cylinder rod-end pivot pin half way out. Then lower one of the leveling arms to the ground. Tap the pin the other direction and lower the opposite leveling arm. Do not remove the pin.

5 Support the jib boom lift cylinder with a lifting device.

6 Remove the pin retaining fastener from the jib boom lift cylinder barrel-end pivot pin. Use a soft metal drift to remove the barrel-end pin.

7 Use a soft metal drift to remove the jib boom lift cylinder rod-end pin. Remove the cylinder from the machine.

WARNING Crushing hazard. The jib boom lift cylinder may become unbalanced and fall when it is removed from the machine if it is not properly supported.

https://truckmanualshub.com/

3-3
Jib Boom / Platform Rotate Manifold Components, S-65 Models

1 2 position 3 way valve ..... AM ..... Platform rotate/ jib boom select ..... 8-10 ft-lbs / 11-14 Nm

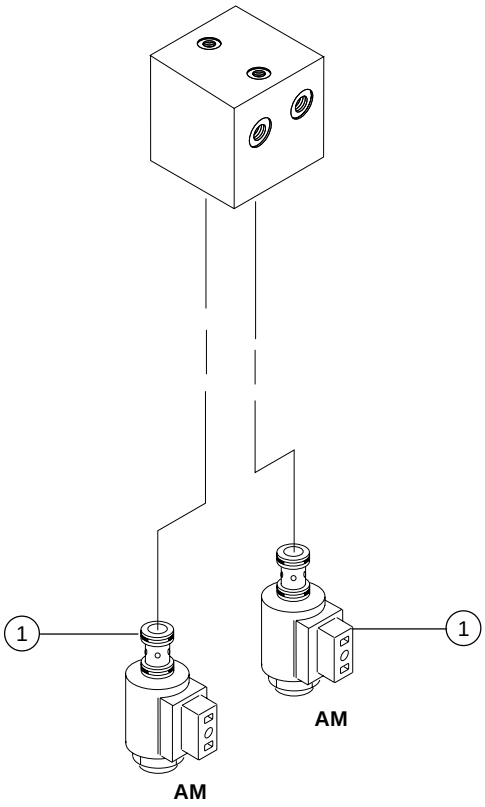

Plug Torque Specifications

Description	Hex Size	Torque
SAE No. 2	1/8	50 in-lbs / 6 Nm
SAE No. 4	3/16	13 ft-lbs / 18 Nm

How to Check the Resistance of a Valve Coil

1 Turn the key switch to the OFF position and disconnect the wires from the valve coil to be tested.

2 Connect the leads from an ohmmeter to the valve coil terminals.

Valve coil specification	
2 position 3 way valve (schematic item AM)	5.9Ω

https://truckmanualshub.com/

Boom Components

4-1 Boom Cable Track

The boom cable track guides cables and hoses running up the boom. It can be repaired link by link without removing the cables and hoses that run through it. Removing the entire boom cable track is necessary when performing major repairs that involve removing the boom.

How to Remove the Boom Cable Track

NOTICE When removing a hose assembly or fitting, the O-ring on the fitting and/or hose end must be replaced and then torqued to specification during installation.
Refer to Section Two, *Hydraulic Hose and Fitting Torque Specifications.*

1 Open the platform control box and remove the platform control box mounting fasteners.

2 Separate the footswitch quick disconnect then lower the platform control box and lay it off to the side.

3 Tag, disconnect and plug the hydraulic hoses from the "V1" and "V2" ports on the counterbalance valve manifold located near the platform rotator. Cap the fittings on the manifold.

⚠WARNING Bodily injury hazard. Spraying hydraulic oil can penetrate and burn skin. Loosen hydraulic connections very slowly to allow the oil pressure to dissipate gradually. Do not allow oil to squirt or spray.

4 Tag, disconnect and plug the hydraulic hoses from the platform leveling cylinder at the union and connect the hoses from the cylinder together using a connector.

⚠WARNING Bodily injury hazard. Spraying hydraulic oil can penetrate and burn skin. Loosen hydraulic connections very slowly to allow the oil pressure to dissipate gradually. Do not allow oil to squirt or spray.

5 **S-65 Models:** Remove the hose and cable cover from the side of the jib boom.

6 **S-65 Models:** Remove the jib/rotate manifold mounting fasteners. Do not disconnect any of the hoses.

7 **S-65 Models:** Tag, disconnect and plug the hydraulic hoses from the jib boom lift cylinder. Cap the fittings on the cylinder.

⚠WARNING Bodily injury hazard. Spraying hydraulic oil can penetrate and burn skin. Loosen hydraulic connections very slowly to allow the oil pressure to dissipate gradually. Do not allow oil to squirt or spray.

8 Raise the boom to a horizontal position.

9 Remove the fasteners from the drive speed limit switch mounted on the side of the cable track at the pivot end of the boom. Do not disconnect the wiring.

10 Remove the fasteners from the side panel on the lower cable track, then remove the panel. Pull all of the cables out of the channel.

11 Place blocks in between the upper and lower cable tracks and secure the upper and lower tracks together.

⚠WARNING Crushing hazard. If the upper and lower cable tracks are not properly secured together, the cable track may become unbalanced and fall when it is removed from the machine.

https://truckmanualshub.com/

12 Remove the mounting fasteners from the large cable track guide at the platform end of the cable track. Remove the guide.

13 Remove the hose and cable clamp at the platform end of the cable track.

14 Attach a lifting strap from an overhead crane to the cable track.

15 Remove the cotter pin and clevis pin from the upper cable track at the platform end.

16 Remove the cable track mounting fasteners that attach the lower cable track to the boom.

17 Remove the cable track from the machine and place it on a structure capable of supporting it.

WARNING Crushing hazard. The cable track may become unbalanced and fall if it is not properly attached to the overhead crane.

CAUTION Component damage hazard. Cables and hoses can be damaged if they are kinked or pinched.

How to Repair the Boom Cable Track

CAUTION Component damage hazard. The boom cable track can be damaged if it is twisted.

NOTICE A cable track repair kit is available through the Genie Industries Service Parts Department, Part no. 46677. The kit includes a 4 link section of cable track, fasteners, other miscellaneous parts and detailed instructions.

1 Remove the boom cable track. See 4-1, *How to Remove the Boom Cable Track.*

2 Visually inspect the cable track and determine which 4 link section needs to be replaced.

3 Drill out the 4 spot welds on each side of the cable track using a 17/64" drill bit. Repeat this step for the other end of the 4 link section of cable track.

CAUTION Component damage hazard. Cables and hoses can be damaged if the drill bit comes in contact with them. Protect the hoses and cables with a block of wood to prevent drilling into the hoses and cables.

4 Remove the retaining fasteners from upper black rollers from the 4 link section of cable track to be replaced. Remove the rollers.

5 Lift up the hoses and cables and carefully remove the damaged 4 link section of cable track.

CAUTION Component damage hazard. Hoses and cables can be damaged if they are kinked or pinched.

6 Remove the upper rollers from the replacement section of cable track.

7 Lift up the hoses and cables and carefully insert the new 4 link section of cable track.

CAUTION Component damage hazard. Hoses and cables can be damaged if they are kinked or pinched.

8 Connect the ends of the replacement cable track section to the existing cable track using the fasteners provided in the kit. Do not overtighten the fasteners.

CAUTION Component damage hazard. Over tightening the fasteners will result in the cable track not rotating and may bind during operation.

NOTICE Be sure that the fasteners are installed from the inside out so the nuts are on the outside of the cable track.

https://truckmanualshub.com/

9 Install the black rollers onto the new section of cable track.

10 Install cable track onto the machine and operate the boom/extend function fully to ensure smooth operation of the new section of cable track.

4-2 Boom

How to Shim the Boom

1 Measure each top wear pad.

NOTICE Replace the pad if it is less than 9/16 inch (14.3 mm) thick. If the pad is more than 9/16 inch (14.3 mm) thick, perform the following procedure.

2 Measure each bottom and side wear pad.

NOTICE Replace the pad if it is less than 11/16 inch (17.5 mm) thick. If the pad is more than 11/16 inch (17.5 mm) thick, perform the following procedure.

3 Extend the boom until the wear pads are accessible.

4 Loosen the wear pad mounting fasteners.

5 Install the new shims under the wear pad to obtain zero clearance and zero drag.

6 Tighten the mounting fasteners.

7 Extend and retract the boom through an entire cycle. Check for tight spots that may cause binding or scraping of the boom.

NOTICE Always maintain squareness between the outer and inner boom tubes.

How to Remove the Boom

WARNING This procedure requires specific repair skills, lifting equipment and a suitable workshop. Attempting this procedure without these skills and tools may cause death or serious injury and significant component damage. Dealer service is strongly recommended.

NOTICE Perform this procedure with the boom in the stowed position.

NOTICE When removing a hose assembly or fitting, the O-ring on the fitting and/or hose end must be replaced and then torqued to specification during installation.
Refer to Section Two, *Hydraulic Hose and Fitting Torque Specifications.*

1 Remove the platform. See 2-1, *How to Remove the Platform*.

2 Remove the platform rotator and leveling slave cylinder. See 2-3, *How to Remove the Platform Rotator*.

S-65 Models: Remove the jib boom. See 3-1, *How to Remove the Jib Boom*.

3 Remove the mounting fasteners from the jib boom/jib rotate valve manifold on the end of the boom. Then remove the manifold and set it aside.

4 Remove the fasteners from the drive speed limit switch mounted on the side of the cable track. Do not disconnect the wiring.

5 Support the cable track with an overhead crane.

6 Remove the hose/cable clamp from the pivot end of the boom.

7 Remove the hose and cable clamp at the platform end of the cable track.

8 Remove the fasteners from the large cable track guide at the platfrom end of the cable track. Remove the guide.

https://truckmanualshub.com/

9 Remove the cotter pin from the clevis pin at the platform end of the cable track and remove the clevis pin.

10 Remove the fasteners from the side panel on the cable track to access the cable track mounting fasteners.

11 Remove the cable track mounting fasteners, then remove the cable track from the boom and lay it off to the side.

⚠CAUTION Component damage hazard. The boom cable track can be damaged if it is twisted.

⚠CAUTION Component damage hazard. Hoses can be damaged if they are kinked or pinched.

12 Remove the turntable end cover.

13 Remove the retaining fastener from the master cylinder rod-end pivot pin. Use a soft metal drift to remove the pin. Pull the cylinder back and secure it from moving.

⚠CAUTION Component damage hazard. When pulling the master cylinder back, be sure not to damage the master cylinder hoses or fittings.

14 Remove the fasteners from the drive speed limit switch mounted to the turntable riser at the pivot end of the boom. Do not disconnect the wiring.

15 Tag, disconnect and plug the extension cylinder hydraulic hoses. Cap the fittings on the cylinder.

⚠WARNING Bodily injury hazard. Spraying hydraulic oil can penetrate and burn skin. Loosen hydraulic connections very slowly to allow the oil pressure to dissipate gradually. Do not allow oil to squirt or spray.

16 Attach an overhead 5 ton (4536 kg) crane to the center point of the boom.

17 Attach a similar lifting device to the lift cylinder.

18 Use the crane to lift the boom to a horizontal position.

19 Place support blocks under the lift cylinder, across the turntable.

20 Remove the pin retaining fastener from the boom lift cylinder rod-end pin. Use a soft metal drift to remove the pin.

⚠WARNING Crushing hazard. The boom lift cylinder will fall unless it is properly supported.

21 Lower the rod end of the lift cylinder onto support blocks. Protect the cylinder rod from damage.

22 Remove the pin retaining fastener from the boom pivot pin.

23 Remove the boom pivot pin with a soft metal drift, then carefully remove the boom from the machine.

⚠WARNING Crushing hazard. If the overhead crane is not properly attached, the boom may become unbalanced and fall when it is removed from the machine.

How to Disassemble the Boom

NOTICE Complete disassembly of the boom is only necessary if the outer or inner boom tubes must be replaced. The extension cylinder can be removed without completely disassembling the boom. See 4-4, *How to Remove the Extension Cylinder*.

1 Remove the boom. See 4-2, *How to Remove the Boom*.

2 Place blocks under the extension cylinder for support.

3 Remove the external snap rings from the extension cylinder barrel-end pivot pin at the base of the number 1 boom tube. Use a soft metal drift to remove the pin.

https://truckmanualshub.com/

BOOM COMPONENTS

4 Remove and label the wear pads from the top side of the number 1 boom tube at the platform end of the boom.

NOTICE Pay careful attention to the location and amount of shims used with each wear pad.

5 Remove the two wear pad stop bolts from each side of the number 1 boom tube (located on the outside).

6 Support the number 2 and 3 boom tubes with a lifting strap attached to an overhead crane at the platform end of the boom.

7 Support and slide the number 2 and 3 boom tubes out of the number 1 boom tube. Place the 2 and 3 boom tubes on blocks for support.

⚠WARNING Crushing hazard. The number 2 and 3 boom tubes may become unbalanced and fall when they are removed from the number 1 boom tube if they are not properly supported.

NOTICE During removal, the overhead crane strap will need to be carefully adjusted for proper balancing.

8 Remove and label the wear pads from the top side of the number 2 boom tube at the platform end of the boom.

9 Remove the trunnion cap mounting fasteners at the base of the number 2 boom tube. Then use a slide hammer to remove the trunnion caps.

10 Carefully rotate the the base end of the extension cylinder until the pin mounting bore is in a vertical position.

11 Support the number 3 boom tube with a lifting strap attached to an overhead crane at the platform end of the boom.

12 Support and slide the number 3 boom tube out of the number 2 boom tube. Place the number 3 boom tube on blocks for support.

⚠WARNING Crushing hazard. The number 3 boom tube may become unbalanced and fall when it is removed from the number 2 boom tube if it is not properly supported.

NOTICE During removal, the overhead crane strap will need to be carefully adjusted for proper balancing.

13 Remove the external snap rings from the extension cylinder rod-end pivot pin at the platform end of the number 3 boom tube. Use a soft metal drift to remove the pin.

14 Support and slide the extension cylinder out of the base end of the number 3 boom tube. Place the extension cylinder on blocks for support.

⚠WARNING Crushing hazard. The extension cylinder may become unbalanced and fall when it is removed from the number 3 boom tube if it is not properly supported.

NOTICE During removal, the overhead crane strap will need to be carefully adjusted for proper balancing.

15 Remove and label the wear pads from the extension cylinder.

NOTICE Pay careful attention to the location of each wear pad.

https://truckmanualshub.com/

4-3
Boom Lift Cylinder

How to Remove the Boom Lift Cylinder

WARNING This procedure requires specific repair skills, lifting equipment and a suitable workshop. Attempting this procedure without these skills and tools may result in death or serious injury and significant component damage. Dealer service is strongly recommended.

NOTICE When removing a hose assembly or fitting, the O-ring on the fitting and/or hose end must be replaced and then torqued to specification during installation.
Refer to Section Two, *Hydraulic Hose and Fitting Torque Specifications.*

1 Raise the boom until the boom is horizontal.

2 Place support blocks under the cylinder across the turntable.

3 Attach an overhead 5 ton (4536 kg) crane to the boom. Do not lift the boom.

4 Support the rod end of the boom lift cylinder with an overhead crane or similar lifting device.

WARNING Crushing hazard. If the overhead crane is not properly attached, the lift cylinder may become unbalanced and fall when it is disconnected from the machine.

5 Tag, disconnect and plug the boom lift cylinder hydraulic hoses. Cap the fittings on the cylinder.

WARNING Bodily injury hazard. Spraying hydraulic oil can penetrate and burn skin. Loosen hydraulic connections very slowly to allow the oil pressure to dissipate gradually. Do not allow oil to squirt or spray.

6 Remove the pin retaining fastener from the lift cylinder rod-end pivot pin. Use a soft metal drift to remove the pin, then lower the lift cylinder onto the blocks. Protect the cylinder rod from damage.

WARNING Crushing hazard. The lift cylinder may become unbalanced and fall if it is not properly supported.

7 Remove the mounting fasteners from the barrel-end cylinder pin retaining plates.

8 With the lift cylinder being supported by the overhead crane, pull the cylinder toward the platform until it is out.

WARNING Crushing hazard. The lift cylinder may become unbalanced and fall if it is not properly supported.

CAUTION Component damage hazard. The cables and hydraulic hoses can be damaged if the lift cylinder is pulled across them.

https://truckmanualshub.com/

BOOM COMPONENTS

4-4 Extension Cylinders

The extension cylinder consists of two cylinders that are fastened together. The first cylinder extends and retracts the number 2 boom tube. The second cylinder extends and retracts the number 3 boom tube.The extension cylinders are equipped with counterbalance valves to prevent movement in the event of a hydraulic line failure.

How to Remove the Extension Cylinders

WARNING This procedure requires specific repair skills, lifting equipment and a suitable workshop. Attempting this procedure without these skills and tools may cause death or serious injury and significant component damage. Dealer service is strongly recommended.

NOTICE When removing a hose assembly or fitting, the O-ring on the fitting and/or hose end must be replaced and then torqued to specification during installation.
Refer to Section Two, *Hydraulic Hose and Fitting Torque Specifications.*

1 Extend the boom until the extension cylinder rod-end pin is accessible in the number 3 boom tube.

2 Remove the platform. See 2-1, *How to Remove the Platform.*

3 Remove the platform leveling slave cylinder. See 2-2, *How to Remove the Slave Cylinder.*

S-65 Models: Remove the jib boom. See 3-1, *How to Remove the Jib Boom.*

4 Raise the boom to a horizontal position.

5 Remove the external snap rings from the extension cylinder rod-end pin (at the platform end). Use a soft metal drift to remove the pin.

6 Remove the turntable end cover.

7 Tag, disconnect and plug the extension cylinder hydraulic hoses. Cap the fittings on the cylinder.

WARNING Bodily injury hazard. Spraying hydraulic oil can penetrate and burn skin. Loosen hydraulic connections very slowly to allow the oil pressure to dissipate gradually. Do not allow oil to squirt or spray.

8 Remove the trunnion pin covers from both sides of the number 1 boom tube at the pivot end of the boom.

9 Remove the trunnion pin retaining fastener and use a slide hammer to remove the pins.

10 Remove the pin retaining fasteners from both sides of the extension cylinder at the pivot end of the boom.

11 Use a slide hammer to remove the pins.

12 Support and slide the extension cylinder out of the pivot end of the boom.

WARNING Crushing hazard. The extension cylinder will fall when it is removed from the extension boom if it is not properly supported.

NOTICE Note the length of the cylinder after removal. The cylinder must be at the same length for installation.

https://truckmanualshub.com/

4-5 Platform Leveling Master Cylinder

The master cylinder acts as a pump for the slave cylinder. It's part of the closed circuit hydraulic loop that keeps the platform level through the entire range of boom motion. The master cylinder is located at the base of the boom.

How to Remove the Platform Leveling Master Cylinder

NOTICE When removing a hose assembly or fitting, the O-ring on the fitting and/or hose end must be replaced and then torqued to specification during installation.
Refer to Section Two, *Hydraulic Hose and Fitting Torque Specifications.*

1 Raise the boom until the rod-end pivot pin is accessible.

2 Remove the turntable end cover to access the master cylinder.

3 Tag, disconnect and plug the master cylinder hydraulic hoses. Cap the fittings on the cylinder.

⚠WARNING Bodily injury hazard. Spraying hydraulic oil can penetrate and burn skin. Loosen hydraulic connections very slowly to allow the oil pressure to dissipate gradually. Do not allow oil to squirt or spray.

4 Remove the pin retaining fasteners from the master cylinder barrel-end pivot pin.

5 Place a rod through the barel-end pivot pin and twist to remove the pin.

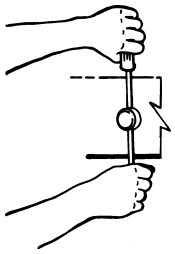

6 Attach a lifting strap from an overhead crane to the lug on the rod end of the master cylinder.

7 Remove the pin retaining fastener from the rod-end pivot pin.

8 Use a soft metal drift to remove the pin.

⚠WARNING Crushing hazard. The master cylinder may become unbalanced and fall if it is not properly supported by the lifting device.

https://truckmanualshub.com/

Turntable Covers

5-1
Turntable Covers

How to Remove a Turntable Cover

1 Raise the turntable cover. Support the open cover with an overhead crane or forklift. Do not lift it.

⚠WARNING Crushing hazard. Due to its heavy weight, do not attempt to support the cover by hand.

⚠CAUTION Component damage hazard. Protect the cover from damage by using carpet or padding on the crane or forklift forks.

2 Remove the upper and lower retaining clips from the gas strut.

3 Gently pry the strut pivot sockets off of the ball studs and remove the strut. Protect the strut cylinder rod from damage.

NOTICE Mark the location of the hinge support bracket on the bulkhead to ensure proper cover alignment during installation.

4 Remove the cover hinge bolts, that fasten the hinge support bracket to the bulkhead.

5 Carefully lift and remove the cover from the machine.

⚠WARNING Crushing hazard. The turntable cover may become unbalanced and fall if it is not properly supported and secured to a appropriate lifting device.

⚠WARNING If a turntable cover must be replaced, be sure that all appropriate safety and instructional decals are applied to the new cover.

NOTICE Alignment adjustments may be necessary when a new cover is installed.

https://truckmanualshub.com/

Deutz Engine F4L 1011F

6-1 RPM Adjustment

Refer to Maintenance Procedures, B-12, *Check and Adjust the Engine RPM.*

6-2 Flex Plate

The flex plate acts as a coupler between the engine and the pump. It is bolted to the engine flywheel and has a splined center to drive the pump.

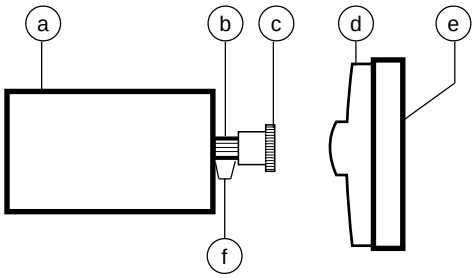

a pump
b pump shaft
c coupler
d flex plate with raised spline
e flywheel
f 1/2 inch gap

How to Remove the Flex Plate

1 Disconnect the wiring plug at the electronic displacement controller (EDC), located on the drive pump.

2 Support the drive pump with an appropriate lifting device. Then remove all of the pump mounting plate to engine bell housing bolts.

3 Carefully pull the pump away from the engine and secure it from moving.

4 Remove the flex plate mounting fasteners, then remove the flex plate from the flywheel.

How to Install the Flex Plate

1 Install the flex plate onto the flywheel with the raised spline towards the pump. Torque the flex plate mounting bolts to 34 ft-lbs (46 Nm).

2 Install the coupler onto the pump shaft with the set screw toward the pump. Leave a 1/2 inch (12.7 mm) gap between the coupler and pump end plate.

3 Apply Loctite® removable thread sealant to the coupler set screw. Torque the set screw to 45 ft-lbs (61 Nm).

CAUTION Component damage hazard. Do not force the drive pump during installation or the flex plate teeth may become damaged.

4 Install the pump and torque the pump mounting plate fasteners to 34 ft-lbs (46 Nm).

6-3 Oil Temperature and Pressure Gauges

The oil temperature gauge is an electrical gauge. The sending unit has limit contacts that are factory set. The contacts will close at 300º F (147º C). When the contacts close, the engine will shut off to prevent damage and will not start until the temperature drops below the contact point. Temperature will be indicated when the key is on and the Emergency Stop Button is pulled out to the ON position.

CAUTION Component damage hazard. Do not crank the engine with the over-temperature light on.

The oil pressure gauge is an electrical gauge. The sending unit has limit contacts that are factory set. The contacts will close at 7 psi (0.48 bar). When the contacts close, the engine will shut off to prevent damage. Oil pressure will be indicated when the engine is running.

CAUTION Component damage hazard. Do not crank the engine with the low oil pressure light on.

https://truckmanualshub.com/

Ford LRG-423 Engine

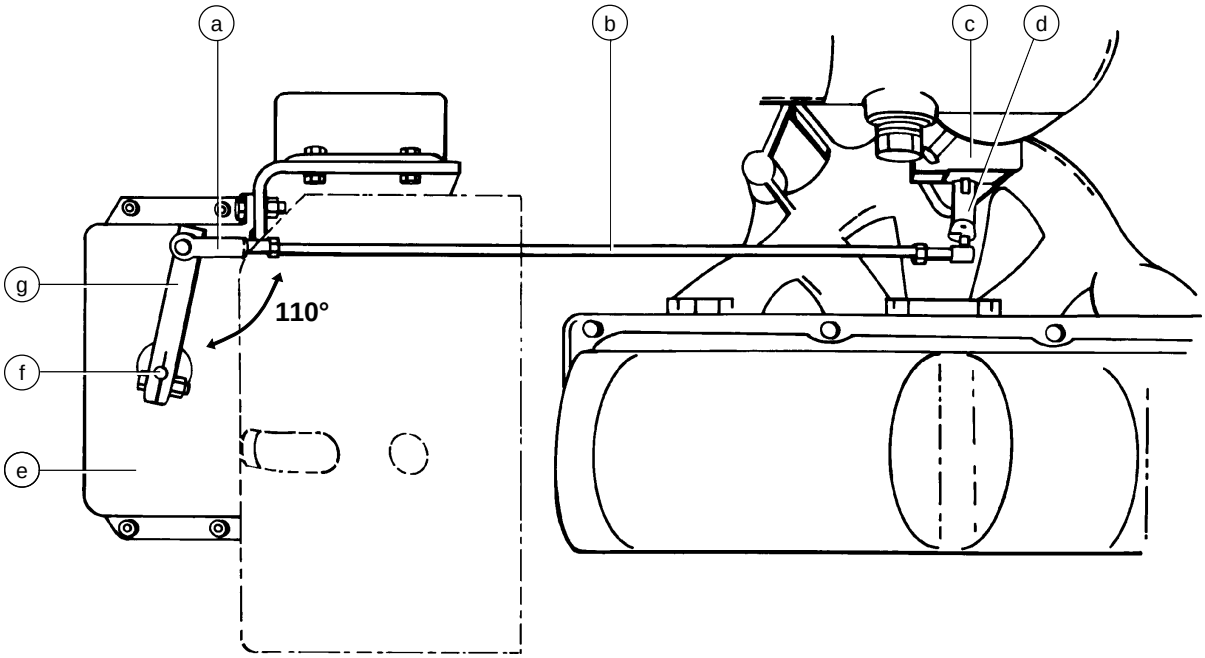

Governor actuator and linkage
a clevis yoke
b linkage rod
c carburetor
d throttle plate shaft
e governor actuator
f actuator shaft
g actuator arm

7-1
Governor Actuator

How to Set Up the Governor Actuator and Linkage

NOTICE Adjustment of the governor actuator is only necessary when the governor actuator or the linkage has been replaced.

1 Connect the linkage rod to the throttle plate shaft, then tighten the lock nut.

2 Fasten the lock nut and clevis yoke to the linkage rod. Do not tighten the lock nut against the clevis yoke.

3 Loosen the fastener on the actuator arm. Rotate the actuator arm until it is at a 110 degree angle to the linkage rod. Then tighten the actuator arm fastener.

4 Position the linkage rod so that the throttle is in the idle position. Then adjust the clevis yoke on the linkage rod to obtain the proper length. Install the yoke onto the actuator arm.

5 With the throttle in the idle position and the actuator arm at a 110 degree angle to the linkage, rotate the clevis yoke on the linkage rod two turns counterclockwise to pre-load the spring. Tighten the lock nut on the linkage rod.

https://truckmanualshub.com/

6 Manually pull the actuator arm through a full cycle to be sure that the linkage moves freely. Be sure that the linkage activates the throttle shaft to approximately half throttle.

⚠CAUTION Component damage hazard. If the throttle linkage is improperly adjusted and allowed to reach full throttle, the engine will over-rev and cause component damage.

NOTICE The linkage must be free of friction and obstruction. Do not let it rub against the engine, brackets or hoses.

7-2 Choke Adjustments

This engine is equipped with an electrically heated automatic choke. The choke has a poppet valve to enhance cold starting ability on LPG fuel.

NOTICE Choke adjustments are affected by climate. Richer adjustment will be necessary in colder climates, leaner adjustment in warmer climates.

Automatic Choke with Poppet Valve

The choke functions in both gasoline and LPG mode. The choke butterfly may be adjusted to a fully closed (rich) position for colder climates and the poppet valve will provide a flow path during LPG fueled operation.

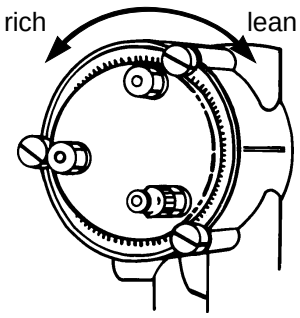

https://truckmanualshub.com/

FORD LRG-423 ENGINE

7-3 Timing Adjustment

Complete information to perform this procedure is available in the *Ford LRG-423 2.3 Liter Industrial Engine Service Manual* (Ford number: PPD-194-287). Genie part number 33907.

7-4 Carburetor Adjustment

Complete information to perform this procedure is available in the *Ford LRG-423 2.3 Liter Industrial Engine Service Manual* (Ford number: PPD-194-287). Genie part number 33907.

7-5 RPM Adjustment

Refer to Maintenance Procedures, B-12, *Check and Adjust the Engine RPM*.

7-6 Flex Plate

The flex plate acts as a coupler between the engine and the pump. It is bolted to the engine flywheel and has a splined center to drive the pump.

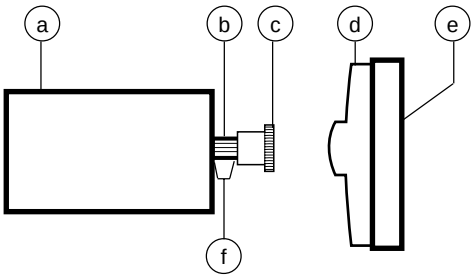

a pump
b pump shaft
c coupler
d flex plate with raised spline
e flywheel
f 1/4 inch gap

Flex Plate Removal

1 Disconnect and remove the hose between the carburetor venturi and the air cleaner.

2 Disconnect the linkage from the governor, then remove the governor linkage from the carburetor. Do not alter the length of the linkage.

3 Disconnect the wiring plug at the electronic displacement controller (EDC), located on the drive pump.

4 Remove the mounting fasteners from the regulator mounting bracket, then pull the bracket up past the bell housing. Secure the bracket before continuing.

5 Support the drive pump with an appropriate lifting device. Then remove all of the pump mounting plate to engine bell housing bolts.

6 Carefully pull the pump away from the engine and secure it from moving.

7 Remove the flex plate mounting fasteners, then remove the flex plate from the fly wheel.

https://truckmanualshub.com/

How to Install the Flex Plate

1 Install the flex plate onto the flywheel with the raised spline towards the pump. Torque the flex plate mounting bolts to 34 ft-lbs (46 Nm).

2 Install the coupler onto the pump shaft with the set screw towards the pump. Leave a 1/4 inch (6.35 mm) gap between the coupler and pump end plate.

3 Apply Loctite® removable thread sealant to the coupler set screw. Torque the set screw to 45 ft-lbs (61 Nm).

⚠CAUTION Component damage hazard. Do not force the drive pump during installation or the flex plate teeth may become damaged.

4 Install the pump and torque the pump mounting plate fasteners to 34 ft-lbs (46 Nm).

7-7 Water Temperature and Oil Pressure Gauges

The water temperature gauge is an electrical gauge. The sending unit has limit contacts that are factory set. The contacts will close at 230°F (109° C). When the contacts close, the engine will shut off to prevent damage and will not start until the temperature drops below the contact point. Temperature will be indicated when the key is on and the Emergency Stop Button is pulled out to the ON position.

⚠CAUTION Component damage hazard. Do not crank the engine with the over-temperature light on.

The oil pressure gauge is an electrical gauge. The sending unit has limit contacts that are factory set. The contacts will close at 8 psi (0.55 bar). When the contacts close, the engine will shut off to prevent damage. Oil pressure will be indicated when the engine is running.

⚠CAUTION Component damage hazard. Do not crank the engine with the low oil pressure light on.

https://truckmanualshub.com/

FORD LRG-423 ENGINE

7-8
Vacuum Switch

How to Test the Vacuum Switch

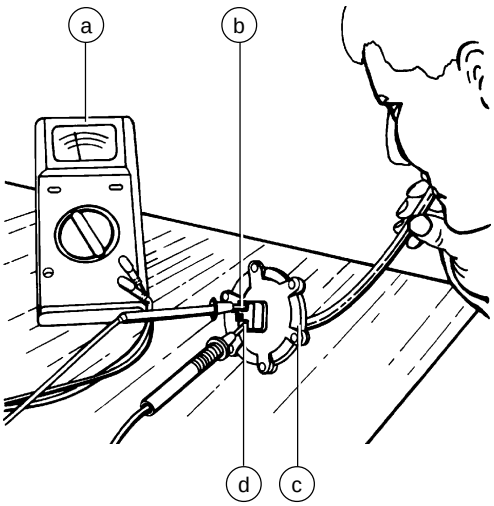

a ohmmeter
b common terminal (SOL.)
c vacuum switch
d normally open terminal (ING.)

1 Connect the leads from an ohmmeter or continuity tester to the common and normally open terminals.

⊙ Result: There should be no continuity (infinite Ω).

2 Apply mild suction to the vacuum port.

⊙ Result: The switch should close and show full continuity (zero Ω).

⚠CAUTION Component damage hazard. Do not short the vacuum switch terminals to ground.

https://truckmanualshub.com/

Ground Controls

8-1 Control Relays

See 1-6, *Control Relays*

8-2 Toggle Switches

See 1-5, *Toggle Switches*.

8-3 Wago® Components

How to Remove a Wago® Component

WARNING Electrocution hazard. Contact with electrically charged circuits may cause death or serious injury. Remove all rings, watches and other jewelry.

NOTICE A small screwdriver is provided and should be used when removing a Wago® component. This screwdriver is located in the operator's manual storage box in the platform.

1 Label the wiring from the component to be removed.

2 Locate the removal tab on the bottom or top side of the component.

3 Use a small narrow flat blade screwdriver to push in and release the wire from the component.

4 Use the small narrow flat blade screwdriver to gently pry up on the tab of the component and remove it.

8-4 Resistors

How to Test the Resistor

The resistor is used to maintain proper control of boom function speeds. A 10 ohm resistor reduces voltage to all the boom function switches at the ground controls.

NOTICE Refer to the schematic legends for resistor locations and values.

1 Turn the key switch to the OFF position.

2 Disconnect either end of one of the wires connected to the resistor to be tested.

3 Connect the leads from an ohmmeter to each end or wiring of the resistor being tested.

4 Compare the ohmmeter reading with the resistance rating printed on the resistor.

https://truckmanualshub.com/

GROUND CONTROLS

8-5
Power Relay

⚠WARNING Electrocution hazard. Contact with electrically charged circuits may result in death or serious injury. Remove all rings, watches and other jewelry.

NOTICE The power relay is mounted on the backside of the ground control box.

How to Test the Power Relay

⚠WARNING Electrocution hazard. Disconnect the ground cable from the battery before performing this procedure.

1 Connect the leads from an ohmmeter to each terminal combination and check for continuity.

Test	Desired result
2 small posts	12 to 16Ω
2 large posts	no continuity (infinite Ω)
Any small post to any large post	no continuity (infinite Ω)

2 Connect 12V DC to one of the small posts and a ground wire to the other small post, then test the following terminal combination.

Test	Desired result
2 large posts	continuity (zero Ω)

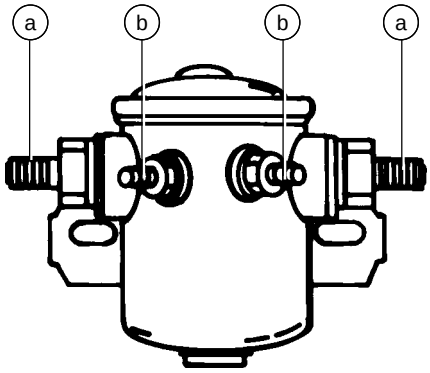

a high amp power contact terminal (large post)

b solenoid activate coil terminal (small post)

https://truckmanualshub.com/

Hydraulic Pumps

9-1 Lift/Steer Pump

How to Remove the Lift/Steer Pump

NOTICE When removing a hose assembly or fitting, the O-ring on the fitting and/or hose end must be replaced and then torqued to specification during installation.
Refer to Section Two, *Hydraulic Hose and Fitting Torque Specifications.*

1 Close the two hydraulic tank valves located at the hydraulic tank.

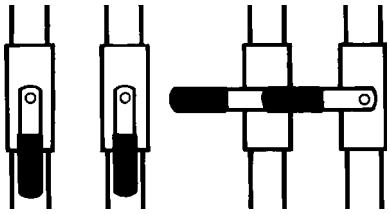

CAUTION Component damage hazard. The engine must not be started with the hydraulic tank shutoff valves in the CLOSED position or component damage will occur.
If the tank valves are closed, remove the key from the key switch and tag the machine to inform personnel of the condition.

2 Tag, disconnect and plug the lift/steer pump hydraulic hoses. Cap the fittings on the pump.

WARNING Bodily injury hazard. Spraying hydraulic oil can penetrate and burn skin. Loosen hydraulic connections very slowly to allow the oil pressure to dissipate gradually. Do not allow oil to squirt or spray.

3 Remove the pump mounting bolts. Carefully remove the pump.

CAUTION Component damage hazard.
Be sure to open the two hydraulic tank valves and prime the pump after installing the pump.

9-2 Drive Pump

The drive pump is a bi-directional variable displacement piston pump. The pump output is controlled by the electronic displacement controller (EDC), located on the pump. The only adjustment that can be made to the pump is the neutral or null adjustment. Any internal service to the pump should only be performed at an authorized Sundstrand-Sauer service center. Call Genie Industries Service Department to locate your local authorized service center.

How to Remove the Drive Pump

CAUTION Component damage hazard. The work area and surfaces where this procedure will be performed must be clean and free of debris that could get into the hydraulic system and cause severe component damage. Dealer service is recommended.

NOTICE When removing a hose assembly or fitting, the O-ring on the fitting and/or hose end must be replaced and then torqued to specification during installation.
Refer to Section Two, *Hydraulic Hose and Fitting Torque Specifications.*

1 Disconnect the electrical connection at the electronic displacement controller (EDC) located on the drive pump.

https://truckmanualshub.com/

HYDRAULIC PUMPS

2 Close the two hydraulic tank valves located at the hydraulic tank.

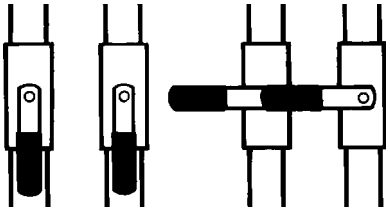

⚠CAUTION Component damage hazard. The engine must not be started with the hydraulic tank shutoff valves in the CLOSED position or component damage will occur. If the tank valves are closed, remove the key from the key switch and tag the machine to inform personnel of the condition.

3 Tag and disconnect and plug the hydraulic hoses from the drive and lift/steer pumps. Cap the fittings on the pumps.

⚠CAUTION Bodily injury hazard. Spraying hydraulic oil can penetrate and burn skin. Loosen hydraulic connections very slowly to allow the oil pressure to dissipate gradually. Do not allow oil to squirt or spray.

4 Support the pump with a lifting device and remove the two drive pump mounting fasteners.

5 Carefully pull the drive pump out until the pump coupler separates from the flex plate.

6 Remove the drive pump from the machine.

⚠CAUTION Component damage hazard. Be sure to open the two hydraulic tank valves and prime the pump after installing the pump.

How to Prime the Pump

1 Connect a 0 to 600 psi (0 to 41 bar) pressure gauge to the test port on the drive pump.

2 **Gasoline/LPG models:** Disconnect the electrical connector at the ignition coils. The ignition coils are located above the alternator.

⚠WARNING Electrocution hazard. Contact with electrically charged circuits may cause death or serious injury. Remove all rings, watches and other jewelry.

Deutz Diesel models: Hold the manual fuel shutoff valve clockwise to the CLOSED position.

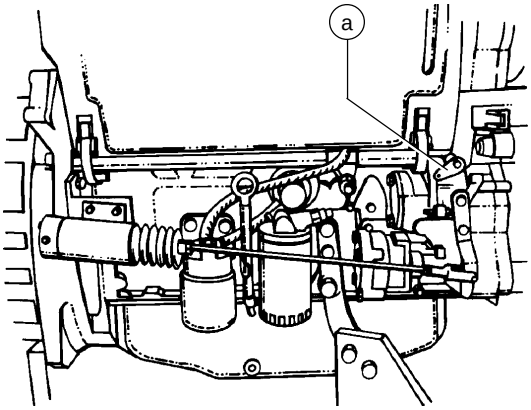

a manual fuel shutoff valve

3 Crank the engine with the starter motor for 15 seconds, wait 15 seconds, then crank the engine an additional 15 seconds or until the pressure reaches 320 psi (22 bar).

4 **Gasoline/LPG models:** Connect the ignition coil wiring and start the engine from the ground controls. Check for hydraulic leaks.

https://truckmanualshub.com/

This page intentionally left blank.

https://truckmanualshub.com/

Manifolds

10-1
Function Manifold Components

The function manifold is located on the tank side tray, behind the ground control box.

Index No.	Description	Schematic Item	Function	Torque
1	3 position 4 way D03 valve	A	Turntable rotate left/right	30-35 in-lbs / 3-4 Nm
2	3 position 4 way D03 valve	B	Boom up/down	30-35 in-lbs / 3-4 Nm
3	3 position 4 way D03 valve	C	Boom extend/retract	30-35 in-lbs / 3-4 Nm
4	Check valve, pilot operated	D	Boom extend/retract circuit	11-13 ft-lbs / 15-18 Nm
5	Relief valve, 2500 psi (172 bar)	E	Boom extend	25-30 ft-lbs / 34-41 Nm
6	Relief valve, 2100 psi (145 bar)	F	Boom down	25-30 ft-lbs / 34-41 Nm
7	Flow regulator valve, 1.5 gpm (5.7 l/min)	G	Boom extend/retract circuit (prevents over flowing the proportional valve)	10-12 ft-lbs / 14-16 Nm
8	Flow regulator valve, 1.5 gpm (5.7 l/min)	H	Boom up/down circuit (prevents over flowing the proportional valve)	10-12 ft-lbs / 14-16 Nm
9	Flow regulator valve, 1.5 gpm (5.7 l/min)	I	Turntable rotate left/right (prevents over flowing the proportional valve)	10-12 ft-lbs / 14-6 Nm
10	Flow regulator valve, 0.1 gpm (0.38 l/min)	J	Bleeds off differential sensing valves to tank	10-12 ft-lbs / 14-16 Nm
11	Check valve	K	Differential sensing circuit, boom extend/retract	11-13 ft-lbs / 15-18 Nm
12	Check valve	L	Differential sensing circuit, boom up/down	11-13 ft-lbs / 15-18 Nm
13	Proportional solenoid valve	M	Boom extend/retract	10-12 ft-lbs / 14-16 Nm
14	Check valve	N	Differential sensing circuit, turntable rotate left/right	11-13 ft-lbs / 15-18 Nm
15	Proportional solenoid valve	O	Boom up/down	10-12 ft-lbs / 14-16 Nm
16	Check valve	P	Differential sensing circuit, platform level up	11-13 ft-lbs / 15-18 Nm
17	Check valve	Q	Differential sensing circuit, platform level down	11-13 ft-lbs / 15-18 Nm

This list continues. Please turn the page

https://truckmanualshub.com/

MANIFOLDS

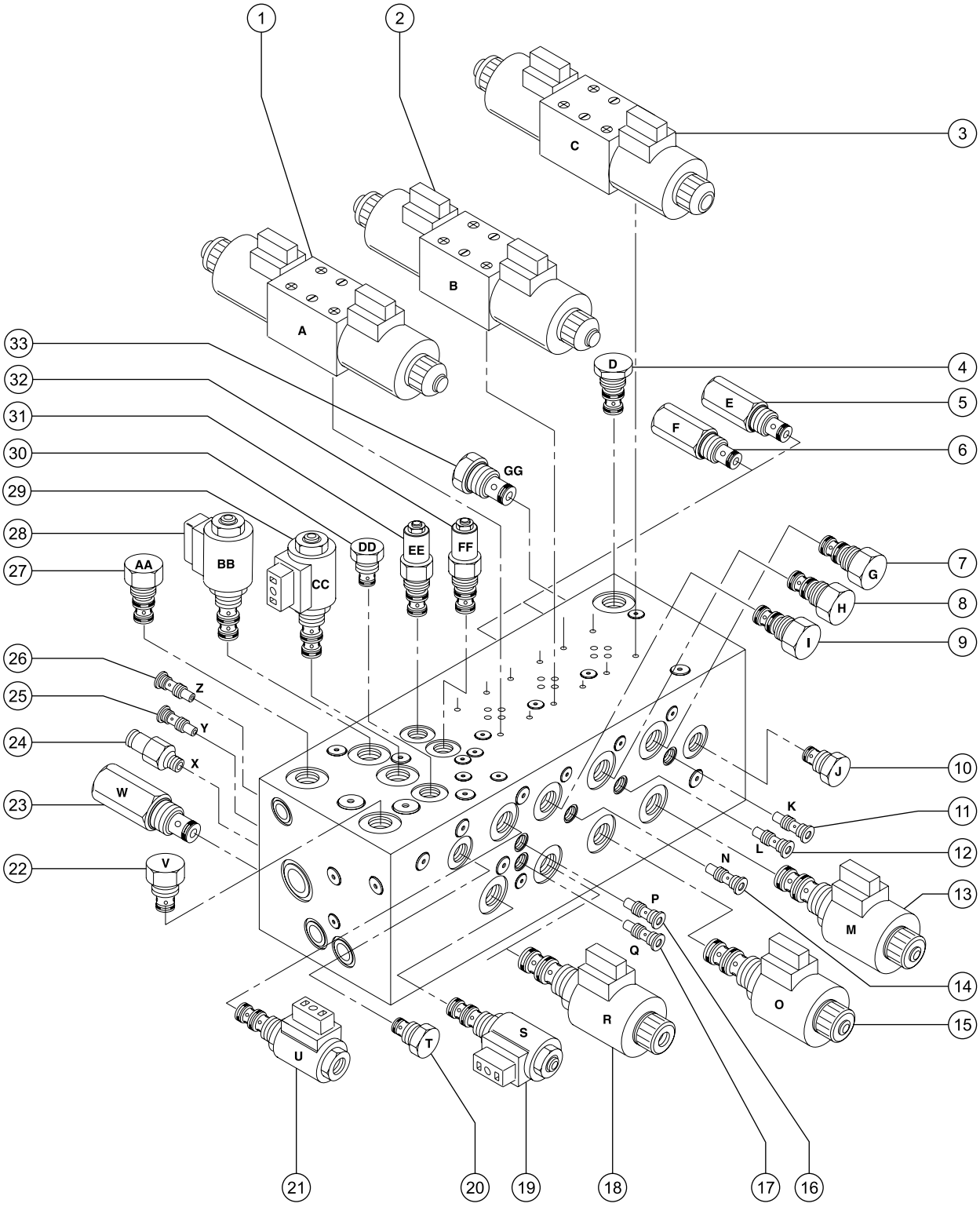

https://truckmanualshub.com/

MANIFOLDS

Function Manifold Components, continued

Index No.	Description	Schematic Item	Function	Torque
18	Proportional solenoid valve	R	Turntable rotate left/right	10-12 ft-lbs / 14-16 Nm
19	Solenoid valve - N.O. Poppet	S	Platform level up	25-30 ft-lbs / 34-41 Nm
20	Flow regulator valve, 0.6 gpm (2.27 l/min)	T	Platform level circuit	10-12 ft-lbs / 14-16 Nm
21	Solenoid valve - N.O. Poppet	U	Platform level down	25-30 ft-lbs / 34-41 Nm
22	Differential sensing valve	V	Meters flow to functions	10-12 ft-lbs / 14-16 Nm
23	Relief valve, 2600 psi (179 bar), S-60 models 2900 psi (200 bar), S-65 models	W	System relief	35-40 ft-lbs / 47-54 Nm
24	Diagnostic nipple	X	Testing	
25	Check valve	Y	Differential sensing circuit Platform rotate left	11-13 ft-lbs / 15-18 Nm
26	Check valve	Z	Differential sensing circuit Platform rotate right	11-13 ft-lbs / 15-18 Nm
27	Priority flow regulator valve, 3.5 gpm (13.2 l/min), without oscillate axle 5 gpm (18.9 l/min), with oscillate axle	AA	Steering	10-12 ft-lbs / 14-16 Nm
28	Solenoid valve - N.O. Poppet	BB	Platform rotate left/Jib boom up	25-30 ft-lbs / 34-41 Nm
29	Solenoid valve - N.O. Poppet	CC	Platform rotate right/Jib boom down	25-30 ft-lbs / 34-41 Nm
30	Flow regulator valve, 0.6 gpm (2.27 l/min)	DD	Platform rotate	10-12 ft-lbs / 14-16 Nm
31	Counterbalance valve	EE	Platform level up	35-40 ft-lbs / 47-54 Nm
32	Counterbalance valve	FF	Platform level down	35-40 ft-lbs / 47-54 Nm
33	Check valve	GG	Boom extend/retract circuit	11-13 ft-lbs / 15-18 Nm

Plug Torque Specifications

Description	Hex size	Torque
SAE No. 2	1/8	50 in-lbs / 6 Nm
SAE No. 4	3/16	13 ft-lbs / 18 Nm
SAE No. 6	1/4	18 ft-lbs / 24 Nm
SAE No. 8	5/16	50 ft-lbs / 68 Nm
SAE No. 10	9/16	55 ft-lbs / 75 Nm

https://truckmanualshub.com/

MANIFOLDS

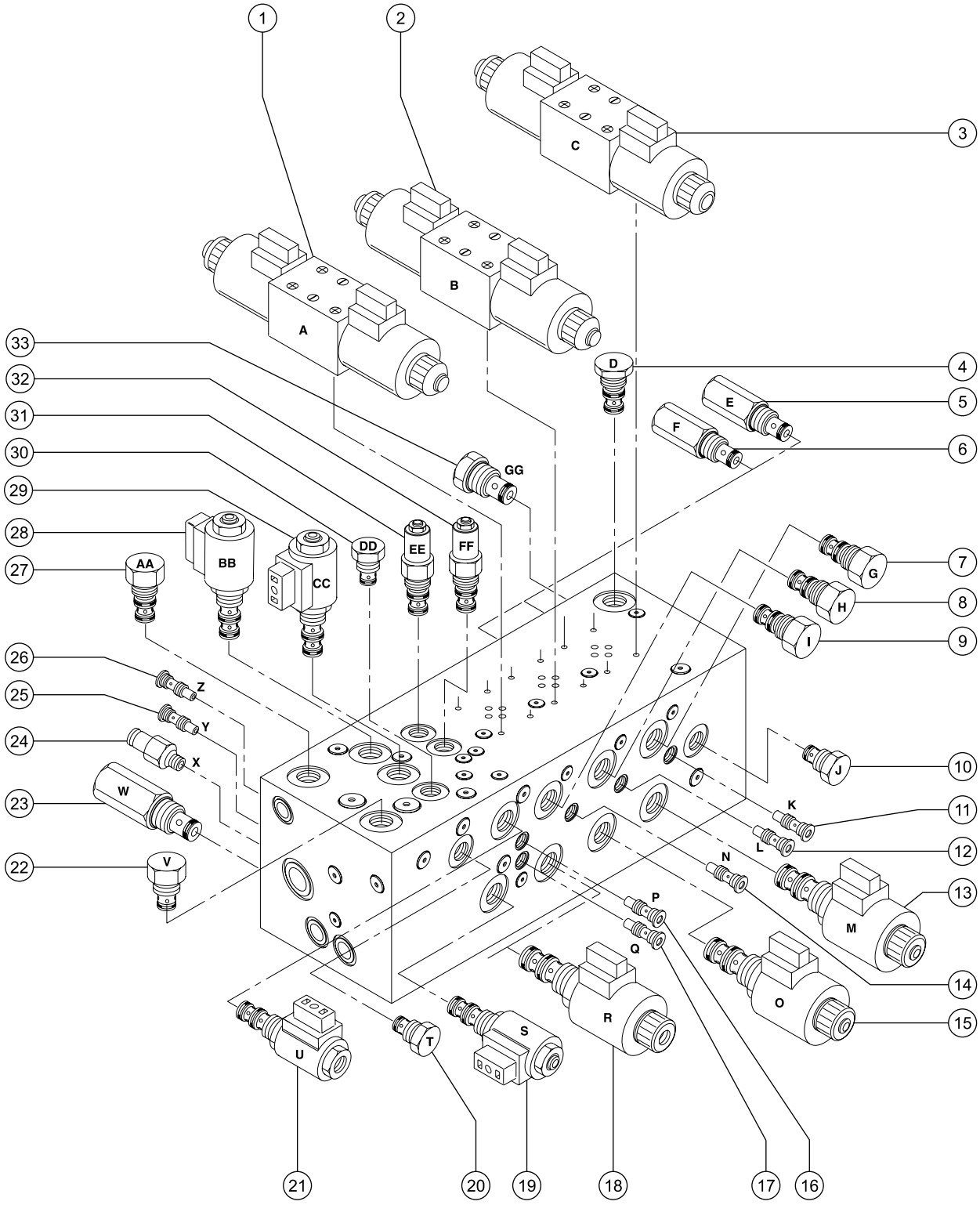

https://truckmanualshub.com/

MANIFOLDS

10-2 Valve Adjustments - Function Manifold

How to Adjust the System Relief Valve

NOTICE Perform this procedure with the boom in the stowed position.

1 Connect a 0 to 5000 psi (0 to 345 bar) pressure gauge to the test port (item 23) on the function manifold.

2 Start the engine from the ground controls.

3 Hold the function enable switch to either side and activate and hold the retract switch with the boom fully retracted. Observe the pressure reading on the pressure gauge.

4 Turn the engine off. Use a wrench to hold the relief valve and remove the cap (item 23, function manifold).

5 Adjust the internal hex socket. Turn it clockwise to increase the pressure or counterclockwise to decrease the pressure. Then install the relief valve cap.

⚠WARNING Tip-over hazard. Do not adjust the relief valves higher than specified.

6 Repeat steps 2 through 5 and recheck relief valve pressure.

System relief valve specifications

Pressure		
S-60 models	2600 psi	179.3 bar
S-65 models	2900 psi	200 bar

How to Adjust the Boom Down Relief Valve

NOTICE Perform this procedure with the boom in the stowed position.

1 Connect a 0 to 5000 psi (0 to 345 bar) pressure gauge to the test port (item 23) on the function manifold.

2 Start the engine from the ground controls.

3 Hold the function enable switch to either side and activate and hold the boom down switch with the boom fully lowered. Observe the pressure reading on the pressure gauge.

4 Turn the engine off. Use a wrench to hold the relief valve and remove the cap (item 6, function manifold).

5 Adjust the internal hex socket. Turn it clockwise to increase the pressure or counterclockwise to decrease the pressure. Then install the relief valve cap.

⚠WARNING Tip-over hazard. Do not adjust the relief valves higher than specified.

6 Repeat steps 2 through 5 and recheck relief valve pressure.

Boom down relief valve specifications

Pressure	2100 psi 145 bar

https://truckmanualshub.com/

How to Adjust the Boom Extend Relief Valve

NOTICE Perform this procedure with the boom in the stowed position.

1 Connect a 0 to 3000 psi (0 to 207 bar) pressure gauge to the test port (item 23) on the function manifold.

2 Start the engine from the ground controls.

3 Hold the function enable switch to either side and activate and hold the extend switch with the boom fully extended. Observe the pressure reading on the pressure gauge.

4 Turn the engine off. Use a wrench to hold the relief valve and remove the cap (item 5, function manifold).

5 Adjust the internal hex socket. Turn it clockwise to increase the pressure or counterclockwise to decrease the pressure. Then install the relief valve cap.

⚠WARNING Tip-over hazard. Do not adjust the relief valves higher than specified.

6 Repeat steps 2 through 5 and recheck relief valve pressure.

Boom extend relief valve specifications	
Pressure	2500 psi 172 bar

How to Override a Valve

A hydraulic valve may need to be manually overridden to troubleshoot a malfunction. The proportional boom functions (boom up/down, extend/retract and turntable rotate) use a variable position proportional valve and a three position directional valve. Example: one position for boom up, one position for neutral and one position for boom down. The platform rotate function uses a three position valve. The platform level uses a three position and a two position valve. The three position valves and the proportional valves can be manually overridden. To identify the manifold valves see 10-1, *Function Manifold,* in this section.

1 Push the button on the end of the valve in ¼ inch (6 mm).

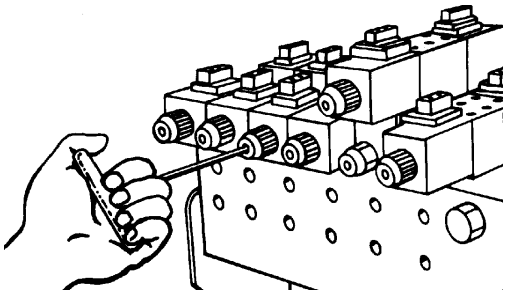

2 Hold the function enable switch to either side and move the ground control function switch for the function being overridden to operate function.

⚠WARNING Collision hazard. Impact with moving boom components may cause death or serious injury. Use extreme caution when overriding a machine function. Identify the direction of machine movement before overriding a valve.

https://truckmanualshub.com/

MANIFOLDS

How to Check the Resistance of a Valve Coil

1 Turn the key switch to the OFF position and disconnect the wires from the valve coil to be tested.

2 Connect the leads from an ohmmeter to the valve coil terminals.

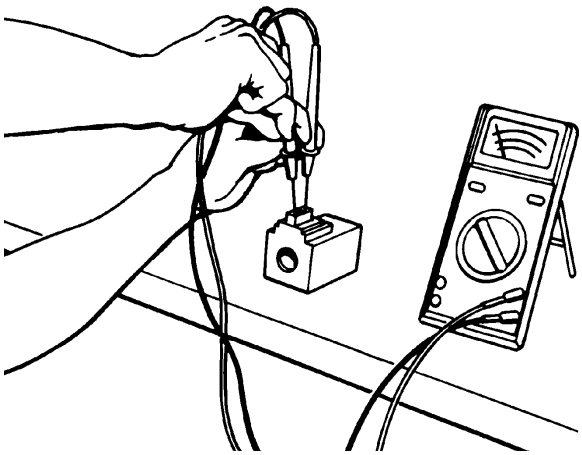

Valve coil specifications	
Proportional solenoid valve, 12V (schematic items M, O and R)	8.6Ω
3 position 4 way directional valve, 10V (schematic items A, B and C)	3.2Ω
Normally open poppet valve (schematic item S, U, BB and CC)	6.4Ω

https://truckmanualshub.com/

10-3
Turntable Rotation Manifold Components

The turntable rotation manifold is mounted to the turntable rotation motor on the tank side of the turntable.

Index No.	Description	Schematic Item	Function	Torque
1	Shuttle valve 2 position 3 way	HH	Turntable rotation brake release	10-13 ft-lbs / 14-18 Nm
2	Counterbalance valve	II	Turntable rotate right	35-40 ft-lbs / 47-54 Nm
3	Counterbalance valve	JJ	Turntable rotate left	35-40 ft-lbs / 47-54 Nm

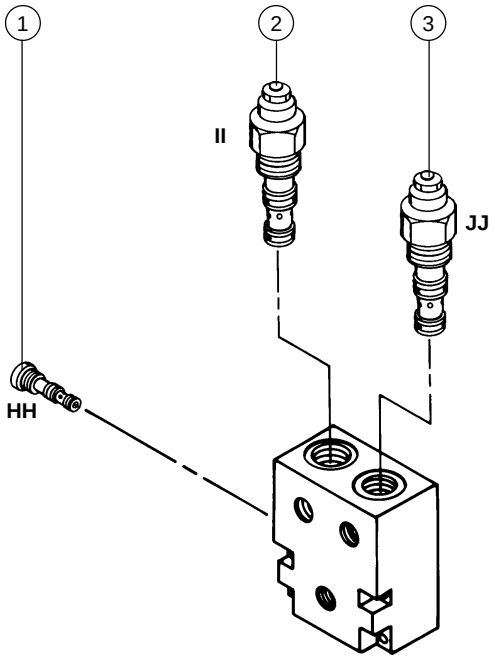

Plug Torque Specifications

Description	Hex size	Torque
SAE No. 2	1/8	50 in-lbs / 6 Nm
SAE No. 4	3/16	13 ft-lbs / 18 Nm
SAE No. 6	1/4	18 ft-lbs / 24 Nm

https://truckmanualshub.com/

MANIFOLDS

10-4
Oscillate Manifold Components

The oscillate manifold is mounted inside the drive chassis at the non-steer end.

Index No.	Description	Schematic Item	Function	Torque
1	Orifice Plug, 0.052 inch (1.32 mm)	KK	Differential sensing circuit	
2	Differential sensing valve	LL	Differential sensing	10-12 ft-lbs / 14-16 Nm
3	Check valve	MM	Oscillate check - left	35-40 ft-lbs / 47-54 Nm
4	Pilot operated unloader valve 950 psi (65 bar)	NN	Sequencing	10-12 ft-lbs / 14-16 Nm
5	Shuttle valve 2 position 3 way	OO	Pilot	10-12 ft-lbs / 14-16 Nm
6	Piston		Check valve circuit (the piston is located between index numbers 3 and 7)	
7	Check valve	PP	Oscillate check - right	35-40 ft-lbs / 47-54 Nm
8	Shuttle valve 2 position 3 way	QQ	Unloading	35-40 ft-lbs / 47-54 Nm
9	Diagnostic fitting		Testing	

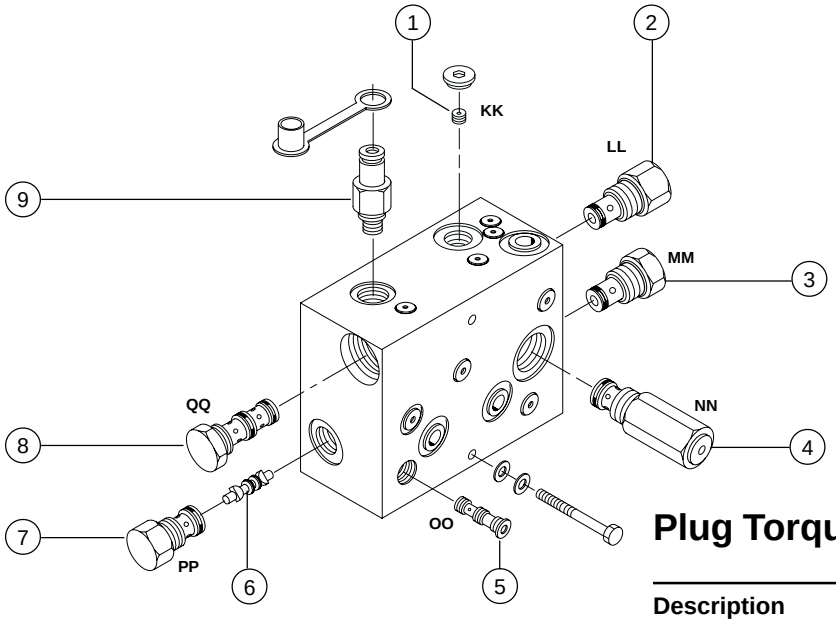

Plug Torque Specifications

Description	Hex size	Torque
SAE No. 2	1/8	50 in-lbs / 6 Nm
SAE No. 4	3/16	13 ft-lbs / 18 Nm
SAE No. 6	1/4	18 ft-lbs / 24 Nm

https://truckmanualshub.com/

10-5 Valve Adjustments - Oscillate Manifold

How to Adjust the Oscillate Sequencing Valve Pressure

NOTICE When removing a hose assembly or fitting, the O-ring on the fitting and/or hose end must be replaced and then torqued to specification during installation.
Refer to Section Two, *Hydraulic Hose and Fitting Torque Specifications.*

1 Connect a 0 to 2000 psi (0 to 138 bar) pressure gauge to the test port located on the oscillate manifold.

⚠WARNING Bodily injury hazard. Spraying hydraulic oil can penetrate and burn skin. Loosen hydraulic connections very slowly to allow the oil pressure to dissipate gradually. Do not allow oil to squirt or spray.

2 Disconnect the directional valve linkage, by removing the clevis yoke from the drive chassis.

3 Start the engine from the platform controls.

4 With the engine running, manually activate the valve and observe the pressure reading on the pressure gauge.

5 Turn the engine off. Hold the unloader valve and remove the cap (item 4).

6 Adjust the internal hex socket. Turn it clockwise to increase the pressure or counterclockwise to decrease the pressure. Then install the valve cap.

⚠WARNING Tip-over hazard. Do not adjust the relief valve higher than specified.

7 Repeat steps 3 through 6 and manually activate the valve and recheck the valve pressure.

8 Turn the engine off, then remove the pressure gauge and assemble the directional valve linkage.

Sequencing valve specifications	
Pressure	950 psi 65.5 bar

https://truckmanualshub.com/

MANIFOLDS

10-6
Directional Valve Manifold Components

The directional valve manifold is mounted inside the drive chassis at the non-steer end.

Index No.	Description	Function	Torque
1	Cap	Breather	20-25 ft-lbs / 27-33Nm
2	Spool valve	Directional control	

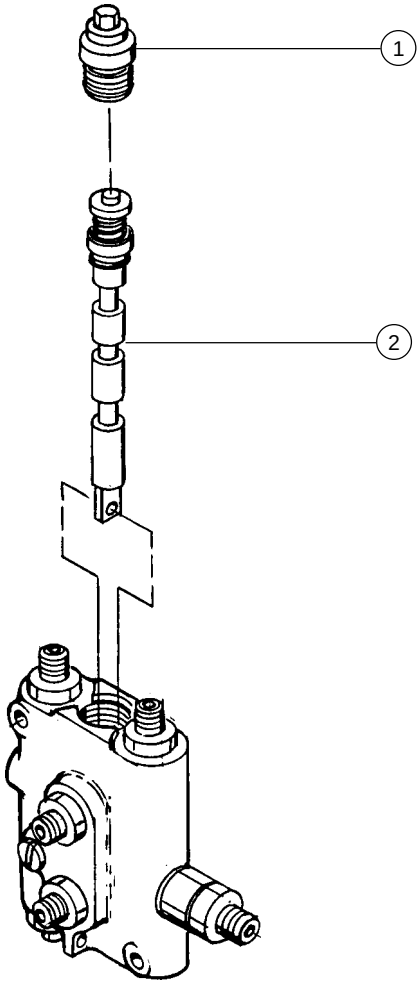

https://truckmanualshub.com/

How to Set Up the Directional Valve Linkage

NOTICE Adjustment of the directional valve linkage is only necessary when the linkage or valve has been replaced.

1 Lower the boom to the stowed position.

2 Use a "bubble type" level to be sure the floor is completely level.

⚠WARNING Failure to perform this procedure on a level floor will compromise the stability of the machine and may result in the machine tipping over.

3 Check the tire pressure in all four tires and add air if needed to meet specification.

4 Remove the drive chassis cover from the non-steer end.

5 Disconnect the linkage clevis yoke from the drive chassis (if not already disconnected).

6 Place a "bubble type" level across the drive chassis non-steer end. Check to be sure the drive chassis is completely level.

7 To level the drive chassis, start the engine and push up or pull down on the linkage adjustment rod until the machine is completely level.

8 Verify that the ground and drive chassis are completely level.

9 Adjust the length of the rod by turning the clevis yoke until the clevis yoke can be pinned to the drive chassis.

10 Install the clevis yoke pin then the cotter pin. Be sure to bend the cotter pin.

11 Measure the distance between the drive chassis and the non-steer axle on both sides (from the inside of the drive chassis).

NOTICE If the distance is not equal and the adjustment to the linkage was completed with the ground and drive chassis level, consult Genie Industries Service Department.

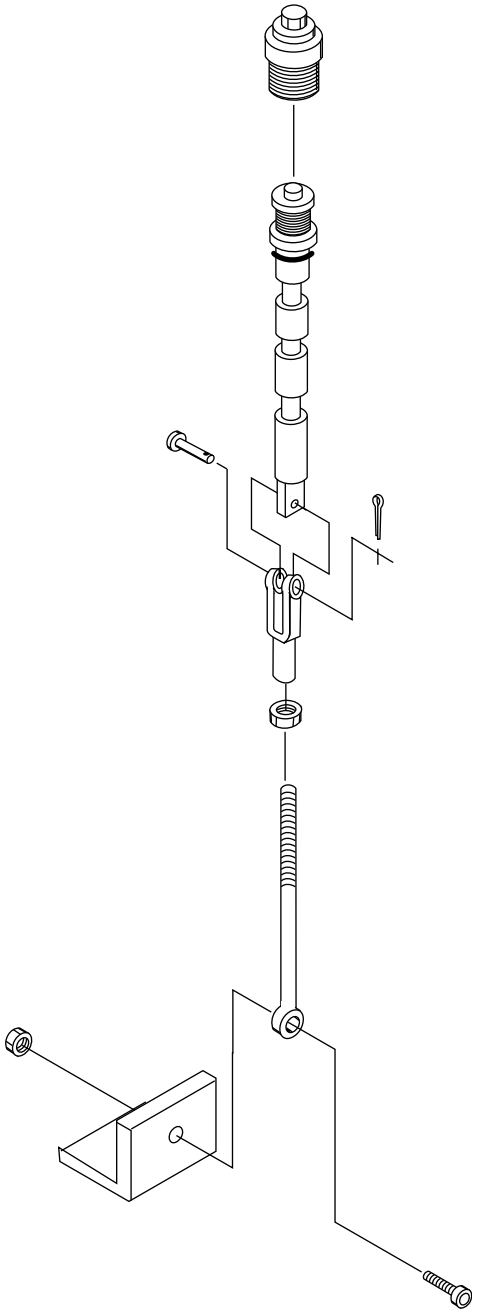

https://truckmanualshub.com/

MANIFOLDS

10-7
Steer Manifold Components, S-60/65 Oscillating Models

The steer manifold is underneath the function manifold.

Index No.	Description	Schematic Item	Function	Torque
1	3 position 4 way solenoid valve	SS	Steer left/right	30-35 in-lbs / 3-4 Nm
2	Check valve	TT	Priority flow regulator circuit	10-12 ft-lbs / 14-16 Nm
3	Orifice Plug, 0.025 inch (0.635 mm)	UU	Priority flow regulator circuit	
4	Priority flow regulator valve, 3.5 gpm (13.2 l/min)	VV	Regulates flow to oscillate manifold	10-12 ft-lbs / 14-16 Nm

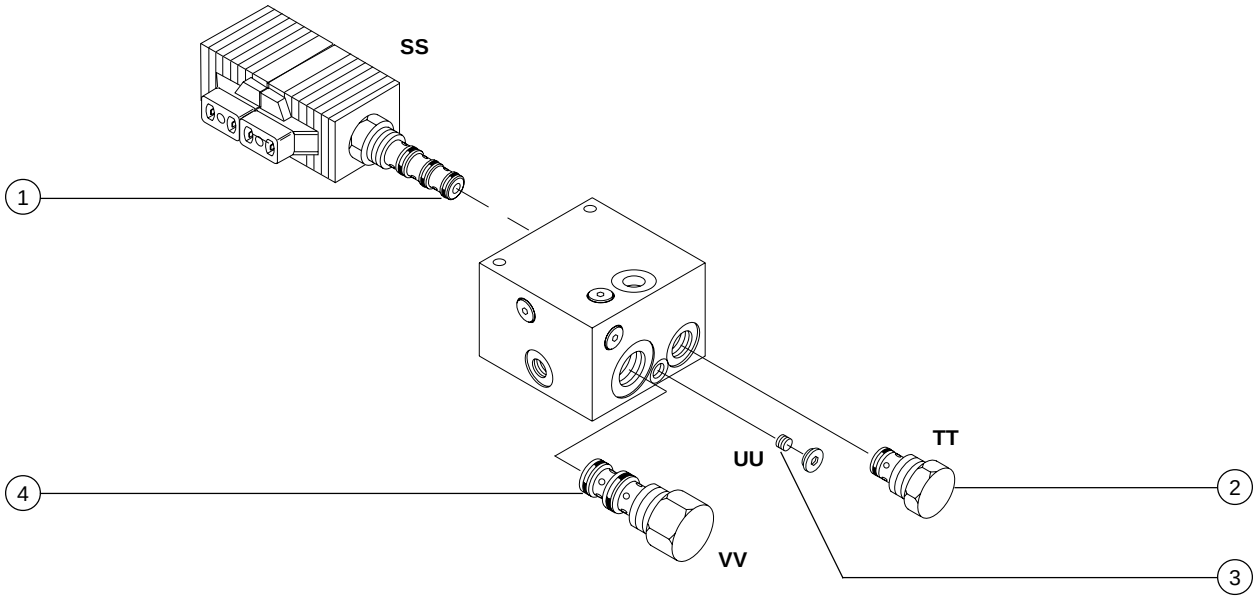

https://truckmanualshub.com/

This page intentionally left blank.

https://truckmanualshub.com/

MANIFOLDS

10-8
2WD Drive Manifold Components

The drive manifold is mounted inside the drive chassis at the non-steer end.

Index No.	Description	Schematic Item	Function	Torque
1	Relief valve, 250 psi (17.2 bar)	WW	Charge pressure circuit	10-12 ft-lbs / 14-16 Nm
2	Flow divider/combiner valve	XX	Controls flow to drive motors in forward and reverse	25-30 ft-lbs / 34-41 Nm
3	Orifice 0.070 in (1.78 mm)	YY	Drive circuit	
4	Shuttle valve 3 position 3 way	ZZ	Charge pressure circuit that gets hot oil out of low pressure side of drive pump and allows low pressure flow path for brake release and 2-speed motor shift	15-18 ft-lbs / 20-24 Nm
5	Diagnostic fitting		Testing	

Plug Torque Specifications

Description	Hex size	Torque
SAE No. 2	1/8	50 in-lbs / 6 Nm
SAE No. 4	3/16	13 ft-lbs / 18 Nm
SAE No. 6	1/4	18 ft-lbs / 24 Nm
SAE No. 8	5/16	50 ft-lbs / 68 Nm
SAE No. 10	9/16	55 ft-lbs / 75 Nm
SAE No. 12	5/8	75 ft-lbs / 102 Nm

https://truckmanualshub.com/

MANIFOLDS

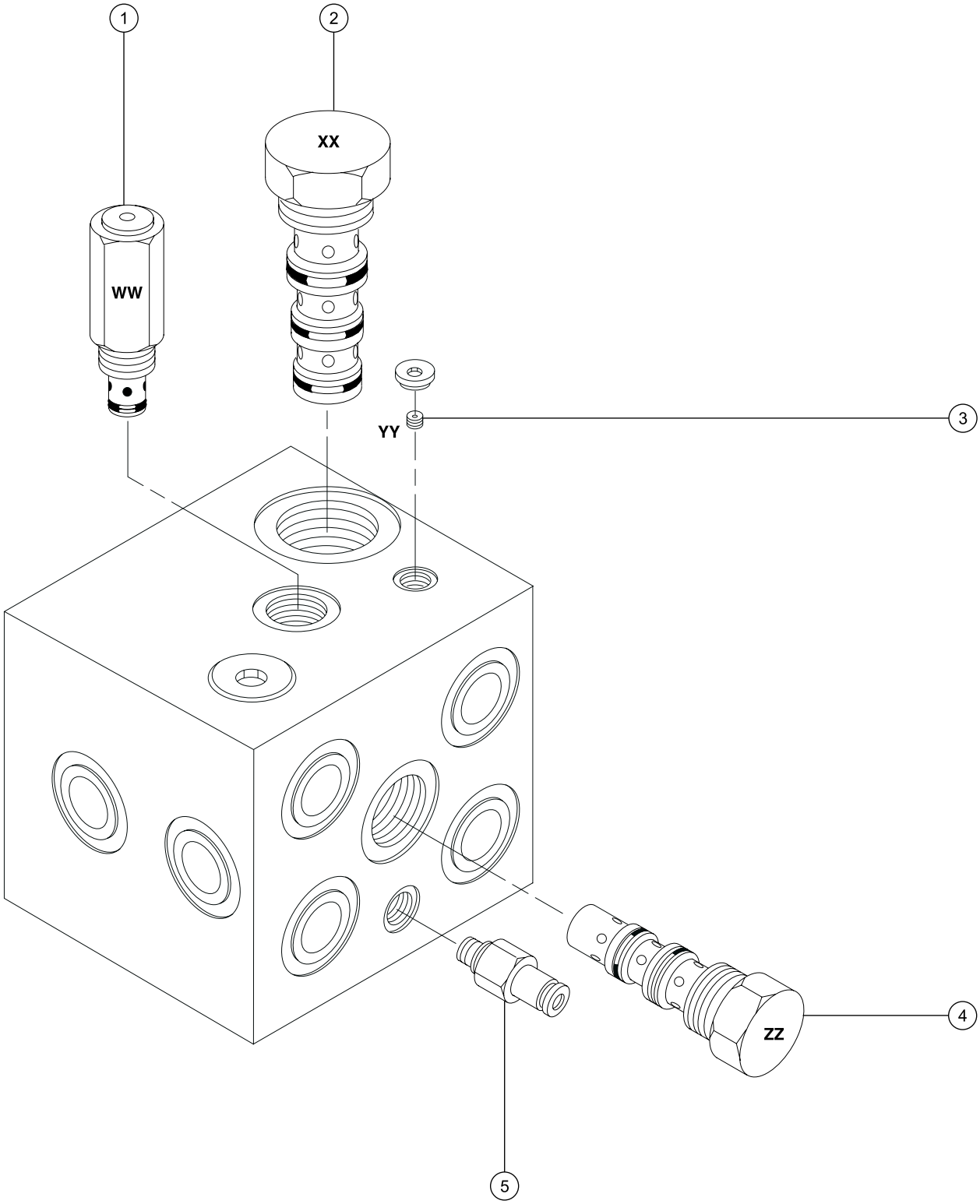

https://truckmanualshub.com/

MANIFOLDS

10-9 Valve Adjustments, 2WD Drive Manifold

How to Adjust the Charge Pressure Relief Valve

1 Connect a 0 to 600 psi (0 to 41 bar) pressure gauge to the test port located on the drive manifold.

2 Start the engine from the platform controls.

3 Drive the machine slowly in either direction and observe the pressure reading on the pressure gauge.

4 Turn the engine off. Hold the charge pressure relief valve and remove the cap (item 1).

5 Adjust the internal hex socket. Turn it clockwise to increase the pressure or counterclockwise to decrease the pressure. Then install the valve cap.

6 Restart the engine. Drive the machine in either direction and recheck the valve pressure.

7 Turn the engine off, then remove the pressure gauge.

Charge Pressure Relief valve specifications	
Pressure	250 psi 17.2 bar

https://truckmanualshub.com/

MANIFOLDS

This page intentionally left blank.

https://truckmanualshub.com/

MANIFOLDS

10-10
4WD Drive Manifold Components

The drive manifold is mounted inside the drive chassis at the non-steer end.

Index No.	Description	Schematic Item	Function	Torque
1	Directional valve, 2 position 2 way	AB	High speed divider bypass N.C. Pilot to open	25-30 ft-lbs / 34-41 Nm
2	Flow divider/combiner valve	AC	Controls flow to flow divider/combiner valves 6 and 7	25-30 ft-lbs / 34-41 Nm
3	Relief valve, 250 psi (17.2 bar)	AD	Charge pressure circuit	10-12 ft-lbs / 14-16 Nm
4	Check valve, pilot to close	AE	Works in conjunction with Index no.12 in the high speed divider bypass circuit	10-12 ft-lbs / 14-16 Nm
5	Orifice - plug, 0.052 inch (1.32 mm)	AF	Front drive motor circuit	
6	Flow divider/combiner valve	AG	Controls flow to steer end drive motors in forward and reverse	25-30 ft-lbs / 34-41 Nm
7	Flow divider/combiner valve	AH	Controls flow to non-steer end drive motors in forward and reverse	25-30 ft-lbs / 34-41 Nm
8	Orifice 0.070 in (1.78 mm)	AI	Rear drive motor circuit	
9	Orifice 0.070 in (1.78 mm)	AJ	Equalizes pressure on both sides of flow divider combiner valve Index no. 2	
10	Shuttle valve, 3 position 3 way	AK	Charge pressure circuit that gets hot oil out of low pressure side of drive pump and allows low pressure flow path for brake release and 2-speed motor shift	15-18 ft-lbs / 20-24 Nm
11	Diagnostic fitting		Testing	
12	Check valve	AL	Works in conjunction with Index no.4 in the high speed divider bypass circuit	10-12 ft-lbs / 14-16 Nm

Plug Torque Specifications

Description	Hex size	Torque
SAE No. 2	1/8	50 in-lbs / 6 Nm
SAE No. 4	3/16	13 ft-lbs / 18 Nm
SAE No. 6	1/4	18 ft-lbs / 24 Nm
SAE No. 8	5/16	50 ft-lbs / 68 Nm
SAE No. 10	9/16	55 ft-lbs / 75 Nm
SAE No. 12	5/8	75 ft-lbs / 102 Nm

https://truckmanualshub.com/

MANIFOLDS

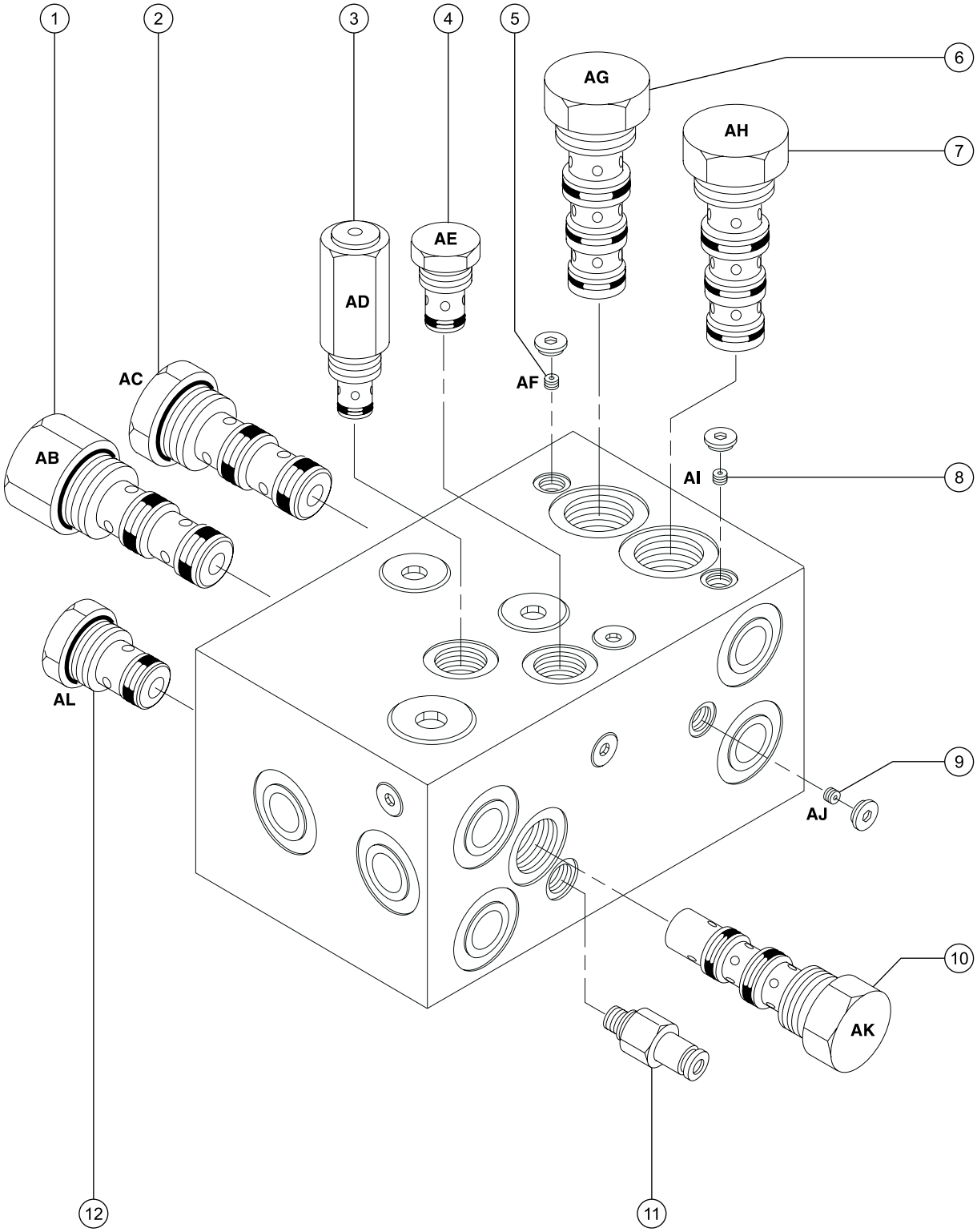

https://truckmanualshub.com/

MANIFOLDS

10-11 Valve Adjustments, 4WD Drive Manifold

How to Adjust the Charge Pressure Relief Valve

1 Connect a 0 to 600 psi (0 to 41 bar) pressure gauge to the test port located on the drive manifold.

2 Start the engine from the platform controls.

3 Drive the machine slowly in either direction and observe the pressure reading on the pressure gauge.

4 Turn the engine off. Hold the charge pressure relief valve and remove the cap (index 3).

5 Adjust the internal hex socket. Turn it clockwise to increase the pressure or counterclockwise to decrease the pressure. Then install the valve cap.

6 Restart the engine. Drive the machine in either direction and recheck the valve pressure.

7 Turn the engine off, then remove the pressure gauge.

Charge Pressure Relief valve specifications	
Pressure	250 psi 17.2 bar

https://truckmanualshub.com/

Fuel and Hydraulic Tanks

11-1 Fuel Tank

How to Remove the Fuel Tank

DANGER Explosion hazard. Engine fuels are combustible. Remove the fuel tank in an open, well-ventilated area away from heaters, sparks, flames and lighted tobacco. Always have an approved fire extinguisher within easy reach.

DANGER Explosion hazard. When transferring fuel, connect a grounding wire between the machine and pump or container.

1 Turn the manual fuel shutoff valve to the CLOSED position.

2 Remove the tank side turntable cover. See 5-1, *How to Remove a Turntable Cover.*

3 **Gasoline/LPG models:** Disconnect, drain and plug the fuel hose.

Deutz Diesel models: Disconnect, drain and plug the supply and return fuel lines. Cap the fuel return fitting on the fuel tank.

4 Remove the retaining fasteners from the fuel tank hold down straps. Remove the straps from the fuel tank.

5 Support the fuel tank with 2 lifting straps. Place one lifting strap at each end of the tank and attach the lifting straps to an overhead crane.

6 Remove the fuel tank from the machine.

WARNING Crushing hazard. The fuel tank may become unbalanced and fall if it is not properly supported and secured to the overhead crane.

NOTICE Clean the fuel tank and inspect for rust and corrosion before installing.

11-2 Hydraulic Tank

The primary functions of the hydraulic tank are to cool, clean and deaerate the hydraulic fluid during operation. It utilizes internal suction strainers for the pump supply lines and has an external return line filter with a filter condition indicator.

How to Remove the Hydraulic Tank

CAUTION Component damage hazard. The work area and surfaces where this procedure will be performed must be clean and free of debris that could get into the hydraulic system.

NOTICE When removing a hose assembly or fitting, the O-ring on the fitting and/or hose end must be replaced and then torqued to specification during installation.
Refer to Section Two, *Hydraulic Hose and Fitting Torque Specifications.*

1 Remove the fuel tank. See 11-1, *How to Remove the Fuel Tank.*

https://truckmanualshub.com/

FUEL AND HYDRAULIC TANKS

2 Close the two hydraulic shutoff valves located at the hydraulic tank.

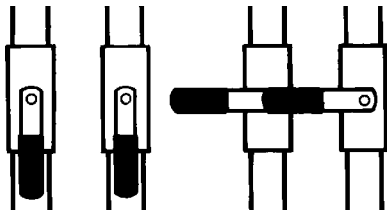

⚠CAUTION Component damage hazard. The engine must not be started with the hydraulic tank shutoff valves in the CLOSED position or component damage will occur. If the tank valves are closed, remove the key from the key switch and tag the machine to inform personnel of the condition.

3 Remove the drain plug from the hydraulic tank.

4 Completely drain the tank into a suitable container. See capacity specifications.

5 Tag, disconnect and plug the two suction hoses that are attached to the hydraulic tank shutoff valves.

6 Disconnect and plug the T-fitting located at the return filter with the 2 hoses connected to it. Cap the fitting on the return filter housing.

7 Disconnect and plug the supply hose for the auxiliary power unit. Cap the fitting on the hydraulic tank.

8 Remove the retaining fasteners from the hydraulic tank hold down straps. Remove the straps from the hydraulic tank.

9 Support the hydraulic tank with 2 lifting straps. Place one lifting strap at each end of the tank and attach the lifting straps to an overhead crane.

10 Remove the hydraulic tank from the machine.

⚠WARNING Crushing hazard. The hydraulic may become unbalanced and fall if it is not properly supported and secured to the overhead crane.

11 Remove the suction strainers from the tank and clean them using a mild solvent.

12 Rinse out the inside of the tank using a mild solvent.

13 Install the suction strainers using a thread sealant on the threads.

14 Install the drain plug using a thread sealant on the threads.

15 Install the hydraulic tank onto the machine.

16 Install the two suction hoses and the supply hose for the auxiliary power unit.

17 Fill the tank with hydraulic oil until the level is within the top 2 inches (5 cm) of the sight gauge. Do not overfill.

18 Clean up any oil that may have spilled and open the hydraulic tank valves.

⚠CAUTION Component damage hazard. Be sure to open the two hydraulic tank valves and prime the pump after installing the hydraulic tank.

NOTICE Always use pipe thread sealant when installing the drain plug.

NOTICE Use only Dexron II equivalent hydraulic fluid.

Hydraulic system	
Hydraulic tank capacity	45 gallons 170 liters
Hydraulic system capacity (including tank)	55 gallons 208 liters
Hydraulic fluid	Dexron equivalent

https://truckmanualshub.com/

How to Prime the Pump

⚠CAUTION Component damage hazard. Be sure that the hydraulic tank shutoff valves are in the OPEN position before priming the pump. The engine must not be started with the hydraulic tank shutoff valves in the CLOSED position or component damage will occur. If the tank valves are closed, remove the key from the key switch and tag the machine to inform personnel of the condition.

1 Connect a 0 to 600 psi (0 to 41 bar) pressure gauge to the test port on the drive pump.

2 **Gasoline/LPG models:** Disconnect the electrical connector at the ignition coils. The ignition coils are located above the alternator.

⚠WARNING Electrocution hazard. Contact with electrically charged circuits may cause death or serious injury. Remove all rings, watches and other jewelry.

Deutz Diesel models: Hold the manual fuel shutoff valve clockwise to the CLOSED position.

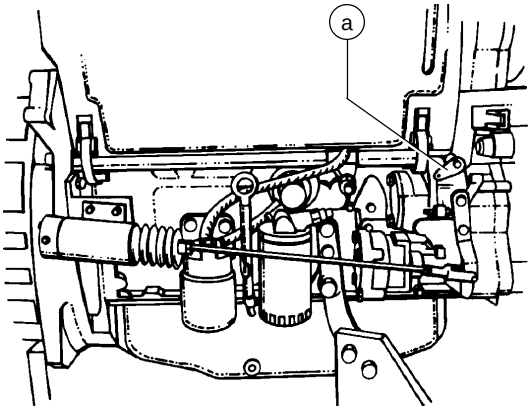

a manual fuel shutoff valve

3 Crank the engine with the starter motor for 15 seconds, wait 15 seconds, then crank the engine an additional 15 seconds or until the pressure reaches 320 psi (22 bar).

4 Connect the wiring and start the engine from the ground controls. Check for hydraulic leaks.

https://truckmanualshub.com/

Turntable Rotation Components

12-1
Rotation Hydraulic Motor

How to Remove the Rotation Hydraulic Motor

NOTICE When removing a hose assembly or fitting, the O-ring on the fitting and/or hose end must be replaced and then torqued to specification during installation. Refer to Section Two, *Hydraulic Hose and Fitting Torque Specifications.*

1 Secure the turntable from rotating with the turntable rotation lock pin.

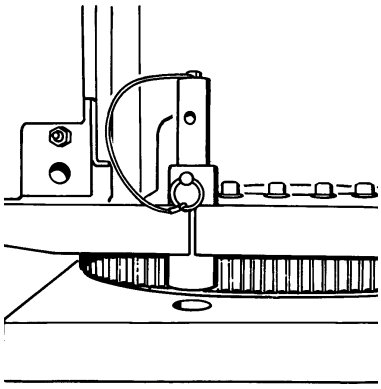

Unlocked position

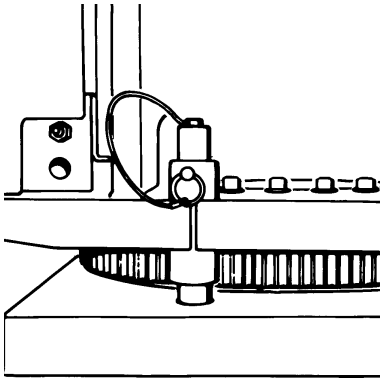

Locked position

2 Tag, disconnect and plug the hydraulic hoses from the motor, brake and manifold. Cap the fittings on the motor, brake and torque hub.

⚠WARNING Bodily injury hazard. Spraying hydraulic oil can penetrate and burn skin. Loosen hydraulic connections very slowly to allow the oil pressure to dissipate gradually. Do not allow oil to squirt or spray.

3 Remove the motor/brake mounting fasteners, then remove the motor from the brake.

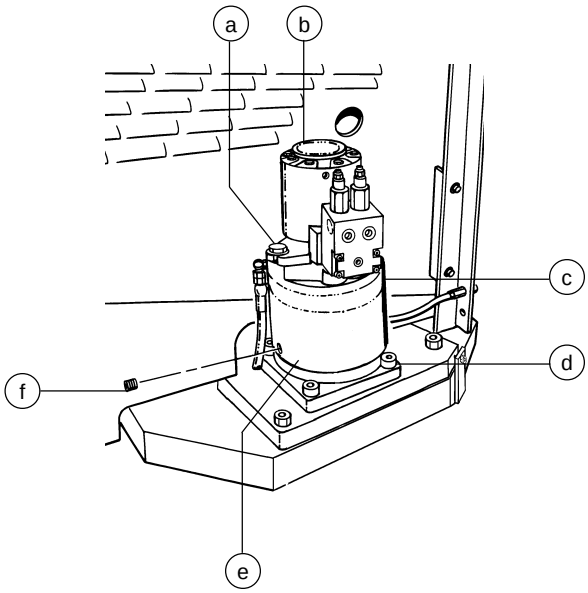

a motor/brake mounting bolts
b motor
c brake
d torque hub mounting bolts
e torque hub
f plug

https://truckmanualshub.com/

How to Remove the Turntable Rotation Brake or Torque Hub

1 Secure the turntable from rotating with the turntable rotation lock pin.

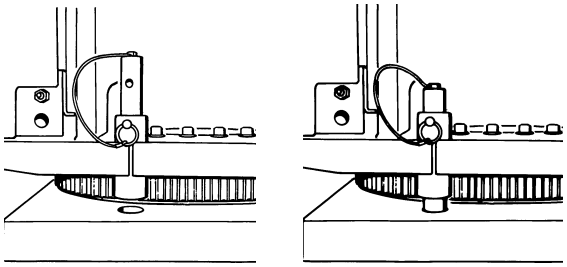

unlocked locked

2 Remove the motor/brake mounting bolts, and then remove the motor and brake from the torque hub and set them to the side.

CAUTION Component damage hazard. Hoses can be damaged if they are kinked or pinched.

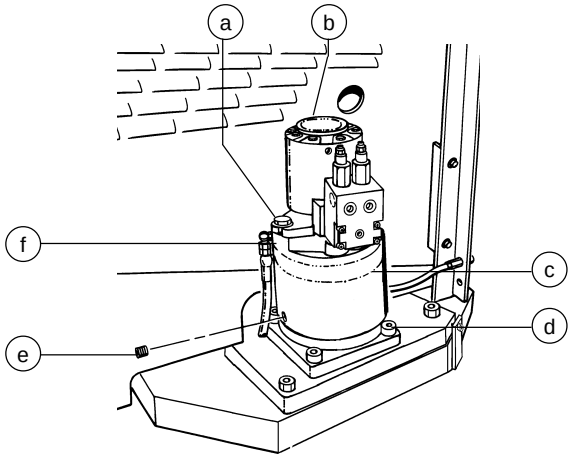

a motor/brake mounting bolt
b motor
c torque hub
d torque hub mounting bolt
e plug
f brake

3 Remove the torque hub mounting bolts, and then use a lifting device to remove the torque hub from the machine.

4 Remove the plug from the side of the torque hub. Then drain the oil from the hub.

5 Install the torque hub. Torque the hub mounting bolts to 180 foot-pounds (244 Newton meters).

6 Install the brake and motor onto the torque hub.

7 Fill the hub with oil from the side hole until the oil level is even with the bottom of the hole. Apply pipe thread sealant to the plugs, and then install the plugs.

8 Adjust turntable rotation gear backlash. See Repair Procedure 18-1, *How to Adjust the Turntable Rotation Gear Backlash.*

Turntable rotate torque hub	
Capacity	17 fluid ounces 0.51 liters
Type: SAE 90 multipurpose hypoid gear oil - API service classification GL5	

https://truckmanualshub.com/

TURNTABLE ROTATION COMPONENTS

How to Adjust the Turntable Rotation Gear Backlash

The turntable rotation torque hub is mounted on a adjustable plate that controls the gap between the rotation motor gear and the turntable bearing.

NOTICE Be sure to check the backlash with the machine on a flat level surface.

1 Loosen the mounting fasteners on the torque hub pivot plate.

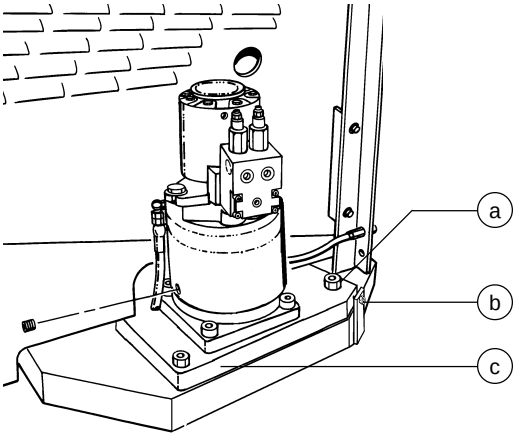

a pivot plate mounting bolts
b adjustment bolt with lock nut
c torque hub pivot plate

2 Push the torque hub pivot plate towards the turntable as far as possible (this will push the rotation gear into the rotation bearing).

3 Loosen the lock nut on the adjustment bolt.

4 Turn the adjustment bolt clockwise until it contacts the pivot plate.

5 Turn the adjustment bolt 1/2 turn counterclockwise. Then tighten the lock nut on the adjustment bolt.

6 Rotate the torque hub pivot plate away from the turntable until it contacts the adjustment bolt. Then tighten the mounting fasteners on the torque hub pivot plate.

7 Rotate the turntable through an entire rotation. Check for tight spots that could cause binding. Readjust if necessary.

https://truckmanualshub.com/

2WD Steering Axle Components

13-1 Yoke and Hub

How to Remove the Yoke and Hub

1 Remove the pin retaining fasteners from both the steering cylinder and the tie rod pivot pins. Remove the pins.

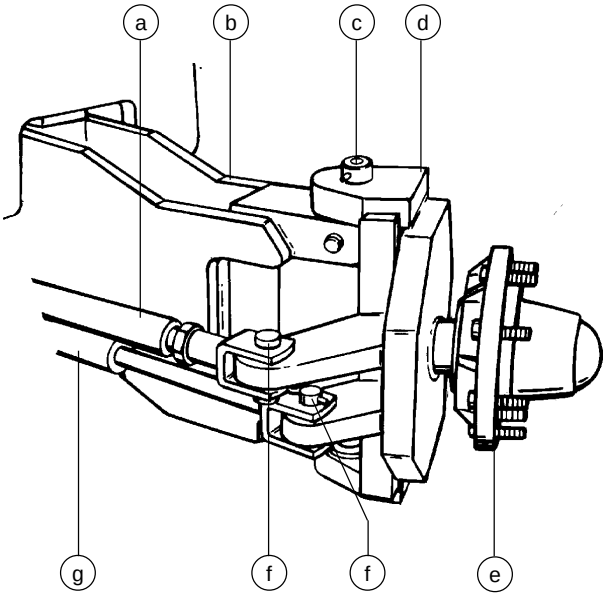

a tie rod
b axle
c yoke pivot pin
d yoke
e hub
f pivot pin
g steering cylinder

2 Loosen the wheel lug nuts. Do not remove them.

3 Block the non-steering wheels, and then center a lifting jack of ample capacity under the steering axle.

4 Raise the machine 6 inches (15 cm) and place blocks under the chassis for support.

5 Remove the lug nuts. Then remove the tire and wheel assembly.

6 Remove the pin retaining fasteners from the yoke pivot pins.

7 Support the yoke/hub assembly with a lifting jack.

8 Use a slide hammer to remove the upper yoke pivot pin, then use a soft metal drift to drive the lower yoke pivot pin down and out.

WARNING Crushing hazard. The yoke/hub assembly may become unbalanced and fall when the yoke pivot pins are removed if it is not properly secured and supported by the lifting jack.

Torque specifications	
Lug nut torque, dry	420 ft-lbs 569.5 Nm
Lug nut torque, lubricated	320 ft-lbs 433.9 Nm

How to Remove the Hub and Bearings

1 Loosen the wheel lug nuts. Do not remove them.

2 Block the non-steering wheels and place a lifting jack of ample capacity under the steering axle.

3 Raise the machine 6 inches (15 cm) and place blocks under the chassis for support.

4 Remove the lug nuts. Then remove the tire and wheel assembly.

5 Remove the dust cap, cotter pin and slotted nut.

6 Pull the hub off the spindle. The washer and outer bearing should fall loose from the hub.

7 Place the hub on a flat surface and gently pry the bearing seal out of the hub. Remove the rear bearing.

https://truckmanualshub.com/

2WD STEERING AXLE COMPONENTS

How to Install the Hub and Bearings

NOTICE When replacing a wheel bearing, both the inner and outer bearings including the pressed-in races must be replaced.

1 Be sure that both bearings are packed with clean, fresh grease.

2 Place the large inner bearing into the rear of the hub.

3 Press the bearing seal evenly into the hub until it is flush.

4 Slide the hub onto the yoke spindle.

⚠CAUTION Component damage. Do not apply excessive force or damage to the lip of the seal may occur.

5 Place the outer bearing into the hub.

6 Install the washer and slotted nut.

7 Tighten the slotted nut to 35 foot-pounds (47 Nm).

8 Loosen the slotted nut, then re-tighten to 8 foot-pounds (11 Nm).

9 Install a new cotter pin. Bend the cotter pin to lock it in.

10 Install the dust cap, then the tire and wheel assembly. Torque the wheel lug nuts to 420 foot-pounds (569.5 Nm).

13-2 Steering Cylinders

How to Remove a Steering Cylinder

There are two identical steering cylinders that work in parallel. They are part of the same hydraulic circuit, but move in opposite directions. The tie rod maintains equal movement of the tires.

NOTICE When removing a hose assembly or fitting, the O-ring on the fitting and/or hose end must be replaced and then torqued to specification during installation.
Refer to Section Two, *Hydraulic Hose and Fitting Torque Specifications.*

1 Tag, disconnect and plug the hydraulic hoses from the steering cylinder. Cap the fittings on the cylinder.

⚠WARNING Bodily injury hazard. Spraying hydraulic oil can penetrate and burn skin. Loosen hydraulic connections very slowly to allow the oil pressure to dissipate gradually. Do not allow oil to squirt or spray.

2 Remove the pin retaining fasteners. Then remove the pivot pin from each end of the steering cylinder.

3 Remove the steering cylinder from the machine.

https://truckmanualshub.com/

13-3
Tie Rod

How to Remove the Tie Rod

1 Remove the pin retaining fasteners, then remove the pivot pin from each end of the tie rod.

2 Remove the tie rod.

How to Perform the Toe-in Adjustment

NOTICE Perform this procedure on a firm, level surface. Block the non-steering tires and be sure that the machine is in the stowed position.

1 Straighten the steer wheels.

2 Measure the steer tires, front to front and back to back, using a measuring fixture.

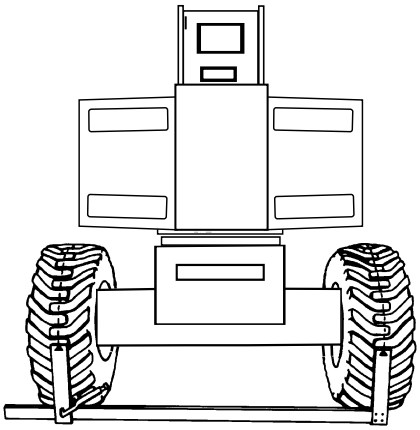

3 Center a lifting jack of ample capacity under the steering axle, then raise the machine.

4 Loosen the jam nut on the adjustable end of the tie rod.

5 Remove the pin retaining fasteners, then remove the pivot pin from the adjustable end of the tie rod.

6 Slide the tie rod off the yoke and adjust it by turning the end.

NOTICE One half turn on the adjustable end equals approximately 1/4 inch (6.4 mm) change in the front and rear measurements.

7 Slide the tie rod onto the yoke. Install the pivot pin, then install the retaining bolt.

8 Tighten the jam nut against the tie rod.

9 Lower the machine and recheck the front and back measurements (step 2). If further adjustment is needed, repeat steps 3 through 8.

Toe-in specification	0 ± 1/8 inch (6.35 mm)

https://truckmanualshub.com/

4WD Steering Axle Components

14-1 Yoke and Hub

How to Remove the Yoke and Hub

The yoke installation utilizes bushings and a thrust washer that may require periodic replacement. The yoke must be removed before the torque hub can be removed.

NOTICE When removing a hose assembly or fitting, the O-ring on the fitting and/or hose end must be replaced and then torqued to specification during installation.
Refer to Section Two, *Hydraulic Hose and Fitting Torque Specifications.*

1 Remove the pin retaining fasteners from both the steering cylinder and the tie rod pivot pins. Remove the pins.

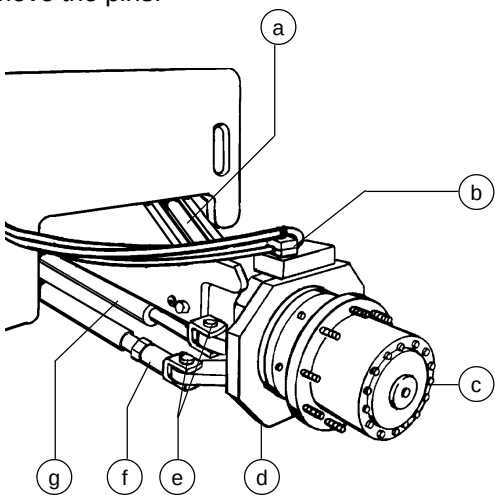

a oscillate cylinder
b king pin
c torque hub
d yoke
e pivot pin
f tie rod
g steer cylinder

2 Tag, disconnect and plug the hydraulic hoses from the drive motor. Cap the fittngs on the drive motor.

WARNING Bodily injury hazard. Spraying hydraulic oil can penetrate and burn skin. Loosen hydraulic connections very slowly to allow the oil pressure to dissipate gradually. Do not allow oil to squirt or spray.

3 Loosen the wheel lug nuts. Do not remove them.

4 Block the non-steering wheels, and then center a lifting jack of ample capacity under the steering axle.

5 Raise the machine 6 inches (15.2 cm) and place blocks under the chassis for support.

6 Remove the lug nuts, then remove the tire and wheel assembly.

7 Remove the hydraulic hose clamp retaining fastener from the top of the yoke.

8 Remove the drive motor mounting fasteners.

9 Slide the drive motor shaft out of the torque hub and then remove the drive motor from the machine.

10 Remove the pin retaining fasteners from the upper and lower yoke pivot pins.

12 Support the yoke/torque hub assembly with a lifting jack. Secure the yoke/torque hub assembly to the lifting jack.

13 Use a slide hammer to remove the upper yoke pivot pin, then use a soft metal drift to drive the lower yoke pivot pin down and out.

WARNING Crushing hazard. The yoke/hub assembly may become unbalanced and fall when the yoke pivot pins are removed if it is not properly secured and supported by the lifting jack.

https://truckmanualshub.com/

14 Place the yoke/torque hub assembly on a flat surface with the torque hub facing down.

15 Remove the torque hub mounting fasteners that attach the yoke to the torque hub. Remove the yoke weldment from the torque hub.

NOTICE Replace the thrust washer when installing the yoke/torque hub assembly onto the axle.

Torque specifications

Lug nut,		
dry	420 ft-lbs	569.5 Nm
lubricated	320 ft-lbs	433.9 Nm
Torque hub mounting bolts,		
dry	120 ft-lbs	163 Nm
lubricated	90 ft-lbs	122 Nm
Drive motor mounting bolts,		
dry	75 ft-lbs	102 Nm
lubricated	56 ft-lbs	76 Nm

14-2 Steering Cylinders

How to Remove a Steering Cylinder

This procedure is the same as the 2WD procedure. See repair procedure 13-2, *How to Remove a Steering Cylinder*.

14-3 Tie Rod

How to Remove the Tie Rod

This procedure is the same as the 2WD procedure. See Repair Procedure 13-3, *How to Remove the Tie Rod*.

How to Perform the Toe-in Adjustment

This procedure is the same as the 2WD procedure. See Repair Procedure 13-3, *How to Perform the Toe-in Adjustment*.

https://truckmanualshub.com/

Oscillating Axle Components

15-1 Oscillating Axle Lock-out Cylinders

The oscillating axle cylinders extend and retract between the drive chassis and the oscillating axle. The cylinders are equipped with counterbalance valves to prevent movement in the event of a hydraulic line failure. The valves are not adjustable.

How to Remove an Oscillating Axle Cylinder

WARNING This procedure requires specific repair skills and a suitable workshop. Attempting this procedure without these skills and tools may result in death or serious injury and significant component damage. Dealer service is strongly recommended.

NOTICE Perform this procedure on a firm, level surface with the boom in the stowed position.

NOTICE When removing a hose assembly or fitting, the O-ring on the fitting and/or hose end must be replaced and then torqued to specification during installation.
Refer to Section Two, *Hydraulic Hose and Fitting Torque Specifications.*

1 Rotate the boom until the boom is between the steer tires.

2 Remove the fasteners from drive chassis cover at the steer end. Remove the cover.

3 Tag, disconnect and plug the oscillating axle cylinder hydraulic hoses. Cap the fittings on the oscillate cylinder.

WARNING Bodily injury hazard. Spraying hydraulic oil can penetrate and burn skin. Loosen hydraulic connections very slowly to allow the oil pressure to dissipate gradually. Do not allow oil to squirt or spray.

4 Remove the pin retaining fasteners from the rod-end pivot pin. Use a soft metal drift to remove the pin.

5 Attach a lifting strap from an overhead crane to the barrel end of the oscillating cylinder.

6 Remove the pin retaining fasteners from the barrel-end pivot pin. Use a soft metal drift to remove the pin.

WARNING Crushing hazard. The oscillate cylinder may become unbalanced and fall when it is removed from the machine if it is not properly attached to the overhead crane.

7 Remove the cylinder from the machine.

https://truckmanualshub.com/

Non-steering Axle Components

16-1 Drive Motor

How to Remove a Drive Motor

CAUTION Component damage hazard. Repairs to the motor should only be performed by an authorized Sundstrand-Sauer dealer.

CAUTION Component damage hazard. The work area and surfaces where this procedure will be performed must be clean and free of debris that could get into the hydraulic system and cause severe component damage. Dealer service is recommended.

NOTICE When removing a hose assembly or fitting, the O-ring on the fitting and/or hose end must be replaced and then torqued to specification during installation.
Refer to Section Two, *Hydraulic Hose and Fitting Torque Specifications.*

1 Remove the fasteners from drive chassis cover at the non-steer end. Remove the cover.

2 Tag, disconnect and plug the hydraulic hoses from the drive motor. Cap the fittings on the drive motor.

WARNING Bodily injury hazard. Spraying hydraulic oil can penetrate and burn skin. Loosen hydraulic connections very slowly to allow the oil pressure to dissipate gradually. Do not allow oil to squirt or spray.

3 Remove the drive motor mounting fasteners.

4 Slide the drive motor shaft out of the brake and then remove the drive motor from the machine.

Torque specifications	
Drive motor mounting bolts	75 ft-lbs 102 Nm

16-2 Torque Hub

How to Remove a Drive Torque Hub

NOTICE When removing a hose assembly or fitting, the O-ring on the fitting and/or hose end must be replaced and then torqued to specification during installation.
Refer to Section Two, *Hydraulic Hose and Fitting Torque Specifications.*

1 Remove the drive motor. See 22-1, *How to Remove a Drive Motor*.

2 Tag, disconnect and plug the hydraulic hose from the brake. Then remove the hydraulic fitting and the bleed valve.

3 Loosen the wheel lug nuts. Do not remove them.

4 Center a lifting jack of ample capacity under the non-steering axle. Raise the machine and place blocks under the drive chassis for support.

5 Remove the wheel lug nuts, then the tire and wheel assembly.

6 Place a second lifting jack under the torque hub for support and secure the torque hub to the lifting jack.

https://truckmanualshub.com/

NON-STEERING AXLE COMPONENTS

7 Remove the torque hub mounting bolts that attach the torque hub to the chassis. Remove the torque hub.

WARNING Crushing hazard. The torque hub may become unbalanced and fall if it is not properly supported and secured to the lifting jack.

Torque specifications		
Lug nut,		
dry	420 ft-lbs	569.5 Nm
lubricated	320 ft-lbs	433.9 Nm
Torque hub mounting bolts,		
dry	120 ft-lbs	163 Nm
lubricated	90 ft-lbs	122 Nm
Drive motor mounting bolts,		
dry	75 ft-lbs	102 Nm
lubricated	56 ft-lbs	76 Nm

https://truckmanualshub.com/

Genie North America

18340 NE 76th Street

P.O. Box 97030

Redmond, Washington

98073-9730

Distributed By:

Genie Europe

Brunel Drive

Newark

Nottinghamshire

NG24 2EG England