https://truckmanualshub.com/

Engine	Yanmar 4TNV98-ZPYS
Gross Power	50.3 kW (67 hp) @ 2,400 rpm
Net Power	47.8 kW (64 hp) @ 2,400 rpm
Breakout Force	25.5 kN
Rated Load	795 kg
Bucket Capacity	0.4 m³
Operating Weight	2,950 kg

CLG365A

Skid Steer Loader

LIUGONG

TOUGH WORLD. TOUGH EQUIPMENT.

https://truckmanualshub.com/

CLG365A Skid Steer Loader

ENGINE

Emission Regulation	Tier 3 / Stage IIIA
Make	Yanmar
Model	4TNV98-ZPYS
Gross Power	50.3 kW (67 hp) @ 2,400 rpm
Net Power	47.8 kW (64 hp) @ 2,400 rpm
Peak Torque	239 N • m @ 1,550 rpm
Number of Cylinders	4
Displacement	3.3 L
Cooling Type	water

ELECTRICAL SYSTEM

System Voltage	12 V
Alternator Output	55 amps

CHAIN TANK

Drive Chain Size	80 HS

TIRES

Ply Type	pneumatic
Tire Size	10 - 16.5
Ply Rating	8

HYDRAULIC SYSTEM

System Type	open
Standard Flow	79.2 L/min
Optional High Flow	120 L/min
Traveling Hydrostatic Pressure	32 MPa
Working Hydrostatic Pressure	20.7 MPa
Hydraulic Cycle Time, total	8.7 s

Raise	Dump	Lower (float down)
4.1 s	2.4 s	2.2 s

OPERATING WEIGHT

Operating Weight	2,950 kg

PERFORMANCE

Static Tipping Load	1,590 kg
Rated Load	795 kg
Boom Breakout Force	18.9 kN
Bucket Breakout Force	25.5 kN
Dump Clearance at Full Height Discharge	2,220 mm
Dump Reach at Full Height Discharge	540 mm
Maximum Dump Angle at Full Height	40°
Maximum Hinge Pin Height	2,923 mm
Bucket Rollback at Ground Level	30°
Ground Clearance	204 mm
Angle of Departure	26°
Front Clearance Radius	1,800 mm

SERVICE CAPACITIES

Fuel Tank	80 L
Engine Oil	10.4 L
Cooling System	18 L
Hydraulic Reservoir	52 L
Hydraulic System Total	56 L
Chain Tanks, Each	7 L

STANDARD EQUIPMENT

General Bucket - 0.4 m^3
Control Safety Interlock
Boom Interlock
Quick Coupler
Enclosed ROPS / FOPS Cab with AC
Auxiliary High Flow - 120.2 L/min

OPTIONAL EQUIPMENT

Open ROPS / FOPS Cab
Flow Standard – 79.2 L/min
Solid Tire
Tire Chains
Yanmar Tier II Engine

OPTIONAL ATTACHMENTS

4 in 1 Bucket – 0.4 m^3
Rocket Bucket – 0.4 m^3
Scrap Bucket – 350 mm to 650 mm
Hydraulic Hammer
Fork
Lift Boom
Auger
Cold Planer
Snow Blade
Pick - up Sweeper
Hydraulic Shear
Trencher

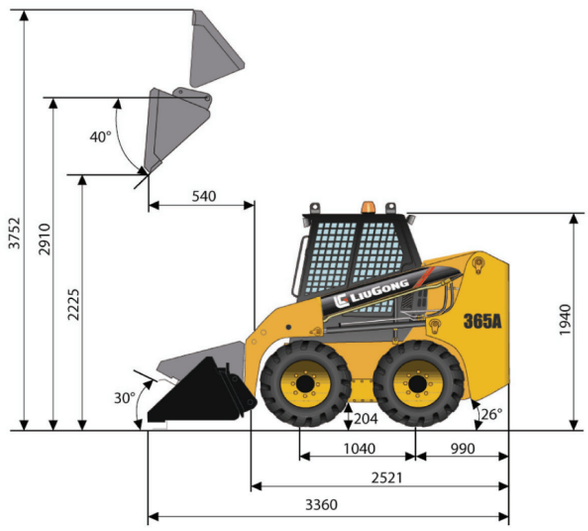

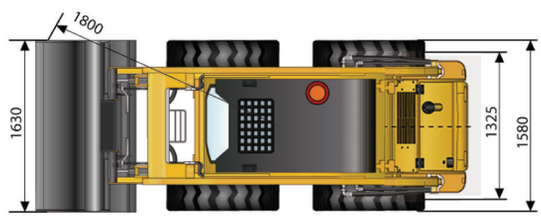

Unit: mm

Guangxi Liugong Machinery Co., Ltd.
No. 1 Liutai Road, Liuzhou, Guangxi 545007, PR China
T: +86 772 3886124 E: overseas@liugong.com
www.liugong.com

05/2014 Designed by LiuGong

Specifications and designs are subject to change without notice. Machines shown may include optional equipment.