https://truckmanualshub.com/

OPERATION & MAINTENANCE

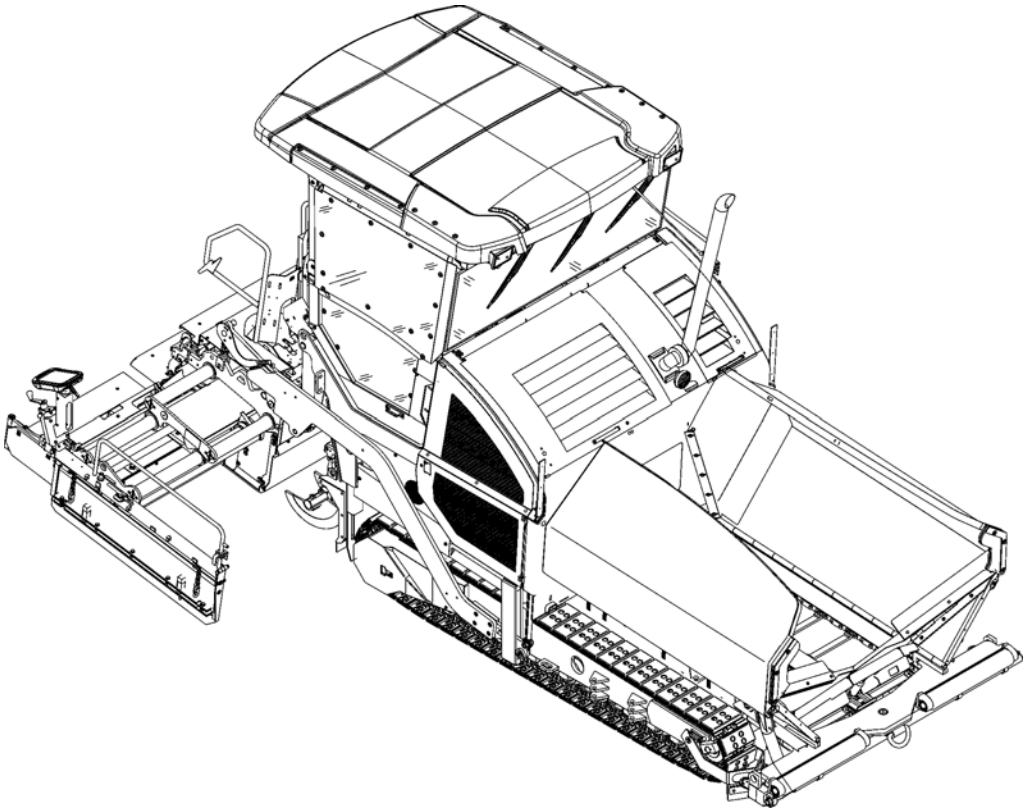

Paver Finisher
Dynapac
SD2550C / SD2550CS
Typ 894 / 895

EN 05-0814 4812012635 (A5)

Keep for later use in document compartment

Valid for:

_____ - _____

_____ - _____

Sustainable Productivity

Atlas Copco

https://truckmanualshub.com/

Atlas Copco

www.atlascopco.com

https://truckmanualshub.com/

Table of contents

V Preface 1

1 General safety instructions 2
1.1 Laws, guidelines, accident prevention regulations 2
1.2 Safety signs, signal words 3
"Danger"! 3
"Warning" ! 3
"Caution" ! 3
"Note" ! 3
1.3 Other supplementary information 3
1.4 Warnings 4
1.5 Prohibitive symbols 6
1.6 Protective equipment 7
1.7 Environmental protection 8
1.8 Fire prevention 8
1.9 Additional information 9
2 CE identification and Declaration of Conformity 10
3 Guarantee conditions 10
4 Residual risks 11
5 Sensibly predictable incorrect usage 12

A Correct use and application 1

B Vehicle description 1

1 Application 1
2 Description of assemblies and functions 2
2.1 Vehicle 3
Construction 3
3 Danger zones 7
4 Safety devices 8
5 Technical data, standard configuration 10
5.1 Dimensions (all dimensions in mm) 10
5.2 Allowed angle of rise and slope 11
5.3 Permissible approach angle 11
5.4 Weights SD2550C (all weights in t) 12
5.5 Weights SD2550CS (all weights in t) 12
5.6 Performance data SD2550C 13
5.7 Performance data SD2550CS 14
5.8 Travel drive/traction unit 15
5.9 Engine SD2550C 15
5.10 Engine SD2550CS 15
5.11 Hydraulic system 16
5.12 Material compartment (hopper) 16
5.13 Material transfer 16
5.14 Material distribution SD2550C 17
5.15 Material distribution SD2550CS 17

5.16 Screed lifting device 18
5.17 Electrical system 18
5.18 Permissible temperature ranges 18
6 Location of instruction labels and identification plates 19
6.1 Warning signs 22
6.2 Information signs 25
6.3 CE marking 27
6.4 Instructive symbols, prohibitive symbols, warning symbols 28
6.5 Danger symbols 29
6.6 Further warnings and operating instructions 30
6.7 Identification label for the paver finisher (41) 32
7 EN standards 33
7.1 Continuous sound pressure SD2550C, Cummins QSB 6.7-C260 33
7.2 Operating conditions during measurement 33
7.3 Measuring point configuration 33
7.4 Continuous sound pressure SD2550CS, Cummins QSB 6.7-C260 34
7.5 Operating conditions during measurement 34
7.6 Measuring point configuration 34
7.7 Vibration acting on the entire body 35
7.8 Vibrations acting on hands and arms 35
7.9 Electromagnetic compatibility (EMC) 35

C11 Transportation 1

1 Safety regulations for transportation 1
2 Transportation on low-bed trailers 2
2.1 Preparations 2
3 Securing the load 4
3.1 Prepare the low-bed trailer 4
3.2 Driving onto the low-bed trailer 5
3.3 Lashing equipment 6
3.4 Loading 7
3.5 Preparing the machine 8
4 Securing the load 9
4.1 Securing at the sides 9
4.2 Securing at the front 9
4.3 Securing at the rear - screed with side board 10
4.4 Securing at the rear - screed without side board 11
Step 1: fasten lashing straps 11
Step 2: fasten lashing chains 11
5 Control panel transport safeguard: 12
5.1 After transportation 13
Protective roof (o) 14
6 Transportation 16
6.1 Preparations 16
6.2 Driving mode 18
7 Loading by crane 19
8 Towing 22
9 Safely parking the vehicle 24
9.1 Lifting the vehicle with hydraulic lifts, lifting points 25

https://truckmanualshub.com/

D11 Operation 1

1 Safety regulations 1
2 Controls 3
2.1 Operating panel 3
2.2 Special functions 50
Reversible conveyor 50
3 Remote control 53

D21 Operation 1

1 Operation of the input and display terminal 1
Button layout on the display 1
Command symbols 2
1.1 Menu operation 3
Main menu 5
Displays: 5
Active / inactive display function 9
"Engine speed" menu 10
Set-up menu Engine speed 10
Measured value display Drive engine 11
"Paving parameters" menu 12
Set-up menu Paving parameters 12
Paving parameters Save 13
Paving parameters Load 13
Actual value display Auger, conveyor, tamper, vibration(o) 14
Set-up menu Screed heater 14
Menu Paving area / automatic steering unit 15
Menu "Machine settings memory" 16
Set-up menu - "Delayed screed start" 16
Menu "Camera display" 17
"Camera 2" display 17
Menu "Front wheel drive" (o) 18
Menu - "Error memory" 19
Display "Machine error messages" 19
Display "Engine error messages" 20
Menu "System information &basic settings" 21
Menu "Service" 22
Set-up menu "Levelling" 23
Set-up menu "Screed type" 23
Set-up menu "Terminal settings" 24
System menu - "Basic settings" display 24
2 Terminal error messages 25
2.1 Drive engine error codes 26
2.2 Error codes 28
3 Menu structure of the setting and display menus 35

https://truckmanualshub.com/

D30 Operation 1

1 Operating elements on the paver finisher 1
1.1 Control elements on the operator's control station 1
Protective roof (o) 2
Ladder 4
Storage space 4
Control platform, moveable (o) 5
Control platform lock (o) 6
Operating panel 7
Protective cabin (o) 8
Windscreen wiper 9
.Emergency actuation control platform, movable 10
Seat console 11
Driver's seat, type I 12
Driver's seat, type II 13
Fuse box 14
Batteries 15
Main battery switch 15
Hopper transport safeguard 16
Screed lock, mechanical (o) 16
Screed lock, hydraulic (o) 17
Paving thickness indicator 18
Auger lighting (o) 19
Engine compartment lighting (o) 19
LED working light (o) 20
500 watt spotlight (o) 21
Camera (o) 21
Auger height adjustment ratchet (o) 22
Auger height indicators 22
Sensor rod / sensor rod extension 23
Manual separator fluid spray (o) 25
Separator fluid spraying system (o) 26
Conveyor limit switches - PLC version 27
Conveyor limit switches - conventional version 28
Ultrasonic auger limit switches (left and right) - PLC version 29
Ultrasonic auger limit switches (left and right) - conventional version ..30
24 volt / 12 volt sockets (o) 31
Pressure control valve for screed charging/relieving 32
Pressure control valve for paving stop with relieving 32
Manometer for screed charging/relieving 32
Central lubrication system (o) 33
Lane clearer (o) 34
Screed eccentric adjustment 35
Push roller crossbar, adjustable 36
Push roller crossbar, hydraulically extendable (o) 37
Push roller damping, hydraulic (o) 37
Fire extinguisher (o) 38
First-aid kit (o) 38
Rotary beacon (o) 39

https://truckmanualshub.com/

Fuelling pump (o) 40
Illuminated balloon (o) 41
Installation and operation 42
Maintenance 43
Replacing the lamp 43

D41 Operation 1

1 Preparing for operation 1
Required devices and aids 1
Before starting work (in the morning or when starting paving) 3
Check list for the vehicle operator 3
1.1 Starting the paver finisher 6
Before starting the paver finisher 6
"Normal" starting 6
External starting (starting aid) 8
After starting 11
Observe indicator lamps 13
Engine coolant temperature check (79) 13
Battery charge indicator (83) 13
Oil pressure indicator lamp for the diesel engine (86) 13
Oil pressure indicator lamp for the travel drive (87) 15
1.2 Preparation for transportation 17
Driving and stopping the paver finisher 19
1.3 Preparations for paving 20
Separator fluid 20
Screed heater system 20
Direction marks 21
Loading/conveying material 23
1.4 Starting for paving 25
1.5 Checks during paving 26
Paver function 26
Quality of the layer 26
1.6 Paving with "screed control at paving stop" and "screed charging/relieving" 27
General 27
Screed charging/relieving 29
Screed control with paver finisher stop / in paving operation (screed stop / paving stop / floating paving) 29
Adjusting the pressure 33
Setting pressure for screed control with paving stop + relieving: 33
1.7 Interrupting/terminating operation 35
During breaks (e.g. the material supply truck is late) 35
During longer breaks(e.g. lunch break) 35
When work is finished 37
2 Malfunctions 38
2.1 Problems during paving 38
2.2 Malfunctions on the paver finisher or screed 40

https://truckmanualshub.com/

E11 Set-up and modification 1

1 Special notes on safety 1
2 Distribution auger 2
2.1 Height adjustment 2
Grain sizes up to 16 mm 2
Grain sizes > 16 mm 2
2.2 Mechanical adjustment with ratchet (o) 3
2.3 Hydraulic adjustment (o) 3
2.4 Height adjustment for large working widths / with brace 4
3 Auger extension 6
3.1 Mounting extension parts 7
Mounting the material shaft and auger extension 7
Mounting the outer auger bearing 8
Mounting the auger end bearing 9
3.2 Auger extension chart 10
Auger upgrading, working width 3.14 m 12
Auger upgrading, working width 3.78 m 12
Auger upgrading, working width 4.42 m 12
Auger upgrading, working width 5.06 m 13
Auger upgrading, working width 5.70 m 13
Auger upgrading, working width 6.34 m 14
Auger upgrading, working width 6.98 m 15
Auger upgrading, working width 7.62 m 16
Auger upgrading, working width 8.26 m 17
Auger upgrading, working width 8.90 m 18
Auger upgrading, working width 9.54 m 19
Auger upgrading, working width 10.18 m 20
Auger upgrading, working width 10.82 m 21
Auger upgrading, working width 11.46 m 22
Auger upgrading, working width 12.10 m 23
Auger upgrading, working width 12.74 m 24
3.3 Mounting the auger brace 25
3.4 Aligning the auger 27
3.5 Material shaft, hinged 29
3.6 Hopper scraper 30
3.7 Crossbeam guide 31
4 Offsetting the screed 32
5 Levelling 33
5.1 Slope controller 33
5.2 Mounting the sensor arm 34
5.3 Mounting the grade control system 34
5.4 Setting up the sensor arm 35
5.5 Big ski 9 m, big ski 13 m 36
Mounting the big ski bracket on the crossbeam 38
Mounting the swivel arms 39
Mounting the centre element 40
Extending the big ski 41
Mounting the sensor bracket 42
Mounting and aligning the sensors 43

https://truckmanualshub.com/

Mounting the distributor box 44
Connection diagram 45
5.6 Levelling shoe 6m, 9m 46
6 Automatic steering unit 48
6.1 Mounting the automatic steering unit on the paver finisher 49
Mounting and aligning the sensor 50
Connecting the sensor 50
Automatic steering unit operating instructions 51
7 Emergency stop during feeder operation 52
8 Limit switch 53
8.1 Auger limit switches (left and right) - mounting the PLC version 53
9 Special accessories 54
9.1 Material bucket 54
Application 54
Description of assemblies and functions 55
Technical data 56
Dimensions, bucket MH2500 - (short version) 56
Dimensions, bucket MH2550 - (long version) 57
Weights 58
Volume 58
10 Identification points 59
..... 59
10.1 Information signs 60
10.2 Warning signs 60
10.3 Further warnings and operating instructions 60
10.4 Instructive symbols, prohibitive symbols, warning symbols 61
Load securing - bucket 62
Prepare the low loader 62
Lashing equipment 63
Lashing 64
Loading with the crane - MH2500 66
Loading with the crane - MH2550 67
Lash the bucket in the paver 69
Operation 71
Operation with a feeder with slewing belt 72
Preparations for paving 72
Separator fluid 72
Cleaning the bucket 73
11 Screed 74
12 Electrical connections 74
12.1 Machine operation without remote control / side board 75

F10 Maintenance 1

1 Notes regarding safety 1

F28 Maintenance review 1

1 Maintenance review 1

F31 Maintenance - conveyor 1

1 Maintenance - conveyor 1
1.1 Maintenance intervals 3
1.2 Points of maintenance 4
Chain tension, conveyor (1) 4
Conveyor drive - drive chains (2) 6
Conveyor deflectors / conveyor plates (3) 7

F40 Maintenance - auger assembly 1

1 Maintenance - auger assembly 1
1.1 Maintenance intervals 3
1.2 Points of maintenance 5
Outer auger bearing (1) 5
Auger planetary gear (2) 6
Drive chains of the augers (3) 7
Auger box (4) 8
Seals and sealing rings (5) 9
Gearbox bolts Check tightening (6) 10
Mounting screws - Outer auger bearing Check tightening (7) 11
Auger blade (8) 12

F54 Maintenance - engine assembly Tier 4F (o) 1

1 Maintenance - engine assembly 1
1.1 Maintenance intervals 3
1.2 Points of maintenance 7
Engine fuel tank (1) 7
Engine lube oil system (2) 9
Engine fuel system (3) 12
Change extraction filter (o) 14
Engine air filter (4) 15
Engine cooling system (5) 17
AdBlue® / DEF tank (6) 19
AdBlue® / DEF tank - suction filter 22
Filter change < / = s/n 003055 24
Filter change > / = s/n 003056 27
AdBlue® / DEF tank - tank cover 30
AdBlue® / DEF dosing unit 32
Engine drive belt (7) 33
Crankshaft ventilation filter (8) 34
Exhaust system - diesel oxidation catalytic converter (9) 35

https://truckmanualshub.com/

F60 Maintenance - hydraulic system 1

1 Maintenance - hydraulic system 1
1.1 Maintenance intervals 3
1.2 Points of maintenance 5
Hydraulic oil tank (1) 5
Suction/return flow hydraulic filter (2) 7
Bleeding the filter 8
Ventilation filter 8
High-pressure filter (3) 9
Pump distribution gear (4) 10
Bleeder 11
Hydraulic hoses (5) 12
Marking hydraulic hoses / storage period, period of use 14
Auxiliary flow filter (6) 15

F74 Maintenance – drive units 1

1 Maintenance – drive units 1
1.1 Maintenance intervals 3
1.2 Points of maintenance 6
Chain tension (1) 6
Bottom plates (2) 9
Rollers (3) 10
Planetary gear (4) 11
Screw connections 13

F81 Maintenance - electrical system 1

1 Maintenance - electrical system 1
1.1 Maintenance intervals 3
1.2 Points of maintenance 4
Batteries (1) 4
Recharging the batteries 5
Alternator (2) 6
Insulation faults 7
Cleaning the generator 8
Electrical fuses / relays (3) 9
Fuses in terminal box (B) 10
Relays in terminal box (C) 12
Relays in the engine compartment (E) 14

F90 Maintenance - lubricating points 1

1 Maintenance - lubricating points 1
1.1 Maintenance intervals 2
1.2 Points of maintenance 3
Central lubrication system (1) 3
Bearing points (2) 7

F100 Tests, stopping 1

1 Tests, checks, cleaning, stopping 1
1.1 Maintenance intervals 2
2 General visual inspection 3
3 Check that the bolts and nuts fit firmly 3
4 Inspection by an expert 4
5 Cleaning 5
5.1 Cleaning the hopper 6
5.2 Cleaning the conveyor and auger 6
6 Preserving the paver finisher 7
6.1 Shutdowns for up to 6 months 7
6.2 Shutdowns lasting from 6 months to 1 year 7
6.3 Recommissioning the machine 7
7 Environmental protection, disposal 8
7.1 Environmental protection 8
7.2 Disposal 8
8 Bolts - torques 9
8.1 Standard metric threads - strength class 8.8 / 10.9 / 12.9 9
8.2 Fine metric threads - strength class 8.8 / 10.9 / 12.9 10

F114 Lubricants and operating substances 1

1 Lubricants and operating substances 1
1.1 Capacities 3
2 Operating substance specifications 4
2.1 Drive engine - fuel 4
2.2 Drive engine - Lube oil 4
2.3 Cooling system 4
2.4 Hydraulic system 5
2.5 Pump distribution gear 5
2.6 Drive unit planetary gear 5
2.7 Auger drive planetary gear 5
2.8 Auger box 6
2.9 Grease 6
2.10 Drive engine - AdBlue® / DEF 7
2.11 Hydraulic oil 8

https://truckmanualshub.com/

V Preface

Translation of the original operating instructions.

If the vehicle is to be operated safely, the information provided in these operating instructions will be required. The information is provided in a concise, clearly structured form. The individual chapters are arranged in alphabetical order. and every chapter starts with page 1. The individual pages are identified by the chapter letter and the page number.
Example: Page B 2 is the second page of chapter B.

These operating instructions cover various vehicle options. Make sure that during operation and maintenance work the description appropriate to the vehicle option is used.

In the interest of continued development, the manufacturer reserves the right to make changes to the vehicle (which will not, however, change the essential features of the type of vehicle described) without updating the present operating instructions at the same time.

Dynapac GmbH
Wardenburg

Ammerländer Strasse 93
D-26203 Wardenburg / Germany
Telephone: +49 / (0)4407 / 972-0
Fax: +49 / (0)4407 / 972-228
www.dynapac.com

https://truckmanualshub.com/

1 General safety instructions

1.1 Laws, guidelines, accident prevention regulations

☞ The locally applicable laws, guidelines and accident prevention regulations must always be observed, even if these are not expressly named here.
The user himself/herself is responsible for compliance with the resulting regulations and measures!

☞ The following warnings, prohibitive symbols and instructive symbols indicate dangers for persons, the vehicle and the environment due to residual risks when operating the vehicle.

☞ Failure to observe this information, prohibitions and instructions can result in life-threatening injuries!

☞ The "Guidelines for the Correct Use and Application of Paver Finishers" compiled by Dynapac must also be observed!

https://truckmanualshub.com/

1.2 Safety signs, signal words

In the safety instructions, the signal words "Danger", "Warning", "Caution", "Note" are positioned in the coloured title block. They follow a certain hierarchy; in combination with the warning symbol, they indicate the severity of the danger or the type of note.

"Danger"!

DANGER

Danger of personal injury.
Indication of an immediately threatening danger that result in fatal or severe injuries unless the corresponding actions are taken.

"Warning" !

WARNING

Indication of a possible danger that can result in fatal or severe injuries unless the corresponding actions are taken.

"Caution" !

CAUTION

Indication of a possible danger that result in moderate or minor injuries unless the corresponding actions are taken.

"Note" !

NOTE

Indication of a possible drawback unless the corresponding actions are taken, e.g. unwanted conditions or consequences can occur.

1.3 Other supplementary information

Other information and important explanations are identified by the following pictograms:

STOP Precedes safety instructions that must be observed in order to prevent danger to personnel.

⚠ Precedes notes that must be observed to prevent damage to equipment.

☞ Precedes general notes and explanations.

https://truckmanualshub.com/

1.4 Warnings

Warning on a dangerous area or hazard!
Failure to observe the warnings can result in life-threatening injuries!

Warning on danger of being pulled in!

In this working area/on this element there is a danger of being pulled in by rotating or conveying elements!
Only carry out activities with elements switched off!

Warning on dangerous electrical voltage!

All maintenance and repair work on the screed's electrical system must always be carried out by an electrician!

Warning on suspended loads!

Never stand under suspended loads!

Warning on danger of crushing!

There is a danger of crushing when certain components are operated, or certain functions or vehicle movements are carried out.
Always make sure that there are no persons within the endangered areas!

Warning on hand injuries!

Warning on hot surfaces or hot liquids!

https://truckmanualshub.com/

Warning on danger of falling!

Warning on dangers posed by batteries!

Warning on hazardous or irritating substances!

Warning on substances which constitute a fire hazard!

Warning on gas bottles!

https://truckmanualshub.com/

1.5 Prohibitive symbols

Opening/walking on/reaching in/carrying out/setting up are prohibited during operation or while the drive engine is running!

Do not start engine/drive!
Maintenance and repair work may only be carried out with the diesel engine shut down!

Spraying with water is prohibited!

Extinguishing with water is prohibited!

Unauthorised maintenance is prohibited!
Only qualified experts may conduct maintenance!

☞ Consult the Dynapac Service Department

Fire!, naked flames and smoking are prohibited!

Do not switch!

https://truckmanualshub.com/

1.6 Protective equipment

☞ Locally applicable regulations may require the wearing of various safety equipment! Always observe these regulations!

Wear safety goggles to protect your eyes!

Wear suitable head protection!

Wear suitable hearing protection to protect your hearing!

Wear suitable safety gloves to protect your hands!

Wear safety shoes to protect your feet!

Always wear close-fitting work clothing!
Wear a warning vest to be seen in time to avoid accidents!

Wear respiratory equipment if breathing air is contaminated!

https://truckmanualshub.com/

1.7 Environmental protection

☞ The locally applicable laws, guidelines and accident prevention regulations for the proper recycling and disposal of waste must always be observed, even if these are not expressly named here.
Water-endangering substances like:

- Lubricants (oil, grease)
- Hydraulic oil
- Diesel fuel
- Coolant
- Cleaning liquids

must not get into the soil or sewer system during cleaning, maintenance and repair work!

Substances must be caught, stored, transported and brought to professional disposal sites in suitable containers!

Environmentally hazardous substance!

1.8 Fire prevention

☞ Locally applicable regulations may require suitable extinguishing agents to be carried on the vehicle!
Always observe these regulations!

Fire extinguisher!
(optional equipment)

https://truckmanualshub.com/

1.9 Additional information

⚠ Also observe the manufacturer's documentation and additional documentation!

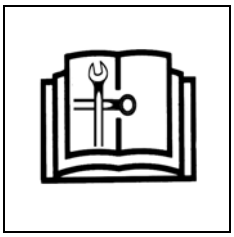

☞ For example, the maintenance instructions of the engine manufacturer

⚠ Description / depiction applicable when equipped with gas heater!

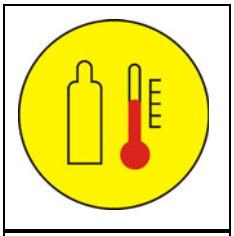

⚠ Description / depiction applicable when equipped with electric heater!

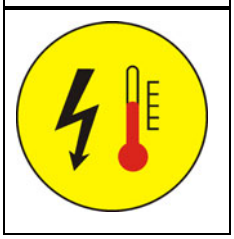

● Used to indicate standard equipment.

○ Used to indicate optional equipment.

https://truckmanualshub.com/

2 CE identification and Declaration of Conformity

(only applies to machines sold in the EU/EEC)

This machine has CE identification. This identification says that the machine fulfils the basic health and safety requirements pursuant to the Machinery Directive 2006/42/EC together with all other valid regulations. The scope of supply of the machine includes a Declaration of Conformity as specified in the valid regulations and amendments together with harmonised standards and other valid provisions.

3 Guarantee conditions

☞ The guarantee conditions are included in the scope of supply of the machine. This contains a complete specification of the valid conditions.

The guarantee becomes null and void if

- damage occurrs through malfunctions caused by improper use and incorrect operation.
- repairs or manipulations are carried out by persons who are neither trained nor authorised accordingly.
- accessories or spare parts are used that cause damage and which are not approved by Dynapac.

https://truckmanualshub.com/

4 Residual risks

These are risks that remain even if all possible measures and safety precautions have been taken to help minimise dangers (risks) or to reduce their probability and scope to zero.

Residual risks in the form of

- **Danger to life and limb of persons at the machine**
- **Danger to the environment posed by the machine**
- **Damage to property and restricted output and functionality of the machine**
- **Damage to property in the operating range of the machine**

caused by:

- wrong or improper use of the machine
- defective or missing safety devices
- use of the machine by untrained, uninstructed staff
- defective or damaged parts
- incorrect transport of the machine
- incorrect maintenance or repairs
- leaking operating substances
- emission of noise and vibrations
- impermissible operating substances

Existing residual risks can be avoided by complying and implementing the following:

- warnings at the machine
- warnings and instructions in the safety manual for paver finishers and in the operating instructions of the paver finisher
- Operating instructions of the machine operator

https://truckmanualshub.com/

5 Sensibly predictable incorrect usage

Every kind of sensibly predictable incorrect usage of the machine constitutes misuse. Incorrect usage makes the manufacturer's warranty null and void: the operator bears sole responsibility.

Sensibly predictable incorrect usage of the machine includes:

- presence in the danger zone of the machine
- transporting persons
- leaving the operator's platform while the machine is operating
- removing protection or safety devices
- starting and using the machine outside the operator's platform
- operating the machine with the screed walkway plate hinged up
- failing to comply with the maintenance instructions
- omission or incorrect execution of maintenance or repair work
- spraying the machine with high pressure cleaners

https://truckmanualshub.com/

A Correct use and application

☞ The "Guidelines for the Correct Use and Application of Paver Finishers" compiled by Dynapac are included in the scope of delivery for the present machine. The guidelines are part of the present operating instructions and must always be heeded. National regulations are fully applicable.

The road construction machine described in these operating instructions is a paver finisher that is suited for laying mixed materials, roll-down concrete or lean-mixed concrete, track-laying ballast and unbound mineral aggregates for foundations for paving.
The paver finisher must be used, operated and maintained according to the instructions given in the present operating instructions. Any other use is regarded as improper use and can cause injury to persons or damage to the paver finisher or other equipment or property.

Any use going beyond the range of applications described above is regarded as improper use and is expressly forbidden! Especially in those cases where the paver finisher is to be operated on inclines or where it is to be used for special purposes (construction of dumps, dams), it is absolutely necessary to contact the manufacturer.

Duties of the user: A "user" within the meaning of these operating instructions is defined as any natural or legal person who either uses the paver finisher himself, or on whose behalf it is used. In special cases (e.g. leasing or renting), the user is considered to be the person who, in accordance with existing contractual agreements between the owner and the user of the paver finisher, is charged with the observance of the operating duties.
The user must ensure that the paver finisher is only used in the stipulated manner and that all danger to life and limb of the operator, or third parties, is avoided. In addition to this, it must be ensured that the relevant accident prevention regulations and other safety-related provisions as well as the operating, servicing and maintenance guidelines are observed. The user must also ensure that all persons operating the paver finisher have read and understood the present operating instructions.

Mounting of attachments: The paver finisher must only be operated in conjunction with screeds that have been approved by the manufacturer. Mounting or installation of any attachments that will interfere with or supplement the functions of the paver finisher is permitted only after written approval by the manufacturer has been obtained. If necessary, the approval of local authorities must be obtained.
Any approval obtained from local authorities does not, however, make approval by the manufacturer unnecessary.

https://truckmanualshub.com/

https://truckmanualshub.com/

B Vehicle description

1 Application

The Dynapac SD2550C / SD2550CS paver finisher is a paver finisher with a caterpillar drive which is used for paving bituminous mixed material, roll-down or lean-mixed concrete, track-laying ballast and unbound mineral aggregates for foundations for paving.

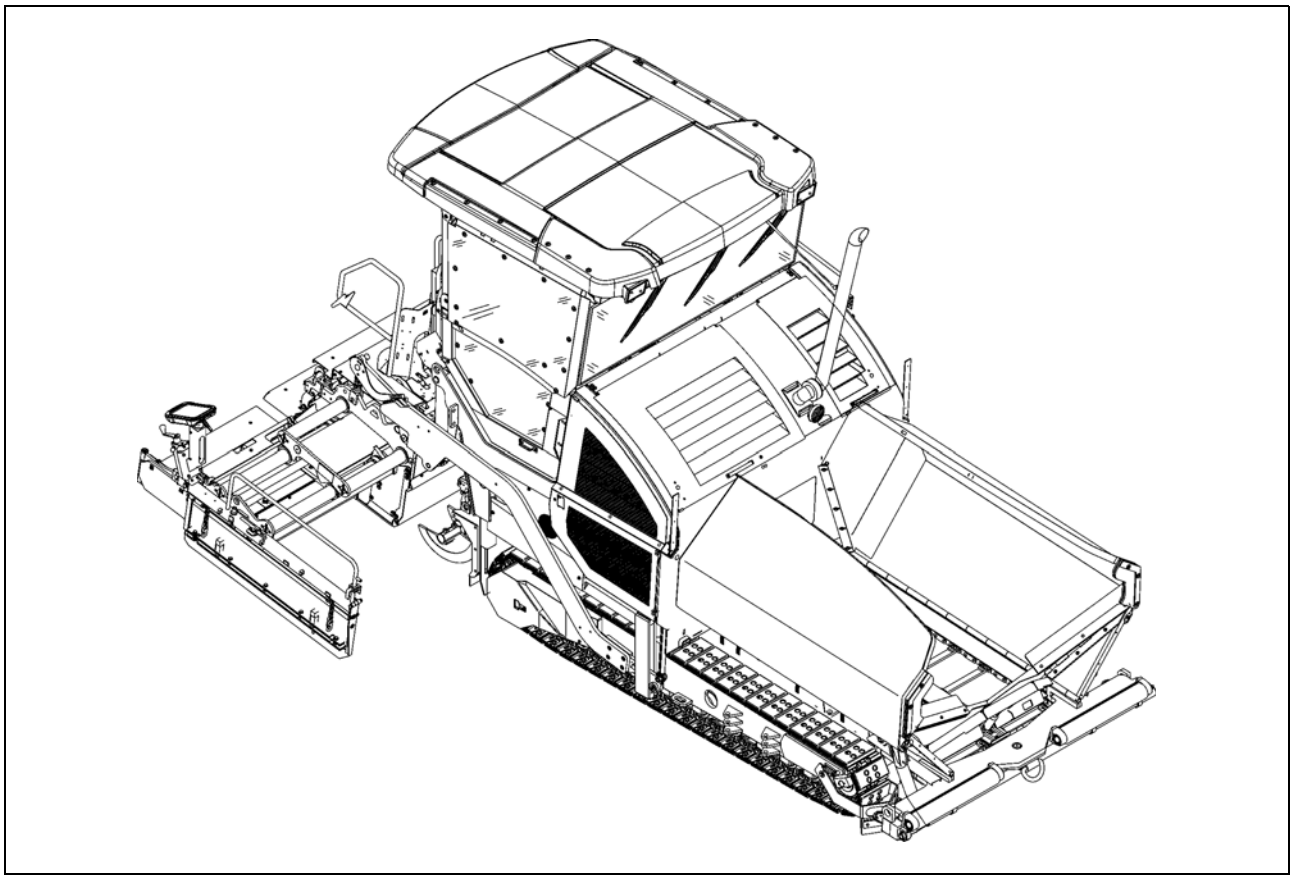

https://truckmanualshub.com/

2 Description of assemblies and functions

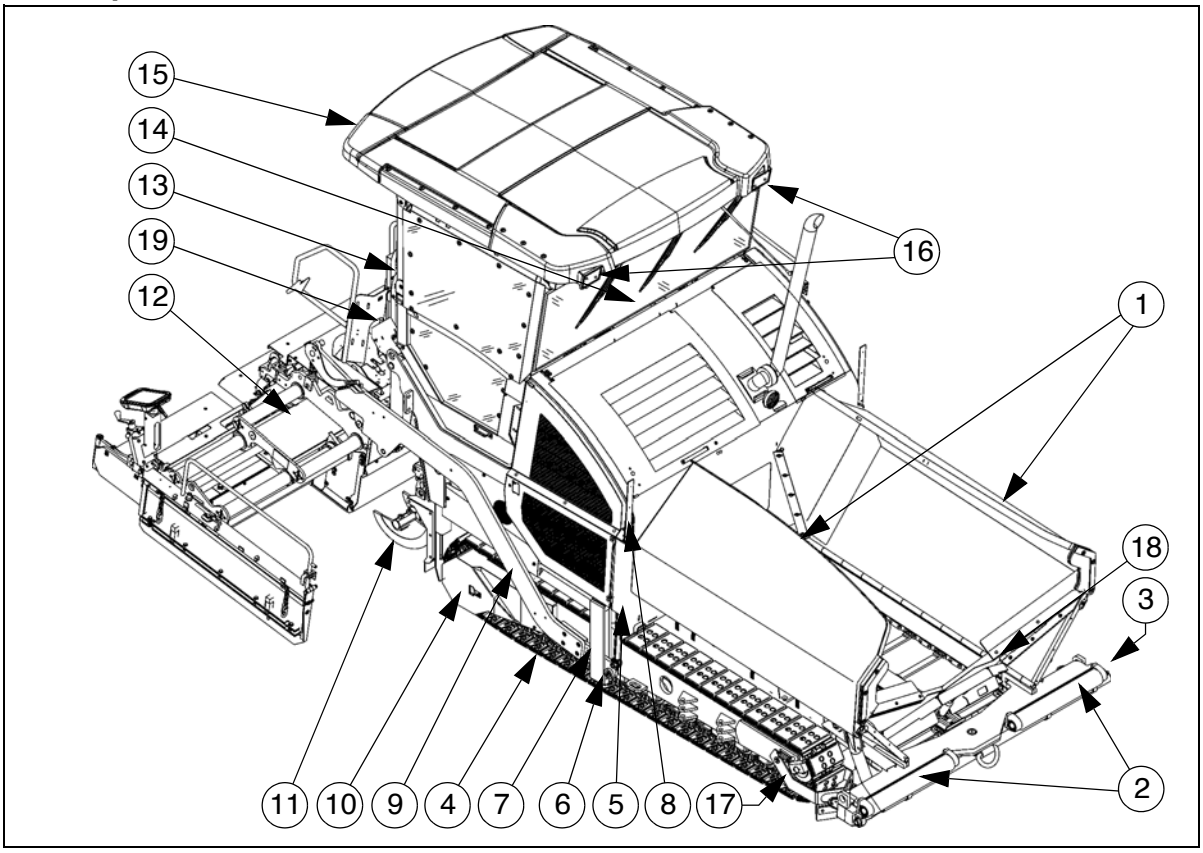

Item		Designation
1	●	Material compartment (hopper)
2	●	Push roller crossbar for truck docking
2	○	Push roller crossbar for truck docking, hydraulically extendable
3	●	Tube for sensor rod (direction indicator) and holder for levelling shoe
4	●	Caterpillar drive
5	●	Levelling cylinder for paving thickness
6	●	Traction roller
7	●	Crossbeam pull bar
8	●	Paving thickness indicator
9	●	Crossbeam
10	●	Travel drive of the caterpillar drive
11	●	Auger
12	●	Screed
13	●	Operator's platform (hydraulically movable)
14	●	Operating panel (can be moved to either side)
15	●	Protective roof
16	○	Working lights
17	●	Lane cleaner
18	○	Hydraulic front hopper flap
19	○	Asphalt fume control system

● = Standard equipment	○ = Optional equipment

https://truckmanualshub.com/

2.1 Vehicle

Construction

The paver finisher has a welded steel frame on which the individual components are mounted.

The caterpillar drives compensate uneven areas on the ground; the suspension of the attached screed additionally helps to attain high paving precision.
The continuously adjustable hydrostatic travel drive allows the speed of the paver finisher to be matched to all work conditions.

The operation of the paver finisher is considerably facilitated by the automatic material handling system, the independent travel drives and the clearly structured operating components and controls.

The following extra equipment (option) is available:

○ Automatic levelling/slope control system

○ Additional cut-off shoe

○ Larger working widths

○ Automatic central lubrication system for the finisher and/or the screed

○ Protective cabin

○ Additional headlights, warning lamps

○ Emulsion spraying system

○ Fuelling system

○ Camera system

○ Asphalt fume control system

○ 12 volt system

○ Further equipment and upgrade options on request

Engine: The paver finisher is driven by a water cooled diesel engine. For further details see the technical data and the engine's instruction manual.
The stage IV engine complies with the latest emissions standards and helps to reduce diesel consumption and improve the working environment.
The exhaust gas aftertreatment system consists e.g. of a diesel oxidisation catalytic converter (DOC), an SCR catalytic converter (Selective Catalytic Reducer) and an AdBlue® / DEF injection system.
The emission of exhaust gases which are harmful to the environment and health is significantly reduced.

Drive unit: Both caterpillar drives are directly driven by separate drives. They operate directly, without any drive chains which require maintenance or servicing.
The tension of the caterpillar chains can be readjusted using tensioners.
A swivelling lane cleaner (○), which ensures an even passage during paving, is located in front of each of the drive units. Small obstacles lying in the lane are cleared away to the side.

Hydraulic system: The diesel engine drives the hydraulic pumps for all main paver finisher drives via the attached distribution gear and its auxiliary drive shafts.

Travel drive: The continuously adjustable travel drive pumps are connected to the travel drive engines by means of high pressure hydraulic hoses.
These hydraulic motors drive the caterpillar chains via planetary gears that are mounted directly inside the drive wheels of the caterpillar chains.

Steering system/operator's platform: The independent hydrostatic travel drives allow the paver finisher to be turned on the spot.
Electronic synchronous control ensures precise straight-ahead travel.
The operating panel can be hydraulically shifted beyond the left/right outer edge of the vehicle, providing the driver with a better view of the paving area in this position.
The entire operating panel can be swivelled for operation beyond the outer edge of the vehicle, and can be additionally be locked in several positions along the control platform.

Push roller crossbar: The push rollers for material trucks are fastened to a cross bar that is pivoted at its centre. The paver finisher thus deviates less from its course and paving in curves is made easier.
For adaptation to various truck design types, the push roller crossbar can be shifted to two positions.

The hydraulically extendable push roller crossbar (○) allows different distances to the rear wheels of material trucks to be infinitely compensated.
The engageable push roller damping hydraulically absorbs the shocks between the material truck and paver finisher.

https://truckmanualshub.com/

Material compartment (hopper): The hopper inlet is equipped with a conveyor system that empties the hopper and transfers the material to the auger.
The hopper can hold approx. 17.5 t.
To facilitate emptying and to improve material transport, each of the lateral covers of the hopper can be hydraulically moved.
The hydraulic front hopper flaps (○) ensure that no material remains at the front of the feeding hoppers.

Material transfer: The paver finisher is equipped with two conveyors driven separately that transfer the material from the hopper to the augers.
By scanning the filling height during the paving procedure, the transfer amount or speed is regulated fully automatically.
The drive is reversible (○).

Augers: The augers are driven and actuated independently from the conveyors. The left-hand and the right-hand half of the auger can be controlled separately. The drive system is fully hydraulic.
The conveying direction can be changed towards the centre or towards the outside. This ensures that there is always a sufficient supply of material even if an excessive amount of material is required at one side. The auger speed is continuously controlled by sensors that monitor the material flow.

Height adjustment and extension of augers: Height adjustment and extension of augers ensure optimum adaptation to a wide range of paving thicknesses and widths.
Different auger diameters are available (○)

When using ratchets for height adjustment, barrel nuts at the guide supports in the rear wall are used to adjust the height.
Another variant allows the height to be regulated at the operating panel by means of hydraulic cylinders (○).

Auger segments of different lengths can be attached to easily adapt to the different paving widths.

Levelling/slope control system: The slope control system (○) can be used to regulate the traction point on the left-hand or the right-hand side with a defined difference to the opposite side.
To determine the actual value, the two traction crossbeams are linked with a slope control rod.

The slope control system always operates in conjunction with the screed height adjustment of the opposite side.

By adjusting the height of the traction point of the crossbeam (traction roller), the paving thickness of the material or the laying height of the screed can be controlled.
Actuation occurs electro-hydraulically on both sides and can be controlled manually by means of toggle switches or automatically by means of an electronic grade control system.

Crossbeams / screed lifting device: The screed lifting device is used to lift the screed during transportation. The screed's approach angle can be changed using the eccentric adjustment facility on the crossbeam.
Depending on the paving condition requirements, the crossbeam can be moved backwards or forwards. This adjustment enlarges the material space between the auger and screed.

Automatic paving stop and screed charging/relieving: The automatic paving stop prevents the formation of any screed marks caused by a stopped screed. When the paver finisher stops (during a truck change), the screed remains in floating position and relief pressure is applied, thus preventing the screed from sinking while stationary.

The screed relieving device puts a higher load on the traction unit, thus increasing the traction.
Activating the screed charging device can improve the compacting result under different paving conditions.

Asphalt fume control system (○): An extraction system installed in the material tunnel extracts and discharges asphalt fumes.

Central lubrication unit (○): The central lubrication pump fitted with a large lubricant tank supplies grease to the various lubrication circuits through various flow dividers. They supply lubricant to the service-sensitive points of lubrication (e.g. bearings) at adjustable intervals.

https://truckmanualshub.com/

3 Danger zones

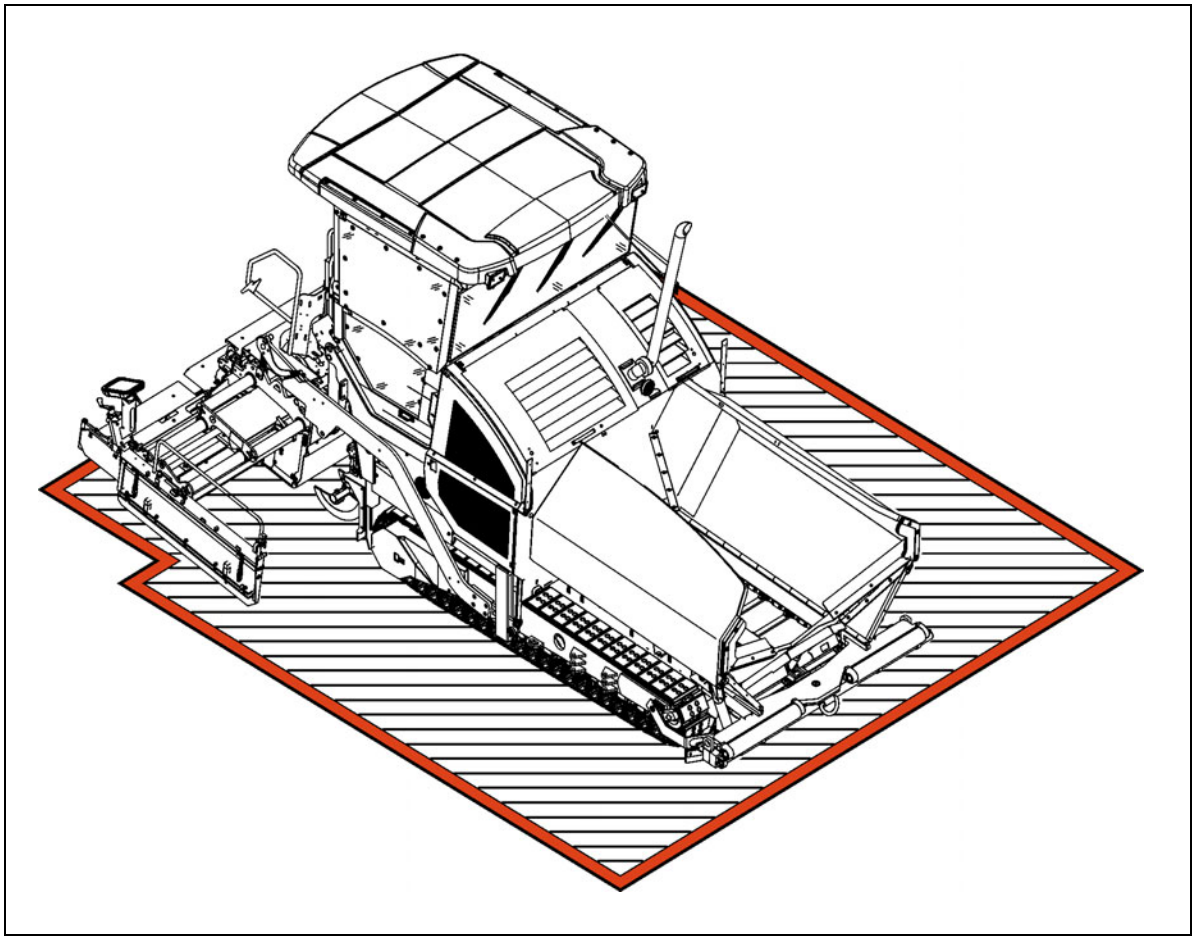

WARNING	Danger for persons in the danger zone
	Persons in the danger zone can suffer severe or fatal injuries from movements and functions of the vehicle! - Never stand in the danger zone of the vehicle! - During operation, only the vehicle operator and the screed personnel are allowed on the vehicle or in the danger zone. The vehicle operator and screed personnel must keep to the respective driver's seats. - Make sure that there is no-one in the danger zone before switching the vehicle on or starting it moving. - The vehicle operator must ensure that no-one is in the danger zone! - Sound the horn before driving away. - Comply with all further information in these instructions and in the safety manual.

4 Safety devices

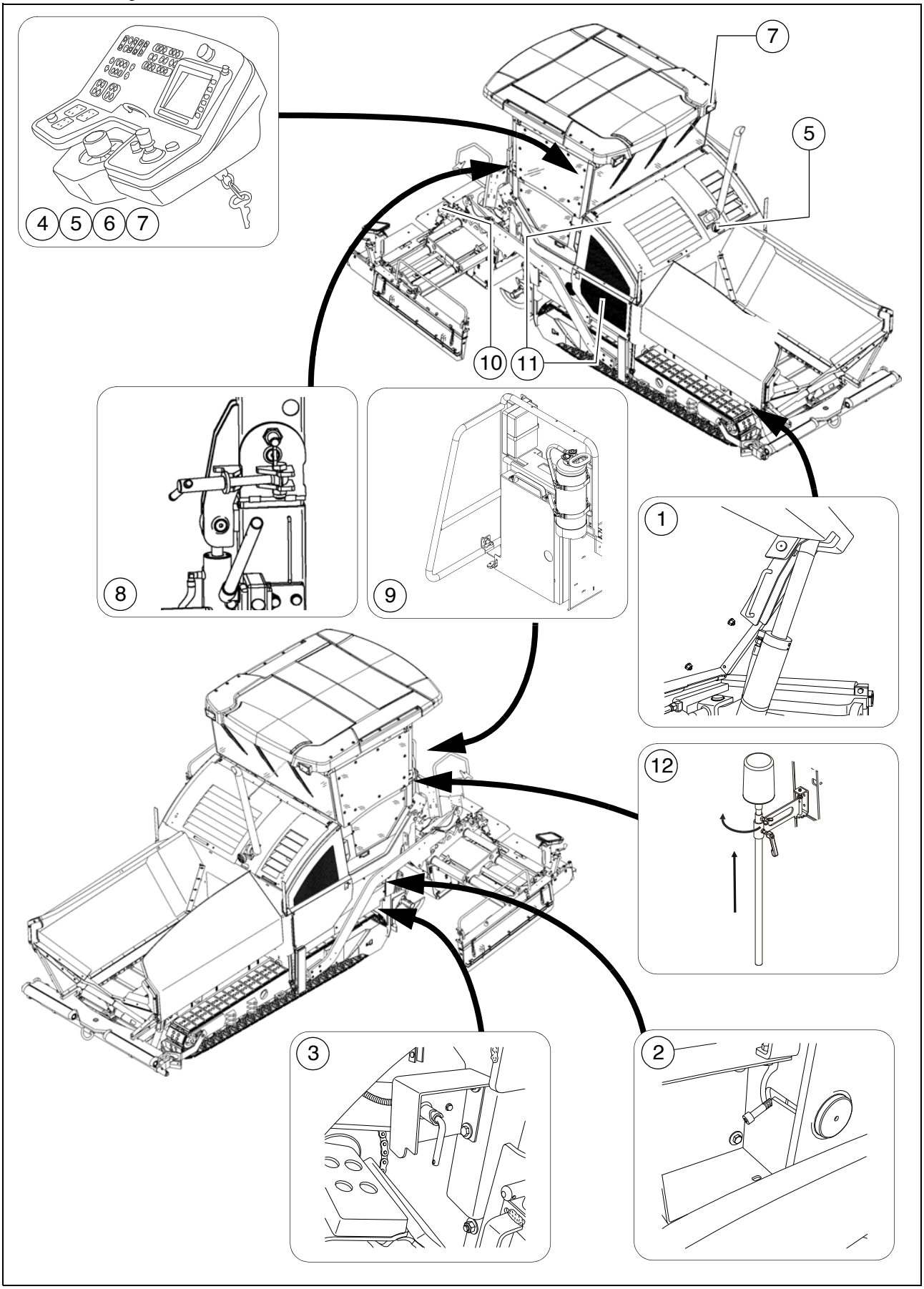

https://truckmanualshub.com/

Item	Designation	
1	Hopper transport safeguard	**
2	Screed lock, mechanical / hydraulic (○)	**
3	Main switch	
4	Emergency stop button	
5	Horn	
6	Ignition key	
7	Lights	**
8	Protective roof latch (○)	**
9	Fire extinguisher (○)	
10	Screed warning light (○)	**
11	Covers, lateral flaps, coverings	**
12	Rotary beacon (○)	

** Located on both sides of the vehicle

⚠ Safe operation is only possible if the control and safety devices are functioning perfectly and if the protective equipment is fitted correctly.

⚠ Check the function of these devices at regular intervals.

☞ Functional descriptions for the individual safety facilities can be found in the following chapters.

https://truckmanualshub.com/

5 Technical data, standard configuration

5.1 Dimensions (all dimensions in mm)

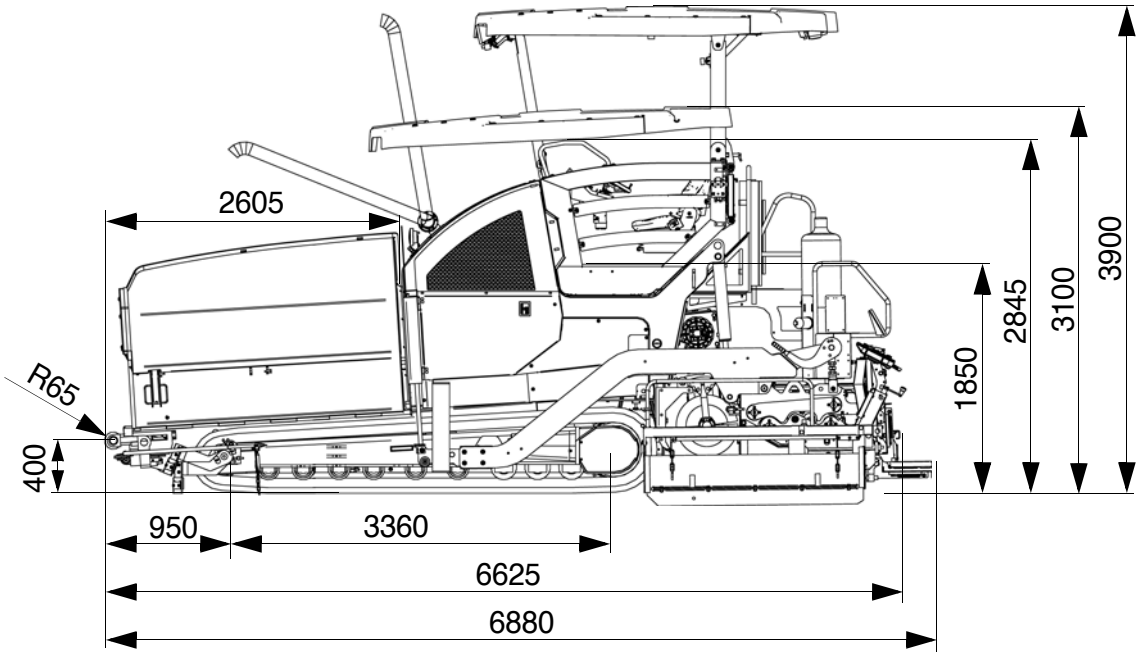

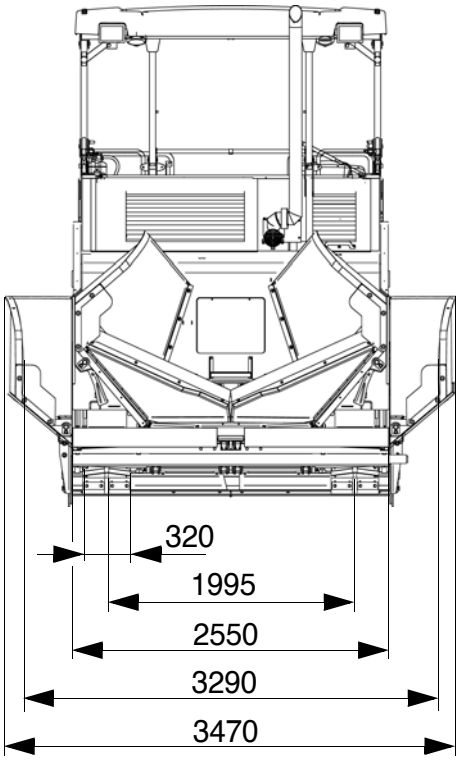

☞ For screed technical data, refer to the screed operating instructions.

https://truckmanualshub.com/

5.2 Allowed angle of rise and slope

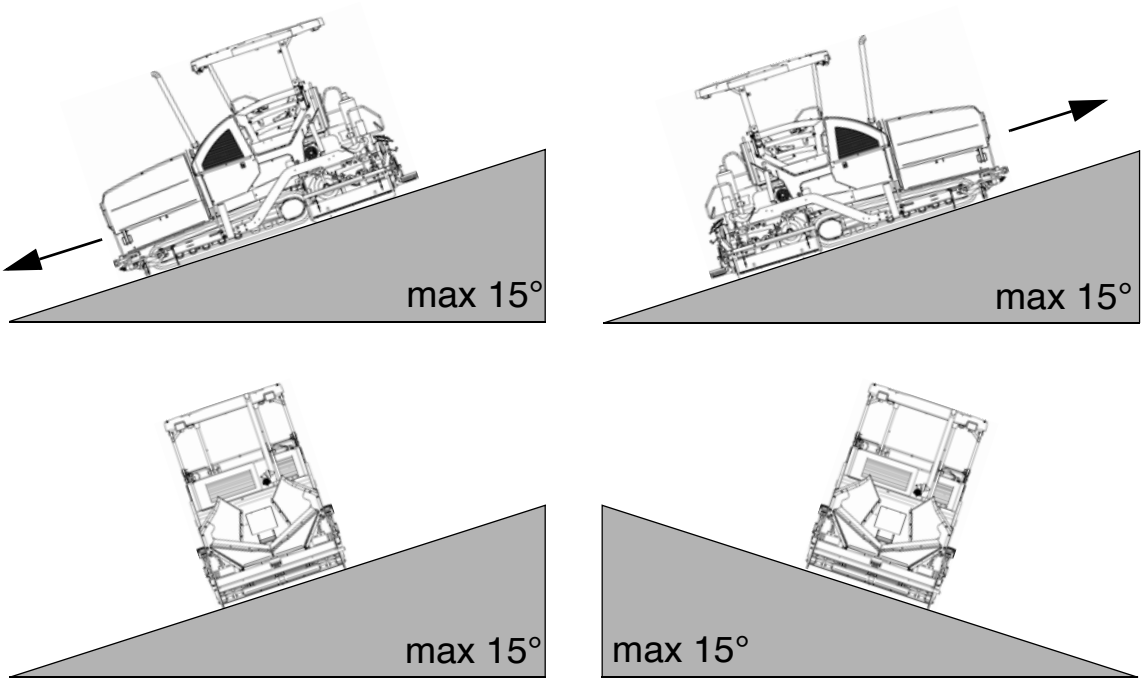

☞ Before operating your vehicle in an inclined position (gradient, slope, lateral inclination) which is above the specified limit value, please consult the customer service department for your vehicle!

5.3 Permissible approach angle

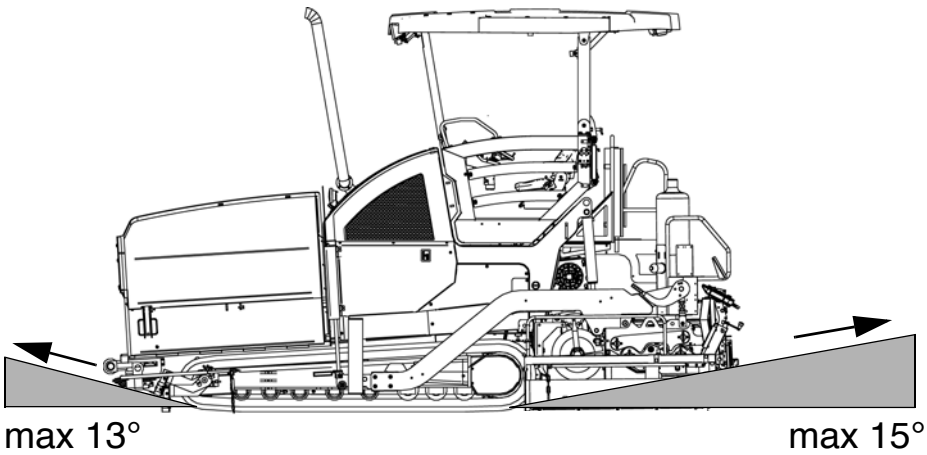

https://truckmanualshub.com/

5.4 Weights SD2550C (all weights in t)

Paver finisher without screed	Approx. 15.5
Paver finisher with screed: - V5100	Approx. 19.2
With extension parts for max. working width, additionally max.:	Approx. xxx
With filled hopper Additionally max.	Approx. 17.5

☞ For the weights of the screed and the screed attachments, see the operating instructions for the screed.

5.5 Weights SD2550CS (all weights in t)

Paver finisher without screed	Approx. 15.5
Paver finisher with screed: - V5100	Approx. 19.2
With extension parts for max. working width, additionally max.:	Approx. xxx
With filled hopper Additionally max.	Approx. 17.5

☞ For the weights of the screed and the screed attachments, see the operating instructions for the screed.

https://truckmanualshub.com/

5.6 Performance data SD2550C

Screed used	Basic width (without cut-off shoes)	Minimum paving width (with cut-off shoe)	Continuously hydraulically adjustable up to	Maximum paving width (with extension parts)	
V5100TV(E)	2.55	2.00	5.10	8.80	m
V5100TV	2.55	2.00	5.10	8.80	m
V6000TV(E)	3.00	2.45	6.00	9.70	m
V6000TV	3.00	2.45	6.00	9.70	m
R300TV(E)	3.00	-	-	12.00	m
R300TV	3.00	-	-	12.00	m

Transport speed	0 - 4	km/h
Operating speed	0 - 28	m/min
Paving height	-150 - 350	mm
Max. grain size	40	mm
Theoretical paving performance	900	t/h

https://truckmanualshub.com/

5.7 Performance data SD2550CS

Screed used	Basic width (without cut-off shoes)	Minimum paving width (with cut-off shoe)	Continuously hydraulically adjustable up to	Maximum paving width (with extension parts)	
V5100TV(E)	2.55	2.00	5.10	8.80	m
V5100TV	2.55	2.00	5.10	8.80	m
V6000TV(E)	3.00	2.45	6.00	9.70	m
V6000TV	3.00	2.45	6.00	9.70	m
R300TV(E)	3.00	-	-	14.00	m
R300TV	3.00	-	-	14.00	m

Transport speed	0 - 4	km/h
Operating speed	0 - 28	m/min
Paving height	-150 - 350	mm
Max. grain size	40	mm
Theoretical paving performance	1100	t/h

https://truckmanualshub.com/

5.8 Travel drive/traction unit

Drive	Hydrostatic drive, continuously controllable
Drive unit	Two separately driven caterpillar drives with rubber grouser chains
Turning capacity	Turning on the spot
Speed	See above

5.9 Engine SD2550C

Make/type	Cummins QSB 6.7-C225
Version	6-cylinder diesel engine (water-cooled)
Performance	168 kW / 228 hp (at 2200 rpm)
Pollutant emissions in co-ordination with:	EU COM IV / Tier 4F
Fuel consumption, full load Fuel consumption, 2/3 load	42.1 l/h 28.1 l/h
Fuel tank capacity	(siehe Kapitel F)
AdBlue® / DEF consumption	approx. 5% of fuel consumption

5.10 Engine SD2550CS

Make/type	Cummins QSB 6.7-C260
Version	6-cylinder diesel engine (water-cooled)
Performance	194 kW / 264 hp (at 2200 rpm)
Pollutant emissions in co-ordination with:	EU COM IV / Tier 4F
Fuel consumption, full load Fuel consumption, 2/3 load	46.3 l/h 30.9 l/h
Fuel tank capacity	(See chapter F)
AdBlue® / DEF consumption	approx. 5% of fuel consumption

https://truckmanualshub.com/

5.11 Hydraulic system

Pressure generation	Hydraulic pumps via distribution gear (directly flanged to the engine)
Pressure distribution	Hydraulic circuits for: - Travel drive - Auger - Conveyor - Tamper / vibration - Operating functions - Fan - Clutch - Separate hydraulic circuits for options
Hydraulic oil reservoir - volume	(See chapter F)

5.12 Material compartment (hopper)

Volume	Approx. 8.0 m^3 = approx. 17.5 t
Minimum inlet height, centre	525 mm
Minimum inlet height, outside	530 mm
Hopper width, outside, open	3610

5.13 Material transfer

Type	Dual conveyor belt
Width	2 x 655 mm
Conveyors	Left and right auger separately controllable
Drive	Hydrostatic, continuously controllable
Conveying volume controller	Fully automatic via configurable switching points

https://truckmanualshub.com/

5.14 Material distribution SD2550C

Auger diameter	430 mm
Drive	Hydrostatic central drive, continuously controllable independently of the conveyor Auger halves can be switched to opposite directions Reversible direction of rotation
Conveying volume controller	Fully automatic via configurable switching points
Auger height adjustment	- Mechanically
Auger extension	With extension parts (see auger extension chart)

5.15 Material distribution SD2550CS

Auger diameter	500 mm
Drive	Hydrostatic central drive, continuously controllable independently of the conveyor Auger halves can be switched to opposite directions Reversible direction of rotation
Conveying volume controller	Fully automatic via configurable switching points
Auger height adjustment	- Mechanically
Auger extension	With extension parts (see auger extension chart)

https://truckmanualshub.com/

5.16 Screed lifting device

Special functions	At standstill: - Screed stop - Screed stop with pretensioning (max. pressure 50 bar) During paving: - Screed charging - Screed relieving (max. pressure 50 bar)
Levelling system	Mechanical grade control Optional systems with and without Slope control system

5.17 Electrical system

On-board voltage	24 V
Batteries	2 x 12 V, 88 Ah
Generator (○)	33 kVA / 400 V 60 kVA / 400 V

5.18 Permissible temperature ranges

Operation	-5°C / +45°C
Storage	-5°C / +45°C

https://truckmanualshub.com/

6 Location of instruction labels and identification plates

CAUTION	Danger from missing or misunderstood vehicle signs
	Missing or misunderstood vehicle signs pose a danger of injuries! - Never remove any warnings or information signs from the vehicle. - Damaged or lost warning or information signs must be replaced immediately. - Make yourself familiar with the meaning and position of the warning and information signs. - Comply with all further information in these instructions and in the safety manual.

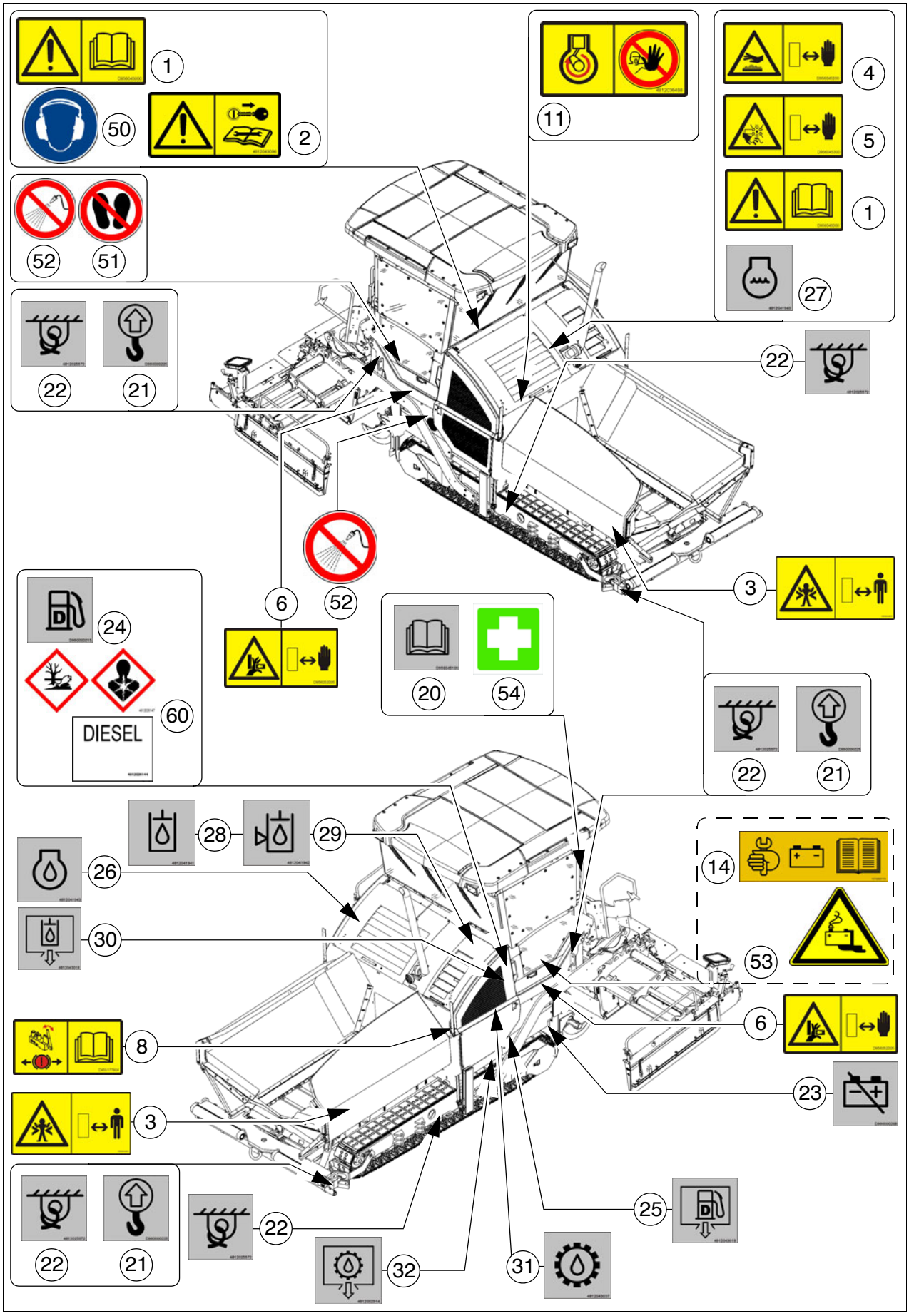
1
50
2
11
4
5
1
27
52
51
22
21
22
3
6
52
24
60
DIESEL
20
54
22
21
28
29
26
30
14
53
6
8
23
3
22
21
22
25
32
31

https://truckmanualshub.com/

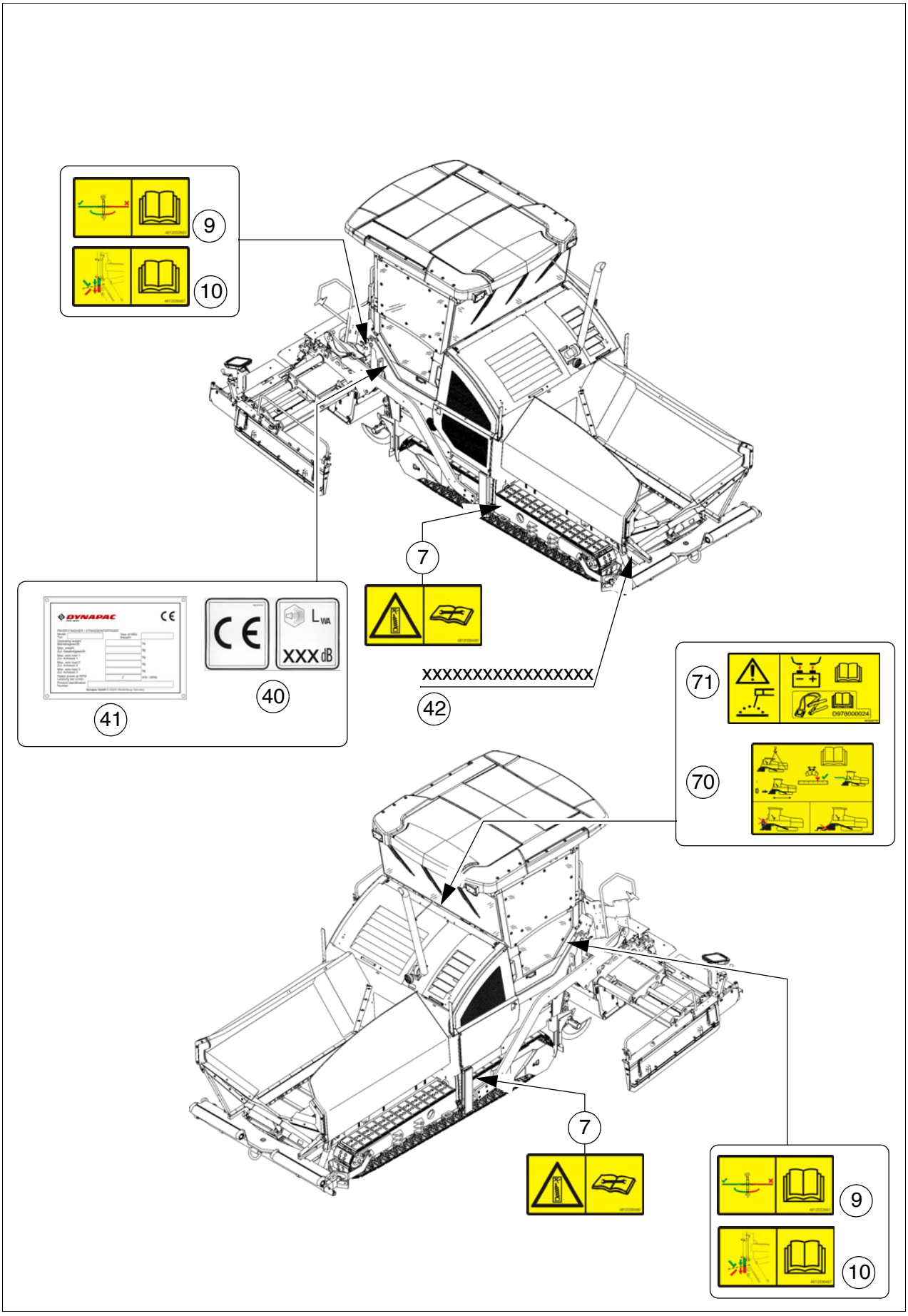

6.1 Warning signs

No.	Pictogram	Meaning
1		- **Warning - Operating instructions!** Danger due to improper operation. The machine personnel must have read and understood the safety, operating and maintenance instructions for the machine before the machine is put into operation! Failure to comply with the operating and warning instructions can cause severe or fatal injuries. Always replace lost operating instructions immediately! It is your personal responsibility to take due care and attention!
2		- **Warning - Switch off the engine and remove the ignition key before performing any maintenance and repair work!** If the drive engine is left running or functions are switched on, this can cause severe or fatal injuries! Switch the engine off and remove the ignition key.
3	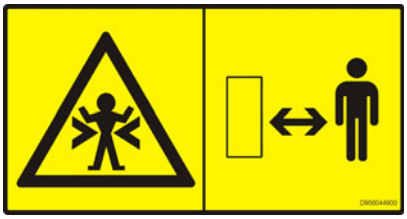	- **Warning - Danger of crushing!** Crushing points can cause severe or fatal injuries! Maintain a safe distance from the danger area!
4	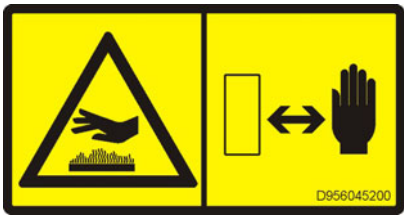	- **Warning - Hot surface - Danger of burning!** Hot surfaces can cause severe injuries! Keep your hands at a safe distance from the danger area! Use protective clothing or protective equipment!
5	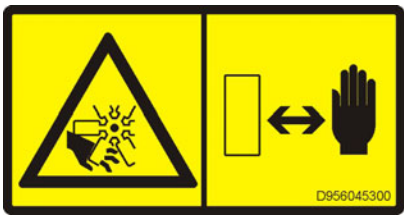	- **Warning - Danger from fan!** Rotating fans can cause severe injuries from cutting or severing fingers and hands. Keep your hands at a safe distance from the danger area!

https://truckmanualshub.com/

No.	Pictogram	Meaning
6	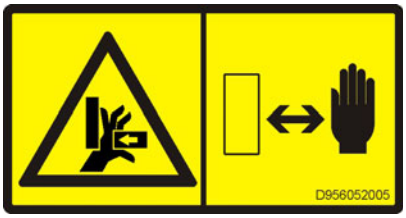	- **Warning - Danger of crushing fingers and hands with moving, accessible machine parts!** Crushing points can cause severe injuries with the loss of parts of the fingers or hand. Keep your hands at a safe distance from the danger area!
7		- **Warning - Spring-loaded part!** Performing work incorrectly can cause severe to fatal injuries. Always observe the maintenance instructions!
8	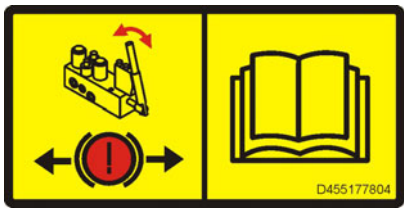	- **Caution - Danger from incorrect towing!** Movements of the machine can cause severe or fatal injuries. The traction system brakes must be released before towing. Always observe the operating instructions!
9	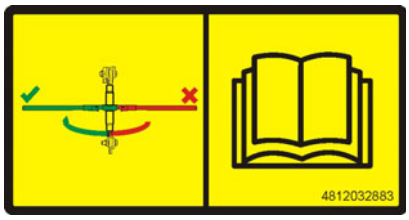	- **Caution - Possible collision of parts!** The ratchet lever must always be swivelled in. Always observe the operating instructions!
10	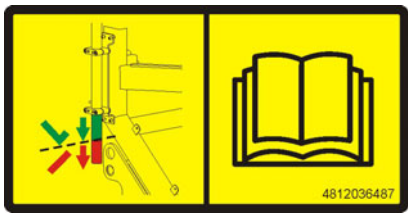	- **Caution - Possible collision of parts!** The Powermoon tripod must be mounted correctly. Always observe the operating instructions!
11		- **Warning - Danger from running engine!** If the drive engine is left running, this can cause severe or fatal injuries. Never open the engine hood while the engine is running!

https://truckmanualshub.com/

No.	Pictogram	Meaning
12		- **Warning - Hazard from hydraulic reservoir and from hydraulic oil under pressure!** Escaping hydraulic oil under pressure can pierce the skin and enter into the body, causing severe or fatal injuries. Always observe the operating instructions!
13		- **Warning - Danger from tyres filled with water!** Handling tyres filled with water incorrectly can cause severe to fatal injuries. Always observe the operating instructions!
14	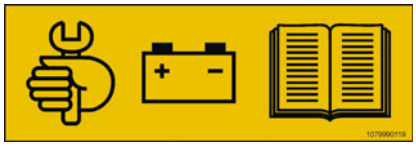	- **Maintenance for the starter batteries!** Maintenance work has to be carried out to the starter batteries! Comply with the maintenance instructions!

https://truckmanualshub.com/

6.2 Information signs

No.	Pictogram	Meaning
20		- **Operating Instructions** Position of the storage compartment.
21	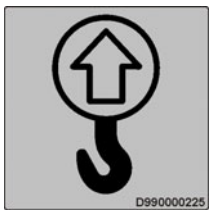	- **Lifting point** Lifting the machine is only permitted at these lifting points!
22	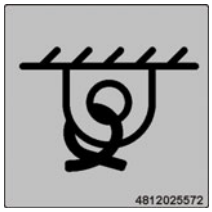	- **Lashing point** Lashing the machine is only permitted at these points!
23	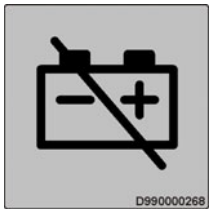	- **Main battery switch** Position of the main battery switch.
24		- **Diesel fuel** Position of the filling point.
24	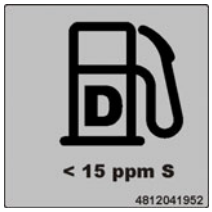	- **Diesel fuel, sulphur level < 15 ppm** Position of the filling point, specification.
25	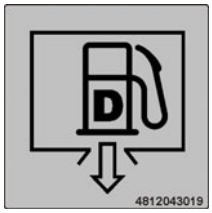	- **Fuel drainage point** Position of the drainage point.

No.	Pictogram	Meaning
26		- **Engine oil** Position of the filling and control point.
27		- **Engine coolant** Position of the filling and control point.
28		- **Hydraulic oil** Position of the filling point.
29	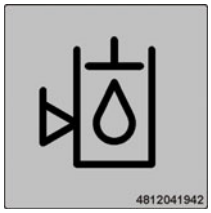	- **Hydraulic oil level** Position of the control point.
30	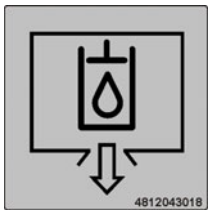	- **Engine oil drainage point** Position of the drainage point.
31		- **Gearbox oil** Position of the filling and control point.
32	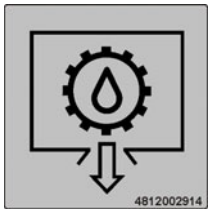	- **Gear oil drainage point** Position of the drainage point.

https://truckmanualshub.com/

No.	Pictogram	Meaning
33	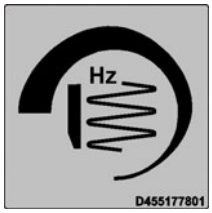	- **Tamper speed adjuster** Position of the speed adjuster.
34	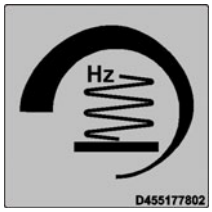	- **Vibration, speed adjuster** Position of the speed adjuster.

6.3 CE marking

No.	Pictogram	Meaning
40	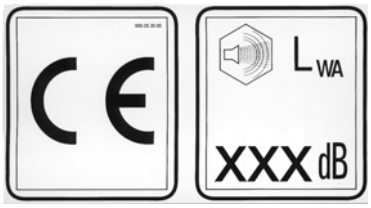	- CE, sound output level

https://truckmanualshub.com/

6.4 Instructive symbols, prohibitive symbols, warning symbols

No.	Pictogram	Meaning
50		- Wear ear protection devices
51		- Do not enter the area!
52		- Do not spray the area or part with water!
53		- Warning on dangers posed by batteries!
54		- First aid kit

https://truckmanualshub.com/

6.5 Danger symbols

No.	Pictogram	Meaning	No.
60	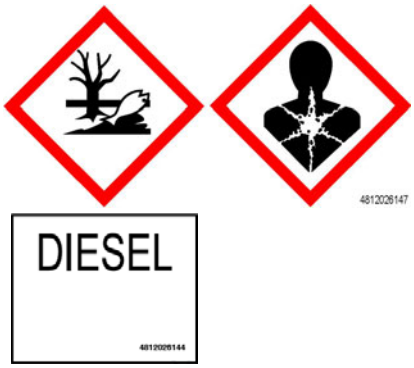 DIESEL 4812026144		- **XN: Danger to health!** This substance can damage your health when absorbed in the body! Substance irritating to skin, eyes and respiratory system; can cause inflammations. Avoid contact with the human body, also avoid inhaling the vapours and seek medical advice if feeling unwell. - **N: Environmentally hazardous substance!** May cause immediate or delayed danger to the eco-system when released into the environment. Do not release into the sewage system, ground or environment, depending on hazard potential. Comply with special disposal regulations! - Diesel fuel complies with EN590

https://truckmanualshub.com/

6.6 Further warnings and operating instructions

No.	Pictogram	Meaning
70	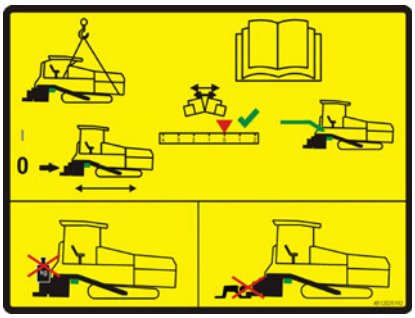	- **Warning - Hazard from unsupported screed!** If the screed sags, this can cause severe or fatal injuries! Insert screed lock only at crown adjustment "zero". Screed lock only for transportation! Do not enter or work under screed only secured with screed lock for transportation!
71	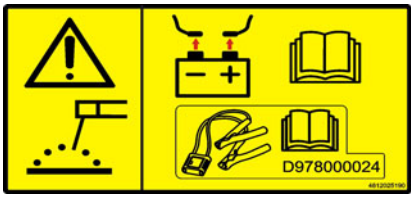	- **Caution - Danger of high voltage in vehicle electrical system!** Disconnect batteries and electronics during welding work or when charging the batteries, or use a service watchdog D978000024 in accordance with the corresponding instruction manual.

https://truckmanualshub.com/

No.	Pictogram	Meaning
74	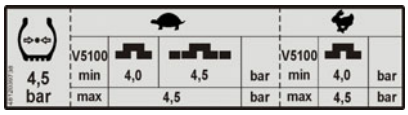	- Overview "Tyre pressure / working width / speed preselection"
74	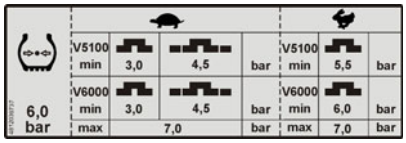	- Overview "Tyre pressure / working width / speed preselection"
75	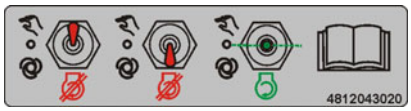	- **Engine start - All switches in neutral!** The engine cannot be started when functions are switched on. Always observe the operating instructions!

https://truckmanualshub.com/

6.7 Identification label for the paver finisher (41)

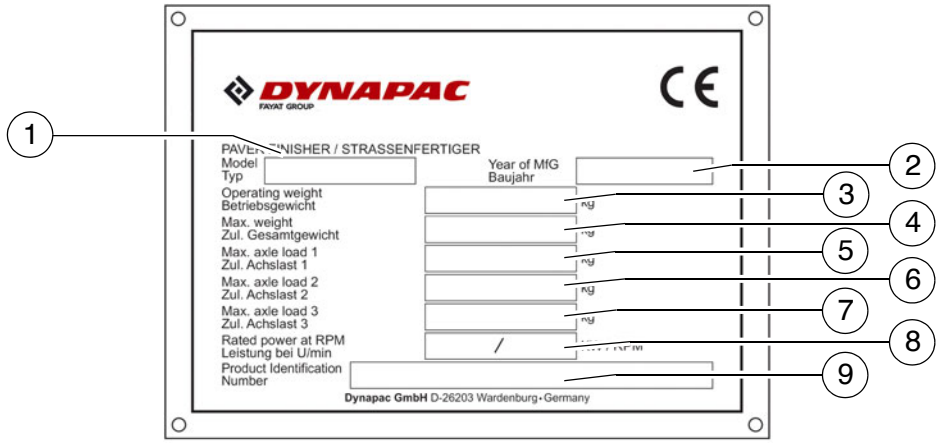

Item	Designation
1	Paver finisher type
2	Year of construction
3	Operating weight, incl. all extension parts, in kg
4	Maximum permitted total weight in kg
5	Max. permissible load on the front axle, in kg
6	Max. permissible load on the rear axle, in kg
7	Max. permissible load on the trailer axle, in kg
8	Rated performance in kW
9	Product identification number (PIN)

☞ The punched vehicle identification number (VIN) on the paver finisher must match the product identification number (9).

https://truckmanualshub.com/

7 EN standards

7.1 Continuous sound pressure SD2550C, Cummins QSB 6.7-C260

⚠ The operator always must use ear protection. The emission value at the ear of the driver varies depending on the materials used for paving and may even rise above 85 dB(A). If no ear protection devices are used, hearing can be impaired.
The sound emission level of the paver finisher was measured under free-field conditions according to EN 500-6:2006 and ISO 4872.

Sound pressure level at the operator's position (at the height of the head): L_{AF} = 88.2 dB(A)

Sound capacity level: L_{WA} = x108.2 dB(A)

Sound pressure level at the vehicle

Measuring point	2	4	6	8	10	12
Sound pressure level L_{AFeq} (dB(A))	75.8	74.5	75.4	74.8	75.1	75.2

7.2 Operating conditions during measurement

The diesel engine was running at maximum speed. The screed was lowered into working position. Tamper and vibration unit were operated at min. 50%, while the augers were operated at a minimum of 40% and the conveyors were operated at a minimum of 10% of their maximum speed.

7.3 Measuring point configuration

Hemispherical measuring surface with a radius of 16 m. The vehicle was at the centre. The measuring points had been assigned the following coordinates:

	Measuring points 2, 4, 6, 8			Measuring points 10, 12		
Co-ordinates	X	Y	Z	X	Y	Z
	±11.2	±11.2	1.5	- 4.32 +4.32	+10.4 -10.4	11.36 11.36

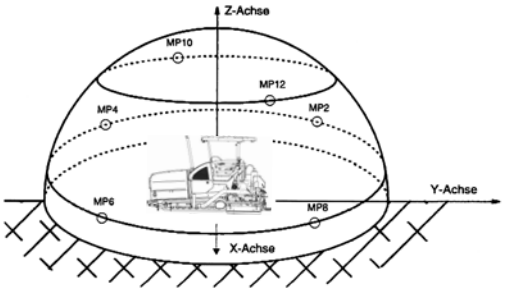

7.4 Continuous sound pressure SD2550CS, Cummins QSB 6.7-C260

The operator always must use ear protection. The emission value at the ear of the driver varies depending on the materials used for paving and may even rise above 85 dB(A). If no ear protection devices are used, hearing can be impaired.
The sound emission level of the paver finisher was measured under free-field conditions according to EN 500-6:2006 and ISO 4872.

Sound pressure level at the operator's position (at the height of the head): L_{AF} = 87.6 dB(A)

Sound capacity level: L_{WA} = 107.9 dB(A)

Sound pressure level at the vehicle

Measuring point	2	4	6	8	10	12
Sound pressure level L_{AFeq} (dB(A))	76.2	73.8	73.3	75.2	75.2	75.4

7.5 Operating conditions during measurement

The diesel engine was running at maximum speed. The screed was lowered into working position. Tamper and vibration unit were operated at min. 50%, while the augers were operated at a minimum of 40% and the conveyors were operated at a minimum of 10% of their maximum speed.

7.6 Measuring point configuration

Hemispherical measuring surface with a radius of 16 m. The vehicle was at the centre. The measuring points had been assigned the following coordinates:

	Measuring points 2, 4, 6, 8			Measuring points 10, 12		
Co-ordinates	X	Y	Z	X	Y	Z
	±11.2	±11.2	1.5	- 4.32 +4.32	+10.4 -10.4	11.36 11.36

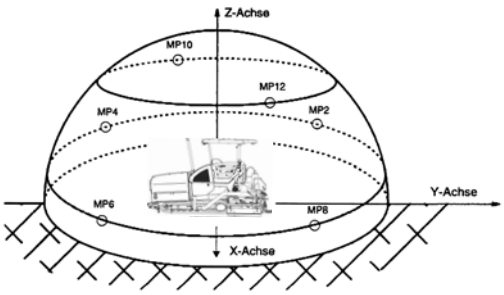

https://truckmanualshub.com/

7.7 Vibration acting on the entire body

When the machine is used properly, the weighted effective acceleration values at the driver's seat of a_w = 0.5 m/s^2 according to DIN EN 1032 are not exceeded.

7.8 Vibrations acting on hands and arms

When the machine is used properly, the weighted effective acceleration values at the driver's seat of a_w = 2.5 m/s^2 according to DIN EN ISO 20643 are not exceeded.

7.9 Electromagnetic compatibility (EMC)

The following limit values are observed according to the stipulations of the EMC directive 2004/108 CE:

- Interference emission according to DIN EN 13309:
  < 35 dB μV/m for frequencies of 30 MHz - 1 GHz measured at a distance of 10 m
  < 45 db μV/m for frequencies of 30 MHz - 1 GHz measured at a distance of 10 m

- Interference immunity against electrostatic discharge according to DIN EN 13309 CE (ESD):
  The paver finisher did not show any discernible reactions to contact discharges of ± 4 KV and to air discharges of ± 4 KV.
  The modifications according to test criterion „A“ are being met, i.e. the paver finisher continues to work without malfunction during the test.

☞ Electrical or electronic components and their arrangement may only be modified after written approval by the manufacturer has been obtained.

https://truckmanualshub.com/

https://truckmanualshub.com/

C 11 Transportation

1 Safety regulations for transportation

⚠ Accidents can happen when the paver finisher and the screed are not properly prepared for transportation or when transportation is carried out improperly!

Reduce both the paver finisher and the screed to their basic widths. Remove all protruding parts (such as the automatic levelling system, auger limit switches, aprons, etc.). When transporting under a special permit, secure these parts!

Close the hopper lids and engage the hopper transport safeguards. Lift the screed and engage the screed transport safeguards. Convert the protective roof and engage the latch.

Pack all parts that are not permanently fixed to the paver finisher and the screed into the appropriate boxes and into the hopper.
Close all coverings and check that they are securely seated.

In Germany, gas bottles must not be transported on the paver finisher or on the screed.
Disconnect the gas bottles from the gas system and protect them with their caps. Use a separate vehicle to transport them.

When loading via ramps, there is a risk that the machine will slip, tilt or overturn.
Drive carefully! Keep people away from the danger area!

Additional stipulations for transportation on public roads:

⚠ In Germany; caterpillar paver finishers **must not be driven as self-propelling vehicles** on public roads.
Note that in other countries different regulations may apply.

The operator must be in the possession of a valid permit for vehicles of this type.

The operating panel must be moved to the side of the oncoming traffic and secured in this position.
The driving lights must be properly adjusted.

Only attachments and extension parts may be transported in the hopper, no material or gas bottles!

If necessary, the operator must be assisted by a second person when driving on public roads – especially at road crossings and junctions.

https://truckmanualshub.com/

2 Transportation on low-bed trailers

Reduce the paver finisher and the screed to their basic widths; also remove any attached side plates.
The maximum approach angle is indicated in the section entitled "Technical data"!

Check the fill level of the operating substances so that these do not escape when driving on an incline.

Attachment and loading equipment must meet the conditions of the applicable accident prevention regulations!

The weight of the paver finisher must be taken into consideration when selecting the attachment and loading equipment!

2.1 Preparations

- Prepare the paver finisher for transportation (see chapter D).
- Remove all overlaying or loose parts from finisher and screed (see also Operating instructions for the screed). Store these parts in a safe place.

Move the auger to the uppermost position to avoid collisions!

When the screed is operated with the optional gas heating system:

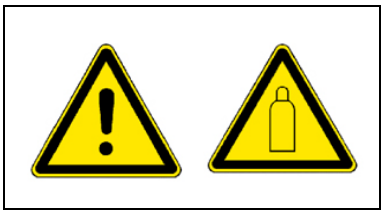

- Remove the gas bottles for the screed heating system:
  - Close the main shut-off valves and the bottle valves.
  - Turn off the valves on the bottles and remove the gas bottles from the screed.
  - Transport the gas bottles on a second vehicle; heed all applicable safety regulations.

https://truckmanualshub.com/

.

Operation	Buttons
- Deactivating the function lock	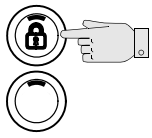
- Activate set-up mode.	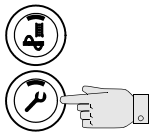
- Close the hopper lids.	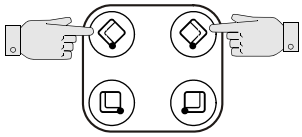
- Engage both hopper transport safe-guards.	
- Lift the screed.	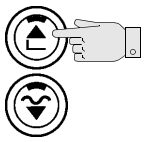
- Extend levelling cylinders completely.	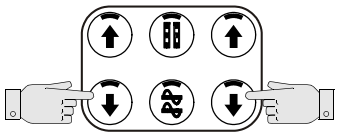
- Retract the screed parts until the screed matches the basic width of the paver fin-isher.	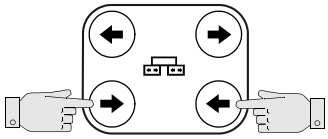
- Deactivate set-up mode.	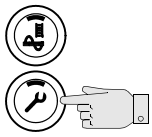

https://truckmanualshub.com/

3 Securing the load

☞ The following instructions for securing the load on the low-bed trailer consist merely in examples of how to secure the load correctly.

☞ Always comply with the local regulations for securing the load and for correct use of load securing equipment.

☞ Normal driving mode also includes emergency braking, evasive manoeuvres and poor road surfaces.

☞ Use should be made of the different methods available for securing loads (positive fit, force connection, diagonal lashing, etc.) in accordance with the specific transport vehicle.

⚠ The low-bed trailer must have the necessary number of lashing points with lashing strength of LC 4,000 daN.

⚠ The total height and total width must not exceed the maximum permissible dimensions.

⚠ The ends of lashing chains and straps must be secured to prevent them working loose and falling down unintentionally!

3.1 Prepare the low-bed trailer

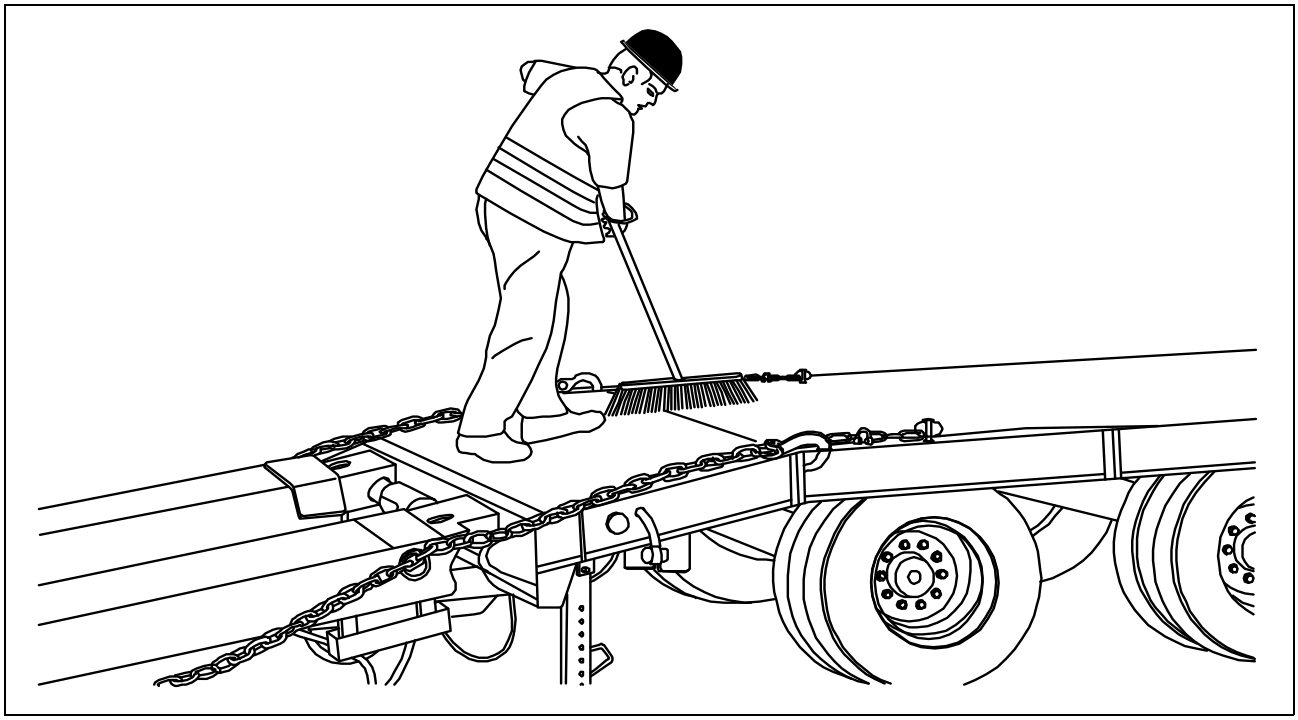

⚠ The floor of the loading space must always be undamaged, free of oil and mud, dry (residual moisture is permitted without accumulations of water) and swept clean!

https://truckmanualshub.com/

3.2 Driving onto the low-bed trailer

Make sure that there are no persons in the danger area during loading.

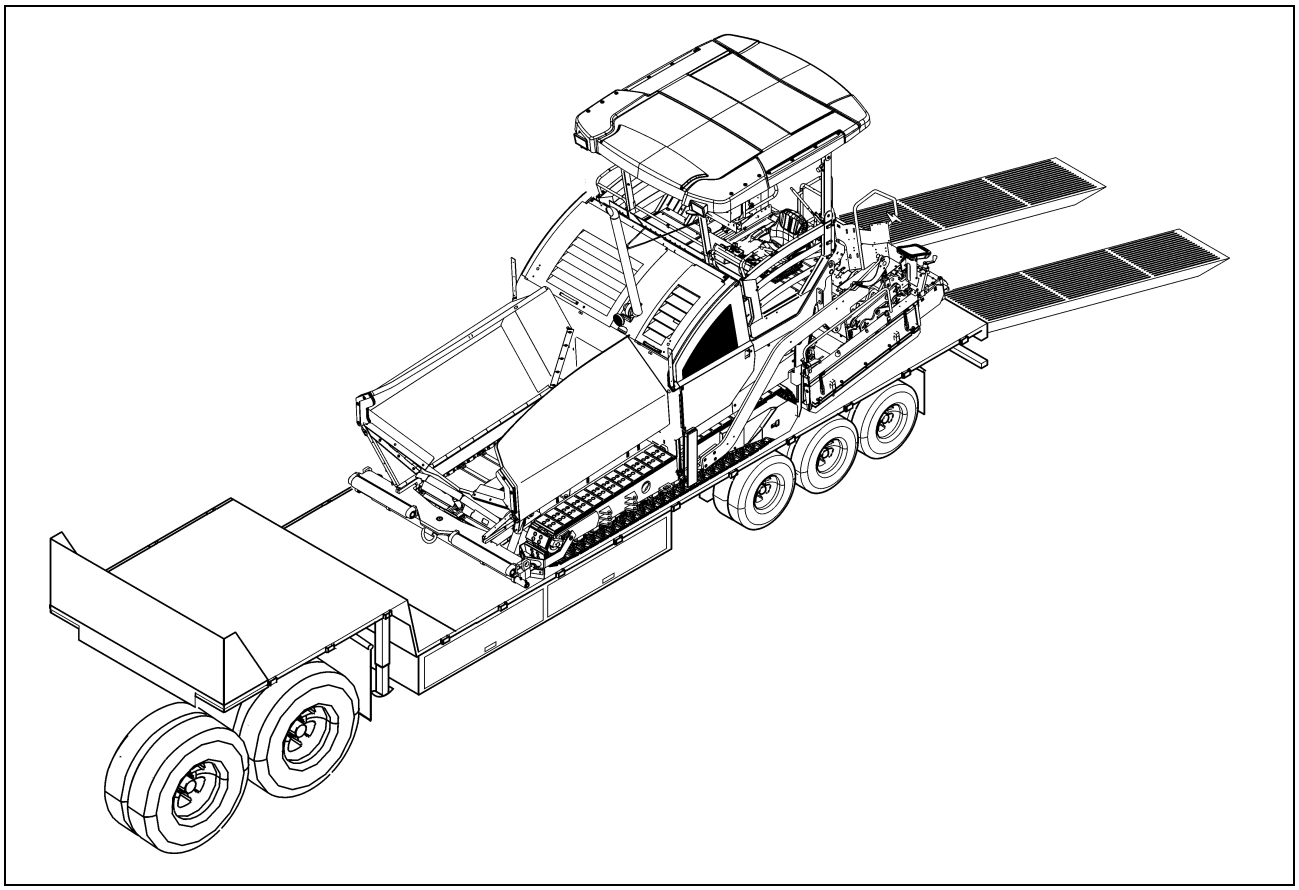

NOTE	Caution! Possible collision of parts
	- When driving up inclines, lock the lane clearer in the upper position.

- Use the work gear and low engine speeds to drive onto the low-bed trailer.

https://truckmanualshub.com/

3.3 Lashing equipment

Use the load securing equipment, lashing straps and chains belonging to the vehicle. Additional shackles, eyebolts, edge safeguards and non-slip mats may be needed, depending on the type of load securing equipment.

⚠ Always comply with the stated values for permitted lashing force and load rating!

⚠ Always tighten the lashing chains and straps handtight (100-150daN).

- Lashing chain permissible lashing force LC 4,000 daN	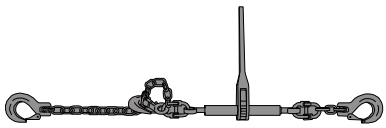
- Lashing straps permissible lashing force LC 2,500 daN	
- Shackles Load rating 4,000 daN	
- Eyebolts Load rating 2,500 daN	
- Edge safeguards for lashing straps	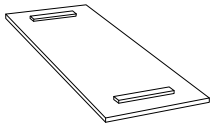
- Non-slip mats	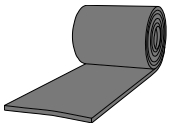

⚠ Lashing equipment must be checked by the user for any signs of damage before use. On detecting any signs of damage that impact on safety, the lashing equipment must be withdrawn from any further use.

https://truckmanualshub.com/

3.4 Loading

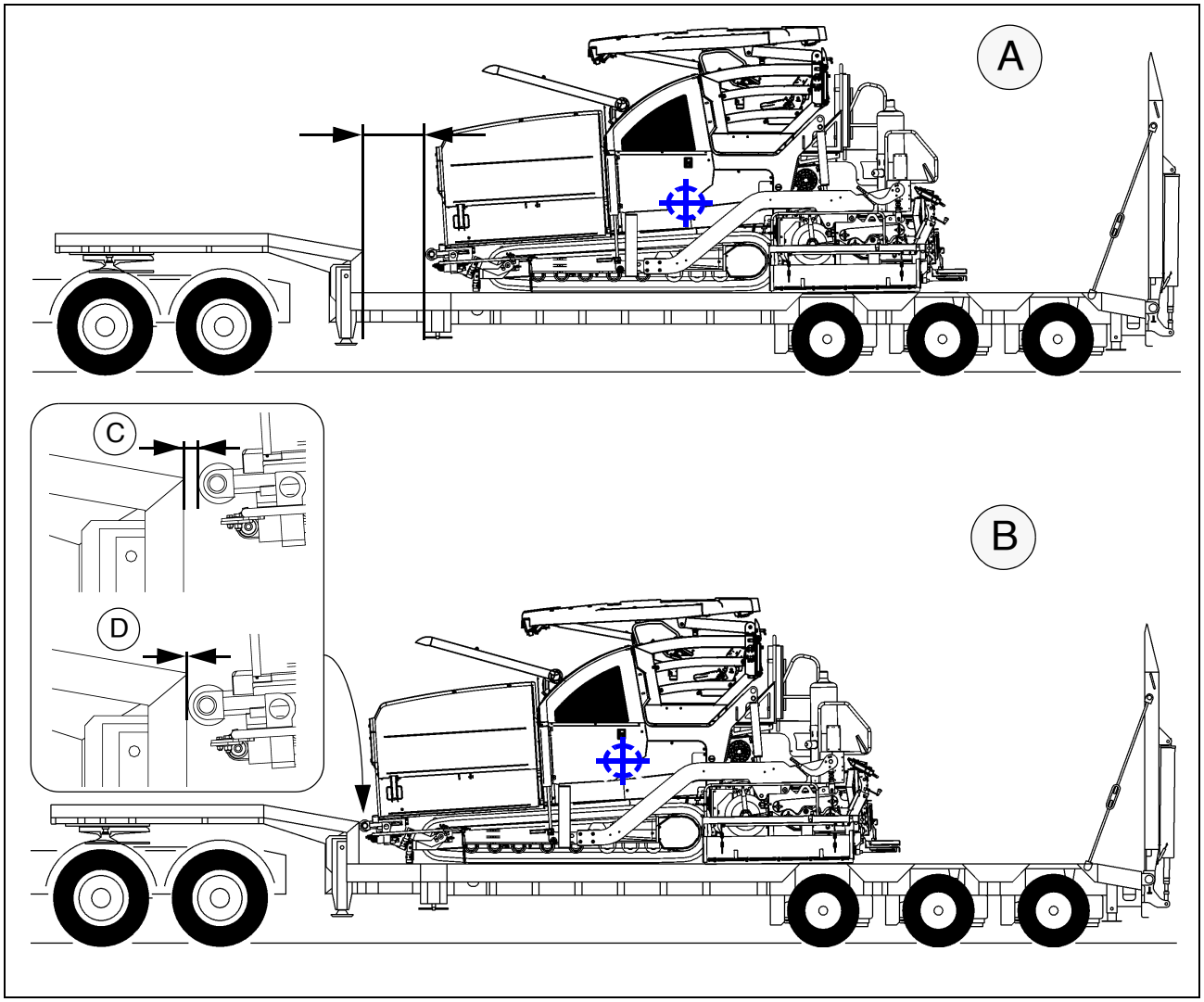

⚠ Pay attention to load distribution during loading!
In some vehicles, the kingpin load is too low so that the load has to be positioned further to the back of the vehicle (A).
Always heed the details regarding load distribution stipulated for the vehicle together with the centre of gravity of the paver finisher.
Comply with the following if the paver finisher has to be placed in the front section of the low-bed trailer (B) for load distribution reasons or on account of the length of the paver finisher:

- The paver finisher must stand freely if the push rollers would only touch the gooseneck half way up (C).
- There must be a positive fit between the paver finisher push rollers and the low-bed trailer if the push rollers are in full contact with the low-bed trailer (D).

3.5 Preparing the machine

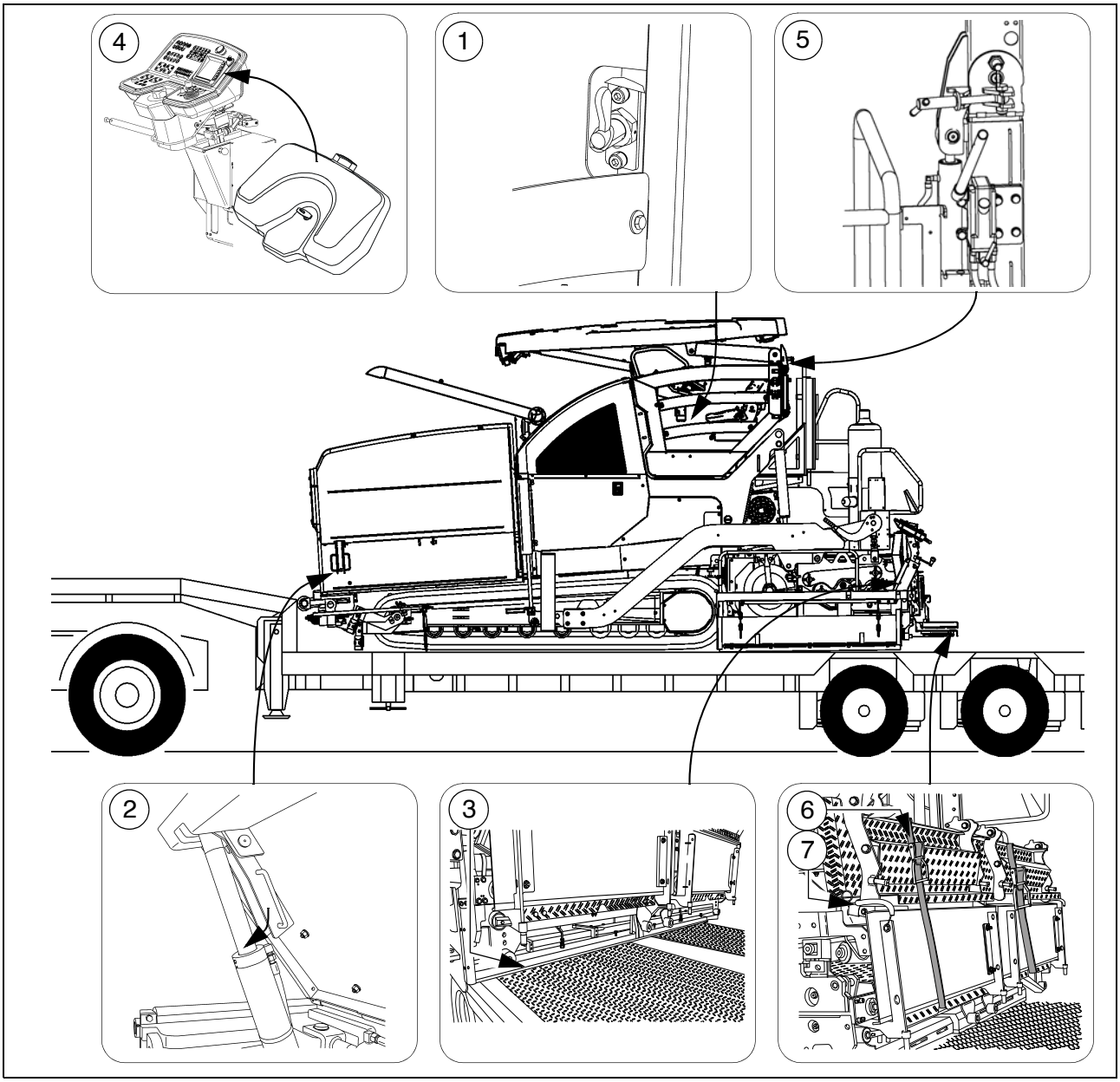

After the machine has been positioned on the low-bed trailer, the following preparations must be carried out:

- For movable platform: Set the retaining bolt properly (1).
- Close the hopper and set the hopper transport safeguards (2) on both sides.
- Position the non-slip mats under the screed across the whole width of the vehicle (3) and lower the screed.
- Switch off the paver finisher.
- Attach and secure the protective hood (4) to protect the operating panel.
- Lower the roof and set the retainers (5) properly on both sides.
  - Fold up the walkway plates of the screed and fasten on both sides using lashing straps (6) and any possibly existing hook springs (7).

https://truckmanualshub.com/

4 Securing the load

4.1 Securing at the sides

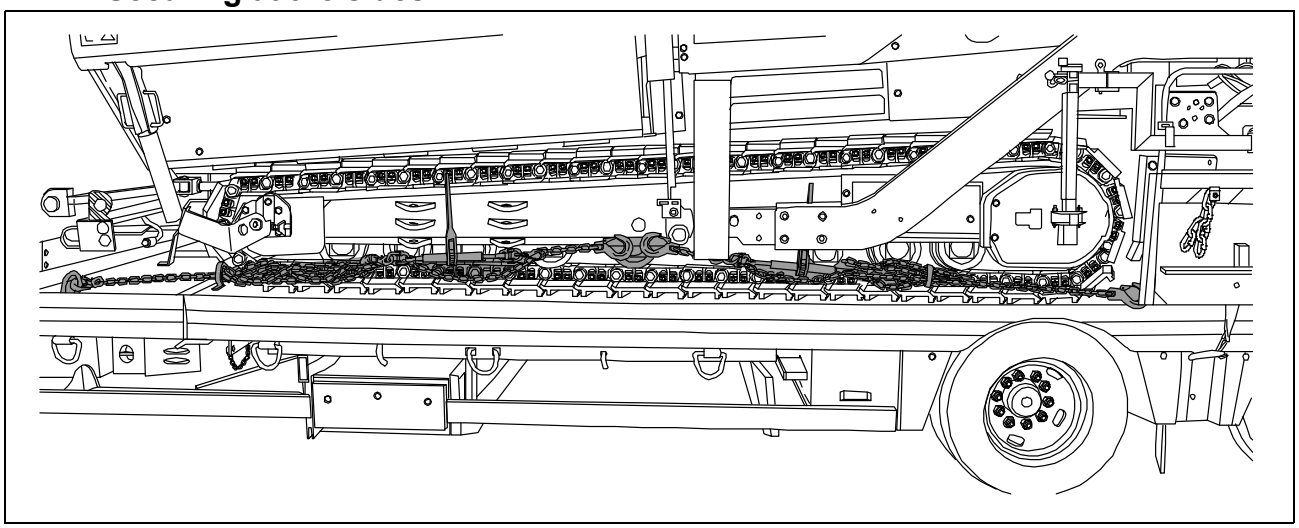

⚠ Diagonal lashing secures the paver finisher at the side using the lashing points on the paver finisher and on the low-load trailer.
Fasten the lashing chains as shown.

4.2 Securing at the front

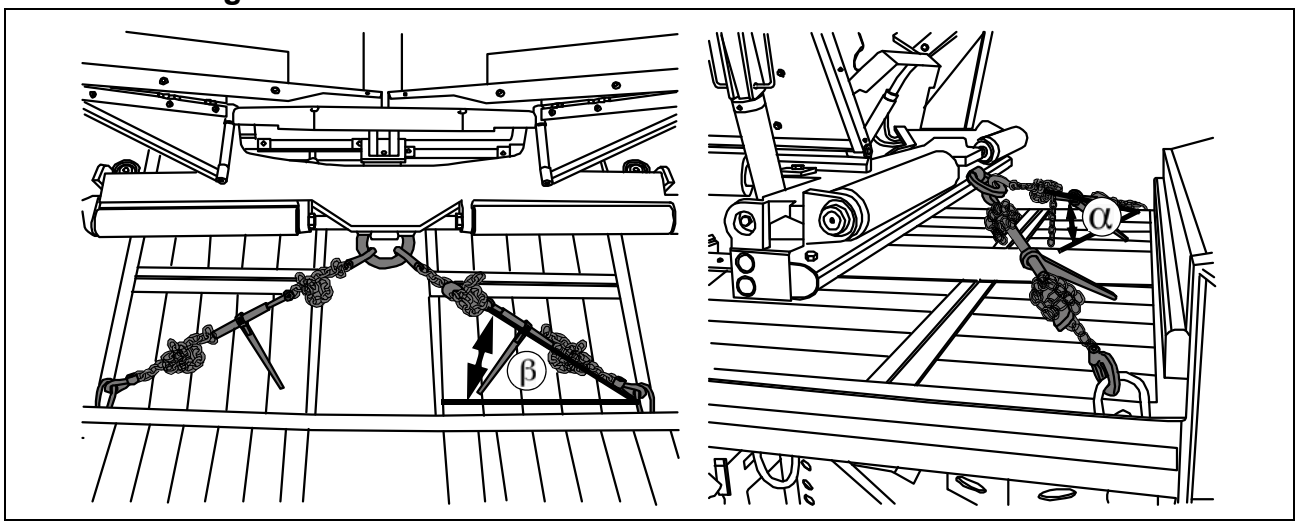

⚠ Diagonal lashing secures the paver finisher at the front using the lashing points on the paver finisher and on the low-load trailer. Fasten the lashing chains as shown.

⚠ The lashing angles should be "ß" between 6°-55° and "a" between 20°-65°!

https://truckmanualshub.com/

4.3 Securing at the rear - screed with side board

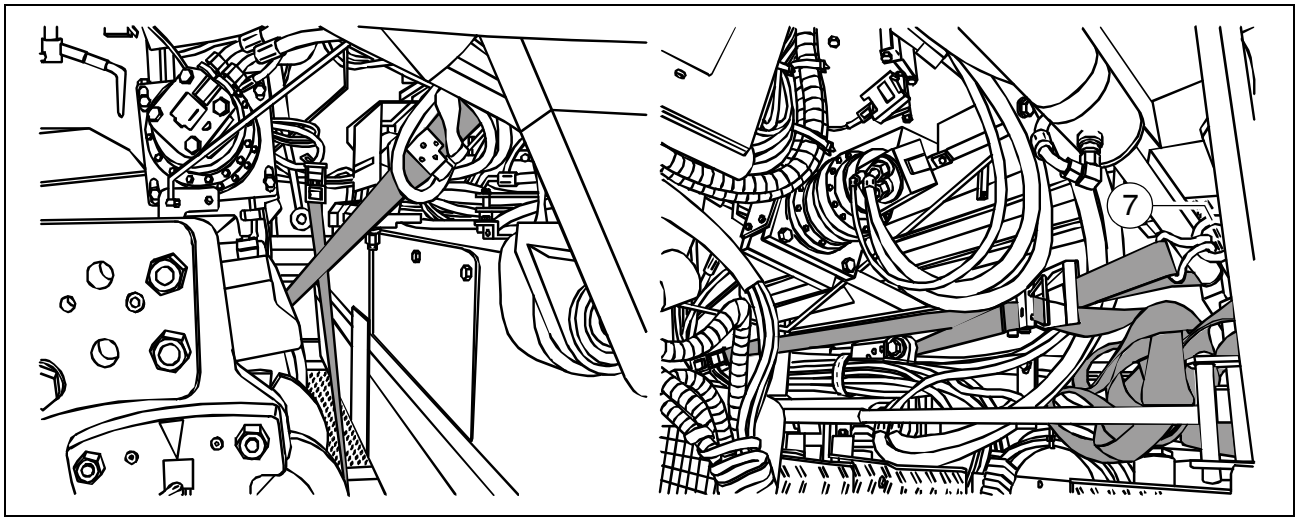

⚠ Diagonal lashing secures the paver finisher at the rear, at right angles to the direction of travel using the lashing points on the paver finisher (eyebolts) and on the low-load trailer. Fasten the lashing straps as shown.
Screw the supplied eyebolts first of all in the holes provided in the arms.

https://truckmanualshub.com/

4.4 Securing at the rear - screed without side board

Step 1: fasten lashing straps

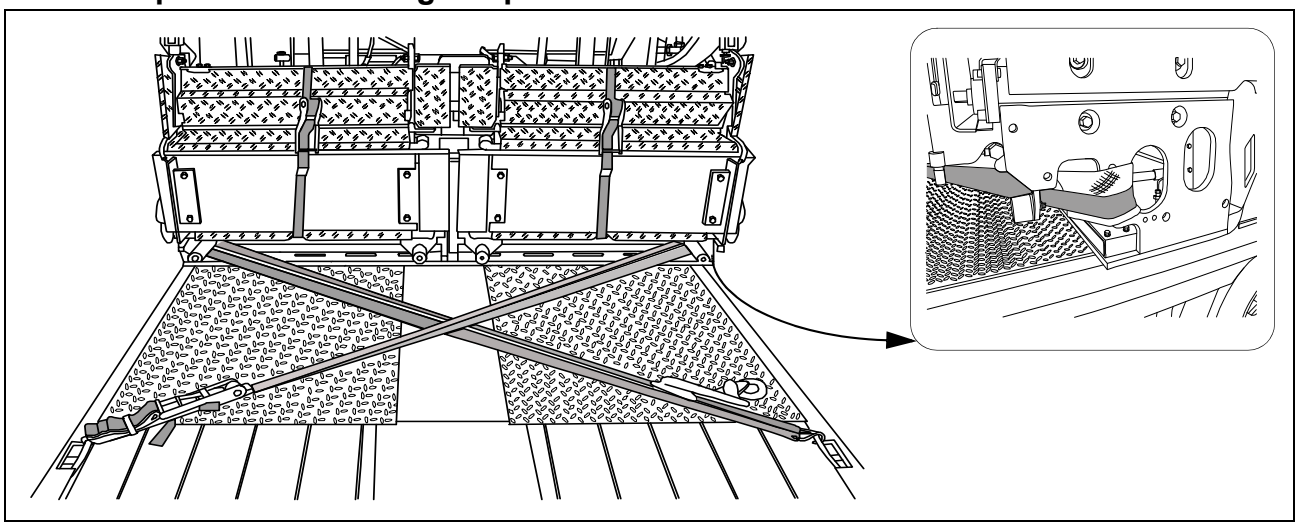

⚠ Diagonal lashing secures the paver finisher at the rear using the lashing points on the paver finisher and on the low-load trailer.
Fasten the lashing straps as shown.

Step 2: fasten lashing chains

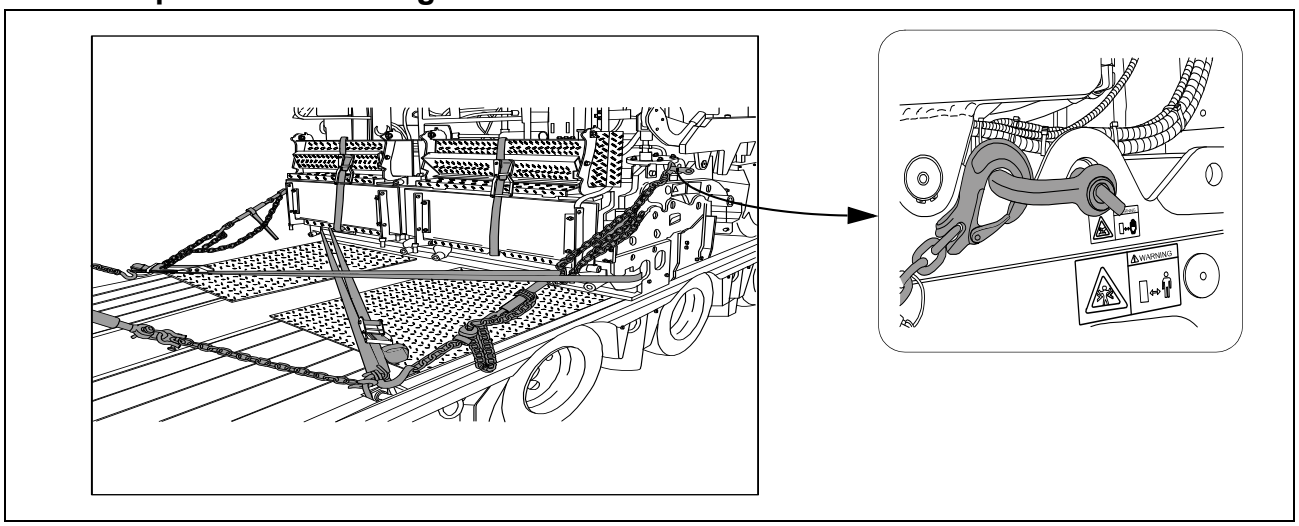

⚠ Diagonal lashing secures the paver finisher at the rear using the lashing points on the paver finisher and on the low-load trailer.
Fasten the lashing chains as shown.

https://truckmanualshub.com/

5 Control panel transport safeguard:

- Release the latch (1) to move the control platform.

☞ The latch must be fixed when the control platform is set in the middle and during transport.

⚠ To be able to set the lock, the platform must be positioned centrally above the vehicle frame..

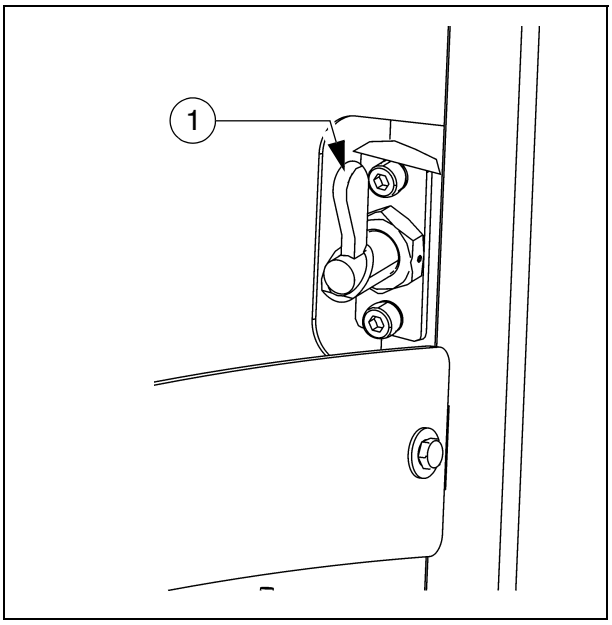

https://truckmanualshub.com/

5.1 After transportation

- Remove the attachment devices.
- Raise the protective roof :

☞ See section entitled "Protective roof"

- Lift the screed to the transportation position.
- Start the engine and drive from the trailer at a low engine/traction speed.
- Park the paver finisher in a secure spot, lower the screed and switch off the engine.
- Remove the key and/or cover the operating panel with the protective hood and secure it.

Protective roof (○)

NOTE	Caution! Possible collision of parts
	The following adjustments must be made before lowering the roof. - Control platform locked in central position - Operating panel locked in central position - Operating panel fixed in lowest position and engaged in rearmost setting - Steering wheel knob is at the bottom (wheeled paver) - Driver's seats swivelled to middle setting and in lowest position - Backrests and armrests of driver's seats tilted forwards - Front and side windows closed - Engine hood and side flaps closed - Rotating beacon swivelled inwards and in lowest setting.

NOTE	Caution! Possible damage to parts!
	The following measures must be ensured before transport: - After lowering the roof, the lock tabs (1) of the side windows must be in the corresponding mountings on both sides of the machine.

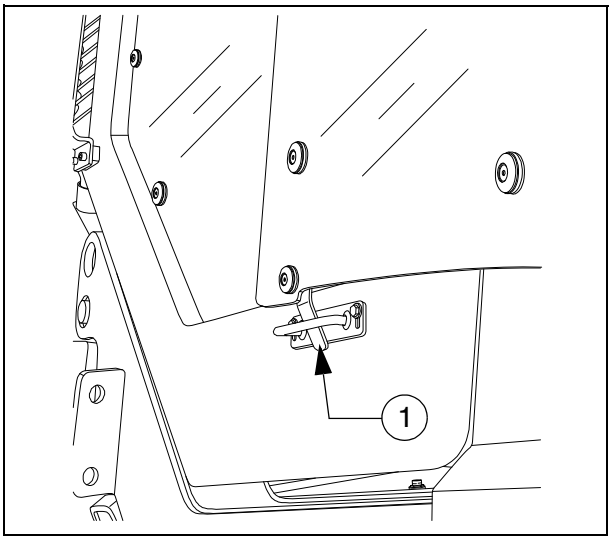

https://truckmanualshub.com/

The protective roof can be raised and lowered with a manual hydraulic pump.

☞ The exhaust pipe is lowered or raised together with the roof.

"Screw lock" version (A)

- Connect the pump lever (1) to the pump (2).
  - Lower the roof: The locks (3) on both sides of the roof must be released.
  - Raise the roof: The locks (4) on both sides of the roof must be released.
- Set the adjustment lever (5) to the "Raise" or "Lower" position.
  - Raise the roof: The lever points forwards.
  - Lower the roof: The lever points backwards.
- Operate the pump lever (1) until the roof has reached the upper or lower limit position.
  - Roof in uppermost position: Set the locks (3) on both sides of the roof.
  - Roof lowered: Set the lock (4) on both sides of the roof.

"Pin lock" version (B)

- Connect the pump lever (1) to the pump (2).
  - Draw out pin (3) on both sides of the roof.
- Operate the pump lever (1) until the roof has reached the upper or lower limit position.
  - Set bolts (3) in the respective position on both sides of the roof.

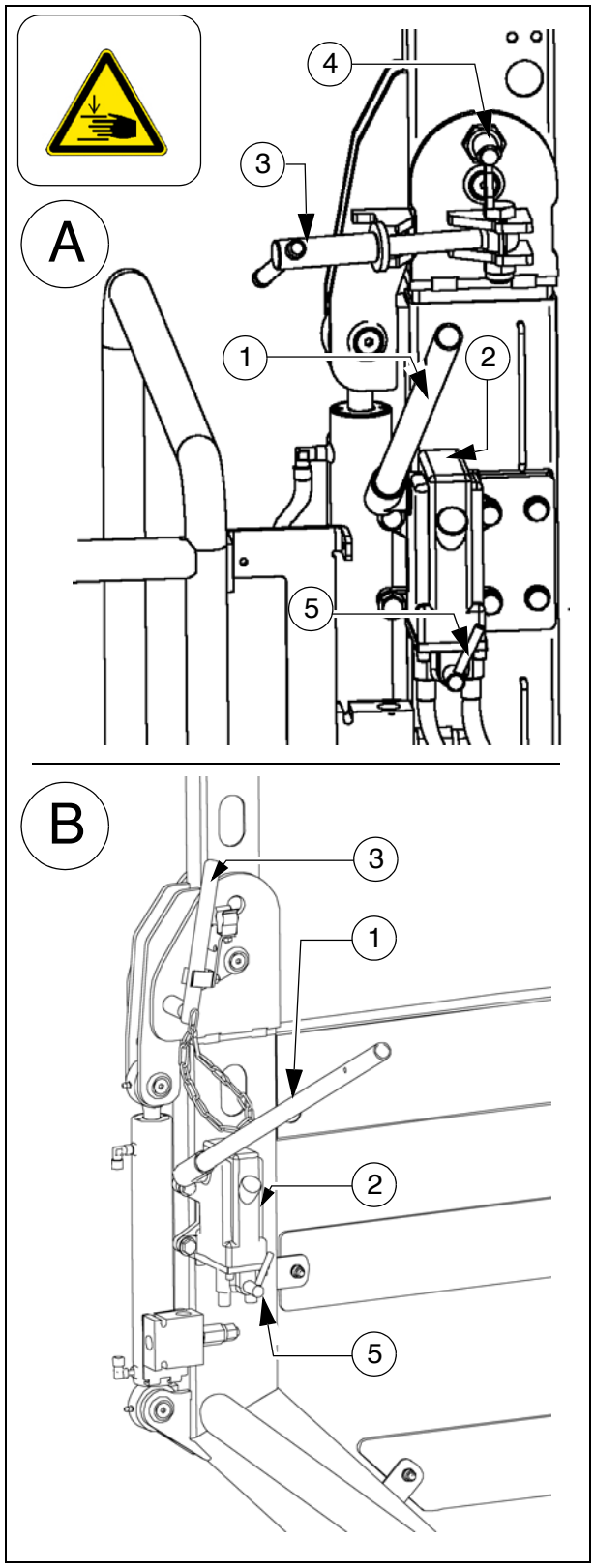

https://truckmanualshub.com/

6 Transportation

Reduce the paver finisher and the screed to their basic widths; also remove any attached side plates.

6.1 Preparations

- Prepare the paver finisher for transportation (see chapter D).
- Remove all overlaying or loose parts from finisher and screed (see also Operating instructions for the screed). Store these parts in a safe place.

When the screed is operated with the optional gas heating system:

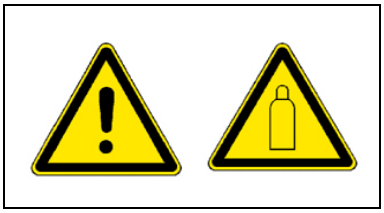

- Remove the gas bottles for the screed heating system:
  - Close main shut-off valves and bottle valves.
  - Turn off the valves on the bottles and remove the gas bottles from the screed.
  - Transport the gas bottles on a second vehicle; heed all applicable safety regulations.

https://truckmanualshub.com/

.

Operation	Buttons
- Deactivating the function lock	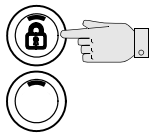
- Activate set-up mode.	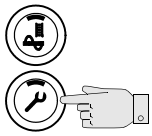
- Close the hopper lids.	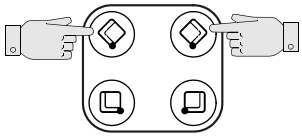
- Engage both hopper transport safe-guards.	
- Lift the screed.	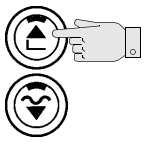
- Extend levelling cylinders completely.	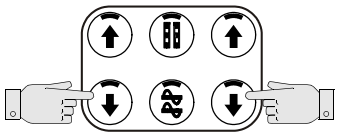
- Retract the screed parts until the screed matches the basic width of the paver fin-isher.	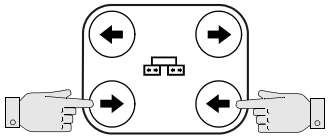
- Deactivate set-up mode.	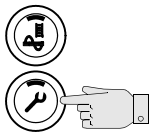

https://truckmanualshub.com/

6.2 Driving mode

Operation	Buttons
- Set the fast/slow switch to "Hare" if necessary.	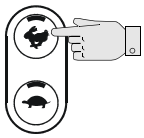
- Turn the preselector to "zero".	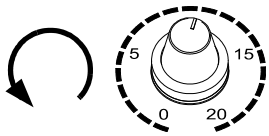
- Swivel the drive lever to maximum. STOP The machine already advances slightly on deflecting the drive lever!	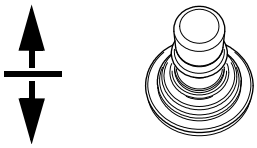
- Adjust required vehicle speed with the preselector.	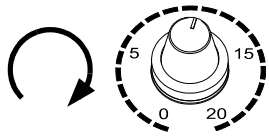
- To stop the machine, swivel the drive lever to the middle setting and set the preselector to "zero".	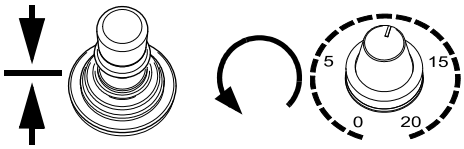

STOP Press the emergency stop button when a dangerous situation arises!

https://truckmanualshub.com/

7 Loading by crane

WARNING	Danger from suspended loads
	Crane and/or raised vehicle can tilt when lifted and cause severe to fatal injuries! - The vehicle may only be raised at the marked lifting points. - Heed the operating weight of the vehicle. - Do not enter the danger zone. - Use only lifting gear that can bear the load. - Do not leave any load or loose parts on the vehicle. - Comply with all further information in these instructions and in the safety manual.

⚠ Use only lifting gear that can bear the load.
(See chapter B for weights and dimensions).

⚠ Attachment and loading equipment must meet the conditions of the applicable accident prevention regulations!

⚠ The vehicle's centre of gravity is dependent on the screed which is mounted.

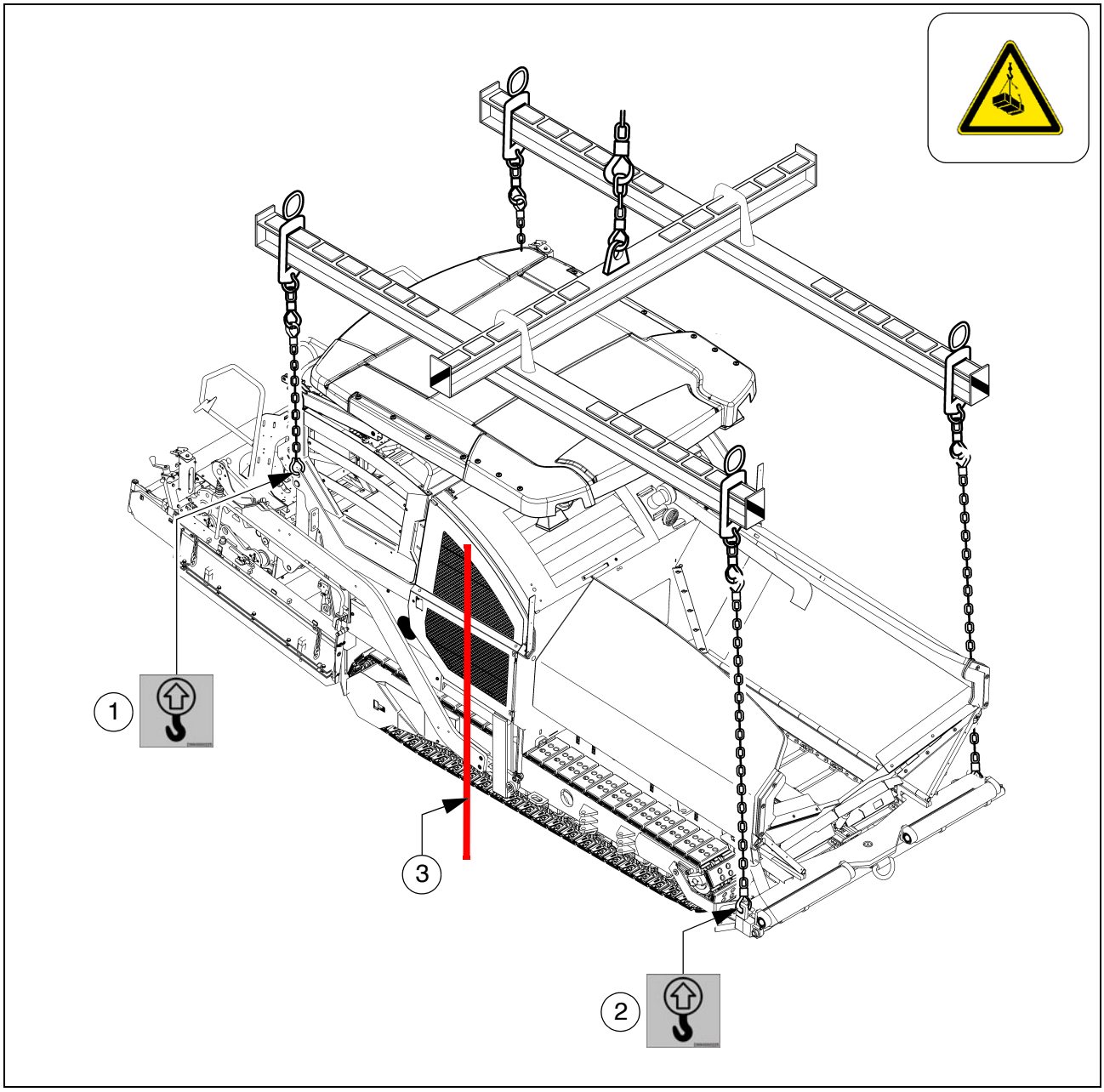

☞ Four lifting eyes (1, 2) are provided for loading the vehicle with a crane.

☞ Depending on the type of screed which is used, the paver finisher's centre of gravity, with the screed mounted, is located in the area of the drive unit's rear reversing roller (3).

- Secure vehicle wherever it is parked up.
- Engage the transport safeguards.
- Remove any attachments and extension parts from the paver finisher and the screed until the basic width has been attained.
- Take off all protruding or loose parts and the gas bottles of the screed heater (see chapters E and D).
- Lower the protective roof:

https://truckmanualshub.com/

☞ See section entitled "Protective roof"

- Attach lifting gear to the four attachment points (1, 2).

⚠ The max. permissible attachment point load is 73.5 kN.

⚠ The permissible load applies in the vertical direction!

⚠ Make sure that the paver finisher remains in a horizontal position during transportation!

https://truckmanualshub.com/

8 Towing

Heed all regulations and apply all safety measures applicable for towing heavy construction machines.

The towing vehicle must be capable of securing the paver finisher, even on slopes.

Use only approved tow bars!

If necessary, remove any attachments and accessories from the paver finisher and the screed until the basic width has been attained.

A hand pump (1) is located in the engine compartment (left side); it must be actuated to be able to tow the machine.
Pressure for releasing the traction system brakes is built up with the hand pump.

- Release lock nut (2), screw threaded dowel (3) into pump as far as possible and secure with lock nut.
- Actuate lever (4) of hand pump until sufficient pressure has been built up and traction system brakes have been released.

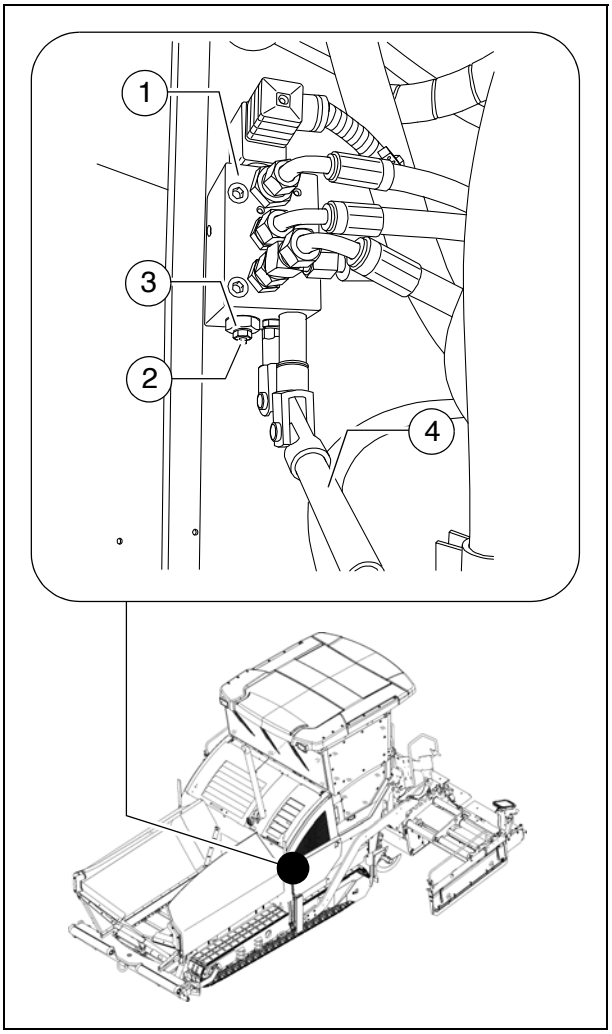

On completion of the towing process, restore the initial status.

Only release the traction system brakes when the machine is sufficiently secured against accidental rolling or is already properly connected to the towing vehicle.

https://truckmanualshub.com/

Two high-pressure cartridges (6) are located on both of the travel drive pumps (5).
The following activities must be carried out to activate the towing function:

- Loosen lock nut (7) half a turn.
- Screw in the bolt (8) until increased resistance occurs. Then screw the bolt a further half turn into the high-pressure cartridge.
- Tighten the lock nut (7) to a torque of 22 Nm.

On completion of the towing process, restore the initial status.

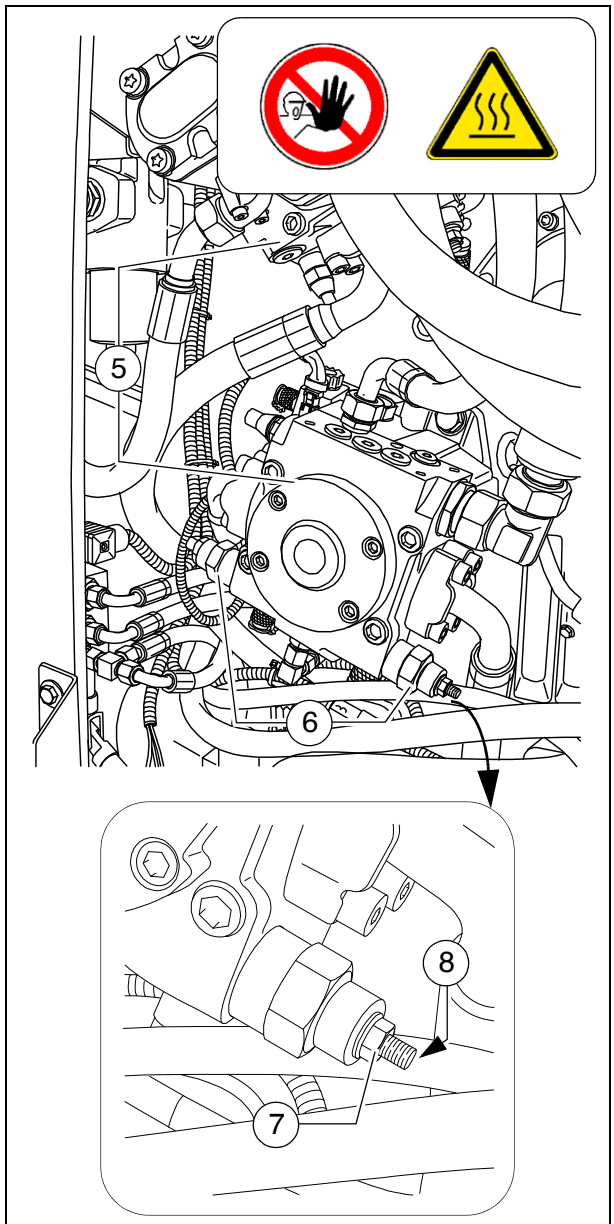

- Attach the tow bar to the coupling (9) located in the bumper.

Now carefully and slowly tow the paver finisher out of
the construction area.

Only ever tow the shortest distance to the means of transport or the next parking possibility.

The max. permissible towing speed is 10 m/min!
In hazardous situations, a towing speed of 15 m/min is only permitted temporarily.

The max. permissible towing eye (9) load is: 200 kN

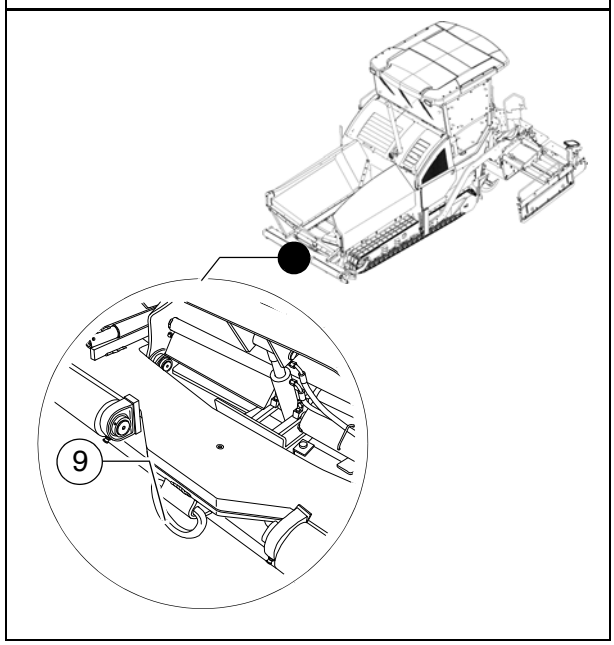

https://truckmanualshub.com/

9 Safely parking the vehicle

When the paver finisher is parked at a location accessible to the public, it must be secured in such a way that unauthorised persons or playing children cannot damage the vehicle.

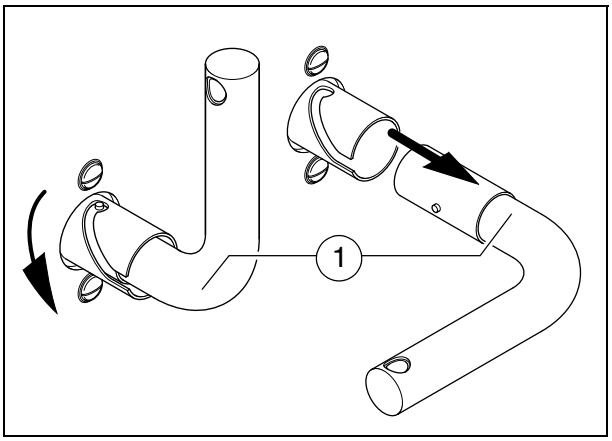

- Pull off the ignition key and the main switch (1) and take it with you – do not hide them somewhere on the machine.

- Protect the operating panel with the dust cover (2) and lock it.
- Store loose parts and accessories in a safe place.

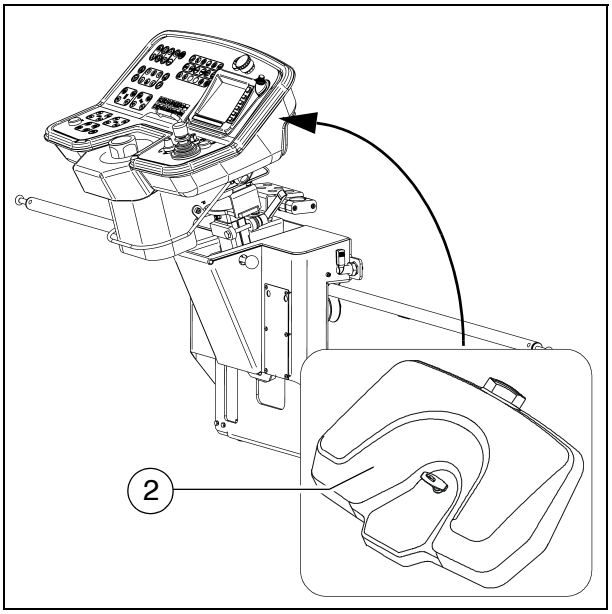

https://truckmanualshub.com/

9.1 Lifting the vehicle with hydraulic lifts, lifting points

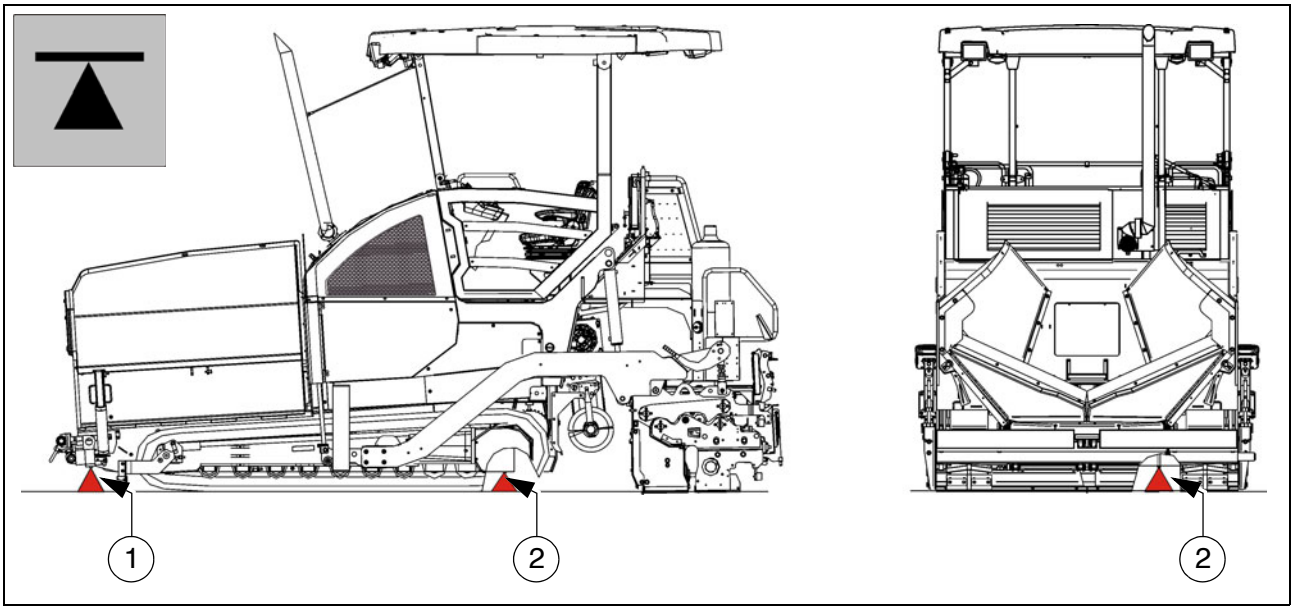

STOP The hydraulic lift must be rated for at least 10t.

STOP Always choose a horizontal surface with adequate load rating as installation surface for the hydraulic lift!

STOP Make sure that the hydraulic lift is securely and correctly positioned!

STOP The hydraulic lift is only intended to lift a load and not as a support. Work should only be performed to and under raised vehicles when they have been secured and correctly supported to prevent them from tilling over and rolling or sliding away.

STOP Roller-type jacks must not be moved when under load.

STOP Chocks or supporting beams positioned so that they cannot be shifted or tilted must be adequately dimensioned and be able to take the corresponding weight.

STOP There must not be anyone on the vehicle while it is being lifted.

STOP All raising and lowering work must be carried out uniformly with all hydraulic lifts in use! Always check and observe horizontal alignment of the load!

STOP Always carry out raising and lowering work with several people together, with an additional person monitoring progress!

STOP Only positions (1) and (2) in the left and right side of the vehicle are permissible lifting points!

https://truckmanualshub.com/

https://truckmanualshub.com/

D 11 Operation

1 Safety regulations

Starting the engine, the travel drive, the conveyor, the auger, the screed or the lifting devices can cause injuries or even the death of persons.
Make sure before starting any of these devices that no-one is working at, in or beneath the paver finisher or within its danger area!

- Do not start the engine or do not actuate any controls when this is expressly forbidden!
  Unless otherwise specified, the controls may only be actuated when the engine is running!

Never crawl into the auger tunnel or step into the hopper or onto the conveyor. Danger to life and limb!

- Always make sure during work that no-one is endangered by the vehicle!
- Ensure that all protective covers and hoods are fitted and secured accordingly!
- Immediately rectify damage which as been ascertained! Operation must not be continued when the vehicle is defective!
- Do not let any persons ride on the paver finisher or the screed!
- Remove obstacles from the road and the work area!
- Always try to choose a driver's position that is opposite to the flowing traffic! Lock the operating panel and the driver's seat.
- Maintain sufficient safety clearance from overhanging objects, other vehicles and points of danger!
- Be careful when travelling on rough terrain to keep the paver finisher from slipping, tipping or turning over.

Always be the master over the vehicle; never try to use it beyond its capacities!

https://truckmanualshub.com/

DANGER	**Danger due to improper operation**
	Improper operation of the vehicle can cause severe to fatal injuries! - The vehicle may only be used in the stipulated manner for its intended purpose. - The vehicle may only be operated by trained staff. - The vehicle operators must have made themselves familiar with the contents of the operating instructions. - Avoid jerky movements of the vehicle. - Do not exceed the allowed angle of rise and slope. - Keep hoods and covering parts closed during operation. - In driving mode, all moving parts must be locked/ secured. - Comply with all further information in these instructions and in the safety manual.

WARNING	**Danger of being pulled in by rotating or conveying vehicle parts**
	Rotating or conveying vehicle parts can cause severe or fatal injuries! - Do not enter the danger zone. - Do not reach into rotating or conveying parts. - Only wear close-fitting clothing. - Comply with the warning and information signs on the vehicle. - Stop the engine and remove the ignition key before any maintenance work. - Comply with all further information in these instructions and in the safety manual.

WARNING	**Danger of crushing from moving vehicle parts**
	Vehicle parts performing movements can cause severe or fatal injuries! - Never stand in the danger zone of the vehicle! - Do not reach into the danger area. - Comply with the warning and information signs on the vehicle. - Comply with all further information in these instructions and in the safety manual.

https://truckmanualshub.com/

2 Controls

2.1 Operating panel

☞ All detent switch functions which may pose a risk on starting the diesel engine (auger and conveyor conveying function) are set to the STOP function in the case of EMERGENCY STOP or restarting the control system. If settings are changed when the diesel engine is stopped ("AUTO" or "MANUAL"), these are reset to "STOP" on starting the diesel engine.
The "Turning on the spot" function is reset to "Straight-ahead travel".

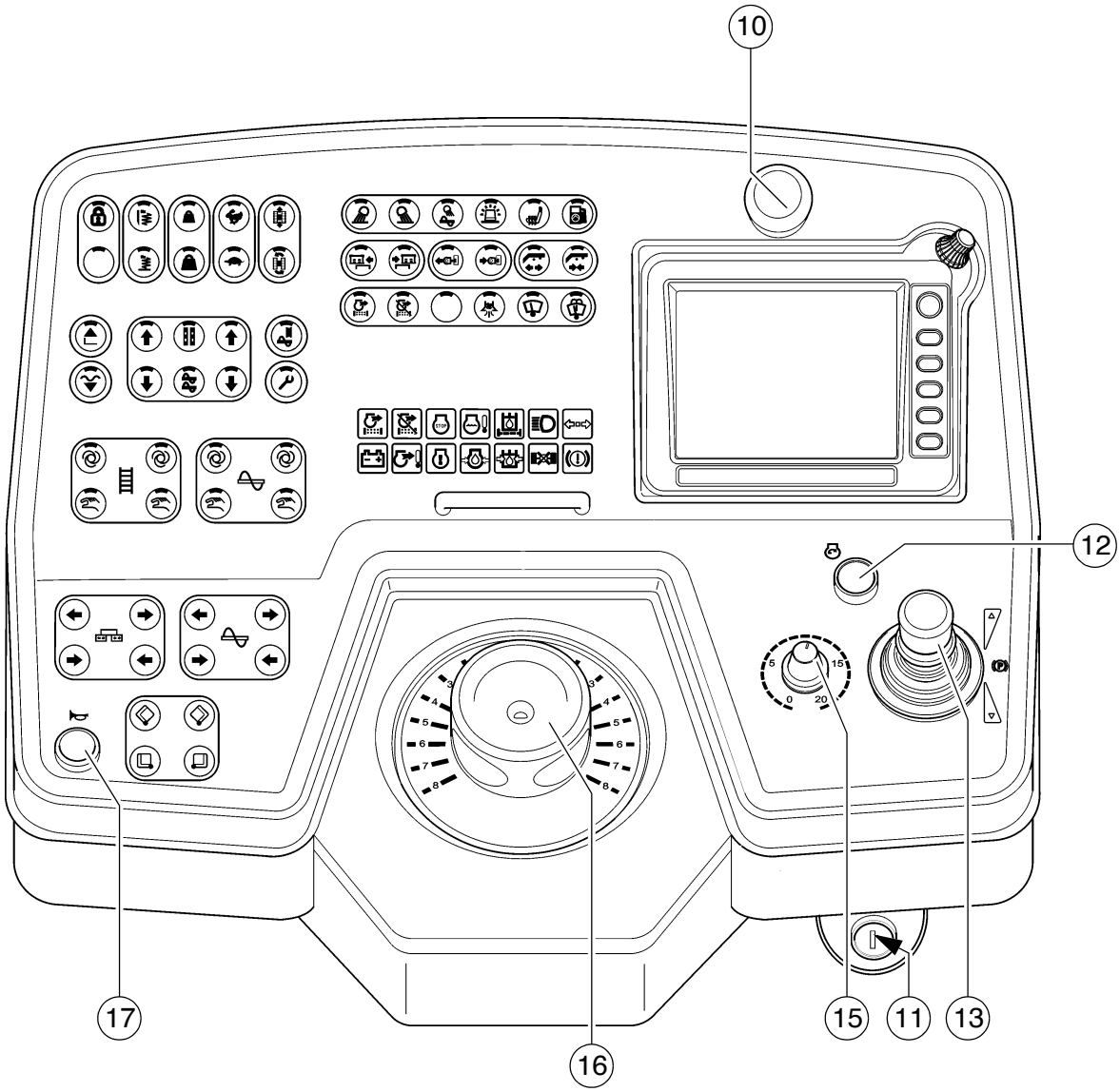
10
12
17
16
15
11
13

https://truckmanualshub.com/

Item	Designation	Brief description
10	Emergency stop button	In the case of an emergency (danger to persons, possible collision, etc.), press in the button! - Pressing the emergency stop button switches the engine, the drives and the steering system off. Making way, lifting the screed or other actions are then no longer possible! Danger of accidents! - The emergency stop button does not shut off the gas heater system (○). Close the main shut-off valve and the valves on the bottles by hand! - To restart the engine, the button must be pulled out again.
11	Ignition lock	To activate the ignition voltage by turning the key. - Switch off by turning the key back to its starting position. ☞ After activating the ignition voltage, the input and display terminal requires a few seconds for the booting process. ☞ On shutting off the vehicle, first switch off the ignition, then deactivate the main switch. ☞ Before the main battery switch is deactivated, a period of at least 10 seconds must elapse after switching off the vehicle.
12	Starter	Energizes starter motor while pressed. All emergency stop buttons (on the operating panel and the remote controls) must be pulled out.

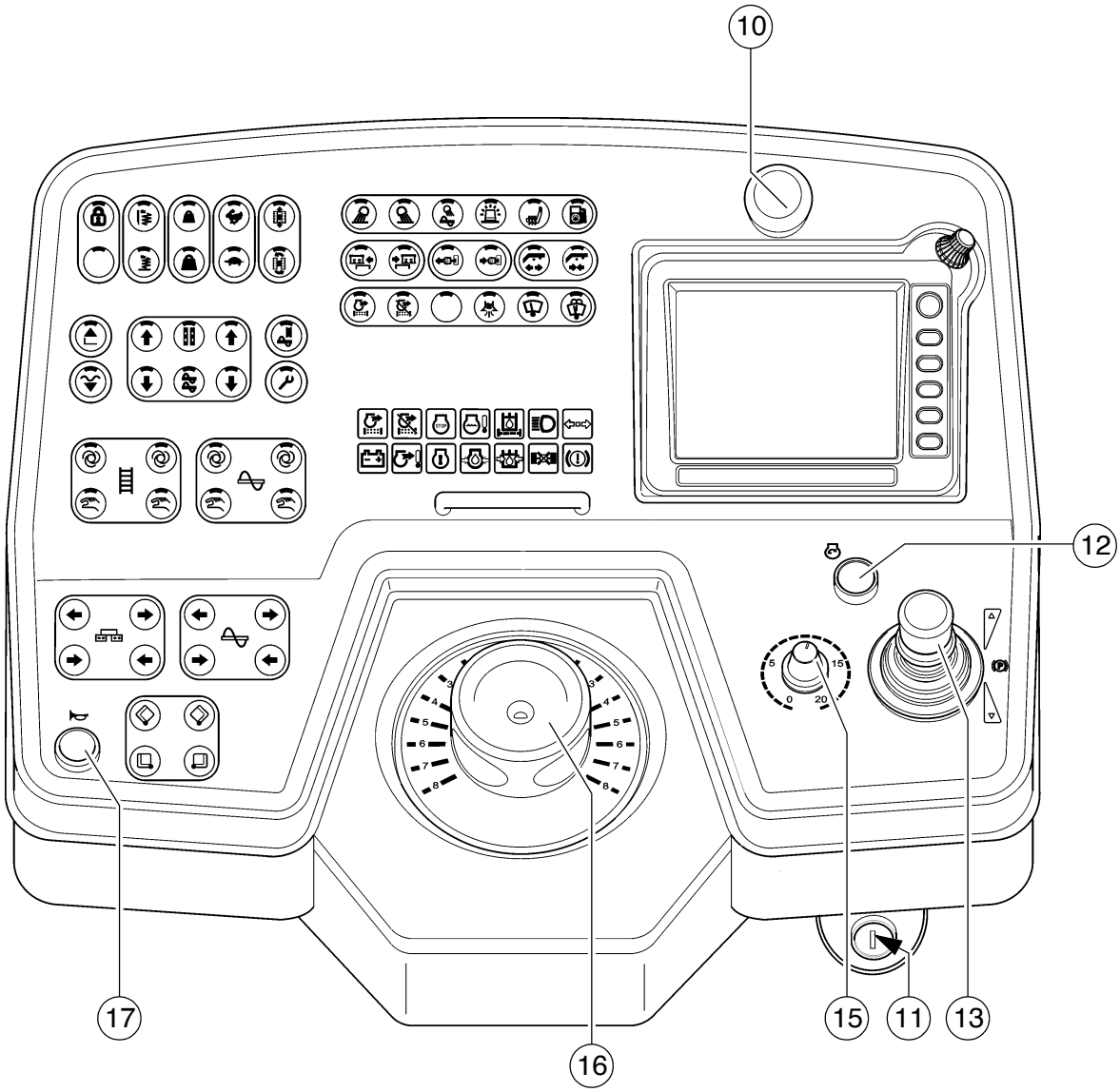
10
12
17
16
15
11
13

https://truckmanualshub.com/

Item	Designation	Brief description
13	Drive lever (traction)	For switching on the paver finisher functions and for continuously regulating the road speed – forward or reverse. Zero position: engine at idling speed; no travel drive; - To swivel the drive lever out, release by pulling the handle up. Depending on the position of the drive lever, the following functions can be activated: 1st position: - Conveyor and auger on. 2nd position: - Screed motion (tamper/vibration) on; travel drive on; increase speed until the stop is reached. ☞ Use the preselector to set the maximum speed. STOP The vehicle speed cannot be reduced to "0" with the preselector. The machine advances slightly with deflected drive lever, even if the travel drive preselector is set to "zero"! ☞ The drive is locked by an engine start with drive lever out of center position. To start the drive, the lever must be put into center position before. ☞ When changing over between forwards and reverse travel, the drive lever must remain briefly in neutral.

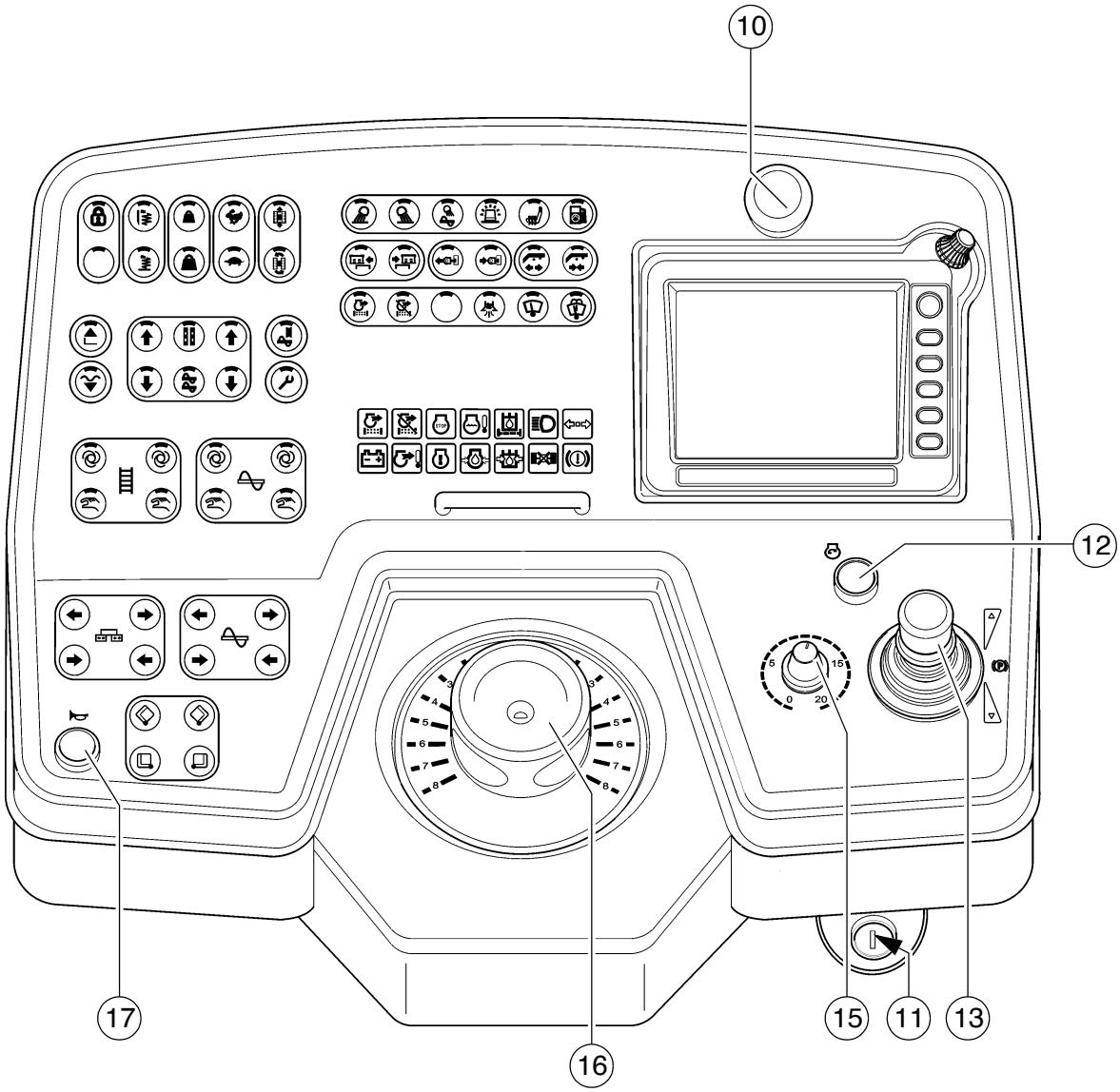
10
12
17
16
15
11
13

https://truckmanualshub.com/

Item	Designation	Brief description
15	Travel drive prese-lector	For setting the maximum speed that can be reached when the drive lever is at its stop. ☞ The scale roughly matches the speed in m/min (during paving). ⚠ The vehicle must not travel at max. transport speed when the hopper is full! STOP The vehicle speed cannot be reduced to "0" with the preselector. The machine advances slightly with de-flected drive lever, even if the travel drive preselector is set to "zero"!
16	Steering potenti-ometer	The steering wheel movement is transferred electrohydrauli-cally. ☞ For precise adjustments (position "0" = straight-ahead), see the straight-ahead travel synchronisation. For turning on the spot, see switch (Turning on the spot).
17	Horn	Press in the case of emergencies and to indicate when the ve-hicle starts to move! ☞ The horn can also be used to communicate acoustically with the truck driver for material loading!

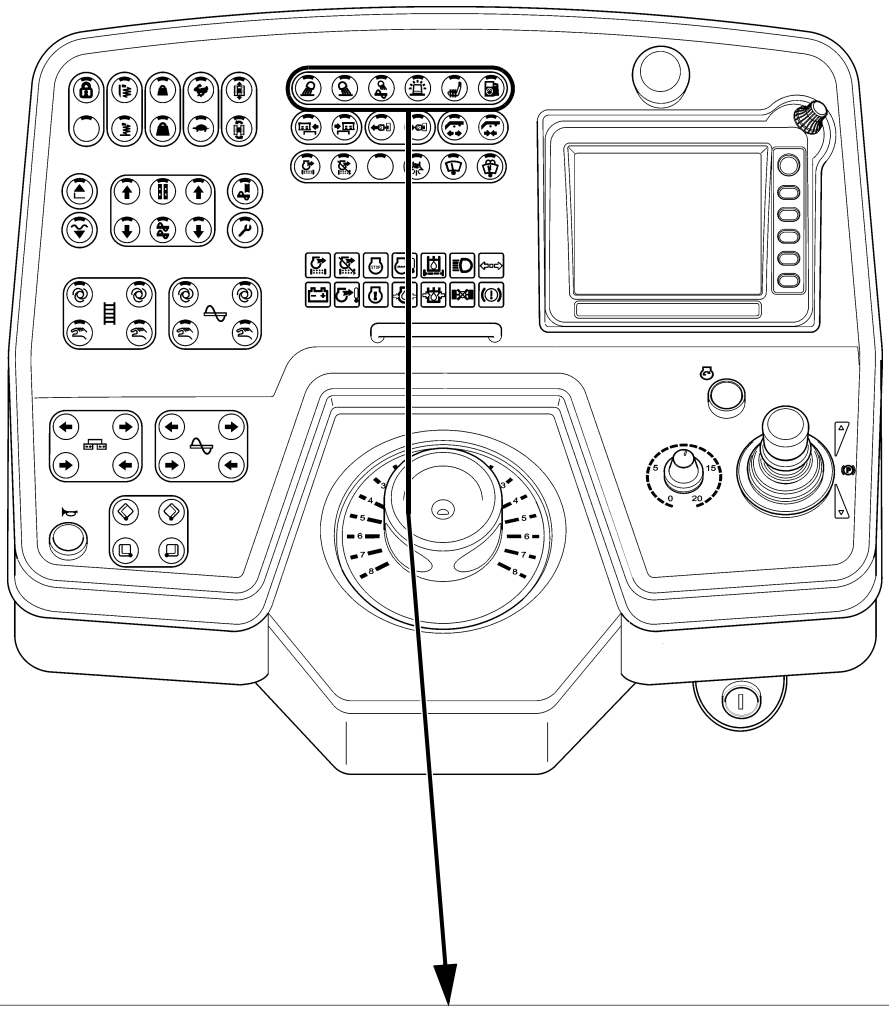

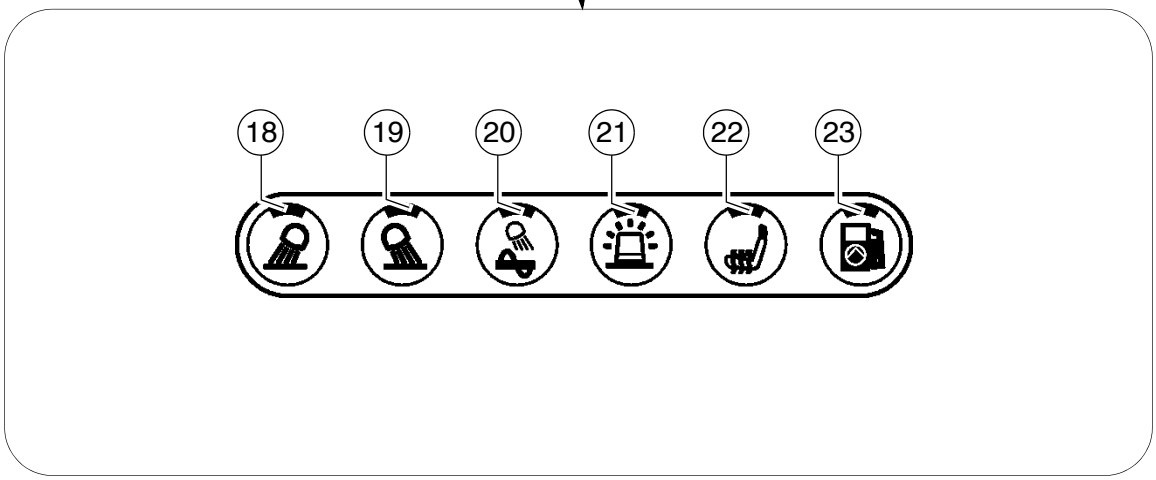
18
19
20
21
22
23

https://truckmanualshub.com/

Item	Designation	Brief description
18	Working lights, front ON / OFF (○)	Button with detent switch function and LED feedback: - For switching on the front working lights - Switch OFF by pressing the button again STOP Avoid dazzling other road users!
19	Working lights, rear ON / OFF (○)	Button with detent switch function and LED feedback: - For switching on the rear working lights - Switch OFF by pressing the button again STOP Avoid dazzling other road users!
20	Auger compartment working lights ON / OFF (○)	Button with detent switch function and LED feedback: - for switching on the auger compartment working lights - Switch OFF by pressing the button again
21	Rotary beacon ON / OFF (○)	Button with detent switch function and LED feedback: - For switching on the rotary beacon - Switch OFF by pressing the button again ☞ Switch on for safety on roads and in the construction site area
22	Seat heating ON / OFF (○)	Button with detent switch function and LED feedback: - For switching on the seat heating - Switch OFF by pressing the button again
23	Filling pump Fuel tank ON / OFF (○)	Button with detent switch function and LED feedback: - For switching on the filling pump - Switch OFF by pressing the button again

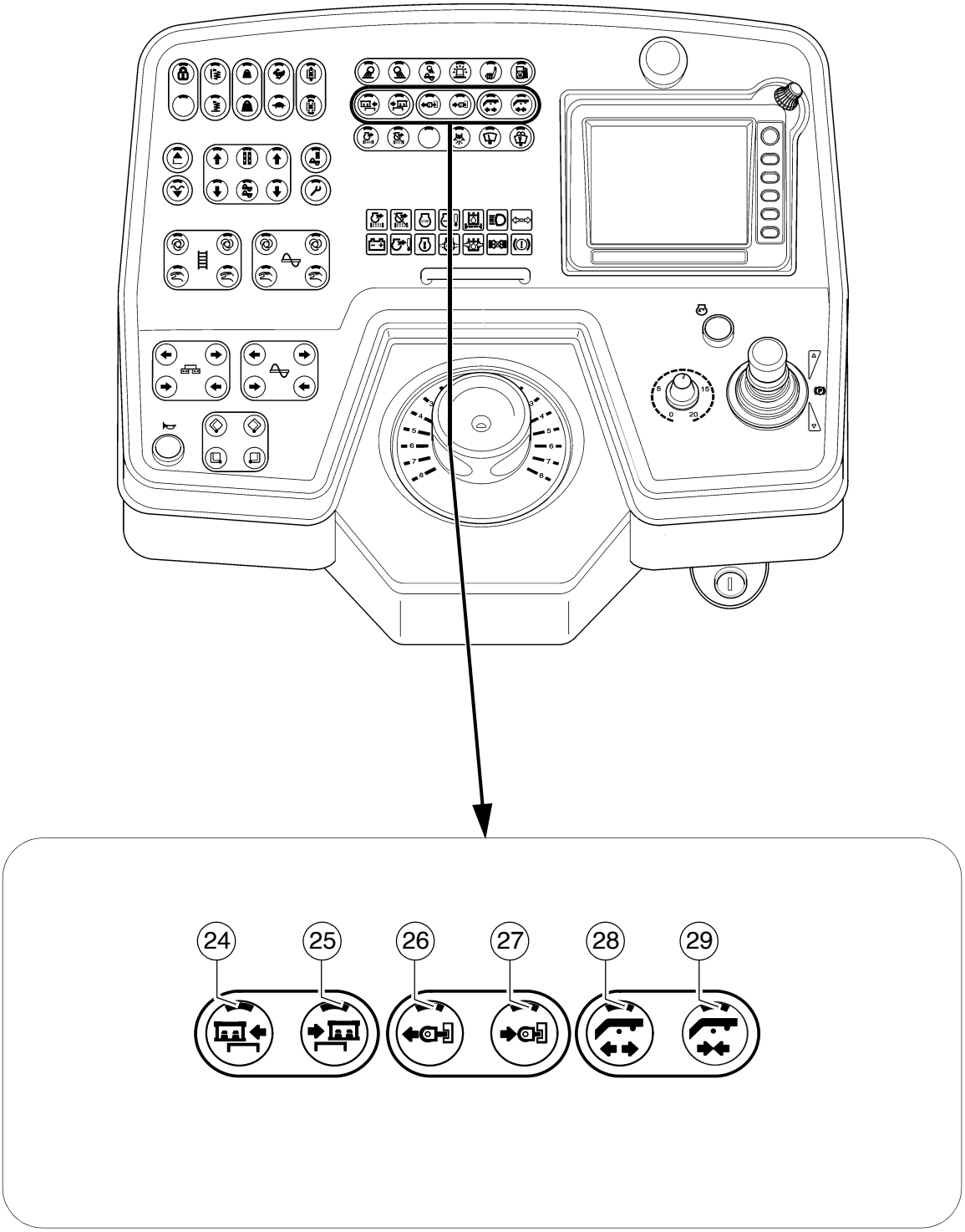
24
25
26
27
28
29

https://truckmanualshub.com/

Item	Designation	Brief description
24	Move control platform to the left	Pushbutton function with LED feedback: - To move the control panel to the left ⚠ The platform lock must be released before moving the control platform! STOP On actuation, note danger zones of moving parts of the vehicle!
25	Move control platform to the right	Pushbutton function with LED feedback: - To move the control panel to the right ⚠ The platform lock must be released before moving the control platform! STOP On actuation, note danger zones of moving parts of the vehicle!
26	Push roller Extend(○)	Pushbutton function with LED feedback: - To hydraulically extend the push roller crossbar. STOP On actuation, note danger zones of moving parts of the vehicle!
27	Push roller Retract (○)	Pushbutton function with LED feedback: - To hydraulically retract the push roller crossbar. STOP On actuation, note danger zones of moving parts of the vehicle!
26 + 27	Push roller damping ON / OFF (○)	Detent switch function and LED feedback: - Press both buttons simultaneously to activate push roller damping. - Switch OFF by pressing one of the two buttons. ☞ Push roller damping hydraulically absorbs the shocks between the material truck and paver finisher.

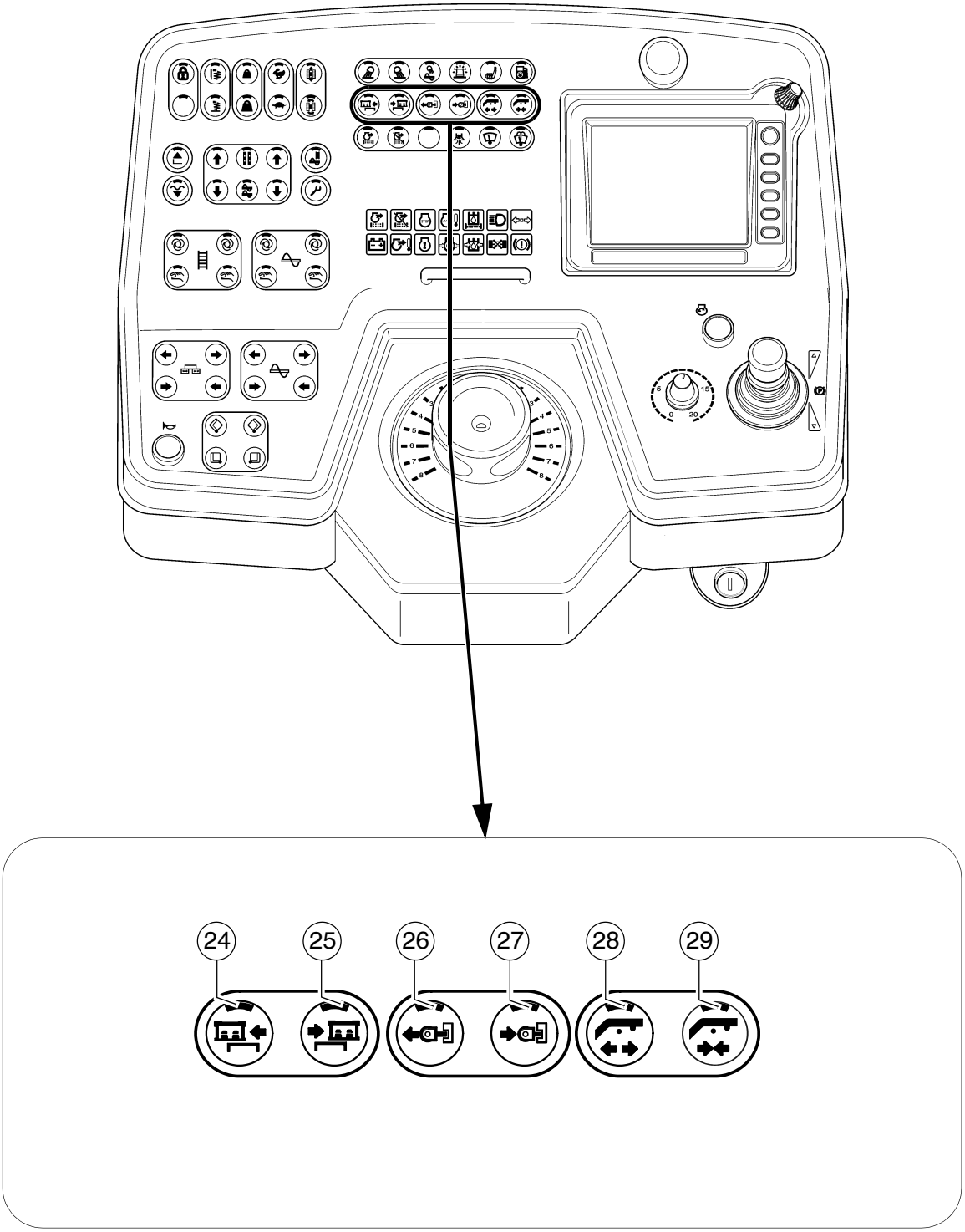
24
25
26
27
28
29

https://truckmanualshub.com/

Item	Designation	Brief description
28	Extend screed l ock (○)	Pushbutton function with LED feedback: - To hydraulically extend the screed lock. ⚠ Before retracting and extending, lift the crossbeams slightly over the locking bolts (lift screed)!
29	Retract screed lock (○)	Pushbutton function with LED feedback: - To hydraulically retract the screed lock. ⚠ Before retracting and extending, lift the crossbeams slightly over the locking bolts (lift screed)!

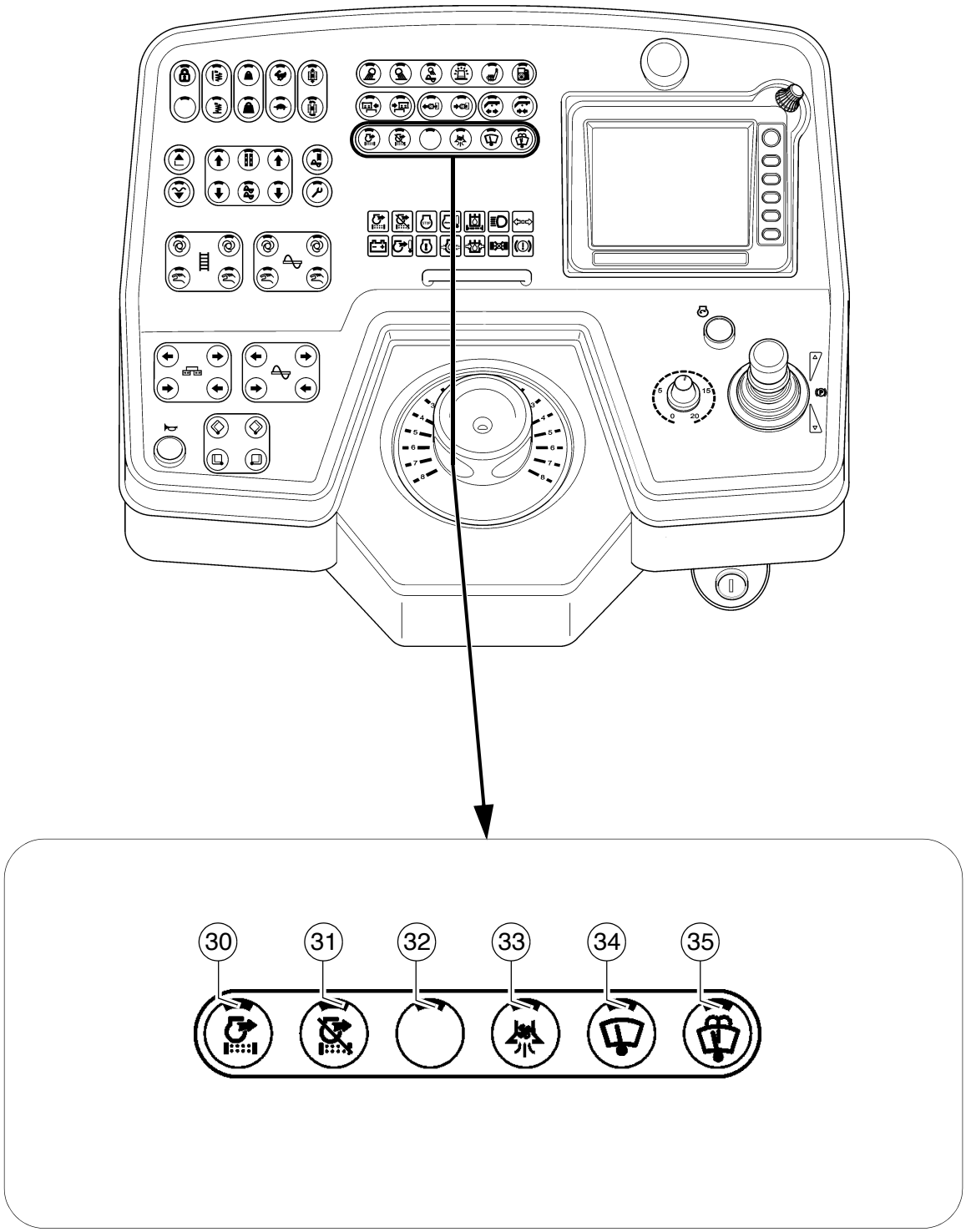
30
31
32
33
34
35

https://truckmanualshub.com/

Item	Designation	Brief description
30	Particulate filter regeneration, manual (○)	Detent switch function and LED feedback: - for activating / manual trigger of particulate filter regeneration. ☞ Particulate filter regeneration does not start when the soot level in the particulate filter is too low. ☞ Particulate filter regeneration takes about 45 minutes.
31	Particulate filter regeneration, automatic - deactivate (○)	Detent switch function and LED feedback: - for deactivating the automatic trigger of particulate filter regeneration. ☞ Depending on the saturation level of the particulate filter, automatic particular filter regeneration can take place immediately after deactivation has been disabled.
32	not used	
33	Extraction ON / OFF (○)	Detent switch function and LED feedback: - To actuate the asphalt fume control system - Switch OFF by pressing the button again
34	Windscreen wipers ON / OFF (○)	Detent switch function and LED feedback: - For switching on the windscreen wipers - Switch OFF by pressing the button again
35	Windscreen washer system + Windscreen wiper ON / OFF (○)	Detent switch function and LED feedback: - To actuate the windscreen washer system + windscreen wipers - Switched OFF with time control

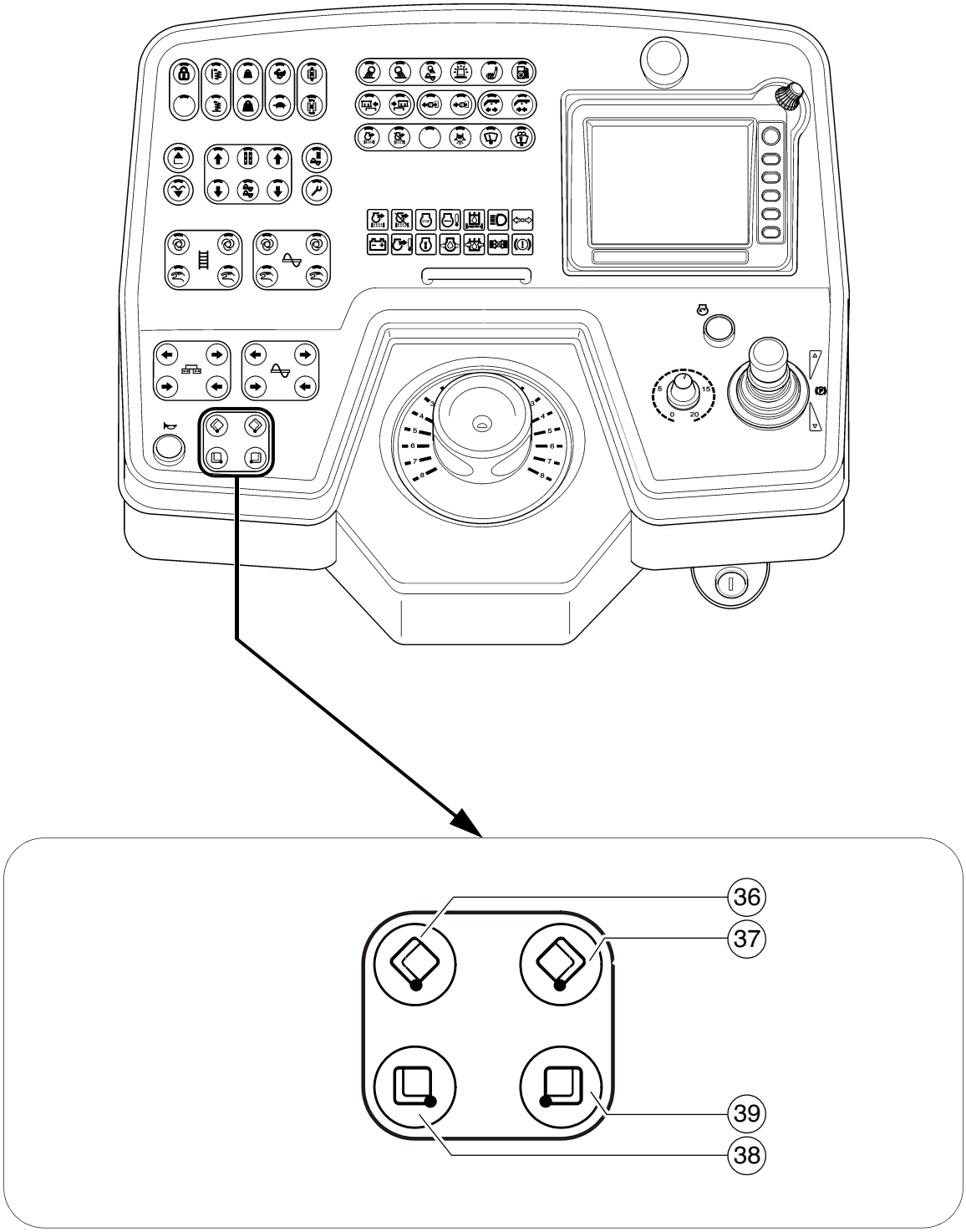
36
37
39
38

https://truckmanualshub.com/

Item	Designation	Brief description
36	Left hopper Close	Pushbutton function: - To close the left half of the hopper ☞ Separate actuation (○): Is required when paving in spaces where there is only limited space at one side or when obstacles obstruct truck unloading. STOP On actuation, note danger zones of moving parts of the vehicle!
37	Right hopper Close	Pushbutton function: - To close the right half of the hopper ☞ Separate actuation (○): Is required when paving in spaces where there is only limited space at one side or when obstacles obstruct truck unloading. STOP On actuation, note danger zones of moving parts of the vehicle!
38	Left hopper Open	Pushbutton function: - To open the left half of the hopper ☞ If the hoppers are hydraulically actuated at the same time, both the left and the right switch can be used for actuation. STOP On actuation, note danger zones of moving parts of the vehicle!
39	Right hopper Open	Pushbutton function: - To open the right half of the hopper ☞ If the hoppers are hydraulically actuated at the same time, both the left and the right switch can be used for actuation. STOP On actuation, note danger zones of moving parts of the vehicle!

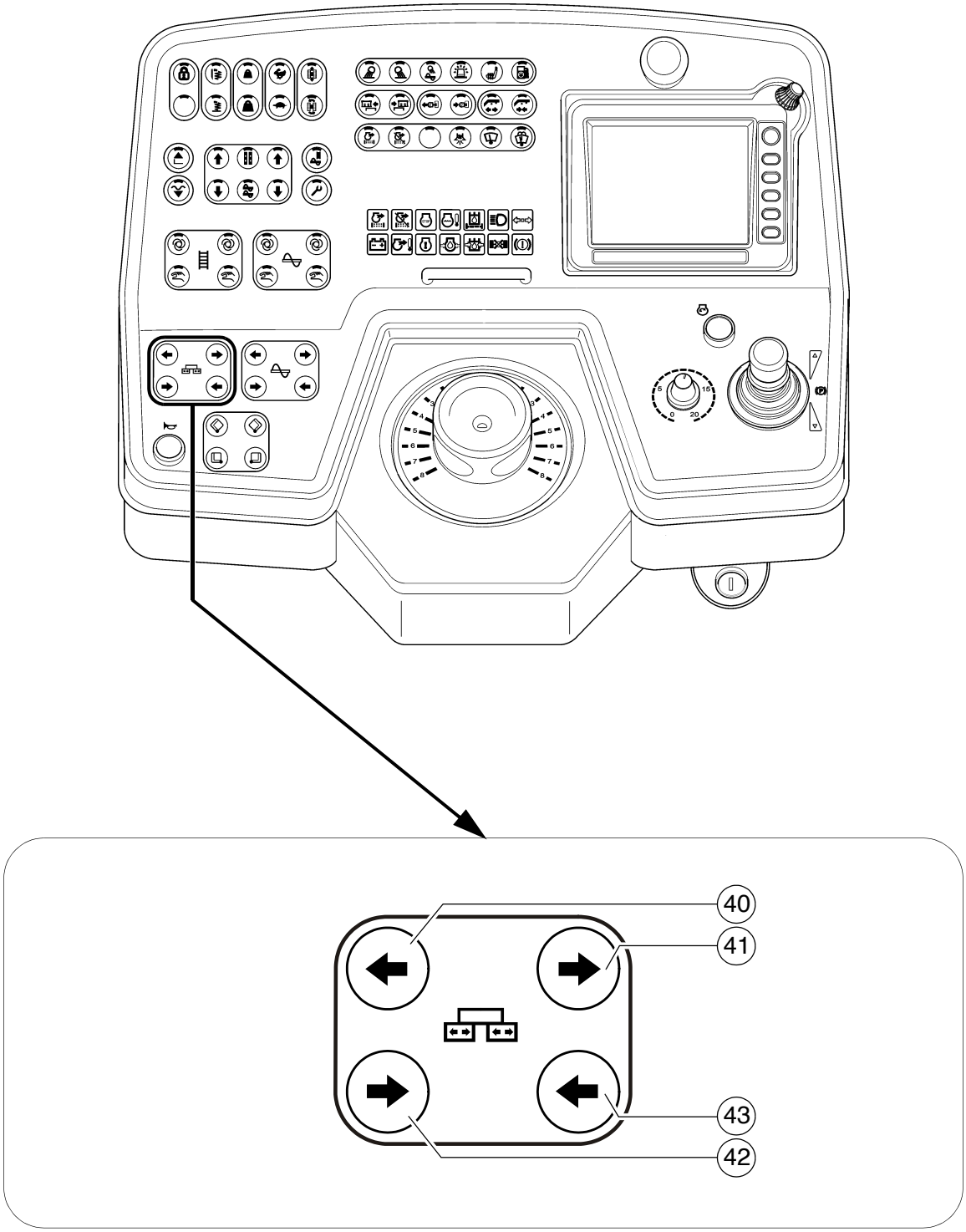
40
41
43
42

https://truckmanualshub.com/

Item	Designation	Brief description
40	Left screed Extend	Pushbutton function: - To extend the left half of the screed ☞ This function is not used in vehicle configurations with a screed which cannot be extended. STOP On actuation, note danger zones of moving parts of the vehicle!
41	Right screed Extend	Pushbutton function: - To extend the right half of the screed ☞ This function is not used in vehicle configurations with a screed which cannot be extended. STOP On actuation, note danger zones of moving parts of the vehicle!
42	Left screed Retract	Pushbutton function: - To retract the left half of the screed ☞ This function is not used in vehicle configurations with a screed which cannot be extended. STOP On actuation, note danger zones of moving parts of the vehicle!
43	Right screed Retract	Pushbutton function: - To retract the right half of the screed ☞ This function is not used in vehicle configurations with a screed which cannot be extended. STOP On actuation, note danger zones of moving parts of the vehicle!

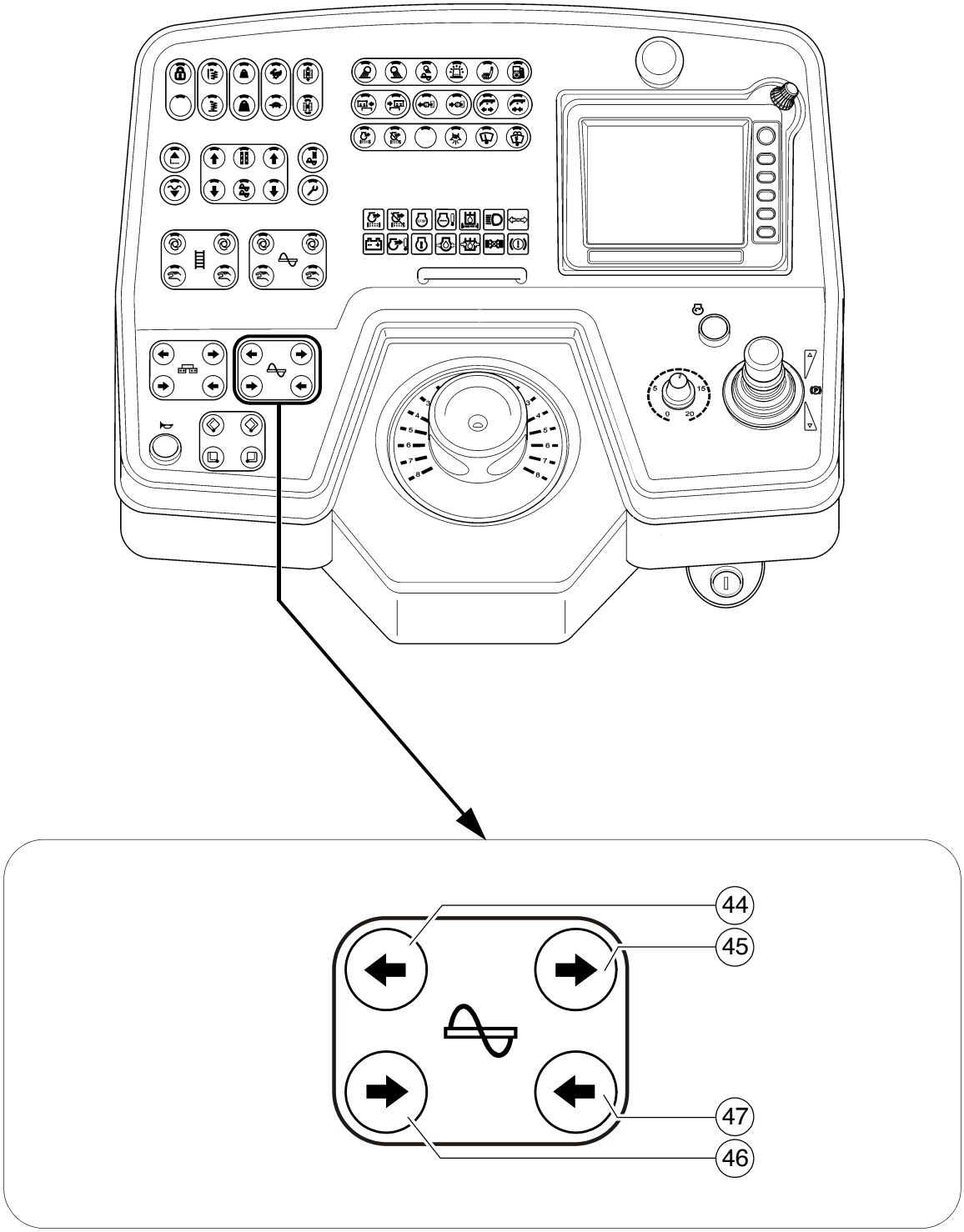
44
45
47
46

https://truckmanualshub.com/

Item	Designation	Brief description
44	Left auger "MANUAL" conveying direction outwards	Pushbutton function: - To manually trigger the conveying function for the left half of the auger, conveying direction outwards. ☞ For manual triggering, the auger function must be switched to "AUTO" or "MANUAL" ☞ On manual triggering, the automatic function is overridden with reduced delivery capacity.
45	Right auger "MANUAL" conveying direction outwards	Pushbutton function: - To manually trigger the conveying function for the right half of the auger, conveying direction outwards. ☞ For manual triggering, the auger function must be switched to "AUTO" or "MANUAL" ☞ On manual triggering, the automatic function is overridden with reduced delivery capacity.
46	Left auger "MANUAL" conveying direction inwards	Pushbutton function: - To manually trigger the conveying function for the left half of the auger, conveying direction inwards. ☞ For manual triggering, the auger function must be switched to "AUTO" or "MANUAL" ☞ On manual triggering, the automatic function is overridden with reduced delivery capacity.
47	Right auger "MANUAL" conveying direction inwards	Pushbutton function: - To manually trigger the conveying function for the right half of the auger, conveying direction inwards. ☞ For manual triggering, the auger function must be switched to "AUTO" or "MANUAL" ☞ On manual triggering, the automatic function is overridden with reduced delivery capacity.

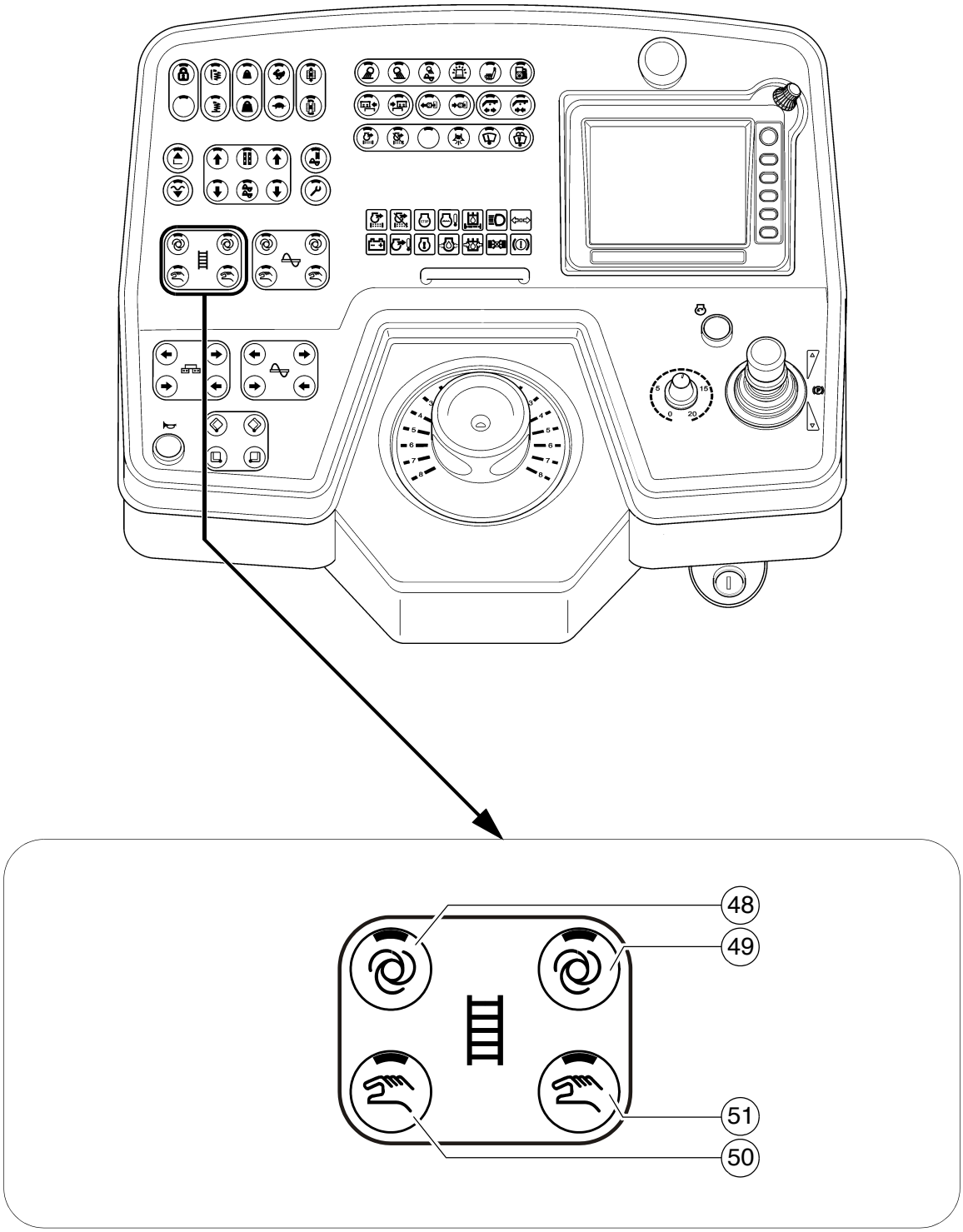
48
49
51
50

https://truckmanualshub.com/

Item	Designation	Brief description
48	Left conveyor "AUTO"	Button with detent switch function and LED feedback: - The conveying function of the left conveyor is switched on when the drive lever is swivelled out and is continuously controlled via the material limit switches in the material tunnel. - Switch OFF by pressing the button again ☞ The function is shut off by pressing the EMERGENCY STOP button or restarting the vehicle. ☞ The main function switch locks the conveying function. STOP On actuation, note danger zones of moving parts of the vehicle!
49	Right conveyor "AUTO"	Button with detent switch function and LED feedback: - The conveying function of the right conveyor is switched on when the drive lever is swivelled out and is continuously controlled via the material limit switches in the material tunnel. - Switch OFF by pressing the button again ☞ The function is shut off by pressing the EMERGENCY STOP button or restarting the vehicle. ☞ The main function switch locks the conveying function. STOP On actuation, note danger zones of moving parts of the vehicle!

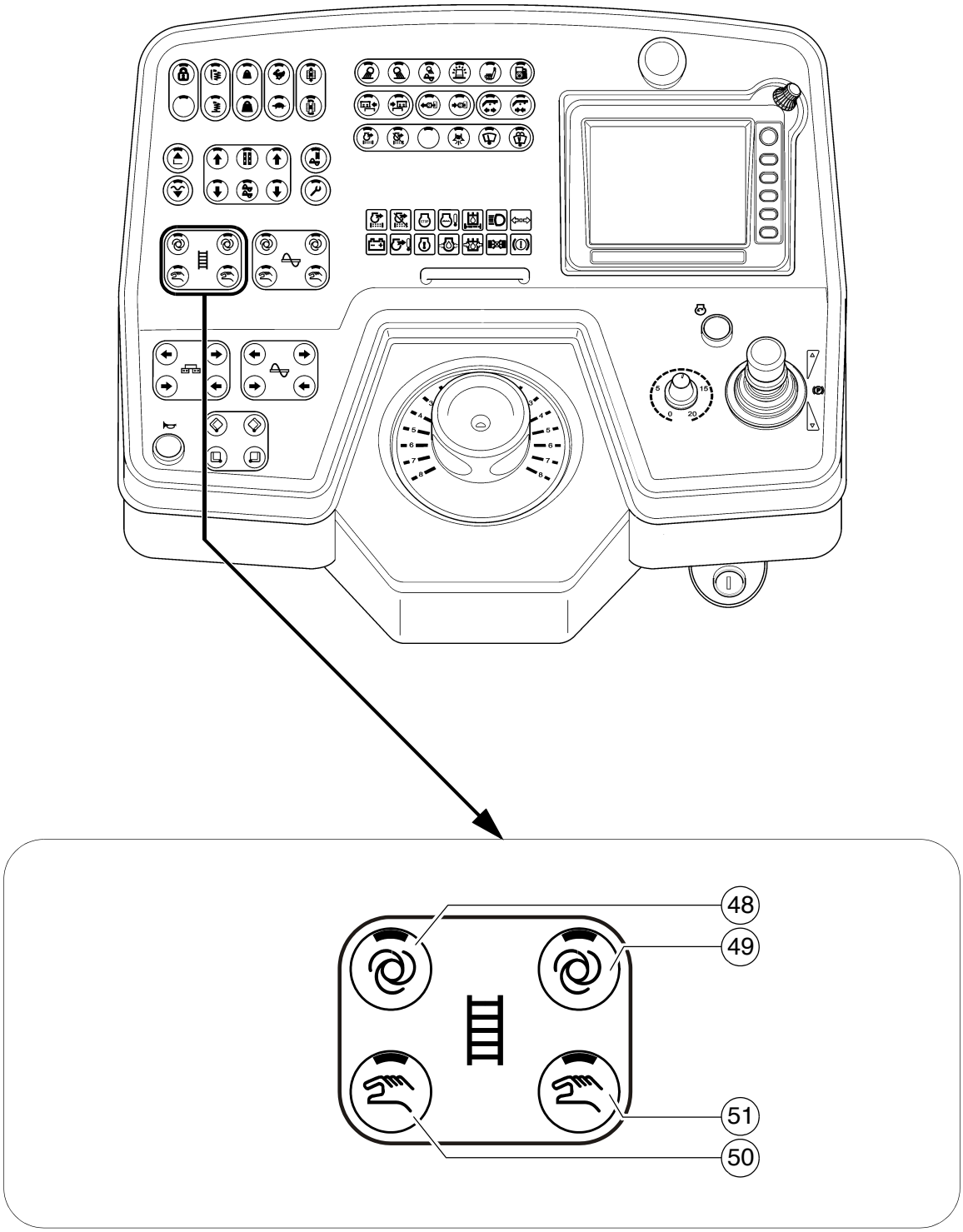
48
49
51
50

https://truckmanualshub.com/

Item	Designation	Brief description
50	Left conveyor "MANUAL" / reverse conveyor (○)	Button with detent switch function and LED feedback: - The conveying function of the left conveyor is switched on continuously with full delivery capacity, without material control via the limit switches in the material tunnel. - Switch OFF by pressing the button again. - Reverse conveyor: Keep button pressed for approx. 1 second. The main function switch (66) must be switched to "OFF" in this case. ☞ To avoid excessive conveying, the system is shut off at a defined material height! ☞ The function is shut off by pressing the EMERGENCY STOP button or restarting the vehicle. ☞ The main function switch locks the conveying function. STOP On actuation, note danger zones of moving parts of the vehicle!
51	Right conveyor "MANUAL" / reverse conveyor (○)	Button with detent switch function and LED feedback: - The conveying function of the right conveyor is switched on continuously with full delivery capacity, without material control via the limit switches in the material tunnel. - Switch OFF by pressing the button again. - Reverse conveyor: Keep button pressed for approx. 1 second. The main function switch (66) must be switched to "OFF" in this case. ☞ To avoid excessive conveying, the system is shut off at a defined material height! ☞ The function is shut off by pressing the EMERGENCY STOP button or restarting the vehicle. ☞ The main function switch locks the conveying function. STOP On actuation, note danger zones of moving parts of the vehicle!

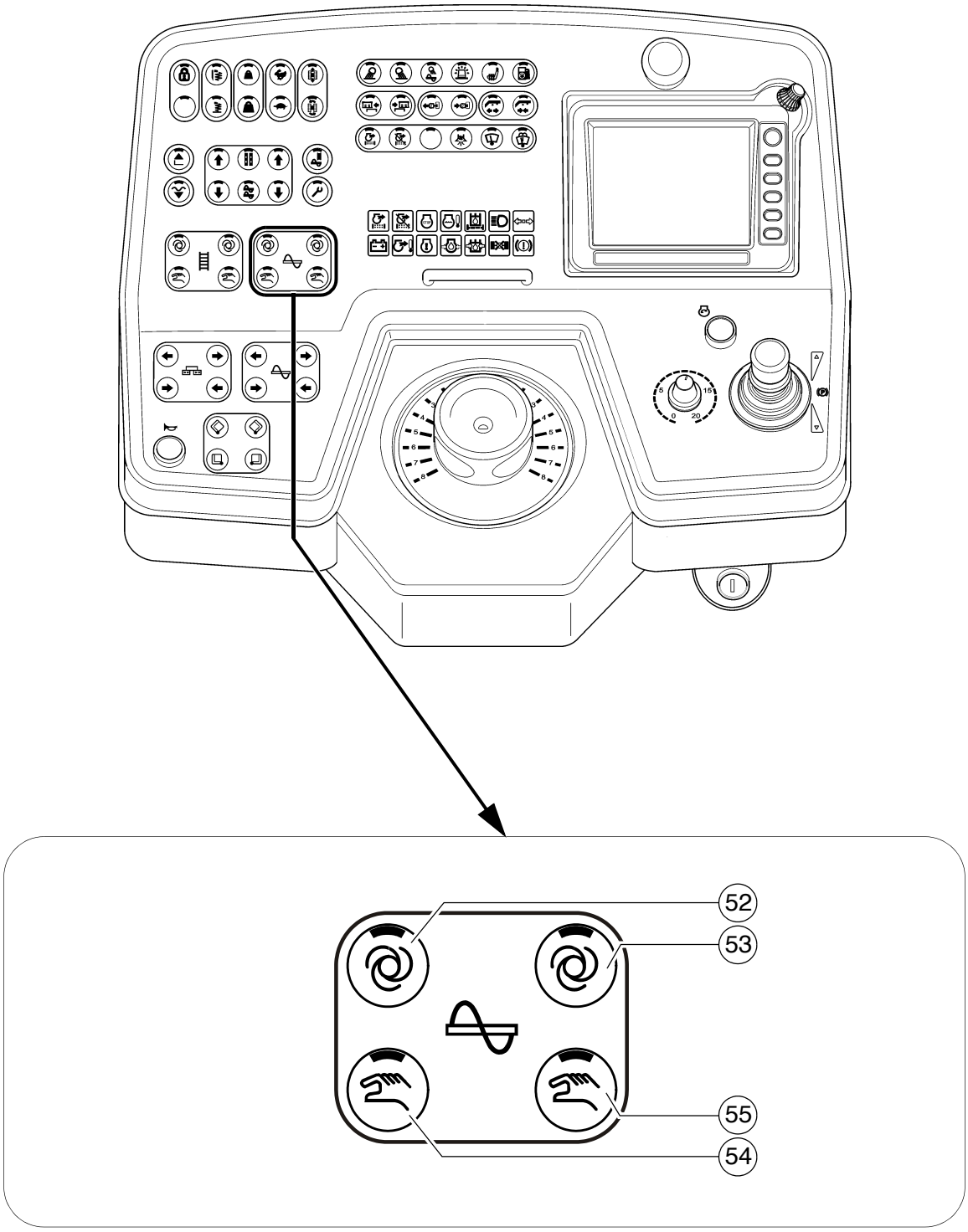
52
53
55
54

https://truckmanualshub.com/

Item	Designation	Brief description
52	Left auger "AUTO"	Button with detent switch function and LED feedback: - The conveying function of the left half of the auger is switched on when the drive lever is swivelled out and is continuously controlled via the material limit switches. - Switch OFF by pressing the button again ☞ The function is shut off by pressing the EMERGENCY STOP button or restarting the vehicle. ☞ The main function switch locks the conveying function. STOP On actuation, note danger zones of moving parts of the vehicle!
53	Right auger "AUTO"	Button with detent switch function and LED feedback: - The conveying function of the right half of the auger is switched on when the drive lever is swivelled out and is continuously controlled via the material limit switches in the material tunnel. - Switch OFF by pressing the button again ☞ The function is shut off by pressing the EMERGENCY STOP button or restarting the vehicle. ☞ The main function switch locks the conveying function. STOP On actuation, note danger zones of moving parts of the vehicle!

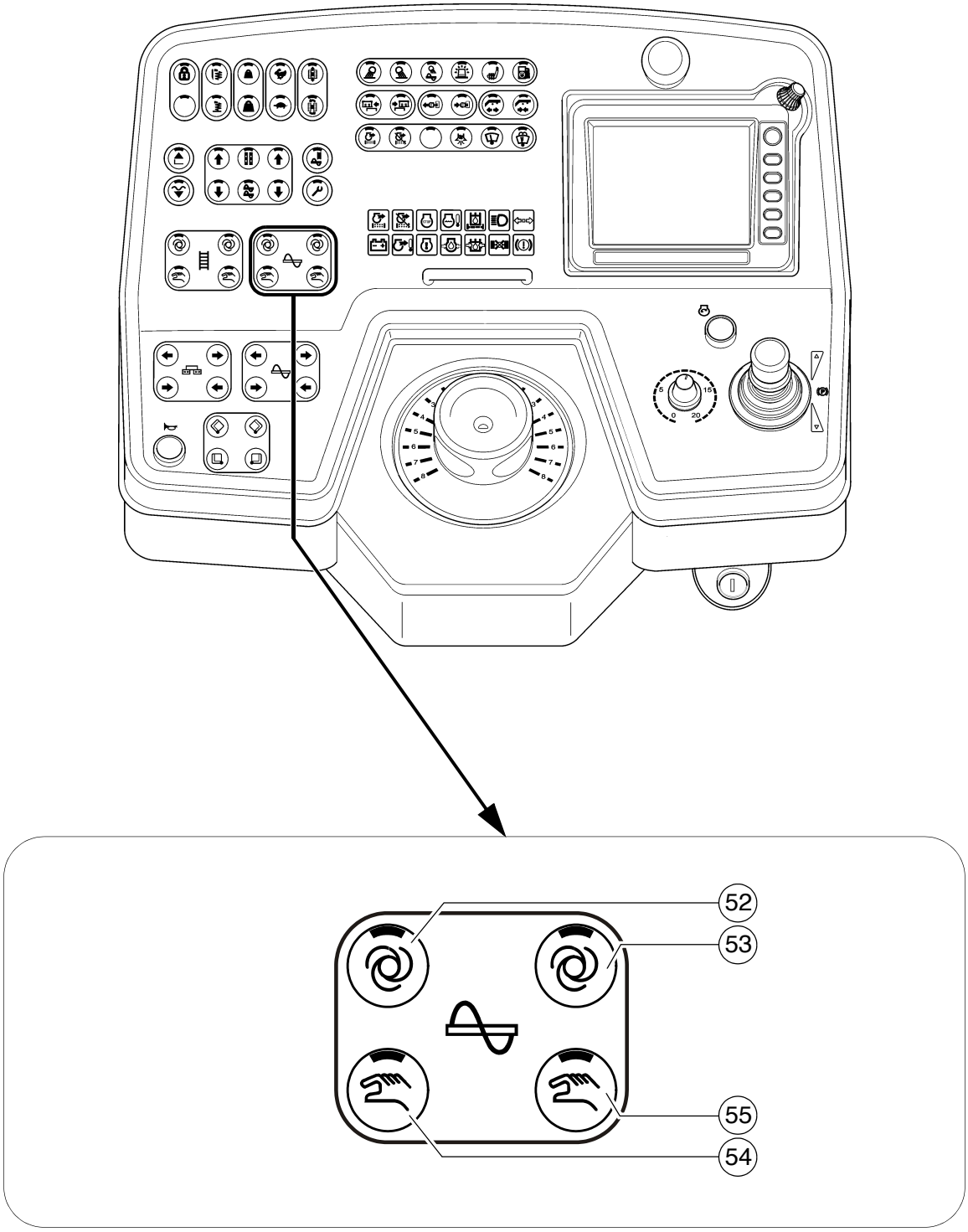
52
53
55
54

https://truckmanualshub.com/

Item	Designation	Brief description
54	Left auger "MANUAL"	Button with detent switch function and LED feedback: - The conveying function of the left half of the auger is switched on continuously with full delivery capacity, without material control via the limit switches. - Switch OFF by pressing the button again ☞ The function is shut off by pressing the EMERGENCY STOP button or restarting the vehicle. ☞ The main function switch locks the conveying function. STOP On actuation, note danger zones of moving parts of the vehicle!
55	Right auger "MANUAL"	Button with detent switch function and LED feedback: - The conveying function of the right half of the auger is switched on continuously with full delivery capacity, without material control via the limit switches. - Switch OFF by pressing the button again ☞ The function is shut off by pressing the EMERGENCY STOP button or restarting the vehicle. ☞ The main function switch locks the conveying function. STOP On actuation, note danger zones of moving parts of the vehicle!

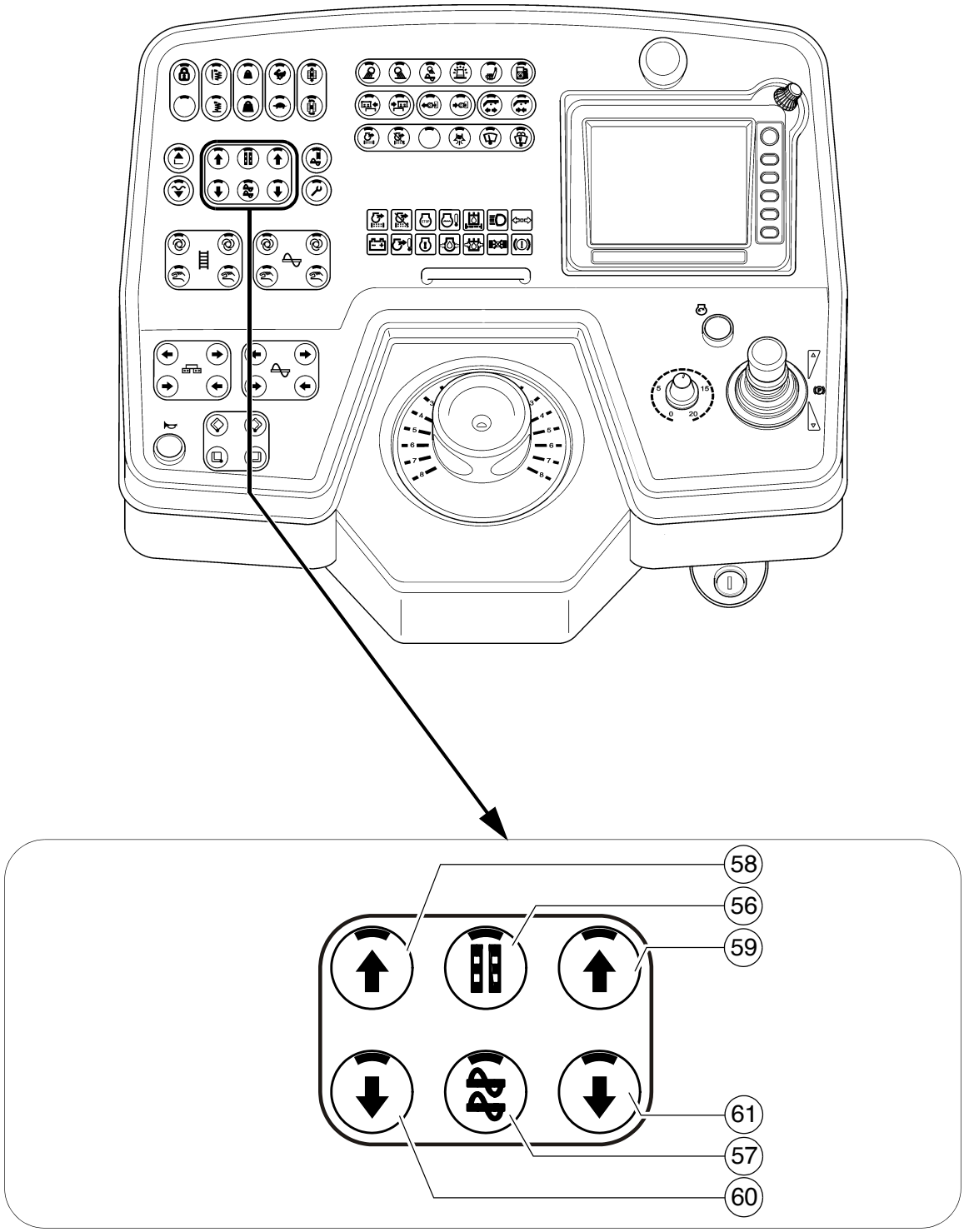
58
56
59
61
57
60

https://truckmanualshub.com/

Item	Designation	Brief description
56	Adjustment Levelling cylinder	Button with detent switch function and LED feedback: - For manual actuation of the levelling cylinders when the automatic levelling system is switched off. - Switch OFF by pressing the button again ☞ The corresponding switch on the remote control must be switched to "Manual" for this function. ☞ Levelling cylinder adjustment is carried out with the adjustment buttons in the displayed arrow direction. ☞ This function is also activated when the remote control is not connected!
57	Auger Lift/lower (○)	Button with detent switch function and LED feedback: - For hydraulic adjustment of the auger height. - Switch OFF by pressing the button again. ☞ The height can be read on the scales to the left and the right of the auger crossbeam support. Rule of thumb: Paving thickness plus 5 cm (2 inches) equals the auger crossbeam height. ☞ Actuate both relevant adjustment switches at the same time as the auger crossbeam otherwise jams! ☞ Auger adjustment is carried out with the adjustment buttons in the displayed arrow direction!

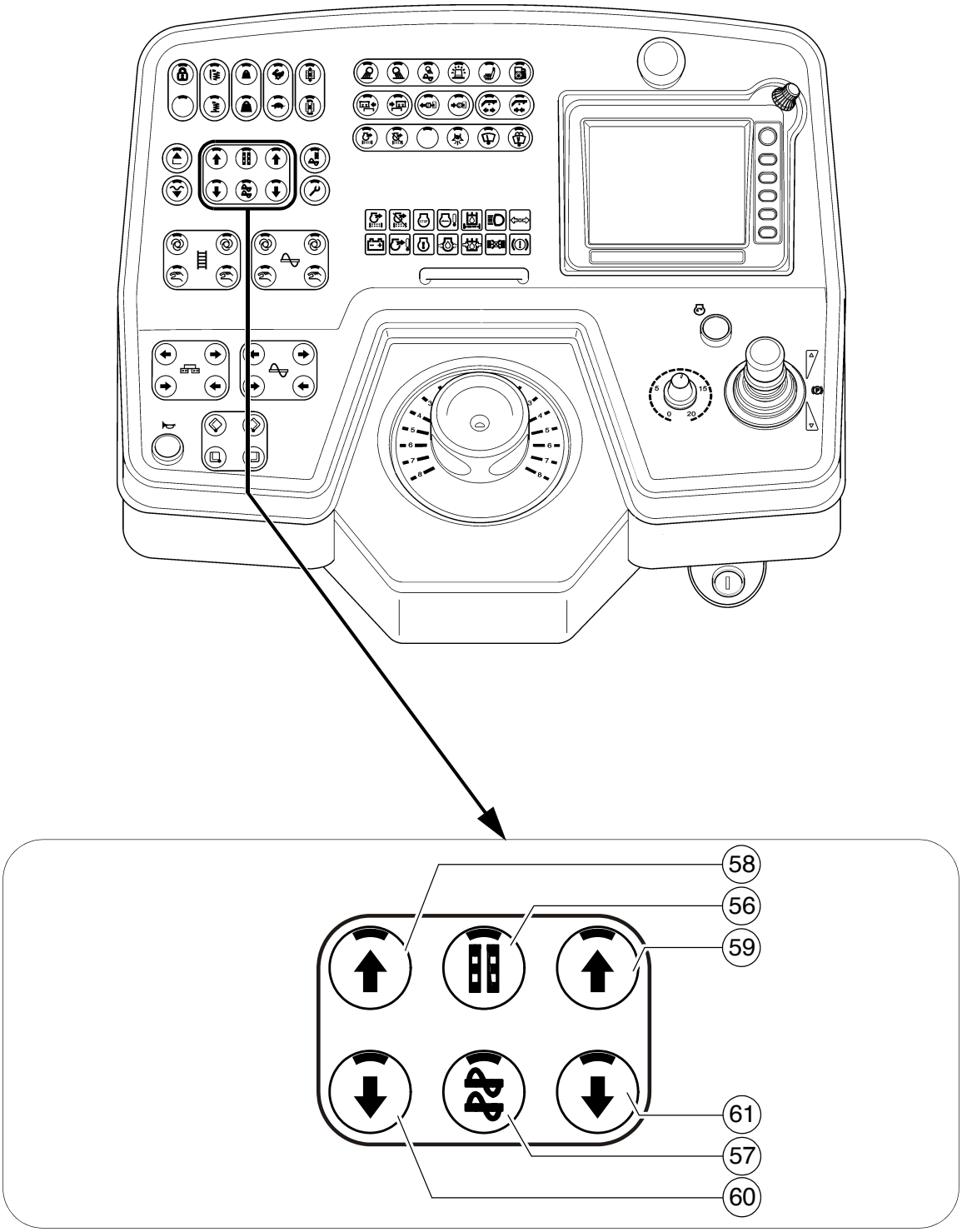
58
56
59
61
57
60

https://truckmanualshub.com/

Item	Designation	Brief description
58	Adjustment button: Retract / lift on left	Pushbutton function: - To adjust the selected function in the corresponding direction. STOP On actuation, note danger zones of moving parts of the vehicle!
59	Adjustment button: Retract / lift on right	Pushbutton function: - To adjust the selected function in the corresponding direction. STOP On actuation, note danger zones of moving parts of the vehicle!
60	Adjustment button: Extend / lower on left	Pushbutton function: - To adjust the selected function in the corresponding direction. STOP On actuation, note danger zones of moving parts of the vehicle!
61	Adjustment button: Extend / lower on right	Pushbutton function: - To adjust the selected function in the corresponding direction. STOP On actuation, note danger zones of moving parts of the vehicle!

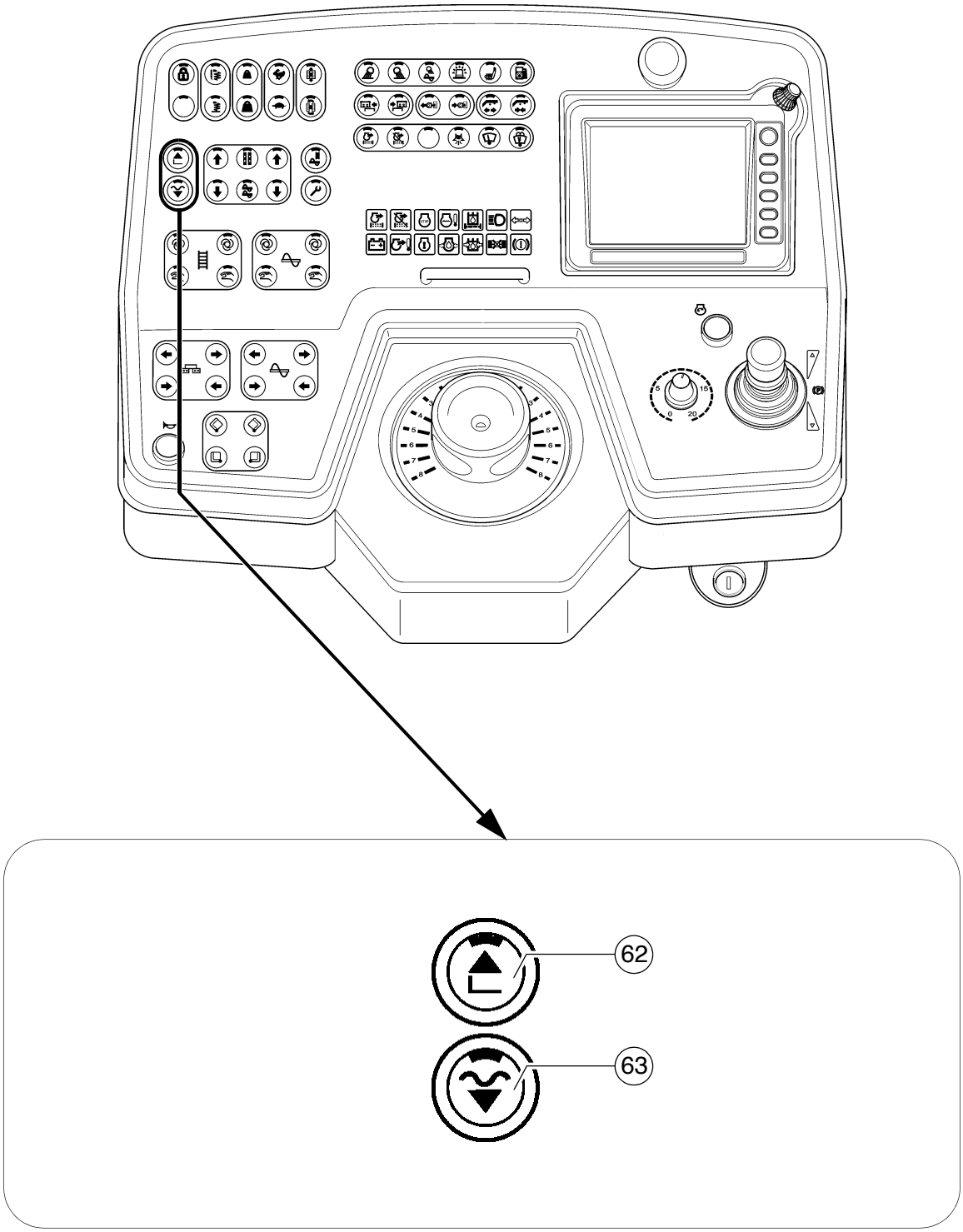
62
63

https://truckmanualshub.com/

Item	Designation	Brief description
62	Lift screed	Pushbutton function with LED feedback: - For lifting the screed (LED ON) for switching off the "Screed floating position" function ⚠ Check whether the screed transport safeguard is inserted! STOP On actuation, note danger zones of moving parts of the vehicle!
63	Stop paving + relief pressure / lower screed + floating position	Button with detent switch function and LED feedback ☞ The main function switch must be set to the OFF position. - Button function: Keep the button pressed for longer than 1.5 seconds (LED ON). The screed is lowered as long as the button is pressed. When the button is released, the screed is held in the stop paving + relief pressure position. (LED ON). ⚠ Screed may lower slowly! - Resting function: Press the button briefly (LED ON) - the screed is lowered. Press the button briefly again - the screed is stopped. - Screed floating position: Pressing the button switches the LED ON and the screed is in readiness in the "floating position", which is activated via the swivelled out drive lever. - Switch off by pressing the button again or via the lift screed button. ☞ During paving, the screed always remains in its floating position. During intermediate stops (drive lever in centre position), the screed is switched to stop paving + relief pressure. ⚠ Check whether the screed transport safeguard is inserted! STOP On actuation, note danger zones of moving parts of the vehicle!

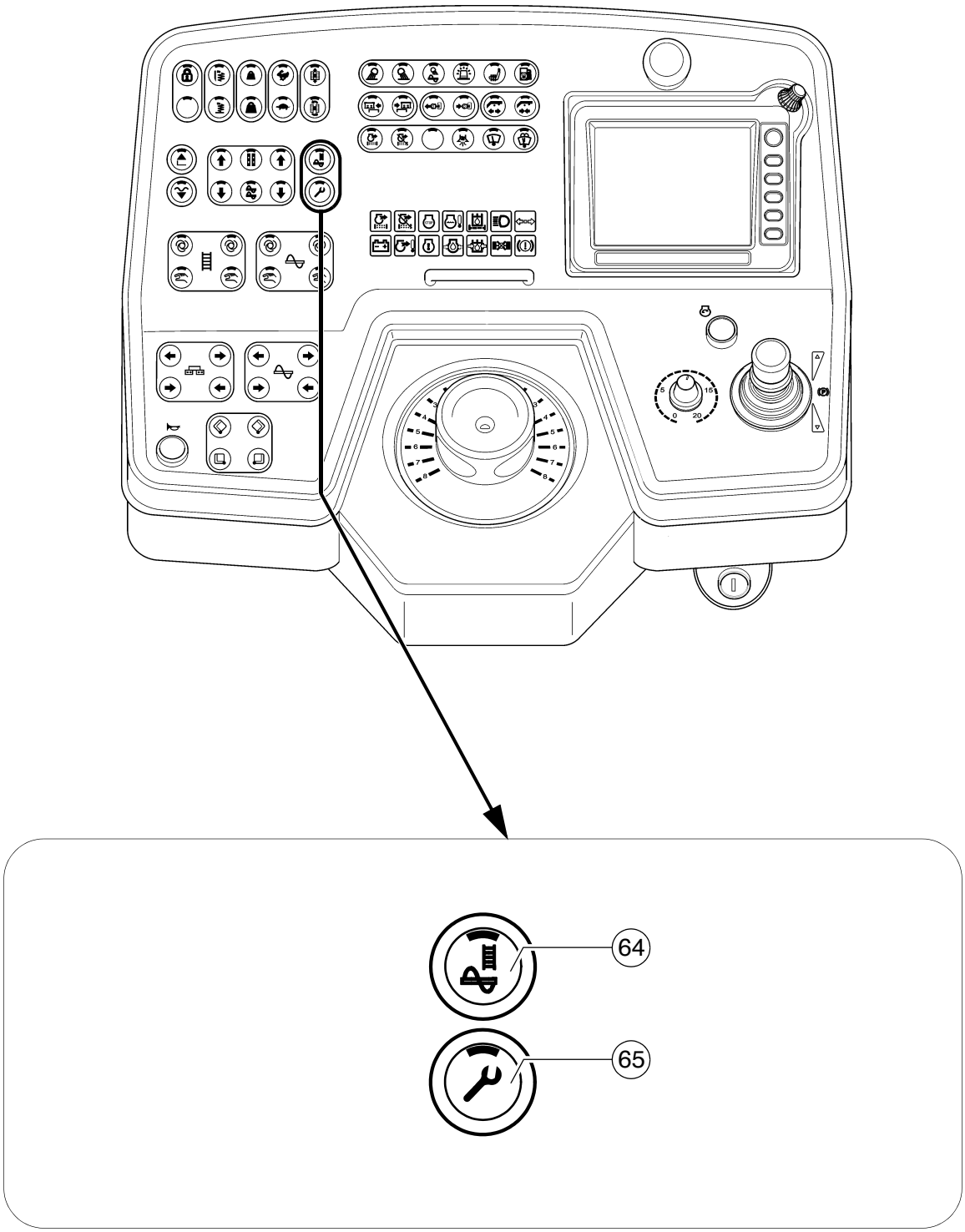
64
65

https://truckmanualshub.com/

Item	Designation	Brief description
64	Fill vehicle for paving process	Detent switch function and LED feedback: - Filling function for the paving process. The diesel engine's speed is increased to the preselected nominal speed and all conveying functions set to "Automatic" (conveyor and auger) are engaged. ☞ The main function switch must be set to the OFF position. - Switch OFF by pressing the button again or by swivelling the drive lever out to the paving position. - On reaching the adjusted material height (material sensor), the filling function is automatically switched off. STOP On actuation, note danger zones of moving parts of the vehicle!
65	Set-up mode	Detent switch function and LED feedback: - When the vehicle is stationary, this function enables all operating functions, which can only be activated when the drive lever is swivelled out (vehicle driving), to be started up. ☞ The main function switch must be set to the OFF position. ☞ The engine speed is increased to the preselected nominal value.

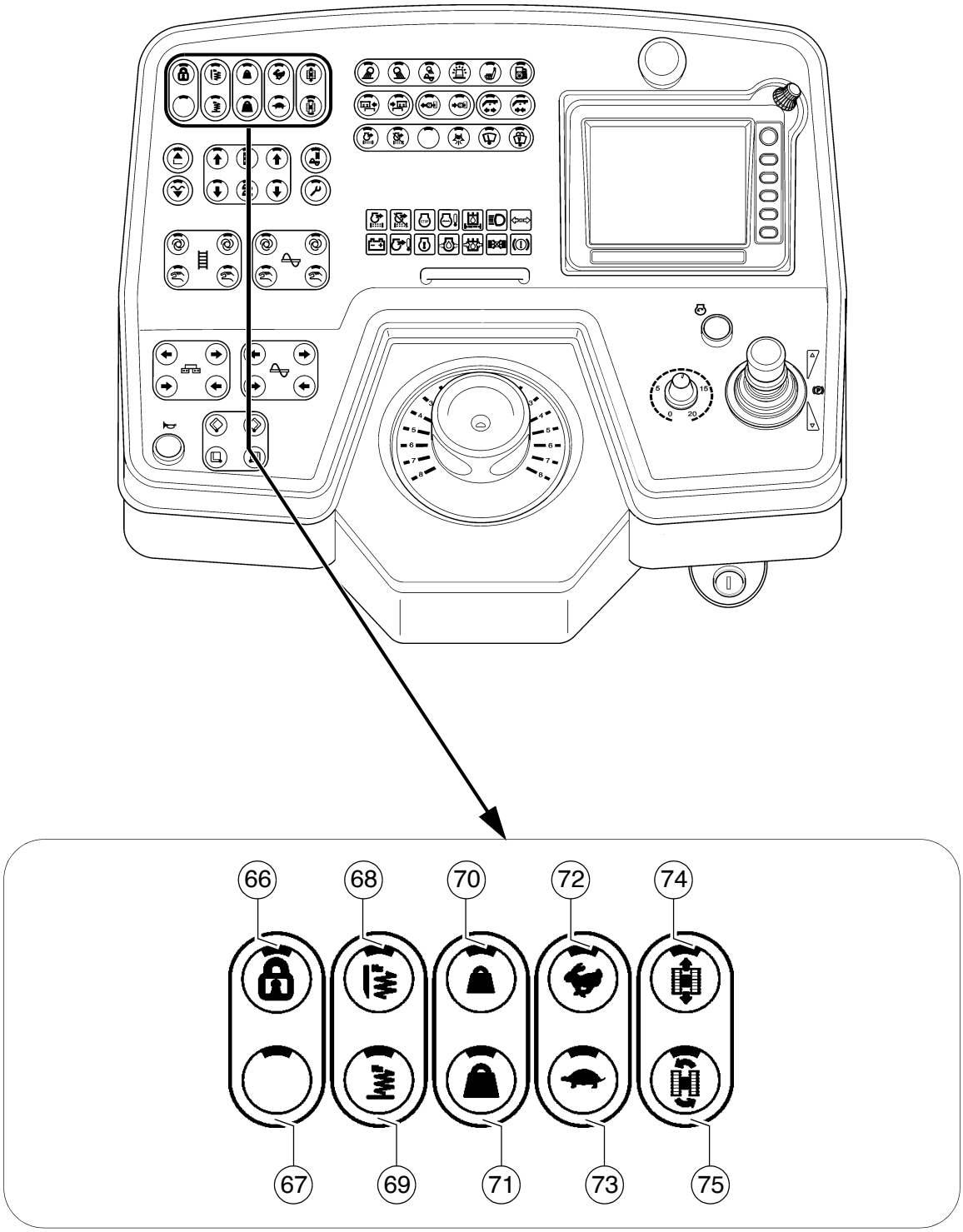
66
68
70
72
74
67
69
71
73
75

https://truckmanualshub.com/

Item	Designation	Brief description
66	Main function switch	Detent switch function and LED feedback: - To lock all functions relevant to paving. Despite "Auto" settings in the individual functions, these are not activated when the drive lever is swivelled out. - Switch OFF by pressing the button again. ☞ The preset vehicle can be relocated and released at the new paving location. The paving process is continued on swivelling the drive lever out. ☞ On restarting, the function is set to "ON".
67	not used	
68	Tamper (screed-specific)	Button with detent switch function and LED feedback: - Tamper ON and OFF function. - Activation is carried out by swivelling the drive lever out. - Switch OFF by pressing the button again. ☞ The main function switch must be set to the OFF position. ☞ The function is preset in conjunction with the "Set-up mode" button.
69	Vibration (screed-specific)	Button with detent switch function and LED feedback: - Vibration ON and OFF function. - Activation is carried out by swivelling the drive lever out. - Switch OFF by pressing the button again. ☞ The main function switch must be set to the OFF position. ☞ The function is preset in conjunction with the "Set-up mode" button.

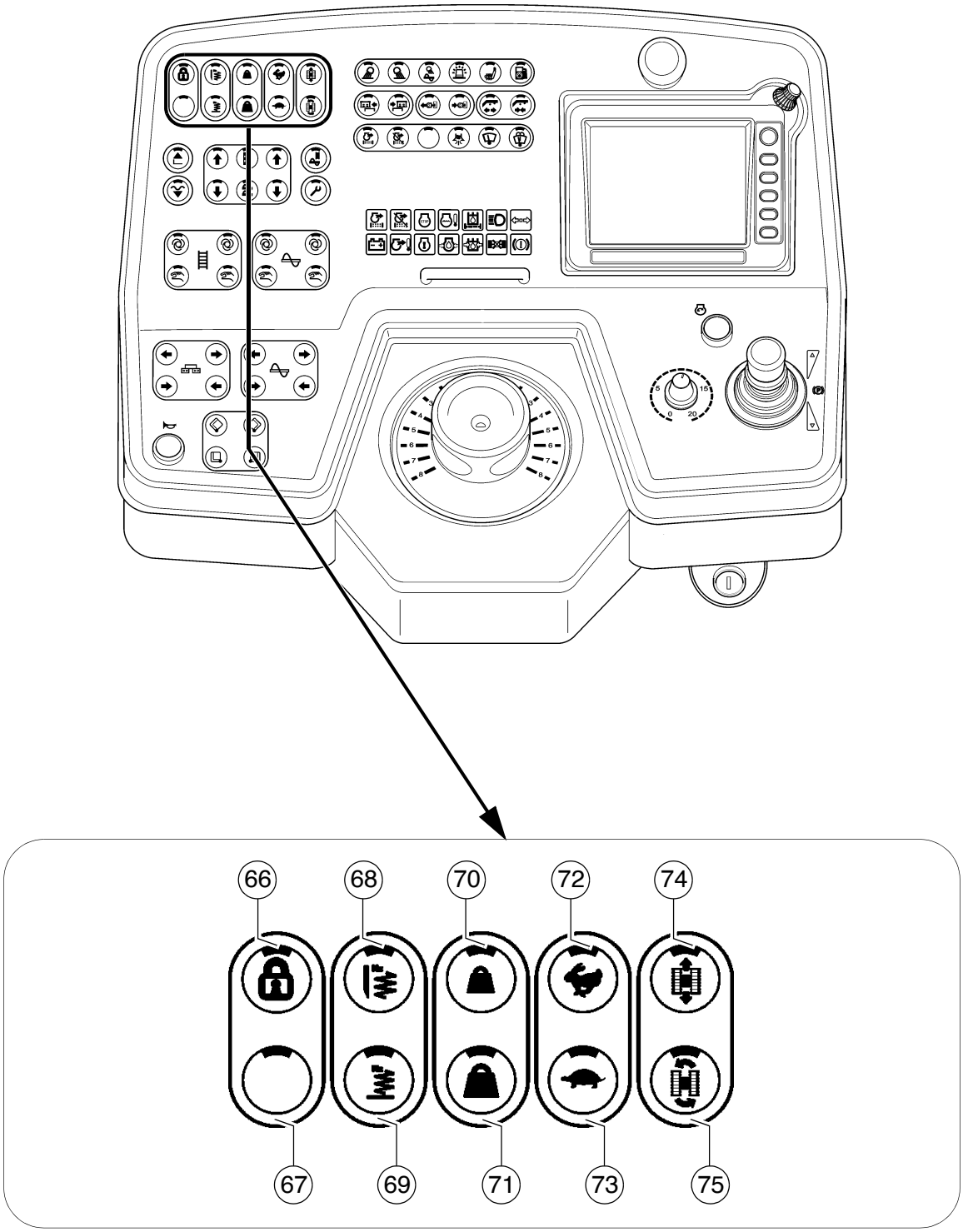
66
68
70
72
74
67
69
71
73
75

https://truckmanualshub.com/

Item	Designation	Brief description
70	Screed relieving	Button with detent switch function and LED feedback: - For relieving the screed to influence the traction force and compaction ratio. - Switch OFF by pressing the button again or switching between screed relieving and screed charging. - To preset the hydraulic oil pressure, switch this button and the "Set-up mode" button to "ON".
71	Screed charging	Button with detent switch function and LED feedback: - For relieving the screed to influence the traction force and compaction ratio. - Switch OFF by pressing the button again or switching between screed relieving and screed charging. - To preset the hydraulic oil pressure, switch this button and the "Set-up mode" button to "ON".

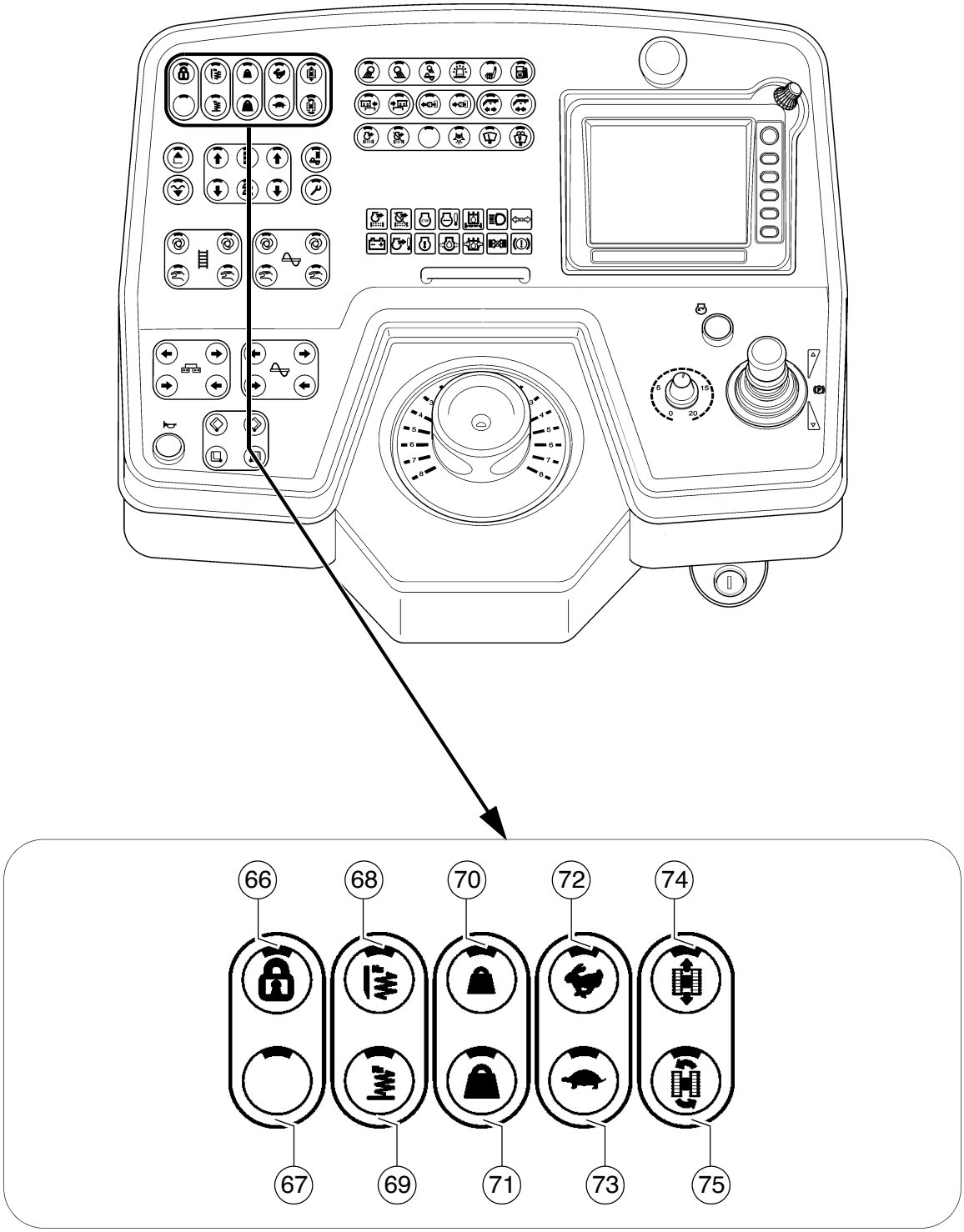
66
68
70
72
74
67
69
71
73
75

https://truckmanualshub.com/

Item	Designation	Brief description
72	Travel drive fast (hare)	Buttons with detent switch function and LED feedback: - To preselect the speed level - transport speed ☞ On restarting, the speed is set to operating speed (tortoise).
73	Travel drive slow (tortoise)	Buttons with detent switch function and LED feedback: - To preselect the speed level - operating speed. ☞ On restarting, the buttons are set to operating speed (tortoise).
74	Straight-ahead travel	Button with detent switch function and LED feedback: - Normal position for straight-ahead travel. ☞ On restarting, the "Straight-ahead travel" button is set. ☞ If the "Turning on the spot" function has been inadvertently activated (and the steering is set to straight-ahead travel), the paver finisher does not move. This is often interpreted as a "malfunction".
75	Turning on the spot	Button with detent switch function and LED feedback: - The vehicle turns on the spot (the caterpillar chains run in opposite directions) when the steering is set to "10". - Steering turned to the left = vehicle turns to the left - Steering turned to the right = vehicle turns to the right ☞ The function can only be activated in the "travel drive slow" speed. ☞ If the "Turning on the spot" function has been inadvertently activated (and the steering is set to straight-ahead travel), the paver finisher does not move. This is often interpreted as a "malfunction". STOP When the vehicle turns, persons and objects next to the paver finisher are in extreme danger. Monitor the area where the paver finisher turns!

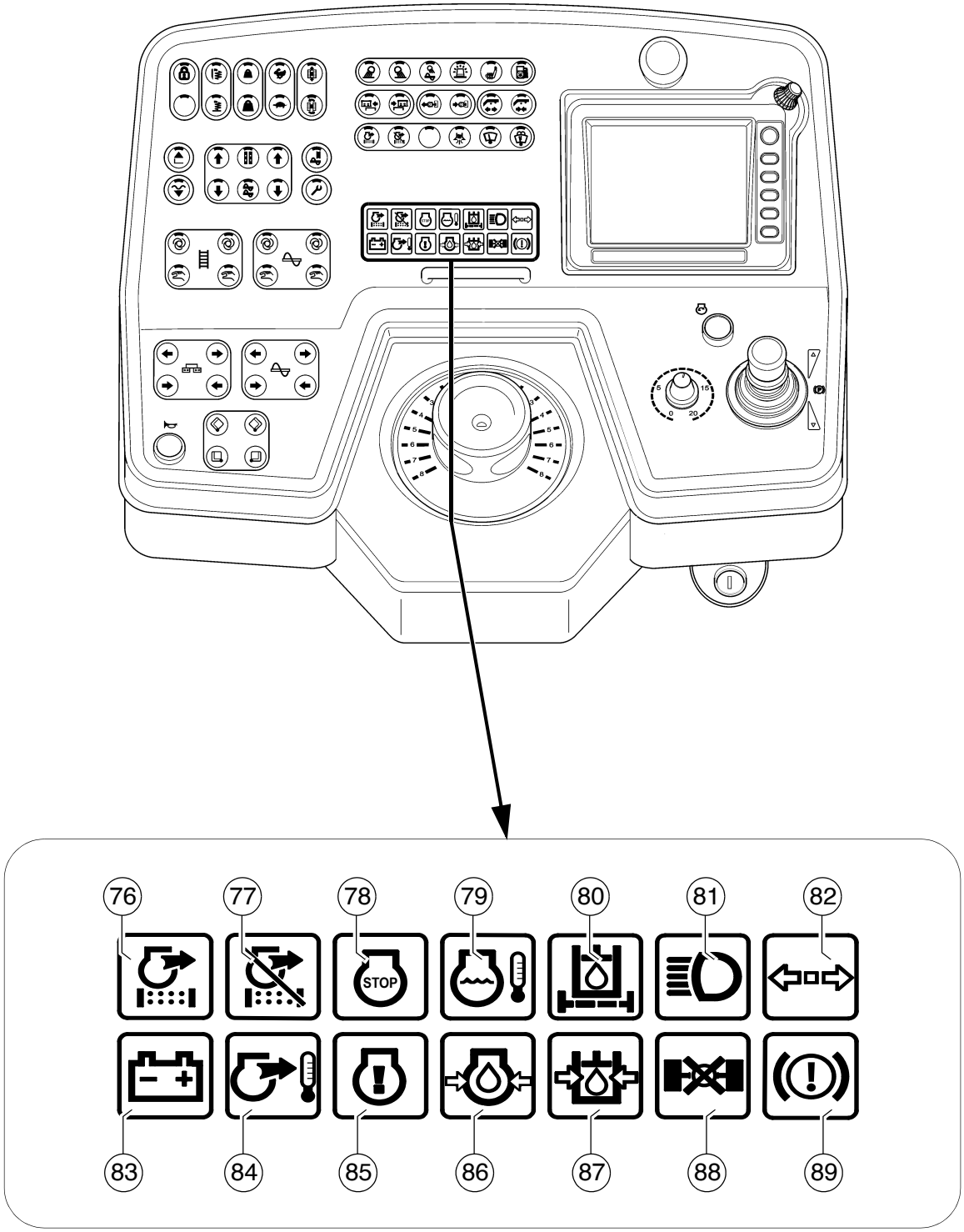
76
77
78
STOP
79
80
81
82
83
84
85
86
87
88
89

https://truckmanualshub.com/

Item	Designation	Brief description
76	Indicator lamp particulate filter maintenance (○)	Lights up when particulate filter regeneration is necessary. - Indicator lamp on all the time: Urgent maintenance, level I. Particulate filter regeneration must be carried out as soon as the operating status of the machine permits. - Indicator light flashes: Urgent maintenance, level II. Particular filter regeneration must be carried out as soon as possible. - Indicator light flashes + indicator light "Engine malfunction" (85) is on all the time. Urgent maintenance, level III. Particulate filter regeneration is vitally necessary to avoid subsequent damage and repairs. - Indicator light goes off + indicator light "Engine malfunction" (78) is on all the time. Particulate filter regeneration is no longer possible. ⚠ Operation must be stopped immediately. ☞ Consult the Dynapac Service Department.
77	Indicator lamp particulate filter regeneration, automatic - deactivated (○)	Lights up when particulate filter regeneration is deactivated. ☞ Automatic regeneration should only be deactivated if the operating status of the paver finisher does not permit any automatic function.
78	Error message "Serious error" (red)	Lights up when a serious error has occurred on the engine. ⚠ Switch off the drive engine immediately! ☞ The error code can be called up using the switch "Call up error / malfunction". ☞ Lights up for a few seconds once the ignition has been switched on for checking purposes.
79	Indicator lamp Engine coolant temperature	Lights up when the engine temperature is too high. ⚠ The engine performance will be throttled down automatically. (Driving mode remains possible). Stop the paver finisher (drive lever to the centre position), let the engine cool down while idling. Determine the cause and rectify if necessary (refer to "Malfunctions" section). After cooling down to normal temperature, the engine will run with full performance again. ☞ Indicates the fault together with the "Error message" lamp.

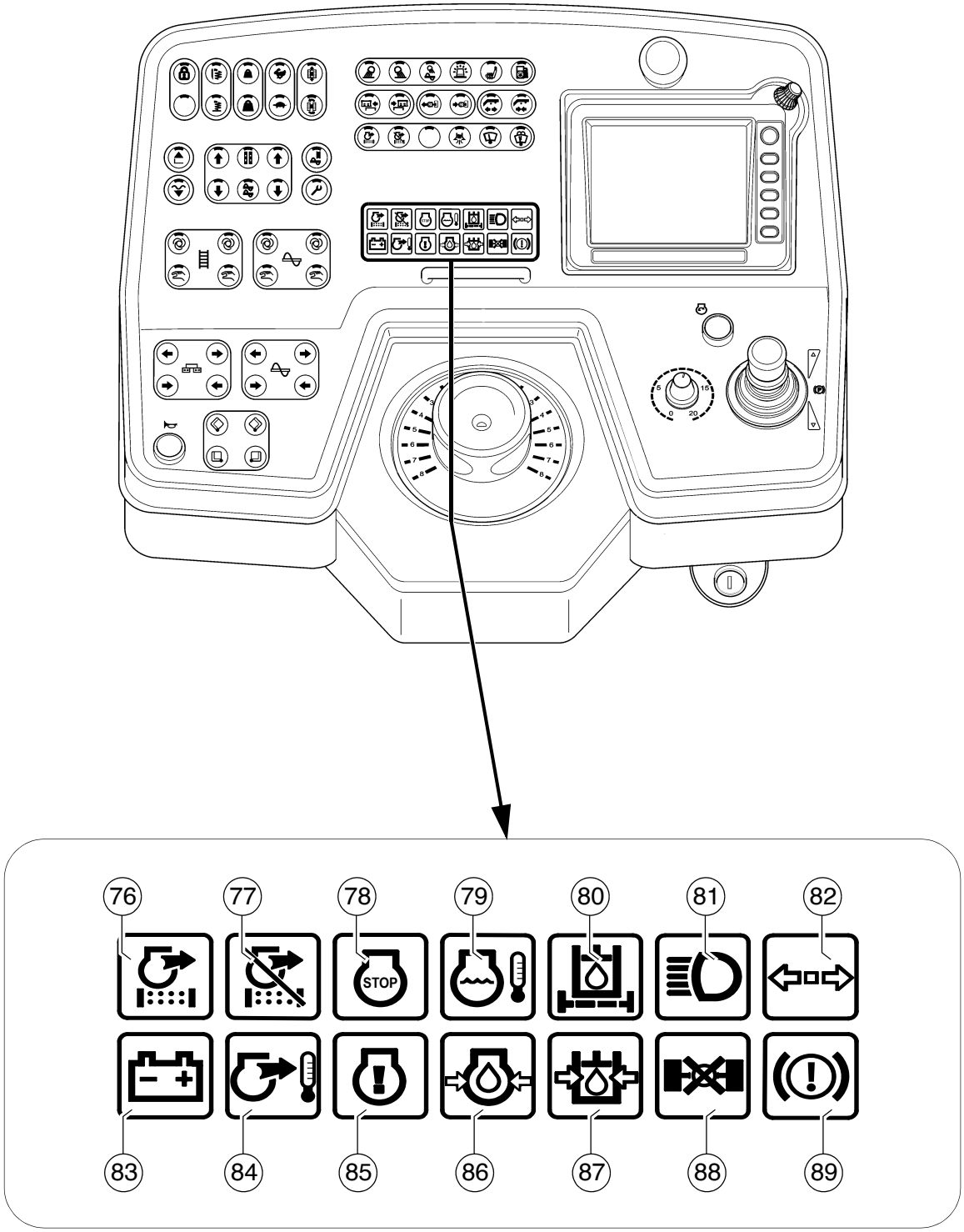
76
77
78
STOP
79
80
81
82
83
84
85
86
87
88
89

https://truckmanualshub.com/

Item	Designation	Brief description
80	Indicator lamp hydraulic filter	Lights up when the hydraulic filter needs replacing. ☞ Replace filter element acc. to Maintenance Instructions!
81	not used	
82	not used	
83	Battery charge indicator (red)	Must go out after starting when the engine revs up. - If the light does not go out, switch off the engine
84	"HEST" warning message (○)	The HEST lamp lights up when the exhaust gas temperature is increased due to particulate filter regeneration. This is a normal process and does not indicate a fault. ⚠ When this lamp lights up, make sure that the exhaust pipe is not pointing at flammable materials or surfaces!
85	Error message (yellow)	Indicates that there is a drive engine fault. Depending on the type of fault, the vehicle can temporarily continue to be operated or, in the case of serious faults, should be shut down immediately to prevent further damage from occurring. Each fault should be rectified as soon as possible! ☞ The error code can be called up using the switch "Call up error / malfunction". ☞ Lights up for a few seconds once the ignition has been switched on for checking purposes.
86	Oil pressure indicator lamp for the diesel engine (red)	⚠ Lights up when the oil pressure is too low. Switch off the engine immediately! For further possible faults, see Engine operating instructions. ☞ Indicates the fault together with the "Error message" lamp.
87	not used	
88	not used	
89	not used	

https://truckmanualshub.com/

2.2 Special functions

Reversible conveyor

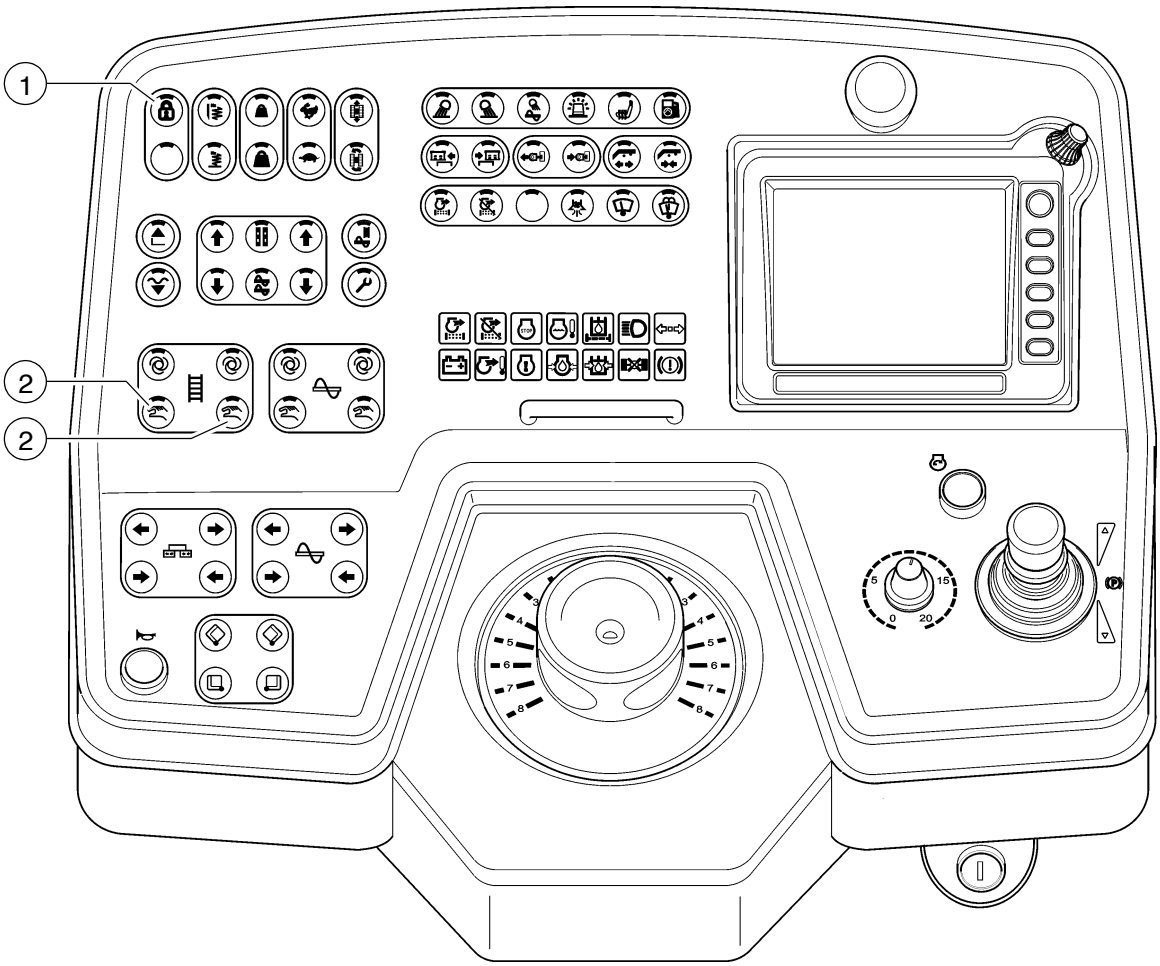

https://truckmanualshub.com/

The conveyor's direction can be reversed in order to slightly reverse any paving material which may be positioned just in front of the auger. This enables e.g. material losses to be avoided during transportation.

- Switch the main function switch (1) to the "off" position (LED off).
- Keep one or both buttons (2) depressed for approx. 1 second.
  The conveyor moves a distance of approx. 1 metre towards the hopper.

☞ If necessary, this process can be repeated as often as required to allow the conveyor to run further in the reverse direction.

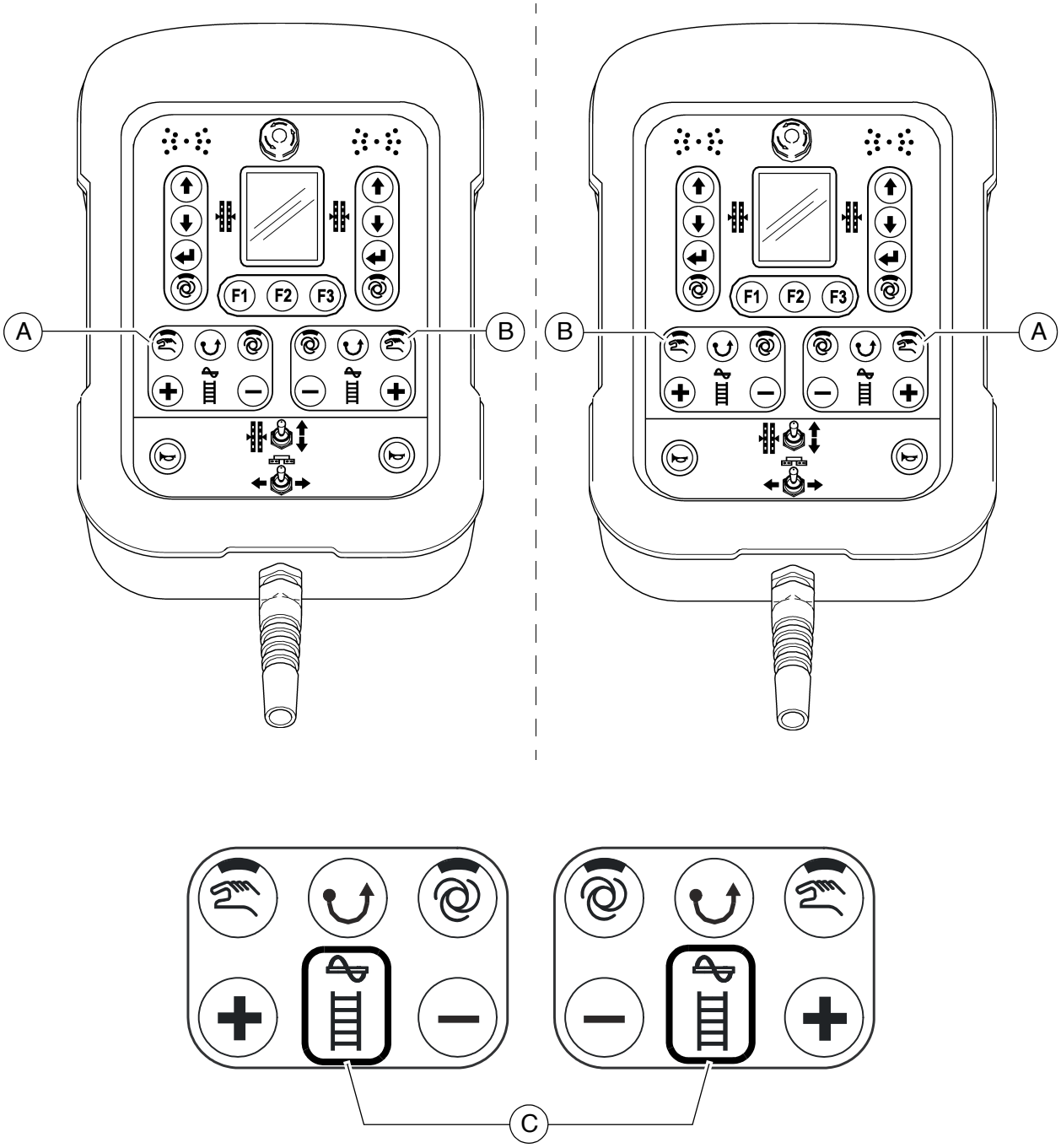
F1
F2
F3
A
B
B
A
C

https://truckmanualshub.com/

3 Remote control

☞ Depending on the side of the vehicle, the button blocks (A) and (B) are assigned to either the auger or the conveyor control system. The relevant element which is controlled is indicated by an illuminated symbol (C).

⚠ Important! Do not disconnect remote controls during operation!
This causes the paver finisher to be shut down!

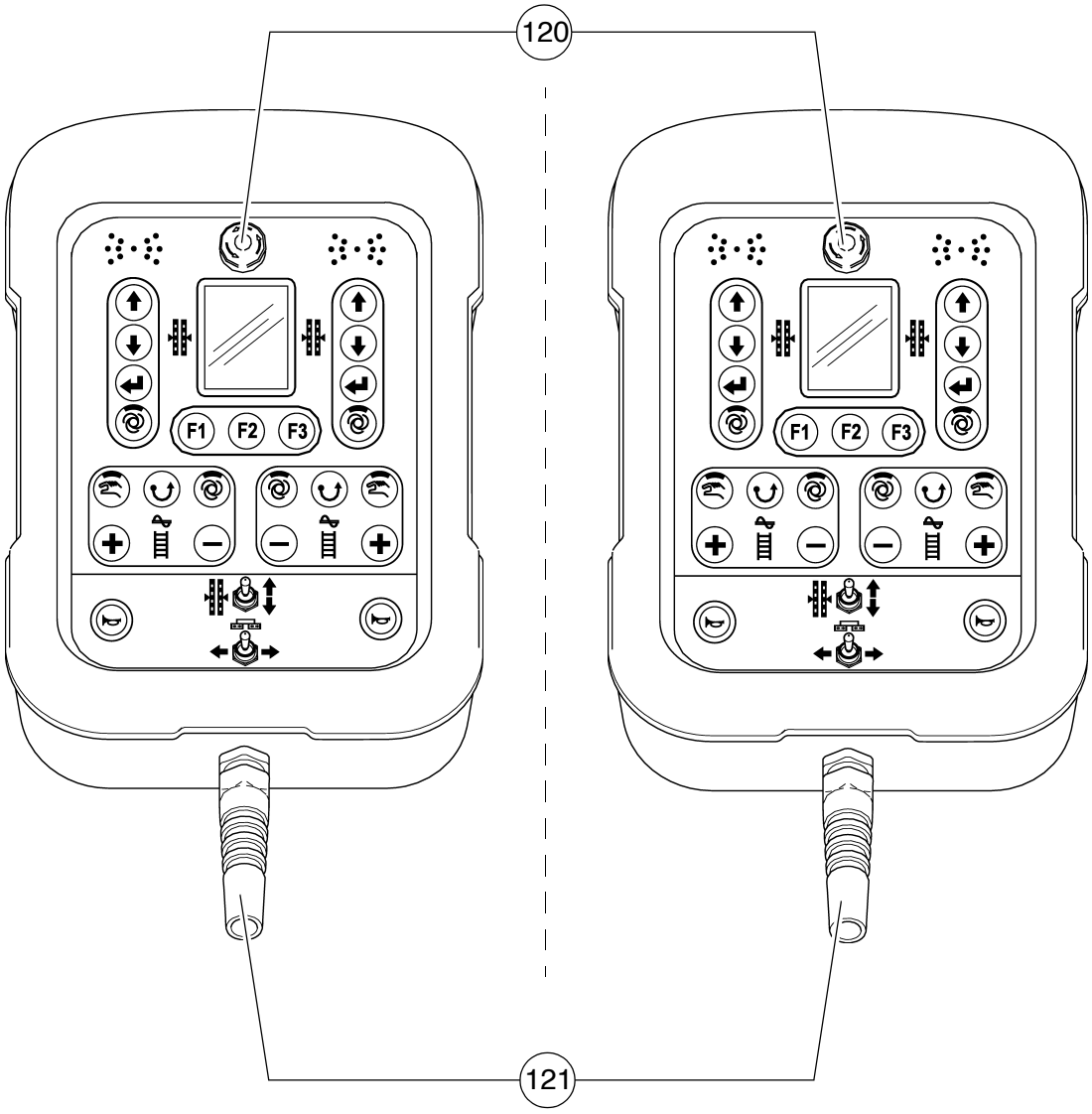
120
F1
F2
F3
F1
F2
F3
121

https://truckmanualshub.com/

Item	Designation	Brief description
120	Emergency stop button	In the case of an emergency (danger to persons, possible collision, etc.), press in the button! - Pressing the emergency stop button switches the engine, the drives and the steering system off. Making way, lifting the screed or other actions are then no longer possible! Danger of accidents! - The emergency stop button does not shut off the gas heater system. Close the main shut-off valve and the valves on the bottles by hand! - To restart the engine, the button must be pulled out again.
121	Remote control connection cable	Connect the plug to the screed. ☞ Whether this involves the left-hand or the right-hand remote control is automatically detected.

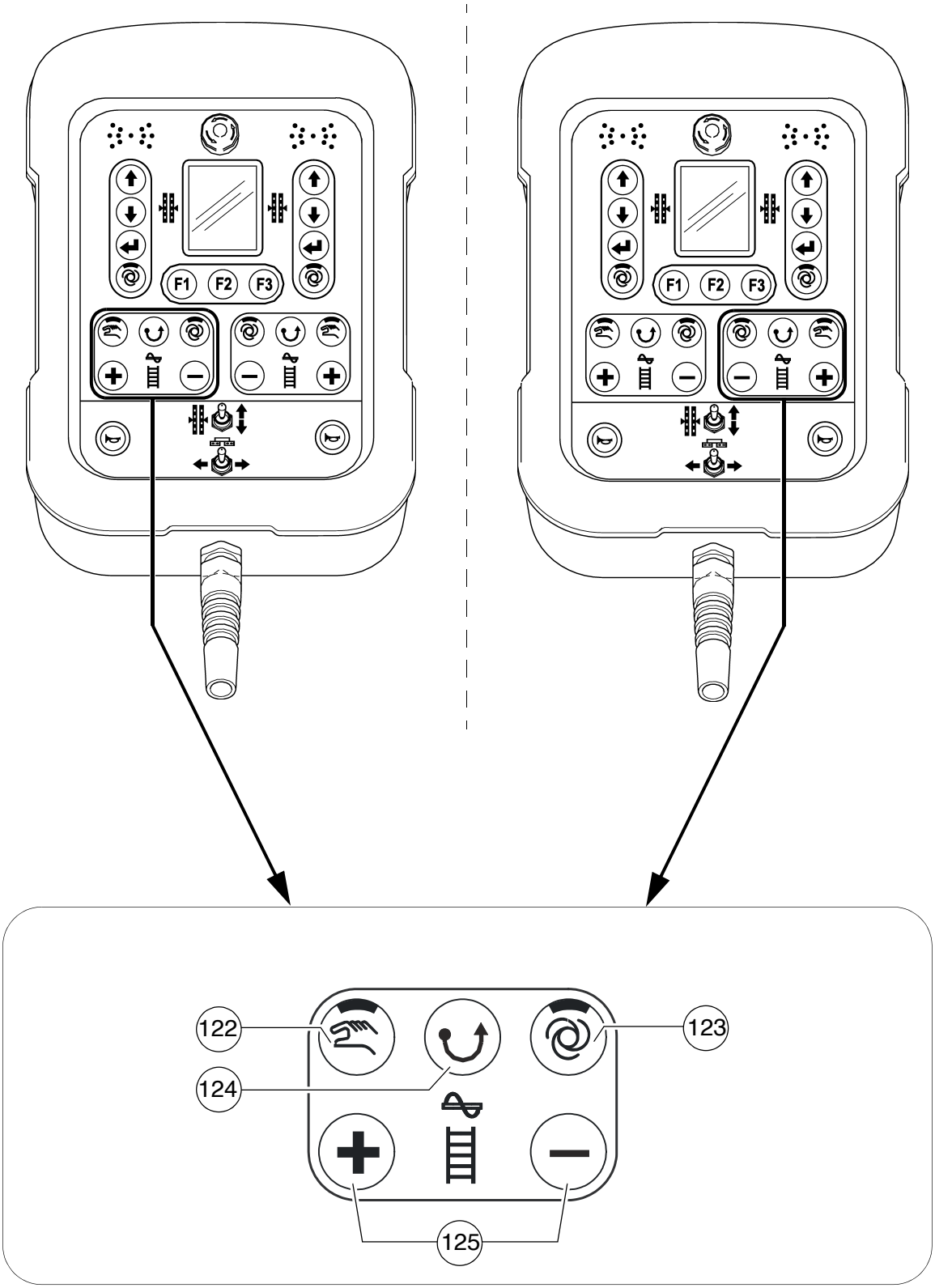
F1
F2
F3
122
123
124
125

https://truckmanualshub.com/

Item	Designation	Brief description
122	Auger "MANUAL"	Button with detent switch function and LED feedback: - The conveying function of the corresponding half of the auger is switched on continuously with full delivery capacity, without material control via the limit switches. - Switch OFF by pressing the button again ☞ The function is shut off by pressing the EMERGENCY STOP button or restarting the vehicle. ☞ The main function switch locks the conveying function.
123	Auger "AUTO"	Button with detent switch function and LED feedback: - The conveying function of the corresponding half of the auger is switched on when the drive lever is swivelled out and is continuously controlled via the material limit switches. - Switch OFF by pressing the button again ☞ The function is shut off by pressing the EMERGENCY STOP button or restarting the vehicle. ☞ The main function switch (operating panel) locks the conveying function.
124	Auger "Reversing mode"	Pushbutton function: - The auger's conveying direction can be reversed in order to slightly reverse any paving material which may be positioned just in front of the auger. This enables e.g. material losses to be avoided during transportation. - Temporally limited reversal is carried out when the button is pressed continuously. ☞ The auger function must be switched to "AUTO" or "MANUAL" for reversing mode. ☞ In reversing mode, the automatic function is overridden with reduced capacity.

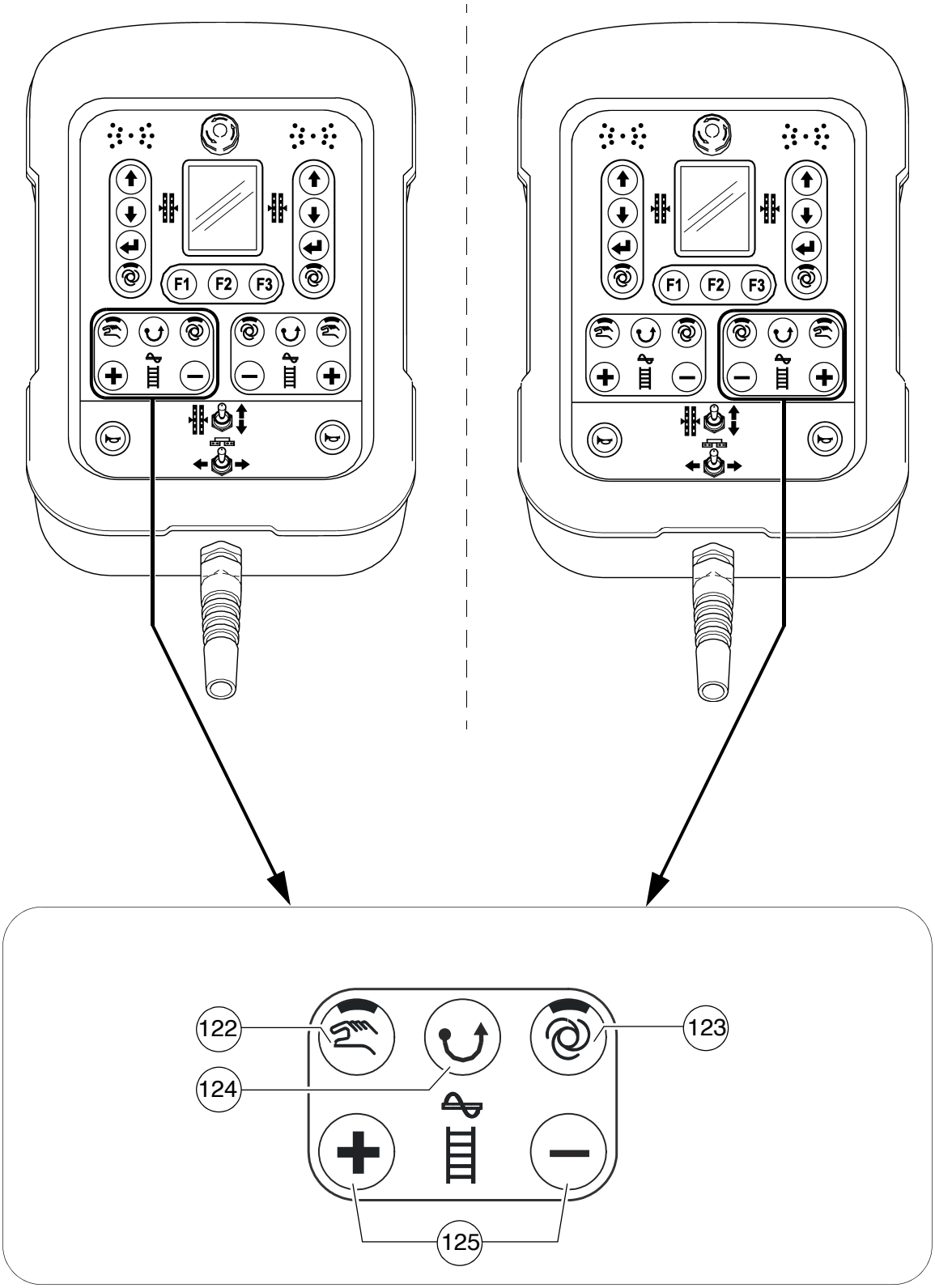
F1
F2
F3
122
123
124
125

https://truckmanualshub.com/

Item	Designation	Brief description
125	Auger delivery capacity	Pushbutton function: - Plus/minus buttons for adjusting the delivery capacity. - The delivery capacity is slowed down or speeded up depending on the length of time for which the button is pressed. ☞ For adjustment purposes, the auger function must be switched to "AUTO" or "MANUAL".

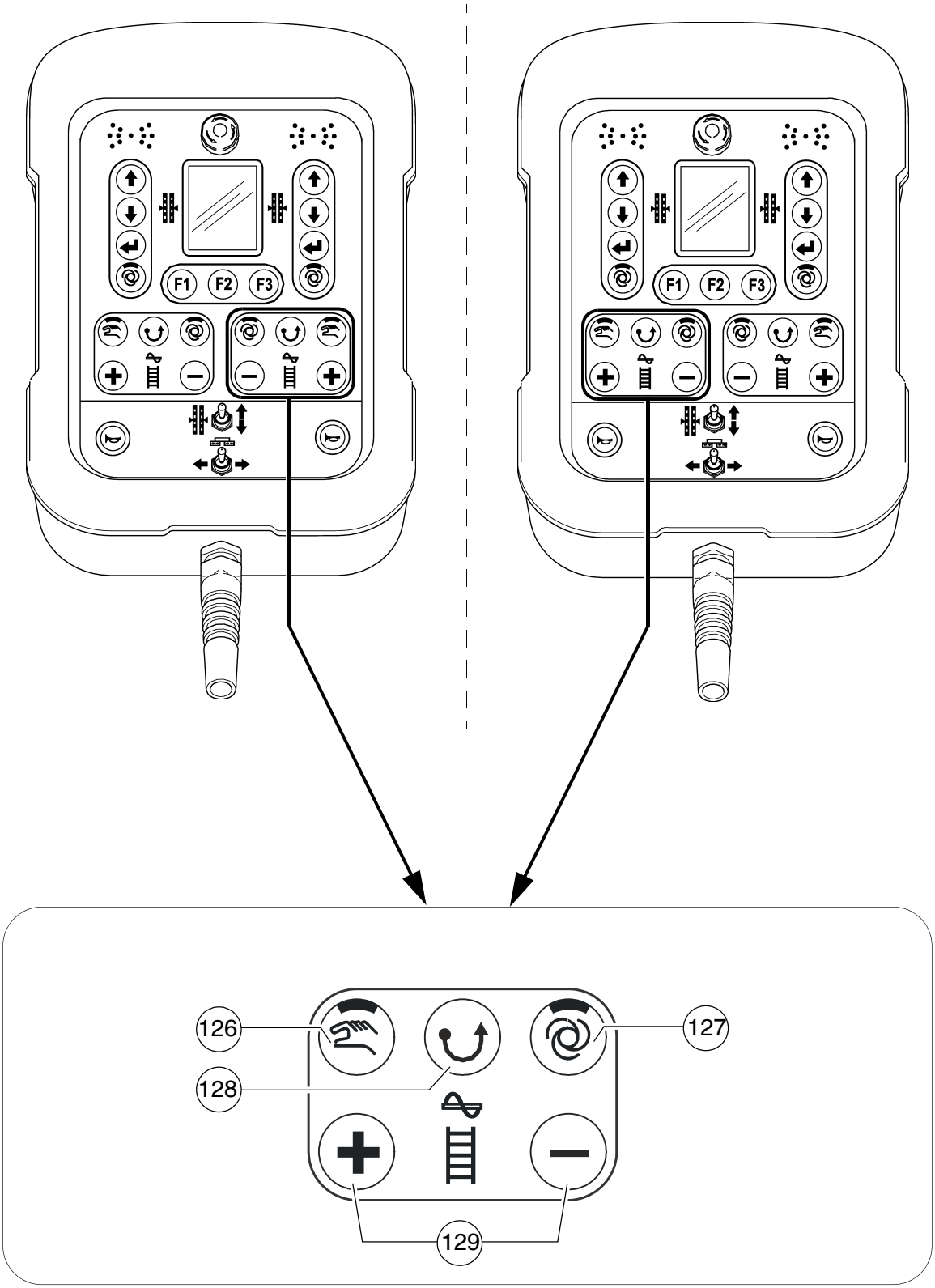
F1
F2
F3
126
127
128
129

https://truckmanualshub.com/

Item	Designation	Brief description
126	Conveyor "MANUAL"	Button with detent switch function and LED feedback: - The conveying function of the corresponding half of the conveyor is switched on continuously with full delivery capacity, without material control via the limit switches. - Switch OFF by pressing the button again ☞ The function is shut off by pressing the EMERGENCY STOP button or restarting the vehicle. ☞ The main function switch locks the conveying function.
127	Conveyor "AUTO"	Button with detent switch function and LED feedback: - The conveying function of the corresponding half of the conveyor is switched on when the drive lever is swivelled out and is continuously controlled via the material limit switches. - Switch OFF by pressing the button again ☞ The function is shut off by pressing the EMERGENCY STOP button or restarting the vehicle. ☞ The main function switch (operating panel) locks the conveying function.
128	Conveyor "Reversing mode"	Pushbutton function: - The conveying direction of the corresponding half of the conveyor can be reversed in order to slightly reverse e.g. paving material which may be present in the material tunnel. - Temporally limited reversal is carried out when the button is pressed continuously. ☞ The conveyor function must be switched to "AUTO" or "MANUAL" for reversing mode. ☞ In reversing mode, the automatic function is overridden with reduced capacity.

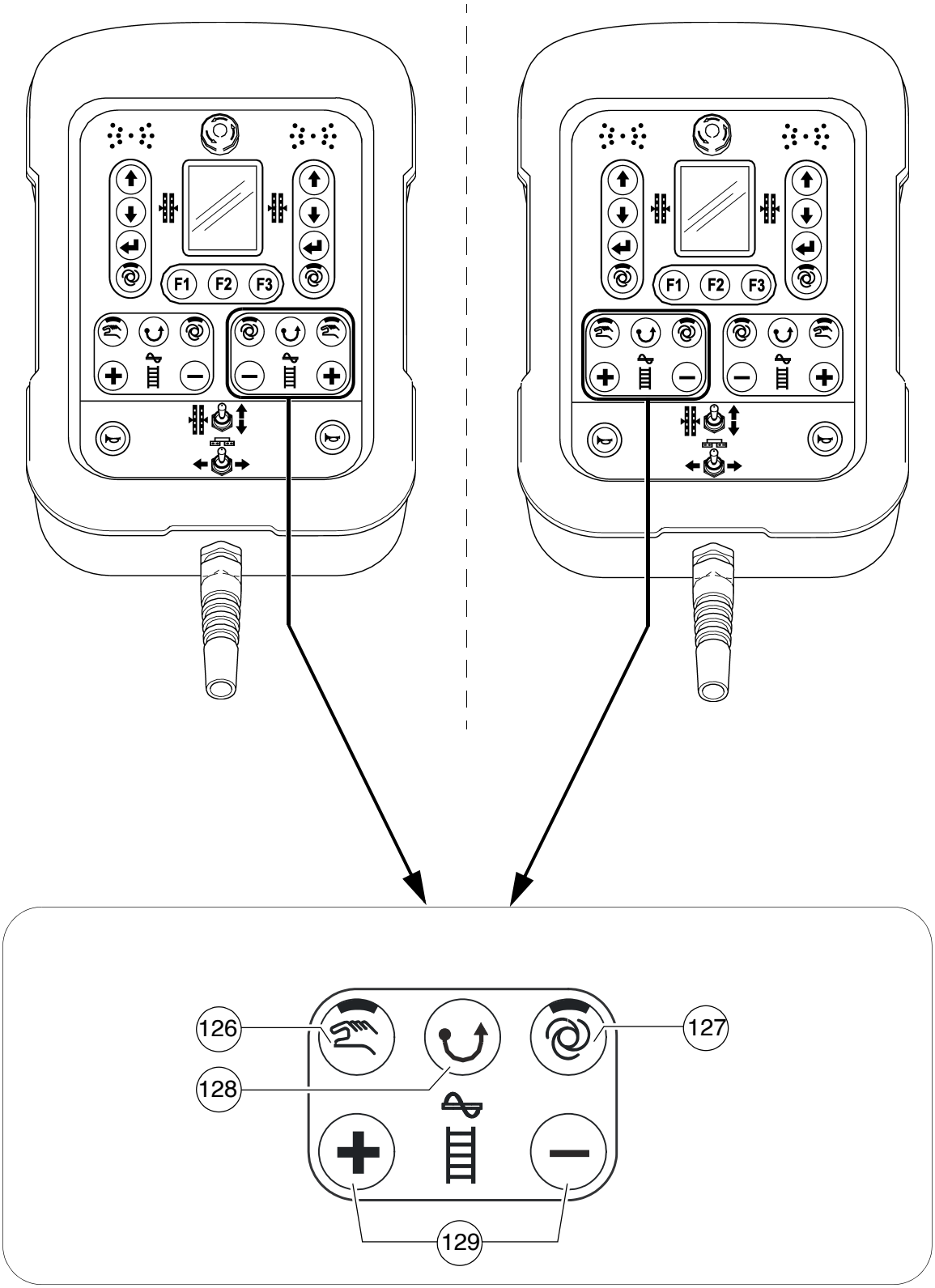
F1
F2
F3
126
127
128
129

https://truckmanualshub.com/

Item	Designation	Brief description
129	Conveyor delivery capacity	Pushbutton function: - Plus/minus buttons for adjusting the delivery capacity. - The delivery capacity is slowed down or speeded up depending on the length of time for which the button is pressed. ☞ For adjustment purposes, the conveyor function must be switched to "AUTO" or "MANUAL".

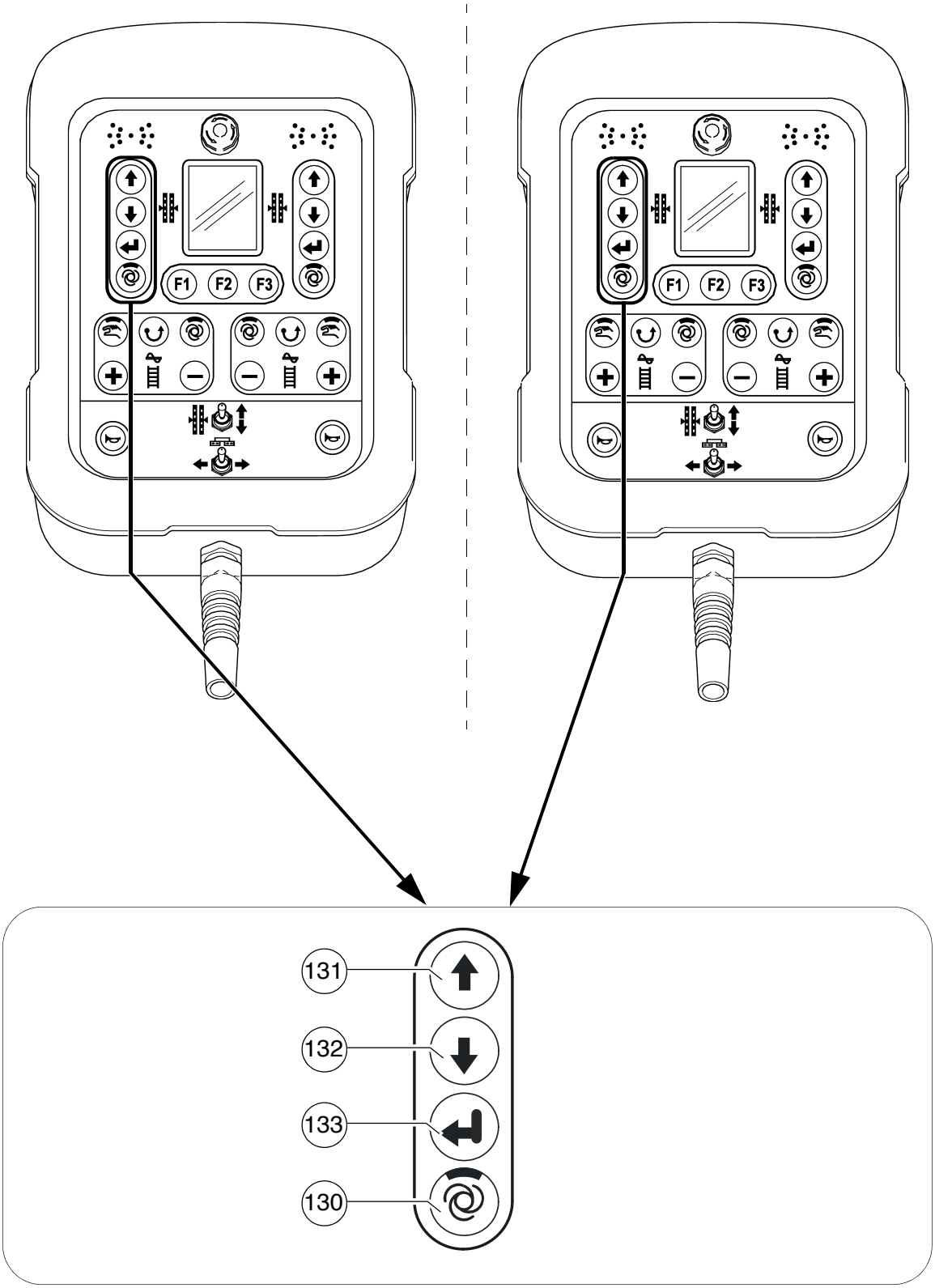
F1
F2
F3
F1
F2
F3
131
132
133
130

https://truckmanualshub.com/

Item	Designation	Brief description
130	Operating mode levelling "AUTO" / "MANUAL" left	Button with detent switch function and LED feedback: - Operating mode "AUTO" (LED ON): levelling engages automatically when the drive lever is swivelled out for paving operation. - Operating mode "MANUAL" (LED OFF): levelling switched off.
131 / 132	Adjustment Left levelling cylinder	Pushbutton function: - To retract and extend the levelling cylinder on the corresponding side of the vehicle. ☞ On adjustment, note the levelling display in the remote control display! ☞ For direct adjustment, the levelling function must be set to "MANUAL". In "AUTO" operating mode, adjustment is carried out after confirming the enter button (133).
133	Enter	Pushbutton function: - For confirming levelling cylinder adjustment in "Auto" operating mode. Levelling cylinder adjustment is carried out by pressing the button.

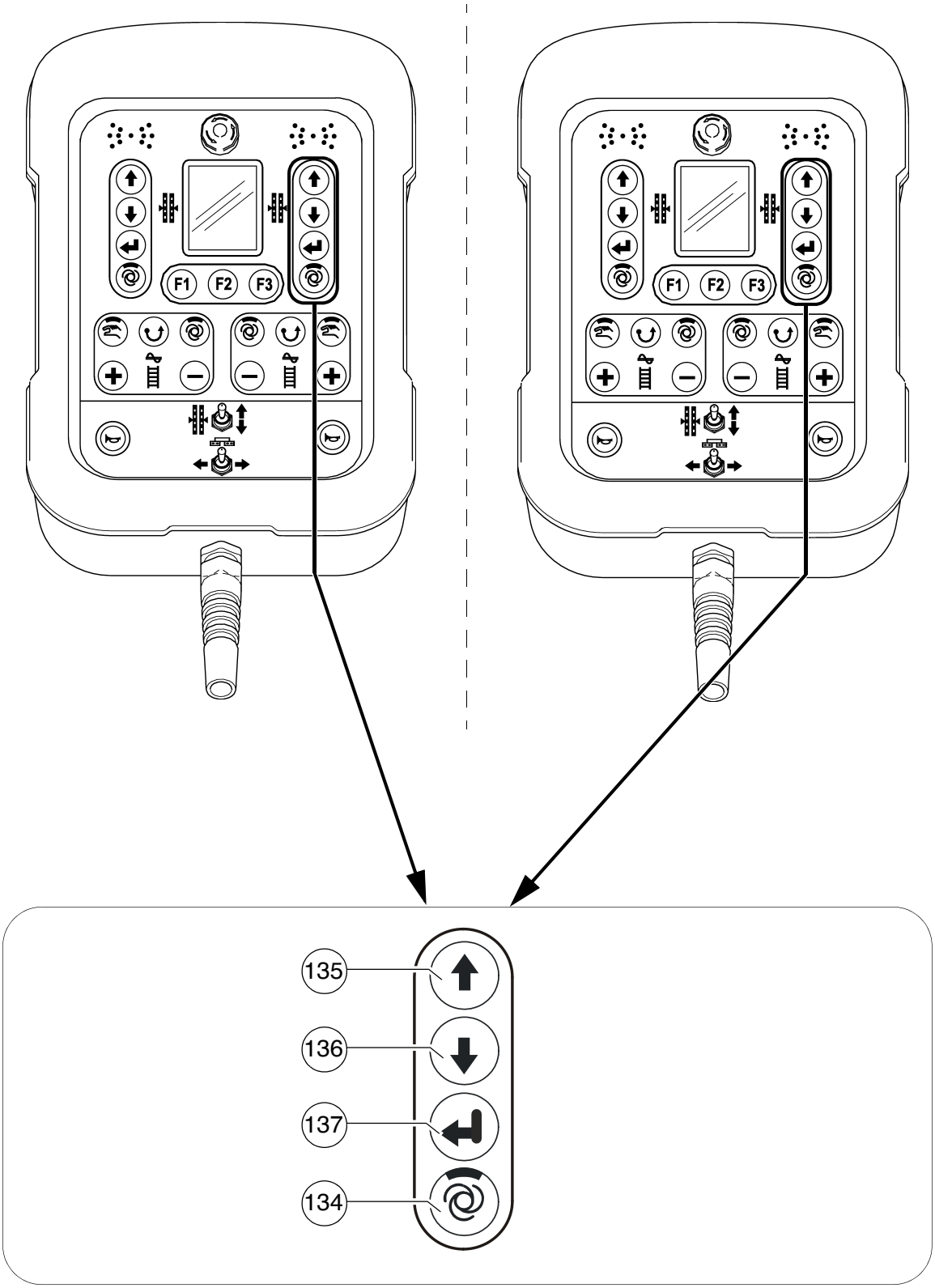
F1
F2
F3
F1
F2
F3
135
136
137
134

https://truckmanualshub.com/

Item	Designation	Brief description
134	Operating mode levelling "AUTO" / "MANUAL" right	Button with detent switch function and LED feedback: - Operating mode "AUTO" (LED ON): levelling engages automatically when the drive lever is swivelled out for paving operation. - Operating mode "MANUAL" (LED OFF): levelling switched off.
135 / 136	Adjustment Right levelling cylinder	Pushbutton function: - To retract and extend the levelling cylinder on the corresponding side of the vehicle. ☞ On adjustment, note the levelling display in the remote control display! ☞ For direct adjustment, the levelling function must be set to "MANUAL". In "AUTO" operating mode, adjustment is carried out after confirming the enter button (137).
137	Enter	Pushbutton function: - For confirming levelling cylinder adjustment in "Auto" operating mode. Levelling cylinder adjustment is carried out by pressing the button.

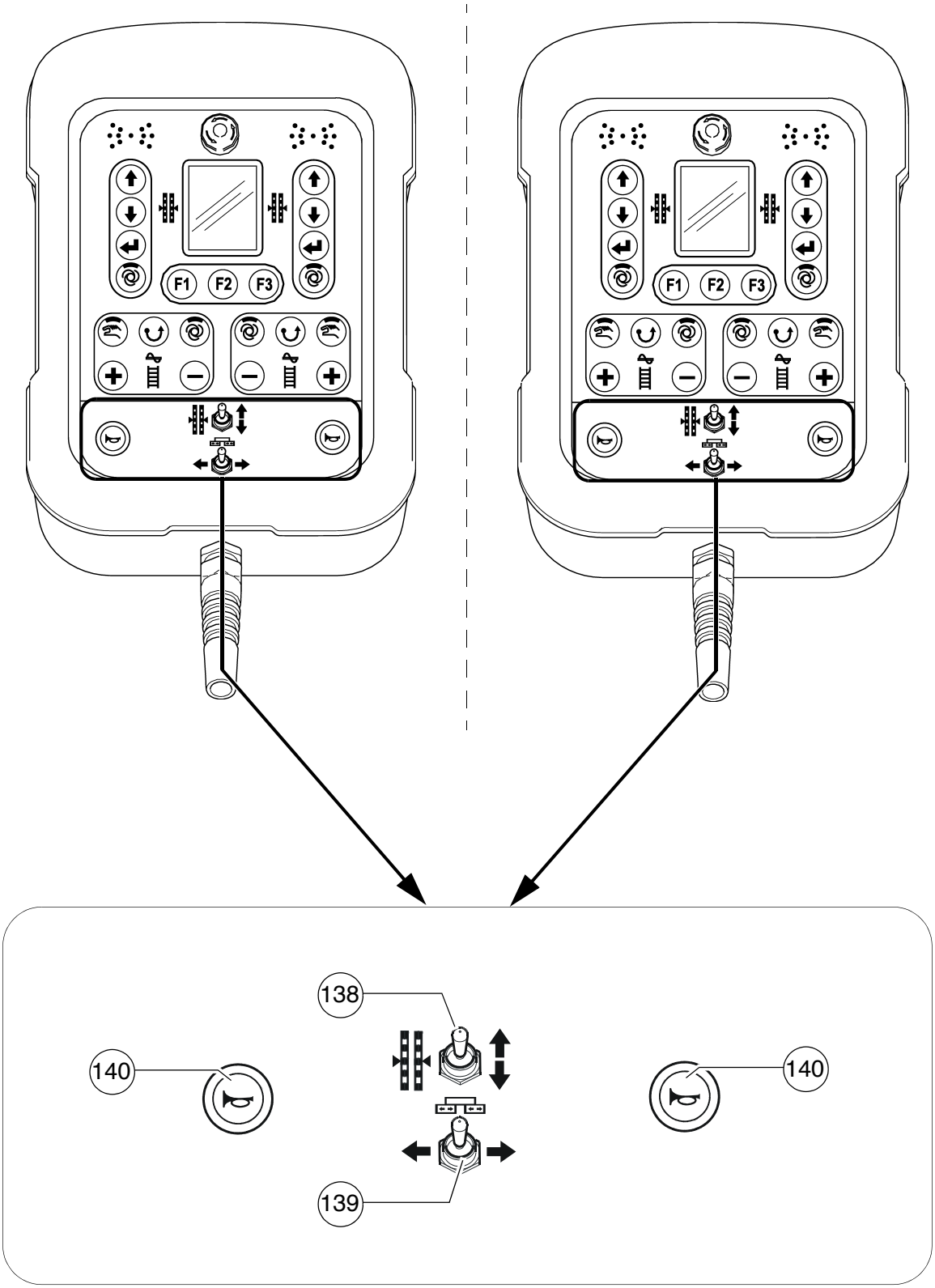
F1
F2
F3
F1
F2
F3
138
140
140
139

https://truckmanualshub.com/

Item	Designation	Brief description
138	Levelling cylinder manual	Pushbutton function: - For manual actuation of the levelling cylinders on the corresponding side of the vehicle when the automatic levelling system is switched off (LED OFF). ☞ On adjustment, note the levelling display in the remote control display!
139	Screed Retract/extend	Pushbutton function: - To retract and extend the screed half on the corresponding side of the vehicle. ☞ This function is not used in vehicle configurations with a screed which cannot be extended. STOP On actuation, note danger zones of moving parts of the vehicle!
140	Horn	Press in the case of emergencies and to indicate when the vehicle starts to move! ☞ The horn can also be used to communicate acoustically with the truck driver for material loading!

https://truckmanualshub.com/

https://truckmanualshub.com/

D 21 Operation

1 Operation of the input and display terminal

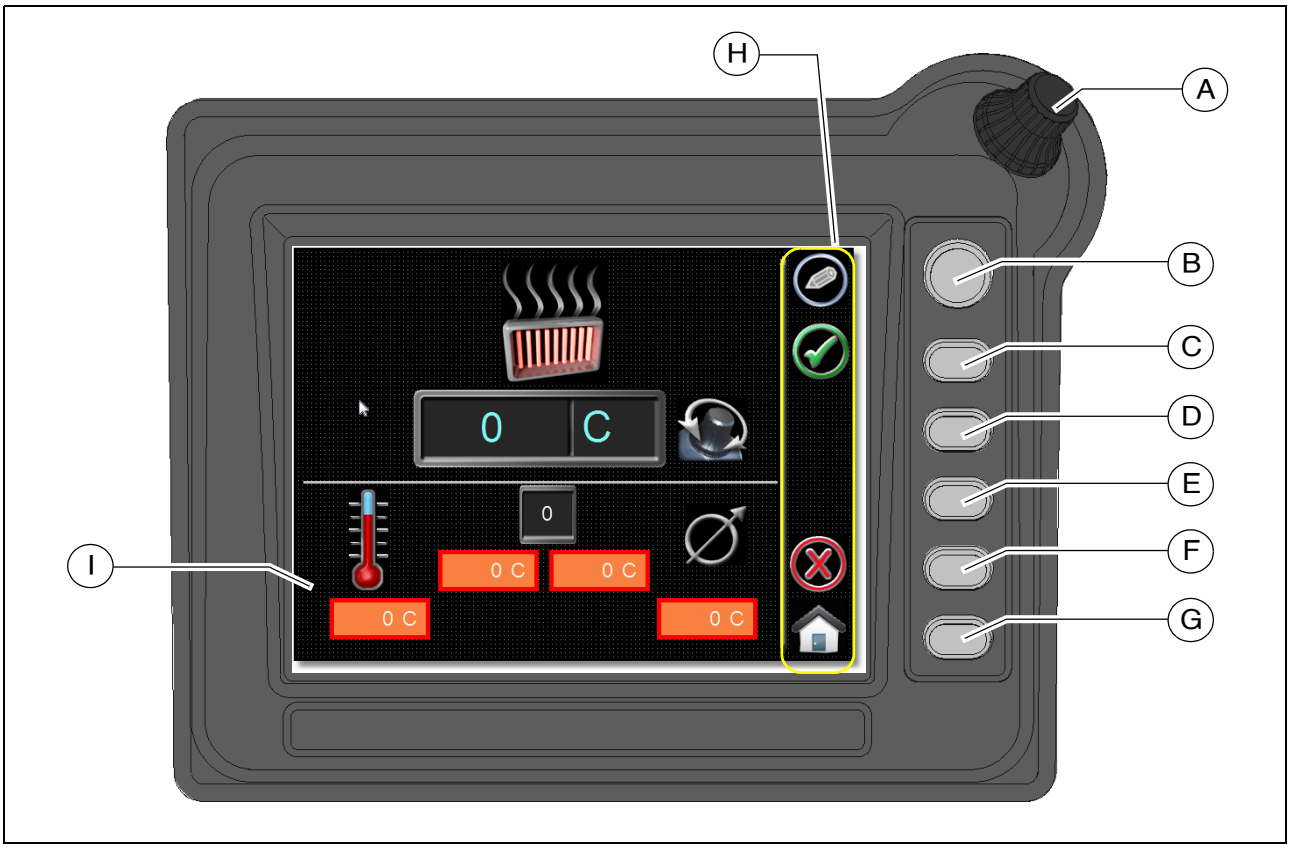

Button layout on the display

- (A) Encoder (rotary actuation):
  - To scroll in the menu
  - To select various parameters within a menu
  - To change parameters

- (B) - (G) Function buttons:
  - To trigger the commands assigned in the display area (H)
  - To select the menus assigned in the display area (H)

https://truckmanualshub.com/

Command symbols

Command	Symbol in the display
- Edit selected parameters.	
- Adopt edited parameters. - For error messages: confirms message and goes straight to the error list.	
- Exit menu. Return to the previous menu. Edited parameters are not adopted.	
- Cancel. Edited parameters are not adopted.	
- Return to start menu. Edited parameters are not adopted.	
- Save parameters.	
- Load parameter from memory.	
- Parameter successfully saved / loaded	

https://truckmanualshub.com/

1.1 Menu operation

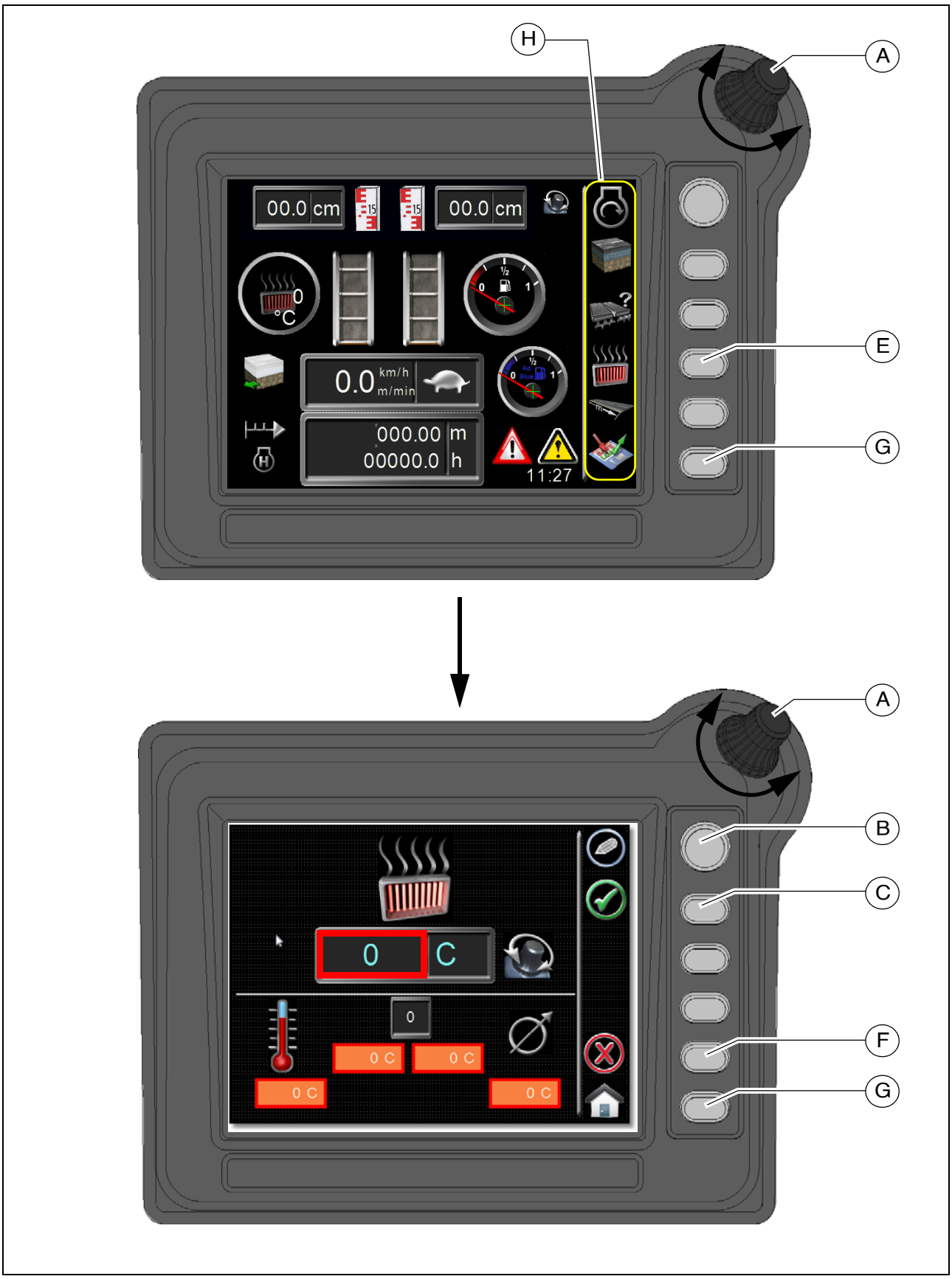

https://truckmanualshub.com/

Example: Screed heater menu

- Turn the encoder (A) until the desired menu appears in the display area (H).
- Press button (E) to call up the heater menu.
- Turn the encoder (A) again until the selection field (red frame) is positioned over the desired parameter to be adjusted.
- Press button (B) to activate the selected parameter to be adjusted.
- Set the desired parameter by turning the encoder (A).
- Press button (F) to exit parameter adjustment without saving.
- Press button (C) to confirm the adjusted parameter.
- Press button (G) to go to the start menu.

https://truckmanualshub.com/

Main menu

Display and function menu

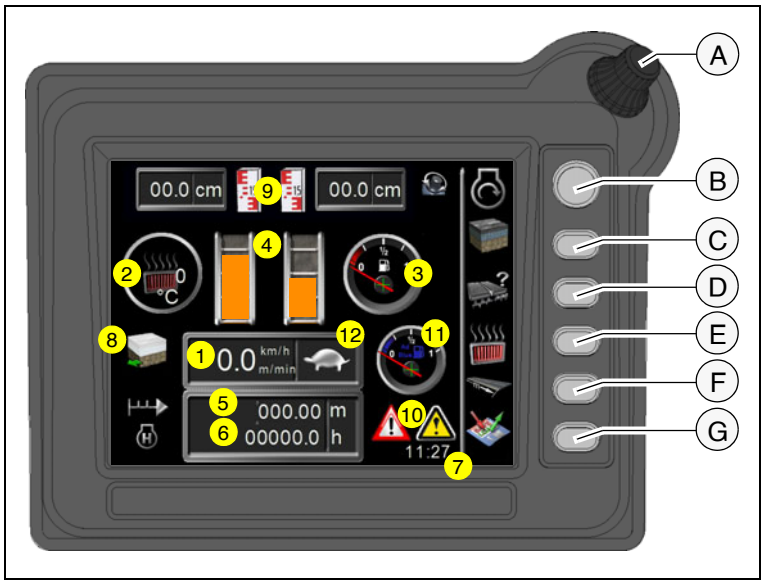

Displays:

- (1) Speed:
  - paving operation (m/min)
  - driving mode (km/h)
- (2) Actual temperature of the screen heater (°C)
- (3) Fuel gauge
- (4) Conveyor filling level left/right
- (5) Distance travelled counter (m)
- (6) Operating hours (h)
- (7) Time of day (hh/mm)
- (8) Used paving parameters from the parameter memory
- (9) Extension distance levelling cylinders left/right (○)
- (10) Error warning (retrievable in the error memory)
- (11) Level AdBlue® / DEF tank (○)

⚠ If the level is too low, a warning appears at this point.
Level 10% - display flashes
Level 5% - display stays on permanently
Level 0% - drive engine is throttled to emergency mode

- (12) Operating status: different symbols are shown depending on the operating status:

Hare: Transportation gear active

Tortoise: Working gear active

STOP: Machine stop

20km/h: Important! Machine speed too high! Reduce travel!

https://truckmanualshub.com/

Snow flake: hydraulic oil temperature too low! Bring vehicle up to temperature with stationary acceleration!

☞ The engine speed cannot be increased when the hydraulic oil temperature is too low!

Red cross: Emergency mode active.

Hare with wheels: Trailer (○) connected.

☞ When the trailer (○) is connected, all screed, auger and levelling functions are locked, apart from lifting/lowering screed.

https://truckmanualshub.com/

Functions:

Pressing encoder (A) calls up the available menus or functions in the start screen.

☞ The menus are called up by pressing the adjacent function button.

☞ Pressing the adjacent function button activates or deactivates the functions. If the relevant symbol is covered with a red cross, the function is deactivated.

- (20) Menu "Engine speed".
- (21) Menu "Paving parameters".
- (22) Actual value display auger, conveyor
- (23) Menu "Screed heater"
- (24) Menu "Paving area and automatic steering unit".
- (25) Menu "Paving parameters save / load".

https://truckmanualshub.com/

Functions:

- (26) "Eco mode" function
  - The engine speed is constantly regulated to 1600 rpm.
- (27) "Automatic steering unit" function
  - The vehicle is steered automatically via corresponding sensing along a reference (e.g. cable).

⚠ When the automatic steering unit is activated, the steering potentiometer is deactivated.

☞ If the driver carries out a steering movement, this overrides the automatic steering unit due to safety reasons.

- (28): "Delayed screed start" function
  - On swivelling the drive lever, the screed functions are only activated once the time set in the relevant menu has elapsed.
- (29): "Delayed tamper start" function
  - On swivelling the drive lever, the tamper function is only activated once a defined time has elapsed.
- (30): "Joint hopper actuation" function
  - Both hopper halves are actuated together with one of the hopper function switches (open hopper / close hopper).
- (31): Camera display function / menu
  - The vehicle positions monitored by camera are shown in the display
- (33): "Delayed screed start" menu
- (34): "Front wheel drive" menu ((○) - only for type SD2500WS)
- (35): "Error memory" menu
- (36): "Set-up" menu

https://truckmanualshub.com/

Active / inactive display function

Pressing the adjacent function button activates or deactivates the functions.
If the relevant symbol is covered with a red cross, the function is deactivated.

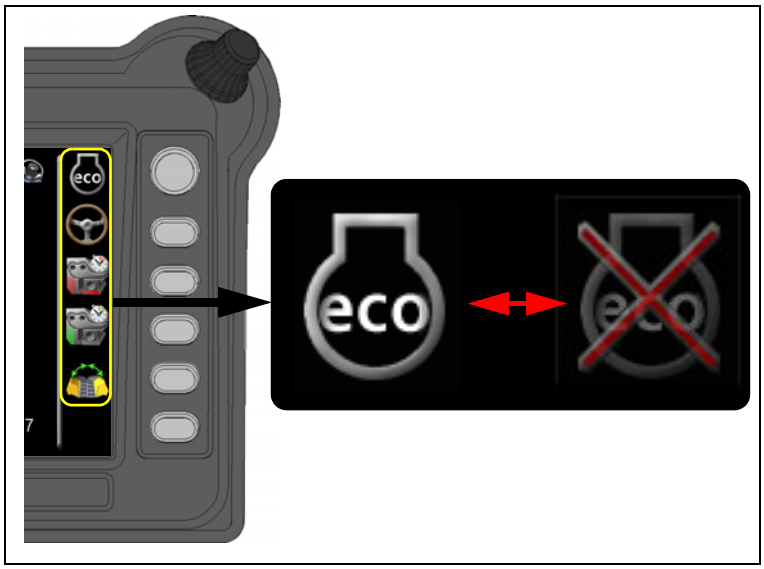

"Engine speed" menu

Menu for showing and adjusting the engine speed.

☞ Press the adjacent function button (B) to call up the menus.

Set-up menu
Engine speed

- (1) Nominal speed display and adjustment parameters
- (2) Actual speed display

☞ Press encoder (A) to start the editing menu.

☞ Adjustment is carried out in steps of 50; the engine speed is adapted directly.

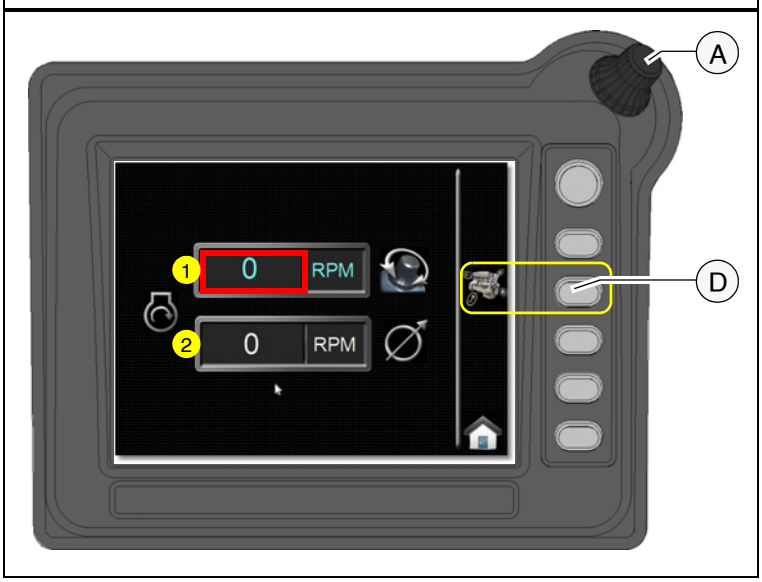

☞ Press the adjacent function button (D) to call up the "Drive engine measured value" display.

https://truckmanualshub.com/

Measured value display Drive engine

Menu for querying various drive engine measured values.

- (1) On-board voltage (V)
- (2) Engine coolant temperature (°C)
- (3) Engine oil pressure (bar)
- (4) Operating hours (h)
- (5) Fuel consumption (l/h)

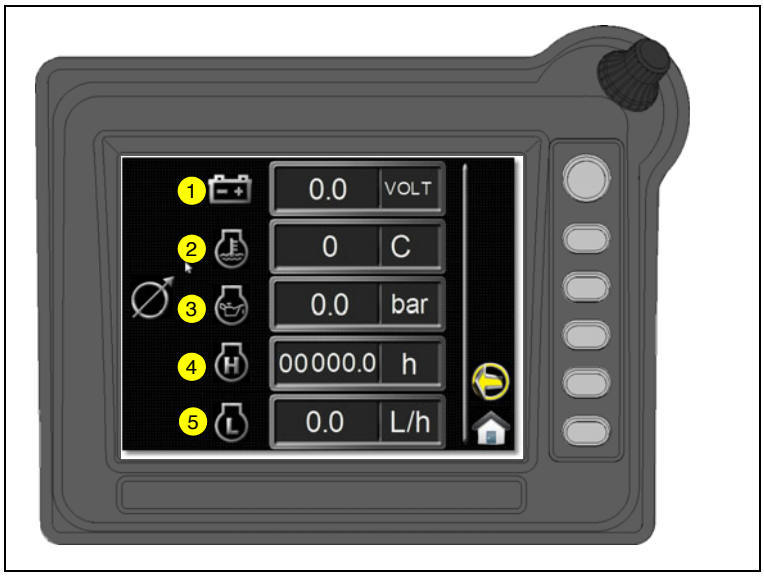

"Paving parameters" menu

Menu for showing and adjusting the paving parameters.

☞ Press the adjacent function button (B) to call up the menus.

Set-up menu
Paving parameters

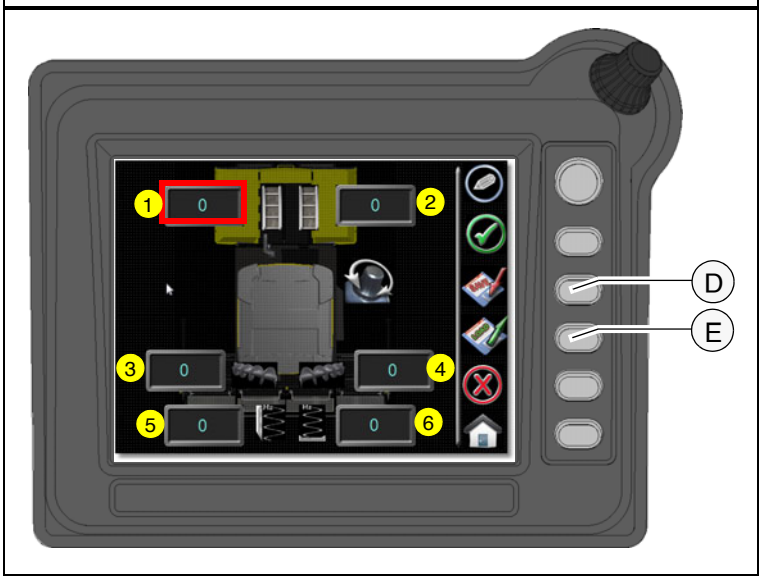

- (1) Left conveyor speed (%) display and adjustment parameters
- (2) Right conveyor speed (%) display and adjustment parameters
- (3) Left auger speed (%) display and adjustment parameters
- (4) Right auger speed (%) display and adjustment parameters
- (5) Nominal vibration speed (RPM) display and adjustment parameters
- (6) Nominal tamper speed (RPM) display and adjustment parameters

☞ Tamper and vibration range depending on screed type.
(see operating instructions for the screed)

☞ Press the adjacent function button (D) to save the paving parameters in the parameter memory.

☞ Press the adjacent function button (E) to call up the paving parameters from the parameter memory.

https://truckmanualshub.com/

Paving parameters
Save

Menu for saving the personal vehicle settings.

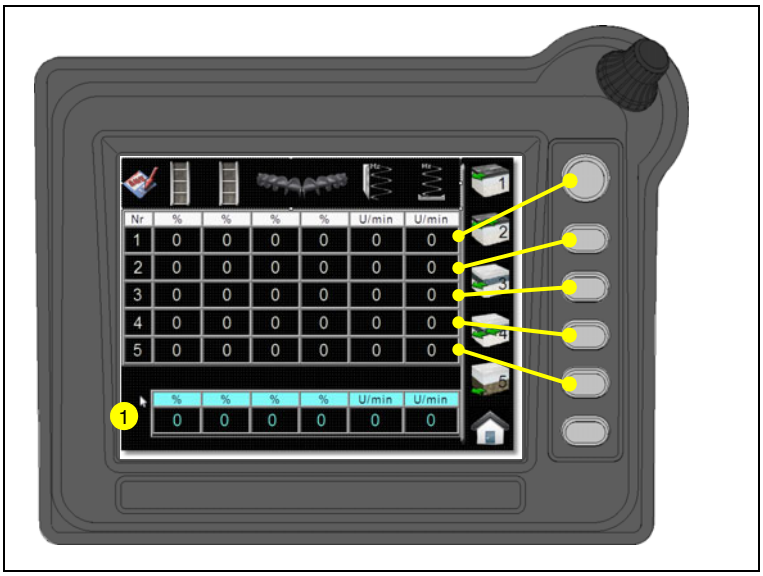

☞ Preferred parameters or parameters configured to the paving material can be saved in the memory for later use.

☞ Memory locations:
Surface course: 1,2
Binder course: 3,4
Base course: 5

⚠ The memory locations may only be used for the intended type of course!
The saved machine parameters are coordinated to the respective type of course!

☞ Press the corresponding function button to select the memory location.

- (1) Overview of parameters intended for saving.

Paving parameters
Load

Menu for retrieving the personal vehicle settings.

☞ Preferred parameters or parameters configured to the paving material can be retrieved from the parameter memory.

Up to 5 saved settings can be retrieved from the memory.

☞ Press the corresponding function button to select the memory location.

Actual value display
Auger, conveyor, tamper, vibration(○)

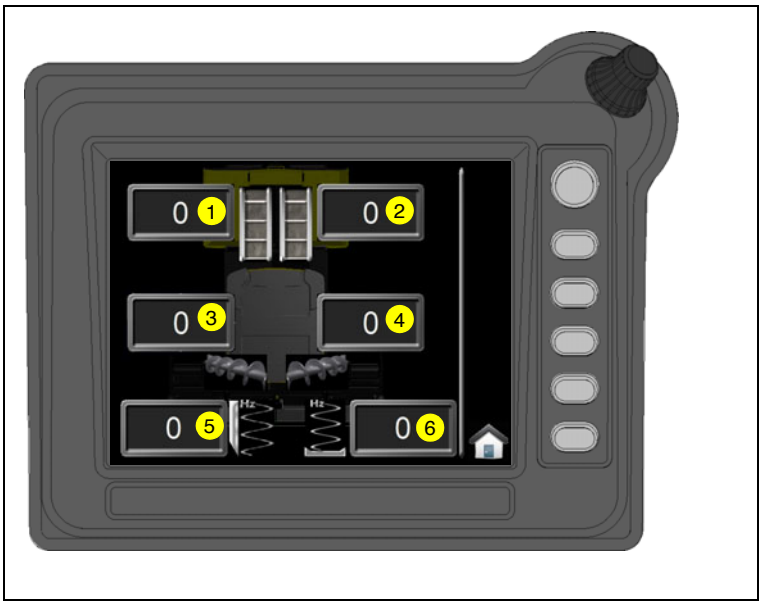

Menu for checking the actual auger, conveyor, tamper and vibration speeds.

- (1) Left conveyor (%)
- (2) Right conveyor (%)
- (3) Left auger (%)
- (4) Right auger (%)
- (5) Tamper (%)(○)
- (6) Vibration (%)(○)

Set-up menu
Screed heater

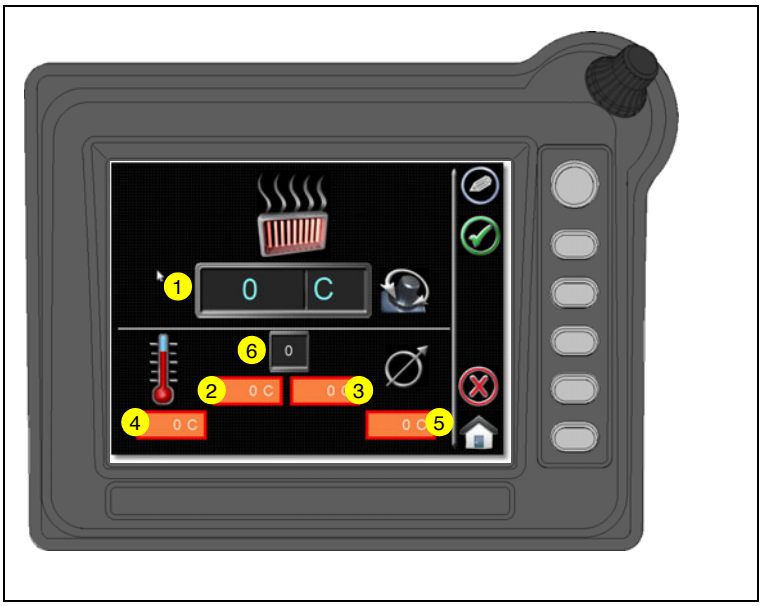

Menu for setting the screed heater:

- (1) Nominal screed heater temperature (°C) display and adjustment parameters
- (2) Actual temperature, left-hand main screed (°C)
- (3) Actual temperature, right-hand main screed (°C)
- (4) Actual temperature, left-hand extendable part + extension parts (°C)
- (5) Actual temperature, right-hand extendable part + extension parts (°C)

☞ Setting range 0-180?

☞ All changes are adopted in the other input devices (remote control, screed heater switch cabinet).

Only when equipped with electric heating:

- (6) Number of currently heated screed sections

https://truckmanualshub.com/

Menu Paving area / automatic steering unit

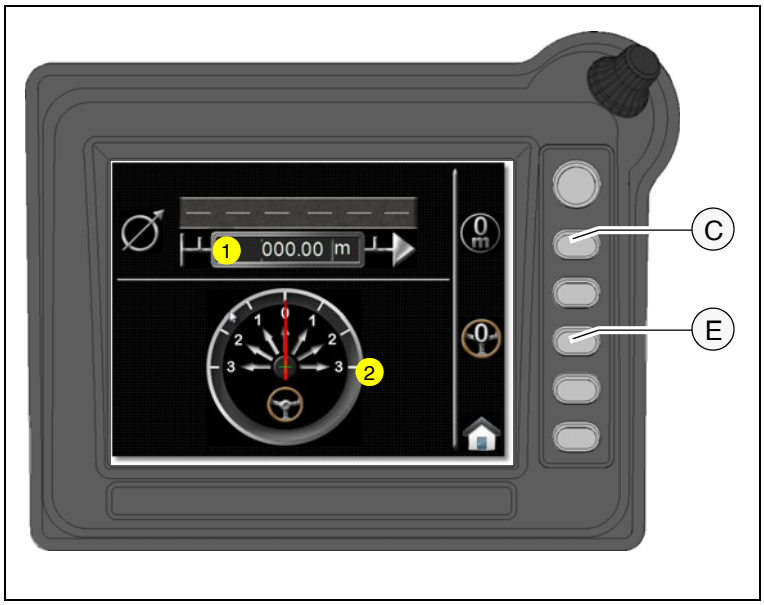

Menu for retrieving and resetting the current paving area, for showing the steering monitoring and resetting the steering monitoring reference.

- (1) Current paving distance
  - Reset - set value to zero: button (C).
- (2) Steering monitoring is used for distance control scanning --> reference.
  - Set reference value to zero: button (E).

☞ Ideal distance scanning --> reference is the value "0" in display (2). Excursions indicate increased or reduced distances.

☞ If necessary, carry out correction via slight steering movement!

☞ If the driver carries out a steering movement, this overrides the automatic steering unit due to safety reasons.

https://truckmanualshub.com/

Menu
"Machine settings memory"

Menu for saving/retrieving the machine settings for the specific construction site.

☞ The machine settings for

- paving thickness
- conveyor and auger speeds
- tamper and vibration speed
- screed heater setting

can be saved during work breaks / at the end of the working day and retrieved from the memory when starting up again.
The settings do not have to be set up again.

⚠ Danger from immediate part movements! Set main function switch (see operating panel) before loading saved vehicle settings!

☞ Settings that have been saved once remain in the memory until they are overwritten by saving new settings.

Set-up menu -
"Delayed screed start"

Menu for setting the screed starting delay:

- (1) Delay duration (sec.) display and adjustment parameters

☞ When the drive lever is deflected, the floating function is activated once the set time has elapsed.

☞ Setting range 0-60 sec.

https://truckmanualshub.com/

Menu
"Camera display"

Machine parts partly concealed from view
can be displayed by the camera system.

When this function is called up, display camera 1 appears.

- Show camera 2 display: button (B).
- Show camera 1+2 display: button (C).

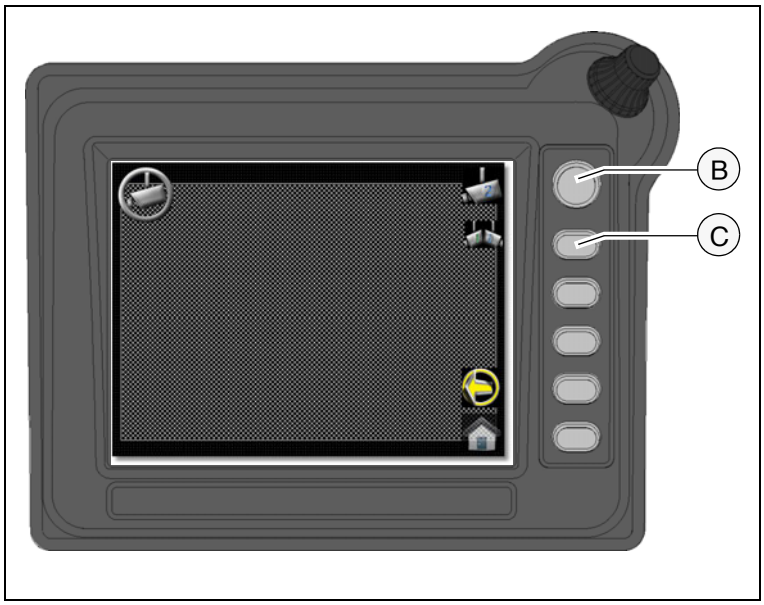

"Camera 2" display

- "Show camera 1" display: button (B).
- Show camera 1+2 display: button (C).

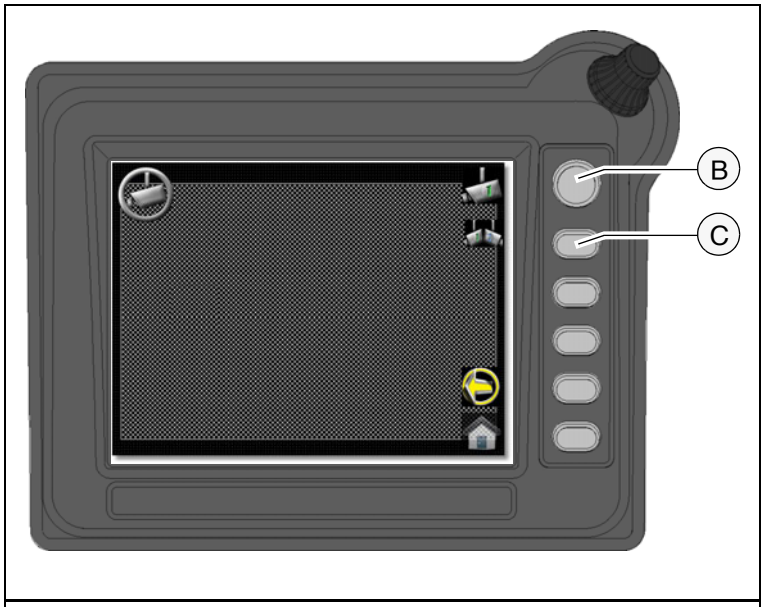

"Camera 1+2" display

- Show camera 1 display: button (B).
- Show camera 2 display: button (C).

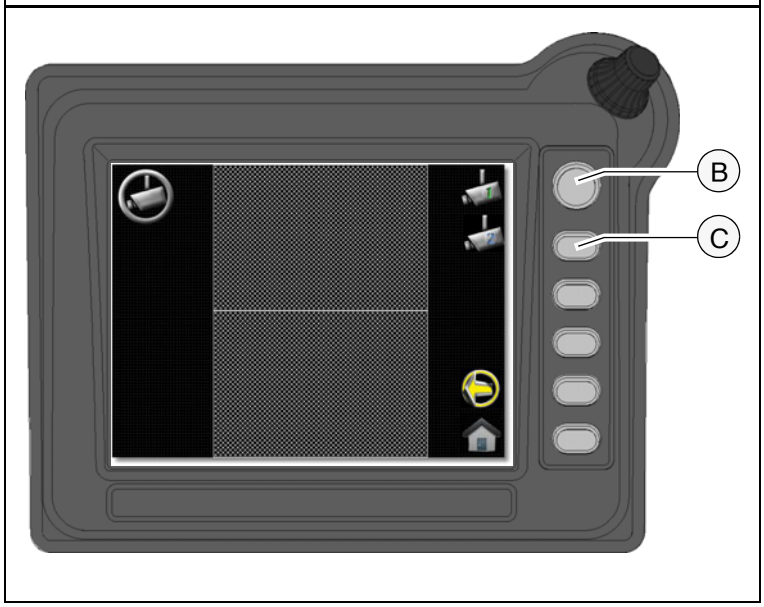

Menu
"Front wheel drive" (○)

Display of the power provided for the front wheel drive.

- (1) Power display left front wheel drive.
- (2) Power display right front wheel drive.

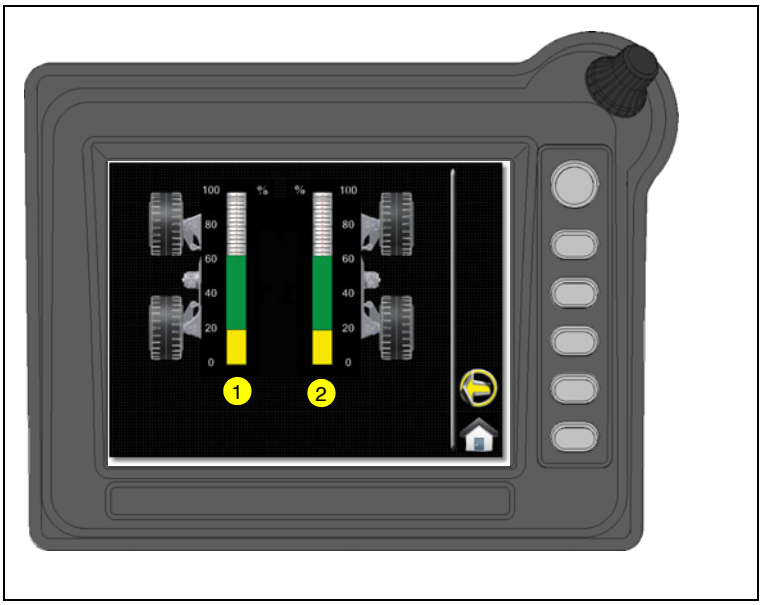

https://truckmanualshub.com/

Menu -
"Error memory"

Menu for retrieving existing error messages.

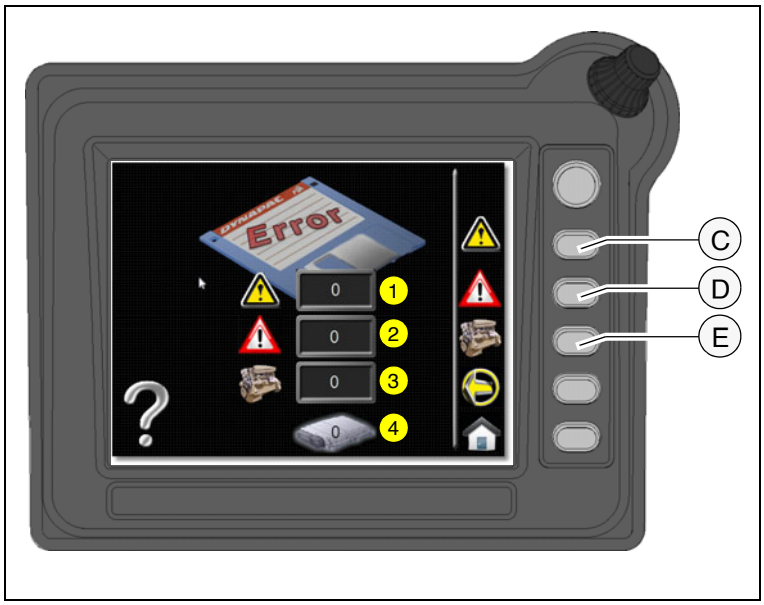

- (1) Number of warning messages.
  - Warning messages retrieval: button (C).
- (2) Number of warning messages with engine stop.
  - Warning messages retrieval: button (D).
- (3) Number of warning messages drive engine.
  - Warning messages retrieval: button (E).
- (4) System error display.

☞ Notify customer service of the system error number displayed on your paver finisher; the customer service department will then discuss with you how to proceed.

Display "Machine error messages"

Display of existing error messages in a table.

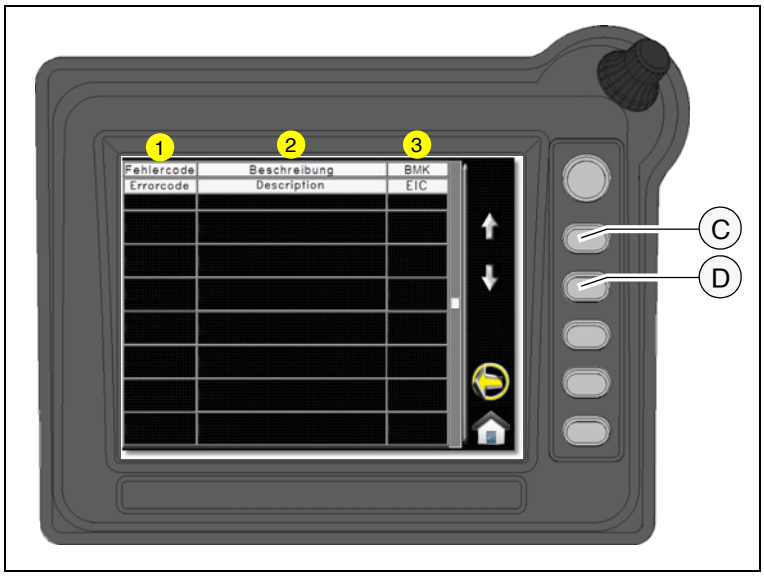

☞ This is shown separately from warning messages and error messages with engine stop.

- (1) Error code.
- (2) Error description.
- (3) Description of the faulty part as per BMK/EIC list.

☞ Press (C) / (D) to scroll through the list.

https://truckmanualshub.com/

Display "Engine error messages"

Display of existing error messages in a table.

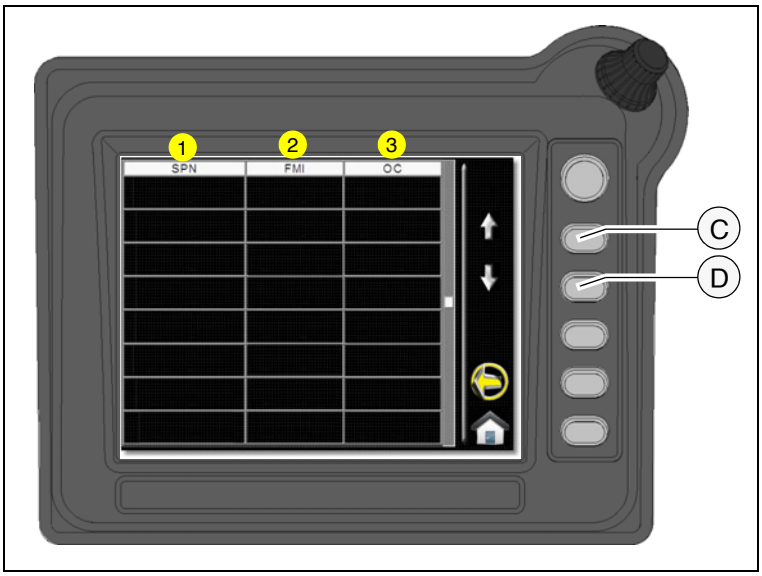

This is shown separately from warning messages and error messages with engine stop.

- (1) SPN code.
- (2) FMI code.
- (3) OC error frequency.

All error messages can be identified in the section "Error codes drive engine".

Press (C) / (D) to scroll through the list.

https://truckmanualshub.com/

Menu
"System information & basic settings"

Display of the following information:

- (1) Time (hh/mm/ss)
- (2) Date (dd/mm/yyyy)
- (3) Software version, travel drive computer
- (4) Software version, terminal
- (5) Operating hours (h)

☞ If consultation with Technical Support is required for your vehicle, always specify the software version!

The following set-up menus can be called up directly:

- (6) "Service" menu.
- (7) "Levelling" set-up menu.
- (8) "Screed type" set-up menu
- (9) "Terminal" set-up menu

https://truckmanualshub.com/

Menu "Service"

Password-protected menu for various service settings.

https://truckmanualshub.com/

Set-up menu "Levelling"

- (1) Left levelling display and adjustment parameters
- (2) Right levelling display and adjustment parameters
  - Internal levelling: parameter 0
  - External levelling: parameter 1

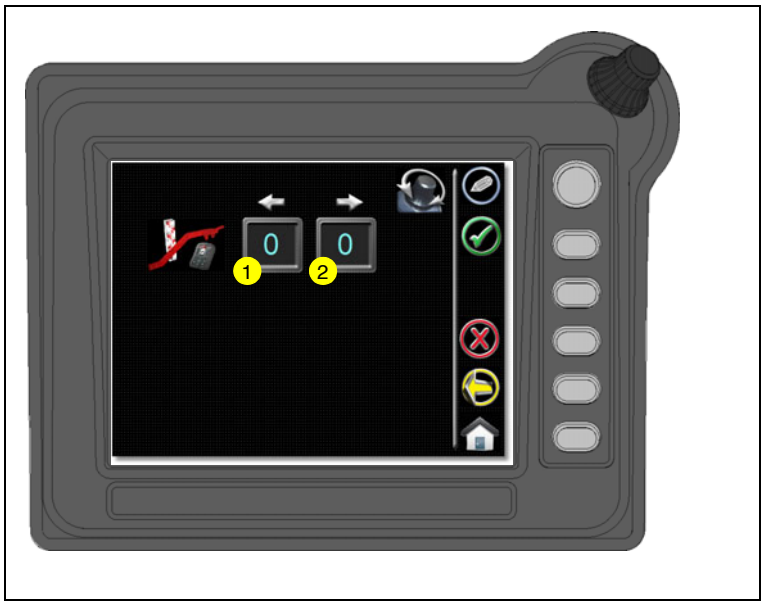

☞ When "External levelling" is selected, the toggle switches of the system's own remote control remain active!

Set-up menu "Screed type"

Menu for setting the screed type.

- (1) Screed type display and adjustment parameters
  - Screed type 1, 2, 3, 4, 5

☞ Please consult the screed type plate for the parameter to be entered here, corresponding to the last number of the screed type.

- (2) Heating type display and adjustment parameters
  - Electric heater: parameter 1
  - Gas heater: parameter 2

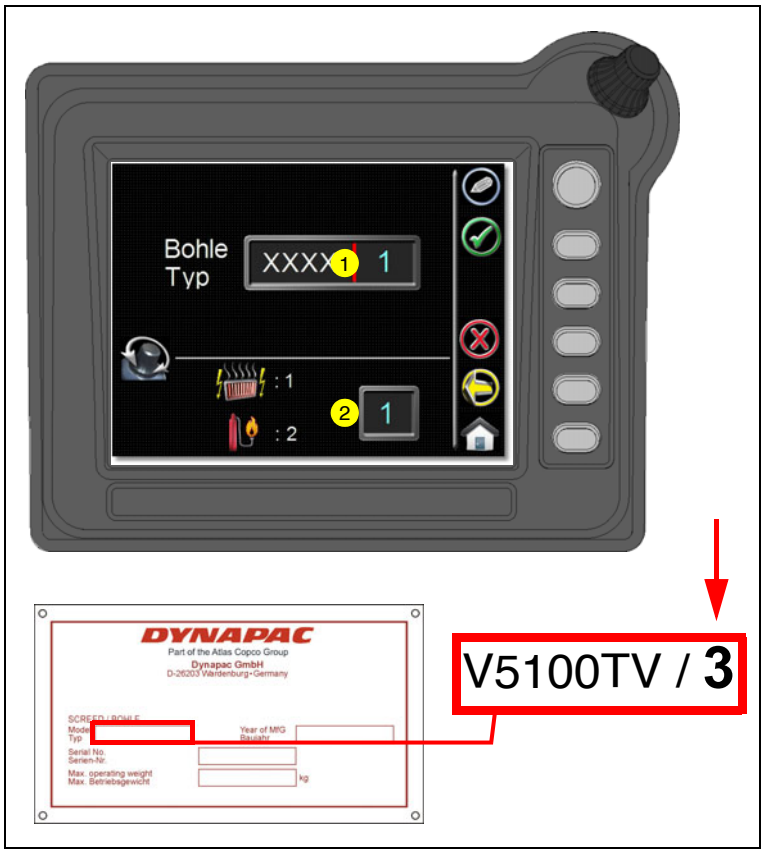

☞ If a different screed type has been connected to the paver finisher, the corresponding setting must be carried out!

Set-up menu "Terminal settings"

- (1) Button day time brightness (%) display and adjustment parameters
- (2) Button night time brightness (%) display and adjustment parameters

☞ Setting range 0-100%

☞ When the working lights are switched on, the system automatically switches to the night time operation settings.

- (3) "Beep" display and adjustment parameters - warning signal for error messages until the error has been acknowledged.
  - "beep" ON: parameter 1
  - "beep" OFF: parameter 0

☞ Press button (D) to call up the system menu.

System menu - "Basic settings" display

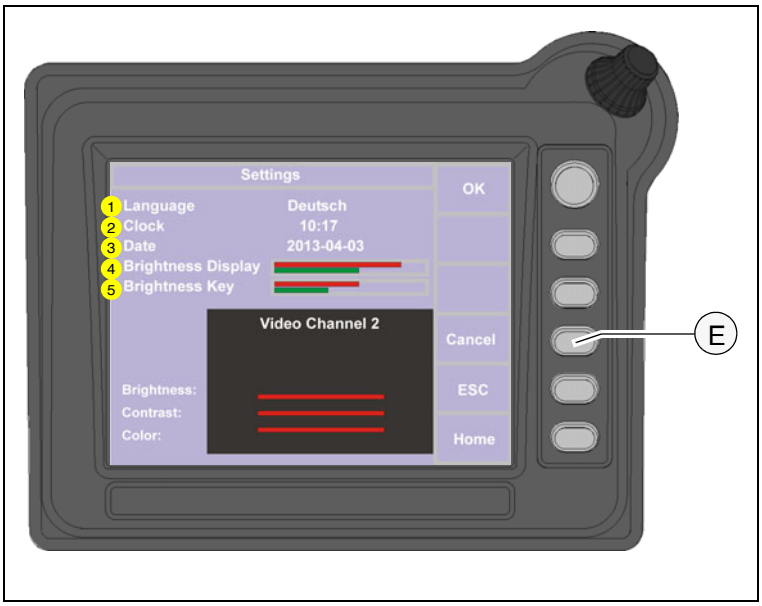

- (1) Language display and adjustment parameters
- (2) Time display and adjustment parameters (hh-mm)
- (3) Date display and adjustment parameters (DD-MM-YYYY)
- (4) Monitor brightness display and adjustment parameters
- (5) Button brightness display and adjustment parameters

☞ The display brightness is adjusted directly, the buttons light up briefly to check.

https://truckmanualshub.com/

2 Terminal error messages

☞ The following error messages appear directly in the display when corresponding errors occur.

☞ Press (B) to confirm and call up the corresponding error list.

Error No. / meaning	Display
Error message "Stop" - Display for all error messages with machine stop.	
Error message "Engine malfunction" - Display for all engine stop error messages.	
Error message "800F" - Emergency stop button actuated or communication master display interrupted.	

2.1 Drive engine error codes

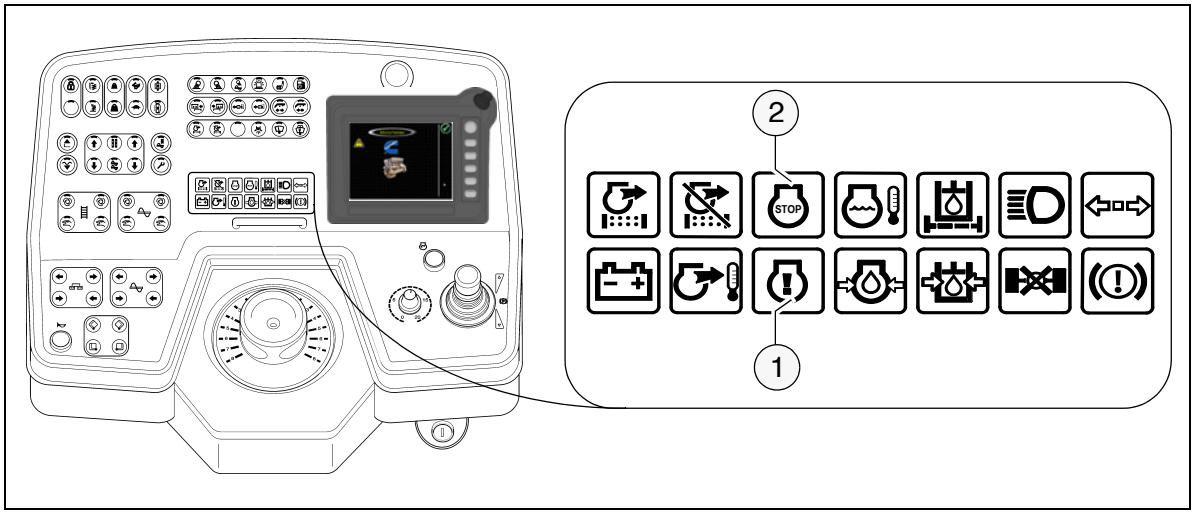

If a fault has been detected on the drive engine, this is indicated by the corresponding warning lamp (1) / (2) and appears at the same time as a warning message in the display.

The error message that can be called up in the display contains several numerical codes, which uniquely define the fault after decoding.

- Display "Engine fault" (3) indicates that there is a fault on the drive engine.

⚠ It may be possible to continue operating the vehicle, depending on the severity of the error. The error should however be remedied quickly to prevent further damage.

☞ Severe errors in the drive engine result in the engine stopping automatically to prevent further damage.

- After confirming the display, the numerical codes appear in the corresponding error list (4).

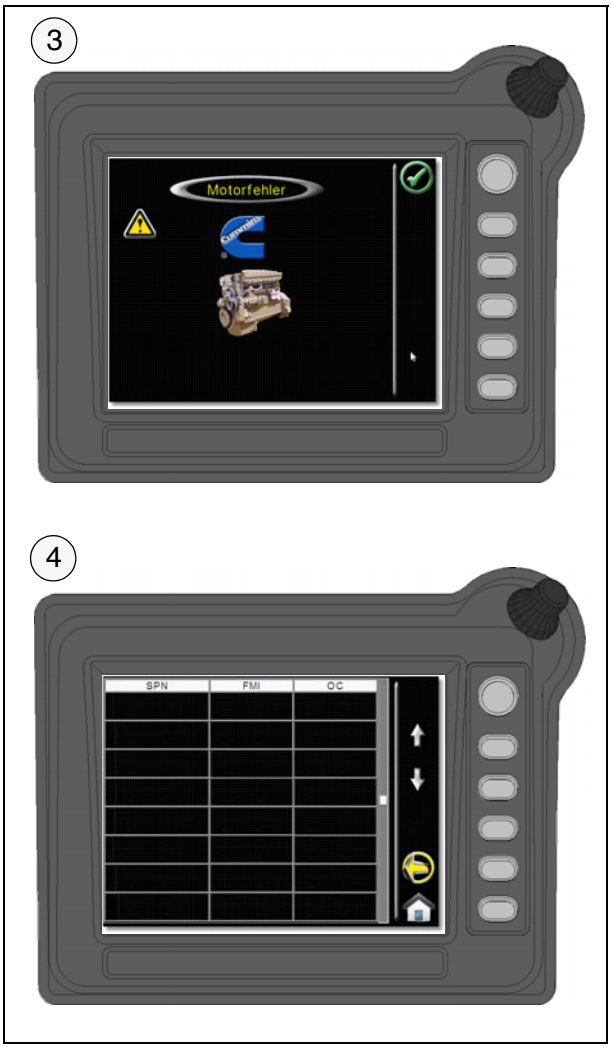

https://truckmanualshub.com/

Example:

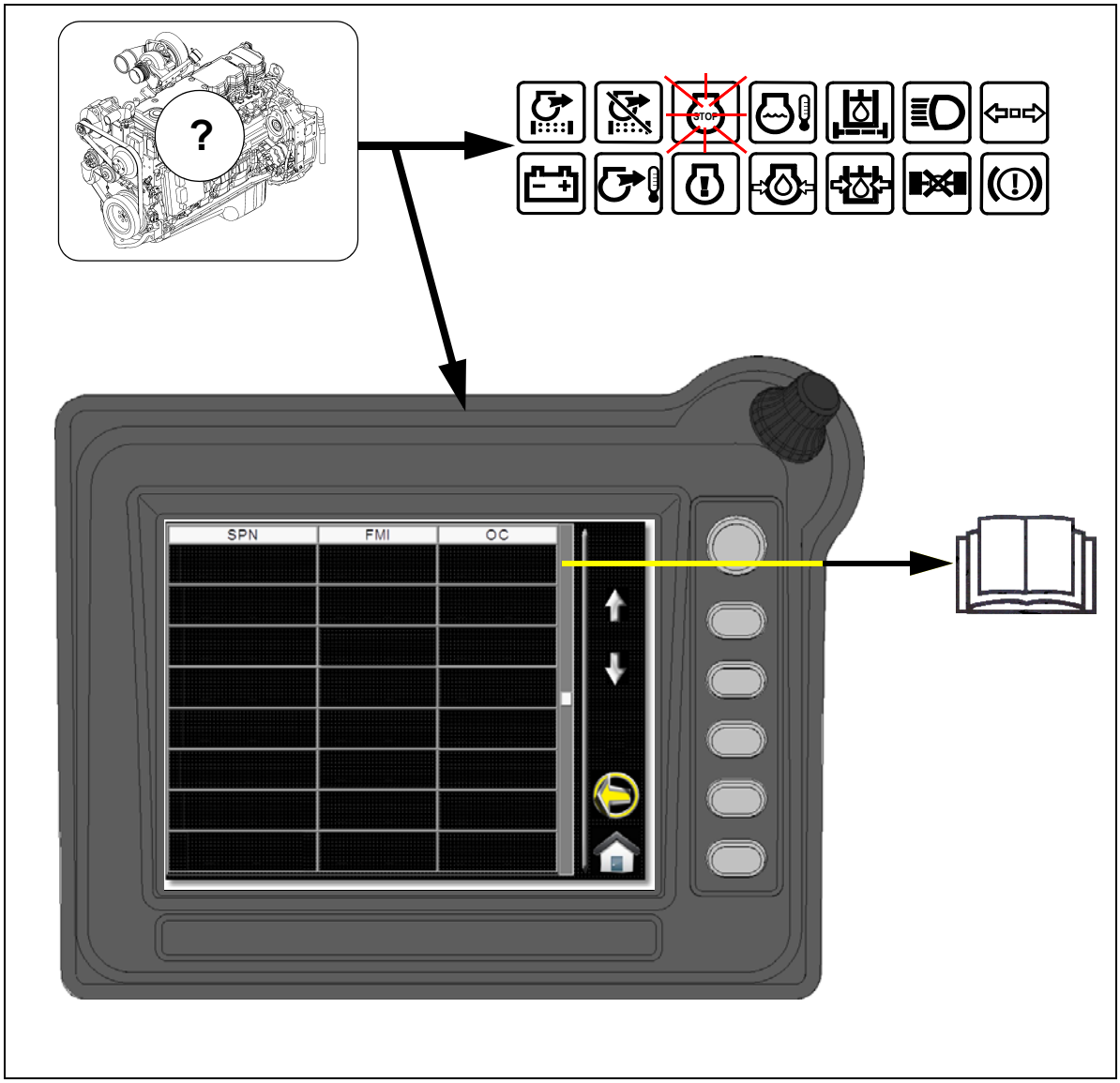

Explanation:
Warning light and display signal a serious fault on the drive engine with automatic or necessary engine shut-down.
Display:

SPN:	157
FMI:	3
OC:	1

Cause: Cable break on sensor for rail pressure.
Effect: Engine shut-down.
Frequency: Fault occurs for the 1st time.

⚠ Notify customer service of the error number displayed on your paver finisher; the customer service department will then discuss the further procedure with you.

https://truckmanualshub.com/

2.2 Error codes

Fault Code	J1939 SPN	J1939 FMI	Lamp Color	J1939 SPN Description	Cummins Description
111	629	12	Red	Controller #1	Engine Control Module Critical internal failure - Bad intelligent Device or Component
115	612	2	Red	System Diagnostic Code # 2	Engine Speed/Position Sensor Circuit lost both of two signals from the magnetic pickup sensor - Data Erratic, Intermittent, or incorrect
122	102	3	Amber	Boost Pressure	Intake Manifold Pressure Sensor Circuit – Voltage Above Normal, or Shorted to High Source
123	102	4	Amber	Boost Pressure	Intake Manifold Pressure Sensor Circuit – Voltage Below Normal, or Shorted to Low Source
131	91	3	Red	Accelerator Pedal Position	Accelerator Pedal or Lever Position Sensor Circuit - Voltage Above Normal, or Shorted to High Source
132	91	4	Red	Accelerator Pedal Position	Accelerator Pedal or Lever Position Sensor Circuit - Voltage Below Normal, or Shorted to Low Source
133	974	3	Red	Remote Accelerator	Remote Accelerator Pedal or Lever Position Sensor Circuit – Voltage Above Normal, or Shorted to High Source
134	974	4	Red	Remote Accelerator	Remote Accelerator Pedal or Lever Position Sensor Circuit – Voltage Below Normal, or Shorted to Low Source
135	100	3	Amber	Engine Oil Pressure	Oil Pressure Sensor Circuit - Voltage Above Normal, or Shorted to High Source
141	100	4	Amber	Engine Oil Pressure	Oil Pressure Sensor Circuit - Voltage Below Normal, or Shorted to Low Source
143	100	18	Amber	Engine Oil Pressure	Oil Pressure Low – Data Valid but Below Normal Operational Range - Moderately Severe Level
144	110	3	Amber	Engine Coolant Temperature	Coolant Temperature Sensor Circuit – Voltage Above Normal, or Shorted to High Source
145	110	4	Amber	Engine Coolant Temperature	Coolant Temperature Sensor Circuit – Voltage Below Normal, or Shorted to Low Source
146	110	16	Amber	Engine Coolant Temperature	Coolant Temperature High - Data Valid but Above Normal Operational Range - Moderately Severe Level
147	91	1	Red	Accelerator Pedal Position	Accelerator Pedal or Lever Position Sensor Circuit – Abnormal Frequency, Pulse Width, or Period
148	91	0	Red	Accelerator Pedal Position	Accelerator Pedal or Lever Position Sensor Circuit – Abnormal Frequency, Pulse Width, or Period
151	110	0	Red	Engine Coolant Temperature	Coolant Temperature Low - Data Valid but Above Normal Operational Range - Most Severe Level
153	105	3	Amber	Intake Manifold #1 Temp	Intake Manifold Air Temperature Sensor Circuit - Voltage Above Normal, or Shorted to High Source
154	105	4	Amber	Intake Manifold #1 Temp	Intake Manifold Air Temperature Sensor Circuit - Voltage Below Normal, or Shorted to Low Source
155	105	0	Red	Intake Manifold #1 Temp	Intake Manifold Air Temperature High – Data Valid but Above Normal Operational Range - Most Severe Level
187	1080	4	Amber	5 Volts DC Supply	Sensor Supply Voltage #2 Circuit – Voltage Below Normal, or Shorted to Low Source
195	111	3	Amber	Coolant Level	Coolant Level Sensor Circuit - Voltage Above Normal, or Shorted to High Source
196	111	4	Amber	Coolant Level	Coolant Level Sensor Circuit - Voltage Below Normal, or Shorted to Low Source
197	111	18	Amber	Coolant Level	Coolant Level - Data Valid but Below Normal Operational Range - Moderately Severe Level
211	1484	31	None	J1939 Error	Additional Auxiliary Diagnostic Codes logged - Condition Exists
212	175	3	Amber	Oil Temperature	Engine Oil Temperature Sensor 1 Circuit - Voltage Above Normal, or Shorted to High Source
213	175	4	Amber	Oil Temperature	Engine Oil Temperature Sensor 1 Circuit - Voltage Below Normal, or Shorted to Low Source
214	175	0	Red	Oil Temperature	Engine Oil Temperature - Data Valid but Above Normal Operational Range - Most Severe Level

Fault Code	J1939 SPN	J1939 FMI	Lamp Color	J1939 SPN Description	Cummins Description
221	108	3	Amber	Barometric Pressure	Barometric Pressure Sensor Circuit – Voltage Above Normal, or Shorted to High Source
222	108	4	Amber	Barometric Pressure	Barometric Pressure Sensor Circuit – Voltage Below Normal, or Shorted to Low Source
227	1080	3	Amber	5 Volts DC Supply	Sensor Supply Voltage #2 Circuit – Voltage Above Normal, or Shorted to High Source
231	109	3	Amber	Coolant Pressure	Coolant Pressure Sensor Circuit - Voltage Above Normal, or Shorted to High Source
232	109	4	Amber	Coolant Pressure	Coolant Pressure Sensor Circuit - Voltage Below Normal, or Shorted to Low Source
233	109	18	Amber	Coolant Pressure	Coolant Pressure - Data Valid but Below Normal Operational Range - Moderately Severe Level
234	190	0	Red	Engine Speed	Engine Speed High - Data Valid but Above Normal Operational Range - Most Severe Level
235	111	1	Red	Coolant Level	Coolant Level Low - Data Valid but Below Normal Operational Range - Most Severe Level
237	644	2	Amber	External Speed Input	External Speed Input (Multiple Unit Synchronization) - Data Erratic, Intermittent, or Incorrect
238	611	4	Amber	System Diagnostic code # 1	Sensor Supply Voltage #3 Circuit – Voltage Below Normal, or Shorted to Low Source
241	84	2	Amber	Wheel-based Vehicle Speed	Vehicle Speed Sensor Circuit - Data Erratic, Intermittent, or Incorrect
242	84	10	Amber	Wheel-based Vehicle Speed	Vehicle Speed Sensor Circuit tampering has been detected – Abnormal Rate of Change
245	647	4	Amber	Fan Clutch Output Device Driver	Fan Control Circuit - Voltage Below Normal, or Shorted to Low Source
249	171	3	Amber	Ambient Air Temperature	Ambient Air Temperature Sensor Circuit - Voltage Above Normal, or Shorted to High Source
256	171	4	Amber	Ambient Air Temperature	Ambient Air Temperature Sensor Circuit - Voltage Below Normal, or Shorted to Low Source
261	174	16	Amber	Fuel Temperature	Engine Fuel Temperature - Data Valid but Above Normal Operational Range - Moderately Severe Level
263	174	3	Amber	Fuel Temperature	Engine Fuel Temperature Sensor 1 Circuit - Voltage Above Normal, or Shorted to High Source
265	174	4	Amber	Fuel Temperature	Engine Fuel Temperature Sensor 1 Circuit - Voltage Below Normal, or Shorted to Low Source
268	94	2	Amber	Fuel Delivery Pressure	Fuel Pressure Sensor Circuit - Data Erratic, Intermittent, or Incorrect
271	1347	4	Amber	Fuel Pump Pressurizing Assembly #1	High Fuel Pressure Solenoid Valve Circuit – Voltage Below Normal, or Shorted to Low Source
272	1347	3	Amber	Fuel Pump Pressurizing Assembly #1	High Fuel Pressure Solenoid Valve Circuit – Voltage Above Normal, or Shorted to High Source
275	1347	7	Amber	Fuel Pump Pressurizing Assembly #1	Fuel Pumping Element (Front) – Mechanical System Not Responding Properly or Out of Adjustment
281	1347	7	Amber	Fuel Pump Pressurizing Assembly #1	High Fuel Pressure Solenoid Valve #1 – Mechanical System Not Responding Properly or Out of Adjustment
284	1043	4	Amber	Internal Sensor Voltage Supply	Engine Speed/Position Sensor (Crankshaft) Supply Voltage Circuit - Voltage Below Normal, or Shorted to Low Source
285	639	9	Amber	SAE J1939 Datalink	SAE J1939 Multiplexing PGN Timeout Error - Abnormal Update Rate
286	639	13	Amber	SAE J1939 Datalink	SAE J1939 Multiplexing Configuration Error – Out of Calibration
287	91	19	Red	Accelerator Pedal Position	SAE J1939 Multiplexing Accelerator Pedal or Lever Sensor System Error - Received Network Data In Error
288	974	19	Red	Remote Accelerator	SAE J1939 Multiplexing Remote Accelerator Pedal or Lever Data Error - Received Network Data In Error
293	441	3	Amber	OEM Temperature	Auxiliary Temperature Sensor Input # 1 Circuit - Voltage Above Normal, or Shorted to High Source
294	441	4	Amber	OEM Temperature	Auxiliary Temperature Sensor Input # 1 Circuit - Voltage Below Normal, or Shorted to Low Source
295	108	2	Amber	Barometric Pressure	Barometric Pressure Sensor Circuit - Data Erratic,

https://truckmanualshub.com/

Fault Code	J1939 SPN	J1939 FMI	Lamp Color	J1939 SPN Description	Cummins Description
					Intermittent, or Incorrect
296	1388	14	Red	Auxiliary Pressure	Auxiliary Pressure Sensor Input 1 - Special Instructions
297	1388	3	Amber	Auxiliary Pressure	Auxiliary Pressure Sensor Input # 2 Circuit - Voltage Above Normal, or Shorted to High Source
298	1388	4	Amber	Auxiliary Pressure	Auxiliary Pressure Sensor Input # 2 Circuit - Voltage Below Normal, or Shorted to Low Source
319	251	2	Maint	Real Time Clock Power	Real Time Clock Power Interrupt - Data Erratic, Intermittent, or Incorrect
322	651	5	Amber	Injector Cylinder #01	Injector Solenoid Cylinder #1 Circuit – Current Below Normal, or Open Circuit
323	655	5	Amber	Injector Cylinder #05	Injector Solenoid Cylinder #5 Circuit – Current Below Normal, or Open Circuit
324	653	5	Amber	Injector Cylinder #03	Injector Solenoid Cylinder #3 Circuit – Current Below Normal, or Open Circuit
325	656	5	Amber	Injector Cylinder #06	Injector Solenoid Cylinder #6 Circuit – Current Below Normal, or Open Circuit
331	652	5	Amber	Injector Cylinder #02	Injector Solenoid Cylinder #2 Circuit – Current Below Normal, or Open Circuit
332	654	5	Amber	Injector Cylinder #04	Injector Solenoid Cylinder #4 Circuit – Current Below Normal, or Open Circuit
334	110	2	Amber	Engine Coolant Temperature	Coolant Temperature Sensor Circuit – Data Erratic, Intermittent, or Incorrect
338	1267	3	Amber	Vehicle Accessories Relay Driver	Idle Shutdown Vehicle Accessories Relay Driver Circuit - Voltage Above Normal, or Shorted to High Source
339	1267	4	Amber	Vehicle Accessories Relay Driver	Idle Shutdown Vehicle Accessories Relay Driver Circuit - Voltage Below Normal, or Shorted to Low Source
341	630	2	Amber	Calibration Memory	Engine Control Module data lost - Data Erratic, Intermittent, or Incorrect
342	630	13	Red	Calibration Memory	Electronic Calibration Code Incompatibility - Out of Calibration
343	629	12	Amber	Controller #1	Engine Control Module Warning internal hardware failure - Bad Intelligent Device or Component
351	629	12	Amber	Controller #1	Injector Power Supply - Bad Intelligent Device or Component
352	1079	4	Amber	5 Volts DC Supply	Sensor Supply Voltage #1 Circuit – Voltage Below Normal, or Shorted to Low Source
386	1079	3	Amber	5 Volts DC Supply	Sensor Supply Voltage #1 Circuit – Voltage Above Normal, or Shorted to High Source
387	1043	3	Amber	Internal Sensor Voltage Supply	Accelerator Pedal or Lever Position Sensor Supply Voltage Circuit - Voltage Above Normal, or Shorted to High Source
415	100	1	Red	Engine Oil Pressure	Oil Pressure Low – Data Valid but Below Normal Operational Range - Most Severe Level
418	97	15	Maint.	Water in Fuel Indicator	Water in Fuel Indicator High - Data Valid but Above Normal Operational Range – Least Severe Level
422	111	2	Amber	Coolant Level	Coolant Level - Data Erratic, Intermittent, or Incorrect
425	175	2	Amber	Oil Temperature	Engine Oil Temperature - Data Erratic, Intermittent, or Incorrect
428	97	3	Amber	Water in Fuel Indicator	Water in Fuel Sensor Circuit - Voltage Above Normal, or Shorted to High Source
429	97	4	Amber	Water in Fuel Indicator	Water in Fuel Sensor Circuit - Voltage Below Normal, or Shorted to Low Source
431	558	2	Amber	Accelerator Pedal Low Idle Switch	Accelerator Pedal or Lever Idle Validation Circuit - Data Erratic, Intermittent, or Incorrect
432	558	13	Red	Accelerator Pedal Low Idle Switch	Accelerator Pedal or Lever Idle Validation Circuit - Out of Calibration
433	102	2	Amber	Boost Pressure	Intake Manifold Pressure Sensor Circuit - Data Erratic, Intermittent, or Incorrect
434	627	2	Amber	Power Supply	Power Lost without Ignition Off - Data Erratic, Intermittent, or Incorrect

https://truckmanualshub.com/

Fault Code	J1939 SPN	J1939 FMI	Lamp Color	J1939 SPN Description	Cummins Description
					Intermittent, or Incorrect
296	1388	14	Red	Auxiliary Pressure	Auxiliary Pressure Sensor Input 1 - Special Instructions
297	1388	3	Amber	Auxiliary Pressure	Auxiliary Pressure Sensor Input # 2 Circuit - Voltage Above Normal, or Shorted to High Source
298	1388	4	Amber	Auxiliary Pressure	Auxiliary Pressure Sensor Input # 2 Circuit - Voltage Below Normal, or Shorted to Low Source
319	251	2	Maint	Real Time Clock Power	Real Time Clock Power Interrupt - Data Erratic, Intermittent, or Incorrect
322	651	5	Amber	Injector Cylinder #01	Injector Solenoid Cylinder #1 Circuit – Current Below Normal, or Open Circuit
323	655	5	Amber	Injector Cylinder #05	Injector Solenoid Cylinder #5 Circuit – Current Below Normal, or Open Circuit
324	653	5	Amber	Injector Cylinder #03	Injector Solenoid Cylinder #3 Circuit – Current Below Normal, or Open Circuit
325	656	5	Amber	Injector Cylinder #06	Injector Solenoid Cylinder #6 Circuit – Current Below Normal, or Open Circuit
331	652	5	Amber	Injector Cylinder #02	Injector Solenoid Cylinder #2 Circuit – Current Below Normal, or Open Circuit
332	654	5	Amber	Injector Cylinder #04	Injector Solenoid Cylinder #4 Circuit – Current Below Normal, or Open Circuit
334	110	2	Amber	Engine Coolant Temperature	Coolant Temperature Sensor Circuit – Data Erratic, Intermittent, or Incorrect
338	1267	3	Amber	Vehicle Accessories Relay Driver	Idle Shutdown Vehicle Accessories Relay Driver Circuit - Voltage Above Normal, or Shorted to High Source
339	1267	4	Amber	Vehicle Accessories Relay Driver	Idle Shutdown Vehicle Accessories Relay Driver Circuit - Voltage Below Normal, or Shorted to Low Source
341	630	2	Amber	Calibration Memory	Engine Control Module data lost - Data Erratic, Intermittent, or Incorrect
342	630	13	Red	Calibration Memory	Electronic Calibration Code Incompatibility - Out of Calibration
343	629	12	Amber	Controller #1	Engine Control Module Warning internal hardware failure - Bad Intelligent Device or Component
351	629	12	Amber	Controller #1	Injector Power Supply - Bad Intelligent Device or Component
352	1079	4	Amber	5 Volts DC Supply	Sensor Supply Voltage #1 Circuit – Voltage Below Normal, or Shorted to Low Source
386	1079	3	Amber	5 Volts DC Supply	Sensor Supply Voltage #1 Circuit – Voltage Above Normal, or Shorted to High Source
387	1043	3	Amber	Internal Sensor Voltage Supply	Accelerator Pedal or Lever Position Sensor Supply Voltage Circuit - Voltage Above Normal, or Shorted to High Source
415	100	1	Red	Engine Oil Pressure	Oil Pressure Low – Data Valid but Below Normal Operational Range - Most Severe Level
418	97	15	Maint.	Water in Fuel Indicator	Water in Fuel Indicator High - Data Valid but Above Normal Operational Range – Least Severe Level
422	111	2	Amber	Coolant Level	Coolant Level - Data Erratic, Intermittent, or Incorrect
425	175	2	Amber	Oil Temperature	Engine Oil Temperature - Data Erratic, Intermittent, or Incorrect
428	97	3	Amber	Water in Fuel Indicator	Water in Fuel Sensor Circuit - Voltage Above Normal, or Shorted to High Source
429	97	4	Amber	Water in Fuel Indicator	Water in Fuel Sensor Circuit - Voltage Below Normal, or Shorted to Low Source
431	558	2	Amber	Accelerator Pedal Low Idle Switch	Accelerator Pedal or Lever Idle Validation Circuit - Data Erratic, Intermittent, or Incorrect
432	558	13	Red	Accelerator Pedal Low Idle Switch	Accelerator Pedal or Lever Idle Validation Circuit - Out of Calibration
433	102	2	Amber	Boost Pressure	Intake Manifold Pressure Sensor Circuit - Data Erratic, Intermittent, or Incorrect
434	627	2	Amber	Power Supply	Power Lost without Ignition Off - Data Erratic, Intermittent, or Incorrect

https://truckmanualshub.com/

Fault Code	J1939 SPN	J1939 FMI	Lamp Color	J1939 SPN Description	Cummins Description
692	1172	4	Amber	Turbocharger #1Compressor Inlet Temperature	Turbocharger #1 Compressor Inlet Temperature Sensor Circuit – Voltage Below Normal, or Shorted to Low Source
697	1136	3	Amber	Sensor Circuit - Voltage	ECM Internal Temperature Sensor Circuit - Voltage Above Normal, or Shorted to High Source
698	1136	4	Amber	Sensor Circuit - Voltage	ECM Internal Temperature Sensor Circuit - Voltage Below Normal, or Shorted to Low Source
719	22	3	Amber	Crankcase Pressure	Extended Crankcase Blow-by Pressure Circuit - Voltage Above Normal, or Shorted to High Source
729	22	4	Amber	Crankcase Pressure	Extended Crankcase Blow-by Pressure Circuit - Voltage Below Normal, or Shorted to Low Source
731	723	7	Amber	Engine Speed Sensor #2	Engine Speed/Position #2 mechanical misalignment between camshaft and crankshaft sensors - Mechanical System Not Responding Properly or Out of Adjustment
753	723	2	Amber	Engine Speed Sensor #2	Engine Speed/Position #2 Camshaft sync error - Data Erratic, Intermittent, or Incorrect
757	611	31	Amber	Electronic Control Module	Electronic Control Module data lost - Condition Exists
778	723	2	Amber	Engine Speed Sensor #2	Engine Speed Sensor (Camshaft) Error – Data Erratic, Intermittent, or Incorrect
779	703	11	Amber	Auxiliary Equipment Sensor Input	Warning Auxiliary Equipment Sensor Input # 3 (OEM Switch) - Root Cause Not Known
951	166	2	None	Cylinder Power	Cylinder Power Imbalance Between Cylinders - Data Erratic, Intermittent, or Incorrect
1117	627	2	None	Power Supply	Power Lost With Ignition On - Data Erratic, Intermittent, or Incorrect
1139	651	7	Amber	Injector Cylinder # 01	Injector Cylinder #1 - Mechanical System Not Responding Properly or Out of Adjustment
1141	652	7	Amber	Injector Cylinder # 02	Injector Cylinder #2 - Mechanical System Not Responding Properly or Out of Adjustment
1142	653	7	Amber	Injector Cylinder # 03	Injector Cylinder #3 - Mechanical System Not Responding Properly or Out of Adjustment
1143	654	7	Amber	Injector Cylinder # 04	Injector Cylinder #4 - Mechanical System Not Responding Properly or Out of Adjustment
1144	655	7	Amber	Injector Cylinder # 05	Injector Cylinder #5 - Mechanical System Not Responding Properly or Out of Adjustment
1145	656	7	Amber	Injector Cylinder # 06	Injector Cylinder #6 - Mechanical System Not Responding Properly or Out of Adjustment
1239	2623	3	Amber	Accelerator Pedal Position	Accelerator Pedal or Lever Position Sensor 2 Circuit - Voltage Above Normal, or Shorted to High Source
1241	2623	4	Amber	Accelerator Pedal Position	Accelerator Pedal or Lever Position Sensor 2 Circuit - Voltage Below Normal, or Shorted to Low Source
1242	91	2	Red	Accelerator Pedal Position	Accelerator Pedal or Lever Position Sensor 1 and 2 - Data Erratic, Intermittent, or Incorrect
1256	1563	2	Amber	Control Module Identification Input State	Control Module Identification Input State Error - Data Erratic, Intermittent, or Incorrect
1257	1563	2	Red	Control Module Identification Input State	Control Module Identification Input State Error - Data Erratic, Intermittent, or Incorrect
1911	157	0	Amber	Injector Metering Rail	Injector Metering Rail 1 Pressure - Data Valid but Above Normal Operational Range - Most Severe Level
2111	32	3	Amber	Coolant Temperature	Coolant Temperature 2 Sensor Circuit - Voltage Above Normal, or Shorted to High Source
2112	52	4	Amber	Coolant Temperature	Coolant Temperature 2 Sensor Circuit - Voltage Below Normal, or Shorted to Low Source
2113	52	16	Amber	Coolant Temperature	Coolant Temperature 2 - Data Valid but Above Normal Operational Range - Moderately Severe Level
2114	52	0	Red	Coolant Temperature	Coolant Temperature 2 - Data Valid but Above Normal Operational Range - Most Severe Level
2115	2981	3	Amber	Coolant Pressure	Coolant Pressure 2 Circuit - Voltage Above Normal, or Shorted to High Source
2116	2981	4	Amber	Coolant Pressure	Coolant Pressure 2 Circuit - Voltage Below Normal, or Shorted to Low Source

https://truckmanualshub.com/

Fault Code	J1939 SPN	J1939 FMI	Lamp Color	J1939 SPN Description	Cummins Description
2117	2981	18	Amber	Coolant Pressure	Coolant Pressure 2 - Data Valid but Below Normal Operational Range - Moderately Severe Level
2185	611	3	Amber	System Diagnostic code # 1	Sensor Supply Voltage #4 Circuit – Voltage Above Normal, or Shorted to High Source
2186	611	4	Amber	System Diagnostic code # 1	Sensor Supply Voltage #4 Circuit – Voltage Below Normal, or Shorted to Low Source
2195	703	14	Red	Auxiliary Equipment Sensor	Auxiliary Equipment Sensor Input 3 Engine Protec Critical - Special Instructions
2215	94	18	Amber	Fuel Delivery Pressure	Fuel Pump Delivery Pressure - Data Valid but Bel Normal Operational Range - Moderately Severe Level
2216	94	1	Amber	Fuel Delivery Pressure	Fuel Pump Delivery Pressure - Data Valid but Abo Normal Operational Range – Moderately Severe Level
2217	630	31	Amber	Calibration Memory	ECM Program Memory (RAM) Corruption - Condit Exists
2249	157	1	Amber	Injector Metering Rail 1 Pressure	Injector Metering Rail 1 Pressure - Data Valid but Below Normal Operational Range - Most Severe Level
2265	1075	3	Amber	Electric Lift Pump for Engine Fuel	Fuel Priming Pump Control Signal Circuit – Voltag Above Normal, or Shorted to High Source
2266	1075	4	Amber	Electric Lift Pump for Engine Fuel	Fuel Priming Pump Control Signal Circuit – Voltag Below Normal, or Shorted to Low Source
2292	611	16	Amber	Fuel Inlet Meter Device	Fuel Inlet Meter Device - Data Valid but Above Normal Operational Range - Moderately Severe L
2293	611	18	Amber	Fuel Inlet Meter Device	Fuel Inlet Meter Device flow demand lower than expected - Data Valid but Below Normal Operatior Range - Moderately Severe Level
2311	633	31	Amber	Fuel Control Valve #1	Fueling Actuator #1 Circuit Error – Condition Exist
2321	190	2	None	Engine Speed	Engine Speed / Position Sensor #1 - Data Erratic, Intermittent, or Incorrect
2322	723	2	None	Engine Speed Sensor #2	Engine Speed / Position Sensor #2 - Data Erratic, Intermittent, or Incorrect
2345	103	10	Amber	Turbocharger 1 Speed	Turbocharger speed invalid rate of change detecte Abnormal Rate of Change
2346	2789	15	None	System Diagnostic Code #1	Turbocharger Turbine Inlet Temperature (Calculat - Data Valid but Above Normal Operational Range Least Severe Level
2347	2629	15	None	System Diagnostic Code #1	Turbocharger Compressor Outlet Temperature (Calculated) - Data Valid but Above Normal Operational Range – Least Severe Level
2362	1072	4	Amber	Engine Compression Brake Output # 1	Engine Brake Actuator Circuit #1 – Voltage Below Normal, or Shorted to Low Source
2363	1073	4	Amber	Engine Compression Brake Output # 2	Engine Brake Actuator Circuit #2 – Voltage Below Normal, or Shorted to Low Source
2366	1072	3	Amber	Engine Compression Brake Output # 1	Engine Brake Actuator Circuit #1 – Voltage Above Normal, or Shorted to High Source
2367	1073	3	Amber	Engine Compression Brake Output # 2	Engine Brake Actuator Circuit #2 – Voltage Above Normal, or Shorted to High Source
2377	647	3	Amber	Fan Clutch Output Device Driver	Fan Control Circuit - Voltage Above Normal, or Shorted to High Source
2384	641	4	Amber	Variable Geometry Turbocharger	VGT Actuator Driver Circuit - Voltage Below Norm or Shorted to Low Source
2385	641	3	Amber	Variable Geometry Turbocharger	VGT Actuator Driver Circuit - Voltage Above Norm or Shorted to High Source
2555	729	3	Amber	Inlet Air Heater Driver #1	Intake Air Heater #1 Circuit - Voltage Above Norm or Shorted to High Source
2556	729	4	Amber	Inlet Air Heater Driver #1	Intake Air Heater #1 Circuit - Voltage Below Norm or Shorted to Low Source
					Auxiliary PWM Driver #1 - Voltage Above Normal

Fault Code	J1939 SPN	J1939 FMI	Lamp Color	J1939 SPN Description	Cummins Description
2963	110	15	None	Engine Coolant Temperature	Engine Coolant Temperature High - Data Valid but Above Normal Operational Range - Least Severe Level
2964	105	15	None	Intake Manifold #1 Temperature	Intake Manifold Temperature High - Data Valid but Above Normal Operational Range - Least Severe Level
2973	102	2	Amber	Boost Pressure	Intake Manifold Pressure Sensor Circuit - Data Erratic, Intermittent, or Incorrect

https://truckmanualshub.com/

3 Menu structure of the setting and display menus

The following illustration shows the menu structure and serves to simplify operation and the procedure in the case of various settings and displays.

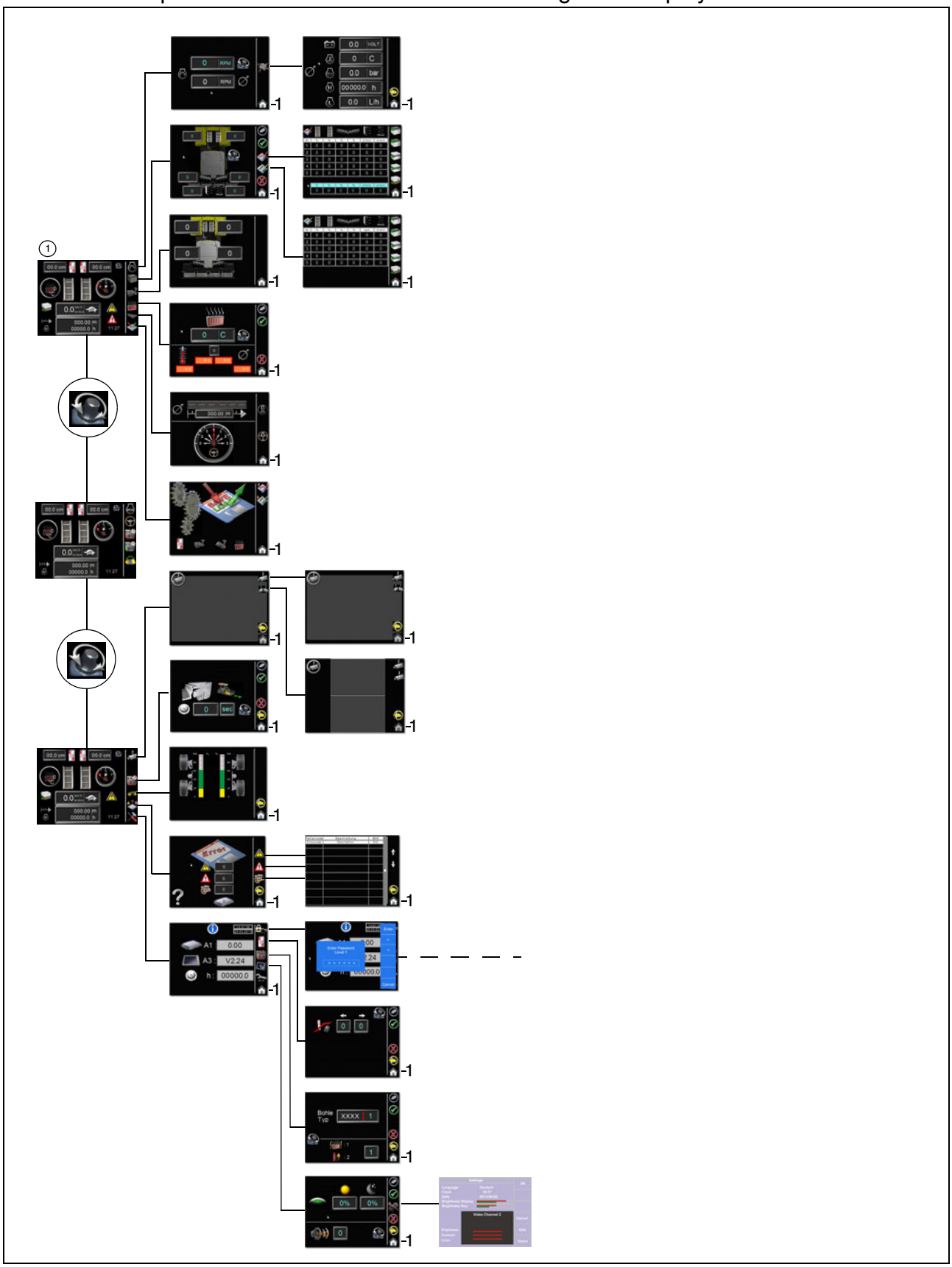

https://truckmanualshub.com/

https://truckmanualshub.com/

D 30 Operation

1 Operating elements on the paver finisher

1.1 Control elements on the operator's control station

WARNING	Danger of falling from the vehicle
	Entering and leaving the vehicle and the driver's seat during operation poses the danger of falling from the vehicle which can cause severe to fatal injuries! - During operation, the operator must be at the intended driver's seat and be seated properly. - Never jump onto or off a moving vehicle. - Keep accessible surfaces free of any soiling, e.g. operating substances, to avoid the risk of slipping. - Use the steps provided and hold onto the handrail with both hands. - Comply with all further information in these instructions and in the safety manual.

Protective roof (○)

NOTE	Caution! Possible collision of parts
	The following adjustments must be made before lowering the roof. - Control platform locked in central position - Operating panel locked in central position - Operating panel fixed in lowest position and engaged in rearmost setting - Steering wheel knob is at the bottom (wheeled paver) - Driver's seats swivelled to middle setting and in lowest position - Backrests and armrests of driver's seats tilted forwards - Front and side windows closed - Engine hood and side flaps closed - Rotating beacon swivelled inwards and in lowest setting.

NOTE	Caution! Possible damage to parts!
	The following measures must be ensured before transport: - After lowering the roof, the lock tabs (1) of the side windows must be in the corresponding mountings on both sides of the machine.

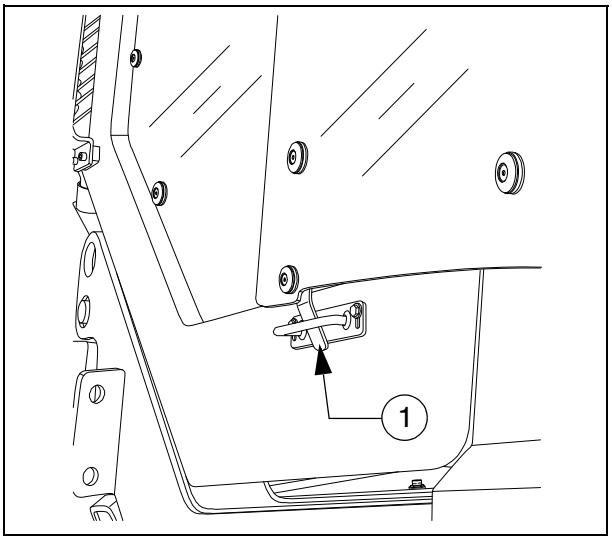

https://truckmanualshub.com/

The protective roof can be raised and lowered with a manual hydraulic pump.

☞ The exhaust pipe is lowered or raised together with the roof.

"Screw lock" version (A)

- Connect the pump lever (1) to the pump (2).
  - Lower the roof: The locks (3) on both sides of the roof must be released.
  - Raise the roof: The locks (4) on both sides of the roof must be released.
- Set the adjustment lever (5) to the "Raise" or "Lower" position.
  - Raise the roof: The lever points forwards.
  - Lower the roof: The lever points backwards.
- Operate the pump lever (1) until the roof has reached the upper or lower limit position.
  - Roof in uppermost position: Set the locks (3) on both sides of the roof.
  - Roof lowered: Set the lock (4) on both sides of the roof.

"Pin lock" version (B)

- Connect the pump lever (1) to the pump (2).
  - Pull bolts (3) on both sides of the roof.
- Operate the pump lever (1) until the roof has reached the upper or lower limit position.
  - Set bolts (3) in the respective position on both sides of the roof.

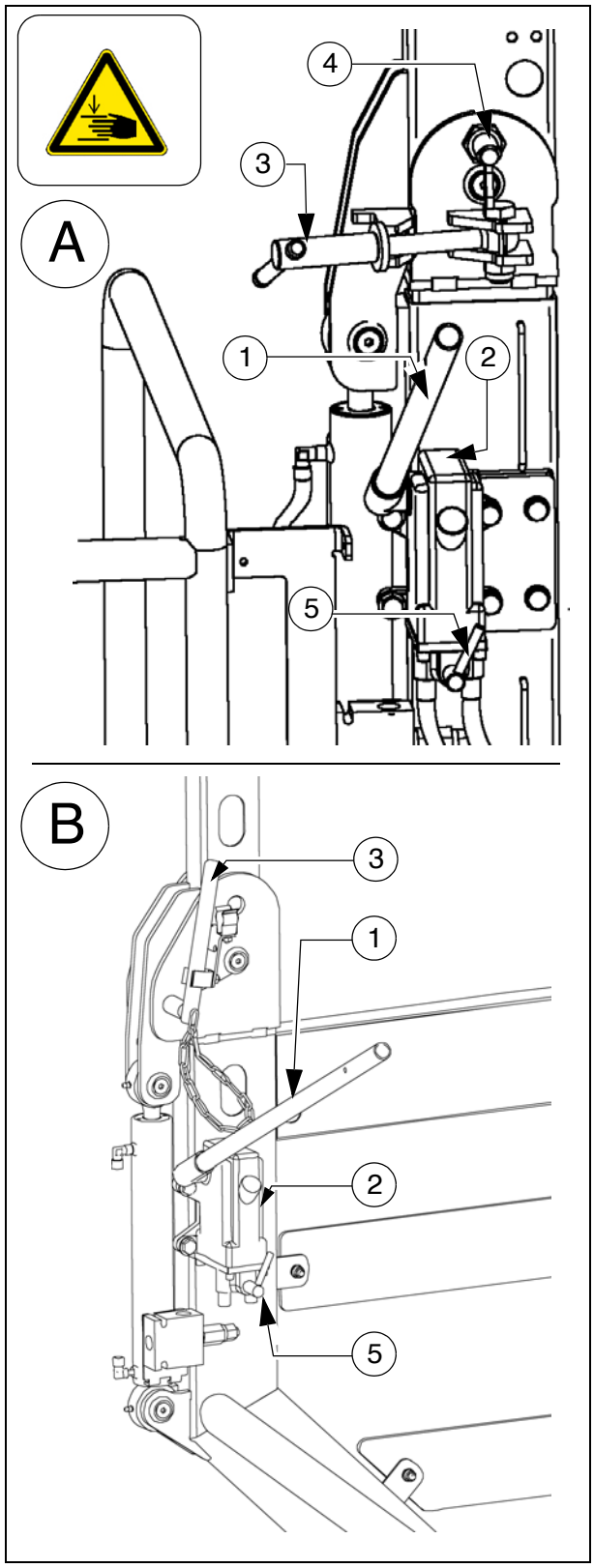

https://truckmanualshub.com/

Ladder

The ladder is used to access the control platform.
The ladder can be secured in the top position:

- have the ladder raised by a second person. Set the latch (1) on both sides of the ladder to the intended position.

STOP The ladder must not be locked when driving or paving!

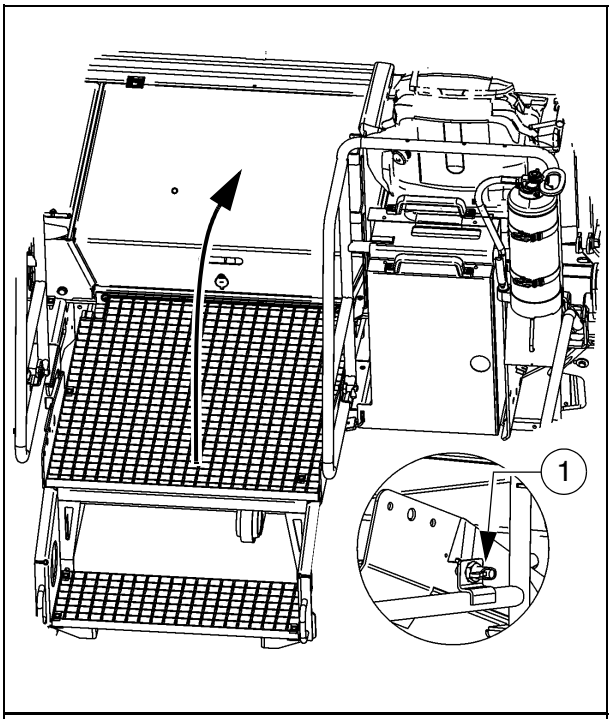

Storage space

There are two removable containers (2) under the lockable bottom flap.

For storing the on-board tool kit, remote controls and other attachments.

The fuse and terminal box is beneath the metal containers.

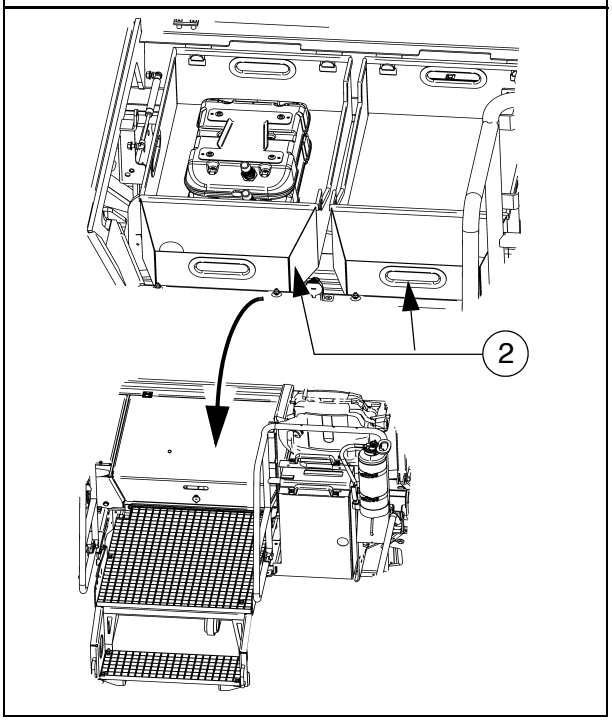

https://truckmanualshub.com/

Control platform, moveable (○)

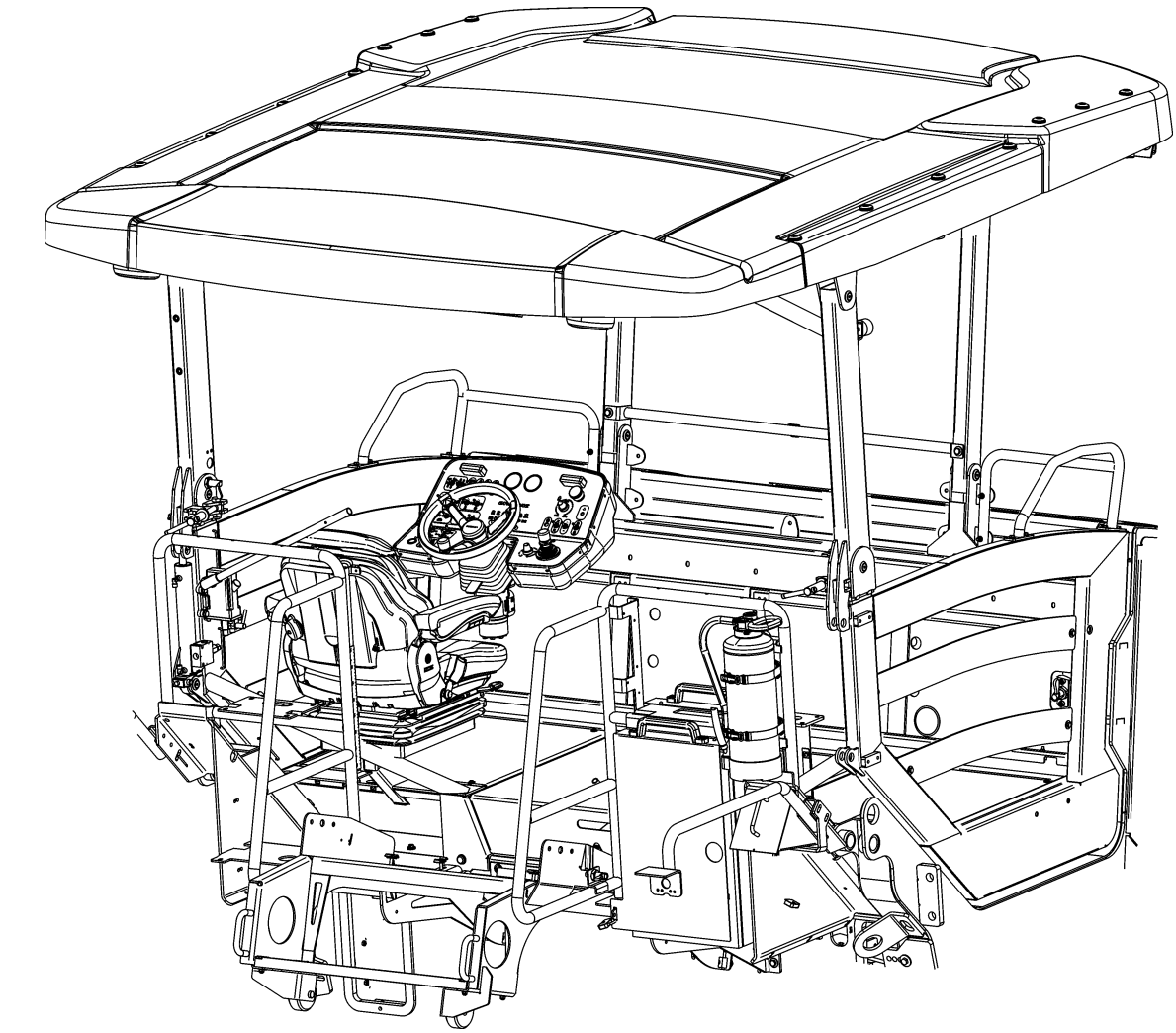

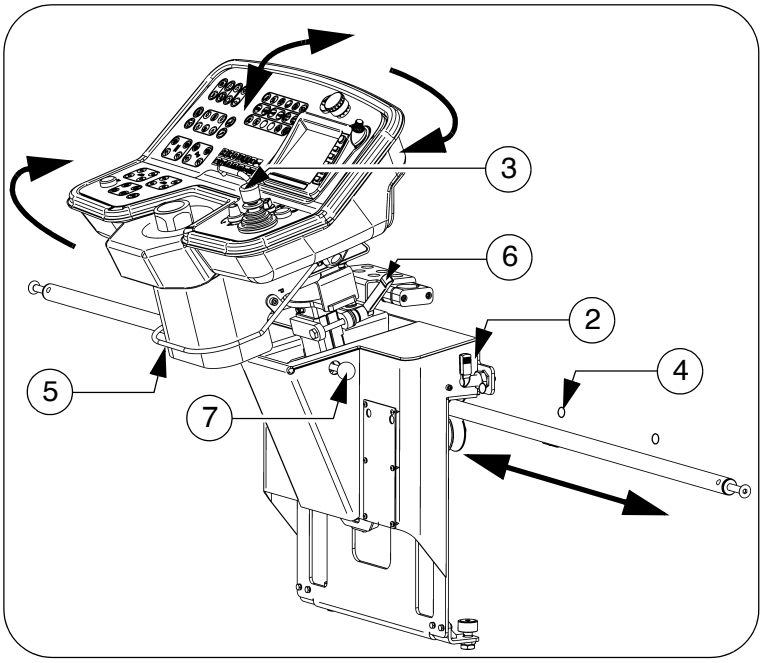

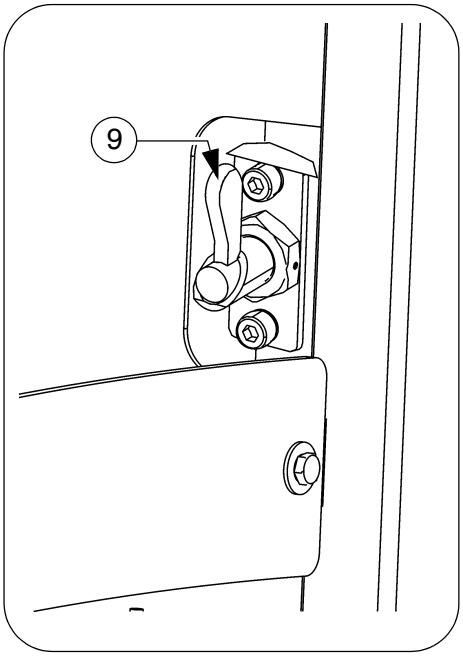

https://truckmanualshub.com/

The control platform can be hydraulically shifted beyond the left/right outer edge of the vehicle, providing the driver with a better view of the paving area in this position.

STOP During transportation in road traffic and when transporting the vehicle on transporters, the control platform must be secured in the central position!

☞ Actuating the platform shift function: see operating panel.

☞ To shift the control platform, the latch (9) must be released.

⚠ Shifting the platform increases the basic width of the paver finisher.

STOP If the platform is moved, ensure that there is no one in the danger area!

STOP Only adjust the operating position whilst the vehicle is stationary!

Control platform lock (○)

- Release the latch (9) to move the control platform.

☞ The latch must be fixed when the control platform is set in the middle and during transport.

☞ To be able to set the lock, the platform must be positioned centrally above the vehicle frame.

https://truckmanualshub.com/

Operating panel

The operating panel can be adjusted to the various operating positions: left/right, sitting/standing. The entire operating panel can be swivelled for operation beyond the outer edge of the vehicle.

⚠ Make sure it is latched properly!

STOP Only adjust the operating position whilst the vehicle is stationary!

Pushing the operating panel:

- Release panel latch (2) and slide panel console to the desired position using the handle (3).
- Insert panel latch (2) into one of the detent positions (4).

Swivelling the operating panel:

- Lift latch (5), swivel operating panel to the required position using the handle (3) and allow latch to engage again in one of the intended detent positions.

Raise/lower the operating panel:

- Release clamping lever (6), lift or lower operating panel.
  Tighten clamping lever (6) in required position.

Operating panel, linear adjustment:

- Press latch (7), move operating panel to foremost or rearmost position and allow latch to engage again.

Protective cabin (○)

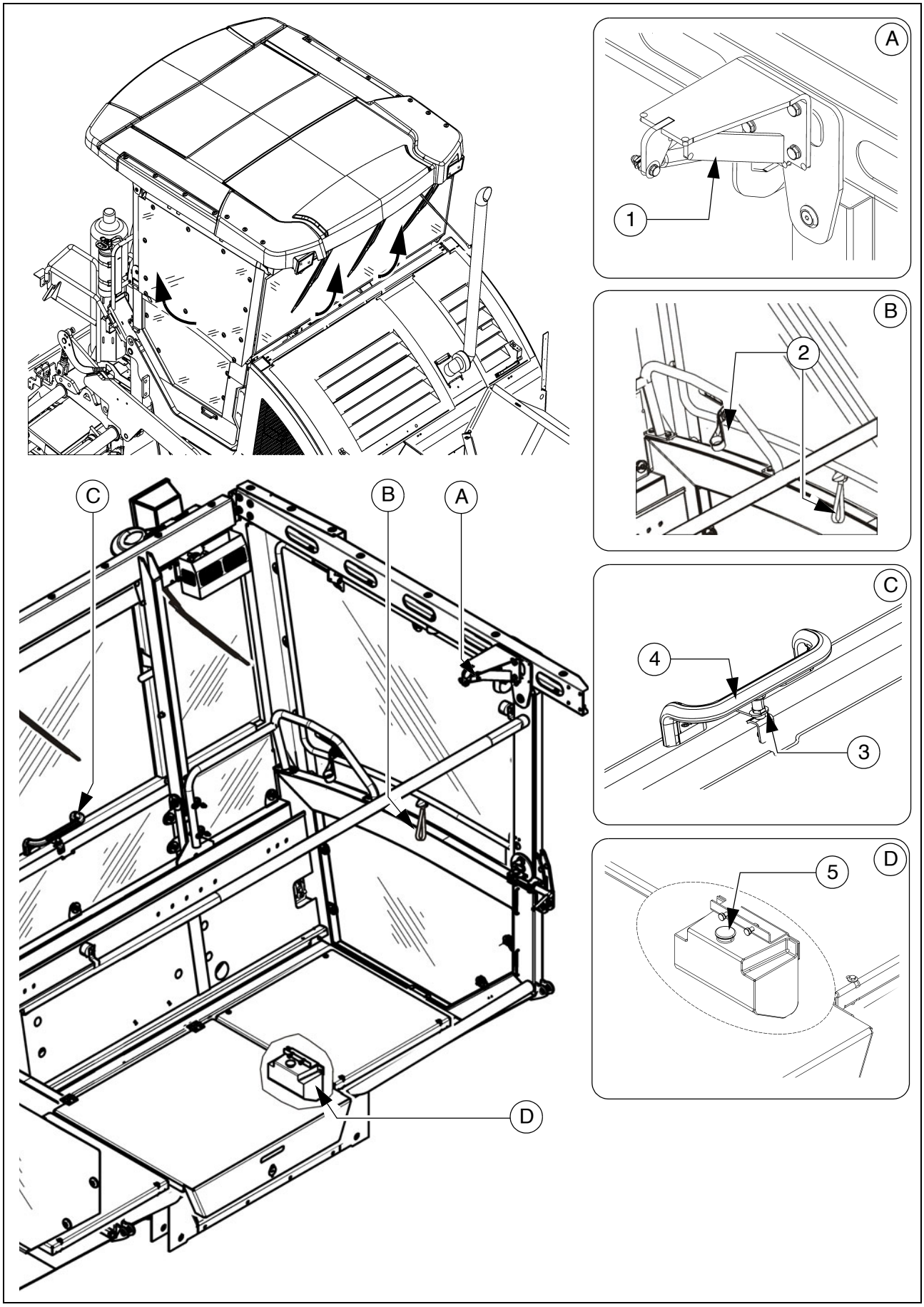

https://truckmanualshub.com/

CAUTION	**Risk of crushing hands**
	When closing the spring-loaded front and side windows, there is a risk of crushing which can cause injuries! - Do not reach into the danger area. - Set the latches correctly. - Comply with further instructions in the safety manual.

The protective roof is equipped with an additional front window and two side windows.

- The side windows can be swivelled out to the side at the sliding frame.
  To close the side windows, press the latch (1) and pull the sliding frame with the both straps (2).
- The front window can be swivelled using the handle (4) with the latch pulled (3).
  To close the front window, pull the latch (4) and pull the sliding frame at the handle (4).

Windscreen wiper

- Activate the windscreen wiper / screen wash on the operating panel if necessary.

☞ Ensure that the washer fluid tank (5) is always adequately filled.

⚠ Replace worn wiper blades immediately.

https://truckmanualshub.com/

.Emergency actuation control platform, movable

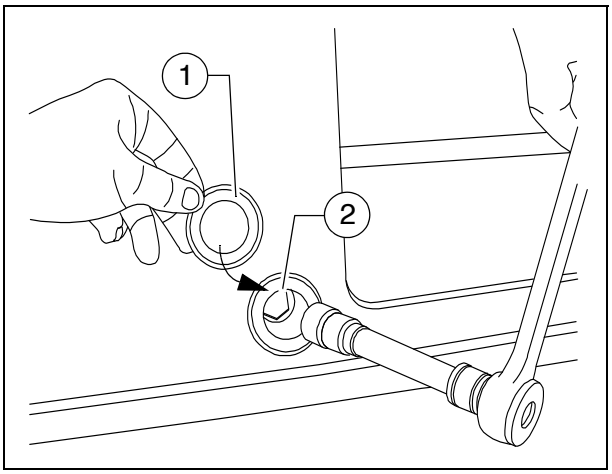

If the control platform cannot be moved hydraulically, it can be pushed back to its central position by hand.

- Remove the screw cap (1) (next to the right footwell window).
- Remove screw (2).

☞ This undoes the connection between the platform and the frame so that the platform can be moved.

- Restore the original status after eliminating the fault.

https://truckmanualshub.com/

Seat console

The seat consoles can be swivelled for operation beyond the outer edge of the vehicle.

- Press latch (1), swivel seat console to the desired position and allow latch to engage again.
- Fold hinged step (2) down if necessary.

Make sure it is latched properly!

Only adjust the operating position whilst the vehicle is stationary!

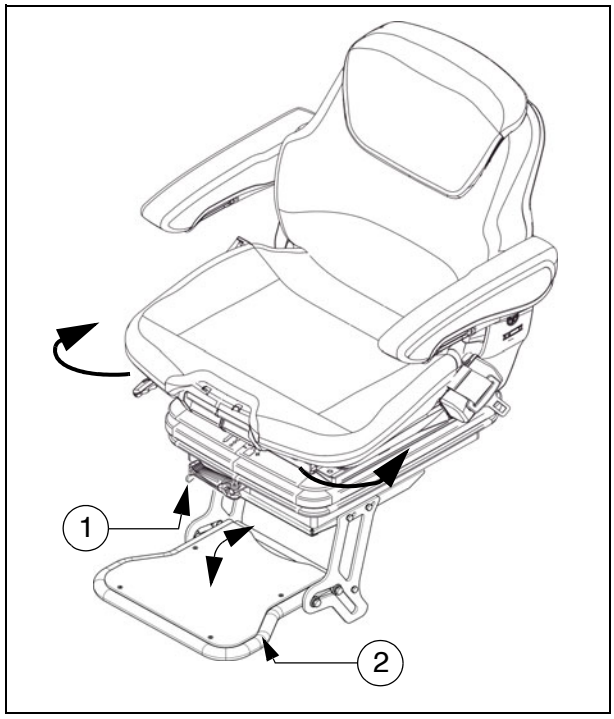

Driver's seat, type I

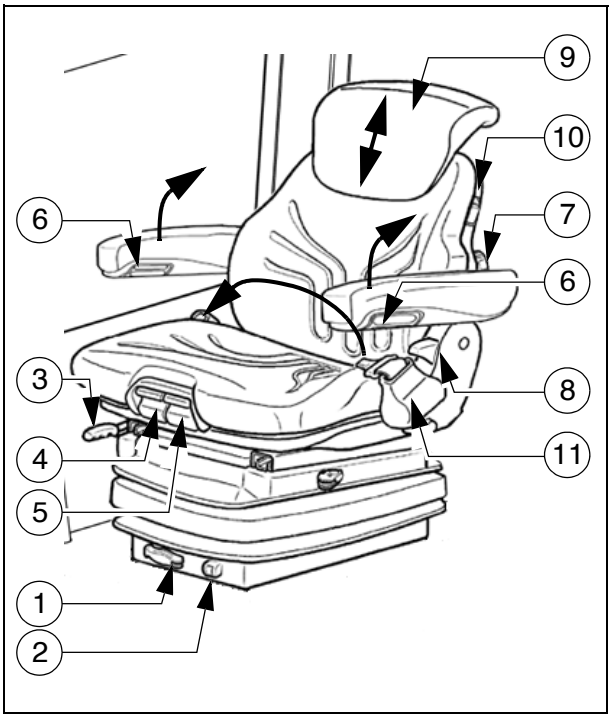

To avoid damage to health, the individual seat settings should be checked and adjusted before starting the vehicle.

After locking the individual elements, it must no longer be possible to shift then to another position.

- **Weight setting (1):** The relevant driver's weight should be set by turning the weight adjustment lever when the driver's seat is unoccupied.
- **Weight indicator (2):** The set driver's weight can be read off at the viewing window.
- **Longitudinal adjustment (3):** Longitudinal adjustment is released by actuating the locking lever.
  The locking lever must engage in the desired position.
- **Seat depth adjustment (4):** The seat depth can be individually adjusted. Raise the button to adjust the seat depth. The desired position is set by simultaneously sliding the seat surface forwards or backwards.
- **Seat inclination adjustment (5):** The seat surface's longitudinal inclination can be individually adjusted. Raise the button to adjust the inclination. The seat surface inclines to the desired position by simultaneously loading or relieving it.
- **Armrest inclination (6):** The armrest's longitudinal inclination can be adjusted by turning the hand wheel. Turning outwards raises the front of the armrest; turning inwards lowers it at the front.
  In addition, the armrests can be folded up fully.
- **Lumbar support (7):** Both the height and the extent of the convexity in the backrest padding can be individually adjusted by turning the hand wheel to the left or right.
- **Backrest adjustment (8):** The backrest is adjusted via the locking lever. The locking lever must engage in the desired position.
- **Back extension (9):** By pulling out via perceptible detents, the height can be individually adjusted up to a limit stop. To remove the back extension, the limit stop is overcome with a jolt.
- **Seat heating ON/OFF (10):** The seat heating is switched on and off by actuating the switch.
- **Seat belt (11):** The seat belt must be applied before starting up the vehicle.

The seat belts must be replaced following an accident.

https://truckmanualshub.com/

Driver's seat, type II

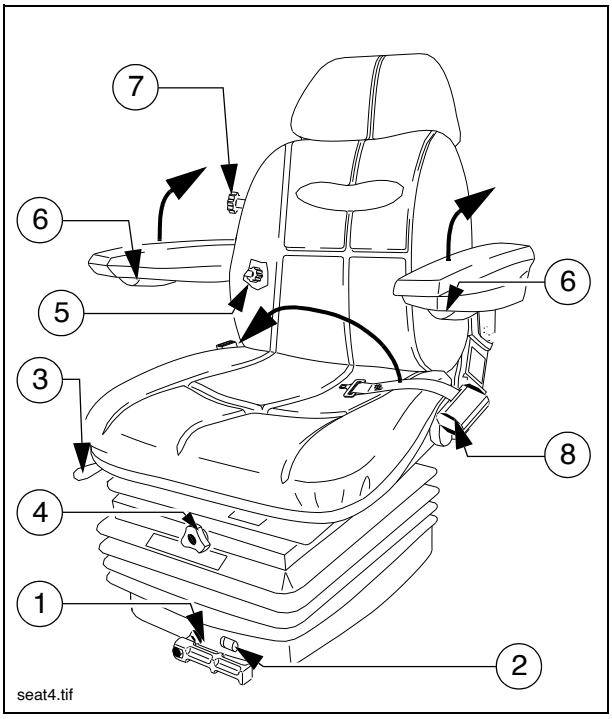

To avoid damage to health, the individual seat settings should be checked and adjusted before starting the vehicle.

After locking the individual elements, it must no longer be possible to shift then to another position.

- **Weight setting (1):** The relevant driver's weight should be set by turning the weight adjustment lever when the driver's seat is unoccupied.
- **Weight indicator (2):** The set driver's weight can be read off at the viewing window.
- **Longitudinal adjustment (3):** Longitudinal adjustment is released by actuating the locking lever.
  The locking lever must engage in the desired position.
- **Seat height adjustment (4):** The seat height can be individually adjusted. Turn the handle in the desired direction to adjust the seat height.
- **Backrest adjustment (5):** The backrest inclination can be continuously adjusted. Turn the handle in the desired direction to adjust.
- **Armrest inclination (6):** The armrest's longitudinal inclination can be adjusted by turning the hand wheel. Turning outwards raises the front of the armrest; turning inwards lowers it at the front.
  In addition, the armrests can be folded up fully.
- **Lumbar support (7):** Both the height and the extent of the convexity in the backrest padding can be individually adjusted by turning the hand wheel to the left or right.
- **Seat belt (8):** The seat belt must be applied before starting up the vehicle.

The seat belts must be replaced following an accident.

https://truckmanualshub.com/

Fuse box

The terminal box, which contains all fuses and relays, etc. is located beneath the central control platform floor panel.

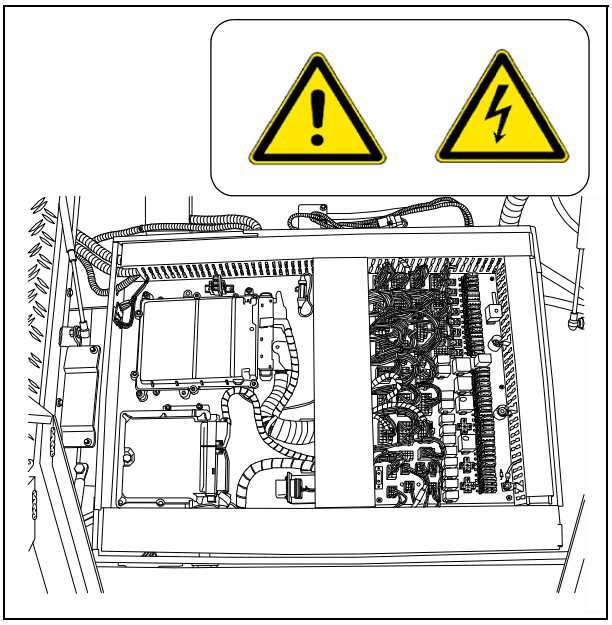

☞ An assignment plan for fuses and relays can be found in chapter F8.

https://truckmanualshub.com/

Batteries

The batteries (1) of the 24 V system are located in the vehicle footwell.

For the specifications, refer to chapter B, "Technical data". For maintenance, see chapter "F".

External starting must only be carried out according to the instructions (see section "Starting the paver finisher, external starting (starting aid)".

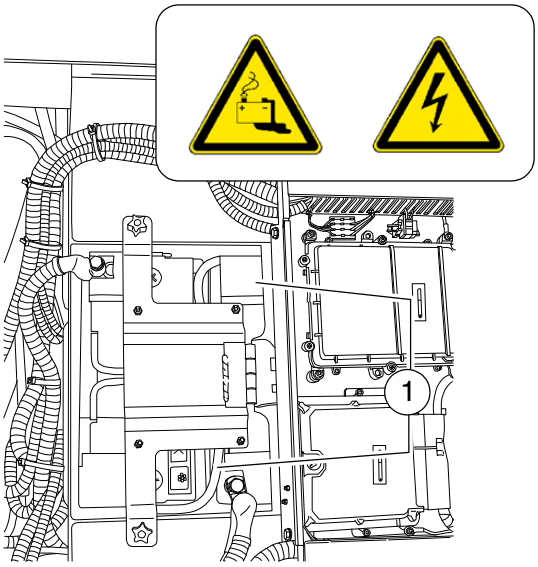

Main battery switch

The main battery switch separates the current circuit from the battery to the main fuse.

For the assignment of all fuses, see chapter F.

- To interrupt the battery's current circuit, turn the key pin (3) to the left and pull it out.

Do not lose the key pin as in this case the paver finisher can no longer be moved!

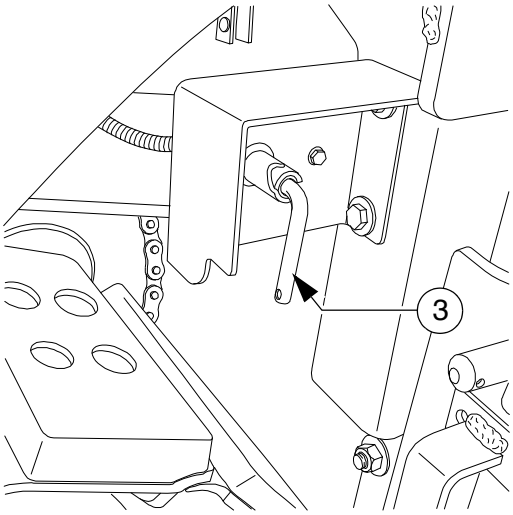

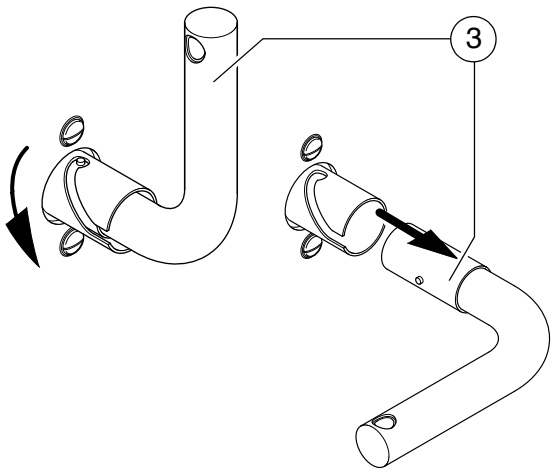

https://truckmanualshub.com/

Hopper transport safeguard

Before transporting or in order to park the paver finisher, the hopper halves must be swung upwards and the transport safeguards for the hopper must be inserted on both sides of the vehicle.

- Pull the locking pin (1) and place the transport safeguard (2) with the handle above the hopper cylinder's piston rod.

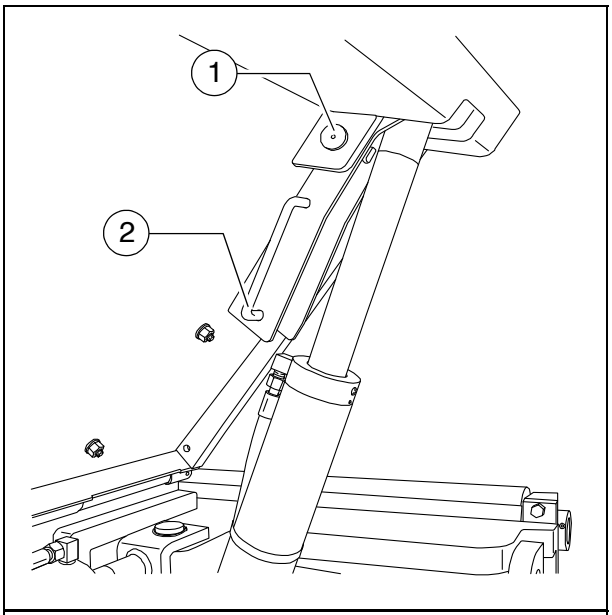

STOP Without transport safeguards inserted, the hopper halves will slowly open; danger during transportation!

Screed lock, mechanical (○)

The screed locks must additionally be engaged on both sides of the vehicle prior to transportation with the screed lifted.

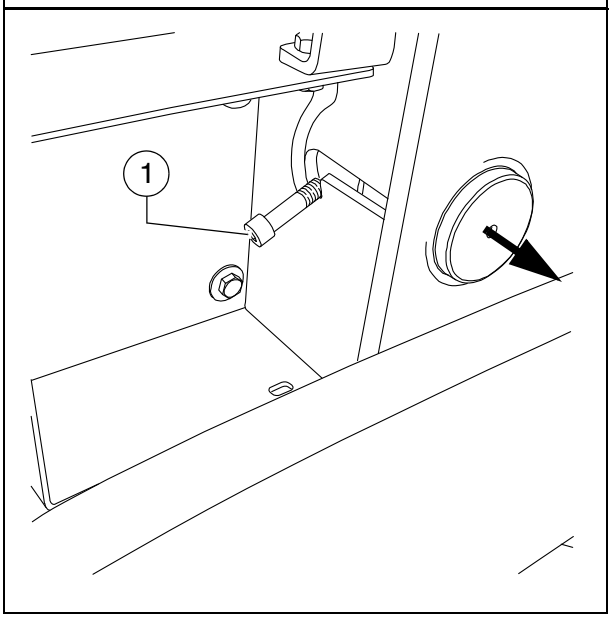

STOP Transportation with an unsecured screed leads to a risk of accidents!

- Lift the screed.
- On both sides of the paver finisher, slide the screed lock beneath the crossbeams using the lever (1); place the lever in the detent position.

ATTENTION!
Insert screed lock only at crown adjustment "zero"!
Screed lock only for transportation!
Do not enter or work under screed only secured with screed lock for transportation!
Danger of accidents!

https://truckmanualshub.com/

Screed lock, hydraulic (○)

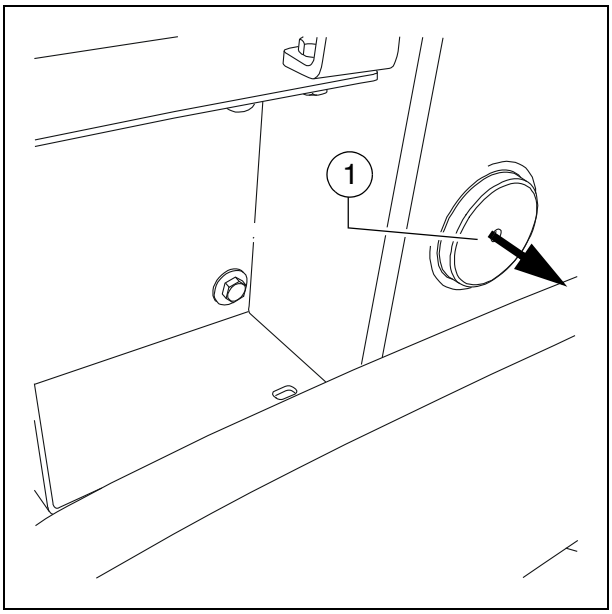

☞ The screed locks must additionally be extended on both sides of the vehicle prior to transportation with the screed lifted.

STOP Transportation with an unsecured screed leads to a risk of accidents!

- Lift the screed.
- Activate the function on the operating panel.

☞ The two screed locks (1) extend hydraulically.

⚠ **ATTENTION!**
Insert screed lock only at crown adjustment "zero"!
Screed lock only for transportation!
Do not enter or work under screed only secured with screed lock for transportation!
Danger of accidents!

https://truckmanualshub.com/

Paving thickness indicator

Two scales, on which the currently set paving thickness can be read off, are located on the left and right sides of the vehicle.

- Loosen the clamping bolt (1) to change the position of the indicator.

☞ In normal paving situations, the same paving thickness should be set on both sides of the vehicle!

Other displays (○) are on the crossbeam guide.

- To change the reading position, the scale (2) can be raised and lowered again in one of the adjacent locating bores (3).
- The pointer (4) can be swivelled to different positions using the locking knob (5).

⚠ The scale (2) and pointer (4) must be swivelled in completely to transport the machine.

⚠ Avoid parallax errors!

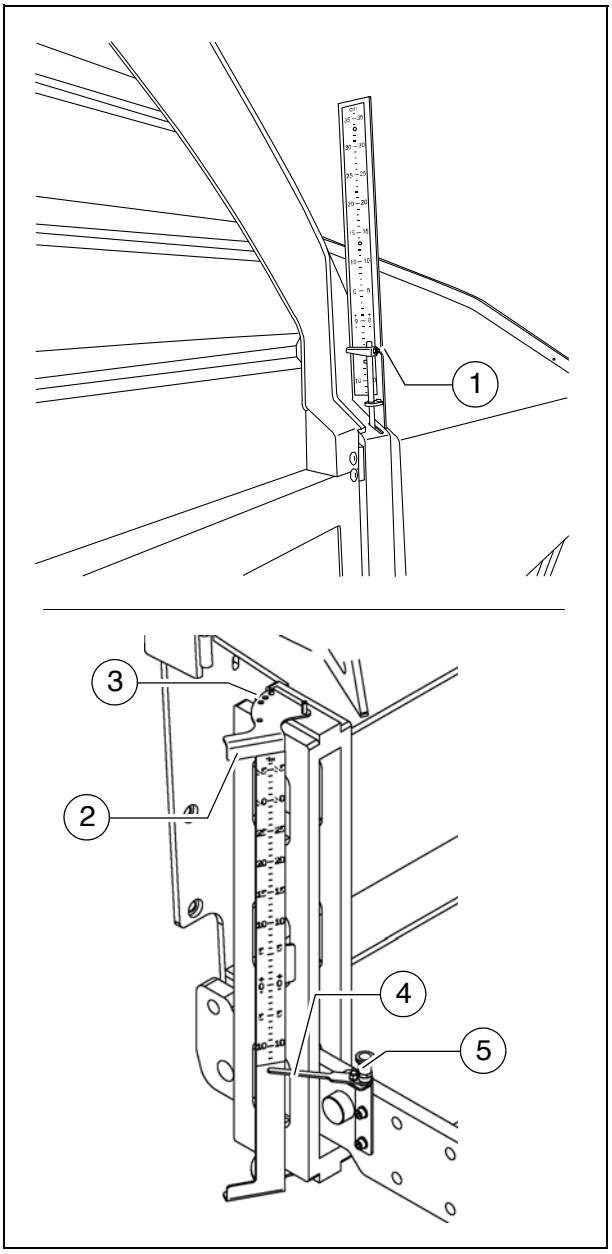

https://truckmanualshub.com/

Auger lighting (○)

☞ Two swivelling headlights (1) are located on the auger box for illuminating the auger compartment.

- They are engaged together with the working lights.

☞ These are activated together with the other working lights on the operating panel!

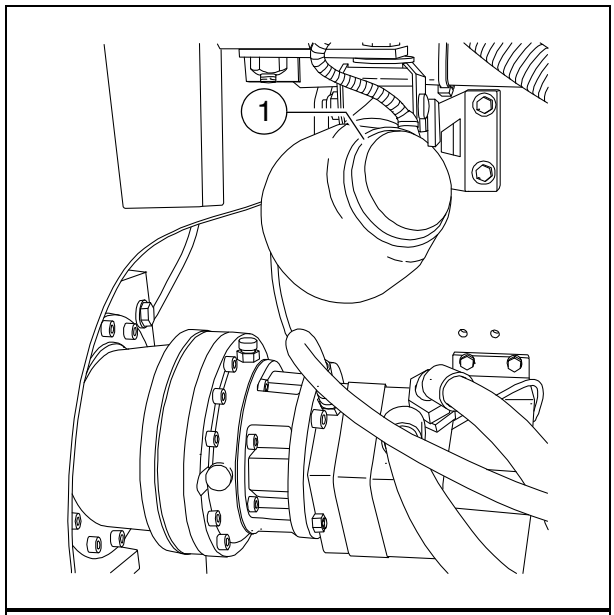

Engine compartment lighting (○)

☞ The engine compartment lighting can be activated when the ignition is switched on.

- On/off switch (1) for the engine compartment lighting.

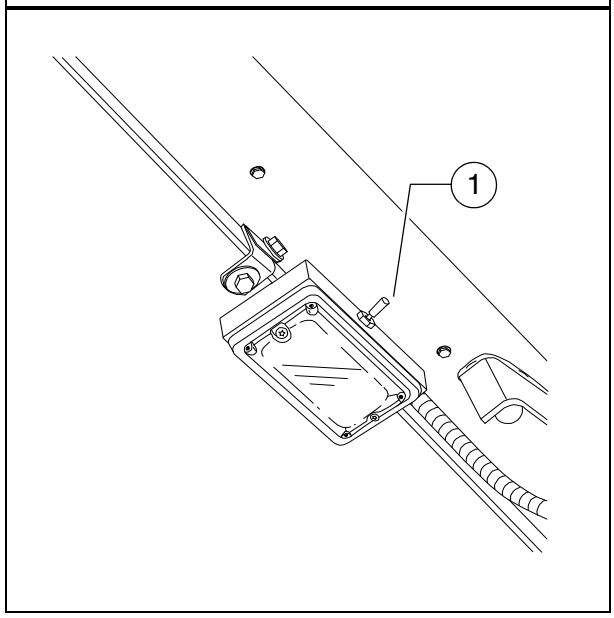

https://truckmanualshub.com/

LED working light (○)

There are two LED spotlights (1) at the front of the machine and also at the back.

Always align the working lights to avoid dazzling the operating personnel or other road users!

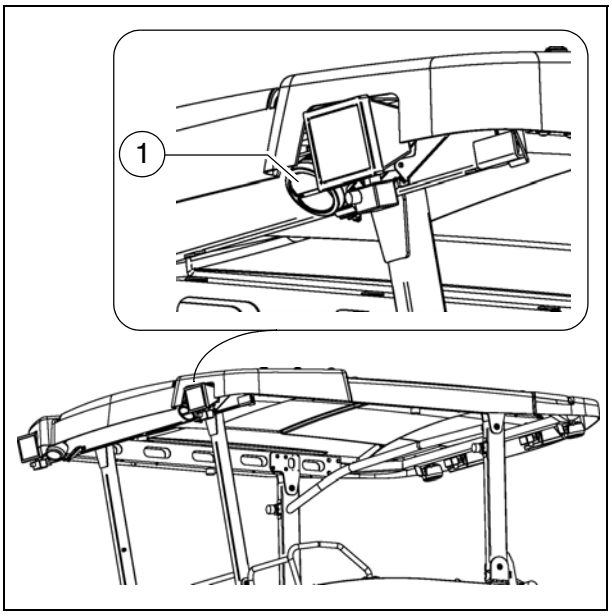

https://truckmanualshub.com/

500 watt spotlight (○)

There are two halogen spotlights (2) at the front of the machine and also at the back.

Always align the working lights to avoid dazzling the operating personnel or other road users!

Danger of burning! The working lights get very hot!
Do not touch working lights that are switched on or hot!

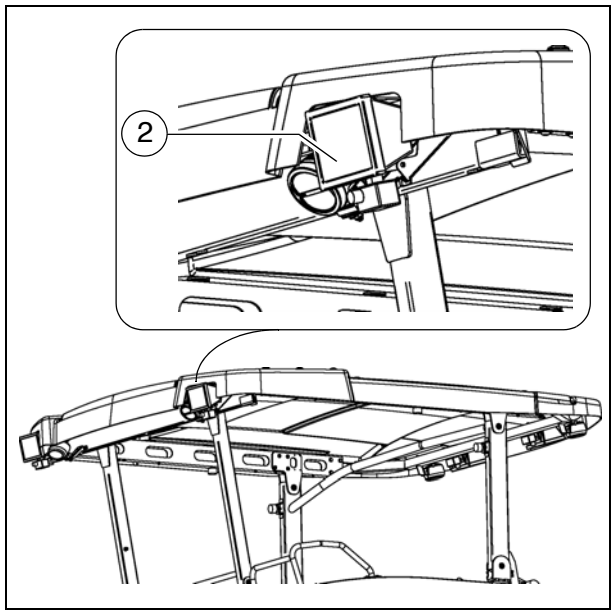

When equipped with an electric screed, it is possible for the lamps to flicker irregularly during the heating-up phase with simultaneous operation of 500 watt spotlights (○) and illuminated balloon (○).
Preferably only one type of lighting should be used during the heating-up phase.

Camera (○)

There is a camera (1) at the front of the machine and also at the back.

- The camera can be swivelled in various directions.

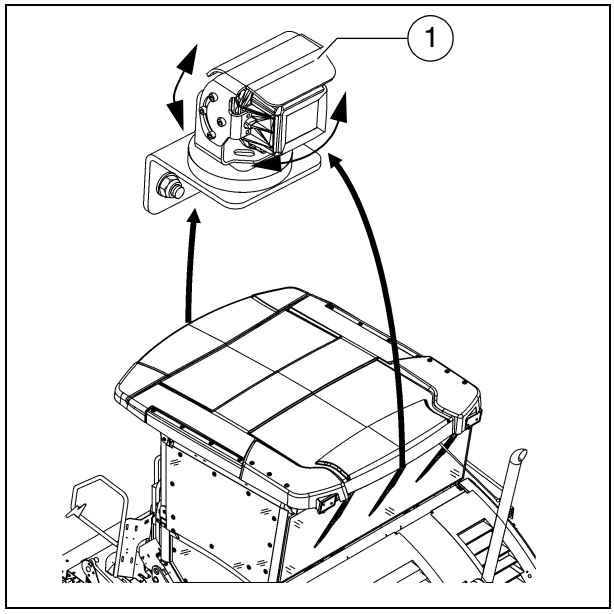

The pictures are shown in the control panel display.

The position of the camera can be changed with the magnetic foot.

Auger height adjustment ratchet (○)

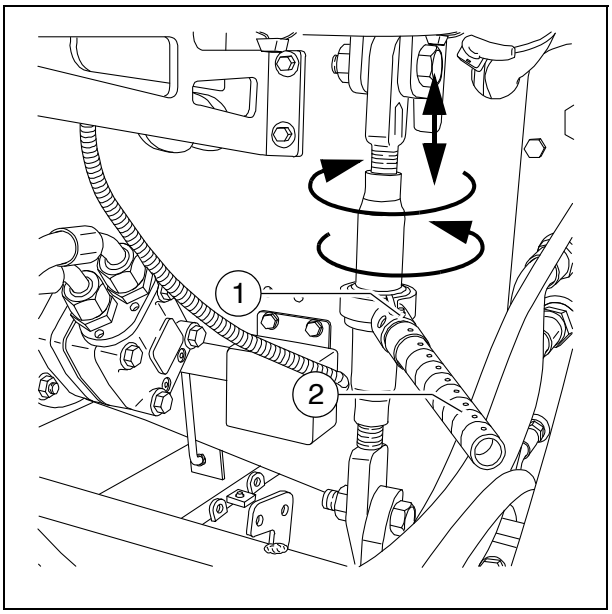

For mechanical adjustment of the auger height

- Set the ratchet direction lever (1) to the clockwise or anti-clockwise direction. Turning anti-clockwise lowers the auger, turning clockwise lifts the auger.
- Actuate the ratchet lever (2)
- Set the desired height by alternatingly actuating the left and right ratchets.

☞ The current height can be read on both auger height indicators.

☞ Observe the notes on adjusting the auger height in the chapter "Set-up and modification"!

Auger height indicators

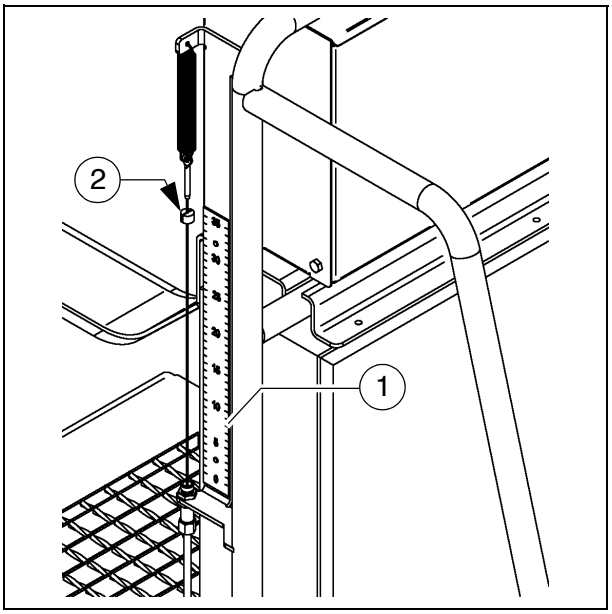

A scale (1), on which the currently set auger height can be read off, is located on the left and right sides of the ladder.

☞ Display in cm

- Loosen the clamping bolt (2) to change the position of the indicator.

⚠ When setting the auger height, adjustment must be carried out evenly on both sides to prevent the auger from jamming!

https://truckmanualshub.com/

Sensor rod / sensor rod extension

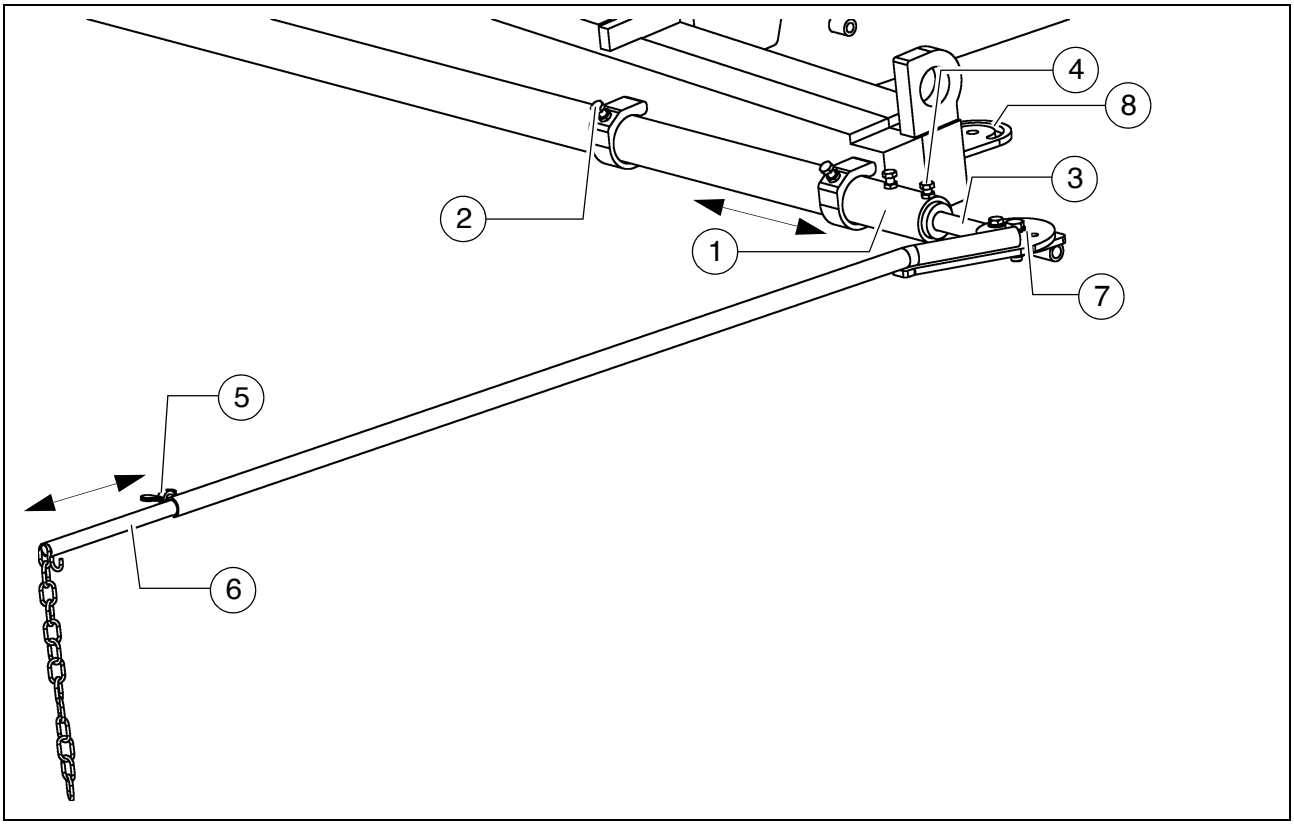

The sensor rod acts as an orientation aid for the vehicle driver during paving. Along the defined paving route, the vehicle driver can use the sensor rod to follow a tensioned reference wire or another marking.

The sensor rod runs along the reference wire or over the marking. Steering deviations can therefore be ascertained and corrected by the driver.

⚠ Use of the sensor rod increases the basic width of the paver finisher.

STOP If the sensor rod or sensor rod extension are used, ensure that there is no one in the vehicle's danger area!

☞ The sensor rod is adjusted when the vehicle is positioned, with its set working width, on the paving route and the reference marking running parallel to the paving route has been set up.

Adjusting the sensor rod:

- The sensor rod (1) is located on the face end of the vehicle and can be pulled out to the left or right after releasing the four clamping bolts (2).

☞ In the case of larger working widths, the sensor rod extension (3) is inserted into the sensor rod.

https://truckmanualshub.com/

- Once the sensor rod has been set to the desired width, the clamping bolts (2) must be tightened again.
- The inserted sensor rod extension is secured with the bolts (4).

☞ Depending on the side of the vehicle on which the sensor rod extension is used, the entire sensor rod may have to be removed and re-inserted on the other side of the vehicle!

- After releasing the wing nuts (5), the end section of the sensor rod extension (6) can be set to the desired length; the angle can additionally be changed by swivelling on the joint (7).

☞ Either the adjustable indicator or the chain can be used as an aid to orientation.

⚠ Tighten all assembly parts properly after setting up!

☞ The sensor rod extension's joint (7) can be mounted on both sides of the vehicle in position (8).
At this point, the sensor rod extension can be swivelled in for transporting the vehicle without increasing the vehicle's basic width.

https://truckmanualshub.com/

Manual separator fluid spray (○)

Used to spray the parts coming into contact with asphalt with a separator emulsion.

- Remove the spray (1) from its bracket.
- Build up pressure by actuating the pump lever (2).
  - The pressure is indicated on the manometer (3).
- Actuate the manual valve (4) to spray.
- On completion of work, secure the manual spray in its bracket with a lock (5).

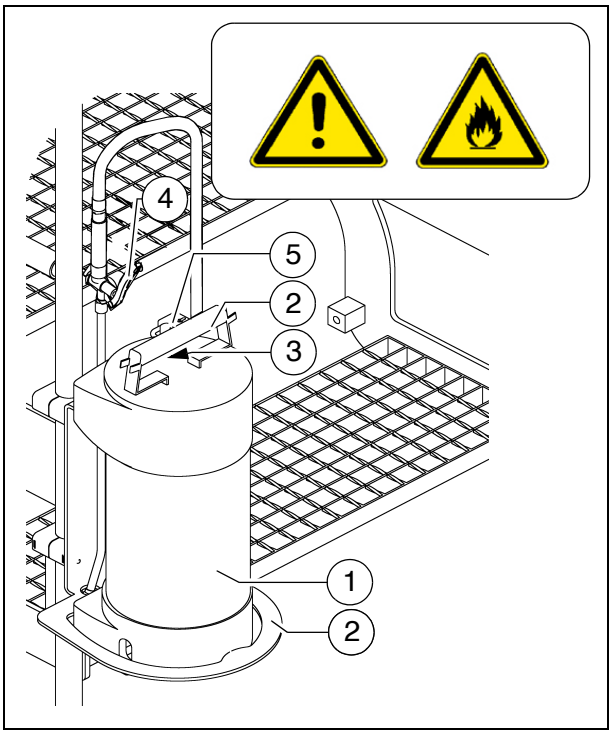

STOP Do not spray into open flame or on hot surface! Danger of explosion!

Separator fluid spraying system (○)

Used to spray the parts coming into contact with asphalt with a separator emulsion.

- Connect the spray hose (1) with quick-action coupling (2).

⚠ Only switch on the spraying system when the diesel engine is running; otherwise, the battery will be discharged. Switch off after use.

☞ A permanently installed hose package (3) for the spraying system is available as an option.

- Pull the hose out of the device until a click is audible. When released, the hose automatically engages here. The hose is automatically retracted into the guide after pulling and discharging again.

- Actuate button (4) to activate and deactivate the pump.
  - The indicator lamp (5) lights up when the emulsion pump is running.
- Actuate the manual valve (6) to spray.

STOP Do not spray into open flame or on hot surface! Danger of explosion!

☞ The spraying system is fed by a canister (7) at the vehicle step.

STOP Refill the canister only while the vehicle is stationary!

- If the system is not in use, place the spray lance (8) in the provided holder (9).
- If the spray hose is not in use, it can be placed in its bracket (10).

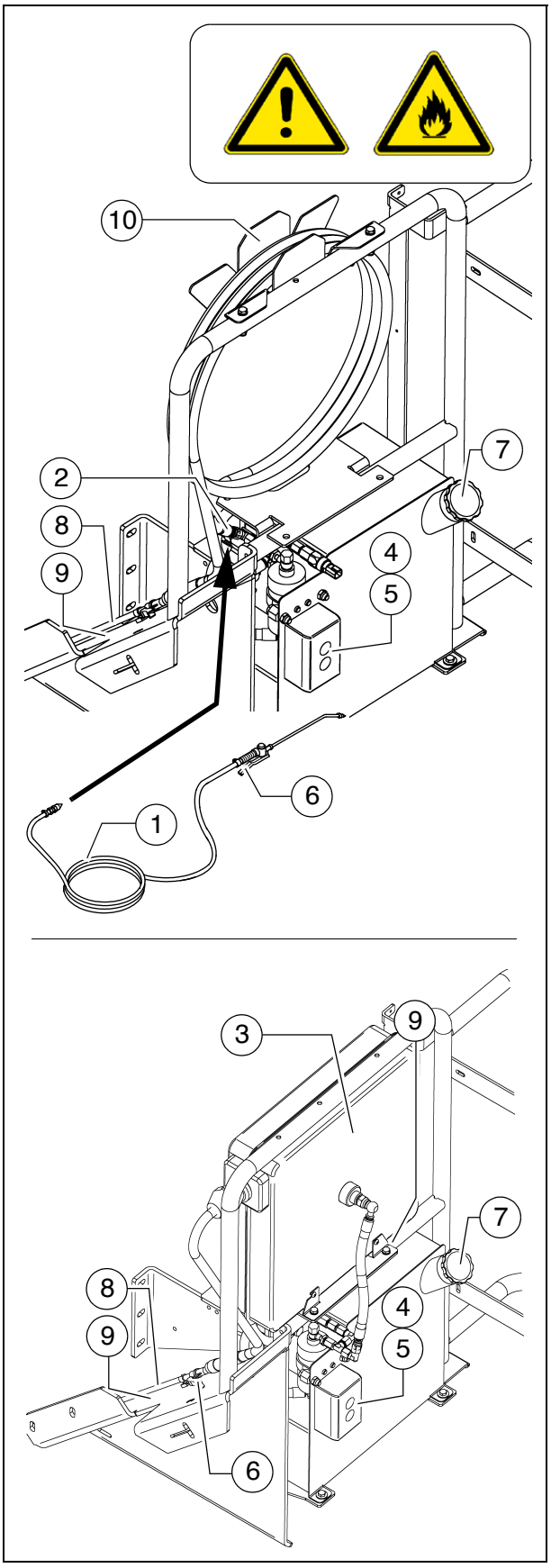

https://truckmanualshub.com/

Conveyor limit switches - PLC version

The mechanical conveyor limit switches (1) or the ultrasonic conveyor limit switches (2) control the material flow on the relevant half of the conveyor. The conveyors should stop when the material has roughly reached the area below the auger tube.

☞ This requires that the auger height has been adjusted correctly (see chapter E).

☞ In vehicles with a PLC control system, the deactivation point is set on the remote control.

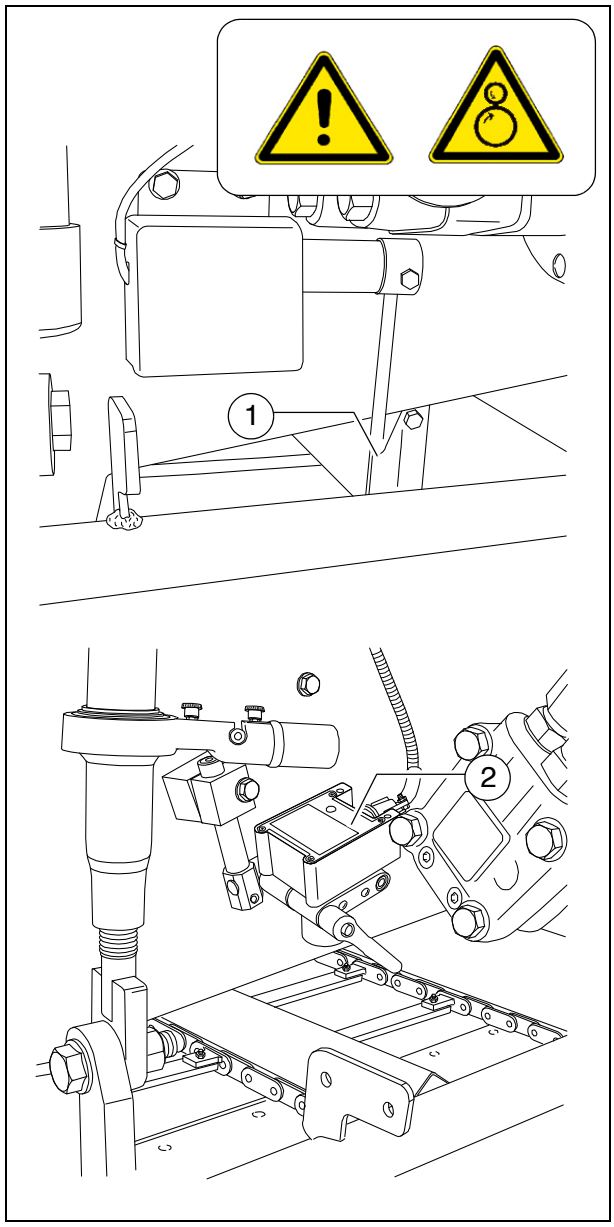

https://truckmanualshub.com/

Conveyor limit switches - conventional version

The mechanical conveyor limit switches (1) control the material flow on the relevant half of the conveyor. The conveyors should stop when the material has roughly reached the area below the auger tube.

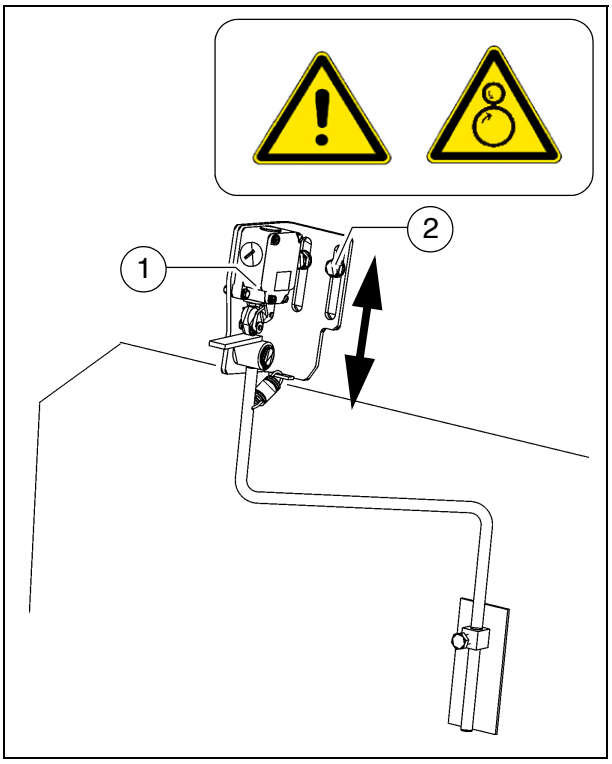

☞ This requires that the auger height has been adjusted correctly (see chapter E).

- To set the deactivation point, release the two mounting screws (2) and set the switch to the required height.
- After adjusting, retighten all mounting parts properly.

https://truckmanualshub.com/

Ultrasonic auger limit switches (left and right) - PLC version

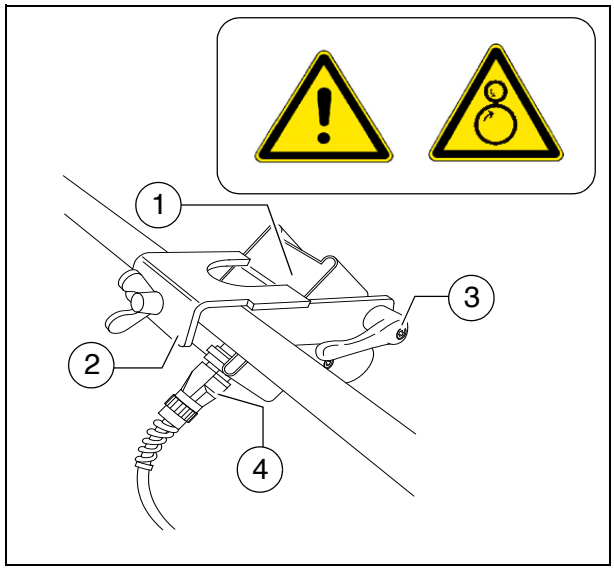

☞ The limit switches control the material flow at the relevant half of the auger without contact.

The ultrasonic sensor (1) is secured to the side shield via a bracket (2).

- To adjust, release the clamping lever / stop screw (3) and adjust the sensor's angle.
- After adjusting, retighten all mounting parts properly.

☞ The connection cables (4) are connected to the relevant sockets on the remote control bracket.

☞ The sensors should be adjusted so that 2/3 of the augers are covered with the paving material.

☞ The paving material must be conveyed over the full working width.

☞ We recommend adjusting the limit switch positions during material distribution.

☞ In vehicles with a PLC control system, the deactivation point is set on the remote control.

https://truckmanualshub.com/

Ultrasonic auger limit switches (left and right) - conventional version

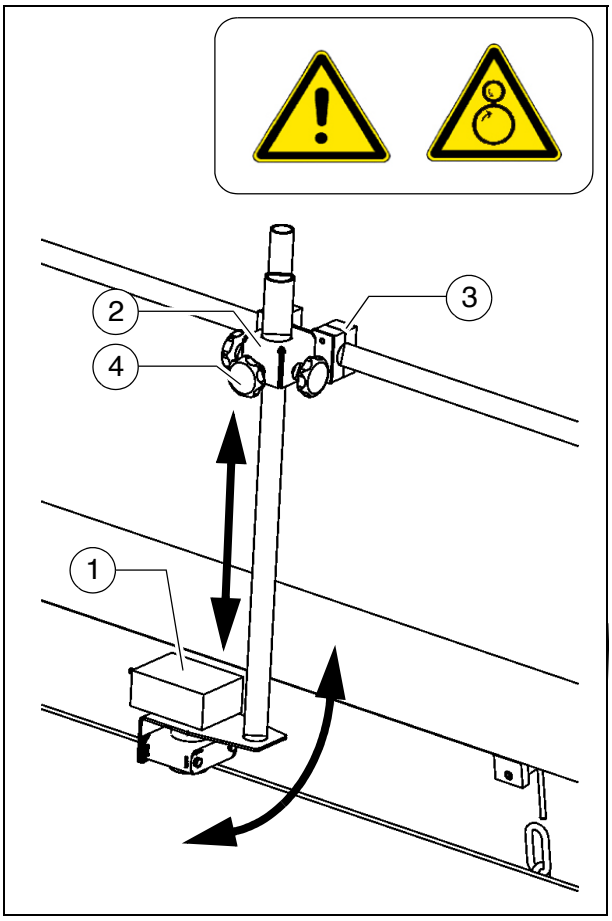

☞ The limit switches control the material flow at the relevant half of the auger without contact.

The ultrasonic sensor (1) is secured to the side shield via a bracket (2).

- To adjust the sensor angle, loosen the clamps (3) and swivel the bracket.
- To set the sensor height / the deactivation point, loosen the star handles (4) and adjust the linkage to the required length.
- After adjusting, retighten all mounting parts properly.

☞ The connection cables are connected to the relevant sockets on the remote control bracket.

☞ The sensors should be adjusted so that 2/3 of the augers are covered with the paving material.

☞ The paving material must be conveyed over the full working width.

☞ We recommend adjusting the limit switch positions during material distribution.

https://truckmanualshub.com/

24 volt / 12 volt sockets (○)

A socket (1) is located behind the left/ right seat consoles.
Additional working lights can be connected here, for example.

- Right seat console: 12V socket
- Left seat console: 24V socket

☞ Voltage is present when the main switch is switched on.

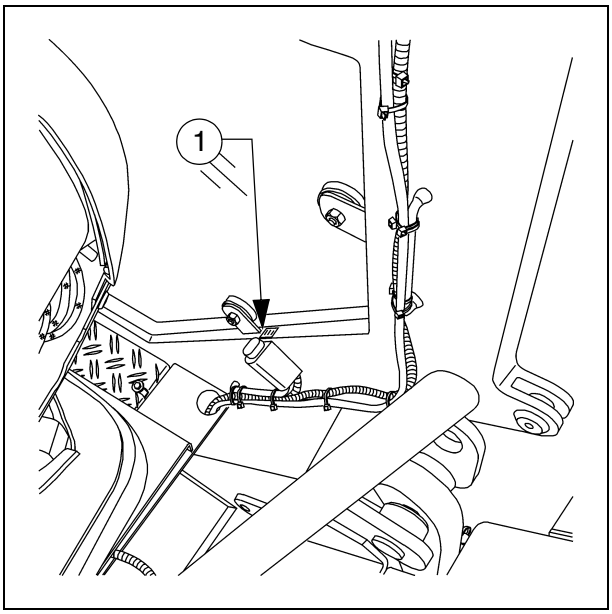

https://truckmanualshub.com/

Pressure control valve for screed charging/relieving

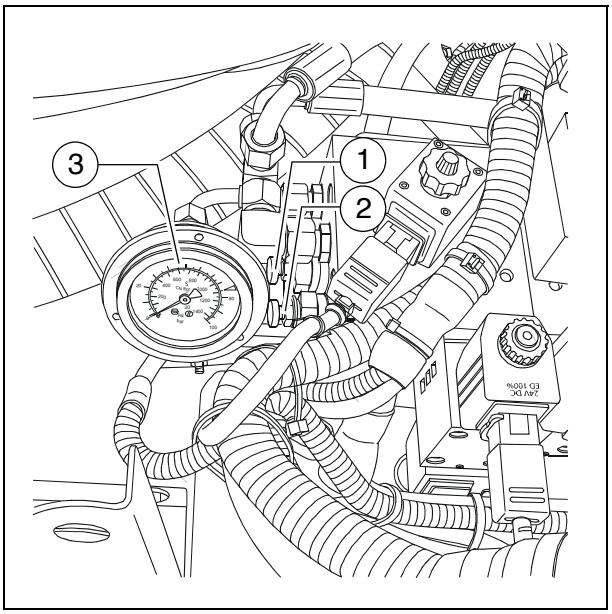

A valve (1) is used to set the pressure for additional screed charging/relieving.

☞ Switching on, see screed charging/relieving (chapter "Operating panel", "Operation").

- For pressure indication, see manometer (3).

Pressure control valve for paving stop with relieving

This is used to set the pressure for "Screed control with paver finisher stop - floating stop with relieving".

- Switching on, see screed stop / paving stop (Chapters "Operating panel", "Operation").
- For pressure indication, see manometer (3).

Manometer for screed charging/relieving

The manometer (3) indicates the pressure for:

- Screed charging/relieving when the drive lever is in the third position (pressure setting with valve (1)).

https://truckmanualshub.com/

Central lubrication system (○)

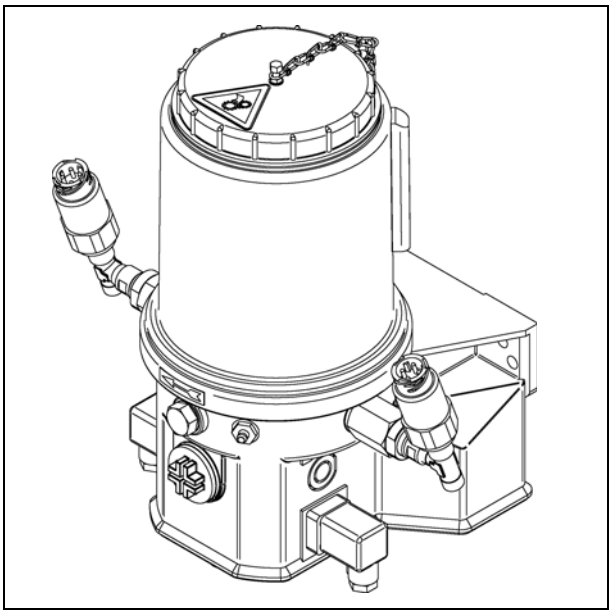

The central lubrication system is activated in automatic mode as soon as the drive engine is started.

- Pumping time: 4 min
- Pause time: 2 h

⚠ It is prohibited to change the factory-set durations of pumping and break without consulting the technical customer service!

☞ Changing the duration of lubrication and breaks may be necessary when laying mineral or cement bound material mix.

https://truckmanualshub.com/

Lane clearer (○)

A swivelling lane clearer (1), which deflects small obstacles away to one side, is located in front of both drive units.

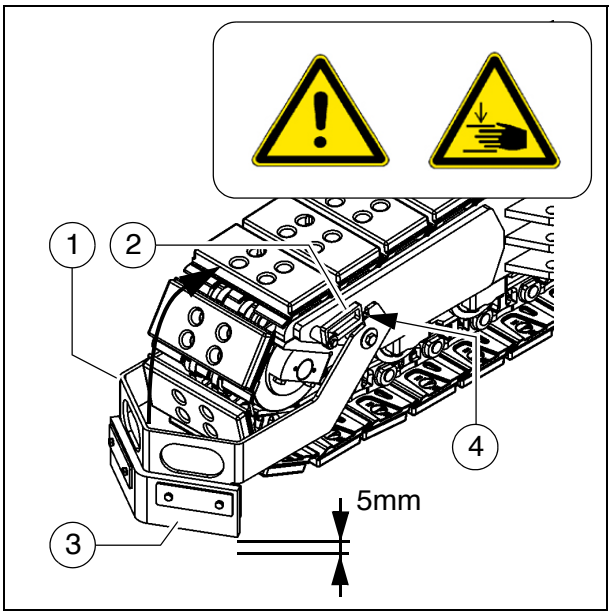

☞ The lane clearers should only be swivelled down during paving.

Swivelling the lane clearers:

- Swivel the lane clearer (1) up and secure in the uppermost position with a shackle (2).
- To lower the lane clearer, it must be lifted a little and the shackle (2) must be swivelled back.

NOTE	**Caution! Possible collision of parts**
	- The lane clearer must be adjusted in the lower setting with a few mm between the ground and the blade (3). - When driving up inclines, lock the lane clearer in the upper position.

☞ The blade's level above the ground is adjusted with a bolt (4).

https://truckmanualshub.com/

Screed eccentric adjustment

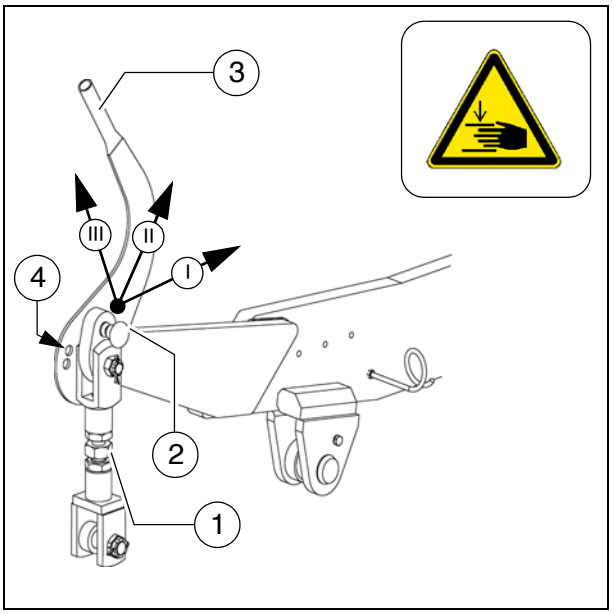

To pave thicker layers of material, if the piston rods in the levelling cylinder are operating close to their limit position and if the desired paving thickness cannot be reached, it is possible to alter the approach angle of the screed by adjusting the eccentric.

- Pos. I: Paving thickness up to approx. 7 cm
- Pos. II Paving thickness of approx. 7 cm to approx. 14 cm
- Pos. III Paving thickness above approx. 14 cm

- The spindle (1) is not adjusted.
- Unfasten locks (2) for eccentric adjustment.
- Swivel screed to the desired position using the lever (3), and engage the locking knob again.

☞ If the levelling unit is connected to a height controller, this has the function of balancing out any rapid rise in the screed position: The levelling cylinders are extended until the correct height is reached.

- The change in approach angle can only take place slowly and uniformly on both sides at once during paving operation, and involves the use of eccentric adjustments. Failing this, any rapid response in the screed could easily cause waves to appear on the road surface.
  The setting process should therefore take place before work starts!

☞ When equipped with rigid screed, the second hole (4) is intended for (item I).

Push roller crossbar, adjustable

For adaptation to various truck design types, the push roller crossbar (1) can be shifted to two positions.

☞ The adjustment travel is 90 mm.

- Close the hopper halves to lift the hopper flap (2).
- After removing the bolts (4), remove the locking plate (3) on the lower side of the crossbar.
- Remove insert plate (5).
- Move the push roller crossbar to stop to the front / rear position.

☞ Shift the push roller crossbar at the towing eye (6) or use a suitable assembly lever in its guide (left and right) to push it into the corresponding position.

- Turn the insert plate (5) 180° and reinsert into the groove in the front or rear position.
- Properly reinstall the locking plate (3) with bolts (4).

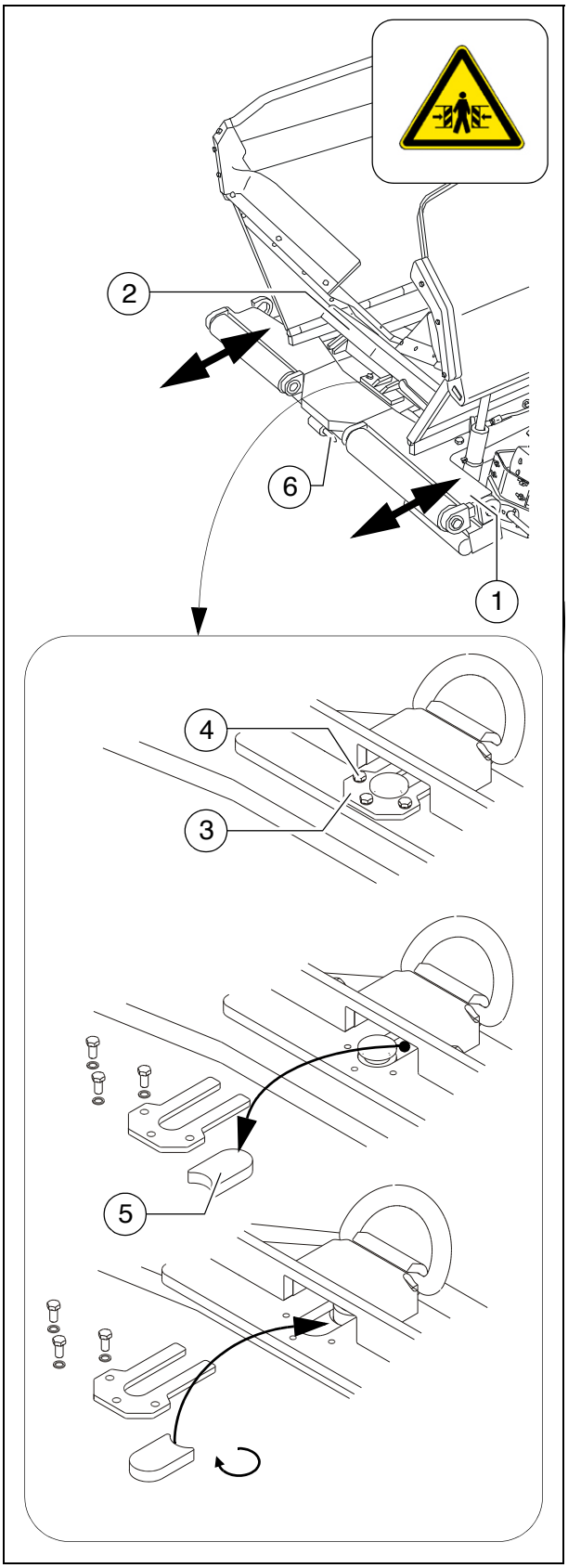

https://truckmanualshub.com/

Push roller crossbar,
hydraulically extendable (○)

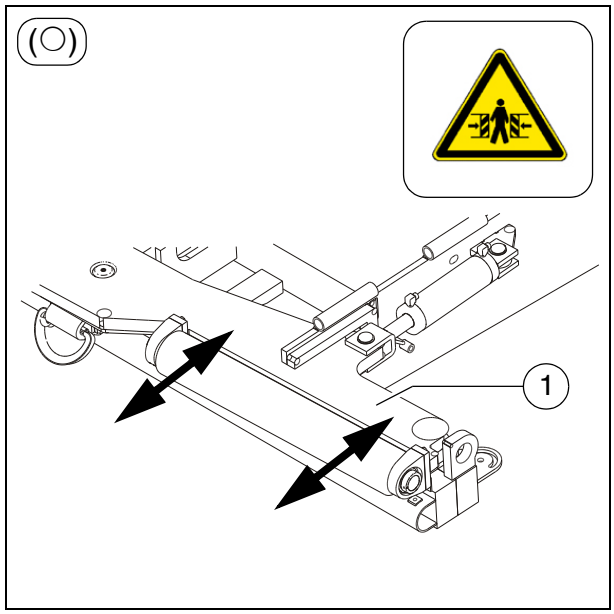

For adaptation to various truck design types, the push roller crossbar (1) can be retracted and extended hydraulically.

☞ The max. adjustment travel is 90 mm.

- Activate the function on the operating panel as necessary.

⚠ Extending the push roller increases the transportation length of the paver finisher.

STOP On actuation, ensure that nobody is in the danger area!

Push roller damping,
hydraulic (○)

☞ Push roller damping hydraulically absorbs the shocks between the material truck and paver finisher.

- Activate the function on the operating panel as necessary.

https://truckmanualshub.com/

Fire extinguisher (○)

☞ The paver finisher personnel must be familiarised with fire extinguisher (2) operation.

☞ Observe the inspection intervals for the fire extinguisher!

First-aid kit (○)

STOP Any dressings that have been used must be replaced immediately!

☞ Heed the expiry date of the first-aid kit!

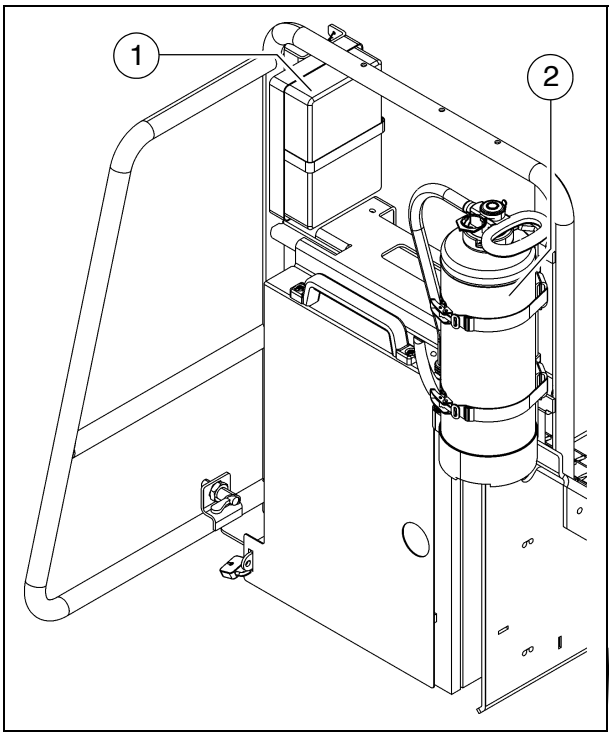

https://truckmanualshub.com/

Rotary beacon (○)

⚠ The function of the rotary beacon must be checked daily before starting work.

- Place the rotary beacon onto the plug-in contact and secure with a wing bolt (1).
- Raise the bracket (2), swivel to the outer position and allow to engage there
- Slide the rotary beacon with tube (3) to the desired height and secure with the clamping bolt (4).
- Activate the function on the operating panel as necessary.

☞ The rotary beacon is easy to remove and should be stored securely at the end of work.

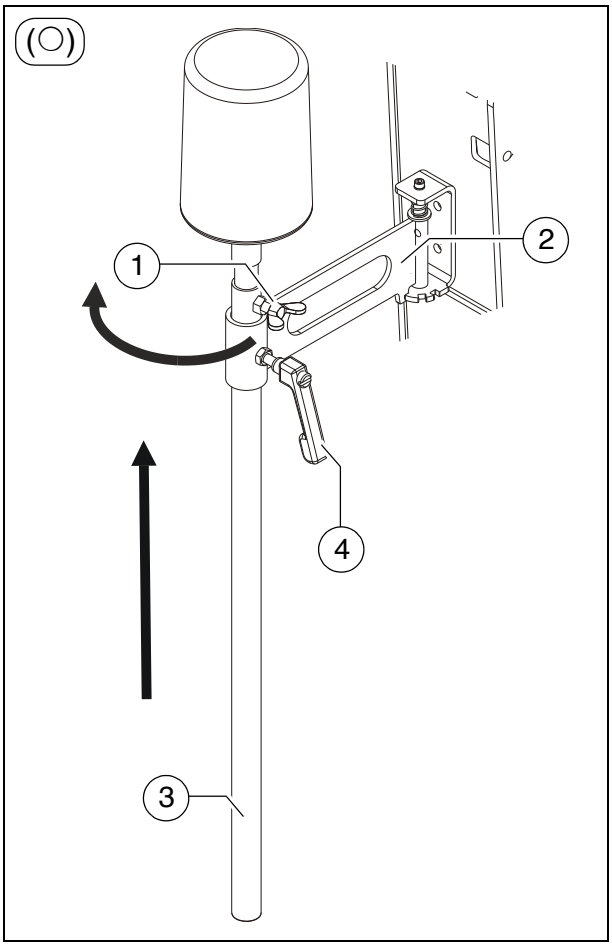

https://truckmanualshub.com/

Fuelling pump (○)

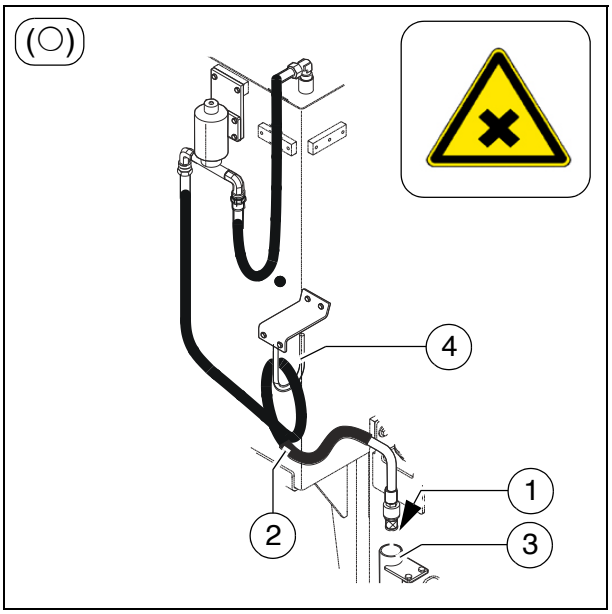

⚠ The fuelling pump must only be used to pump diesel fuel.

⚠ Foreign bodies which are larger than the mesh size of the intake cage (1) lead to damage. An intake cage must therefore always be used.

⚠ Each time fuelling is carried out, the intake cage (1) must be checked for damage, and must be replaced if damaged. Do not work without it under any circumstances, as the fuelling pump is not otherwise protected against foreign bodies.

- Insert the suction hose (2) into the container which is to be emptied.

☞ To enable the container to be emptied completely, the suction hose must reach down to the floor of the container.

- Activate the function on the operating panel as necessary.

⚠ The fuelling pump does not shut off automatically. Therefore, never leave the pump unattended when fuelling!

⚠ Never operate the pump without pumping a fluid. The risk of damaging your diesel pump is run if it runs dry.

- To end fuelling, switch the function "off" on the operating panel.
- Place the end of the hose, with the intake cage, into its cup (3) so that no diesel is able to escape into the environment.
- Gather up the hose and place it over the bracket (4).

https://truckmanualshub.com/

Illuminated balloon (○)

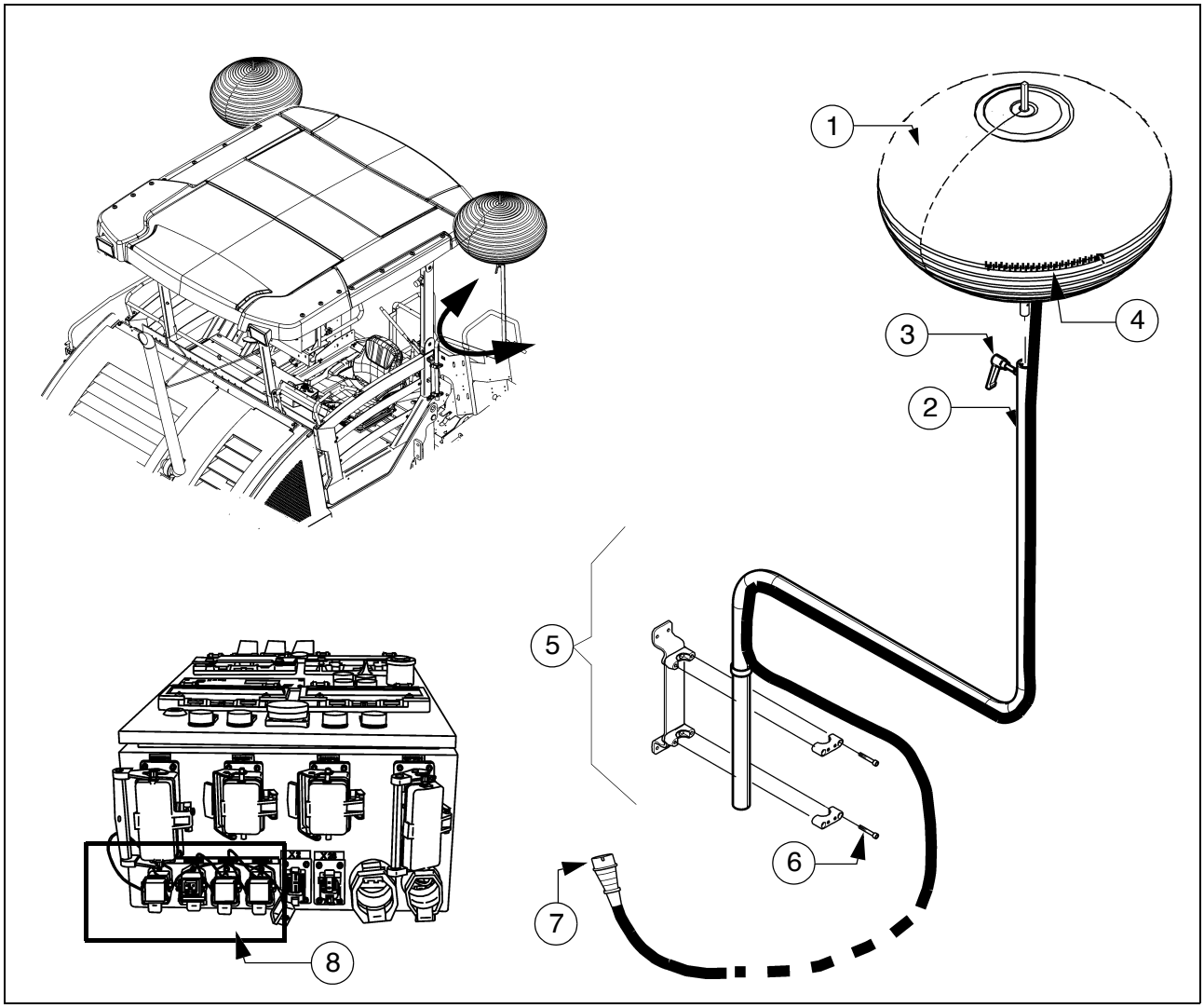

The illuminated balloon generates shadow-reducing and anti-dazzle light.

STOP The illuminated balloon makes the paver finisher higher and wider.

STOP Note the passage height of bridges and tunnels and the enlarged vehicle width.

STOP Always disconnect the power supply before working on the illuminated balloon!

STOP Never look directly in the balloon when it is switched on!

STOP The illuminated balloon must not be used in the vicinity of highly flammable materials (e.g. petrol and gas); a safety distance of at least 1 metre must be maintained from combustible materials.

https://truckmanualshub.com/

Danger due to electric shock. Voltage flashover poses the risk of severe or fatal injuries!
Heed the following safety distances to high-voltage lines:
< 125KV 5m
> 125KV 15m

The illuminated balloon must not be operated if the electric supply cables or connectors are damaged.

Before starting up, check that the zip fastener of the balloon skin is closed. If the skin is damaged, it must be repaired or replaced. The bulbs must be checked for firm seating and damage.

The balloon cannot be operated with damaged skin.

Never operate the balloon unattended!

Maximum wind speed for using the balloon: 80km/h.

Installation and operation

- Fasten the illuminated balloon (1) to the holding tube (2) and pull the clamping lever (3) tight.
- Close the zip fastener (4) in the balloon skin and smooth away any large wrinkles in the skin.
- Guide the holding tube (3) into the premounted holder (5) and tighten the screws (6) correctly to fix the holding tube.
- Once the illuminated balloon is completely mounted and secured, connect the plug (7) of the illuminated balloon into the corresponding power sockets (8) in the switch cabinet.

Operation of the switch cabinet - see screed operating instructions.

Route the supply lines so as to rule out any risk of stumbling or damage to the lines.

- After the illuminated balloon is connected up to the switch cabinet, it inflates automatically.
- The skin of the illuminated balloon collapses again on being switched off.
- Remove the plug and open the zip of the balloon skin. Let the lamps cool down completely.
- Store any dry illuminated balloons that are not needed in the corresponding transport cover.

The holding tube most be removed during transport or to lower the roof!

https://truckmanualshub.com/

When equipped with an electric screed, it is possible for the lamps to flicker irregularly during the heating-up phase with simultaneous operation of 500 watt spotlights (○) and the illuminated balloon (○).
Preferably only one type of lighting should be used during the heating-up phase.

Maintenance

Occasionally clean or replace the air filter (9) beneath the connection plate.

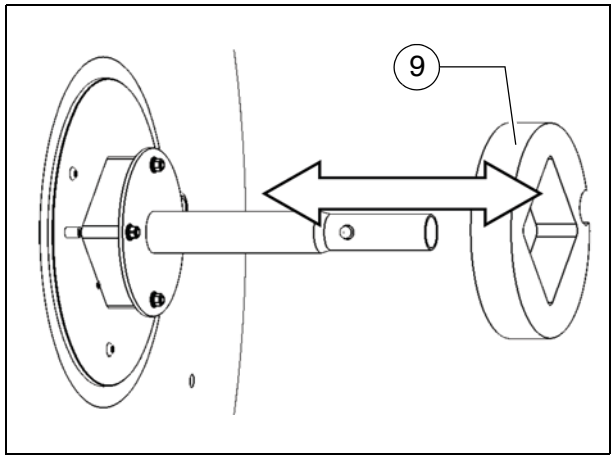

Do not use solvents to clean the balloon skin!

Replacing the lamp

- Disconnect the power cable and open the zip fastener of the skin.

Let lamp cool down completely!

Always wear the supplied cotton glove to touch the lamp!

- Press the lamp down gently to remove it.
- Insert the new lamp in the socket.

- Close the zip fastener of the balloon skin.

https://truckmanualshub.com/

https://truckmanualshub.com/

D 41 Operation

1 Preparing for operation

Required devices and aids

To avoid delays on site, check before starting work whether or not the following devices and aids are present:

- Wheel loader for transporting heavy extension parts
- Diesel fuel
- Engine oil and hydraulic oil, lubricants
- Separator fluids (emulsion) and manual injector
- Two filled propane gas bottles
- Shovel and broom
- Scraper (spatula) for cleaning the auger and the hopper infeed area
- Parts that may become necessary for extending the auger
- Parts that may become necessary for extending the screed
- Percentage spirit level + levelling rail, 4 m long
- Levelling wire
- Protective clothing, signal vest, gloves, ear protection

CAUTION	**Danger due to restricted vision**
	Restricted vision poses a risk of injury! - Before starting work, arrange the intended driver's seat so as to warrant adequate vision. - Signalmen must be used when vision is restricted, also to the sides and when reversing. - Only reliable persons may be used as signalmen who must have been received instructions about their task before taking up their activity. This refers in particular to the hand signals to be used. Standardised hand signals must be used. - Adequate lighting must be provided when working at night. - Comply with all further information in these instructions and in the safety manual.

WARNING	**Danger of falling from the vehicle**
	Entering and leaving the vehicle and the driver's seat during operation poses the danger of falling from the vehicle which can cause severe to fatal injuries! - During operation, the operator must be at the intended driver's seat and be seated properly. - Never jump onto or off a moving vehicle. - Keep accessible surfaces free of any soiling, e.g. operating substances, to avoid the risk of slipping. - Use the steps provided and hold onto the handrail with both hands. - Comply with all further information in these instructions and in the safety manual.

https://truckmanualshub.com/

Before starting work
(in the morning or when starting paving)

- Heed the safety instructions.
- Check the personal protective equipment .
- Take an inspection walk around the paver finisher and check for leaks and damages.
- Install parts removed for transportation or for the night.
- When screed is operated with the optional gas heating system, open the closing valves and the main shut-off valve.
- Perform the check according to the "Checklist for the vehicle operator" given below.

Check list for the vehicle operator

Check!	How?
Emergency stop button - on the operating panel - on both remote controls	Push in the button. The diesel engine and all running drives must stop immediately.
Steering	The paver finisher must immediately follow every steering wheel movement in a precise manner. Check straight ahead travel.
Horn - on the operating panel - on both remote controls	Briefly press the horn button. Horn signal must sound.
Lights	Switch on with the ignition key, walk around the paver finisher to check and switch off again.
Screed hazard flasher (with vario screeds)	With the ignition switched on, press the switches for extending/retracting the screed parts. Hazard warning flashers must flash.
Gas heater system (○): - Bottle holders - Bottle valves - Pressure reducer - Hose break safety devices - Shut-off valves - Main shut-off valve - Connections - Indicator lamps of the switch box	Check: - Secure seat - Cleanliness and tightness - Working pressure 1.5 bar - Function - Function - Function - Tightness - All indicator lamps must light up when the system is switched on

Check!	How?
Auger coverings	For larger working widths, the walkway plates must be extended and the auger tunnels must be covered.
Screed covers and walkways	Folding walkways must be present at the basic screed and all extension parts and folded down accordingly. Check that the side shields and the covers fit firmly.
Screed transport safeguard	When the screed is raised / before transport, make sure that the cross-beam lock is fixed correctly.
Hopper transport safeguard	When the hopper is closed / before transport, the locks must be fixed correctly.
Protective roof	The locking bolts must be set properly.
Other facilities: - Engine panels - Lateral flaps	Check that the hoods and flaps are securely seated.
Accessories: - First aid box	Equipment must be present on the vehicle! ☞ Always observe the local regulations!

https://truckmanualshub.com/

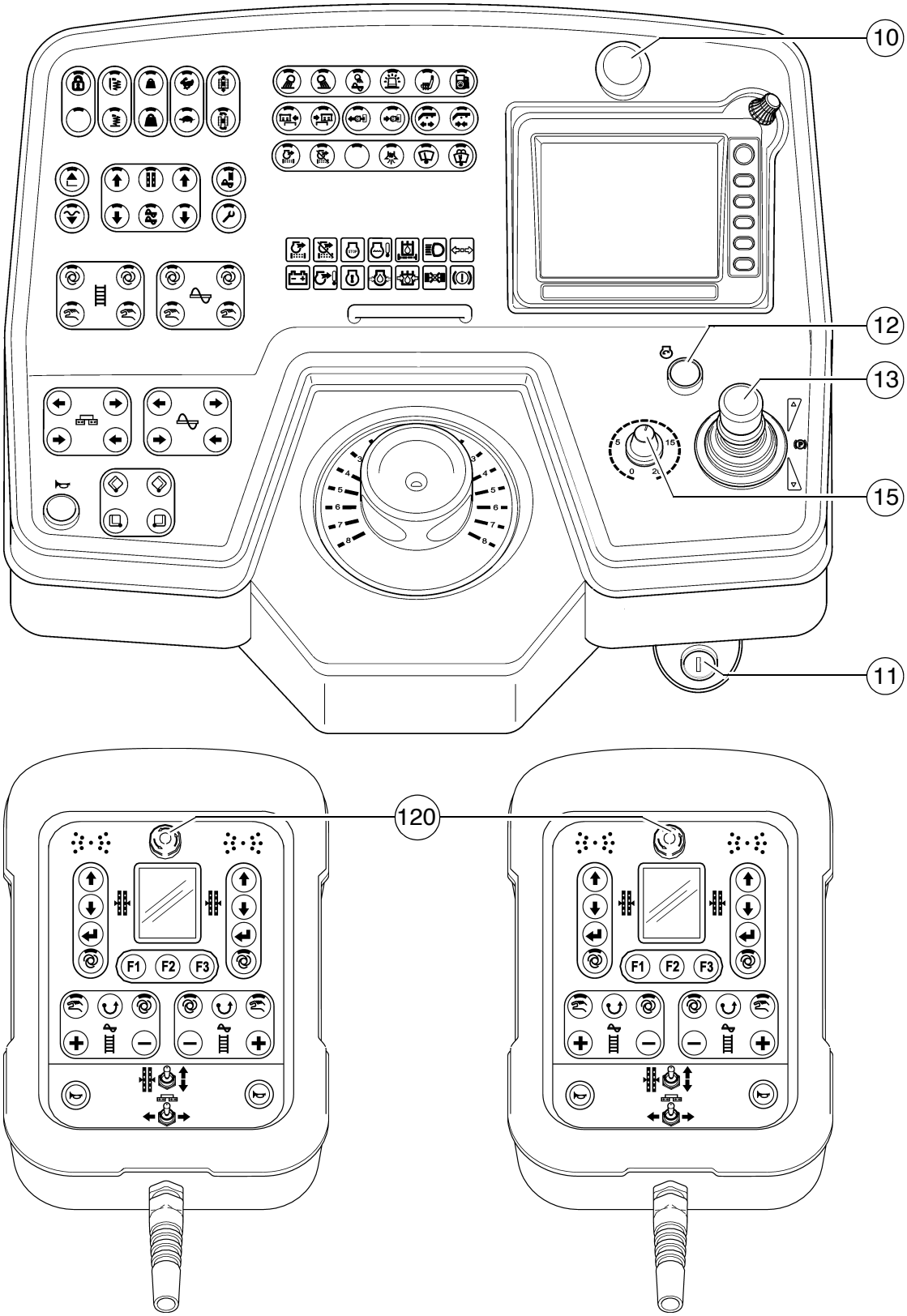

https://truckmanualshub.com/

1.1 Starting the paver finisher

Before starting the paver finisher

Before starting the diesel engine and beginning operation, the following steps must be performed:

- Daily maintenance of the paver finisher (see chapter F).

⚠ Check the operating hours counter to determine whether further maintenance work should be conducted.

- Check the safety devices and protective devices.

"Normal" starting

- Set the drive lever (13) to the centre position and the travel drive preselector (15) to minimum.
- Insert the ignition key (11) in position "0".

☞ It is impossible to start the vehicle, if one of the emergency stop buttons (10) / (120) is depressed.
(Error shown on the display)

NOTE	Caution! Possible subsequent damage!
	- No additional consumers (light, heater, etc.) may be switched on when starting. - Do not switch the consumers on until the engine has reached a speed of >1000 revs.

- Press the starter button (12) to start the engine. Do not let the starter run permanently for more than 30 seconds; allow for a break of 2 minutes after every attempt!

https://truckmanualshub.com/

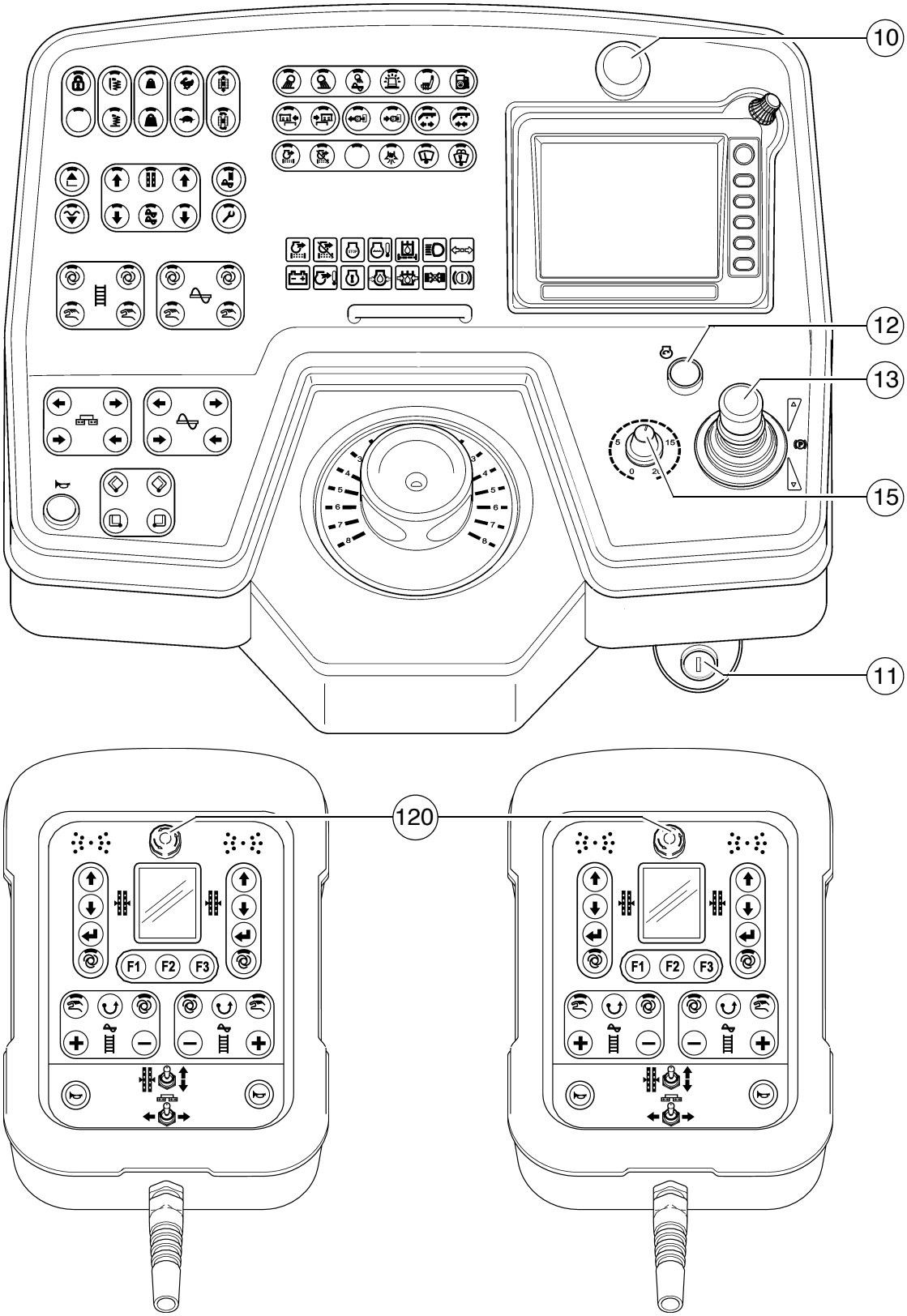

External starting (starting aid)

The engine can be started with the help of an external power source if the batteries are empty and the starter no longer turns.

Suitable power sources are:

- Other vehicles with a 24 V system
- Additional 24 V battery
- Start device that is suitable for external starting (24 V/90 A).

Standard chargers or quick chargers cannot be used for external starting.

To externally start the engine:

- Switch on the ignition (11), set the drive lever (13) to the centre position and the travel drive preselector (15) to minimum.

The starting aid cable must be connected to 24 V.

- First connect the positive terminal (1) of the starting aid battery to the positive terminal (2) of the vehicle battery.
- Then connect the negative terminal (3) of the starting aid battery to the ground of the discharged vehicle, e.g. to the engine block or to a bolt (4) on the vehicle frame.

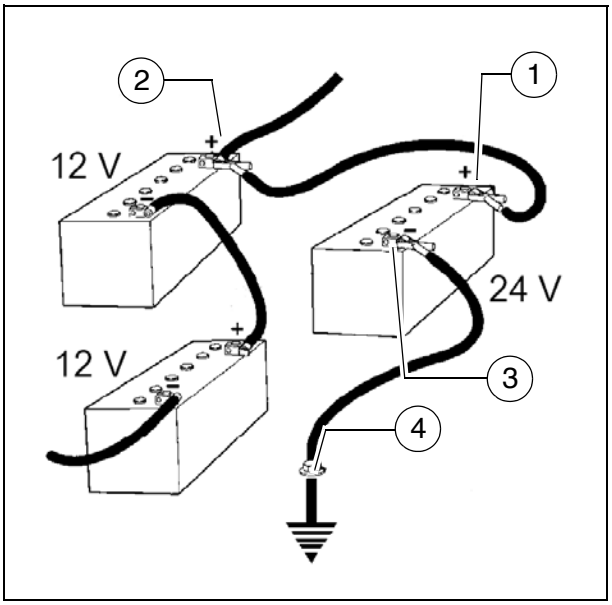

Do not connect the starting aid cable to the negative terminal of the discharged battery! Danger of explosion!

Lay the starting aid cable so that it can be disconnected once the engine is running.

It is impossible to start the vehicle, if one of the emergency stop buttons (10) / (120) is depressed.
(Error shown on the display)

NOTE	Caution! Possible subsequent damage!
	- No additional consumers (light, heater, etc.) may be switched on when starting. - Do not switch the consumers on until the engine has reached a speed of >1000 revs.

https://truckmanualshub.com/

- If necessary, start the engine of the vehicle supplying power and leave to run for a while.

Now try to start the other vehicle:

- Press the starter button (12) to start the engine. Do not let the starter run permanently for more than 30 seconds; allow for a break of 2 minutes after every attempt!
- If the engine still has not started after two attempts, ascertain the cause!
- If the engine starts up: disconnect the starting aid cable again in reverse order.

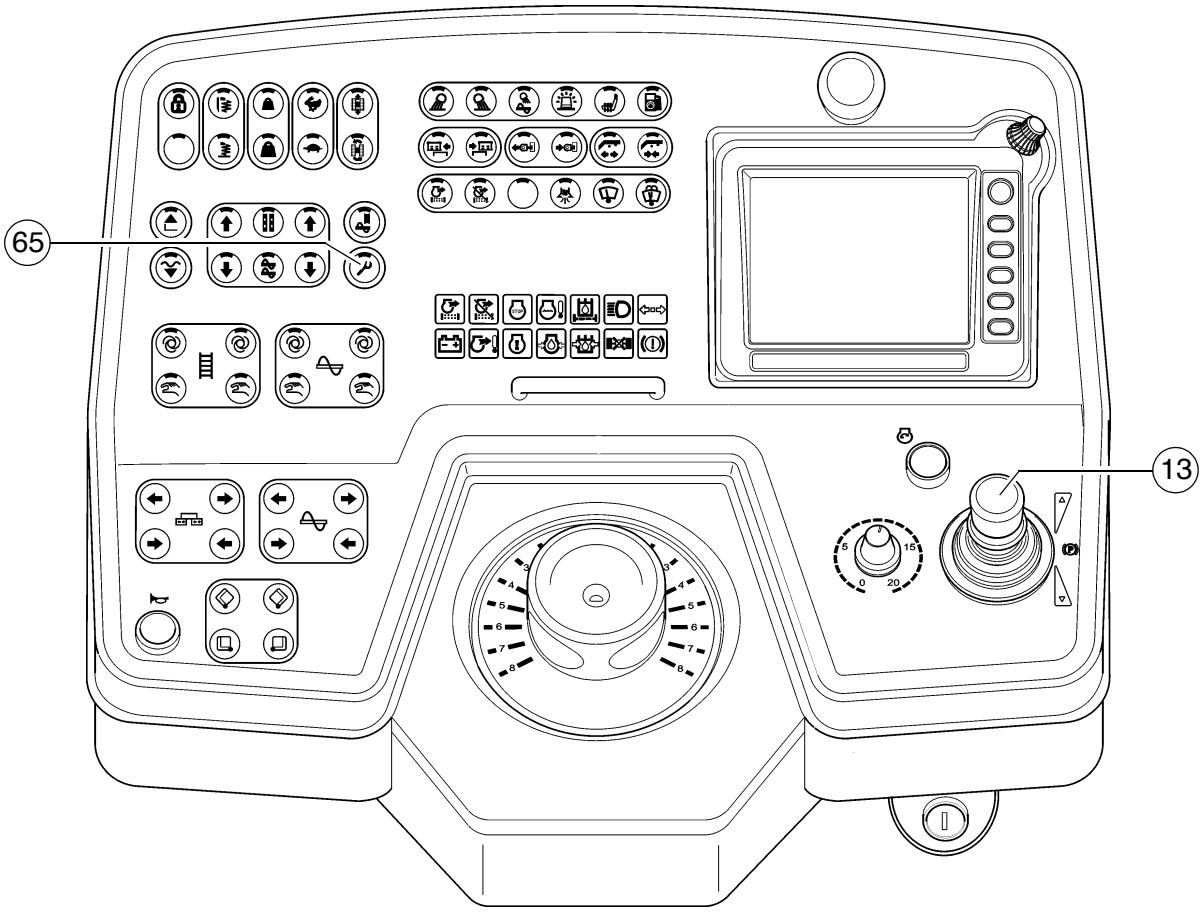
65
13

https://truckmanualshub.com/

After starting

To increase the engine speed:

- Press button (65) to increase engine speed.

☞ The engine speed is increased to the preset value.

⚠ Let the paver finisher warm up for approx. 5 minutes if the engine is cold.

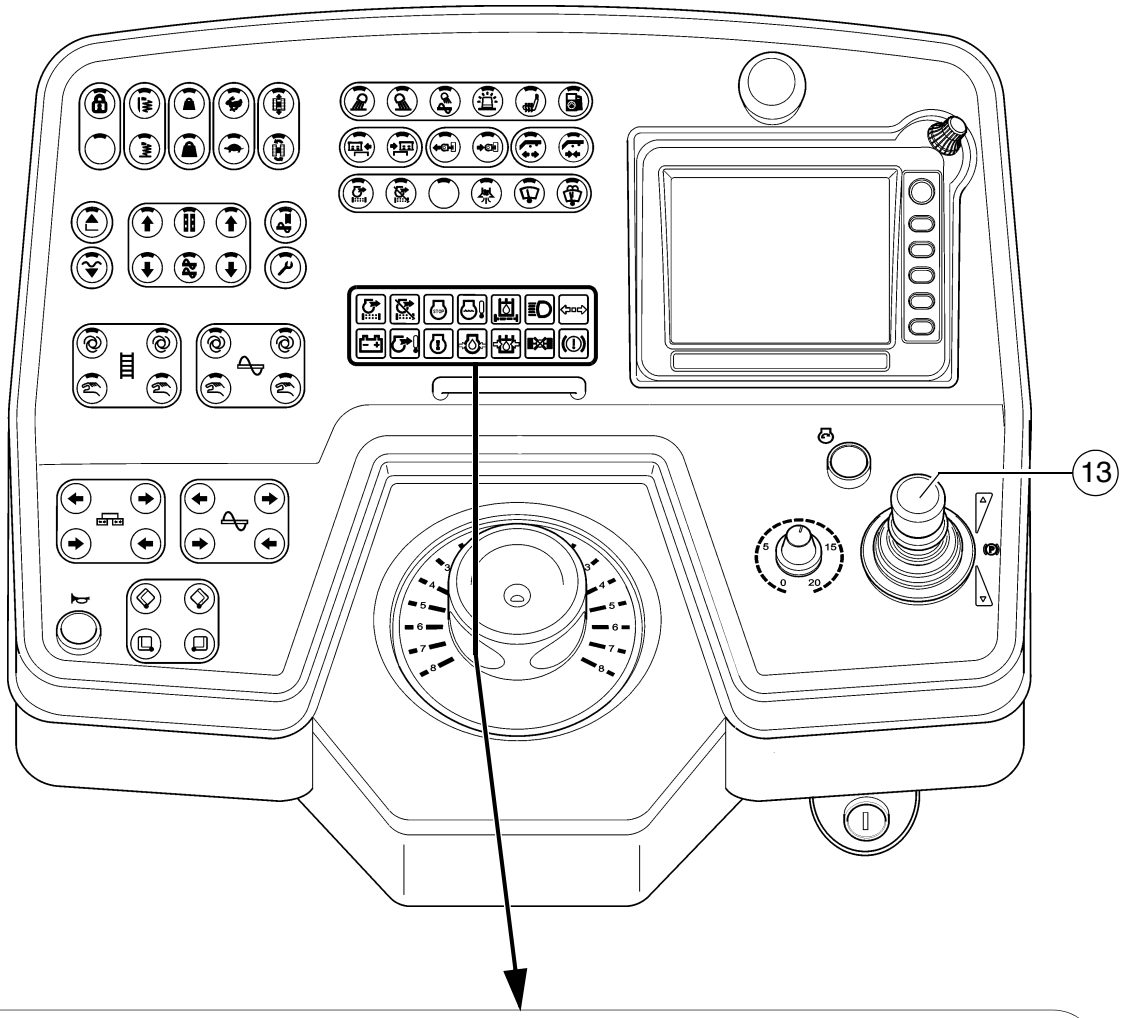
13

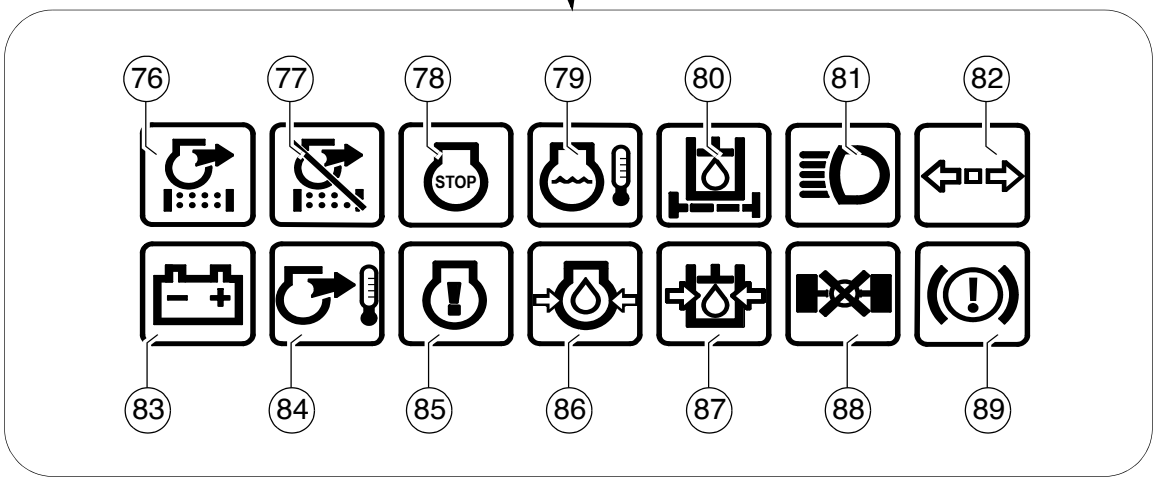
76
77
78
STOP
79
80
81
82
83
84
85
86
87
88
89

https://truckmanualshub.com/

Observe indicator lamps

The following indicator lamps must be observed under all circumstances:

For further possible faults, see Engine operating instructions.

Engine coolant temperature check (79)

Lights up when the engine temperature is outside of the permissible range.

⚠ Stop the paver finisher (drive lever to the centre position), let the engine cool down while idling.
Determine the cause and correct it if necessary.

☞ The engine performance will be throttled down automatically. (Driving mode remains possible).
After cooling down to normal temperature, the engine will run with full performance again.

Battery charge indicator (83)

Must go out after starting when the engine revs up.

⚠ If the lamp does not go out or lights up during operation: Briefly rev up the engine. Switch off the engine and determine the fault if the lamp does not go out.

For further possible malfunctions, refer to the section "Malfunctions".

Oil pressure indicator lamp for the diesel engine (86)

Must go out at the latest 15 seconds after starting.

⚠ If the lamp does not go out or lights up during operation: switch off engine immediately and determine fault.

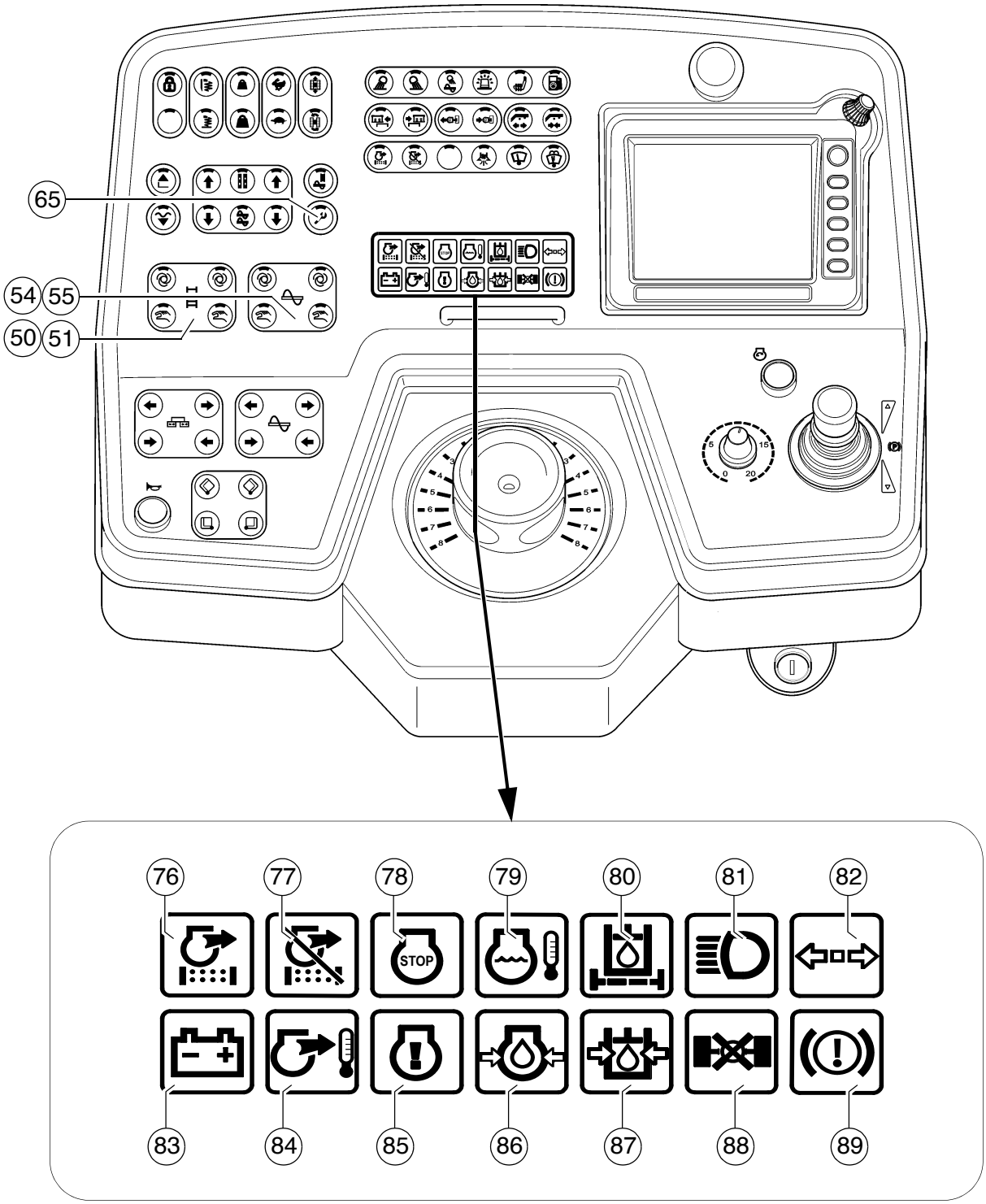
65
54
55
50
51
76
77
78
79
80
81
82
STOP
83
84
85
86
87
88
89

https://truckmanualshub.com/

Oil pressure indicator lamp for the travel drive (87)

- Must go out after starting.

If the lamp does not go out:
Do not switch on the travel drive! Otherwise, the entire hydraulic system could be damaged.

When the hydraulic oil is cold:

- Activate set-up mode function (65).
- Set the conveyor function (50)/(51) to "manual" and the auger function (54)/(55) to "manual". Conveyor and auger start to operate
- Let the hydraulics warm up until the indicator lamp goes out.

The Lamp goes out when the pressure drops below
2.8 bar = 40 psi.

For further possible faults, refer to the section "Malfunctions".

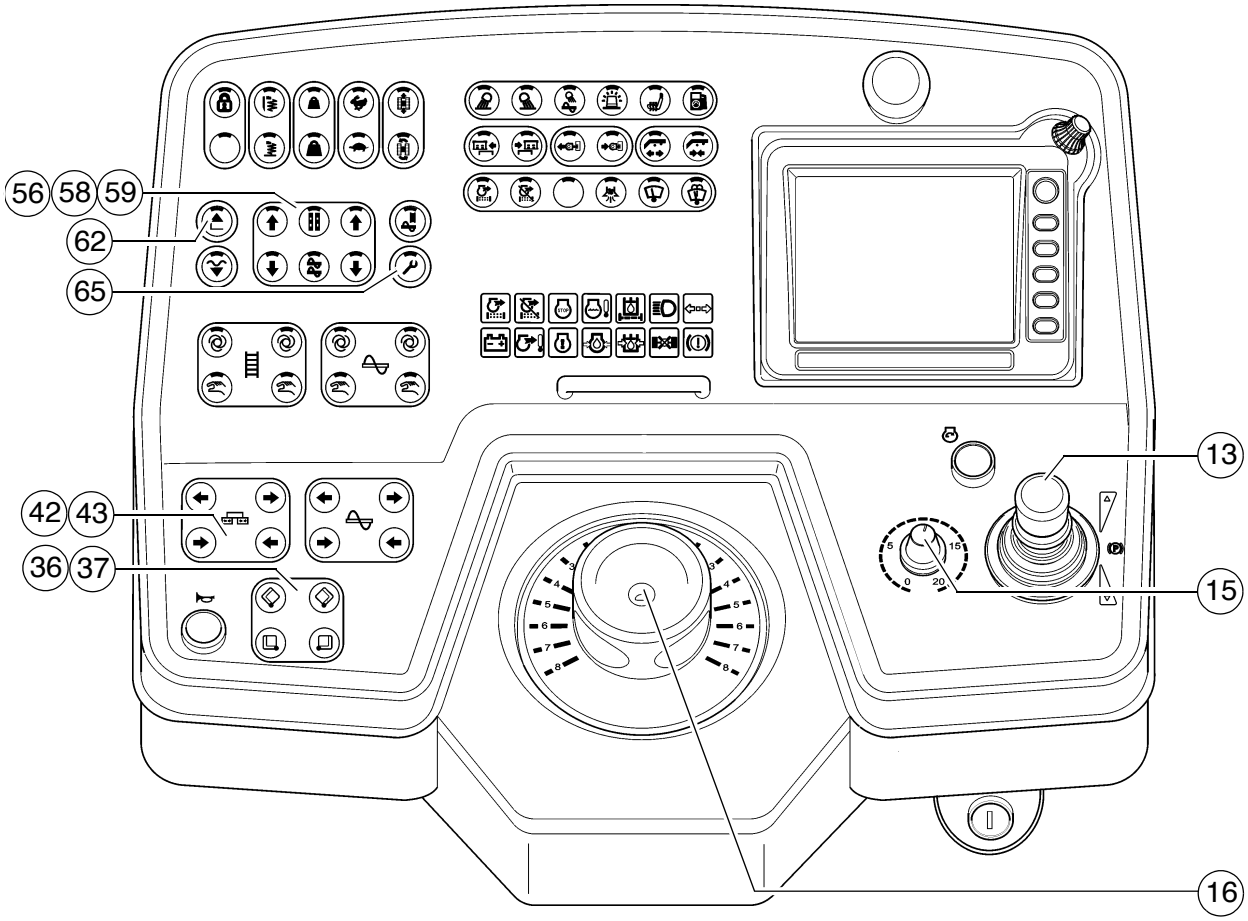
56
58
59
62
65
42
43
36
37
13
15
16

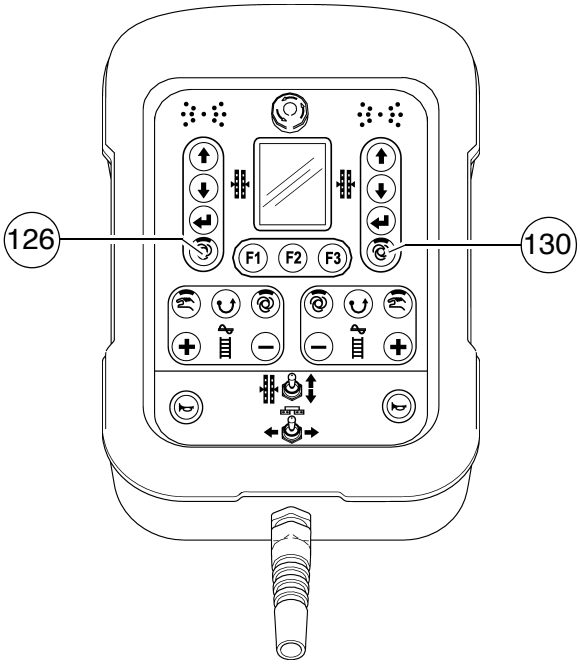
126
130
F1
F2
F3

https://truckmanualshub.com/

1.2 Preparation for transportation

- Close the hopper with switch (36)/(37).
- Engage both hopper transport safeguards.
- Lift the screed completely using switch (62), set the crossbeam lock.
- Turn the travel drive preselector (15) to zero.
- Activate set-up mode function (65).
- Fully extend the levelling cylinders with switch (56),(58)/(59).

☞ To extend the levelling cylinders, levelling operating mode (126)/(130) must be switched to "MANUAL" (LED OFF) on the remote controls.

- Use switch (42)/(43) to adjust the screed to the basic width of the paver finisher.

⚠ Lift the auger if necessary!

☞ The drive is locked by an engine start with drive lever out of center position.
To start the drive, the lever must be put into center position before.

https://truckmanualshub.com/

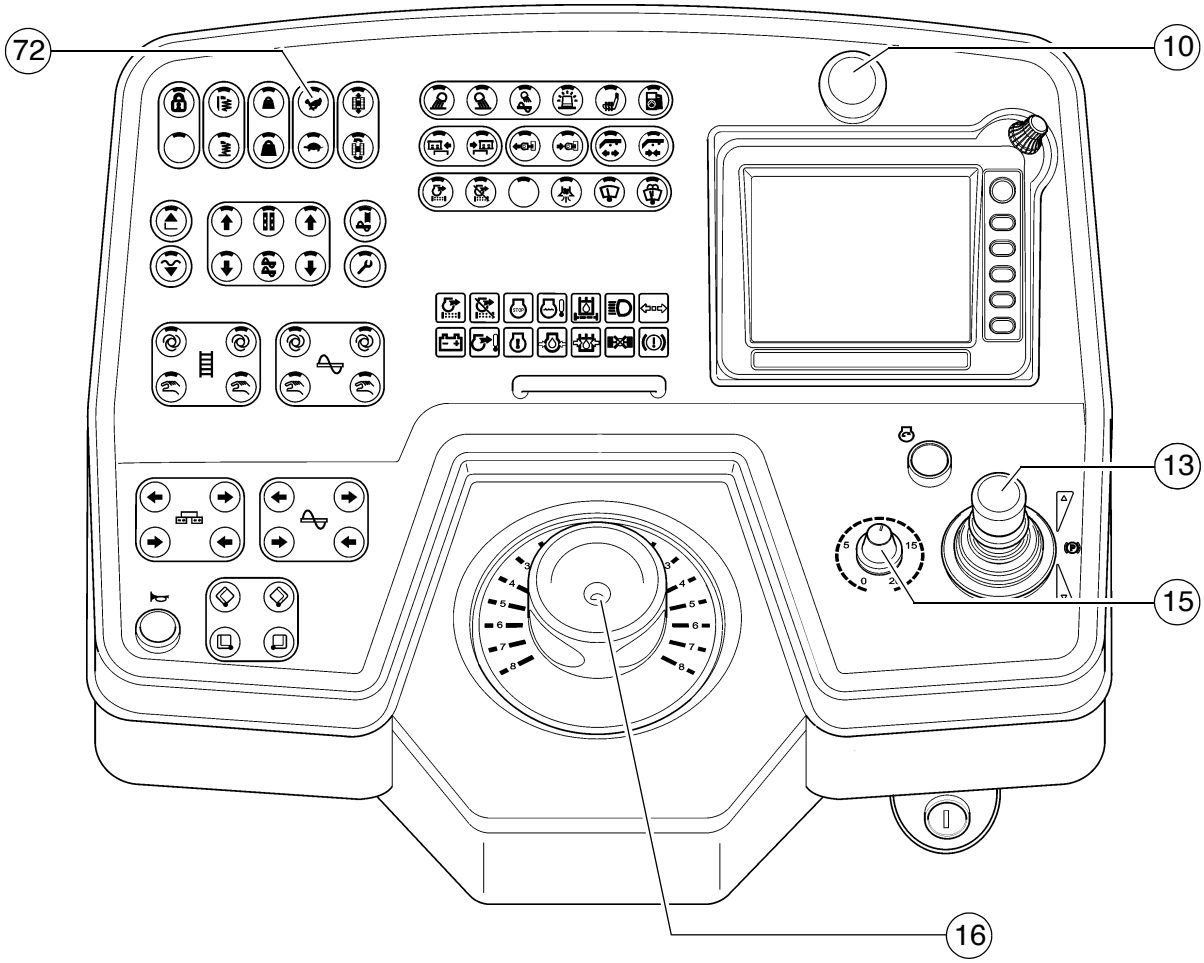

https://truckmanualshub.com/

Driving and stopping the paver finisher

- Set the fast/slow switch (72) to "Hare".
- Set the preselector (15) to mark 10.
- For driving, carefully tilt the drive lever (13) forward or backward according to the drive direction desired.
  - Use the preselector (15) to regulate the speed.
- Carry out steering movements by actuating the steering potentiometer (16).

In case of an emergency, press the emergency stop button (10)!

- To stop, set the preselector (15) to "0" and move the drive lever (13) into its centre position.

https://truckmanualshub.com/

1.3 Preparations for paving

Separator fluid

Spray the parts coming into contact with asphalt (hopper, screed, auger, push roller) with a separator fluid.

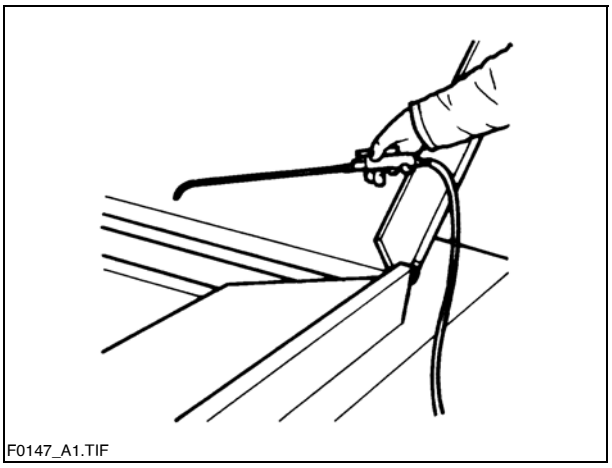
F0147_A1.TIF

⚠ Do not use diesel fuel as it dissolves the bitumen (prohibited in Germany!).

Screed heater system

Switch on the screed heater approx. 15–30 minutes (depending on the ambient temperature) before paving begins. Warming up prevents the material from sticking to the screed plates.

https://truckmanualshub.com/

Direction marks

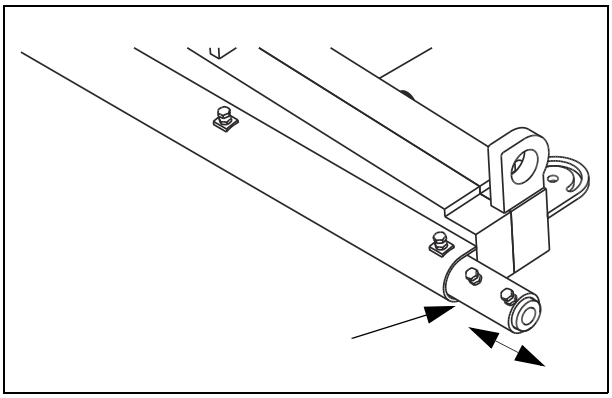

To ensure straight paving, a direction mark must be present or established (road edge, chalk lines or similar).

- Slide the operating panel to the desired side and secure it.
- Pull the direction indicator out of the bumper (arrow) and adjust it accordingly.

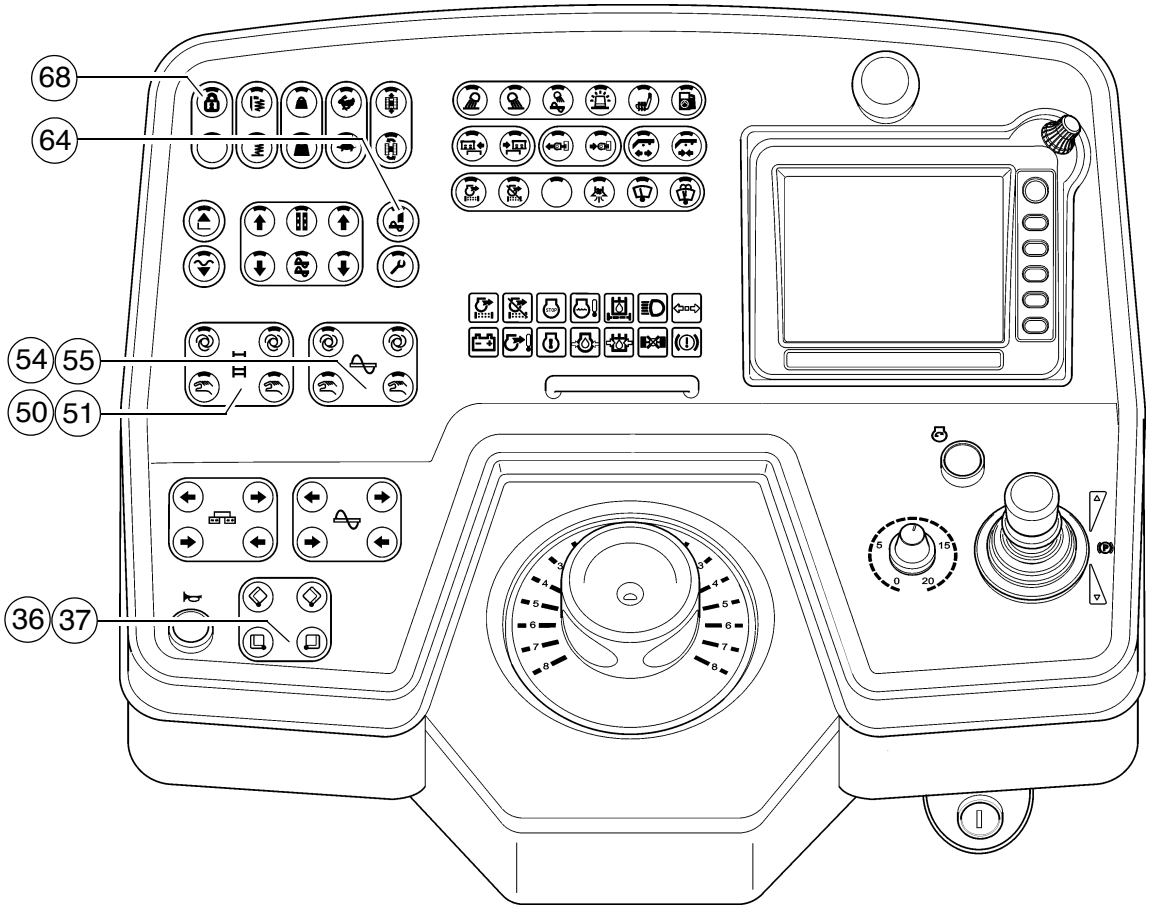
68
64
54
55
50
51
36
37

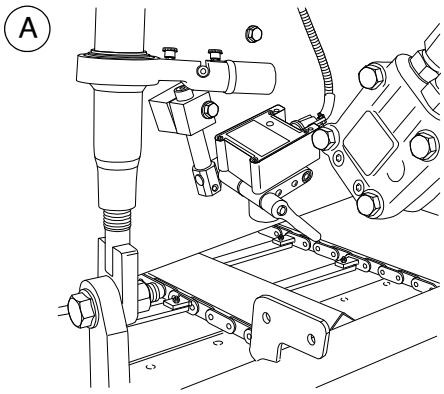
A

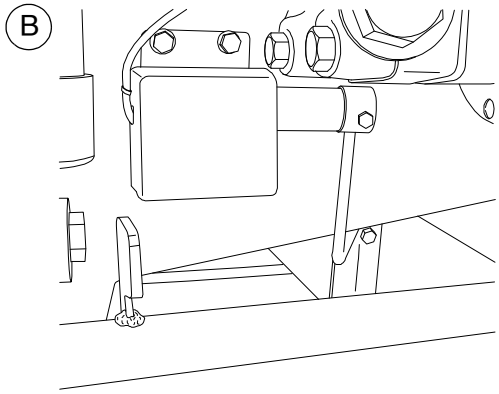
B

https://truckmanualshub.com/

Loading/conveying material

- Button (68) has to be switched off.
- Use switch (36)/(37) to open the hopper.
  Instruct the truck driver to dump the material.
- Set the switches for the auger (54)/(55) and the conveyor (50)/(51) to "Auto".
- Activate function (64) to fill the vehicle for the paving process.

- Switch the conveyors on.
  The conveyor limit switches (A) / (B) must switch off when the material has approximately reached the area beneath the auger crossbeam.
- Check that the material is transferred properly.
  Manually switch on or off the conveyor if the material is not conveyed properly until a sufficient amount of material lies in front of the screed.

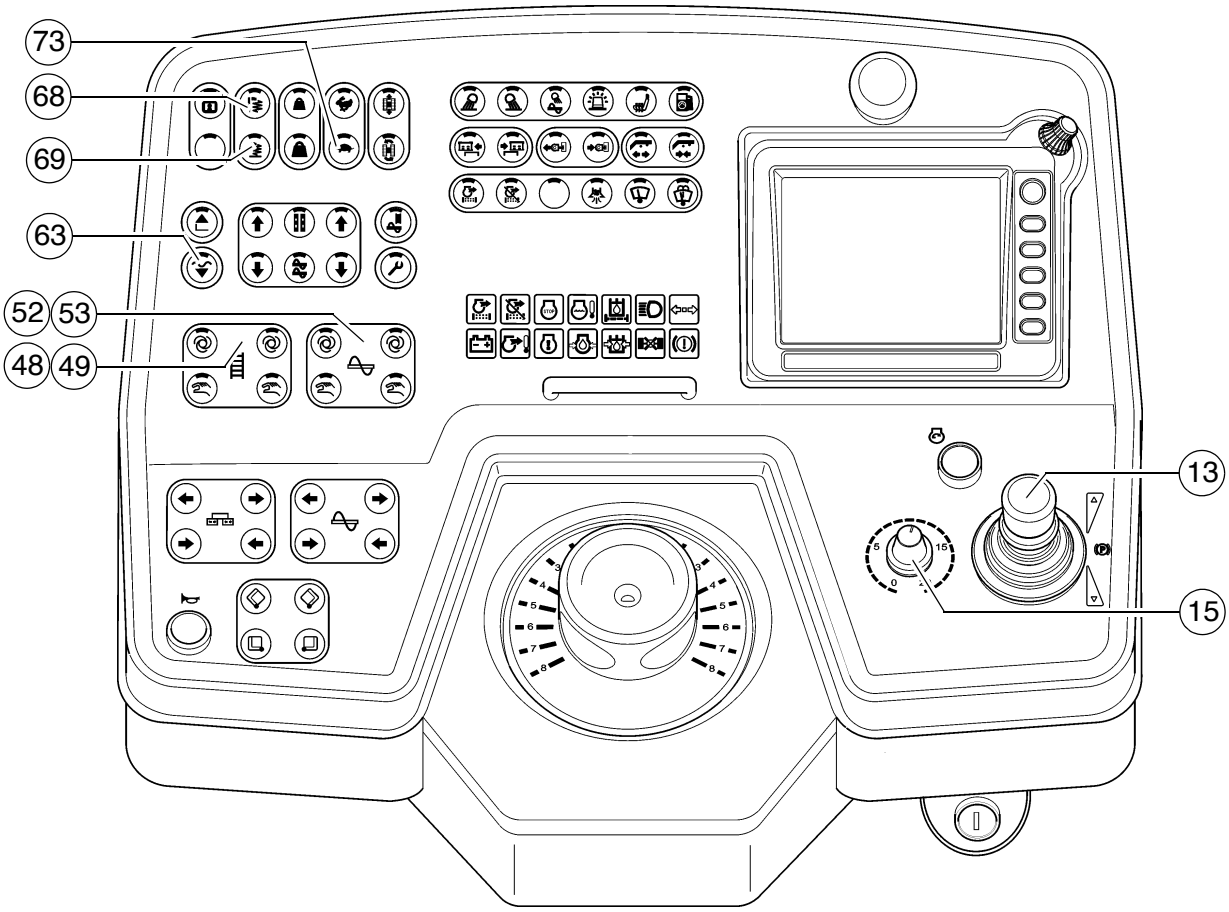
73
68
69
63
52
53
48
49
13
15

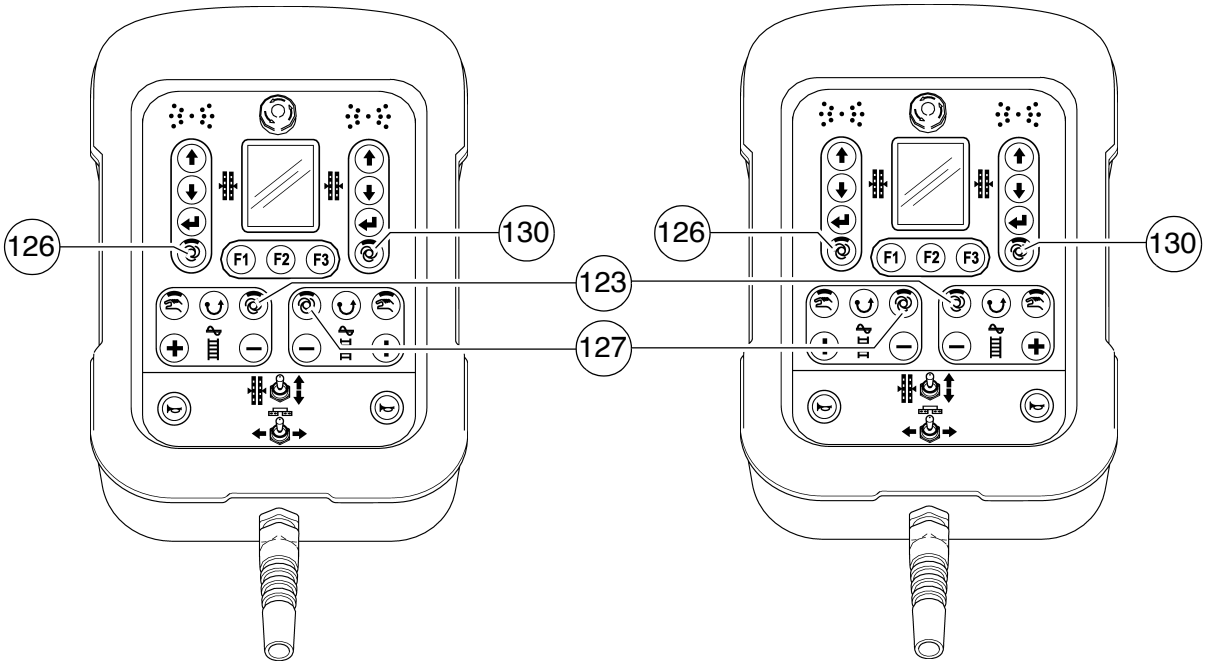
126
130
123
127
F1
F2
F3

https://truckmanualshub.com/

1.4 Starting for paving

Set the switches, levers and controls listed below to the specified positions when the screed has reached its operating temperature and a sufficient amount of material lies in front of the screed:

Item	Travelling direction	Position
13	Drive lever	Centre position
73	Travel drive fast/slow	Tortoise-operating speed
15	Travel drive preselector	Mark 6-7
63	Preparation for screed floating position	LED ON
67	Vibration	LED ON
66	Tamper	LED ON
52/53	Auger left/right	Auto
123		
48/49	Conveyor left/right	Auto
127		
126 / 130	Levelling	Auto
	Speed regulation, vibration	Depending on the working conditions
	Speed regulation, tamper	Depending on the working conditions

- Push the drive lever (13) all the way to the front and start driving.
- Observe the distribution of the material and adjust the limit switches if necessary.
- Set the compacting elements (tamper / vibration) according to the required compaction ratio.
- Let the paving master check the paving thickness after 5–6 meters and correct if necessary.

Carry out the check in the area of the caterpillar chains or drive wheels as the screed tends to level an uneven ground. The reference points for the layer thickness are the caterpillar chains or drive wheels.

The basic setting of the screed must be corrected when the actual layer thickness deviates significantly from the values indicated by the scales (see the operating instructions for the screed).

☞ The basic setting is for asphalt material.

https://truckmanualshub.com/

1.5 Checks during paving

The following points must be constantly observed during paving:

Paver function

- Screed heater system
- Tamper and vibration
- Engine oil and hydraulic oil temperature
- The screed parts must be retracted and extended in time when obstacles are in the way
- Uniform material transport and distribution or supply to the screed; may require corrections to settings of the material switches for conveyor and auger.

☞ See the section "Malfunctions" when paver finisher functions fail.

Quality of the layer

- Paving height
- Slope
- Evenness in the driving direction and at right angles to it (check with 4 m levelling rod)
- Surface structure/texture behind the screed.

☞ See section "Malfunctions, problems during paving" if the paving quality is poor.

https://truckmanualshub.com/

1.6 Paving with "screed control at paving stop" and "screed charging/relieving"

General

The screed hydraulics can be influenced in three different ways to attain optimum paving results:

- Paving stop + relief when the paver finisher is halting,
- floating paving when the paver finisher is driving,
- floating paving with screed charging or relieving when the paver finisher is driving.

☞ Relieving reduces the screed weight and increases the traction force.
Charging increases the screed weight, reduces the traction force, but increases the compaction ratio. (To be used with light-weight screeds in exceptional cases.)

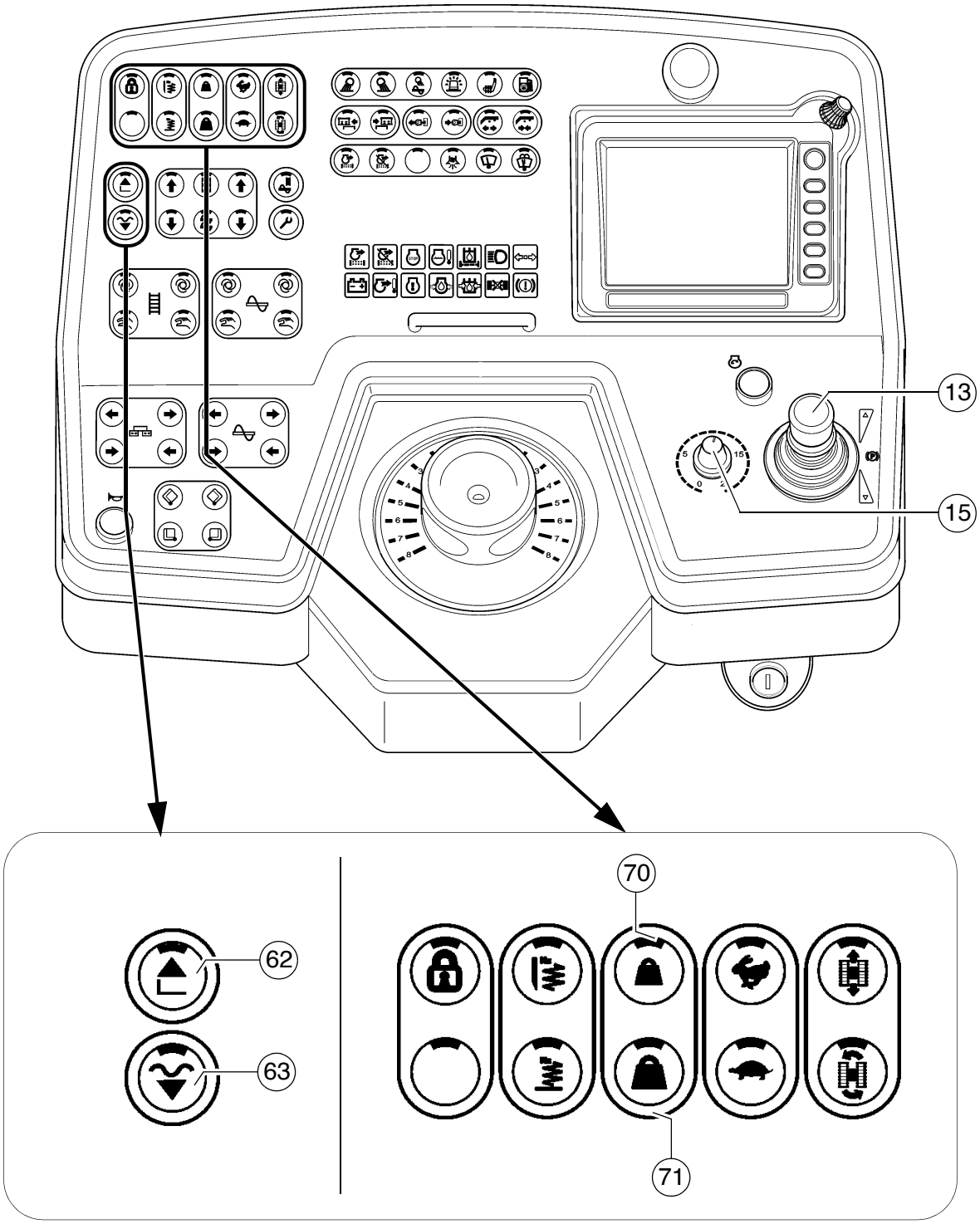
13
15
62
63
70
71

https://truckmanualshub.com/

Screed charging/relieving

This function charges or relieves the screed regardless of its own dead weight.

Function (70) Relieving (screed "lighter")
Function (71) Charging (screed "heavier")

☞ The "Screed charging and relieving" functions are only effective when the paver finisher moves. According to the activated function, the paver finisher is automatically switched to "paving stop + relief" when stationary.

Screed control with paver finisher stop / in paving operation (screed stop / paving stop / floating paving)

Button (63) can be used to activate the following functions:

- Screed stop / floating position (OFF)-->(LED OFF)
  - Screed is hydraulically held in position.

☞ Function for setting up the paver finisher and for lifting/lowering the screed

- Paving stop / floating paving (ON)-->(LED ON)

The following functions are active depending on operating status:

- "Paving stop": when the paver finisher is stationary.
  The screed is held by the relief pressure and the counter pressure of the material.
- "Floating paving": during paving operation.
  Lower screed to the floating position with preselected screed charging/relieving function.

☞ Function for paving operation.

- To lift the screed press switch (62).
- To lower the screed:
  - Resting function: Keep button (63) pressed for longer than 1.5 seconds. The screed is lowered as long as the button is pressed. When the button is released, the screed is stopped again.
  - Button function: Press button (63) briefly - the screed is lowered. Press the button briefly again - the screed is stopped.

As in the case of screed charging and relieving, a pressure of 2-50 bar is separately applied to the screed lifting cylinders. This pressure acts to combat the weight of the screed to prevent the screed from sinking into the freshly laid material, thus supporting the paving stop function, especially when the screed relieving function is used.

https://truckmanualshub.com/

The pressure to be applied depends on the load-bearing capacity of the material. If necessary, the pressure must be readjusted or changed as required during the first stops until the lower edge of the screed no longer leaves any marks when the finisher moves on again.

A pressure greater than 10-15 bar neutralises the screed weight, thus preventing the screed from sinking into the material.

☞ When combining the "paving stop" and "screed relieving" functions, make sure that the pressure difference between the two functions does not exceed 10–15 bar.

⚠ Especially in those cases where the "screed relieving" function is only briefly used as a start-up aid, there is a danger of uncontrolled floating when starting up again.

https://truckmanualshub.com/

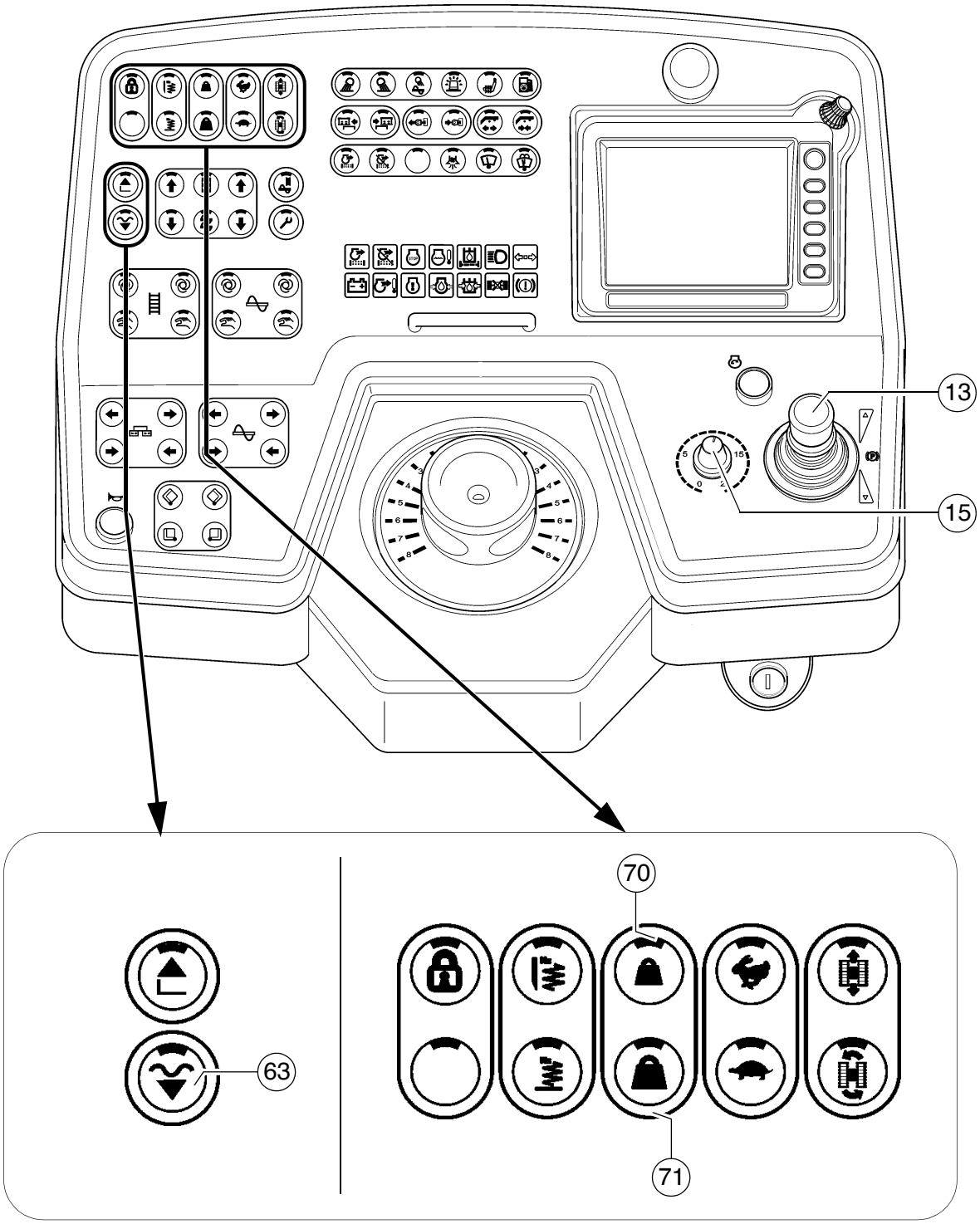
13
15
63
70
71

https://truckmanualshub.com/

Adjusting the pressure

Pressure adjustments can only be made while the diesel engine is running. Therefore:

- Start the diesel engine and turn the traction controller (15) back to zero (precaution against inadvertent advancing).
- Activate the "floating position" using switch (63).

For screed charging/relieving:

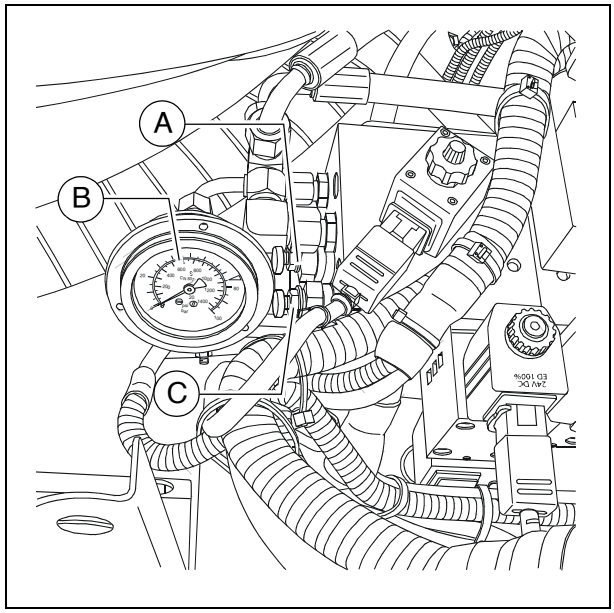

- Set the drive lever (13) to the centre position.
- Activate the screed relieving (70) or screed charging (71) function (LED ON).
- Set the pressure using pressure regulating valve (A); read it off at the manometer (B).

☞ When screed charging/relieving is necessary and automatic levelling is used (grade control and/or slope control), the compacting performance changes (layer thickness).

☞ The pressure can also be set or corrected during paving.
(Max. 50 bar)

Setting pressure for screed control with paving stop + relieving:

- Set the drive lever (13) to the centre position.
- Activate the "floating position" (63) function (LED ON).
- Set the pressure using pressure regulating valve (C); read it off at the manometer (A).
  (Basic setting: 20 bar)

https://truckmanualshub.com/

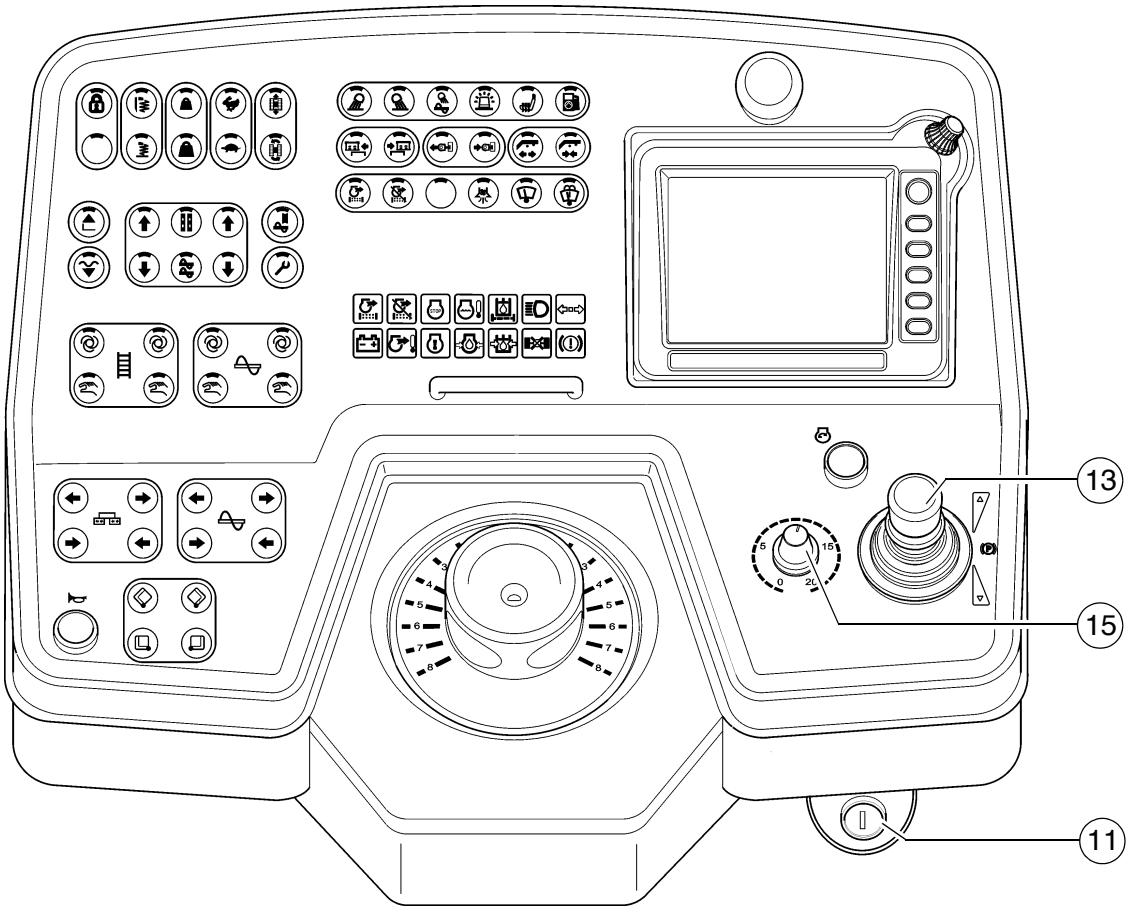

https://truckmanualshub.com/

1.7 Interrupting/terminating operation

During breaks (e.g. the material supply truck is late)

- Determine the approximate duration.
- When cooling down of the material below the minimum paving temperature must be expected, run the paver finisher empty and create an edge like the end of a layer.
- Set the drive lever (13) to the centre position.

During longer breaks(e.g. lunch break)

- Drive lever (13) into centre position, RPM speed adjustment (15) to minimum position.
- Switch off the ignition (11).
- Switch the screed heater system off.
- With a screed with gas heating system (○), close the bottle valves.

☞ The screed must be heated up to the correct paving temperature before paving may be restarted.

https://truckmanualshub.com/

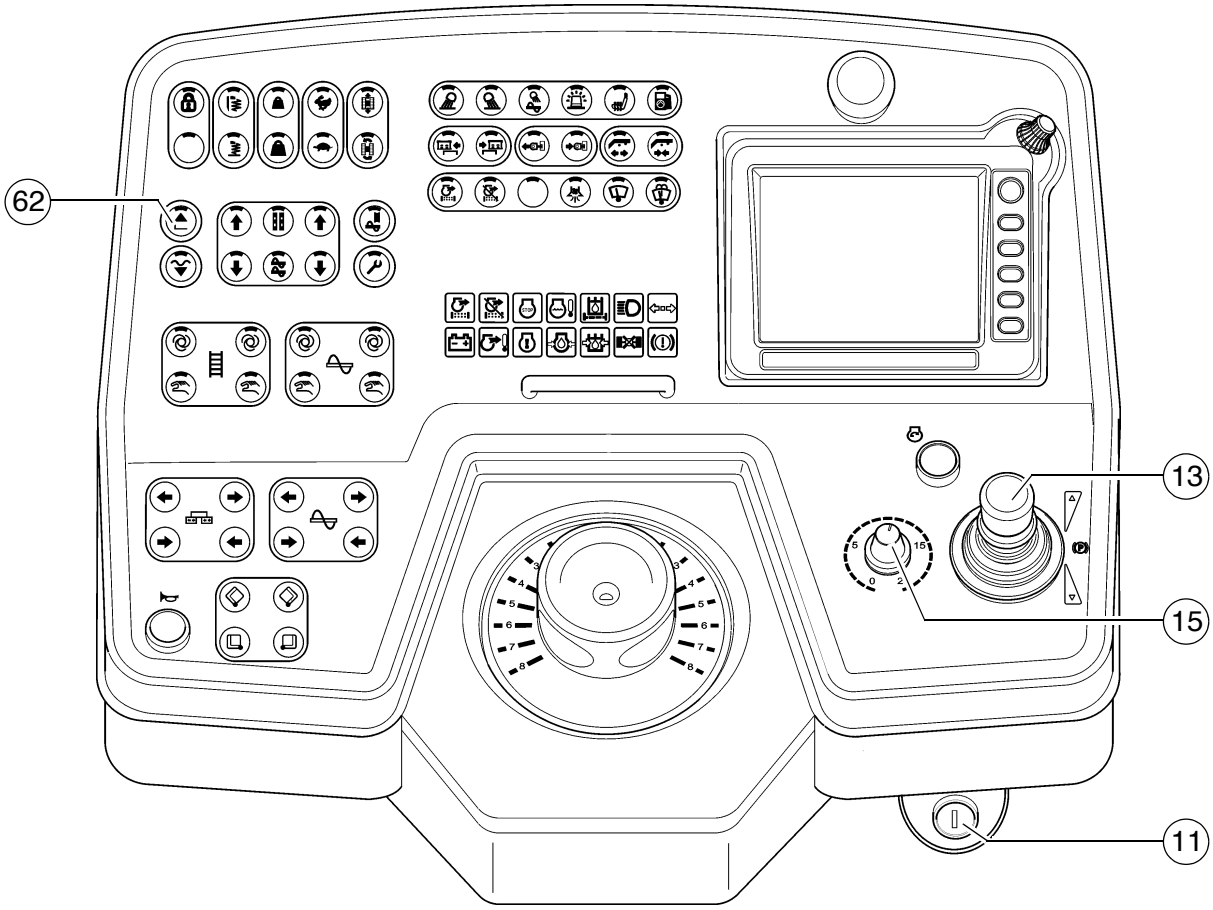

https://truckmanualshub.com/

When work is finished

- Run the paver finisher empty and stop it.
- Lift the screed using switch (62), set the crossbeam lock.
- Retract the screed parts to the basic screed width and lift the auger. Where applicable, completely extend the levelling cylinders.
- Close hopper halves, set hopper transport safeguards.

☞ The screed is hydraulically secured in the lifted position.

- While operating the tampers at a low speed, let any material residues drop out.

- Set the drive lever (13) to the centre position and the speed adjuster (15) to minimum.
- Switch the screed heater system off.
- Switch off the ignition (11).
- With a screed with gas heating system (○), close the main shut-off valves and the bottle valves.
- Remove the levelling units and stow them away in the boxes, close all flaps.
- Remove all parts that extend beyond the paver finisher contour or secure them if the paver finisher is to be transported over public roads on a low-bed trailer.
- Read and check the operating hour meter to determine whether maintenance work must be performed (see chapter F).
- Cover and lock the operating panel.
- Remove material residues from the screed and the paver finisher and spray all parts with separator fluid.

https://truckmanualshub.com/

2 Malfunctions

2.1 Problems during paving

Problem	Reason
Wavy surface ("short waves")	- change in the material temperature, demixing - wrong material composition - incorrect operation of the roller - incorrectly prepared foundation - long standstill times between loads - grade control reference line is not suitable - grade control jumps to the reference line - grade control toggles between up and down (inertia setting is too high) - bottom plates of the screed are loose - bottom plates of the screed are warped or not uniformly worn - screed is not operated in the floating position - too much play in the mechanical screed link/suspension - paver finisher speed is too high - augers are overloaded - changing material pressure against the screed
Wavy surface (“long waves”)	- change in the material temperature - demixing - roller has stopped on the hot material - roller has turned or roller speed has been changed too fast - incorrect operation of the roller - incorrectly prepared foundation - truck brake is applied too tight - long standstill times between loads - grade control reference line is not suitable - incorrect installation of the grade control - limit switch is not correctly set - screed is empty - screed has not been switched to the floating position - too much play in the mechanical screed link - auger is set too deep - auger is overloaded - changing material pressure against the screed
Cracks in the layer (over the entire width)	- material temperature is too low - change in the material temperature - moisture on the foundation - demixing - wrong material composition - wrong layer height for maximum grain size - cold screed - bottom plates of the screed are worn or warped - paver finisher speed is too high

https://truckmanualshub.com/

Problem	Reason
Cracks in the layer (centre strip)	- material temperature - cold screed - bottom plates are worn or warped - wrong crowning
Cracks in the layer (outer strip)	- material temperature - screed extendable parts are incorrectly installed - limit switch is not correctly set - cold screed - bottom plates are worn or warped - paver finisher speed is too high
Layer composition is not uniform	- material temperature - change in the material temperature - moisture on the foundation - demixing - wrong material composition - incorrectly prepared foundation - wrong layer height for maximum grain size - long standstill times between loads - vibration is too slow - screed extendable parts are incorrectly installed - cold screed - bottom plates are worn or warped - screed is not operated in the floating position - paver finisher speed is too high - auger is overloaded - changing material pressure against the screed
Marks in the surface	- truck hits too much against the finisher while aligning to the finisher - too much play in the mechanical screed link/suspension - truck brake is applied - vibration is too high while standing on a spot
Screed does not react to corrective measures as expected	- material temperature - change in the material temperature - wrong layer height for maximum grain size - incorrect installation of the grade control - vibration is too slow - screed is not operated in the floating position - too much play in the mechanical screed link - paver finisher speed is too high

2.2 Malfunctions on the paver finisher or screed

Malfunction	Reason	Remedy
At the diesel engine	Various	See operating instructions for the engine
Diesel engine does not start	Batteries empty	See "External starting" (start assistance)
	Various	see "Towing"
Tamper or vibration is not functioning	Tamper is obstructed by cold bitumen	Properly heat the screed
	Hydraulic oil level in the tank is too low	Top up the oil
	Pressure limiting valve is defective	Replace the valve; if necessary, repair and adjust the valve
	Leak in the suction line of the pump	Seal or replace the connections
		Tighten or replace the hose clamps
	Oil filter is soiled	Clean the filter; if necessary, replace the filter
Conveyor or augers run too slowly	Hydraulic oil level in the tank is too low	Top up the oil
	Power supply interrupted	Check fuses and cables; replace if necessary
	Switch is defective	Replace the switch
	One of the pressure limiting valves is defective	Repair or exchange the valves
	Pump shaft broken	Replace the pump
	Limit switch does not switch or regulate correctly	Check the switch; replace and adjust the switch if necessary
	Pump is defective	Check the high pressure filter for dirt particles; replace if necessary
	Oil filter is soiled	Replace the filter
Hopper cannot be swung open	Engine speed is too low	Increase the speed
	Hydraulic oil level is too low	Top up the oil
	Leak in the suction line	Tighten the connections
	Flow rate regulator defective	Replace
	Leaking seals of the hydraulic cylinder	Replace
	Control valve is defective	Replace
	Power supply interrupted	Check fuse and cables; replace if necessary

https://truckmanualshub.com/

Malfunction	Reason	Remedy
Hoppers lowers inadvertently	Control valve is defective	Replace
	Leaking seals of the hydraulic cylinder	Replace
Screed cannot be lifted	Oil pressure too low	Increase the oil pressure
	Leaking seal	Replace
	Screed relieving or charging is switched on	Switch must be in the centre position
	Power supply interrupted	Check fuse and cables; replace if necessary
Crossbeams cannot be lifted or lowered	Switch on the remote control is set to "Auto"	Set the switch to "Manual"
	Power supply interrupted	Check fuse and cables; replace if necessary
	Switch on the operating panel defective	Replace
	Excess pressure valve defective	Replace
	Flow rate regulator defective	Replace
	Seals defective	Replace
Crossbeams lower inadvertently	Control valves defective	Replace
	Pilot-controlled non-return valves defective	Replace
	Seals defective	Replace

Malfunction	Reason	Remedy
Traction does not work	Travel drive fuse defective	Replace (fuse strip on the operating panel)
	Power supply interrupted	Check potentiometer, cables, connectors; replace if necessary
	Travel drive monitoring (type-specific) defective	Replace
	Electro-hydraulic servo unit of the pump defective	Replace the servo unit
	Insufficient supply pressure	Check and adjust if necessary
		Check the suction filter; replace the supply pump and the filter if necessary
	Drive shaft of hydraulic pumps or engines broken	Replace pump or engine
Irregular engine speed, engine stop function does not work	Fuel level too low	Check the fuel level; refill fuel if necessary
	Fuse "engine speed control" defective	Replace (fuse strip on the operating panel)
	Electrical power defect (line break or short circuit)	Check potentiometer, cables, connectors; replace if necessary

https://truckmanualshub.com/

E 11 Set-up and modification

1 Special notes on safety

Danger to personnel by inadvertent starting of the engine, travel drive, conveyor, auger, screed or screed lifting devices.
Unless otherwise specified, work may only be performed when the engine is at a standstill!

- To protect the paver finisher against inadvertent starting:
  Move drive lever into centre position and turn preselector controller to zero, remove ignition key and battery main switch.
- Protect lifted vehicle parts (e.g. screed or hopper) against lowering by means of mechanical safeguards.
- Replace parts or have them replaced as stipulated.

When connecting or disconnecting hydraulic hoses and when working on the hydraulic system, hot hydraulic fluid may spurt out at high pressure.
Switch off the engine and depressurise the hydraulic system! Protect your eyes!

- Mount all protective devices before re-commissioning the paver finisher.
- The walkway must always reach over the entire working width of the screed.
  The hinged walkway plate may only be folded up under the following conditions:
  - When paving next to a wall or a similar obstacle.
  - During transportation on a low-bed trailer.

DANGER	**Danger due to changes at the vehicle**
	Structural changes to the vehicle make the operating licence null and void and can cause severe to fatal injuries! - Only use original spare parts and approved accessories. - After maintenance and repair work, ensure that any dismantled protective and safety devices are all completely fitted again. - Comply with all further information in these instructions and in the safety manual.

https://truckmanualshub.com/

2 Distribution auger

2.1 Height adjustment

Depending on the mix of materials, the set height of the distribution auger (1) – measured from its bottom edge – should lie above the material layer height.

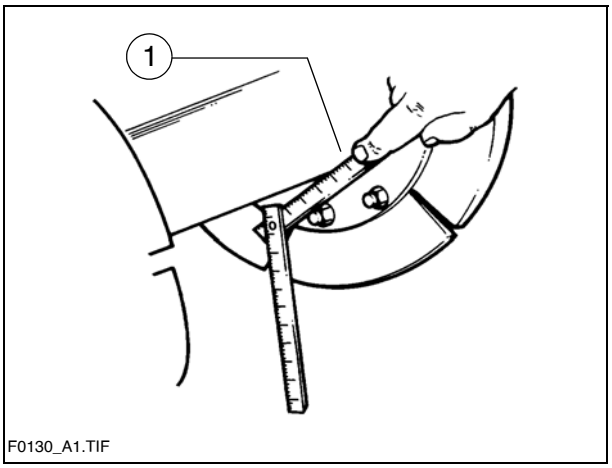

Grain sizes up to 16 mm

Example:

Paving thickness 10 cm
Min. height setting 15 cm
from the ground

Grain sizes > 16 mm

Example:

Paving thickness 10 cm
Min. height setting 18 cm
from the ground

☞ An incorrect height setting can result in the following problems during paving:

- Auger too high:
  Too much material in front of the screed; material overflow. When operating with larger working widths, demixing and traction problems may occur.
- Auger too low:
  Not enough material that can be precompacted by the auger. Irregularities resulting from this cannot be completely compensated by the screed (wavy surface).
  In addition, increased auger segment wear occurs.

https://truckmanualshub.com/

2.2 Mechanical adjustment with ratchet (○)

- Set the ratchet direction lever (1) to the clockwise or anti-clockwise direction. Turning anti-clockwise lowers the auger, turning clockwise lifts the auger.
- Set the desired height by alternatingly adjusting the right-hand and the left-hand side.
- The current height can be read at the scale (2).

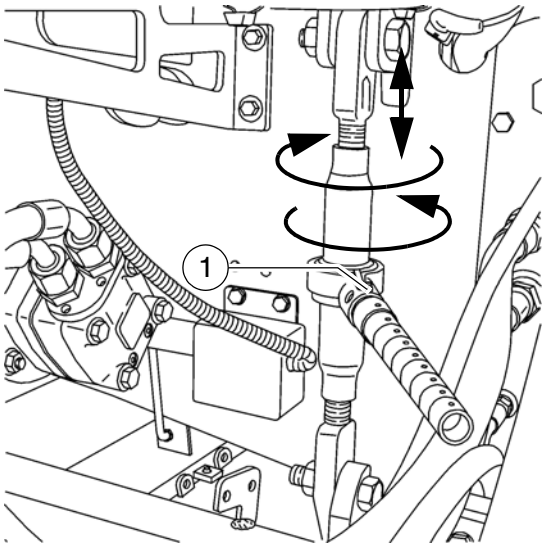

2.3 Hydraulic adjustment (○)

- Determine the currently set height of the auger crossbeam - left and right on the scale (2).

⚠ Actuate both of the corresponding function buttons on the operating panel evenly to prevent the auger crossbeam from jamming.

- Check whether the heights on the left and on the right are identical.

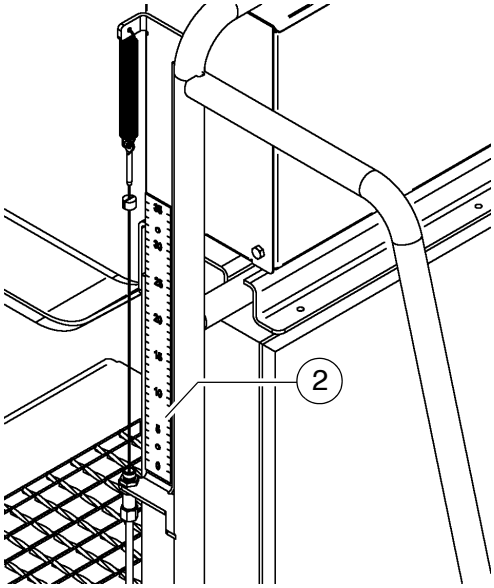

https://truckmanualshub.com/

2.4 Height adjustment for large working widths / with brace

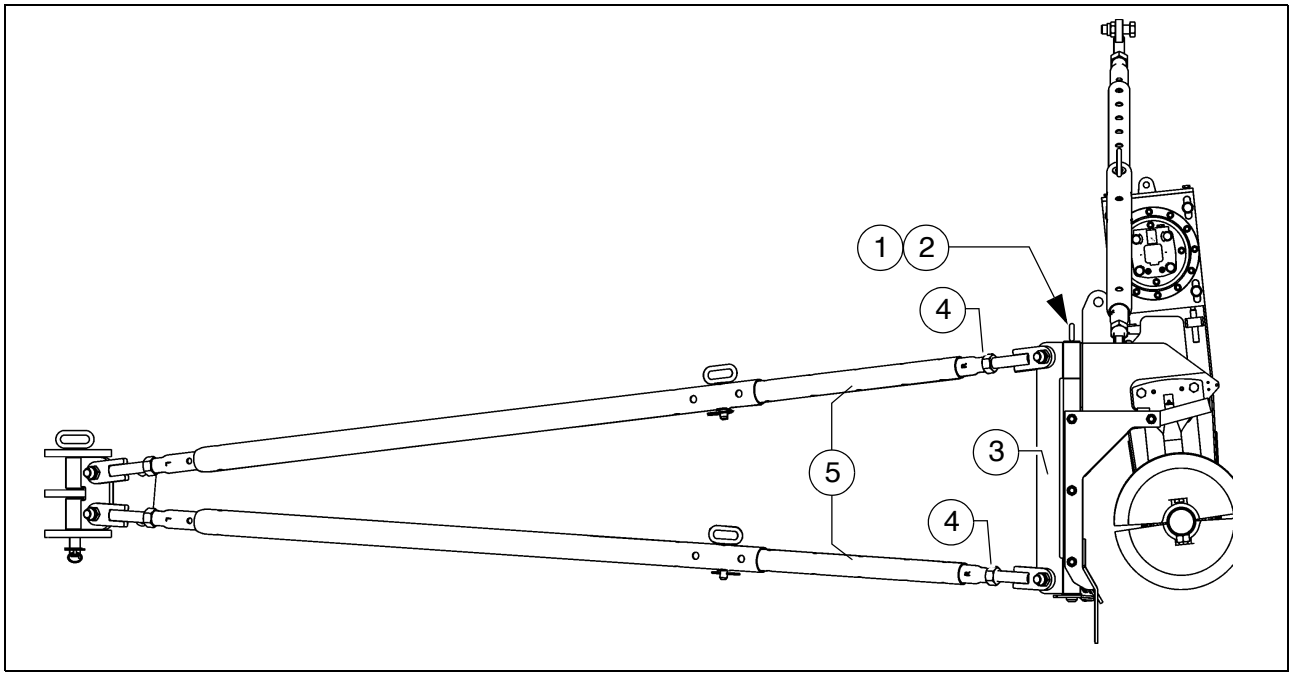

Auger height adjustment for large working widths can be carried out with a hinged brace:

⚠ Only adjust the height of the auger with the slewing bracket retaining pins removed!

- Remove the slewing bracket (3) split pin (1) and retaining pin (2) on both sides of the vehicle.
- Push the slewing brackets with braces from the attaching point on the material shaft.
- Carry out height adjustment.
- Push the slewing brackets with braces onto the attaching point on the material shaft.
- Install the split pin (1) and retaining pin (2) again.

☞ If the retaining pins (2) cannot be inserted in the new position, the braces must be extended or shortened by rotating the adjustment rods until a continuous bore enables the retaining pin (2) to be inserted.

- Loosen lock nuts (4).

☞ The adjustment rods (5) are each equipped with a bore. A suitable drift can be used to adjust the length of the adjustment rod here.

https://truckmanualshub.com/

- Extend or shorten the braces by rotating the adjustment rods (5) until the retaining pins can be inserted.
- Retighten the lock nuts (4).
- Install the split pin (1) and retaining pin (2).

⚠ Each time the height is adjusted, the auger must be realigned via the braces!

☞ See section "Aligning the auger"!

⚠ In the case of large working widths with double braces, the procedure must be carried out on both pairs of braces (6) / (7)!

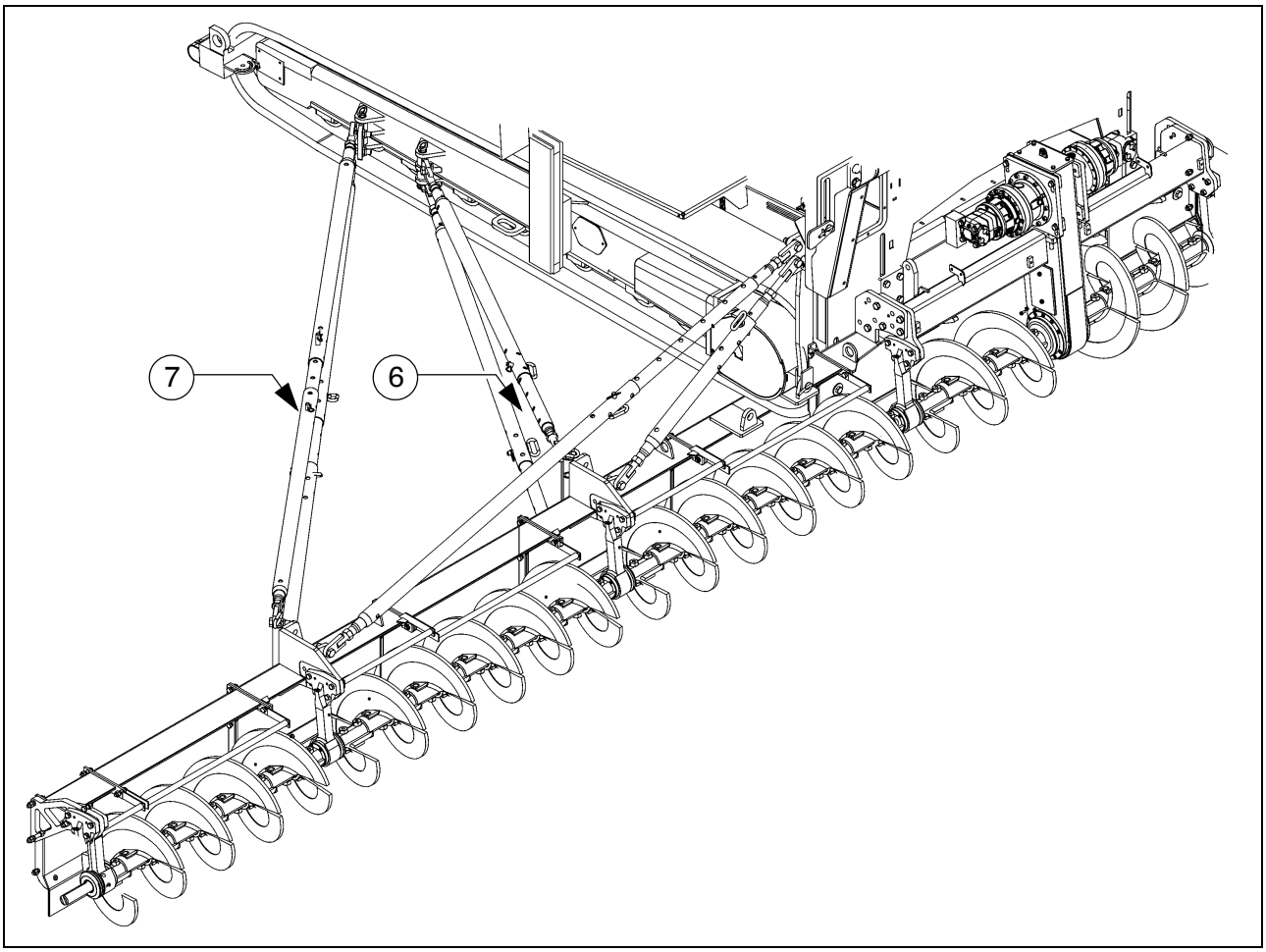

https://truckmanualshub.com/

3 Auger extension

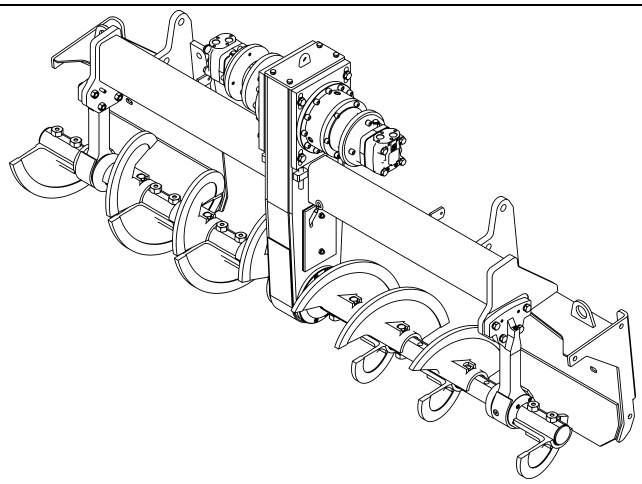

Auger_DEM.bmp

Depending on the type of screed, the most diversified working widths can be reached.

☞ Auger and screed extension must match.
Refer to the appropriate chapter "Set-up and modification" in the Operating instructions for the screed:
– screed extension chart

To attain the desired working width, the respective screed extensions, side plates, augers, tunnel plates or cut-off shoes must be mounted.

For working widths of more than 3.00 m, the auger should be fitted with extension parts on both sides to improve material distribution and to reduce the wear.

STOP The diesel engine must be switched off whenever work is performed on the auger. Danger of injuries!

☞ If the operating conditions on the construction site permit an auger extension to be fitted, or render this necessary, always additionally fit the outer auger bearings.
For auger width extensions with an outer auger bearing on the basic unit, fit the shorter auger blade to the bearing. Otherwise, destruction between the auger blade and bearing may occur.

https://truckmanualshub.com/

3.1 Mounting extension parts

Mounting the material shaft and auger extension

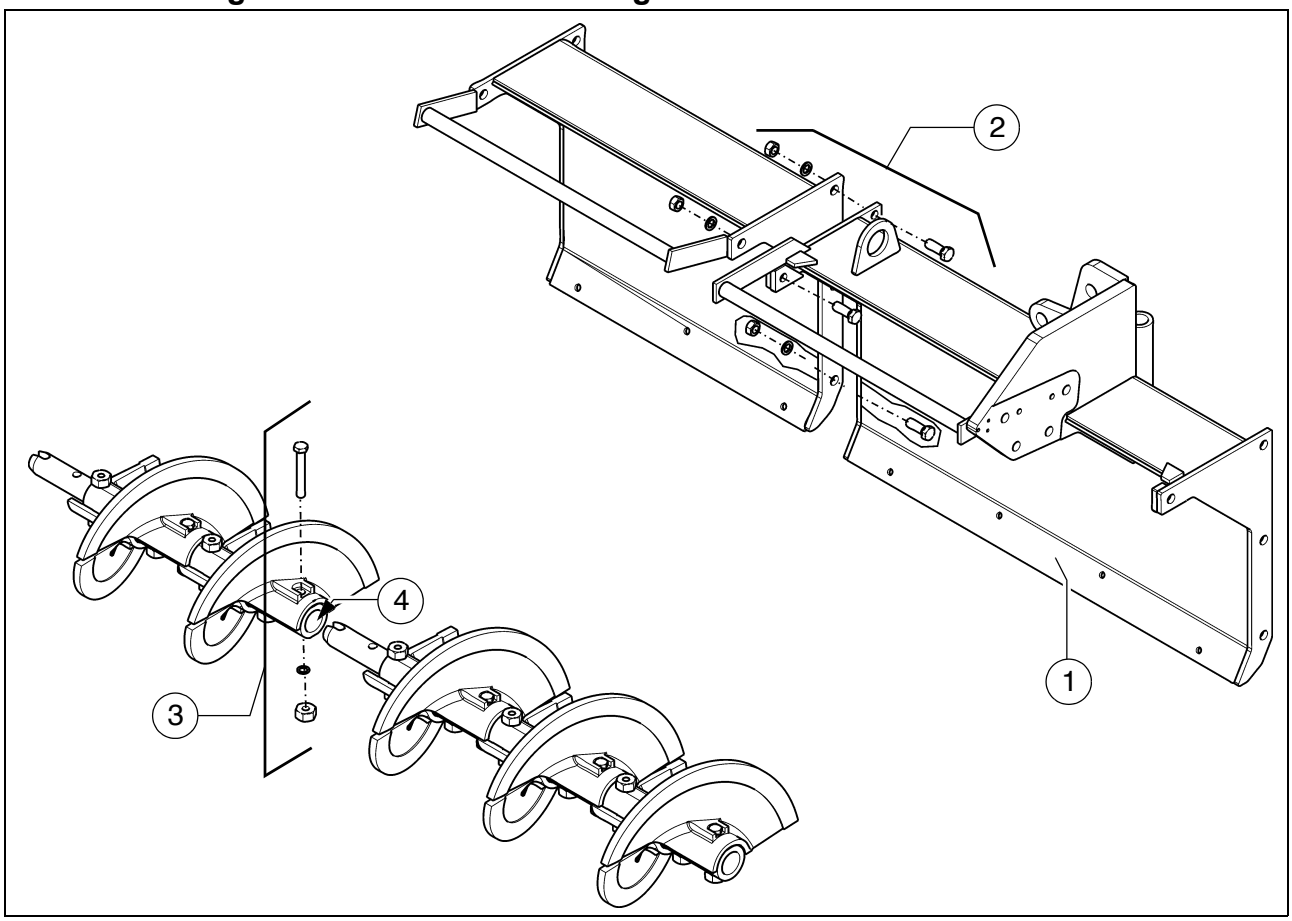

- Secure the additional material shaft (1) to the basic unit or the adjacent material shaft with the relevant assembly parts (2) (bolts, washers, nuts).
- Dismantle the assembly parts (3) of the adjacent auger blade, remove plug (4).
- Insert the auger shaft extension into the auger shaft.
- Reinstall the previously removed assembly parts (3) and simultaneously tighten the auger shaft bolts.
- Insert the plug (4) at the end of the auger.

☞ Depending on the operating width, the outer auger bearing and/or auger end bearing must be installed:

https://truckmanualshub.com/

Mounting the outer auger bearing

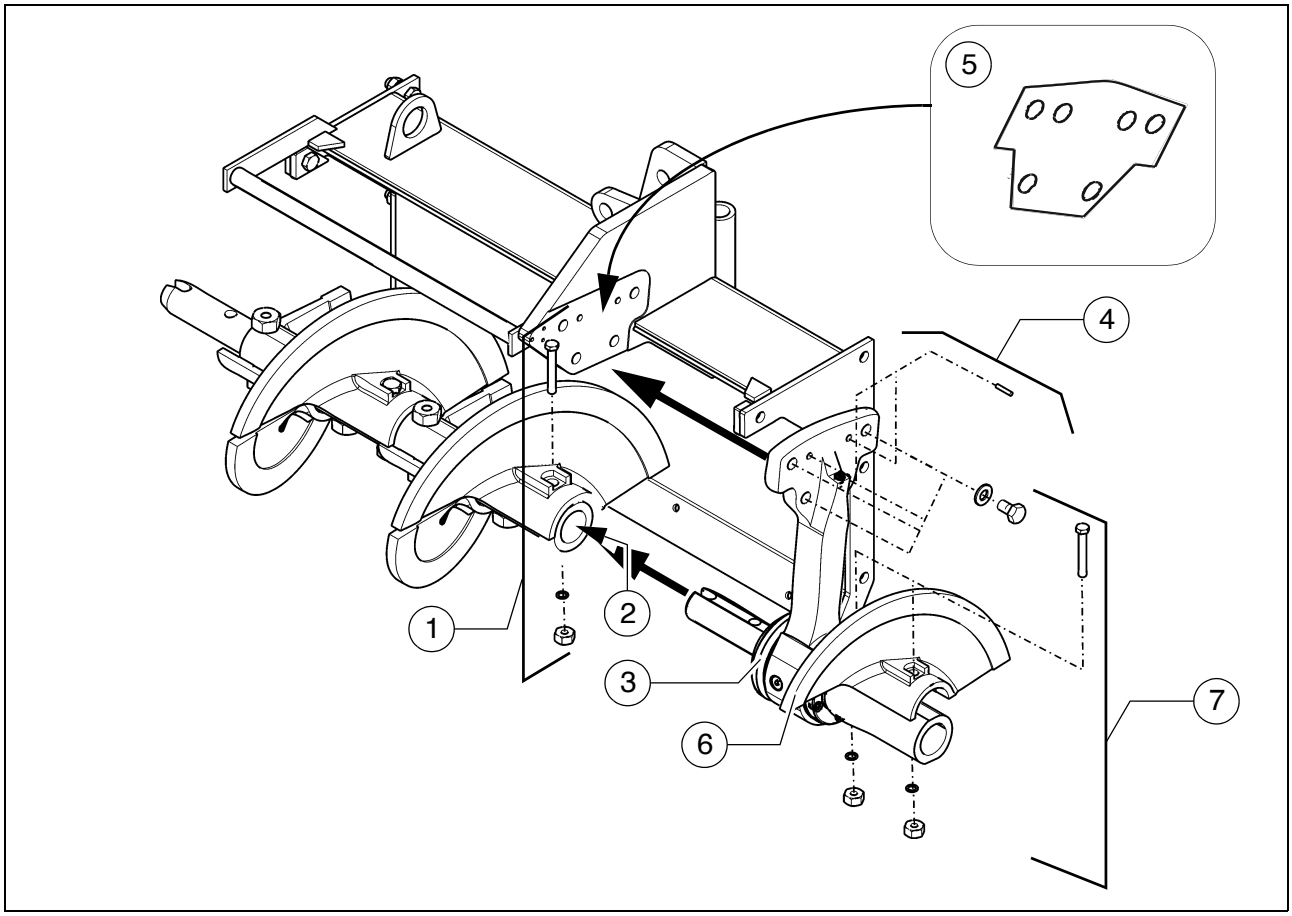

- Dismantle the assembly parts (1) of the adjacent auger blade, remove plug (2).
- Insert the outer auger bearing (3) into the auger extension.
- Secure the outer auger bearing to the brace shaft with the relevant assembly parts (4) (bolts, washers, pins).

☞ If necessary, insert fitted plates (5)!

- Reinstall the previously removed assembly parts (1) and simultaneously tighten the auger shaft and bearing shaft bolts.
- Mount the auger half (5) on the outer side of the bearing with the relevant assembly parts (6) (bolts, washers, nuts).
- Insert the plug (2) at the end of the auger.

https://truckmanualshub.com/

Mounting the auger end bearing

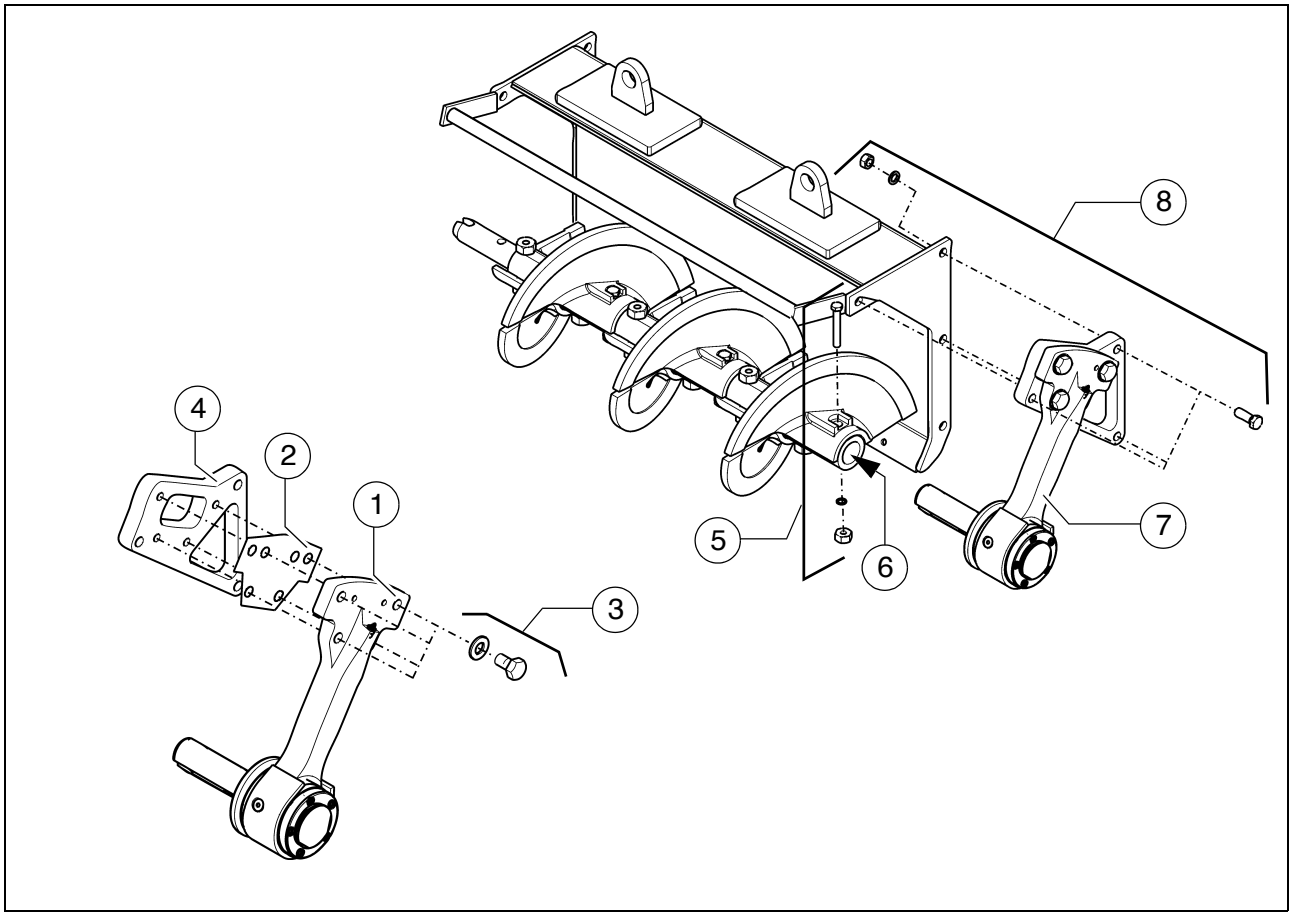

- The auger end bearing must first be pre-assembled:
  - Mount the auger end bearing (1) together with the fitted plate (2) on the intermediate plate (4) with the relevant assembly parts (3) (bolt, washer).
- Dismantle the assembly parts (5) of the adjacent auger blade, remove plug (6).
- Insert the auger end bearing (7) into the auger extension.
- Secure the auger end bearing to the material shaft with the relevant assembly parts (8) (bolts, washers, nuts).
- Reinstall the previously removed assembly parts (5) of the auger blade and simultaneously tighten the auger shaft and bearing shaft bolts.
- Insert the plug (6) at the end of the auger.

https://truckmanualshub.com/

3.2 Auger extension chart

Symbol		Meaning
	- (160L)	- Auger blade 160 mm left
	- (160R)	- Auger blade 160 mm right
	- (320L)	- Auger extension part 320 mm left
	- (320R)	- Auger extension part 320 mm right
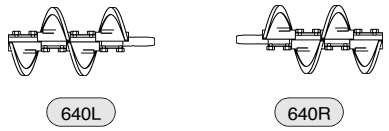	- (640L)	- Auger extension part 640 mm left
	- (640R)	- Auger extension part 640 mm right
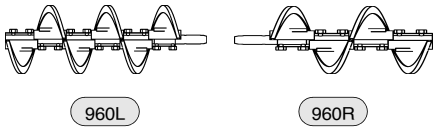	- (960L)	- Auger extension part 960 mm left
	- (960R)	- Auger extension part 960 mm right
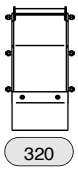	- (320)	- Material shaft 320 mm
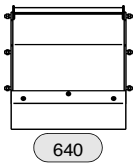	- (640)	- Material shaft 640 mm
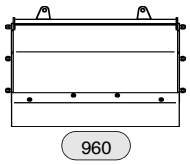	- (960)	- Material shaft 960 mm
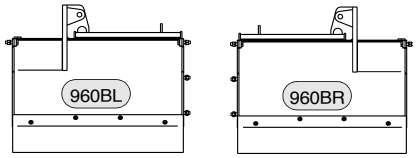	- (960BL)	- Material shaft 960 mm with brace left
	- (960BR)	- Material shaft 960 mm with brace right

https://truckmanualshub.com/

Symbol		Meaning
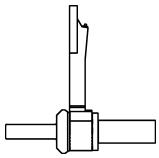		Outer auger bearing
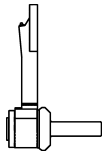		Auger end bearing

https://truckmanualshub.com/

Auger upgrading, working width 3.14 m

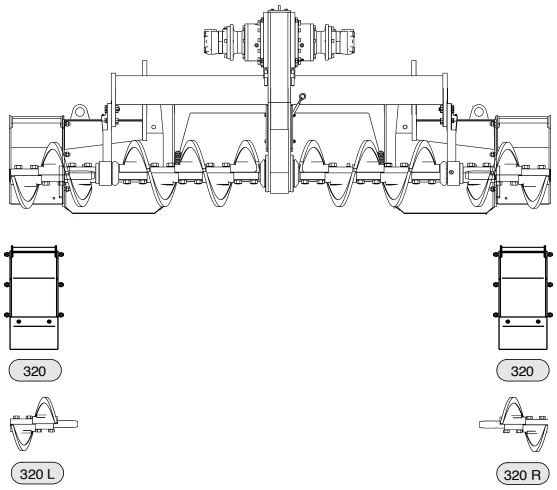

Auger upgrading, working width 3.78 m

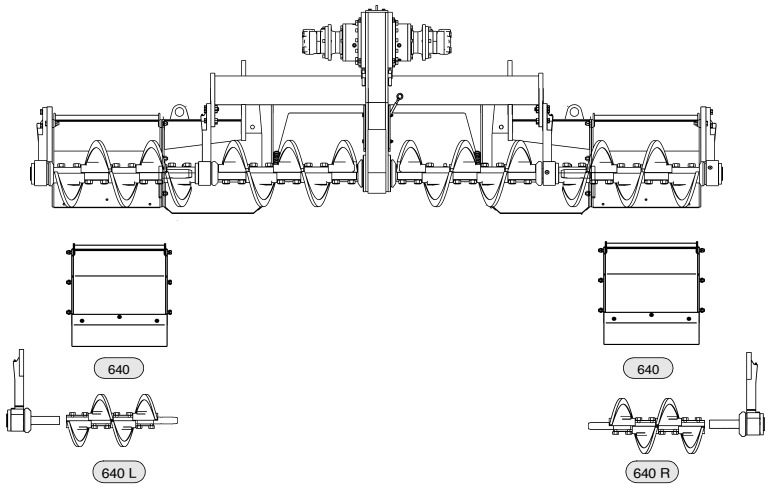

Auger upgrading, working width 4.42 m

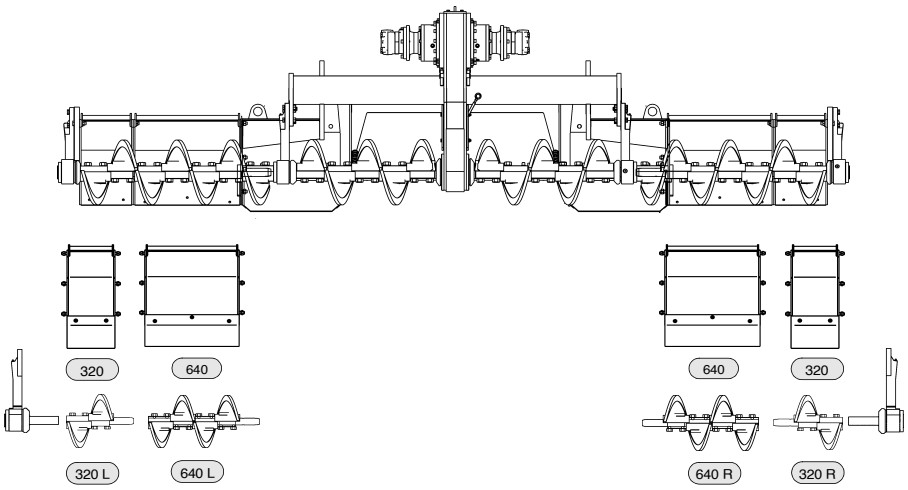

https://truckmanualshub.com/

Auger upgrading, working width 5.06 m

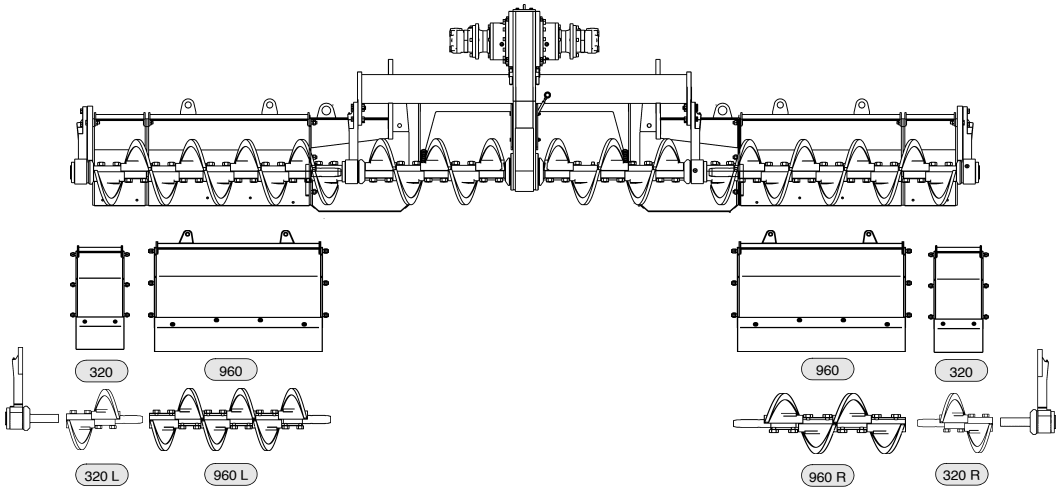

Auger upgrading, working width 5.70 m

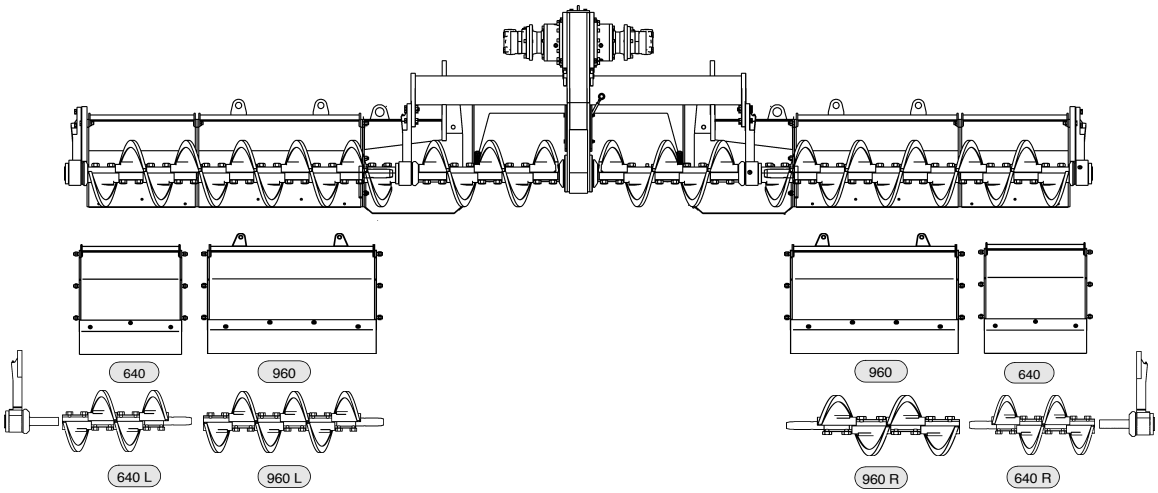

https://truckmanualshub.com/

Auger upgrading, working width 6.34 m

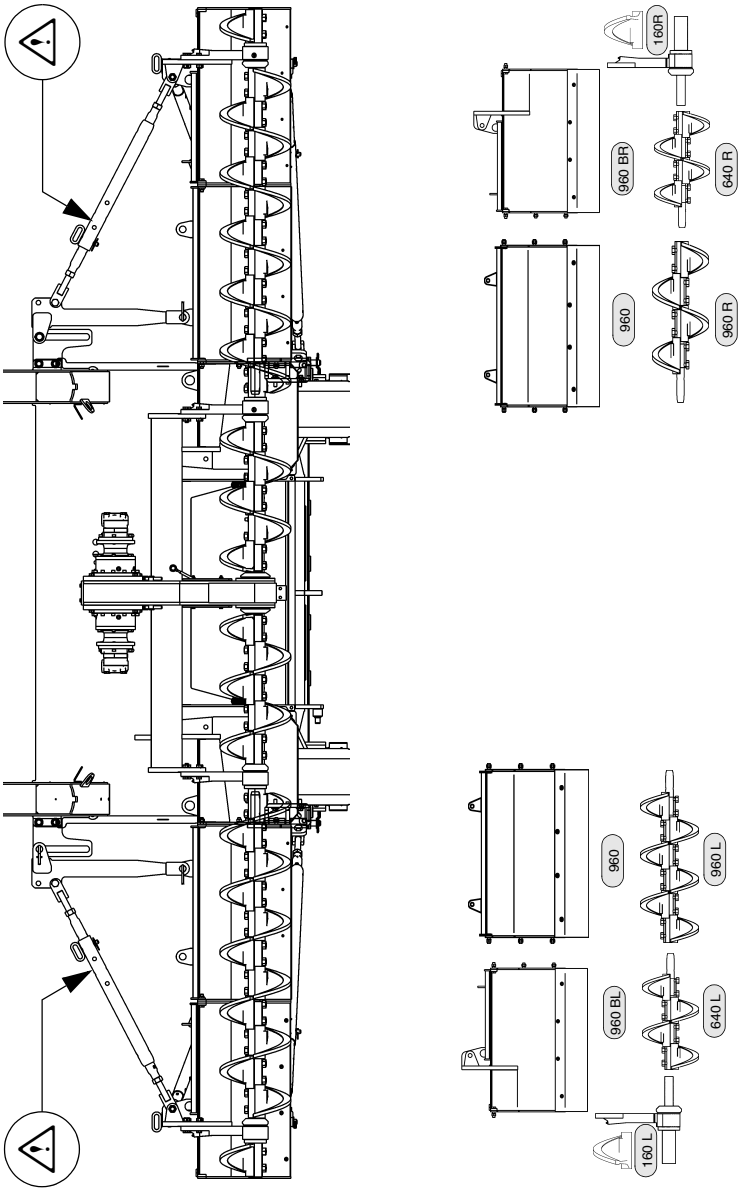

https://truckmanualshub.com/

Auger upgrading, working width 6.98 m

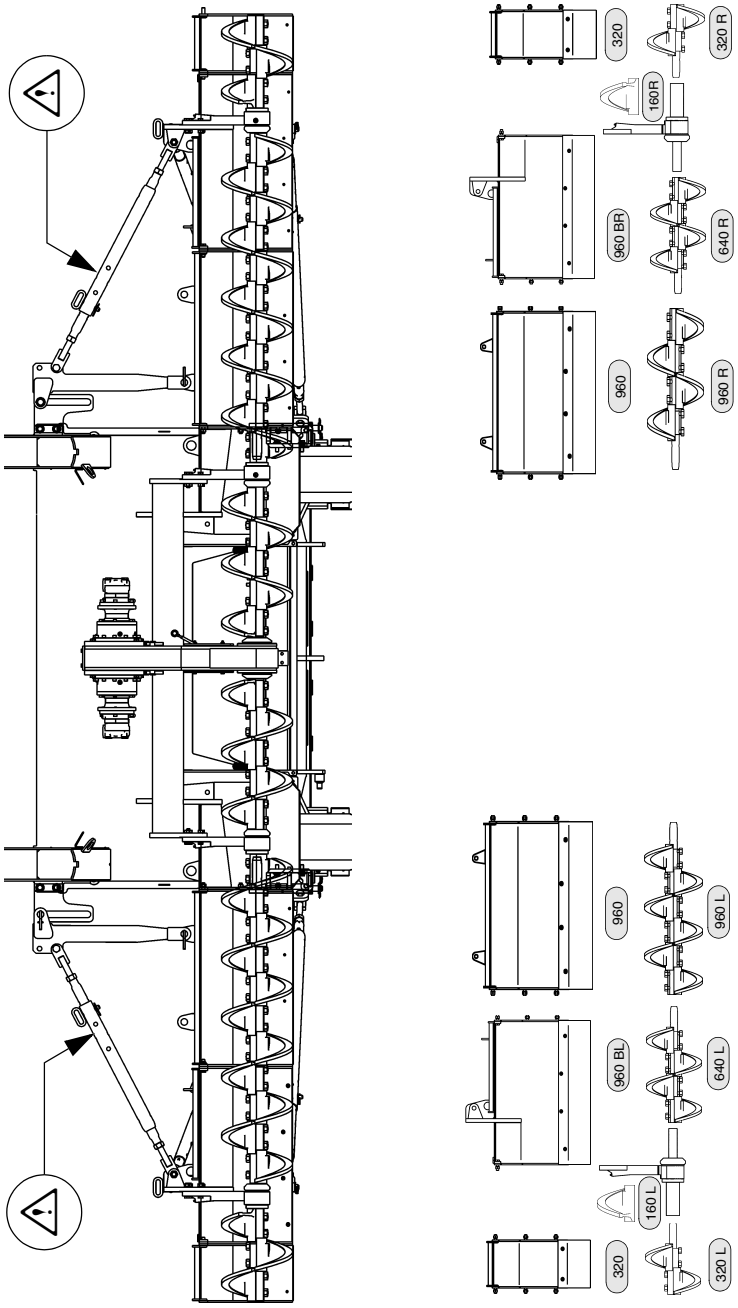

https://truckmanualshub.com/

Auger upgrading, working width 7.62 m

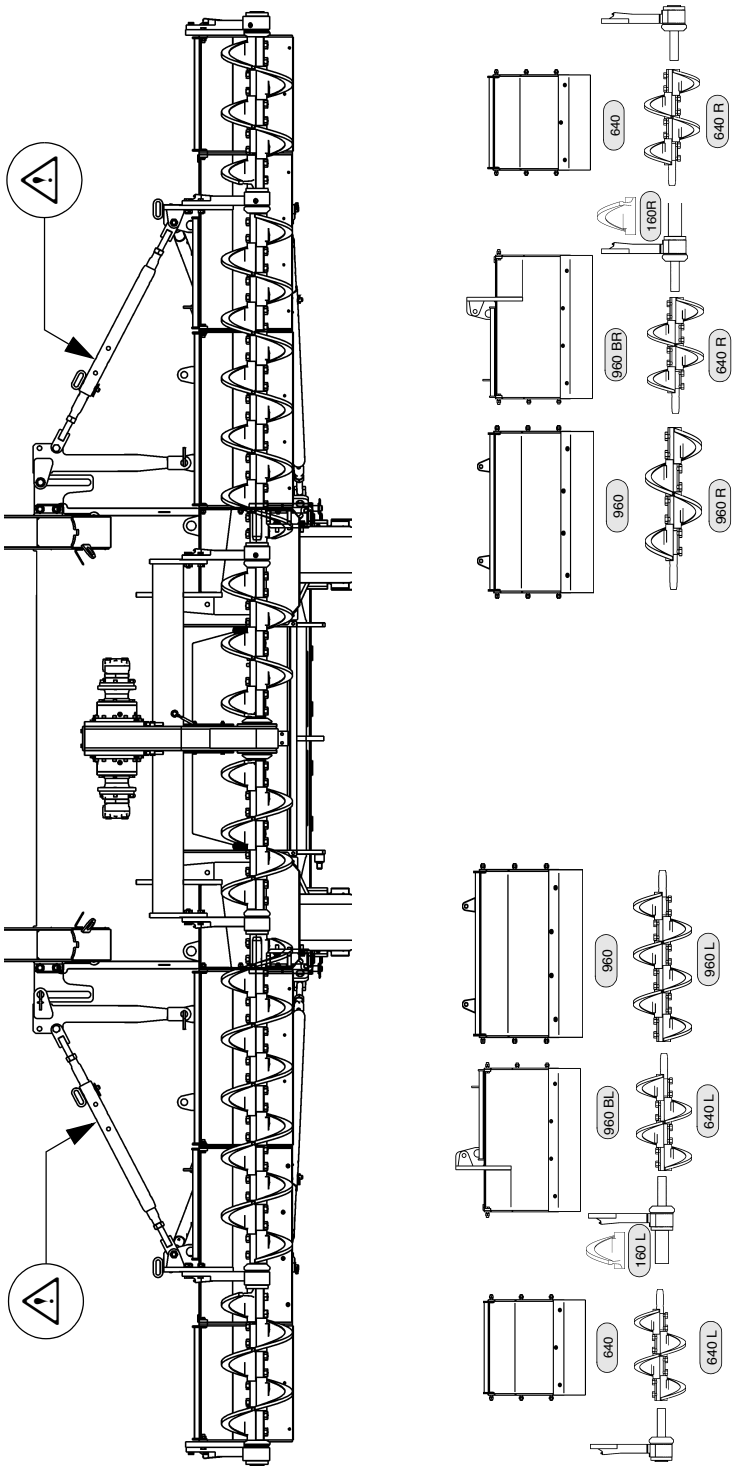

https://truckmanualshub.com/

Auger upgrading, working width 8.26 m

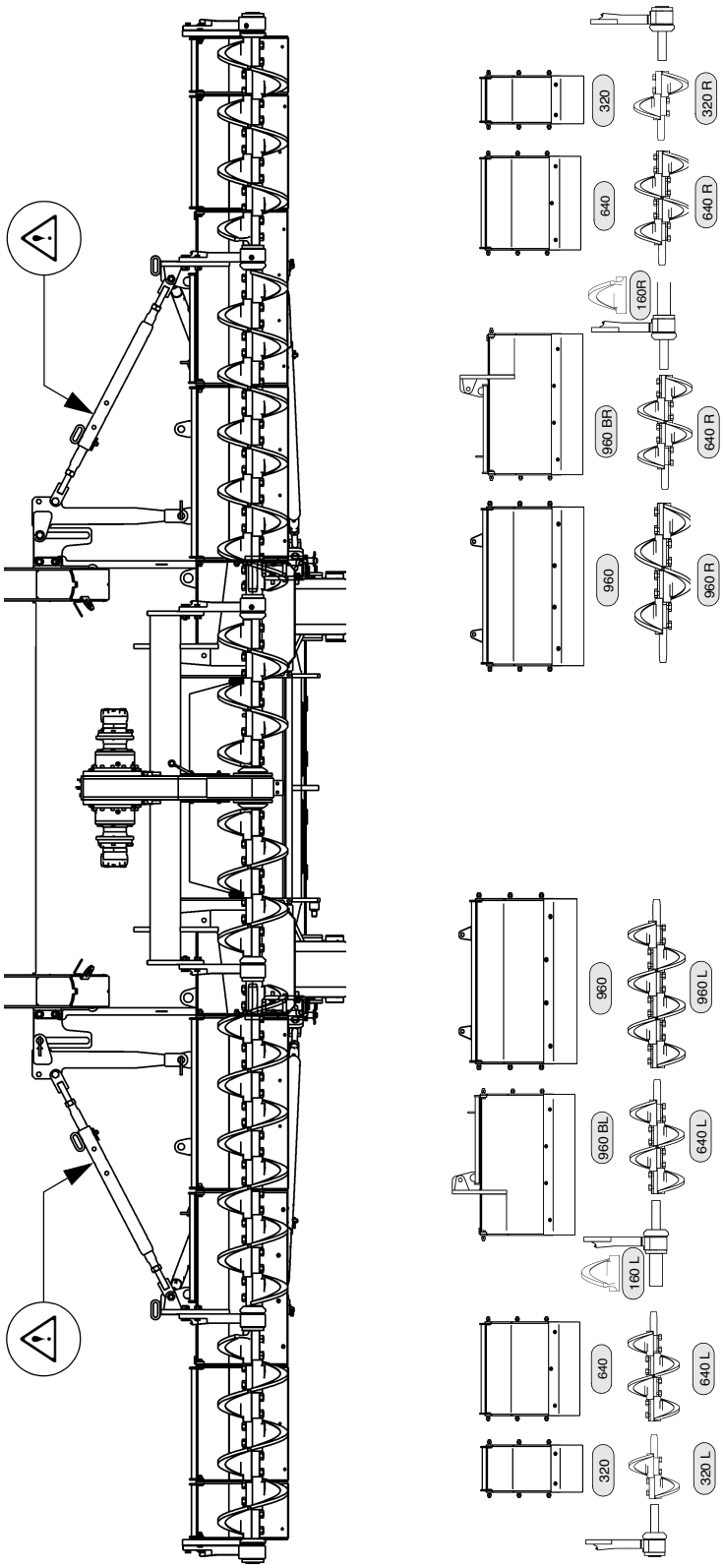

https://truckmanualshub.com/

Auger upgrading, working width 8.90 m

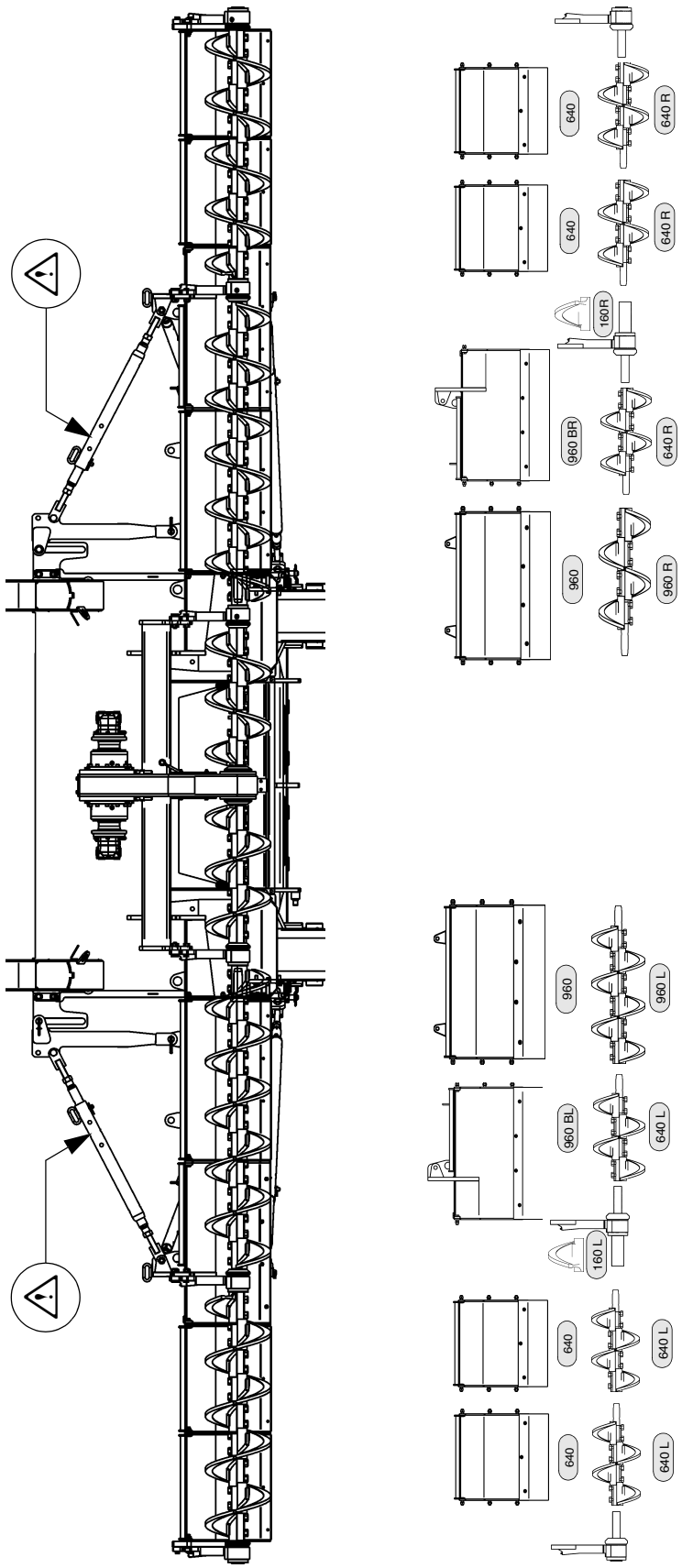

https://truckmanualshub.com/

Auger upgrading, working width 9.54 m

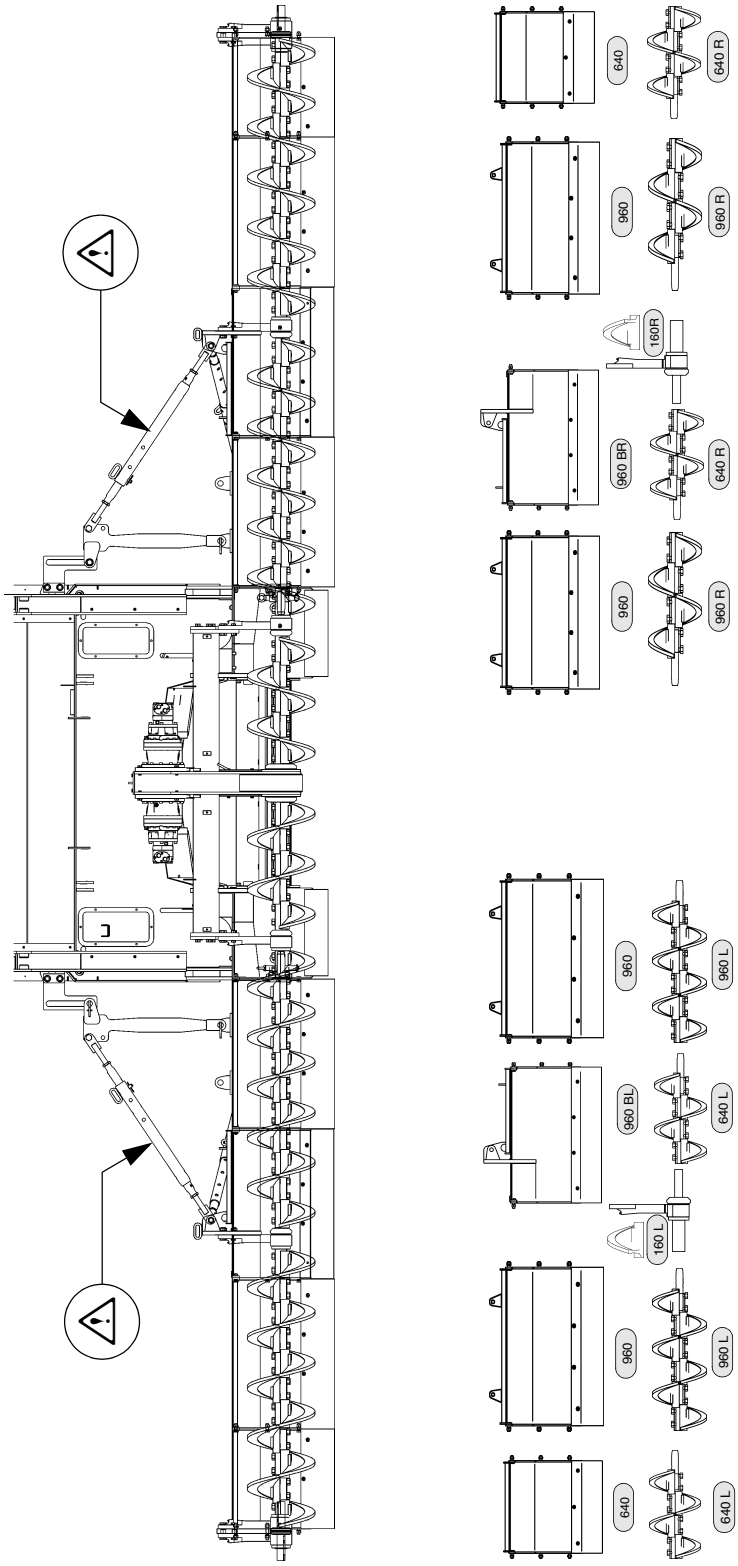

https://truckmanualshub.com/

Auger upgrading, working width 10.18 m

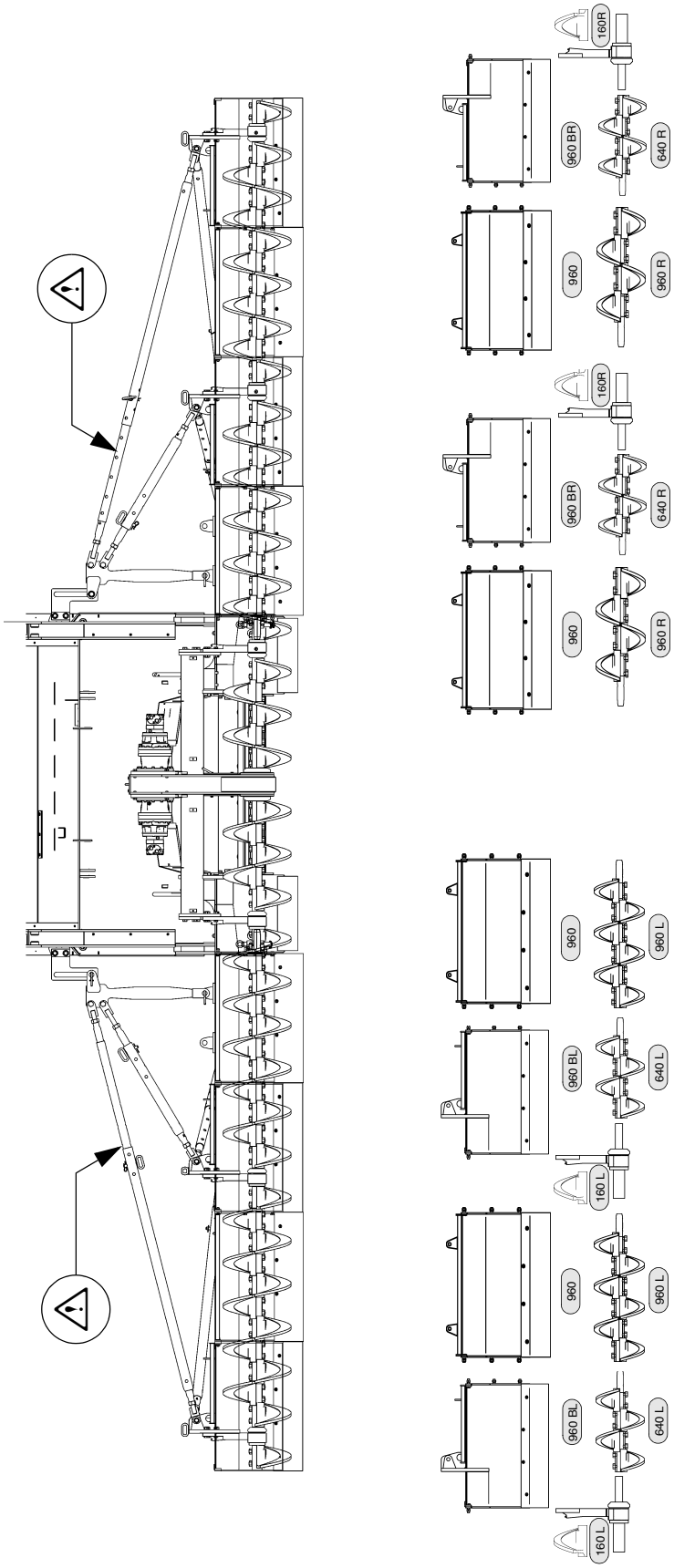

https://truckmanualshub.com/

Auger upgrading, working width 10.82 m

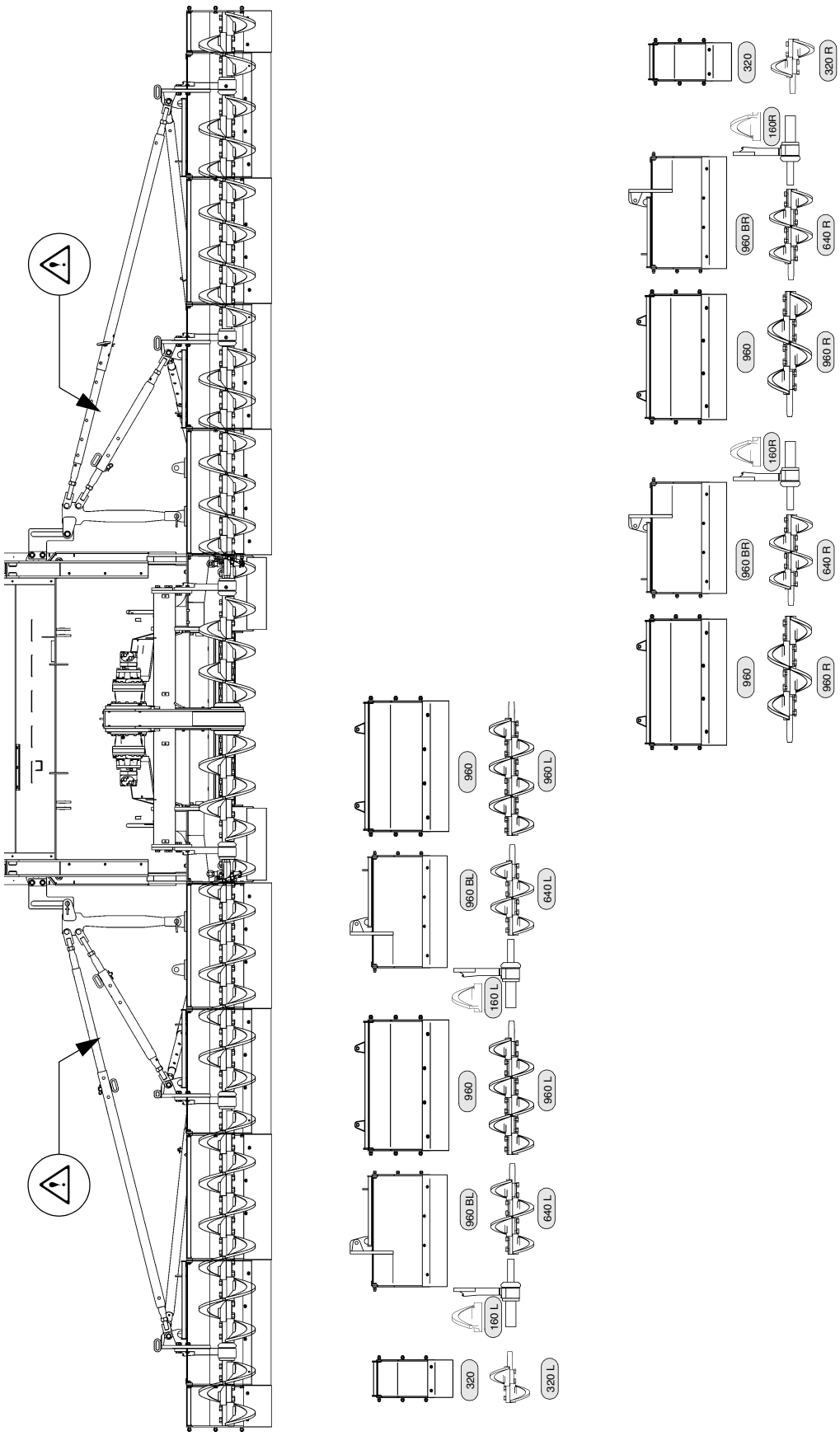

https://truckmanualshub.com/

Auger upgrading, working width 11.46 m

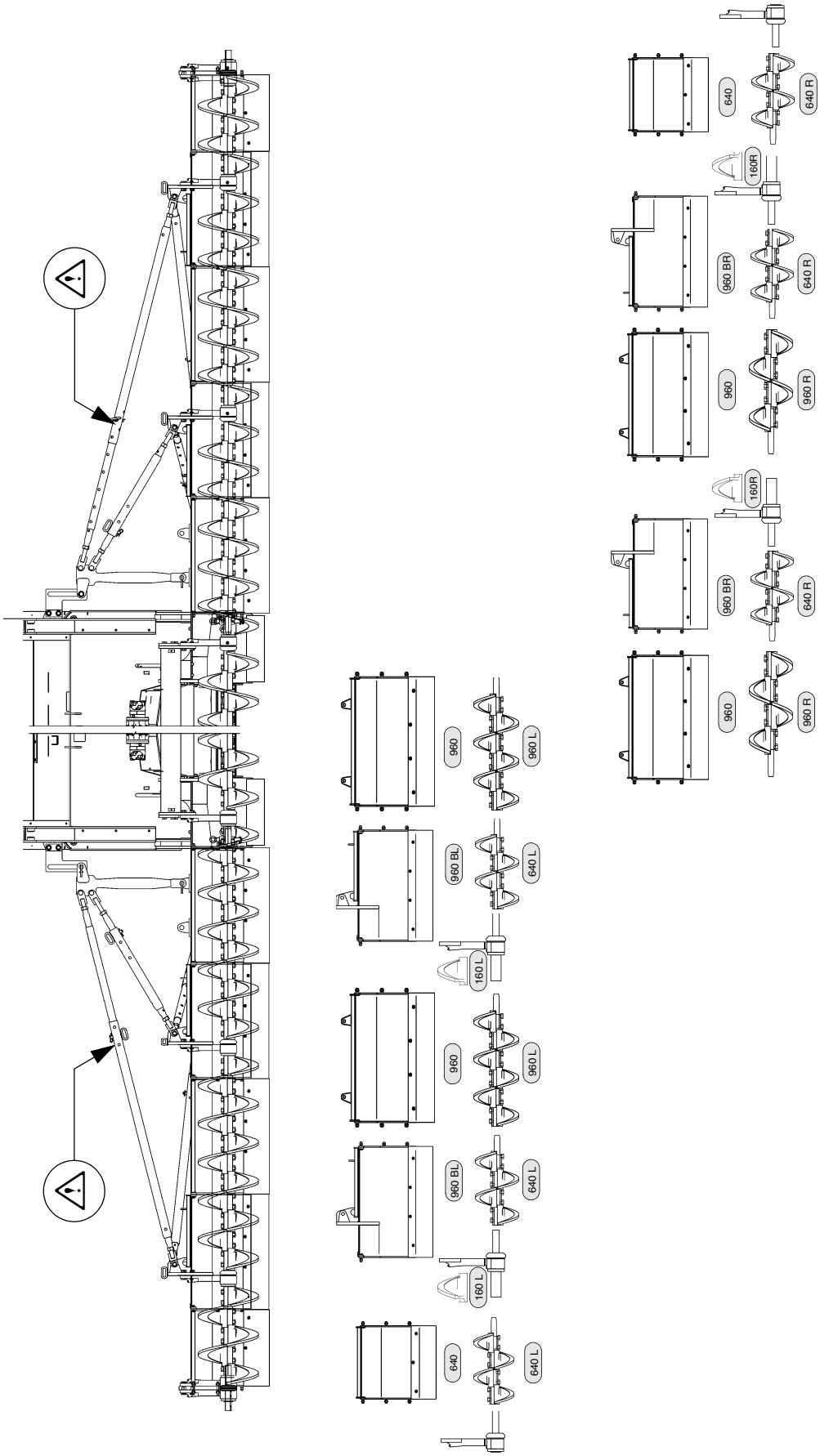

https://truckmanualshub.com/

Auger upgrading, working width 12.10 m

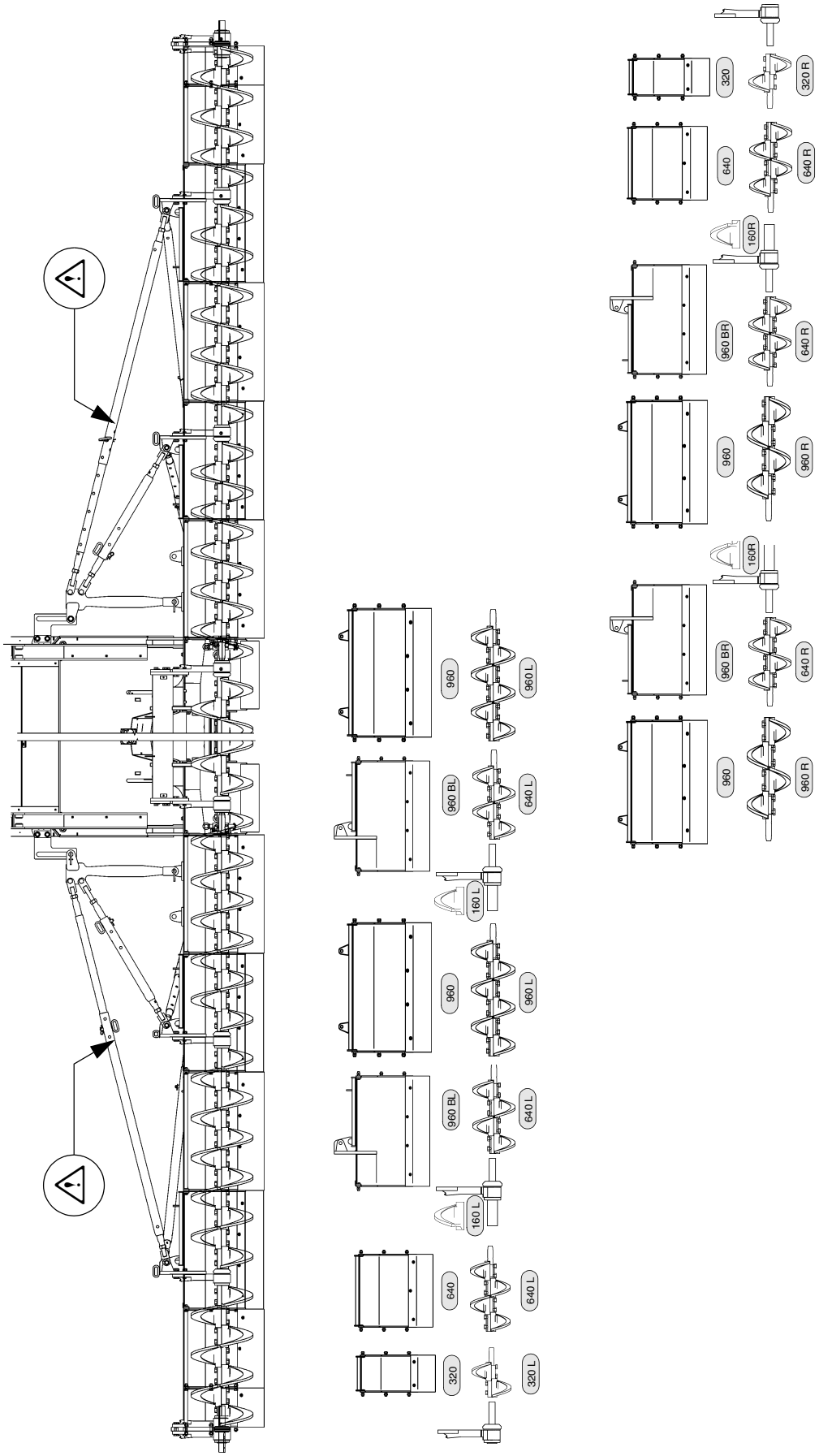

https://truckmanualshub.com/

Auger upgrading, working width 12.74 m

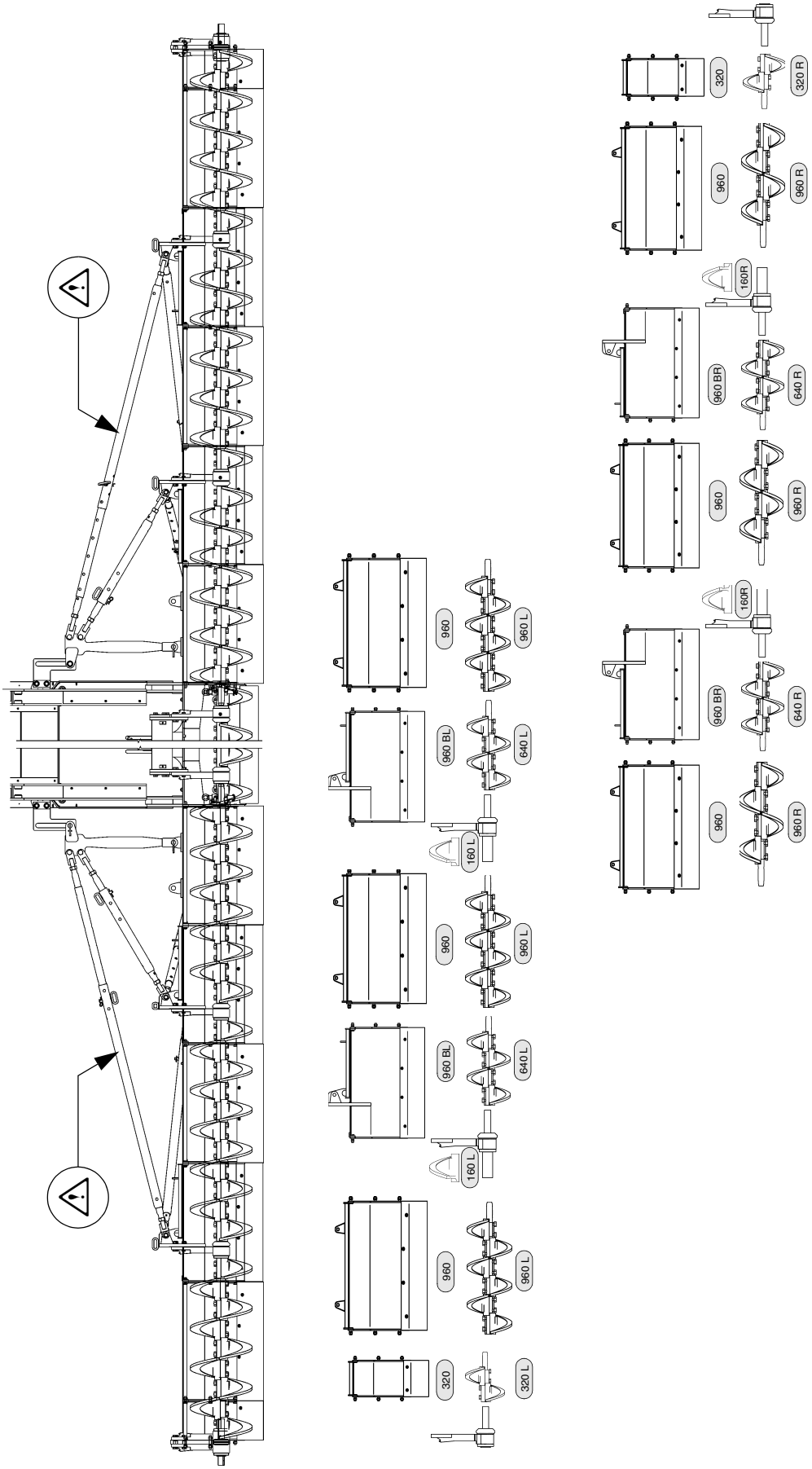

https://truckmanualshub.com/

3.3 Mounting the auger brace

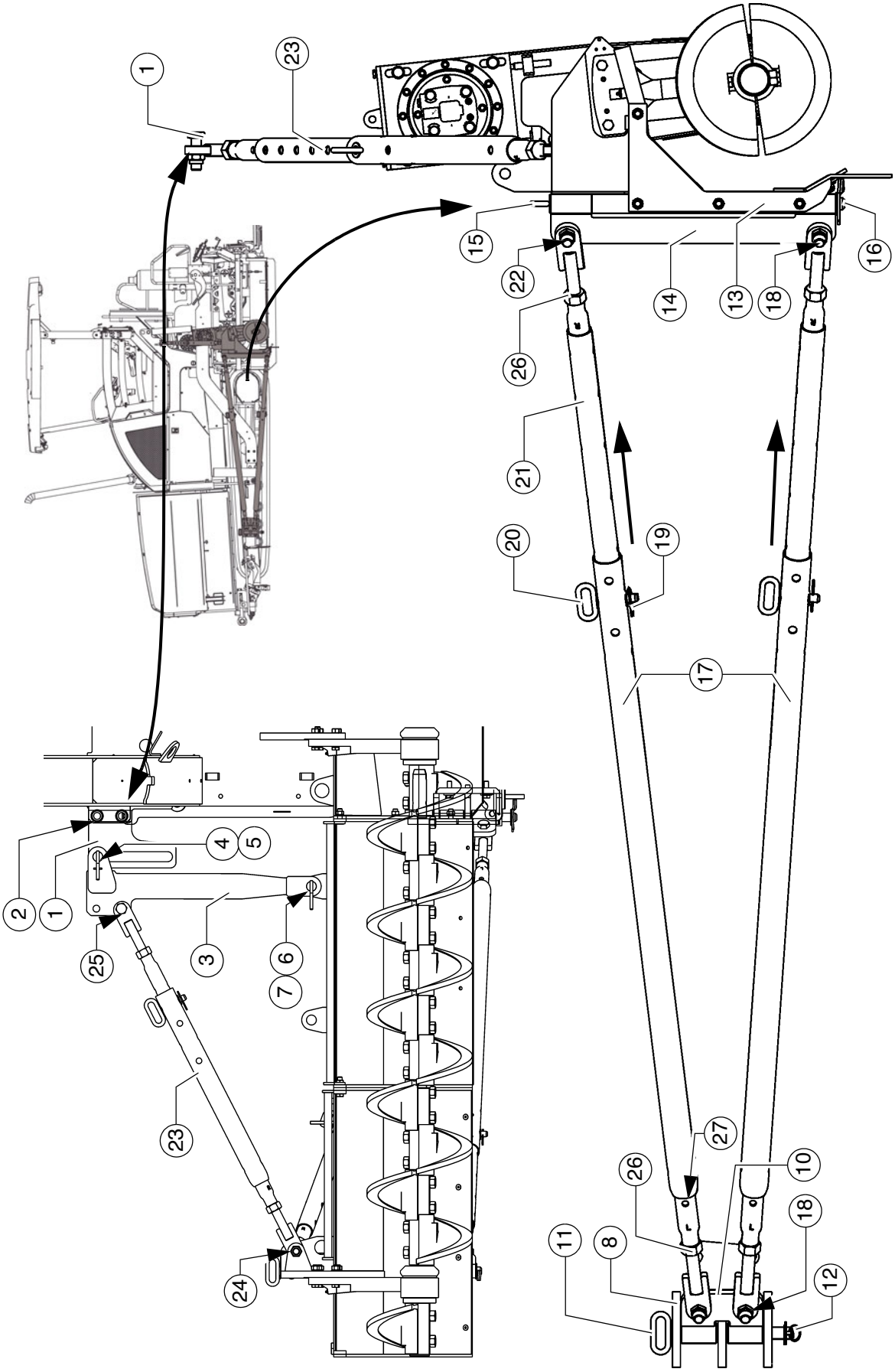

https://truckmanualshub.com/

☞ Before mounting the auger brace, the required auger height should already have been set on the basic auger!
Note the section "Height adjustment for large operating widths / with brace"!

- Mount the left/right guide plates (1) on the vehicle frame shackles with the relevant assembly parts (2).

☞ The guide plates must be mounted on the front side of the shackles.

- Slide the support shackle (3) over the guide plate and secure in the groove with a pin (4) and split pin (5).
- Slide the lower support shackle (3) over the attaching point of the material shaft and secure with a pin (6) and split pin (7).

☞ The brace bracket (8) is located directly on the drive unit.

☞ The rear brace bracket is used for the first brace set!
For larger working widths, the second brace set is mounted on the front brace bracket.

- Insert the fulcrum bracket (10) into the brace bracket (8) and secure with the retaining pin (11).
- Secure the retaining pins (11) with a split pin (12).

☞ The first brace set must be set in the rear bore. If the operating width necessitates a second brace, the front bore must be used!

- Mount the slewing bracket (14) at the brace shaft (13) with retaining pins (15).
- Secure the retaining pins (15) with a split pin (16).
- Mount the braces (17) on the fulcrum bracket (10) with the assembly parts (18).

☞ The braces must be mounted on the outer side of the fulcrum bracket (10)!

- Remove the spring cotter pin (19) and retaining pin (20), pull out the adjustment rod (21) until the brace can be mounted on the slewing bracket (14) together with the corresponding assembly parts (22).
- Secure the adjustment rod (21) in an appropriate bore with a retaining pin (20) and spring cotter pin (19).

- Mount the vertical brace (23) in the same way.
  - In this case, secure the vertical brace at the outer auger bearing (24) and the lower support bore (25).

☞ At the support (3) mounting point, the brace must be secured at the rear side in each case!

https://truckmanualshub.com/

3.4 Aligning the auger

- Loosen lock nuts (26).

☞ Note the left-hand thread (L) and right-hand thread (R) mark on the brace!

- Extend or shorten the braces (17) by rotating both adjustment rods (21) until all mounted material shafts align with the auger.

☞ The adjustment rod (21) is equipped with a bore (27) on the left and right. A suitable drift can be used to adjust the length of the adjustment rod here. The rotational direction for extending or shortening the adjustment rod is determined by the left-hand thread (L) or right-hand thread (R).

☞ A cord, which aligns with the screed or the rear wall of the vehicle, can be tensioned e.g. to provide assistance during alignment!

- Extend the upper and lower adjustment rods until the material shafts are aligned vertically.

- Retighten the lock nuts (26).
- Align the auger height in the same way by adjusting the vertical brace (23).

☞ Check the horizontal alignment with a spirit level!

https://truckmanualshub.com/

⚠ In the case of large working widths with double braces, the procedure must be carried out on both lower pairs of braces (30) / (31) and both upper pairs of braces (32) / (33)!

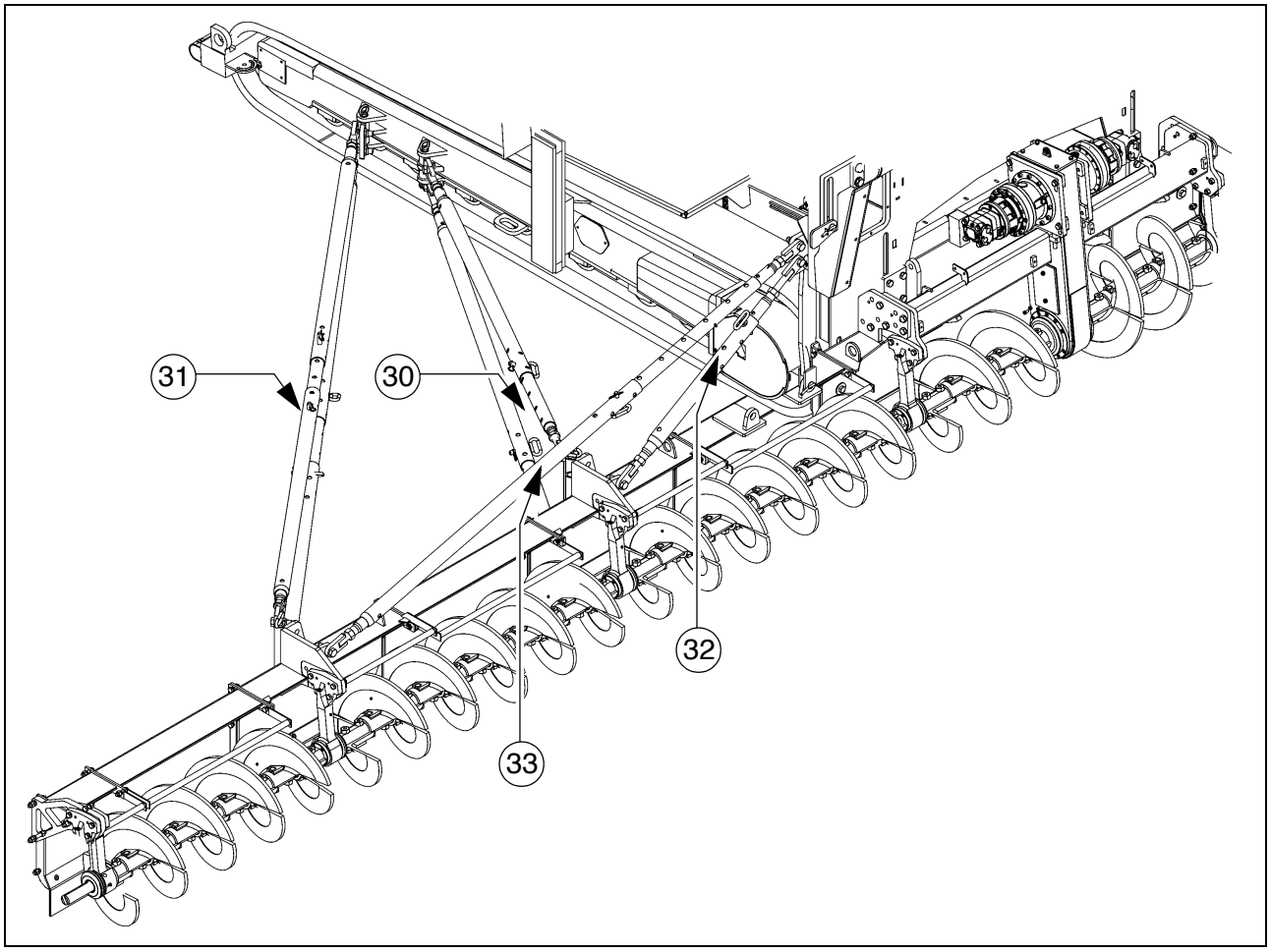

https://truckmanualshub.com/

3.5 Material shaft, hinged

To close the gap between auger box and side board of the screen, hinged material shafts can be fitted to both sides of the auger.

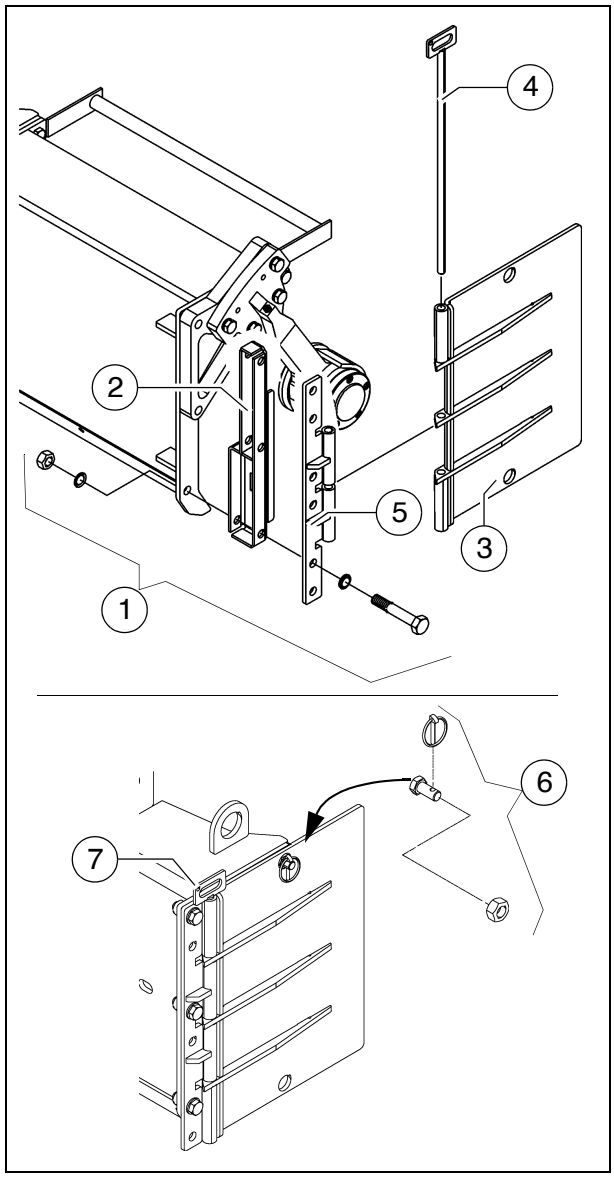

☞ The hinged material shafts swivel up due to the material pressure which is exerted and swivel in due to screed retraction.

- Mount the left/right material shafts on the auger box with the relevant assembly parts (1).

☞ If a terminal bearing is mounted for the existing auger width, the adapter plate (2) also has to be fitted.

- Fit the plate (3) to the hinge (5) using the hinge rod (4).

☞ The hinged material shaft can be secured with the assembly parts (6) in swivelled in position when transporting the machine in its basic width.

☞ The assembly parts (6) can be kept at the hole (7).

https://truckmanualshub.com/

3.6 Hopper scraper

To reduce the gap between hopper and machine frame, the hopper scrapers (1) must be adjusted at both hopper halves.

- Loosen the mounting screws (2).
- Adjust a gap of 6 mm across the whole length of the scraper.
- Retighten the mounting screws (2) properly.

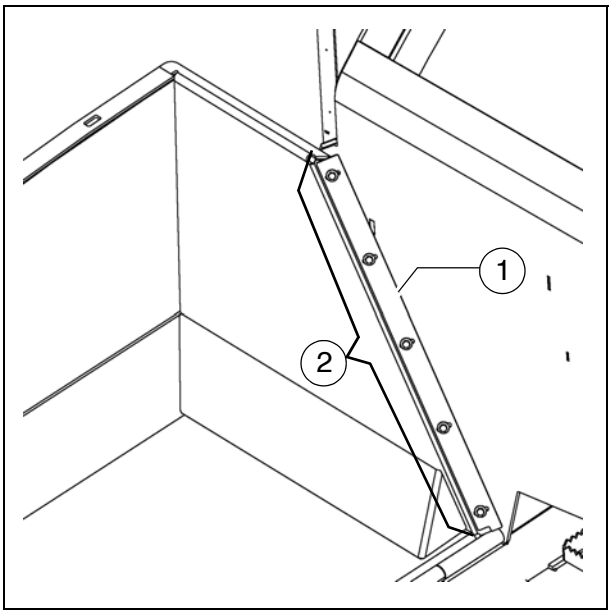

STOP Risk of injury due to sharp-edged parts! Wear suitable safety gloves to protect your hands!

https://truckmanualshub.com/

3.7 Crossbeam guide

To warrant correct guidance of the crossbeams, the guide plates (1) at both sides of the vehicle must be adjusted to the prevailing paving conditions (e.g. positive or negative crowning, etc.).

- Loosen screw (2) and remove screws (3).
- Adjust guide plate to the required size (basic setting 25mm).
- Retighten the mounting screws (2), (3) properly.

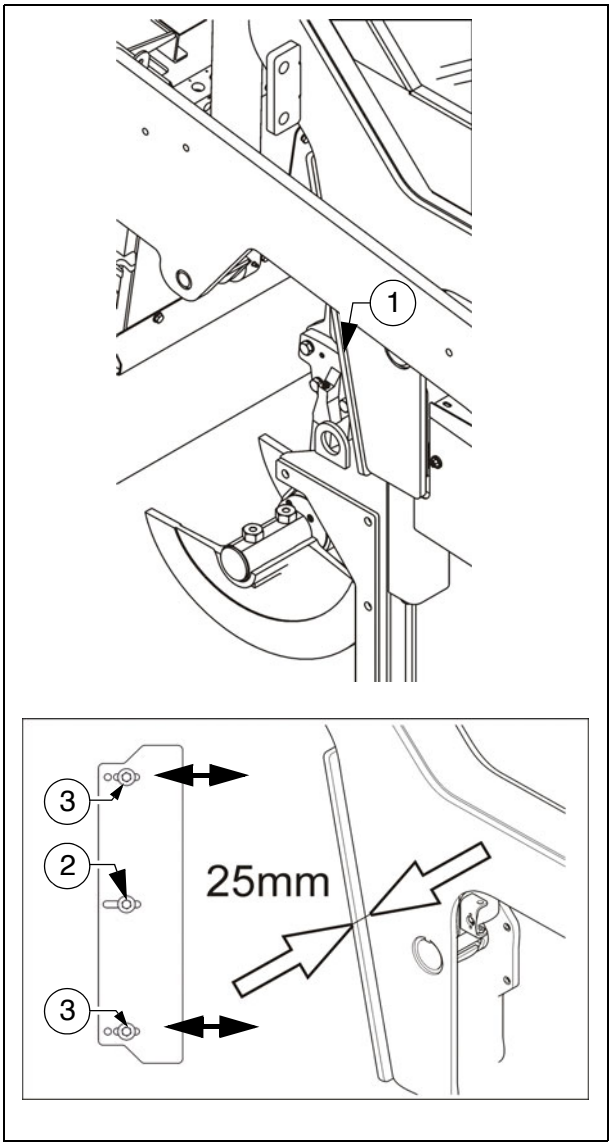

STOP Risk of injury due to sharp-edged parts! Wear suitable safety gloves to protect your hands!

https://truckmanualshub.com/

4 Offsetting the screed

Depending on the paving condition requirements, the crossbeam can be moved backwards or forwards.
This adjustment enlarges the material space between the auger and screed.

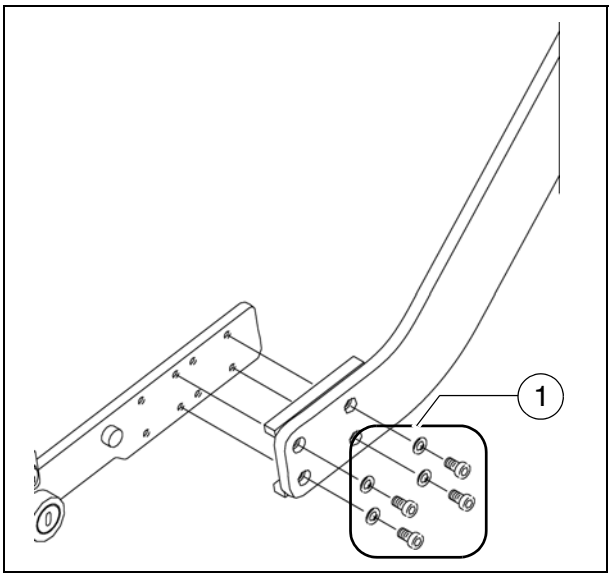

- Loosen the four mounting screws (1).
- Remove the screws and move the vehicle forwards.
- The crossbeam remains in its position on slide rails: now tighten the screws (1) back down.

☞ When paving thin layers, the material can "settle" in front of the screed if the screed is set to the rear position. When paving thick layers, the screed then climbs better.

https://truckmanualshub.com/

5 Levelling

5.1 Slope controller

⚠ During operation, no work may be carried out on the slope control linkage or the slope controller!

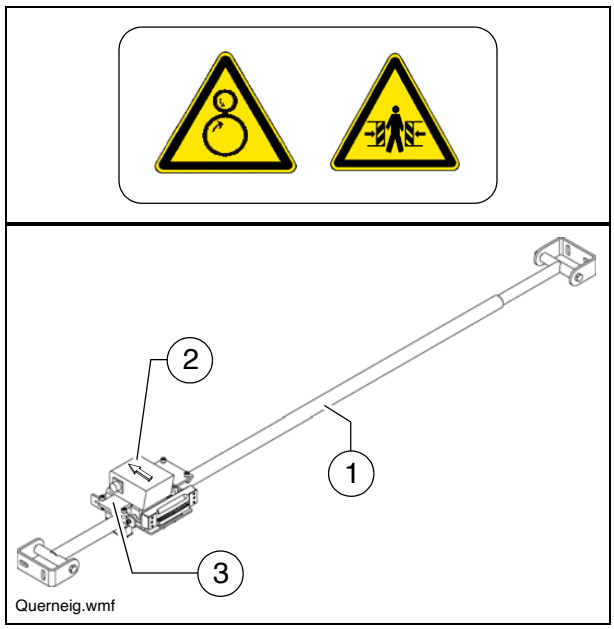

- Mount the slope control linkage (1) in the intended position between the two crossbeams.
- Mount the slope controller (2) on the slope control linkage's retaining plate (3).

☞ Four securing holes are provided for mounting on the sensor's retaining plate.

☞ The digital slope controller must be mounted in such a way that the marking arrow on the housing points in the direction of travel.

☞ The analogue slope controller must be mounted in such a way that the displays for the operator visibly point backwards.

- Connect the left or right connection cable to the intended handset or vehicle socket.

☞ Exhaustive operating instructions can be found in the documentation for the corresponding levelling system.

https://truckmanualshub.com/

5.2 Mounting the sensor arm

- Position the sensor arm mounting (1) on the corresponding journal of the screed side board.
- Tighten the pin (2) so that the sensor arm is just still able to swivel.

☞ The sensor arm can be secured on the side board with the lock (3).

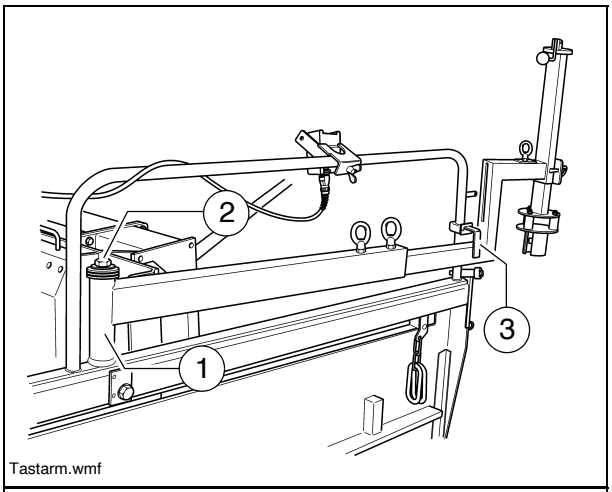

Tastarm.wmf

5.3 Mounting the grade control system

Insert the grade control system into the clamp bracket (1) and secure with the clamping bolt (2) to prevent rotation.

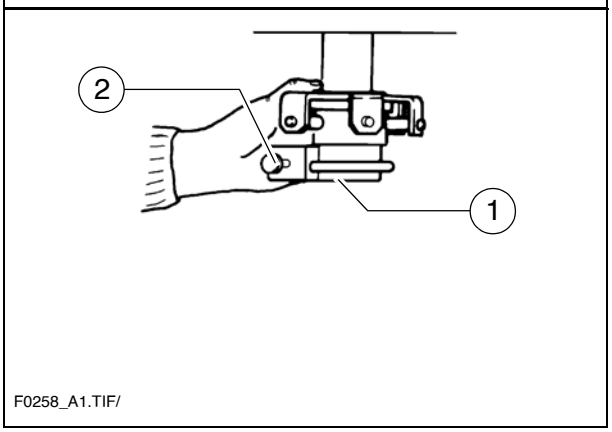

F0258_A1.TIF/

https://truckmanualshub.com/

5.4 Setting up the sensor arm

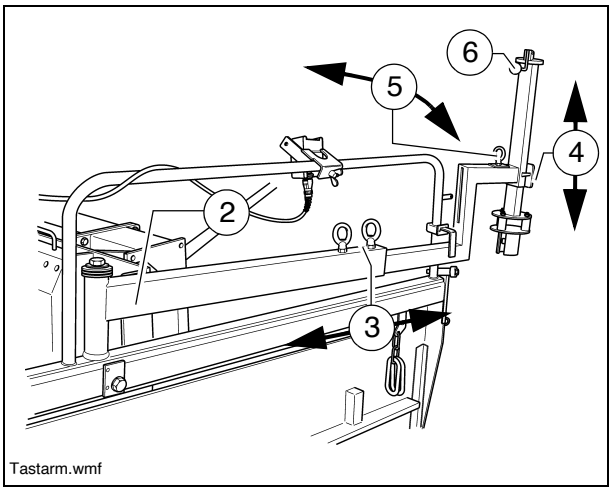

Before starting paving, the sensor arm must be set, with the grade control system, to its reference (cable, kerb, etc.).

☞ Sensing should be carried out in the area of the auger.

- Swivel the sensor arm (2) over the reference.
- Use the following options to adjust the sensor arm precisely:
  - After loosening the clamping bolts (3), the sensor arm length can be set up.
  - The sensing height can be set by loosening the clamping bolts (4).
  - Adjustment of the lateral sensing angle is possible at the lock (5).
  - Height adjustment for analogue grade sensors is carried out by means of a crank (6). To lock it, the crank is inserted into one of the available notches following the adjustment work.

☞ All assembly parts and clamping points must be tightened properly to ensure safe and precise sensor arm operation!

- Connect the left or right grade control system connection cable to the intended handset or vehicle socket.

☞ If the vehicle is to be operated with automatic grade sensing on both sides, the above described adjustment process must be repeated on the second side.

☞ Exhaustive operating instructions can be found in the documentation for the corresponding levelling system.

https://truckmanualshub.com/

5.5 Big ski 9 m, big ski 13 m

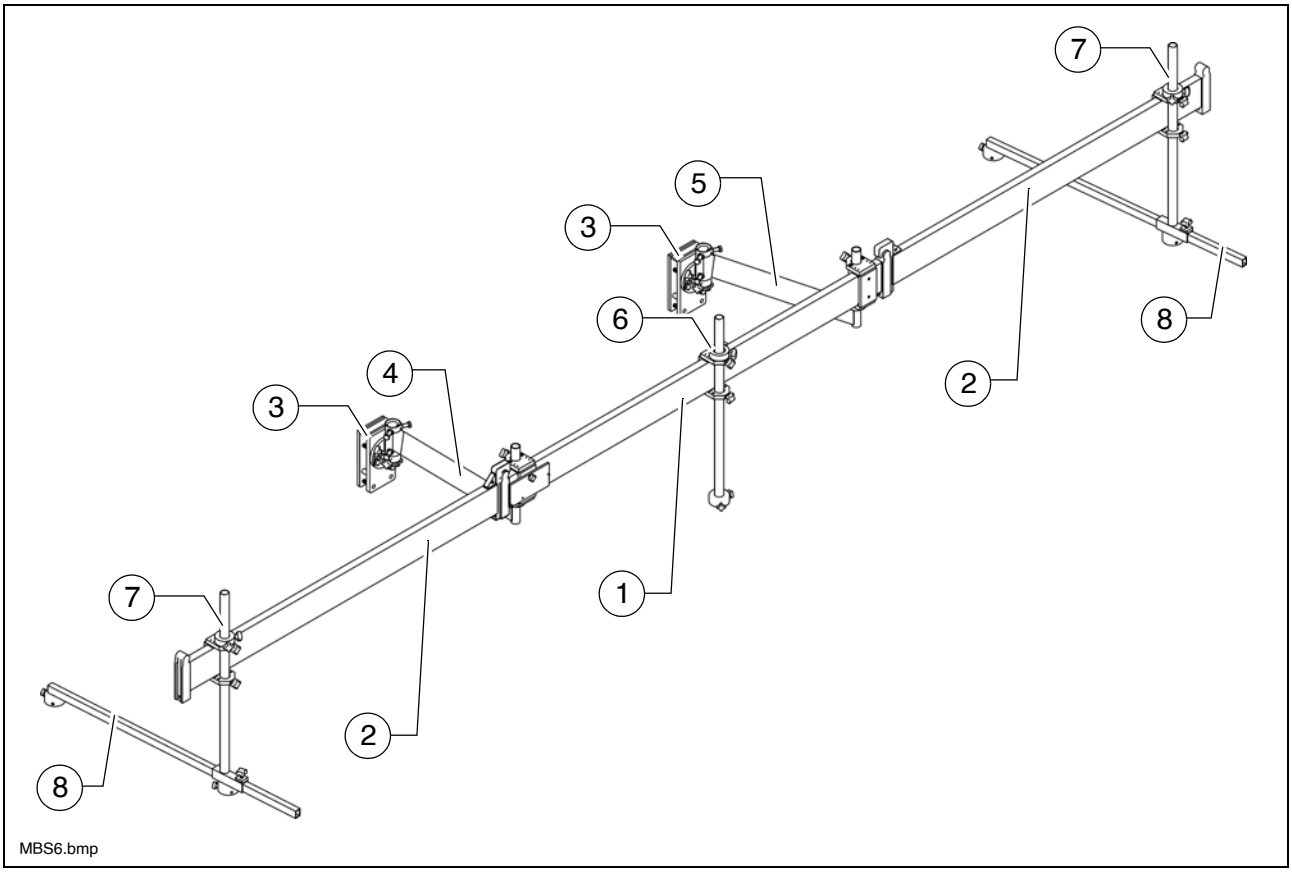

The big ski is used for contactless sensing over a particularly large reference length.

☞ A total max. ski length of approx. 9.30 m can be achieved with the combination of 1 centre element and 2 module elements together with the sensor arm extensions. A total max. ski length of approx. 13.50 m can be achieved with the combination of 1 centre element and 4 module elements together with the sensor arm extensions.

☞ The big ski enables the alignment of the individual sensors at the front and rear to be shifted over the reference. The sonic ski can actually be positioned in front of and behind the vehicle in order to guarantee safe reference sensing even on cornering.

☞ Before starting paving, the big ski must be set, with the grade control system mounted, to its reference (cable, kerb, etc.).

The big ski essentially consists of the following components:

- Centre element (1)
- Extension modules (2)
- Crossbeam bracket (3)
- Front swivel arm (4)
- Rear swivel arm (5)
- Sensor bracket (6)
- Sensor bracket, extendable (7)
- Arm extension (8)

https://truckmanualshub.com/

☞ Assembly of the short version is described in the following, as the longer variant is achieved simply by adding further module elements.

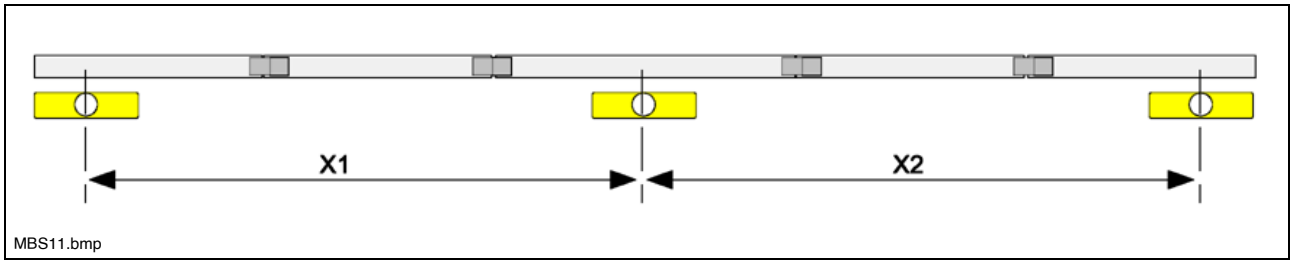

The distances between the sensors are ideally identical (X1 = X2).

☞ The centre sensor is mounted in the usual individual sensor position so that, if necessary, work can be carried out with just one sensor by switching over on the MOBA-matic (e.g. at the start of paving, road junctions, etc…)

☞ Depending on application, the mechanism can be mounted at the side next to the screed or also above the screed. This is dependent on the paving width required in each case.

☞ The procedure for mounting the big ski is the same in both cases.

☞ So that the big ski can be operated as parallel to the ground as possible during paving, it must be attached according to the subsequent paving conditions. To do this, the screed should be lowered to the desired course thickness and the traction point should be set appropriately.

⚠ When mounting the two crossbeam brackets, it is vital to ensure that these do not hamper the free movement of either the crossbeam or the screed construction! Clearance must be guaranteed throughout the entire working range!

https://truckmanualshub.com/

Mounting the big ski bracket on the crossbeam

☞ The entire big ski construction is mounted laterally on the crossbeams. To do so, the two crossbeam brackets must first be mounted. The crossbeam bracket design differs slightly depending on the paver finisher which is used.
During assembly, it is possible either to bolt the bracket directly at the existing bores or, as described in the following, to secure it to the crossbeam using clamping plates.

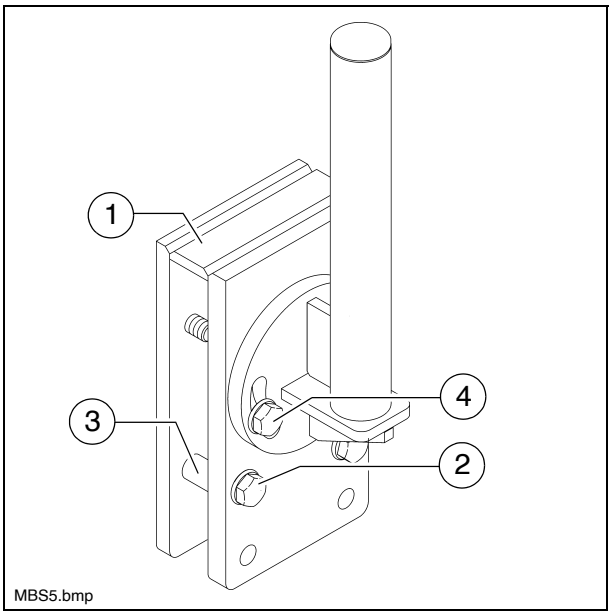

☞ The front bracket is mounted directly behind the traction point; the rear bracket is mounted at approximately the height of the auger.

- Place both brackets (1) over the crossbeam at the corresponding point and mount with bolts (2) and sleeves (3).

☞ For different crossbeam thicknesses, use the mounting's corresponding bores.

- The mounting tube is aligned via the two bolts (4).

☞ Align the bracket vertically.

https://truckmanualshub.com/

Mounting the swivel arms

- Slide a fixing ring (1) over the tube of the big ski bracket (2).

☞ The fixing ring's 45° chamfer must point upwards.

- Then slide the two swivel arms (3) onto the tube of the big ski bracket.

☞ The rear swivel arm is positioned, rotated by 180°, on the big ski bracket.

- Slide a fixing ring (4) (flat version) onto the front swivel arm and secure with the relevant star handle bolt.

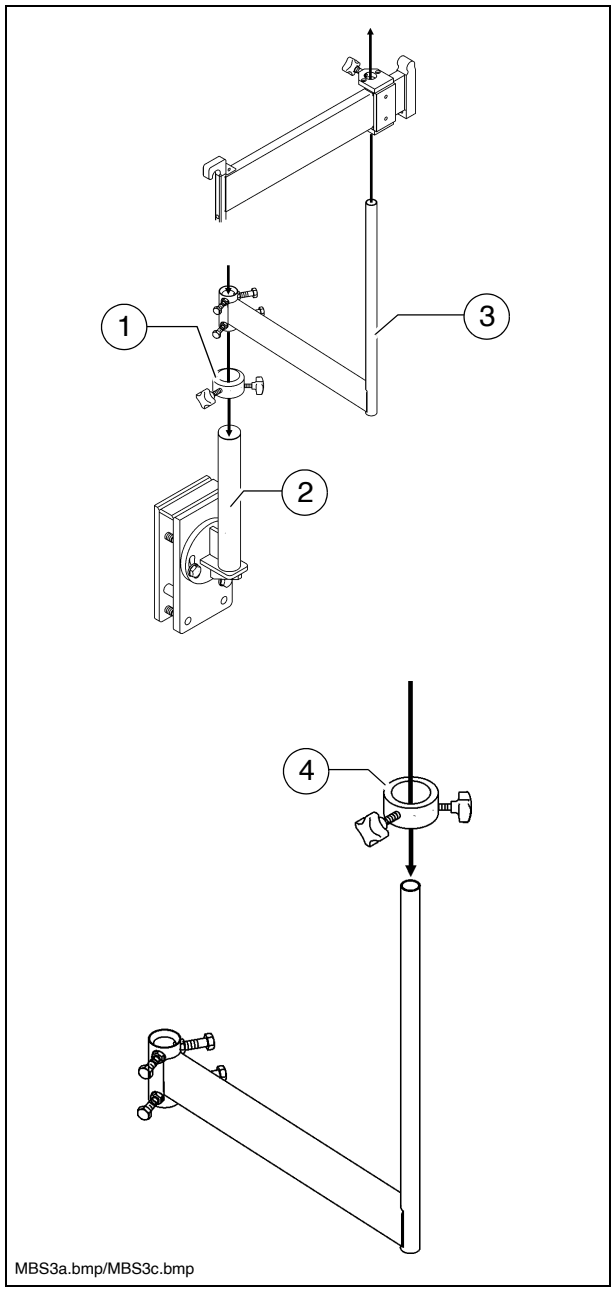

MBS3a.bmp/MBS3c.bmp

https://truckmanualshub.com/

Mounting the centre element

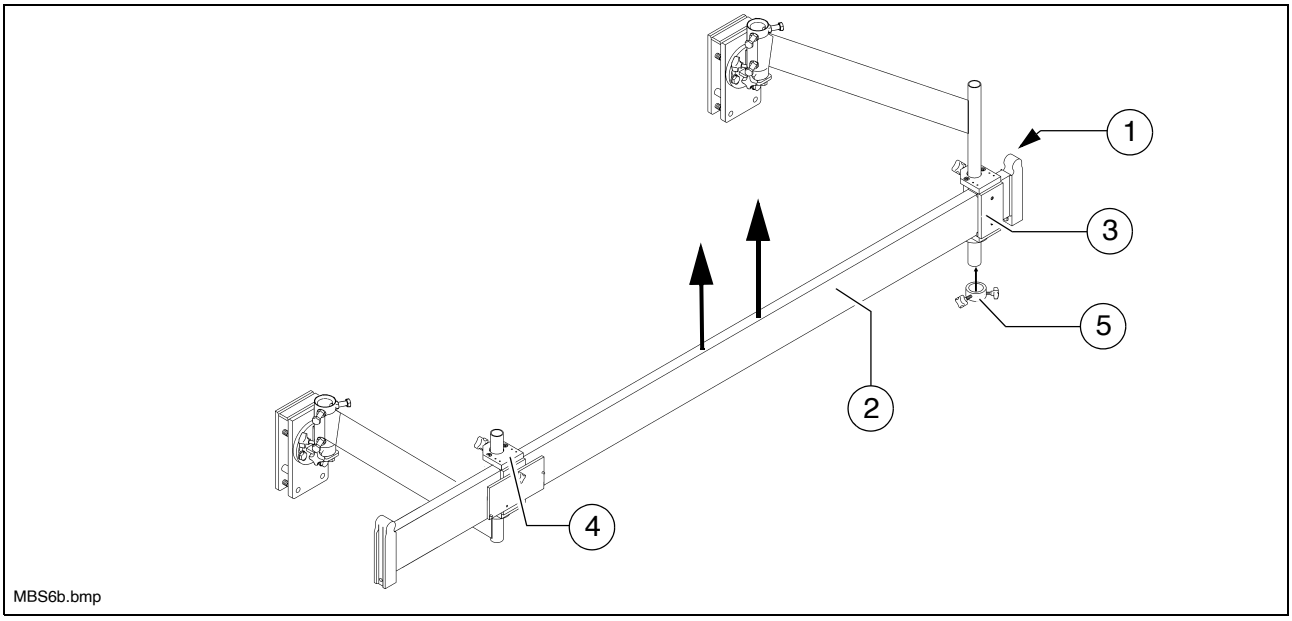

☞ During assembly, it must be ensured that the round lug (1) for attaching the subsequent modules points upwards.

☞ The centre element (2) is already fitted in the factory with 2 pre-assembled sliding parts (3) / (4), which are pushed over the two round mounting journals of the swivel arms.

- First slide the rear sliding part (3) onto the rear swivel arm from below. Then raise the centre element, together with the rear swivel arm, until the front sliding part (4) can be pushed onto the front swivel arm from above.
- Then secure the rear sliding part with a fixing ring (5) and the relevant star handle bolt.

☞ Once the first part of the beam has been assembled, it is initially aligned:

- The centre element is now aligned horizontally using the fixing rings on the swivel arms, and also with the fixing rings on the big ski brackets if necessary.
- Next, the centre element is aligned by rotating the swivel arms parallel to the paver finisher.
- Finally tighten all securing bolts.

https://truckmanualshub.com/

Extending the big ski

☞ The big ski can be extended to both the 9 m and 13 m versions.

☞ Structure of the 9 m version:
Extension part at the front/rear each.
Structure of the 13 m version:
Two extension parts at the front/rear each.

- Place the extension module (1) onto the centre element (2) and secure with a bolt (3).

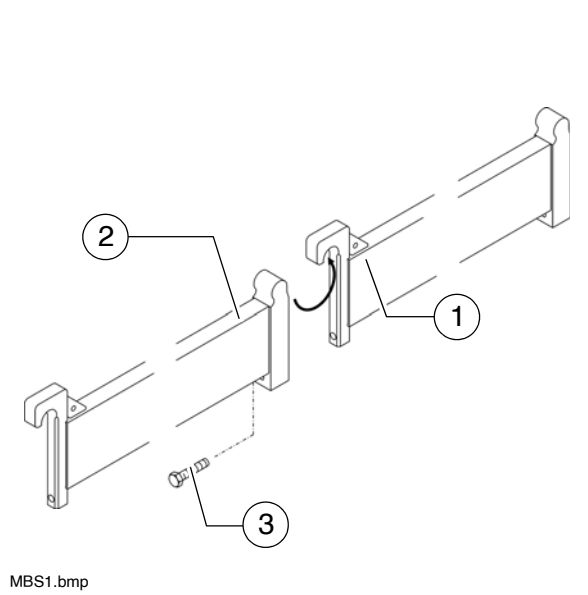

MBS1.bmp

https://truckmanualshub.com/

Mounting the sensor bracket

☞ A sensing system with 3 sensors is provided over the entire length of the big ski. One sensor each on the centre element, and the front and rear end elements.

☞ The centre sensor should be mounted on the ski in precisely the location in which it would be found during normal operation (approx. the height of the auger).
The two other sensors should be mounted the same distance away from it.

☞ Extendable sensor brackets (1) are mounted in the two outer positions; the normal sensor bracket (2) is mounted in the centre.

- Place the sliding bracket (3) over the corresponding big ski element from the inner side.
- Insert the sensor bracket (4) into the sliding bracket (5) from below and secure with the relevant star handle bolts.
- Place the clamping ring (6) onto the sensor bracket tube and secure with the relevant star handle bolt.

- In the case of the extendable sensor brackets, slide in the arm extension (7) and secure in position with the relevant star handle bolt.

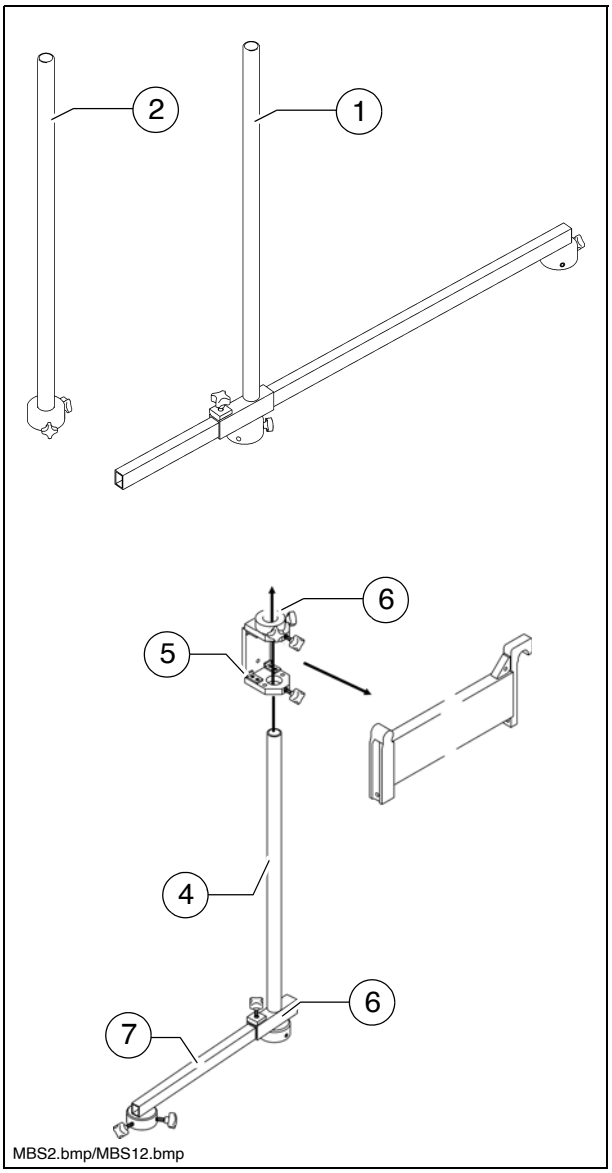

MBS2.bmp/MBS12.bmp

https://truckmanualshub.com/

Mounting and aligning the sensors

- Insert the sensor mounting (1) into the bracket (2).
- Align the sensor and secure with the relevant star handle bolts.
  - The sensing height can be adjusted by loosening the star handle bolts (3).

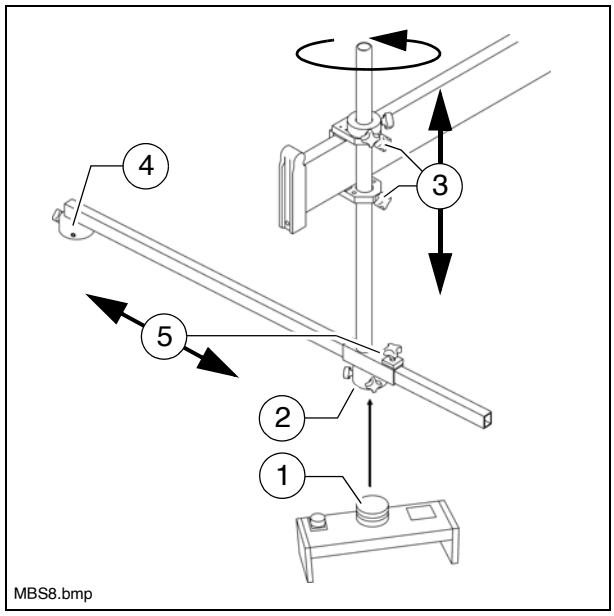

☞ At the two outer sensor brackets, the sensor can also be mounted on the swivelling sensor extension arm (4).
This therefore enables the two outer sensors to be swivelled during paving for diverse requirements, e.g. cornering.

- By loosening the star handle bolts (5), the length of the extension arm can be adjusted.
- The sensor bracket with extension arm can be swivelled by loosening the star handle bolts (3).

☞ If a sensor extension arm is swivelled to the side, it must be ensured that the attached sensor is subsequently aligned in the direction of travel.

☞ All assembly parts must be mounted and tightened properly to ensure safe and precise operation of the big ski!

https://truckmanualshub.com/

Mounting the distributor box

The distributor box should be mounted in such a way that simple wiring to the controller and the sensors is possible.

The connections for the sensors should always point down to prevent water from entering the distributor box. Inlets which are not required must be sealed with dust caps.

- Allen head bolts are used to initially mount the distributor box (1) on the mounting plate (2).

The input connector always points in the direction of travel.

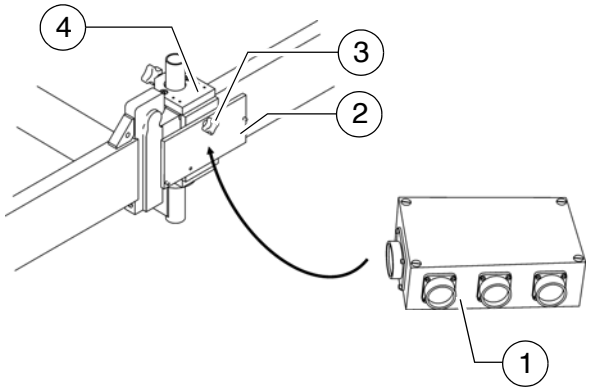

MBS10.bmp

- Then mount the mounting plate on one of the two sliding brackets (4) on the centre element using a star handle bolt (3).

Mounting the big ski on the right-hand side of the vehicle:
To meet the requirement that the input connector always points in the direction of travel, the sliding bracket, on which the distributor box is to be mounted, must be pushed onto the big ski from the inside to the outside here.

https://truckmanualshub.com/

Connection diagram

☞ The three sensors are connected to the distributor box and the distributor to the machine according to the following scheme.

- Sensors
  - Front (1)
  - Centre (2)
  - Rear (3)
- Distributor box (4)
- Machine interface (5)

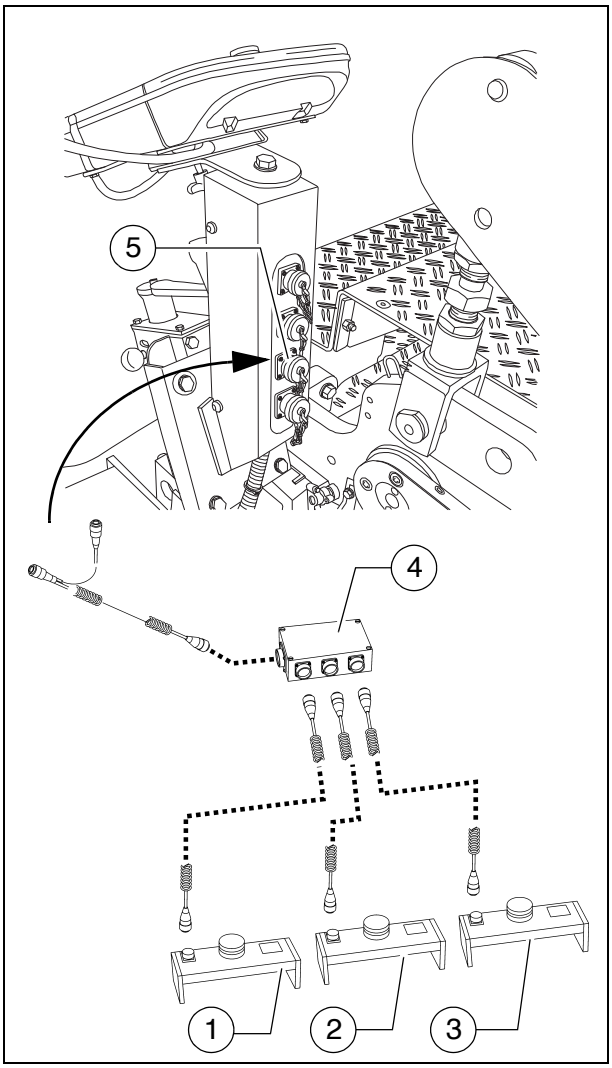

https://truckmanualshub.com/

5.6 Levelling shoe 6m, 9m

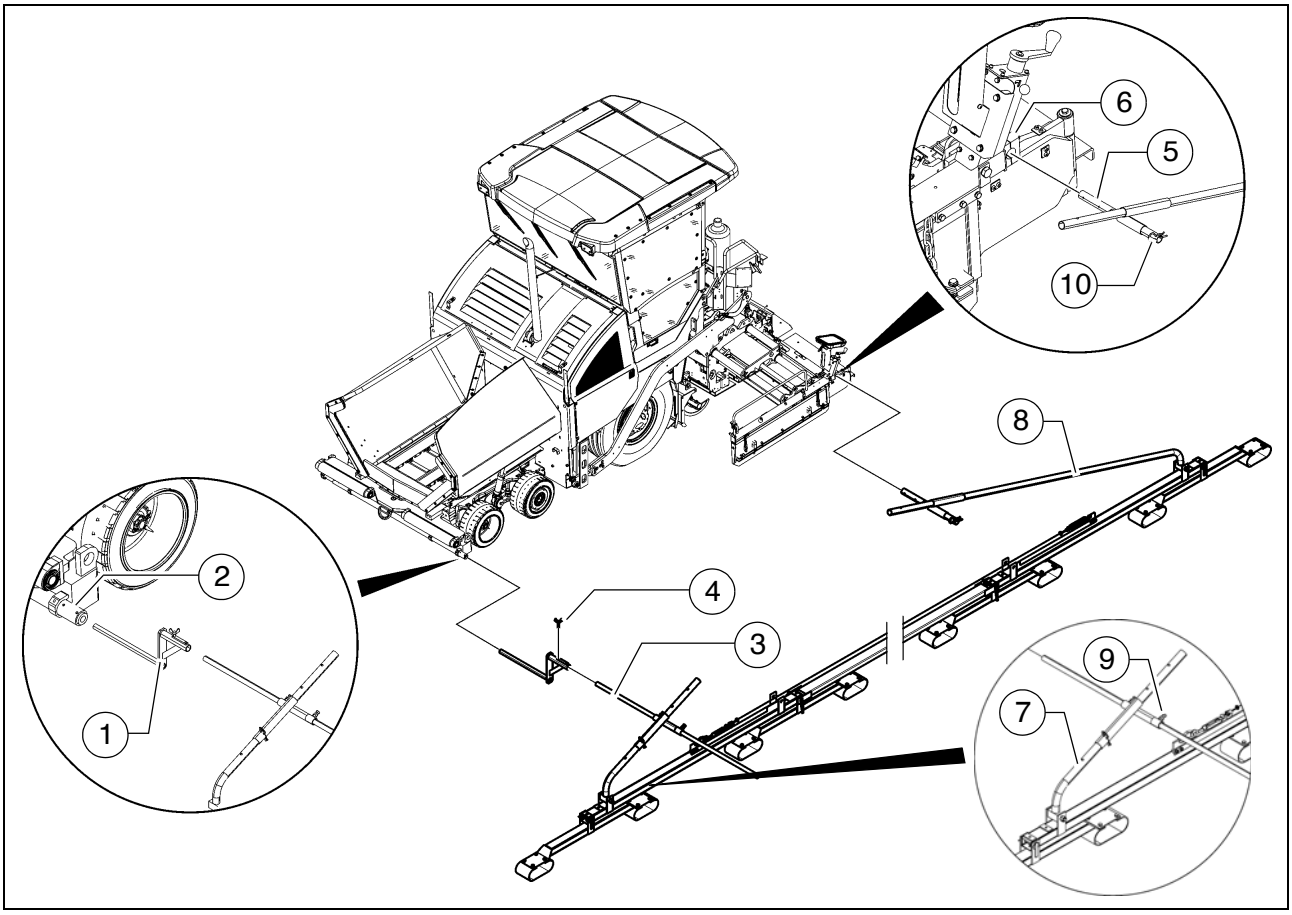

The levelling shoe includes a shoe that moves at several joints and runs on the reference surface, together with a rotary sensor that scans a reference wire on the shoe. The levelling shoe is ideal for compensating for long bumps in the ground.

It is used on roadworks sections without tight bends.

- Adjust the working width by extending the screed.
- Push the levelling piece (1) in the extension pipe (2). Tighten the clamping bolts at the extension pipe.
- Push the extension (3) into the levelling piece (1). Secure properly with wing nuts (4).
- Insert the holding tube (5) in the clamp bracket (6) on the side board. Tighten the bolts of the clamp bracket correctly.
- Fix the front pull rod (7) in the holding tube with a spring cotter pin so that the shoe lies freely on the ground at the front.

☞ At the back, the shoe automatically lies on the ground on account of the freely moving pull rod (8).

https://truckmanualshub.com/

- Align the shoe to be parallel to the paver across the whole length and not tilted to the side.
- Fix with bolts (9) at the front.
- Set the spring cotter pin (10) at the back.
- Insert the sensor (11) in the height sensing unit (12).
- Set up the height sensing unit so that the sensing arm (13) lies on the reference wire (14) in the middle.

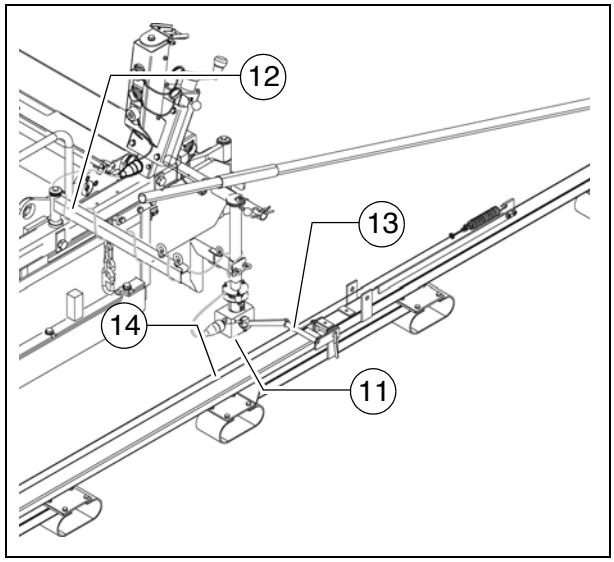

☞ Tighten the reference wire with the rope tensioner if too loose.

- Connect the corresponding cable lead with the provided socket in the remote control bracket and with the sensor.

⚠ Route the connection cable so that it cannot be damaged during operation.

⚠ Use of the levelling shoe increases the basic width of the paver finisher!

https://truckmanualshub.com/

6 Automatic steering unit

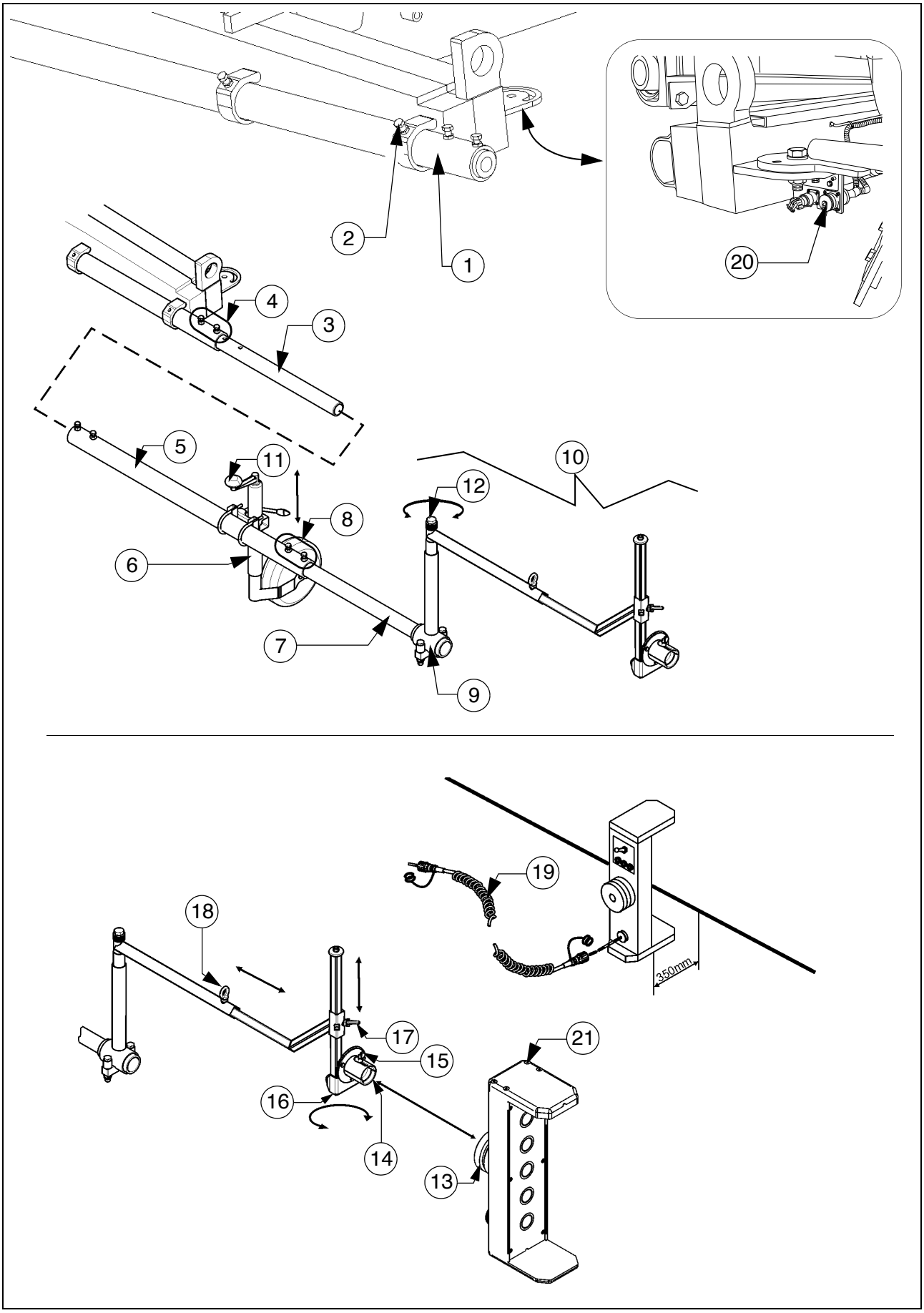

https://truckmanualshub.com/

6.1 Mounting the automatic steering unit on the paver finisher

⚠ During operation, no work may be carried out on the automatic steering unit!

☞ Depending on the desired sensing side on the vehicle, the sensor rod tube may have to be removed and re-inserted on the other side of the vehicle!

- Pull the sensor rod tube (1) at the front of the vehicle out to the desired length and secure with the clamping bolts (2).

☞ Only for 14m automatic steering unit:
-Push the connecting tube (3) into the sensor rod tube (1), fix with screws and lock nuts (4).
-Push extension (5) onto the connection tube and fix in the same way.
-Fix support wheel (6) in a suitable position using the corresponding assembly parts.
-Heed vertical alignment!

- Insert tube (7) to the required length and also fix with screws and lock nuts (8).
- Fit the clamping piece (9) with extension arm (10) to the end of the tube.

☞ Heed vertical alignment!

- If necessary, adjust the height of the support wheel at the adjustment knob (11) until all extension tubes are horizontally in line.
- Swivel the extension arm (9) to the desired angle and secure by tightening the bolt (12).

⚠ Use of the automatic steering unit increases the basic width of the paver finisher!

☞ If the automatic steering unit is used, ensure that there are no persons and no hindrances in the danger area.

https://truckmanualshub.com/

Mounting and aligning the sensor

- Insert the sensor mounting (13) into the bracket (14) and secure with a wing nut (15).
- Align the angle between the sensor and reference and secure with the relevant clamping bolt (16).

☞ The sensor and reference must be at right angles to each other!

- The sensing height can be set by loosening the fixing screw (17).

☞ The reference should run centrally along the sensor.

- The sensor's distance from the reference can be set by loosening the fixing screw (18).

☞ The distance between the sensor and reference (cable) should be 350 mm!

☞ All assembly parts must be mounted and tightened properly to ensure safe and precise operation of the automatic steering unit!

Connecting the sensor

☞ A sensor for connecting the sensing system to the vehicle's control system is located on the left and right sides of the vehicle on the inner side of the bumper.

- Connect the relevant connection cable (19) to the socket (20) and sensor (21).

☞ A connection socket for the automatic steering unit is located on both sides of the vehicle.

⚠ Route the connection cable so that it cannot be damaged during operation.

⚠ Seal unused sockets with the relevant protective caps.

https://truckmanualshub.com/

Automatic steering unit operating instructions

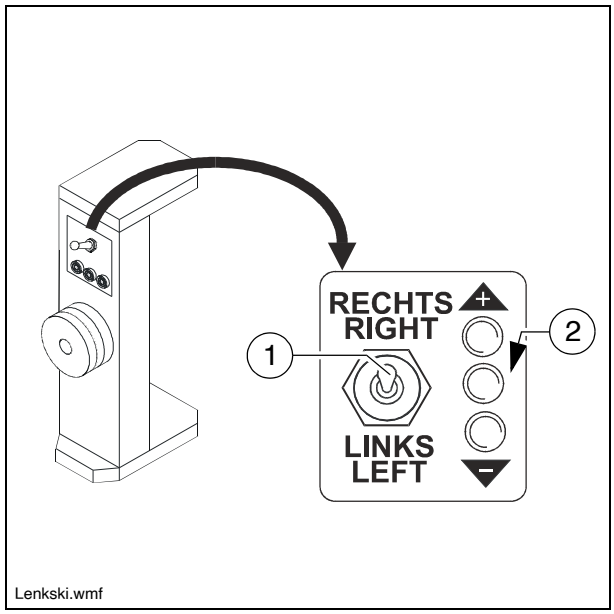

- When the automatic steering unit is activated, the steering potentiometer is deactivated. Steering is carried out automatically via ski cable sensing.
- Activate the function on the operating panel as necessary.
- The automatic steering unit can be overridden by actuating the steering potentiometer.

- The switch (1) is used to set the sensing side:
  - Right: Automatic steering unit on the right side of the vehicle.
  - Left: Automatic steering unit on the left side of the vehicle.

- The LEDs (2) indicate the distance from the reference.
  - LED + / - : Distance from the reference too high / too low.
  - Centre LED: Distance correct.

https://truckmanualshub.com/

7 Emergency stop during feeder operation

☞ If the function is not in use, the bridge connector must be fitted to the corresponding socket, as otherwise the travel drive is blocked!

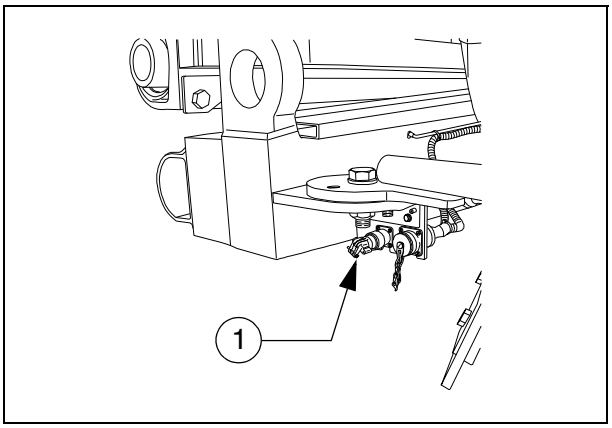

https://truckmanualshub.com/

8 Limit switch

8.1 Auger limit switches (left and right) - mounting the PLC version

The auger's ultrasonic limit switch is mounted on both sides on the side board's handrail.

- Place the sensor bracket (1) onto the handrail, align it and tighten with a wing bolt (2).
- Align the sensor (3) and secure with a clamping lever (4).
- Connect the left or right sensor's connection cable (5) to the intended remote control bracket sockets.

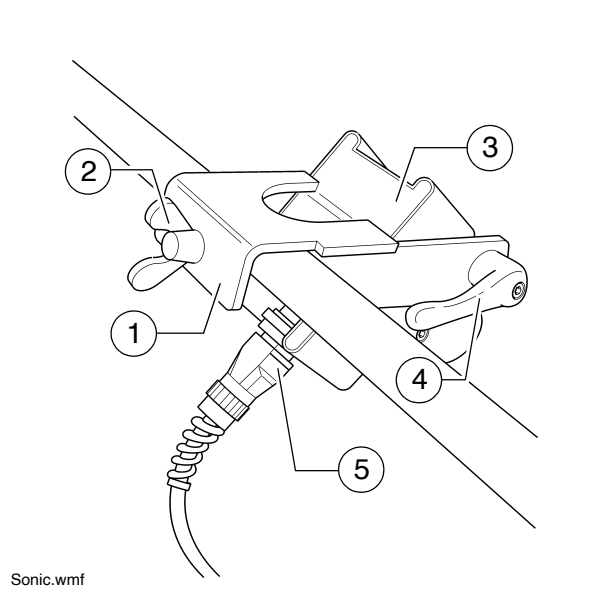

☞ The connection cables are connected to the relevant sockets on the remote control bracket.

☞ The sensors should be adjusted so that 2/3 of the augers are covered with the paving material.

☞ The paving material must be conveyed over the full working width.

☞ We recommend adjusting the limit switch positions during material distribution.

https://truckmanualshub.com/

9 Special accessories

9.1 Material bucket

Application

The additional bucket is placed in the open hopper and secured in position.
It is used to take larger volumes of material provided by a feeder.

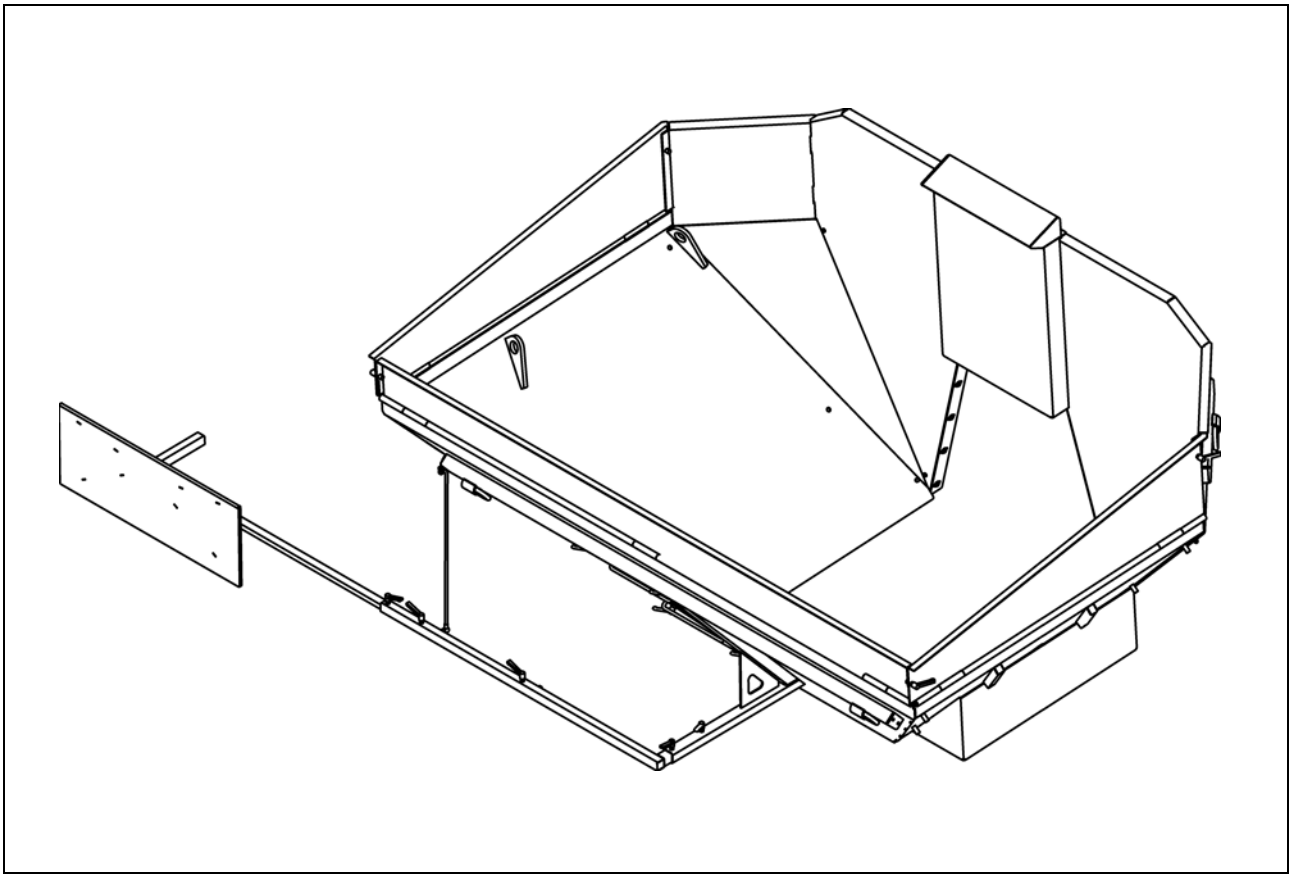

⚠ The material bucket may only be used in the following combinations:

MH2500 - bucket, short (universal bucket): SD2500C, SD2500CS

MH2550 - bucket, long: SD2550C, SD2550CS

https://truckmanualshub.com/

Description of assemblies and functions

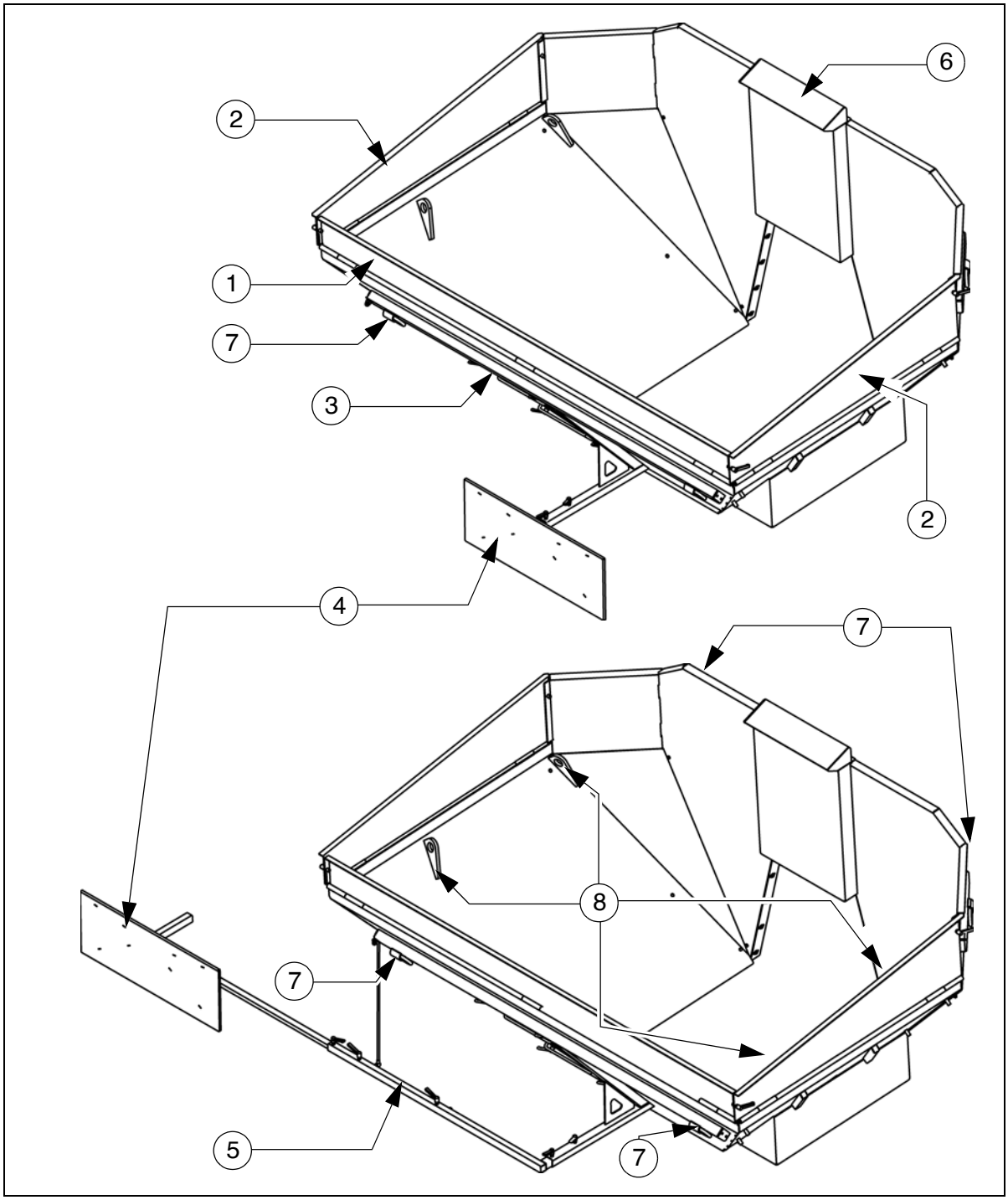

Item		Designation
1	●	Swivelling front flap
2	●	Swivelling side flaps
3	●	Maintenance door
4	●	Reflector plate for feeder clearance sensor
5	●	Reflector plate extension pipe - for operation on the side
6	●	Fixture for paver option "extraction system"
7	●	Tie-down rings
8	●	Lashing points for loading by crane

https://truckmanualshub.com/

Technical data

Dimensions, bucket MH2500 - (short version)

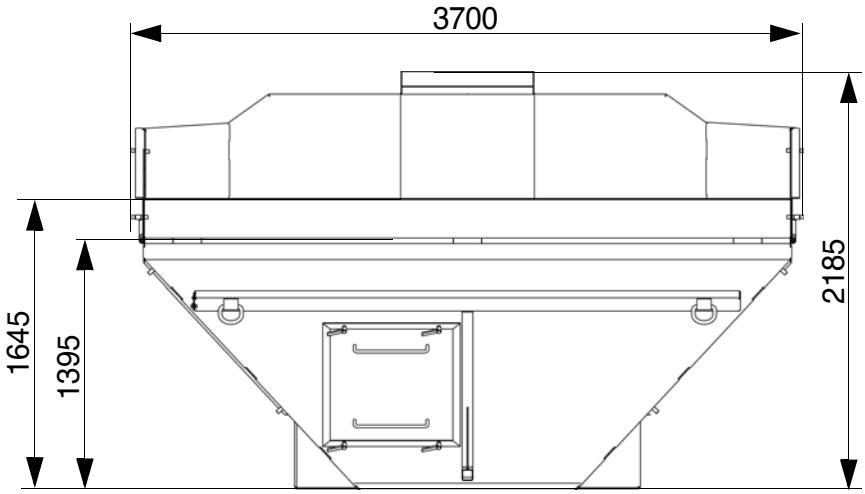

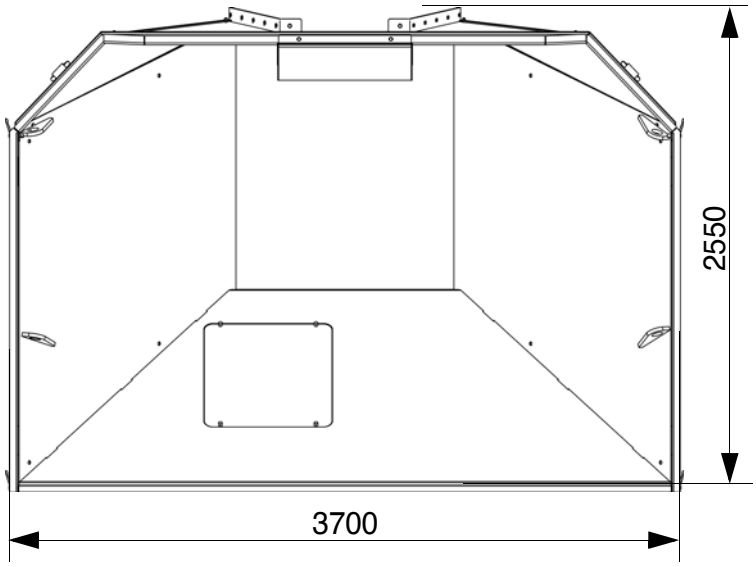

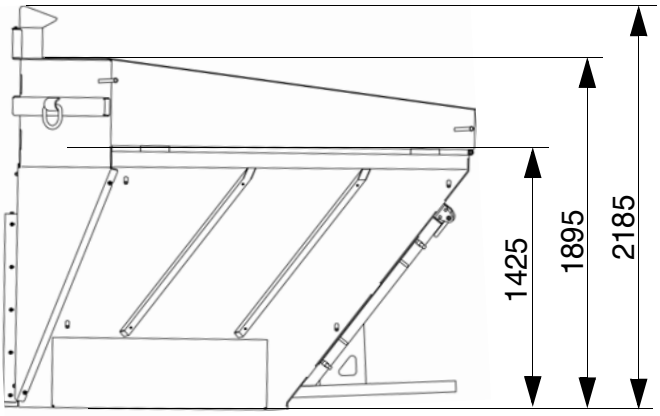

https://truckmanualshub.com/

Dimensions, bucket MH2550 - (long version)

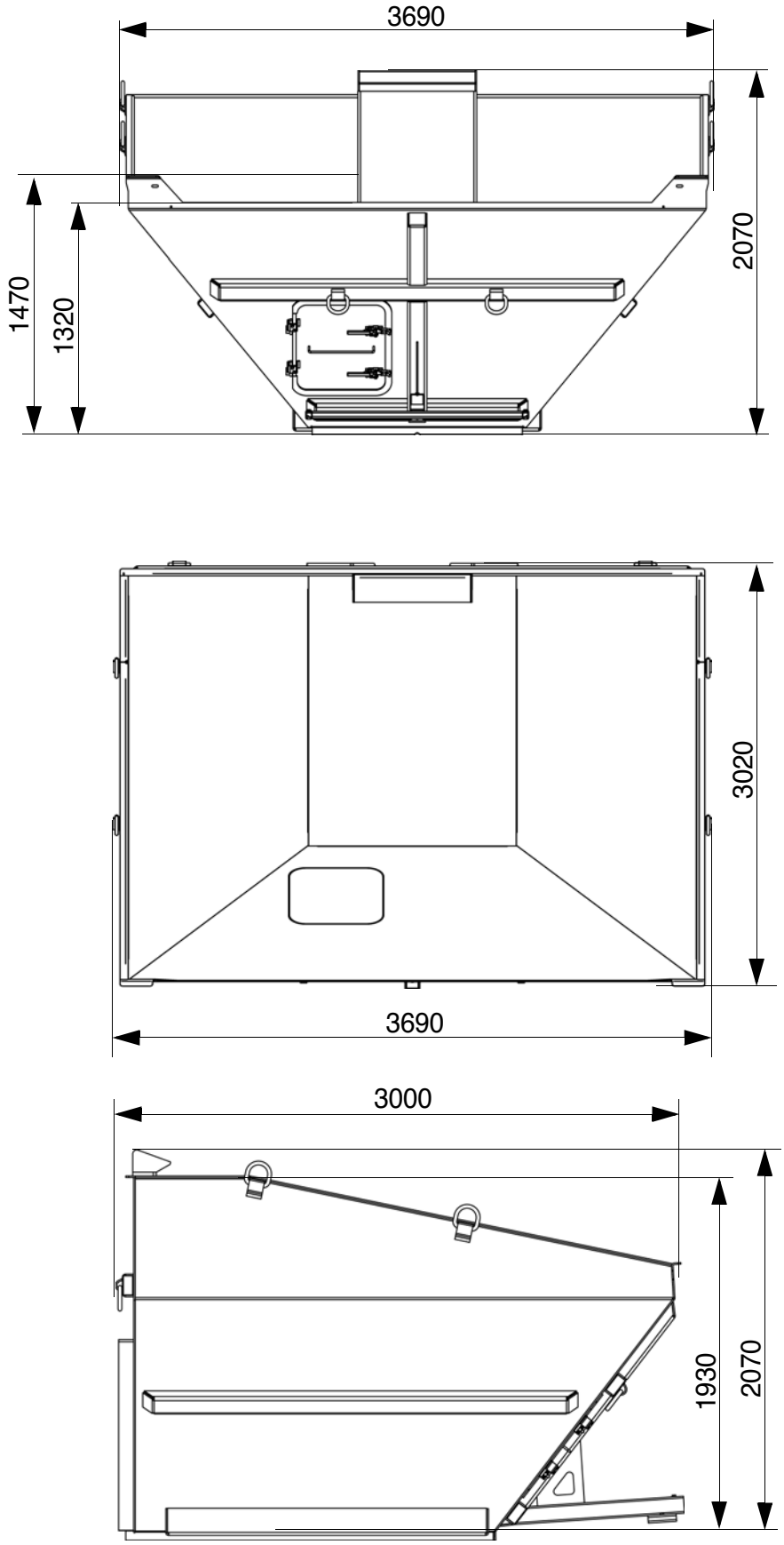

https://truckmanualshub.com/

Weights

Bucket MH2500 - short version	approx. 1.2t
Bucket MH2550 - long version	approx. 1.7t

Volume

Bucket MH2500 - short version	approx. 10.9 m^3 / 24.0t
	approx. 10.0m^3 / 22.0t (OFFSET)
Bucket MH2550 - long version	approx. 12.7 m^3 / 28.0t

https://truckmanualshub.com/

10 Identification points

CAUTION	Danger due to missing or misunderstood vehicle signs
	Missing or misunderstood vehicle signs pose a danger of injuries! - Never remove any warnings or information signs from the vehicle. - Damaged or lost warning or information signs must be replaced immediately. - Make yourself familiar with the meaning and position of the warning and information signs. - Comply with all further information in these instructions and in the safety manual.

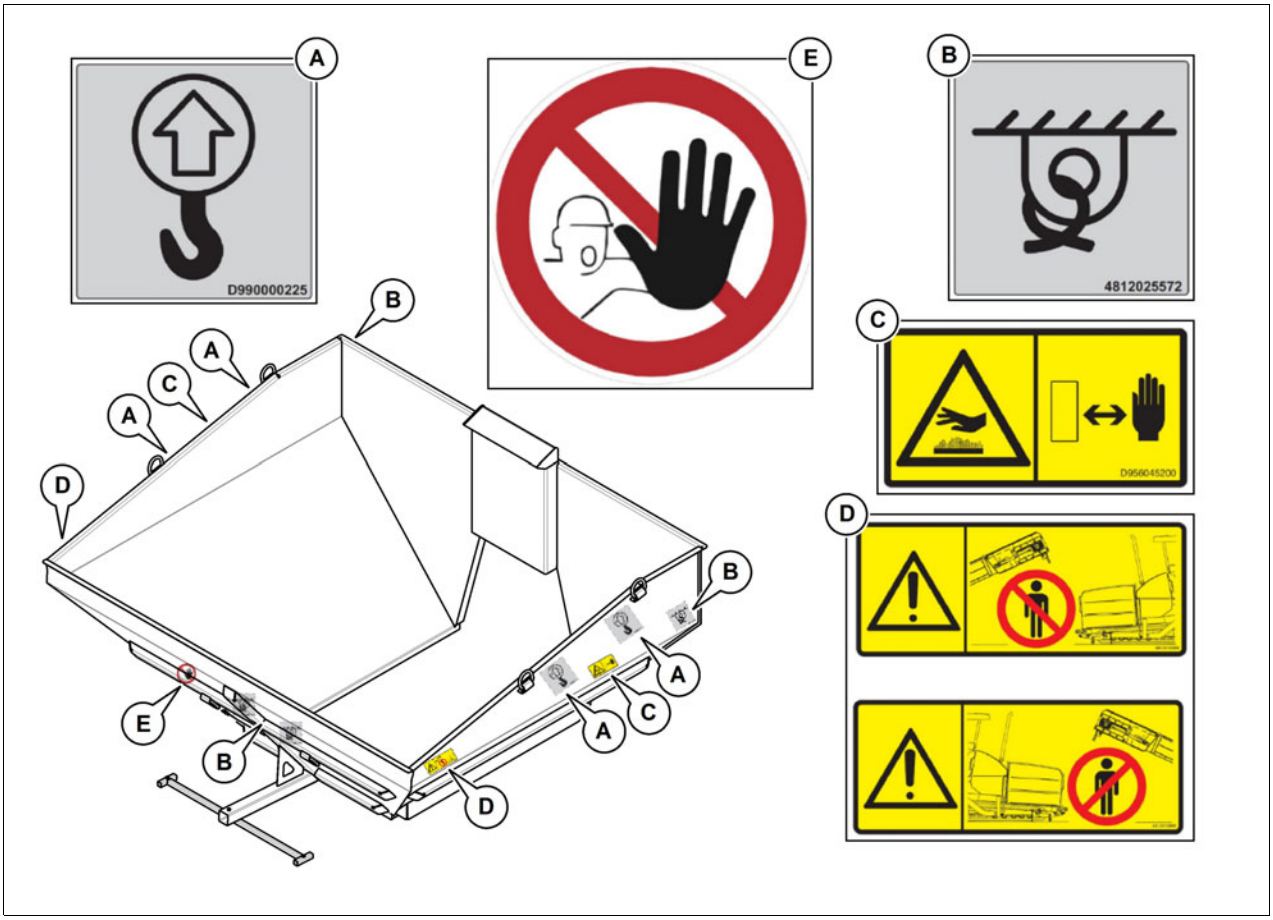

https://truckmanualshub.com/

10.1 Information signs

No.	Pictogram	Meaning
A		- **Lifting point** Lifting the machine is only permitted at these lifting points!
B	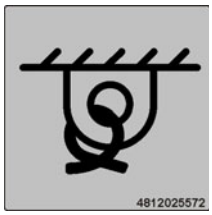	- **Lashing point** Lashing the machine is only permitted at these points!

10.2 Warning signs

No.	Pictogram	Meaning
C	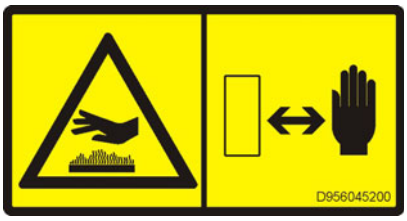	- **Warning - hot surface - risk of burning!** Hot surfaces can cause severe injuries! Keep your hands a safe distance away from the danger area! Use protective clothing or protective equipment!

10.3 Further warnings and operating instructions

No.	Pictogram	Meaning
D		- **Attention - danger zone!** Entering the danger zone between the feeder and the paver finisher can trigger undesired vehicle movements; these may lead to severe to fatal injuries! Never enter the danger zone!

https://truckmanualshub.com/

10.4 Instructive symbols, prohibitive symbols, warning symbols

No.	Pictogram	Meaning
E		- Do not open - hazard!

https://truckmanualshub.com/

Load securing - bucket

☞ The following instructions for securing the bucket for transport on the low-bed trailer consist merely in examples of how to secure the load correctly.

☞ Always comply with the local regulations for securing the load and for correct use of load securing equipment.

☞ Normal driving mode also includes emergency braking, evasive manoeuvres and poor road surfaces.

☞ Use should be made of the different methods available for securing loads (positive fit, force connection, diagonal lashing, etc.) in accordance with the specific transport vehicle.

⚠ The low-loader must have the necessary number of lashing points with a lashing strength of LC 5,000 daN.

⚠ The total height and total width must not exceed the maximum permissible dimensions.

⚠ The ends of lashing chains and straps must be secured to prevent them working loose and falling down unintentionally!

⚠ Clean bucket before loading, remove material residues.

Prepare the low loader

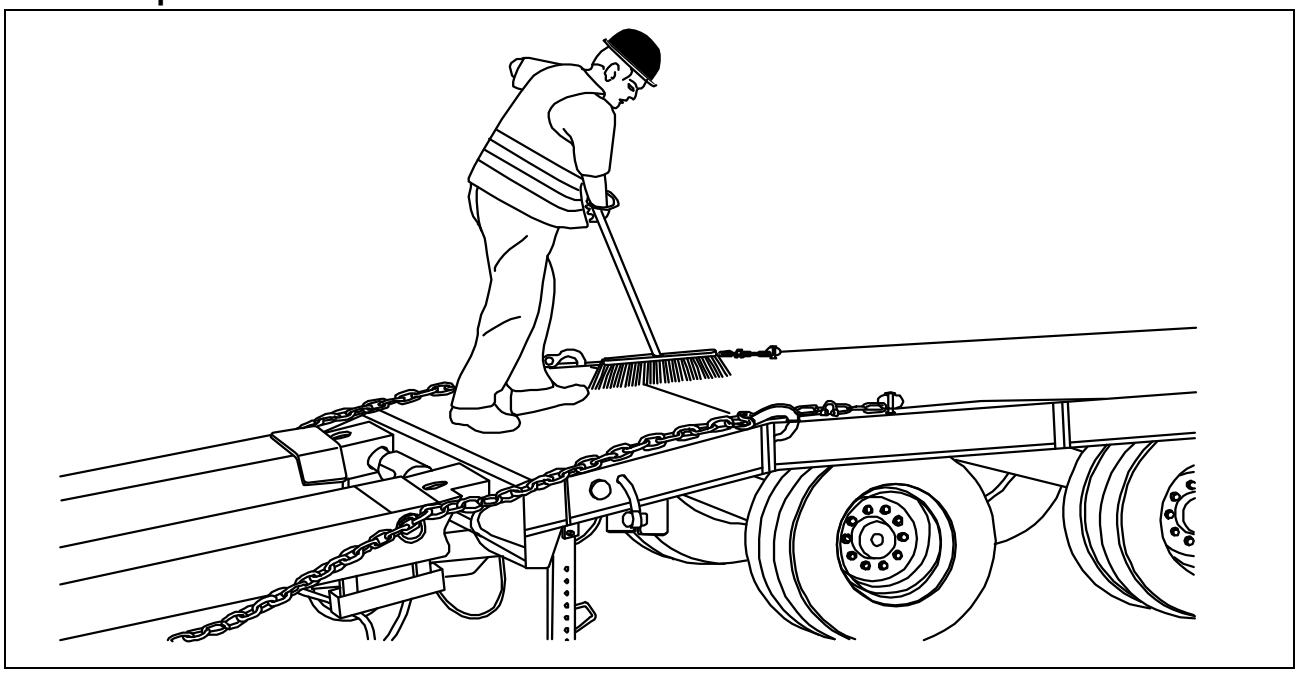

⚠ The floor of the loading space must always be undamaged, free of oil and mud, dry (residual moisture is permitted without accumulations of water) and swept clean!

https://truckmanualshub.com/

Lashing equipment

Use the load securing equipment, lashing straps and chains belonging to the vehicle. Additional shackles, eyebolts, edge guards and non-slip mats may be needed depending on the type of load securing equipment.

⚠ Always comply with the stated values for permitted lashing force and load rating!

⚠ Always tighten the lashing chains as stated by the manufacturer.

⚠ Tighten the lashing straps as tight as possible.

Equipment	
- Lashing straps permissible lashing force LC 2,500 daN	
- Non-slip mats	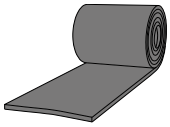

⚠ Lashing equipment must be checked by the user for any signs of damage before use. On detecting any signs of damage that affect safety, the lashing equipment must be withdrawn from further use.

https://truckmanualshub.com/

Lashing

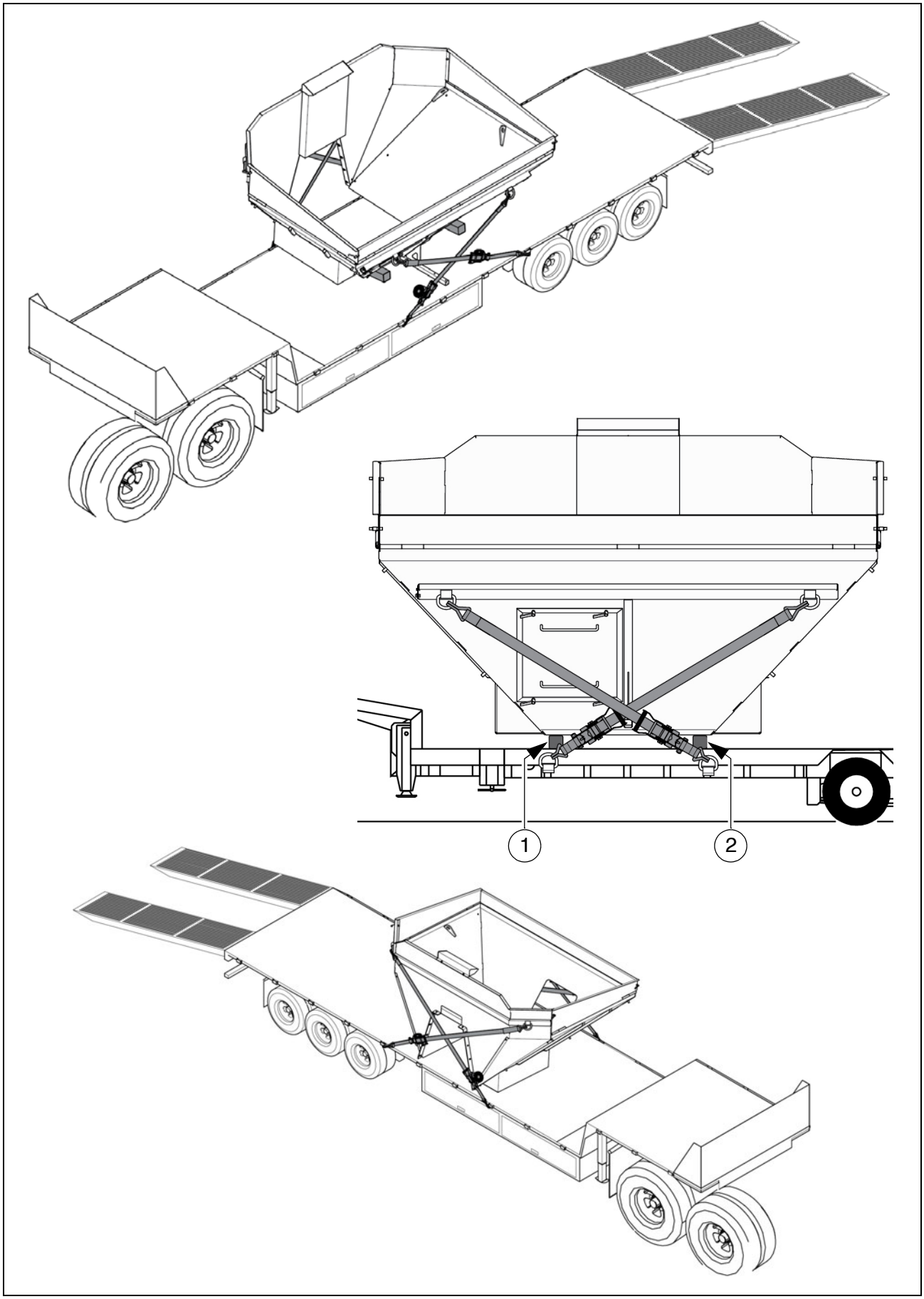

https://truckmanualshub.com/

☞ When securing the bucket, make sure that the sensor plate is dismantled and the front flap properly closed.

⚠ Diagonal lashing secures the bucket at the front and rear, using the lashing points on the bucket and on the low-load trailer.
Fasten the lashing straps as shown.

☞ Fasten the lashing straps diagonally to the bucket and to the lashing points on the low-load trailer.

☞ Use non-slip mats at the contact surfaces (1) and (2) as compensation for adjusting the horizontal position of the bucket.
If necessary, use non-slip mats in combination with squared timbers. Use non-slip mats at both top and bottom.

https://truckmanualshub.com/

Loading with the crane - MH2500

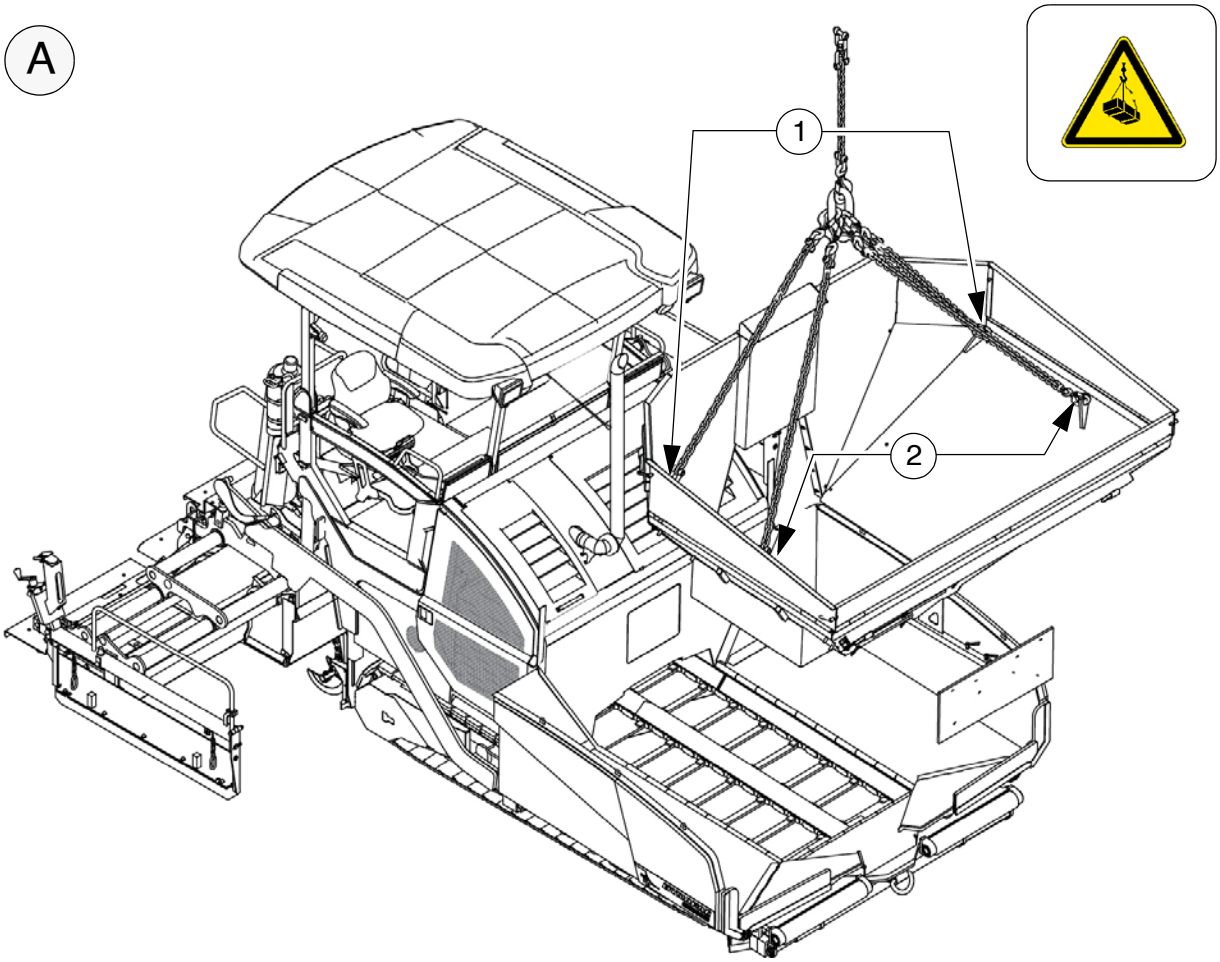

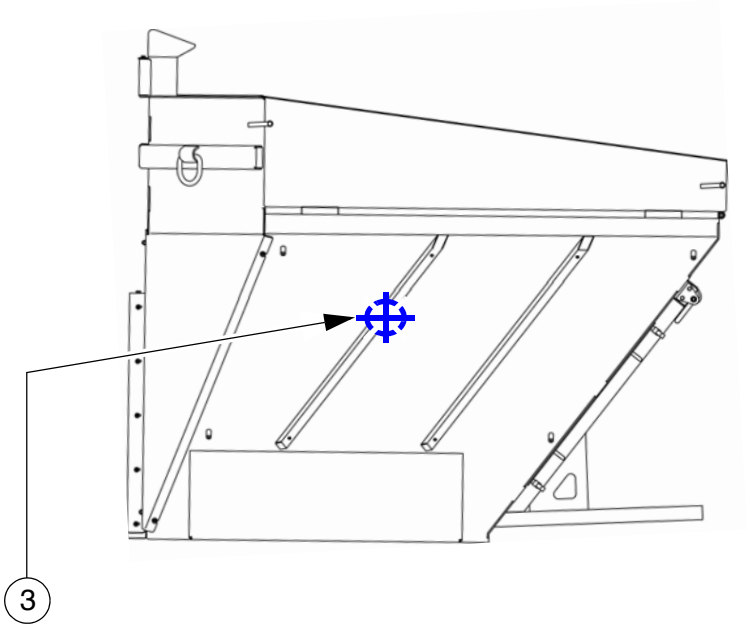

https://truckmanualshub.com/

Loading with the crane - MH2550

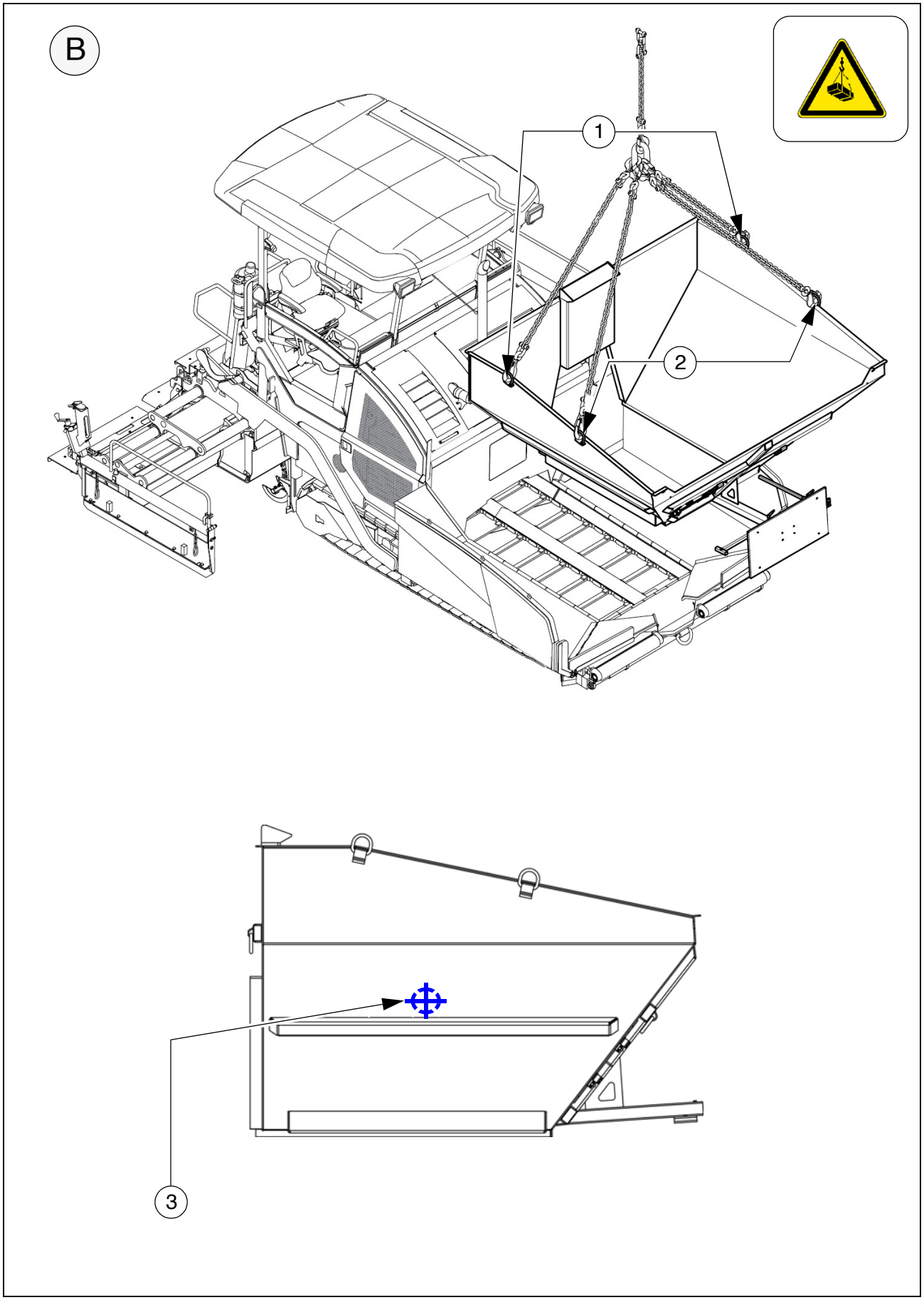

https://truckmanualshub.com/

WARNING	Danger from suspended loads
	Crane and/or lifted load can tip when lifted and cause injuries! - The load may only be raised at the marked lifting points. - Do not enter the danger zone. - Use only lifting gear that can bear the load. - Do not leave any material residues or loose parts in the bucket. - Comply with all further information in these instructions and in the safety manual.

⚠ Attachment and loading equipment must meet the conditions of the applicable accident prevention regulations!

⚠ Heed the bucket's centre of gravity during loading!

⚠ Clean bucket before loading, remove material residues!

☞ Use the securing points (1, 2) provided on the binder course hopper for loading with the lifting gear.

☞ The centre of gravity of the bucket is in the area marked (3).

- Attach lifting gear to the attachment points (1, 2).

☞ (A) Loading example bucket MH2500 - short version

⚠ The max. permissible attachment point load at the attachment points is: 44kN.

☞ (B) Loading example bucket MH2550 - long version

⚠ The max. permissible attachment point load at the attachment points is: 150kN.

https://truckmanualshub.com/

Lash the bucket in the paver

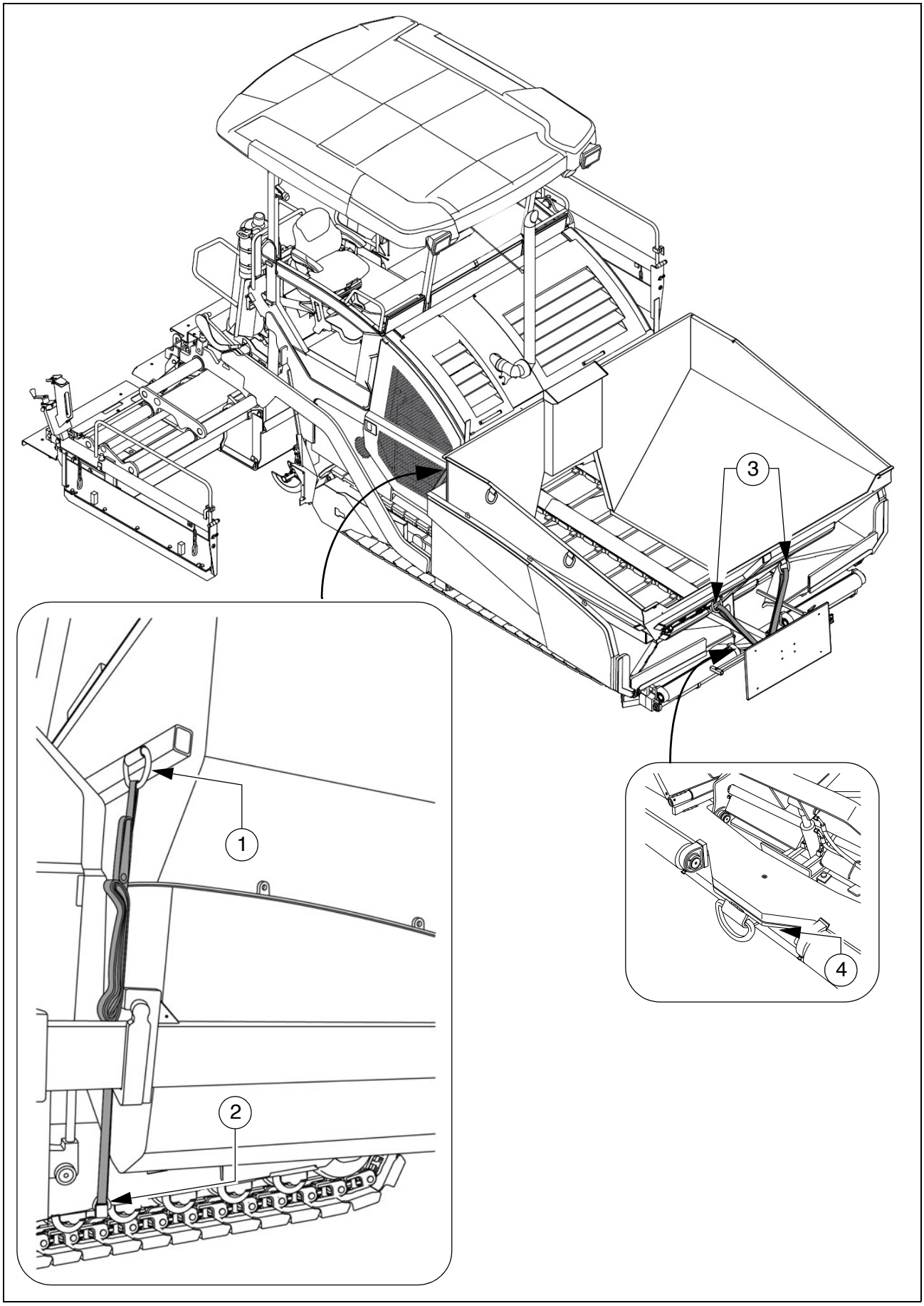

https://truckmanualshub.com/

☞ The following explanations for securing the bucket in the paver act as examples for correct usage in a Dynapac paver finisher.
When combining different brands, the bucket must be secured according to the available possibilities.

☞ Dynapac does not assume any warranty for damage caused by the bucket being incorrectly secured!

⚠ The paver finisher must have the necessary number of lashing points with a lashing strength of LC 5.000 daN.

⚠ The ends of lashing chains and straps must be secured to prevent them working loose and falling down unintentionally!

⚠ Clean bucket and paver hopper before inserting the bucket, remove material residues. Removing adhering material residues from contact surfaces.

⚠ The bucket is secured by tying it down,
using the lashing points (1) on the bucket.
Fasten the lashing straps to the drive unit frame (2) of the paver finisher as shown.

⚠ The bucket is secured at the front by diagonal lashing, using the lashing points (3) on the bucket and the towing eye (4) on the paver finisher.
Fasten the lashing straps as shown.

☞ Fasten the lashing straps diagonally to the bucket and to the towing eye on the paver finisher.

https://truckmanualshub.com/

Operation

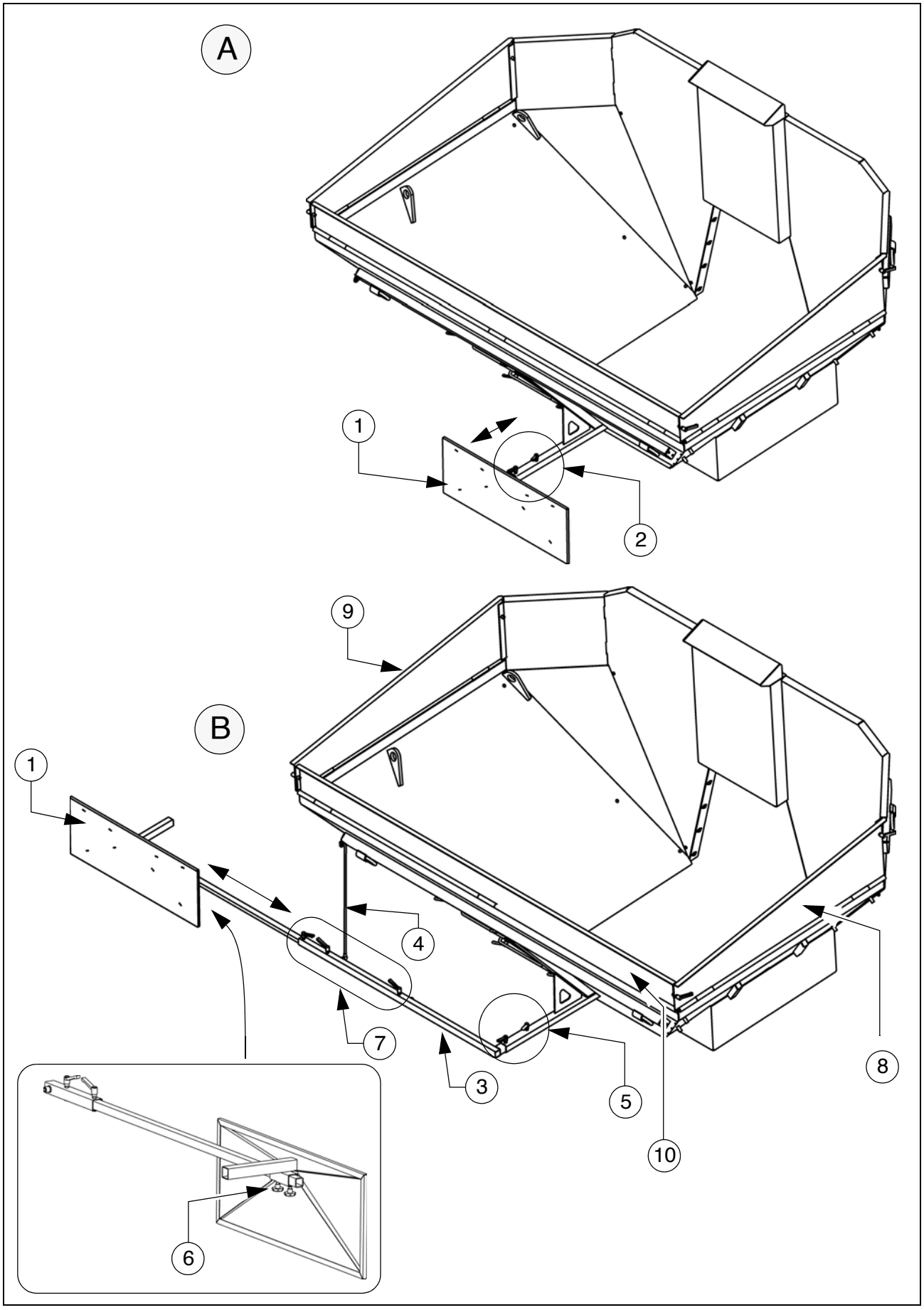

https://truckmanualshub.com/

☞ Depending on the specific use, the reflector plate (1) can be fitted in front of the bucket in the middle or to the side of the bucket on the left/right.

- Reflector plate in the middle: fixed with the corresponding clamping levers (2).
- Reflector plate on the side: dismantle reflector plate (1), mount additional retaining rod (3) and support holder (4) to the required side.
  - Fix retaining rod with the corresponding clamping levers (5).
  - Mount the reflector plate to the retaining rod with the star handles (6).
  - On reaching the required position, fix the pipe extension with the corresponding clamping levers (7).

⚠ When the reflector plate is fitted to the side, this increases the basic width of the vehicle. Note the danger area!

☞ The magnetic foil included in the scope of supply of the vehicle must be put on the reflector plate (1) when in operation.

Operation with a feeder with slewing belt

NOTE	**Caution! Possible damage to parts!**
	There is a risk of collision when using a feeder with slewing belt! The bucket must be prepared as follows: - Swivel the side flaps (8/9) and the front flap (10) down (loosen corresponding clamping levers).

Preparations for paving

Separator fluid

Spray all surfaces coming into contact with asphalt material with separator fluid.

⚠ Do not use diesel fuel as it dissolves the bitumen!

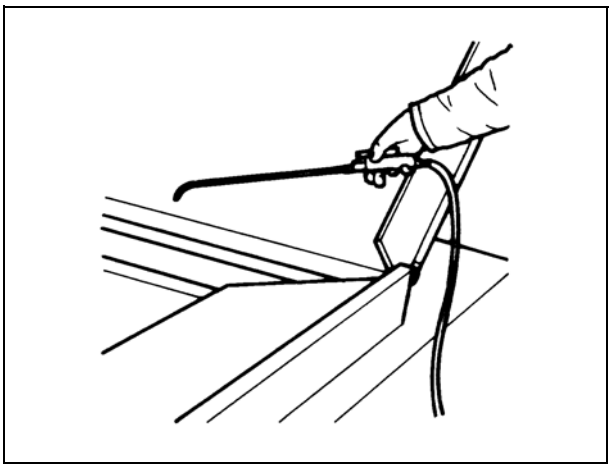

https://truckmanualshub.com/

Cleaning the bucket

Clean the bucket regularly and remove adhering asphalt residues.

Only clean the hopper after it has cooled down.

If the bucket is inserted in a paver during cleaning, the paver must be switched off and secured to prevent it being switched on again.

Spray all surfaces coming into contact with asphalt material with separator fluid.

Access to the bucket for cleaning purposes is possible through the door (1) at the front.

Close the door properly for operation.

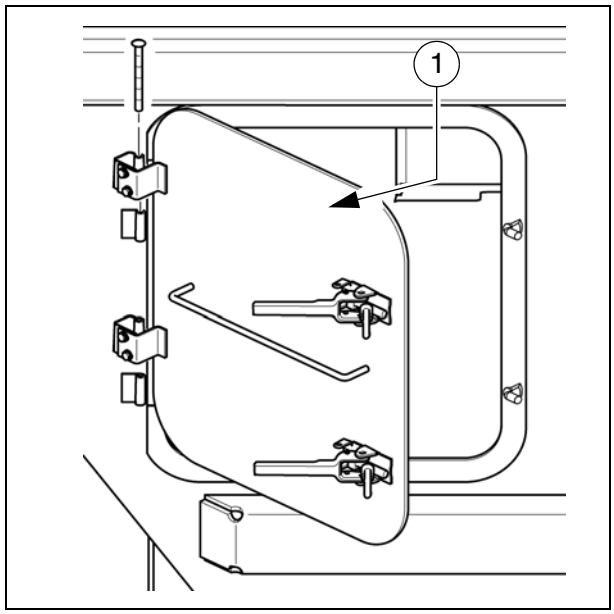

https://truckmanualshub.com/

11 Screed

The Operating instructions for the screed cover all work required for mounting, setting up and extending the screed.

12 Electrical connections

Establish the following connections on the rear of the remote control brackets (1) when the mechanical assemblies have been mounted and set up:

PLC version:

- Auger limit switches (2)
- Remote control (3)
- Grade control system (4)
- External levelling system (5)

☞ When using an external levelling system, this must be logged in using the remote control menu.

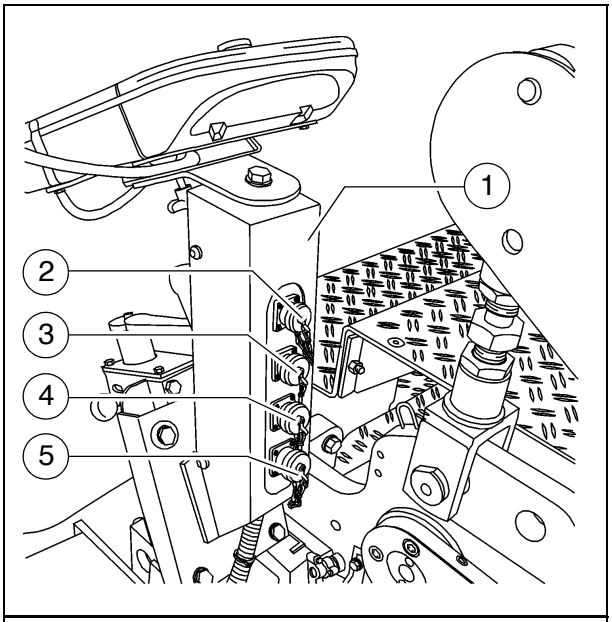

Conventional version:

- Remote control (6)
- Auger limit switches (7)
- Automatic levelling system (8)

☞ Always seal unused sockets with the relevant protective caps!

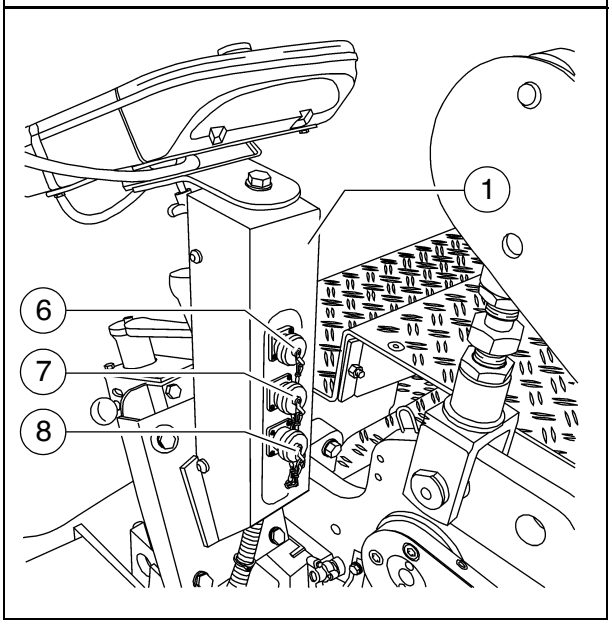

https://truckmanualshub.com/

12.1 Machine operation without remote control / side board

☞ The machine can only be driven without connected remote control if the corresponding bridge connectors have been fitted on both sides of the machine.

Side board with mounted remote bracket:

- Fit bridge connector (1) in the socket of the remote control and secure with cap.
- Check that the connection box is plugged in (2).

Side board removed:

- Fit bridge connector (3) in the socket of the connection box and secure with cap.

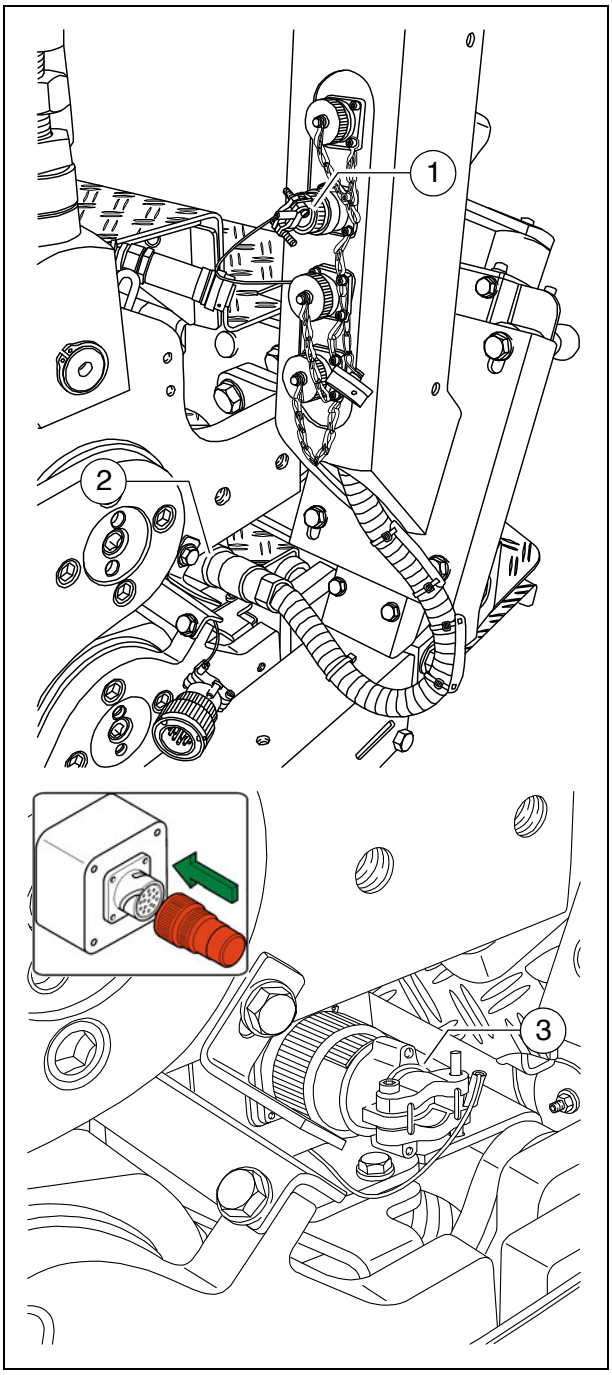

https://truckmanualshub.com/

https://truckmanualshub.com/

F 10 Maintenance

1 Notes regarding safety

DANGER	Danger due to changes at the vehicle
	Structural chances to the vehicle make the operating licence null and void and can cause severe to fatal injuries! - Only use original spare parts and approved accessories. - After maintenance and repair work, ensure that any dismantled protective and safety devices are all completely fitted again. - Comply with all further information in these instructions and in the safety manual.

DANGER	Danger due to incorrect vehicle maintenance
	Incorrectly performed maintenance and repair work can cause severe or fatal injuries! - Ensure that maintenance and repair work is always only carried out by trained, specialist staff. - All maintenance, repair and cleaning work should only be carried out with the engine turned off. Remove ignition key and main switch. - Affix a sign "Do not start" to the vehicle. - Perform a visual inspection and check all functions every day. - Proceed with all maintenance tasks according to the maintenance schedule. - Proceed with expert inspection every twelve months. - Eliminate all ascertained faults straight away. - Do not restart the vehicle until all ascertained faults have been eliminated. - Failure to comply with the prescribed inspection and maintenance work renders the operating licence null and void! - Comply with all further information in these instructions and in the safety manual.

https://truckmanualshub.com/

CAUTION	Hot surfaces!
	Surfaces including those behind covering parts, together with combustion fuels from the engine or screed heater can be very hot and cause injuries! - Wear your personal safety gear. - Do not touch hot parts of the vehicle. - Only perform maintenance and repair work after the vehicle has cooled down. - Comply with all further information in these instructions and in the safety manual.

CAUTION	Danger due to electric shock
	Injuries can be caused by touching live parts directly or indirectly! - Do not remove any protective safeguards. - Never spray water on electric or electronic components. - Maintenance work to the electric system should only be carried out by trained specialist staff. - When equipped with electric screed heater, check the insulation monitoring every day according to the instructions. - Comply with all further information in these instructions and in the safety manual.

Cleaning: Do not use any inflammable substances (such as petrol).
Avoid directly cleaning electrical parts and insulation material with a steam jet; cover them up beforehand.

Working in enclosed environments: Exhaust fumes must be conducted into the open air. Propane gas bottles must not be stored in closed rooms.

In addition to these maintenance instructions, the maintenance instructions issued by the engine manufacturer must be adhered to under all circumstances. All maintenance work and service intervals itemised here are binding in nature.

Information on how to maintain the optional equipment can be found in the individual sub-sections of this chapter!

https://truckmanualshub.com/

F 28 Maintenance review

1 Maintenance review

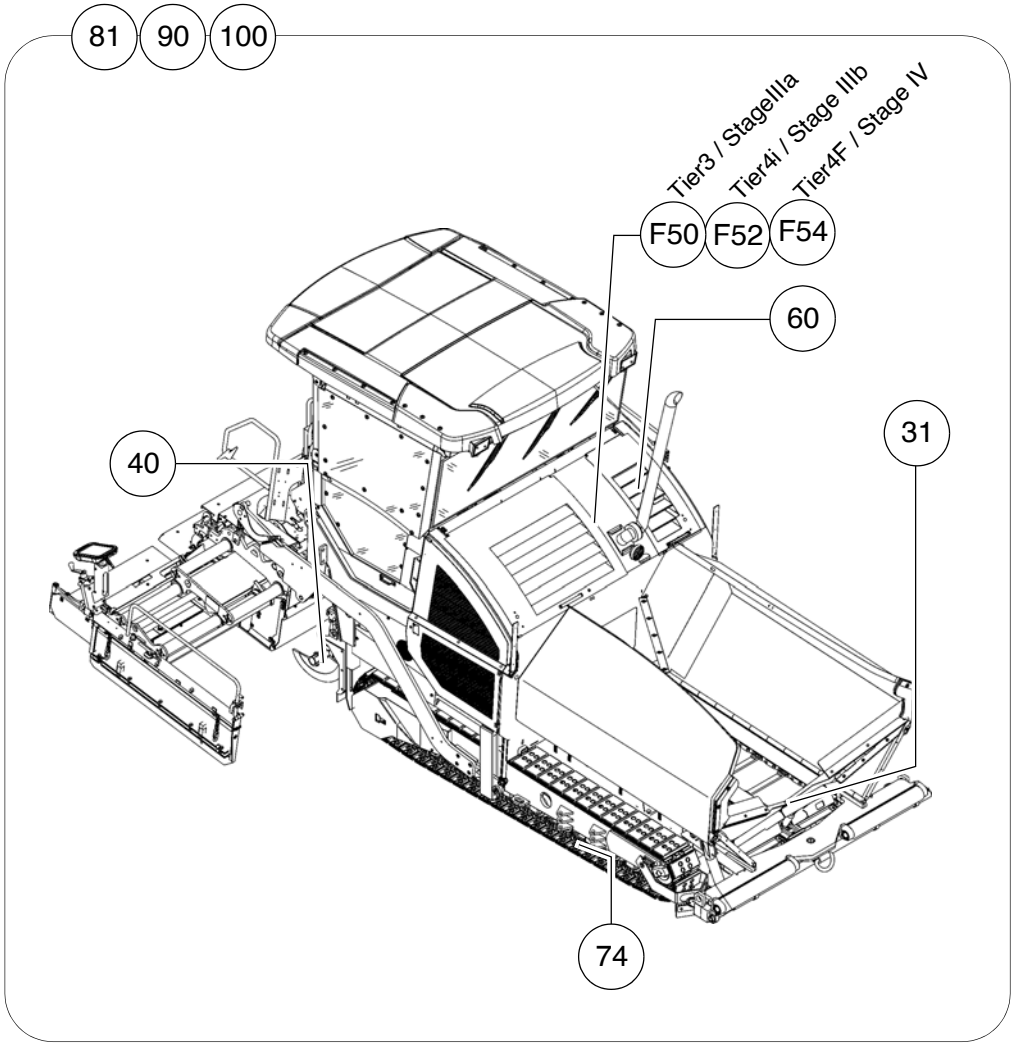

https://truckmanualshub.com/

Assembly	Chapter	Maintenance required after the following service hours										
		10	50	100	250	500	1000 / annually	2000 / every 2 years	4000 / every 3 years	5000	20000	If necessary
Conveyor	F31	■		■								■
Auger	F40	■	■	■	■		■	■				■
Engine - Tier3 / Stage IIIa	F50	■			■	■	■	■				■
Engine - Tier4i / Stage IIIb	F52	■			■	■	■	■		■		■
Engine- Tier4F / Stage IV	F54	■			■	■	■	■	■			■
Hydraulics	F60	■	■			■	■	■				■
Drive units	F74	■	■	■	■	■	■					■
Electronics	F81	■	■	■	■							■
Lubrication points	F90	■	■					■				■
Checking/stopping	F100	■					■					■

Maintenance required	■

☞ In this overview, you will find the maintenance intervals for optional machine equipment!

https://truckmanualshub.com/

F 31 Maintenance - conveyor

1 Maintenance - conveyor

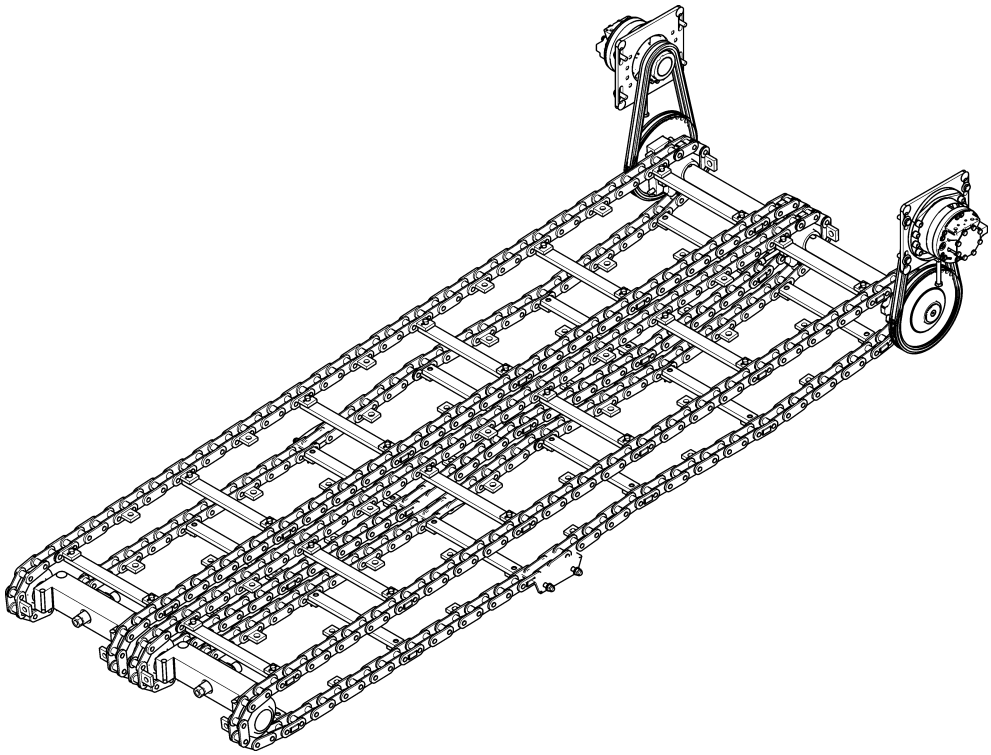

https://truckmanualshub.com/

WARNING	**Danger of being pulled in by rotating or conveying vehicle parts**
	Rotating or conveying vehicle parts can cause severe or fatal injuries! - Do not enter the danger zone. - Do not reach into rotating or conveying parts. - Only wear close-fitting clothing. - Comply with the warning and information signs on the vehicle. - Stop the engine and remove the ignition key before any maintenance work. - Comply with all further information in these instructions and in the safety manual.

CAUTION	**Danger from heavy loads**
	Lowering vehicle parts may cause injuries! - When the vehicle is parked and during maintenance and transport, close both halves of the hopper and fit the corresponding hopper transport safeguards. - When the vehicle is parked and during maintenance and transport, raise the screen and fit the corresponding screed transport safeguards. - Ensure that opened hoods and covering parts are locked properly. - Comply with all further information in these instructions and in the safety manual.

CAUTION	**Hot surfaces!**
	Surfaces including those behind covering parts, together with combustion fuels from the engine or screed heater can be very hot and cause injuries! - Wear your personal safety gear. - Do not touch hot parts of the vehicle. - Only perform maintenance and repair work after the vehicle has cooled down. - Comply with all further information in these instructions and in the safety manual.

https://truckmanualshub.com/

1.1 Maintenance intervals

Item	Interval								Maintenance point	Note
	10	50	100	250	500	1000 / annually	2000 / every 2 years	If necessary		
1	■								- Conveyor chain - Check tightness	
								■	- Conveyor chain - Adjust tension	
								■	- Conveyor chain - Replace chain	
2			■						- Conveyor drive - drive chains - Check chain tightness	
								■	- Conveyor drive - drive chains - Adjust chain tightness	
3								■	- Replace conveyor deflectors / conveyor plates	

Maintenance	■
Maintenance during the running-in period	▼

https://truckmanualshub.com/

1.2 Points of maintenance

Chain tension, conveyor (1)

Check chain tension:

When the conveyor chain is correctly tensioned, the lower edge of the chain is approx. 20-25mm over the lower edge of the chassis.

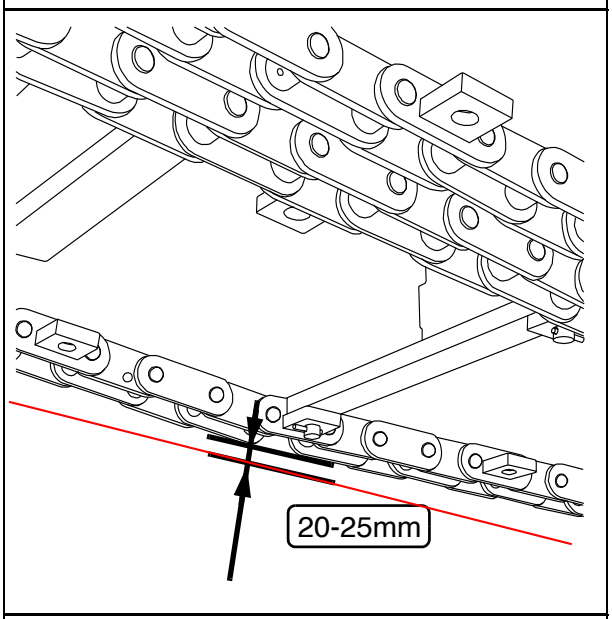

⚠ The conveyor chains should not be too tight or too slack. An excessively taut chain can cause the chain to be stopped or to break when material falls into the space between the chain and the sprocket.
An excessively slack chain may catch on protruding objects and be destroyed.

Adjustment of chain tension:

☞ The chain tension is adjusted with grease tensioners. The filling connections (A) are located behind the bumper on the left and right sides.

- Add grease with a grease gun until the correct chain tension is set.

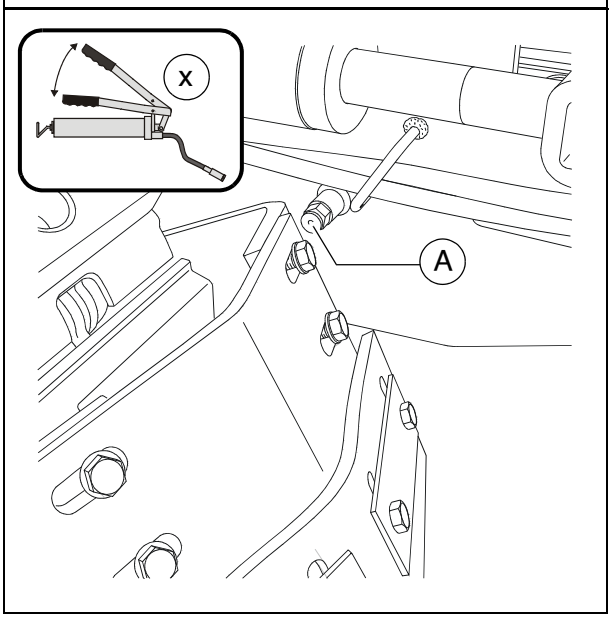

https://truckmanualshub.com/

Check / replace chain:

At the latest, the conveyor chains (A) must be replaced when their elongation has progressed so far that they can no longer be re-tensioned.

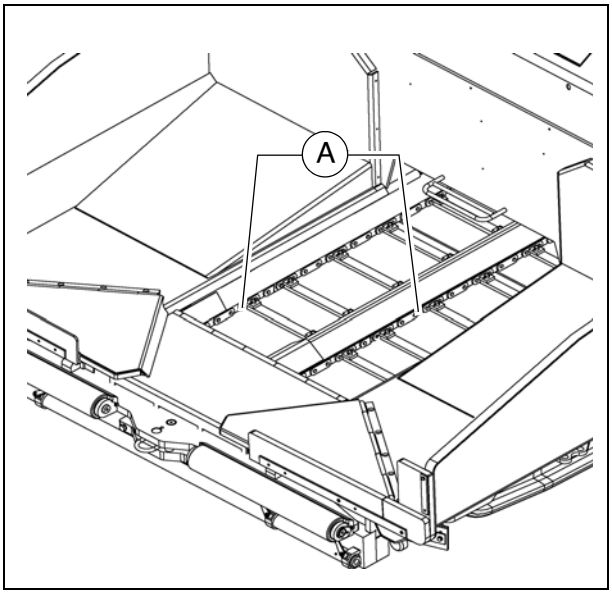

Chain links must not be removed to shorten the chain!
Incorrectly dividing the chains would lead to the destruction of the drive wheels!

If components have to be replaced as a result of wear, the following components should always be replaced in sets:

- Conveyor chain
- Conveyor deflectors
- Conveyor plates
- Deflector plates
- Conveyor chain reversing rollers
- Conveyor drive chain sprockets

Your Dynapac customer service will be happy to provide support during maintenance, repair and the replacement of wearing parts!

https://truckmanualshub.com/

Conveyor drive - drive chains (2)

To **check the chain tension**:

- If the tension has been set properly, the chain must be able to move freely approx. 10 - 15 mm.

To **re-tension** the chains

- Unfasten mounting screws (A) and lock nut (B) slightly.
- Use the tensioning screw (C) to set the required chain tightness.
- Retighten mounting screws (A) and lock nuts (B) correctly.

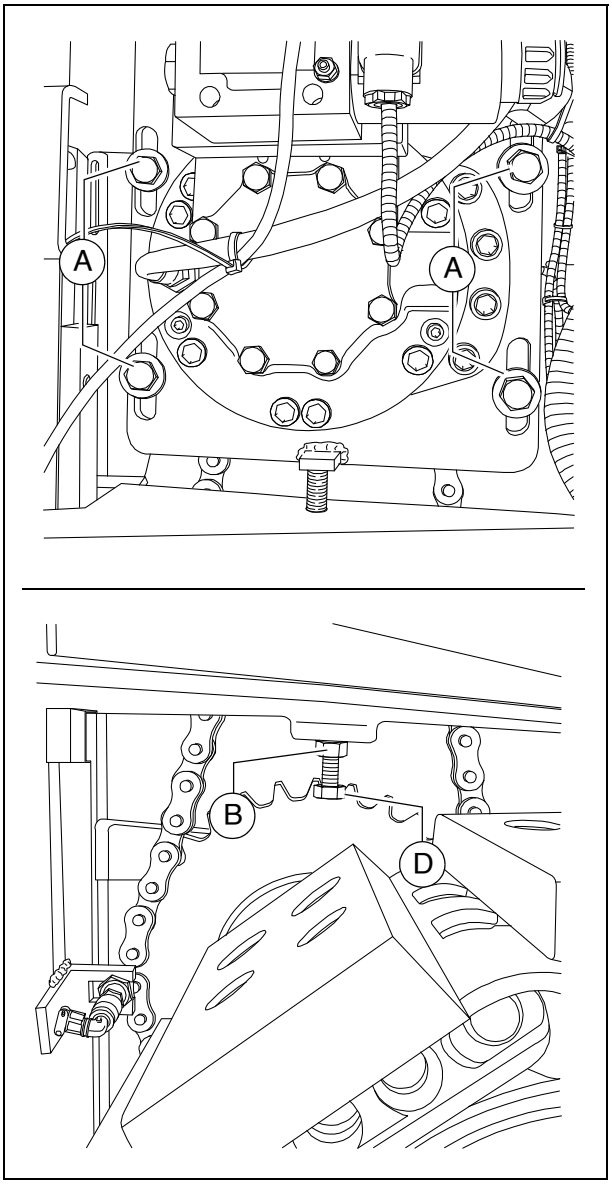

https://truckmanualshub.com/

Conveyor deflectors / conveyor plates (3)

At the latest, the conveyor deflectors (A) must be replaced when their lower edges are worn or reveal holes.

The conveyor chain is not offered protection by worn conveyor deflectors!

- Remove conveyor deflector bolts.
- Remove the conveyor deflectors from the material tunnel.
- Install new conveyor deflectors with new bolts.

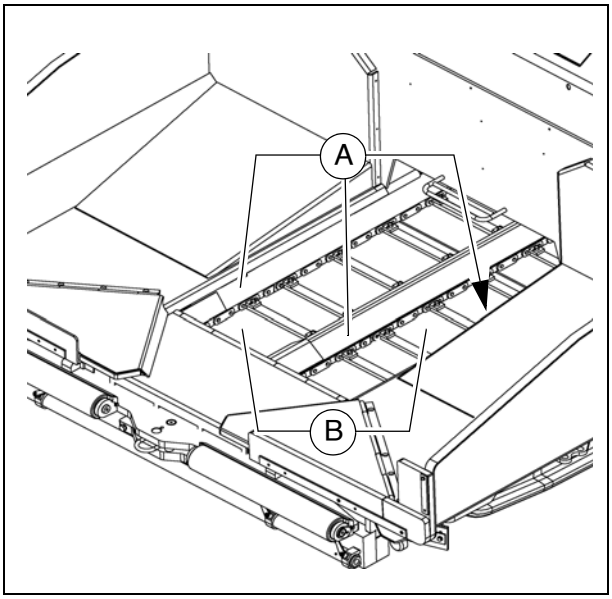

At the latest, the conveyor plates (B) must be replaced when the wear limit of 5 mm in the rear area beneath the chain has been reached.

If components have to be replaced as a result of wear, the following components should always be replaced in sets:

- Conveyor chain
- Conveyor deflectors
- Conveyor plates
- Deflector plates
- Conveyor chain reversing rollers
- Conveyor drive chain sprockets

Your Dynapac customer service will be happy to provide support during maintenance, repair and the replacement of wearing parts!

https://truckmanualshub.com/

https://truckmanualshub.com/

F 40 Maintenance - auger assembly

1 Maintenance - auger assembly

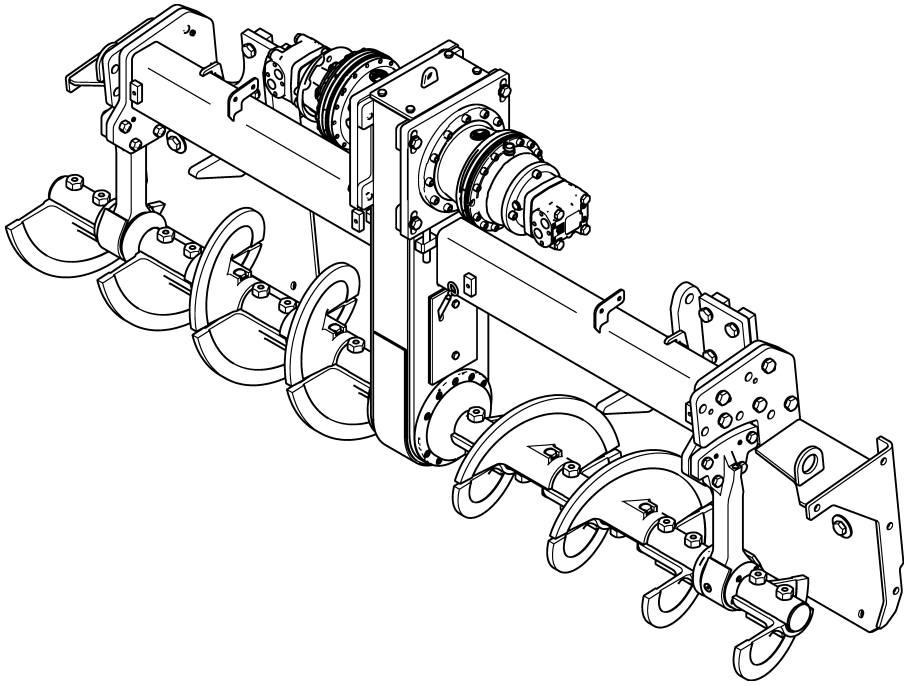

https://truckmanualshub.com/

WARNING	**Danger of being pulled in by rotating or conveying vehicle parts**
	Rotating or conveying vehicle parts can cause severe or fatal injuries! - Do not enter the danger zone. - Do not reach into rotating or conveying parts. - Only wear close-fitting clothing. - Comply with the warning and information signs on the vehicle. - Stop the engine and remove the ignition key before any maintenance work. - Comply with all further information in these instructions and in the safety manual.

CAUTION	**Hot surfaces!**
	Surfaces including those behind covering parts, together with combustion fuels from the engine or screed heater can be very hot and cause injuries! - Wear your personal safety gear. - Do not touch hot parts of the vehicle. - Only perform maintenance and repair work after the vehicle has cooled down. - Comply with all further information in these instructions and in the safety manual.

https://truckmanualshub.com/

1.1 Maintenance intervals

Item	Interval									Maintenance point	Note
	10	50	100	250	500	1000 / annually	2000 / every 2 years	5000	If necessary		
1	■									- Outer auger bearing - Lubricate	
2						■				- Auger planetary gear - Check oil level	
									■	- Auger planetary gear - Top up oil	
				▼			■			- Auger planetary gear - Change oil	
3			■							- Auger drive chains - Check tension	
									■	- Auger drive chains - Adjust tension	
4				■						- Auger box - Check oil level	
									■	- Auger box - Top up oil	
						■				- Auger box - Change oil	
5								■		- Seals and sealing rings - Check wear	
									■	- Seals and sealing rings - Replace seals	

Maintenance	■
Maintenance during the running-in period	▼

https://truckmanualshub.com/

Item	Interval									Maintenance point	Note
	10	50	100	250	500	1000 / annually	2000 / every 2 years	5000	If necessary		
6				▼						- Gearbox bolts - Check tightening	
									■	- Gearbox bolts - Tighten to correct torque	
7		▼							▼	- Outer bearing bolts - Check tightening	
									■	- Outer bearing bolts - Tighten to correct torque	
8			■							- Auger blade - Check wear	
									■	- Auger blade - Replace auger blade	

Maintenance	■
Maintenance during the running-in period	▼

https://truckmanualshub.com/

1.2 Points of maintenance

Outer auger bearing (1)

The grease nipples are located on each side at the top of the outer auger bearings.

These nipples must be lubricated at the end of work to force out any bitumen residues which may have entered and to supply the bearings with fresh grease when warm.

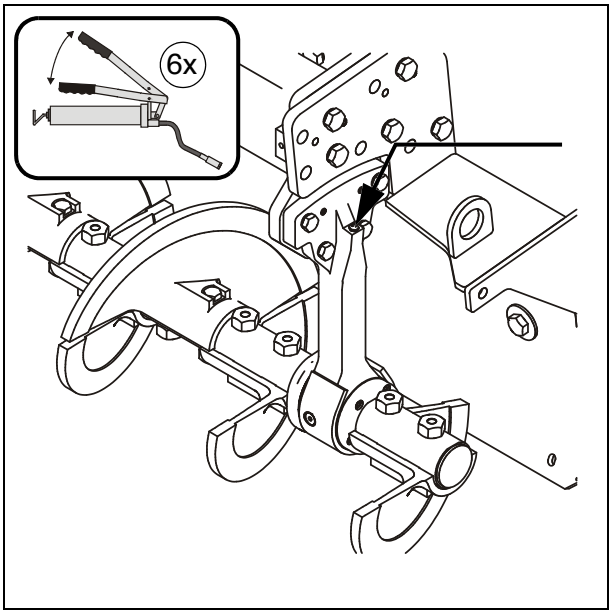

☞ If the auger is extended, the outer rings should be loosened slightly when initially greasing the outer bearing points in order to improve ventilation on greasing. The outer rings must be properly secured again after greasing.

☞ New bearings must be filled with 6 strokes of grease using a grease gun.

https://truckmanualshub.com/

Auger planetary gear (2)

- For **oil level check** unscrew and remove the inspection bolt (A).

☞ When oil level is correct, the oil comes up to the lower edge of the inspection bore or a small amount of oil escapes through the aperture.

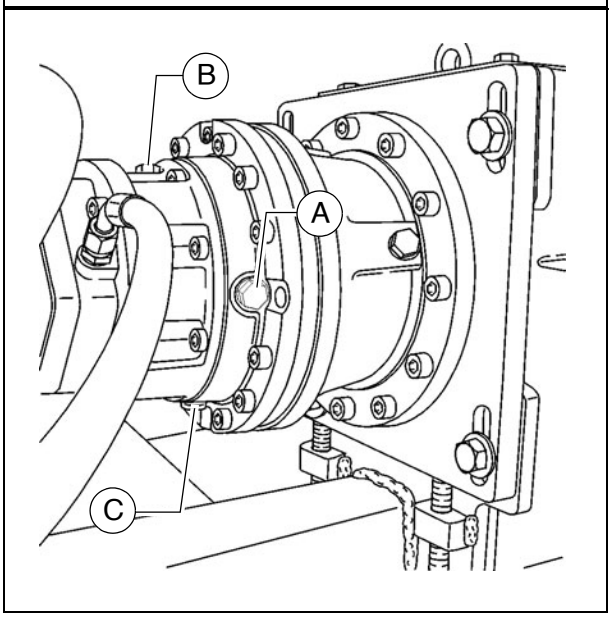

For **filling in** the oil:

- Unscrew inspection screw (A) and filler screw (B).
- Fill in the specified oil into the filler bore at (B) until the oil level has reached the lower edge of the inspection bore (A).
- Screw the filler (B) and inspection screws (A) back in.

To **change** oil:

☞ The oil should be changed when at operating temperature.

- Unscrew the filler screw (B) and drain plug (C).
- Drain the oil.
- Screw the drain plug (C) back in.
- Unscrew the inspection screw (A).
- Fill the specified oil into the filler bore at (B) until the oil level has reached the lower edge of the inspection bore (A).
- Screw the filler (B) and inspection screws (A) back in.

https://truckmanualshub.com/

Drive chains of the augers (3)

To **check the chain tension**:

- Manually turn both augers to the right and left. In this case, movement clearance (C) at the augers' outer circumference should be 10 mm.

Risk of injury due to sharp-edged parts!

To **re-tension** the chains

- Release the mounting screws (A).
- Set the chain tension correctly using the threaded pins (B):
  - Tighten the threaded pins to 20 Nm using a torque wrench.
  - Subsequently loosen the threaded pins again by one full revolution.
- Retighten the bolts (A).

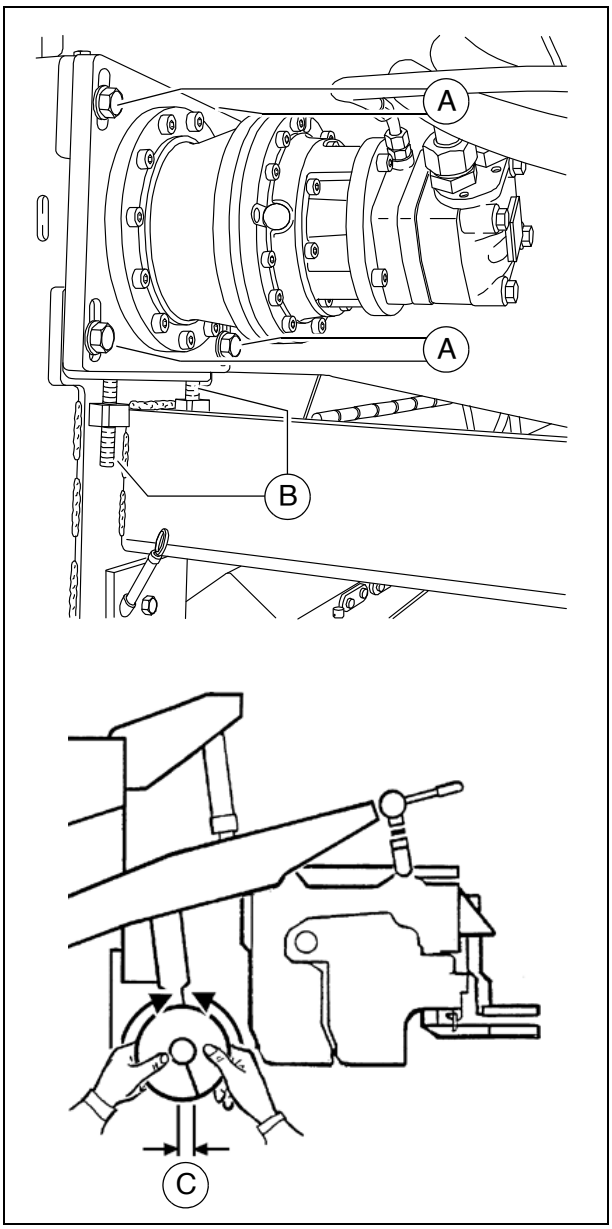

https://truckmanualshub.com/

Auger box (4)

Check oil level

☞ In case of correct oil level, the oil is between the two notches of the dipstick (A).

For **filling in** the oil:

- Unscrew screws (B) from the top cover of the auger box.
- Take off the cover (C).
- Fill up oil to correct level.
- Reinstall the cover.
- Use dipstick to check level again.

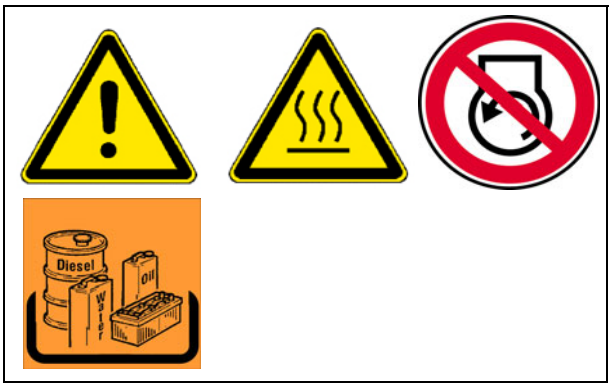

Change oil

☞ The oil should be changed when at operating temperature.

- Place a suitable collecting container under the auger box.
- Loosen bolts (D) from the circumference of the worm shaft flange.

☞ The oil runs out between the flange and auger box.

- Drain out all oil.
- Correctly retighten flange bolts (D) diagonally.
- Pour the specified oil in through the open top cover (C) of the auger box until the oil level has reached the correct level on the dipstick (A).
- Correctly reinstall the cover (C) and screws (B).

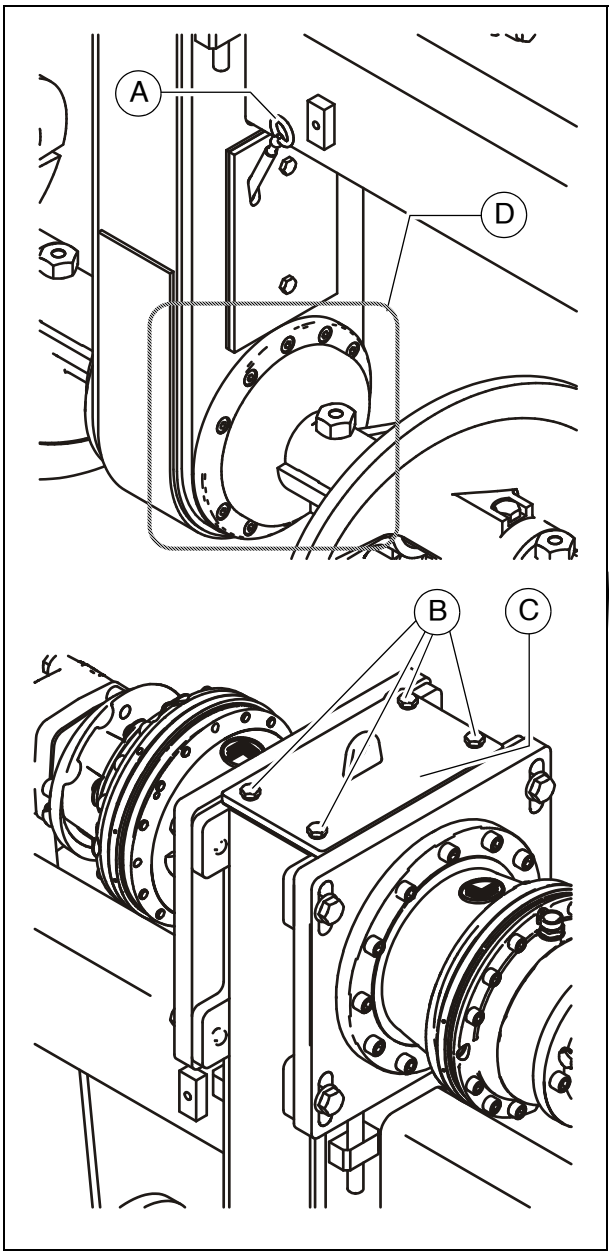

https://truckmanualshub.com/

Seals and sealing rings (5)

After reaching operating temperature, check the gearbox for leaks.

In case of visible leaks, e.g. between the flange surfaces (A) of the gearbox, replacement of the seals and sealing rings is necessary.

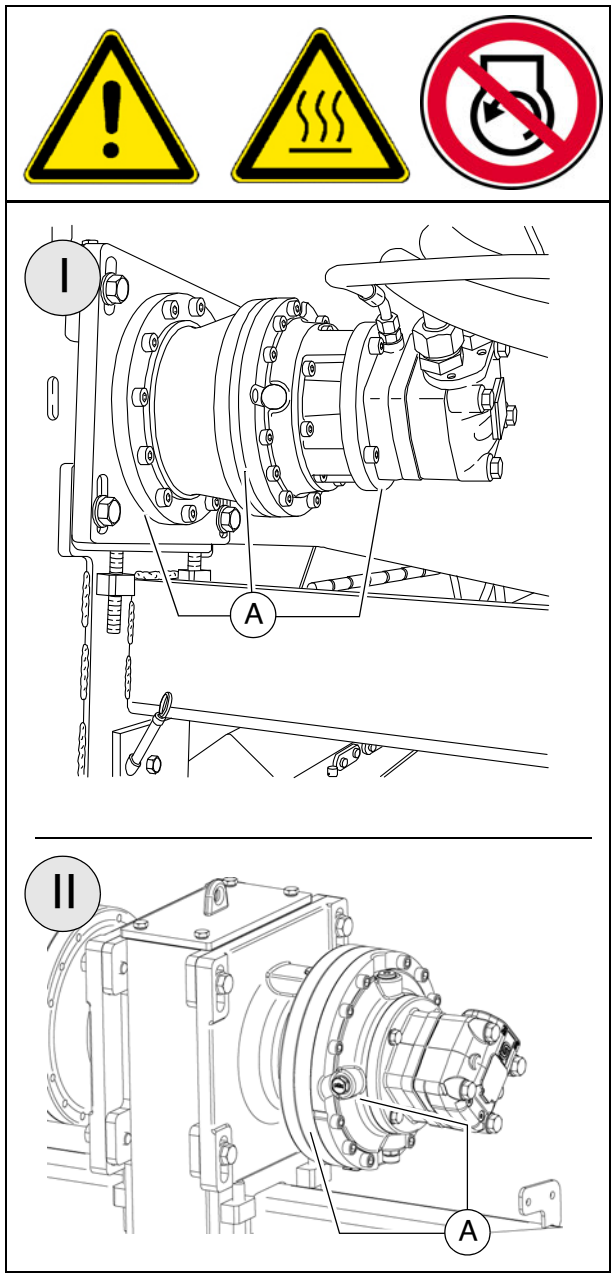

https://truckmanualshub.com/

Gearbox bolts
Check tightening (6)

⚠ Following the running-in period, the tightening torques of the outer gearbox bolts must be checked.

☞ Please check which gear version is used in your vehicle.

- Tighten to the following torques if necessary:
  - (A): 86 Nm
  - (B): 83 Nm
  - (C): 49 Nm
  - (D): 49 Nm
  - (E): 86 Nm

⚠ Check that each bolt has attained the full tightening torque and note the corresponding tightening pattern whilst doing so!

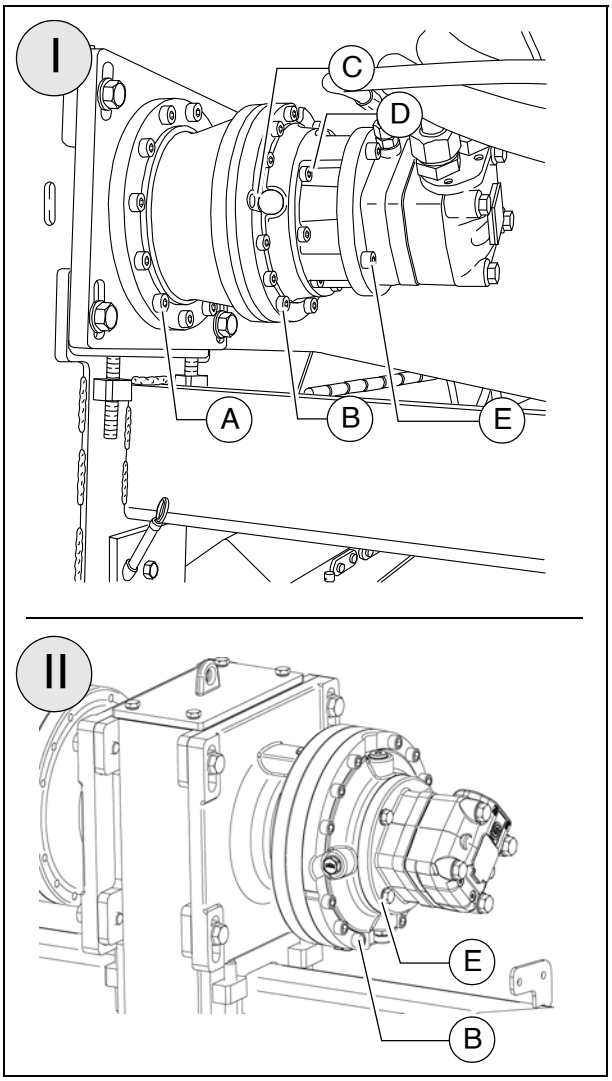

https://truckmanualshub.com/

Mounting screws -
Outer auger bearing
Check tightening (7)

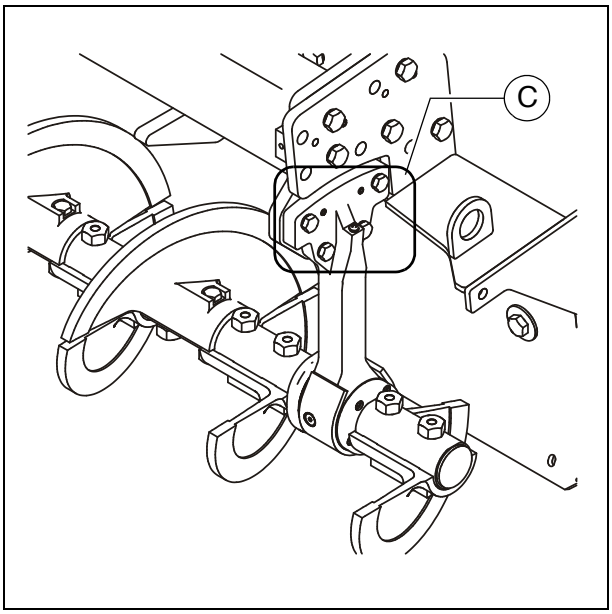

⚠ Following the running-in period, the tightening torques of the outer auger bearing mounting screws must be checked.

- Tighten to the following torques if necessary:
  - (F): 210 Nm

⚠ If the auger's working width is changed, the tightening check must be repeated after the running-in period!

https://truckmanualshub.com/

Auger blade (8)

If the surface of the auger blade (A) becomes sharp-edged, the diameter of the auger is reduced and the blades (B) have to be replaced.

- Remove the bolts (C), washers (D), nuts (E) and auger blade (B).

Risk of injury due to sharp-edged parts!

Auger blades must be installed play-free; the contact surfaces must be dirt-free!

- Install the new auger blade (B); replace the bolts (C), washers (D) and nuts (E) if necessary.

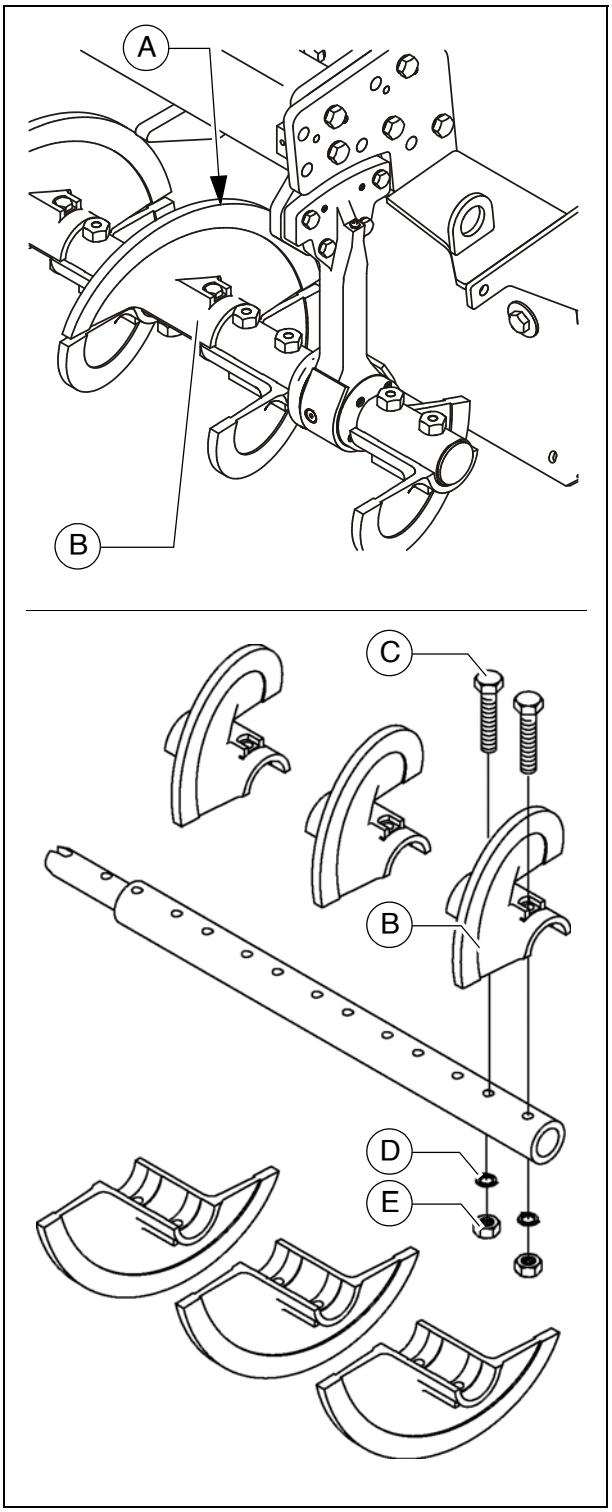

https://truckmanualshub.com/

F 54 Maintenance - engine assembly Tier 4F (○)

1 Maintenance - engine assembly

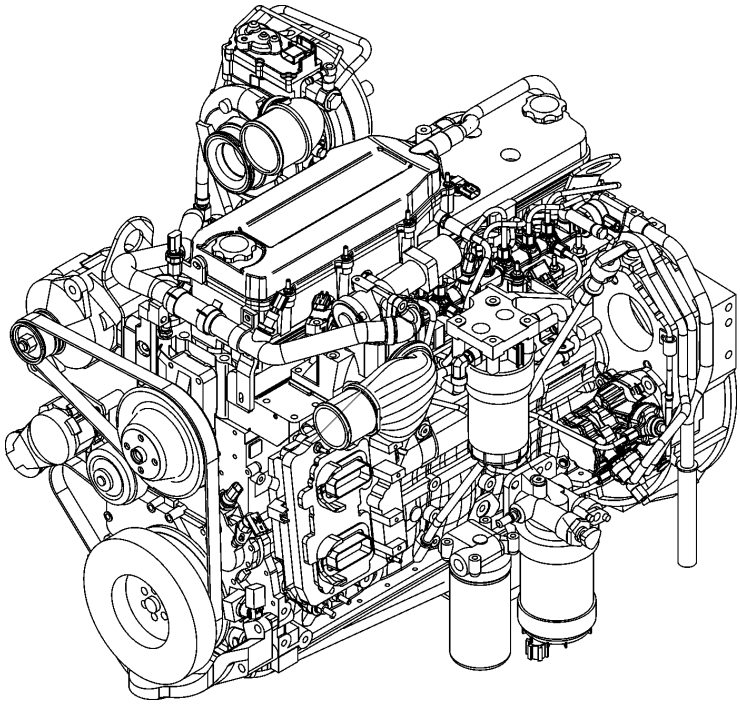

⚠ In addition to these maintenance instructions, the maintenance instructions issued by the engine manufacturer must be adhered to under all circumstances. All maintenance work and service intervals itemised here are binding in nature.

https://truckmanualshub.com/

WARNING	**Danger of being pulled in by rotating or conveying vehicle parts**
	Rotating or conveying vehicle parts can cause severe or fatal injuries! - Do not enter the danger zone. - Do not reach into rotating or conveying parts. - Only wear close-fitting clothing. - Comply with the warning and information signs on the vehicle. - Stop the engine and remove the ignition key before any maintenance work. - Comply with all further information in these instructions and in the safety manual.

CAUTION	**Hot surfaces!**
	Surfaces including those behind covering parts, together with combustion fuels from the engine or screed heater can be very hot and cause injuries! - Wear your personal safety gear. - Do not touch hot parts of the vehicle. - Only perform maintenance and repair work after the vehicle has cooled down. - Comply with all further information in these instructions and in the safety manual.

https://truckmanualshub.com/

1.1 Maintenance intervals

Item	Interval								Maintenance point	Note
	10	50	250	500 / annually	1000 / annually	2000 / every 2 years	4000 / 3 years	If necessary		
1	■								- Fuel tank Check filling level	
								■	- Fuel tank Refill with fuel	
						■			- Fuel tank Clean the tank and system	
2	■								- Engine lube oil system Check oil level	
								■	- Engine lube oil system Top up oil	
				■					- Engine lube oil system Change oil	
				■					- Engine lube oil system Change oil filter	
3	■								- Engine fuel system Fuel filter (drain the water separa-tor)	
				■					- Engine fuel system Replace fuel pre-filter	
				■					- Engine fuel system Replace fuel filter	
								■	- Engine fuel system Bleed fuel system	

Maintenance	■
Maintenance during the running-in period	▼

https://truckmanualshub.com/

Item	Interval								Maintenance point	Note
	10	50	250	500 / annually	1000 / annually	2000 / every 2 years	4000 / 3 years	If necessary		
4	■								- Engine air filter Check air filter	
	■								- Engine air filter Dust collector Emptying	
					■			■	- Engine air filter Air filter cartridge Clean / replace	
5	■								- Engine cooling system Check radiator fins	
			■					■	- Engine cooling system Clean radiator fins	
			■						- Engine cooling system Check level of the coolant	
								■	- Engine cooling system Top up coolant	
				■					- Engine cooling system Check coolant concentration	
								■	- Engine cooling system Coolant concentration Adjust	
						■			- Engine cooling system Change coolant	

Maintenance	■
Maintenance during the running-in period	▼

https://truckmanualshub.com/

Pos.	Interval								Points of maintenance	Note
	10	50	250	500 / annually	1000 / annually	2000 / 2 years	4000 / 3 years	as required		
6	■								- AdBlue® / DEF tank Check filling level	
								■	- AdBlue® / DEF tank Top up AdBlue® / DEF	
						■		■	- AdBlue® / DEF tank Replace suction filter	
			■						- AdBlue® / DEF tank Check tank cover	
								■	- AdBlue® / DEF tank Clean tank cover	
							■		- AdBlue® / DEF dosing unit Inspection and cleaning	
							■	■	- AdBlue® / DEF dosing unit Replace filter	
							■		- Check hoses and lines for damage	

Maintenance	■
Maintenance during the running-in period	▼

https://truckmanualshub.com/

Item	Interval								Maintenance point	Note
	10	50	250	500 / annually	1000 / annually	2000 / every 2 years	4000 / 3 years	wenn erforderlich		
7			■						- Engine drive belt Check drive belt	
								■	- Engine drive belt Tighten drive belt	
					■				- Engine drive belt Replace drive belt	
8						■			- Crankshaft ventilation filter Replace filter element	
9							■		- Exhaust system / Inspect diesel oxidation catalytic converter	

Maintenance	■
Maintenance during the running-in period	▼

https://truckmanualshub.com/

1.2 Points of maintenance

Engine fuel tank (1)

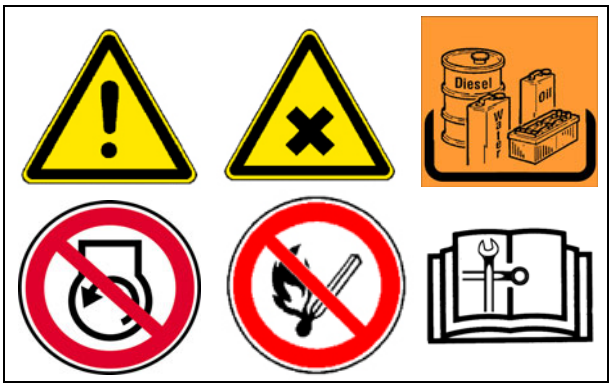

- Check the **filling level** on the gauge on the operating panel.

☞ Fill the fuel tank each time before starting work so that the fuel system cannot "run dry" and time-consuming venting (bleeding) can therefore be avoided.

⚠ Observe the instructions for fuel recommendations and the specification in the chapter on "Lubricants and operating substances"!

GEFAHR	**Danger from ultra low-sulphur diesel**
	Ultra low-sulphur diesel (ULSD) poses a greater risk of combustion from static electricity than earlier grades of diesel that contained more sulphur. An explosion or combustion can cause severe to fatal injuries ! - When refuelling vehicles, always ensure that the fuel pump is earthed with equipotential bonding to the vehicle. - When a fuel pump has correct equipotential bonding, there is a continuous electrically conductive connection between all components of the fuel pump and the vehicle being refuelled. - Contact your fuel supplier or the supplier of your refuelling system to ensure that the fuel pump complies with the currently valid refuelling standards and that correct earthing and equipotential bonding is warranted.

https://truckmanualshub.com/

For **filling in** the fuel:

- Unscrew cap (A).
- Fill in fuel through the filling port until the required fill lever is achieved.
- Replace the cap (A).

Clean the tank and system:

- Unscrew the drain plug (B) at the bottom of the tank and drain into a collection pan about 1 l fuel.
- When returning the screw, make sure to use a new seal.

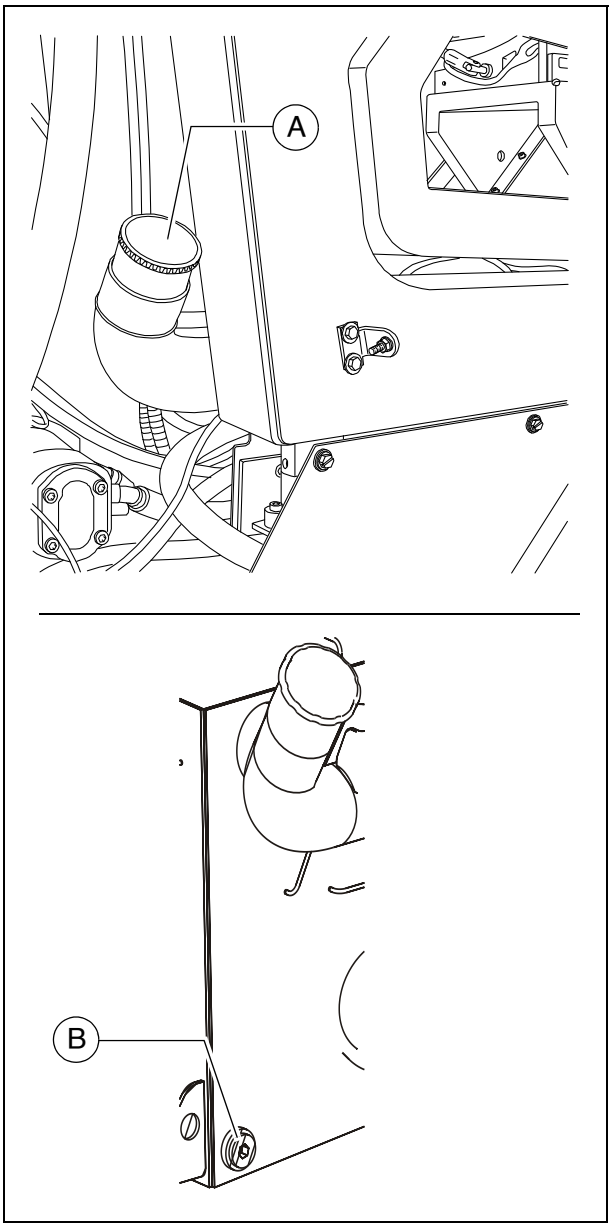

https://truckmanualshub.com/

Engine lube oil system (2)

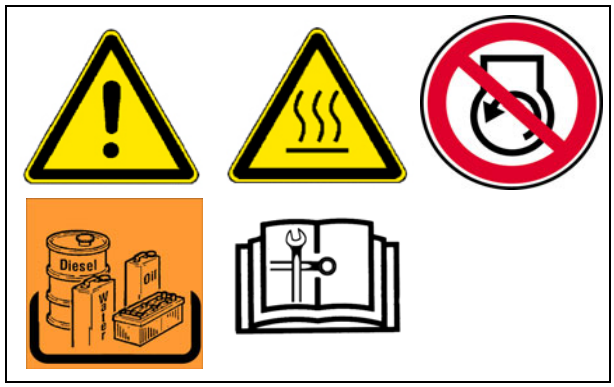

Check oil level

In case of correct oil level, the oil is between the two notches of the dipstick (A).

Only check the oil level when the finisher is in a horizontal position!

Too much oil in engine damages gaskets; too little oil results in overheating and engine destruction.

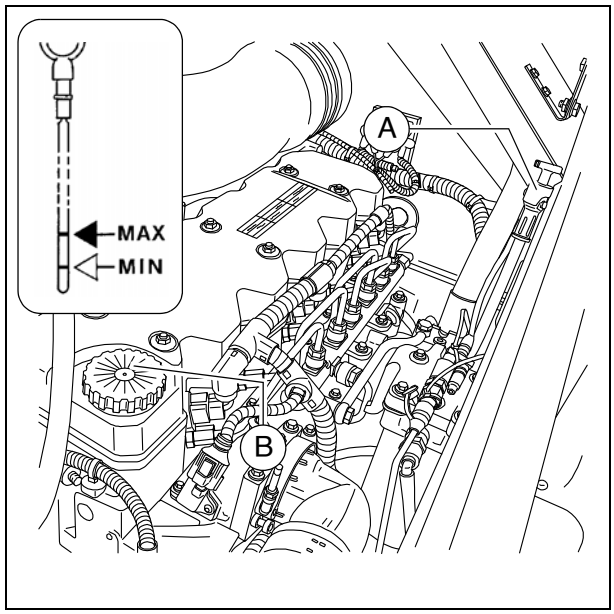

For **filling in** the oil:

- Remove cap (B).
- Fill up oil to correct level.
- Return cap (B).
- Use dipstick to check level again.

Oil change:

The oil drain screw is accessed via the cover (C) in the vehicle's material tunnel:

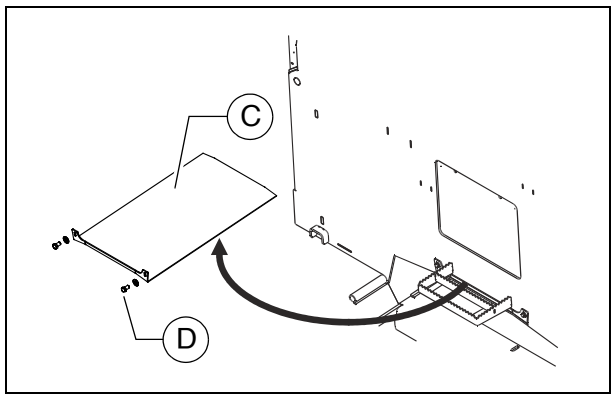

- Remove the bolts (D) from the frame and pull the cover (C) out in the direction of travel.
- After completing the maintenance work, reinstall the cover (C) properly.

Change the oil when the engine is at operating temperature.

https://truckmanualshub.com/

- Position a collecting container beneath the oil pan oil drain screw (E).
- Remove the oil drain screw (E) and allow the oil to drain completely.
- Reinstall the oil drain screw (E) with a new seal and tighten properly.
- Fill in the specified quality of oil through the filler opening (B) on the engine until the oil level rises to the correct mark on the dipstick (A).

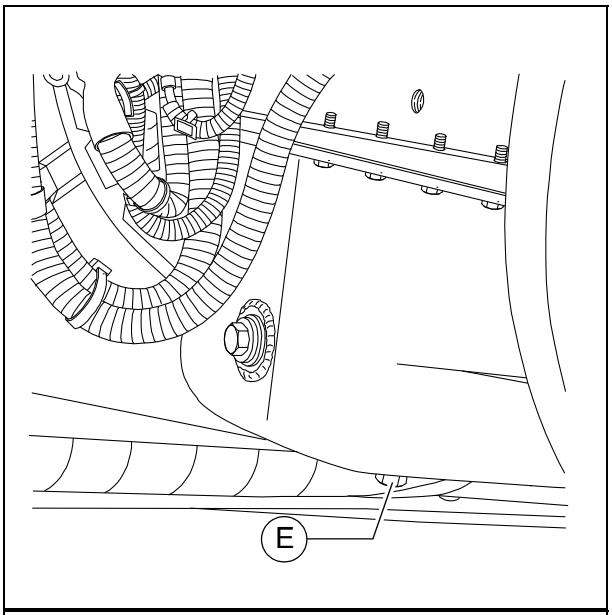

☞ When fitted with the optional asphalt fume control system, there is a drainage hose behind the left side flap.

- Place the end of the oil drain port hose (E1) in the collection container.
- Remove the screw cap with a wrench and allow the oil to drain completely.
- Replace the screw cap and tighten properly.
- Refill with oil as described above.

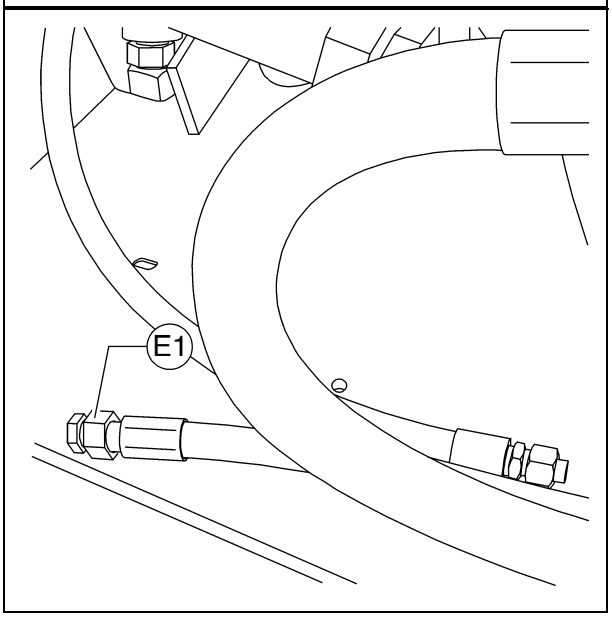

Changing the oil filter:

☞ All filters are accessed via the service flap (F) on the vehicle's centre wall:

- Remove the screws (G) from the inner side of the frame and remove the service flap (F).
- After completing the maintenance work, reinstall the service flap (F) properly.

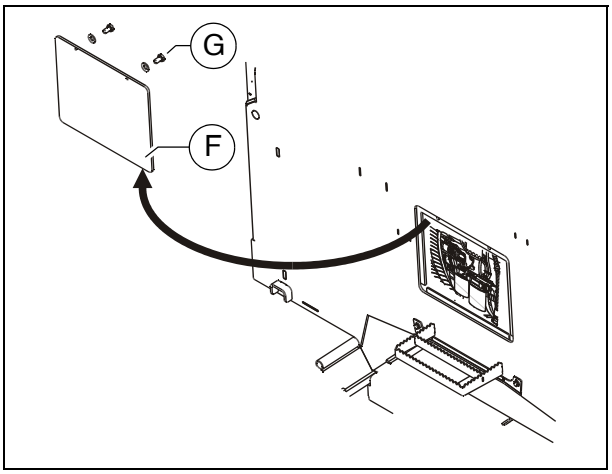

https://truckmanualshub.com/

☞ The new filter is inserted during an oil change once the used oil has been drained out.

- Loosen the filter (H) with a filter wrench or filter strap and unscrew it. Clean the contact surface.
- Apply light coating of oil to the gasket on the new filter and fill filter with oil before installing it.
- Lightly oil the filter cartridge gasket and screw under the bracket.
- Once the gasket has contact with the filter head, turn the filter another 3/4 to full revolution.

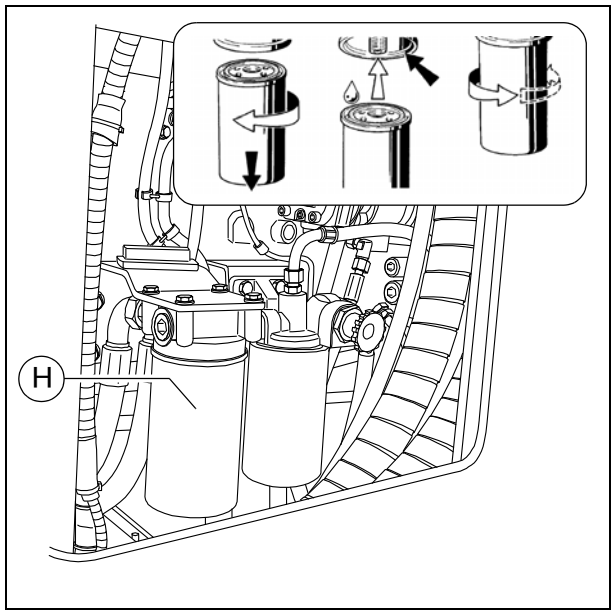

☞ After installing the oil filter, attention must be paid to the oil pressure display and good sealing during the test run. Check oil level again.

https://truckmanualshub.com/

Engine fuel system (3)

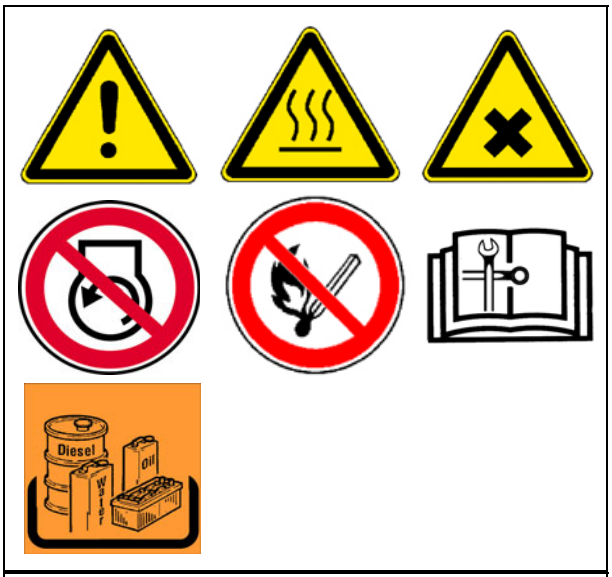

All filters are accessed via the service flap (A) on the vehicle's centre wall:

- Remove the screws (B) from the inner side of the frame and remove the service flap (A).
- After completing the maintenance work, reinstall the service flap (A) properly.

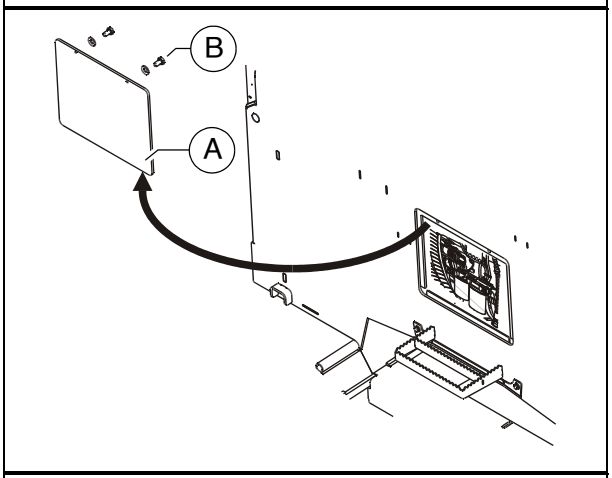

The fuel filter system consists of two filters:

- Prefilter with water separator (C)
- Main filter (D)

Prefilter - draining of water

Drain the collecting vessel at regular intervals, or in response to an error message from the engine control unit.

- Drain off separated water at the cock (E) and collect, then close the cock again.

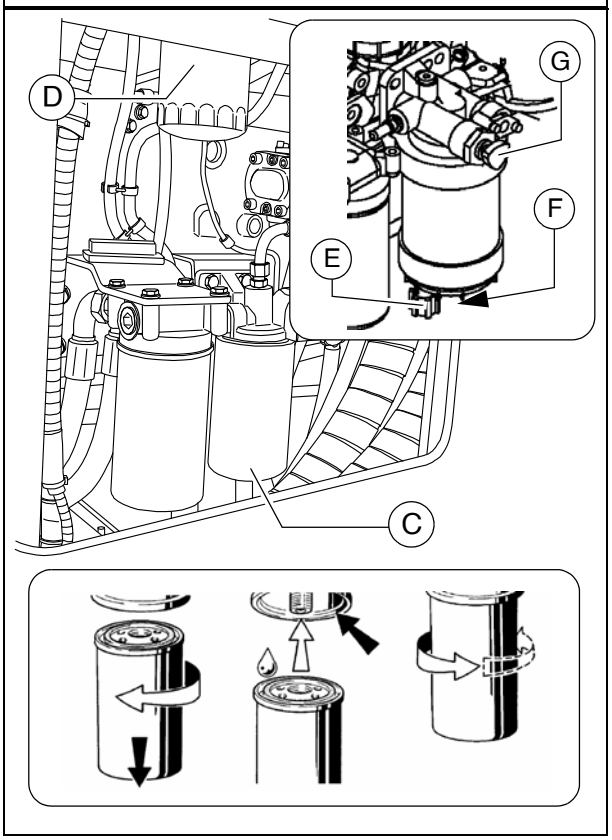

https://truckmanualshub.com/

Changing the prefilter:

- Drain off separated water at the cock (E) and collect, then close the cock again.
- Pull off the water sensor (F) connector.
- Loosen the filter cartridge (C) using a filter wrench or filter strap and unscrew.
- Clean sealing surface of filter bracket.
- Lightly oil the filter cartridge gasket and screw under the bracket.
- Once the gasket has contact with the filter head, turn the filter another 3/4 to full revolution.
- Reconnect the water sensor (F) connector.

Bleeding the pre-filter:

- Release the manual fuel pump's (G) bayonet lock by pressing and simultaneously turning counter-clockwise.
- The pump plunger is now pressed out via the spring.
- Pump until a very high resistance is perceptible and pumping can only be carried out very slowly.
- Now continue pumping a few more times. (The return line must be filled).
- Start the engine and operate for approx. 5 minutes at idle speed or low load.
- Check the prefilter for leaks whilst doing this.
- Lock the manual fuel pump's (G) bayonet lock by pressing and simultaneously turning clockwise.

Replacing the main filter:

- Loosen the filter cartridge (D) using a filter wrench or filter strap and unscrew.
- Clean sealing surface of filter bracket.
- Lightly oil the filter cartridge gasket and screw under the bracket.
- Once the gasket has contact with the filter head, turn the filter another 3/4 to full revolution.

☞ Torque: 38Nm

☞ After fitting the filter, ensure good sealing action during the test run.

https://truckmanualshub.com/

Change extraction filter (○)

☞ The air outlet shaft (A) has to be dismantled first in order to reach the filters.

- Open engine hood, remove screws (B) underneath the shaft.
- Loosen clips (C) on inside of frame and remove air outlet shaft (A).
- After completing the maintenance work, fit the air outlet shaft again in reverse order.

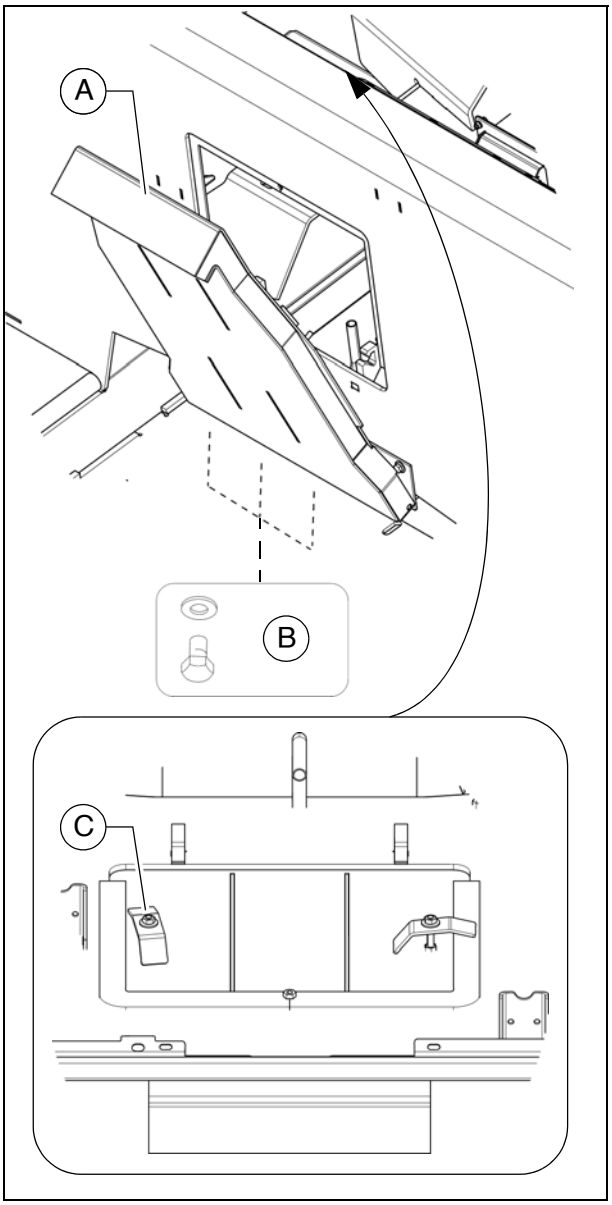

https://truckmanualshub.com/

Engine air filter (4)

Empty dust collector

- Empty the dust removal valve (A) on the air filter housing by compressing the discharge slot.
- Remove any baked on dust by pressing together the upper valve section.

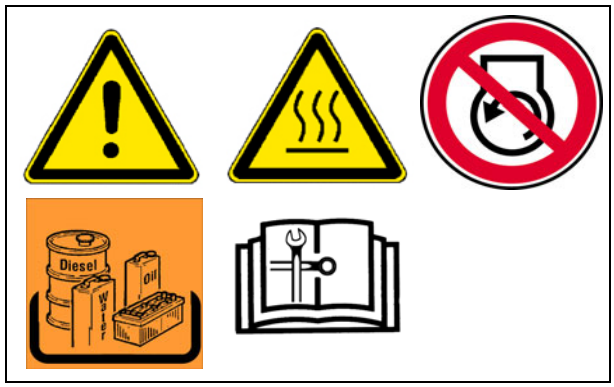

- Open the collector housing (B) at the clips (C) and remove dust accumulations.
- Properly reposition the collector housing and lock at the clips (C).

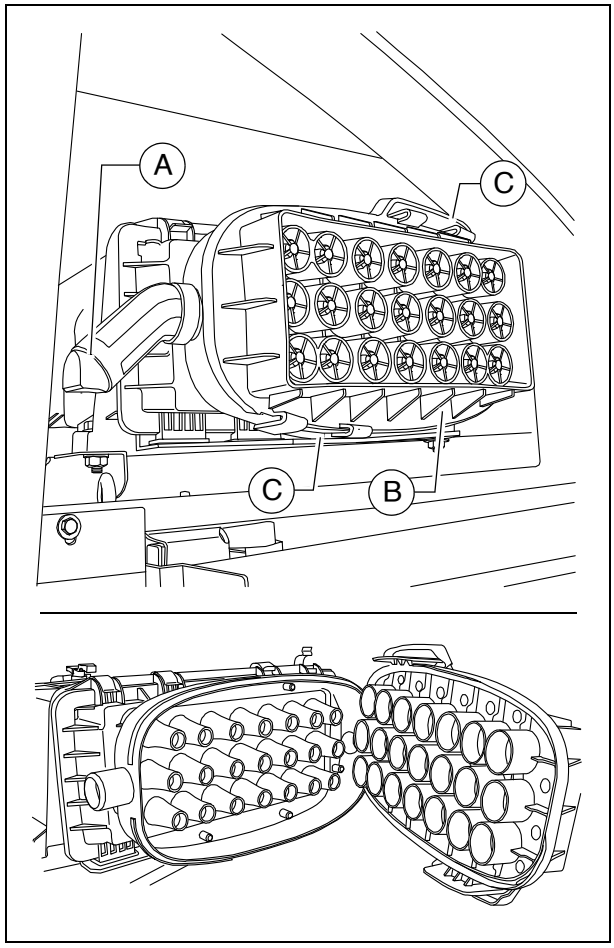

☞ Clean the dust removal valve from time to time.

https://truckmanualshub.com/

Cleaning / replacing the air filter cartridge

Maintenance of the filter becomes necessary if:

- Engine electronics service display or according to the maintenance interval.

- Open the collector housing (B) at the clips (C).
- Open the collector housing (D) at the clips (E).
- Pull out the filter element (F) and safety element (G).

- Insert new filter elements in reverse order.

Make sure they are sealed correctly.

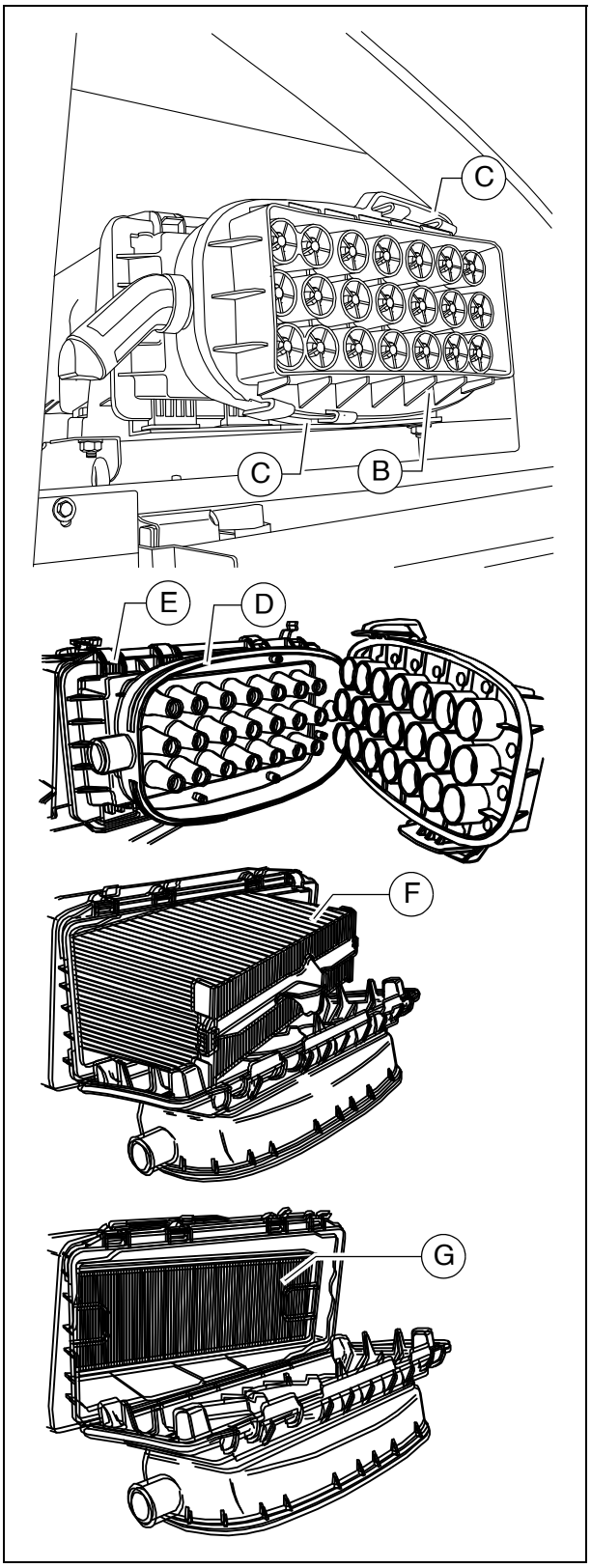

https://truckmanualshub.com/

Engine cooling system (5)

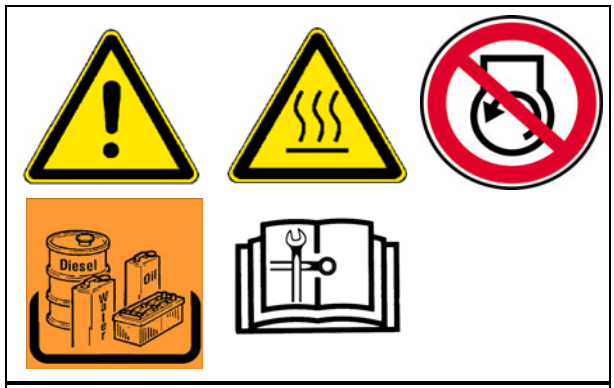

Checking / topping up coolant

The cooling water level must be checked when the system is cold. Make sure that the anti-freeze and anti-corrosive liquid is sufficient (-25°C).

STOP When hot, the system is under pressure. When it is opened, there is danger of scalding!

- If necessary fill in a sufficient amount of coolant through the open port (A) of the compensating tank.

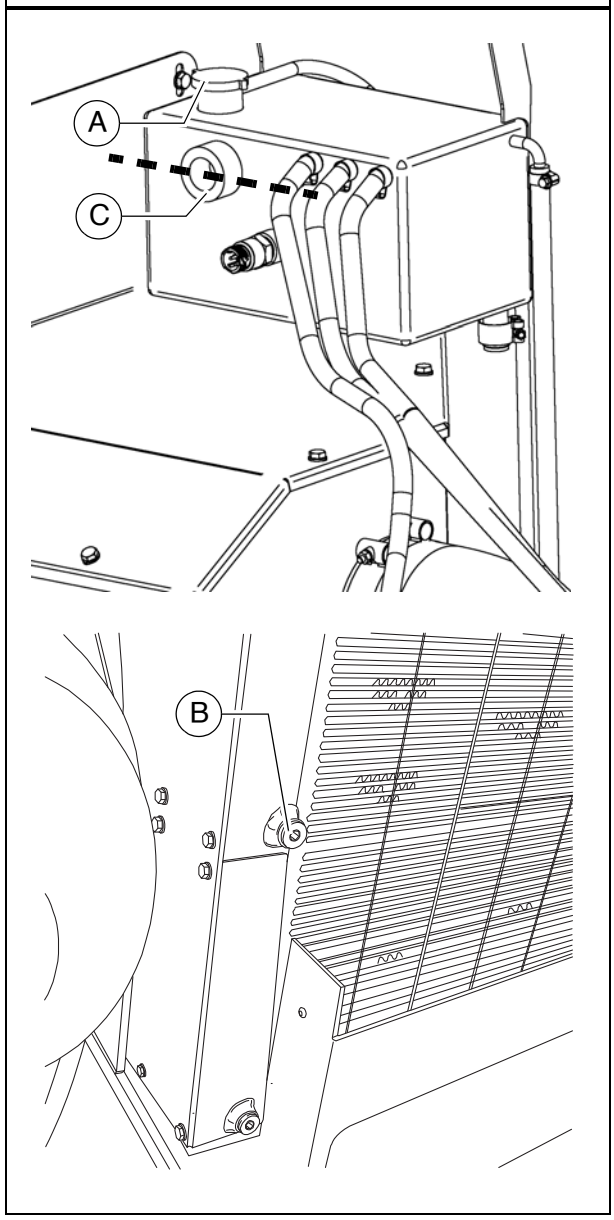

Change coolant

STOP When hot, the system is under pressure. When it is opened, there is danger of scalding!

⚠ Use only approved coolants!

☞ Observe the instructions in the chapter entitled "Operating substances"!

- Remove the drain screw (B) on the radiator and let the coolant drain completely.
- Reinstall the drain screw (B) and tighten properly.
- Fill in coolant through the filling opening (A) on the compensation tank until the coolant level rises to the centre of the sight glass (C).

⚠ The air is only able to escape completely from the cooling system once the engine has reached its operating temperature (at least 90°C).
Check the fluid level again, top up if necessary.

https://truckmanualshub.com/

Checking and cleaning the radiator fins

- If necessary, remove leaves, dust or sand from the radiator.

☞ Observe engine's operating instructions

Checking coolant concentration

- Check the concentration using a suitable tester (hydrometer).
- Adjust the concentration if necessary.

☞ Observe engine's operating instructions

https://truckmanualshub.com/

AdBlue® / DEF tank (6)

- Check the **filling level** using the display on the operating panel.

☞ Top up with AdBlue® / DEF if necessary.

HINWEIS	**Storage and handling of AdBlue® / Diesel Exhaust Fluid (DEF)**

	Incorrect handling of AdBlue® / DEF can cause major damage to the vehicle:
	
	- Never fill oil, diesel or other fluids into the AdBlue® / DEF system.
	  - Do not start the engine after filling incorrectly
	  - Consult the Atlas Copco Service Department
	- Only use AdBlue® / DEF as per ISO 22241-1 / DIN 70070.
	- The storage temperature for AdBlue® / DEF is between -5°C and 25°C (23°F and 77°F)
	- Store in sealed containers to avoid impurities.
	- No direct sunlight.
	- It is not advisable to store in a vehicle for longer than 6 months. Seal the tank breathers when stored in the urea tank.
	- If AdBlue® / DEF is spilt on painted surfaces or aluminium surfaces when topping up, rinse the affected areas immediately with water.
	- Do not fill the AdBlue® / DEF tank until it overflows, otherwise it can be damaged at very low temperatures.
	- Always heed the local rules and regulations when disposing of AdBlue® / DEF!
	- Comply with all further information in the engine operating instructions.

https://truckmanualshub.com/

WARNUNG	**Danger from AdBlue® / Diesel Exhaust Fluid (DEF)**
	Inadequate preparations for using AdBlue® / DEF can result in severe injuries! AdBlue® / DEF should never be in contact with the skin, eyes or clothing or be swallowed. Keep AdBlue® / DEF out of reach of children. - Before handling AdBlue® / DEF, make yourself familiar with the safety data sheet. - If you get AdBlue® / DEF in your eyes, rinse your eyes immediately and thoroughly for at least 15 minutes with clear water. Seek medical advice immediately! - Wash AdBlue® / DEF off your skin immediately with soap and water. - If you have swallowed AdBlue® / DEF, rinse your mouth out with water and drink plenty of water. Seek medical advice immediately! - Change any clothing soiled with AdBlue® / DEF immediately. - Comply with all further instructions in the AdBlue® / DEF safety data sheet. - Comply with all further information in the engine operating instructions.

https://truckmanualshub.com/

WARNUNG	**Risk from ammonia vapours, overpressure in the tank**
	If you open the AdBlue® / DEF tank cap at high temperatures, ammonia vapours can escape and cause injuries! - Only fill the AdBlue® / DEF tank in well ventilated areas. - Always be careful when opening the AdBlue® / DEF, as this can cause pressure to be released. AdBlue® / DEF may leak as a result. - Do not inhale the ammonia vapours! - Ammonia vapours have a biting smell and cause irritation above all to the skin, mucous membranes and eyes. - Consult a doctor immediately if injured. - Comply with all further instructions in the AdBlue® / DEF safety data sheet. - Comply with all further information in the engine operating instructions.

To **top up** with AdBlue® / DEF

- Remove cap (A).
- Top up with AdBlue® / DEF through the filling port until the required level is reached.
- Replace the cap (A).

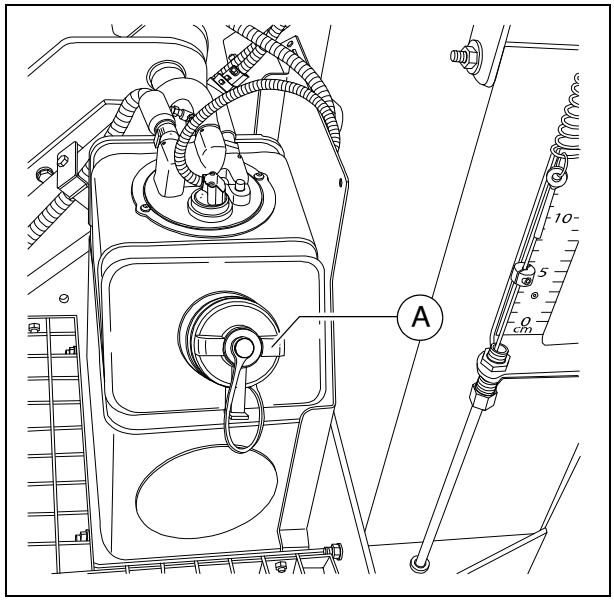

https://truckmanualshub.com/

AdBlue® / DEF tank - suction filter

Replace filter element

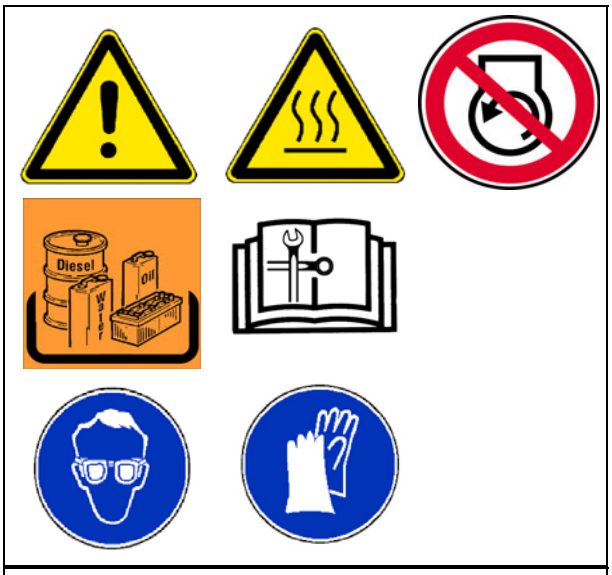

- To change the filter, the supply lines (B) at the AdBlue® / DEF multi-head (A) must be dismantled and the electrical connection (plug) (C) disconnected.

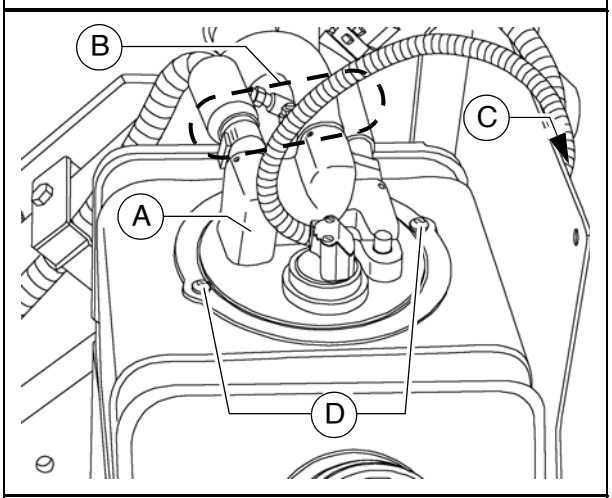

☞ Use a suitable container or cloth to take up any leaked residues.

- Loosen screws (D) and remove retaining ring (E).

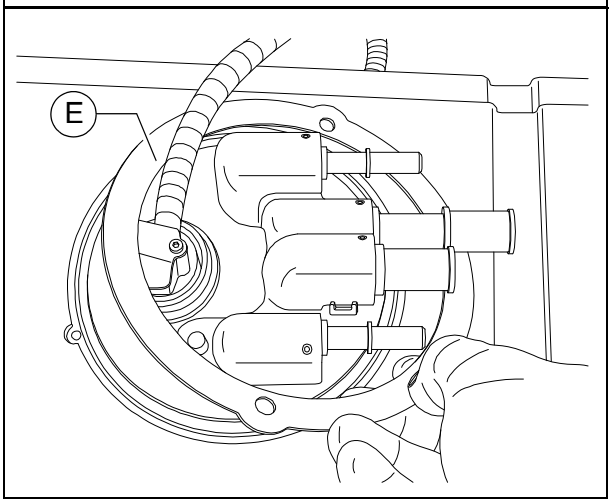

https://truckmanualshub.com/

- Carefully lever the multi-head (A) from the tank surface by applying a suitable slotted screwdriver around the edge. Pull the head at the same time.

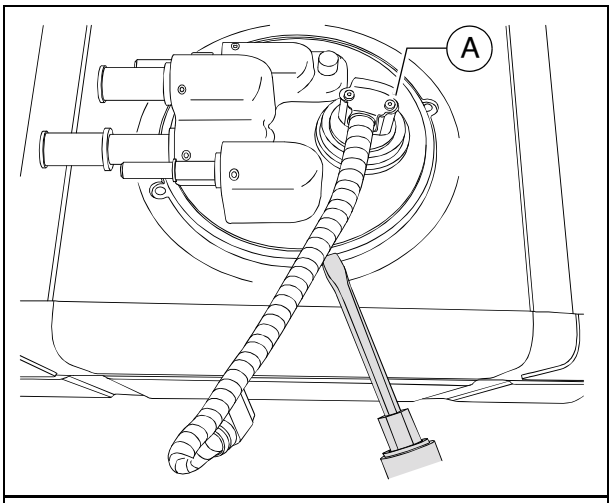

⚠ Do not pull the connection cable or connection port!

- Carefully pull the multi-head up until the lower part is beneath the tank opening.

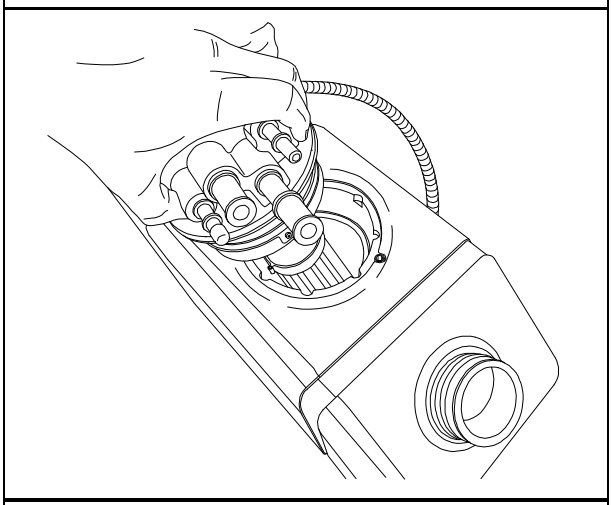

- Carefully tilt the lower part up and turn the head until the lower part is at the tank opening.
- Carefully pull the lower part out of the tank opening.

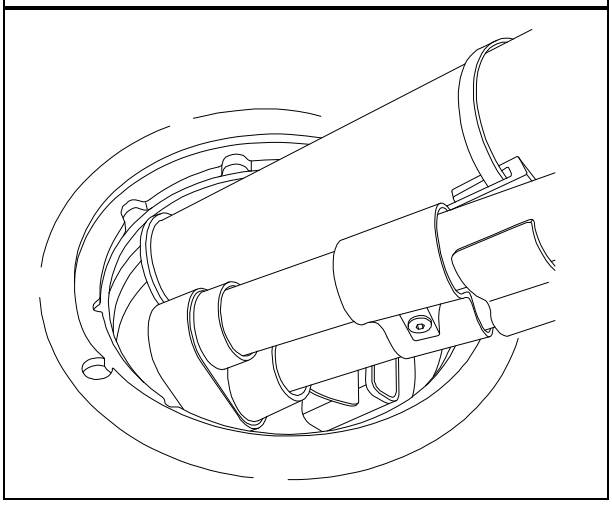

https://truckmanualshub.com/

Filter change < / = s/n 003055

- Loosen the fastening screw (F) of the filter.

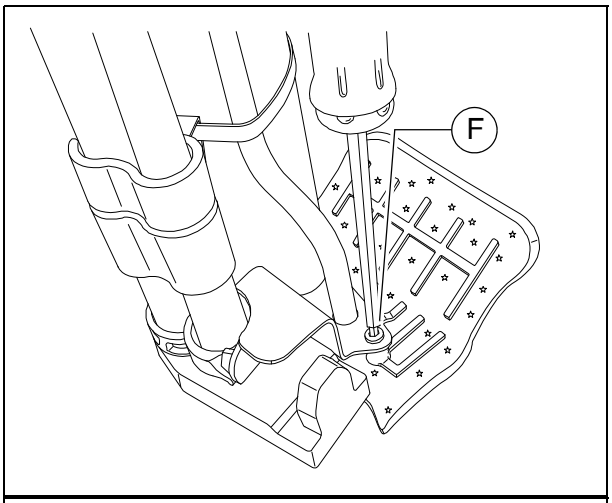

- Pull the used filter (G) from the suction pipe.

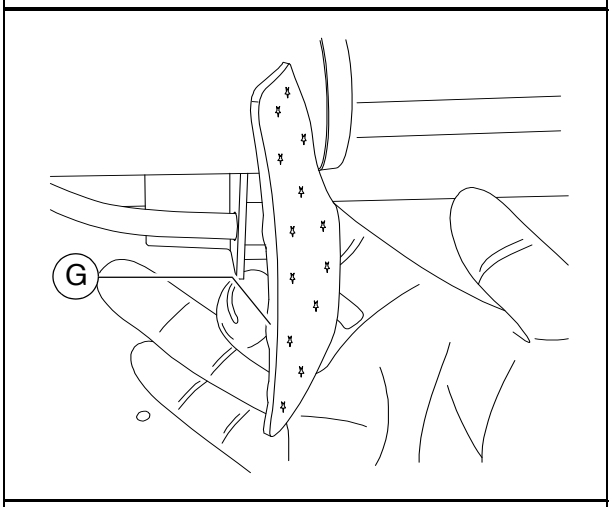

- Fit the new filter onto the suction pipe and fasten with a new fastening screw (F).

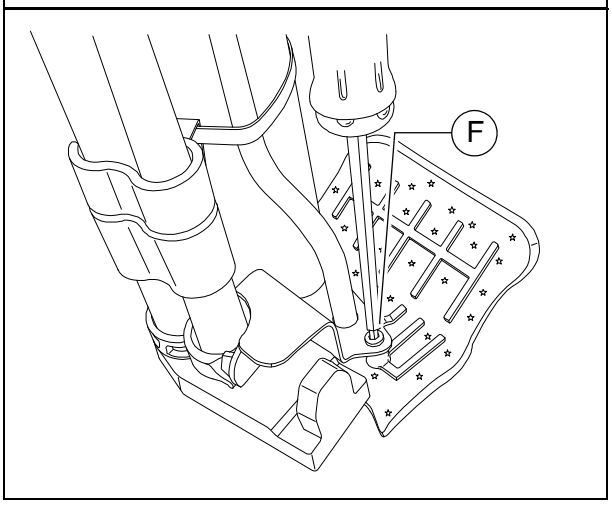

https://truckmanualshub.com/

- Lightly grease the O-ring (H) of the multi-head.

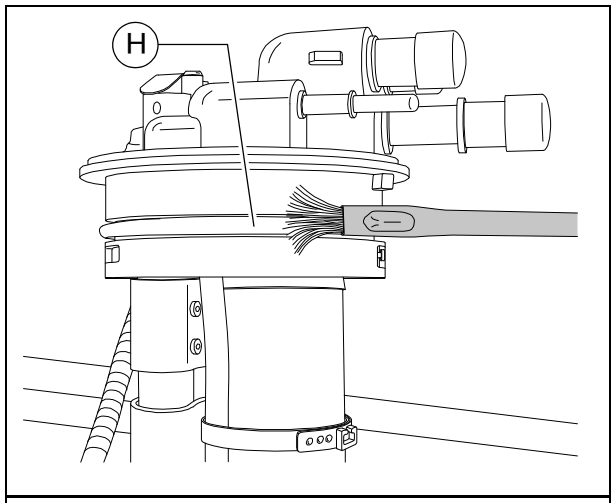

- Fold the filter element (G) in the middle towards the underside of the lower part.
- Tilt the lower part at an angle of about 45°.
- Place the filter side and the tip of the lower part in the tank opening as shown.
- Gradually insert the lower part in the tank opening, proceeding carefully.

⚠ Do not push the parts with force directly into the tank opening. This will cause damage!

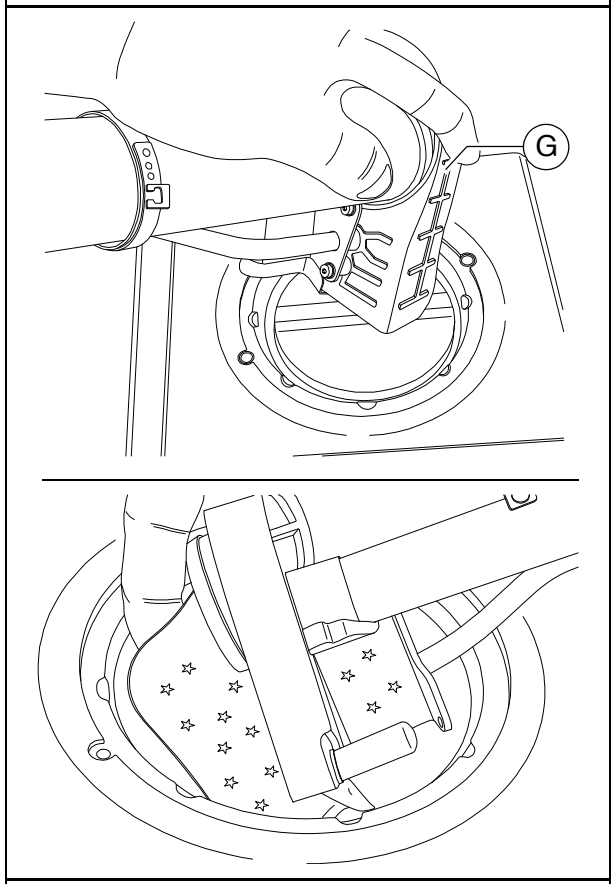

- Position the head in the required alignment and press on the top until the head fits completely in the tank opening.

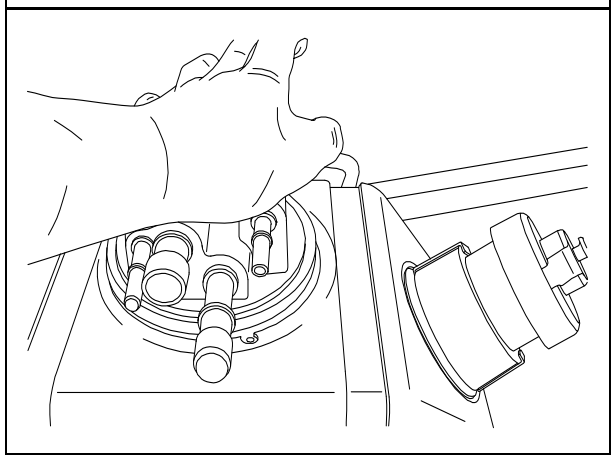

https://truckmanualshub.com/

- Place the retaining ring (E) over the filter head.

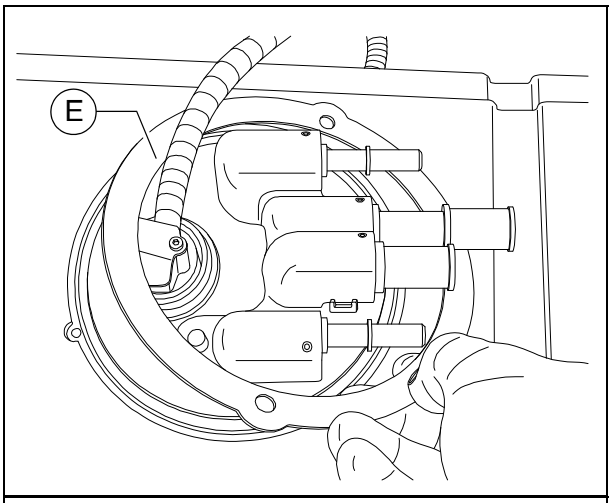

- Tighten the screws (D) properly.
- Then mount the supply lines (B) and connect up to the power supply (plug) (C).

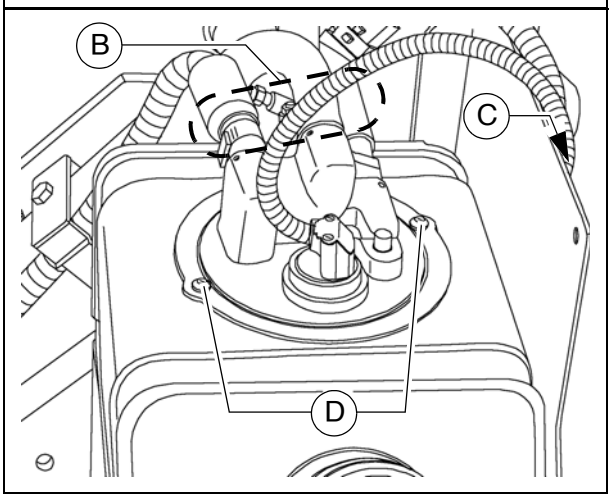

⚠ After installation, check correct sealing during a trial run.

https://truckmanualshub.com/

Filter change > / = s/n 003056

- Loosen the fastening screw (F) of the filter.

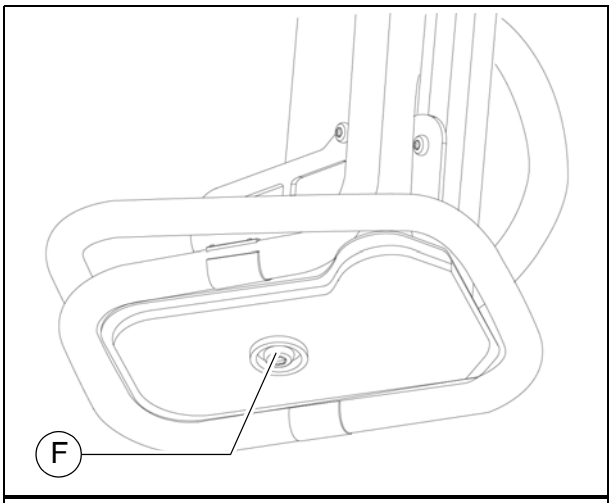

- Pull the used filter (G) from the suction pipe.
- Fit the new filter onto the suction pipe and fasten with a new fastening screw (F).

☞ Ensure correct alignment of filter and holders!

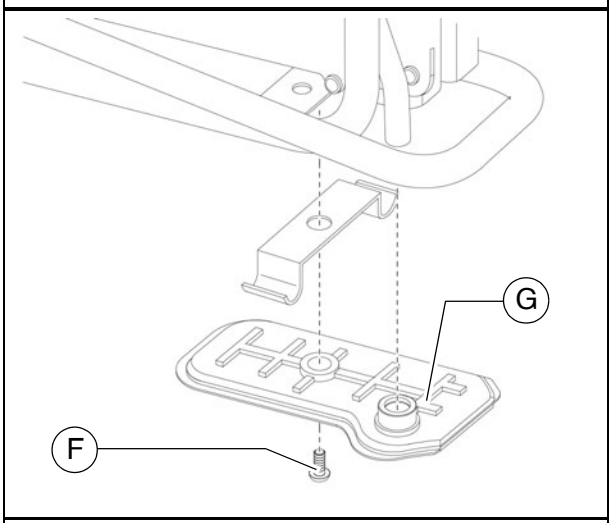

- Lightly grease the O-ring (H) of the multi-head.

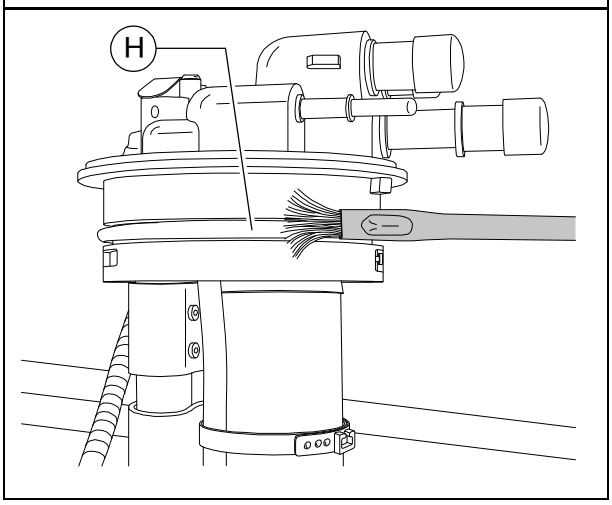

https://truckmanualshub.com/

- Introduce the filter side into the tank opening as shown.
- Gradually introduce the whole unit I into the tank opening, using due caution.

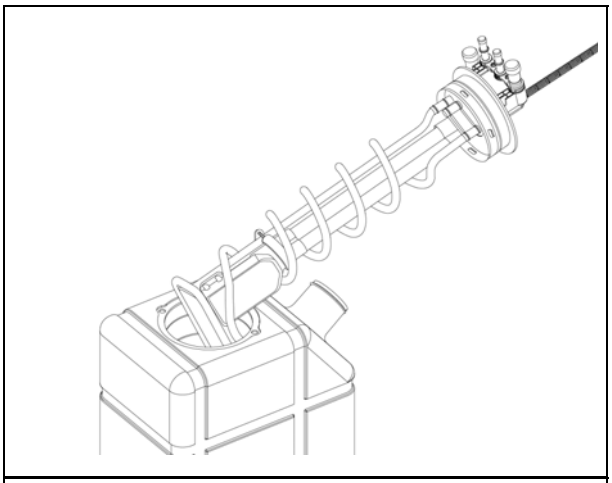

⚠ Do not push the parts with force directly into the tank opening. This will cause damage!

- Position the head in the required alignment.
  Ensure that the two noses (I) at the flange of the filter head fit in the corresponding recesses at the tank!
  Press on the top until the head fits completely in the tank opening.

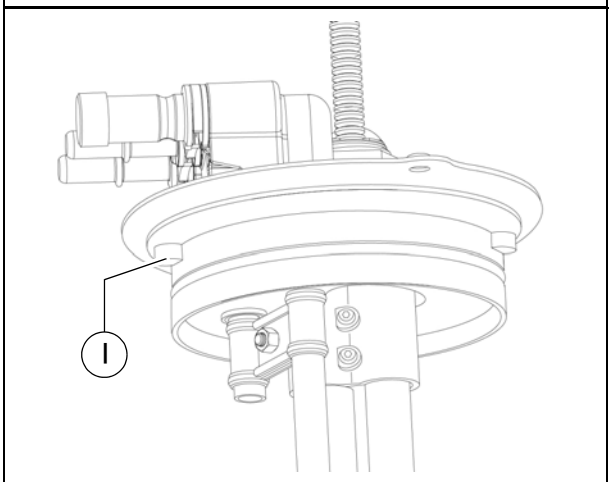

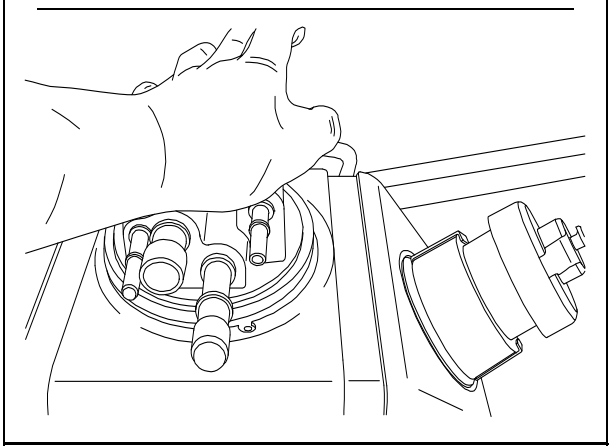

- Place the retaining ring (E) over the filter head.

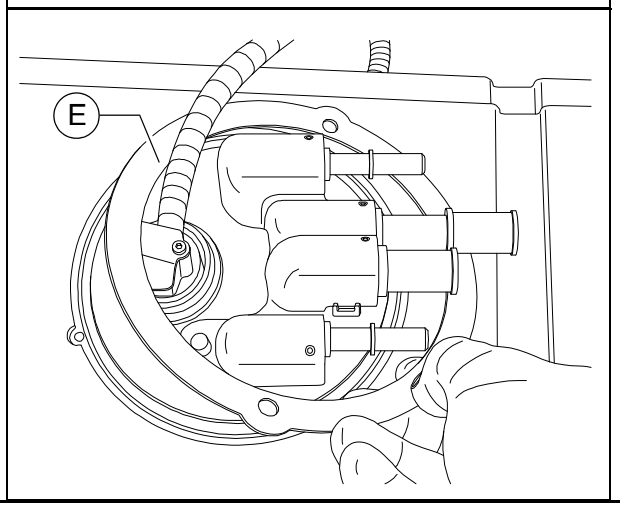

https://truckmanualshub.com/

- Tighten the screws (D) properly.
- Then mount the supply lines (B) and connect up to the power supply (plug) (C).

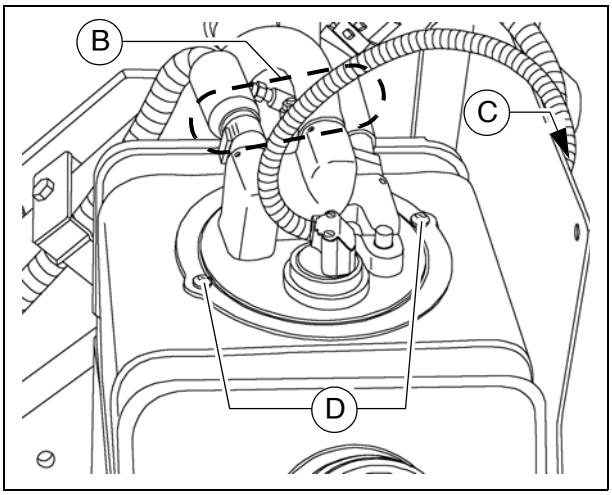

⚠ After installation, check correct sealing during a trial run.

https://truckmanualshub.com/

AdBlue® / DEF tank - tank cover

Clean tank cover

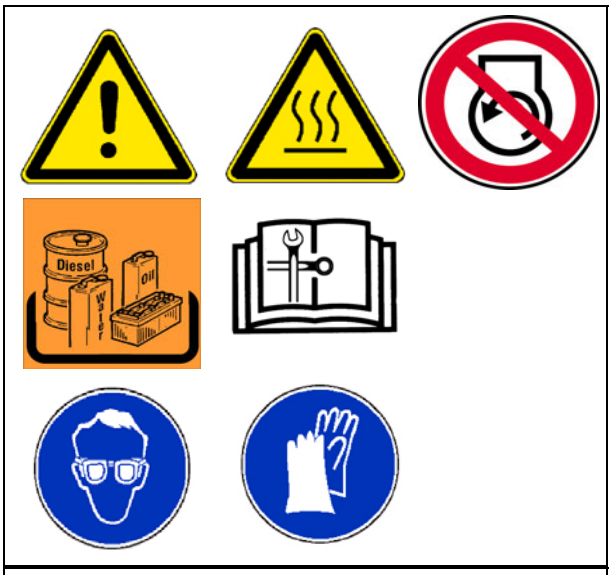

⚠ Impurities or crystals of AdBlue® / DEF on the outside and inside of the tank cover can considerably interfere with the system!

☞ If the tank cover is visibly soiled, it must be cleaned as follows.

- Loosen the retaining tab (A) and unscrew the tank cover (B) from the tank.

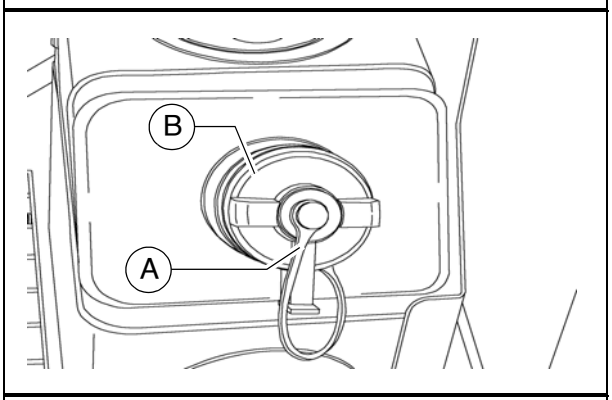

- Put the cover in a vessel filled with water so that the water comes up to half the height of the blue edge (large diameter).
  Leave the cap to soak for about five minutes.

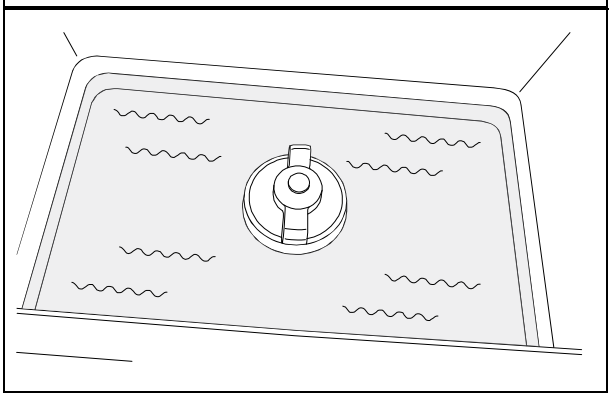

⚠ Make sure that the cover is not completely covered with water as this interferes with the ventilation function.

- Shake the cap to let any residual water drain out.

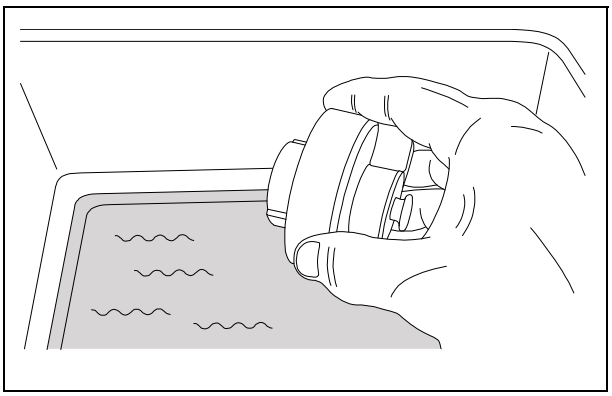

https://truckmanualshub.com/

- Wipe the gasket with a damp cloth to remove any remaining DEF crystals or dirt.

- Then connect the tank cover with the previously loosened retaining tab and screw onto the tank.

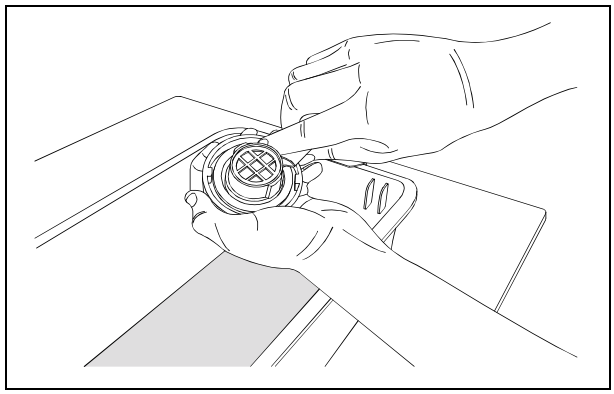

https://truckmanualshub.com/

AdBlue® / DEF dosing unit

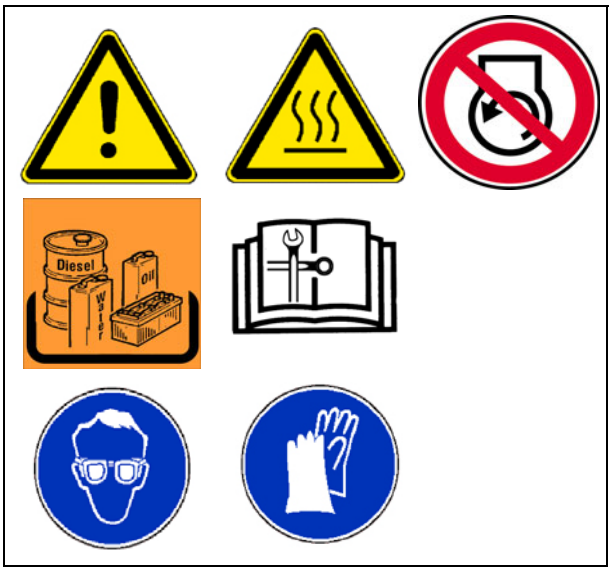

⚠ Do not disconnect the vehicle batteries until the dosing system has finished the rinsing cycle. Wait for at least 5 minutes after the ignition has been switched off before starting to work on the dosing unit.

Replace filter element

- Place a suitable container under the filter housing to catch any AdBlue® / DEF residues.
- Unscrew the cover (A) (27mm wrench) and compensating element (B).
- Remove the filter (C) using the corresponding service tool (supplied with the filter). The tool engages on the filter with a "click".

☞ Use the side of the service tool with the same colour markings as the filter.

⚠ Depending on their condition, **the** compensation element and filter must be replaced after they have been removed.

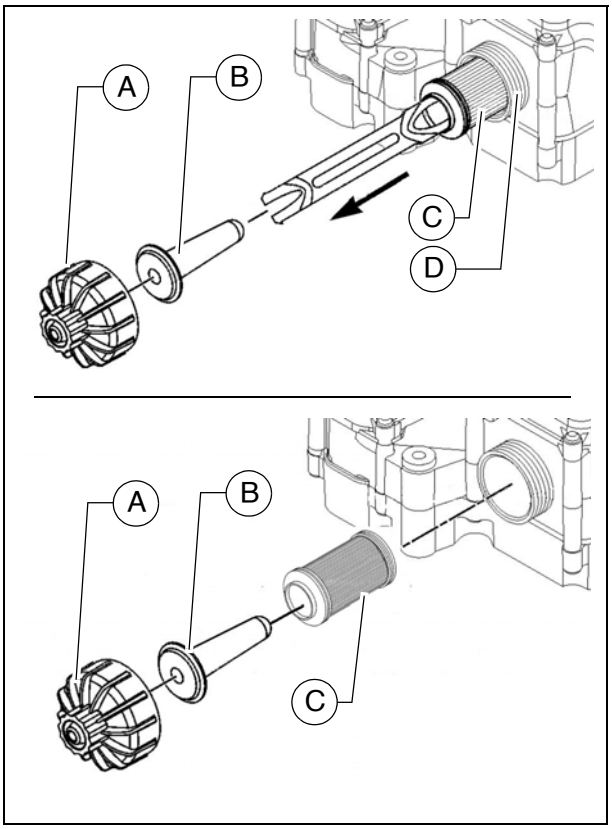

☞ Check the cover (A), cover thread and thread (D) of the dosing unit for any damage and replace if necessary!

- Clean the cover (A), the cap thread and the dosing unit with warm water and a clean cloth.

☞ Do not oil the O-rings and gaskets of the filter!

- Insert the compensating element (B) in the filter cartridge (C) and push this into the dosing unit.
- Fit the cover (A).
  Torque: 20 Nm.

⚠ Let the engine run for at least 15 minutes so that the system reaches operating temperature. Look out for any leaks.

https://truckmanualshub.com/

Engine drive belt (7)

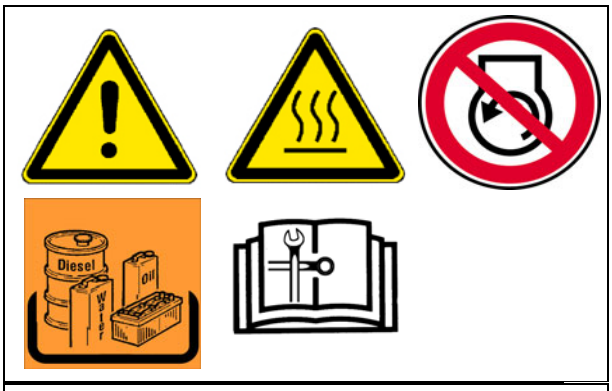

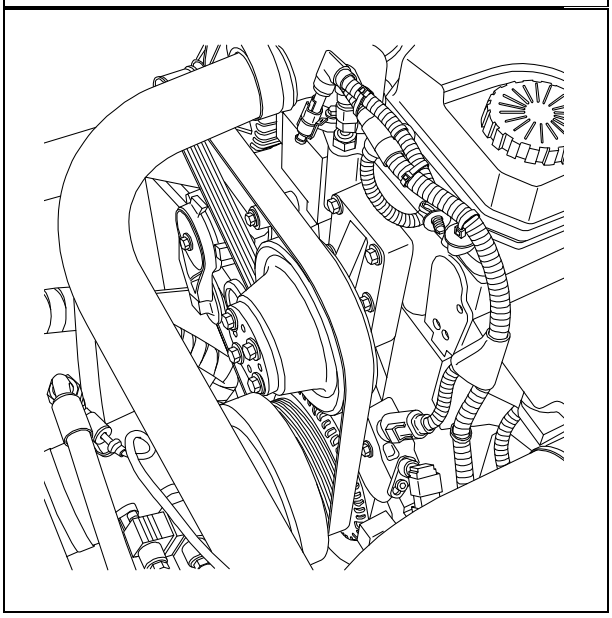

Check drive belts

- Check the drive belt for damage.

☞ Small transverse cracks in the belt are acceptable.

⚠ In the event of longitudinal cracks which intersect with transverse cracks and damaged material surfaces, belt replacement is necessary.

☞ Observe engine's operating instructions

Replace drive belt

☞ Observe engine's operating instructions

https://truckmanualshub.com/

Crankshaft ventilation filter (8)

Change filter element

- Take the cover off (A) and remove the filter cover (B)
- Remove the depleted filter.

☞ Check the cover and cover seal for any signs of damage and replace if necessary!

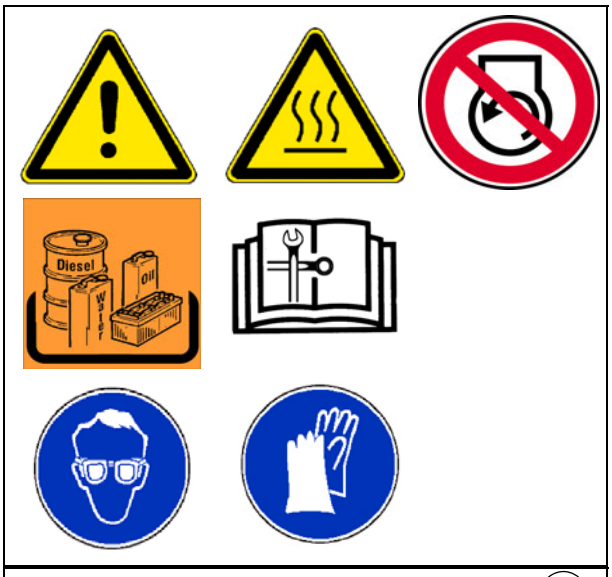

- Clean the contact surface (D) of the filter and the sealing surfaces of the O-rings with a cloth and light solvent and then dry them with a clean cloth.
- Clean the filter cover with warm soapy water (E) and dry it with compressed air.

STOP Wear protective goggles when using working with compressed air! Never blow compressed air towards other people!

STOP Use personal safety equipment when cleaning with solvents! Avoid contact with skin!

- Apply a little fresh engine oil to the O-rings (F) of the new filter and set the filter correctly on its contact surface.
- Fit the cover (B):
  - Start with the inside screw (G) and work forwards clockwise.

⚠ The torque for the cover screws is 7 Nm.

⚠ After installation, check correct sealing during a trial run.

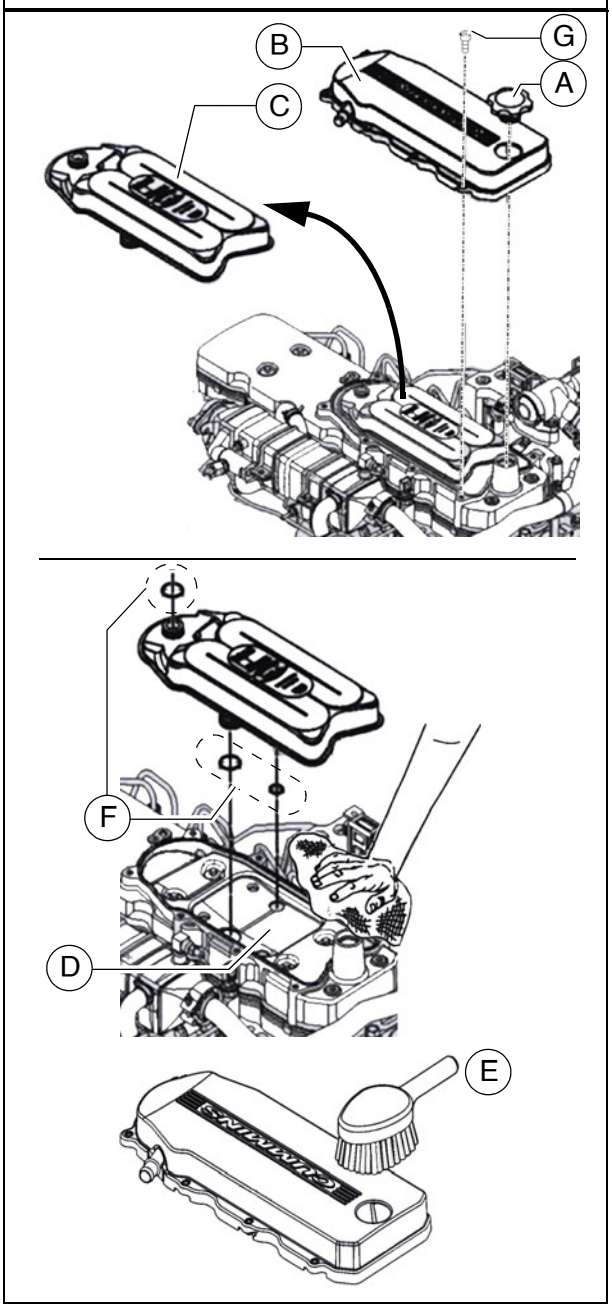

https://truckmanualshub.com/

Exhaust system - diesel oxidation catalytic converter (9)

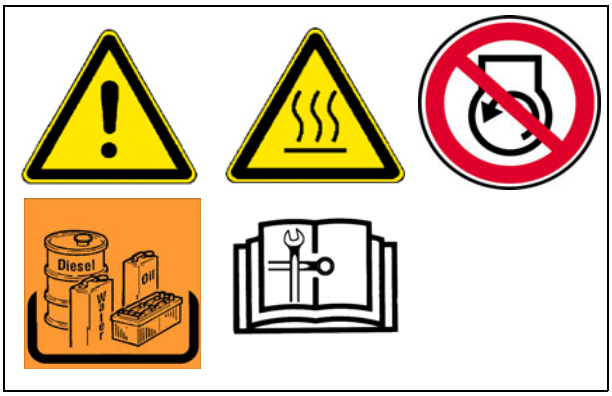

Inspect the exhaust system

☞ Basically the exhaust system does not need any maintenance.
Inspection consists of a visual check:

- damaged parts?
- loose screwed connections, plugs or lines?

⚠ WARNUNG	**Risk from hot surfaces!**
	During system cleaning, the exhaust temperature and the surface temperature of the exhaust system is very hot and can cause severe injuries! The exhaust and exhaust components remain hot after the engine has stopped. - Let the exhaust system cool down before starting inspection work. - Make sure that no flammable materials can come into contact with the exhaust system. - Wear your personal safety gear. - Do not touch hot parts of the vehicle. - Comply with all further information in the engine operating instructions and in the safety manual.

⚠ The Atlas Copco Customer Service must be consulted whenever the exhaust system is to be repaired

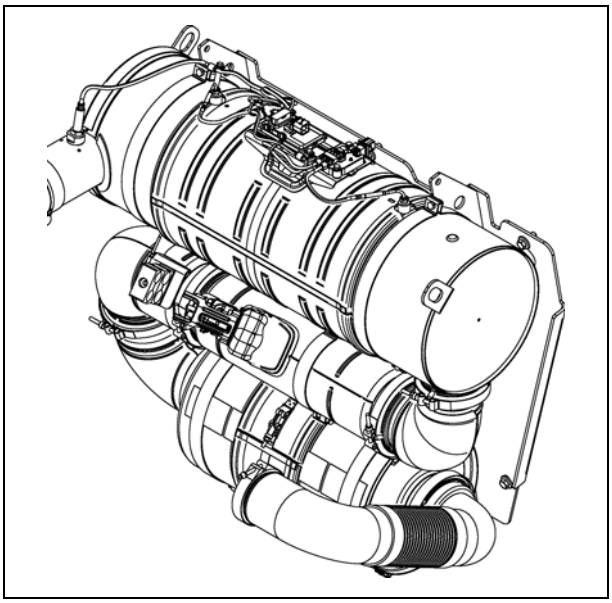

https://truckmanualshub.com/

https://truckmanualshub.com/

F 60 Maintenance - hydraulic system

1 Maintenance - hydraulic system

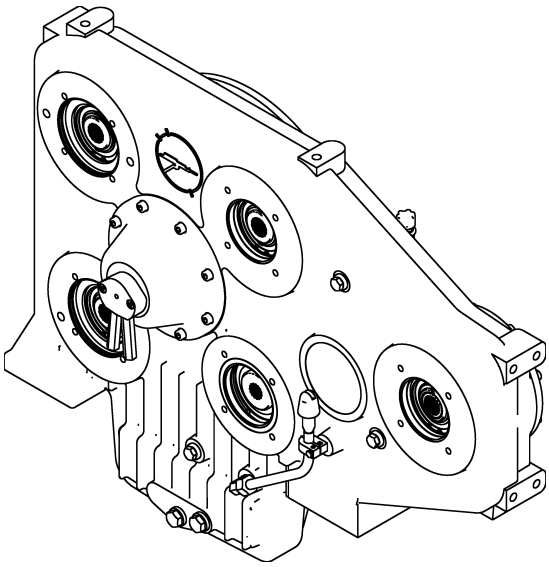

https://truckmanualshub.com/

WARNING	**Danger from hydraulic oil**
	Hydraulic oil under high pressure can cause severe to fatal injuries! - Only competent staff should work on the hydraulic system! - Any hydraulic hoses that are cracked or soaked through must be replaced immediately. - Depressurise the hydraulic system. - Lower screed and open hopper. - Stop the engine and remove the ignition key before any maintenance work. - Secure the vehicle to prevent it being switched on again. - Consult a doctor immediately if injured. - Comply with all further information in these instructions and in the safety manual.

CAUTION	**Hot surfaces!**
	Surfaces including those behind covering parts, together with combustion fuels from the engine or screed heater can be very hot and cause injuries! - Wear your personal safety gear. - Do not touch hot parts of the vehicle. - Only perform maintenance and repair work after the vehicle has cooled down. - Comply with all further information in these instructions and in the safety manual.

https://truckmanualshub.com/

1.1 Maintenance intervals

Item	Interval								Maintenance point	Note
	10	50	100	250	500	1000 / annually	2000 / every 2 years	If necessary		
1	■								- Hydraulic oil tank - Check fill level	
								■	- Hydraulic oil tank - Top up with oil	
							■		- Hydraulic oil tank - Change oil and clean	
2	■								- Hydraulic oil tank - Check maintenance indicator	
						■		■	- Hydraulic oil tank - Intake / return hydraulic filter; change, vent	
						■			- Hydraulic oil tank - Change ventilation filter	
3	■								- High-pressure filter - Check maintenance indicator	
						■		■	- High-pressure filter - Replace filter element	

Maintenance	■
Maintenance during the running-in period	▼

https://truckmanualshub.com/

Item	Interval								Maintenance point	Note
	10	50	100	250	500	1000 / annually	2000 / every 2 years	If necessary		
4		■							- Pump distribution gear - Check oil level	
								■	- Pump distribution gear - Top up oil	
						■			- Pump distribution gear - Change oil	
		■							- Pump distribution gear - Check bleeder	
								■	- Pump distribution gear - Clean bleeder	
5	▼ ■								- Hydraulic hoses - Visual inspection	
	▼ ■								- Hydraulic system Leak test	
								■	- Hydraulic system Retighten screw connections	
							■	■	- Hydraulic hoses - Replace hoses	
6					■			■	- Auxiliary flow filter- Replace filter element	(○)

Maintenance	■
Maintenance during the running-in period	▼

https://truckmanualshub.com/

1.2 Points of maintenance

Hydraulic oil tank (1)

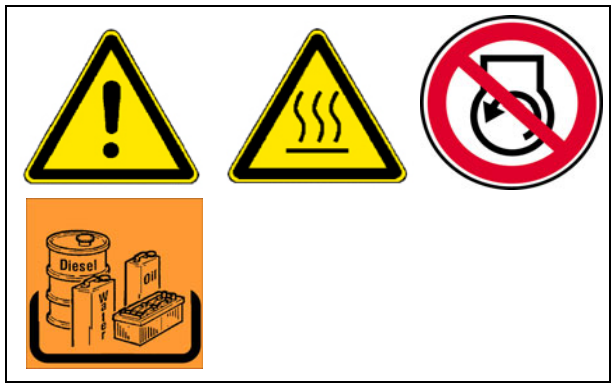

- Check **oil level** on sight glass (A).

☞ The oil level must be up to the centre of the sight glass when the cylinders are retracted.

☞ If all the cylinders are extended, the level can fall below the sight glass.

☞ The sight glass is located on the side of the tank.

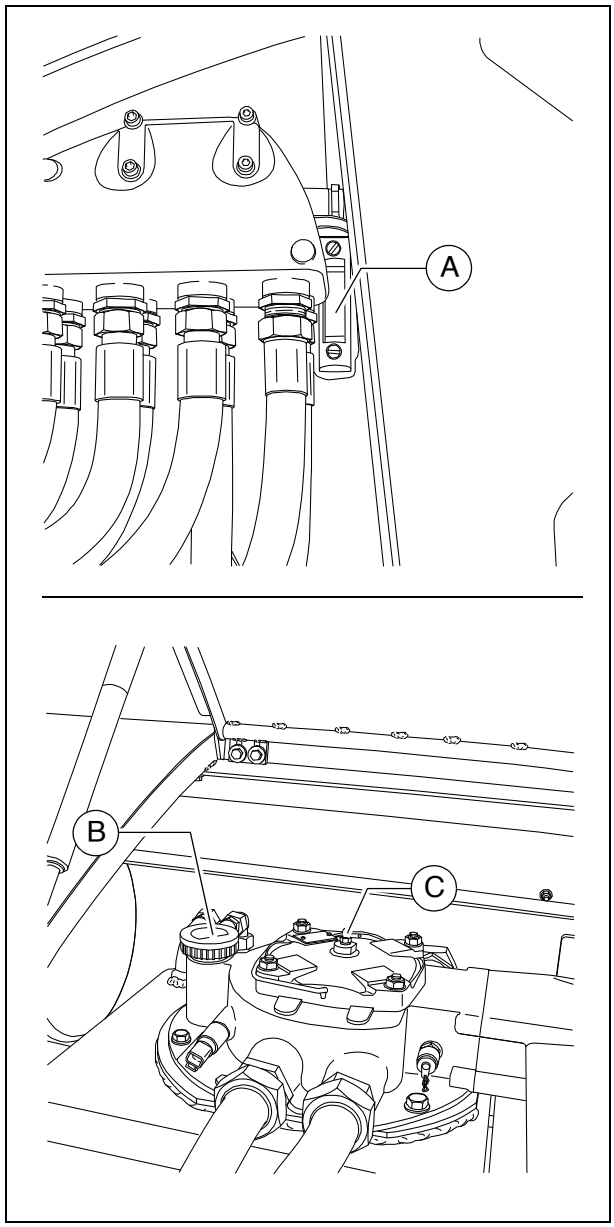

For **filling in** the oil:

- Remove cap (B).
- Fill in oil through the filling opening until the oil level rises to the centre of the sight glass (A) (+/- 5mm).
- Screw cap (B) on again.

☞ Regularly remove dust and dirt from the oil tank vent (C). Clean the surfaces of the oil cooler.

⚠ Use only the recommended hydraulic oils - see section "Recommended hydraulic oils".

☞ When filling for the first time, all hydraulic cylinders should be extended/retracted at least 2x for ventilation!

https://truckmanualshub.com/

To **change** oil:

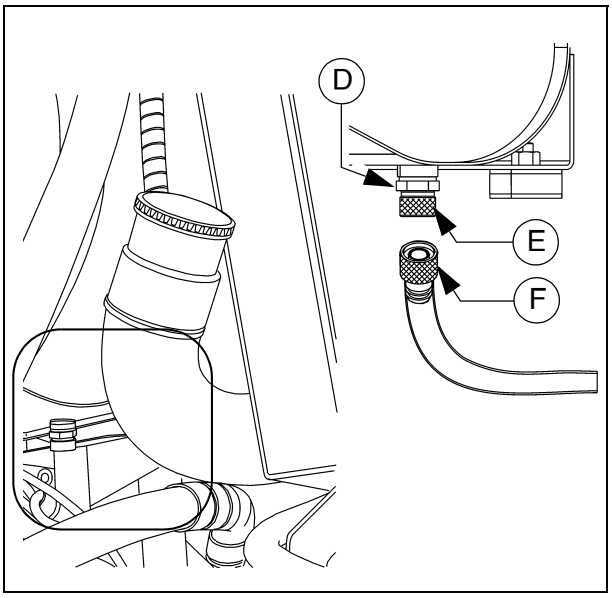

- To drain the hydraulic oil unscrew the drain plug (D) at the bottom of the tank.
- Collect the oil in a container using a funnel.
- When returning the screw, make sure to use a new seal.

☞ When using the drainage hose (○):

- Unscrew seal cap (E).
- Screwing on the oil drainage hose (F) opens the valve to let the oil drain out.
- Place the end of the hose in the collecting vessel and let the oil drain completely.
- Unscrew the drainage hose and return the screw cap.

☞ The oil should be changed when at operating temperature.

⚠ When changing the hydraulic oil also change the filter.

https://truckmanualshub.com/

Suction/return flow hydraulic filter (2)

Carry out **filter replacement** according to the interval or the indicator lamp in the operating panel!

- Remove cover mounting screws (A) and lift off cover.
- Disassemble the removed unit into:
  - Cover (B)
  - Separating plate (C)
  - Filter (D)
  - Dirt trap (E)
- Clean the filter housing, cover, separating plate and dirt trap.
- Check the O-rings (F), replace if necessary.
- Coat the sealing surfaces and O-rings with clean operating fluid.

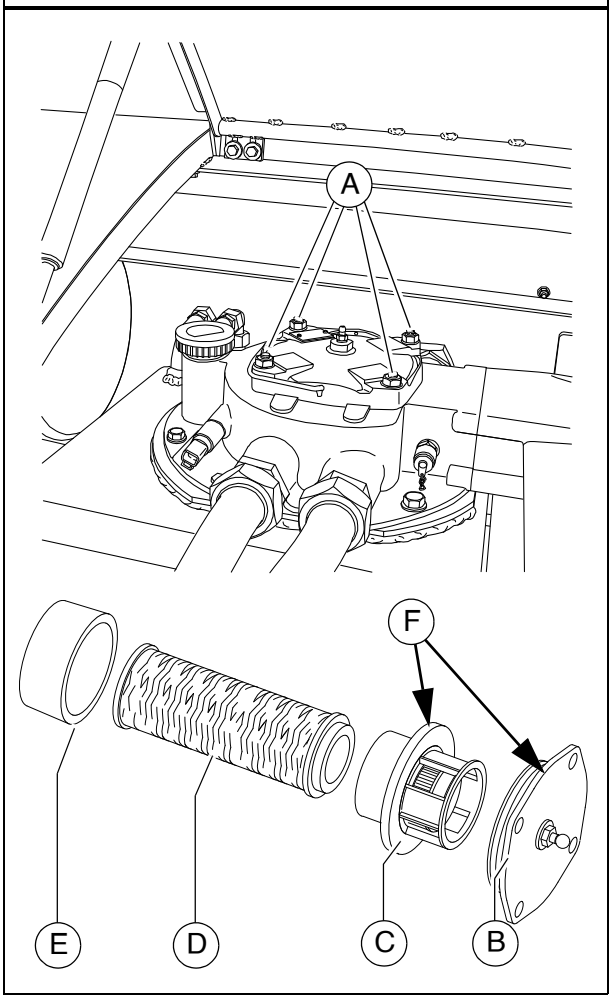

⚠ The filter must be bled following filter replacement!

https://truckmanualshub.com/

Bleeding the filter

- Fill the opened filter housing with hydraulic oil up to approx. 2 cm below the top edge.
- If the oil level drops, replenish oil again.

☞ Slow oil level reduction of approx. 1 cm / min. is normal!

- If the oil level remains stable, slowly insert the assembled unit with new filter element into the housing and tighten the cover mounting screws (A).
- Open the bleed screw (G).
- Place a transparent hose (H) onto the bleed screw, ending in a suitable container.
- Start the up drive engine at idle speed.
- Close the bleed screw (G) as soon as the oil forced through the hose is clear and therefore free of air bubbles.

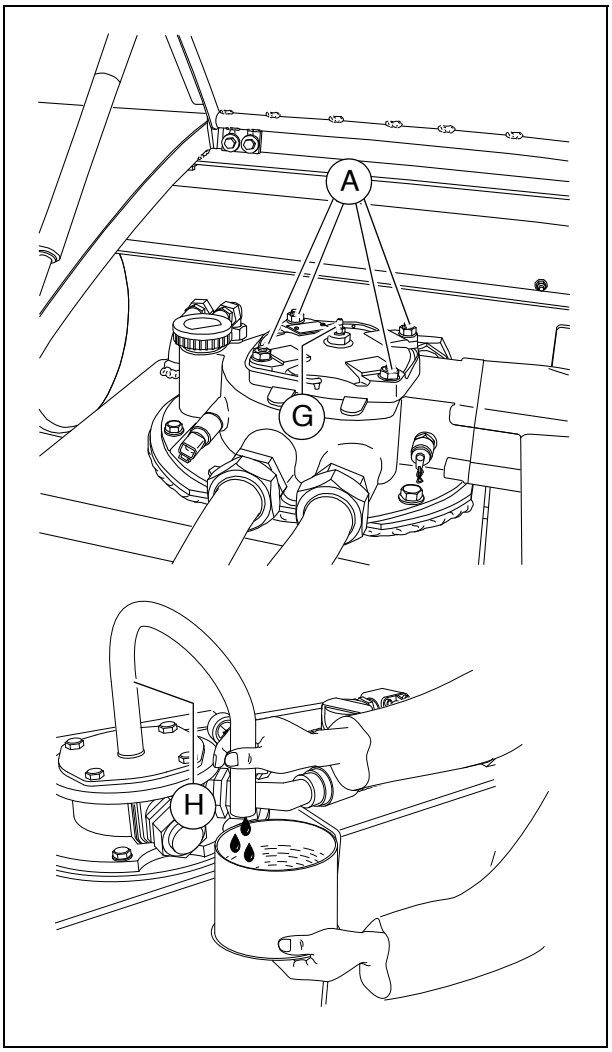

☞ The process from assembling the filter cover to starting the drive engine should take place in less than 3 minutes, as the oil level in the filter housing otherwise falls too far.

⚠ Ensure seal integrity is good after changing the filter.

Ventilation filter

☞ The ventilation filter is contained in the filler cap.

- Replace ventilation filter / filler cap.

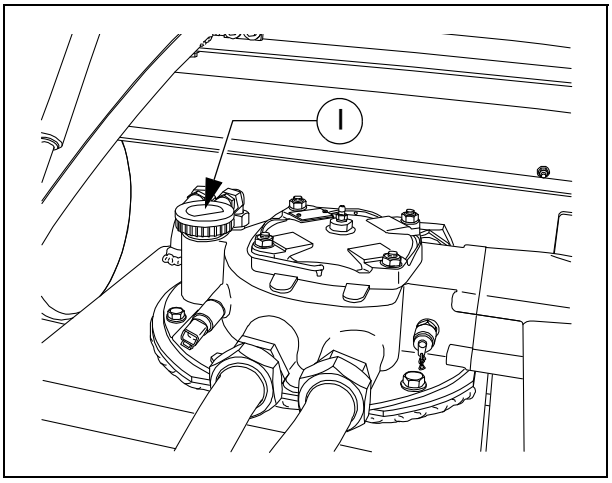

https://truckmanualshub.com/

High-pressure filter (3)

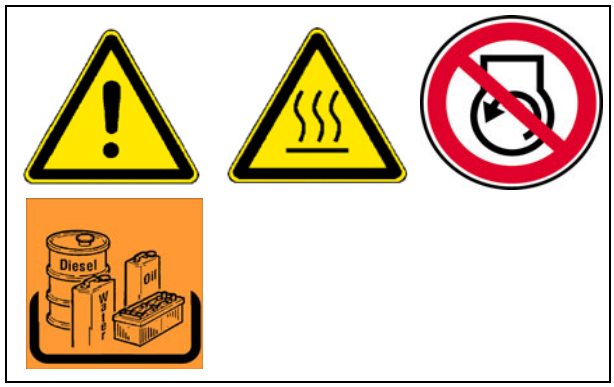

The filter elements must be replaced when the maintenance indicator (A) turns red.

☞ The vehicle's hydraulic system contains 3 high-pressure filters.

- Unscrew filter housing (B).
- Remove the filter cartridge.
- Clean the filter housing.
- Insert the new filter cartridge.
- Replace the seal ring of the filter housing.
- Turn on the filter housing by hand and tighten it using a wrench.
- Start trial operation and check the tightness of the filter.

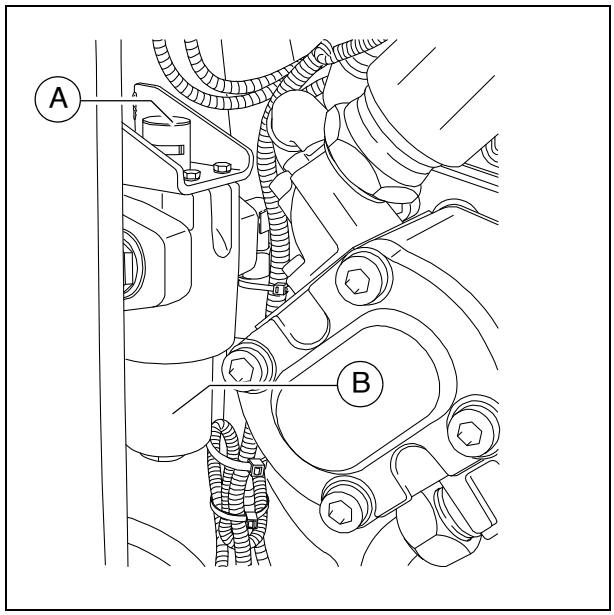

☞ Replace the seal ring whenever the filter cartridge is replaced.

☞ After replacing the filter element, the red mark in the maintenance indicator (A) automatically reverts to green.

https://truckmanualshub.com/

Pump distribution gear (4)

- **Oil level** check on dipstick (A).

☞ The oil level must lie between the upper and lower marks.

For **filling in** the oil:

- Pull out the dipstick (A) completely.
- Add new oil through the dipstick opening (B).
  - Check the fluid level using the dipstick.

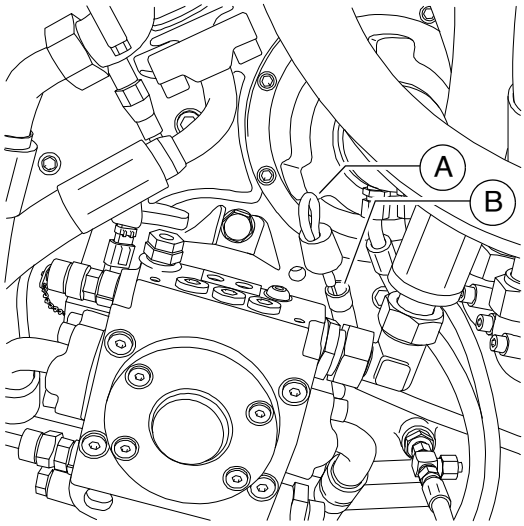

☞ Before checking with the dipstick, wait for a moment, as the oil which has been poured in first has to flow off.

⚠ Make sure to clean the screw and the vicinity of the drain bore!

Oil change:

- Place the end of the oil drain port hose (C) in the collection container.
- Remove the screw cap with a wrench and allow the oil to drain completely.
- Replace the screw cap and tighten properly.
- Pour in the prescribed quality of oil through the dipstick opening (B).
  - Check the fluid level using the dipstick.

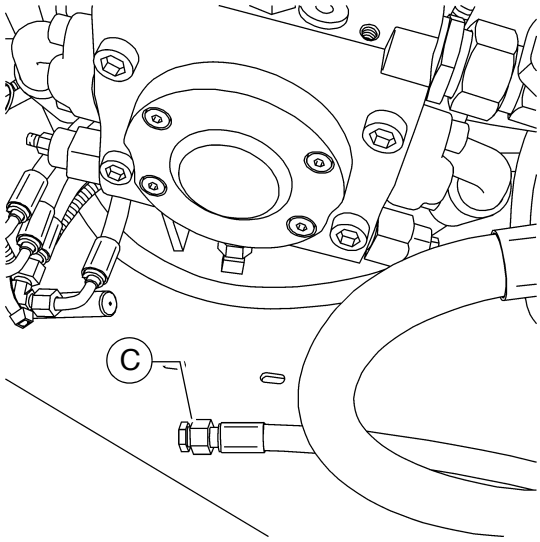

☞ The oil should be changed when at operating temperature.

https://truckmanualshub.com/

Bleeder

☞ The bleeder (A) can be found on the rear of the pump distribution gear housing.

- The functioning of the bleeder must be ensured.
  If soiling has occurred, the bleeder should be cleaned.

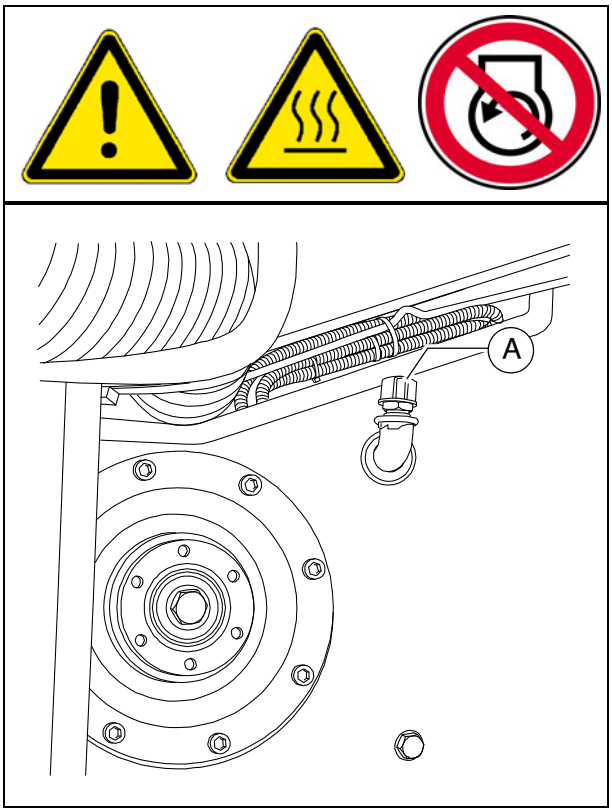

https://truckmanualshub.com/

Hydraulic hoses (5)

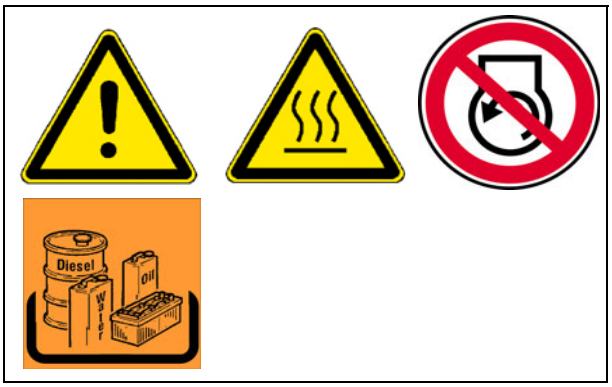

- Specifically check the condition of the hydraulic hoses.
- Immediately replace any damaged hoses.

☞ Replace hydraulic hoses if the following criteria are found on inspection:

- damage of the outer layer to the inlay (e.g. chafing, cuts, cracks).
- brittleness of the outer layer (cracking of the hose material).
- deformation that does not correspond to the natural shape of the hose or pipe when depressurised or under pressure or when bent (e.g. separated layers, blistering, pinched or buckled points).
- leaks.
- damage or deformation to the hose fittings (affecting the sealing function); replacements are not necessary for minor damage to the surface.
- hose coming away from the fitting.
- corrosion of the fitting with a detrimental effect on function and strength.
- failure to comply with the installation requirements.
- period of use has exceeded 6 years. Here it is the date of manufacture of the hydraulic hose stated on the fitting that counts, plus 6 years. If the fitting states "2004" as the date of manufacture, the period of use ends in February 2010.

☞ See the section on "Marking hydraulic hoses".

STOP Ageing hoses become porous and may burst! Danger of accidents!

https://truckmanualshub.com/

⚠ Always comply with the following instructions when installing and removing hydraulic hoses:

- Always only use original Dynapac hydraulic hoses!
- Always observe high standards of cleanliness!
- Hydraulic hoses must always be fitted to ensure that in all operating statuses,
  - there is no tensile load apart from dead weight.
  - there is no compressive load for short lengths.
  - any external mechanical impact on the hydraulic hoses is avoided.
  - appropriate positioning and fastening of the hoses prevents them from chafing on components or on each other.
    components with sharp edges must be covered when installing hydraulic hoses.
  - bending radii are not smaller than the permitted values.
- When hydraulic hoses are connected to moving parts, the length of the hose must be dimensioned to ensure that the bending radii are not smaller than the permitted smallest values right across the full range of movement and/or that the hydraulic hose is not also exposed to tension.
- Fasten the hydraulic hoses to the provided fastening points. the hoses must not be hindered in their natural movement and change in length.
- Painting the hydraulic hoses is forbidden!

https://truckmanualshub.com/

Marking hydraulic hoses / storage period, period of use

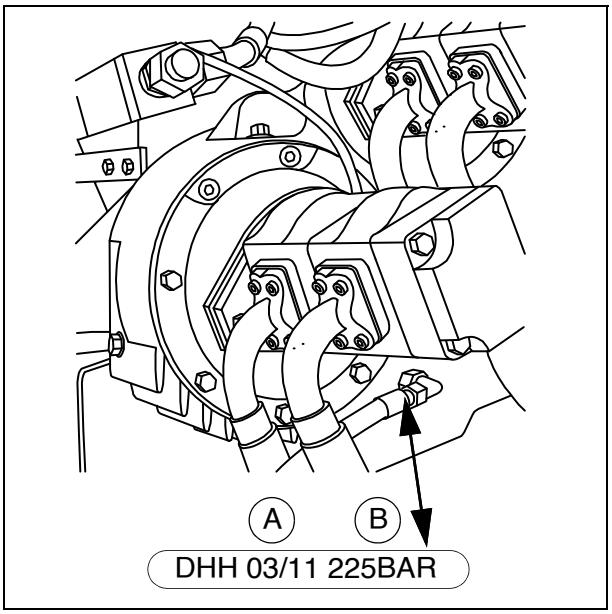

A number stamped onto the threaded connection provides information about the date of manufacture (A) (month / year)and the maximum pressure permitted for this hose (B).

Never install hoses on top of one another and always ensure that they are at the correct pressure.

In individual cases, the period of use can be stipulated according to experience and may differ from the following general indications:

- When producing the hose pipe, the hose (purchased by the meter) should not be more than four years old.
- The period of use of a hose pipe should not exceed six years, including any possible storage period.
  The storage period should not exceed two years.

https://truckmanualshub.com/

Auxiliary flow filter (6)

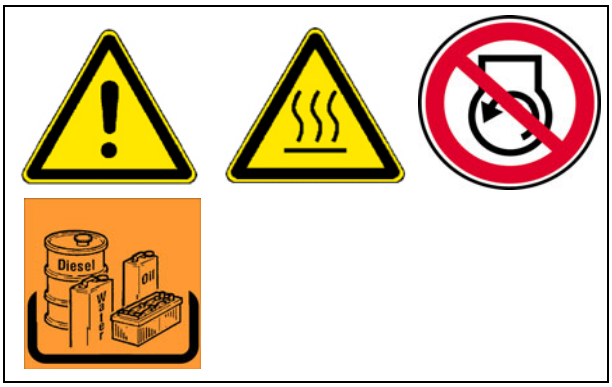

☞ The hydraulic oil change is omitted on use of an auxiliary flow filter!
The quality of the oil must be checked regularly.
The oil level must be topped up if necessary!

Replacing filter element:

- Release the threaded cover connection (A) then open the non-return valve briefly to lower the oil level in the filter, then close the non-return valve again.
- Replace filter element (B) and sealing ring (C):
  - Turn filter element clockwise with the help of carrier straps and, at the same time, raise it slightly.
  - Wait for a moment until the oil has escaped downwards, then remove the filter element.
- Check inlet and outlet in filter housing (D).
- As required, top up hydraulic oil level in filter housing then screw down the cover.
- Bleed the hydraulic system.

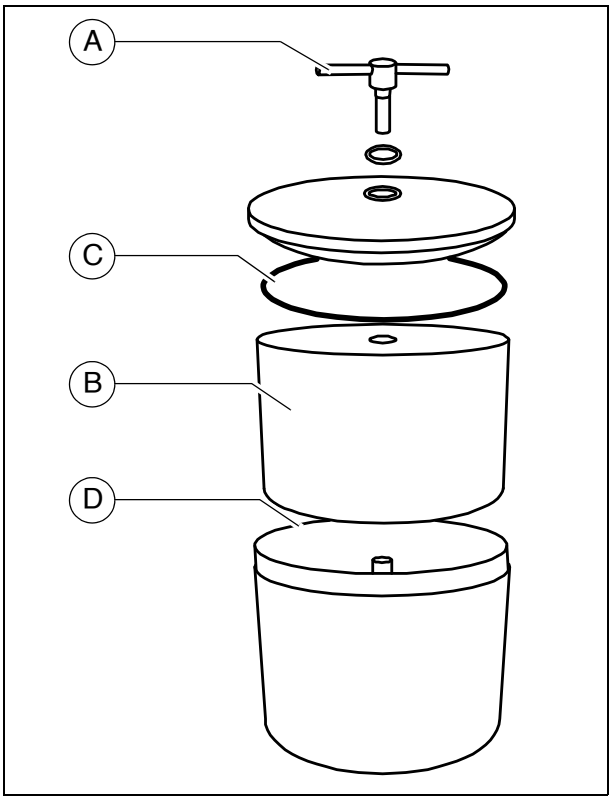

⚠ Do not remove the cardboard sleeve from the filter element! This is part of the filter!

https://truckmanualshub.com/

https://truckmanualshub.com/

F 74 Maintenance – drive units

1 Maintenance – drive units

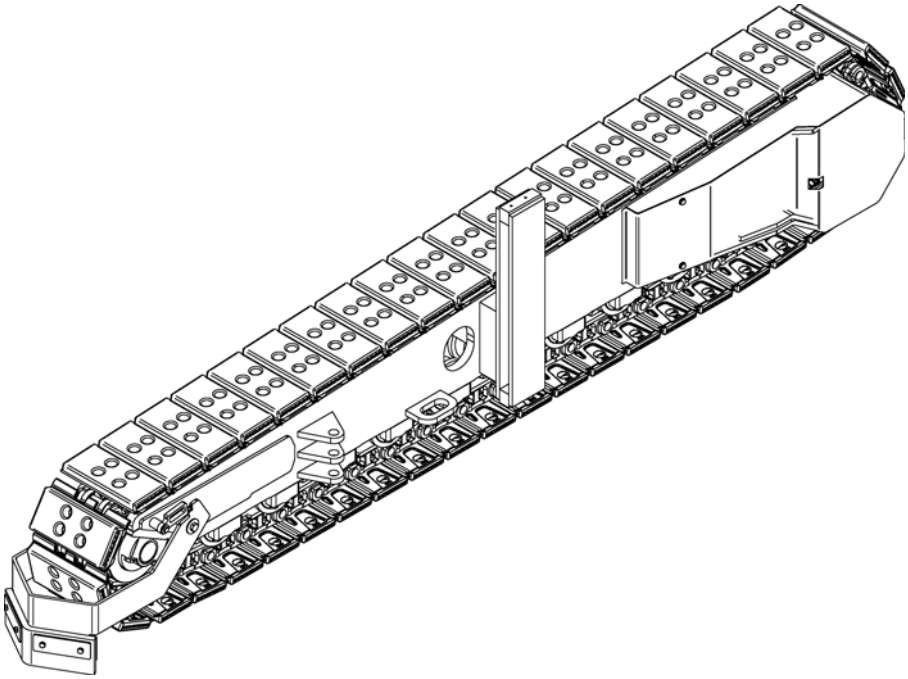

https://truckmanualshub.com/

WARNING	**Danger of being pulled in by rotating or conveying vehicle parts**
	Rotating or conveying vehicle parts can cause severe or fatal injuries! - Do not enter the danger zone. - Do not reach into rotating or conveying parts. - Only wear close-fitting clothing. - Comply with the warning and information signs on the vehicle. - Stop the engine and remove the ignition key before any maintenance work. - Comply with all further information in these instructions and in the safety manual.

CAUTION	**Danger from heavy loads**
	Lowering vehicle parts may cause injuries! - When the vehicle is parked and during maintenance and transport, close both halves of the hopper and fit the corresponding hopper transport safeguards. - When the vehicle is parked and during maintenance and transport, raise the screen and fit the corresponding screed transport safeguards. - Ensure that opened hoods and covering parts are locked properly. - Comply with all further information in these instructions and in the safety manual.

CAUTION	**Hot surfaces!**
	Surfaces including those behind covering parts, together with combustion fuels from the engine or screed heater can be very hot and cause injuries! - Wear your personal safety gear. - Do not touch hot parts of the vehicle. - Only perform maintenance and repair work after the vehicle has cooled down. - Comply with all further information in these instructions and in the safety manual.

https://truckmanualshub.com/

1.1 Maintenance intervals

Item	Interval								Maintenance point	Note
	10	50	100	250	500	1000 / annually	2000 / every 2 years	If necessary		
1	■								- Chain tension - Check	
								■	- Chain tension - Adjust	
								■	- Chains - Relieve	
2				■					- Bottom plates - Check wear	
								■	- Bottom plates - Replace	
3	■								- Rollers - Check for leaks	
				■					- Rollers - Check wear	
								■	- Rollers - Replace	

Maintenance	■
Maintenance during the running-in period	▼

https://truckmanualshub.com/

Item	Interval								Maintenance point	Note
	10	50	100	250	500	1000 / annually	2000 / every 2 years	If necessary		
4		■							- Planetary gear - Check oil level	
								■	- Planetary gear - Top up oil	
			▼			■			- Planetary gear - Change oil	
					■				- Planetary gear - Check oil quality	
				■					- Planetary gear - Screw connections Check	
								■	- Planetary gear - Screw connections Tighten	

Maintenance	■
Maintenance during the running-in period	▼

https://truckmanualshub.com/

WARNING	Danger from pretensioned springs
	Incorrectly performed maintenance and repair work can cause severe or fatal injuries! - Always observe the maintenance instructions. - Do not perform any unauthorised maintenance or repair work to pretensioned springs. - Comply with all further information in these instructions and in the safety manual.

STOP Any work on the pretensioned spring element must only be carried out by trained, specialist personnel!

STOP The spring elements must only be removed by a specialist workshop! The following applies to all spring elements in the event of a necessary repair: replace the complete unit only!

STOP Repairing the spring elements involves significant safety measures and should only be carried out by a specialist workshop!

☞ Your Dynapac customer service will be happy to provide support during maintenance, repair and the replacement of wearing parts!

https://truckmanualshub.com/

1.2 Points of maintenance

Chain tension (1)

⚠ If the chains are not tensioned sufficiently, they can slip out of their guide formed by rollers, drive gear and idler wheel, thereby increasing wear levels.

⚠ If the chains are tensioned too tightly, this increases wear on the idler wheel and drive unit mounting, and also increases wear on track bolts and bushes.

Checking / adjusting chain tension

- The chain tension is adjusted with grease tensioners. The filling ports (A) are located on the RH and LH sides of the drive unit frame.

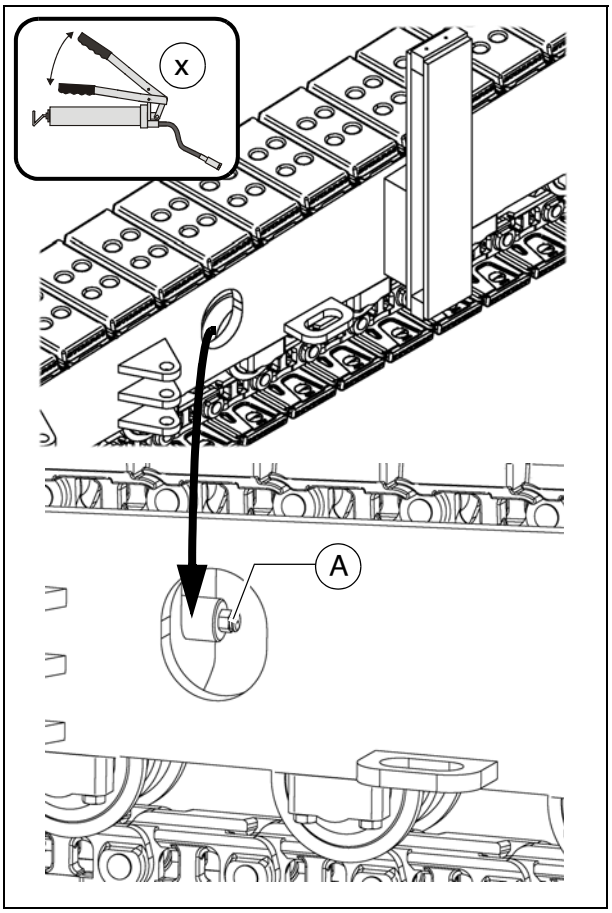

https://truckmanualshub.com/

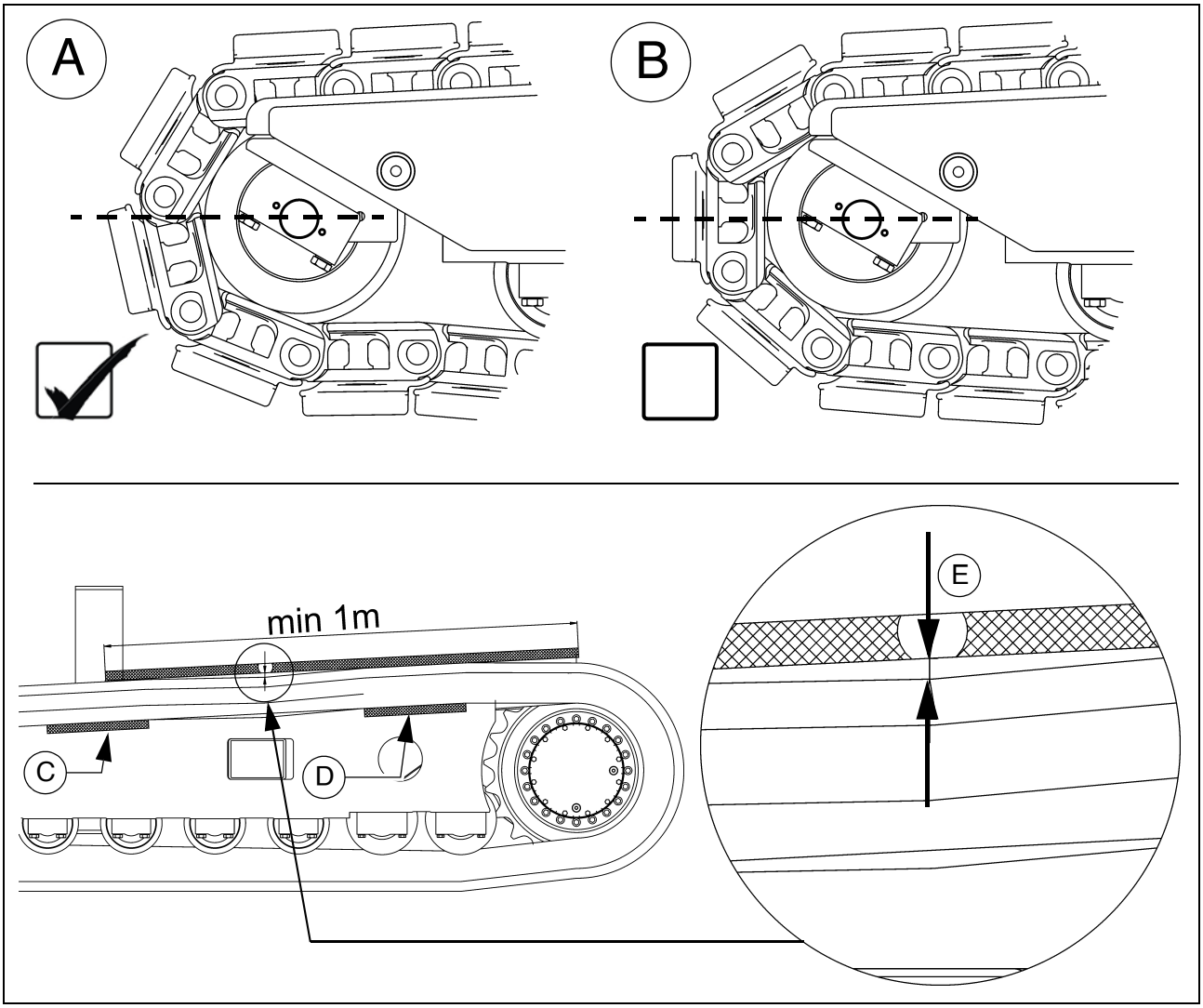

- Before checking/adjusting the chain tension, ensure that the position of the chain to the idler wheel is as shown in diagram (A).

☞ Correct if necessary by moving the vehicle a little.

- Insert a measuring rule between the sliding piece (C) and (D) of the track to determine the maximum slack:
  - the distance (E) between bottom plate and measuring rule must be 10-20 mm.

https://truckmanualshub.com/

If a different level of slack is detected during the measurement process, proceed as follows:

- Screw head section for flat nipple (tool box) onto the grease gun.
- Refill the chain tensioner with grease at the filler connection (A), then remove the grease gun.
- Check the chain tension once again, as described above.

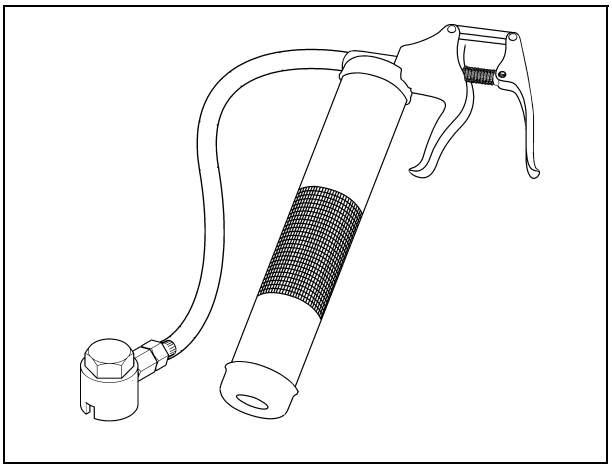

If the tension is too high: see section "Relieving the chain".

Repeat this procedure on both drive units!

Relieving the chain:

STOP The grease in the tensioning element is under pressure. Carefully and slowly unscrew the filling valve, but not too far.

- Unscrew the lubricating nipple (A) on the grease tensioner using a tool until the grease is able to emerge from the nipple's lateral hole.

The idler wheel moves back independently or must be reset manually.

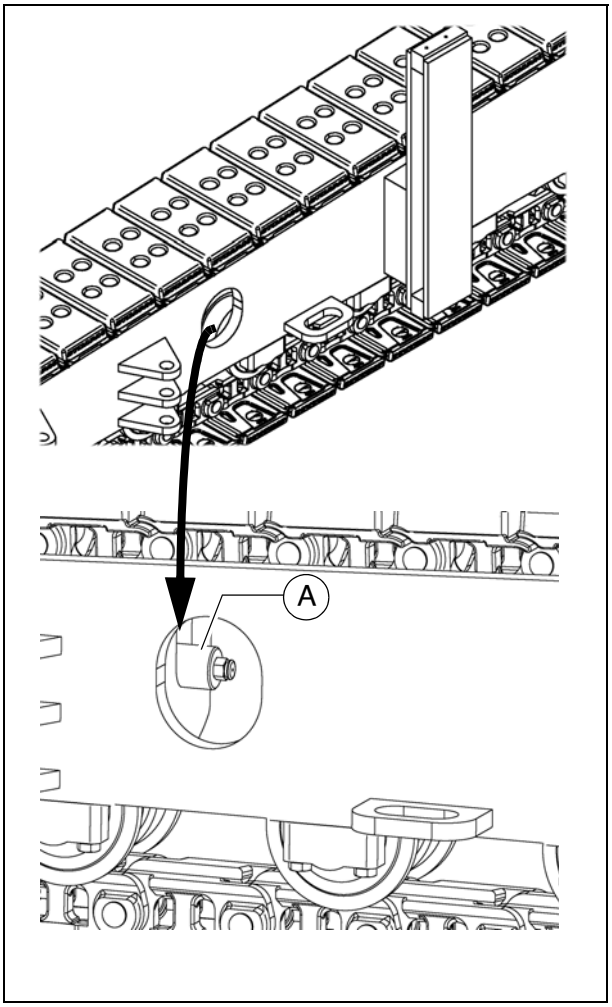

https://truckmanualshub.com/

Bottom plates (2)

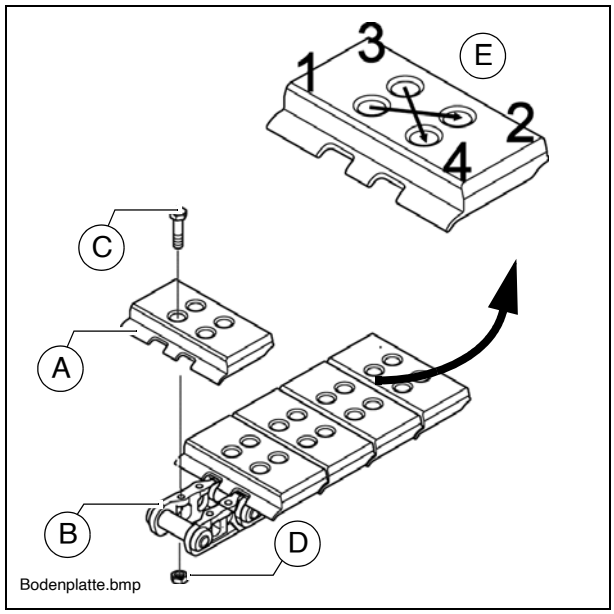

⚠ Always use new bolts and nuts when installing new bottom plates!

- After removing the worn bottom plates, the adhesions must be cleaned from the contact surfaces of the chain links and the nut seats.
- Place the bottom plate with the front edge (A) over the chain links' bolt eye (B).
- Lubricate the threads and the contact surfaces beneath the bolt heads with a thin film of oil or grease.
- Insert the bolts (C) into the holes and screw them into the nuts (D) a few turns.
- Tighten the bolts without applying significant torque.
- Tighten the bolts diagonally to the required torque 155 ± 8 Nm (E).

⚠ Check that each bolt has attained the full tightening torque!

https://truckmanualshub.com/

Rollers (3)

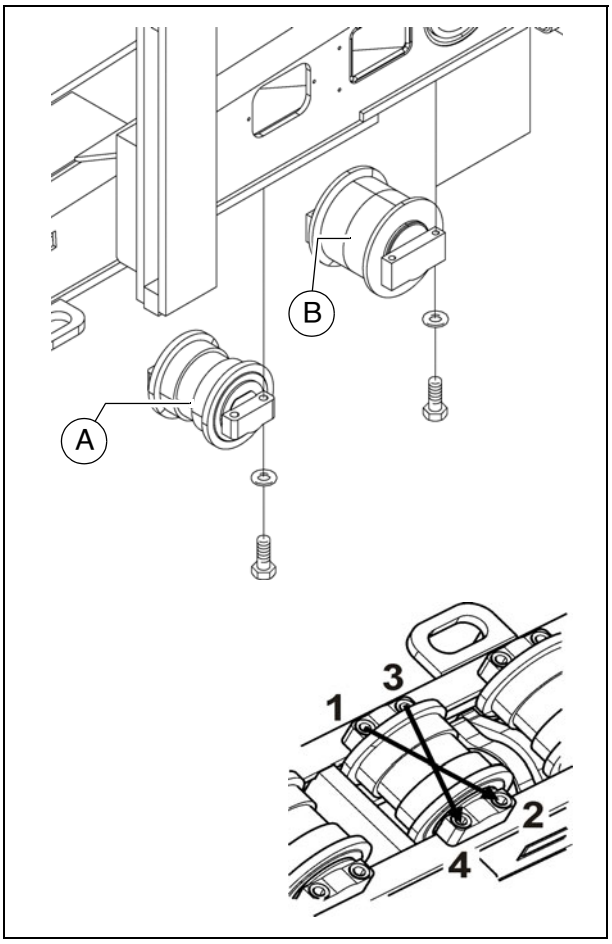

Rollers with damaged surfaces or which are leaking should be replaced immediately!

- Relieving the caterpillar chain:
- Raise the track chassis using suitable lifting equipment and remove adhering dirt.

Observe the safety measures when raising and securing loads!

- Remove the defective roller.
- Install the new roller using new assembly parts.

- Tighten the bolts without applying significant torque.
- Tighten the bolts diagonally to the required torque.

- Tighten to the following torques:
  - Small rollers (A): 220 Nm
  - Large rollers (B): 87 Nm

Check that each bolt has attained the full tightening torque!

- Lower the track chassis and tension the caterpillar chain properly.

https://truckmanualshub.com/

Planetary gear (4)

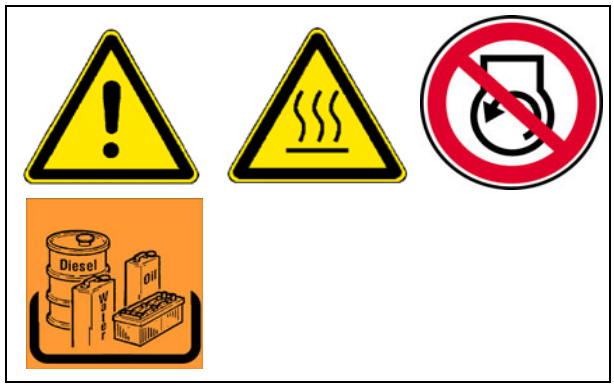

- Turn the conveyor chain sprocket so that the drain plug (B) is located at the bottom.
- For **oil level check** unscrew and remove the inspection bolt (A).

☞ When oil level is correct, the oil comes up to the lower edge of the inspection bore or a small amount of oil escapes through the aperture.

For **filling in** the oil:

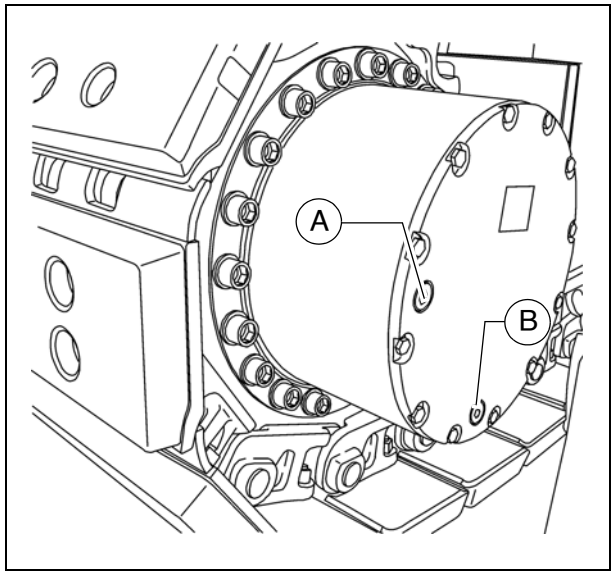

- Unscrew the filler screw (A).
- Fill in the specified oil into the filler bore at (A) until the oil level has reached the lower edge of the filler bore.
- Screw the filler screw (A) back in.

Oil change:

☞ The oil should be changed when at operating temperature.

⚠ Ensure that no dirt or foreign bodies are able to enter the gear.

- Turn the conveyor chain sprocket so that the drain plug (B) is located at the bottom.
- Unscrew and remove the drain plug (B) and filler screw (A) and drain off oil.
- Check gaskets on both screws and replace if necessary.
- Screw the drain plug (B) in.
- Fill new oil through the filler opening until the lower edge of the opening is reached.
- Tighten the filler screw (A).

https://truckmanualshub.com/

☞ Alternatively, the oil level can be checked and the oil changed at the rear of the gearbox:

- Remove protective cover (A)
- The following are located at the rear of the gearbox:
  - Oil inlet (B)
  - Oil level check (C)
  - Oil drain (D)

☞ Carry out the oil level check and oil change as per the description above.

⚠ When draining using the drain (D), a small residual quantity of oil remains in the gearbox.

- Max. oil level up to lower edge of oil check (C).
- Reinstall the protective cover (A) properly.

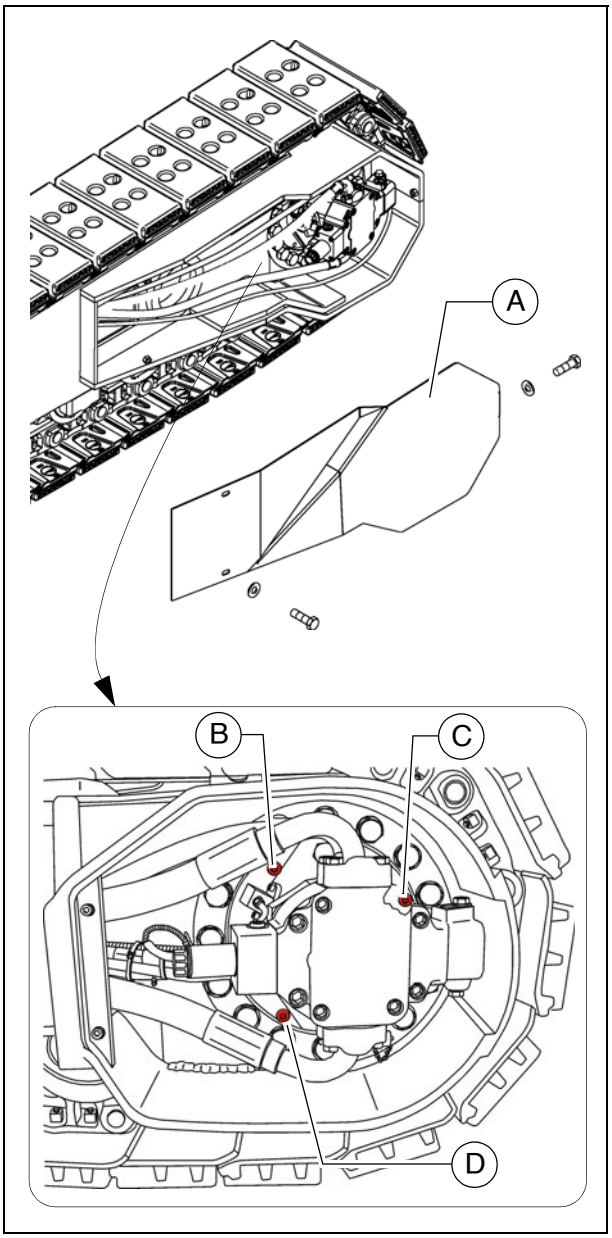

https://truckmanualshub.com/

Screw connections

After approx. 250 hours of operation at full load, check that all gearbox mounting screws are firmly seated.

Improperly tightened screws may lead to increased wear and to the destruction of components!

- The correct tightening torque for the connecting screws for the gearbox - drive unit frame (B) is: 500Nm +/-50Nm
- The correct tightening torque for the connecting screws for the hydraulic motor - gearbox (C) is: 410 Nm

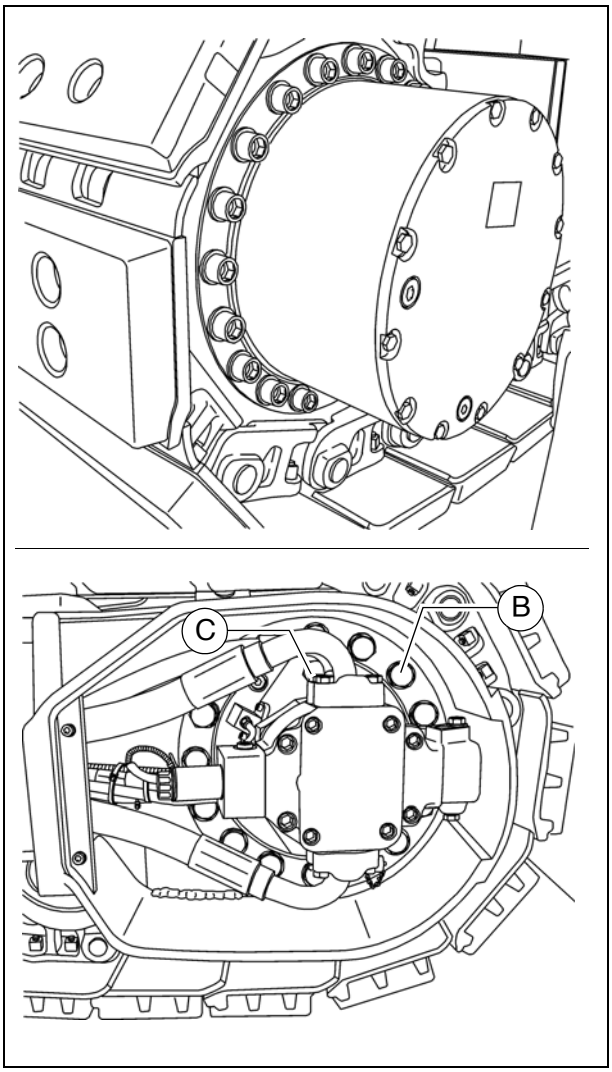

https://truckmanualshub.com/

https://truckmanualshub.com/

F 81 Maintenance - electrical system

1 Maintenance - electrical system

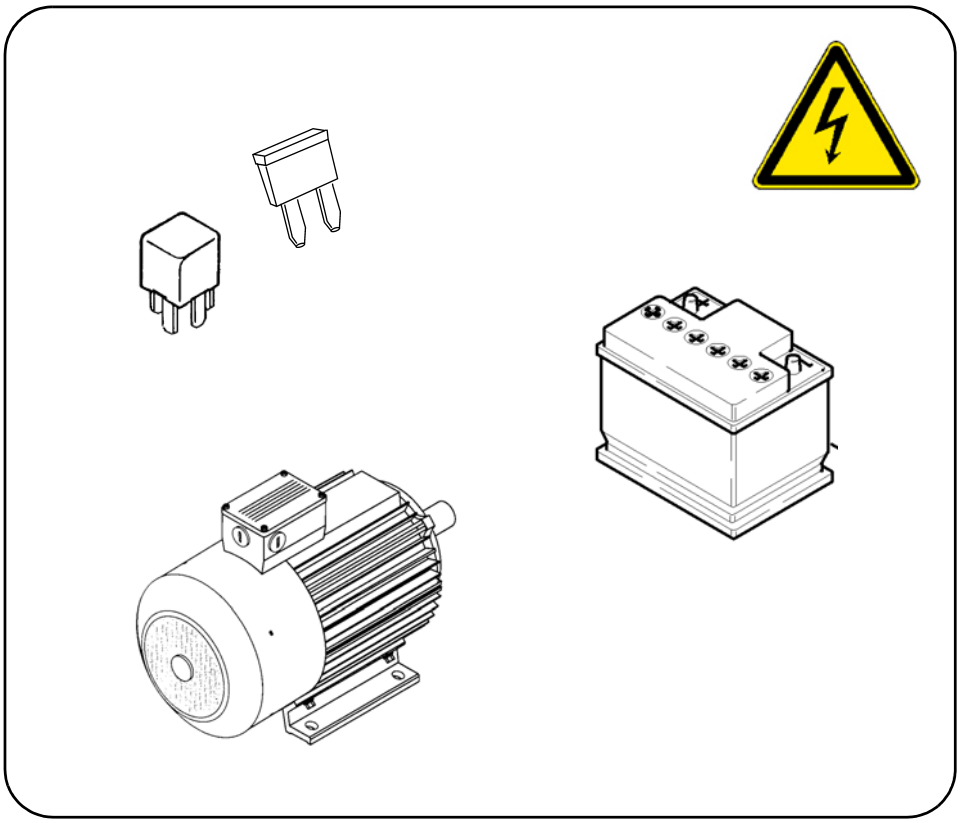

https://truckmanualshub.com/

WARNING	**Danger of being pulled in by rotating or conveying vehicle parts**
	Rotating or conveying vehicle parts can cause severe or fatal injuries! - Do not enter the danger zone. - Do not reach into rotating or conveying parts. - Only wear close-fitting clothing. - Comply with the warning and information signs on the vehicle. - Stop the engine and remove the ignition key before any maintenance work. - Comply with all further information in these instructions and in the safety manual.

CAUTION	**Danger due to electric shock**
	Injuries can be caused by touching live parts directly or indirectly! - Do not remove any protective safeguards. - Never spray water on electric or electronic components. - Maintenance work to the electric system should only be carried out by trained specialist staff. - When equipped with electric screed heater, check the insulation monitoring every day according to the instructions. - Comply with all further information in these instructions and in the safety manual.

CAUTION	**Danger from batteries**
	Incorrect handling of the batteries poses a danger of injuries! - Wear your personal safety gear. - Do not smoke, avoid any open flames. - Ensure the working area is well ventilated after opening the battery compartment. - Avoid short-circuiting the battery terminals. - Comply with all further information in these instructions and in the safety manual.

https://truckmanualshub.com/

1.1 Maintenance intervals

Item	Interval								Maintenance point	Note
	10	50	100	250	500	1000 / annually	2000 / every 2 years	If necessary		
1			■						Filling level of battery electrolyte - check	
								■	Top up with distilled water	
				■					Apply grease to battery terminals	
2	■								- Generator Electrical system insulation monitoring Check function	(○)
		■							- Alternator Visual check for pollution or damage - Check the cooling air openings for pollution or clogging, clean if necessary.	(○)
3								■	Electrical fuses	

Maintenance	■
Maintenance during the running-in period	▼

https://truckmanualshub.com/

1.2 Points of maintenance

Batteries (1)

Maintenance of batteries

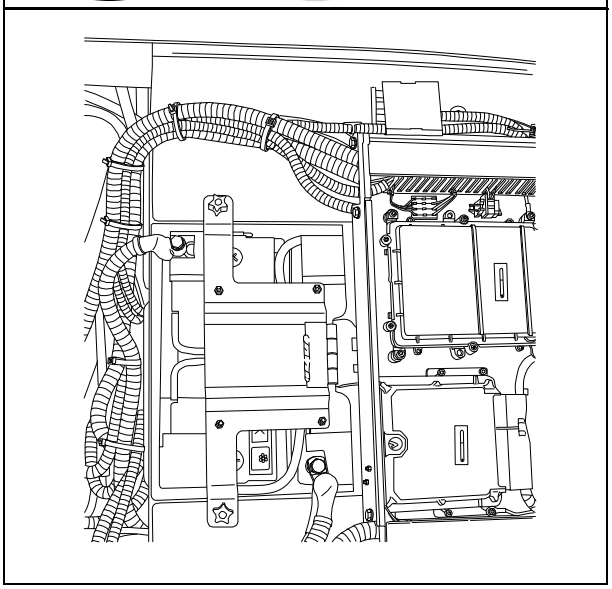

☞ The batteries are factory-filled with the correct quantity of acid. The fluid level should come up to the top mark. If required, top up the battery, but only use distilled water to do so!

⚠ The battery terminal clips must be free of oxide and protected with a special terminal grease.

⚠ When removing the batteries, always first remove the negative terminal, ensuring that the battery terminals cannot be short circuited.

☞ Keep the battery surfaces clean and dry, use only a damp or antistatic cloth for cleaning.

⚠ Do not open batteries without plugs!

☞ If the starting capacity is insufficient, check and possible recharge the batteries.

☞ Regularly check the charge of the battery and recharge if necessary.

https://truckmanualshub.com/

Recharging the batteries

Both batteries must be recharged individually and must be dismantled from the vehicle for this purpose.

Always keep batteries upright during transport!

Before and after recharging a battery, always check the electrolyte level in every cell; if this needs to be topped up, only use distilled water.

When recharging batteries, every cell must be opened, i.e. plugs and/or covers must be removed.

Only use commercially available automatic battery chargers according to the manufacturer's instructions.

Preferably use the slow recharging procedure and adjust the charge current according to the following rule of thumb:
Battery capacity in Ah divided by 20 results in the safe charge current in A.

https://truckmanualshub.com/

Alternator (2)

Electrical system insulation monitoring

The function of the protective insulation monitoring measure must be checked every day before starting work.

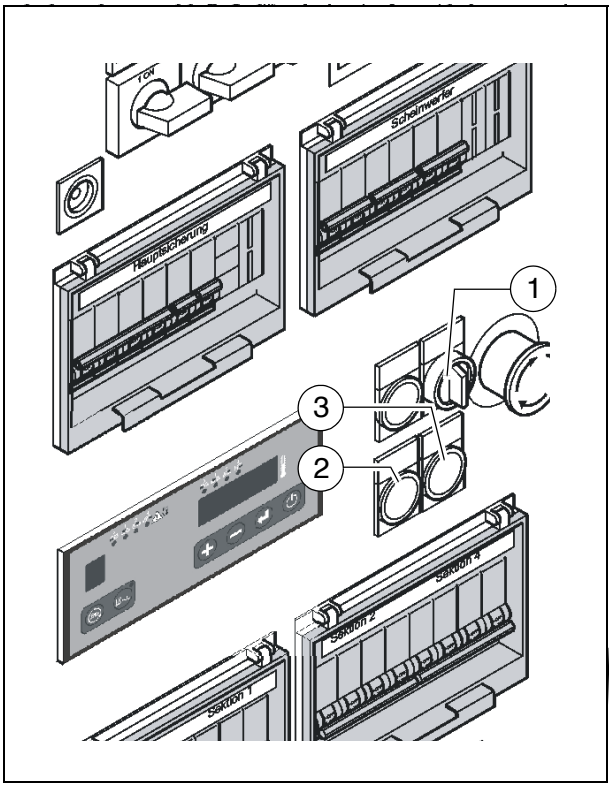

This check only checks the function of the insulation monitor, not whether an insulation error has occurred on the heating sections or consumers.

- Start the paver finisher's drive engine.
- Switch heating system switch (1) to ON.
- Press test button (2).
- The indicator lamp integrated into the test button signals "insulation fault".
- Press reset button (3) for at least 3 sec. to delete the simulated fault.
- The indicator lamp goes out.

If the test is conducted successfully, work may be undertaken with the screed and external consumers may be used.
If the "insulation fault" indicator lamp displays a fault even before the test button is pressed or if no fault is displayed during the simulation, work must not be undertaken with the screed or with connected, external equipment.

The screed and equipment must be checked or repaired by a specialist electrician. Only then may work again be undertaken with the screed and equipment.

Danger due to electrical voltage

Non-adherence to the safety precautions and safety regulations when operating the electric screed heating system leads to a risk of electric shock.
Danger to life.
All maintenance and repair work on the screed's electrical system may be carried out by a specialist electrician only.

https://truckmanualshub.com/

Insulation faults

If an insulation fault occurs during operation, and the indicator lamp displays an insulation fault, the operator may proceed as follows:

- Switch the switches of all external equipment and the heating system to OFF and press the reset button for at least 3 seconds to delete the fault.
- If the indicator lamp does not go out, the fault lies in the generator.

STOP No further work may be carried out.

- If the indicator lamp goes out, the switches of the heating system and external equipment can be switched back to ON one after another until a message again appears and the system is shut-down.
- The equipment found to be faulty must be removed or must not be engaged, and the reset button must be pressed for at least 3 seconds to delete the fault.

Operation may now be continued - without the faulty equipment, of course.

The generator or electrical consumer found to be faulty must be checked or repaired by a specialist electrician. Only then may work again be carried out with the screed and equipment.

https://truckmanualshub.com/

Cleaning the generator

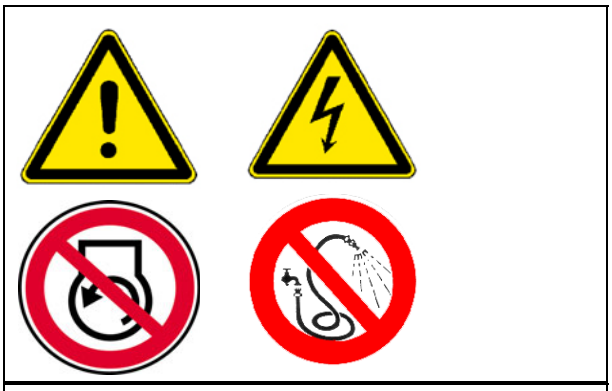

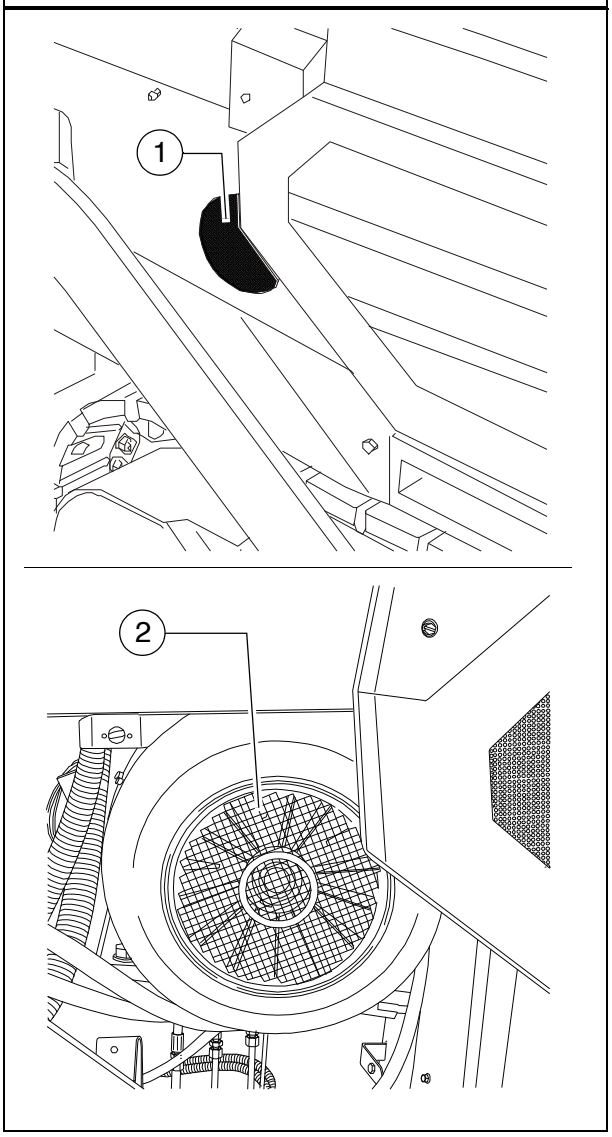

⚠ The generator must be regularly checked for excessive dirt and must be cleaned if necessary.

- The air intake (1) and fan shroud (2) must be kept free of dirt.

⚠ Cleaning with a high-pressure cleaner is not permissible!

https://truckmanualshub.com/

Electrical fuses / relays (3)

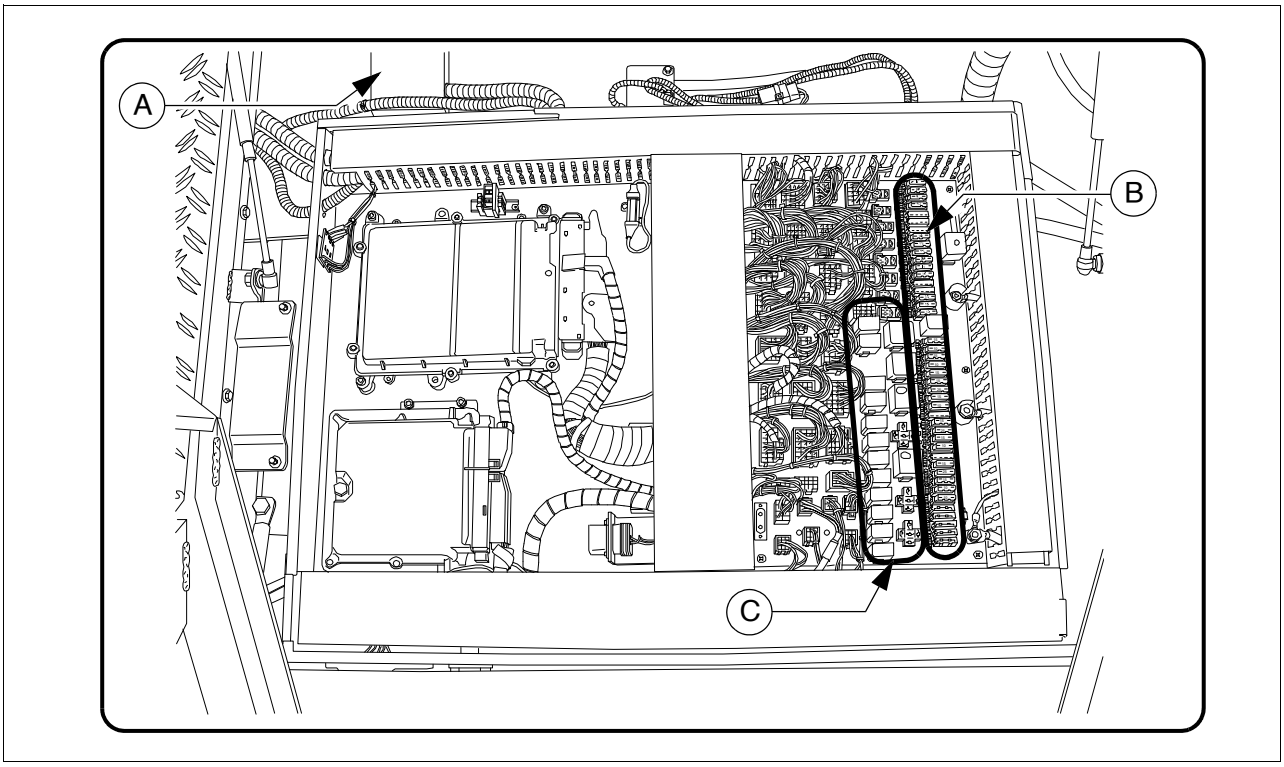

A	Main fuses
B	Fuses in terminal box
C	Relays in terminal box

Main fuses (A)

F		A
F1.1	Main fuse	50
F1.2	Main fuse	50

https://truckmanualshub.com/

Fuses in terminal box (B)

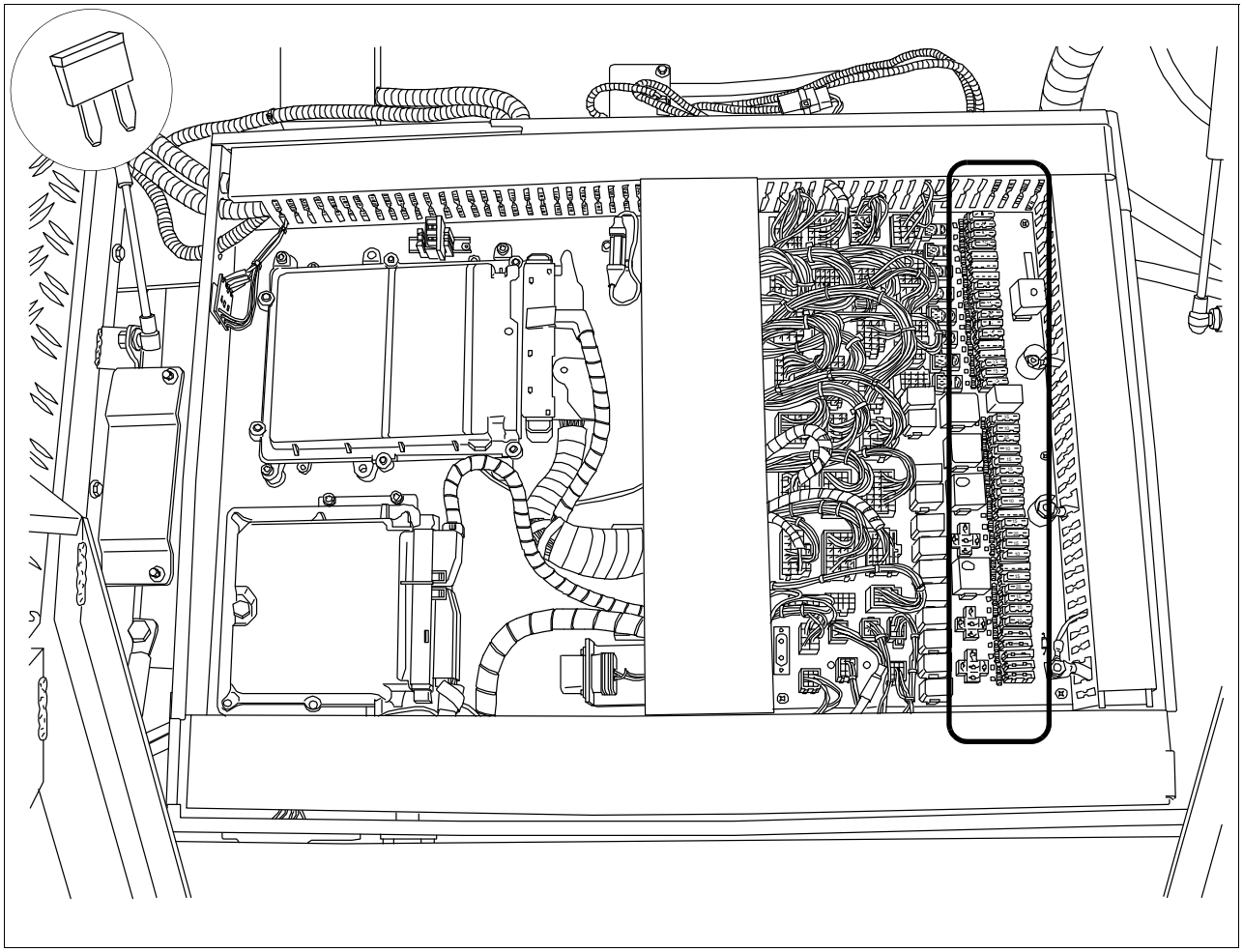

https://truckmanualshub.com/

F		A
F1	Screed	10
F2	Screed	10
F3	Levelling	10
F4	Engine start / emergency stop	5
F5	not used	
F6	not used	
F7	not used	
F8	Emergency stop / remote steering	5
F9	Emulsion spraying system	5
F10	Travel drive sensors	7,5
F11	Electric heating	10
F12	Conveyor sensors	7,5
F13	12V socket	10
F14	not used	
F15	not used	
F16	24V socket	10
F17	Display voltage supply	5
F18	Keyboard voltage supply	10
F19	Engine compartment lighting	10
F20	Rotary beacon	7,5
F21	Travel drive computer voltage supply	25A
F22	Travel drive computer voltage supply	25A
F23	Horn	15
F24	Engine start	10
F25	Windscreen wiper	5
F26	Engine control unit	30
F27	Keyboard / display constant positive	2
F28	not used	
F29	Ignition	3
F30	Reverse buzzer	5
F31	Diesel pump	5
F32	Travel drive computer control voltage	20
F33	not used	
F34	Seat heating	5
F35	Rear working lights	10
F36	Front working lights	10
F37	Engine interface	2
F38	Interface	2

https://truckmanualshub.com/

Relays in terminal box (C)

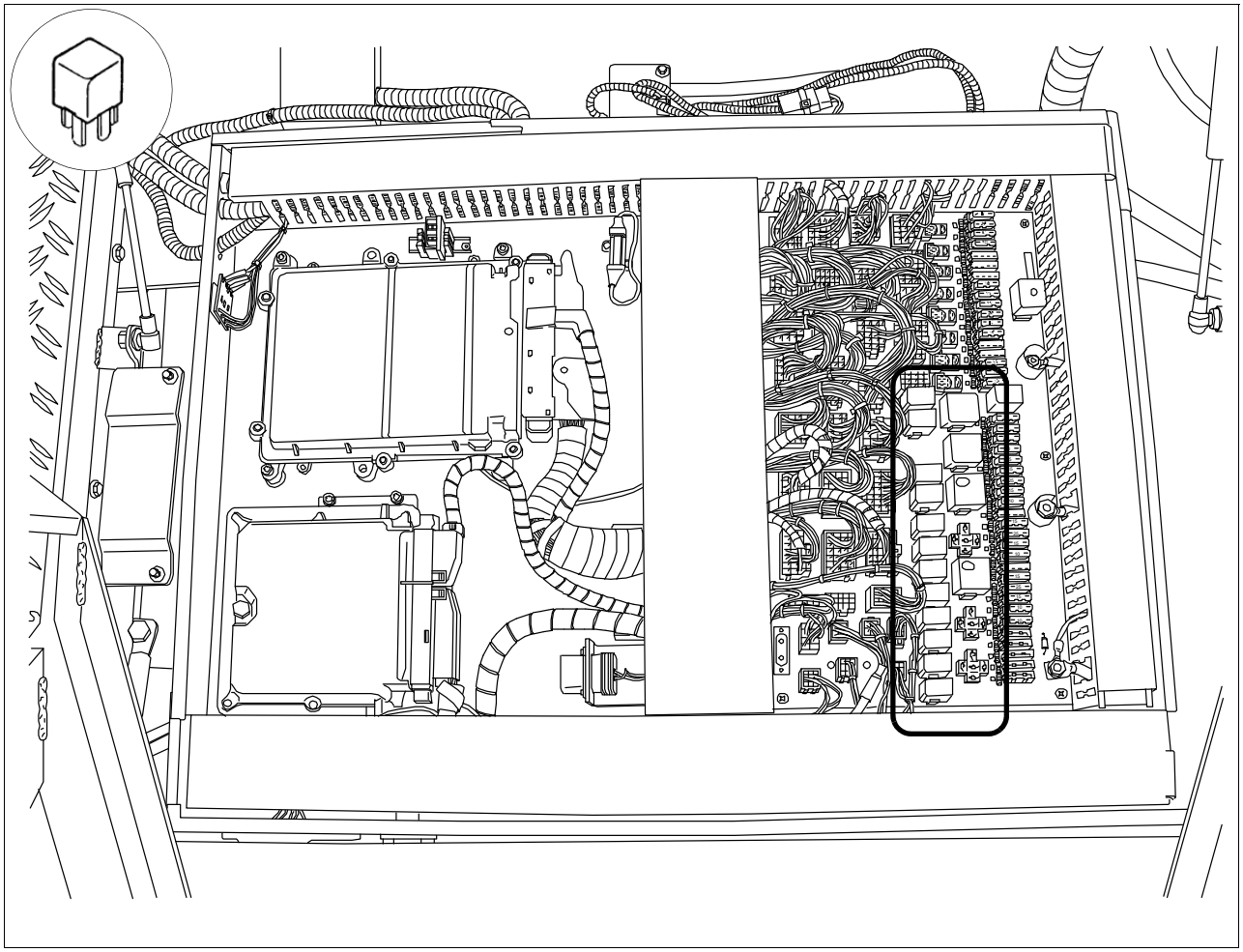

https://truckmanualshub.com/

K	
0	Engine start
1	Ignition
2	Travel drive computer voltage supply
3	Travel drive computer voltage supply
4	Engine start
5	Travel drive computer control voltage
6	Keyboard / display
7	Front working lights
8	Rear working lights
9	Horn
10	Start inhibit, emergency stop
11	Start inhibit
12	Rotary beacon
13	Seat heating
14	Windscreen wiper
15	Windscreen washer system
16	Reverse buzzer
17	Diesel pump
18	not used
19	not used
20	not used
21	not used
22	not used
23	not used
24	not used
25	not used
26	not used
27	not used
28	not used
29	Central lubrication

https://truckmanualshub.com/

Relays in the engine compartment (E)

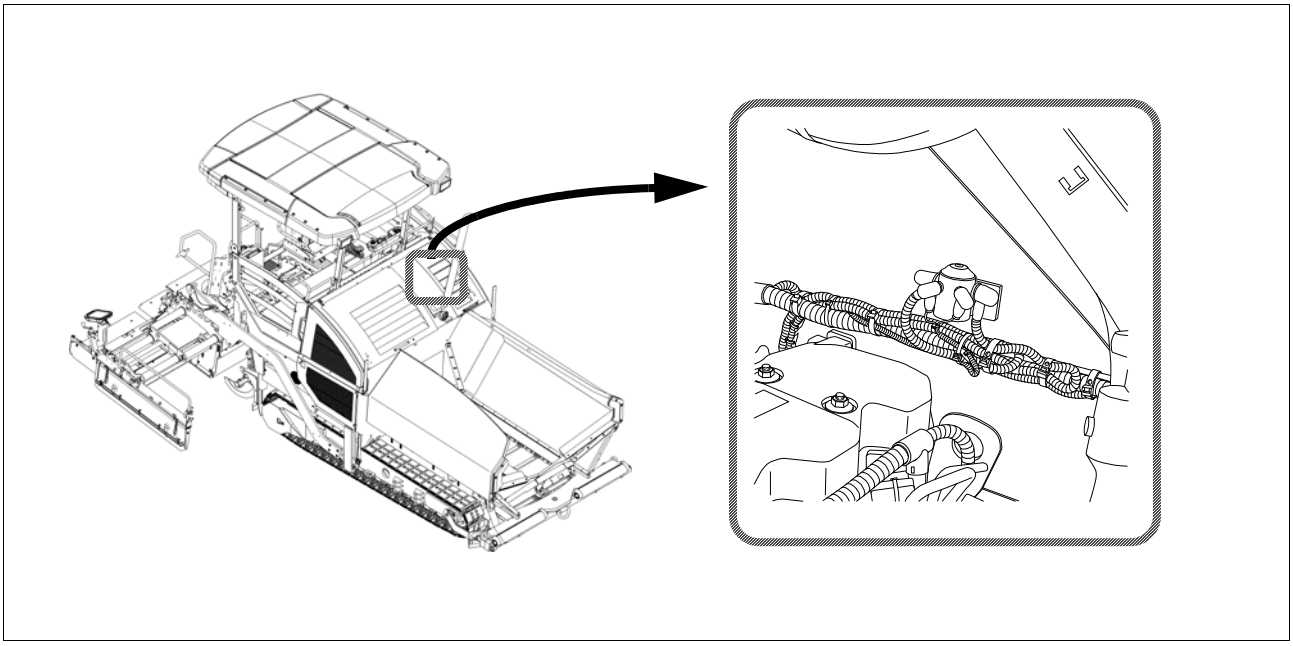

K	
0	Engine start

https://truckmanualshub.com/

F 90 Maintenance - lubricating points

1 Maintenance - lubricating points

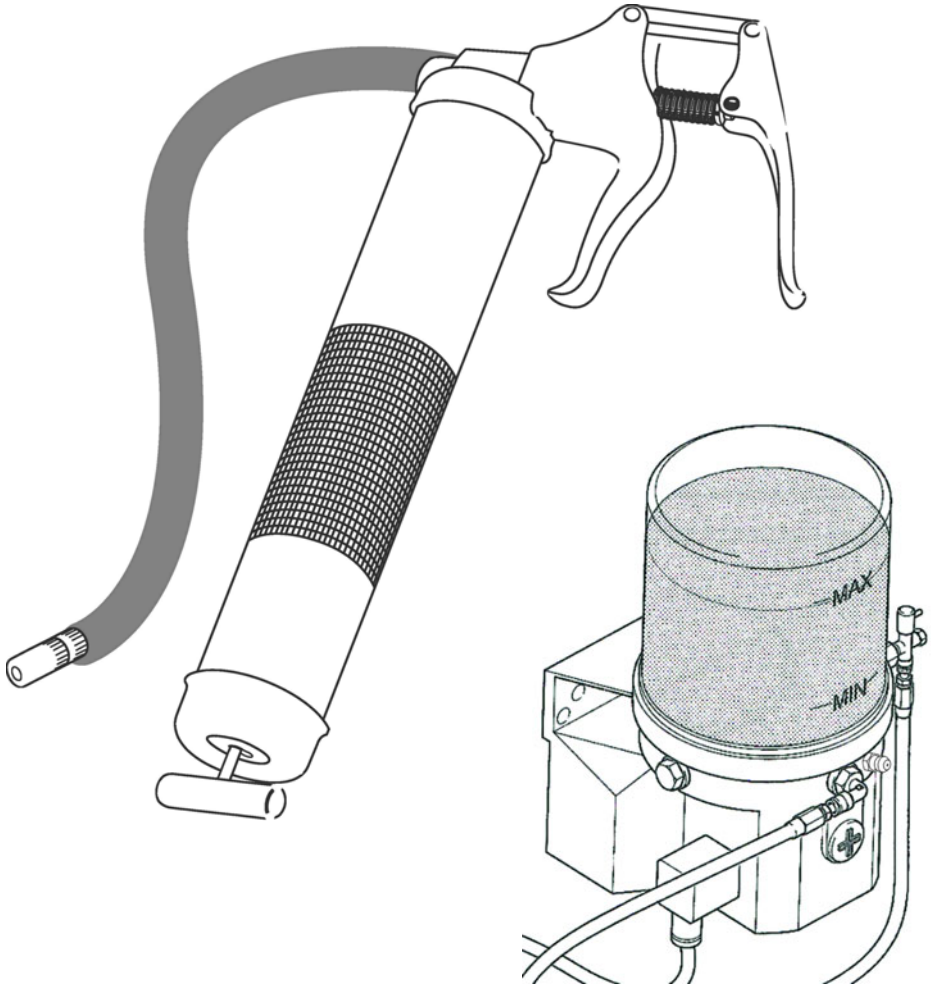

☞ The information on the lubricating points for the various assemblies is assigned to the specific maintenance descriptions and must be read there!

https://truckmanualshub.com/

☞ Due to the use of a central lubrication system (○), the number of lubricating points may deviate from the description.

1.1 Maintenance intervals

Item	Interval								Maintenance point	Note
	10	50	100	250	500	1000 / annually	2000 / every 2 years	If necessary		
1	■								- Check lubricant tank fill level	(○)
								■	- Top up lubricant tank	(○)
							■		- Bleed central lubrication system	(○)
	■								- Check pressure limiting valve	(○)
								■	- Check flow of lubricant at the consumer	(○)
2		■							- Bearing points	

Maintenance	■
Maintenance during the running-in period	▼

https://truckmanualshub.com/

1.2 Points of maintenance

Central lubrication system (1)

Danger of injuries!

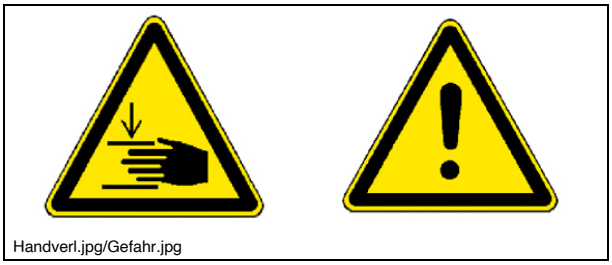
Handverl.jpg/Gefahr.jpg

- Do not reach into the tank when the pump is running!
- The central lubrication system must only be operated with the safety valve installed!
- Do not undertake any work on the pressure relief valve during operation!
- Risk of injury due to escaping lubricant, as the system operates at high pressures!
- Ensure that the diesel engine cannot be started when working on the system!
- Observe safety regulations for handling hydraulic systems!
- Ensure maximum cleanliness when working on the central lubrication system!

The following assemblies' lubricating points can be automatically supplied with grease by the central lubrication system:

- Conveyor
- Auger
- Steering, axles (wheeled pavers)
- Screed (tamper / vibration)

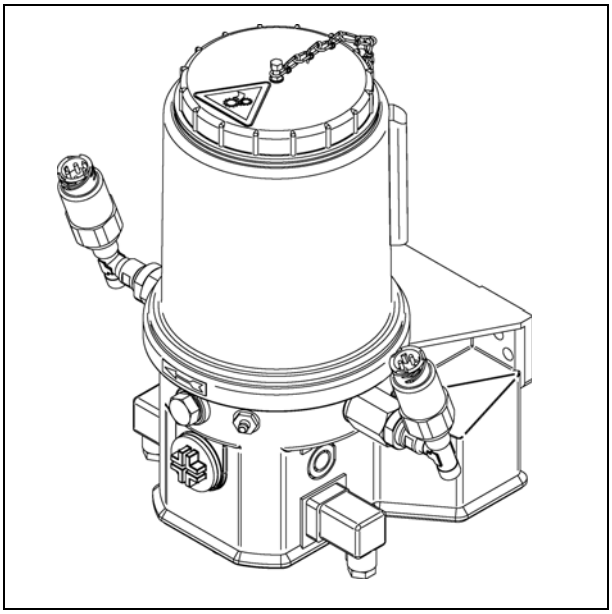

https://truckmanualshub.com/

Central lubrication system
Check filling level

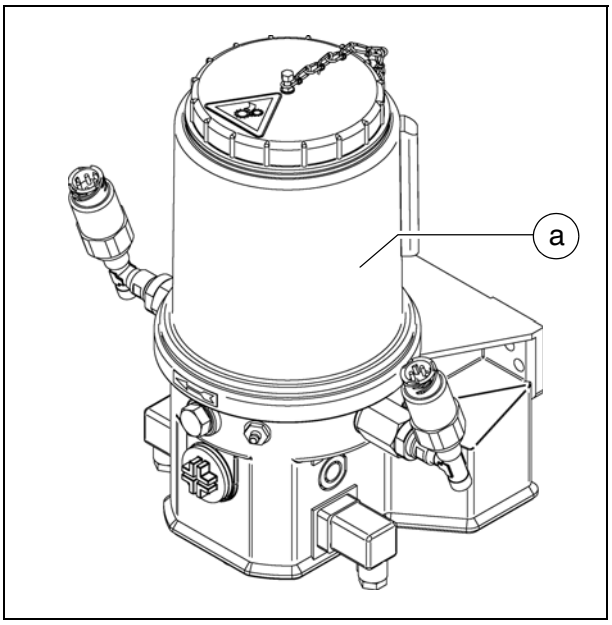

☞ The lubricant tank should always be filled sufficiently to ensure that the system does not "run dry", that adequate lubricating point supply is ensured and that time-consuming bleeding does not become necessary.

- Always maintain a fill level above the "MIN" mark (a) on the tank.

Top up lubricant tank

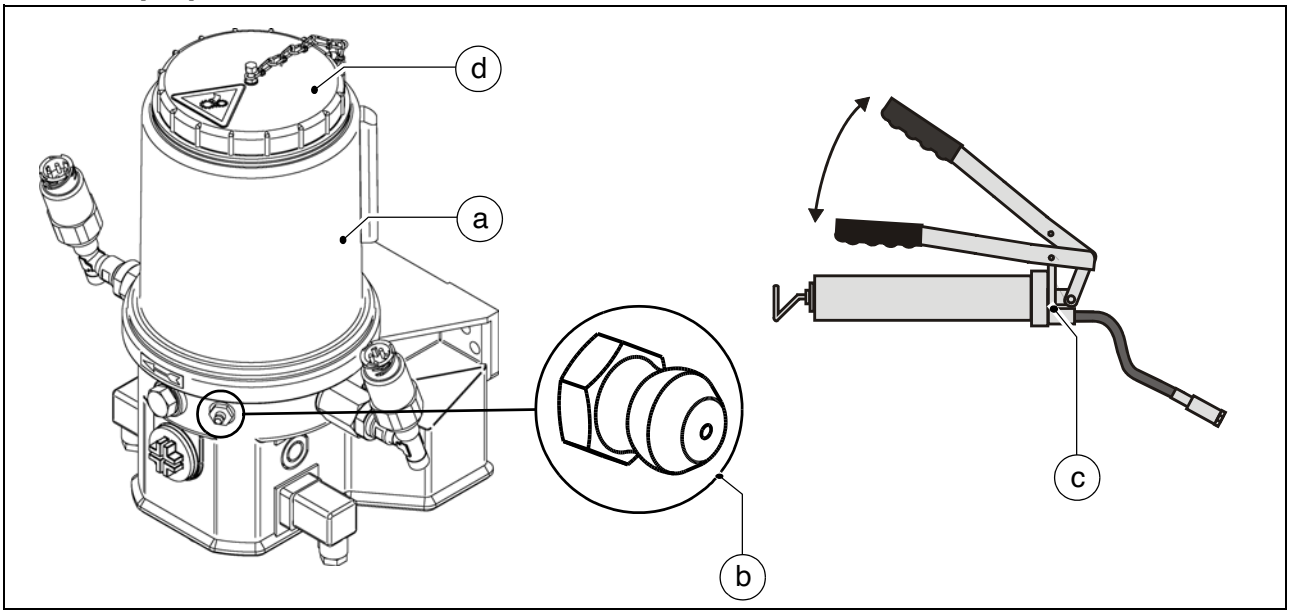

- A lubricating nipple (b) is located on the lubricant tank (a) for filling purposes.
- Connect the grease gun (c) enclosed on delivery to the filling nipple (b) and fill the lubricant tank (a) up to the MAX mark.
- Alternatively, unscrew cover (d) and fill tank from above.

☞ When the lubricant tank is completely empty, the pump may have to run for up to 10 minutes until the full delivery rate is achieved after filling.

https://truckmanualshub.com/

Bleed central lubrication system

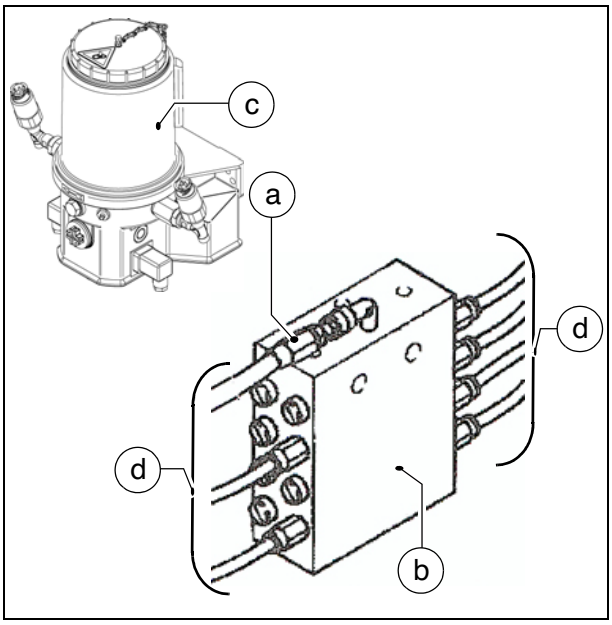

Bleeding the lubrication system is necessary if the central lubrication system has been operated with an empty lubricant tank.

- Release the main lubrication line (a) at the distributor (b).
- Start up the central lubrication system with the filled lubricant tank (c).
- Allow the pump to run until lubricant emerges from the previously released main line (a).
- Reconnect the main line (a) to the distributor.
- Release all distribution lines (d) from the distributor.
- Reconnect all distribution lines as soon as lubricant has emerged.
- Check all connections and lines for leaks.

Check pressure limiting valve

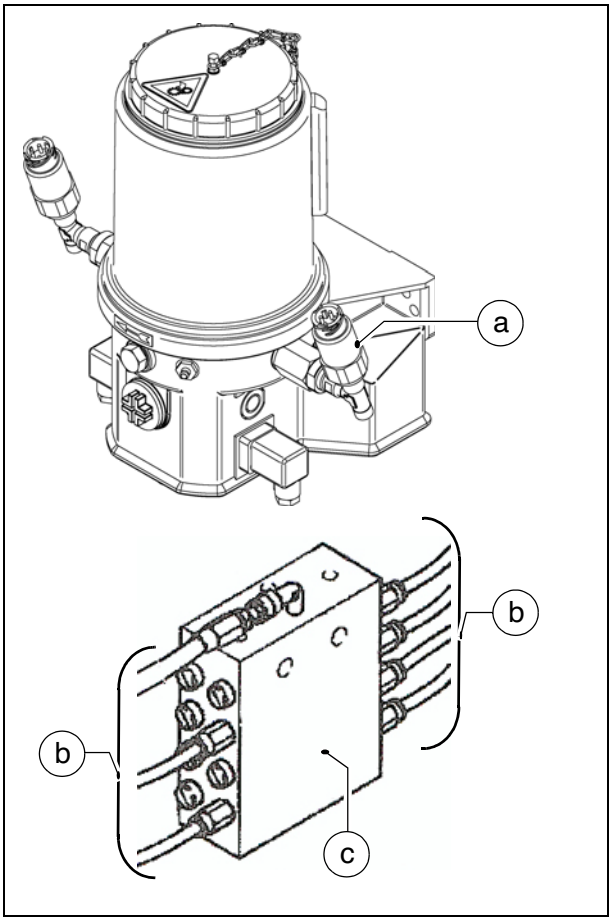

⚠ If lubricant emerges at the pressure limiting valve (a), this indicates a malfunction in the system.
The consumers are no longer adequately supplied with lubricant.

- Release all distribution lines (b) leading from the distributor (c) to the consumers in succession.
- If lubricant emerges from one of the released distribution lines (b) under pressure, search in this lubrication circuit for the cause of the blockage which has triggered the pressure limiting valve.
- After rectifying the malfunction and reconnecting all lines, again check the pressure limiting valve (a) for lubricant emergence.
- Check all connections and lines for leaks.

https://truckmanualshub.com/

Check the flow of lubricant at the consumers

Each lubrication channel at the consumers must be checked as regards clearance.

- Remove the lubrication line (a) and install a normal lubricating nipple (b).
- Connect the grease gun (c) enclosed on delivery to the lubricating nipple (b).
- Operate the grease gun until the lubricant visibly emerges.
- Rectify any faults in the flow of lubricant.
- Reinstall the lubrication lines.
- Check all connections and lines for leaks.

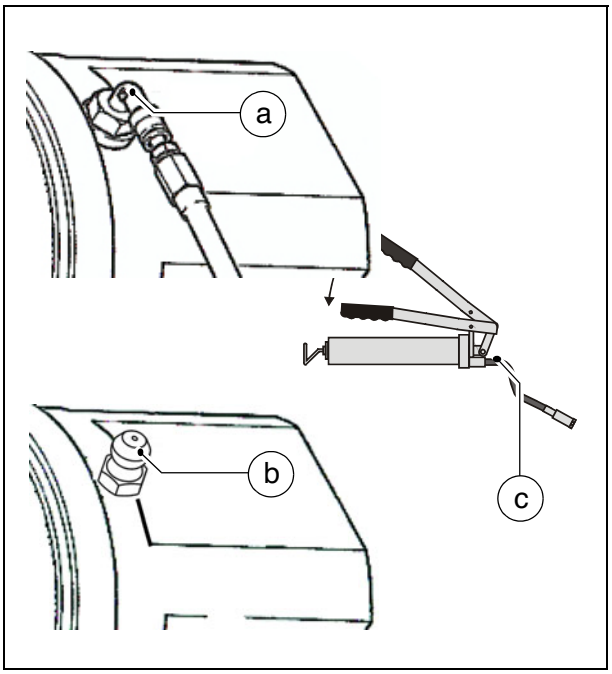

https://truckmanualshub.com/

Bearing points (2)

☞ One lubricating nipple (A) is located at each hydraulic cylinder bearing point (top and bottom).

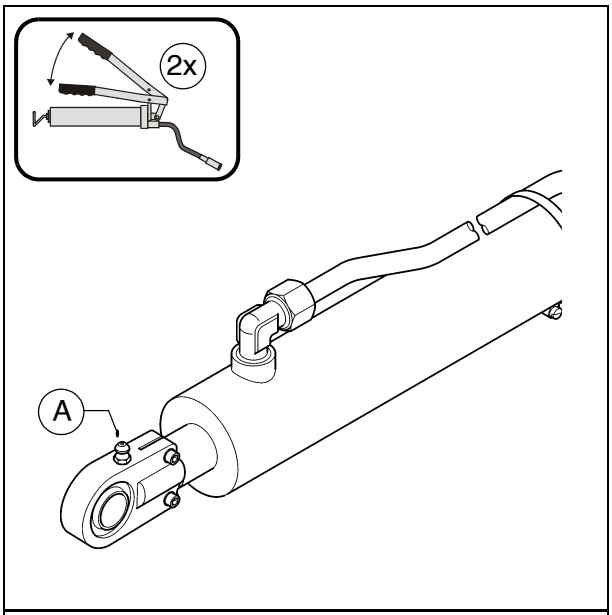

☞ One lubricating nipple (B) is located at each push roller bearing point.

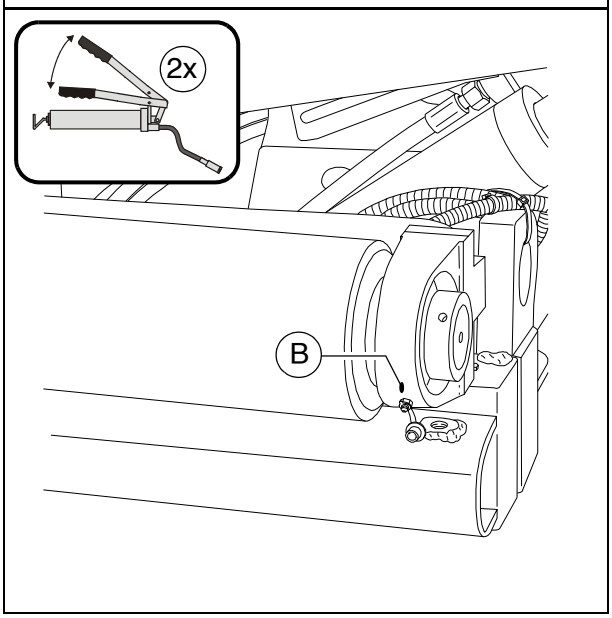

https://truckmanualshub.com/

https://truckmanualshub.com/

F 100 Tests, stopping ...

1 Tests, checks, cleaning, stopping

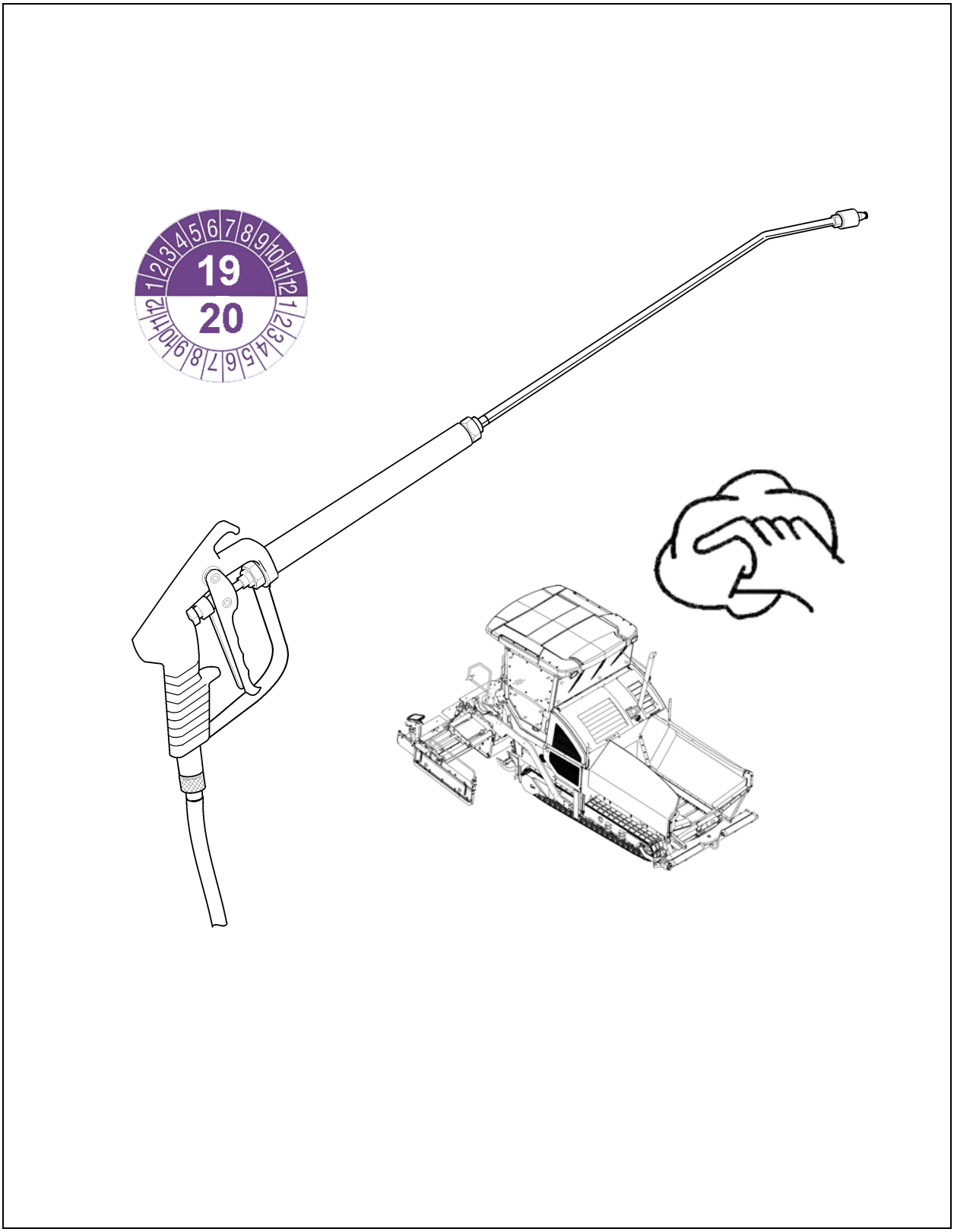

https://truckmanualshub.com/

1.1 Maintenance intervals

Item	Interval								Maintenance point	Note
	10	50	100	250	500	1000 / annually	2000 / every 2 years	If necessary		
1	■								- General visual inspection	
2	regularly								- Check that the bolts and nuts fit firmly	
3						■		■	- Inspection by an expert	
4								■	- Cleaning	
5								■	- Preserving the paver finisher	

Maintenance	■
Maintenance during the running-in period	▼

https://truckmanualshub.com/

2 General visual inspection

The daily routine should comprise a visual inspection around the entire paver finisher. The following items must be checked:

- Are components or controls damaged?
- Are there leaks on the engine, the hydraulics, the gearbox, etc.?
- Are all fastening points (conveyor, auger, screed, etc.) in order?
- Are the warnings affixed to the vehicle complete and legible?
- Are the non-slip surfaces at ladders, steps, etc. in correct condition, not worn or soiled?

⚠ Immediately take actions to correct any detected malfunction to avoid damages, dangers or environmental hazards!

3 Check that the bolts and nuts fit firmly

NOTE	Caution! Possible damage to or destruction of parts!
	- Self-locking nuts must always be replaced after removal. - Special torques not mentioned in this manual are stated at the corresponding place in the spare parts catalogue. - Screws locked with screw cement must be cemented in again if found to have come loose. Always use the stated torque. - Stated torques for screwed connections apply to dry (unoiled) state - Do no reuse screws inserted with the maximum permitted torque; instead, replace with new screws. - Screws in strength class 12.9 should only be used once. - All screwed connections must be clean. - Check all reused components of the screwed connection for any signs of damage.

Bolts and nuts must be checked regularly to ensure that they fit firmly; retighten them if necessary.

☞ The spare parts catalogue states the special torques at the corresponding parts.

☞ For the necessary standard torques, please refer to the section "Bolts - torques"

https://truckmanualshub.com/

4 Inspection by an expert

☞ Have finisher, screed and optional gas or electric system checked by a trained specialist

- when required (according to the operating conditions and the nature of application),
- however, at least once a year, check that they are all in good operational condition.

https://truckmanualshub.com/

5 Cleaning

- Clean all parts coming into contact with paving material.
  - Spray contaminated parts with the separator fluid spraying system (○).

⚠ **Before** cleaning work with the high pressure cleaner, grease all lube points acc. to specification.

- Clean the vehicle with water after laying mineral aggregates, lean-mixed concrete, etc.

⚠ Do not spray bearing points, electrical or electronic components with water.

- Remove residual paving material.

⚠ **After** cleaning work with the high pressure cleaner, grease all lube points acc. to specification.

STOP Danger of slipping! Ensure that all steps and ladders are free of grease and oil!

https://truckmanualshub.com/

WARNING	**Danger of being pulled in by rotating or conveying vehicle parts**
	Rotating or conveying vehicle parts can cause severe or fatal injuries! - Do not enter the danger zone. - Do not reach into rotating or conveying parts. - Only wear close-fitting clothing. - Comply with the warning and information signs on the vehicle. - Stop the engine and remove the ignition key before any maintenance work. - Comply with all further information in these instructions and in the safety manual.

CAUTION	**Hot surfaces!**
	Surfaces including those behind covering parts, together with combustion fuels from the engine or screed heater can be very hot and cause injuries! - Wear your personal safety gear. - Do not touch hot parts of the vehicle. - Only perform maintenance and repair work after the vehicle has cooled down. - Comply with all further information in these instructions and in the safety manual.

5.1 Cleaning the hopper

Clean the hopper regularly

To clean the hopper, park the vehicle on a smooth surface with the hopper open. Switch off the engine.

5.2 Cleaning the conveyor and auger

Clean the conveyor and auger regularly.

If necessary, let the conveyor and auger run at low speed during cleaning.

There must always be an assistant at the operator's platform whenever cleaning work is being carried out to intervene in the event of any potential danger.

https://truckmanualshub.com/

6 Preserving the paver finisher

6.1 Shutdowns for up to 6 months

- Park the vehicle in a place where it is protected from great exposure to direct sunlight, wind, humidity and frost.
- Grease all lube points in accordance with specifications. Allow optional central lubricating unit to run if necessary.
- Change oil in diesel engine.
- Seal exhaust silencer to make it airtight.
- Remove batteries, charge them and store them in a well ventilated place at room temperature.

⚠ Recharge removed batteries every 2 months.

- Protect all bare metal components, e.g. piston rods on hydraulic cylinders, with a suitable corrosion inhibitor.
- If it is not possible to park the vehicle is an enclosed building or under cover, it must be covered with a suitable size of tarpaulin. In all cases, seal all air intake and exhaust apertures with plastic film and adhesive tape.

6.2 Shutdowns lasting from 6 months to 1 year

- Carry out all the actions listed for "Shutdowns of up to 6 months".
- Once the engine oil has been drained off, fill the diesel engine with a manufacturer-approved grade of preserving oil.

6.3 Recommissioning the machine

- Reverse all the steps described in the "Shutdown" sections.

https://truckmanualshub.com/

7 Environmental protection, disposal

7.1 Environmental protection

☞ Packaging materials, used operating substances, cleaning agents and machine accessories must be correctly recycled.

☞ Always observe the local regulations!

7.2 Disposal

☞ Correctly sorted disposal must be carried out after replacing wear and spare parts and after the machine has been withdrawn from service (scrapped).
The materials must be sorted correctly according to metal, plastic, electronic scrap, various operating substances etc.
Any oily or greasy parts (hydraulic hoses, lube pipes etc.) must be treated separately.

☞ Electric devices, accessories and packaging should be recycled in an environment-friendly manner.

☞ Always observe the local regulations!

https://truckmanualshub.com/

8 Bolts - torques

8.1 Standard metric threads - strength class 8.8 / 10.9 / 12.9

Treatment	dry/lightly oiled						Molykote ®					
	Torque (Nm)	Permitted deviation (+/- Nm)	Torque (Nm)	Permitted deviation (+/- Nm)	Torque (Nm)	Permitted deviation (+/- Nm)	Torque (Nm)	Permitted deviation (+/- Nm)	Torque (Nm)	Permitted deviation (+/- Nm)	Torque (Nm)	Permitted deviation (+/- Nm)
Strength class	8.8	8.8	10.9	10.9	12.9	12.9	8.8	8.8	10.9	10.9	12.9	12.9
M3	1	0,3	1,5	0,4	1,7	0,4	1	0,3	1,4	0,4	1,7	0,4
M4	2,4	0,6	3,5	0,9	4	1	2,3	0,6	3,3	0,8	3,9	1
M5	5	1,2	7	1,7	8	2	4,6	1,1	6,4	1,6	7,7	1,9
M6	8	2,1	12	3	14	3	7,8	1,9	11	2,7	13	3,3
M8	20	5	28	7,1	34	8	19	4,7	26	6,6	31	7,9
M10	41	10	57	14	70	17	37	9	52	13	62	16
M12	73	18	97	24	120	30	63	16	89	22	107	27
M14	115	29	154	39	195	45	100	25	141	35	169	42
M16	185	46	243	61	315	75	156	39	219	55	263	66
M18	238	60	335	84	402	100	215	54	302	76	363	91
M20	335	84	474	119	600	150	304	76	427	107	513	128
M22	462	116	650	162	759	190	410	102	575	144	690	173
M24	600	150	817	204	1020	250	522	131	734	184	881	220
M27	858	214	1206	301	1410	352	760	190	1067	267	1281	320
M30	1200	300	1622	405	1948	487	1049	262	1475	369	1770	443
M33	1581	395	2224	556	2669	667	1400	350	1969	492	2362	590
M36	2000	500	2854	714	3383	846	1819	455	2528	632	3070	767

https://truckmanualshub.com/

8.2 Fine metric threads - strength class 8.8 / 10.9 / 12.9

Treatment	dry/lightly oiled						Molykote ®					
	Torque (Nm)	Permitted deviation (+/- Nm)	Torque (Nm)	Permitted deviation (+/- Nm)	Torque (Nm)	Permitted deviation (+/- Nm)	Torque (Nm)	Permitted deviation (+/- Nm)	Torque (Nm)	Permitted deviation (+/- Nm)	Torque (Nm)	Permitted deviation (+/- Nm)
Strength class	8.8	8.8	10.9	10.9	12.9	12.9	8.8	8.8	10.9	10.9	12.9	12.9
M3x0,35	1,2	0,3	1,7	0,4	2,1	0,5	1,1	0,3	1,5	0,4	1,8	0,5
M4x0,5	2,8	0,7	3,9	1	4,7	1,2	2,5	0,6	3,5	0,9	4,2	1
M5x0,5	5,7	1,4	8	2	9,6	2,4	5,1	1,3	7,1	1,8	8,5	2,1
M6x0,75	9,2	2,3	12,9	3,2	15,5	3,9	8,3	2,1	11,6	2,9	13,9	3,5
M8x1	21,7	5,4	30,6	7,6	36,7	9,2	19,5	4,9	27,4	6,8	32,8	8,2
M10x1,25	42,1	10,5	59,2	15	71	17,8	37,7	9,4	53	13	63,6	15,9
M12x1,25	75,7	18,9	106,2	26	127	31,9	67,2	16,8	94,5	24	113	28,3
M14x1,5	119	29,7	167	42	200	50,1	106	26	149	37	178	44,6
M16x1,5	183	45,6	257	64	308	77	162	40	227	57	273	68,2
M18x1,5	267	66,8	376	94	451	112,7	236	59	331	83	398	99,4
M20x1,5	373	93,2	524	131	629	157,3	328	82	461	115	553	138,3
M22x1,5	503	126	707	177	848	212,1	442	110	621	155	745	186,3
M24x2	630	158	886	221	1063	265,8	556	139	782	195	938	234,5
M27x2	918	229	1290	323	1548	387,1	807	202	1136	284	1363	340,7
M30x2	1281	320	1802	450	2162	540,6	1124	281	1581	395	1897	474,3
M33x2	1728	432	2430	607	2916	728,9	1514	378	2128	532	2554	638,5
M36x3	2126	532	2990	747	3588	897,1	1876	469	2638	659	3165	791,3

https://truckmanualshub.com/

F 114 Lubricants and operating substances

1 Lubricants and operating substances

⚠ Use only the lubricants listed below or comparable qualities of well-known brands.

⚠ Only use containers which are clean on inside and outside for filling oil or fuel.

☞ Note capacities (see section "Capacities").

⚠ Incorrect oil or lubricant levels promote rapid wear and paver finisher failure.

⚠ Never mix synthetic oils with mineral oils!

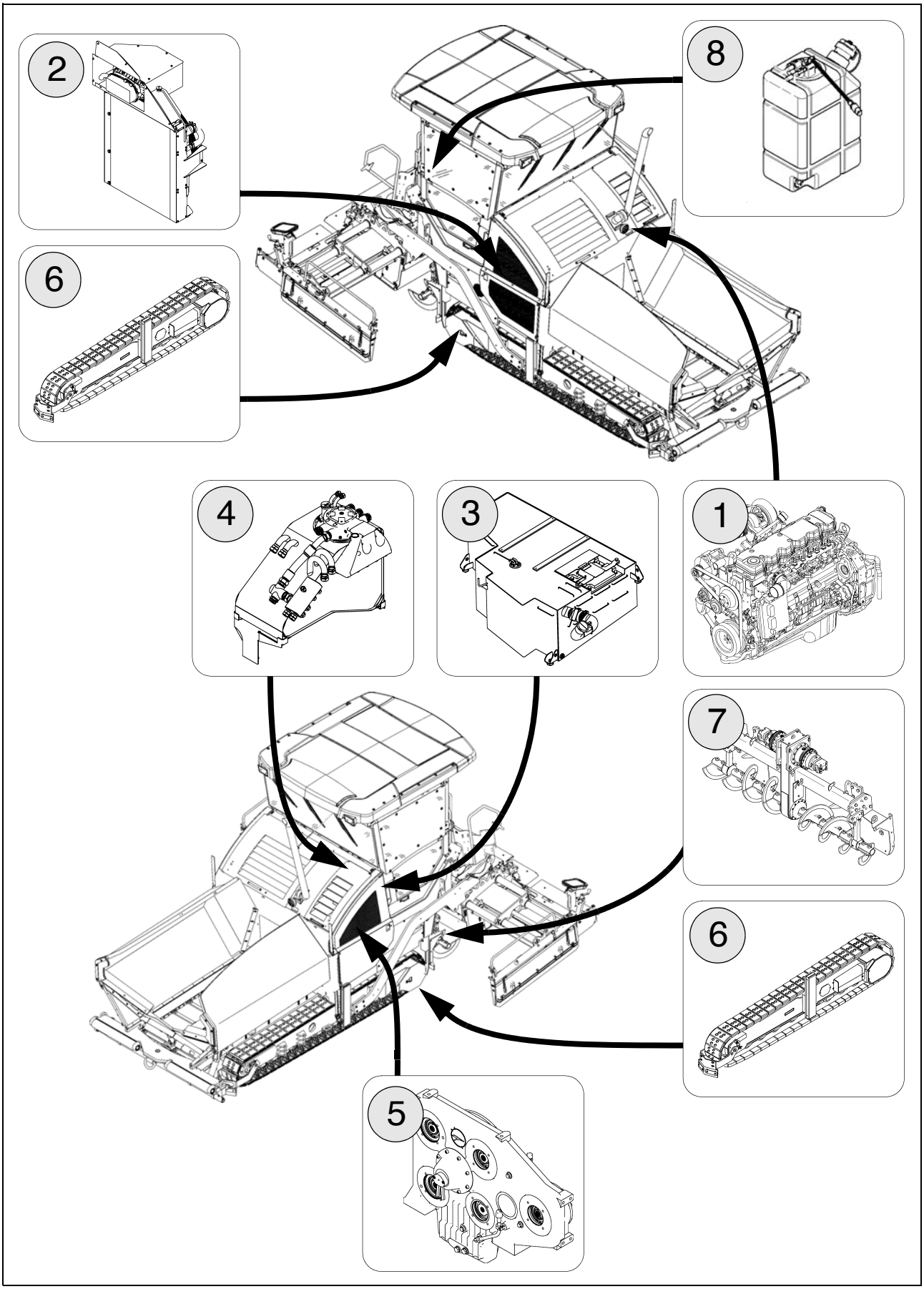
2
8
6
4
3
1
7
6
5

https://truckmanualshub.com/

1.1 Capacities

		Substance	Volume	
1	Fuel tank	Diesel fuel	350	litres
2	Diesel engine (with oil filter change)	Engine oil	15	litres
3	Engine cooling system	Cooling liquid	32.0	litres
4	Hydraulic oil reservoir	Hydraulic oil	200	litres
5	Pump distribution gear	Gearbox oil	7.0	litres
6	Planetary gear drive unit	Gearbox oil	3.5	litres
7	Planetary gear augers (on each side)	Gearbox oil	1.5	litres
7	Auger box	Gearbox oil	4.0	litres
7	Outer auger bearing (per bearing)**	Hot bearing grease	115	grammes
8	AdBlue® / DEF - tank	AdBlue® / DEF - fluid	19	Liter
	Central lubrication system (option)	Grease		
	Batteries	Distilled water		

⚠ Note specifications on the following pages!

** for new installation

https://truckmanualshub.com/

2 Operating substance specifications

2.1 Drive engine - fuel

Low-sulphur diesel fuel is prescribed for correct operation of the exhaust-gas treatment system!
The maximum sulphur level must not exceed 15 ppm!
If low-sulphur diesel fuel is not used, the prescribed exhaust values cannot be met and damage will be caused to the engine and to the exhaust-gas treatment system!

Risk of explosion! Never mix diesel fuel with ethanol, petrol or alcohol!

Diesel fuel contaminated with water or dirt can cause serious damage to the fuel system! Keep fuel and fuel system free of water and impurities!

Observe the instructions for fuel recommendations and the specification in the maintenance instructions of the engine manufacturer!

2.2 Drive engine - Lube oil

Atlas Copco	Aral	BP	Esso / Exxon	Fuchs	Mobil	Shell	
Paroil E Emission Green (*)							

(*) = recommended

Observe the instructions for lubricant recommendations and the specification in the maintenance instructions of the engine manufacturer!

2.3 Cooling system

Dynapac	AGIP	Chevron	Caltex	Delo	Petronas		
Coolant 200 (*)	-Antifreeze Spezial	Extended Life Coolant	Extended Life Coolant	Extended Life Coolant	Frost G12		

(*) = recommended

https://truckmanualshub.com/

2.4 Hydraulic system

Atlas Copco	AGIP	Chevron	Caltex	Fuchs	Mobil	Shell	
Hydraulic 100 (*)		Rando HDZ 46	Rando HDZ 46			-Tellus Oil S2 V46	

☞ (*) = recommended

2.5 Pump distribution gear

Dynapac	Aral	BP	Esso / Exxon	Fuchs	Mobil	Shell	
				-Titan ATF 6000 SL (*)		-Spirax S4 ATF HDX -Spirax S4 ATF VM	

☞ (*) = filled in at the factory

2.6 Drive unit planetary gear

Atlas Copco	Aral	BP	Esso / Exxon	Fuchs	Mobil	Shell	
Traction Gear 100 (*)						-Omala Oil F 220	

☞ (*) = recommended

2.7 Auger drive planetary gear

Atlas Copco	Aral	BP	Esso / Exxon	Fuchs	Mobil	Shell	
Traction Gear 100 (*)						-Omala Oil F 220	

☞ (*) = recommended

2.8 Auger box

Dynapac	Aral	BP	Esso / Exxon	Fuchs	Mobil	Shell	
						-Omala S4WE460 (*)	

☞ (*) = recommended

2.9 Grease

Dynapac	Aral	BP	Esso / Exxon	Fuchs	Mobil	Shell	Chevron
Paver Grease (*)						-Gadus S5 T460 1.5	-High Temp Premium2

☞ (*) = recommended

https://truckmanualshub.com/

2.10 Drive engine - AdBlue® / DEF

⚠ For correct operation of the exhaust gas treatment system, the use of AdBlue® / DEF fluid is prescribed pursuant to ISO 22241-1 respectively DIN 70070!
For vehicles operating in North America, the use of a DEF fluid with API approval is urgently recommended!

⚠ Observe the instructions for the AdBlue® / DEF recommendations and specification in the maintenance instructions issued by the engine manufacturer!

Atlas Copco							

https://truckmanualshub.com/

2.11 Hydraulic oil

Preferred hydraulic oils:

a) Synthetic hydraulic liquids based on ester, HEES

Manufacturer	ISO viscosity class VG 46
Atlas Copco	Hydraulic 120 (*)
Shell	Naturelle HF-E46
Panolin	HLP SYNTH 46
Esso	Univis HEES 46
Total	Total Biohydran SE 46
Aral	Vitam EHF 46

☞ (*) = recommended

b) Mineral oil pressure fluids

Manufacturer	ISO viscosity class VG 46
Atlas Copco	Hydraulic 100 (*)
Shell	Tellus S2 VX 46
Chevron	Rando HDZ 46
Caltex	Rando HDZ 46

☞ (*) = recommended

⚠ When changing from mineral oil pressure fluids to biodegradable pressure fluids, please contact our factory advisory service!

https://truckmanualshub.com/

Parts & Service

Training

We offer our customers training courses on DYNAPAC equipment in our dedicated factory training centre. We hold regular training courses in this training centre as well as courses outside the scheduled hours.

Service

Please contact one of our responsible service outlets if you encounter any operational problems or have enquiries about spare parts.
Our trained, specialist staff will ensure that you receive prompt attention and repairs in the event of any accident or malfunction you may encounter.

Factory Advisory Service

If ever for any reason our dealership network encounters limits to what it is able to do for you, please always feel free to contact us directly.
Our team of technical advisers is on hand to assist you.
gmbh-service@atlascopco.com

Atlas Copco

https://truckmanualshub.com/

Atlas Copco

www.atlascopco.com