https://truckmanualshub.com/

CLARK®

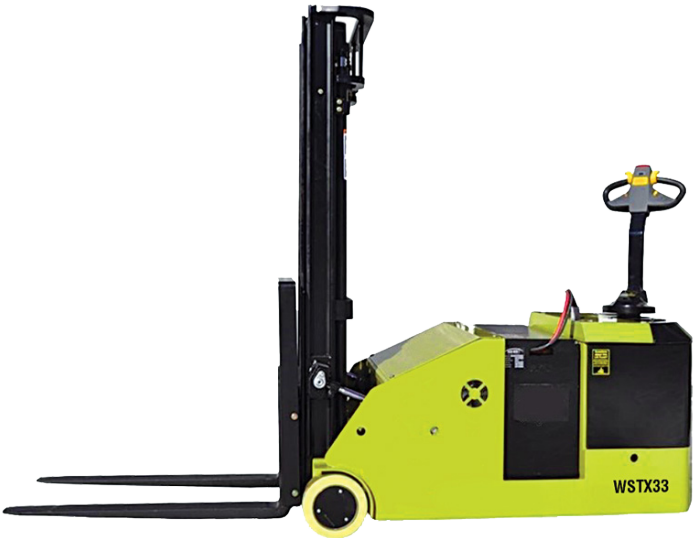

Operator's Manual

WSTX 33

OM-743

IMPORTANT! Do not remove this manual from the lift truck.

JUN 2022 | REV 1.2

https://truckmanualshub.com/

Record the following information pertaining to your truck.

Model No. _____

Serial No._____

Customer Truck Identification No. _____

Truck Weight, Empty _____

Truck Rated Capacity _____

Truck Gross Weight_____

Special Equipment or Attachments _____

IMPORTANT
Do not expose this manual to hot water or steam.

Copyright © 2022 CLARK Material Handling Company

https://truckmanualshub.com/

Operator's Manual

You must be trained and authorized to operate a lift truck.

YOU can prevent accidents

First: Learn safe operating rules and your company rules.

Next: Read your Operator's Manual. If you do not understand, ask your supervisor for assistance.

Learn about the unit you operate.

KNOW YOUR TRUCK

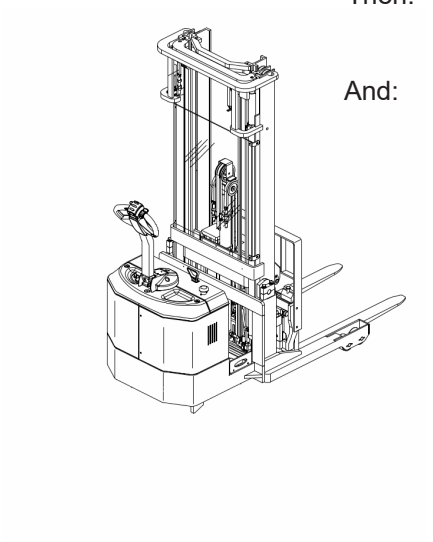

Then: Practice operating your truck safely.

And: Keep your truck in a safe operating condition with correct and timely maintenance.

Breaking these rules will cause serious or fatal injury to yourself and others.

https://truckmanualshub.com/

Contents of this Manual

A Message to CLARK Lift Truck Operators ..... **iv**

Introduction ..... **vi**

How to Use this Manual ..... **viii**

Safety Signs and Safety Messages ..... **x**

Section 1. General Safety Rules **1-1**

Section 2. Operating Hazards **2-1**

Section 3. Common Truck **3-1**

Section 4. Operator Maintenance and Care **4-1**

Section 5. Operating Procedures **5-1**

Section 6. Planned Maintenance **6-1**

Section 7. Towing **7-1**

Section 8. Specifications **8-1**

https://truckmanualshub.com/

https://truckmanualshub.com/

A Message to CLARK Lift Truck Operators

Lift trucks are specialized machines with unique operating characteristics, designed to perform a specific job. Their function and operation is not like a car or ordinary truck. They require specific instructions and rules for safe operation and maintenance.

Safe operation of lift trucks is of primary importance to CLARK. Our experience with lift truck accidents has shown that when accidents happen and people are killed or injured, the causes are:

- **Operator not properly trained**
- **Operator not experienced with lift truck operation**
- **Basic safety rules not followed**
- **Lift truck not maintained in safe operating condition**

For these reasons, CLARK wants you to know about the safe operation and correct maintenance of your lift truck.

This manual is designed to help you operate your lift truck safely. This manual shows and tells you about safety inspections and the important general safety rules and hazards of lift truck operation. It describes the special components and features of the truck and explains their functions. The correct operating procedures are shown and explained. Illustrations and important safety messages are included for clear understanding. A section on maintenance and lubrication is included for the lift truck mechanic.

https://truckmanualshub.com/

The operator's manual is not a training manual. It is a guide to help trained and authorized operators safely operate their lift truck by emphasizing and illustrating the correct procedures. However, it cannot cover every possible situation that may result in an accident. You must watch for hazards in your work areas and avoid or correct them. It is important that you know and understand the information in this manual and that you know and follow your company safety rules! Be sure that your equipment is maintained in a safe condition. Do not operate a damaged or malfunctioning truck. Practice safe operation every time you use your lift truck. Let's join together to set high standards in safety.

Remember, before you start operating this lift truck, be sure you understand all driving procedures. It is your responsibility, and it is important to you and your family, to operate your lift truck safely and efficiently. Be aware that the Federal Occupational Safety and Health Administration (OSHA) and state laws require that operators be completely trained in the safe operation of lift trucks; it is also an OSHA requirement that a machine inspection be performed before every shift. If you have not been trained (or need refresher training) operating or inspecting your lift truck, ask your supervisor.

CLARK lift trucks are built to take hard work, but not abuse. They are built to be dependable, but they are only as safe and efficient as the operator and the persons responsible for maintaining them. Do not make any repairs to this truck unless you have been trained in safe lift truck repair procedures and are authorized by your employer.

https://truckmanualshub.com/

Introduction

CLARK welcomes you to the growing group of professionals who own, operate, and maintain CLARK lift trucks. We take pride in the long tradition of quality products and superior value the CLARK name represents. This manual familiarizes you with safety, operating, and maintenance information about your new lift truck. It has been specially prepared to help you use and maintain your CLARK lift truck in a safe and correct manner.

Your CLARK lift truck has been designed and built to be as safe and efficient as today's technology can make it. As manufactured, it meets all the applicable requirements of ANSI/ITSDF B56.1 Safety Standard for Powered Industrial Trucks. Each truck is also furnished with equipment to help you operate safely; for example, load back rest, parking brake and horn are standard equipment.

Safe, productive operation of a lift truck requires both skill and knowledge on the part of the operator. The operator must know, understand, and practice the safety rules and safe driving and load handling techniques described in this manual. To develop the skill required, the operator must become familiar with the construction and features of the lift truck and how they function. The operator must understand its capabilities and limitations, and see that it is kept in a safe condition.

Routine Servicing and Maintenance

Regular maintenance and care of your lift truck is not only important for economy and utilization reasons; it is essential for your safety. A faulty lift truck is a potential source of danger to the operator, and to other personnel working near it. As with all quality equipment, keep your lift truck in good operating condition by following the recommended schedule of maintenance.

https://truckmanualshub.com/

Operator Daily Inspection — Safety and Operating Checks

A lift truck should always be examined by the operator, before driving, to be sure it is safe to operate. The importance of this procedure is emphasized in this manual with a brief illustrated review and later with more detailed instructions. CLARK dealers can supply copies of a helpful “Drivers Daily Checklist.”

Planned Maintenance

In addition to the daily operator inspection, CLARK recommends that a planned maintenance and safety inspection program (PM) be performed by a trained and authorized mechanic on a regular basis. The PM will provide an opportunity to make a thorough inspection of the safety and operating condition of your lift truck. Necessary adjustments and repairs can be done during the PM, which will increase the life of components and reduce unscheduled downtime and increase safety. The PM can be scheduled to meet your particular application and lift truck usage.

The procedures for a periodic planned maintenance program that covers inspections, operational checks, cleaning, lubrication, and minor adjustments are outlined in this manual. Your CLARK dealer is prepared to help you with a Planned Maintenance Program by trained service personnel who know your lift truck and can keep it operating safely and efficiently.

https://truckmanualshub.com/

How to Use this Manual

This manual is a digest of essential information about the safe operation, the features and functions, and explains how to maintain your lift truck. This manual is organized into eight major parts:

Section 1. General Safety Rules, reviews and illustrates accepted practices for safe operation of a lift truck.

Section 2. Operating Hazards, warns of conditions that could cause damage to the truck or injury to the operator or other personnel.

Section 3. Common Truck, describes the most common operating components, systems, controls, and other features of your truck and tells how they function.

Section 4. Operator Maintenance and Care, presents details on how to perform the operator's daily safety inspection and refuel the lift truck.

Section 5. Operating Procedures, discusses more specific instruction on the safe, efficient operation of your lift truck.

Section 6. Planned Maintenance, describes the PM program.

Section 7. Towing, Provides information regarding towing a disabled truck.

Section 8. Specifications, provides reference information and data on features, components, and maintenance items.

NOTICE: The descriptions and specifications included in this manual were in effect at the time of printing. CLARK Material Handling Company reserves the right to make improvements and changes in specifications or design, without notice and without incurring obligation. Please check with your authorized CLARK dealer for information on possible updates or revisions.

The examples, illustrations, and explanations in this manual should help you improve your skill and knowledge as a professional lift truck operator and take full advantage of the capabilities and safety features of your new lift truck.

The first Section of the manual is devoted to a review, with illustrations and brief messages, of general safety rules and the major operating hazards you can encounter while operating a lift truck.

https://truckmanualshub.com/

Next, you will find descriptions of the components of your specific lift truck model and how the instruments, gauge, and controls operate. Then, you will find a discussion of safe and efficient operating procedures, followed by instructions on how to tow a disabled lift truck. The later sections of the manual are devoted to maintenance and truck specifications.

Take time to carefully read the “Know Your Truck” section. By acquiring a good basic understanding of your truck's features, and how they function, you are better prepared to operate it both efficiently and safely.

In “Planned Maintenance,” you will find essential information for correct servicing and periodic maintenance of your truck, including charts with recommended maintenance intervals and component capacities. Carefully follow these instructions and procedures.

Each major Section has its own table of contents, so that you can find the various topics more easily. If you cannot find a topic in the table of contents, check the index at the back of the manual.

We urge you to first carefully read the manual from cover to cover. Take time to read and understand the information on general safety rules and operating hazards. Acquaint yourself with the various procedures in this manual. Understand how BDI gauge, indicator lights, and control functions. Please contact your authorized CLARK dealer for the answers to any questions you may have about your lift truck’s features, operation, or manuals.

Operate your lift truck safely; careful driving is your responsibility. Drive defensively and think about the safety of people who are working nearby. Know your truck’s capabilities and limitations. Follow all instructions in this manual, including all IMPORTANT, CAUTION, WARNING, and DANGER messages to avoid damage to your lift truck or the possibility of any harm to yourself or others.

This manual is intended to be a permanently attached part of your lift truck. Keep it on the truck as a ready reference for anyone who may drive or service it. If the truck you operate is not equipped with a manual, ask your supervisor to obtain one and have it attached to the truck. And, remember, your CLARK dealer is pleased to answer any questions about the operation and maintenance of your lift truck and will provide you with additional information should you require it.

https://truckmanualshub.com/

Safety Signs and Safety Messages

Improper operation can cause accidents. Don't take chances with incorrect or damaged equipment. **Read** and **understand** the procedures for safe driving and maintenance outlined in this manual. Don't hesitate to ask for help. **Stay alert!** Follow safety rules, regulations, and procedures. Avoid accidents by recognizing dangerous procedures or situations before they occur. **Drive and work safely** and follow the safety signs and their messages on the truck and in this manual.

Safety signs and messages are placed in this manual and on the truck to provide instructions and identify specific areas where potential hazards exist and special precautions should be taken. Know and understand the meaning of these instructions, signs, and messages. Damage to the truck, death, or serious injury to you or other persons may result if these messages are not followed. If warning decals are damaged, they must be replaced. Contact your CLARK dealer for replacements.

NOTICE

This message is used when special information, instructions or identification are required relating to procedures, equipment, tools, pressures, capacities and other special data.

IMPORTANT

This message is used when special precautions should be taken to ensure a correct action or to avoid damage to or malfunction of the truck or a component.

CAUTION

Indicates a potentially hazardous situation which, if not avoided, may result in minor or moderate injury. It may also be used to alert against unsafe practices.

WARNING

Indicates a potentially hazardous situation which, if not avoided, could result in death or serious injury.

DANGER

Indicates an imminently hazardous situation which, if not avoided, will result in death or injury.

https://truckmanualshub.com/

Contents

Daily Inspection 1.2
Do's and Don'ts 1.3
No Riders 1.4
Pedestrians 1.4
Fork Safety 1.5
Pinch Points 1.6
Travel 1.7
Tip-Over 1.8
Surface and Capacity 1.9
Parking 1.10

https://truckmanualshub.com/

Daily Inspection

CLARK
THE FORKLIFT

Operator's Daily Checklist
Check each Item Before Start of Each Shift

Date: _____

Check one: ☐ Gas/LPG/Diesel Truck ☐ Electric Sit-down ☐ Electric Stand-up ☐ Electric Pallet

Truck Serial Number: _____ Operator: _____ Supervisor's OK: _____

Hour meter reading: _____

Check each of the following items before the start of each shift. Let your supervisor and/or maintenance department know of any problem.
DO NOT OPERATE A FAULTY TRUCK. Your safety is at risk.
After checking, mark each item accordingly. Explain below as necessary.

Check boxes as follows: √ OK X NG: needs attention or repair. Circle problem and explain below.

OK	NG	Visual Checks	OK	NG	Visual Checks
		Tires/Wheels: wear, damage, nuts tight			Engine: runs rough, noisy, leaks
		Head/Tail/Work Lights: damage, mounting, operation			Steering: loose/binding, leaks, operation
		Gauges/Instruments: damage, operation			Service Brake: linkage loose/binding, stops OK, grab
		Operator Restraint: damage, mounting, operation, oily, dirty			Parking Brake: loose/binding, operational, adjustment
		Warning Decals/Operator's Manual: missing, not readable			Seat Brake (if equipped): loose/binding, operational, adjustment
		Data Plate: not readable, missing			Horn: Operation
		Overhead Guard: bent, cracked, loose, missing			Backup Alarm (if equipped): mounting, operation
		Load Back Rest: bent, cracked, loose, missing			Warning Lights (if equipped): mounting, operation
		Forks: bent, worn, stops OK			Lift/Lower: loose/binding, excessive drift, leaks
		Engine Oil: level, dirty, leaks			Tilt: loose/binding, excessive drift, "chatters," leaks
		Hydraulic Oil: level, dirty, leaks			Attachments: mounting, damaged, operation, leaks
		Radiator: level, dirty, leaks			Battery Test (electric trucks only): indicator in green while holding full forward tilt
		Fuel: level, leaks			Control Levers: loose/binding, freely return to neutral
		Battery: connections loose, charge, electrolyte low			Directional Control: loose/binding, find neutral OK
		Covers/Sheet metal: damaged, missing			
		Brakes: linkage, reservoir fluid level, leaks debris on floor			

Explanation of problems marked above:

_____
_____
_____
_____
_____
_____
_____
_____
_____

At the beginning of each shift, inspect your truck and fill out a daily inspection sheet.

Check for damage and maintenance problems.

Have repairs made before you operate the truck.

⚠ CAUTION

DO NOT MAKE REPAIRS YOURSELF. Lift truck mechanics are trained professionals. They know how to make repairs safely (see Section 4).

https://truckmanualshub.com/

Do's and Don'ts

OM0001

Don't mix drugs or alcohol with your job.

Do watch for pedestrians.

OM0002

OM0003

Don't block safety or emergency equipment.

Do wear safety equipment when required.

OM0004

OM0005

Don't smoke in "NO SMOKING" areas or when refueling.

https://truckmanualshub.com/

No Riders

WARNING

Always walk the truck. Never attempt to ride or allow passengers.

Pedestrians

IMPORTANT

- **Watch where you are going.**
- **Look in the direction of travel.**
- **Pedestrians may use the same roadway you do.**
- **Sound your horn at all intersections or blind spots.**
- **Watch for people in your work area even if your truck has warning lights or alarms. People may not watch for you.**
- **Make people stand back, even when you are parked.**

https://truckmanualshub.com/

Fork Safety

Never allow anyone to walk under raised forks.

657005

⚠ DANGER

There is special equipment to raise people for overhead work. DO NOT USE LIFT TRUCKS.

657006

https://truckmanualshub.com/

Pinch Points

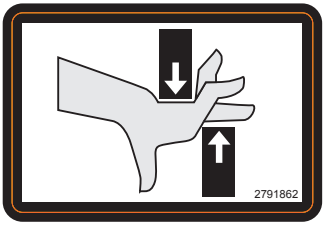

WARNING

Keep hands, feet, and legs out of the upright.

WARNING

Don't use the upright as a ladder.

CAUTION

Never try to repair the upright, carriage, chain, or attachment yourself! Only properly trained mechanics can repair or maintain lift trucks.

https://truckmanualshub.com/

Travel

⚠ CAUTION

The WSTX33 walkie-stacker counterbalanced lift truck is designed for smooth level surfaces and is not recommended for ramps or inclines.

- Never lift or lower the load when the truck is in motion.
- Travel with the load near the floor/ground whenever possible.
- Never lift or lower the load when the truck is in motion.
- When handling bulky loads that restrict your vision operate your truck in reverse to improve visibility.
- Unstable loads are a hazard to you and to your fellow workers.
- Always make certain that the load is well stacked and evenly positioned across both forks.
- Never attempt to lift a load with only one fork.

https://truckmanualshub.com/

Tip-over

Lateral Tip-over

- Lateral tip-over can occur with a combination of travel speed and sharpness of turn. This combination may exceed the stability of the truck. This condition is even more likely with an unloaded truck.
- While traveling with the load or upright raised, lateral tip-over can occur while turning and/or braking when in reverse or accelerating and turning while traveling forward.
- Lateral tip-over can occur loaded or unloaded by turning on an incline or ramp.

Longitudinal Tip-over

- Longitudinal tip-over can occur with a combination of overloading and load elevated also with capacity load and elevated. Traveling with this combination may exceed the stability of the truck. This condition is even more likely when braking in forward travel or accelerating rearward.

Lateral and longitudinal tip-over can occur if the truck is driven over objects on the floor or ground, off the edge of improved surfaces, or into potholes in the road surface, or by running into overhead objects or collisions.

An off dock type of tip-over can occur if the truck is steered too close to the dock edge, driven off the edge of the dock or ramp, or if the highway truck or trailer rolls away from the dock or is driven away during loading.

⚠ WARNING

The conditions listed above can be further aggravated by overloading, or off center loads.

⚠ DANGER

Lift truck tip-over can cause serious injury or death if the operator is trapped between the truck and the ground.

https://truckmanualshub.com/

Surface and Capacity

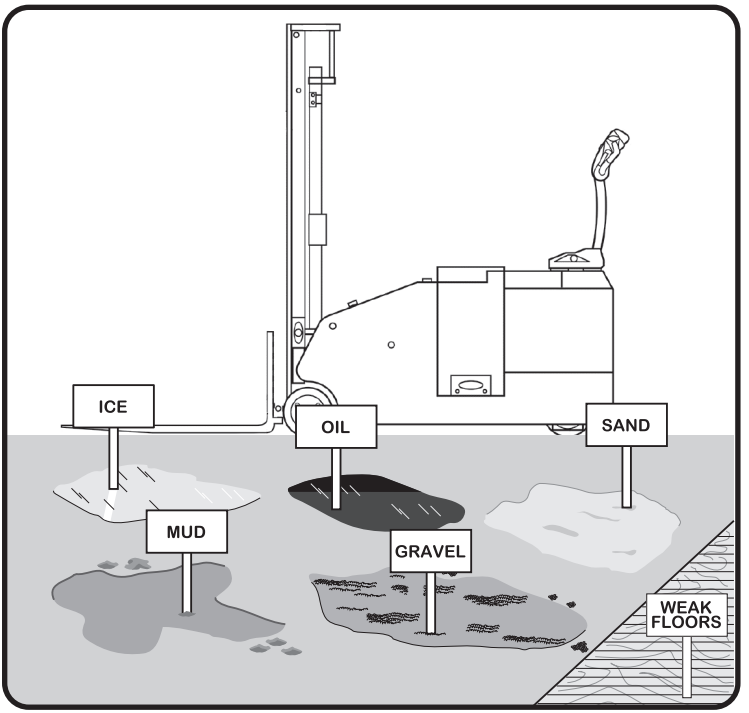

Avoid these conditions. They can cause a truck to tip over or lose traction for braking or driving.

⚠ WARNING

Know the weight of your truck and load. Especially when using elevators. Know the capacity of the elevator you intend to use. Do not overload.

https://truckmanualshub.com/

Parking

- Park only in authorized locations.
- Never park on a grade.
- Always come to a complete stop.
- Be sure travel control is in NEUTRAL.
- Lower forks fully to floor.
- Place control handle in full turn and raise handle to "UP" position to apply brake.
- Turn key to OFF position.
- Block drive wheel to prevent accidental roll.
- Turn key in to proper authority.

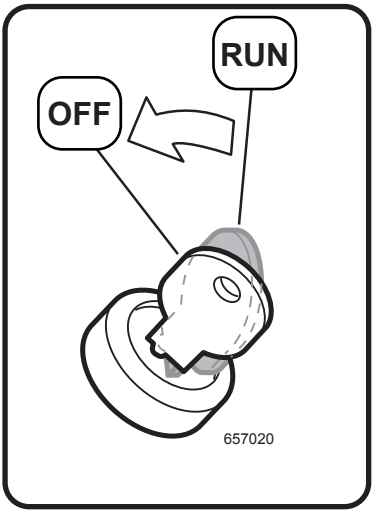

https://truckmanualshub.com/

Contents

Loose Loads.....2.2

Long and Wide Loads 2.3

Rear Swing 2.3

Low Overhead Clearance.....2.4

Fast Turns and High Loads.....2.4

Right-Angle Stacking 2.5

Chain Slack 2.6

Pallets and Skids 2.7

IMPORTANT

This section shows some of the hazards that may cause you, or someone around you, to be killed or badly hurt. As the operator, you must look for other hazards. Get your supervisor to help you identify and avoid those hazards.

https://truckmanualshub.com/

Loose Loads

⚠ WARNING

Loose or unbalanced loads are dangerous. Observe these precautions.

Never carry loose or uneven material.

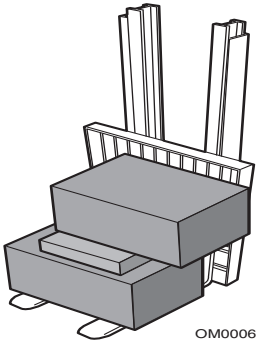

Center wide loads.

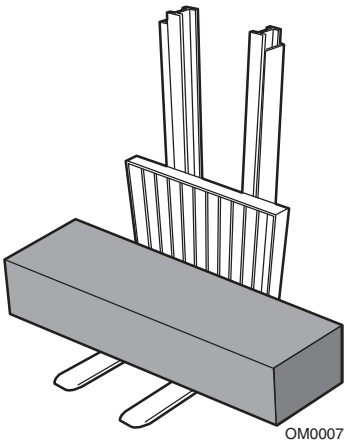

Stack and band loose material.

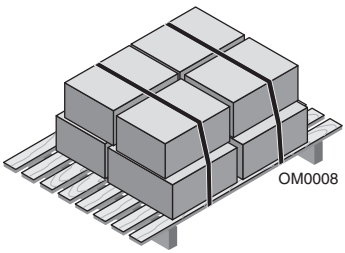

https://truckmanualshub.com/

Long and Wide Loads

⚠ WARNING

With long or wide loads, you need more room. Slow down and watch your clearance.

A long load reduces the capacity of the truck. Know and understand your truck load rating.

When extra-long material makes it necessary to travel with the load elevated, do so with extreme care and be alert to load end-swing when turning.

Rear Swing

⚠ WARNING

When turning, be sure the truck does not swing into racks, posts, etc. Watch for pedestrians beside the truck.

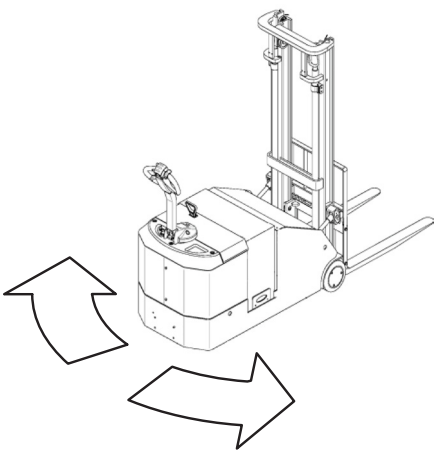

https://truckmanualshub.com/

Low Overhead Clearance/Fast Turns and High Loads

⚠ WARNING

- **Know the height of your truck, with and without a load.**
- **Check your clearances.**
- **Keep the load low as possible when traveling.**
- **Watch overhead clearance.**
- **Moving into overhead structures can tip a truck over, or spill a load.**

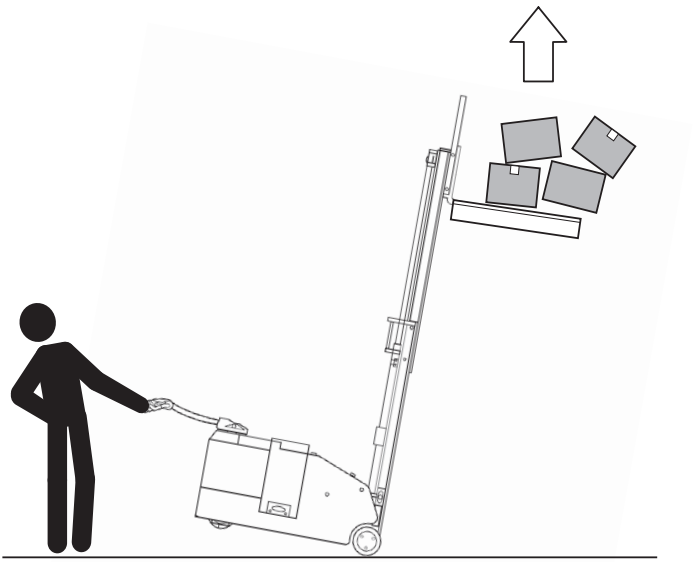

⚠ WARNING

Slow down before turning. The truck can tip over.

Turn too sharp with a raised load and your truck can tip even at slow speeds.

Travel with a load raised only when removing or depositing a load.

https://truckmanualshub.com/

Right-Angle Stacking

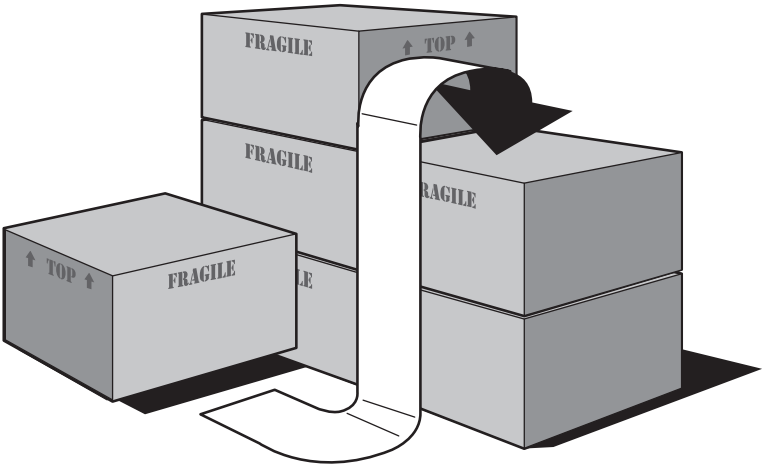

SLOWLY

⚠ WARNING

When right-angle stacking or moving with a raised load to clear low objects, avoid sharp turns and move slowly.

https://truckmanualshub.com/

Chain Slack

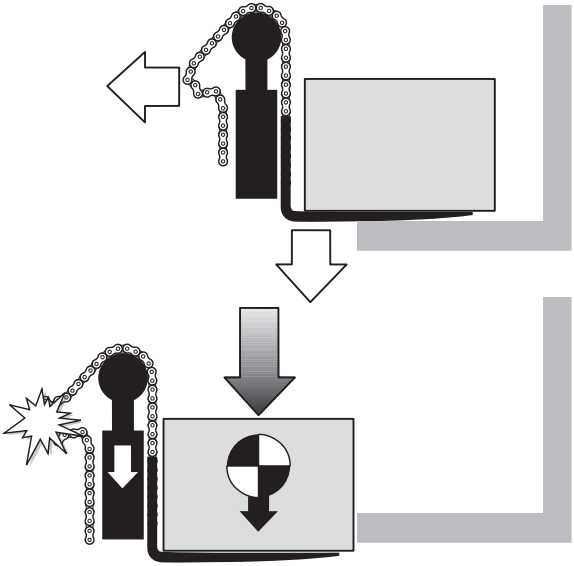

WARNING

Slack chains mean rail or carriage hang-up. Raise the forks before you move, or broken chains and/or hoses can result.

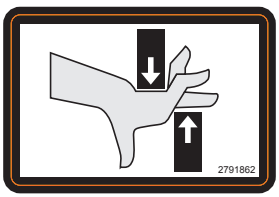

WARNING

Keep hands, feet and legs out of the upright.

WARNING

Don't use the upright as a ladder.

CAUTION

Never try to repair the upright, carriage, chain, or attachment yourself! Always contact a trained mechanic.

https://truckmanualshub.com/

Pallets and Skids

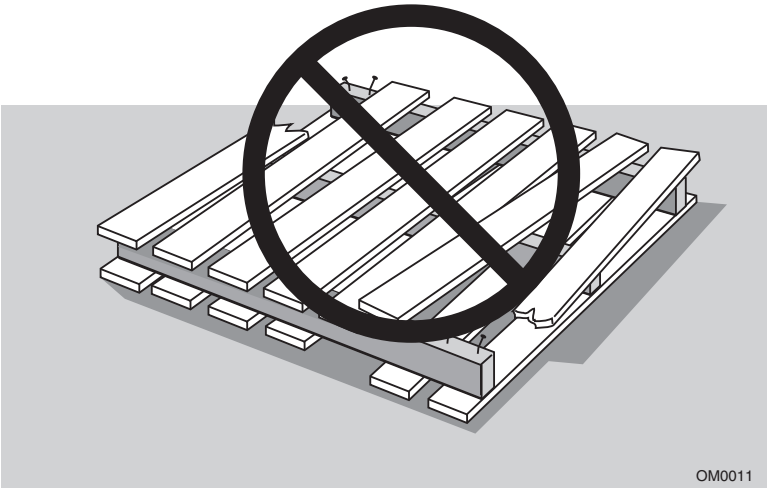

⚠ WARNING

Do not move or store materials on damaged pallets or skids. Items can fall through them causing severe injury or death!

Be sure the pallet or skid you are using is in good condition and does not have defective or missing components and fasteners.

https://truckmanualshub.com/

https://truckmanualshub.com/

Contents

Truck Description **3.2**
Operator Controls **3.3**
Battery Discharge Indicator **3.4**
Nameplate **3.5**
Warning Decals **3.6**

https://truckmanualshub.com/

Truck Description

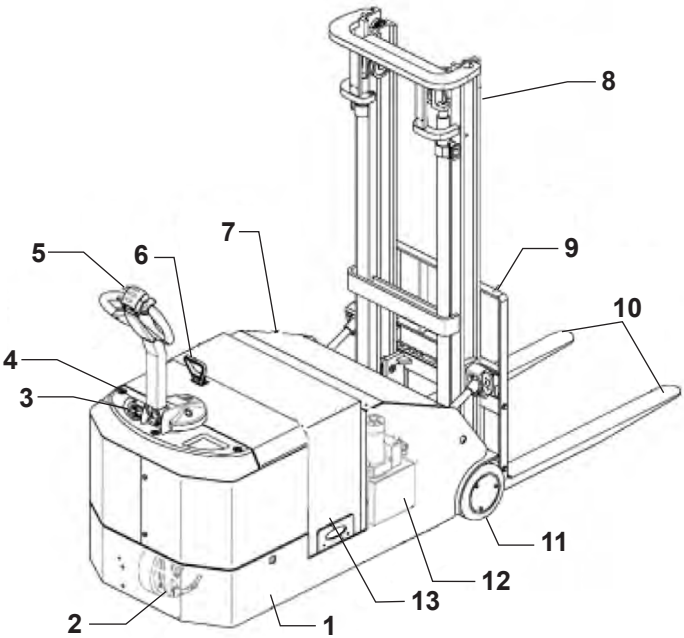

1. Chassis
2. Drive Wheel
3. Battery Discharge Indicator
4. Key Switch
5. Control Handle
6. Battery Disconnect
7. Controller
8. Mast
9. Back rest
10. Forks
11. Load Wheel
12. Hydraulic Pump
13. Battery

https://truckmanualshub.com/

Operator Controls

Key/Start Switch

- Connects the battery with all truck operating systems (drive, lift, and steer electrical circuits) including the horn.
- Connects battery to the diagnostic display.

The key switch must always be turned to the **ON** position to operate the truck. When the key is in the vertical **OFF** position, instruments, drive and pump motor electrical circuits are disconnected (shut-off), and the key can be removed. The horn will not operate if the key switch is turned off.

Control Handle

- Controls travel direction and speed, lift, lower, tilt, horn, braking and steering.
- Twist grip or butterfly type speed control for left or right hand operation.
- Up or down brake application.
- Safety reversing switch on end of control handle.
- 180º rotation for maneuverability.
- Offset steering provides greater visibility for the operator.

Drive Unit

- 24-Volt AC drive motor for increased efficiency and duty cycles.

Brakes

- Electronic magnetic parking brake provides safe and secure holding power.

https://truckmanualshub.com/

Battery Discharge Indicator

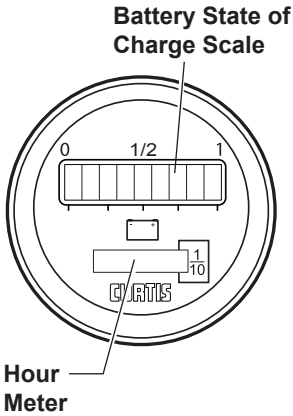

1	Fully Charged Battery
1/2	50% Charged Battery
0	Fully Discharged Battery

The battery indicator shows the actual charge level of the trucks battery. The battery discharge indicator (BDI) is used to indicate the degree the battery has been drained of charge. The BDI is to be read when the unit is at rest with the key switch "ON" and with no motor running.

The hour meter displays the time the drive motor and/or the pump motors are operating.

https://truckmanualshub.com/

Nameplate

Know the Data on the Nameplate

1. Truck registered name.
2. Type of construction. The code signifies the UL type of protection. Check with proper authority before entering areas where flammable or explosive material may be present.
3. Truck serial number.
4. Capacity, data.
5. Truck weight, less load.
6. Battery weight.
7. Battery type.
8. Battery voltage
9. Battery ampere-hour rating.

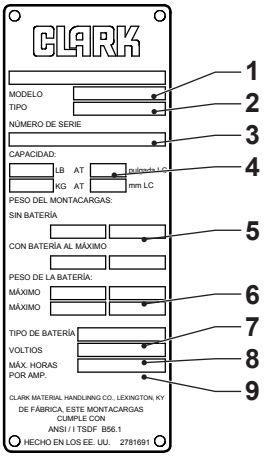

⚠ CAUTION

When attachments are added or if the truck is modified, the capacity of the truck may be affected. Contact your authorized Clark dealer for a new nameplate showing the revised capacity.

IMPORTANT

OSHA requires prior written approval from the manufacturer before any modifications affecting capacity or safety may be made.

https://truckmanualshub.com/

Warning Decals

IMPORTANT

Safety and warning decals are placed in conspicuous locations on the truck to remind you of essential procedures or to prevent you from making an error that could damage the truck or possibly cause personal injury. You should know, understand, and follow these instructions. Safety and warning decals should be replaced immediately if missing or defaced (damaged or illegible). Refer to your Service Manual for location of all decals.

⚠ Operator Warning Decal

The operator's warning decal describes basic instructions for safe operation of a lift truck. Read and understand these instructions and the other safety messages in this manual and on the lift truck.

⚠ ADVERTENCIA

ROMPER ESTAS REGLAS CAUSARÁ LESIONES SERIAS O FATALES A USTED Y A OTROS

- **No opere este montacargas manual motorizado si no ha recibido la capacitación correspondiente y ha sido autorizado para ello. Lea y entienda el manual del operador antes de poner en marcha el montacargas.**
- **No opere un montacargas dañado o averiado. No intente hacer reparaciones a menos que haya recibido la capacitación correspondiente y esté autorizado para ello.**
- **Mantenga las manos en las agarraderas designadas y los pies lejos del montacargas. No opere el montacargas con manos o calzados húmedos o con grasa.**
- **Entre a las áreas confinadas con el extremo de la carga primero. Tenga cuidado al operar en áreas confinadas para evitar quedarse atorado.**
- **Evite superficies disparejas o resbaladizas, así como materiales sueltos.**
- **Conduzca despacio y con cuidado en pendientes y no gire. Siempre trasládese con la carga cuesta abajo.**
- **No cargue el montacargas más allá de la capacidad indicada en la placa. No maniobre con cargas que se muevan. Tenga mucho cuidado con el manejo de cargas largas, anchas o altas.**
- **No exceda los límites de peso de los pisos.**

8108312

- Do not operate this motorized hand truck unless you are trained and authorized. Read and understand the operator's manual before starting truck.
- Do not operate damaged or faulty truck. Do not attempt repairs unless you are trained and authorized.
- Keep hands on designated grip and feet away from truck. Do not operate truck with wet or greasy hands or shoes.
- Enter confined areas with load first. Be very careful when operating in confined area to avoid being pinned.
- Avoid uneven or slippery surfaces and loose materials.
- Travel slowly and with caution.
- Do not load truck over capacity on nameplate. Do not handle shaky loads, be very careful when handling long, high and wide loads.
- Do not exceed floor weight limits.

https://truckmanualshub.com/

No Riding Decal

This safety decal is placed on the top cover to warn of the danger of injury by riding on the truck. Always walk with **WSTX33** model truck.

No Passenger Decal

This safety decal is placed on the top cover to warn of the danger of injury by attempting to ride as a passenger.

Battery Warning Decal

This decal is located on the right cover to give warning to disconnect the battery before servicing and to maintain correct battery polarity.

Upright Warning Decal

This safety decal is on the upright to warn of the danger of injury from movement between rails, chains, sheaves, fork carriage, and other parts of the upright assembly. Do not climb on or reach into the upright. Personal injury will result if any part of your body is put between moving parts of the upright.

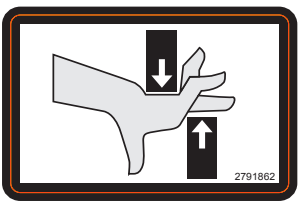

https://truckmanualshub.com/

⚠ Keep Away from Forks Decal

This safety decal is placed on the upright to warn of the danger of injury from forks when they are in the raised position. Do not ride on or stand under forks or attachments. The forks can fall and cause injury or death. Always make sure that the forks are in the fully lowered position when they are not being used to handle a load.

https://truckmanualshub.com/

Contents

Daily Safety Inspection 4.2

Visual Checks 4.3

Functional Checks 4.4

Concluding Inspection 4.5

CAUTION

The Occupational Safety and Health Administration (OSHA) requires that truck users examine their trucks before each shift to be sure they are in safe working order. Defects when found shall be immediately reported and corrected. The truck shall be tagged with a "Out Of Service" tag and taken out of service until it has been restored to safe operating condition.

https://truckmanualshub.com/

Daily Safety Inspection

Before using a lift truck, **it is the operator's responsibility** to check its condition and be sure it is safe to operate.

Check for damage and maintenance problems; have repairs made before you operate the truck. Unusual noises or problems must be reported immediately to your supervisor or other designated authority.

Do not make repairs yourself unless you are trained in lift truck repair procedures and authorized by your employer. Have a qualified mechanic make repairs using genuine CLARK or CLARK-approved parts.

⚠ CAUTION

Do not operate a truck if it is in need of repair. If it is in an unsafe condition, remove the key and report the condition to the proper authority. If the truck becomes unsafe in any way while you are operating it, stop operating the truck, report the problem immediately, and have it corrected.

Lift trucks should be inspected every eight hours, or at the start of each shift. In general, the daily inspection should include the **visual** and **functional checks** described on the following pages.

As an aid in carrying out this inspection, CLARK has prepared a form called the **"Driver's Daily Checklist."** We recommend that you use this form to make a daily record of your inspections and truck condition. You may obtain copies of this form from your CLARK dealer.

⚠ WARNING

Leaking hydraulic oil may be hot or under pressure. When inspecting a lift truck, wear safety glasses and do not check for leaks with bare hands.

https://truckmanualshub.com/

Visual Checks

First, perform a visual inspection of the truck and its major components:

1. Walk around your lift truck and take note of obvious damage that may have been caused by operation during the last shift.
2. Check that all capacity, safety, and warning plates or decals are attached and legible.
3. Check that the battery is installed and secured in position correctly. Check battery connector for safe condition.
4. Check for hydraulic oil leaks and loose fittings

⚠ CAUTION

Do not use bare hands to check. Oil may be hot or under pressure.

5. Be sure that the load back rest and all other safety devices are in place, securely fastened and undamaged. Inspect for damaged or missing parts, corrosion, cracks, breaks etc.
6. Check all of the critical components that handle or carry the load.
7. Look the upright and lift chains over. Check for obvious wear and maintenance problems such as damaged or missing parts, leaks, slack or broken chains, rust, corrosion, bent parts, cracks, etc.
8. Carefully inspect the load forks for cracks, breaks, bending, twists, and wear. Be sure that the forks are correctly installed and locked in their proper position.
9. Inspect the wheels and tires for safe mounting, wear condition.

https://truckmanualshub.com/

Functional Checks

Check the operation of the truck as follows:

NOTICE

Before performing these checks, familiarize yourself with the operating procedures in Section 5.

1. Test warning devices, horn, lights, and other safety equipment and accessories.
2. With the key switch ON, check the diagnostic display. The diagnostic display should show the charge remaining on the battery, the hour meter or a fault code. If the fault code is not an operator fault code, notify a service technician.
3. Be sure all controls and systems operate freely and return to neutral properly. Check the:
   - Brake system
   - Hydraulic controls
   - Control handle (Direction/Accelerator and Steering control)
   - Steering system

When the functional checks are completed:

1. Bring truck to complete stop.
2. Lower the lift mechanism fully.
3. Raise handle to the full "up" position (Brake will automatically apply when the handle is raised).
4. Turn the ignition switch to the OFF position.

If you are going to leave the truck unattended:

5. Remove the key.
6. Block the wheels, if the truck has the possibility of moving.
7. Unplug the battery.

https://truckmanualshub.com/

Concluding the Inspection

Make a record on the "Driver's Daily Checklist' of all the operating and truck problems that you find. Review the checklist to be sure it has been completed and turn it in to the person responsible for lift truck maintenance. Be sure any unusual noises or problems are investigated immediately.

Do not operate a lift truck that has a maintenance problem, or is not safe to operate.

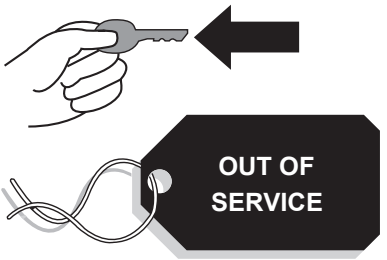

Remove the key from the ignition switch and put an "Out of Service" tag on the truck.

Be sure to put this Operator's Manual back in the holder in the operator's compartment. Read the manual again if you are not sure of all lift truck operating procedures.

If all of the Daily Inspection checks were normal or satisfactory, the truck can be operated.

https://truckmanualshub.com/

https://truckmanualshub.com/

Contents

Before Operating the Truck 5-2

Starting from a Safe Condition.....5-2

Travel Control.....5-3

Emergency Reverse Switch.....5-3

Lift and Lower Control 5-4

Horn 5-4

Braking 5-5

Plugging 5-5

Load Handling.....5-6

Stacking.....5-13

After Operating the Truck 5-15

https://truckmanualshub.com/

Before Operating the Truck

Be sure that you have read and understand the information in this Operator's Manual before operating the lift truck.

The Operator's Manual is located conveniently in the operators compartment.

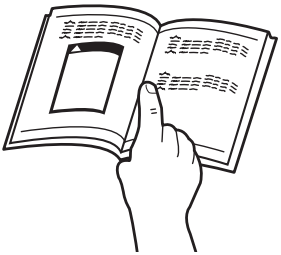

⚠ WARNING

- **This equipment can be dangerous if not used properly. Safe operation is the responsibility of the operator.**
- **Do not start or operate the truck, or any of its functions or attachments, from any place other than the designated operator's position.**

⚠ CAUTION

- **Inspect your walkie/stacker lift truck before operating at the start of the day or shift. Before putting your truck to use, check the operation of the controls and all systems.**

Starting from a Safe Condition

Always start from a safe condition**.** Before operating a walkie/stacker truck, make sure:

- The emergency disconnect switch is in the "OFF" position.
- Unplug battery charger.
- Remove chocks from drive wheel.
- Lower control handle to a comfortable operating position.
- Align control handle in the intended path of forward or reverse travel.
- Turn key to the "ON" position.
- Check to make sure your path of travel is clear of people or obstructions.

https://truckmanualshub.com/

Travel Control

Rotate the direction/speed control as shown to travel forward. Rotate the direction/speed control in the opposite direction to travel in reverse (Reverse is defined as the direction in which the forks point). Truck speed increase the further you rotate the direction/speed control. When you release the control, it rotates back the NEUTRAL (N) position.

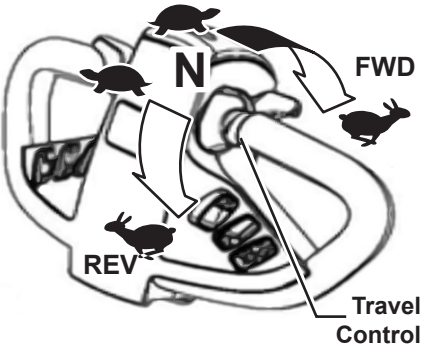

Emergency Reverse Switch

When the emergency reversal switch strikes an object or a person, or is held in by the operator, the truck automatically propels itself in the "reverse" direction (reverse is defined as the direction in which the forks point). When the switch no longer contacts the person or object, the switch pops up and the truck resumes normal control. Emergency reversal is disabled when the brake is "ON" or when the truck is in high speed mode.

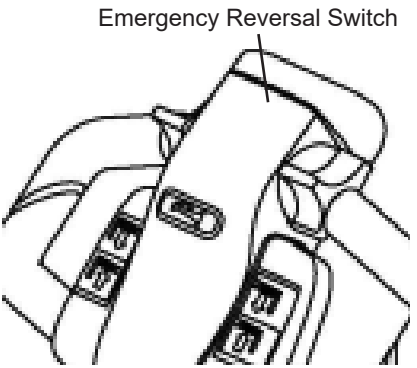

⚠ CAUTION

Be careful not to activate *Emergency Reversal Switch* when pulling down the handle from the parked position.

https://truckmanualshub.com/

Lift and Lower Control

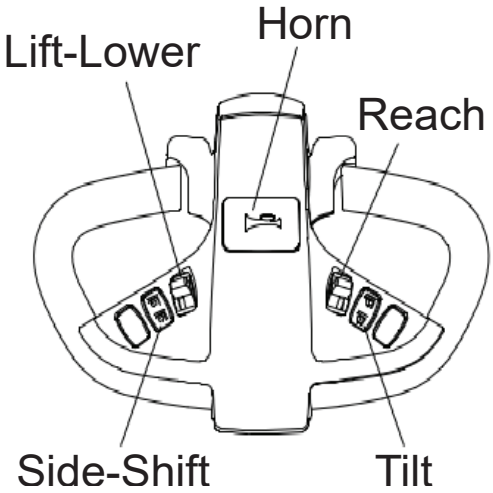

Lift and Lower Control

- Raises and Lowers forks.

Tilt Control

- Tilts the forks forward and backwards

Horn Button

- Press horn button to sound horn.

https://truckmanualshub.com/

Braking

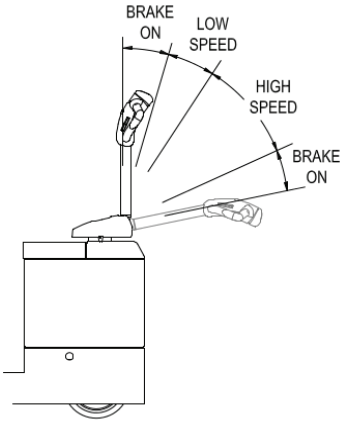

The stopping distance of the truck depends on the ground conditions. The driver must take this into account when operating the truck.

The driver must be looking ahead when traveling. If there is no hazard, brake moderately to avoid moving the load.

The brake is fully applied by lowering or raising the steering arm. (See Figure Above) All traction control power is shut off when the brake is engaged. When the steering arm is in the upright position, the brake acts as a parking brake. Braking occurs when the handle is released and spring action raises steering arm to the upright position.

Plugging

This electrical braking function consists of rotating the speed control lever in the opposite direction of travel and then releasing it when the truck stops. Plugging is a convenient way to slow down the truck during normal operation. If the control is not released, the truck will accelerate in the opposite direction.

⚠ CAUTION

Be careful when plugging. Any sudden change in direction can cause the load to move or fall off forks.

https://truckmanualshub.com/

Load Handling

- Lower forks completely before entering load.
- Center forks with load as you approach.
- Enter load as far as possible.

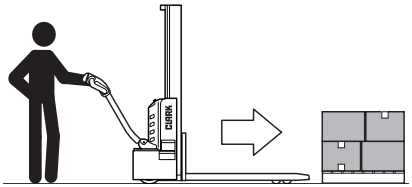

- Make sure the lifting area is clear before lifting load.
- Tilt load back enough to secure the load.
- Raise forks enough to elevate the load before moving truck.
- Avoid operating hazards and observe general safety rules while moving.

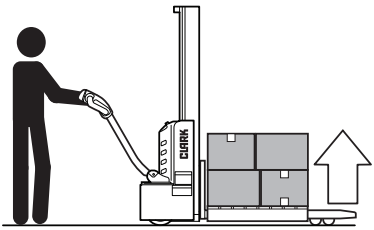

- Always approach load deposit areas squarely and cautiously.
- Be especially careful when placing loads near water pipes, electrical wiring or outlets, steam pipes, heaters, and other dangerous or fragile equipment.
- After placing load in position, lower the forks completely.
- Tilt forward.
- Withdraw the forks squarely from the load.

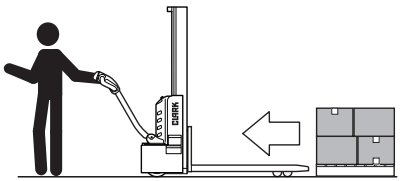

https://truckmanualshub.com/

Always be in full control of your walkie-stacker lift truck...
Never operate a truck or its attachments if you are not in the designated operator's position. Never operate a lift truck when your hands are wet or greasy. Always pick the smoothest travel route for your truck. Avoid bumps, holes, slick spots, and loose objects or debris in your path that may cause the truck to swerve or tip. If these conditions are unavoidable, slow down and carefully drive past them. Slow down for wet or slippery surfaces.

Avoid any sudden movement. Start, stop, travel, steer, and brake smoothly.

Operate your walkie/stacker lift truck under all conditions at a speed that will permit you to bring it to a safe stop.

⚠ WARNING

Travel slowly when turning. Use special care when traveling without a load because the risk of tipping over is greater with an empty truck, especially at high speed and when turning.

Travel with the forks tilted back and raised only enough to fully clear the ground or obstacles. When the carriage (load) is in an elevated position the stability of the truck is reduced.

IMPORTANT

Your speed will be restricted when the forks are raised to a preset height.

Do not elevate the load except during stacking.

⚠ CAUTION

Operate your walkie/stacker lift truck only in areas that have been approved for your truck type designation. Certain areas contain flammable gases, liquids, dust, fibers, or other hazardous materials. Lift truck operations in these areas must have special approval. These areas must be designated to show the type of lift truck approval required for operation in the area. Be aware that changes to special equipment or poor maintenance can cause the lift truck to lose its special approval.

https://truckmanualshub.com/

⚠ CAUTION

Be sure that your truck is the correct fire safety type for the area in which you are working. The proper type designation for this truck is listed on the nameplate. In areas classified as hazardous, use only trucks approved for use in those areas. If you are unsure of the classification of the area you wish to enter, check before entering.

Practice safe operation every time you use your truck...
Careful driving and operation is your responsibility. Be completely familiar with all the safe driving and load handling techniques in this operator's manual. Use common sense. Drive carefully; do not indulge in stunt driving or horseplay. Observe traffic rules. Watch for people and hazards. Slow down. Be in full control of your lift truck at all times.

Follow the instructions in this manual to avoid damage to your truck or the possibility of injury to yourself or others.

During your work, observe all functions of your walkie/stacker lift truck. This allows you to immediately recognize a problem or irregularity that could affect the safe operation of your truck.

Periodically check the diagnostics display in the instrument panel to be sure it indicates a normal condition. If an abnormal condition appears, shut off the key switch immediately and report the problem.

⚠ WARNING

Do not continue to operate a truck that has a malfunction. Tag the truck and remove it from service. Stop and have it fixed.

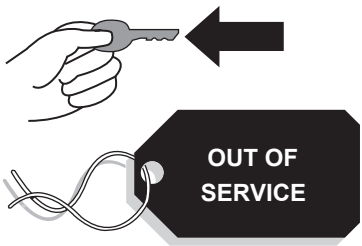

https://truckmanualshub.com/

Adjusting the Load Forks

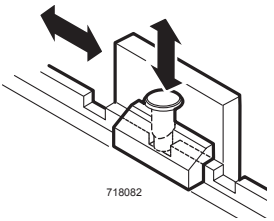

The load forks are adjustable on the carriage fork bar. Forks should be spaced as far apart as the load being carried will allow. Both forks should always be the same distance from the center of the fork carriage.

IMPORTANT

When adjusting forks ALWAYS push forks away from you, never pull forks toward you.

To adjust the forks, raise the carriage slightly. Unlock the fork locking pins. Position the forks. Secure the fork locking pins.

Load Handling

Handle only loads that are within the truck rated capacity as shown on the nameplate. This rating specifies the maximum load that should be lifted. However, other factors such as special load handling attachments, loads having a high center of gravity, or uneven terrain may dictate that the safe working load be less than the rated capacity. Under these conditions, the operator must reduce the load being carried so that the lift truck remains stable.

Handle only stable or safely arranged loads. Do not handle loads made up of loose, unevenly stacked or unstable items that can easily shift and fall. Take the time to correctly stack and band loose items. Center the load on the forks.

Do not lift anything that might fall on the operator or a bystander.

Do not handle loads that are higher than the fork carriage or load backrest unless the load is secured so that no part of it can fall backwards.

Keep the load back against the carriage. Loads placed out on the ends of the forks can make the lift truck less stable and more likely to tip forward.

Operate lift controls slowly and smoothly.

https://truckmanualshub.com/

⚠ WARNING

Slack chains mean rail or carriage hang-up. Raise the upright before you move. If the upright malfunctions in any way or becomes stuck in a raised position, operate the lift control to eliminate any slack chains. Have the truck fixed by a trained and authorized mechanic. DO NOT go under a raised upright or forks to attempt repairs.

Traveling with a Load

Travel with load or carriage as low as possible. Never travel with the load or carriage raised (elevated) in a high position, except during stacking.

Observe all traffic regulations and watch for other traffic, pedestrians, and safe clearances. Always look in the direction of travel. Keep a clear view of the path of travel, and when the load blocks your visibility, travel in reverse with load trailing.

Avoid sudden movements when carrying a load—start, stop, travel, steer, and brake smoothly. Steer clear of bumps, holes, and loose materials or debris on the ground. Lift and tilt slowly and smoothly. Go slowly when turning.

Use special care when handling and traveling with long, high, or wide loads—to avoid losing the load, striking bystanders or obstructions, or tipping the truck.

https://truckmanualshub.com/

Watch clearances around the truck and load as you travel. Raise the forks or attachment only to pick up or stack a load. Look out for obstructions, especially overhead.

Be aware that exaggerated tail swing, when turning while traveling forward, is a characteristic of lift trucks that are steered by the rear wheels. Accordingly, you need to become accustomed to tail swing and always check the tail swing area to be sure it is clear before you turn.

Always be concerned about the stability of your lift truck. When attachments are used, extra care should be taken in securing, manipulating, positioning, and transporting the load. Because attachments generally add extra weight and complexity to the truck, operate trucks equipped with attachments as partially-loaded trucks when not handling a load.

Picking Up and Moving Loads

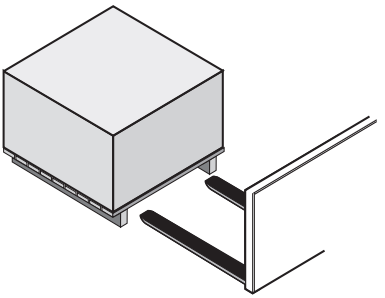

When picking up a load from the ground, approach the load slowly and carefully align the truck square with the load. The forks should be adjusted to fit the load or pallet being handled and spread as wide as possible to provide good stability and balance. With the lift controls, adjust the forks to the correct height and for freely engaging the load pallet. Move forward until the forks are squarely and completely under the load. Before lifting, be sure the load is centered and the forks are fully under and supporting the load. Fork length should be at least 2/3 of load length.

NOTICE

Be sure that the forks do not extend beyond the load, causing damage or tipping of other adjacent loads or materials behind the load being moved.

https://truckmanualshub.com/

If the forks are longer than the load, move the tips partially under the load without extending beyond the load. Raise the load to clear the floor. Back out several inches, or whatever distance is necessary, then set the load down and move forward until the load is positioned against the face of the forks.

Then raise the load to traveling height.

Unloading

To deposit a load after being moved into the correct position, lower the load to the floor.

Adjust the fork height as necessary, for smooth removal of the forks from the load (pallet).

Carefully back away to clear the forks from the load.

Raise the forks to traveling height.

Stacking

To put a load on a stack:

Approach slowly and align the lift truck and load squarely with the stack. Level the load as the lift truck is nearing the stack using the Fork Level function. Move forward, slowly, until the load is almost touching the stack. The leading edge and sides of the load pallet should be lined up exactly with the near edge and side of the load or rack on which you are stacking.

https://truckmanualshub.com/

Fig. 1 Stop close to the stack and level the forks.

Fig. 2 Lift (raise) the load high enough to clear the top surface of the stack.

Fig. 3 Slowly move the load into position. Be careful not to damage or move adjacent loads.

Fig. 4 When the load is aligned with the stack beneath it, carefully lower the load onto the top surface of the stack.

Fig. 5 Lower (drop) the forks slightly to clear (disengage) the load pallet. Tilt the forks forward slightly, if necessary.

Fig. 6 Check your travel path, then carefully back away until the forks are clear of the stack. Stop and lower the forks to the travel position (6 to 8 inches above the ground), then tilt back to travel.

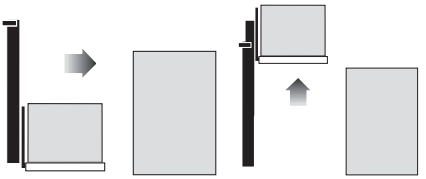

Fig. 1 **Fig. 2**

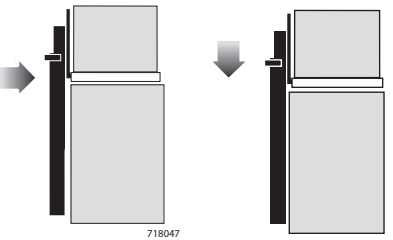

Fig. 3 **Fig. 4**

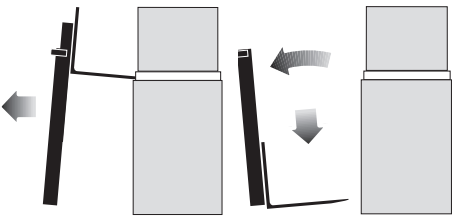

Fig. 5 **Fig. 6**

https://truckmanualshub.com/

To move a load from a stack:

Approach the stack carefully, truck lined up squarely with the load. With upright vertical, raise the forks to the correct height for freely engaging the load pallet. Adjust fork angle as necessary to fit squarely under the load. Move forward until the forks are under the load.

NOTICE

Be sure that the forks do not extend beyond the load, causing damage or tipping of other adjacent loads or materials behind the load being moved. If the forks are longer than the load, move the tips partially under the load without extending beyond the load. Raise the load to clear the under surface. Back out several inches, then set the load down and move forward until the front face of the forks contacts the load.

Raise the load from the stack by tilting the upright back just enough to lift the load from the surface. Or, with the upright still vertical, raise the forks until they begin to lift the load. At this point, apply the minimum back tilt that will stabilize the load.

Check your travel path, slowly back off until clear of the stack, stop, and then lower the load to the travel position (6 to 8 inches off the ground). Tilt full back to travel (except for certain loads that may have to be transported as level as possible). Be sure the load is back flush against the carriage or front face of the forks.

NOTICE

Certain loads may have to be transported as level as possible.

https://truckmanualshub.com/

After Operating the Truck

Always leave your lift truck in a safe condition. When you leave your truck, or park it, follow these safety rules:

- Park truck in designated parking area.
- Never park in areas that block emergency routes or equipment, access to fire aisles, or stairways and fire equipment. Lower forks to the floor.
- Tilt the upright forward until the forks are level and flat on the floor.
- Place control handle in full turn and raise handle to "UP" position to apply brake.
- Turn key switch to the **OFF** position and remove key.
- Block drive wheel to prevent accidental roll.
- Turn key in to proper authority.
- Plug in battery charger if necessary.

https://truckmanualshub.com/

https://truckmanualshub.com/

Contents

Daily Inspection Points 6.2

Typical Operating Conditions 6.2

Maintenance and Lubrication Schedule 6.3

Safe Maintenance Practices 6.4

Safety Standards 6.7

Battery Maintenance 6.8

Battery Handling 6.9

Battery Charging 6.10

Battery Removal 6.11

Battery Cleaning and Care 6.12

Battery Service Records 6.12

Battery Life 6.13

Battery Installation 6.13

NOTICE

THIS SECTION IS FOR TRAINED SERVICE PERSONNEL to use as a reference for Planned Maintenance (PM) procedures. Complete maintenance information is located in the Service Manual.

https://truckmanualshub.com/

Daily Inspection Points

The following should be done at the start of every shift:

- Check truck for obvious damage and leaks.
- Check / clean battery terminals.
- Check battery electrolyte level and specific gravity.
- Check capacity plate, warning plates & decals.
- Check condition of tires and wheels and remove embedded objects.
- Check drive wheel nut.
- Check hour meter and battery discharge indicator.
- Check brake operation.
- Check horn operation.
- Check emergency reversal switch operation.
- Check directional and speed control operation.
- Check lift and lower operation.
- Check emergency disconnect switch.

Typical Operating Conditions

Time intervals between maintenance are largely determined by operating conditions. The intervals specified in the following table are for normal operation. For more severe operation, the maintenance intervals should be shortened accordingly. Contact you CLARK dealer for recommendations.

Normal Operation:
Basically, eight hour material handling in clean buildings with smooth clean and level floors.

Severe Operation:
Prolonged operating hours or constant usage, with ramps and/or bumpy floors.

Extreme Operation:

- Sandy or dusty locations.
- High temperature locations.
- Sudden temperature changes such as refrigeration facilities.

https://truckmanualshub.com/

Maintenance and Lubrication Schedule

Recommended Planned Maintenance Intervals:

A = 8 - 10 hours or every day
B = 50 - 250 hours or every month
C = 450 - 500 hours or every 3 months
D = 900 - 1000 hours or every 6 months
E = 2000 hours or every year

PERIODIC CHECKS and PLANNED MAINTENANCE (PM)	A	B	C	D	E
Check truck visually and inspect components.	X	X			
Test drive truck/check functional performance.	X	X			
Air clean truck. (including all motors)		X			
Check torque on critical fasteners.		X			
Lubricate truck.		X			
Clean / Check battery terminals, electrolyte level.	X	X			
Check battery cables / truck receptacle.		X			
Perform battery load test.		X			
Test for shorts and grounds.		X			
Clean drive motor air vent.		X			
Drain and replace drive unit fluid.					X
Check hydraulic fliud level.		X			
Drain and replace hydraulic fluid					X
Check emergency brake.		X			

NOTE: See Section 8. Specifications in this manual for CLARK recommended fluids and capacities.

https://truckmanualshub.com/

Safe Maintenance Practices

The following instructions have been prepared from current industry and government safety standards applicable to industrial truck operations and maintenance. They are listed here for the reference and safety of all workers during inspection / maintenance operations. When in doubt of any inspection / maintenance procedures, please contact your local CLARK dealer.

1. Powered industrial trucks can become hazardous if maintenance is neglected. Therefore, suitable maintenance facilities, trained personnel and procedures shall be provided.

2. Maintenance and inspection of all powered industrial trucks shall be done in conformance with the manufacturer's recommendations.

3. A scheduled planned maintenance, lubrication and inspection system shall be followed.

4. Only trained and authorized personnel shall be permitted to maintain, repair, adjust and inspect industrial trucks and in accordance with the manufacturer's specifications.

5. Properly ventilate work area, vent exhaust fumes, keep shop clean and floor dry.

6. Avoid fire hazards and have fire protection equipment present in the work area. Do not use an open flame to check electrolyte level. Do not use open pans of fuel or flammable cleaning fluids for cleaning parts.

7. Before Starting To Work On Truck:
   a) Raise drive wheel free of floor or disconnect power source and use blocks or other positive truck positioning devices.
   b) Put blocks under the load-engaging means, or chassis before working on them.
   c) Disconnect battery before working on the electrical system.
   d) When working on hydraulic system, be sure the battery is disconnected.

8. Operation of the truck to check performance must be conducted in an authorized, safe, clear area.

https://truckmanualshub.com/

9. Before Starting to Drive the Truck:
   a) Remove drive wheel chocks if needed.
   b) Plug-in battery connector.
   c) Lower and turn control handle to operating position.
   d) Insert key and turn to "On" position.
   e) Make sure path of travel is clear.
   f) Check function of controls and emergency reversal switch.
   g) Check function of brakes.

10. Before Leaving the Truck:
   a) Park truck in designated area.
   b) Fully lower forks.
   c) Raise and turn control handle.
   d) Turn off key switch and remove key.
   e) Unplug battery connector.
   f) Block drive wheel.

11. Brakes, steering mechanisms, control mechanisms, warning devices, lights, guards and safety devices, lift mechanisms, and frame members must be carefully and regularly inspected and maintained in a safe operating condition.

12. Special trucks or devices designed and approved for hazardous area operation must receive special attention to ensure that maintenance preserves the original, approved safe operating features.

13. All hydraulic systems must be regularly inspected and maintained in conformance with good practices. Lift cylinders, valves and other similar parts must be checked to assure that “drift” or leakage has not developed to the extent that it would create a hazard.

14. When working on hydraulic system, be sure the battery is disconnected and forks are in the fully lowered position, and hydraulic pressure relieved in hoses and tubing.

15. The truck manufacturer’s capacity, operation and maintenance instruction plates, tags or decals must be maintained in legible condition.

https://truckmanualshub.com/

16. Batteries, motors, controllers, limit switches, protective devices, electrical conductors and connections must be inspected and maintained in conformance with good practices. Special attention must be paid to the condition of electrical insulation.

17. To avoid injury to personnel or damage to the equipment, consult the manufacturer's procedures in replacing contacts on any battery.

18. Industrial trucks must be kept in a clean condition to minimize fire hazards and help in the detection of loose or defective parts.

19. Modifications and additions that affect capacity and safe truck operation must not be done without the manufacturer's prior written approval. Capacity, operation and maintenance instruction plates, tags or decals must be changed accordingly.

20. Care must be taken to assure that all replacement parts, including tires, are interchangeable with the original parts and of a quality at least equal to that provided in the original equipment. Parts, including tires, are to be installed per the manufacturer's procedures. Always use genuine CLARK or CLARK - approved parts.

21. Use special care when removing heavy components from the truck, such as counterweight, upright, etc. The truck can become unstable and should be blocked. Be sure that lifting and handling equipment is of the correct capacity and in good condition.

IMPORTANT

Your new CLARK lift truck has been built to meet all applicable mandatory requirements of ANSI/ITSDF B56.1 Safety Standard for Powered Industrial Trucks. Each truck also includes certain safety devices-such as a horn as standard equipment. No additions, omissions, or modifications should be made that affect compliance to above requirements or in any way minimize the effectiveness of the safety devices.

https://truckmanualshub.com/

Safety Standards

NOTICE

You should also be familiar with additional operating and maintenance safety instructions contained in the following publications:

ANSI / ITSDF B56.1: Safety Standard for Low Lift and High Lift Trucks (Safety Code For Powered Industrial Trucks). Published by: Industrial Truck Standards Development Foundation. 1750 K Street NW, Suite 460, Washington DC 20009, www.itsdf.org.

NFPA 505: Fire Safety Standard for Powered Industrial Trucks: Type Designations, Areas of Use, Maintenance and Operation. Available from: National Fire Protection Assoc., Inc., Batterymarch Park, Quincy, MA 02269.

General Industry Standards, OSHA 2206: OSHA Safety and Health Standards (29 CFR 1910), Subpart N - Materials Handling and Storage, Section 1910.178 Powered Industrial Trucks. For sale by: Superintendent of Documents, U.S. Government Printing Office, Washington, D.C. 20402 or contact your CLARK dealer.

https://truckmanualshub.com/

Battery Maintenance

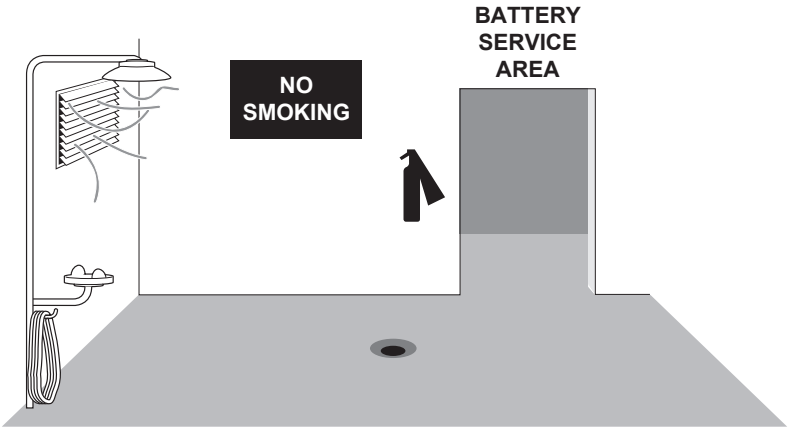

Battery charging installations must be located in areas designated for that purpose. These areas must be kept free of all nonessential combustible materials.

Facilities must be provided for:
- Flushing spilled electrolyte.
- Fire protection.
- Protecting charging apparatus from damage by trucks.
- Adequate ventilation for dispersal of fumes from gassing batteries.

When handling acid concentrates greater than 50% acid (above 1.400 specific gravity), an eye wash fountain must be provided.

A conveyor, overhead hoist, or equivalent material handling equipment must be provided for handling batteries.

IMPORTANT

Electric truck batteries are heavy and awkward to handle. They are filled with a very hazardous chemical solution. On charge, they give off hydrogen which, in certain concentrations, is explosive. And, they are costly. Before you remove, service, or install a truck battery, carefully read the following recommendations and instructions.

https://truckmanualshub.com/

Battery Handling

1. Change (remove) or service storage batteries only in an area designated for this purpose.

2. Be sure this area has provisions to flush and neutralize spillage, to ventilate fumes from gassing batteries, and for fire protection.

3. This area should be equipped with material handling tools designed for removing and replacing batteries, including a conveyor or overhead hoist. Use lift hooks that have safety latches.

4. Always use a special lifting device such as an insulted spreader bar to attach the hoist to the battery. The width of the spreader bar must be the same as the lifting eyes of the battery, to prevent damage to the battery. If the spreader bar hooks are movable, carefully adjust the position (width) of the hooks so that the pull is directly upward (vertical) and no side load or force (pressure) is exerted on the battery case. Be sure the lift hooks are the correct size to fit the lifting eyes of the battery.

5. If the battery does not have a cover of its own or has exposed terminals and connectors, cover the top with a non-conductive (insulating) material, such as a sheet of plywood or heavy cardboard, prior to attaching the lifting device.

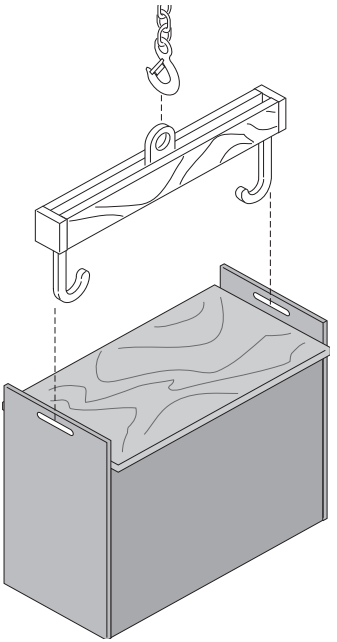

https://truckmanualshub.com/

6. Chain hoists or power battery hoists must be equipped with load chain containers to accumulate the excess lifting chain.

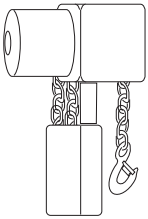

7. Keep all tools and other metallic objects away from terminals.

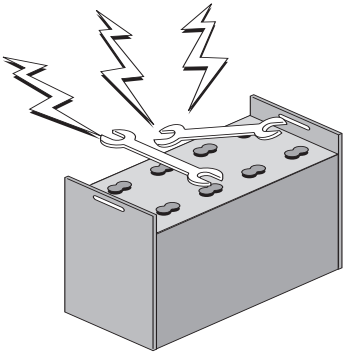

⚠ WARNING

BATTERY SERVICE must be done by trained and authorized personnel. Battery acid can cause severe burns and injury.

Battery Charging

1. Persons maintaining storage batteries must wear protective clothing such as face shield, long sleeves, and gloves.
2. Hydrogen emissions from charging batteries are explosive. No smoking is allowed in the charging area. Do not check the electrolyte level with an open flame. Do not allow open flame, sparks, or electric arcs in battery charging area.

⚠ WARNING

SULFURIC ACID: The battery contains corrosive acid that can cause injury. If acid contacts your eyes or skin, flush immediately with water and get medical assistance.

⚠ WARNING

EXPLOSIVE GASES: Do not smoke or have open flames or sparks on battery charging areas or near batteries. An explosion can cause injury or death.

https://truckmanualshub.com/

3. When charging batteries, the vent caps must be kept in place to avoid electrolyte spray. Care must be taken to assure that vent caps are open (clean) and functioning. The battery (or compartment) cover(s) must be open to dissipate heat and gas.

IMPORTANT

If batteries discharge rapidly during normal operation or do not charge to the correct specifications, contact a qualified battery service technician to check the battery for you. Do not add electrolyte or attempt to service the battery.

Battery Removal

1. Check the designated service and charging area for fire protection, and be sure all sources of ignition are cleared from the area. **Do not smoke**. Be sure all previous noted equipment is in the area, in good repair, and working properly. If the battery is to be serviced, be sure there are provisions to flush and neutralize spillage and to disperse (ventilate) fumes from gassing batteries on charge. And, be sure there are provisions for handling electrolyte.
2. Before attempting to remove or charge a storage battery, the truck should be positioned in the designated battery service area and the parking brake applied so the truck cannot move.
3. Disconnect the battery connector.
4. If the battery to be handled is not equipped with its own cover, use a non-conductive (insulating) material, e.g., plywood or heavy cardboard, before attaching the lifting device.

WARNING

- **Disconnect battery before handling electrical components.**
- **Polarity must be correct to prevent damage.**

1747748

5. Use an approved lifting device with an insulated spreader bar, to remove and transport a truck battery. Be sure the hoist and lifting chains are equipped with safety hooks.
6. Remove the battery and move it to a safe storage location. Store batteries either on an approved battery rack or on a wooden pallet.

https://truckmanualshub.com/

Battery Cleaning and Care

Never wash the battery when it is in the truck. The easiest and most satisfactory method of cleaning a battery is to wash it occasionally with a low-pressure cold-water spray. The top can also be washed off with a solution of baking soda and water (add a box of baking soda to a pail of water and stir until dissolved) and rinsed with clean water. It is good practice to have this solution in a battery room at all times.

IMPORTANT

During cleaning, the battery vent caps must be tightly in place.

Refer to the battery manufacturer or supplier for their recommended battery maintenance and care procedures.

BATTERY SAVER and CLEANER, CLARK Part No. 886398, may be used to clean and protect the truck battery.

New Truck Batteries: Apply a light coat of BATTERY SAVER and CLEANER to entire surface of battery. Allow to set for approximately 30 seconds, then wipe thoroughly with a wiping cloth or rag. Chemical action will dissolve rust and corrosion. After cleaning, apply a second coating for protection. This will prevent the start and growth of corrosion on battery terminals and cable connections.

Battery Service Records

Keep a record of battery service and maintenance to obtain the best service life from your battery and truck. Select a pilot cell, take readings of specific gravity and temperature before and after charging, and record the readings with the date. It is best to change the location of the pilot cell occasionally to distribute any electrolyte loss over the battery. Every 2 or 3 months, take complete battery readings (specific gravity, temperature, and voltage) and make a record of them.

https://truckmanualshub.com/

Battery Life

1. Follow normal battery maintenance procedures, re-charging before 80% discharged and with periodic equalizing charges.
2. Don't add acid to a battery. Only a person trained and qualified to do battery maintenance should determine if this is necessary.
3. Lift battery only with a correctly-constructed lifting device that will not put pressure on the battery case.
4. Keep open flames, tools, and metal objects away from the top of battery to prevent short circuits and explosions.
5. Do not overcharge.
6. Check the battery electrolyte level **after** each charging. Add water if the top of the separator or plates are visible. **Do not overfill!**
7. **Keep the battery clean and dry**. Wash down as needed.
8. Keep battery service records.

Battery Installation

1. Use only a lead-acid battery with the voltage and ampere-hour rating specified for the truck. Use only the type of battery as indicated on the truck nameplate.
2. When changing batteries on battery electric trucks, replacement batteries must be of the service weight that falls within the minimum/maximum range specified on truck nameplate.
3. Handle battery only with approved lifting device.
4. Install the battery correctly in the truck and secure it in position.

NOTICE

Some trucks are equipped with battery stops or blocks. Others do not require them. If the truck being serviced has battery stops or blocks, be sure none are missing or damaged. Replace them as necessary. If they are an adjustable type, be sure they are correctly adjusted and tightened.

https://truckmanualshub.com/

https://truckmanualshub.com/

Towing

IMPORTANT

The WSTX33 walkie-stacker counterbalanced lift truck has an electromagnetic emergency brake that must be disabled prior to towing, see your Service Manual.

Once the emergency brake system is disabled the truck can be pulled by hand to a service area.

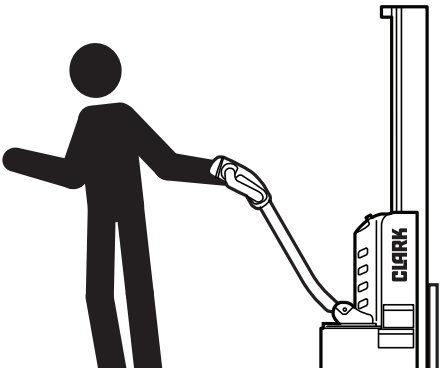

If your truck becomes disabled contact a trained and authorized mechanic.

⚠ CAUTION

Do not tow or push the truck with another vehicle.

https://truckmanualshub.com/

https://truckmanualshub.com/

Specifications

Load Capacities (24" LC)

Model	*Load Capacity**	*Side Shift*
WSTX33	3300 lb (1496 kg)	No
WSTX33	2800 lb (1270 kg)	Yes (≤ 126" MFH)
WSTX33	2400 lb (1088 kg)	Yes (> 126" MFH)

*Derate capacity 500 lb (227 kg) when above 132"

Service Weights

Model	*Battery Compartment*	*Minimum Battery Weight*	*Service Weight w/o Battery*
WSTX33 (104" MFH)	32.5" x 13.1" (825 x 332 mm)	1050 lb (477 kg)	4390 lb (1992 kg)
WSTX33 (126" MFH)	32.5" x 13.1" (825 x 332 mm)	1050 lb (477 kg)	4695 lb (2130 kg)
WSTX33 (157" MFH)	32.5" x 13.1" (825 x 332 mm)	1050 lb (477 kg)	4820 lb (2187 kg)

Grades
5% (loaded)
8% (empty)

Travel
Variable from 0 to 3.1 mph (loaded)
Variable from 0 to 3.4 mph (empty)

Tilt
3° Forward
7° Backward

Lift
Up to 20 ft/min (loaded)
Up to 27 ft/min (empty)

Drive Wheel
10" x 4.1" polyurethane

Load Wheel
10" x 4" polyurethane

Fluid Recommendations

Hydraulic Unit: AW ISO32 Hydraulic Fluid (CLARK Part No. 1800236)
AW ISO32 HVI Hydraulic Fluid (Cold Storage)

Transmission: SAE 80W-90 GL-5 Normal (CLARK Part No. 1808014)
SAE 75W-90 GL-5 (Cold Storage)

Fluid Capacities

Hydraulic Unit: 14.4 to 19.0 quarts (13.6 to 18.0 L)

Transmission: 1.83 quarts (1.74 L)

Lubrication Recommendations
NLGI #2 Lithium Grease
Chain and Cable Lubricant (CLARK Part No. 886399)
Innerslide Lubricant (CLARK Part No. 886396)

https://truckmanualshub.com/

https://truckmanualshub.com/

https://truckmanualshub.com/

Scan Link Below

Safety Starts with You!

OM-743

CLARK® Material Handling Company

700 Enterprise Drive
Lexington KY 40510

Additional copies of this manual are available from your CLARK dealer.