Bobcat®

444

EXCAVATORS

Superior design for superior performance

The Bobcat 12.5-tonne excavator

- Powerful
- Easy to operate
- Environmentally friendly
- Choice of tracks and boom

The 12.5 tonne Bobcat 444 excavator is a state-of-the-art machine designed to provide truly superior performance, outstanding compactness with the shortest tail-swing in its class and more productivity thanks to a boom offset feature (like a compact excavator).

Operating weight with ROPS cab
12500 kg

Maximum power at 2100 RPM
69.0 kW

Comfortable cab

The full-vision cab is acoustically insulated to keep the sound level down, providing a comfortable working environment. The suspension seat is fully adjustable for weight, height and backrest angle.

A deflector on the front of the cab prevents water entering it, and keeps the operator dry even in the worse weather conditions.

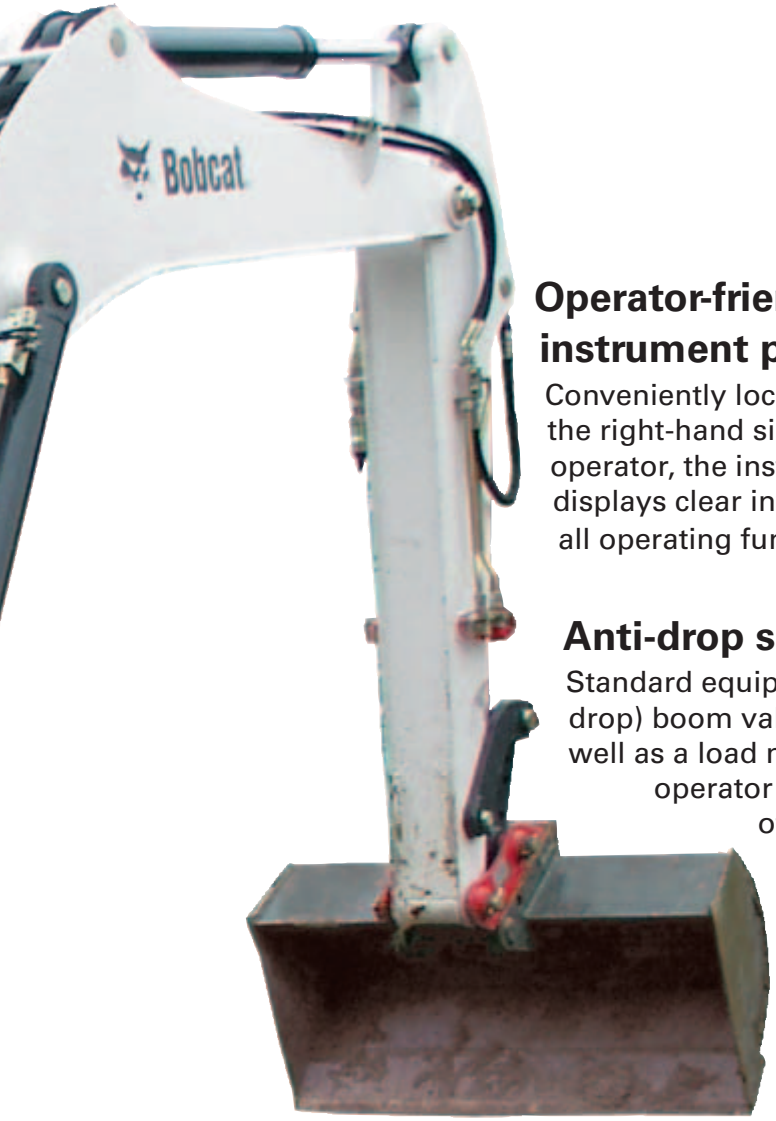

Operator-friendly instrument panel

Conveniently located on the right-hand side of the operator, the instrument panel displays clear information on all operating functions.

Anti-drop safety valve

Standard equipment includes a safety (anti-drop) boom valve for lifting applications as well as a load moment device to keep the operator informed of the stability limit of the excavator. If necessary, the load moment device can be switched off. The standard equipment also includes an anti-drop valve for the blade.

Exceptional stability

The rugged oversized undercarriage ensures exceptional longitudinal and lateral stability.

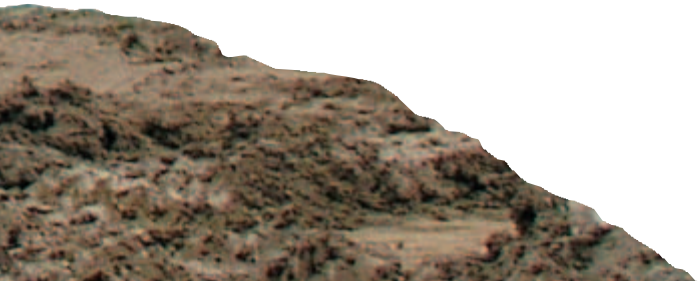

Compact and versatile

Short tail swing radius

Because the tail of the 444 is more compact than conventional models, the risk of damage to the job site or excavator is significantly reduced. The need to constantly check for clearance behind the machine is also reduced.

240° Swing range

The right-hand corner of the excavator is designed to facilitate a full 240° swing. This means the machine can manoeuvre alongside potential obstacles and still swing around to load a truck positioned behind it. The boom offset further contributes to the machine's flexibility and versatility when working in confined spaces.

Features that make a difference

Load-sensing

An axial piston pump with load-sensing in combination with a load-independent flow division system enables simultaneous, independent control of all movements.

Two speed ranges

A 2-stage variable displacement hydrostatic motor provides two speed ranges in both forward and reverse with a maximum speed of 5.2 km/h.

Maintenance-free undercarriage

The track rollers are sealed and lubricated for life. Track tensioning is fast and simple via grease cylinder.

Easy access

Flip-up covers provide easy access to the service points.

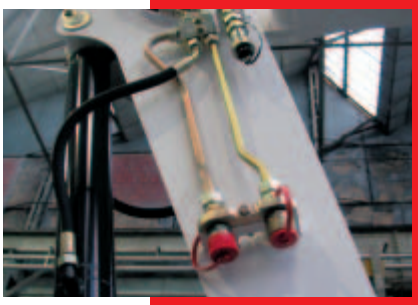

Articulated boom option

The optional articulated boom increases vertical digging depth, dumping height and reach, as well as reducing the front turning radius.

Auxiliary hydraulics

Standard equipment includes 2-way auxiliary hydraulics as well as an anti-drop valve for the blade and the supplementary equipment necessary to operate a clamshell bucket. Option includes a direct return to tank for certain hydraulic breakers.

Advanced steering system

Pilot-operated hand levers and pedals provide independent and precise control of the crawler tracks, including counterclockwise operation.

Load into trucks with high sides

With a height to bucket pin of 6.33 m, the 444 can easily load material into large trucks with sides as high as 5.2 metres.

Dimensions & Working range

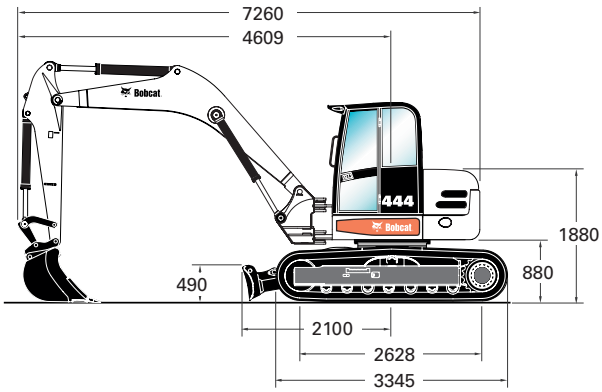

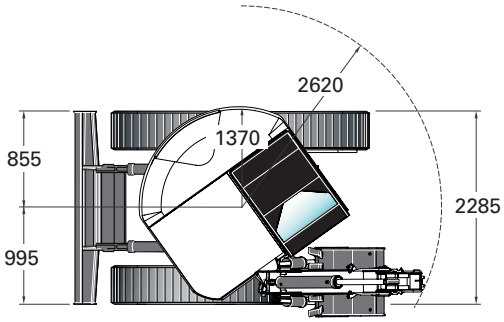

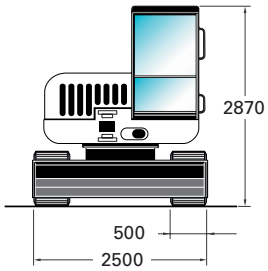

All dimensions in mm.

Standard boom and dipperstick

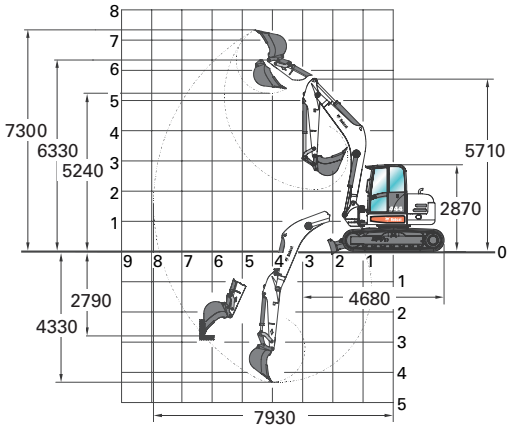

Standard boom and long dipperstick

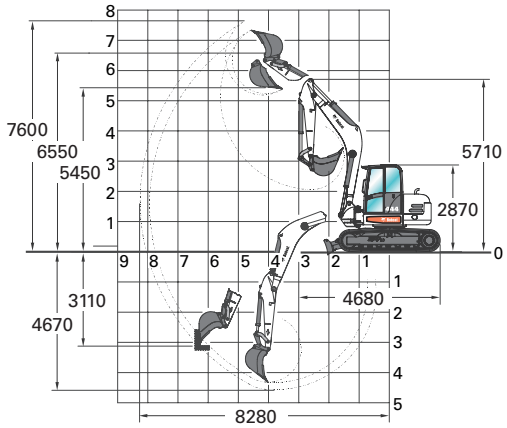

Articulated boom and standard dipperstick

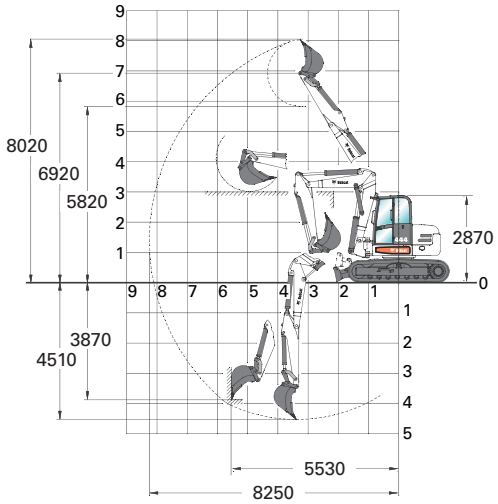

Load capacities in tons (t) Bucket hinge pin height		Load radius from the center of the ring gear									
		3.2 m		4 m		5 m		6 m		6.6 m	
		180°	90°	180°	90°	180°	90°	180°	90°	180°	90°
3.0 m	Supported by blade	4.8	2.06	3.58	3.36	3.02	2.28	2.78	1.7	2.68	1.48
	Travelling	3.15	--	3.53	3.28	2.32	2.26	2.03	1.69	1.37	1.46
1.5 m	Supported by blade	7.19	3.9	5.32	2.86	3.9	2.03	3.25	1.6	2.93	1.36
	Travelling	4.66	3.83	3.53	2.07	2.6	2.07	1.98	1.62	1.65	1.33
0 m	Supported by blade	7.3	4.02	5.91	2.65	4.53	1.98	2.87	1.51	3.2	1.32
	Travelling	4.7	3.92	3.21	2.59	2.41	1.95	1.14	1.48	1.64	1.3
-0.5 m	Supported by blade	6.84	3.67	6.37	2.74	4.4	1.95	3.69	1.52	3.37	1.37
	Travelling	4.45	3.62	3.26	2.61	2.34	1.91	1.77	1.5	1.57	1.34

Weights

Operating weight	12500 kg
Additional weight for 500 mm steel tracks	300 kg
Additional weight for 800 mm steel tracks	910 kg
Additional weight for long dipperstick	70 kg
Additional weight for articulated boom	300 kg

Engine

Make / model	Deutz / BF-4M-2012 turbo
Fuel / Cooling	Diesel / Liquid
Maximum power at 2100 RPM (DIN 70020)	69.0 kW
Maximum torque at 1600 RPM (SAE Net)	385 Nm
Number of cylinders	4
Displacement	4.0 l
Bore / Stroke	94 mm / 115 mm
Alternator	12 V — 55 A — open frame with internal regulator
Starter	12 V — gear reduction type — 3.1 kW

Controls

Steering	Direction and speed controlled by two pilot-operated hand levers or pedals

Hydraulic System

Pump type	One engine-driven piston pump and two gear pumps
Piston pump capacity	158 l/min
Gear pump capacity	41.4 + 36.0 l/min
Auxiliary flow	100 l/min
Control valve	Nine-spool

Performance

Digging force, dipperstick	61000 N
Digging force, bucket	81500 N
Drawbar pull	82000 N
Ground pressure with rubber tracks	43.0 kPa
Travel speed, low range	2.7 km/h
Travel speed, high range	5.4 km/h
Maximum digging depth	4330 mm

Slew System

Boom swing, left	56°
Boom swing, right	65°
Slew circle	Single row shear-type ball bearings with internal gear
Slew drive	Axial piston motor with spring applied disk brake
Slew rate	9.0 RPM

Traction

Track width	500 mm
Number of track rollers per side	1 top, 7 bottom
Gradeability	30°

Brakes

Travel brake	Spring applied, hydraulically released, multi-disk brake
Slew brake	Spring applied, hydraulically released, multi-disk brake

Fluid Capacities

Cooling system	12.0 l
Engine lubrication plus oil filter	10.0 l
Fuel reservoir	190.0 l
Hydraulic reservoir	140.0 l
Hydraulic system with bucket and dipper cylinder retracted, bucket on the ground, and blade down	140.0 l

444

Standard Features

- Adjustable suspension seat
- Horn
- 2000 mm dipperstick
- 2500 mm dozer blade
- 500 mm rubber or steel tracks
- Boom anti-drop valve
- Blade anti-drop valve
- Control console locks
- Electrical disconnect
- Enclosed cab with heater
- Hydraulic joystick controls
- Overload indicator
- Radio pre-installation
- Seat belt
- Two-speed travel
- Warranty: 12 months, 2000 hours
- Working lights

Options

- 500 or 800 mm steel tracks
- Air conditioning
- Air-cushioned operator's seat
- Articulated boom
- Bucket rod with crane hook
- Dipperstick hose rupture safety valve
- Dozer blade float position
- Electric refuelling pump
- Independent diesel heating
- Keyless ignition
- Long dipperstick (2350 mm)
- MS08 quick-change attachment mounting system
- Open return (required for certain hydraulic breakers)
- Secondary auxiliary hydraulic circuit
- Special paint
- Travel motion alarm
- Yellow rotating beacon

Attachments

- Digging bucket
- Grading bucket
- Hydraulic breaker
- Rotating clamshell bucket
- Tilt bucket

Worldwide Support

With the Bobcat 444, you get more than just an exceptional excavator. You also get the support of a worldwide network of Bobcat dealers offering industry-leading attachments, accessories and parts availability. Their factory-trained service technicians are equipped to handle all your parts and service requirements, including engine and hydrostatic/hydraulic components. Get all the details from your Bobcat dealer.

BOBCAT EUROPE
J. Huysmanslaan, 59
B - 1651 LOT Belgium
www.bobcat.com

An Ingersoll-Rand business

Specifications and design are subject to change without notice.

4470340-EN (06-2005)