https://truckmanualshub.com/

150 DF/DG/DA

https://truckmanualshub.com/

https://truckmanualshub.com/

Piezas para el modelo

Parts list model

■ En las páginas siguientes encontrará los despieces de los distintos componentes del vehículo, así como la relación de las piezas que los componen debidamente referenciadas. Esto le servirá para identificar correctamente cualquier pieza que pueda precisar.
Para solicitar piezas de repuesto es preciso indicar: **Nº de bastidor, Nº de tabla, Nº de figura y Nº de referencia de la pieza.**
Para su comodidad y mejor servicio, pida los repuestos que precise al Distribuidor Oficial más próximo.
La Empresa Constructora se reserva el derecho de variar cualquier característica sin previo aviso, si lo considera conveniente para la mejora de sus vehículos.

■ *On the following pages you will find the list of spares of different components of the vehicle; and duly referenced to identity the spare you need.*
In order to ask for spares you must indicate: ***Nr. of chassis, Nr. of table. Nr. of figure and Nr. of reference.***
For your comfort and best service, please order the spares to your nearest Official Distributor. The manufacturer reserves the right of changingtheir characteristics without any previous notice, if it is considered suitable to improve the vehicles.

https://truckmanualshub.com/

Indice
Index

Motor / *Engine*
Motor y Silenciador / *Engine and Exhaust muffle (Diter)* **6**
Motor y Silenciador / *Engine and Exhaust muffle (Kubota)* **7**
Motor y Silenciador / *Engine and Exhaust muffle (Hatz)* **8**
Grupo radiador / *Radiator group (Kubota)* **9**
Suplemento radiador / *Radiator supplement (Kubota)* **10**
Soporte motor / *Engine fastening (Diter)* **11**
Soporte motor / *Engine fastening (Kubota)* **12**
Soporte motor / *Engine fastening (Hatz)* **13**
Grupo acelerador / *Accelerator group (Diter, Kubota)* **14**
Grupo acelerador / *Accelerator group (Hatz)* **15**
Embrague / *Clutch (Diter)* **14**
Embrague / *Clutch (Kubota)* **17**
Embrague / *Clutch (Hatz)* **18**
Filtro aire / *Air filter (Diter, Kubota)* **19**
Manivela arranque / *Starting handle (Diter, Hatz)* **20**
Depósito combustible / *Hydraulic oil tank* **21**
Tapón / Plug **22**

Transmisión / *Transmission*
Campana embrague / *Clutch sump* **23**
Palancas mandos cambio / *Shift gear lever* **24**
Caja de cambios (exterior) / *Gear box (external)* **25**
Diferencial / *Differential* **26**
Caja de cambios (interior) / *Gearbox (internal)* **27**
Puente delantero / *Front axle* **28**
Puente directriz DG-DA / *Directrix axle* **30**
Puente directriz "Plus" / *Directrix axle* **31**
Cilindro dirección "Plus" / *Steering cylinder* **32**

Chasis / *Chassis*
Bastidor DF / *Chassis* **33**
Bastidor DA / *Chassis* **34**

Dirección / *Steering*
Dirección mecánica / *Mechanic steering* **35**
Dirección hidráulica "Plus" / *Hydraulic steering* **36**
Soportes dirección / *Steering bracket* **37**

Freno / *Brake*
Freno / *Brake* **38**
Frenos hidráulicos "Plus" / *Hydraulic brakes* **39**
Pedales / *Pedals* **40**
Mandos freno / *Brake actuatros* **41**
Bomba de frenos "Plus" / *Brake pump assembly* **42**
Instalación frenos "Plus" / *Brake installation* **43**
Freno de estacionamiento / *Parking brake* **44**
Freno de estacionamiento "Plus" / *Parking brake* **45**

Ruedas / *Wheel*
Ruedas / Wheel **46**

Carrocería / *Body*
Protectores / *Protectors* **47**
Asiento / *Seat* **48**
Contrapeso / *Counterweight* **49**
Faldones ruedas (opcional) / *Mudflats (optional)* **50**
Espejo retrovisor (opcional) / *Rear-vision mirror (optional)* **51**
Protector conductor (opcional) / *Driver protector (optional)* **52**
Limpiaparabrisas (opcional) / *Winscreen wipers (optional)* **53**

https://truckmanualshub.com/

Indice
Index

Implementos Funcionamiento Máquina / *Machine operation tools*
Cilindro elevación tolva DF / *Skip lifting ram* **54**
Cilindro elevación tolva DA - DG / *Skip lifting ram* **55**
Cilindro giratorio DG / *Rotating cylinder* **56**
Válvula reguladora DG-DA / *Regulator valve* **58**
Válvula reguladora DF-DA / *Regulator valve* **59**
Cilindro tijeras DA / *Scissors cylinder* **60**
Tijeras DA / *Scissors* **61**
Cilindro cuchara DF / *Liddle cylinder* **62**
Cilindro elevador cuchara DF / *Liddle lifting ram* **63**
Cilindro elevación tolva DG / *Skip lifting ram* **64**
Tolva DF / *Hopper* **65**
Tolva y Soporte DA / *Hopper and Mounting* **66**
Fijación tolva DA / *Hopper and Mounting* **67**
Sop. giratorio, tolva, bastidor DG / *Rotating Support, Hopper, Chassis* **68**
Instalación cuchara DF / *Liddle installation* **69**

Instalación Hidráulica / *Hydraulic circuit*
Depósito aceite / *Oil tank* **70**
Distribuidor y Bomba hidráulica / *Distributor And Hydraulic Pump* **71**
Instalación hidráulica DG / *Hydraulic installation* **72**
Instalación hidráulica (dirección hidráulica) DG "Plus" / *Hydraulic installation (hydraulic steering)* **73**
Instalación hidráulica DA / *Hydraulic installation* **74**
Instalación hidráulica (dirección hidráulica) DA "Plus" / *Hydraulic installation (hydraulic steering)* **75**
Instalación hidráulica DF / *Hydraulic installation* **76**
Instalación hidráulica (dirección hidráulica) DF "Plus" / *Hydraulic installation (hydraulic steering)* **77**

Instalación Eléctrica / *Electric circuit*
Faro giratorio / *Rotating beacon* **78**
Instalación eléctrica arranque / *Starting electrical installation (Diter, Hatz)* **79**
Tablier arranque / *Starting panel (Diter, Hatz)* **80**
Instalación eléctrica alumbrado / *Lighting electrical installation (Diter)* **81**
Tablier alumbrado "Plus" / *Lighting panel (Diter)* **82**
Instalación eléctrica arranque "Plus" / *Starting electrical installation (Kubota)* **83**
Tablier arranque "Plus" / *Starting panel (Kubota)* **84**
Instalación eléctrica alumbrado / *Lighting electrical installation (Kubota)* **85**
Tablier alumbrado 4/ *Lighting panel (Kubota)* **86**

Acabados / *Finishing*
Protector tablier / *Panel protector* **87**
Placas / *Plates* **88**

Transmisión 4x4 / *4x4 Transmission*
Puente directriz / *Axle transmission* **90**
Transmisión eje / *Axle transmission* **91**
Transmisión rueda / *Tyre transmission* **92**
Cilindro dirección / *Steering cylinder* **93**
Piñón ataque / *Drive pinion* **94**
Desconector Dumper 1 / *Dumper disconector 1* **95**
Desconector Dumper 2 / *Dumper disconector 2* **96**
Desconector Dumper 3 / *Dumper disconector 3* **97**
Desconector Dumper 4 / *Dumper disconector 4* **98**
Pedal / *Pedal* **99**
Junta cardán / *Cardan joint* **100**
Tope en chasis / *Chassis bumpers* **101**

https://truckmanualshub.com/

Motor
Engine

Motor y Silenciador
Engine and Exhaust muffler

(Diter)

Fig. Nº	Referencia	Cantidad
1	01.00101.04	(1)
1	01.00101.05	(1)
2	40.02001.00	1
3	935.47051.66	1
4	01.13310.02	1
5	603.08020.86	2
6	101.08000.66	2
7	105.08000.66	2

Fig. Nº *Fig. Nº*	Referencia *Part Nº*	Cantidad *Quantity*

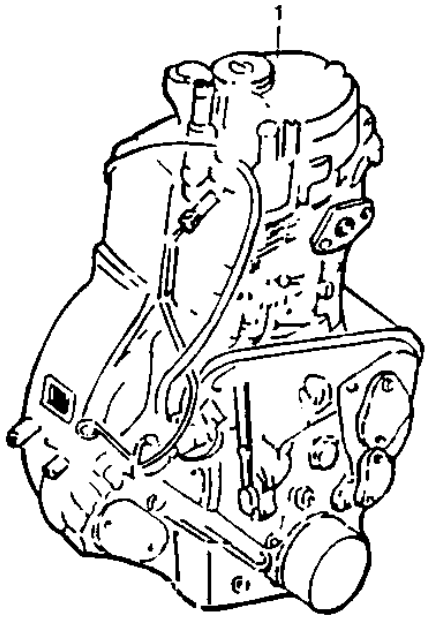

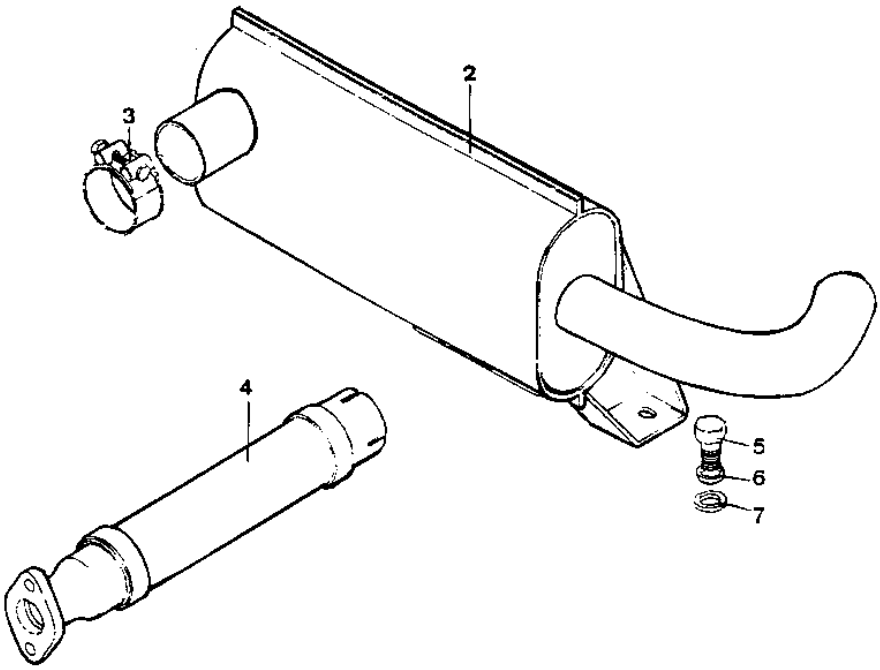

https://truckmanualshub.com/

Motor
Engine

Motor y Silenciador
Engine and Exhaust muffler

(Kubota)

Fig. Nº *Fig. Nº*	Referencia *Part Nº*	Cantidad *Quantity*
1	09.00200.00	1
2	09.00119.00	1
3	725.08000.30	4
4	105.08000.66	4
5	621.38015.86	1
6	105.10000.66	1
7	101.10000.66	1
8	86.00100.06	1
9	86.00100.02	1
10	86.00100.03	1
11	86.00100.00	1

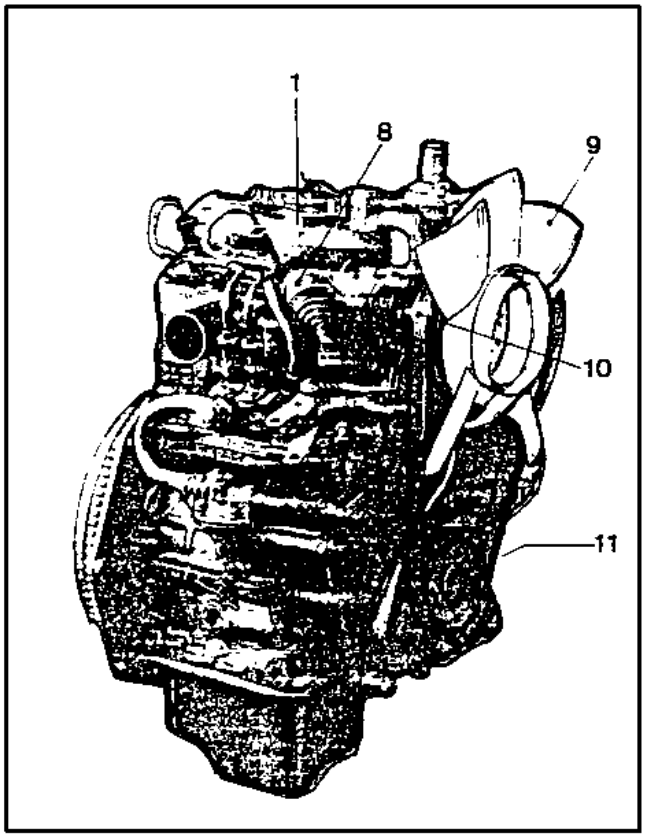

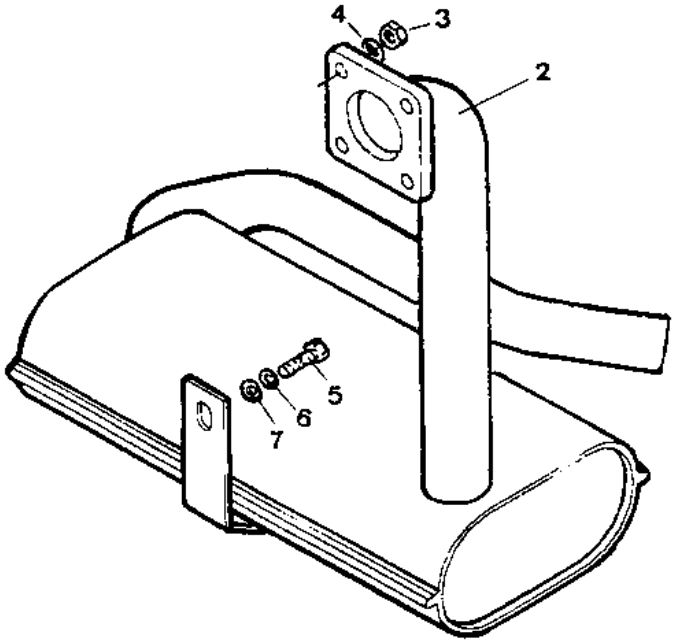

https://truckmanualshub.com/

Motor
Engine

Motor y Silenciador
Engine and Exhaust muffler

(Hatz)

Fig. Nº *Fig. Nº*	Referencia *Part Nº*	Cantidad *Quantity*
1	40.02001.00	1
2	935.47051.66	1
3	40.20150.00	1
4	603.08020.86	2
5	105.08000.66	2
6	101.08000.66	2
7	40.00100.20	1
8	86.90000.01	1
9	86.90000.03	1
10	86.90000.02	1
11	02.01125.00	1

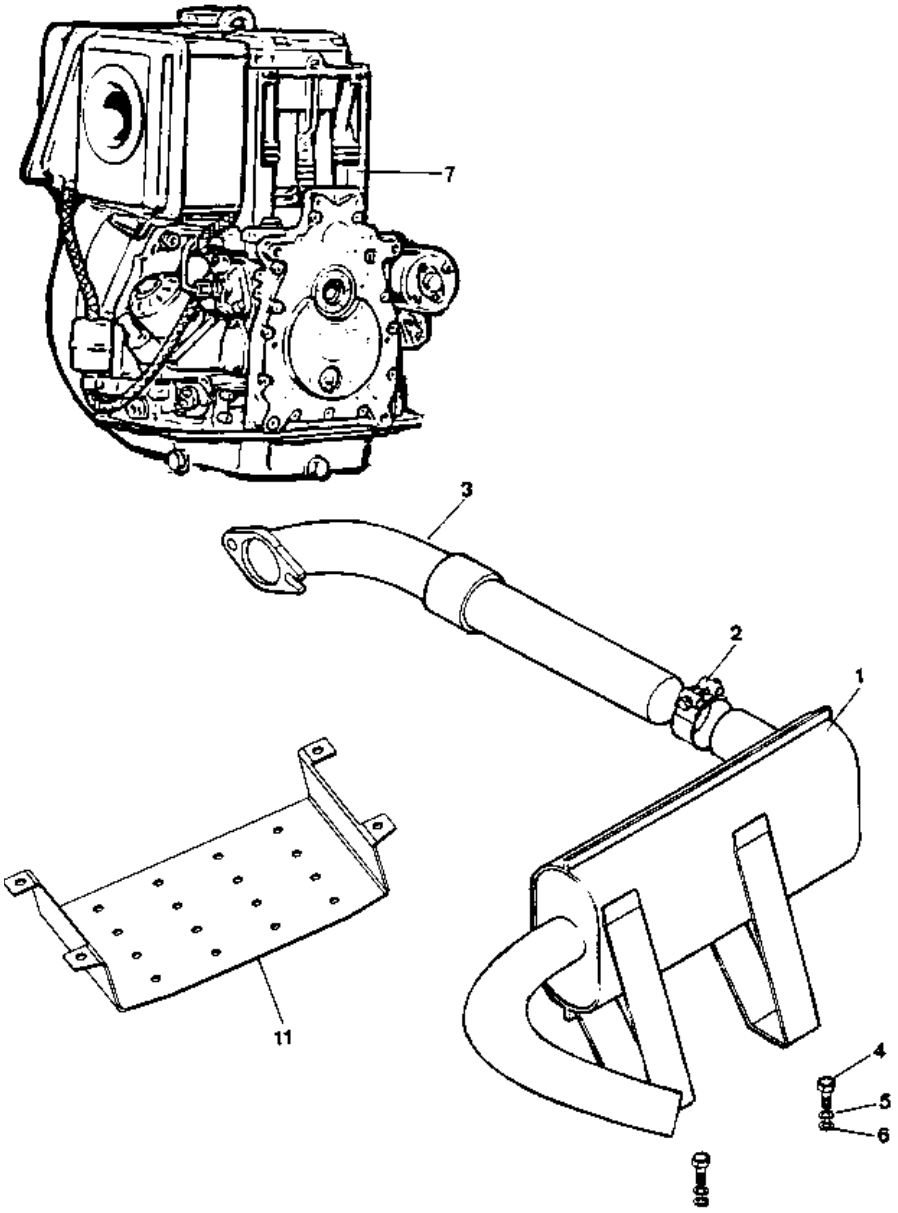

https://truckmanualshub.com/

Motor
Engine

Grupo radiador
Radiator group

(Kubota)

Fig. Nº *Fig. Nº*	Referencia *Part Nº*	Cantidad *Quantity*
1	09.00821.00	1
2	701.05000.66	4
3	101.05000.66	4
4	608.05010.86	4
5	701.08000.60	1
6	09.00167.00	1
7	85.11300.65	1
8	09.60410.00	1
9	912.20032.00	6
10	09.00117.00	1

Fig. Nº *Fig. Nº*	Referencia *Part Nº*	Cantidad *Quantity*
11	09.00118.00	1
12	09.00158.00	1
13	09.00125.00	1
14	16.00760.00	2
15	112.10000.66	2
16	711.10000.66	2
17	603.08030.86	2
18	105.08000.66	2
19	101.08000.66	2

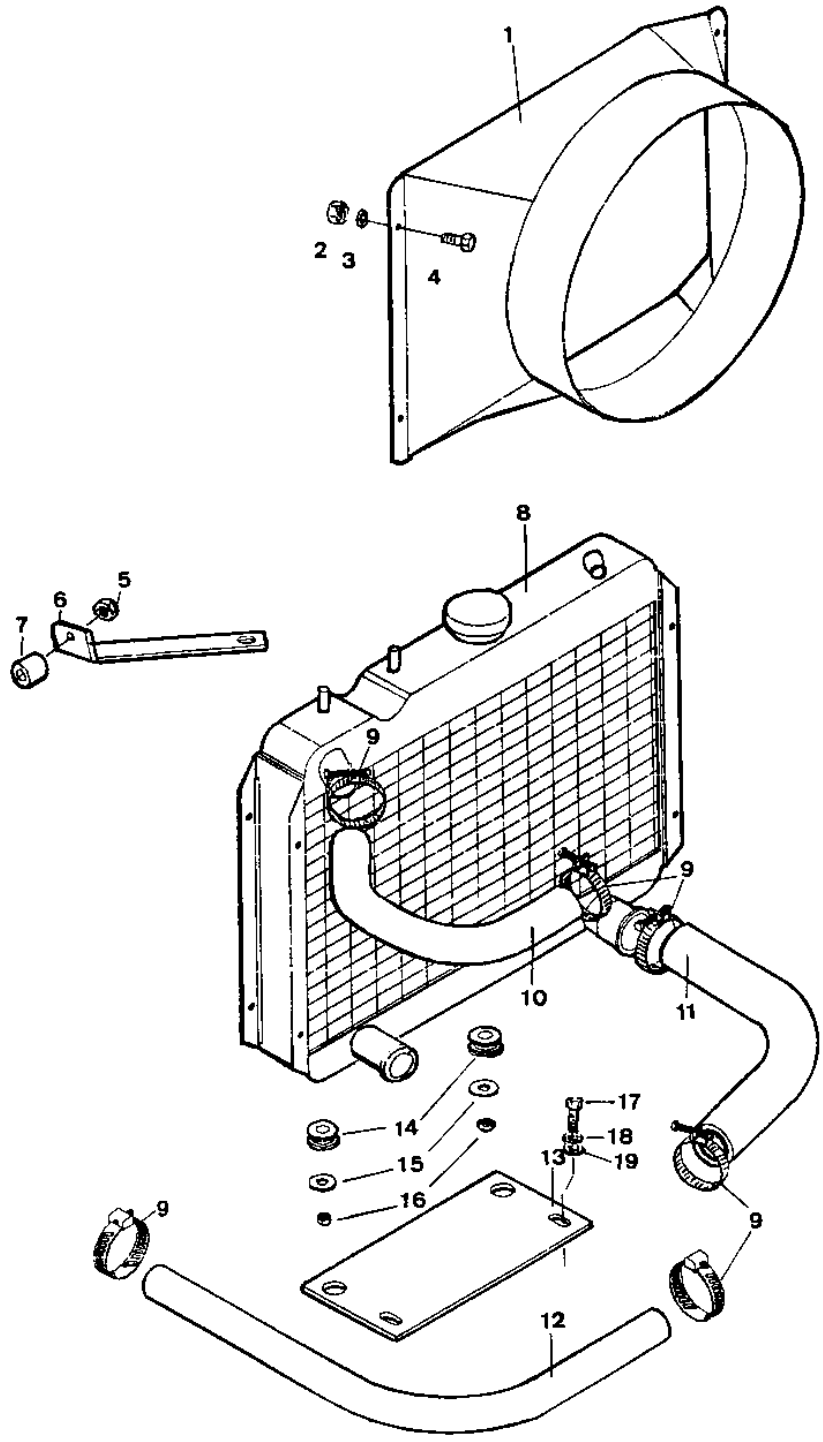

https://truckmanualshub.com/

Motor
Engine

Suplemento radiador
Radiator supplement

(Kubota)

Fig. Nº *Fig. Nº*	Referencia *Part Nº*	Cantidad *Quantity*
1	09.00720.00	1
2	603.08020.86	2
3	105.08000.66	2
4	09.00171.00	1
5	920.08016.66	2
6	43.14105.40	1
7	09.00245.00	1
8	912.20032.00	1

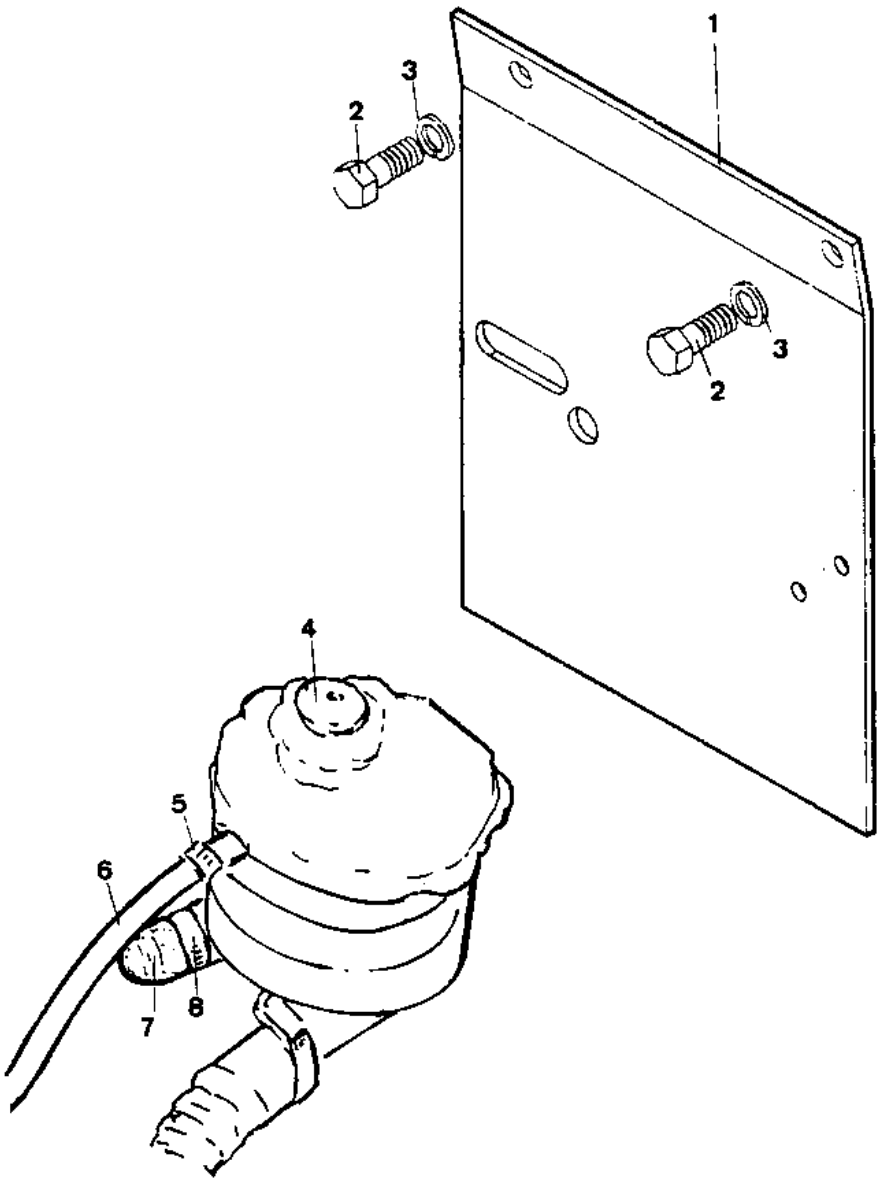

https://truckmanualshub.com/

Motor
Engine

Soporte motor
Engine fastening

(Diter)

Fig. Nº *Fig. Nº*	Referencia *Part Nº*	Cantidad *Quantity*
1	10.00776.01	1
2	603.10035.86	2
3	01.00112.10	1
4	15.00113.00	4
5	15.00114.01	2
6	604.14080.86	2
7	37.00374.00	2
8	701.14000.86	2

Fig. Nº *Fig. Nº*	Referencia *Part Nº*	Cantidad *Quantity*
9	01.00776.15	1
10	603.12025.86	4
11	105.14000.66	2
12	105.12000.66	4
13	105.10000.66	2
14	101.10000.66	2
15	711.10000.66	2

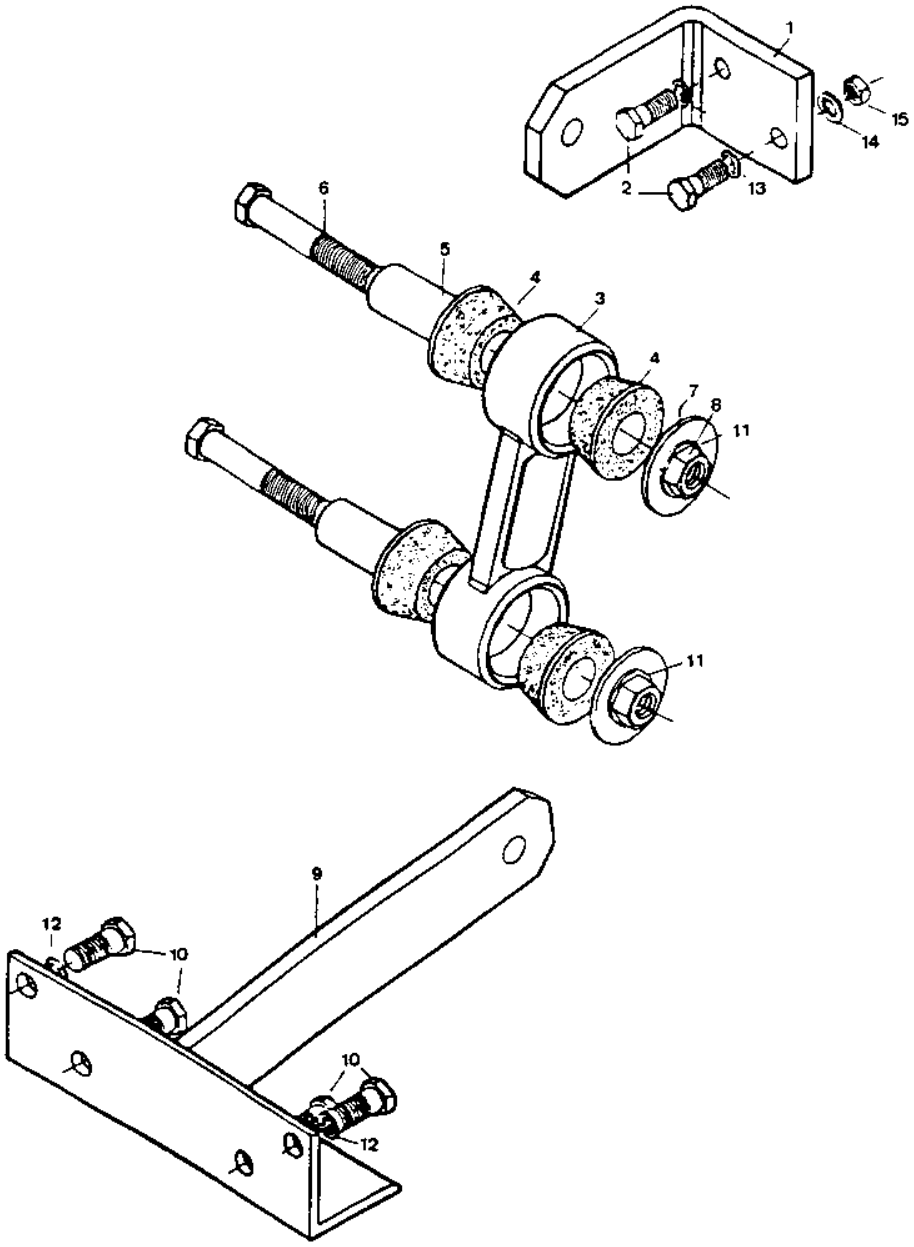

https://truckmanualshub.com/

Motor
Engine

Soporte motor
Engine fastening

(Kubota)

Fig. Nº *Fig. Nº*	Referencia *Part Nº*	Cantidad *Quantity*
1	09.00200.00	1
2	09.00130.00	1
3	37.00374.00	2
4	15.00114.01	2
5	15.00113.00	4
6	604.14080.86	2
7	604.10035.86	2
8	701.14000.86	2
9	105.14000.66	2
10	01.00112.10	1
11	09.00121.00	1
12	625.10025.86	8
13	105.10000.66	8

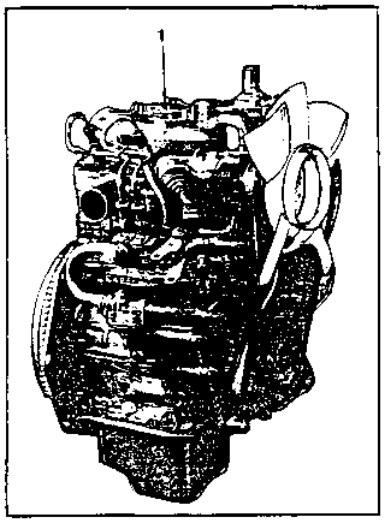

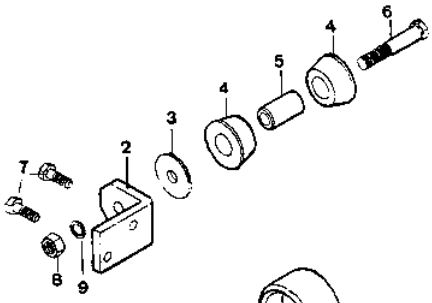

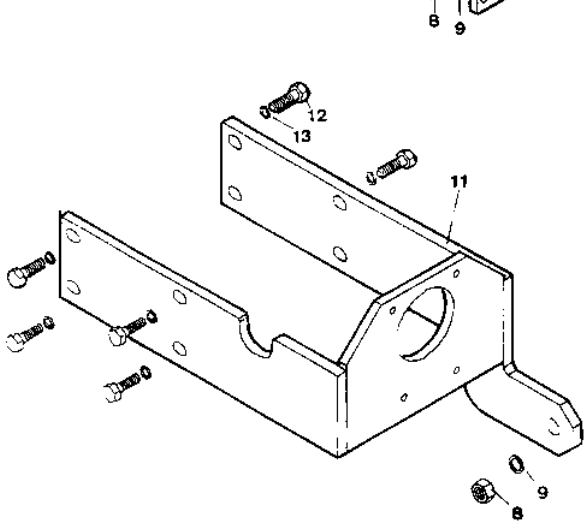

https://truckmanualshub.com/

Motor
Engine

Soporte motor
Engine fastening

(Hatz)

Fig. Nº *Fig. Nº*	Referencia *Part Nº*	Cantidad *Quantity*
1	10.00776.00	1
2	604.14080.86	2
3	15.00114.01	2
4	15.00113.00	4
5	01.00112.10	1
6	40.10120.00	1
7	37.00374.00	2
8	604.08035.86	2
9	603.08045.86	2

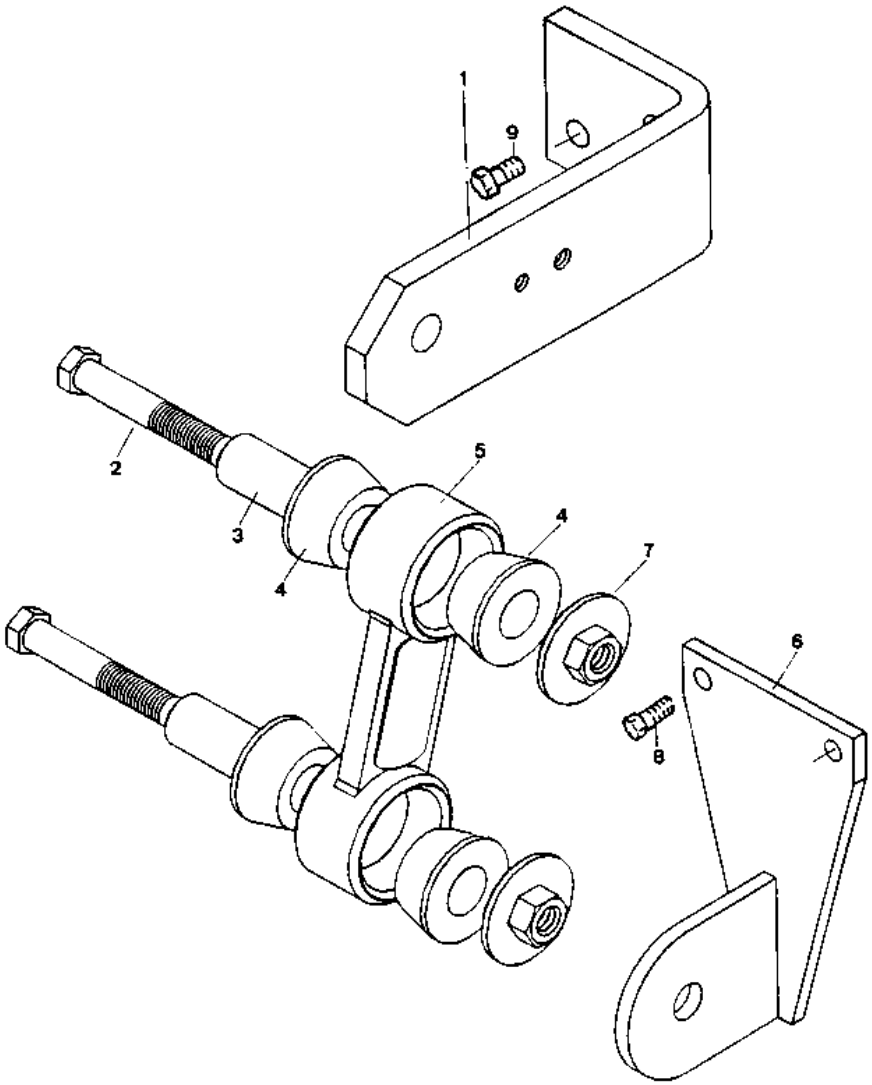

https://truckmanualshub.com/

Motor
Engine

Grupo Acelerador
Accelerator group

(Diter / Kubota)

Fig. Nº *Fig. Nº*	Referencia *Part Nº*	Cantidad *Quantity*
1	37.00123.04	1
1	09.00123.00	1
2	16.00151.03	1
3	15.00124.01	1
4	630.06015.86	3
5	701.06000.66	3
6	01.00308.00	2
7	402.04020.00	1
8	45.00139.00	1
9	401.02020.60	2
10	16.00146.00	1

Fig. Nº *Fig. Nº*	Referencia *Part Nº*	Cantidad *Quantity*
10	16.00147.00	1
11	01.00138.00	1
12	01.00133.00	1
13	701.06000.66	1
14	43.00727.00	1
14	01.00135.01	1
15	16.01470.00	(1)
16	105.06000.66	3
17	45.04113.10	1
18	105.08000.66	1
19	603.08015.86	1

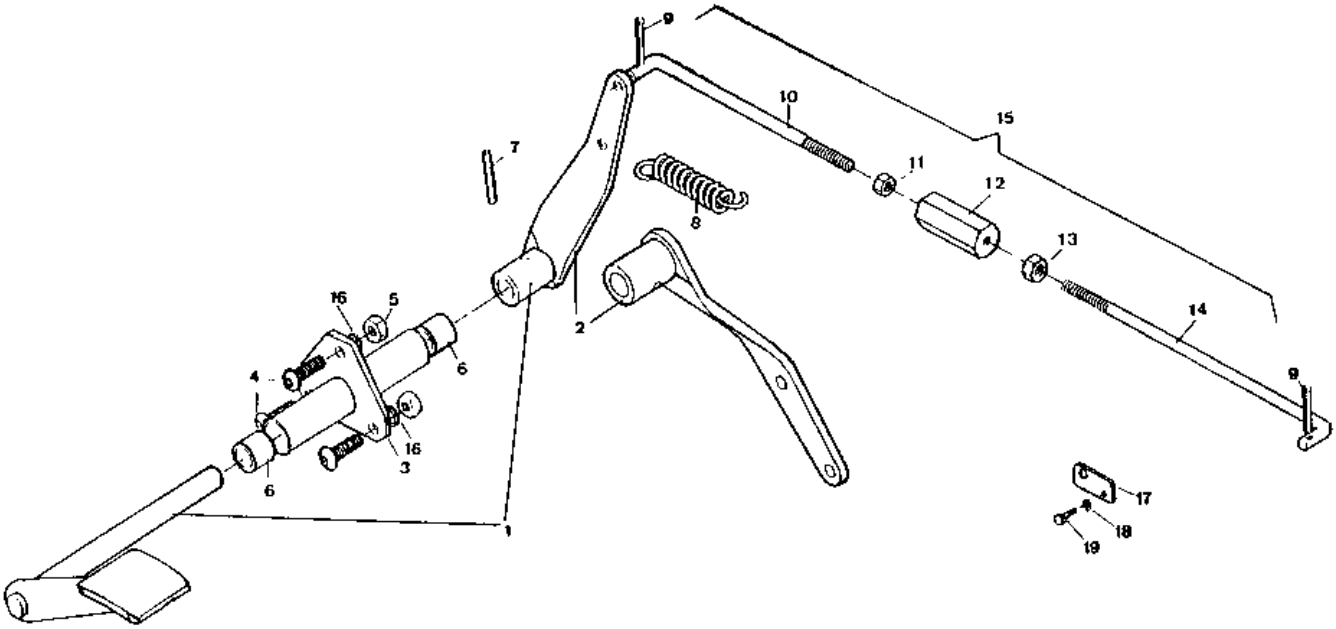

https://truckmanualshub.com/

Motor
Engine

Grupo Acelerador
Accelerator group

(Hatz)

Fig. Nº *Fig. Nº*	Referencia *Part Nº*	Cantidad *Quantity*
1	15.00124.02	1
2	37.01123.02	1
3	402.04020.00	1
4	630.06015.96	3
5	105.06000.86	3
6	701.06000.66	3
7	01.00308.00	2
8	16.01470.00	(1)
9	16.00146.00	1
10	01.00138.00	1

Fig. Nº *Fig. Nº*	Referencia *Part Nº*	Cantidad *Quantity*
11	01.00133.00	1
12	701.06000.66	1
13	43.00727.00	1
14	401.02020.60	2
15	40.00148.00	1
16	45.03150.00	1
17	54.59180.00	1
18	40.02148.00	1
19	01.00123.00	1

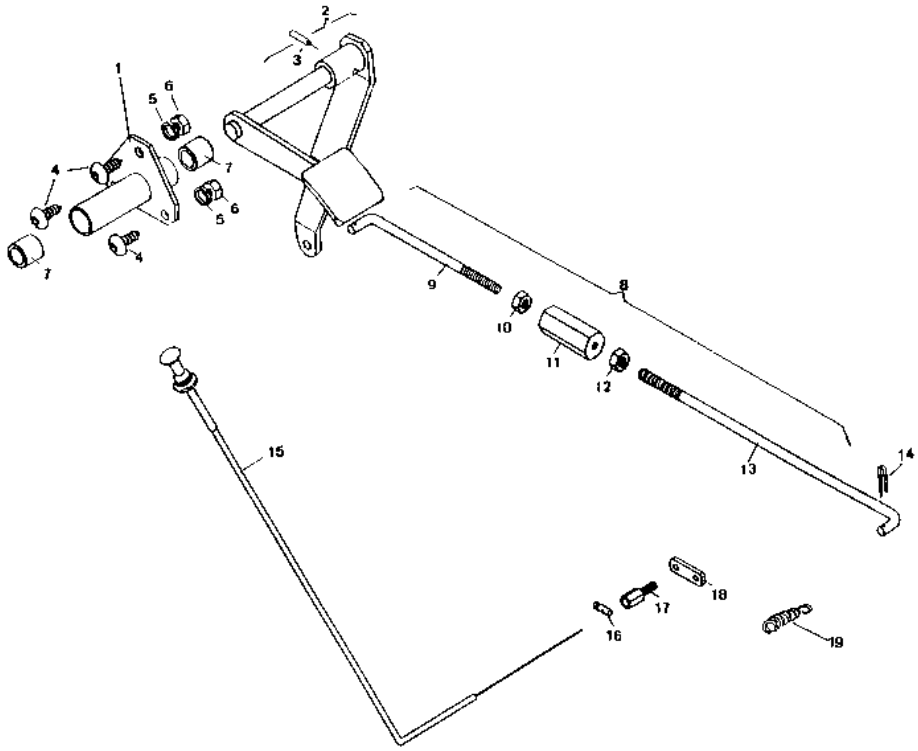

https://truckmanualshub.com/

Motor
Engine

Embrague
Clutch

(Diter)

Fig. Nº *Fig. Nº*	Referencia *Part Nº*	Cantidad *Quantity*
1	01.00213.01	1
2	309.17012.00	1
3	603.06015.86	9
4	15.02011.01	1
5	10.00201.00	1
6	402.06015.00	3

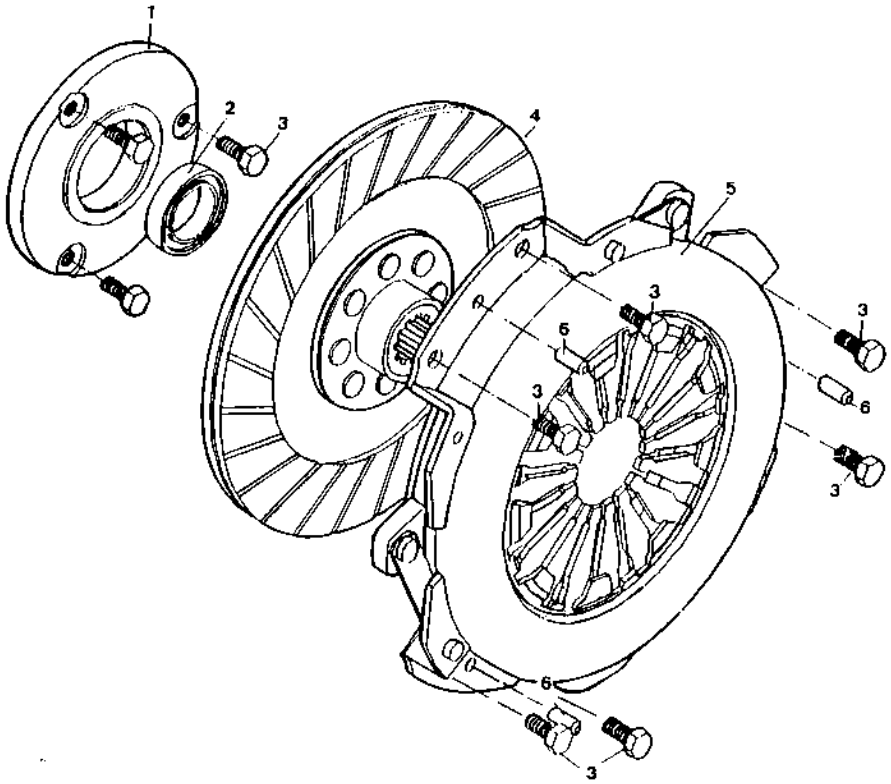

https://truckmanualshub.com/

Motor
Engine

Embrague
Clutch

(Kubota)

Fig. Nº *Fig. Nº*	Referencia *Part Nº*	Cantidad *Quantity*
1	40.10213.00	1
2	104.08000.66	6
3	621.51620.86	6
4	309.17012.00	1
5	15.02011.01	1
6	10.00201.00	1
7	105.06000.66	6
8	603.06015.86	6
9	402.06015.00	3

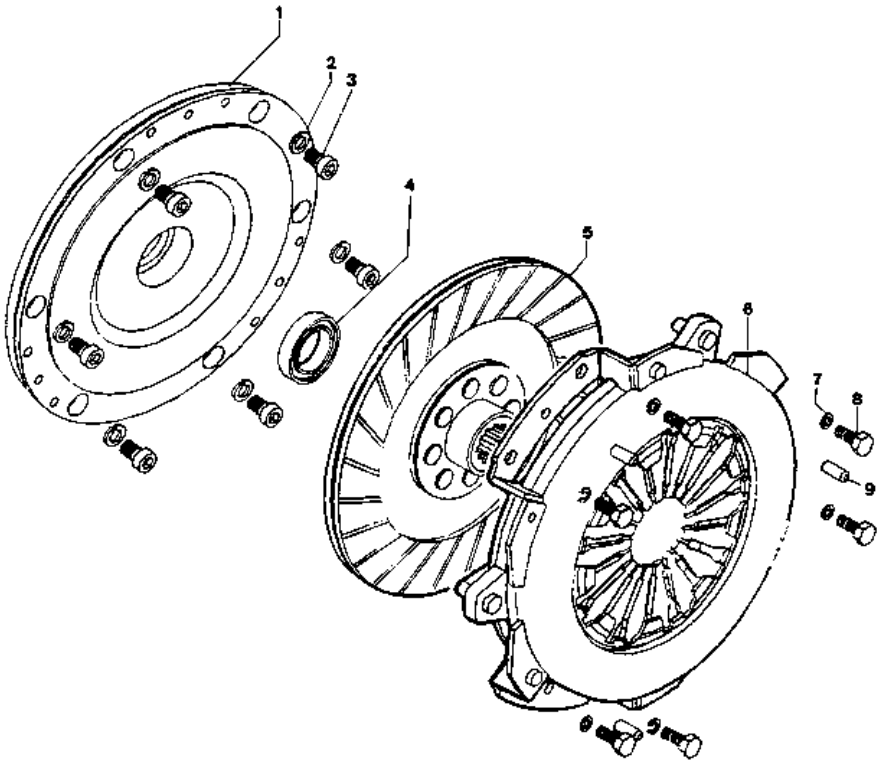

https://truckmanualshub.com/

Motor
Engine

Embrague
Clutch

(Hatz)

Fig. Nº *Fig. Nº*	Referencia *Part Nº*	Cantidad *Quantity*
1	40.10213.00	1
2	601.08020.96	6
3	115.08000.66	6
4	309.17012.00	1
5	15.02011.01	1
6	10.00201.00	(1)
7	105.06000.66	6
8	603.06015.86	6
9	402.06015.00	3

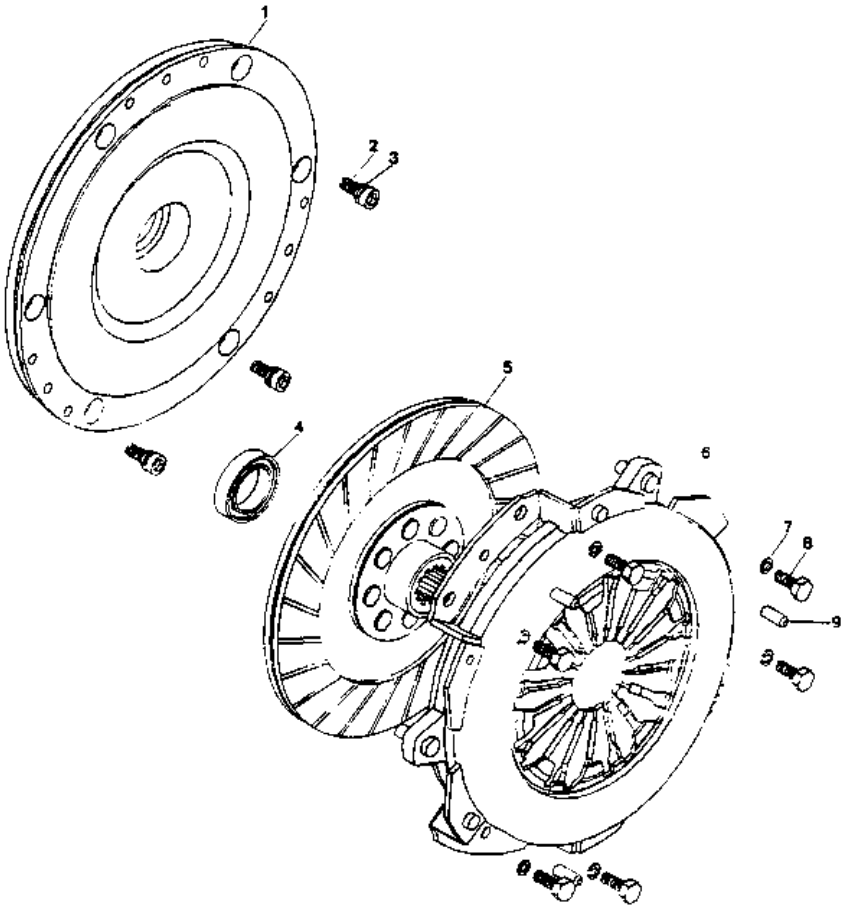

https://truckmanualshub.com/

Motor
Engine

Filtro aire
Air filter

(Diter / Kubota)

Fig. Nº *Fig. Nº*	Referencia *Part Nº*	Cantidad *Quantity*
1	01.01590.00	1
2	912.40060.66	1
3	09.01200.00	1
4	09.01201.00	1
5	630.08020.96	2
6	105.08000.66	2
7	701.08000.66	2

Fig. Nº *Fig. Nº*	Referencia *Part Nº*	Cantidad *Quantity*
8	09.01204.00	1
9	912.32050.66	1
10	09.00230.00	1
11	43.50119.00	1
12	709.10000.66	1
13	16.01354.00	1
14	43.11192.00	1

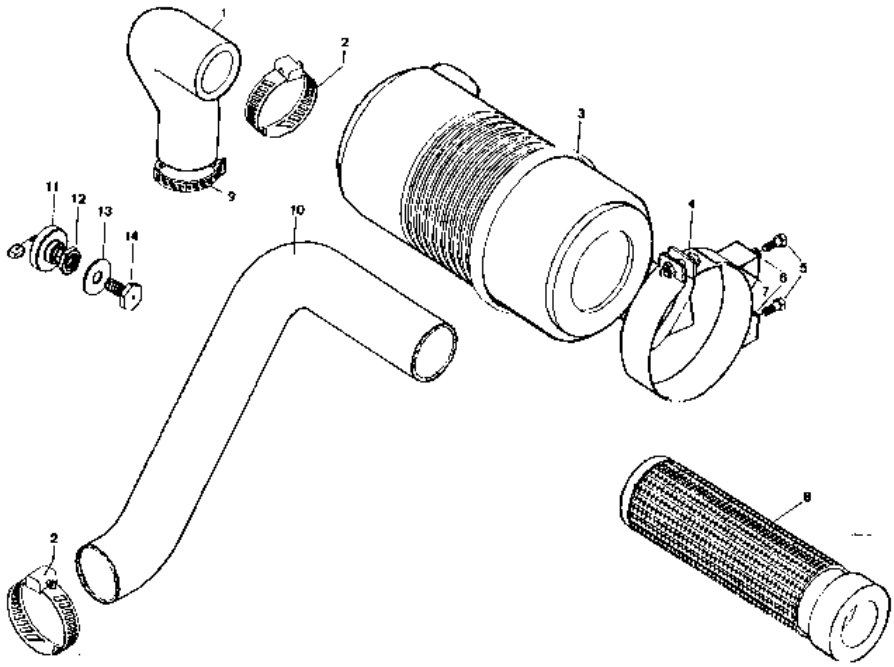

https://truckmanualshub.com/

Motor
Engine

Manivela arranque
Starting handle

(Diter / Hatz)

Fig. Nº *Fig. Nº*	Referencia *Part Nº*	Cantidad *Quantity*
1	02.00159.00	1
2	201.32004.50	1
3	603.08015.86	2
4	01.00156.00	1
5	402.07030.00	1
6	402.07045.00	1
7	603.06015.86	4
8	01.00109.00	6
9	01.00115.01	1
10	10.01019.06	1
10	10.01019.02	1
11	402.05030.00	1

Fig. Nº *Fig. Nº*	Referencia *Part Nº*	Cantidad *Quantity*
12	403.10030.00	1
13	101.22000.66	1
14	01.00113.00	1
15	10.00157.00	1
16	105.06000.66	4
17	10.00131.00	1
18	09.01025.00	(1)
18	08.01025.00	(1)
18	40.10179.01	(1)
18	40.10179.00	(1)
19	105.08000.66	2
20	40.10178.01	1

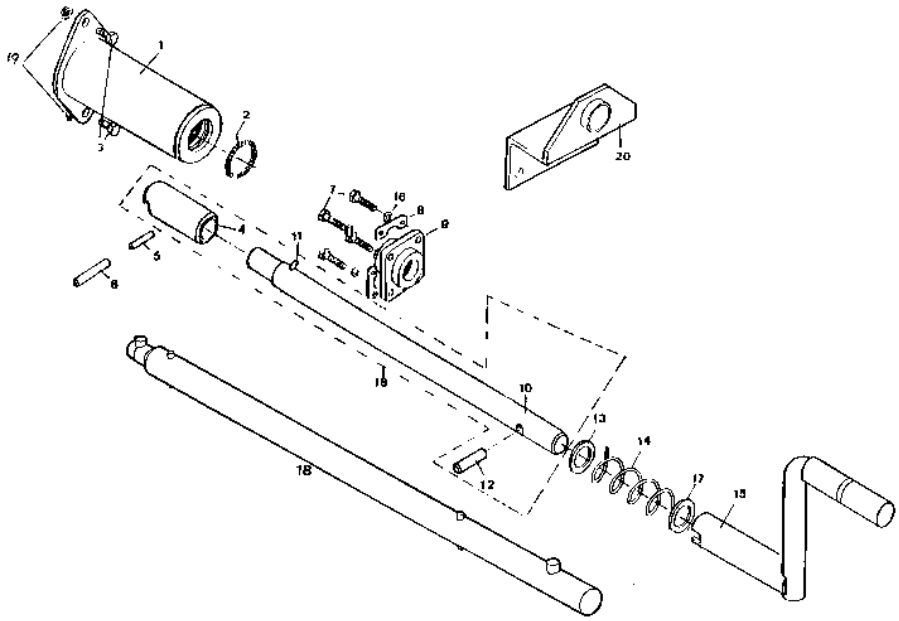

https://truckmanualshub.com/

Motor
Engine

Depósito combustible
Hydraulic oil tank

Fig. Nº *Fig. Nº*	Referencia *Part Nº*	Cantidad *Quantity*
1	02.09250.00	(1)
2	15.01524.00	1
3	912.08000.66	1
4	02.00925.01	1
5	54.14400.00	1
6	80.06041.00	2
7	107.08000.10	4
8	630.08020.96	4
9	107.14000.10	1
10	52.00110.02	1
11	43.00750.07	1
12	82.00310.02	1
13	80.06062.01	1
14	105.08000.66	3

Fig. Nº *Fig. Nº*	Referencia *Part Nº*	Cantidad *Quantity*
15	101.08000.66	1
16	912.08016.66	2
17	43.14105.40	1
18	52.00110.00	2
19	107.14000.10	2
20	45.04106.00	2
21	604.08035.86	2
22	80.01009.00	4
23	09.60620.00	(1)
24	09.60621.00	2
25	43.14105.11	1
26	43.14105.18	1
26	43.14105.14	1
27	43.14105.03	1

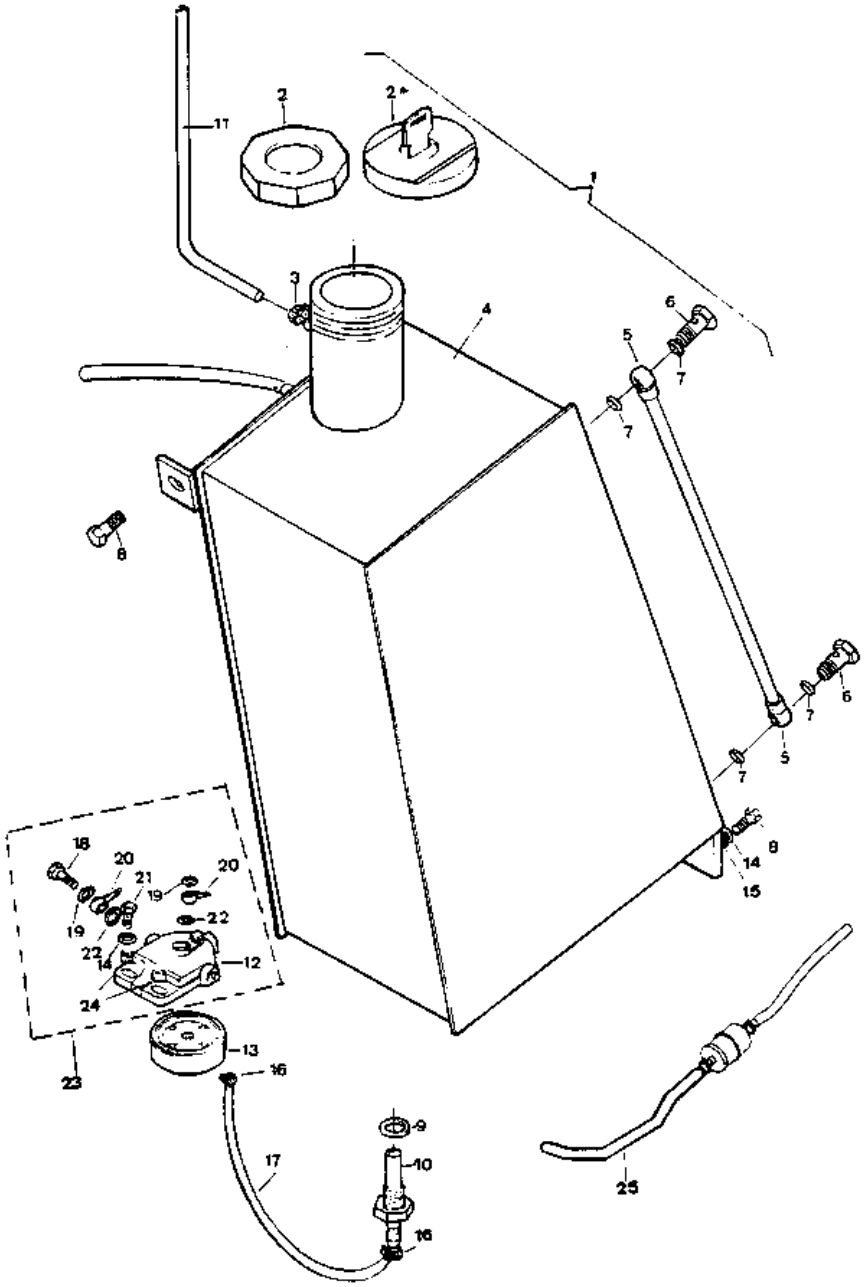

https://truckmanualshub.com/

Motor
Engine

Tapón
Plug

Fig. Nº *Fig. Nº*	Referencia *Part Nº*	Cantidad *Quantity*
1	15.01524.00	1
2	02.11101.00	1
3	630.08025.96	1
4	02.11010.00	1
5	711.08000.66	1
6	502.05000.66	2
7	01.01925.00	1

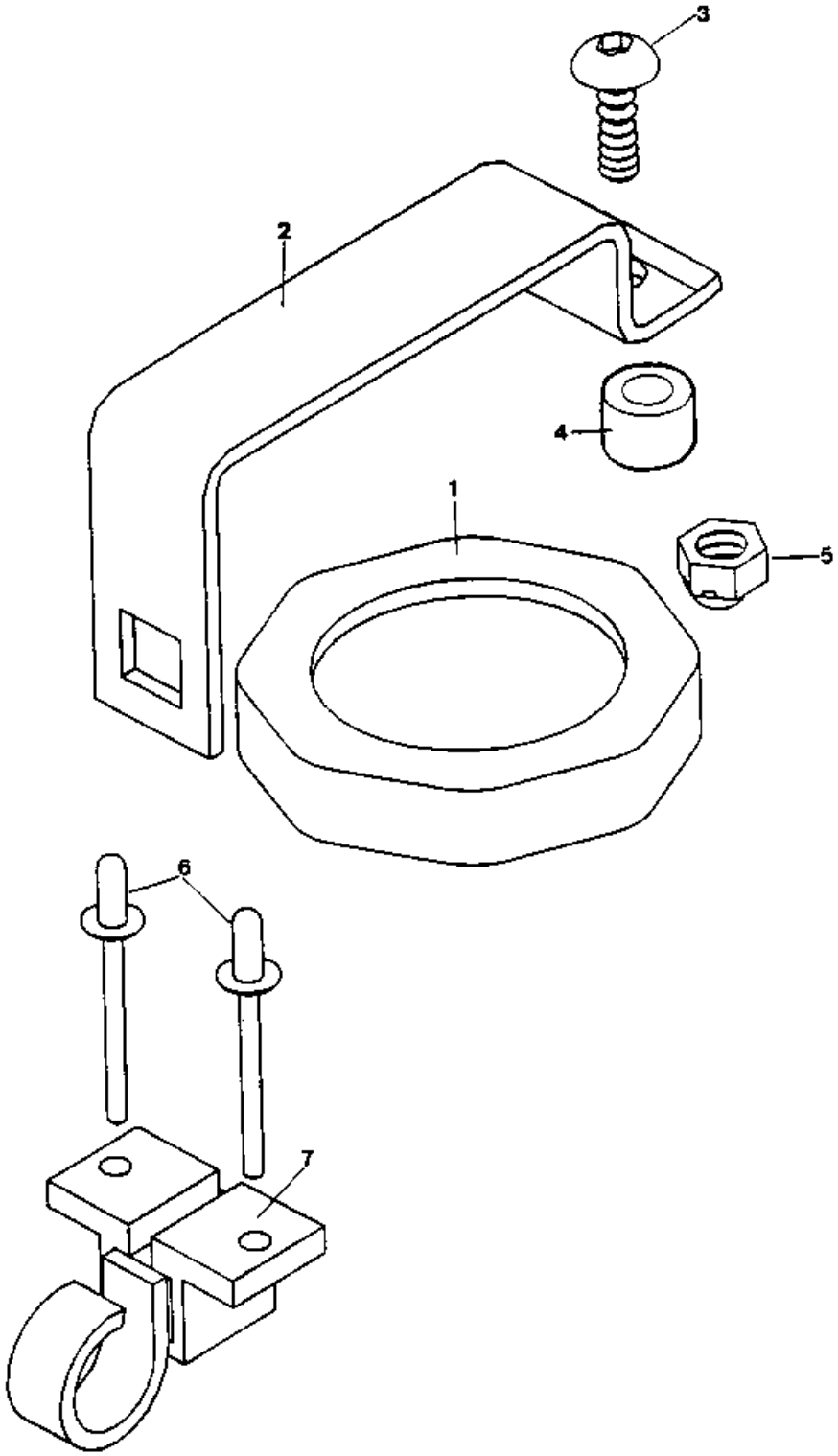

https://truckmanualshub.com/

Transmisión
Transmission

Campana embrague
Clutch sump

Fig. Nº *Fig. Nº*	Referencia *Part Nº*	Cantidad *Quantity*
1	01.00210.03	1
1	45.04211.01	1
2	01.00910.00	2
3	101.14000.66	4
3.1	15.00109.00	4
4	603.14040.86	2
5	01.00227.02	2
6	604.14075.86	2
7	105.14000.66	2
8	37.00374.00	2
9	15.00113.00	4
10	01.00107.00	2
10.1	15.00107.01	2
11	15.00114.00	2
12	01.00220.01	1
13	01.00225.00	1
13	01.00225.10	1
14	603.06015.86	3
15	105.06000.66	3

Fig. Nº *Fig. Nº*	Referencia *Part Nº*	Cantidad *Quantity*
16	45.04204.01	(1)
17	01.00235.00	1
18	105.08000.66	3
19	603.08025.86	3
20	401.04030.60	1
21	901.08000.33	1
22*	10.00020.01	(1)
23	402.06030.00	2
24	402.35030.00	2
25*	01.00222.02	1
26*	10.02110.01	1
27	01.00223.02	1
28	604.10030.86	6
28	627.38030.86	8
29	105.10000.66	14
30	01.00371.01	2
31	40.10180.00	1
32	45.04113.10	1

* Para repuestos se sirve en conjunto

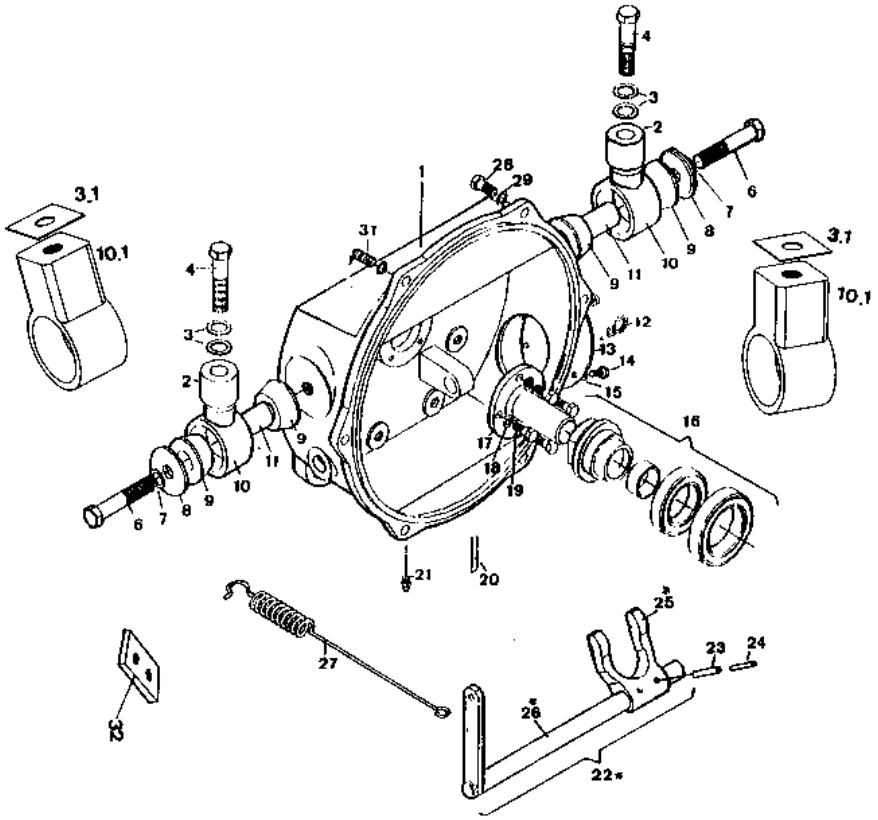

https://truckmanualshub.com/

Transmisión
Transmission

Palancas mandos cambio
Shift gear lever

Fig. Nº *Fig. Nº*	Referencia *Part Nº*	Cantidad *Quantity*
1	01.00325.02	1
2	02.40323.01	1
3	02.41323.00	1
4	01.00309.00	2
5	01.00308.00	2
6	01.00325.03	1
7	01.00324.06	1
8	711.08000.66	3
9	08.30321.00	1
10	00.02803.00	1
11	107.14000.10	1
12	00.00326.00	2

Fig. Nº *Fig. Nº*	Referencia *Part Nº*	Cantidad *Quantity*
13	603.08025.86	4
14	105.08000.66	4
15	40.30310.00	1
15	40.30310.01	1
16	105.09000.66	1
17	701.09000.66	1
18	01.00312.01	1
19	01.00326.00	2
20	905.45000.00	2
21	46.00322.01	1
22	40.00005.00	(1)
22	40.00005.10	(1)

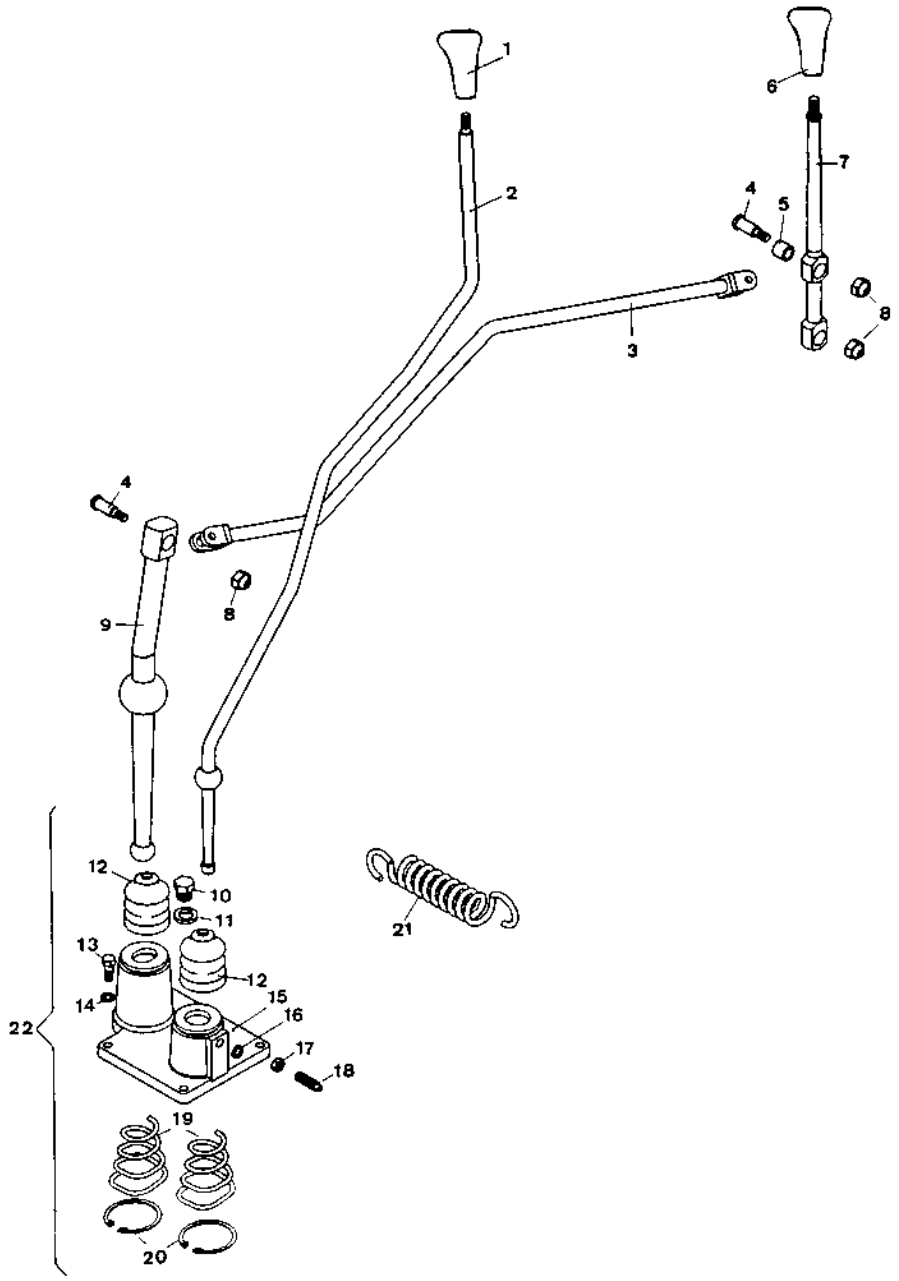

https://truckmanualshub.com/

Transmisión
Transmission

Caja de cambios
Gear box

(exterior)
(external)

Fig. Nº *Fig. Nº*	Referencia *Part Nº*	Cantidad *Quantity*
1	603.08025.86	4
2	105.08000.66	4
3	01.03841.00	1
4		1
5	01.00383.01	4
6	01.00345.00	8
7	105.11000.66	8
8	00.00130.00	8
9	01.00383.00	4
10		1
11	01.00378.01	1
12	618.08020.86	4
13	10.00921.00	2
13	80.01035.01	2
14	107.14000.10	2
15	01.00351.04	1
15	01.00351.06	1

Fig. Nº *Fig. Nº*	Referencia *Part Nº*	Cantidad *Quantity*
16		1
17	01.00350.01	1
18	105.10000.66	8
19	701.10000.66	8
20		1
21	01.00364.01	1
22	624.06015.66	6
23	01.00349.00	2
24	01.00327.00	2
25	01.00371.01	8
26	01.00365.00	2
27	08.00007.00	(1)
27	37.00007.00	(1)
27	37.00007.00	(1)
28	01.00335.00	1
29	09.99007.00	(1)

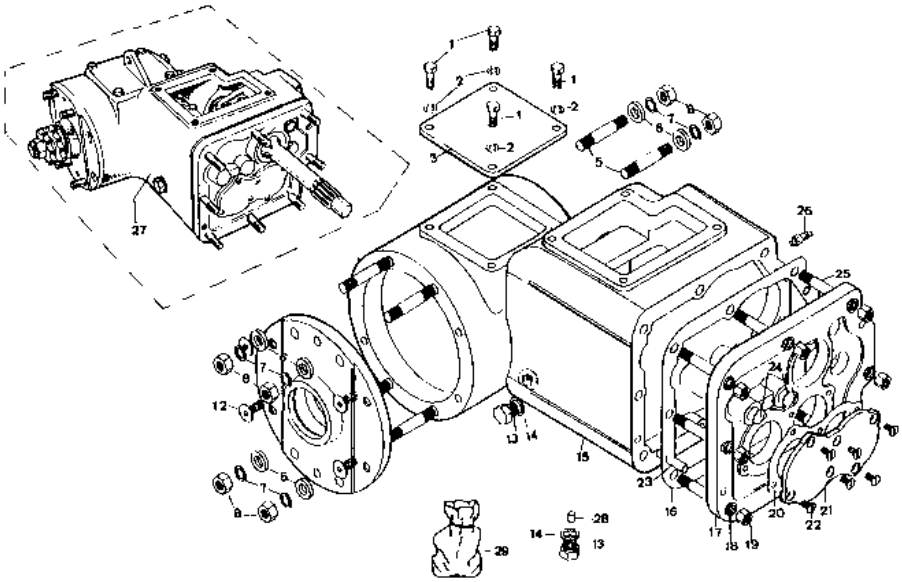

https://truckmanualshub.com/

Transmisión
Transmission

Diferencial
Differential

Fig. Nº *Fig. Nº*	Referencia *Part Nº*	Cantidad *Quantity*	Fig. Nº *Fig. Nº*	Referencia *Part Nº*	Cantidad *Quantity*
1	01.00301.02	(1)	10	301.25015.00	2
1	01.30000.00	(1)	11	905.52000.00	2
2	01.00387.00	4	12	202.34075.50	2
3	01.00388.00	1	13	02.00385.02	2
4	00.00382.02	2	14	904.25000.00	2
5	01.03010.02	(1)	15	202.25000.50	1
6	01.00302.02	(1)	16	01.00389.00	4
7	01.30000.00	(1)	17	01.00380.00	8
8	01.03902.00	var.	18	01.01302.00	8
8	01.03903.00	var.	19	09.99007.00	(1)
9	301.40018.00	2	20	01.03000.00	(1)

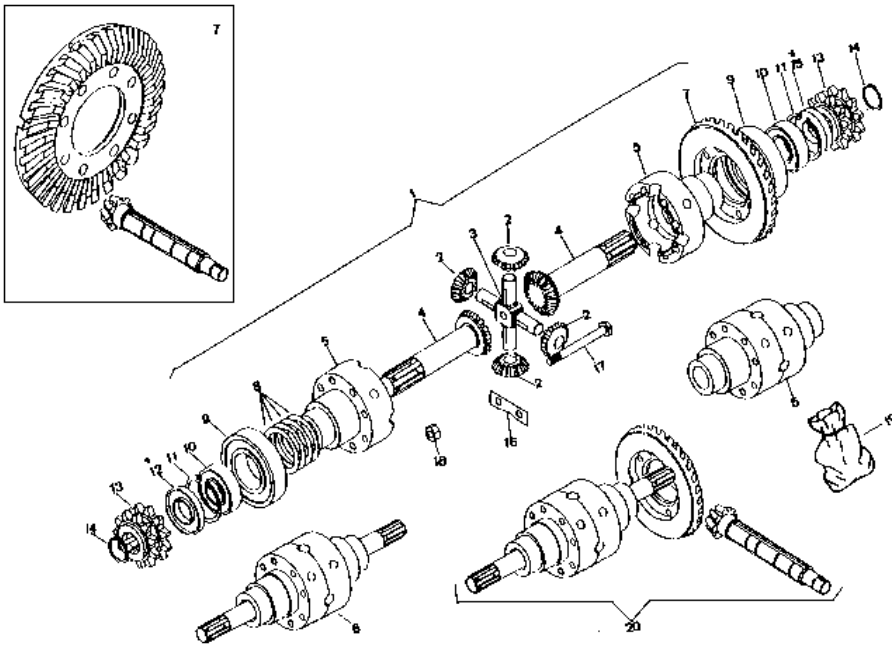

https://truckmanualshub.com/

Transmisión
Transmission

Caja de cambios
Gearbox

(interior)
(internal)

Fig. Nº *Fig. Nº*	Referencia *Part Nº*	Cantidad *Quantity*
1	01.30000.00	(1)
2	320.30016.00	1
3	914.62000.00	1
3	905.62000.00	1
4	904.30000.00	2
5	01.00356.00	1
6	01.00357.00	1
7	01.00386.00	1
8	01.03912.00	var.
9	304.20222.00	1
9	328.20015.00	1
10	01.00394.01	1
10	01.00394.02	1
11	01.00393.00	1
11	01.00393.01	1
12	02.00013.01	1
13	904.20000.00	3
14	328.20015.00	2
15	905.52000.00	3
16	01.00319.00	2
17	01.00316.00	1

Fig. Nº *Fig. Nº*	Referencia *Part Nº*	Cantidad *Quantity*
18	01.00314.00	2
19		1
20	01.00355.00	1
21	910.35348.00	20
22	01.00369.00	2
23	01.00362.00	1
24		1
25	301.20015.00	1
26		2
27	02.00358.00	1
28	301.30016.00	1
29	01.00313.00	1
30	01.00353.01	1
31	01.00317.00	1
32	00.03128.00	2
32*	15.00315.00	1
33	908.08000.00	3
34		1
35	01.00315.00	1
36	01.00320.00	1
37	09.99007.00	(1)

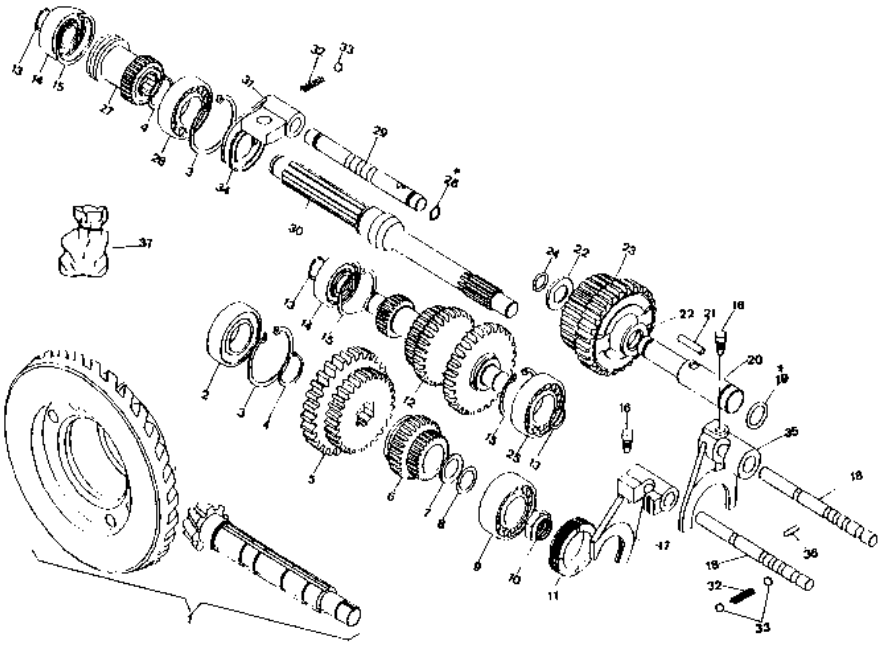

https://truckmanualshub.com/

Transmisión
Transmission

Puente delantero
Front axle

Fig. Nº *Fig. Nº*	Referencia *Part Nº*	Cantidad *Quantity*
1	02.00400.01	(2)
2	01.00432.00	2
3	09.00426.00	1
3	08.00426.00	1
4	01.01319.00	2
5	101.30000.66	2
6	202.45007.50	2
7	43.08034.00	12
8	105.08000.66	12
9	701.08000.66	12
10	401.25030.60	2
11	01.01312.00	2
12	00.00431.00	2
13	901.08000.33	2
14	603.06015.86	4
15	101.14000.66	4
16	701.08000.66	6
17	105.08000.66	6
18	101.08000.66	6
19	00.01307.02	6
20	00.00420.00	6
21	00.00421.00	2
22	00.00430.00	2
23	00.00427.00	2
24	00.00412.00	16
25	105.09000.66	16
26	01.01303.00	16
27	603.10080.86	1

Fig. Nº *Fig. Nº*	Referencia *Part Nº*	Cantidad *Quantity*
28	00.00422.00	1
29	01.00425.00	1
30	02.00411.00	1
31	905.80000.00	2
32	306.40018.00	4
33	02.00415.00	2
34	301.45019.00	2
35	00.00402.01	2
36	02.00519.01	2
37	02.00414.00	2
37	02.00414.99	2
38	02.00417.00	2
39	02.00419.00	2
40	02.00518.00	2
40	02.00518.04	2
41	00.00587.00	10
42	00.00588.00	10
43	401.04050.60	2
44*	01.01305.00	8
45*	00.00184.00	4
46*	01.00182.00	2
47*	02.00183.00	2
48	105.06000.66	4
49	603.09030.86	2
50	03.00425.00	2
51	03.00426.00	2
52	603.09030.86	4

* Solamente en DF-DG

https://truckmanualshub.com/

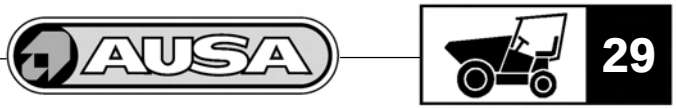

Transmisión
Transmission

Puente delantero
Front axle

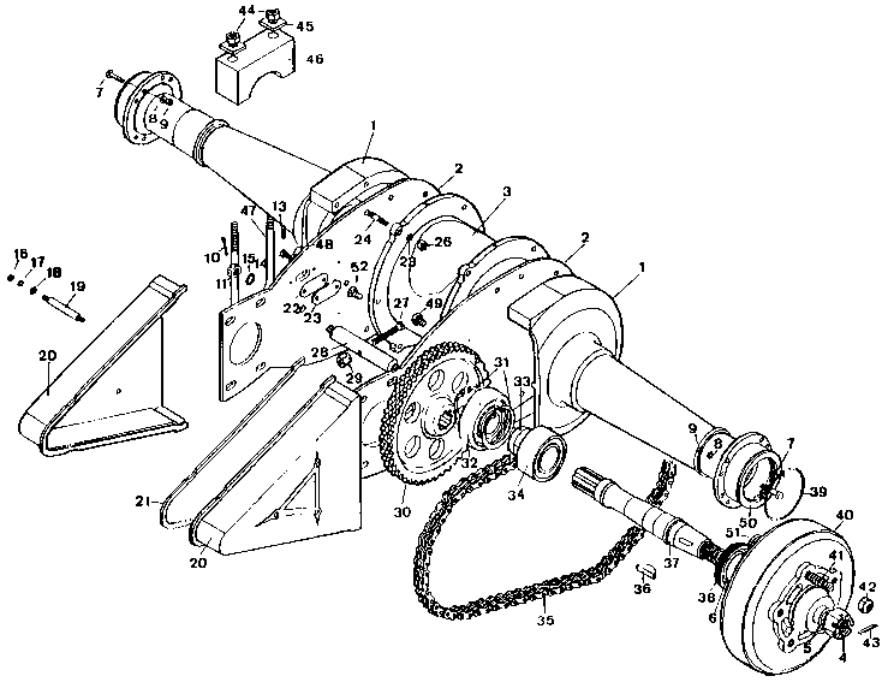

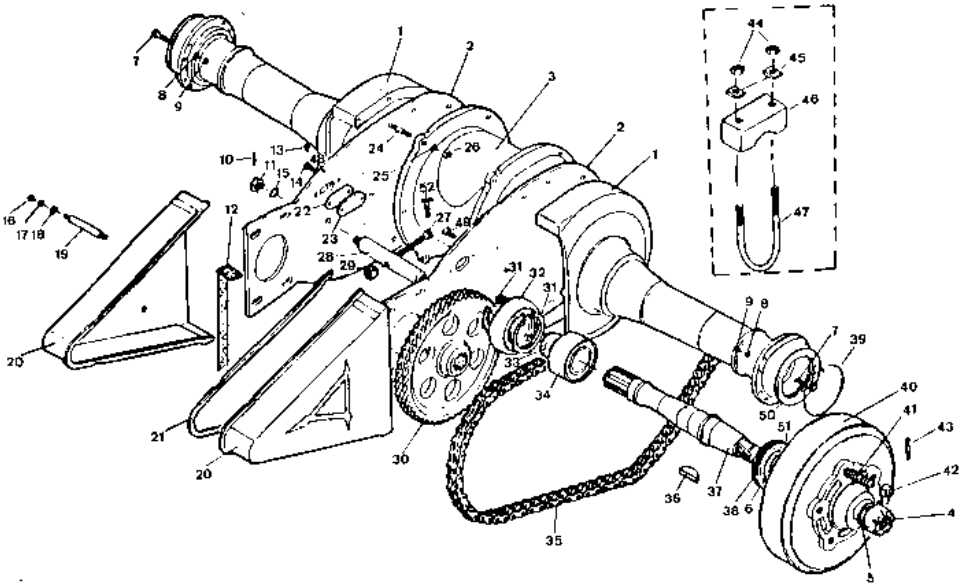

https://truckmanualshub.com/

Transmisión
Transmission

Puente directriz DG / DA
Directrix axle

Fig. Nº *Fig. Nº*	Referencia *Part Nº*	Cantidad *Quantity*
1	01.00500.05	(1)
2	02.00600.04	(1)
2	02.00626.02	(1)
3	01.00625.00	2
4	01.00629.00	1
5	01.00628.00	3
6	901.08000.33	1
7	01.00623.00	2
8	01.00634.00	4
9	01.00633.00	2
10	710.14000.66	2
11	401.25030.60	6
12	01.01314.00	2
13	01.00632.00	2
14	01.00640.02	1
15	01.00639.02	1
16	202.30008.50	2
17	01.00553.01	2
18	307.25016.00	2
19	01.00552.02	2
20	307.20015.00	2
21	01.00561.00	2
22	01.00550.08	2
23	01.00557.08	6

Fig. Nº *Fig. Nº*	Referencia *Part Nº*	Cantidad *Quantity*
23	01.00557.00	6
24	101.16000.66	2
25	00.05806.00	2
26	01.01314.00	2
27	09.00617.00	1
28	01.00617.00	1
29	01.00618.00	4
30	01.00638.00	2
31	01.00630.00	2
32	01.06300.00	4
33	101.10000.66	4
34	01.00619.00	4
35	01.00631.00	2
36	01.00549.08	6
36	01.00549.00	6
37	01.00627.02	1
38	718.18000.66	1
39	105.10000.66	1
40	603.10020.86	1
41	01.01307.00	2
42	01.00037.01	(2)
43	902.08000.33	1
44	711.10000.66	4

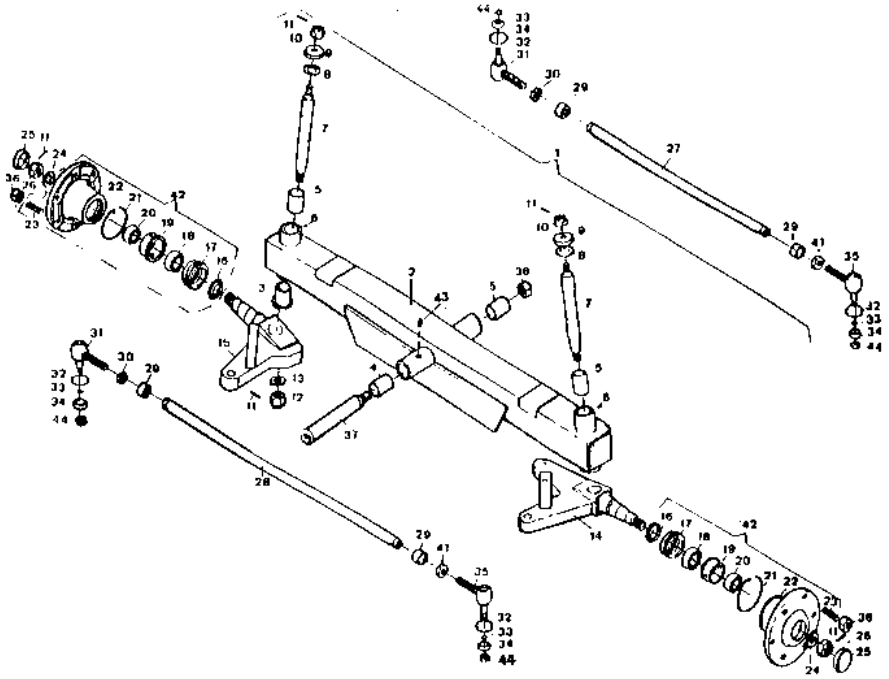

https://truckmanualshub.com/

Transmisión
Transmission

Puente directriz “Plus”
Directrix axle

Fig. Nº *Fig. Nº*	Referencia *Part Nº*	Cantidad *Quantity*
1	01.00500.04	(1)
2	02.00600.04	(1)
2	02.00626.04	(1)
3	01.00625.00	2
4	01.00629.00	1
5	01.00628.00	3
6	901.08000.33	4
7	01.00623.00	2
8	01.00634.00	4
9	01.00633.00	2
10	710.14000.66	2
11	401.25030.60	6
12	01.01314.00	4
13	01.00632.00	2
14	01.00639.03	(1)
15	01.00639.02	(1)
16	202.30008.50	2

Fig. Nº *Fig. Nº*	Referencia *Part Nº*	Cantidad *Quantity*
17	01.00553.01	2
18	307.25016.00	2
19	01.00552.02	2
20	307.20015.00	2
21	01.00561.00	2
22	01.00550.08	2
23	01.00557.08	6
23	01.00557.00	6
24	101.16000.66	2
25	00.05806.00	2
26	01.00549.08	6
26	01.00549.00	6
27	01.00627.02	1
28	718.18000.66	1
29	902.08000.33	1
30	01.00037.01	(2)

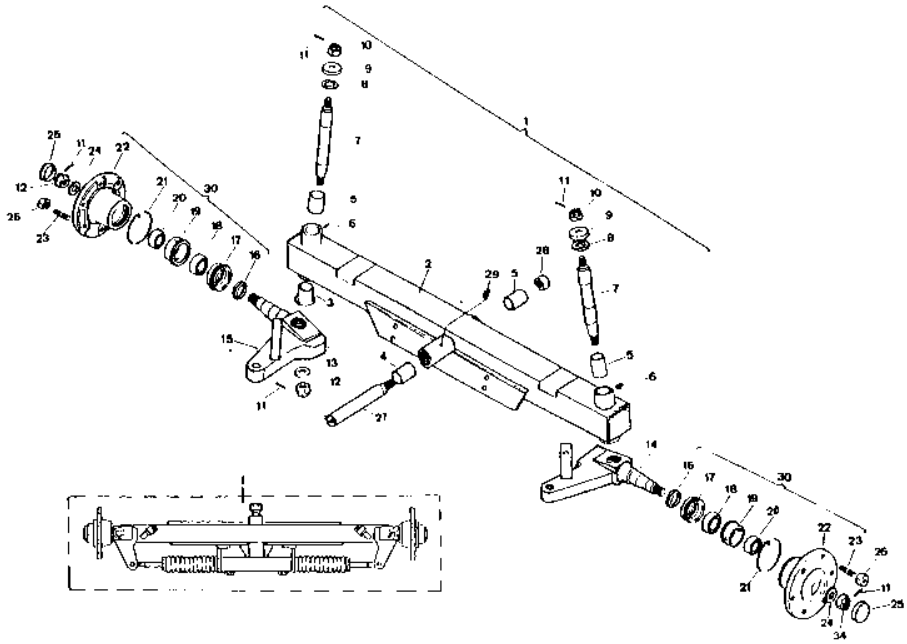

https://truckmanualshub.com/

Transmisión
Transmission

Cilindro dirección “Plus”
Steering cylinder

Fig. Nº *Fig. Nº*	Referencia *Part Nº*	Cantidad *Quantity*
1	01.00617.11	(1)
2	10.09100.00	2
3	01.61720.00	2
4	912.32050.00	2
5	45.01492.00	2
6	01.00617.10	(1)
7	01.06175.00	1
8	01.06176.00	1
9	01.06172.00	2

Fig. Nº *Fig. Nº*	Referencia *Part Nº*	Cantidad *Quantity*
10	01.06171.00	1
11	01.00617.10	1
12*	207.04032.50	2
13*	201.03335.50	2
14*	229.02228.50	2
15*	228.02230.50	2
16	603.08030.86	2
17*	11.99130.01	(1)

* Se sirven en conjunto

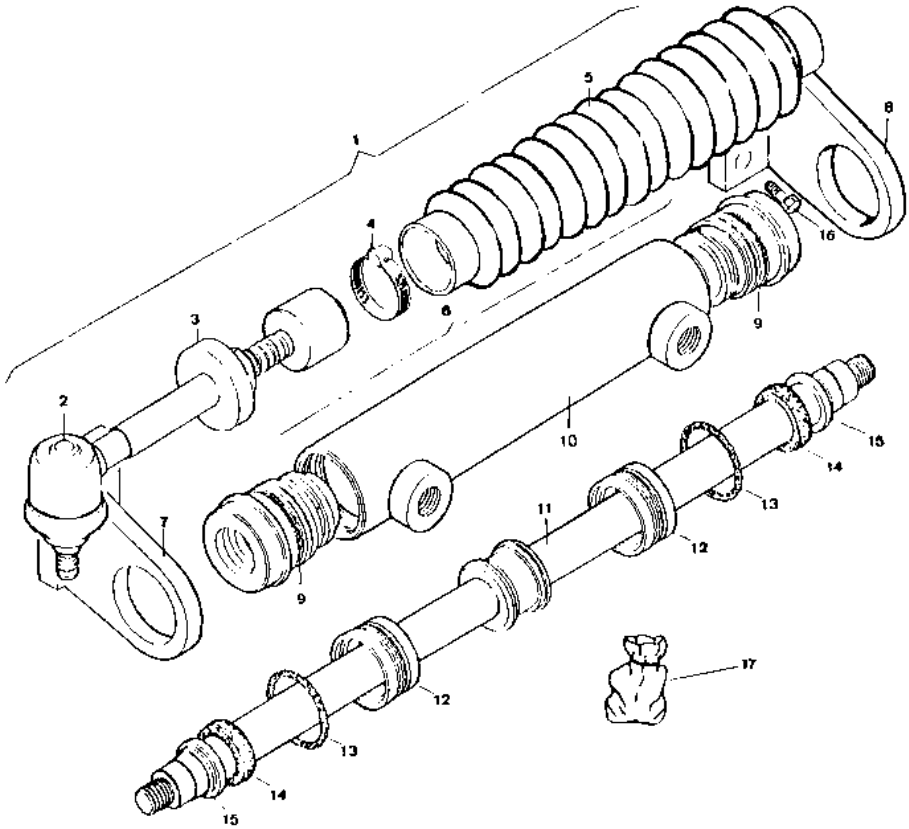

https://truckmanualshub.com/

Chasis
Chassis

Bastidor DF
Chassis

Fig. Nº *Fig. Nº*	Referencia *Part Nº*	Cantidad *Quantity*
1	09.00705.62	1
2	08.00527.00	4
3	901.08000.33	2

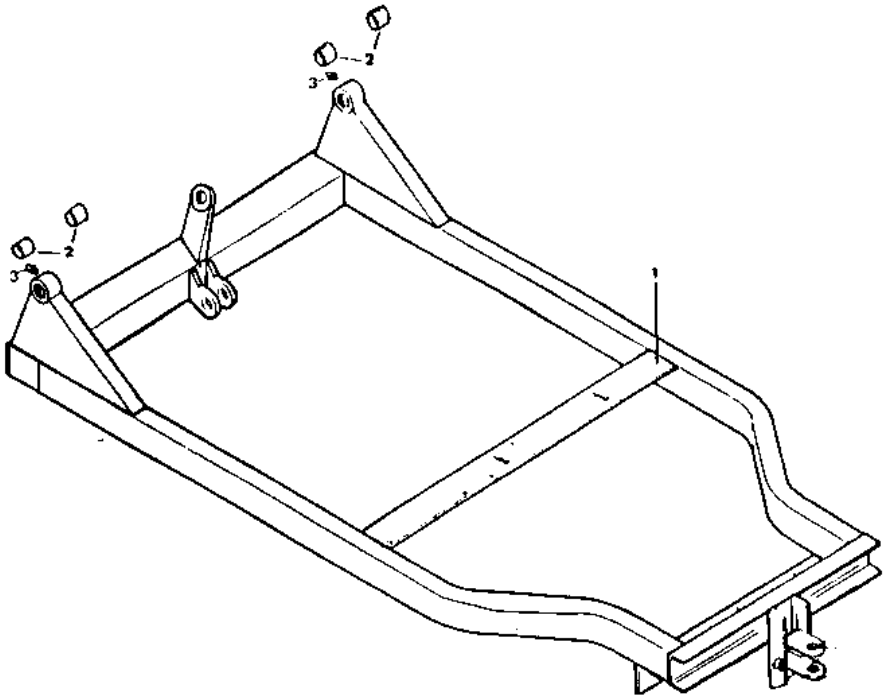

https://truckmanualshub.com/

Chasis
Chassis

Bastidor DA
Chassis

Fig. Nº *Fig. Nº*	Referencia *Part Nº*	Cantidad *Quantity*
1	14.00705.53	1
2	604.16080.86	4
3	401.04045.60	2
4	01.01318.00	2
5	105.24000.66	2
6	603.10030.86	4
7	14.01053.00	1
8	14.01050.00	1
9	105.10000.66	4
10	701.10000.66	4
11	904.35000.00	2
12	14.00749.00	2
13	105.16000.66	4
14	14.00182.01	(2)

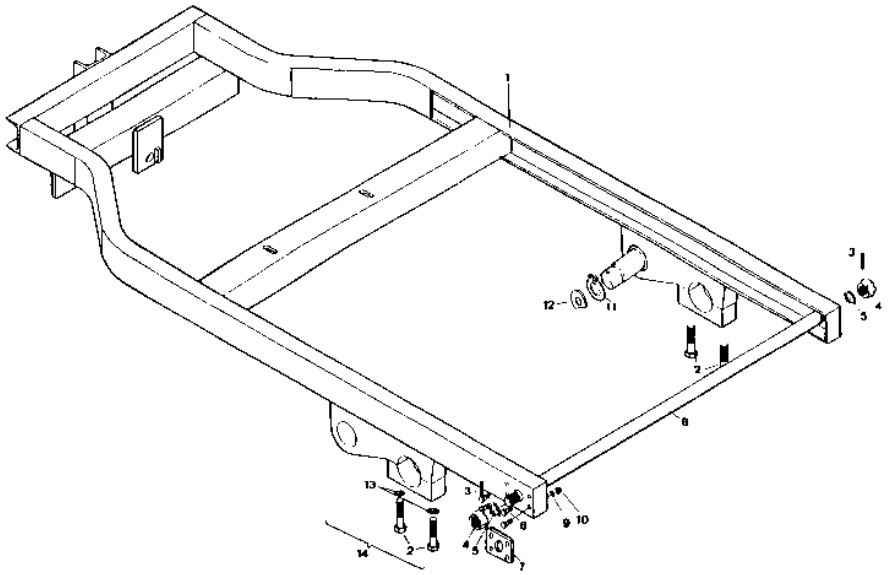

https://truckmanualshub.com/

Dirección
Steering

Dirección mecánica
Mechanic steering

Fig. Nº *Fig. Nº*	Referencia *Part Nº*	Cantidad *Quantity*
1	09.00600.02	(1)
2	01.00613.03	1
3	612.08010.80	2
4	01.00635.01	1
5	10.00629.00	2
6	203.30008.50	1
7	603.08030.86	1
8	105.08000.66	5
9	01.00610.01	1
10	101.08000.66	4
11	01.00612.05	1
12	924.28000.00	1
13	01.00635.10	1
14	603.08025.86	4
15	01.00611.02	1
16	901.08000.33	3
17	01.00637.00	2
18	01.00615.00	1
19	01.01315.00	1
20	401.03040.60	1
21	00.02509.00	1
22	01.00614.03	1
23	105.16000.66	1
24	709.16000.66	1
25	00.00626.04	1
26	09.01016.00	1
27	15.10011.00	1
28	603.14030.86	2
29	105.14000.66	2

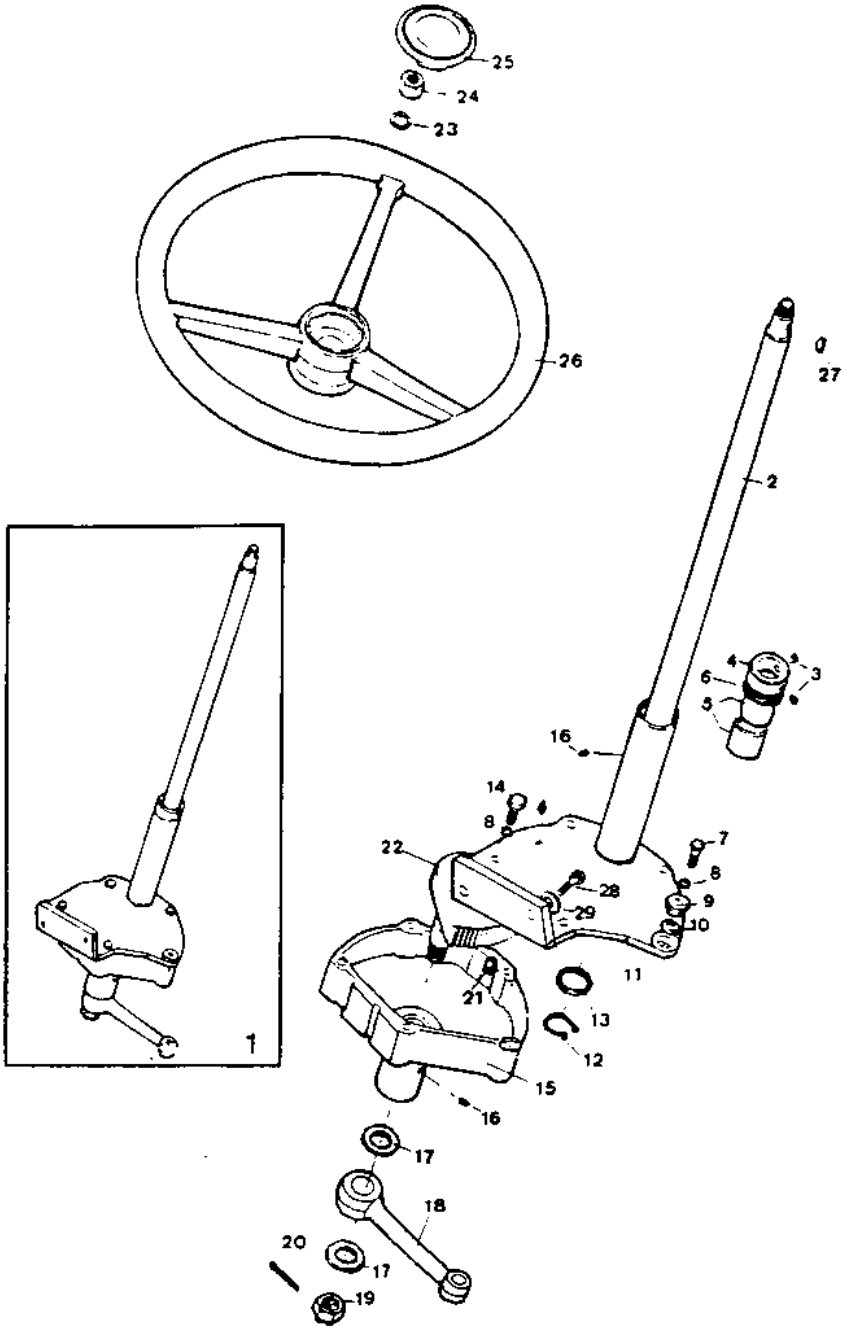

https://truckmanualshub.com/

Dirección
Steering

Dirección hidráulica “Plus”
Hydraulic steering

Fig. Nº *Fig. Nº*	Referencia *Part Nº*	Cantidad *Quantity*
1 *	09.00608.01	(1)
2	09.10680.00	1
3 *	09.06130.00	1
3 **	37.01002.00	1
3 **	45.01003.00	1
3	37.06130.00	(1)

Fig. Nº *Fig. Nº*	Referencia *Part Nº*	Cantidad *Quantity*
4	630.10030.96	4
5	105.10000.66	4
6	105.16000.66	1
7	00.00626.03	1
8	15.01016.01	1

* 150 DF-DA
** 150 DG

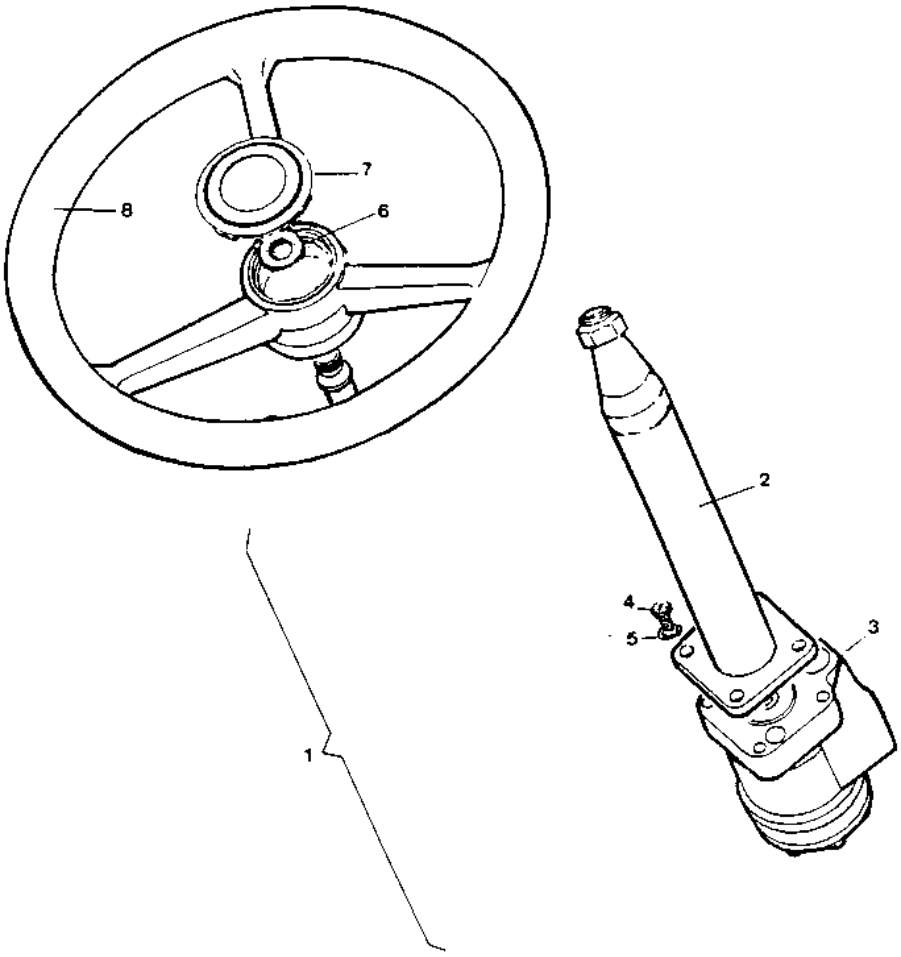

https://truckmanualshub.com/

Dirección
Steering

Soportes dirección
Steering bracket

Fig. Nº *Fig. Nº*	Referencia *Part Nº*	Cantidad *Quantity*
1	08.00701.04	1
2	02.00758.00	1
3	630.08020.96	4
4	01.01031.01	1
5	01.01030.00	1
6	02.00780.10	2
7	60.01924.01	1
7	60.01925.01	1
8	02.00780.02	1
9	01.00735.00	2
10	02.00926.01	1
11	630.08020.96	4
12	701.08000.66	4
13	603.08020.86	5
14	105.08000.66	5

Fig. Nº *Fig. Nº*	Referencia *Part Nº*	Cantidad *Quantity*
15	101.08000.66	5
16	09.00750.00	1
17	105.06000.66	1
18	701.06000.66	1
19	02.00780.09	1
20	02.32013.00	1
21	02.32033.00	1
21A	02.32022.00	
Resorte en 150 DG		
22	603.08015.86	1
23	101.08000.66	1
24	701.08000.66	1
25	08.01233.00	1
26	08.01234.00	1

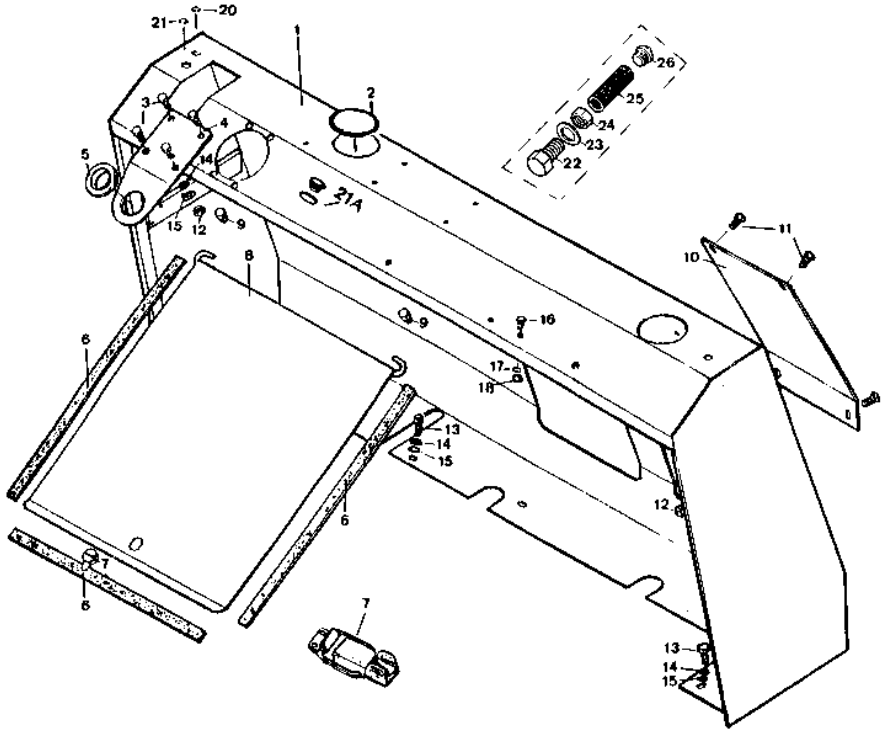

https://truckmanualshub.com/

Freno
Brake

Freno
Brake

Fig. Nº *Fig. Nº*	Referencia *Part Nº*	Cantidad *Quantity*
1	01.00002.01	(2)
2	601.08022.86	8
3	105.08000.66	8
4	708.08000.66	8
5	00.00517.00	2
6	105.06000.66	4
7	43.08034.00	4
8	00.00516.00	1
9	00.00520.01	2
10	101.13000.00	1

Fig. Nº *Fig. Nº*	Referencia *Part Nº*	Cantidad *Quantity*
11	105.13000.66	1
12	01.01306.00	1
13	00.00511.00	2
14	105.16000.66	2
15	708.16000.66	2
16	00.00500.00	2
17	02.00510.01	1
18	00.00515.00	2
19	00.00512.00	2
20	401.03040.60	2

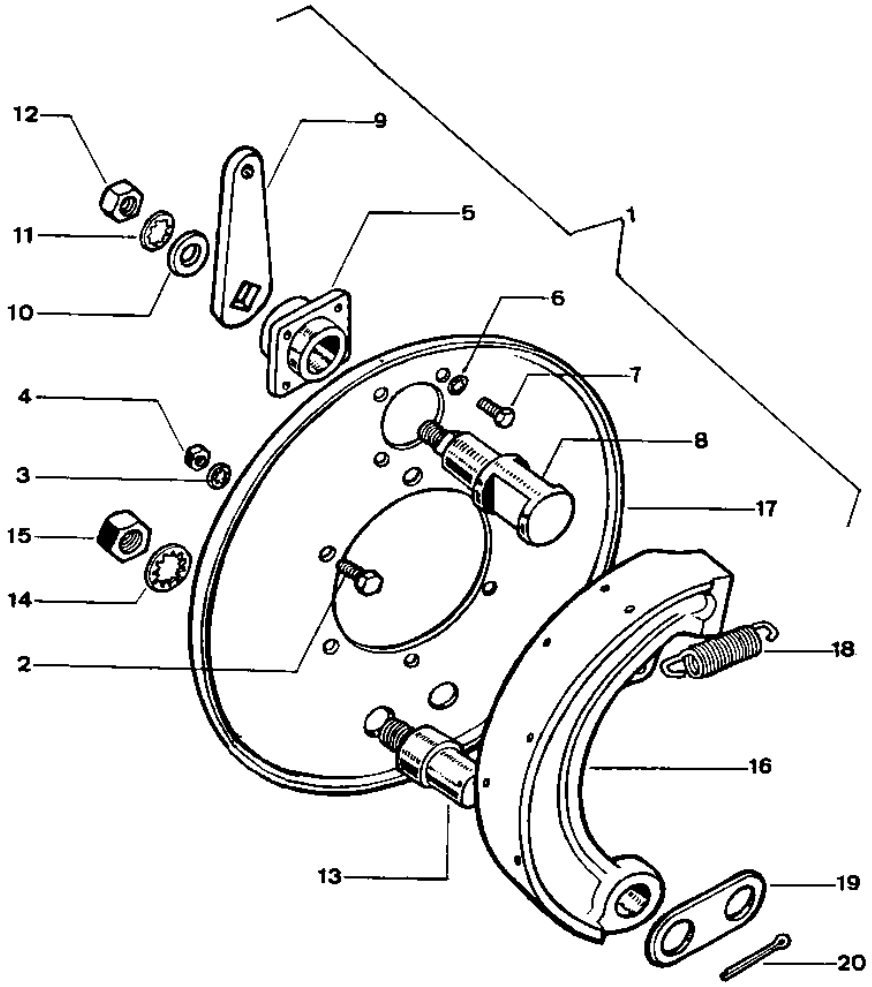

https://truckmanualshub.com/

Freno
Brake

Frenos hidráulicos “Plus”
Hydraulic brakes

Fig. Nº *Fig. Nº*	Referencia *Part Nº*	Cantidad *Quantity*
1	46.00403.00	(1)
1	46.00404.00	(1)
2	46.00407.34	(1)
3	45.00408.21	(1)
3	45.00407.21	(1)
4	45.00408.46	(1)
5	45.00408.26	(1)
5	45.00407.26	(1)
6	45.00408.29	(2)

Fig. Nº *Fig. Nº*	Referencia *Part Nº*	Cantidad *Quantity*
7	45.00408.44	(2)
8	45.00408.45	(1)
9	45.00408.58	2
10	45.00408.59	2
11	45.00408.60	1
12	45.00408.61	1
13	45.00408.41	1
14	45.00408.40	1

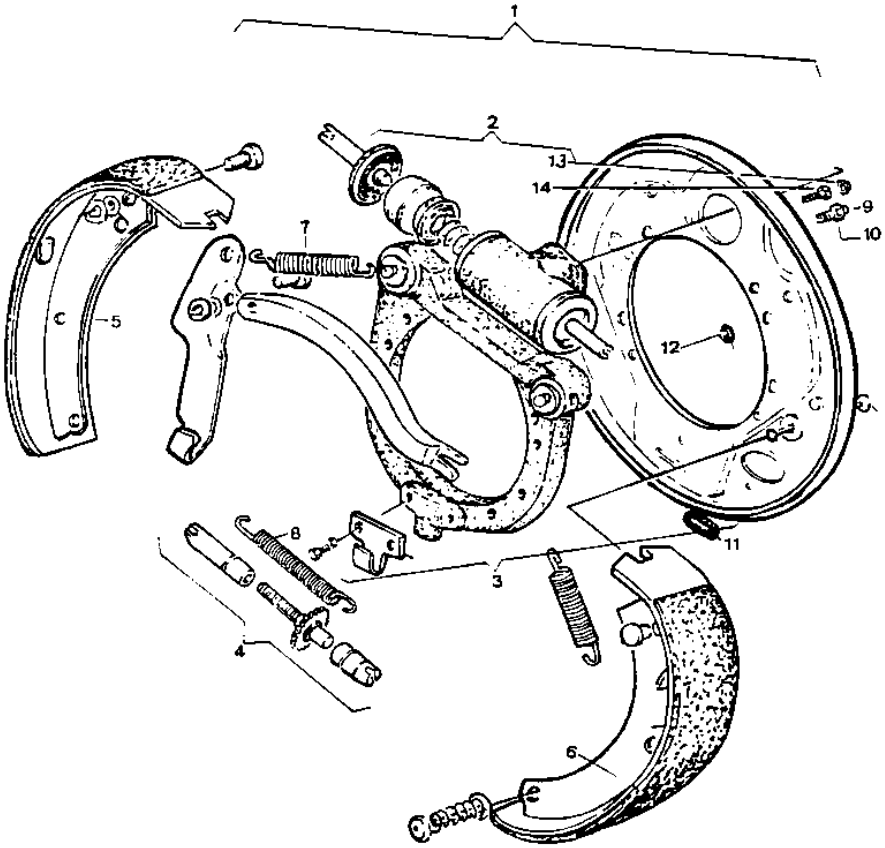

https://truckmanualshub.com/

Freno
Brake

Pedales
Pedals

Fig. Nº *Fig. Nº*	Referencia *Part Nº*	Cantidad *Quantity*	Fig. Nº *Fig. Nº*	Referencia *Part Nº*	Cantidad *Quantity*
1	43.07310.01	2	11	105.08000.66	6
2	10.00215.01	1	12	603.08020.86	6
3	10.00519.04	1	13	01.00212.01	1
4	923.16030.00	2	14	401.02020.60	2
5	01.00223.00	1	15	101.07000.66	2
6	901.08000.33	4	16	701.07000.86	1
7	402.06030.00	1	17	00.00329.01	1
8	402.35030.00	1	18	01.00226.00	1
9	10.00214.01	1	19	10.00202.01	(1)
10	01.00216.00	3			

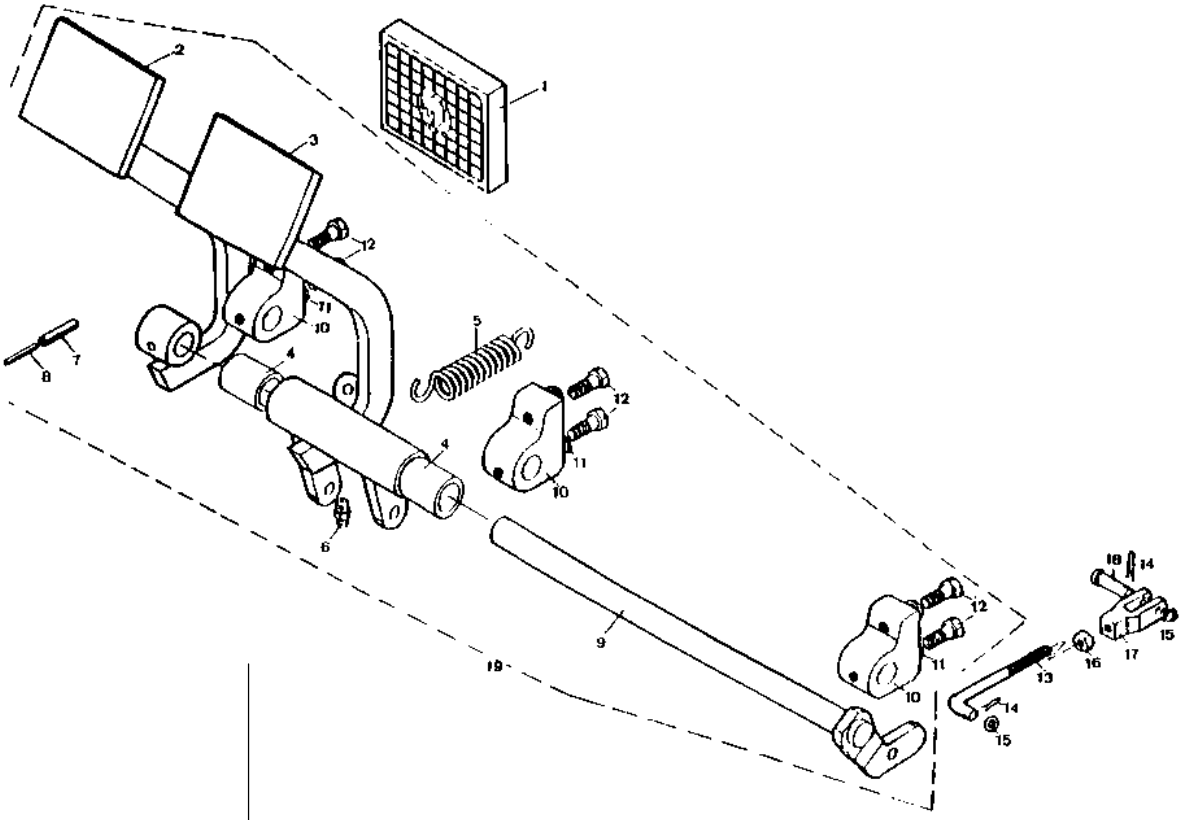

https://truckmanualshub.com/

Freno
Brake

Mandos frenos
Brake actuatros

Fig. Nº *Fig. Nº*	Referencia *Part Nº*	Cantidad *Quantity*
1	10.00519.04	1
2	01.00514.01	4
3	01.00564.01	2
4	401.02020.60	6
5	101.08000.66	4
6	01.01304.00	2
7	01.00521.00	1
8	14.00566.03	1
9	01.00571.00	2
10	00.00520.00	2
11	09.00182.00	2
12	604.10040.86	4

Fig. Nº *Fig. Nº*	Referencia *Part Nº*	Cantidad *Quantity*
13	101.13000.66	2
14	105.13000.66	2
15	01.01306.00	2
16	10.00184.00	4
17	01.00568.03	4
18	105.10000.66	4
19	701.10000.86	4
20	01.00039.00	(2)
21	00.00569.00	1
22	01.00570.00	1
23	01.01301.00	1
24	901.08000.33	2

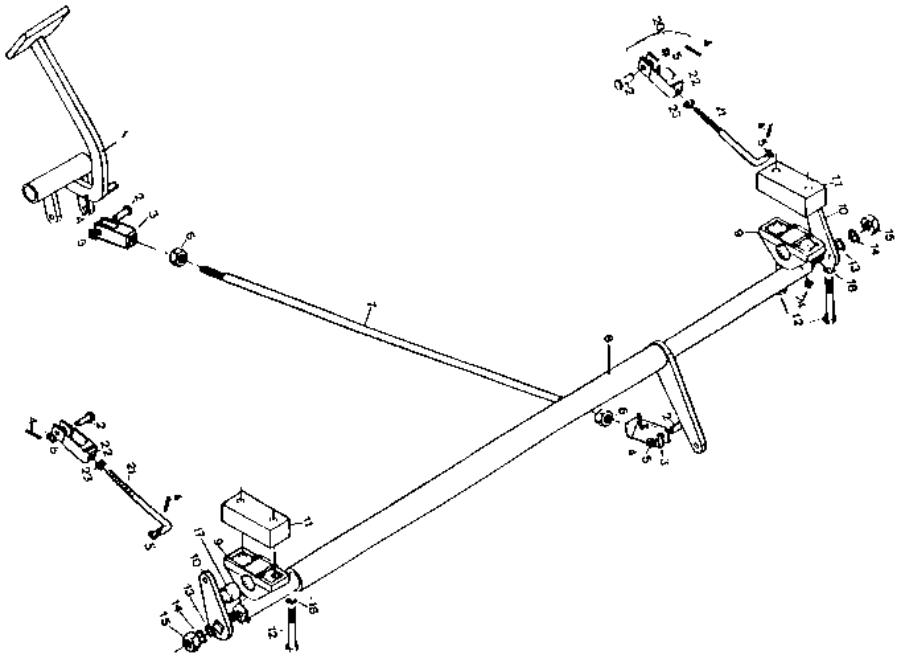

https://truckmanualshub.com/

Freno
Brake

Bomba de freno “Plus”
Brake pump assembly

Fig. Nº *Fig. Nº*	Referencia *Part Nº*	Cantidad *Quantity*
	43.00747.20	(1)
1		1
2	43.00747.25	1
3		1
4		1
5		1
6		1
7		1
8		1
9		1
10		1
11		1

Fig. Nº *Fig. Nº*	Referencia *Part Nº*	Cantidad *Quantity*
12		1
13		1
14		1
15	43.00747.34	1
16		1
17		1
18		1
19		1
20		1
21	15.07780.00	1
22	43.00747.90	var.

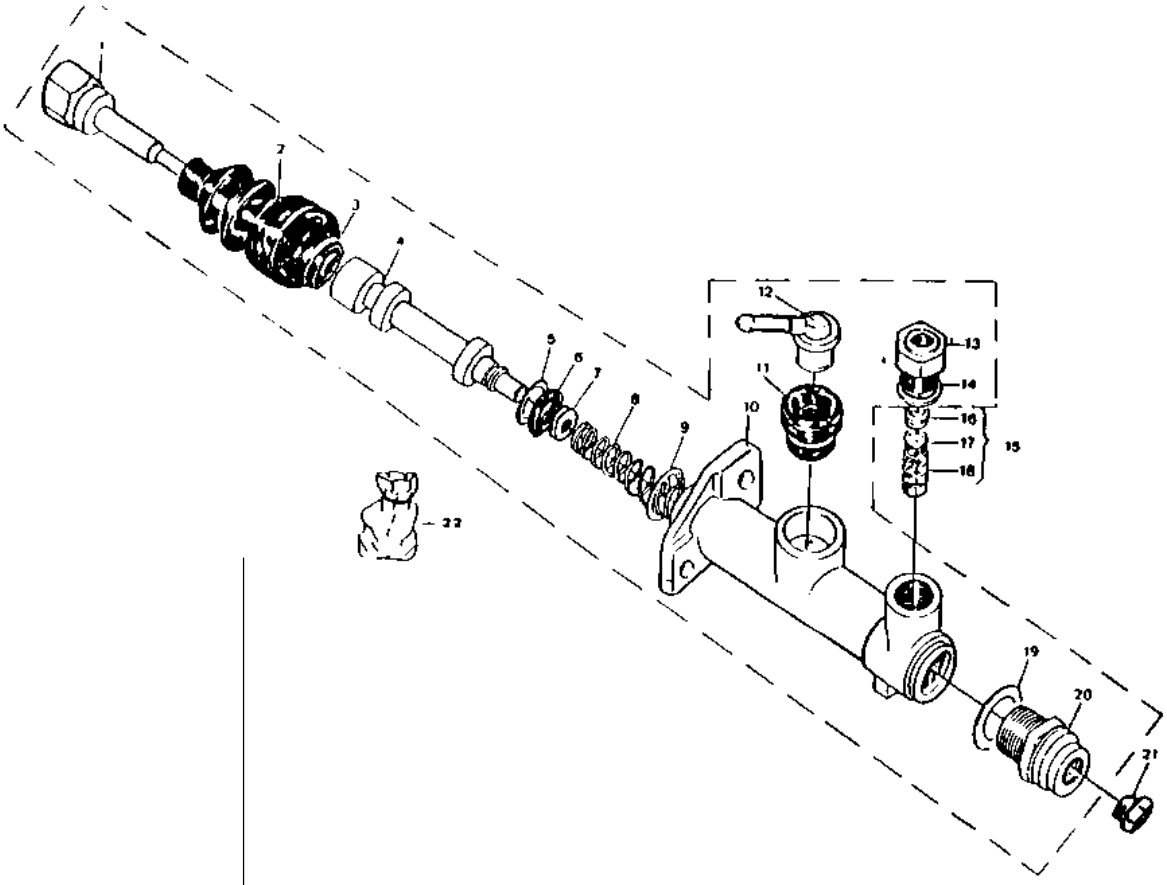

https://truckmanualshub.com/

Freno
Brake

Instalación frenos “Plus”
Brake installation

Fig. Nº *Fig. Nº*	Referencia *Part Nº*	Cantidad *Quantity*
1	43.00751.00	1
2	43.07511.00	1
3	01.00223.01	1
4	10.00519.04	1
5	01.00514.01	1
6	01.00564.02	1
7	401.02020.60	1
8	101.08000.66	1
9	09.00774.01	1
10	912.08000.66	1

Fig. Nº *Fig. Nº*	Referencia *Part Nº*	Cantidad *Quantity*
11	31.01065.00	1
12	43.00747.20	1
13	43.01521.00	1
14	31.01064.00	1
15	09.00773.01	1
16	43.00750.06	1
17	43.07512.00	1
18	01.01304.00	1
19	929.05000.00	7

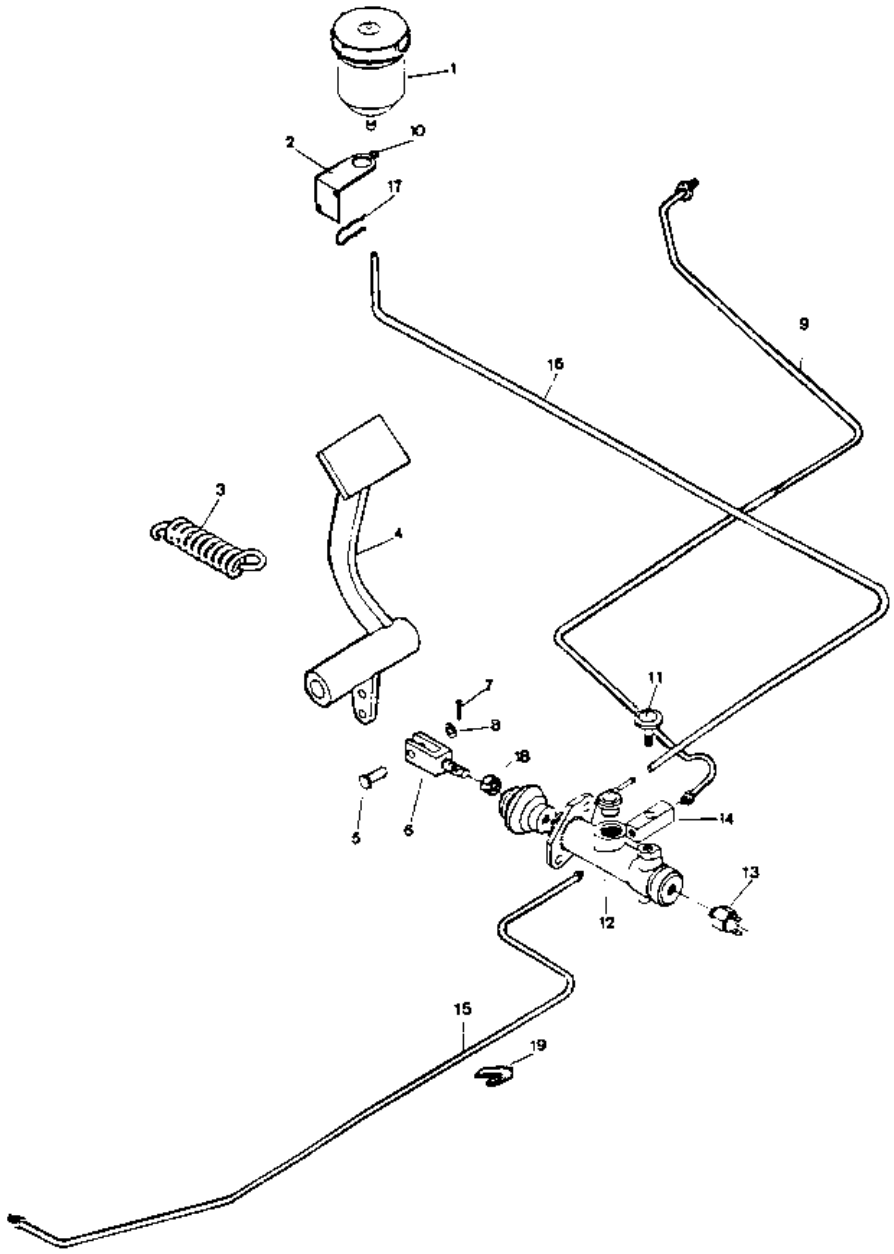

https://truckmanualshub.com/

Freno
Brake

Freno de estacionamiento
Parking brake

Fig. Nº *Fig. Nº*	Referencia *Part Nº*	Cantidad *Quantity*	Fig. Nº *Fig. Nº*	Referencia *Part Nº*	Cantidad *Quantity*
1	10.00519.04	1	9	43.07550.01	1
2	603.08015.86	3	10	604.08070.86	2
3	101.08000.66	5	11	43.00755.01	1
4	01.00514.02	1	12	630.08020.96	4
5	401.02020.60	1	13	105.08000.66	4
6	02.08102.00	1	14	701.08000.66	4
7	43.00755.11	1	15	02.50551.00	2
8	604.08040.86	2	16	37.00157.03	1

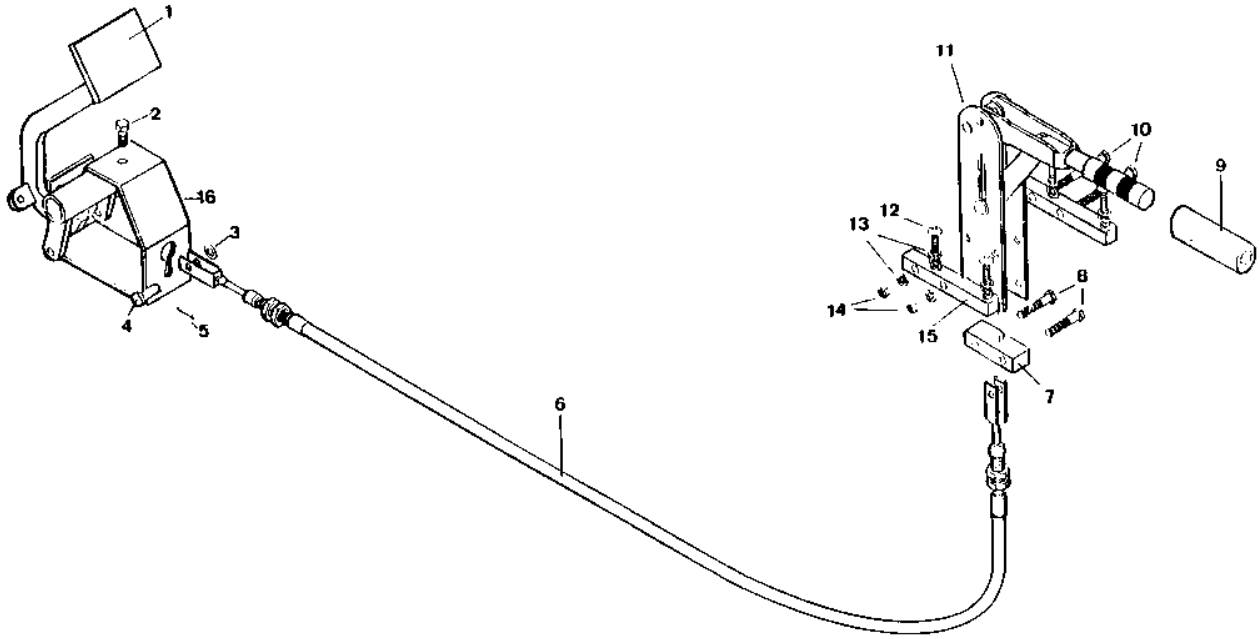

https://truckmanualshub.com/

Freno
Brake

Freno de estacionamiento “Plus”
Parking brake

Fig. Nº *Fig. Nº*	Referencia *Part Nº*	Cantidad *Quantity*
1	43.00755.01	1
2	43.07550.01	1
3	630.08020.96	4
4	105.08000.66	8
5	401.02020.60	3
6	101.08000.66	4
7	01.00514.01	3
8	43.00766.00	1
9	37.00157.12	1
10	603.08010.86	4
11	44.00706.02	1

Fig. Nº *Fig. Nº*	Referencia *Part Nº*	Cantidad *Quantity*
12	43.00706.01	1
13	43.00708.00	2
14	830.01808.00	2
15	02.50551.00	2
16	43.00755.11	1
17	02.08102.00	1
18	604.08040.86	2
19	604.08070.86	2
20	105.08000.66	4
21	701.08000.66	4
22	603.08020.86	4

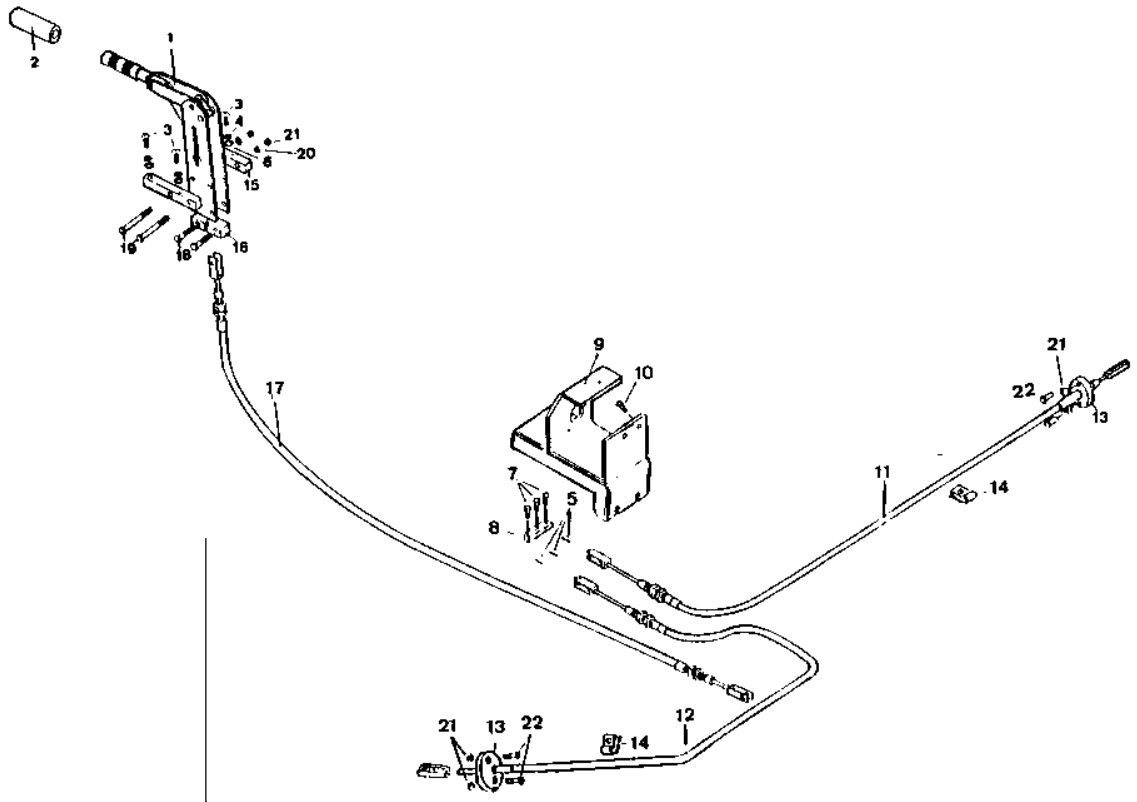

https://truckmanualshub.com/

Ruedas
Wheel

Ruedas
Wheel

Fig. Nº *Fig. Nº*	Referencia *Part Nº*	Cantidad *Quantity*
1	01.00502.00	(2)
2	00.05016.08	2
3	01.00555.08	2
4	01.00585.08	2
5	02.00501.00	(2)
6	02.00580.00	2
7	02.00590.00	2
8	02.00581.00	2
	01.00502.01	(2)
	00.00580.00	2
	01.00555.08	2
	01.00585.09	2

Fig. Nº *Fig. Nº*	Referencia *Part Nº*	Cantidad *Quantity*
	10.00502.03	(2)
	00.05016.00	2
	10.00585.01	2
	10.00555.00	2
Ruedas por 4x4		
1	39.15502DE00	(1)
1	39.15502IZ00	(1)
2	39.10628.00	2
3	10.00555.00	2
4	10.15585.00	2

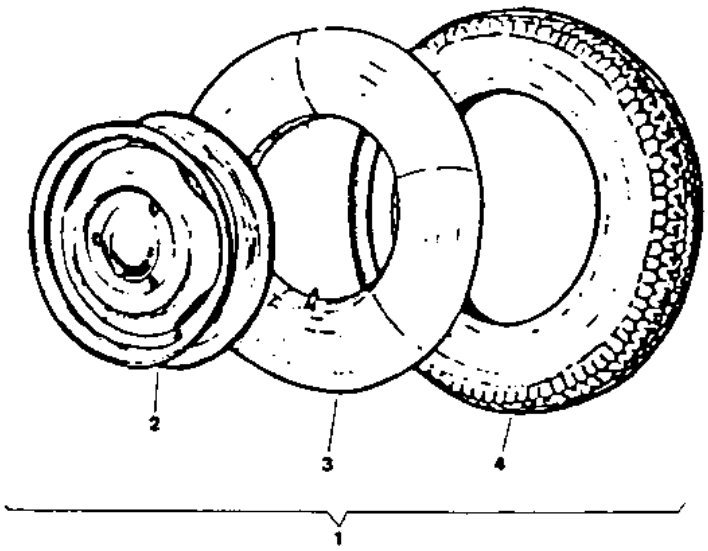

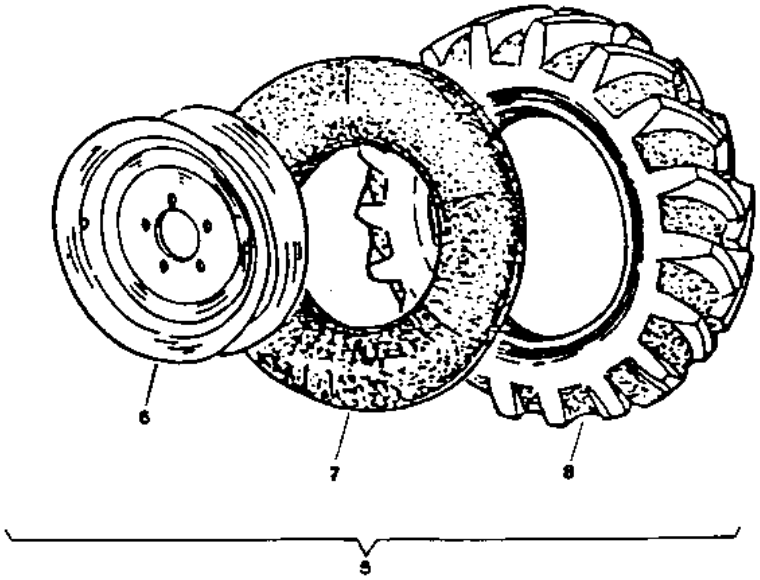

https://truckmanualshub.com/

Carrocería
Body

Protectores
Protectors

Fig. Nº *Fig. Nº*	Referencia *Part Nº*	Cantidad *Quantity*
1	02.30927.01	1
1	02.30927.00	1
2	40.00930.00	1
3	02.00923.01	1
4	603.08020.96	4
5	02.11922.00	1
6	02.20922.00	1
7	02.21922.01	1
8	14.40901.00	2
9	603.08015.86	4
10	02.10922.00	1
11	02.32016.00	1
12	01.00036.01	1
13	37.00726.22	1
14	105.10000.66	4
15	630.08020.96	4

Fig. Nº *Fig. Nº*	Referencia *Part Nº*	Cantidad *Quantity*
16	105.08000.66	6
17	727.06004.86	4
18	105.06000.66	4
19	603.06015.96	4
20	02.00757.00	1
21	02.00826.00	1
22	117.09000.66	4
23	701.08000.66	1
24	701.10000.66	1
25	101.08000.66	6
26	603.08025.86	4
27	105.10000.66	3
28	101.10000.66	3
29	605.10020.66	3
30	14.07167.00	1
31	15.00836.01	1

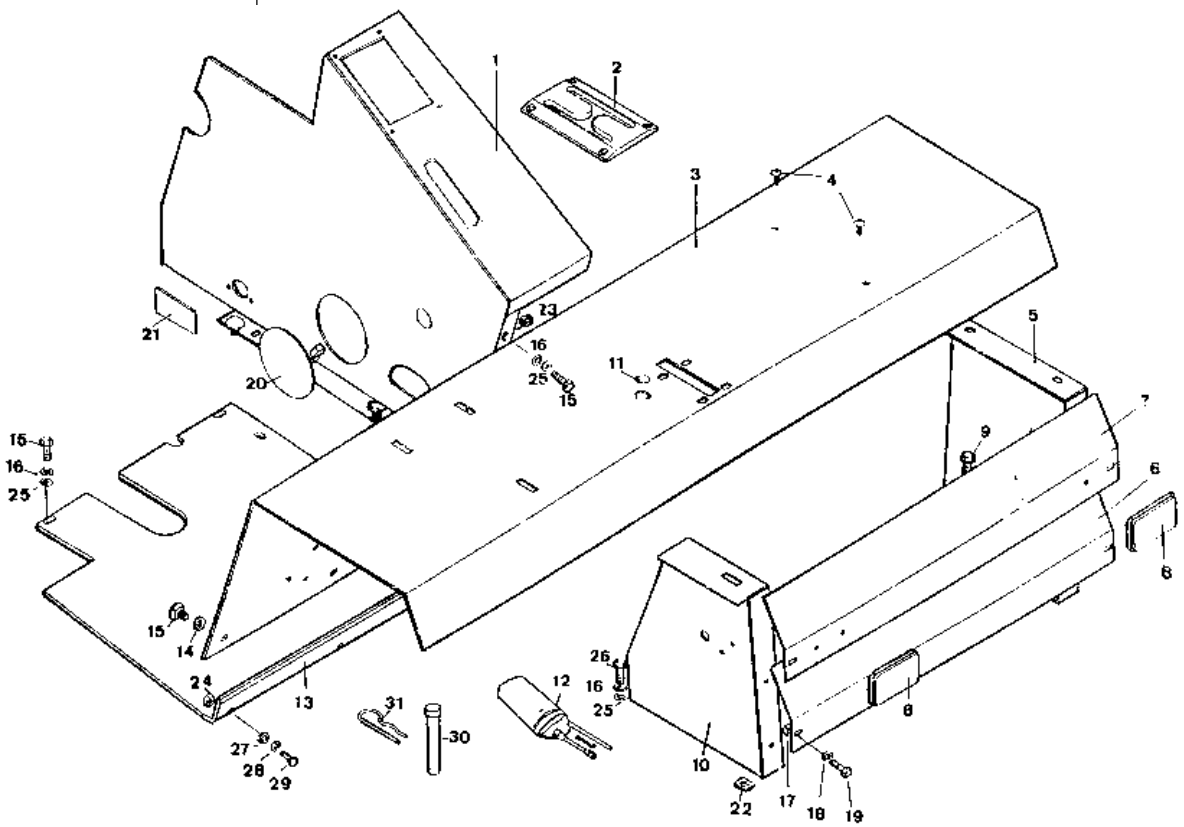

https://truckmanualshub.com/

Carrocería
Body

Asiento
Seat

Fig. Nº *Fig. Nº*	Referencia *Part Nº*	Cantidad *Quantity*
1	01.00706.06	(1)
2	605.10025.86	4
3	105.10000.66	4
4	701.10000.66	4
5	711.10000.06	4

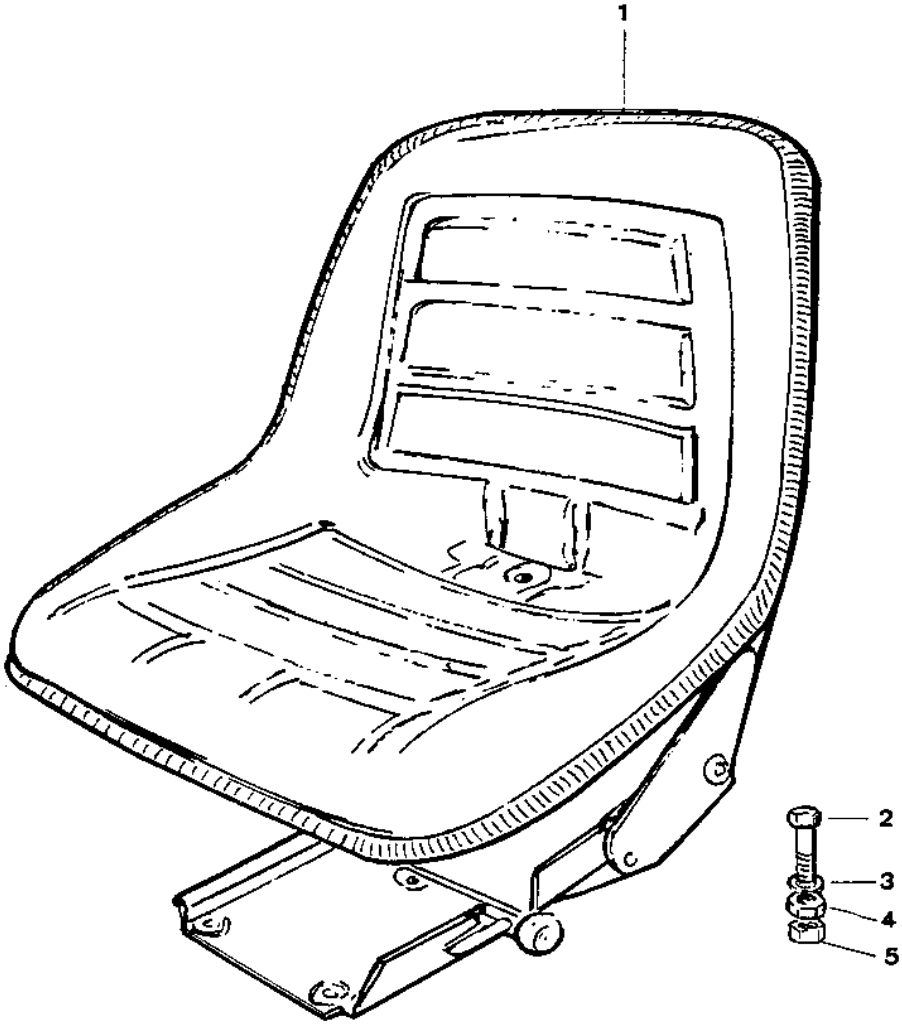

https://truckmanualshub.com/

Carrocería
Body

Contrapeso
Counterweight

Fig. Nº *Fig. Nº*	Referencia *Part Nº*	Cantidad *Quantity*
1	15.08350.00	(1)
1A	15.00835.00	1
2	15.00834.00	1
3	603.05010.86	1
4	701.05000.66	1
5	15.00836.00	1
6	14.00788.02	1
7	701.16000.86	3
8	105.16000.66	4
9	604.16100.86	2
10	604.16060.86	1
11	604.16090.86	1
12	101.16000.66	1
Contrapeso DF		
13	08.00788.01	(1)
14	01.00731.01	1
15	604.14080.86	1
16	711.14000.66	1

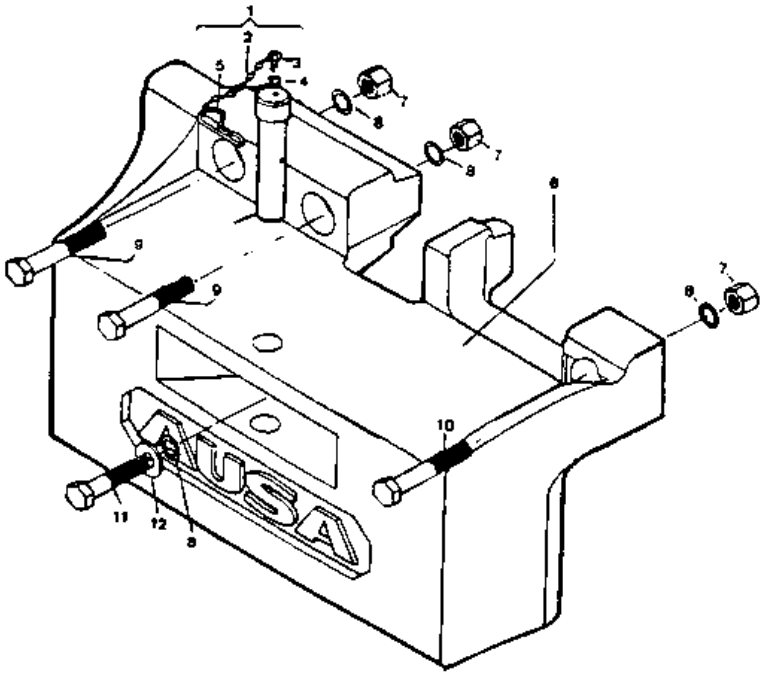

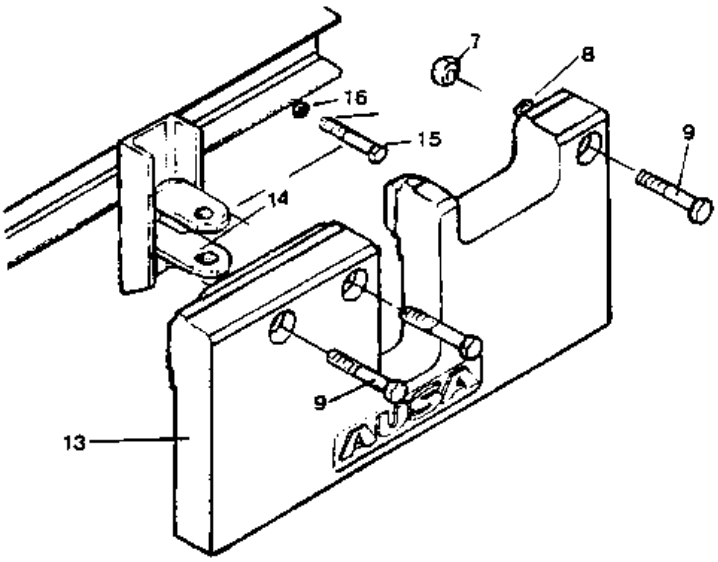

https://truckmanualshub.com/

Carrocería
Body

Faldones ruedas
Mudflats

(opcional)
(optional)

Fig. Nº *Fig. Nº*	Referencia *Part Nº*	Cantidad *Quantity*
1	09.01831.00	2
1	09.11831.01	2
2	09.01829.00	2
2	09.11829.01	2
3	09.01828.00	1

Fig. Nº *Fig. Nº*	Referencia *Part Nº*	Cantidad *Quantity*
4	09.01827.00	1
5	09.01830.00	1
6	09.01832.00	1
7	09.00654.00	2
8	630.06020.96	2

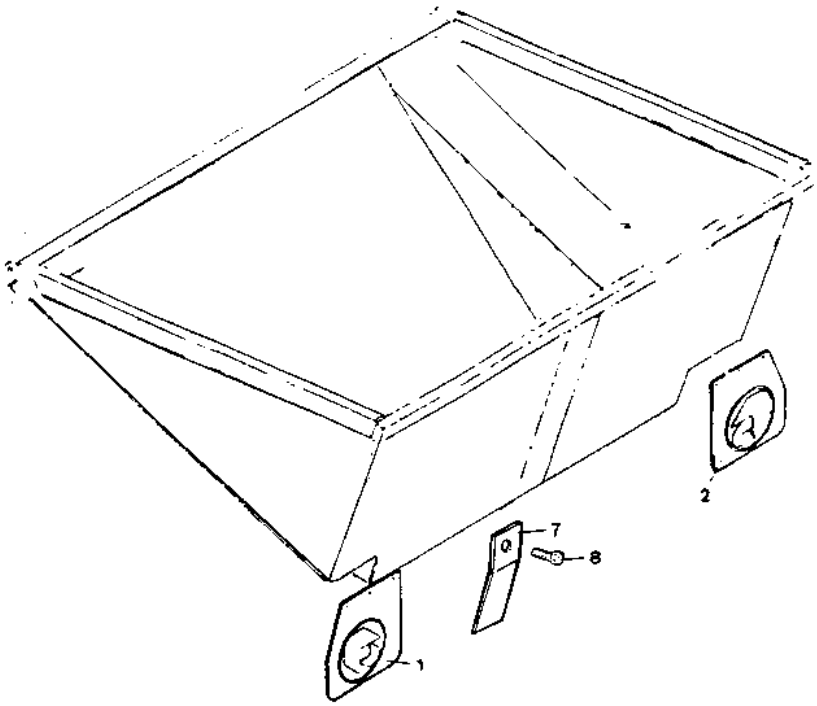

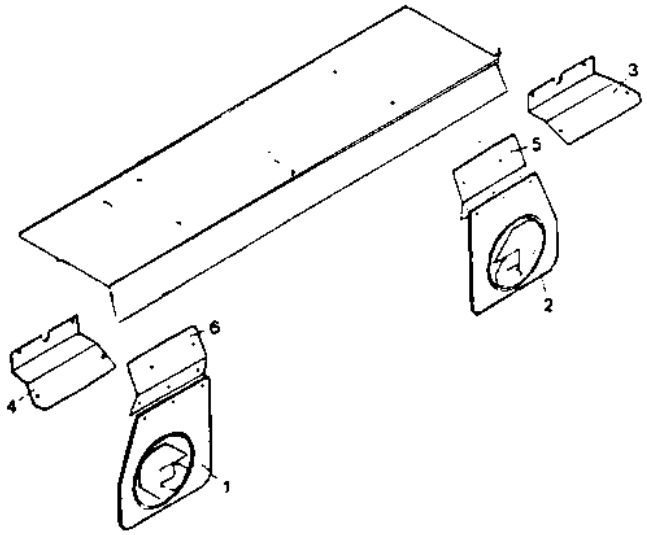

https://truckmanualshub.com/

Carrocería
Body

Espejo retrovisor
Rear-vision mirror

(opcional)
(optional)

Fig. Nº *Fig. Nº*	Referencia *Part Nº*	Cantidad *Quantity*
1	09.11009.00	(1)
2	09.11013.00	1
3	09.11010.00	1
4	09.11011.00	1
5	09.11012.00	1

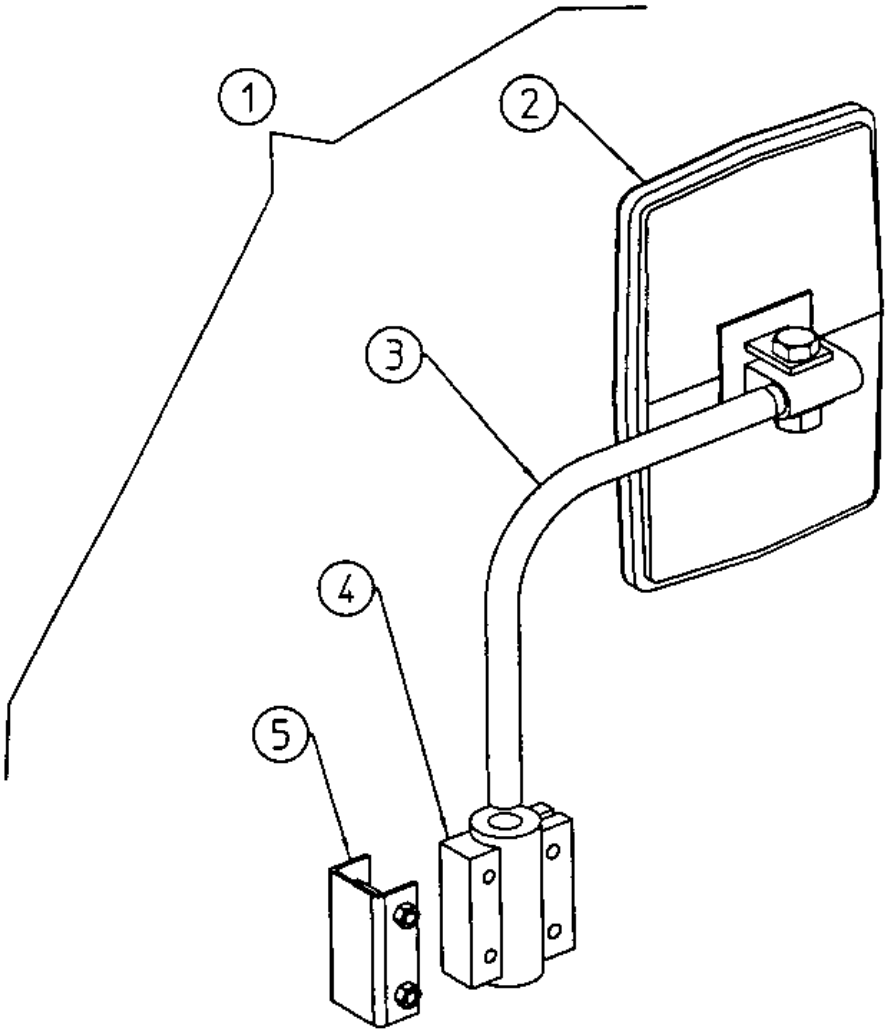

https://truckmanualshub.com/

Carrocería
Body

Protector conductor
Driver protector

(opcional)
(optional)

Fig. Nº *Fig. Nº*	Referencia *Part Nº*	Cantidad *Quantity*
1	01.08236RE01	(1)
2	01.08236.01	(1)
2A	01.08237.20	1
2B	01.08237.21	1
3	01.08520.00	1
4	09.00750.00	1
5	02.00788.00	1
6	603.08025.86	2
7	105.08000.66	2
8	112.08000.66	2
9	603.12030.86	4
10	01.08252.00	1
11	16.00760.00	7
12	101.11000.66	7

Fig. Nº *Fig. Nº*	Referencia *Part Nº*	Cantidad *Quantity*
13	43.50941.00	7
14	01.08251.00	1
15	630.06015.96	2
16	101.06000.66	2
17	711.06000.66	2
Resorte en 150 DG		
18	603.08015.86	1
19	101.08000.66	1
20	701.08000.66	1
21	08.01233.00	1
22	08.01234.00	1
23		1
24		1
25		1

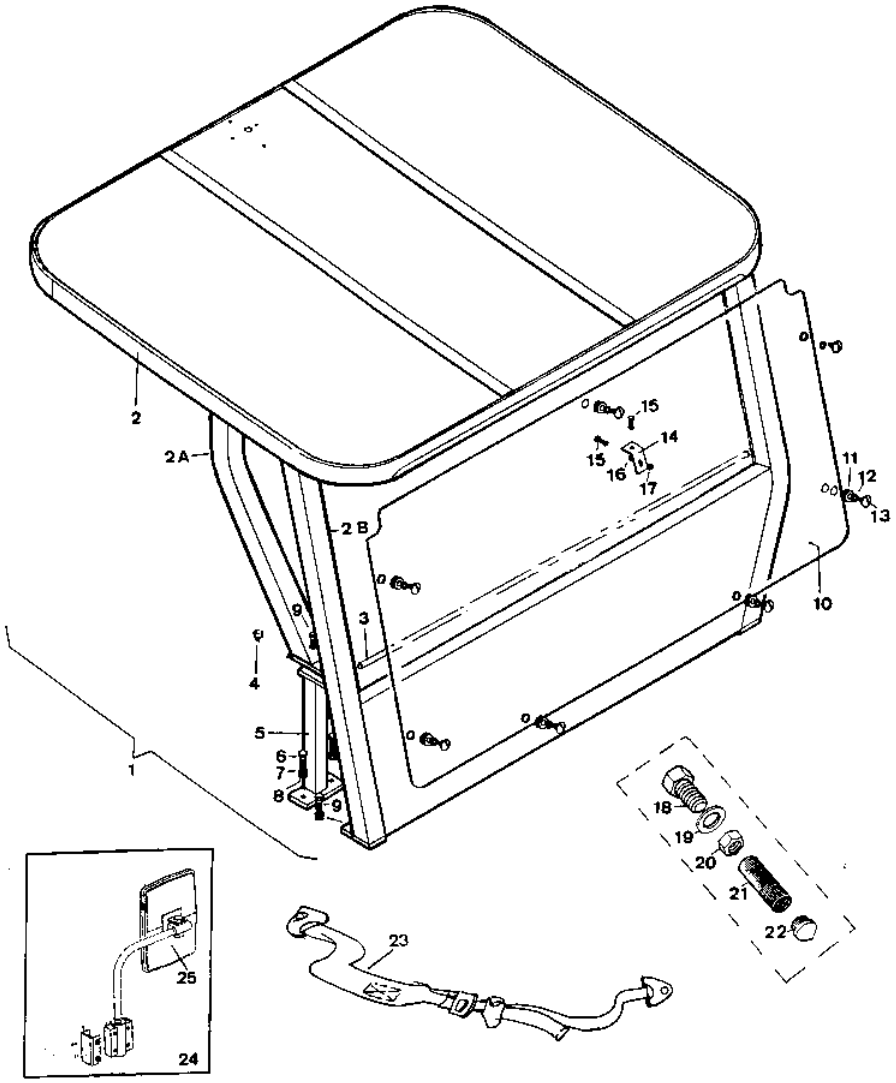

https://truckmanualshub.com/

Carrocería
Body

Limpiaparabrisas
Winscreen wipers

(opcional)
(optional)

Fig. Nº *Fig. Nº*	Referencia *Part Nº*	Cantidad *Quantity*
1	46.00843.00	1
2	01.00804.01	1
3	46.00841.00	1
4	46.00842.00	1

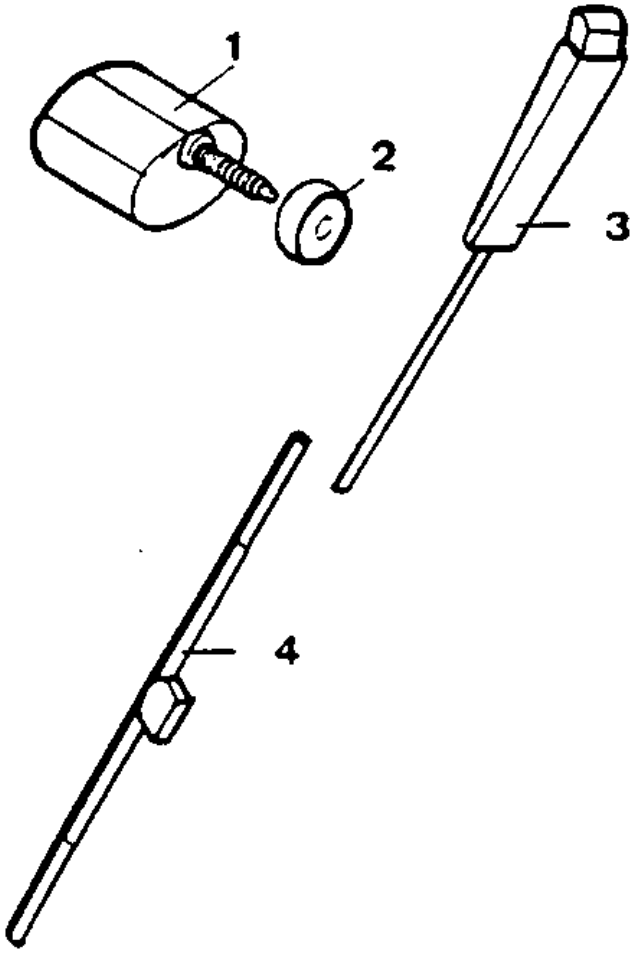

https://truckmanualshub.com/

Implementos funcionamiento máquina

Machine operation tools

Cilindro elevación tolva DF
Skip lifting ram

Fig. Nº *Fig. Nº*	Referencia *Part Nº*	Cantidad *Quantity*
1	09.00500.12	(1)
2	09.00520.03	1
3	08.00528.02	1
4 *	217.30006.50	1
5 *	201.05153.50	1
6	08.00530.01	1
7 *	203.30008.50	1
8 *	207.63028.50	1
9	08.00521.04	1

Fig. Nº *Fig. Nº*	Referencia *Part Nº*	Cantidad *Quantity*
10*	201.22003.50	1
11	08.00525.01	1
12	08.00527.00	2
13	15.01216.00	2
14	15.00832.00	2
15	105.06000.66	4
16	603.06015.86	4
17	09.99500.06	(1)

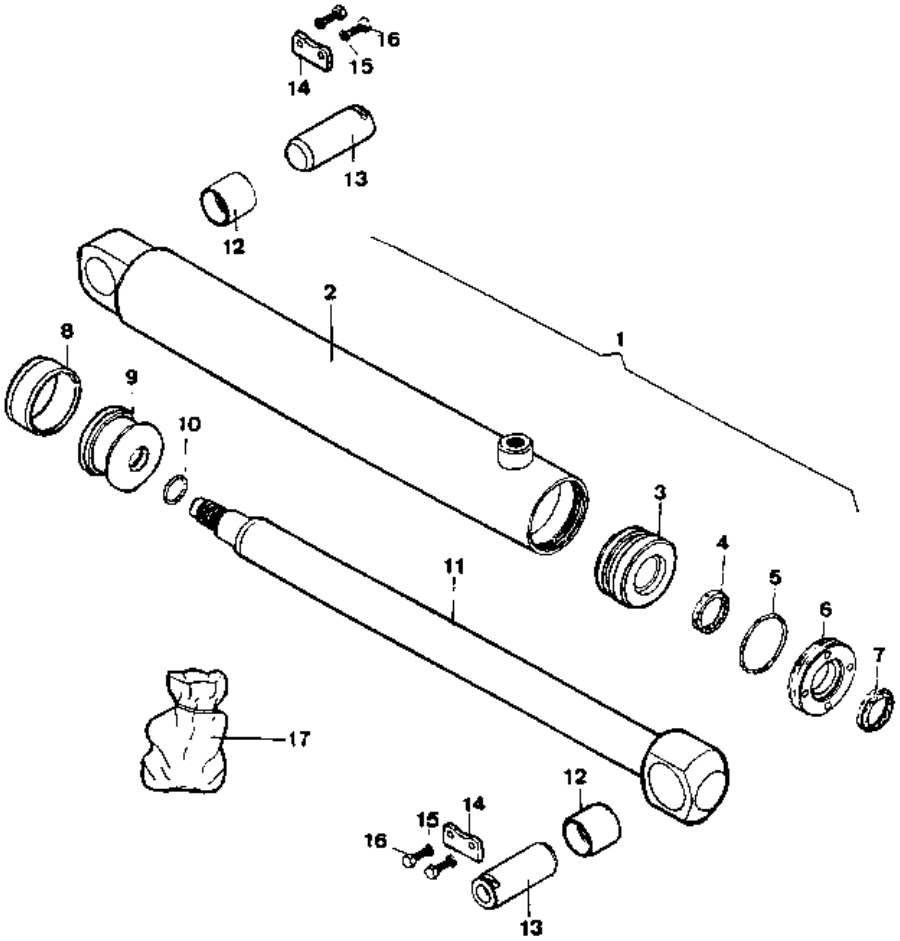

https://truckmanualshub.com/

Implementos funcionamiento máquina

Machine operation tools

Cilindro elevación tolva DA-DG
Skip lifting ram

Fig. Nº *Fig. Nº*	Referencia *Part Nº*	Cantidad *Quantity*
1	55.01220.02	(1)
2	720.27000.66	1
3 *	201.02802.50	1
4	207.07058.50	1
5	44.01211.00	1
6	44.01102.01	1
7	10.01117.00	1
8	10.01115.00	1
9	55.01101.01	1
10*	201.05905.50	1
11	44.01210.00	1

Fig. Nº *Fig. Nº*	Referencia *Part Nº*	Cantidad *Quantity*
12*	229.04010.50	1
13*	228.04008.50	1
14	08.00527.00	1
15	14.01116.00	1
16	603.06015.86	4
17	105.06000.66	4
18	15.00832.00	2
19	15.01216.00	1
20	15.00831.01	1
21	55.99100.02	(1)

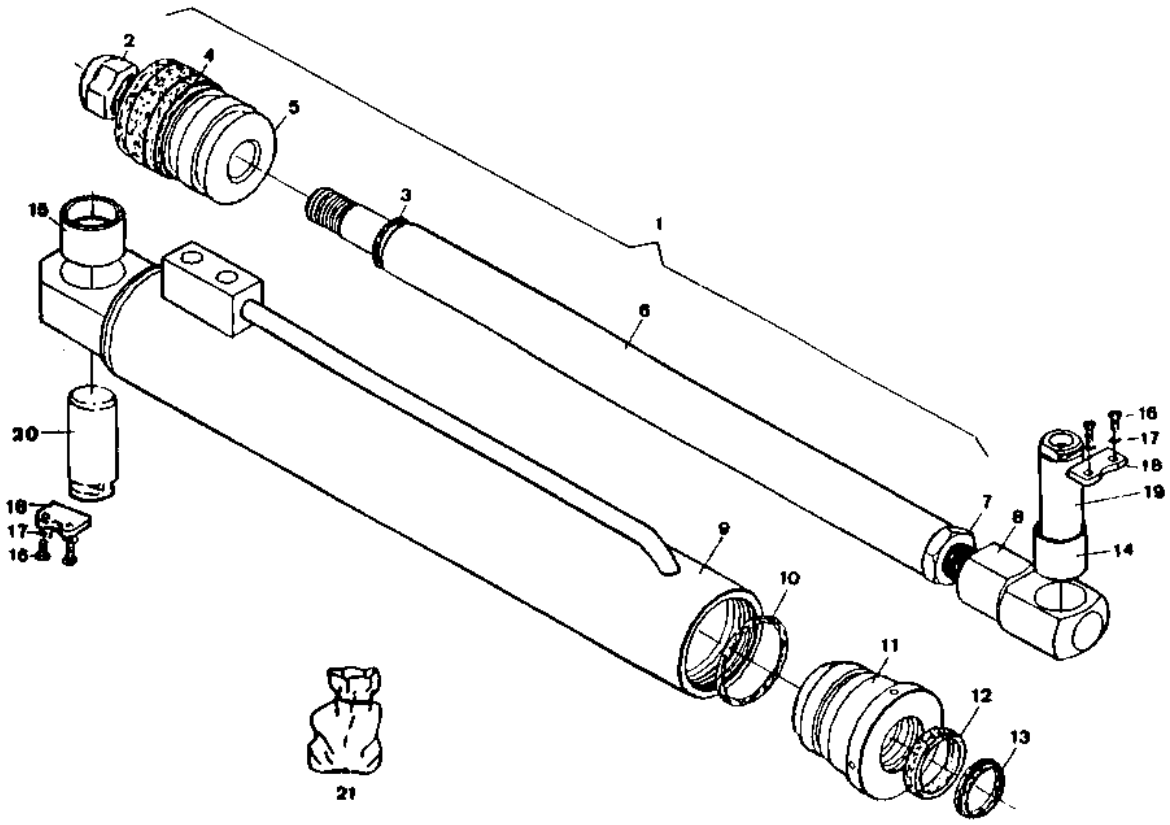

https://truckmanualshub.com/

Implementos funcionamiento máquina

Machine operation tools

Cilindro giratorio DG
Rotating cylinder

Fig. Nº *Fig. Nº*	Referencia *Part Nº*	Cantidad *Quantity*
	08.00100.12	(1)
1	08.00122.11	1
2 *		1
3	08.00111.10	1
4 *		1
5	08.00127.00	4
6 *		1
7	08.00114.01	1
8	701.07000.86	2
9	105.07000.66	6
10	603.07040.86	2
11	603.07020.86	4
12	08.00125.01	1
13	55.00124.00	1
14*		1
16	08.00103.00	(2)
17	08.00116.01	1
18	08.00115.02	1
19	908.08000.00	1
20	08.00105.01	1
21	08.00117.00	1
22	08.00110.10	1
23	106.14000.20	3

Fig. Nº *Fig. Nº*	Referencia *Part Nº*	Cantidad *Quantity*
24	603.14045.86	2
25	603.14035.86	1
26	08.00128.00	1
27	08.00133.00	1
28	01.01319.00	1
29*		1
30	08.00120.00	1
31	08.00123.10	9
32	105.12000.66	26
33	701.12000.86	26
34	01.00320.00	1
35	08.00153.00	1
36	08.00113.10	16
37	08.00123.11	1
38	701.14000.86	1
39	105.14000.66	1
40	603.16060.86	6
41	105.16000.66	6
42	701.16000.66	6
43	08.99100.00	(1)
44*		1
45	901.08000.33	1
46	947.08009.00	1

https://truckmanualshub.com/

Implementos funcionamiento máquina

Machine operation tools

Cilindro giratorio DG
Rotating cylinder

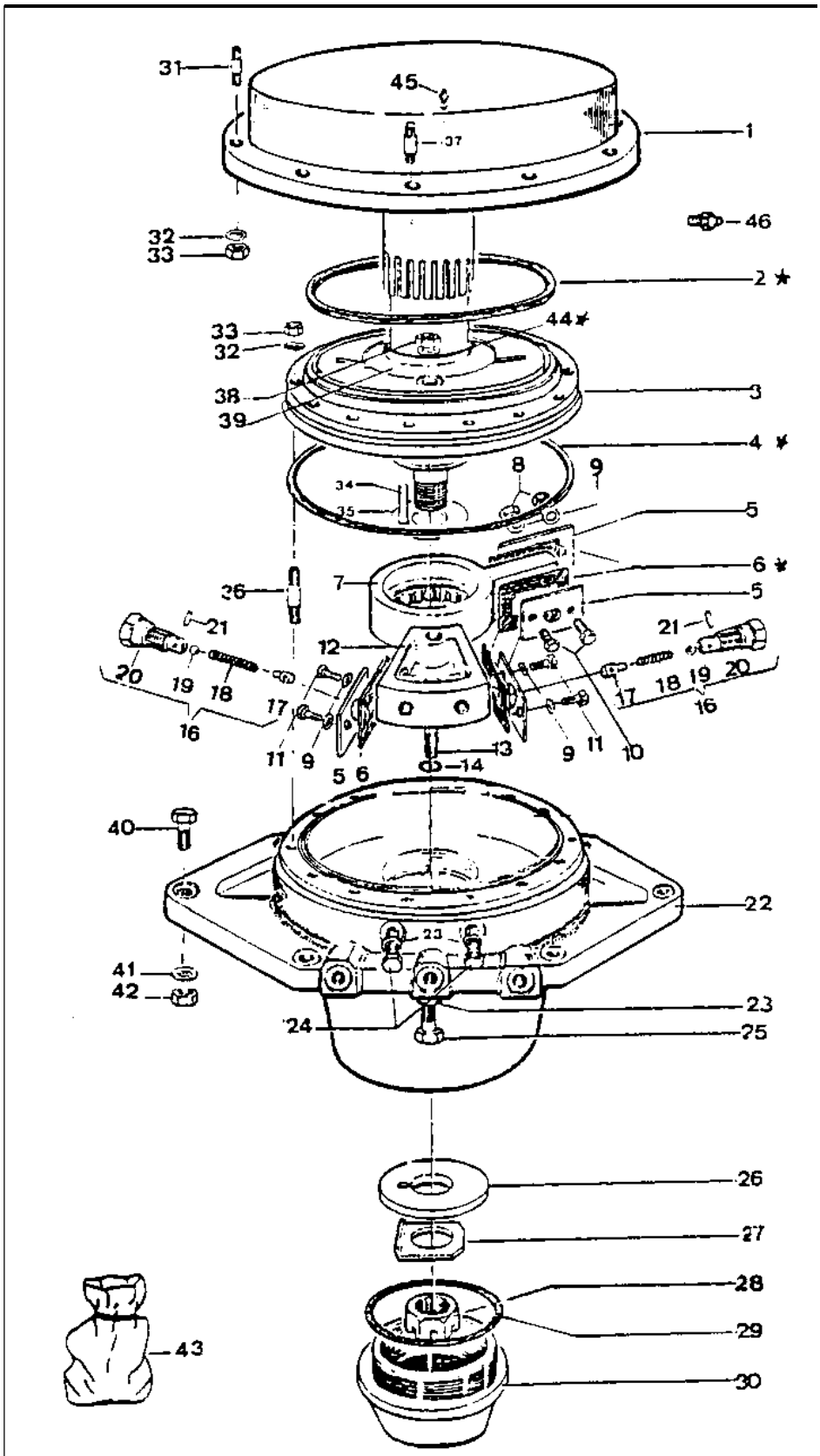

https://truckmanualshub.com/

Implementos funcionamiento máquina

Machine operation tools

Válvula reguladora DG-DA
Regulator valve

Fig. Nº *Fig. Nº*	Referencia *Part Nº*	Cantidad *Quantity*
1	09.01203.01	1
2	09.01210.01	1
3	09.01212.00	1
4	908.11000.00	1
5	08.00317.00	1
6	09.01211.00	1

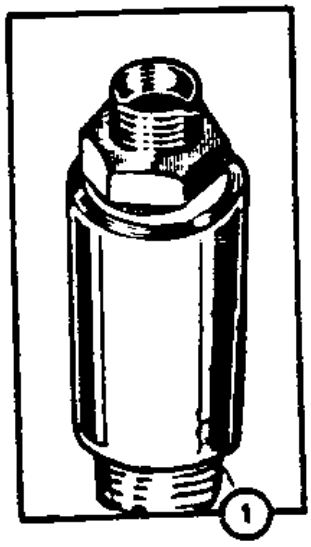

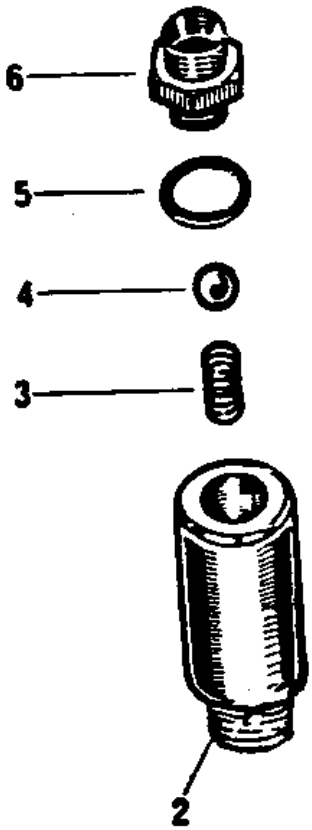

https://truckmanualshub.com/

Implementos funcionamiento máquina

Machine operation tools

Válvula reguladora DF-DA
Regulator valve

Fig. Nº *Fig. Nº*	Referencia *Part Nº*	Cantidad *Quantity*
1	09.01203.00	1
2	09.01210.00	1
3	09.01212.00	1
4	908.11000.00	1
5	08.00317.00	1
6	09.01211.00	1

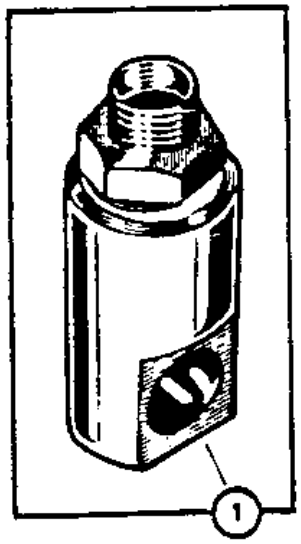

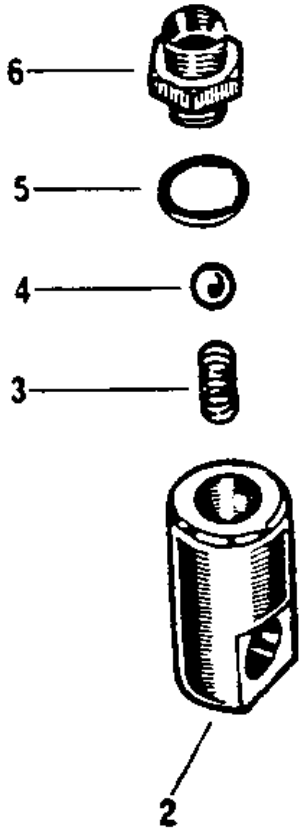

https://truckmanualshub.com/

Implementos funcionamiento máquina

Machine operation tools

Cilindro tijeras DA
Scissors cylinder

Fig. Nº *Fig. Nº*	Referencia *Part Nº*	Cantidad *Quantity*
1	14.01100.03	(2)
2 *		1
3 *		1
4	14.01110.02	1
5 *		1
6	14.01101.03	1
7	14.01116.00	2
8	14.01115.00	1
9	10.01117.00	1

Fig. Nº *Fig. Nº*	Referencia *Part Nº*	Cantidad *Quantity*
10	14.01102.02	1
11	14.01107.00	1
12*		1
13	718.18000.66	1
14*		1
15	901.08000.33	2
16	14.99110.04	(1)
17	14.01116.01	2
18	601.08035.86	4

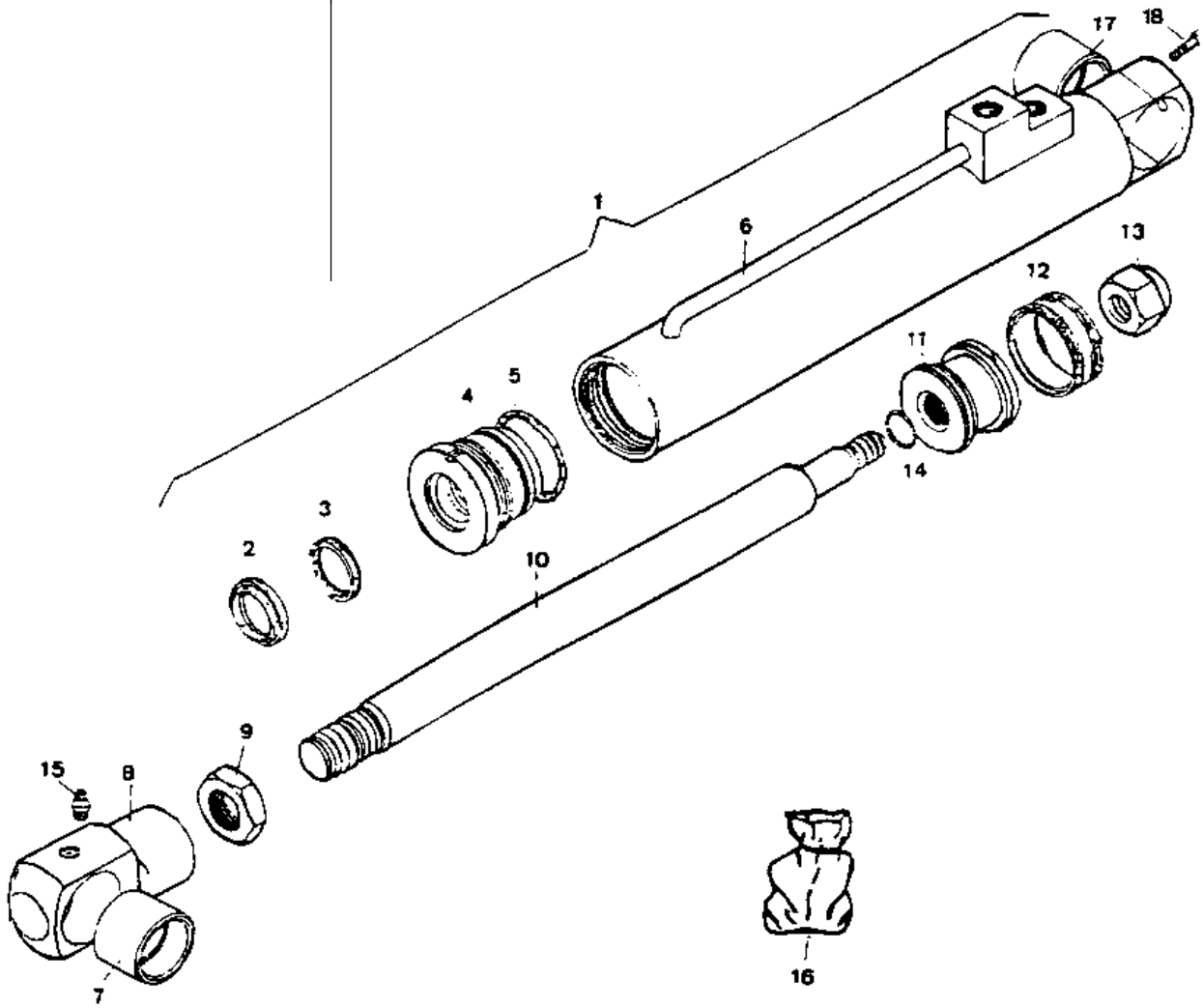

https://truckmanualshub.com/

Implementos funcionamiento máquina

Machine operation tools

Tijeras DA
Scissors

Fig. Nº *Fig. Nº*	Referencia *Part Nº*	Cantidad *Quantity*
1	14.00049.52	(1)
2	14.01430.01	1
3	14.01030.01	1
4	14.01073.00	4
5	14.01072.01	2
6	14.01074.00	var.
7	10.01117.00	4
8	08.00527.00	6

Fig. Nº *Fig. Nº*	Referencia *Part Nº*	Cantidad *Quantity*
9	14.01050.00	2
10	14.10652.01	2
11	14.10651.00	2
12	613.12025.86	8
13	105.12000.66	8
14	14.01070.01	2
15	105.27000.66	4
16	14.01065.01	1

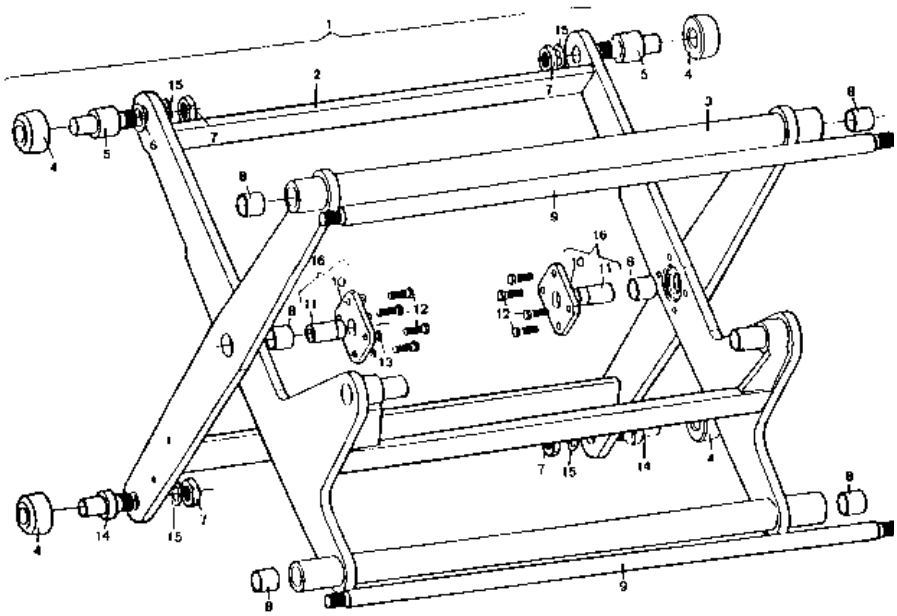

https://truckmanualshub.com/

Implementos funcionamiento máquina

Machine operation tools

Cilindro cuchara DF
Liddle cylinder

Fig. Nº *Fig. Nº*	Referencia *Part Nº*	Cantidad *Quantity*
1	09.10120.04	(1)
2	09.10121.03	1
3	718.20000.66	1
4	19.00221.02	1
5 *	207.55028.50	1
6 *	201.20025.50	1
7 *	201.47005.50	1
8 *	217.28008.50	1
9 *	228.28000.50	1
10	09.10162.02	1
11	09.10302.00	1
12	904.22000.00	2
13	901.08000.33	2

Fig. Nº *Fig. Nº*	Referencia *Part Nº*	Cantidad *Quantity*
14	09.10301.00	1
15	19.00220.03	1
16	711.18000.66	1
17	101.18000.66	1
18*	202.20355.50	1
19*	202.20305.50	1
20	711.14000.66	1
21	101.14000.66	1
22	913.20012.00	1
23	09.10622.00	1
24	603.14050.96	1
25*	09.99120.02	(1)

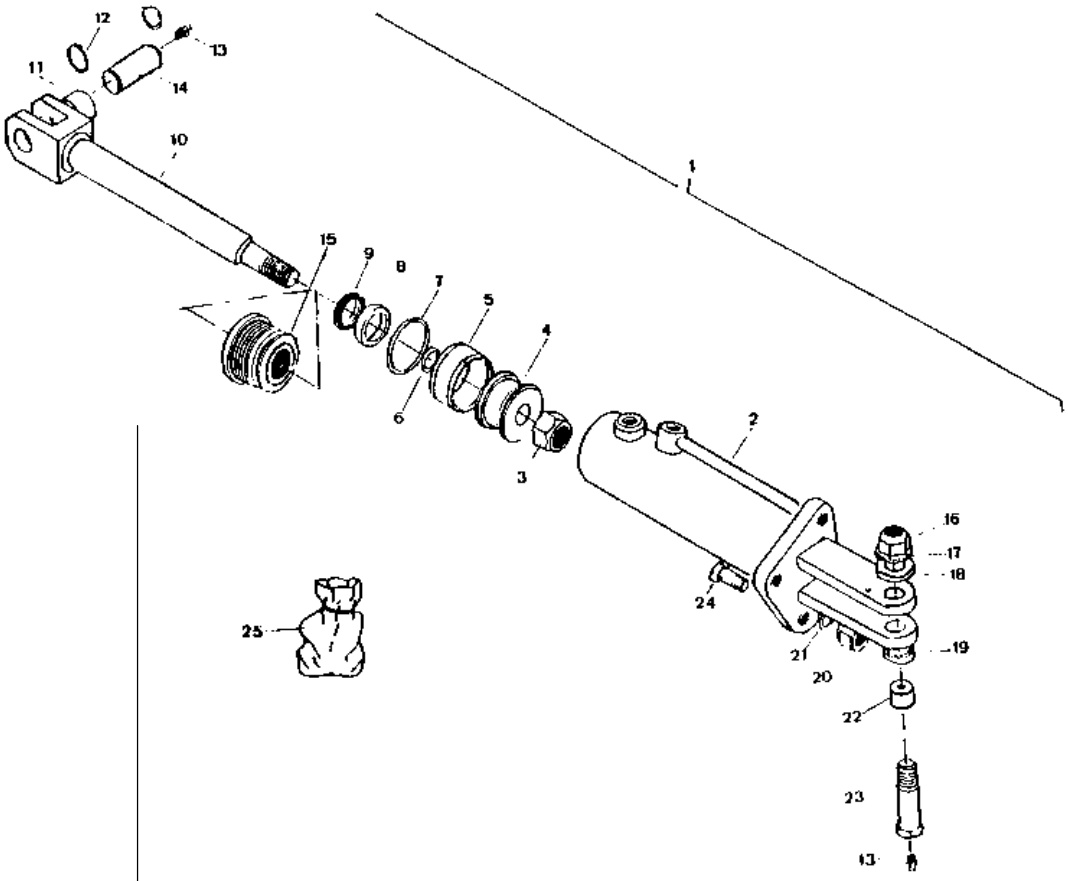

https://truckmanualshub.com/

Implementos funcionamiento máquina

Machine operation tools

Cilindro elevador cuchara DF
Liddle lifting ram

Fig. Nº *Fig. Nº*	Referencia *Part Nº*	Cantidad *Quantity*
1	08.05000.11	(1)
2	08.20520.00	1
3	401.25040.60	1
4	08.00527.00	1
5	01.01315.00	1
6	08.00526.00	1
7	207.63028.50	1
8	08.00521.04	1
9	201.05153.50	1
10	08.00525.02	1
11	09.87228.05	1
12	201.30004.50	2
13	08.00528.02	1

Fig. Nº *Fig. Nº*	Referencia *Part Nº*	Cantidad *Quantity*
14	217.30006.50	1
15	08.00530.01	1
16	203.30008.50	1
17	54.01117.00	1
18	54.01115.01	1
19	914.47000.00	2
20	913.30022.00	1
21	09.99500.06	1
22	08.00135.00	1
23	15.00832.00	2
24	603.06015.86	4
25	901.08000.33	2

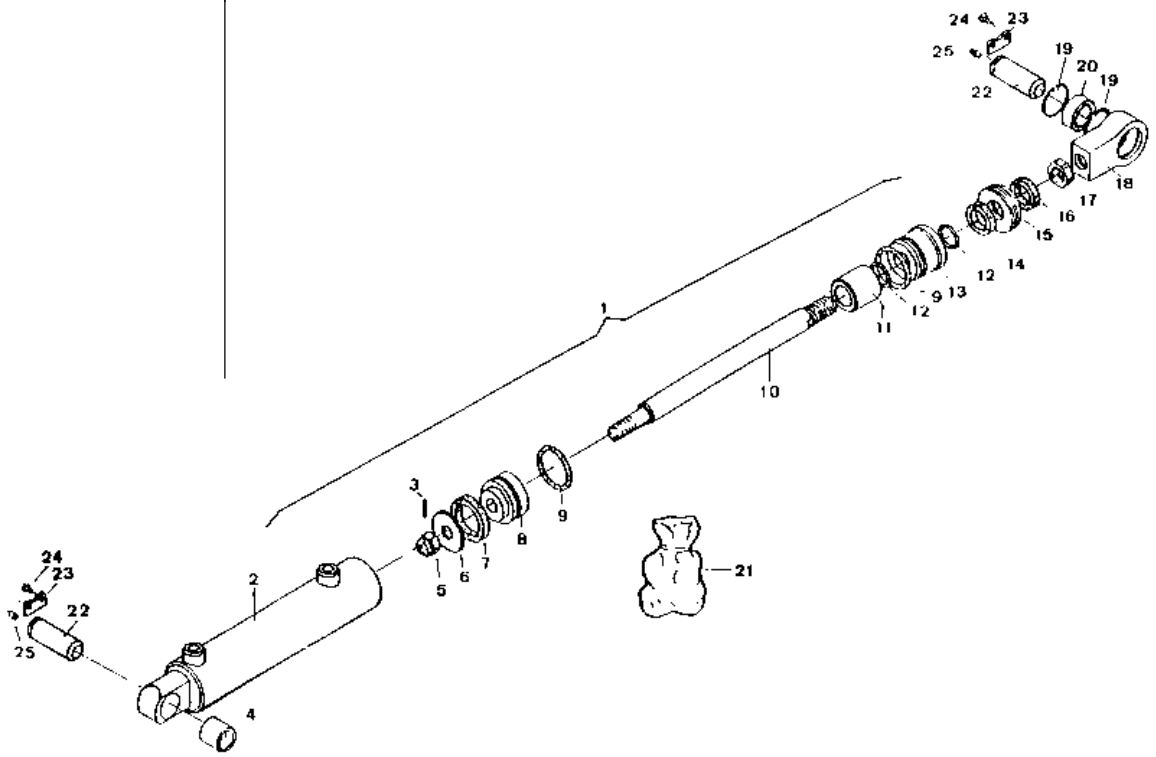

https://truckmanualshub.com/

Implementos funcionamiento máquina

Machine operation tools

Cilindro elevación tolva DG
Skip lifting ram

Fig. Nº *Fig. Nº*	Referencia *Part Nº*	Cantidad *Quantity*
1	08.00500.06	(2)
2	08.00520.05	2
3	901.08000.33	4
4	08.00527.00	4
5	08.00525.01	2
6	207.63029.50	2
7	08.00521.04	2
8	201.22003.50	2
9	08.00528.02	2

Fig. Nº *Fig. Nº*	Referencia *Part Nº*	Cantidad *Quantity*
10	201.05153.50	2
11	217.30006.50	2
12	08.00530.01	2
13	203.30008.50	2
14	08.99500.06	(2)
15	15.01216.00	2
16	15.00832.00	2
17	105.06000.66	8
18	603.06015.86	8

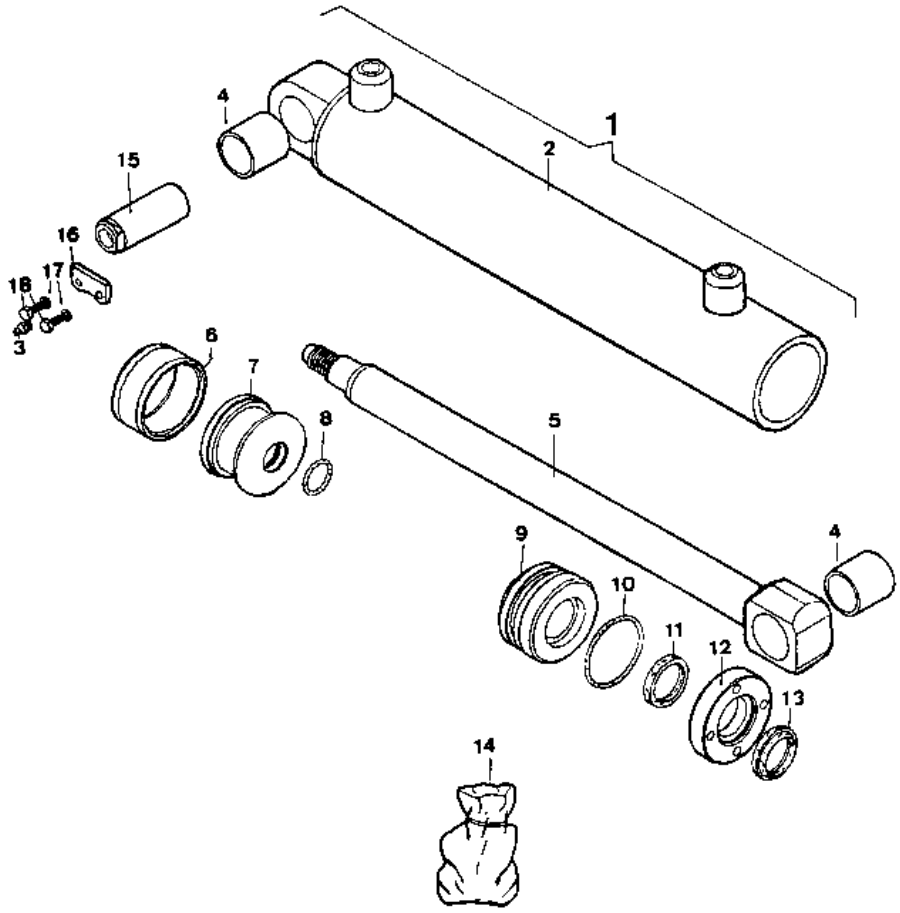

https://truckmanualshub.com/

Implementos funcionamiento máquina

Machine operation tools

Tolva DF
Hopper

Fig. Nº *Fig. Nº*	Referencia *Part Nº*	Cantidad *Quantity*
1	09.00716.04	1
2	09.00135.00	2
3	15.00832.00	2
4	603.06015.86	4
5	105.06000.66	4

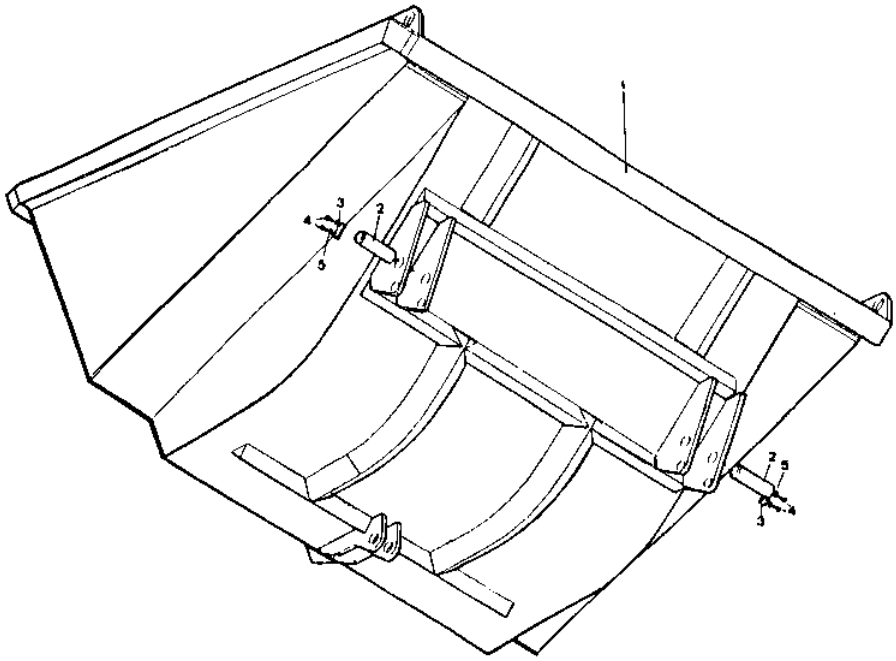

https://truckmanualshub.com/

Implementos funcionamiento máquina

Machine operation tools

Tolva y Soporte DA
Hopper and Mounting

Fig. Nº *Fig. Nº*	Referencia *Part Nº*	Cantidad *Quantity*
1	14.00716.04	1
2	14.01410.02	1
3	15.00832.00	2
4	603.06015.86	4
5	105.06000.66	4
6	09.00135.00	2
7	08.00527.00	2
8	401.04045.60	2
9	01.01318.00	2

Fig. Nº *Fig. Nº*	Referencia *Part Nº*	Cantidad *Quantity*
10	101.24000.66	2
11	14.01050.00	1
12	14.01053.00	1
13	901.08000.33	2
14	603.10030.86	4
15	105.10000.66	4
16	701.10000.66	4
17	603.16055.86	2
18	701.16000.66	2

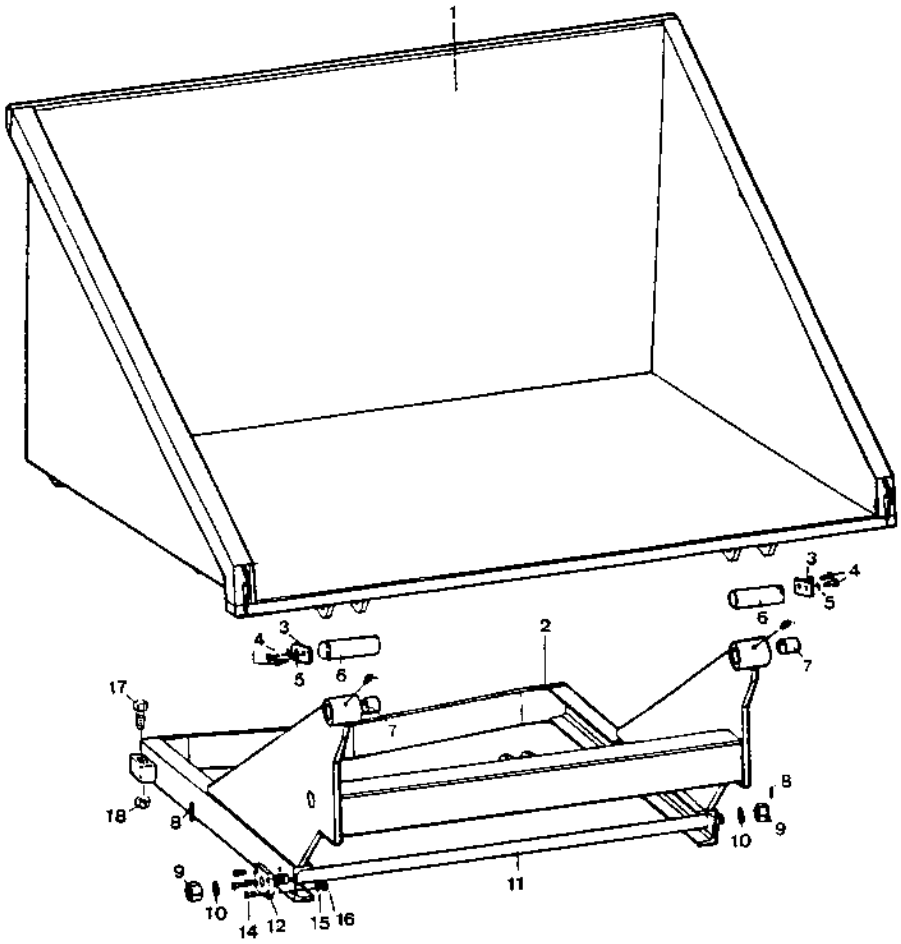

https://truckmanualshub.com/

Implementos funcionamiento máquina

Machine operation tools

Fijación tolva DA
Hopper and Mounting

Fig. Nº *Fig. Nº*	Referencia *Part Nº*	Cantidad *Quantity*
1	55.00143.00	1
2	08.00145.00	1
3	08.00140.00	1
4	08.00139.00	1
5	603.12030.86	2
6	105.12000.66	4
7	701.12000.66	2
8	08.00138.00	1
9	105.14000.66	2

Fig. Nº *Fig. Nº*	Referencia *Part Nº*	Cantidad *Quantity*
10	701.14000.66	2
11	901.08000.33	1
12	08.00144.01	1
13	604.12035.86	2
14	08.00141.00	2
15	55.00141.00	1
16	08.00150.01	(1)
17	604.12035.86	2

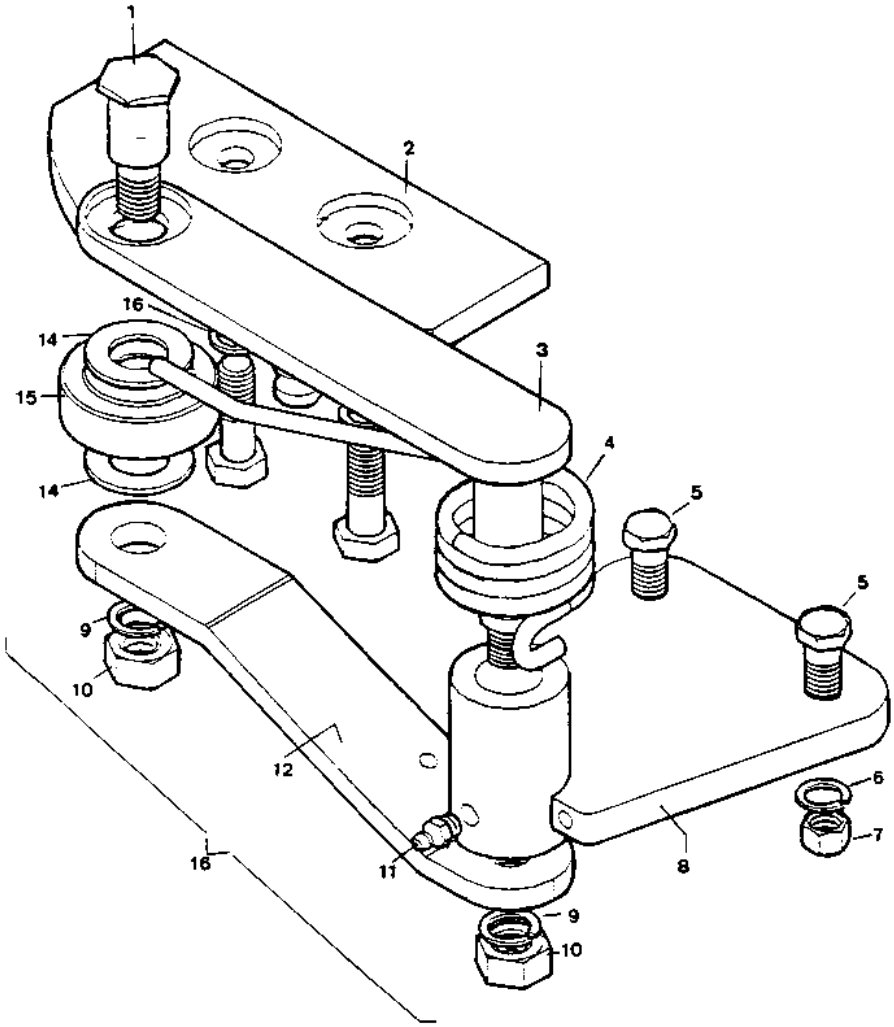

https://truckmanualshub.com/

Implementos funcionamiento máquina

Machine operation tools

Sop. giratorio, tolva, bastidor DG
Rotating Support, Hopper, Chassis

Fig. Nº *Fig. Nº*	Referencia *Part Nº*	Cantidad *Quantity*
1	08.00108.10	(1)
2	08.00527.00	4
3	09.00135.00	2
4	603.06015.86	4
5	105.06000.66	4
6	15.00832.00	2
7	08.00716.60	1

Fig. Nº *Fig. Nº*	Referencia *Part Nº*	Cantidad *Quantity*
8	08.00100.12	1
9	08.00705.52	1
10	603.16060.86	6
11	105.16000.66	6
12	701.16000.86	6
13	901.08000.33	2

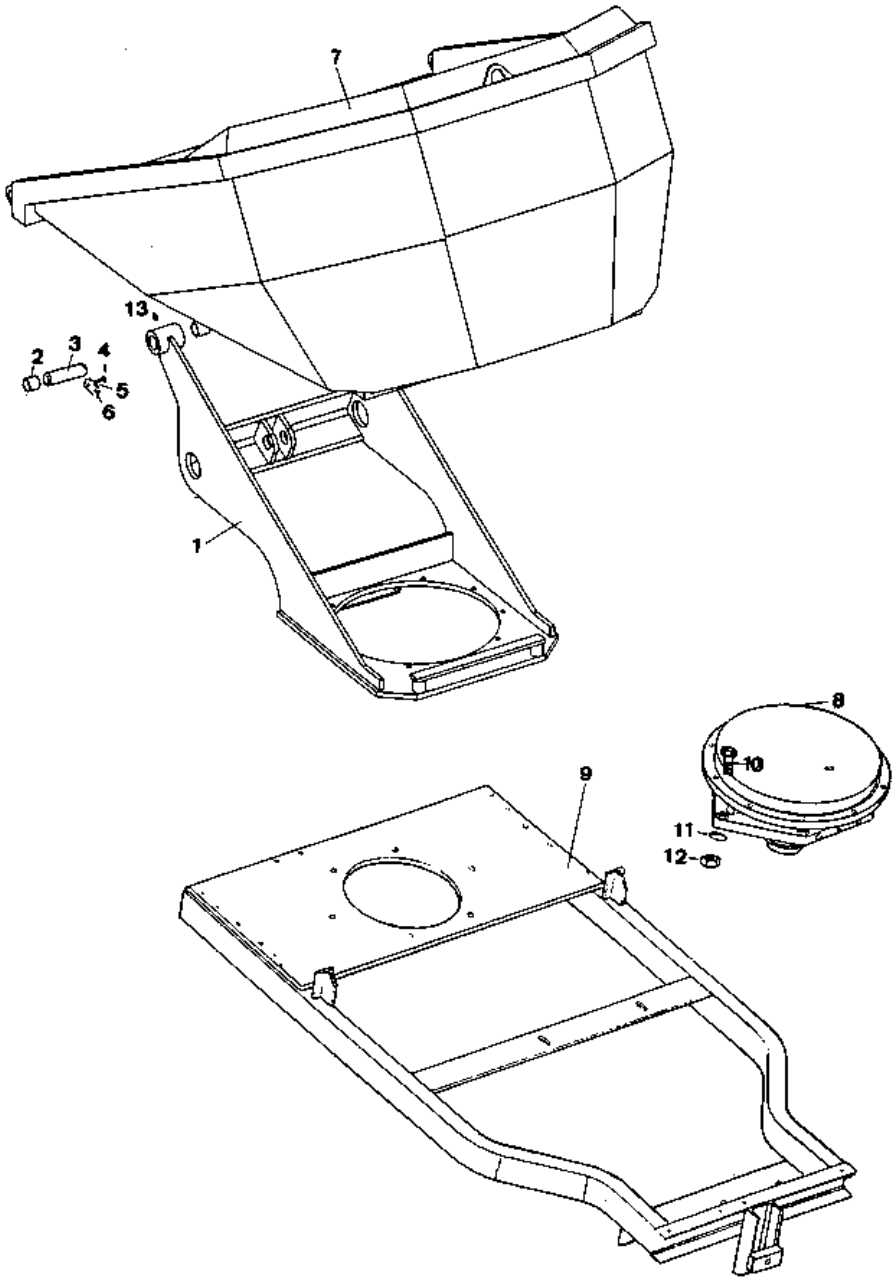

https://truckmanualshub.com/

Implementos funcionamiento máquina

Machine operation tools

Instalación cuchara DF
Liddle installation

Fig. Nº *Fig. Nº*	Referencia *Part Nº*	Cantidad *Quantity*
1	09.10140.00	(1)
2	09.10130.02	1
3	09.10137.01	1
4	09.10110.24	(1)
5	09.10110.05	1
6	09.10102.00	1
7	603.10020.86	1
8	603.14030.86	4
9	901.08000.33	1
10	603.14045.96	4
11	09.10115.01	1

Fig. Nº *Fig. Nº*	Referencia *Part Nº*	Cantidad *Quantity*
12	101.14000.66	3
13	711.14000.66	3
14	603.14050.96	3
15	09.10555.00	2
15	09.10555.02	var.
16	601.08035.86	4
17	101.27000.66	1
18	720.27000.66	1
19	08.00527.00	4
20	09.10302.00	1
21	901.08000.33	1

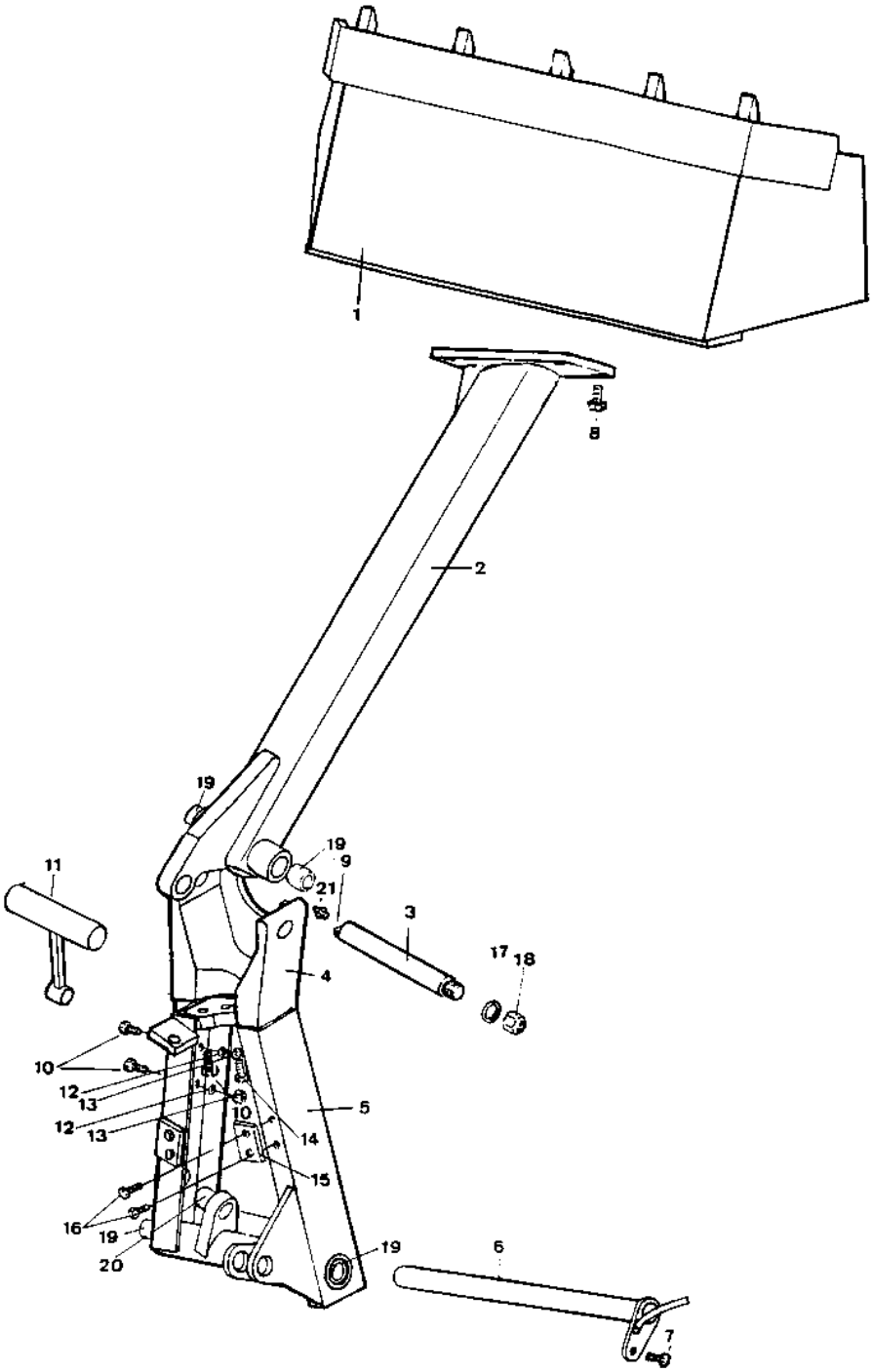

https://truckmanualshub.com/

Instalación hidráulica

Hydraulic circuit

Depósito aceite
Oil tank

Fig. Nº *Fig. Nº*	Referencia *Part Nº*	Cantidad *Quantity*
1	02.09240.02	(1)
2	02.00924.02	1
3	603.08025.86	2
4	09.00630.61	1
5	201.75003.50	1
6	02.01432.01	1
7	105.06000.66	6
8	603.06015.86	6
9	603.08020.86	4

Fig. Nº *Fig. Nº*	Referencia *Part Nº*	Cantidad *Quantity*
10	105.08000.66	4
11	09.00631.61	1
12	701.08000.66	4
13	02.01433.00	1
14	45.01423.00	1
15	08.00316.00	1
16	912.09000.66	1
17	15.10750.08	1

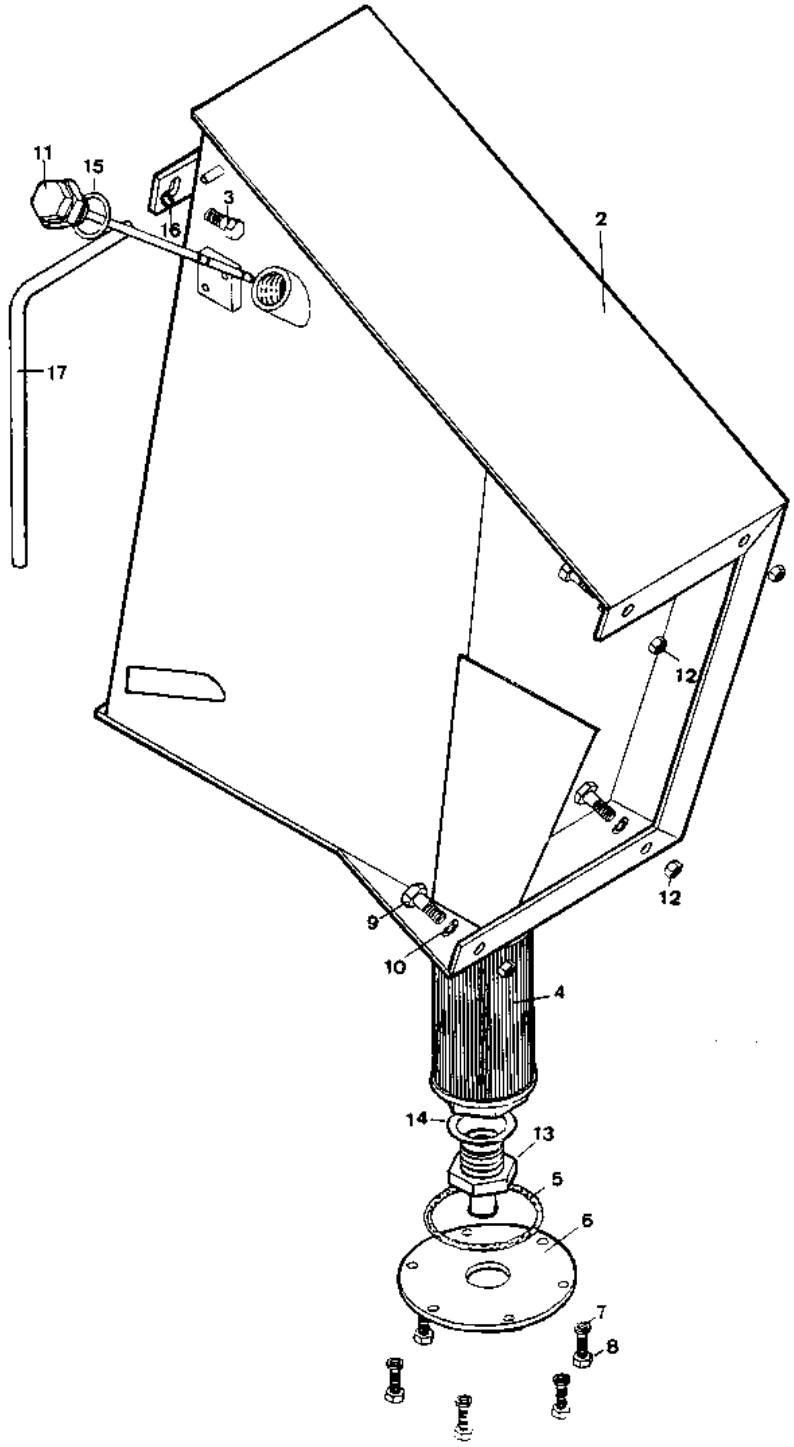

https://truckmanualshub.com/

Instalación hidráulica

Hydraulic circuit

Distribuidor y Bomba hidráulica
Distributor and Hydraulic pump

Fig. Nº *Fig. Nº*	Referencia *Part Nº*	Cantidad *Quantity*
1	81.03102.26	1
2	81.93101.16	1
3	52.01352.00	1
4	16.00110.01	1
5	604.10100.86	2
6	08.00330.00	1

Fig. Nº *Fig. Nº*	Referencia *Part Nº*	Cantidad *Quantity*
7	604.08060.86	2
8	711.08000.66	2
9	09.01451.00	2
10	60.01007.00	2
11	59.10738.00	2
12	03.11103.00	1

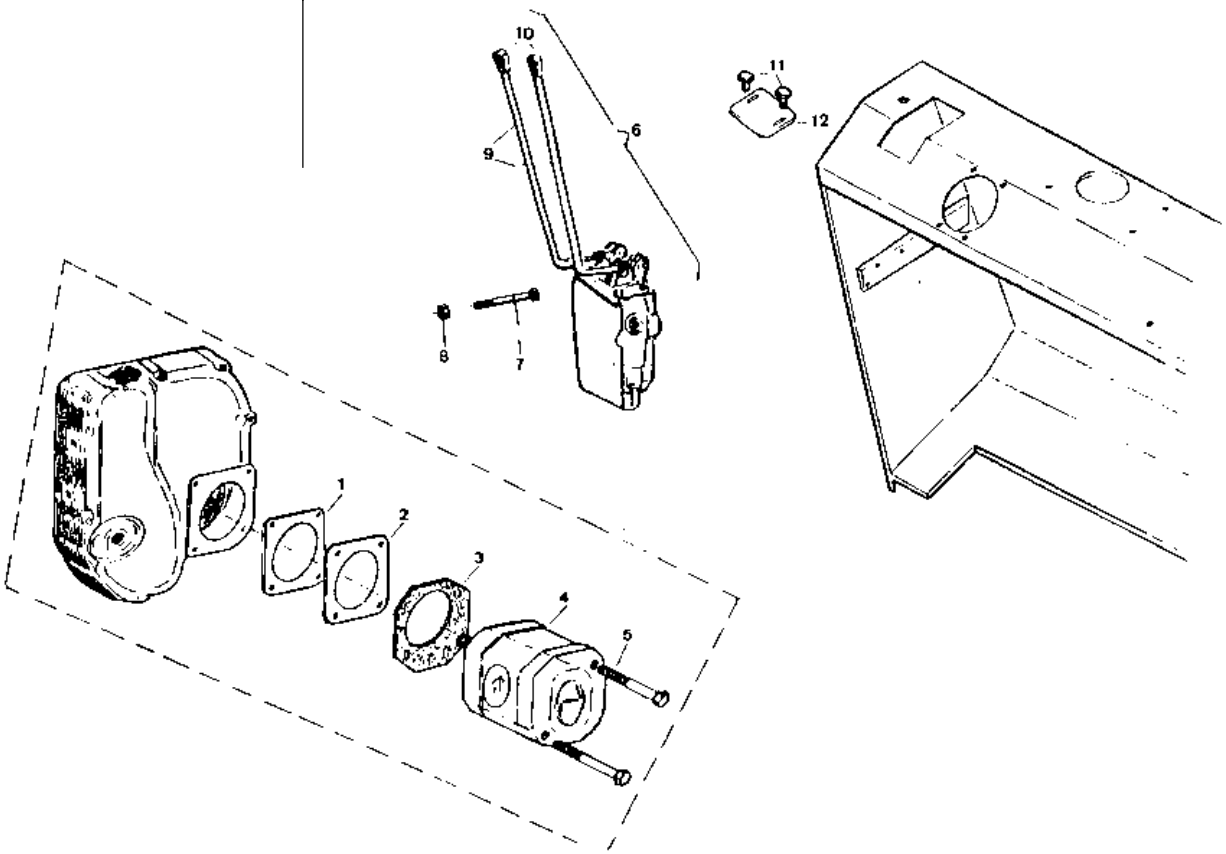

https://truckmanualshub.com/

Instalación hidráulica

Hydraulic circuit

Instalación hidráulica DG
Hydraulic installation

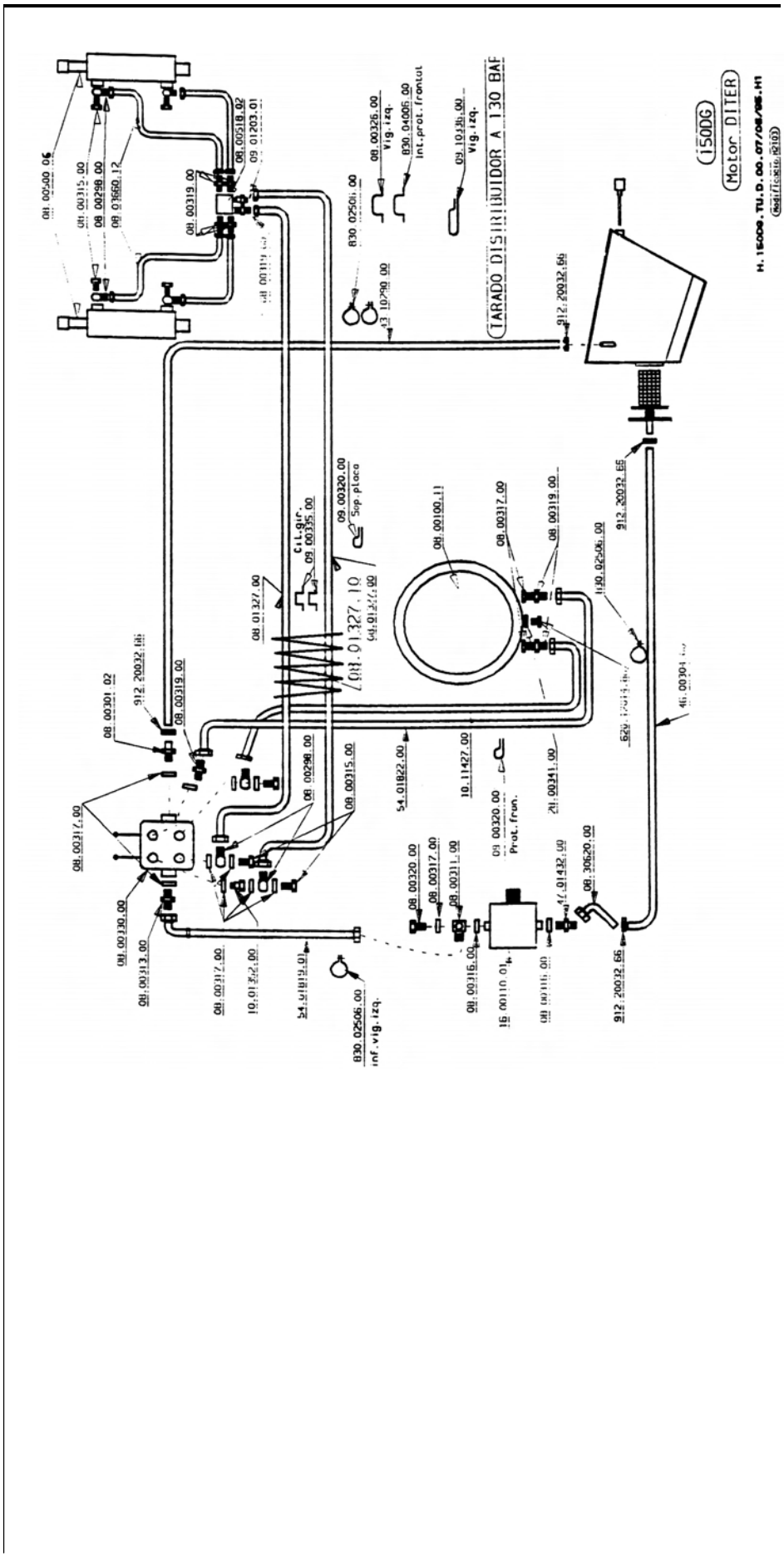

https://truckmanualshub.com/

Instalación hidráulica

Hydraulic circuit

Instalación hidráulica DG
Hydraulic installation

(dirección hidráulica “Plus”)
(hydraulic steering)

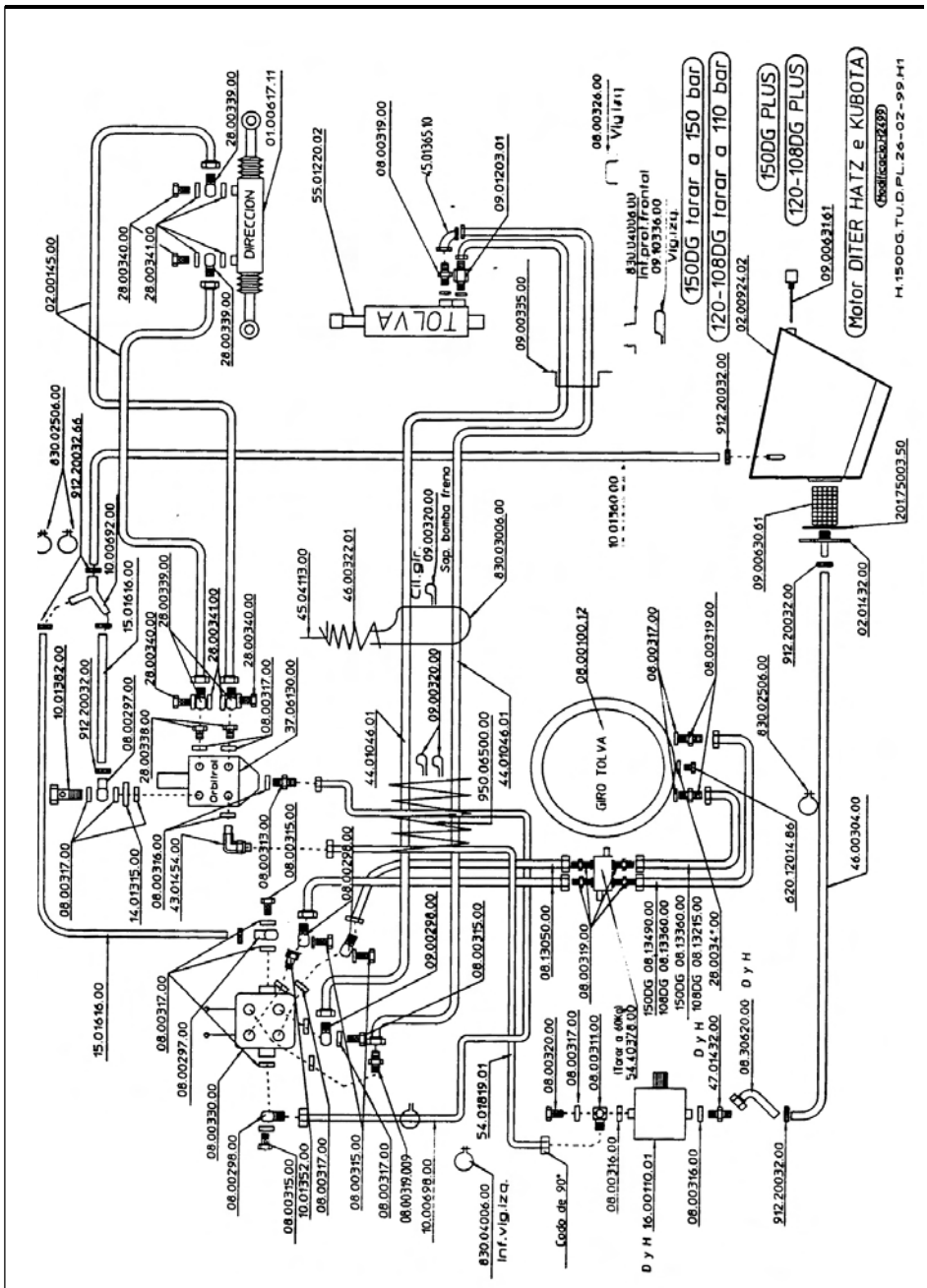

https://truckmanualshub.com/

Instalación hidráulica

Hydraulic circuit

Instalación hidráulica DA
Hydraulic installation

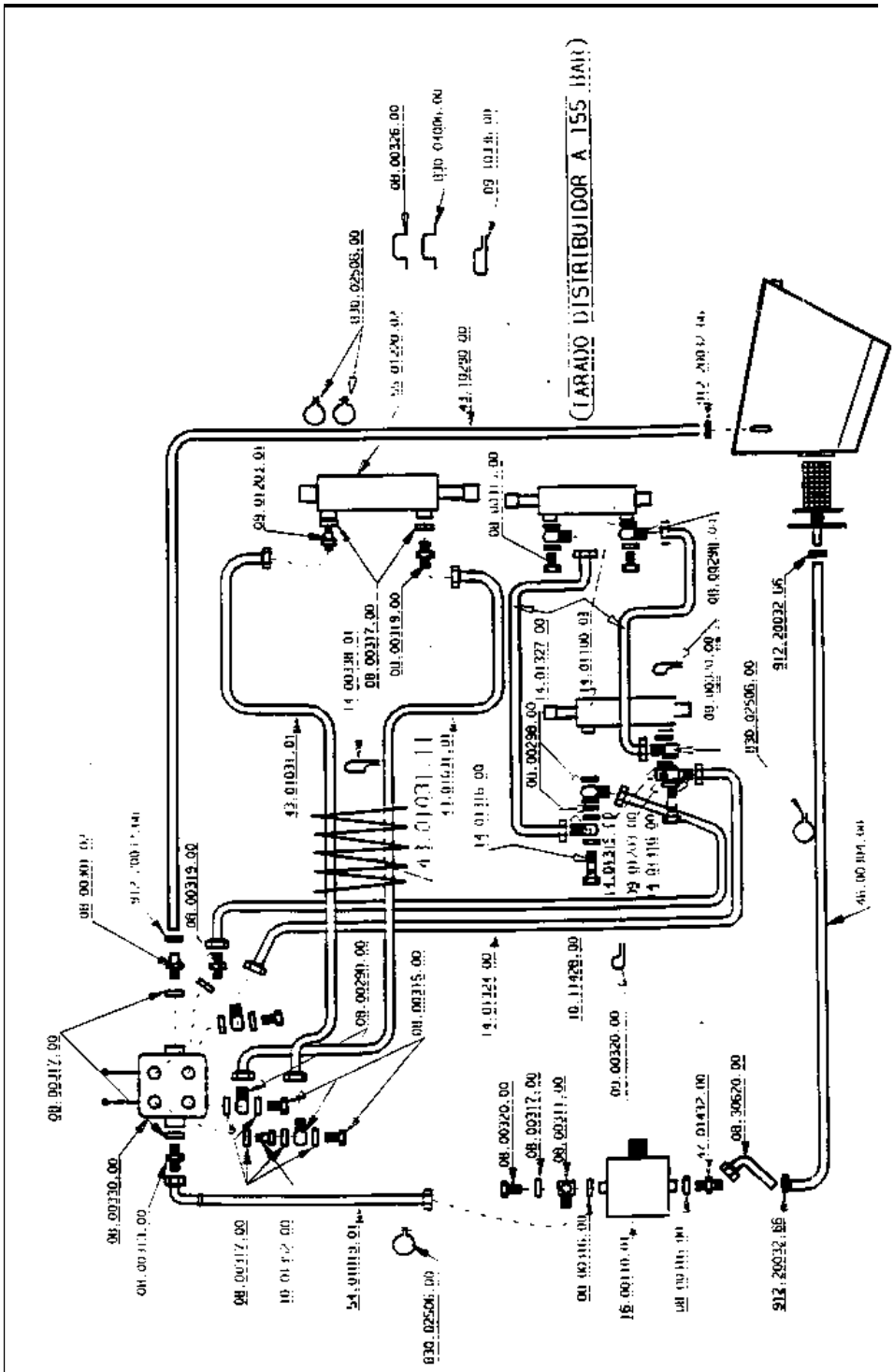

https://truckmanualshub.com/

Instalación hidráulica

Hydraulic circuit

Instalación hidráulica DA
Hydraulic installation

(dirección hidráulica “Plus”)
(hydraulic steering)

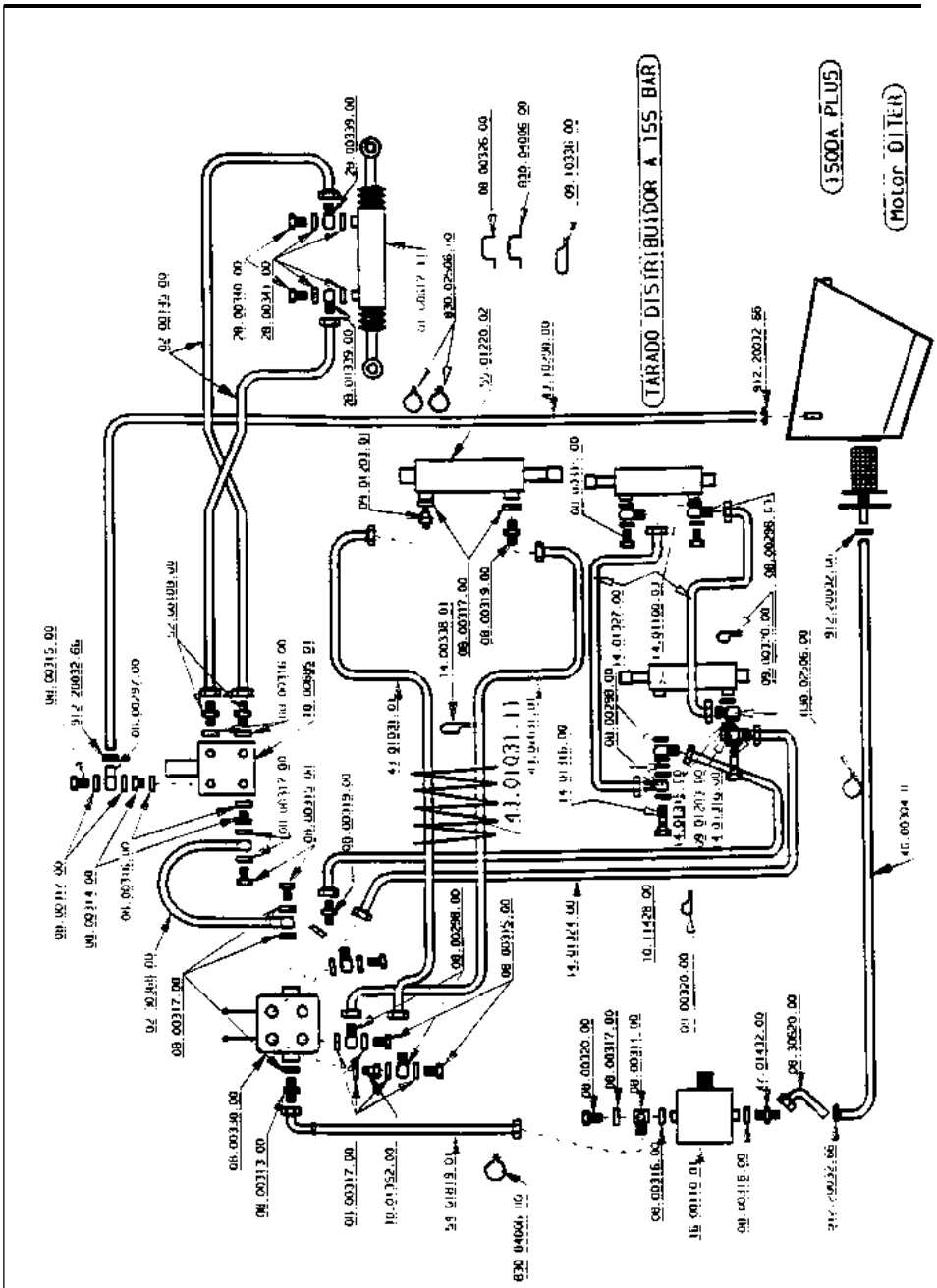

https://truckmanualshub.com/

Instalación hidráulica

Hydraulic circuit

Instalación hidráulica DF
Hydraulic installation

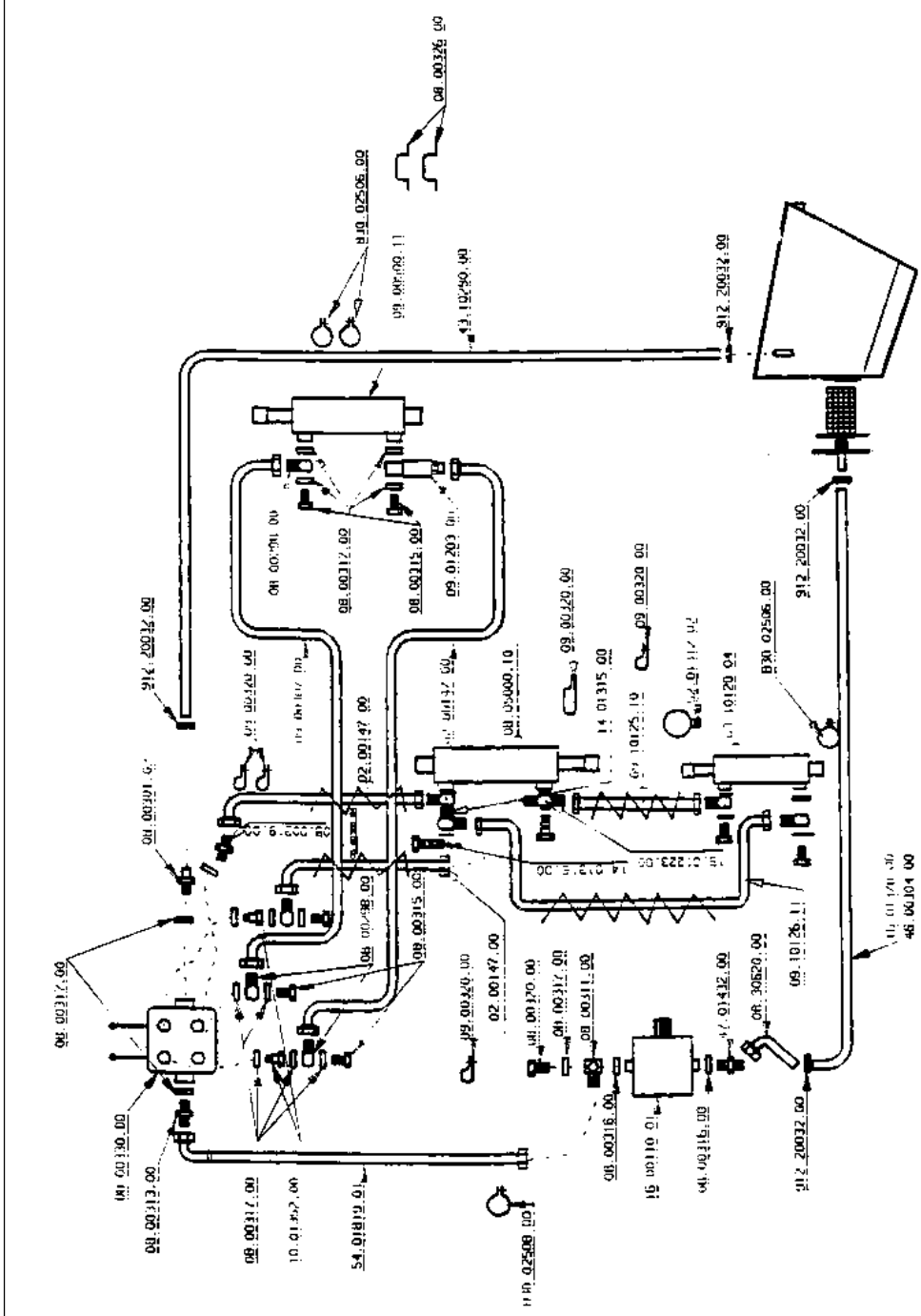

https://truckmanualshub.com/

Instalación hidráulica

Hydraulic circuit

Instalación hidráulica DF
Hydraulic installation

(dirección hidráulica “Plus”)
(hydraulic steering)

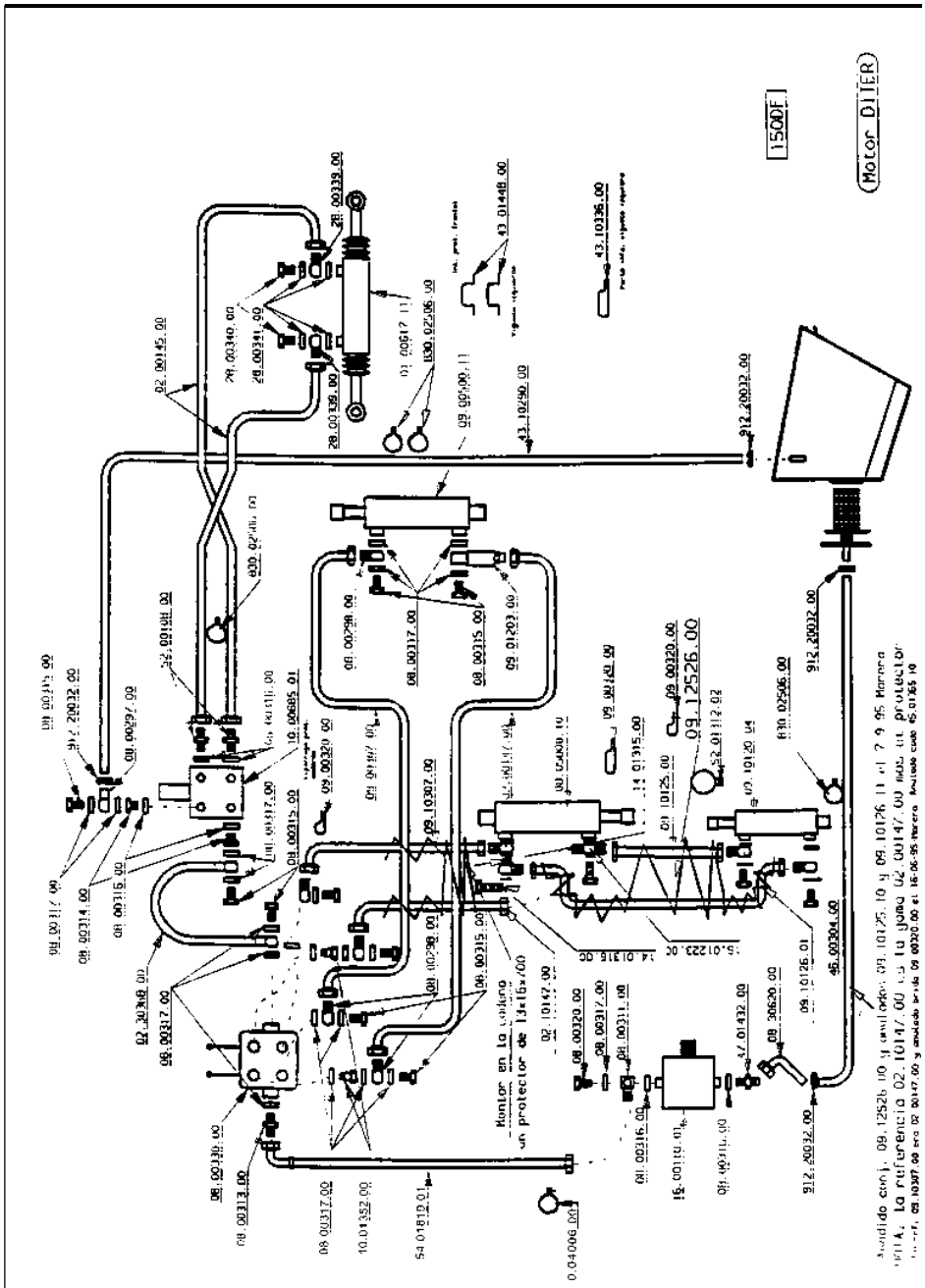

https://truckmanualshub.com/

Instalación eléctrica

Electric circuit

Faro giratorio
Rotating beacon

Fig. Nº *Fig. Nº*	Referencia *Part Nº*	Cantidad *Quantity*
1	01.00922.00	1
2	01.00923.00	1
3	601.06025.00	3
4	101.06000.66	3
5	711.06000.66	3

Fig. Nº *Fig. Nº*	Referencia *Part Nº*	Cantidad *Quantity*
6	01.00927.01	1
7	15.01230.00	1
7	21.00161.00	1
8	16.00760.00	1

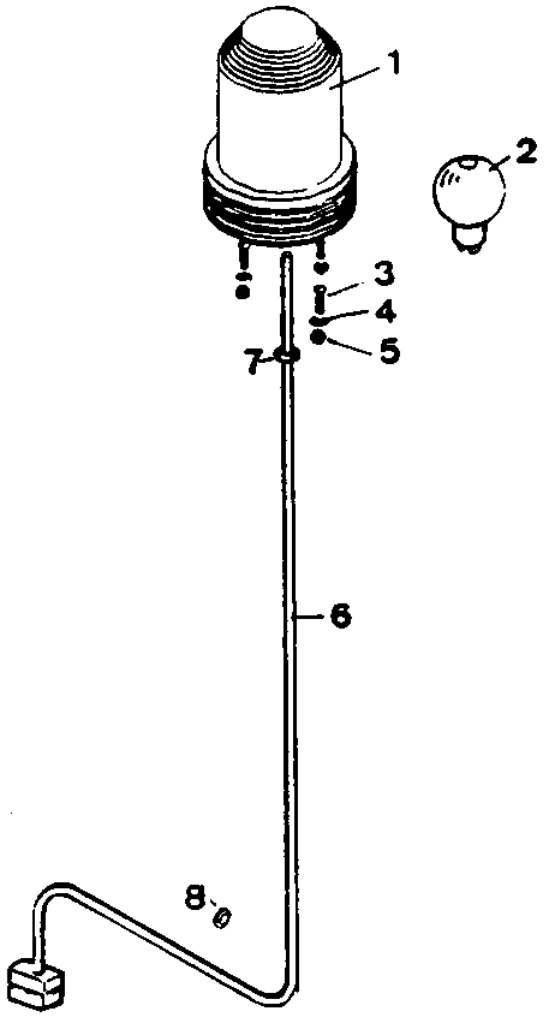

https://truckmanualshub.com/

Instalación eléctrica

Electric circuit

Instalación eléctrica arranque
Starting electrical installation

(Diter / Hatz)

Fig. Nº *Fig. Nº*	Referencia *Part Nº*	Cantidad *Quantity*
1	09.00080.03	(1)
1	09.00080.04	(1)
2	09.92200.03	(1)
2	40.92200.00	(1)
3	01.08440.10	1
3	40.08440.10	1
4	85.11800.09	1
4	85.11800.10	1
5	01.00798.00	1
6	15.00101.12	1
6	15.00101.13	1
7	16.01415.00	1
8	01.00881.00	1
9	01.01360.00	1
10	601.12025.86	2
11	01.00855.00	1
12	00.09034.00	1

Fig. Nº *Fig. Nº*	Referencia *Part Nº*	Cantidad *Quantity*
13	105.08000.66	2
14	601.08020.86	2
15	02.01926.01	1
16	00.09035.01	1
17	15.01443.00	1
18	01.00842.00	1
19	603.08015.86	1
20	43.10827.01	1
21	105.08000.66	1
22	701.08000.66	1
23	46.10002.00	1
24	02.02926.01	1
25	01.00844.99	1
26	02.00189.01	1
27	02.00189.00	1
28	85.11800.23	1
29	83.00840.05	1

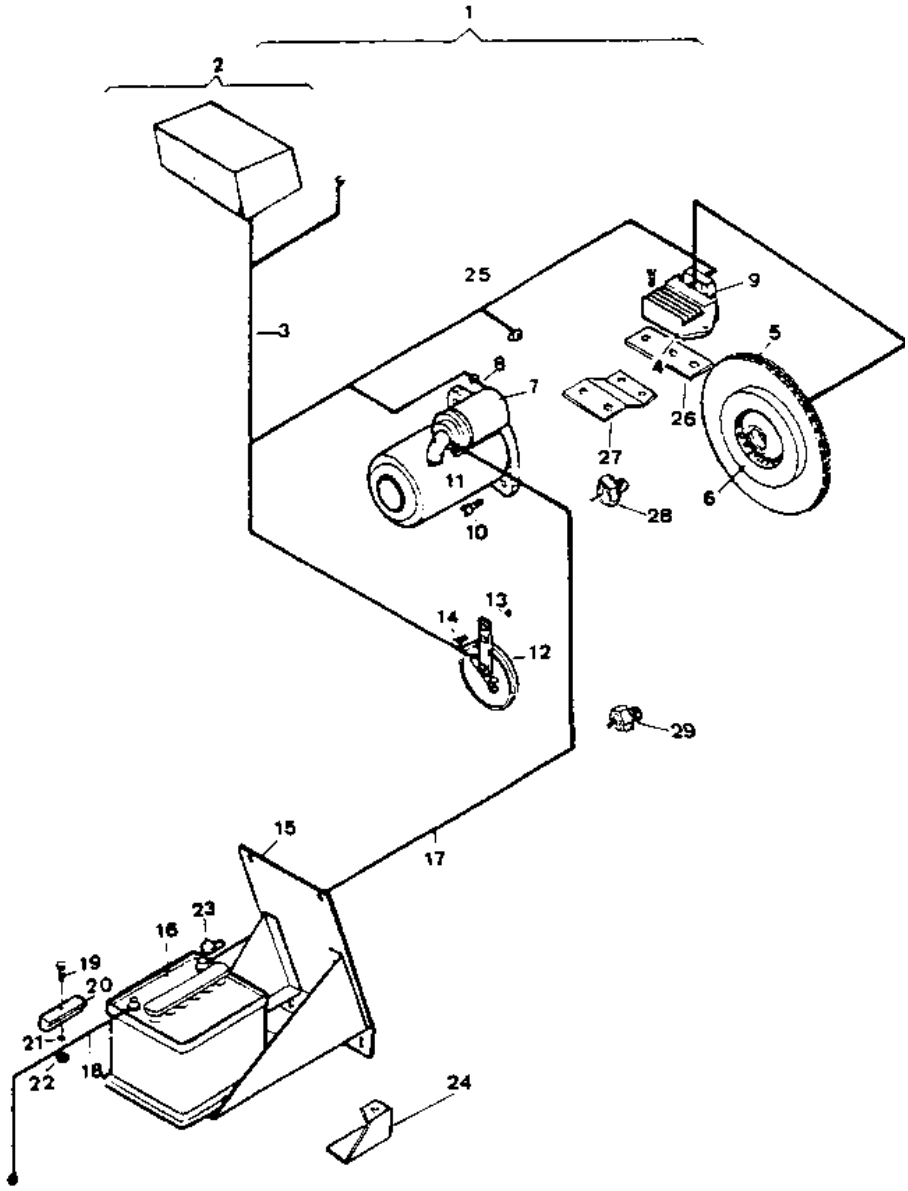

https://truckmanualshub.com/

Instalación eléctrica

Electric circuit

Tablier arranque
Starting panel

(Diter / Hatz)

Fig. Nº *Fig. Nº*	Referencia *Part Nº*	Cantidad *Quantity*
1	09.92200.03	(1)
1	40.92200.00	(1)
2	09.09220.03	(1)
2	40.09220.00	(1)
3	09.00923.03	1
4	01.00928.00	1
5	43.50030.00	1
6	603.06015.96	4
7	01.00796.00	1
8	43.50024.01	1
9	43.50025.00	1

Fig. Nº *Fig. Nº*	Referencia *Part Nº*	Cantidad *Quantity*
10	46.50029.00	1
10	46.50029.01	1
11	09.50020.00	1
11	09.50020.01	1
12	01.00823.03	1
13	01.00844.12	1
13	01.00844.14	1
14	09.00922.03	1
15	43.50022.01	1
15	43.50022.02	1
16	58.15340.00	1

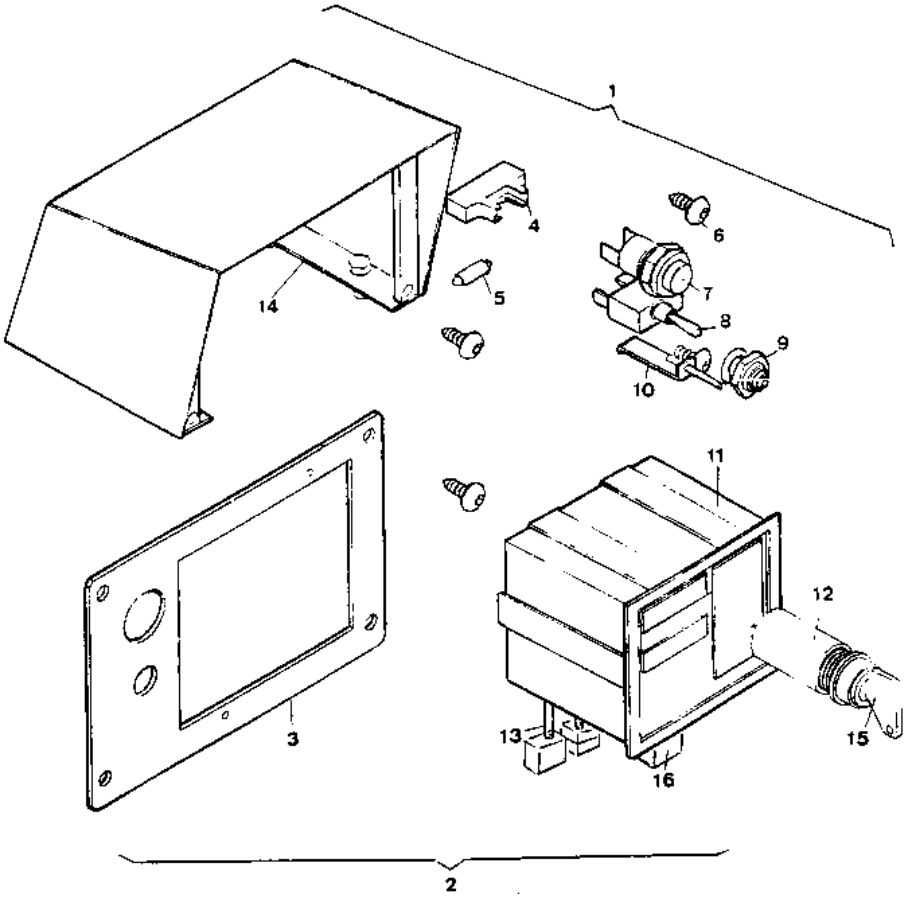

https://truckmanualshub.com/

Instalación eléctrica

Electric circuit

Instalación eléctrica alumbrado
Lighting electrical installation

(Diter)

Fig. Nº *Fig. Nº*	Referencia *Part Nº*	Cantidad *Quantity*
1	09.92310.01	(1)
2	46.01324.00	1
3	46.10755.00	1
4	46.10754.00	1
5	54.01327.00	2
6	16.01449.12	1
7	16.01449.13	1
8	01.00855.00	1
9	85.11800.09	1
9	85.11800.10	1
10	16.01415.00	1
11	01.00881.00	1
12	15.00101.12	1
12	15.00101.13	1
13	01.00798.00	1
14	15.01443.00	1
15	37.01242.12	1
16	01.08440.10	1
17	02.01223.00	1
18	43.10623.00	1
19	46.10002.00	1
20	00.09035.01	1
21	45.01525.00	1
22	603.06015.86	2
23	09.00328.00	1

Fig. Nº *Fig. Nº*	Referencia *Part Nº*	Cantidad *Quantity*
24	701.06000.66	2
25	01.00842.00	1
26	02.01926.01	1
27	603.06030.86	1
28	43.10827.01	1
29	105.06000.66	1
30	701.06000.66	1
35	112.08000.66	4
36	00.09032.10	1
37	00.09032.11	1
38	02.02926.01	1
39	603.08020.86	1
40	105.08000.66	1
41	701.08000.66	1
42	31.01331.00	2
43	31.01329.00	2
44	09.00081.06	(1)
44	09.00081.07	(1)
45	02.00189.01	1
46	02.00189.00	1
47	85.11800.23	1
48	83.00840.05	1
49	709.14000.66	1
50	08.11180.03	1
51	08.11180.02	1

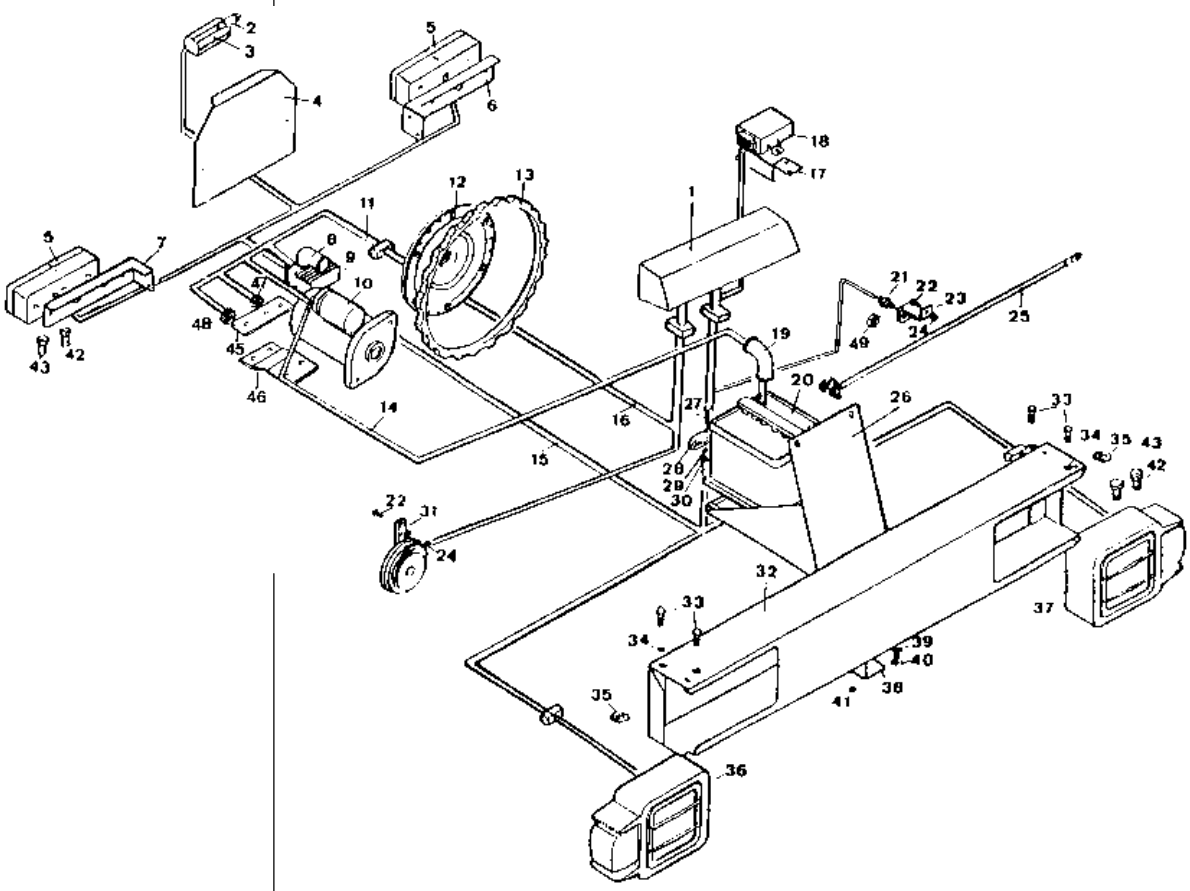

https://truckmanualshub.com/

Instalación eléctrica

Electric circuit

Tablier alumbrado “Plus”
Lighting panel

(Diter)

Fig. Nº *Fig. Nº*	Referencia *Part Nº*	Cantidad *Quantity*
1A	09.92310.00	(1)
1B	09.09231.01	1
1	09.00922.05	1
2	09.00923.04	1
3	46.50028.00	2
4	09.50024.00	1
5	09.50026.00	1
6	01.00823.03	1
7	43.50022.01	1
7	43.50022.02	1
8	09.50022.00	1

Fig. Nº *Fig. Nº*	Referencia *Part Nº*	Cantidad *Quantity*
9	630.06015.96	6
10	46.50029.00	3
10	46.50029.01	1
11	43.50024.01	1
12	43.50032.00	11
13	01.00872.00	1
14	43.50025.00	1
15	09.70034.00	1
16	43.50023.00	1
17	43.50026.00	1
18	01.00844.13	1

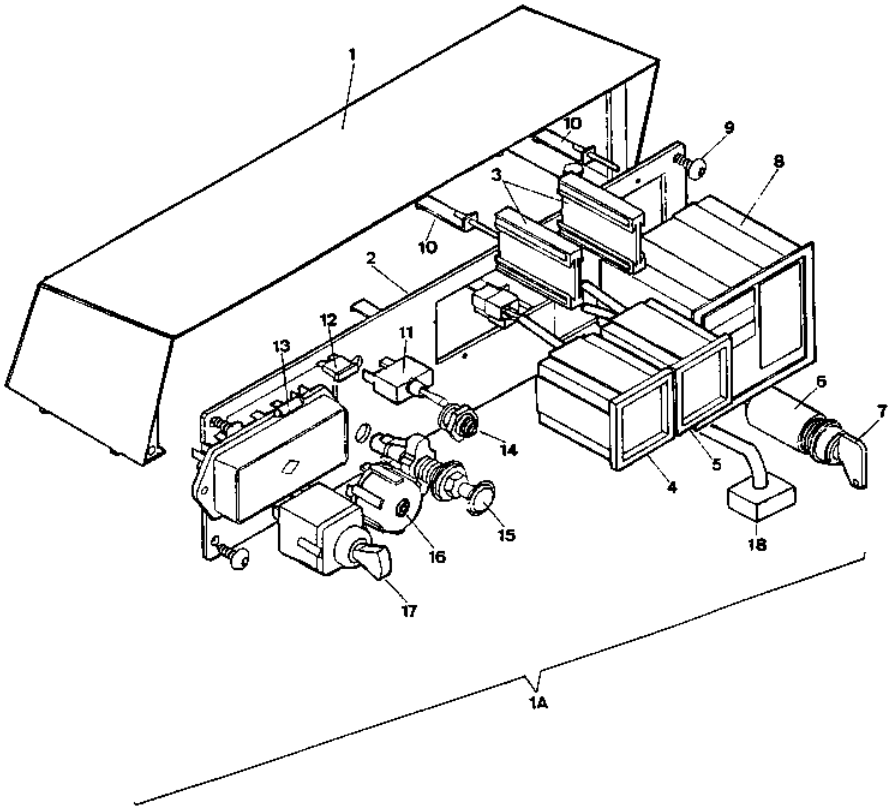

https://truckmanualshub.com/

Instalación eléctrica

Electric circuit

Inst. eléctrica arranque “Plus”
Starting electrical installation

(Kubota)

Fig. Nº *Fig. Nº*	Referencia *Part Nº*	Cantidad *Quantity*
1	09.92400.00	(1)
2	43.10621.00	1
3	86.00100.05	1
4	86.00100.08	1
5	86.00100.01	1
6	09.01501.00	1
7	603.08025.86	1
8	603.08025.86	2
9	86.00100.04	1
10	86.00100.09	1
11	86.00100.06	1
12	603.08015.86	1
13	43.10827.01	1

Fig. Nº *Fig. Nº*	Referencia *Part Nº*	Cantidad *Quantity*
14	01.00841.02	1
15	00.09035.01	1
16	46.10002.01	1
17	86.00100.07	1
18	15.01444.00	1
19	60.24046.10	1
20	45.04113.00	1
21	603.05015.86	1
22	603.08020.86	1
23	02.01926.01	1
24	701.08000.66	1
25	810.00000.00	1

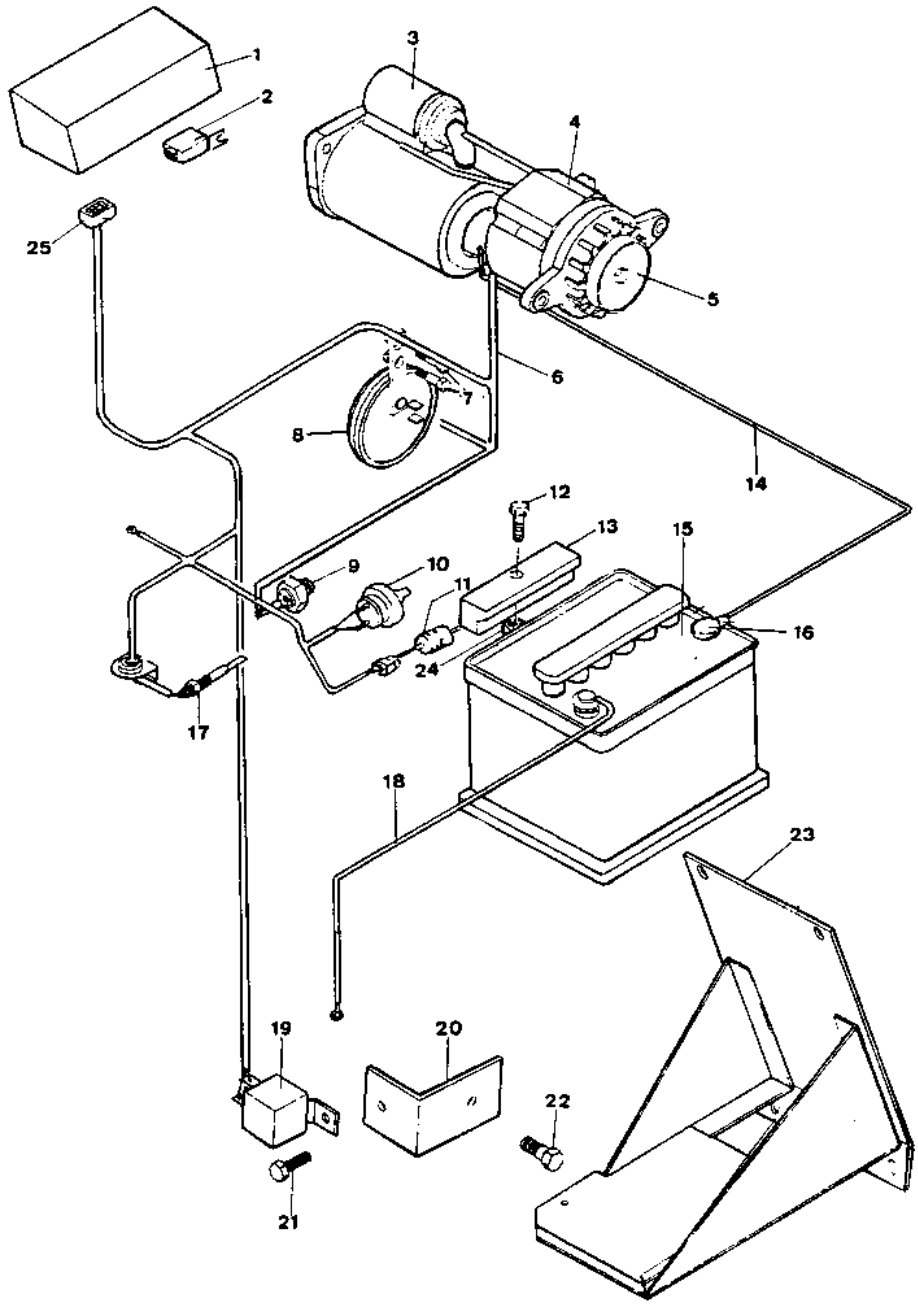

https://truckmanualshub.com/

Instalación eléctrica

Electric circuit

Tablier arranque “Plus”
Starting panel

(Kubota)

Fig. Nº *Fig. Nº*	Referencia *Part Nº*	Cantidad *Quantity*
1	09.92400.00	(1)
2	09.00922.01	1
3	630.06015.96	4
4	09.09240.00	(1)
5	01.00796.00	1
6	01.00823.03	1
7	43.50022.01	1
8	43.50032.00	11
9	43.50024.01	1

Fig. Nº *Fig. Nº*	Referencia *Part Nº*	Cantidad *Quantity*
10	43.50025.00	1
11	46.50024.01	1
12	43.50057.02	1
13	46.50028.00	1
14	01.00877.00	1
15	46.50029.00	2
16	09.00940.00	1
17	09.01242.00	1

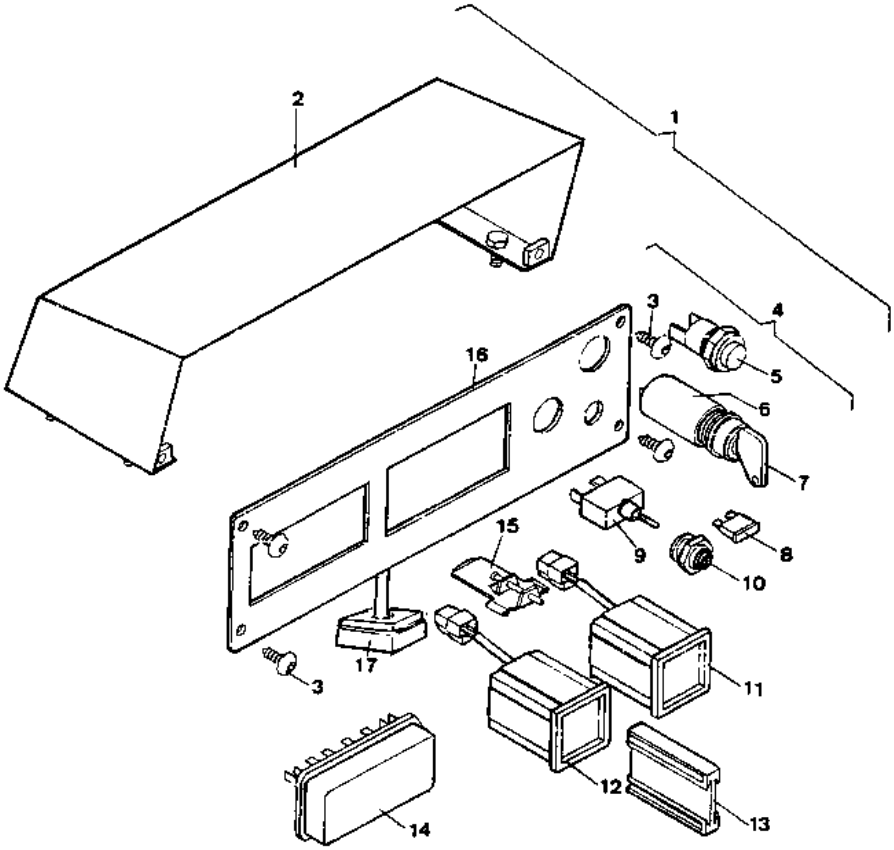

https://truckmanualshub.com/

Instalación eléctrica

Electric circuit

Instalación eléctrica alumbrado
Lighting electrical installation

(Kubota)

Fig. Nº *Fig. Nº*	Referencia *Part Nº*	Cantidad *Quantity*
1	09.92500.00	(1)
2	16.01449.12	1
3	54.01327.00	2
4	16.01449.13	1
5	46.10754.00	1
6	46.10755.00	1
7	46.01324.00	1
8	37.01242.12	1
9	43.10621.00	1
10	02.01223.00	1
11	603.06015.86	2
12	00.09034.00	1
13	701.06000.66	1
14	37.01501.02	1
15	01.00809.00	1
16	09.00328.00	1
17	603.10020.86	4
18	15.01444.00	1
19	105.10000.66	4
20	112.08000.66	4
21	14.11430.00	1
22	31.01329.00	2
23	31.01331.00	2

Fig. Nº *Fig. Nº*	Referencia *Part Nº*	Cantidad *Quantity*
24	00.09032.11	1
25	00.09032.10	1
26	603.08020.86	1
27	02.02926.01	1
28	701.08000.66	1
29	02.01926.01	1
30	00.09035.01	1
31	701.06000.66	1
32	43.10827.01	1
33	603.06030.86	1
34	01.00841.02	1
35	86.00100.09	1
36	86.00100.04	1
37	86.00100.07	1
38	86.00100.06	1
39	60.24046.10	1
40	86.00100.08	1
41	86.00100.05	1
42	45.04113.00	1
43	603.05015.86	1
44	709.14000.66	1
45	08.11180.03	1
46	08.11180.02	1

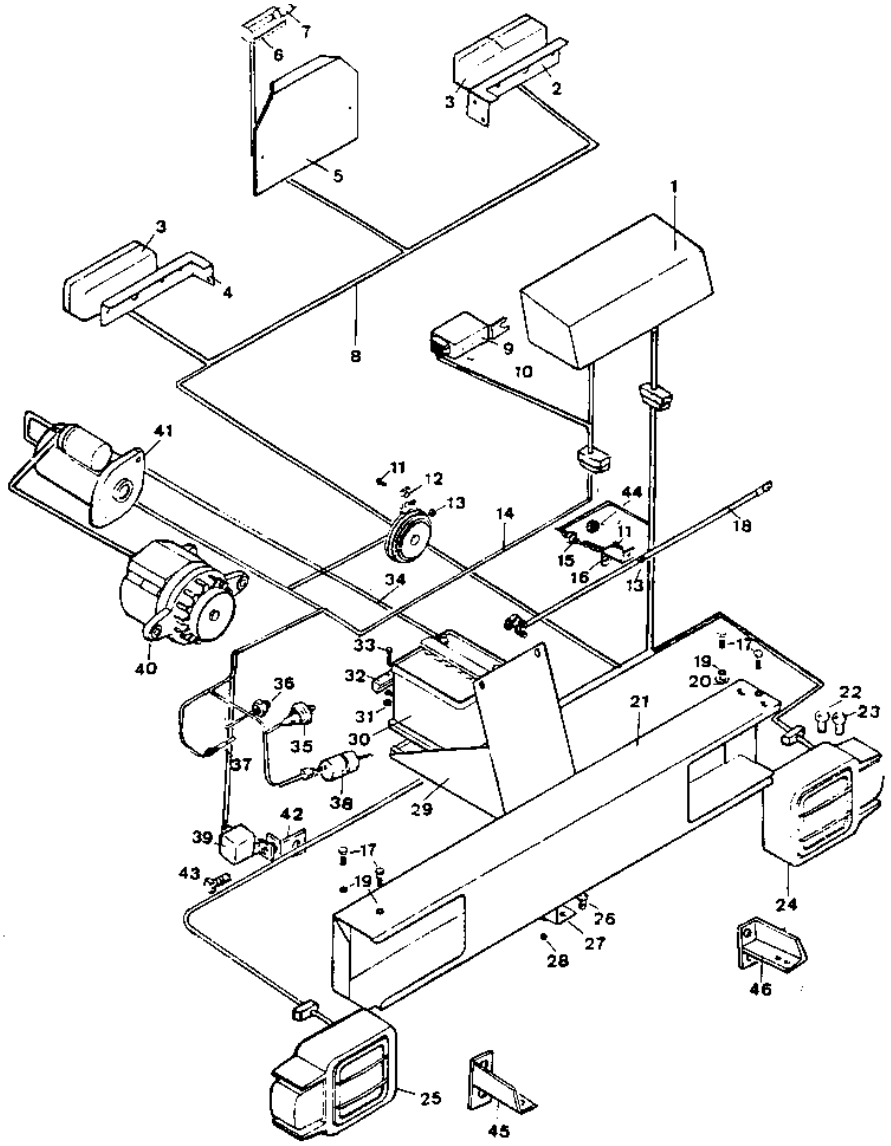

https://truckmanualshub.com/

Instalación eléctrica

Electric circuit

Tablier alumbrado Plus
Lighting panel

(Kubota)

Fig. Nº *Fig. Nº*	Referencia *Part Nº*	Cantidad *Quantity*
1	09.92500.00	(1)
2	09.00922.00	1
3	630.06015.96	4
4	09.09250.00	(1)
5	09.00925.00	1
6	09.70034.00	1
7	43.50032.00	9
8	46.50029.00	3
9	01.00823.03	1
10	43.50022.01	1

Fig. Nº *Fig. Nº*	Referencia *Part Nº*	Cantidad *Quantity*
11	46.50024.01	1
12	43.50057.02	1
13	46.50026.00	1
14	43.50025.00	1
15	43.50024.01	1
16	43.50026.00	1
17	43.50023.00	1
18	01.00877.00	1
19	46.50028.00	2
20	09.01243.00	1

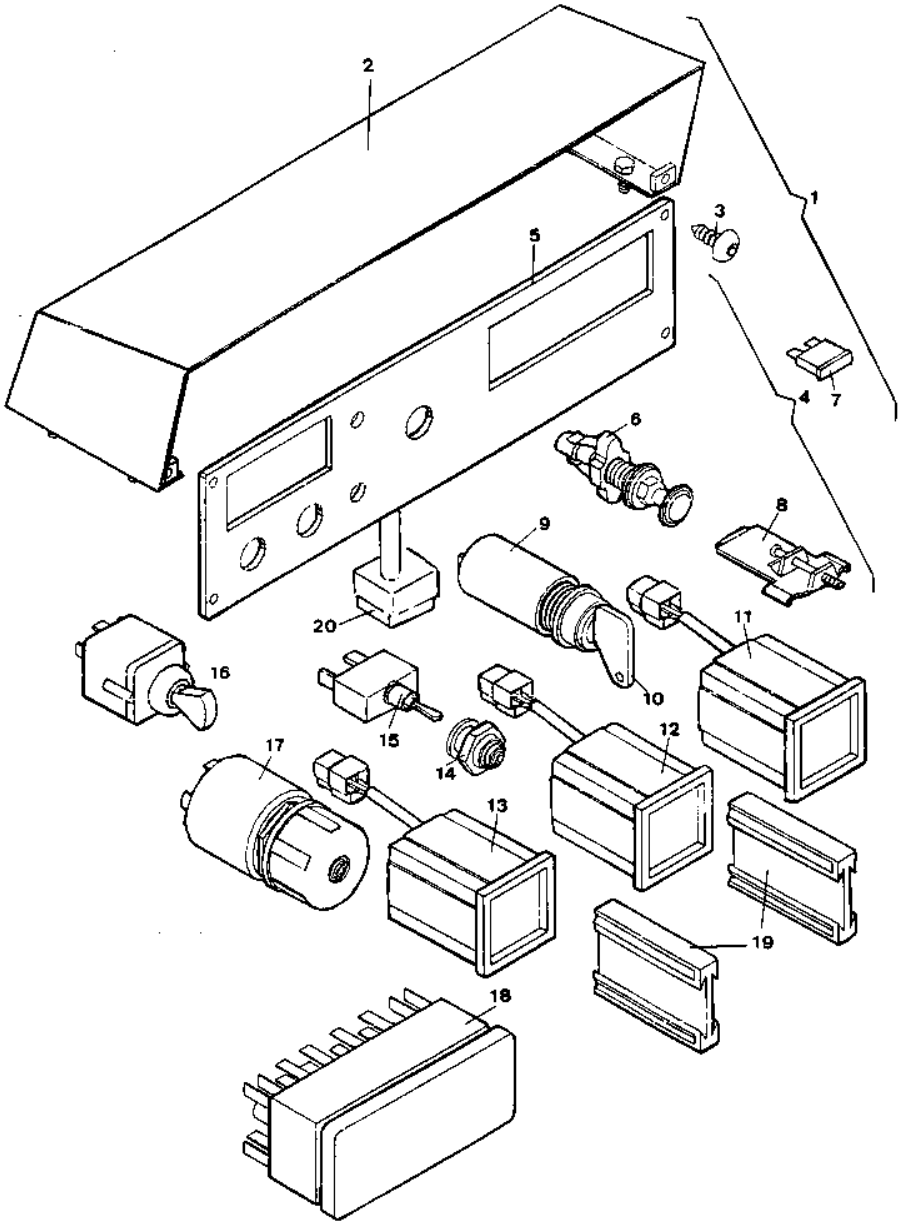

https://truckmanualshub.com/

Acabados
Finishing

Protector tablier
Panel protector

Fig. Nº *Fig. Nº*	Referencia *Part Nº*	Cantidad *Quantity*
Tablier con mando luces		
1	60.01454.00	1
2	711.06000.66	1
3	60.01453.00	1
Tablier mando arranque		
4	60.01454.01	1
5	711.06000.66	1
6	60.01453.00	1

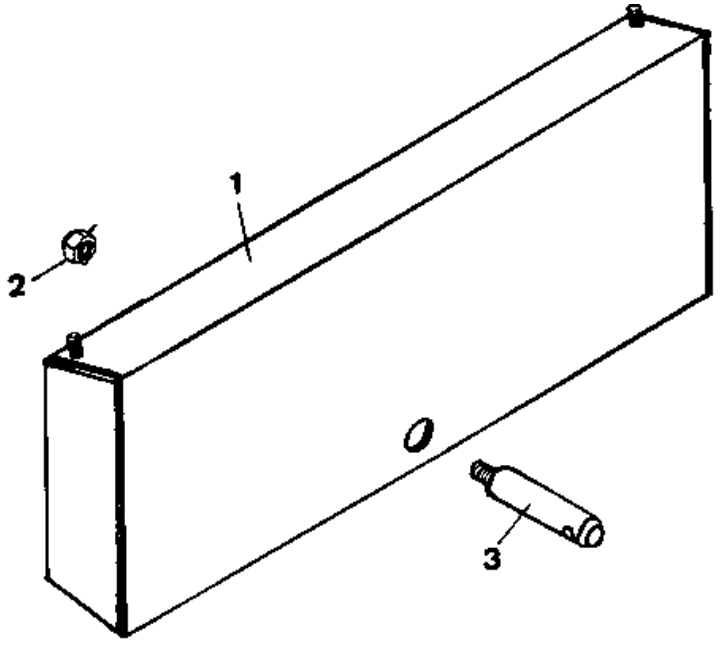

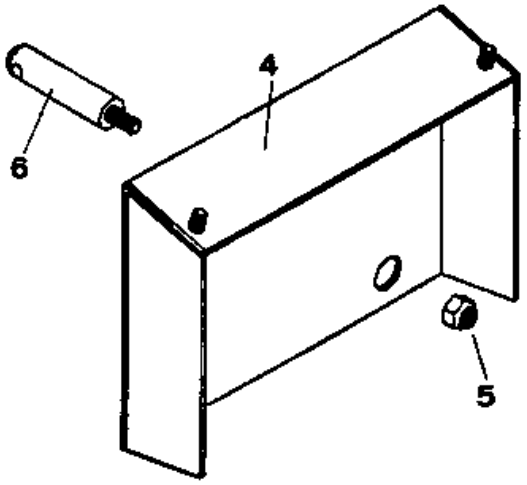

https://truckmanualshub.com/

Acabados
Finishing

Placas
Plates

Fig. Nº *Fig. Nº*	Referencia *Part Nº*	Cantidad *Quantity*
1	14.20000.00	1
2	08.20000.00	1
3	02.20002.00	2
4	09.00769.00	1
5	43.01170.00	1
6	43.01352.10	10
7	01.01354.00	1
8	01.00779.21	1
9	01.01355.01	1
10	01.01355.07	1
11	14.01351.02	2
12	09.01351.00	2
13	14.00775.01	2
13	14.00775.00	2
13	14.00775.02	2
13	14.00775.03	2
14	01.00757.00	1
15	01.01357.00	1
16	39.09901.00	1
17	43.01356.00	2
18	01.01358.00	1
19	01.00788.03	1

Fig. Nº *Fig. Nº*	Referencia *Part Nº*	Cantidad *Quantity*
19	01.00788.04	1
19	01.00788.05	1
21	08.00921.00	1
22	08.01232.00	1
23	09.09902.00	1
24	14.00770.00	1
25	01.13570.00	1
26	02.00773.01	1
27	46.00825.00	1
28	08.01351.00	1
29	09.09902.00	2
30	09.10155.00	1
31	45.19101.00	1
32	01.01353.00	1
33	02.00774.00	1
34	02.00777.00	1
35	02.00778.00	1
36	02.00779.01	1
37	01.00779.21	1
38	15.01525.00	1
39	39.08242.00	1
40	39.08242.00	1

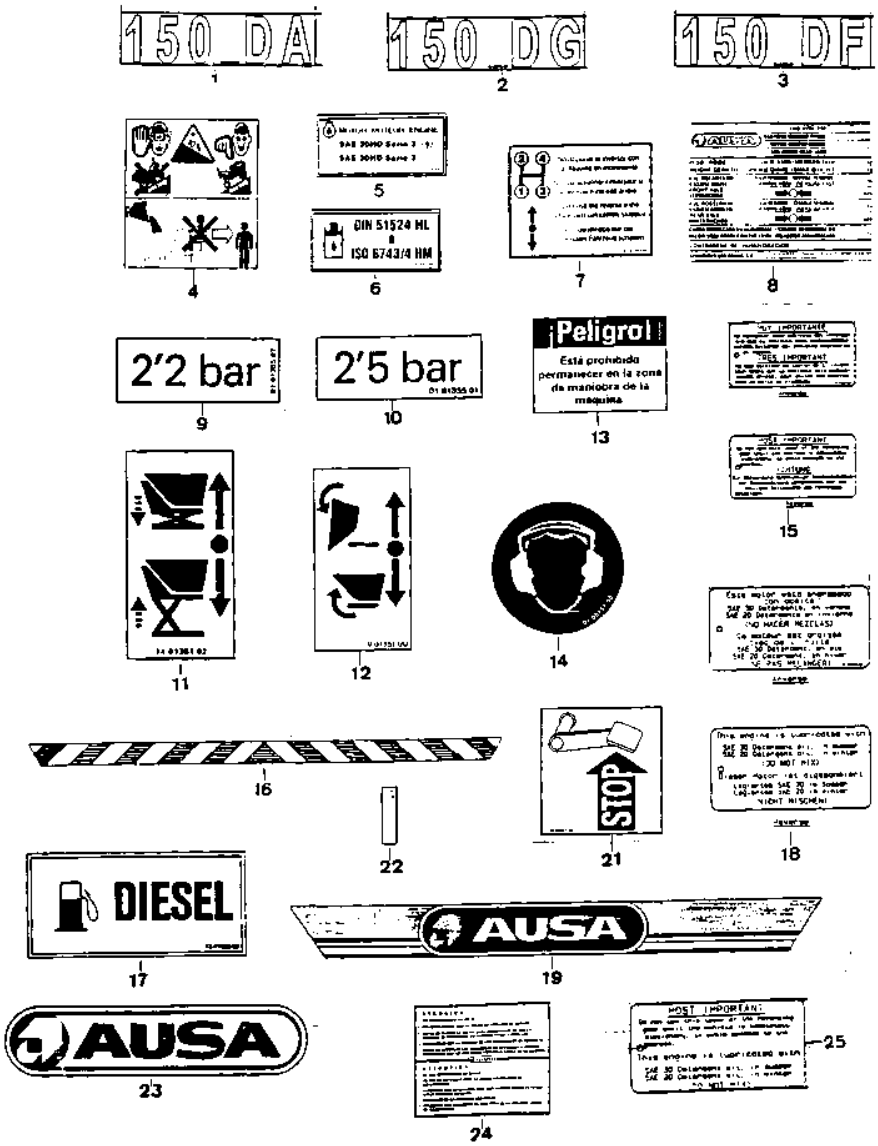

https://truckmanualshub.com/

Acabados
Finishing

Placas
Plates

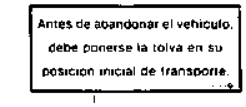

26

27

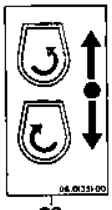

28

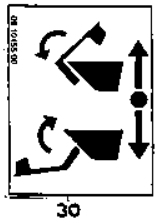

30

29

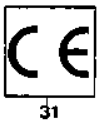

31

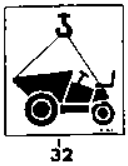

32

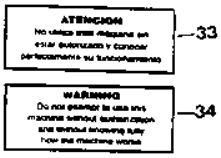

33

34

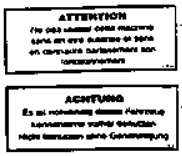

35

36

37

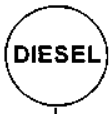

38

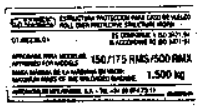

39

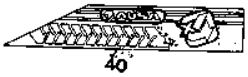

40

https://truckmanualshub.com/

Transmisión 4X4
4x4 Transmission

Puente directriz
Axle transmission

Fig. Nº *Fig. Nº*	Referencia *Part Nº*	Cantidad *Quantity*
1	39.10606.01	1
2	39.10616.00	2
3	52.00365.00	1
4	39.10605.00	1
5	223.02047.66	4
6	39.10614.00	8
7	901.08000.33	4
8	601.08020.86	8
9	39.10641.00	4
9	39.10641.01	4
10	307.20015.00	4
11	39.10602.00	2
12	403.06020.00	4

Fig. Nº *Fig. Nº*	Referencia *Part Nº*	Cantidad *Quantity*
13	39.10601.00	2
14	603.08030.86	14
15	201.14602.50	1
16	601.08040.86	8
17	403.10035.00	2
18	39.10625.00	1
19	603.10025.96	12
20	10.00921.00	1
21	80.01035.01	1
22	39.10626.00	1
23	15.00357.00	4
24	711.12000.66	4

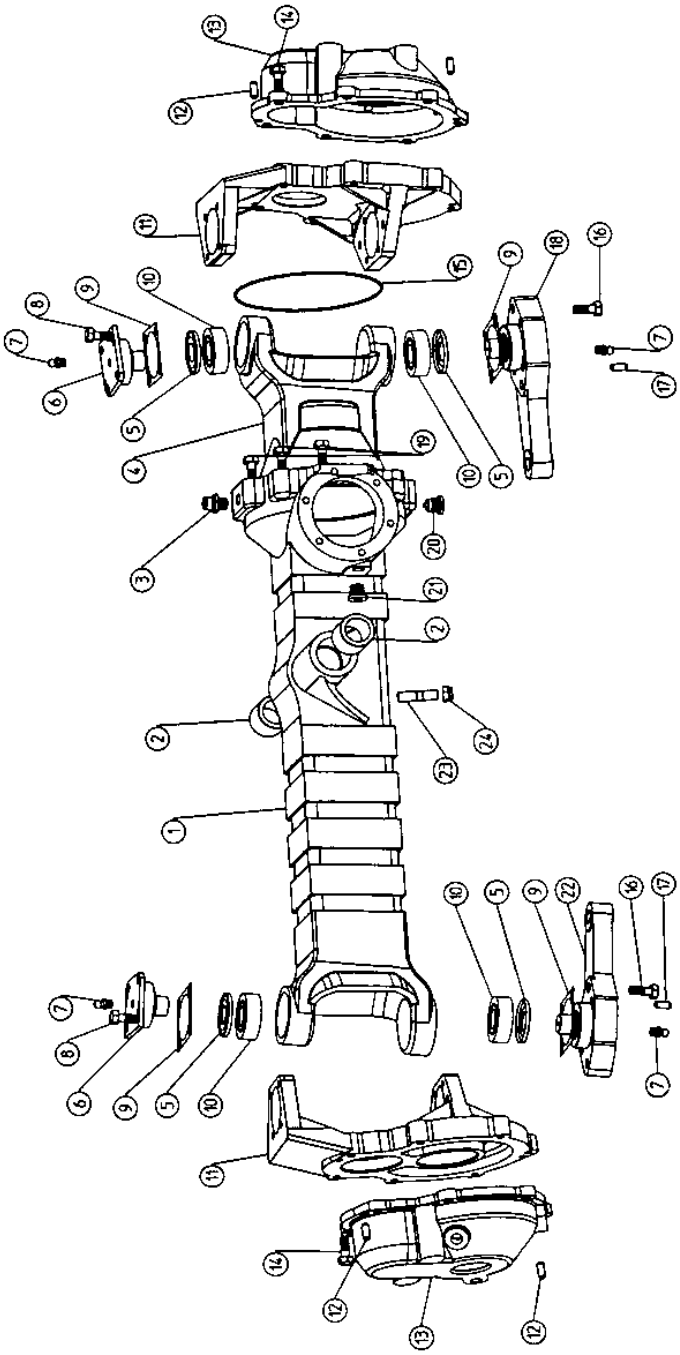

https://truckmanualshub.com/

Transmisión 4X4
4x4 Transmission

Transmisión eje
Axle transmission

Fig. Nº *Fig. Nº*	Referencia *Part Nº*	Cantidad *Quantity*
1	39.00379.00	1
2	01.00376.02	1
3	39.10621.00	1
4	39.10622.00	1
5	01.00388.00	1
6	01.00387.00	4
7	01.00375.02	1
8	301.40018.00	2
9	301.25015.00	1
10	202.02508.50	2
11	201.03002.50	2
12	39.10615.00	2
13	202.04006.50	2

Fig. Nº *Fig. Nº*	Referencia *Part Nº*	Cantidad *Quantity*
14	39.10632.00	2
15	39.10630.00	2
16	312.30016.00	2
17	39.10611.01	2
18	301.30016.00	2
19	39.10631.00	2
20	201.02104.50	2
21	01.01302.00	1
22	01.00389.00	1
23	01.00380.00	1
24	905.52000.00	2
25	309.25015.00	1

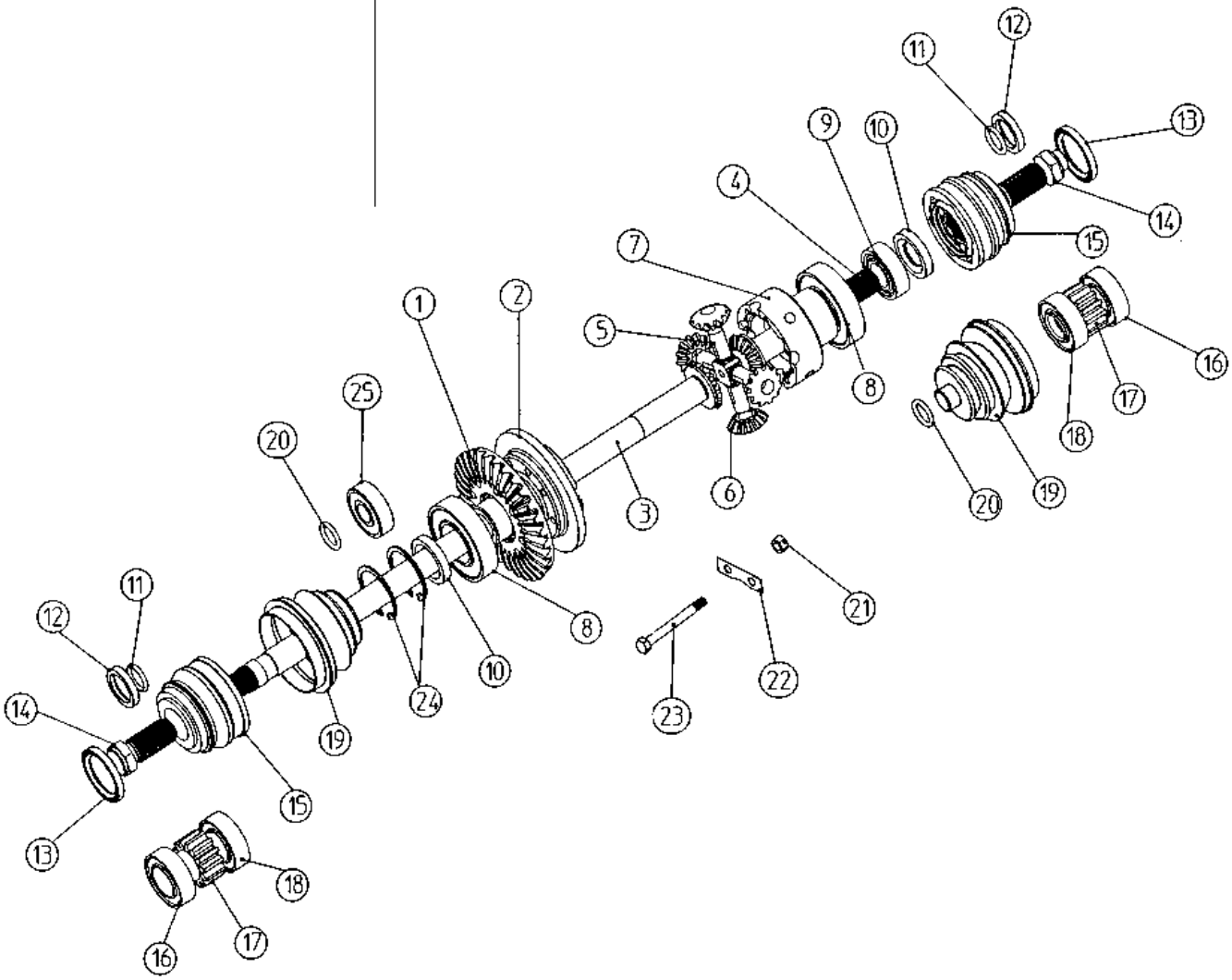

https://truckmanualshub.com/

Transmisión 4X4
4x4 Transmission

Transmisión rueda
Tyre transmission

Fig. Nº *Fig. Nº*	Referencia *Part Nº*	Cantidad *Quantity*
1	10.00561.00	2
1	39.10628.00	2
2	39.10613.01	2
3	310.35017.00	2
4	905.72000.00	2
5	39.10612.01	2

Fig. Nº *Fig. Nº*	Referencia *Part Nº*	Cantidad *Quantity*
6	312.25017.00	2
7	907.35008.00	2
8	906.35000.00	2
9	202.04006.50	2
10	01.00557.00	12
11	01.00549.00	12

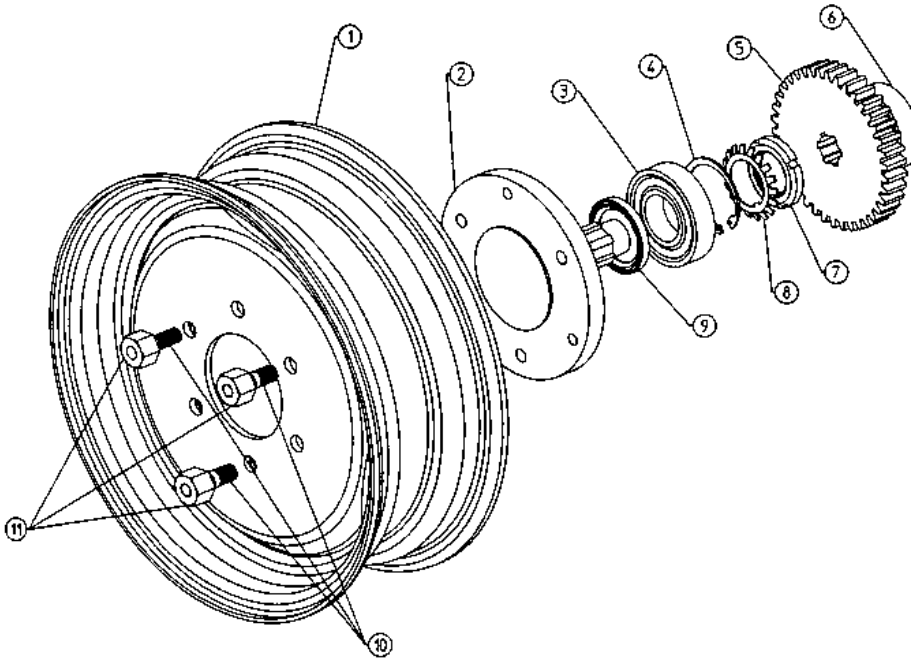

https://truckmanualshub.com/

Transmisión 4X4
4x4 Transmission

Cilindro dirección
Steering cylinder

Fig. Nº *Fig. Nº*	Referencia *Part Nº*	Cantidad *Quantity*
1	39.00617.12	(1)
2	01.00617.09	1
3	10.09101.01	2
4	00.05806.01	2
5	912.32050.00	4
6	45.01492.00	1
7	39.10623.01	1
8	01.06172.00	2

Fig. Nº *Fig. Nº*	Referencia *Part Nº*	Cantidad *Quantity*
9	01.06171.00	1
10	39.10624.01	1
11*	228.02230.50	2
12*	229.02228.50	2
13*	201.03335.50	2
14*	207.04032.50	2
15*	01.06173.01	1
16*	11.99130.01	(1)

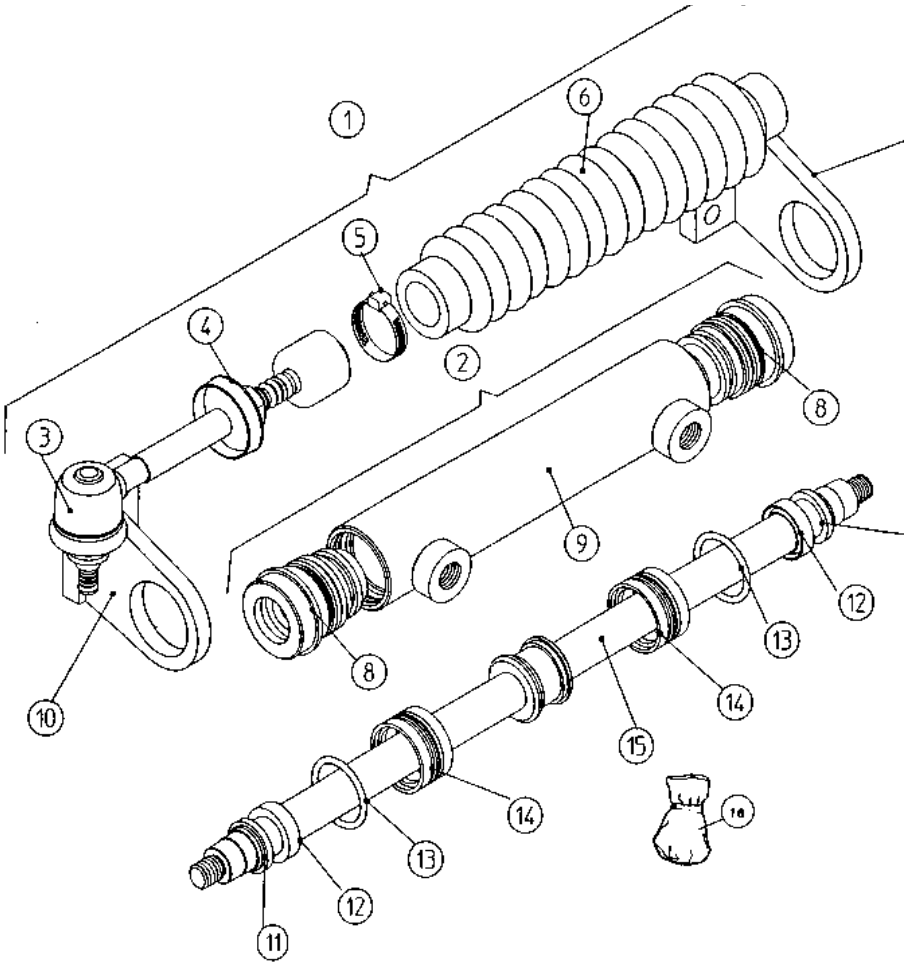

https://truckmanualshub.com/

Transmisión 4X4
4x4 Transmission

Piñón ataque
Drive pinion

Fig. Nº *Fig. Nº*	Referencia *Part Nº*	Cantidad *Quantity*
1	39.10619.00	1
2	39.10620.00	1
3	604.08080.86	1
4	307.35018.00	2
5	907.35008.00	1
6	216.03007.50	1
7	906.35000.00	1
8	39.10618.00	1
9	39.10640.00	1
10	201.07202.50	2

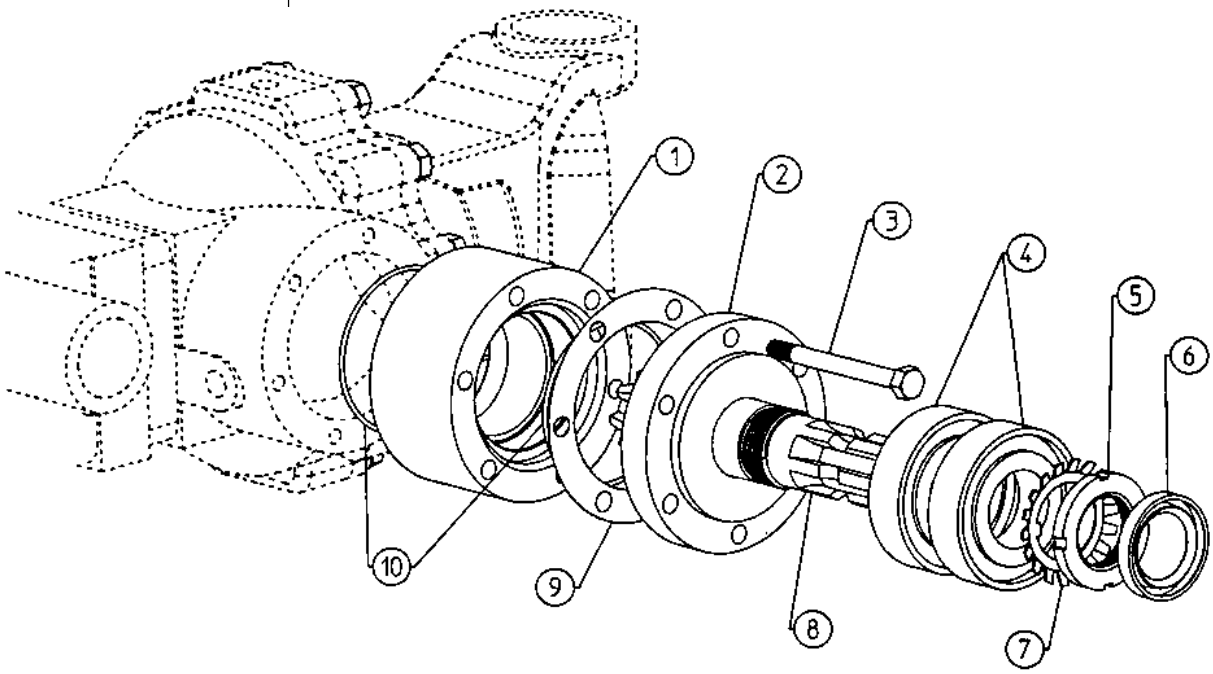

https://truckmanualshub.com/

Transmisión 4X4
4x4 Transmission

Desconector Dumper 1
Dumper disconector 1

Fig. Nº *Fig. Nº*	Referencia *Part Nº*	Cantidad *Quantity*
1	603.06025.86	6
2	10.03102.00	1
3	216.03510.50	1
4	301.35017.00	1
5	45.00369.00	1
6	10.03107.00	1
7	937.28002.00	2
8	45.00385.00	1
9	301.20015.00	1
10	10.00921.00	1
11	10.03109.00	2

Fig. Nº *Fig. Nº*	Referencia *Part Nº*	Cantidad *Quantity*
12	603.06020.86	1
13	10.03106.00	1
14	09.03179.00	1
15	101.14000.66	1
16	43.70581.01	1
17	09.03485.00	1
18	904.14000.00	1
19	09.03094.00	1
20	10.03101.03	1
21	119.02805.66	1
22	107.14000.10	1

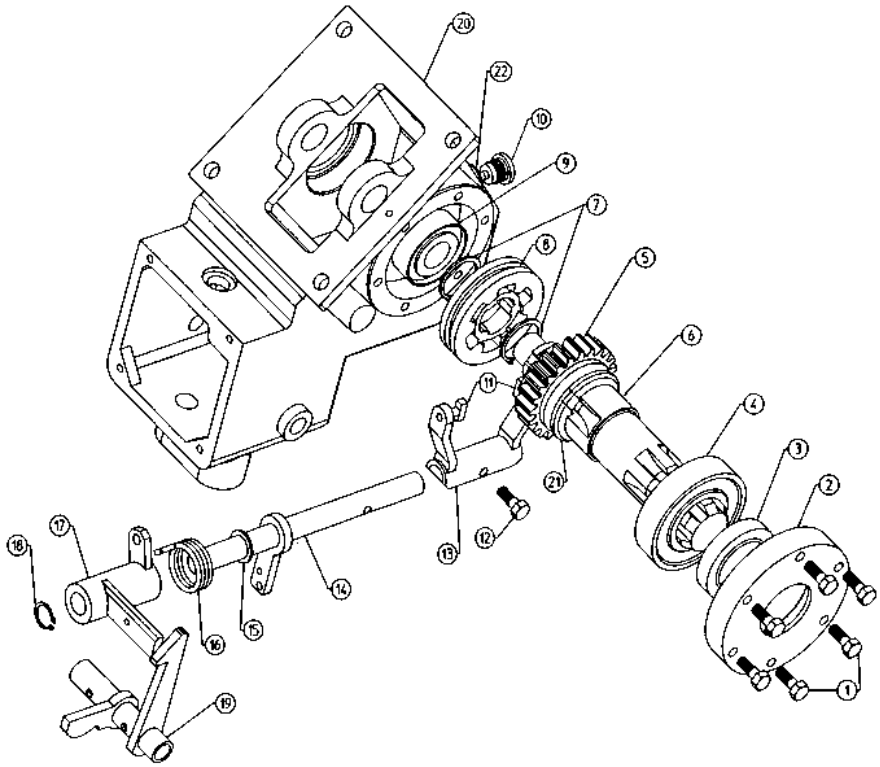

https://truckmanualshub.com/

Transmisión 4X4
4x4 Transmission

Desconector Dumper 2
Dumper disconector 2

Fig. Nº *Fig. Nº*	Referencia *Part Nº*	Cantidad *Quantity*
1	10.03101.03	1
2	601.10030.86	4
3	402.04020.00	1
4	10.03104.01	1
5	101.20000.66	2
6	39.10642.00	1
7	402.04040.00	1
8	301.20015.00	2
9	10.03103.00	1

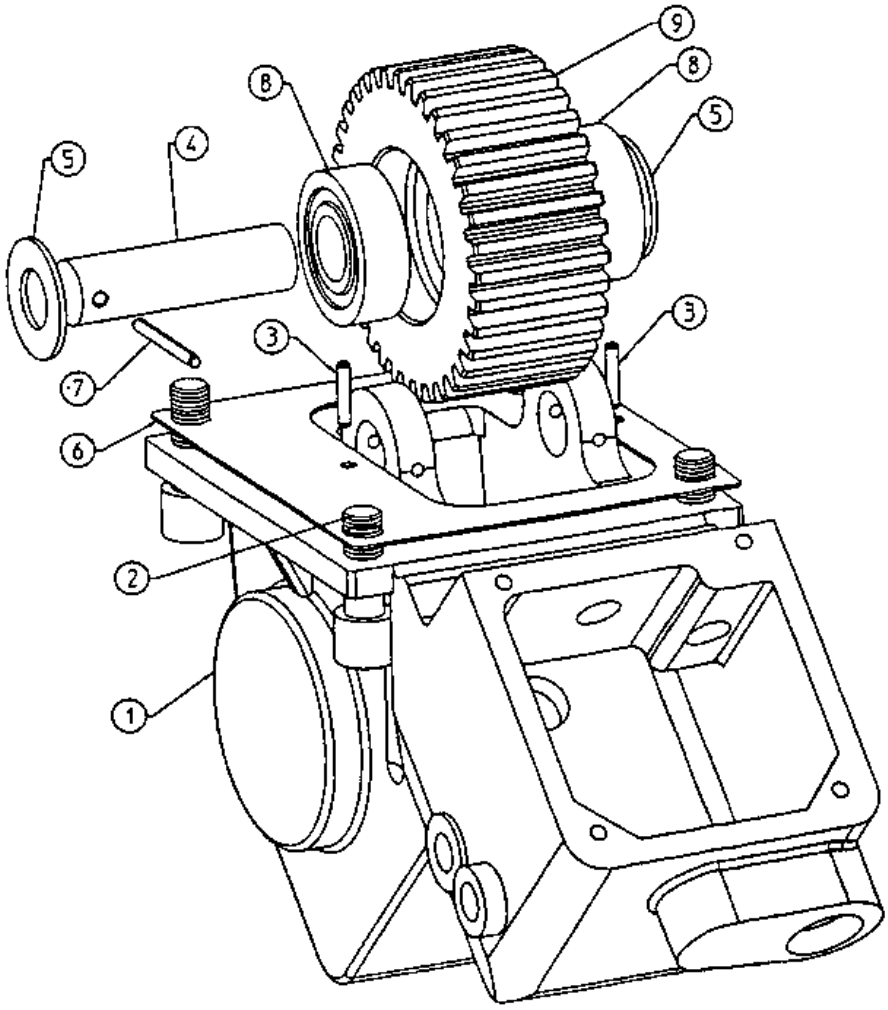

https://truckmanualshub.com/

Transmisión 4X4
4x4 Transmission

Desconector Dumper 3
Dumper disconector 3

Fig. Nº *Fig. Nº*	Referencia *Part Nº*	Cantidad *Quantity*
1	10.03101.03	1
2	09.03055.00	1
3	402.04020.00	1
4	216.01407.50	1
5	231.01403.50	1
6	09.03023.00	1
7	904.14000.00	2
8	701.08000.66	1
9	612.08025.86	1
10	09.03065.00	1
11	09.03081.00	1
12	904.12000.00	2
13	201.07025.50	2
14	101.12000.66	2
15	09.03094.00	1
16	09.03140.00	1
17	09.03016.00	1
18	45.00139.01	1
19	09.03485.00	1
20	711.06000.66	1
21	603.06025.86	1
22	401.02020.60	2
23	09.03350.00	1
24	09.03360.00	(1)

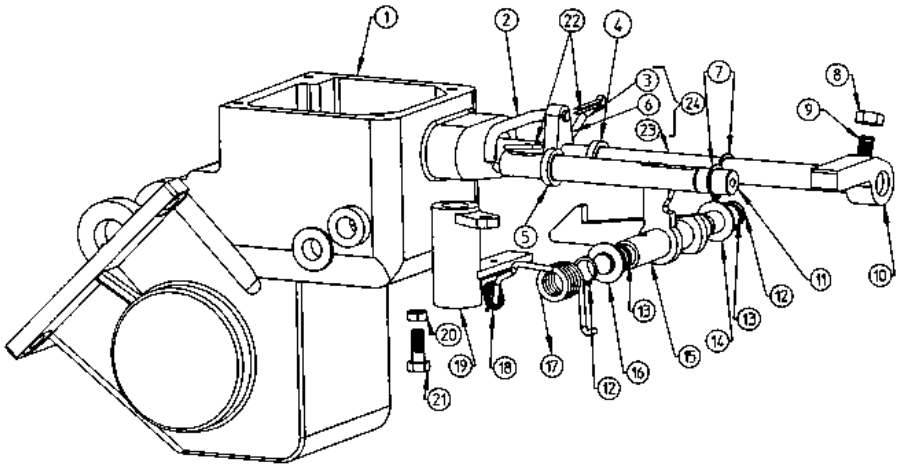

https://truckmanualshub.com/

Transmisión 4X4
4x4 Transmission

Desconector Dumper 4
Dumper disconector 4

Fig. Nº *Fig. Nº*	Referencia *Part Nº*	Cantidad *Quantity*	Fig. Nº *Fig. Nº*	Referencia *Part Nº*	Cantidad *Quantity*
1	09.03045.00	1	11	603.07040.86	1
2	603.06015.86	6	12	09.03104.00	1
3	09.03135.00	1	13	10.03101.03	1
4	401.02020.60	1	14	107.14000.10	1
5	09.03130.00	1	15	09.14012.00	1
6	09.03080.00	1	16	09.03081.00	1
7	216.01007.50	1	17	09.03150.00	1
8	604.08040.86	1	18	01.00226.00	1
9	00.00329.01	1	19	401.02020.66	1
10	701.07000.66	1	20	09.14140.00	1

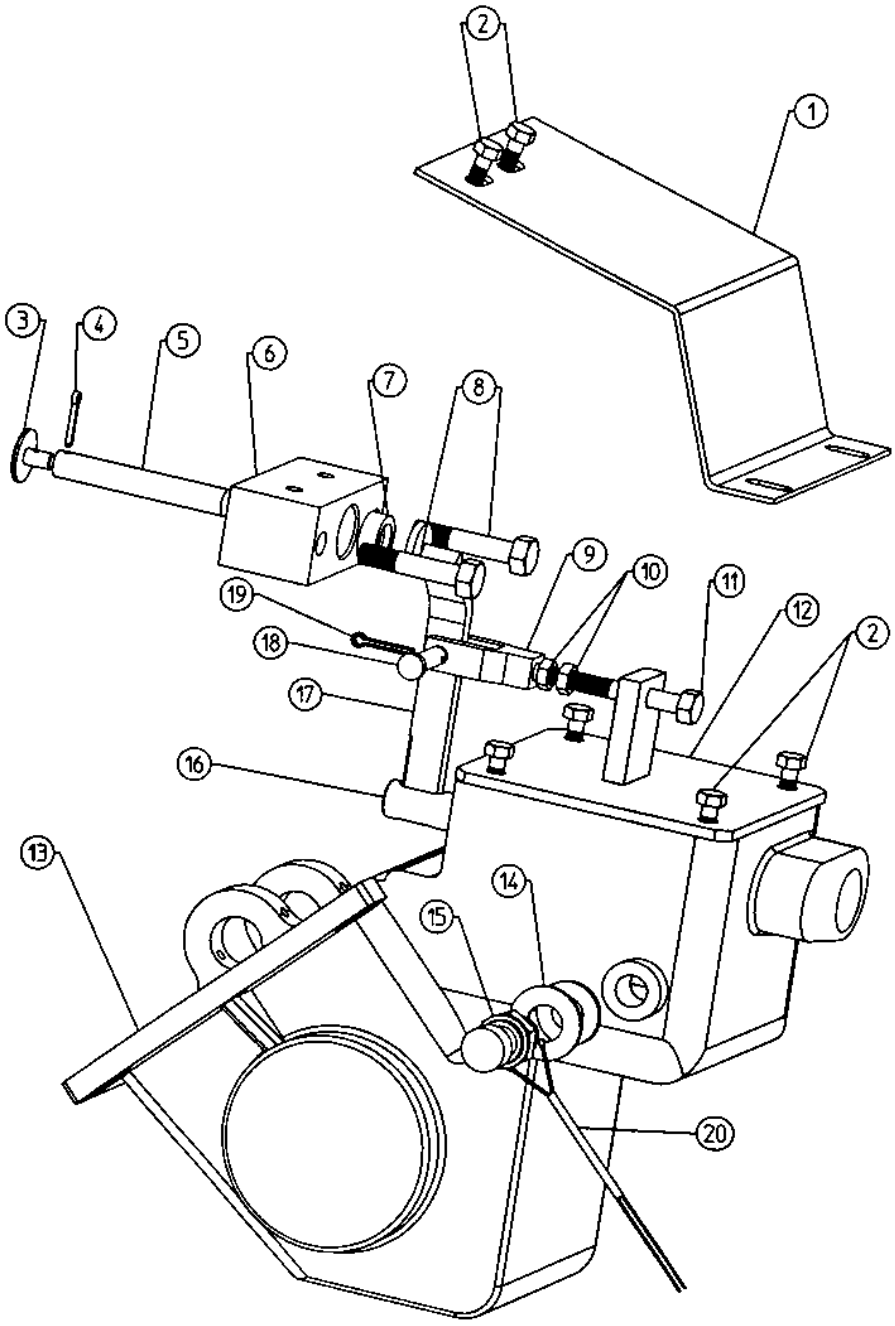

https://truckmanualshub.com/

Transmisión 4X4
4x4 Transmission

Pedal
Pedal

Fig. Nº *Fig. Nº*	Referencia *Part Nº*	Cantidad *Quantity*
1	09.03159.00	1
2	01.00223.00	1
3	901.08000.33	1
4	09.15050.00	1
5	02.20003.00	1

Fig. Nº *Fig. Nº*	Referencia *Part Nº*	Cantidad *Quantity*
6	09.14105.00	1
7	43.50028.00	1
8	43.50027.00	1
9	09.14140.00	1
10	923.18030.00	2

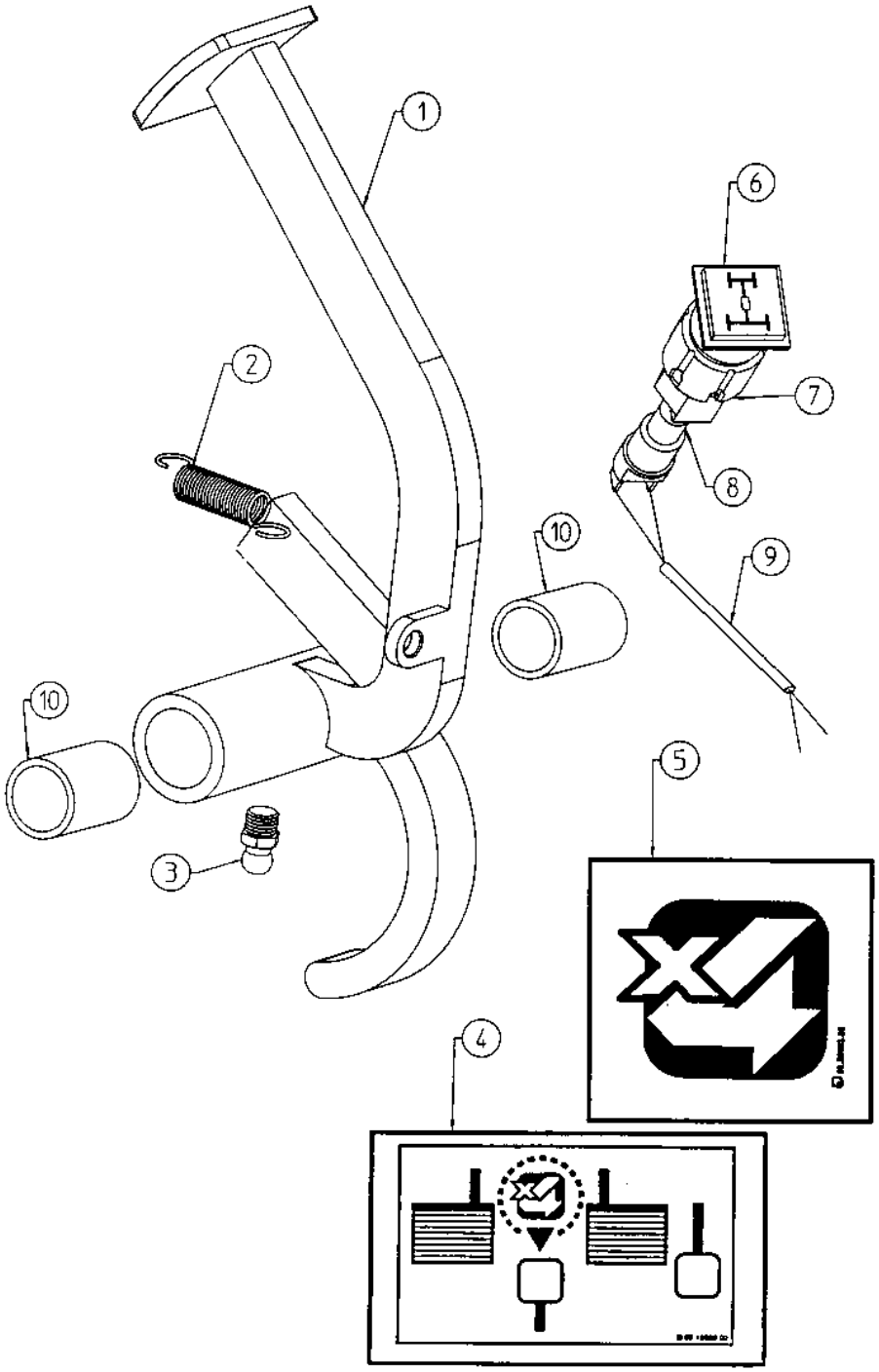

https://truckmanualshub.com/

Transmisión 4X4
4x4 Transmission

Junta cardán
Cardan joint

Fig. Nº *Fig. Nº*	Referencia *Part Nº*	Cantidad *Quantity*
1	10.03113.00	1
2	10.03114.00	1
3	10.03115.00	1
4	901.08000.33	1

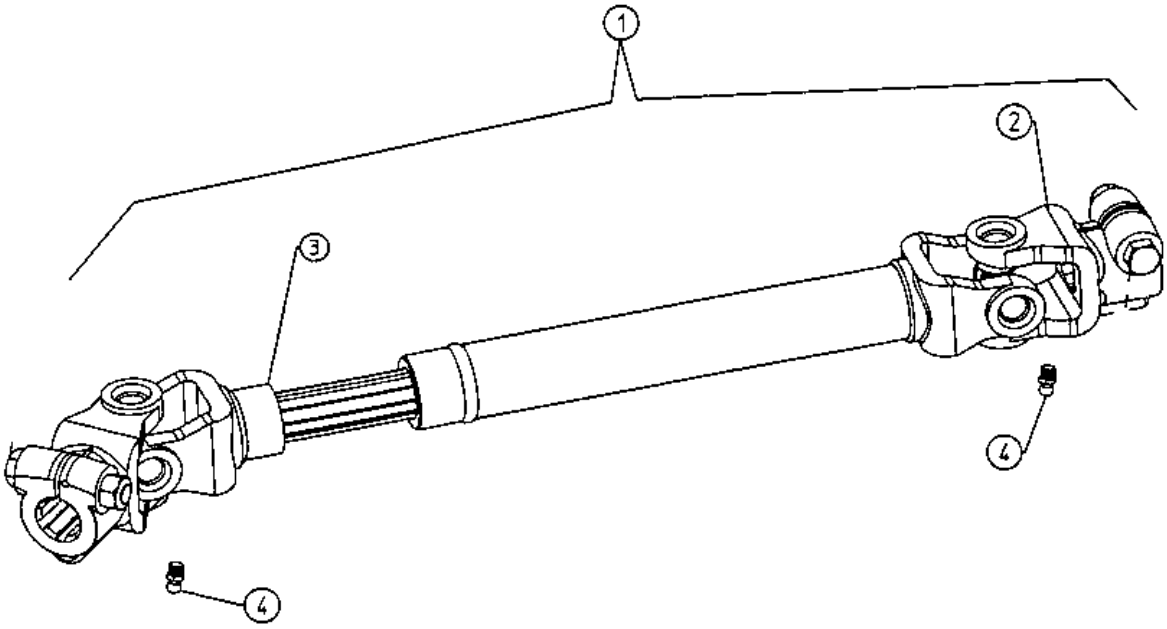

https://truckmanualshub.com/

Transmisión 4X4
4x4 Transmission

Tope en chasis
Chassis bumpers

Fig. Nº *Fig. Nº*	Referencia *Part Nº*	Cantidad *Quantity*
1	39.00705.52	(1)
1	39.00705.60	(1)
1	39.00705.53	(1)
1	09.00705.52	(1)
1	14.00705.53	(1)
1	09.00705.62	(1)

Fig. Nº *Fig. Nº*	Referencia *Part Nº*	Cantidad *Quantity*
1	08.00705.52	(1)
2	701.14000.66	4
3	15.00750.00	2
4	105.14000.66	2
5	604.14065.86	2

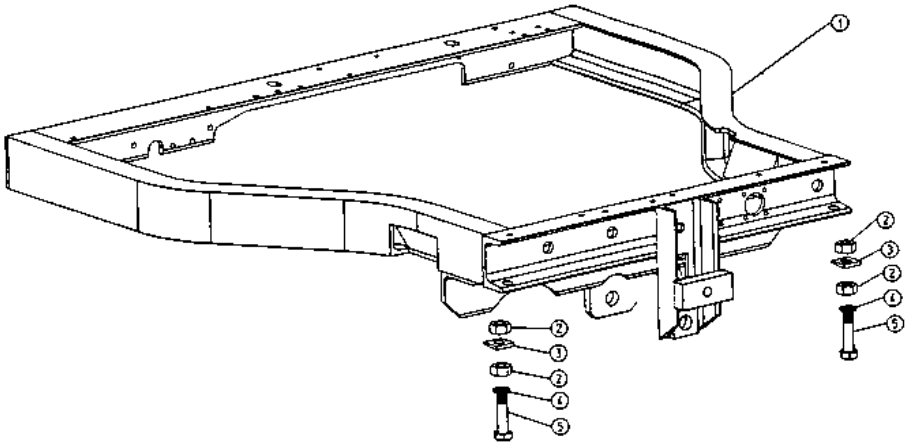

https://truckmanualshub.com/

https://truckmanualshub.com/

ÍNDICE DE REFERENCIAS

REFERENCES INDEX

https://truckmanualshub.com/

Referencia *Reference*	Tabla *Board*	Fig. Nº *Fig. Nr*	Denominación *Denomination*	
00.00130.00	7914-08-14	8	TUERCA DIN934*	NUT DIN934*
00.00184.00	10914-08-14	45	ARAND. DIN434*	WASHER DIN434*
00.00326.00	6.1914-08-14	12	GUARDAPOLVO	DUST EXCLUDER
00.00329.01	11914-08-14	17	HORQUILLA ART.	ART. FORK
	9T914-08-14	9	HORQUILLA ART.	ART. FORK
00.00382.02	8914-08-14	4	ENGRANAJE CONICO	GEAR CONICAL
00.00402.01	10914-08-14	35	CADENA	CHAIN
00.00412.00	10914-08-14	24	ESPARRAGO DIN939*	STUD DIN939*
00.00420.00	10914-08-14	20	PROT. TRANS.	GUARD TRANS.
00.00421.00	10914-08-14	21	JUNTA CORCHO	CORK GASKET
00.00422.00	10914-08-14	28	TENSOR.	TENSIONER
00.00427.00	10914-08-14	23	TAPA REGISTRO	COVER HANDHOLE
00.00430.00	10914-08-14	22	JUNTA PAPEL REC.	PAPER GASKET
00.00431.00	10914-08-14	12	JUNTA CORCHO	CORK GASKET
00.00500.00	10.1914-08-14	16	MORDAZA FRENO	BRAKE SHOE
00.00511.00	10.1914-08-14	13	EJE CPA/ROS	AXLE 'CPA/ROS'
00.00512.00	10.1914-08-14	19	SUPLEMENTO	PANEL
00.00515.00	10.1914-08-14	18	RESORTE TRAC.	SPRING TENSION
00.00516.00	10.1914-08-14	8	LEVA	CAM
00.00517.00	10.1914-08-14	5	COJINETE CIL.	BEARING CYL.
00.00520.00	12914-08-14	10	PALANCA ACC.	ACC.LEVER
00.00520.01	10.1914-08-14	9	PALANCA ACC.	ACC.LEVER
00.00569.00	12914-08-14	21	VARILLA FORL8	ROD L8
00.00580.00	24914-08-14		RUEDA	WHEEL RIM
00.00587.00	10914-08-14	41	ESPARRAGO DIN939*	STUD DIN939*
00.00588.00	10914-08-14	42	TUERCA RUEDA	NUT DIN929*
00.00626.03	16.1914-08-14	7	EMBELLECEDOR	TRIM
00.00626.04	16914-08-14	25	EMBELLECEDOR	TRIM
00.01307.02	10914-08-14	19	EJE ROS/ROS	AXLE 'ROS/ROS'
00.02509.00	16914-08-14	21	CHAVETA DIN6888	FEATHER DIN6888 KEY
00.02803.00	6.1914-08-14	10	TORNILLO DIN910*	SCREW DIN910*
00.03128.00	9914-08-14	32	RESORTE COMP.	SPRING COMPRESSION
00.05016.00	24914-08-14		RUEDA	WHEEL RIM
00.05016.08	24914-08-14	2	RUEDA	WHEEL RIM
00.05806.00	19914-08-14	25	TAPON.	CAP
	19.1914-08-14	25	TAPON.	CAP
00.05806.01	4T914-08-14	4	TAPON.	CAP
00.09032.10	36914-08-14	36	FARO	BEACON
	40914-08-14	25	FARO	BEACON
00.09032.11	36914-08-14	37	FARO	BEACON
	40914-08-14	24	FARO	BEACON
00.09034.00	34914-08-14	12	CLAXON	HORN
	40914-08-14	12	CLAXON	HORN
00.09035.01	34914-08-14	16	BATERIA	BATTERY
	36914-08-14	20	BATERIA	BATTERY
	38914-08-14	15	BATERIA	BATTERY
	40914-08-14	30	BATERIA	BATTERY
01.00002.01	10.1914-08-14	1	CTO. PLATO MORD.	
01.00036.01	20914-08-14	12		
01.00037.01	19914-08-14	42		
	19.1914-08-14	30		
01.00039.00	12914-08-14	20		
01.00101.04	1914-08-14	1	MOTOR DIESEL	ENGINE DIESEL
01.00101.05	1914-08-14	1	MOTOR DIESEL	ENGINE DIESEL
01.00107.00	5914-08-14	10	SOP. AMORTIG.	SHOCK ABSORV. SUPP.
01.00109.00	15914-08-14	8	GRUESO REG. REC.	REGUL SPACER
01.00112.10	2914-08-14	3		
	2.1914-08-14	10		
	2.2914-08-14	5	TIRANTE	TIE ROD
01.00113.00	15914-08-14	14	RESORTE COMP.	SPRING COMPRESSION
01.00115.01	15914-08-14	9	COJINETE CIL.	BEARING CYL.
01.00123.00	3.1914-08-14	19	RESORTE COMP.	SPRING COMPRESSION
01.00133.00	3914-08-14	12	TENSOR.	TENSIONER
	3.1914-08-14	11	TENSOR.	TENSIONER
01.00135.01	3914-08-14	14	VARILLA FOR.6	ROD F6
01.00138.00	3914-08-14	11	TUERCA DIN934*	NUT DIN934*
	3.1914-08-14	10	TUERCA DIN934*	NUT DIN934*
01.00156.00	15914-08-14	4		
01.00182.00	10914-08-14	46	SUPLEMENTO	PANEL
01.00210.03	5914-08-14	1	CAMPANA EMBR.	CLUTCH CASING
01.00212.01	11914-08-14	13	VARILLA FORL7	ROD L7
01.00213.01	4914-08-14	1	SOP. COJ.	BEARING SUPPORT

Referencia *Reference*	Tabla *Board*	Fig. Nº *Fig. Nr*	Denominación *Denomination*	
01.00216.00	11914-08-14	10	COJINETE CIL.	BEARING CYL.
01.00220.01	5914-08-14	12	RESORTE TORS.	SPRING TORSION
01.00222.02	5914-08-14	25*	HORQUILLA	
01.00223.00	11914-08-14	5	RESORTE TRAC.	SPRING TENSION
	10T914-08-14	2	RESORTE TRAC.	SPRING TENSION
01.00223.01	12.2914-08-14	3	RESORTE TRAC.	SPRING TENSION
01.00223.02	5914-08-14	27	RESORTE TRAC.	SPRING TENSION
01.00225.00	5914-08-14	13	TAPA REGISTRO	COVER HANDHOLE
01.00225.10	5914-08-14	13	TAPA REGISTRO	COVER HANDHOLE
01.00226.00	11914-08-14	18	EJE CIL/CPA	AXLE 'CIL/CPA'
	9T914-08-14	18	EJE CIL/CPA	AXLE 'CIL/CPA'
01.00227.02	5914-08-14	5	ARANDELA DIN125	WASHER DIN125
01.00235.00	5914-08-14	17	CASQUILLO	
01.00301.02	8914-08-14	1	DIFERENCIAL	DIFFERENTIAL
01.00302.02	8914-08-14	6	DIFERENCIAL	DIFFERENTIAL
01.00308.00	3914-08-14	6	COJINETE NYLON	NYLON BEARING
	3.1914-08-14	7	COJINETE NYLON	NYLON BEARING
	6.1914-08-14	5	COJINETE NYLON	NYLON BEARING
01.00309.00	6.1914-08-14	4	TORNILLO DIN933*	SCREW DIN933*
01.00312.01	6.1914-08-14	18	TORNILLO DIN417*	SCREW DIN417*
01.00313.00	9914-08-14	29	EJE CIL/CPA	AXLE 'CIL/CPA'
01.00314.00	9914-08-14	18	EJE CIL/CPA	AXLE 'CIL/CPA'
01.00315.00	9914-08-14	35	HORQUILLA ACC.	ACC. FORK
01.00316.00	9914-08-14	17	HORQUILLA ACC.	ACC. FORK
01.00317.00	9914-08-14	31	HORQUILLA ACC.	ACC. FORK
01.00319.00	9914-08-14	16	TORNILLO DIN480*	SCREW DIN480
01.00320.00	9914-08-14	36	PASADOR	
	18.2914-08-14	34	PASADOR	
01.00324.06	6.1914-08-14	7	PALANCA MANDO	CONTROL LEVER
01.00325.02	6.1914-08-14	1	EMPU\ADURA	KNOB
01.00325.03	6.1914-08-14	6	EMPU\ADURA	KNOB
01.00326.00	6.1914-08-14	19	RESORTE COMP.	SPRING COMPRESSION
01.00327.00	7914-08-14	24	TAPON.	CAP
01.00335.00	7914-08-14	28	IMAN	MAGNET
01.00345.00	7914-08-14	6	ARANDELA DIN1441*	WASHER DIN1441*
01.00349.00	7914-08-14	23	PASADOR DIN6325	
01.00350.01	7914-08-14	17	TAPA SOP.	FLANGE
01.00351.04	7914-08-14	15	CARCASA	CASING
01.00351.06	7914-08-14	15	CARCASA	CASING
01.00353.01	9914-08-14	30	EJE CAS/CIL	SHAFT 'CAS/CIL'
01.00355.00	9914-08-14	20	EJE CAS/CAS	SHAFT 'CAS/CAS'
01.00356.00	9914-08-14	5	ENGRANAJE z33-25	GEAR z33-26
01.00357.00	9914-08-14	6	ENGRANAJE z20-15	GEAR z20-15
01.00362.00	9914-08-14	23	ENGRANAJE z21-17	GEAR z21-17
01.00364.01	7914-08-14	21	TAPA REGISTRO	COVER HANDHOLE
01.00365.00	7914-08-14	26	TORNILLO DIN564*	SCREW DIN564*
01.00369.00	9914-08-14	22	ARANDELA DIN125*	WASHER DIN125*
01.00371.01	5914-08-14	30	ESPARRAGO DIN939*	STUD DIN939*
	7914-08-14	25	ESPARRAGO DIN939*	STUD DIN939*
01.00375.02	2T914-08-14	7		
01.00376.02	2T914-08-14	2		
01.00378.01	7914-08-14	11	TAPA SOP.	FLANGE
01.00380.00	8914-08-14	17	TORNILLO DIN931*	SCREW DIN931*
	2T914-08-14	23	TORNILLO DIN931*	SCREW DIN931*
01.00383.00	7914-08-14	9	ESPARRAGO DIN939*	STUD DIN939*
01.00383.01	7914-08-14	5	ESPARRAGO DIN939*	STUD DIN939*
01.00386.00	9914-08-14	7	ARANDELA DIN433*	WASHER DIN443*
01.00387.00	8914-08-14	2	ENGRANAJE z12	GEAR z12
	2T914-08-14	6	ENGRANAJE z12	GEAR z12
01.00388.00	8914-08-14	3	EJES EN CRUZ	AXLES
	2T914-08-14	5	EJES EN CRUZ	AXLES
01.00389.00	8914-08-14	16	SUPLEMENTO	PANEL
	2T914-08-14	22	SUPLEMENTO	PANEL
01.00393.00	9914-08-14	11	TUERCA DIN547*	NUT DIN547*
01.00393.01	9914-08-14	11	TUERCA DIN547*	NUT DIN547*
01.00394.01	9914-08-14	10	TUERCA DIN985*	NUT DIN985*
01.00394.02	9914-08-14	10	TUERCA DIN985*	NUT DIN985*
01.00425.00	10914-08-14	29	TUERCA DIN982*	NUT DIN982*
01.00432.00	10914-08-14	2	PLANCHA	PLATE
01.00500.04	19.1914-08-14	1	PUENTE COMPLETO	
01.00500.05	19914-08-14	1	PUENTE COMPLETO	
01.00502.00	24914-08-14	1	RUEDA	WHEEL RIM

https://truckmanualshub.com/

Referencia *Reference*	Tabla *Board*	Fig. Nº *Fig. Nr*	Denominación *Denomination*	
01.00502.01	24914-08-14			
01.00514.01	12914-08-14	2	EJE	
	12.2914-08-14	5	EJE	
	13.1914-08-14	7	EJE CIL/CPA	AXLE 'CIL/CPA'
01.00514.02	13914-08-14	4	EJE CIL/CPA	AXLE 'CIL/CPA'
01.00521.00	12914-08-14	7	VARILLA REC.7/16'	ROD STRAIGHT R7/16'
01.00549.00	19914-08-14	36		
	19.1914-08-14	26		
	3T914-08-14	11	TUERCA DIN934*	NUT DIN934*
01.00549.08	19914-08-14	36	TUERCA RUEDA	NUT DIN929*
	19.1914-08-14	26	TUERCA RUEDA	NUT DIN929*
01.00550.08	19914-08-14	22		
	19.1914-08-14	22		
01.00552.02	19914-08-14	19	CASQUILLO.	BUSH
	19.1914-08-14	19	CASQUILLO.	BUSH
01.00553.01	19914-08-14	17	TUERCA CUBO	NUT DIN516*
	19.1914-08-14	17	TUERCA CUBO	NUT DIN516*
01.00555.08	24914-08-14	3	CAMARA	TUBE
	24914-08-14		CAMARA	TUBE
01.00557.00	19914-08-14	23	ESPARRAGO DIN940*	STUD DIN940*
	19.1914-08-14	23	ESPARRAGO DIN940*	STUD DIN940*
	3T914-08-14	10	ESPARRAGO DIN940*	STUD DIN940*
01.00557.08	19914-08-14	23	ESPARRAGO DIN939*	STUD DIN939*
	19.1914-08-14	23	ESPARRAGO DIN939*	STUD DIN939*
01.00561.00	19914-08-14	21	ANILLO DIN70951*	RING DIN70951*
	19.1914-08-14	21	ANILLO DIN70951*	RING DIN70951*
01.00564.01	12914-08-14	3	HORQUILLA ART.	ART. FORK
01.00564.02	12.2914-08-14	6	HORQUILLA ACC.	ACC. FORK
01.00568.03	12914-08-14	17	TUBO MET.	TUBE MET.
01.00570.00	12914-08-14	22	HORQUILLA ART.	ART. FORK
01.00571.00	12914-08-14	9	COJINETE CIL.	BEARING CYL.
01.00585.08	24914-08-14	4	CUBIERTA LS	TYRE 'LS'
01.00585.09	24914-08-14		CUBIERTA TT	TYRE 'TT'
01.00610.01	16914-08-14	9	CASQUILLO.	BUSH
01.00611.02	16914-08-14	15	TAPA SOP.	FLANGE
01.00612.05	16914-08-14	11	TAPA SOP.	FLANGE
01.00613.03	16914-08-14	2	EJE CPA/DEN	SHAFT 'CPA/DEN'
01.00614.03	16914-08-14	22	SECTOR DIREC.	GEAR STEERING
01.00615.00	16914-08-14	18	PALANCA ACC.	ACC.LEVER
01.00617.00	19914-08-14	28	BARRA DIREC.	STEERING ROD
01.00617.09	4T914-08-14	2	CILINDRO D/E	CYLINDER D/E
01.00617.10	19.2914-08-14	6	CILINDRO D/E	CYLINDER D/E
	19.2914-08-14	11	CILINDRO D/E	CYLINDER D/E
01.00617.11	19.2914-08-14	1		
01.00618.00	19914-08-14	29	CASQUILLO.	BUSH
01.00619.00	19914-08-14	34	GUARDAPOLVO	DUST EXCLUDER
01.00623.00	19914-08-14	7	EJE RPS/RPS	SHAFT 'RPS/RPS'
	19.1914-08-14	7	EJE RPS/RPS	SHAFT 'RPS/RPS'
01.00625.00	19914-08-14	3	COJINETE VAL. A/L	STEPPED S/L BEARING
	19.1914-08-14	3	COJINETE VAL. A/L	STEPPED S/L BEARING
01.00627.02	19914-08-14	37	EJE CIL/ROS	AXLE 'CIL/ROS'
	19.1914-08-14	27	EJE CIL/ROS	AXLE 'CIL/ROS'
01.00628.00	19914-08-14	5		
	19.1914-08-14	5		
01.00629.00	19914-08-14	4	COJINETE CIL.	BEARING CYL.
	19.1914-08-14	4	COJINETE CIL.	BEARING CYL.
01.00630.00	19914-08-14	31		
01.00631.00	19914-08-14	35		
01.00632.00	19914-08-14	13	ARANDELA DIN1440*	WASHER DIN1440*
	19.1914-08-14	13	ARANDELA DIN1440*	WASHER DIN1440*
01.00633.00	19914-08-14	9	ARANDELA DIN7989*	WASHER DIN7989*
	19.1914-08-14	9	ARANDELA DIN7989*	WASHER DIN7989*
01.00634.00	19914-08-14	8	ARANDELA DIN1440*	WASHER DIN1440*
	19.1914-08-14	8	ARANDELA DIN1440*	WASHER DIN1440*
01.00635.01	16914-08-14	4	ARANDELA REG.	WASHER ADJUST.
01.00635.10	16914-08-14	13	ARANDELA REG.	WASHER ADJUST.
01.00637.00	16914-08-14	17	ARANDELA DIN1440*	WASHER DIN1440*
01.00638.00	19914-08-14	30	TUERCA DIN431*	NUT DIN431*
01.00639.02	19914-08-14	15		
	19.1914-08-14	15		
01.00639.03	19.1914-08-14	14		
01.00640.02	19914-08-14	14		

Referencia *Reference*	Tabla *Board*	Fig. Nº *Fig. Nr*	Denominación *Denomination*	
01.00706.06	21914-08-14	1	ASIEN. CONDUCTOR	DRIVER'S SEAT
01.00731.01	22.2914-08-14	14	SOP. PLAN. REC.	SHEET SUPPORT
01.00735.00	17914-08-14	9	TORNILLO DIN933*	SCREW DIN933*
01.00757.00	27914-08-14	14	PLACA AD. INDI.	PLATE AD. INDI
01.00776.15	2914-08-14	9	SOP. MOTOR	ENGINE SUPPORT
01.00779.21	27914-08-14	8	PLACA CARAC.	PLATE CHARAC.
	27914-08-14	37	PLACA CARAC.	PLATE CHARAC.
01.00788.03	27914-08-14	19	PLACA AD. INDI.	PLATE AD. INDI
01.00788.04	27914-08-14	19	PLACA AD. INDI.	PLATE AD. INDI
01.00788.05	27914-08-14	19	PLACA AD. INDI.	PLATE AD. INDI
01.00796.00	35914-08-14	7	PULSADOR	PUSCH BUTTOM
	39914-08-14	5	PULSADOR	PUSCH BUTTOM
01.00798.00	34914-08-14	5	CORONA	CROWN
	36914-08-14	13	CORONA	CROWN
01.00804.01	33.2914-08-14	2	CASQUILLO.	BUSH
01.00809.00	40914-08-14	15	INTERRUPTOR	SWITCH
01.00823.03	35914-08-14	12	CONMUTADOR	CONMUTATOR
	37914-08-14	6	CONMUTADOR	CONMUTATOR
	39914-08-14	6	CONMUTADOR	CONMUTATOR
	41914-08-14	9	CONMUTADOR	CONMUTATOR
01.00841.02	38914-08-14	14	CABLE ELEC.	ELECTRICAL CABLE
	40914-08-14	34	CABLE ELEC.	ELECTRICAL CABLE
01.00842.00	34914-08-14	18	CABLE ELEC.	ELECTRICAL CABLE
	36914-08-14	25	CABLE ELEC.	ELECTRICAL CABLE
01.00844.12	35914-08-14	13	TRAMO I/E	LENGTH ELEC. INSTAL.
01.00844.13	37914-08-14	18	TRAMO I/E	LENGTH ELEC. INSTAL.
01.00844.14	35914-08-14	13	TRAMO I/E	LENGTH ELEC. INSTAL.
01.00844.99	34914-08-14	25	TRAMO I/E	LENGTH ELEC. INSTAL.
01.00855.00	34914-08-14	11	CASQUILLO	ACC. FORK
	36914-08-14	8	CASQUILLO	ACC. FORK
01.00872.00	37914-08-14	13	PLACA INDI.	PLATE INDI.
01.00877.00	39914-08-14	14	CAJA.	BOX.
	41914-08-14	18	CAJA.	BOX.
01.00881.00	34914-08-14	8	TRAMO I/E	LENGTH ELEC. INSTAL.
	36914-08-14	11	TRAMO I/E	LENGTH ELEC. INSTAL.
01.00910.00	5914-08-14	2	TOPE.	BUTT
01.00922.00	33914-08-14	1	FARO	BEACON
01.00923.00	33914-08-14	2	LAMPARA	BULB
01.00927.01	33914-08-14	6	TRAMO I/E	LENGTH ELEC. INSTAL.
01.00928.00	35914-08-14	4	PORTAFUSIBLES	FUSE BOX
01.01030.00	17914-08-14	5	COJINETE NYLON	NYLON BEARING
01.01031.01	17914-08-14	4	SOP. EJE	AXLE SUPPORT
01.01301.00	12914-08-14	23	TUERCA DIN431*	NUT DIN431*
01.01302.00	8914-08-14	18	TUERCA DIN934*	NUT DIN934*
	2T914-08-14	21	TUERCA DIN934*	NUT DIN934*
01.01303.00	10914-08-14	26	TUERCA DIN934*	NUT DIN934*
01.01304.00	12914-08-14	6	TUERCA DIN934*	NUT DIN934*
	12.2914-08-14	18	TUERCA DIN934*	NUT DIN934*
01.01305.00	10914-08-14	44	TUERCA DIN431*	NUT DIN431*
01.01306.00	10.1914-08-14	12	TUERCA DIN934*	NUT DIN934*
	12914-08-14	15	TUERCA DIN934*	NUT DIN934*
01.01307.00	19914-08-14	41	TUERCA DIN431*	NUT DIN431*
01.01312.00	10914-08-14	11	TUERCA DIN935*	CASTELL. NUT DIN935*
01.01314.00	19914-08-14	12	TUERCA DIN935*	CASTELL. NUT DIN935*
	19914-08-14	26	TUERCA DIN935*	CASTELL. NUT DIN935*
	19.1914-08-14	12	TUERCA DIN935*	CASTELL. NUT DIN935*
01.01315.00	16914-08-14	19	TUERCA DIN935*	CASTELL. NUT DIN935*
	18.8914-08-14	5	TUERCA DIN935*	CASTELL. NUT DIN935*
01.01318.00	22.1914-08-14	4	TUERCA DIN935*	CASTELL. NUT DIN935*
	23.1914-08-14	9	TUERCA DIN935*	CASTELL. NUT DIN935*
01.01319.00	10914-08-14	4		
	18.2914-08-14	28	TUERCA DIN935*	CASTELL. NUT DIN935*
01.01353.00	27914-08-14	32	PLACA AD. INDI.	PLATE AD. INDI
01.01354.00	27914-08-14	7	PLACA AD. INDI.	PLATE AD. INDI
01.01355.01	27914-08-14	9	PLACA AD. INDI.	PLATE AD. INDI
01.01355.07	27914-08-14	10	PLACA AD. INDI.	PLATE AD. INDI
01.01357.00	27914-08-14	15		
01.01358.00	27914-08-14	18		
01.01360.00	34914-08-14	9	CONECTOR	PLUG
01.01590.00	14914-08-14	1	TUBO ADMISION	ADMISSION TUBE
01.01925.00	25.1914-08-14	7	CIERRE	LATCH
01.03000.00	8914-08-14	20		

https://truckmanualshub.com/

Referencia *Reference*	Tabla *Board*	Fig. Nº *Fig. Nr*	Denominación *Denomination*	
01.03010.02	8914-08-14	5	CAJA DIFERENCIAL	DIFFERENT. HOUSING
01.03841.00	7914-08-14	3	TAPA REGISTRO	COVER HANDHOLE
01.03902.00	8914-08-14	8	ARANDELA REG.	WASHER ADJUST.
01.03903.00	8914-08-14	8	ARANDELA REG.	WASHER ADJUST.
01.03912.00	9914-08-14	8		
01.06171.00	19.2914-08-14	10	CUERPO	
	4T914-08-14	9	CUERPO	
01.06172.00	19.2914-08-14	9	GUIA	GUIDE
	4T914-08-14	8	GUIA	GUIDE
01.06173.01	4T914-08-14	15	VASTAGO	SPINDLE
01.06175.00	19.2914-08-14	7	SOP. ANG.	BRACKET ANG.
01.06176.00	19.2914-08-14	8	SOP. ANG.	BRACKET ANG.
01.06300.00	19914-08-14	32	RESORTE COMP.	SPRING COMPRESSION
01.08236.01	32914-08-14	2	PROT. CONDUCTOR	DRIVER GUARD
01.08236RE01	32914-08-14	1	PROT. CONDUCTOR	DRIVER GUARD
01.08237.20	32914-08-14	2A	BARRA.	ROD
01.08237.21	32914-08-14	2B	PROT. CONDUCTOR	DRIVER GUARD
01.08251.00	32914-08-14	14	SOP. ANG.	BRACKET ANG.
01.08252.00	32914-08-14	10	CRISTAL	GLASS
01.08440.10	34914-08-14	3	TRAMO I/E	LENGTH ELEC. INSTAL.
	36914-08-14	16	TRAMO I/E	LENGTH ELEC. INSTAL.
01.08520.00	32914-08-14	3	PERFIL	PROFILE
01.13310.02	1914-08-14	4	TUBO MET.	TUBE MET.
01.13570.00	27914-08-14	25		
01.30000.00	8914-08-14	1	GRUPO CONICO	CONICAL GEAR SET
	8914-08-14	7	GRUPO CONICO	CONICAL GEAR SET
	9914-08-14	1	GRUPO CONICO	CONICAL GEAR SET
01.61720.00	19.2914-08-14	3		
02.00013.01	9914-08-14	12	ENGRANAJE.	GEAR
02.00159.00	15914-08-14	1	SOP. EJE	AXLE SUPPORT
02.00183.00	10914-08-14	47	BRIDA FORU	CLAMP U
02.00189.00	34914-08-14	27		
	36914-08-14	46		
02.00189.01	34914-08-14	26	SOP. PLAN. REC.	SHEET SUPPORT
	36914-08-14	45	SOP. PLAN. REC.	SHEET SUPPORT
02.00358.00	9914-08-14	27	ENGRANAJE EST. z14	GEAR z14
02.00385.02	8914-08-14	13	ENGRANAJE z11-11	GEAR z11-11
02.00400.01	10914-08-14	1	TROMPETA	ASCLE HOUSING
02.00411.00	10914-08-14	30	ENGRANAJE z48	GEAR z48
02.00414.00	10914-08-14	37	PALIER	DRIVE SHAFT
02.00414.99	10914-08-14	37	PALIER	DRIVE SHAFT
02.00415.00	10914-08-14	33	TUERCA DIN547*	NUT DIN547*
02.00417.00	10914-08-14	38	TUERCA DIN547*	NUT DIN547*
02.00419.00	10914-08-14	39	ANILLO DIN471*	SNAP RING DIN471*
02.00501.00	24914-08-14	5	RUEDA	WHEEL RIM
02.00510.01	10.1914-08-14	17	PLATO FRENO	BRAKE PLATE
02.00518.00	10914-08-14	40		
02.00518.04	10914-08-14	40	TAMBOR FRENO	BRAKE DRUMP
02.00519.01	10914-08-14	36	CHAVETA DIN6888	FEATHER DIN6888 KEY
02.00580.00	24914-08-14	6	RUEDA	WHEEL RIM
02.00581.00	24914-08-14	8	CUBIERTA TT	TYRE 'TT'
02.00590.00	24914-08-14	7	CAMARA	TUBE
02.00600.04	19914-08-14	2		
	19.1914-08-14	2		
02.00626.02	19914-08-14	2	PUENTE DIRECTRIZ	AXLE STEEL
02.00626.04	19.1914-08-14	2	PUENTE DIRECTRIZ	AXLE STEEL
02.00757.00	20914-08-14	20	TAPON.	CAP
02.00758.00	17914-08-14	2	TAPON.	CAP
02.00773.01	27914-08-14	26	PLACA AD. INDI.	PLATE AD. INDI
02.00774.00	27914-08-14	33	PLACA AD. INDI.	PLATE AD. INDI
02.00777.00	27914-08-14	34	PLACA AD. INDI.	PLATE AD. INDI
02.00778.00	27914-08-14	35	PLACA AD. INDI.	PLATE AD. INDI
02.00779.01	27914-08-14	36	PLACA AD. INDI.	PLATE AD. INDI
02.00780.02	17914-08-14	8	TAPA.	COVER
02.00780.09	17914-08-14	19		
02.00780.10	17914-08-14	6		
02.00788.00	32914-08-14	5	SOP. FIJACION	FIXING SUPPORT
02.00826.00	20914-08-14	21		
02.00923.01	20914-08-14	3	GUARDABARROS	MUDGUARD
02.00924.02	26914-08-14	2	DEPOSITO	TANK
02.00925.01	25914-08-14	4	DEPOSITO	TANK
02.00926.01	17914-08-14	10	TAPA.	COVER

Referencia *Reference*	Tabla *Board*	Fig. Nº *Fig. Nr*	Denominación *Denomination*	
02.01125.00	1.2914-08-14	11	PROT. MOTOR	ENGINE GUARD
02.01223.00	36914-08-14	17	PEDAL ACEL.	ACCEL. PEDAL
	40914-08-14	10	PEDAL ACEL.	ACCEL. PEDAL
02.01432.01	26914-08-14	6	TAPA REGISTRO	COVER HANDHOLE
02.01433.00	26914-08-14	13	SOP. FILTRO ASP.	AD. FILTER SUPPORT
02.01926.01	34914-08-14	15	SOP. BATERIA	BATTERY SUPPORT
	36914-08-14	26	SOP. BATERIA	BATTERY SUPPORT
	38914-08-14	23	SOP. BATERIA	BATTERY SUPPORT
	40914-08-14	29	SOP. BATERIA	BATTERY SUPPORT
02.02926.01	34914-08-14	24	SOP. PAS. FOR.	STRIGHT SUPPORT
	36914-08-14	38	SOP. PAS. FOR.	STRIGHT SUPPORT
	40914-08-14	27	SOP. PAS. FOR.	STRIGHT SUPPORT
02.08102.00	13914-08-14	6	CABLE FRENO	BRAKE CABLE
	13.1914-08-14	17	CABLE FRENO	BRAKE CABLE
02.09240.02	26914-08-14	1	SUPLEMENTO	PANEL
02.09250.00	25914-08-14	1	SUPLEMENTO	PANEL
02.10922.00	20914-08-14	10	SUPLEMENTO	PANEL
02.11010.00	25.1914-08-14	4		
02.11101.00	25.1914-08-14	2	CIERRE	LATCH
02.11922.00	20914-08-14	5	SUPLEMENTO	PANEL
02.20002.00	27914-08-14	3	PLACA AD. INDI.	PLATE AD. INDI
02.20003.00	10T914-08-14	5	PLACA AD. INDI.	PLATE AD. INDI
02.20922.00	20914-08-14	6	PROT. MOTOR	ENGINE GUARD
02.21922.01	20914-08-14	7	PROT. MOTOR	ENGINE GUARD
02.30927.00	20914-08-14	1	PROTECTOR	PROTECTOR
02.30927.01	20914-08-14	1	PROTECTOR	PROTECTOR
02.32013.00	17914-08-14	20	TAPON.	CAP
02.32016.00	20914-08-14	11	TAPON.	CAP
02.32022.00	17914-08-14	21A	TAPON.	CAP
02.32033.00	17914-08-14	21		
02.40323.01	6.1914-08-14	2	PALANCA MANDO	CONTROL LEVER
02.41323.00	6.1914-08-14	3	PALANCA MANDO	CONTROL LEVER
02.50551.00	13914-08-14	15	MAT. CUA.	
	13.1914-08-14	15	MAT. CUA.	
03.00425.00	10914-08-14	50		
03.00426.00	10914-08-14	51		
03.11103.00	29914-08-14	12	PLANCHA	PLATE
08.00007.00	7914-08-14	27		
08.00100.12	18.2914-08-14			
	28914-08-14	8		
08.00103.00	18.2914-08-14	16		
08.00105.01	18.2914-08-14	20	CUERPO VALVULA	VALVE BODY
08.00108.10	28914-08-14	1	SOP. PLACA	SUPPORT PLATE
08.00110.10	18.2914-08-14	22	CUERPO CIL.	CYL. BARREL
08.00111.10	18.2914-08-14	3	TAPA.	COVER
08.00113.10	18.2914-08-14	36	ESPARRAGO DIN939*	STUD DIN939*
08.00114.01	18.2914-08-14	7	EMBOLO	PISTON
08.00115.02	18.2914-08-14	18	RESORTE COMP.	SPRING COMPRESSION
08.00116.01	18.2914-08-14	17	EJE CIL/CIL	SHAFT 'CIL/CIL'
08.00117.00	18.2914-08-14	21	PASADOR DIN7	LOCK-PIN DIN7
08.00120.00	18.2914-08-14	30	TAPON.	CAP
08.00122.11	18.2914-08-14	1	EJE CIL/ROS	AXLE 'CIL/ROS'
08.00123.10	18.2914-08-14	31	ESPARRAGO DIN939*	STUD DIN939*
08.00123.11	18.2914-08-14	37	ESPARRAGO DIN939*	STUD DIN939*
08.00125.01	18.2914-08-14	12	TOPE.	BUTT
08.00127.00	18.2914-08-14	5	SUPLEMENTO	PANEL
08.00128.00	18.2914-08-14	26	ARANDELA.	WASHER
08.00133.00	18.2914-08-14	27	ARANDELA.	WASHER
08.00135.00	18.8914-08-14	22	EJE CIL/COA	SHAFT 'CIL/COA'
08.00138.00	23.2914-08-14	8	SOP. ART.	SUPPORT ART.
08.00139.00	23.2914-08-14	4	RESORTE TORS.	SPRING TORSION
08.00140.00	23.2914-08-14	3	EJE CIL/ROS	AXLE 'CIL/ROS'
08.00141.00	23.2914-08-14	14	ARANDELA DIN125*	WASHER DIN125*
08.00144.01	23.2914-08-14	12	PALANCA ACC.	ACC.LEVER
08.00145.00	23.2914-08-14	2	SOP. PAS. FOR.	STRIGHT SUPPORT
08.00150.01	23.2914-08-14	16		
08.00153.00	18.2914-08-14	35		
08.00316.00	26914-08-14	15	JUNTA MET. BUNA	GASKET MET. BUNA
08.00317.00	18.3914-08-14	5	JUNTA MET. BUNA	GASKET MET. BUNA
	18.4914-08-14	5	JUNTA MET. BUNA	GASKET MET. BUNA
08.00330.00	29914-08-14	6	DISTRIBUIDOR 2E	CONTROL VALVE 2E
08.00426.00	10914-08-14	3	TAMBOR SEPARADOR	SEPARATOR CASING

https://truckmanualshub.com/

Referencia *Reference*	Tabla *Board*	Fig. Nº *Fig. Nr*	Denominación *Denomination*	
08.00500.06	18.9914-08-14	1	CILINDRO D/E	CYLINDER D/E
08.00520.05	18.9914-08-14	2		
08.00521.04	18914-08-14	9	EMBOLO	PISTON
	18.8914-08-14	8	EMBOLO	PISTON
	18.9914-08-14	7	EMBOLO	PISTON
08.00525.01	18914-08-14	11	VASTAGO	SPINDLE
	18.9914-08-14	5	VASTAGO	SPINDLE
08.00525.02	18.8914-08-14	10	VASTAGO	SPINDLE
08.00526.00	18.8914-08-14	6		
08.00527.00	22914-08-14	2	COJINETE CIL.	BEARING CYL.
	18914-08-14	12	COJINETE CIL.	BEARING CYL.
	18.1914-08-14	14	COJINETE CIL.	BEARING CYL.
	18.6914-08-14	8	COJINETE CIL.	BEARING CYL.
	18.8914-08-14	4	COJINETE CIL.	BEARING CYL.
	18.9914-08-14	4	COJINETE CIL.	BEARING CYL.
	23.1914-08-14	7	COJINETE CIL.	BEARING CYL.
	28914-08-14	2	COJINETE CIL.	BEARING CYL.
	28.1914-08-14	19	COJINETE CIL.	BEARING CYL.
08.00528.02	18914-08-14	3	GUIA	GUIDE
	18.8914-08-14	13	GUIA	GUIDE
	18.9914-08-14	9	GUIA	GUIDE
08.00530.01	18914-08-14	6	TUERCA DIN547*	NUT DIN547*
	18.8914-08-14	15	TUERCA DIN547*	NUT DIN547*
	18.9914-08-14	12	TUERCA DIN547*	NUT DIN547*
08.00701.04	17914-08-14	1	PUPITRE	MAST
08.00705.52	28914-08-14	9		
	12T914-08-14	1	BASTIDOR	FRAME
08.00716.60	28914-08-14	7		
08.00788.01	22.2914-08-14	13	CONTRAPESO	BALLAST WEIGHT
08.00921.00	27914-08-14	21	PLACA AD. INDI.	PLATE AD. INDI
08.01025.00	15914-08-14	18	EJE CIL/CIL	SHAFT 'CIL/CIL'
08.01232.00	27914-08-14	22	PLACA AD. INDI.	PLATE AD. INDI
08.01233.00	17914-08-14	25	RESORTE TRAC.	SPRING TENSION
	32914-08-14	21	RESORTE TRAC.	SPRING TENSION
08.01234.00	17914-08-14	26	TAPON.	CAP
	32914-08-14	22	TAPON.	CAP
08.01351.00	27914-08-14	28	PLACA AD. INDI.	PLATE AD. INDI
08.05000.11	18.8914-08-14	1	CILINDRO D/E	CYLINDER D/E
08.11180.02	36914-08-14	51	SOP. ANG.	BRACKET ANG.
	40914-08-14	46	SOP. ANG.	BRACKET ANG.
08.11180.03	36914-08-14	50	SOP. ANG.	BRACKET ANG.
	40914-08-14	45	SOP. ANG.	BRACKET ANG.
08.20000.00	27914-08-14	2	PLACA AD. INDI.	PLATE AD. INDI
08.20520.00	18.8914-08-14	2		
08.30321.00	6.1914-08-14	9	PALANCA CONTACTO	GEAR LEVER
08.99100.00	18.2914-08-14	43	JUEGO JUNTAS	GASKET SET
08.99500.06	18.9914-08-14	14		
09.00080.03	34914-08-14	1	EQUIPO ELEC.	INST. ELEC. ASSEMBLY
09.00080.04	34914-08-14	1	EQUIPO ELEC.	INST. ELEC. ASSEMBLY
09.00081.06	36914-08-14	44	EQUIPO ELEC.	INST. ELEC. ASSEMBLY
09.00081.07	36914-08-14	44		
09.00117.00	1.3914-08-14	10	TUBO ADMISION	ADMISSION TUBE
09.00118.00	1.3914-08-14	11	TUBO ADMISION	ADMISSION TUBE
09.00119.00	1.1914-08-14	2	TUBO SALIDA GASES	TUBE EXHAUST
09.00121.00	2.1914-08-14	11	SOP. MOTOR	ENGINE SUPPORT
09.00123.00	3914-08-14	1		
09.00125.00	1.3914-08-14	13	PLETINA	STRIP
09.00130.00	2.1914-08-14	2	SOP. MOTOR	ENGINE SUPPORT
09.00135.00	23914-08-14	2		
	23.1914-08-14	6		
	28914-08-14	3	EJE CIL/COA	SHAFT 'CIL/COA'
09.00158.00	1.3914-08-14	12	TUBO ADMISION	ADMISSION TUBE
09.00167.00	1.3914-08-14	6	TIRANTE	TIE ROD
09.00171.00	1.4914-08-14	4	DEPOSITO	TANK
09.00182.00	12914-08-14	11	SUPLEMENTO	PANEL
09.00200.00	1.1914-08-14	1		
	2.1914-08-14	1		
09.00230.00	14914-08-14	10	TUBO ADMISION	ADMISSION TUBE
09.00245.00	1.4914-08-14	7	TAPON.	CAP
09.00328.00	36914-08-14	23	SOP. PAS. REC.	STRIP SUPPORT
	40914-08-14	16	SOP. PAS. REC.	STRIP SUPPORT
09.00426.00	10914-08-14	3	TAMBOR SEPARADOR	SEPARATOR CASING

Referencia *Reference*	Tabla *Board*	Fig. Nº *Fig. Nr*	Denominación *Denomination*	
09.00500.12	18914-08-14	1	CILINDRO D/E	CYLINDER D/E
09.00520.03	18914-08-14	2		
09.00600.02	16914-08-14	1		
09.00608.01	16.1914-08-14	1		
09.00617.00	19914-08-14	27	BARRA.	ROD
09.00630.61	26914-08-14	4	FILTRO ACEITE	OIL FILTER
09.00631.61	26914-08-14	11		
09.00654.00	31914-08-14	7		
09.00705.52	12T914-08-14	1	BASTIDOR	FRAME
09.00705.62	22914-08-14	1	BASTIDOR	FRAME
	12T914-08-14	1	BASTIDOR	FRAME
09.00716.04	23914-08-14	1	TOLVA.	SKIP
09.00720.00	1.4914-08-14	1	PLETINA	STRIP
09.00750.00	17914-08-14	16	TOPE.	BUTT
09.00750.00	32914-08-14	4	TOPE.	BUTT
09.00769.00	27914-08-14	4	PLACA AD. INDI.	PLATE AD. INDI
09.00773.01	12.2914-08-14	15	TUBO BUNDY3	TUBE BUNDY3
09.00774.01	12.2914-08-14	9	TUBO BUNDY3	TUBE BUNDY3
09.00821.00	1.3914-08-14	1	EMBUDO	LEVER DESCOMP.
09.00922.00	41914-08-14	2	CAJA.	BOX.
09.00922.01	39914-08-14	2	CAJA.	BOX.
09.00922.03	35914-08-14	14	CAJA.	BOX.
09.00922.05	37914-08-14	1	CAJA.	BOX.
09.00923.03	35914-08-14	3	TAPA SOP.	FLANGE
09.00923.04	37914-08-14	2	TAPA.	COVER
09.00925.00	41914-08-14	5	TAPA.	COVER
09.00940.00	39914-08-14	16	TAPA.	COVER
09.01016.00	16914-08-14	26	VOLANTE DIREC.	WHEEL STEERING
09.01025.00	15914-08-14	18	EJE CIL/CIL	SHAFT 'CIL/CIL'
09.01200.00	14914-08-14	3	FILTRO AIRE	AIR FILTER
09.01201.00	14914-08-14	4	ABRAZADERA.	CLAMP
09.01203.00	18.4914-08-14	1	VALVULA	VALVE
09.01203.01	18.3914-08-14	1	VALVULA	VALVE
09.01204.00	14914-08-14	8	ELEM. FILTRANTE	FILTER ELEMENT
09.01210.00	18.4914-08-14	2	CUERPO VALVULA	VALVE BODY
09.01210.01	18.3914-08-14	2	CUERPO VALVULA	VALVE BODY
09.01211.00	18.3914-08-14	6	RACOR M/M	NIPPLE M/M
	18.4914-08-14	6	RACOR M/M	NIPPLE M/M
09.01212.00	18.3914-08-14	3	RESORTE COMP.	SPRING COMPRESSION
09.01212.00	18.4914-08-14	3	RESORTE COMP.	SPRING COMPRESSION
09.01242.00	39914-08-14	17		
09.01243.00	41914-08-14	20		
09.01351.00	27914-08-14	12	PLACA AD. INDI.	PLATE AD. INDI
09.01451.00	29914-08-14	9	PALANCA MANDO	CONTROL LEVER
09.01501.00	38914-08-14	6	TRAMO I/E	LENGTH ELEC. INSTAL.
09.01827.00	31914-08-14	4	SOP. PLACA	SUPPORT PLATE
09.01828.00	31914-08-14	3	SOP. PLACA	SUPPORT PLATE
09.01829.00	31914-08-14	2	FALDON	GUARD
09.01830.00	31914-08-14	5	SOP. ANG.	BRACKET ANG.
09.01831.00	31914-08-14	1	FALDON	GUARD
09.01832.00	31914-08-14	6	SOP. ANG.	BRACKET ANG.
09.03016.00	8T914-08-14	17	RESORTE TORS.	SPRING TORSION
09.03023.00	8T914-08-14	6		
09.03045.00	9T914-08-14	1	TAPA.	COVER
09.03055.00	8T914-08-14	2	VARILLA FORL6	ROD L6
09.03065.00	8T914-08-14	10	BIELA	CON ROD
09.03080.00	9T914-08-14	6	SOP. EJE	AXLE SUPPORT
09.03081.00	8T914-08-14	11	EJE CAS/CIL	SHAFT 'CAS/CIL'
	9T914-08-14	16	EJE CAS/CIL	SHAFT 'CAS/CIL'
09.03094.00	6T914-08-14	19	EJE CPA/CPA	AXLE 'CPA/CPA'
	8T914-08-14	15	EJE CPA/CPA	AXLE 'CPA/CPA'
09.03104.00	9T914-08-14	12	TAPA.	COVER
09.03130.00	9T914-08-14	5	EJE CIL/ROS	AXLE 'CIL/ROS'
09.03135.00	9T914-08-14	3	EJE CIL/CIL	SHAFT 'CIL/CIL'
09.03140.00	8T914-08-14	16	EJE CIL/CIL	SHAFT 'CIL/CIL'
09.03150.00	9T914-08-14	17	PALANCA ACC.	ACC.LEVER
09.03159.00	10T914-08-14	1	PEDAL FIJ.	HOOPER PEDAL
09.03179.00	6T914-08-14	14	EJE CIL/CPA	AXLE 'CIL/CPA'
09.03350.00	8T914-08-14	23		
09.03360.00	8T914-08-14	24	EJE CIL/CIL	SHAFT 'CIL/CIL'
09.03485.00	6T914-08-14	17	EJE CAS/CAS	SHAFT 'CAS/CAS'
	8T914-08-14	19	EJE CAS/CAS	SHAFT 'CAS/CAS'

https://truckmanualshub.com/

Referencia *Reference*	Tabla *Board*	Fig. Nº *Fig. Nr*	Denominación *Denomination*	
09.06130.00	16.1914-08-14	3		
09.09220.03	35914-08-14	2		
09.09231.01	37914-08-14	1B	TABLIER	DASH, PANEL
09.09240.00	39914-08-14	4	TABLIER	DASH, PANEL
09.09250.00	41914-08-14	4	TABLIER	DASH, PANEL
09.09902.00	27914-08-14	23	PLACA AD. INDI.	PLATE AD. INDI
	27914-08-14	29	PLACA AD. INDI.	PLATE AD. INDI
09.10102.00	28.1914-08-14	6	EJE CIL/CPL	AXLE 'CIL/CPL'
09.10110.05	28.1914-08-14	5	BRAZO PALA	SHOVEL ARM
09.10110.24	28.1914-08-14	4	SOP. PAS. FOR.	STRIGHT SUPPORT
09.10115.01	28.1914-08-14	11	SOP. ART.	SUPPORT ART.
09.10120.04	18.7914-08-14	1	CILINDRO S/E	CYLINDER S/E
09.10121.03	18.7914-08-14	2		
09.10130.02	28.1914-08-14	2	BRAZO PALA	SHOVEL ARM
09.10137.01	28.1914-08-14	3	EJE COR/ROS	AXLE 'COR/ROS'
09.10140.00	28.1914-08-14	1	TOLVA.	SKIP
09.10155.00	27914-08-14	30	PLACA AD. INDI.	PLATE AD. INDI
09.10162.02	18.7914-08-14	10	VASTAGO	SPINDLE
09.10301.00	18.7914-08-14	14	EJE CAS/CAS	SHAFT 'CAS/CAS'
09.10302.00	18.7914-08-14	11	COJINETE CIL.	BEARING CYL.
	28.1914-08-14	20	COJINETE CIL.	BEARING CYL.
09.10555.00	28.1914-08-14	15	MAT. REC.	STRIP MAT.
09.10555.02	28.1914-08-14	15	MAT. PLANCHA	SHEET MAT.
09.10622.00	18.7914-08-14	23	EJE CIL/ROS	AXLE 'CIL/ROS'
09.10680.00	16.1914-08-14	2	COLUMNA DIREC.	STEERING COLUMM
09.11009.00	31.1914-08-14	1	ESPEJO RETROVISOR	DRIVING MIRROR
09.11010.00	31.1914-08-14	3		
09.11011.00	31.1914-08-14	4		
09.11012.00	31.1914-08-14	5		
09.11013.00	31.1914-08-14	2	ESPEJO RETROVISOR	DRIVING MIRROR
09.11829.01	31914-08-14	2	FALDON	GUARD
09.11831.01	31914-08-14	1	FALDON	GUARD
09.14012.00	9T914-08-14	15	INTERRUPTOR	SWITCH
09.14105.00	10T914-08-14	6	LUZ TESTIGO	WARNING LIGHT
09.14140.00	9T914-08-14	20	TRAMO I/E	LENGTH ELEC. INSTAL.
	10T914-08-14	9	TRAMO I/E	LENGTH ELEC. INSTAL.
09.15050.00	10T914-08-14	4	INDICADOR	INDICATOR
09.50020.00	35914-08-14	11	TABLIER	DASH, PANEL
09.50020.01	35914-08-14	11	TABLIER	DASH, PANEL
09.50022.00	37914-08-14	8		
09.50024.00	37914-08-14	4		
09.50026.00	37914-08-14	5	CAJA INTERMITENCIA	PULSE GENERATOR
09.60410.00	1.3914-08-14	8	RADIADOR	RADIATOR
09.60620.00	25914-08-14	23	FILTRO COMBUST.	FILTER FUEL
09.60621.00	25914-08-14	24	CASQUILLO.	BUSH
09.70034.00	37914-08-14	15	INTERRUPTOR	SWITCH
	41914-08-14	6	INTERRUPTOR	SWITCH
09.87228.05	18.8914-08-14	11		
09.92200.03	34914-08-14	2		
09.92200.03	35914-08-14	1		
09.92310.00	37914-08-14	1A		
09.92310.01	36914-08-14	1		
09.92400.00	38914-08-14	1		
	39914-08-14	1		
09.92500.00	40914-08-14	1		
	41914-08-14	1		
09.99007.00	7914-08-14	29		
	8914-08-14	19		
09.99007.00	9914-08-14	37		
09.99120.02	18.7914-08-14	25		
09.99500.06	18914-08-14	17		
09.99500.06	18.8914-08-14	21		
10.00020.01	5914-08-14	22*	PALANCA ACC.	ACC.LEVER
10.00131.00	15914-08-14	17	ARANDELA DIN1440*	WASHER DIN1440*
10.00157.00	15914-08-14	15	MANIVELA ARRANQ.	STARTING HANDLE
10.00184.00	12914-08-14	16	ARANDELA DIN434*	WASHER DIN434*
10.00201.00	4914-08-14	5	CONJ. PRESION	PRESSURE PLATE
	4.1914-08-14	6	CONJ. PRESION	PRESSURE PLATE
	4.2914-08-14	6	CONJ. PRESION	PRESSURE PLATE
10.00202.01	11914-08-14	19	PEDAL EMBR.	CLUTCH PEDAL
10.00214.01	11914-08-14	9	EJE CIL/CPA	AXLE 'CIL/CPA'
10.00215.01	11914-08-14	2	PEDAL EMBR.	CLUTCH PEDAL

Referencia *Reference*	Tabla *Board*	Fig. Nº *Fig. Nr*	Denominación *Denomination*	
10.00502.03	24914-08-14		RUEDA	WHEEL RIM
10.00519.04	11914-08-14	3	PEDAL FRENO	BRAKE PEDAL
	12914-08-14	1	PEDAL FRENO	BRAKE PEDAL
	12.2914-08-14	4	PEDAL FRENO	BRAKE PEDAL
	13914-08-14	1	PEDAL FRENO	BRAKE PEDAL
10.00555.00	24914-08-14		CAMARA	TUBE
	24914-08-14	3	CAMARA	TUBE
10.00561.00	3T914-08-14	1	RUEDA	WHEEL RIM
10.00585.01	24914-08-14			
10.00629.00	16914-08-14	5	COJINETE CIL.	BEARING CYL.
10.00776.00	2.2914-08-14	1	SOP. PAS. FOR.	STRIGHT SUPPORT
10.00776.01	2914-08-14	1	SOP. MOTOR	ENGINE SUPPORT
10.00921.00	7914-08-14	13		
	1T914-08-14	20		
	6T914-08-14	10	TAPON.	CAP
10.01019.02	15914-08-14	10	EJE CIL/CIL	SHAFT 'CIL/CIL'
10.01019.06	15914-08-14	10		
10.01115.00	18.1914-08-14	8	CABEZA VASTAGO	CYLINDER ROD HEAD
10.01117.00	18.1914-08-14	7	TUERCA DIN439*	NUT DIN439*
	18.5914-08-14	9	TUERCA DIN439*	NUT DIN439*
	18.6914-08-14	7	TUERCA DIN439*	NUT DIN439*
10.02110.01	5914-08-14	26*		
10.03101.03	6T914-08-14	20		
	7T914-08-14	1		
	8T914-08-14	1		
	9T914-08-14	13	SOP. ENGRANAJE	GEAR SUPPORT
10.03102.00	6T914-08-14	2	TAPA.	COVER
10.03103.00	7T914-08-14	9	ENGRANAJE.	GEAR
10.03104.01	7T914-08-14	4	EJE CIL/CIL	SHAFT 'CIL/CIL'
10.03106.00	6T914-08-14	13	HORQUILLA ACC.	ACC. FORK
10.03107.00	6T914-08-14	6	EJE CAS/CIL	SHAFT 'CAS/CIL'
10.03109.00	6T914-08-14	11	EJE CIL/COA	SHAFT 'CIL/COA'
10.03113.00	11T914-08-14	1	JUNTA CARDAN	PROPELLER SHAFT
10.03114.00	11T914-08-14	2		
10.03115.00	11T914-08-14	3		
10.09100.00	19.2914-08-14	2	ROTULA.	BUSHING
10.09101.01	4T914-08-14	3	ROTULA DIREC.	L BALL
10.15585.00	24914-08-14	4	CUBIERTA TT	TYRE 'TT'
11.99130.01	19.2914-08-14	17		
14.00049.52	18.6914-08-14	1	BRAZO TIJERA	SCISORS ARM
14.00182.01	22.1914-08-14	14	SOP. GUIA TUBO	TUBE GUIDE SUPPORT
14.00566.03	12914-08-14	8	EJE ROS/ROS	AXLE 'ROS/ROS'
14.00705.53	22.1914-08-14	1	BASTIDOR	FRAME
	12T914-08-14	1	BASTIDOR	FRAME
14.00716.04	23.1914-08-14	1	TOLVA.	SKIP
14.00749.00	22.1914-08-14	12	ARANDELA.	WASHER
14.00770.00	27914-08-14	24	PLACA AD. INDI.	PLATE AD. INDI
14.00775.00	27914-08-14	13	PLACA AD. INDI.	PLATE AD. INDI
14.00775.01	27914-08-14	13	PLACA AD. INDI.	PLATE AD. INDI
14.00775.02	27914-08-14	13	PLACA AD. INDI.	PLATE AD. INDI
14.00775.03	27914-08-14	13	PLACA AD. INDI.	PLATE AD. INDI
14.00788.02	22.2914-08-14	6	CONTRAPESO	BALLAST WEIGHT
14.01030.01	18.6914-08-14	3	SOP. ART.	SUPPORT ART.
14.01050.00	22.1914-08-14	8	EJE RPS/RPS	SHAFT 'RPS/RPS'
	18.6914-08-14	9	EJE RPS/RPS	SHAFT 'RPS/RPS'
	23.1914-08-14	11	EJE RPS/RPS	SHAFT 'RPS/RPS'
14.01053.00	22.1914-08-14	7	SOP. PAS. REC.	STRIP SUPPORT
	23.1914-08-14	12	SOP. PAS. REC.	STRIP SUPPORT
14.01065.01	18.6914-08-14	16	SOP. ART.	SUPPORT ART.
14.01070.01	18.6914-08-14	14	EJE CIL/ROS	AXLE 'CIL/ROS'
14.01072.01	18.6914-08-14	5	EJE CIL/ROS	AXLE 'CIL/ROS'
14.01073.00	18.6914-08-14	4	RODILLO*	ROLLER
14.01074.00	18.6914-08-14	6	ARANDELA REG.	WASHER ADJUST.
14.01100.03	18.5914-08-14	1	CILINDRO D/E	CYLINDER D/E
14.01101.03	18.5914-08-14	6		
14.01102.02	18.5914-08-14	10	VASTAGO	SPINDLE
14.01107.00	18.5914-08-14	11		
14.01110.02	18.5914-08-14	4	GUIA	GUIDE
14.01115.00	18.5914-08-14	8	CABEZA VASTAGO	CYLINDER ROD HEAD
14.01116.00	18.1914-08-14	15	COJINETE CIL.	BEARING CYL.
	18.5914-08-14	7	COJINETE CIL.	BEARING CYL.
14.01116.01	18.5914-08-14	17	COJINETE CIL.	BEARING CYL.

https://truckmanualshub.com/

Referencia *Reference*	Tabla *Board*	Fig. Nº *Fig. Nr*	Denominación *Denomination*	
14.01351.02	27914-08-14	11	PLACA AD. INDI.	PLATE AD. INDI
14.01410.02	23.1914-08-14	2	SOP. ART.	SUPPORT ART.
14.01430.01	18.6914-08-14	2	SOP. ART.	SUPPORT ART.
14.07167.00	20914-08-14	30	EJE CIL/CPA	AXLE 'CIL/CPA'
14.10651.00	18.6914-08-14	11	EJE CIL/CIL	SHAFT 'CIL/CIL'
14.10652.01	18.6914-08-14	10	SOP. PAS. REC.	STRIP SUPPORT
14.11430.00	40914-08-14	21	SOP. PAS. REC.	STRIP SUPPORT
14.20000.00	27914-08-14	1	PLACA AD. INDI.	PLATE AD. INDI
14.40901.00	20914-08-14	8		
14.99110.04	18.5914-08-14	16	JUEGO JUNTAS	GASKET SET
15.00101.12	34914-08-14	6	ALTERNADOR	GENERATOR
	36914-08-14	12	ALTERNADOR	GENERATOR
15.00101.13	34914-08-14	6	ALTERNADOR	GENERATOR
	36914-08-14	12	ALTERNADOR	GENERATOR
15.00107.01	5914-08-14	10.1	SOP. MOTOR	ENGINE SUPPORT
15.00109.00	5914-08-14	3.1	SUPLEMENTO	PANEL
15.00113.00	5914-08-14	9	AMORTIGUADOR.	SHOCK ABSORVER
	2914-08-14	4	AMORTIGUADOR.	SHOCK ABSORVER
	2.1914-08-14	5	AMORTIGUADOR.	SHOCK ABSORVER
	2.2914-08-14	4	AMORTIGUADOR.	SHOCK ABSORVER
15.00114.00	5914-08-14	11	CASQUILLO.	BUSH
15.00114.01	2914-08-14	5	CASQUILLO.	BUSH
	2.1914-08-14	4	CASQUILLO.	BUSH
	2.2914-08-14	3	CASQUILLO.	BUSH
15.00124.01	3914-08-14	3	SOP. EJE	AXLE SUPPORT
15.00124.02	3.1914-08-14	1	SOP. EJE	AXLE SUPPORT
15.00315.00	9914-08-14	32	RESORTE COMP.	SPRING COMPRESSION
15.00357.00	1T914-08-14	23	ESPARRAGO DIN939*	STUD DIN939*
15.00750.00	12T914-08-14	3	ARANDELA DIN6916*	WASHER DIN6916*
15.00831.01	18.1914-08-14	20	EJE CIL/COA	SHAFT 'CIL/COA'
15.00832.00	18914-08-14	14	SUPLEMENTO	PANEL
	18.1914-08-14	18	SUPLEMENTO	PANEL
	18.8914-08-14	23	SUPLEMENTO	PANEL
	18.9914-08-14	16	SUPLEMENTO	PANEL
	23914-08-14	3	SUPLEMENTO	PANEL
	23.1914-08-14	3	SUPLEMENTO	PANEL
	28914-08-14	6	SUPLEMENTO	PANEL
15.00834.00	22.2914-08-14	2	CADENA	CHAIN
15.00835.00	22.2914-08-14	1A	EJE CPA/GRA	AXLE 'CPA/GRA'
15.00836.00	22.2914-08-14	5	PASADOR DIN11024	GRIP CLIP DIN11024
15.00836.01	20914-08-14	31	PASADOR DIN11024	GRIP CLIP DIN11024
15.01016.01	16.1914-08-14	8	VOLANTE DIREC.	WHEEL STEERING
15.01216.00	18914-08-14	13	EJE CIL/COA	SHAFT 'CIL/COA'
	18.1914-08-14	19	EJE CIL/COA	SHAFT 'CIL/COA'
	18.9914-08-14	15	EJE CIL/COA	SHAFT 'CIL/COA'
15.01230.00	33914-08-14	7	PASACABLES	GROMMET
15.01443.00	34914-08-14	17	CABLE ELEC.	ELECTRICAL CABLE
	36914-08-14	14	CABLE ELEC.	ELECTRICAL CABLE
15.01444.00	38914-08-14	18	CABLE ELEC.	ELECTRICAL CABLE
	40914-08-14	18	CABLE ELEC.	ELECTRICAL CABLE
15.01524.00	25914-08-14	2	TAPON.	CAP
	25.1914-08-14	1	TAPON.	CAP
15.01525.00	27914-08-14	38	PLACA AD. INDI.	PLATE AD. INDI
15.02011.01	4914-08-14	4	DISCO EMBR.	DISK CLUTCH
	4.1914-08-14	5	DISCO EMBR.	DISK CLUTCH
	4.2914-08-14	5	DISCO EMBR.	DISK CLUTCH
15.07780.00	12.1914-08-14	21	TORNILLO DIN910*	SCREW DIN910*
15.08350.00	22.2914-08-14	1		
15.10011.00	16914-08-14	27	CHAVETA DIN6888	FEATHER DIN6888 KEY
15.10750.08	26914-08-14	17		
16.00110.01	29914-08-14	4	BOMBA HIDR.	HYDR. PUMP
16.00146.00	3914-08-14	10	VARILLA FORL6	ROD L6
	3.1914-08-14	9	VARILLA FORL6	ROD L6
16.00147.00	3914-08-14	10	VARILLA FORL6	ROD L6
16.00151.03	3914-08-14	2	PALANCA ACC.	ACC.LEVER
16.00760.00	1.3914-08-14	14	CASQUILLO.	BUSH
	32914-08-14	11	CASQUILLO.	BUSH
	33914-08-14	8	CASQUILLO.	BUSH
16.01354.00	14914-08-14	13	ARANDELA DIN9021*	CIR-CLIP INT. DIN9021*
16.01415.00	34914-08-14	7	MOTOR ARRANQUE	STARTER
	36914-08-14	10	MOTOR ARRANQUE	STARTER
16.01449.12	36914-08-14	6	SOP. PILOTO	LIGHT SUPPORT

Referencia *Reference*	Tabla *Board*	Fig. Nº *Fig. Nr*	Denominación *Denomination*	
	40914-08-14	2	SOP. PILOTO	LIGHT SUPPORT
16.01449.13	36914-08-14	7	SOP. PILOTO	LIGHT SUPPORT
	40914-08-14	4	SOP. PILOTO	LIGHT SUPPORT
16.01470.00	3914-08-14	15	VARILLA.	ROD
	3.1914-08-14	8	VARILLA.	ROD
19.00220.03	18.7914-08-14	15	GUIA	GUIDE
19.00221.02	18.7914-08-14	4		
31.01064.00	12.2914-08-14	14	RACOR O/H/H	NIPPLE O/H/H
31.01065.00	12.2914-08-14	11	RACOR TOR. SIMPLE	NIPPLE SCREW SIM.
31.01329.00	36914-08-14	43		
	40914-08-14	22	LAMPARA	BULB
31.01331.00	36914-08-14	42		
	40914-08-14	23	LAMPARA	BULB
37.00007.00	7914-08-14	27		
	7914-08-14	27		
37.00123.04	3914-08-14	1	PEDAL ACEL.	ACCEL. PEDAL
37.00157.03	13914-08-14	16	SOP. PAS. REC.	STRIP SUPPORT
37.00157.12	13.1914-08-14	9	SOP. BOMBA PIE	BRAKE PUMP SUPPORT
37.00374.00	5914-08-14	8	ARANDELA DIN9021*	CIR-CLIP INT. DIN9021*
	2914-08-14	7	ARANDELA DIN9021*	CIR-CLIP INT. DIN9021*
	2.1914-08-14	3	ARANDELA DIN9021*	CIR-CLIP INT. DIN9021*
	2.2914-08-14	7	ARANDELA DIN9021*	CIR-CLIP INT. DIN9021*
37.00726.22	20914-08-14	13	PLANCHA	PLATE
37.01002.00	16.1914-08-14	3	DIREC. HIDROSTATIC.	STEERING VALVE
37.01123.02	3.1914-08-14	2	PEDAL ACEL.	ACCEL. PEDAL
37.01242.12	36914-08-14	15	TRAMO I/E	LENGTH ELEC. INSTAL.
	40914-08-14	8	TRAMO I/E	LENGTH ELEC. INSTAL.
37.01501.02	40914-08-14	14	TRAMO I/E	LENGTH ELEC. INSTAL.
37.06130.00	16.1914-08-14	3	DIREC. HIDROSTATIC.	STEERING VALVE
39.00379.00	2T914-08-14	1		
39.00617.12	4T914-08-14	1		
39.00705.52	12T914-08-14	1		
39.00705.53	12T914-08-14	1	BASTIDOR	FRAME
39.00705.60	12T914-08-14	1	BASTIDOR	FRAME
39.08242.00	27914-08-14	39	PLACA AD. INDI.	PLATE AD. INDI
	27914-08-14	40	PLACA AD. INDI.	PLATE AD. INDI
39.09901.00	27914-08-14	16	PLACA AD. INDI.	PLATE AD. INDI
39.10601.00	1T914-08-14	13	TAPA SOP.	FLANGE
39.10602.00	1T914-08-14	11	TAPA SOP.	FLANGE
39.10605.00	1T914-08-14	4	TROMPETA	ASCLE HOUSING
39.10606.01	1T914-08-14	1	TROMPETA	ASCLE HOUSING
39.10611.01	2T914-08-14	17	ENGRANAJE.	GEAR
39.10612.01	3T914-08-14	5	ENGRANAJE.	GEAR
39.10613.01	3T914-08-14	2	EJE CIL/CIL	SHAFT 'CIL/CIL'
39.10614.00	1T914-08-14	6	EJE CIL/CIL	SHAFT 'CIL/CIL'
39.10615.00	2T914-08-14	12	SUPLEMENTO	PANEL
39.10616.00	1T914-08-14	2	CASQUILLO.	BUSH
39.10618.00	5T914-08-14	8		
39.10619.00	5T914-08-14	1	ACOP. CIL/CIL	COUPLING CYL/CYL
39.10620.00	5T914-08-14	2	TAPA.	COVER
39.10621.00	2T914-08-14	3	ENGRANAJE.	GEAR
39.10622.00	2T914-08-14	4	ENGRANAJE.	GEAR
39.10623.01	4T914-08-14	7	SOP. PLAN. CIL.	SUPPORT SHEET
39.10624.01	4T914-08-14	10	SOP. PLAN. CIL.	SUPPORT SHEET
39.10625.00	1T914-08-14	18	SOP. DIRECCION	STEERING SUPPORT
39.10626.00	1T914-08-14	22	SOP. DIRECCION	STEERING SUPPORT
39.10628.00	24914-08-14	2	RUEDA	WHEEL RIM
	3T914-08-14	1	RUEDA	WHEEL RIM
39.10630.00	2T914-08-14	15	ROTULA.	BUSHING
39.10631.00	2T914-08-14	19	GUARDAPOLVO	DUST EXCLUDER
39.10632.00	2T914-08-14	14	TUERCA DIN982	NUT DIN982
39.10640.00	5T914-08-14	9	GRUESO REG. DISCO	REGUL SKIM
39.10641.00	1T914-08-14	9	GRUESO REG. REC.	REGUL SPACER
39.10641.01	1T914-08-14	9	GRUESO REG. REC.	REGUL SPACER
39.10642.00	7T914-08-14	6	GRUESO REG. REC.	REGUL SPACER
39.15502DE00	24914-08-14	1	RUEDA	WHEEL RIM
39.15502IZ00	24914-08-14	1	RUEDA	WHEEL RIM
40.00005.00	6.1914-08-14	22		
40.00005.10	6.1914-08-14	22		
40.00100.20	1.2914-08-14	7	MOTOR DIESEL	ENGINE DIESEL
40.00148.00	3.1914-08-14	15	CABLE MANDO	CABLE CHOKE
40.00930.00	20914-08-14	2	SOP. PLACA	SUPPORT PLATE

https://truckmanualshub.com/

Referencia *Reference*	Tabla *Board*	Fig. Nº *Fig. Nr*	Denominación *Denomination*	
40.02001.00	1.2914-08-14	1	SILENCIADOR	MUFFLER
	1914-08-14	2	SILENCIADOR	MUFFLER
40.02148.00	3.1914-08-14	18	SOP. PAS. REC.	STRIP SUPPORT
40.08440.10	34914-08-14	3	TRAMO I/E	LENGTH ELEC. INSTAL.
40.09220.00	35914-08-14	2	TABLIER	DASH, PANEL
40.10120.00	2.2914-08-14	6	SOP. MOTOR	ENGINE SUPPORT
40.10178.01	15914-08-14	20	SOP. ANG.	BRACKET ANG.
40.10179.00	15914-08-14	18	EJE CPA/CPA	AXLE 'CPA/CPA'
40.10179.01	15914-08-14	18	EJE CPA/CPA	AXLE 'CPA/CPA'
40.10180.00	5914-08-14	31		
40.10213.00	4.1914-08-14	1	VOLANTE MOTOR	FLY WHEEL ENGINE
	4.2914-08-14	1	VOLANTE MOTOR	FLY WHEEL ENGINE
40.20150.00	1.2914-08-14	3	TUBO SALIDA GASES	TUBE EXHAUST
40.30310.00	6.1914-08-14	15	TAPA.	COVER
40.30310.01	6.1914-08-14	15	TAPA.	COVER
40.92200.00	34914-08-14	2		
	35914-08-14	1		
43.00727.00	3914-08-14	14	VARILLA FORL6	ROD L6
	3.1914-08-14	13	VARILLA FORL6	ROD L6
43.00747.20	12.1914-08-14			
	12.2914-08-14	12		
43.00747.25	12.1914-08-14	2	GUARDAPOLVO	DUST EXCLUDER
43.00747.34	12.1914-08-14	15	VALVULA	VALVE
43.00747.90	12.1914-08-14	22	JUEGO JUNTAS	GASKET SET
43.00750.06	12.2914-08-14	16	TUBO PLAS. TRANS.	HOSE TRANS. PLAS
43.00750.07	25914-08-14	11	TUBO PLAS. TRANS.	HOSE TRANS. PLAS
43.00751.00	12.2914-08-14	1		
43.00755.01	13914-08-14	11	PALANCA MANDO	CONTROL LEVER
	13.1914-08-14	1	PALANCA MANDO	CONTROL LEVER
43.00755.11	13914-08-14	7	SOP. PAS. REC.	STRIP SUPPORT
	13.1914-08-14	16	SOP. PAS. REC.	STRIP SUPPORT
43.00766.00	13.1914-08-14	8	SOP. PAS. REC.	STRIP SUPPORT
43.01170.00	27914-08-14	5	PLACA AD. INDI.	PLATE AD. INDI
43.01352.10	27914-08-14	6	PLACA AD. INDI.	PLATE AD. INDI
43.01356.00	27914-08-14	17	PLACA AD. INDI.	PLATE AD. INDI
43.01521.00	12.2914-08-14	13	INTERRUPTOR	SWITCH
43.07310.01	11914-08-14	1	SUPLEMENTO	PANEL
43.07511.00	12.2914-08-14	2		
43.07512.00	12.2914-08-14	17		
43.07550.01	13914-08-14	9		
43.07550.01	13.1914-08-14	2		
43.08034.00	10914-08-14	7	TORNILLO DIN912*	SCREW DIN912*
	10.1914-08-14	7	TORNILLO DIN912*	SCREW DIN912*
43.10621.00	38914-08-14	2	CAJA.	BOX.
	40914-08-14	9	CAJA.	BOX.
43.10623.00	36914-08-14	18	CAJA INTERMITENCIA	PULSE GENERATOR
43.10827.01	34914-08-14	20	SOP. FIJACION	FIXING SUPPORT
	36914-08-14	28	SOP. FIJACION	FIXING SUPPORT
	38914-08-14	13	SOP. FIJACION	FIXING SUPPORT
	40914-08-14	32	SOP. FIJACION	FIXING SUPPORT
43.11192.00	14914-08-14	14	RACOR M/H	NIPPLE M/H
43.14105.03	25914-08-14	27		
43.14105.11	25914-08-14	25		
43.14105.14	25914-08-14	26		
43.14105.18	25914-08-14	26		
43.14105.40	1.4914-08-14	6		
	25914-08-14	17		
43.50022.01	35914-08-14	15	LLAVE CONTACTO	SWITCH KEY
	37914-08-14	7	LLAVE CONTACTO	SWITCH KEY
	39914-08-14	7	LLAVE CONTACTO	SWITCH KEY
	41914-08-14	10	LLAVE CONTACTO	SWITCH KEY
43.50022.02	35914-08-14	15	LLAVERO	
	37914-08-14	7	LLAVERO	
43.50023.00	37914-08-14	16	CONMUTADOR	CONMUTATOR
	41914-08-14	17	CONMUTADOR	CONMUTATOR
43.50024.01	35914-08-14	8	INTERRUPTOR	SWITCH
	37914-08-14	11	INTERRUPTOR	SWITCH
	39914-08-14	9	INTERRUPTOR	SWITCH
	41914-08-14	15	INTERRUPTOR	SWITCH
43.50025.00	35914-08-14	9	GUARDAPOLVO	DUST EXCLUDER
	37914-08-14	14	GUARDAPOLVO	DUST EXCLUDER
	39914-08-14	10	GUARDAPOLVO	DUST EXCLUDER

Referencia *Reference*	Tabla *Board*	Fig. Nº *Fig. Nr*	Denominación *Denomination*	
	41914-08-14	14	GUARDAPOLVO	DUST EXCLUDER
43.50026.00	37914-08-14	17	CONMUTADOR	CONMUTATOR
	41914-08-14	16	CONMUTADOR	CONMUTATOR
43.50027.00	10T914-08-14	8	LAMPARA	BULB
43.50028.00	10T914-08-14	7	CONECTOR	PLUG
43.50030.00	35914-08-14	5	FUSIBLE	FUSE
43.50032.00	37914-08-14	12	FUSIBLE	FUSE
	39914-08-14	8	FUSIBLE	FUSE
	41914-08-14	7	FUSIBLE	FUSE
43.50057.02	39914-08-14	12	CAJA.	BOX.
	41914-08-14	12	CAJA.	BOX.
43.50119.00	14914-08-14	11	INDICADOR	INDICATOR
43.50941.00	32914-08-14	13	TORNILLO DIN923*	SCREW DIN923*
43.70581.01	6T914-08-14	16	RESORTE TORS.	SPRING TORSION
44.00706.02	13.1914-08-14	11	CABLE FRENO	BRAKE CABLE
44.01102.01	18.1914-08-14	6		
44.01210.00	18.1914-08-14	11		
44.01211.00	18.1914-08-14	5	EMBOLO	PISTON
45.00139.00	3914-08-14	8	RESORTE TRAC.	SPRING TENSION
45.00139.01	8T914-08-14	18	RESORTE TRAC.	SPRING TENSION
45.00369.00	6T914-08-14	5	ENGRANAJE z23	GEAR z23
45.00385.00	6T914-08-14	8	ACOP. CIL/CIL	COUPLING CYL/CYL
45.00407.21	10.2914-08-14	3	PLATO FRENO	BRAKE PLATE
45.00407.26	10.2914-08-14	5	MORDAZA FRENO	BRAKE SHOE
45.00408.21	10.2914-08-14	3	PLATO FRENO	BRAKE PLATE
45.00408.26	10.2914-08-14	5	MORDAZA FRENO	BRAKE SHOE
45.00408.29	10.2914-08-14	6	MORDAZA FRENO	BRAKE SHOE
45.00408.40	10.2914-08-14	14	TAPON.	CAP
45.00408.41	10.2914-08-14	13	TAPON.	CAP
45.00408.44	10.2914-08-14	7	RESORTE TRAC.	SPRING TENSION
45.00408.45	10.2914-08-14	8	RESORTE TRAC.	SPRING TENSION
45.00408.46	10.2914-08-14	4	TENSOR.	TENSIONER
45.00408.58	10.2914-08-14	9	TORNILLO DIN912	SCREW DIN912
45.00408.59	10.2914-08-14	10		
45.00408.60	10.2914-08-14	11	TAPON.	CAP
45.00408.61	10.2914-08-14	12		
45.01003.00	16.1914-08-14	3	VALVULA	VALVE
45.01423.00	26914-08-14	14	JUNTA MET. BUNA	GASKET MET. BUNA
45.01492.00	19.2914-08-14	5	GUARDAPOLVO	DUST EXCLUDER
	4T914-08-14	6	GUARDAPOLVO	DUST EXCLUDER
45.01525.00	36914-08-14	21	INTERRUPTOR	SWITCH
45.03150.00	3.1914-08-14	16	CIERRE	LATCH
45.04106.00	25914-08-14	20	RACOR O/TB	NIPPLE O/TB
45.04113.00	38914-08-14	20	SOP. RESORTE	SPRING SUPPORT
	40914-08-14	42	SOP. RESORTE	SPRING SUPPORT
45.04113.10	3914-08-14	17	SOP. PAS. REC.	STRIP SUPPORT
	5914-08-14	32	SOP. PAS. REC.	STRIP SUPPORT
45.04204.01	5914-08-14	16		
45.04211.01	5914-08-14	1	CAMPANA EMBR.	CLUTCH CASING
45.19101.00	27914-08-14	31	PLACA AD. INDI.	PLATE AD. INDI
46.00322.01	6.1914-08-14	21	RESORTE TRAC.	SPRING TENSION
46.00403.00	10.2914-08-14	1	FRENO	BRAKE
46.00404.00	10.2914-08-14	1	FRENO	BRAKE
46.00407.34	10.2914-08-14	2	BOMBIN	BRAKE CYLINDER
46.00825.00	27914-08-14	27	PLACA AD. INDI.	PLATE AD. INDI
46.00841.00	33.2914-08-14	3	BRAZO LIMPIA	WINDSCR. WIPER ARM
46.00842.00	33.2914-08-14	4		
46.00843.00	33.2914-08-14	1	MOTOR LIMPIA	MOTOR WINDS. WIPER
46.01324.00	36914-08-14	2	LAMPARA	BULB
	40914-08-14	7	LAMPARA	BULB
46.10002.00	34914-08-14	23	PROT. BORNE	TERMINAL PROTECTOR
	36914-08-14	19	PROT. BORNE	TERMINAL PROTECTOR
46.10002.01	38914-08-14	16		
46.10754.00	36914-08-14	4	SOP. PAS. FOR.	STRIGHT SUPPORT
	40914-08-14	5	SOP. PAS. FOR.	STRIGHT SUPPORT
46.10755.00	36914-08-14	3	PILOTO	PILOT
	40914-08-14	6	PILOTO	PILOT
46.50024.01	39914-08-14	11	CAJA.	BOX.
	41914-08-14	11	CAJA.	BOX.
46.50026.00	41914-08-14	13	CAJA INTERMITENCIA	PULSE GENERATOR
46.50028.00	37914-08-14	3		
	39914-08-14	13		

https://truckmanualshub.com/

Referencia *Reference*	Tabla *Board*	Fig. Nº *Fig. Nr*	Denominación *Denomination*	
	41914-08-14	19		
46.50029.00	35914-08-14	10	BRIDA.	CLAMP
	37914-08-14	10	BRIDA.	CLAMP
	39914-08-14	15	BRIDA.	CLAMP
	41914-08-14	8	BRIDA.	CLAMP
46.50029.01	35914-08-14	10	BRIDA.	CLAMP
	37914-08-14	10	BRIDA.	CLAMP
52.00110.00	25914-08-14	18	RACOR TOR. SIMPLE	NIPPLE SCREW SIM.
52.00110.02	25914-08-14	10	RACOR M/M	NIPPLE M/M
52.00365.00	1T914-08-14	3	TAPON.	CAP
52.01352.00	29914-08-14	3	JUNTA PAPEL REC.	PAPER GASKET
54.01115.01	18.8914-08-14	18	CABEZA VASTAGO	CYLINDER ROD HEAD
54.01117.00	18.8914-08-14	17	TUERCA DIN934*	NUT DIN934*
54.01327.00	36914-08-14	5	PILOTO	PILOT
	40914-08-14	3	PILOTO	PILOT
54.14400.00	25914-08-14	5	TUBO PLAS. TRANS.	HOSE TRANS. PLAS
54.59180.00	3.1914-08-14	17	TENSOR.	TENSIONER
55.00124.00	18.2914-08-14	13	ESPARRAGO DIN939*	STUD DIN939*
55.00141.00	23.2914-08-14	15	RODILLO*	ROLLER
55.00143.00	23.2914-08-14	1	TORNILLO DIN7968*	SCREW DIN7968
55.01101.01	18.1914-08-14	9		
55.01220.02	18.1914-08-14	1	CILINDRO D/E	CYLINDER D/E
55.99100.02	18.1914-08-14	21		
58.15340.00	35914-08-14	16	AVISADOR ACUSTICO	HORN
59.10738.00	29914-08-14	11		
60.01007.00	29914-08-14	10	EMPU\ADURA	KNOB
60.01453.00	33.1914-08-14	3	EJE CIL/ROS	AXLE 'CIL/ROS'
	33.1914-08-14	6	EJE CIL/ROS	AXLE 'CIL/ROS'
60.01454.00	33.1914-08-14	1	PROT. LAMPARA	BULB GUARD
60.01454.01	33.1914-08-14	4	PROT. LAMPARA	BULB GUARD
60.01924.01	17914-08-14	7	CIERRE	LATCH
60.01925.01	17914-08-14	7	CIERRE	LATCH
60.24046.10	38914-08-14	19		
	40914-08-14	39		
80.01009.00	25914-08-14	22	ARANDELA CU	WASHER CU
80.01035.01	7914-08-14	13	TAPON.	CAP
	1T914-08-14	21	TAPON.	CAP
80.06041.00	25914-08-14	6	RACOR TOR. SIMPLE	NIPPLE SCREW SIM.
80.06062.01	25914-08-14	13	ELEMENTO FILTRANTE	FILTER ELEMENT
81.03102.26	29914-08-14	1	JUNTA PAPEL FOR.	PAPER GAKET
81.93101.16	29914-08-14	2	TAPA.	COVER
810.00000.00	38914-08-14	25		
82.00310.02	25914-08-14	12	CABEZA FILTRO	COVER
83.00840.05	34914-08-14	29	TERMOCONTACTO	THERMOCONTACT
	36914-08-14	48	TERMOCONTACTO	THERMOCONTACT
830.01808.00	13.1914-08-14	14	BRIDA LAZO	CLAMP LOOP
85.11300.65	1.3914-08-14	7	AMORTIGUADOR.	SHOCK ABSORVER
85.11800.09	34914-08-14	4	REGUL. TENSION	VOLTAGR REGULATOR
	36914-08-14	9	REGUL. TENSION	VOLTAGR REGULATOR
85.11800.10	34914-08-14	4	REGUL. TENSION	VOLTAGR REGULATOR
	36914-08-14	9	REGUL. TENSION	VOLTAGR REGULATOR
85.11800.23	34914-08-14	28	INTERRUPTOR	SWITCH
	36914-08-14	47	INTERRUPTOR	SWITCH
86.00100.00	1.1914-08-14	11	FILTRO ACEITE	OIL FILTER
86.00100.01	38914-08-14	5		
86.00100.02	1.1914-08-14	9		
86.00100.03	1.1914-08-14	10		
86.00100.04	38914-08-14	9		
	40914-08-14	36		
86.00100.05	38914-08-14	3		
	40914-08-14	41		
86.00100.06	1.1914-08-14	8		
	38914-08-14	11		
	40914-08-14	38		
86.00100.07	38914-08-14	17		
	40914-08-14	37		
86.00100.08	38914-08-14	4		
	40914-08-14	40		
86.00100.09	38914-08-14	10		
	40914-08-14	35		
86.90000.01	1.2914-08-14	8	FILTRO AIRE	AIR FILTER
86.90000.02	1.2914-08-14	10	FILTRO ACEITE	OIL FILTER

Referencia *Reference*	Tabla *Board*	Fig. Nº *Fig. Nr*	Denominación *Denomination*	
86.90000.03	1.2914-08-14	9	FILTRO COMBUSTIBLE	FILTER FUEL
101.05000.66	1.3914-08-14	3	ARANDELA DIN125	WASHER DIN125
101.06000.66	32914-08-14	16	ARANDELA DIN125	WASHER DIN125
	33914-08-14	4	ARANDELA DIN125	WASHER DIN125
101.07000.66	11914-08-14	15	ARANDELA DIN125	WASHER DIN125
101.08000.66	1914-08-14	6	ARANDELA DIN125	WASHER DIN125
	1.2914-08-14	6	ARANDELA DIN125	WASHER DIN125
	1.3914-08-14	19	ARANDELA DIN125	WASHER DIN125
	25914-08-14	15	ARANDELA DIN125	WASHER DIN125
	10914-08-14	18	ARANDELA DIN125	WASHER DIN125
	16914-08-14	10	ARANDELA DIN125	WASHER DIN125
	17914-08-14	15	ARANDELA DIN125	WASHER DIN125
	17914-08-14	23	ARANDELA DIN125	WASHER DIN125
	12914-08-14	5	ARANDELA DIN125	WASHER DIN125
	12.2914-08-14	8	ARANDELA DIN125	WASHER DIN125
	13914-08-14	3	ARANDELA DIN125	WASHER DIN125
	13.1914-08-14	6	ARANDELA DIN125	WASHER DIN125
	20914-08-14	25	ARANDELA DIN125	WASHER DIN125
	32914-08-14	19	ARANDELA DIN125	WASHER DIN125
101.10000.66	1.1914-08-14	7	ARANDELA DIN125	WASHER DIN125
	2914-08-14	14	ARANDELA DIN125	WASHER DIN125
	19914-08-14	33	ARANDELA DIN125	WASHER DIN125
	20914-08-14	28	ARANDELA DIN125	WASHER DIN125
101.11000.66	32914-08-14	12	ARANDELA DIN125	WASHER DIN125
101.12000.66	8T914-08-14	14	ARANDELA DIN125	WASHER DIN125
101.13000.00	10.1914-08-14	10		
101.13000.66	12914-08-14	13	ARANDELA DIN125	WASHER DIN125
101.14000.66	5914-08-14	3	ARANDELA DIN125	WASHER DIN125
	10914-08-14	15	ARANDELA DIN125	WASHER DIN125
	18.7914-08-14	21	ARANDELA DIN125	WASHER DIN125
	28.1914-08-14	12	ARANDELA DIN125	WASHER DIN125
	6T914-08-14	15	ARANDELA DIN125	WASHER DIN125
101.16000.66	19914-08-14	24	ARANDELA DIN125	WASHER DIN125
	19.1914-08-14	24	ARANDELA DIN125	WASHER DIN125
	22.2914-08-14	12	ARANDELA DIN125	WASHER DIN125
101.18000.66	18.7914-08-14	17	ARANDELA DIN125	WASHER DIN125
101.20000.66	7T914-08-14	5	ARANDELA DIN125	WASHER DIN125
101.22000.66	15914-08-14	13	ARANDELA DIN125	WASHER DIN125
101.24000.66	23.1914-08-14	10	ARANDELA DIN125	WASHER DIN125
101.27000.66	28.1914-08-14	17	ARANDELA DIN125	WASHER DIN125
101.30000.66	10914-08-14	5	ARANDELA DIN125	WASHER DIN125
104.08000.66	4.1914-08-14	2	ARANDELA DIN7980	CIR-CLIP EXT. DIN7980
105.06000.66	3914-08-14	16	ARANDELA DIN127	WASHER DIN127
	4.1914-08-14	7	ARANDELA DIN127	WASHER DIN127
	4.2914-08-14	7	ARANDELA DIN127	WASHER DIN127
	15914-08-14	16	ARANDELA DIN127	WASHER DIN127
	5914-08-14	15	ARANDELA DIN127	WASHER DIN127
	10914-08-14	48	ARANDELA DIN127	WASHER DIN127
	17914-08-14	17	ARANDELA DIN127	WASHER DIN127
	10.1914-08-14	6	ARANDELA DIN127	WASHER DIN127
	20914-08-14	18	ARANDELA DIN127	WASHER DIN127
	18914-08-14	15	ARANDELA DIN127	WASHER DIN127
	18.1914-08-14	17	ARANDELA DIN127	WASHER DIN127
	18.9914-08-14	17	ARANDELA DIN127	WASHER DIN127
	23914-08-14	5	ARANDELA DIN127	WASHER DIN127
	23.1914-08-14	5	ARANDELA DIN127	WASHER DIN127
	28914-08-14	5	ARANDELA DIN127	WASHER DIN127
	26914-08-14	7	ARANDELA DIN127	WASHER DIN127
	36914-08-14	29	ARANDELA DIN127	WASHER DIN127
105.06000.86	3.1914-08-14	5	ARANDELA DIN127	WASHER DIN127
105.07000.66	18.2914-08-14	9	ARANDELA DIN127	WASHER DIN127
105.08000.66	15914-08-14	19	ARANDELA DIN127	WASHER DIN127
	1914-08-14	7	ARANDELA DIN127	WASHER DIN127
	1.1914-08-14	4	ARANDELA DIN127	WASHER DIN127
	1.2914-08-14	5	ARANDELA DIN127	WASHER DIN127
	1.3914-08-14	18	ARANDELA DIN127	WASHER DIN127
	1.4914-08-14	3	ARANDELA DIN127	WASHER DIN127
	3914-08-14	18	ARANDELA DIN127	WASHER DIN127
	14914-08-14	6	ARANDELA DIN127	WASHER DIN127
	25914-08-14	14	ARANDELA DIN127	WASHER DIN127
	5914-08-14	18	ARANDELA DIN127	WASHER DIN127
	6.1914-08-14	14	ARANDELA DIN127	WASHER DIN127

https://truckmanualshub.com/

Referencia *Reference*	Tabla *Board*	Fig. Nº *Fig. Nr*	Denominación *Denomination*	
	7914-08-14	2	ARANDELA DIN127	WASHER DIN127
	10914-08-14	8	ARANDELA DIN127	WASHER DIN127
	10914-08-14	17	ARANDELA DIN127	WASHER DIN127
	16914-08-14	8	ARANDELA DIN127	WASHER DIN127
	17914-08-14	14	ARANDELA DIN127	WASHER DIN127
	10.1914-08-14	3	ARANDELA DIN127	WASHER DIN127
	11914-08-14	11	ARANDELA DIN127	WASHER DIN127
	13914-08-14	13	ARANDELA DIN127	WASHER DIN127
	13.1914-08-14	4	ARANDELA DIN127	WASHER DIN127
	13.1914-08-14	20	ARANDELA DIN127	WASHER DIN127
	20914-08-14	16	ARANDELA DIN127	WASHER DIN127
	32914-08-14	7	ARANDELA DIN127	WASHER DIN127
	26914-08-14	10	ARANDELA DIN127	WASHER DIN127
	34914-08-14	13	ARANDELA DIN127	WASHER DIN127
	34914-08-14	21	ARANDELA DIN127	WASHER DIN127
	36914-08-14	40	ARANDELA DIN127	WASHER DIN127
105.09000.66	6.1914-08-14	16		
	10914-08-14	25	ARANDELA DIN127	WASHER DIN127
105.10000.66	1.1914-08-14	6	ARANDELA DIN127	WASHER DIN127
	2914-08-14	13	ARANDELA DIN127	WASHER DIN127
	2.1914-08-14	13	ARANDELA DIN127	WASHER DIN127
	5914-08-14	29	ARANDELA DIN127	WASHER DIN127
	7914-08-14	18	ARANDELA DIN127	WASHER DIN127
	19914-08-14	39	ARANDELA DIN127	WASHER DIN127
	22.1914-08-14	9	ARANDELA DIN127	WASHER DIN127
	16.1914-08-14	5	ARANDELA DIN127	WASHER DIN127
	12914-08-14	18	ARANDELA DIN127	WASHER DIN127
	20914-08-14	14	ARANDELA DIN127	WASHER DIN127
	20914-08-14	27	ARANDELA DIN127	WASHER DIN127
	21914-08-14	3	ARANDELA DIN127	WASHER DIN127
	23.1914-08-14	15	ARANDELA DIN127	WASHER DIN127
	40914-08-14	19	ARANDELA DIN127	WASHER DIN127
105.11000.66	7914-08-14	7	ARANDELA DIN127	WASHER DIN127
105.12000.66	2914-08-14	12	ARANDELA DIN127	WASHER DIN127
	18.2914-08-14	32	ARANDELA DIN127	WASHER DIN127
	18.6914-08-14	13	ARANDELA DIN127	WASHER DIN127
	23.2914-08-14	6	ARANDELA DIN127	WASHER DIN127
105.13000.66	10.1914-08-14	11	ARANDELA DIN127	WASHER DIN127
	12914-08-14	14	ARANDELA DIN127	WASHER DIN127
105.14000.66	2914-08-14	11	ARANDELA DIN127	WASHER DIN127
	2.1914-08-14	9	ARANDELA DIN127	WASHER DIN127
	5914-08-14	7	ARANDELA DIN127	WASHER DIN127
	16914-08-14	29	ARANDELA DIN127	WASHER DIN127
	18.2914-08-14	39	ARANDELA DIN127	WASHER DIN127
	23.2914-08-14	9	ARANDELA DIN127	WASHER DIN127
	12T914-08-14	4	ARANDELA DIN127	WASHER DIN127
105.16000.66	22.1914-08-14	13	ARANDELA DIN127	WASHER DIN127
	16914-08-14	23	ARANDELA DIN127	WASHER DIN127
	16.1914-08-14	6	ARANDELA DIN127	WASHER DIN127
	10.1914-08-14	14	ARANDELA DIN127	WASHER DIN127
	22.2914-08-14	8	ARANDELA DIN127	WASHER DIN127
	18.2914-08-14	41	ARANDELA DIN127	WASHER DIN127
	28914-08-14	11	ARANDELA DIN127	WASHER DIN127
105.24000.66	22.1914-08-14	5	ARANDELA DIN127	WASHER DIN127
105.27000.66	18.6914-08-14	15	ARANDELA DIN127	WASHER DIN127
106.14000.20	18.2914-08-14	23	ARANDELA CU	WASHER CU
107.08000.10	25914-08-14	7	ARANDELA AL	WASHER AL
107.14000.10	25914-08-14	9	ARANDELA AL	WASHER AL
	25914-08-14	19	ARANDELA AL	WASHER AL
	6.1914-08-14	11	ARANDELA AL	WASHER AL
	7914-08-14	14	ARANDELA AL	WASHER AL
	6T914-08-14	22	ARANDELA AL	WASHER AL
	9T914-08-14	14	ARANDELA AL	WASHER AL
	4T914-08-14	16		
112.08000.66	32914-08-14	8	ARANDELA DIN9021	CIR-CLIP INT. DIN9021
	36914-08-14	35	ARANDELA DIN9021	CIR-CLIP INT. DIN9021
	40914-08-14	20	ARANDELA DIN9021	CIR-CLIP INT. DIN9021
112.10000.66	1.3914-08-14	15	ARANDELA DIN9021	CIR-CLIP INT. DIN9021
115.08000.66	4.2914-08-14	3		
117.09000.66	20914-08-14	22	ARANDELA DIN434*	WASHER DIN434*
119.02805.66	6T914-08-14	21	ARANDELA.	WASHER
201.02104.50	2T914-08-14	20	JUNTA DIN3770	O-RING DIN3770

Referencia *Reference*	Tabla *Board*	Fig. Nº *Fig. Nr*	Denominación *Denomination*	
201.02802.50	18.1914-08-14	3	JUNTA DIN3770	O-RING DIN3770
201.03002.50	2T914-08-14	11	JUNTA DIN3770	O-RING DIN3770
201.03335.50	19.2914-08-14	13	JUNTA DIN3770	O-RING DIN3770
	4T914-08-14	13	JUNTA DIN3770	O-RING DIN3770
201.05153.50	18914-08-14	5	JUNTA DIN3770	O-RING DIN3770
	18.8914-08-14	9	JUNTA DIN3770	O-RING DIN3770
	18.9914-08-14	10	JUNTA DIN3770	O-RING DIN3770
201.05905.50	18.1914-08-14	10	JUNTA DIN3770	O-RING DIN3770
201.07025.50	8T914-08-14	13	JUNTA DIN3770	O-RING DIN3770
201.07202.50	5T914-08-14	10	JUNTA DIN3770	O-RING DIN3770
201.14602.50	1T914-08-14	15	JUNTA DIN3770	O-RING DIN3770
201.20025.50	18.7914-08-14	6		
201.22003.50	18914-08-14	10	JUNTA DIN3770	O-RING DIN3770
	18.9914-08-14	8	JUNTA DIN3770	O-RING DIN3770
201.30004.50	18.8914-08-14	12	JUNTA DIN3770	O-RING DIN3770
201.32004.50	15914-08-14	2	JUNTA DIN3770	O-RING DIN3770
201.47005.50	18.7914-08-14	7		
201.75003.50	26914-08-14	5	JUNTA DIN3770	O-RING DIN3770
202.02508.50	2T914-08-14	10	RETEN DIN3760	SEAL DIN3760
202.04006.50	2T914-08-14	13	RETEN DIN3760	SEAL DIN3760
	3T914-08-14	9	RETEN DIN3760	SEAL DIN3760
202.20305.50	18.7914-08-14	19	RETEN DIN3760	SEAL DIN3760
202.20355.50	18.7914-08-14	18	RETEN DIN3760	SEAL DIN3760
202.25000.50	8914-08-14	15		
202.30008.50	19914-08-14	16	RETEN DIN3760	SEAL DIN3760
	19.1914-08-14	16	RETEN DIN3760	SEAL DIN3760
202.34075.50	8914-08-14	12	RETEN DIN3760	SEAL DIN3760
202.45007.50	10914-08-14	6	RETEN DIN3760	SEAL DIN3760
203.30008.50	16914-08-14	6	RASCADOR	WIPER RING
	18914-08-14	7	RASCADOR	WIPER RING
	18.8914-08-14	16	RASCADOR	WIPER RING
	18.9914-08-14	13	RASCADOR	WIPER RING
207.04032.50	19.2914-08-14	12		
	4T914-08-14	14		
207.07058.50	18.1914-08-14	4		
207.55028.50	18.7914-08-14	5		
207.63028.50	18914-08-14	8		
	18.8914-08-14	7	JUNTA ESTAN. COMP.	GASKET
207.63029.50	18.9914-08-14	6		
21.00161.00	33914-08-14	7	PASACABLES	GROMMET
216.01007.50	9T914-08-14	7	RETEN RECUBIER. LD	SEAL
216.01407.50	8T914-08-14	4	RETEN RECUBIER. LD	SEAL
216.03007.50	5T914-08-14	6	RETEN RECUBIER. LD	SEAL
216.03510.50	6T914-08-14	3	RETEN RECUBIER. LD	SEAL
217.28008.50	18.7914-08-14	8		
217.30006.50	18914-08-14	4	JUNTA DIN6505	GASKET DIN6505
	18.8914-08-14	14	JUNTA DIN6505	GASKET DIN6505
	18.9914-08-14	11	JUNTA DIN6505	GASKET DIN6505
223.02047.66	1T914-08-14	5	ANILLO OBTURADOR	OBTURATING RING
228.02230.50	19.2914-08-14	15	RASCADOR	WIPER RING
	4T914-08-14	11	RASCADOR	WIPER RING
228.04008.50	18.1914-08-14	13	RASCADOR	WIPER RING
228.28000.50	18.7914-08-14	9		
229.02228.50	19.2914-08-14	14	JUNTA DIN6505	GASKET DIN6505
	4T914-08-14	12	JUNTA DIN6505	GASKET DIN6505
229.04010.50	18.1914-08-14	12		
231.01403.50	8T914-08-14	5	RETEN DIN3760	SEAL DIN3760
301.20015.00	9914-08-14	25	RODAMIENTO DIN625	BEARING DIN625
	6T914-08-14	9	RODAMIENTO DIN625	BEARING DIN625
	7T914-08-14	8	RODAMIENTO DIN625	BEARING DIN625
301.25015.00	8914-08-14	10	RODAMIENTO DIN625	BEARING DIN625
	2T914-08-14	9	RODAMIENTO DIN625	BEARING DIN625
301.30016.00	9914-08-14	28	RODAMIENTO DIN625	BEARING DIN625
	2T914-08-14	18	RODAMIENTO DIN625	BEARING DIN625
301.35017.00	6T914-08-14	4	RODAMIENTO DIN625	BEARING DIN625
301.40018.00	8914-08-14	9	RODAMIENTO DIN625	BEARING DIN625
	2T914-08-14	8	RODAMIENTO DIN625	BEARING DIN625
301.45019.00	10914-08-14	34	RODAMIENTO DIN625	BEARING DIN625
304.20222.00	9914-08-14	9	RODAMIENTO DIN628	BEARING DIN628
306.40018.00	10914-08-14	32	RODAM. DIN5412	BEARING DIN5412
307.20015.00	19914-08-14	20	RODAMIENTO DIN720	BEARING DIN720
	19.1914-08-14	20	RODAMIENTO DIN720	BEARING DIN720

https://truckmanualshub.com/

Referencia *Reference*	Tabla *Board*	Fig. Nº *Fig. Nr*	Denominación *Denomination*	
	1T914-08-14	10	RODAMIENTO DIN720	BEARING DIN720
307.25016.00	19914-08-14	18	RODAMIENTO DIN720	BEARING DIN720
	19.1914-08-14	18	RODAMIENTO DIN720	BEARING DIN720
307.35018.00	5T914-08-14	4	RODAM. RODILLOS	ROLLING BEARING
309.17012.00	4914-08-14	2	RODAMIENTO DIN625	BEARING DIN625
	4.1914-08-14	4	RODAMIENTO DIN625	BEARING DIN625
	4.2914-08-14	4	RODAMIENTO DIN625	BEARING DIN625
309.25015.00	2T914-08-14	25	RODAMIENTO DIN625	BEARING DIN625
310.35017.00	3T914-08-14	3	RODAM. DIN5412	BEARING DIN5412
312.25017.00	3T914-08-14	6	RODAM. DIN5412	BEARING DIN5412
312.30016.00	2T914-08-14	16	RODAM. DIN5412	BEARING DIN5412
320.30016.00	9914-08-14	2	RODAM. DIN5412	BEARING DIN5412
328.20015.00	9914-08-14	9	RODAMIENTO DIN618	BEARING DIN618
	9914-08-14	14	RODAMIENTO DIN618	BEARING DIN618
401.02020.60	3914-08-14	9	PASADOR DIN94	SPLIT PIN DIN94
	3.1914-08-14	14	PASADOR DIN94	SPLIT PIN DIN94
	11914-08-14	14	PASADOR DIN94	SPLIT PIN DIN94
	12914-08-14	4	PASADOR DIN94	SPLIT PIN DIN94
	12.2914-08-14	7	PASADOR DIN94	SPLIT PIN DIN94
	13914-08-14	5	PASADOR DIN94	SPLIT PIN DIN94
	13.1914-08-14	5	PASADOR DIN94	SPLIT PIN DIN94
	8T914-08-14	22	PASADOR DIN94	SPLIT PIN DIN94
	9T914-08-14	4	PASADOR DIN94	SPLIT PIN DIN94
	9T914-08-14	19	PASADOR DIN94	SPLIT PIN DIN94
401.03040.60	16914-08-14	20	PASADOR DIN94	SPLIT PIN DIN94
	10.1914-08-14	20	PASADOR DIN94	SPLIT PIN DIN94
401.04030.60	5914-08-14	20	PASADOR DIN94	SPLIT PIN DIN94
401.04045.60	22.1914-08-14	3	PASADOR DIN94	SPLIT PIN DIN94
	23.1914-08-14	8	PASADOR DIN94	SPLIT PIN DIN94
401.04050.60	10914-08-14	43	PASADOR DIN94	SPLIT PIN DIN94
401.25030.60	10914-08-14	10	PASADOR DIN94	SPLIT PIN DIN94
	19914-08-14	11	PASADOR DIN94	SPLIT PIN DIN94
	19.1914-08-14	11	PASADOR DIN94	SPLIT PIN DIN94
401.25040.60	18.8914-08-14	3	PASADOR DIN94	SPLIT PIN DIN94
402.04020.00	3914-08-14	7	PASADOR DIN1481	ROLL PIN DIN1481
	3.1914-08-14	3	PASADOR DIN1481	ROLL PIN DIN1481
	7T914-08-14	3	PASADOR DIN1481	ROLL PIN DIN1481
	8T914-08-14	3	PASADOR DIN1481	ROLL PIN DIN1481
402.04040.00	7T914-08-14	7	PASADOR DIN1481	ROLL PIN DIN1481
402.05030.00	15914-08-14	11	PASADOR DIN1481	ROLL PIN DIN1481
402.06015.00	4914-08-14	6	PASADOR DIN1481	ROLL PIN DIN1481
	4.1914-08-14	9	PASADOR DIN1481	ROLL PIN DIN1481
	4.2914-08-14	9	PASADOR DIN1481	ROLL PIN DIN1481
402.06030.00	5914-08-14	23	PASADOR DIN1481	ROLL PIN DIN1481
	11914-08-14	7	PASADOR DIN1481	ROLL PIN DIN1481
402.07030.00	15914-08-14	5	PASADOR DIN1481	ROLL PIN DIN1481
402.07045.00	15914-08-14	6	PASADOR DIN1481	ROLL PIN DIN1481
402.35030.00	5914-08-14	24	PASADOR DIN1481	ROLL PIN DIN1481
	11914-08-14	8	PASADOR DIN1481	ROLL PIN DIN1481
403.06020.00	1T914-08-14	12	PASADOR DIN6325	
403.10030.00	15914-08-14	12	PASADOR DIN6325	
403.10035.00	1T914-08-14	17	PASADOR DIN6325	
502.05000.66	25.1914-08-14	6		
601.06025.00	33914-08-14	3	TORNILLO DIN912	SCREW DIN912
601.08020.86	34914-08-14	14	TORNILLO DIN912	SCREW DIN912
	1T914-08-14	8	TORNILLO DIN912	SCREW DIN912
601.08020.96	4.2914-08-14	2	TORNILLO DIN6912	SCREW DIN6912
601.08022.86	10.1914-08-14	2	TORNILLO DIN912	SCREW DIN912
601.08035.86	18.5914-08-14	18	TORNILLO DIN912	SCREW DIN912
	28.1914-08-14	16	TORNILLO DIN912	SCREW DIN912
601.08040.86	1T914-08-14	16	TORNILLO DIN912	SCREW DIN912
601.10030.86	7T914-08-14	2	TORNILLO DIN912	SCREW DIN912
601.12025.86	34914-08-14	10		
603.05010.86	22.2914-08-14	3	TORNILLO DIN933	SCREW DIN933
603.05015.86	38914-08-14	21	TORNILLO DIN933	SCREW DIN933
	40914-08-14	43	TORNILLO DIN933	SCREW DIN933
603.06015.86	4914-08-14	3	TORNILLO DIN933	SCREW DIN933
	4.1914-08-14	8	TORNILLO DIN933	SCREW DIN933
	4.2914-08-14	8	TORNILLO DIN933	SCREW DIN933
	15914-08-14	7	TORNILLO DIN933	SCREW DIN933
	5914-08-14	14	TORNILLO DIN933	SCREW DIN933
	10914-08-14	14	TORNILLO DIN933	SCREW DIN933

Referencia *Reference*	Tabla *Board*	Fig. Nº *Fig. Nr*	Denominación *Denomination*	
	18914-08-14	16	TORNILLO DIN933	SCREW DIN933
	18.1914-08-14	16	TORNILLO DIN933	SCREW DIN933
	18.8914-08-14	24	TORNILLO DIN933	SCREW DIN933
	18.9914-08-14	18	TORNILLO DIN933	SCREW DIN933
	23914-08-14	4	TORNILLO DIN933	SCREW DIN933
	23.1914-08-14	4	TORNILLO DIN933	SCREW DIN933
	28914-08-14	4	TORNILLO DIN933	SCREW DIN933
	26914-08-14	8	TORNILLO DIN933	SCREW DIN933
	36914-08-14	22	TORNILLO DIN933	SCREW DIN933
	40914-08-14	11	TORNILLO DIN933	SCREW DIN933
	9T914-08-14	2	TORNILLO DIN933	SCREW DIN933
603.06015.96	20914-08-14	19		
	35914-08-14	6		
603.06020.86	6T914-08-14	12	TORNILLO DIN933	SCREW DIN933
603.06025.86	6T914-08-14	1	TORNILLO DIN933	SCREW DIN933
	8T914-08-14	21	TORNILLO DIN933	SCREW DIN933
603.06030.86	36914-08-14	27	TORNILLO DIN933	SCREW DIN933
	40914-08-14	33	TORNILLO DIN933	SCREW DIN933
603.07020.86	18.2914-08-14	11	TORNILLO DIN933	SCREW DIN933
603.07040.86	18.2914-08-14	10	TORNILLO DIN933	SCREW DIN933
	9T914-08-14	11	TORNILLO DIN933	SCREW DIN933
603.08010.86	13.1914-08-14	10	TORNILLO DIN933	SCREW DIN933
603.08015.86	3914-08-14	19	TORNILLO DIN933	SCREW DIN933
	15914-08-14	3	TORNILLO DIN933	SCREW DIN933
	17914-08-14	22	TORNILLO DIN933	SCREW DIN933
	13914-08-14	2	TORNILLO DIN933	SCREW DIN933
	20914-08-14	9	TORNILLO DIN933	SCREW DIN933
	32914-08-14	18	TORNILLO DIN933	SCREW DIN933
	34914-08-14	19	TORNILLO DIN933	SCREW DIN933
	38914-08-14	12	TORNILLO DIN933	SCREW DIN933
603.08020.86	1914-08-14	5	TORNILLO DIN933	SCREW DIN933
	1.2914-08-14	4	TORNILLO DIN933	SCREW DIN933
	1.4914-08-14	2	TORNILLO DIN933	SCREW DIN933
	17914-08-14	13	TORNILLO DIN933	SCREW DIN933
	11914-08-14	12	TORNILLO DIN933	SCREW DIN933
	13.1914-08-14	22	TORNILLO DIN933	SCREW DIN933
	26914-08-14	9	TORNILLO DIN933	SCREW DIN933
	36914-08-14	39	TORNILLO DIN933	SCREW DIN933
	38914-08-14	22	TORNILLO DIN933	SCREW DIN933
	40914-08-14	26	TORNILLO DIN933	SCREW DIN933
603.08020.96	20914-08-14	4		
603.08025.86	5914-08-14	19	TORNILLO DIN933	SCREW DIN933
	6.1914-08-14	13	TORNILLO DIN933	SCREW DIN933
	7914-08-14	1	TORNILLO DIN933	SCREW DIN933
	16914-08-14	14	TORNILLO DIN933	SCREW DIN933
	20914-08-14	26	TORNILLO DIN933	SCREW DIN933
	32914-08-14	6	TORNILLO DIN933	SCREW DIN933
	26914-08-14	3	TORNILLO DIN933	SCREW DIN933
	38914-08-14	7	TORNILLO DIN933	SCREW DIN933
	38914-08-14	8	TORNILLO DIN933	SCREW DIN933
603.08030.86	1.3914-08-14	17	TORNILLO DIN933	SCREW DIN933
	19.2914-08-14	16	TORNILLO DIN933	SCREW DIN933
	16914-08-14	7	TORNILLO DIN933	SCREW DIN933
	1T914-08-14	14	TORNILLO DIN933	SCREW DIN933
603.08045.86	2.2914-08-14	9	TORNILLO DIN933	SCREW DIN933
603.09030.86	10914-08-14	49	TORNILLO DIN933	SCREW DIN933
	10914-08-14	52	TORNILLO DIN933	SCREW DIN933
603.10020.86	19914-08-14	40	TORNILLO DIN933	SCREW DIN933
	28.1914-08-14	7	TORNILLO DIN933	SCREW DIN933
	40914-08-14	17	TORNILLO DIN933	SCREW DIN933
603.10025.96	1T914-08-14	19	TORNILLO DIN933	SCREW DIN933
603.10030.86	22.1914-08-14	6	TORNILLO DIN933	SCREW DIN933
	23.1914-08-14	14	TORNILLO DIN933	SCREW DIN933
603.10035.86	2914-08-14	2	TORNILLO DIN933	SCREW DIN933
603.10080.86	10914-08-14	27	TORNILLO DIN933	SCREW DIN933
603.12025.86	2914-08-14	10	TORNILLO DIN933	SCREW DIN933
603.12030.86	32914-08-14	9	TORNILLO DIN933	SCREW DIN933
	23.2914-08-14	5	TORNILLO DIN933	SCREW DIN933
603.14030.86	16914-08-14	28	TORNILLO DIN933	SCREW DIN933
	28.1914-08-14	8	TORNILLO DIN933	SCREW DIN933
603.14035.86	18.2914-08-14	25	TORNILLO DIN933	SCREW DIN933
603.14040.86	5914-08-14	4	TORNILLO DIN933	SCREW DIN933

https://truckmanualshub.com/

Referencia *Reference*	Tabla *Board*	Fig. Nº *Fig. Nr*	Denominación *Denomination*	
603.14045.86	18.2914-08-14	24	TORNILLO DIN933	SCREW DIN933
603.14045.96	28.1914-08-14	10		
603.14050.96	18.7914-08-14	24	TORNILLO DIN933	SCREW DIN933
	28.1914-08-14	14	TORNILLO DIN933	SCREW DIN933
603.16055.86	23.1914-08-14	17	TORNILLO DIN933	SCREW DIN933
603.16060.86	18.2914-08-14	40	TORNILLO DIN933	SCREW DIN933
	28914-08-14	10	TORNILLO DIN933	SCREW DIN933
604.08035.86	2.2914-08-14	8	TORNILLO DIN931	SCREW DIN931
	25914-08-14	21	TORNILLO DIN931	SCREW DIN931
604.08040.86	13914-08-14	8	TORNILLO DIN931	SCREW DIN931
	13.1914-08-14	18	TORNILLO DIN931	SCREW DIN931
	9T914-08-14	8	TORNILLO DIN931	SCREW DIN931
604.08060.86	29914-08-14	7	TORNILLO DIN931	SCREW DIN931
604.08070.86	13914-08-14	10	TORNILLO DIN931	SCREW DIN931
	13.1914-08-14	19	TORNILLO DIN931	SCREW DIN931
604.08080.86	5T914-08-14	3	TORNILLO DIN931	SCREW DIN931
604.10030.86	5914-08-14	28	TORNILLO DIN931	SCREW DIN931
604.10035.86	2.1914-08-14	7	TORNILLO DIN931	SCREW DIN931
604.10040.86	12914-08-14	12	TORNILLO DIN931	SCREW DIN931
604.10100.86	29914-08-14	5	TORNILLO DIN931	SCREW DIN931
604.12035.86	23.2914-08-14	13	TORNILLO DIN931	SCREW DIN931
	23.2914-08-14	17	TORNILLO DIN931	SCREW DIN931
604.14065.86	12T914-08-14	5	TORNILLO DIN931	SCREW DIN931
604.14075.86	5914-08-14	6	TORNILLO DIN931	SCREW DIN931
604.14080.86	22.2914-08-14	15	TORNILLO DIN931	SCREW DIN931
	2914-08-14	6	TORNILLO DIN931	SCREW DIN931
	2.1914-08-14	6	TORNILLO DIN931	SCREW DIN931
	2.2914-08-14	2	TORNILLO DIN931	SCREW DIN931
604.16060.86	22.2914-08-14	10	TORNILLO DIN931	SCREW DIN931
604.16080.86	22.1914-08-14	2	TORNILLO DIN931	SCREW DIN931
604.16090.86	22.2914-08-14	11	TORNILLO DIN931	SCREW DIN931
604.16100.86	22.2914-08-14	9	TORNILLO DIN931	SCREW DIN931
605.10020.66	20914-08-14	29	TORNILLO DIN603	SCREW DIN603
605.10025.86	21914-08-14	2		
608.05010.86	1.3914-08-14	4		
612.08010.80	16914-08-14	3	TORNILLO DIN914	SCREW DIN814
612.08025.86	8T914-08-14	9	TORNILLO DIN914	SCREW DIN814
613.12025.86	18.6914-08-14	12	TORNILLO DIN7984	SCREW DIN7984
618.08020.86	7914-08-14	12	TORNILLO DIN7991	SCREW DIN7991
621.38015.86	1.1914-08-14	5	TORNILLO DIN912	SCREW DIN912
621.51620.86	4.1914-08-14	3	TORNILLO DIN912	SCREW DIN912
624.06015.66	7914-08-14	22	TORNILLO DIN963	SCREW DIN63
625.10025.86	2.1914-08-14	12	TORNILLO DIN961	SCREW DIN961
627.38030.86	5914-08-14	28	TORNILLO DIN931	SCREW DIN931
630.06015.86	3914-08-14	4		
630.06015.96	3.1914-08-14	4	TORNILLO ISO7380	SCREW ISO7380
	32914-08-14	15	TORNILLO ISO7380	SCREW ISO7380
	37914-08-14	9	TORNILLO ISO7380	SCREW ISO7380
	39914-08-14	3	TORNILLO ISO7380	SCREW ISO7380
	41914-08-14	3	TORNILLO ISO7380	SCREW ISO7380
630.06020.96	31914-08-14	8	TORNILLO ISO7380	SCREW ISO7380
630.08020.96	14914-08-14	5	TORNILLO ISO7380	SCREW ISO7380
	25914-08-14	8	TORNILLO ISO7380	SCREW ISO7380
	17914-08-14	3	TORNILLO ISO7380	SCREW ISO7380
	17914-08-14	11	TORNILLO ISO7380	SCREW ISO7380
	13914-08-14	12	TORNILLO ISO7380	SCREW ISO7380
	13.1914-08-14	3	TORNILLO ISO7380	SCREW ISO7380
	20914-08-14	15	TORNILLO ISO7380	SCREW ISO7380
630.08025.96	25.1914-08-14	3	TORNILLO ISO7380	SCREW ISO7380
630.10030.96	16.1914-08-14	4	TORNILLO ISO7380	SCREW ISO7380
701.05000.66	1.3914-08-14	2	TUERCA DIN934	NUT DIN934
	22.2914-08-14	4	TUERCA DIN934	NUT DIN934
701.06000.66	3914-08-14	5	TUERCA DIN934	NUT DIN934
	3914-08-14	13	TUERCA DIN934	NUT DIN934
	3.1914-08-14	6	TUERCA DIN934	NUT DIN934
	3.1914-08-14	12	TUERCA DIN934	NUT DIN934
	17914-08-14	18	TUERCA DIN934	NUT DIN934
	36914-08-14	24	TUERCA DIN934	NUT DIN934
	36914-08-14	30	TUERCA DIN934	NUT DIN934
	40914-08-14	13	TUERCA DIN934	NUT DIN934
	40914-08-14	31	TUERCA DIN934	NUT DIN934
701.07000.66	9T914-08-14	10	TUERCA DIN934	NUT DIN934

Referencia *Reference*	Tabla *Board*	Fig. Nº *Fig. Nr*	Denominación *Denomination*	
701.07000.86	11914-08-14	16	TUERCA DIN934	NUT DIN934
	18.2914-08-14	8	TUERCA DIN934	NUT DIN934
701.08000.60	1.3914-08-14	5	TUERCA DIN934	NUT DIN934
701.08000.66	14914-08-14	7	TUERCA DIN934	NUT DIN934
	10914-08-14	9	TUERCA DIN934	NUT DIN934
	10914-08-14	16	TUERCA DIN934	NUT DIN934
	17914-08-14	12	TUERCA DIN934	NUT DIN934
	17914-08-14	24	TUERCA DIN934	NUT DIN934
	13914-08-14	14	TUERCA DIN934	NUT DIN934
	13.1914-08-14	21	TUERCA DIN934	NUT DIN934
	20914-08-14	23	TUERCA DIN934	NUT DIN934
	32914-08-14	20	TUERCA DIN934	NUT DIN934
	26914-08-14	12	TUERCA DIN934	NUT DIN934
	34914-08-14	22	TUERCA DIN934	NUT DIN934
	36914-08-14	41	TUERCA DIN934	NUT DIN934
	38914-08-14	24	TUERCA DIN934	NUT DIN934
	40914-08-14	28	TUERCA DIN934	NUT DIN934
	8T914-08-14	8	TUERCA DIN934	NUT DIN934
701.09000.66	6.1914-08-14	17	TUERCA DIN934	NUT DIN934
701.10000.66	7914-08-14	19	TUERCA DIN934	NUT DIN934
	22.1914-08-14	10	TUERCA DIN934	NUT DIN934
	20914-08-14	24	TUERCA DIN934	NUT DIN934
	21914-08-14	4	TUERCA DIN934	NUT DIN934
	23.1914-08-14	16	TUERCA DIN934	NUT DIN934
701.10000.86	12914-08-14	19	TUERCA DIN934	NUT DIN934
701.12000.66	23.2914-08-14	7	TUERCA DIN934	NUT DIN934
701.12000.86	18.2914-08-14	33	TUERCA DIN934	NUT DIN934
701.14000.66	23.2914-08-14	10	TUERCA DIN934	NUT DIN934
	12T914-08-14	2	TUERCA DIN934	NUT DIN934
701.14000.86	2914-08-14	8	TUERCA DIN934	NUT DIN934
	2.1914-08-14	8	TUERCA DIN934	NUT DIN934
	18.2914-08-14	38	TUERCA DIN934	NUT DIN934
701.16000.66	18.2914-08-14	42	TUERCA DIN934	NUT DIN934
	23.1914-08-14	18	TUERCA DIN934	NUT DIN934
701.16000.86	22.2914-08-14	7	TUERCA DIN934	NUT DIN934
	28914-08-14	12	TUERCA DIN934	NUT DIN934
708.08000.66	10.1914-08-14	4		
708.16000.66	10.1914-08-14	15	TUERCA DIN934	NUT DIN934
709.10000.66	14914-08-14	12	TUERCA DIN936	NUT DIN936
709.14000.66	36914-08-14	49	TUERCA DIN936	NUT DIN936
	40914-08-14	44	TUERCA DIN936	NUT DIN936
709.16000.66	16914-08-14	24	TUERCA DIN936	NUT DIN936
710.14000.66	19914-08-14	10	TUERCA DIN935	CASTELL. NUT DIN935
	19.1914-08-14	10	TUERCA DIN935	CASTELL.X NUT DIN935
711.06000.66	32914-08-14	17	TUERCA DIN982	NUT DIN982
	33914-08-14	5	TUERCA DIN982	NUT DIN982
	33.1914-08-14	2	TUERCA DIN982	NUT DIN982
	33.1914-08-14	5	TUERCA DIN982	NUT DIN982
	8T914-08-14	20	TUERCA DIN982	NUT DIN982
711.08000.66	25.1914-08-14	5	TUERCA DIN982	NUT DIN982
	6.1914-08-14	8	TUERCA DIN982	NUT DIN982
	29914-08-14	8	TUERCA DIN982	NUT DIN982
711.10000.06	21914-08-14	5	TUERCA DIN982	NUT DIN982
711.10000.66	1.3914-08-14	16	TUERCA DIN982	NUT DIN982
	2914-08-14	15	TUERCA DIN982	NUT DIN982
	19914-08-14	44	TUERCA DIN982	NUT DIN982
711.12000.66	1T914-08-14	24	TUERCA DIN982	NUT DIN982
711.14000.66	22.2914-08-14	16	TUERCA DIN982	NUT DIN982
	18.7914-08-14	20	TUERCA DIN982	NUT DIN982
	28.1914-08-14	13	TUERCA DIN982	NUT DIN982
711.18000.66	18.7914-08-14	16	TUERCA DIN982	NUT DIN982
718.18000.66	19914-08-14	38	TUERCA DIN982	NUT DIN982
	19.1914-08-14	28	TUERCA DIN982	NUT DIN982
	18.5914-08-14	13	TUERCA DIN982	NUT DIN982
718.20000.66	18.7914-08-14	3		
720.27000.66	18.1914-08-14	2	TUERCA DIN985	NUT DIN985
	28.1914-08-14	18	TUERCA DIN985	NUT DIN985
725.08000.30	1.1914-08-14	3	TUERCA DIN934	NUT DIN934
727.06004.86	20914-08-14	17	TUERCA ENJAULADA	CAPTIVE NUT
901.08000.33	5914-08-14	21	ENGRAS. DIN71412-A	GREASER DIN71412-A
	10914-08-14	13	ENGRAS. DIN71412-A	GREASER DIN71412-A
	19914-08-14	6	ENGRAS. DIN71412-A	GREASER DIN71412-A

https://truckmanualshub.com/

Referencia *Reference*	Tabla *Board*	Fig. Nº *Fig. Nr*	Denominación *Denomination*	
	19.1914-08-14	6	ENGRAS. DIN71412-A	GREASER DIN71412-A
	22914-08-14	3	ENGRAS. DIN71412-A	GREASER DIN71412-A
	16914-08-14	16	ENGRAS. DIN71412-A	GREASER DIN71412-A
	11914-08-14	6	ENGRAS. DIN71412-A	GREASER DIN71412-A
	12914-08-14	24	ENGRAS. DIN71412-A	GREASER DIN71412-A
	18.2914-08-14	45	ENGRAS. DIN71412-A	GREASER DIN71412-A
	18.5914-08-14	15	ENGRAS. DIN71412-A	GREASER DIN71412-A
	18.7914-08-14	13	ENGRAS. DIN71412-A	GREASER DIN71412-A
	18.8914-08-14	25	ENGRAS. DIN71412-A	GREASER DIN71412-A
	18.9914-08-14	3	ENGRAS. DIN71412-A	GREASER DIN71412-A
	23.1914-08-14	13	ENGRAS. DIN71412-A	GREASER DIN71412-A
	23.2914-08-14	11	ENGRAS. DIN71412-A	GREASER DIN71412-A
	28914-08-14	13	ENGRAS. DIN71412-A	GREASER DIN71412-A
	28.1914-08-14	9	ENGRAS. DIN71412-A	GREASER DIN71412-A
	28.1914-08-14	21	ENGRAS. DIN71412-A	GREASER DIN71412-A
	1T914-08-14	7	ENGRAS. DIN71412-A	GREASER DIN71412-A
	10T914-08-14	3	ENGRAS. DIN71412-A	GREASER DIN71412-A
	11T914-08-14	4	ENGRAS. DIN71412-A	GREASER DIN71412-A
902.08000.33	19914-08-14	43	ENGRAS. DIN71412-C	GREASER DIN71412-C
	19.1914-08-14	29	ENGRAS. DIN71412-C	GREASER DIN71412-C
904.12000.00	8T914-08-14	12	ANILLO DIN471	SNAP RING DIN471
904.14000.00	6T914-08-14	18	ANILLO DIN471	SNAP RING DIN471
	8T914-08-14	7	ANILLO DIN471	SNAP RING DIN471
904.20000.00	9914-08-14	13	ANILLO DIN471	SNAP RING DIN471
904.22000.00	18.7914-08-14	12	ANILLO DIN471	SNAP RING DIN471
904.25000.00	8914-08-14	14	ANILLO DIN471	SNAP RING DIN471
904.30000.00	9914-08-14	4	ANILLO DIN471	SNAP RING DIN471
904.35000.00	22.1914-08-14	11	ANILLO DIN471	SNAP RING DIN471
905.45000.00	6.1914-08-14	20	ANILLO DIN472	SNAP RING DIN472
905.52000.00	8914-08-14	11	ANILLO DIN472	SNAP RING DIN472
	9914-08-14	15	ANILLO DIN472	SNAP RING DIN472
	2T914-08-14	24	ANILLO DIN472	SNAP RING DIN472
905.62000.00	9914-08-14	3	ANILLO DIN472	SNAP RING DIN472
905.72000.00	3T914-08-14	4	ANILLO DIN472	SNAP RING DIN472
905.80000.00	10914-08-14	31	ANILLO DIN472	SNAP RING DIN472
906.35000.00	3T914-08-14	8	ARANDELA DIN6799	WASHER DIN6799
	5T914-08-14	7	ARANDELA DIN6799	WASHER DIN6799
907.35008.00	3T914-08-14	7	TUERCA DIN934	NUT DIN934
	5T914-08-14	5	TUERCA DIN934	NUT DIN934
908.08000.00	9914-08-14	33	BOLA	BALL
	18.2914-08-14	19	BOLA	BALL
908.11000.00	18.3914-08-14	4	BOLA	BALL
	18.4914-08-14	4	BOLA	BALL
910.35348.00	9914-08-14	21	AGUJA DIN5402	NEEDLE DIN5402
912.08000.66	25914-08-14	3		
	12.2914-08-14	10		
912.08016.66	25914-08-14	16	ABRAZ. DIN3017	CLAMP DIN3017
912.09000.66	26914-08-14	16	ABRAZADERA.	CLAMP
912.20032.00	1.3914-08-14	9	ABRAZADERA.	CLAMP
	1.4914-08-14	8	ABRAZADERA.	CLAMP
912.32050.00	19.2914-08-14	4		
	4T914-08-14	5		
912.32050.66	14914-08-14	9	ABRAZ. DIN3017	CLAMP DIN3017
912.40060.66	14914-08-14	2	ABRAZADERA.	CLAMP
913.20012.00	18.7914-08-14	22	ROTULA.	BUSHING
913.30022.00	18.8914-08-14	20	ROTULA.	BUSHING
914.47000.00	18.8914-08-14	19	ANILLO DIN2200	RING DIN2200
914.62000.00	9914-08-14	3	ANILLO DIN2200	RING DIN2200
920.08016.66	1.4914-08-14	5		
923.16030.00	11914-08-14	4	COJINETE CIL.	BEARING CYL.
923.18030.00	10T914-08-14	10	COJINETE CIL.	BEARING CYL.
924.28000.00	16914-08-14	12		
929.05000.00	12.2914-08-14	19	SOP. GUIA TUBO	TUBE GUIDE SUPPORT
935.47051.66	1914-08-14	3		
	1.2914-08-14	2		
937.28002.00	6T914-08-14	7	ANILLO DIN471*	SNAP RING DIN471*
947.08009.00	18.2914-08-14	46	ENGRAS. DIN71412-A	GREASER DIN71412-A

https://truckmanualshub.com/

https://truckmanualshub.com/

AUSA

https://truckmanualshub.com/