https://truckmanualshub.com/

WEAM005205

Operation & Maintenance Manual

SK1020-5 turbo

SKID-STEER LOADER

SERIAL NUMBER

SK1020-5 turbo 37CTF00432 and up

WARNING

Unsafe use of this machine may cause serious injury or death. Operators and maintenance personnel must read this manual before operating or maintaining this machine.
This manual should be kept inside the cab for reference and periodically reviewed by all personnel who will come into contact with the machine.

KOMATSU

Utility

https://truckmanualshub.com/

https://truckmanualshub.com/

1.1 FOREWORD

- This manual is supplied by Komatsu Utility S.p.A. in order to provide customers with all the necessary information on the machine and the safety regulations related to it, together with the use and maintenance instructions that enable the operator to exploit the capacity of the machine with optimal results and to keep the machine efficient over time.
- The operation manual, together with the spare parts catalogue, is an integral part of the machine and must accompany it, even when it is resold, until its final disposal.
- The manual must be handled with the greatest care and always kept on board the machine, so that it can be consulted at any moment; it must be placed in the appropriate compartment, where also the ownership documents and the logbook are usually kept.
- This manual must be given to the persons who have to use the machine and carry out the routine maintenance operations; they must read the contents carefully more than once, in such a way as to clearly understand what are the correct operating conditions and the dangerous conditions that must be avoided.
  In case of loss or damage, request a new copy to Komatsu or to your Komatsu Dealer.
- The illustrations contained in this manual may represent machine configurations that are available on request.
  Komatsu machines are constantly improved in order to increase their efficiency and reliability; this manual sums up all the information regarding the most recent techniques applied at the moment in which the machine is marketed.
  For any updated information, contact your Komatsu Dealer.
- Punctual periodic annotations regarding the maintenance operations that have been carried out are important to have a clear prospect of the situation and to know exactly what has been done and what has to be done after the next maintenance interval. Therefore, it is advisable to consult either the hour meter and the maintenance plan frequently.
- Over the years Komatsu Dealers have gathered considerable experience in customer service.
  If more information is needed, do not hesitate to contact your Komatsu Utility Dealer: he always knows how to get the best performance from the machine, he can suggest the use of the equipment that is most suitable for specific needs and can provide the technical assistance necessary for any change that may be required to conform the machine to the safety standards and traffic rules.
  Furthermore, Komatsu Dealers also ensure their assistance for the supply of Komatsu genuine spare parts, which alone guarantee safety and interchangeability.
- The table included in this manual must be filled in with the machine data, which are the data that must always be indicated to the Dealer when requiring assistance and ordering spare parts.

⚠ CAUTION

- **Improper use and maintenance of this machine may be hazardous and cause serious injuries and even death.**
- **Operators and maintenance personnel must carefully read this manual before using the machine or performing maintenance operations.**
- **Some actions involved in the operation and maintenance of the machine may cause serious injuries or even death, if they are not performed in compliance with the instructions given herein.**
- **The procedures and precautions described in this manual are valid for application to the machine only when it is used correctly.**
  If the machine is used for any purpose or in any way other than those described herein, the operator shall be responsible for his own safety and for the safety of any other person involved.

https://truckmanualshub.com/

1.2 INFORMATION ON SAFETY

Many accidents are caused by insufficient knowledge of and failure to comply with the safety regulations prescribed for the maintenance operations that must be performed on the machine.
In order to avoid accidents, before starting work and before carrying out any maintenance operation, carefully read and be sure to understand all the information and warnings contained in this manual and given on the plates applied on to the machine.
To enable you to use this machine safely, safety precautions and labels are given in this manual and affixed to the machine to give explanations of situations involving potential hazards and of the methods of avoiding such situations

Signal words

The following signal words are used to inform you that there is a potential hazardous situation that may lead to personal injury or damage.
In this manual and on machine labels, the following signal words are used to express the potential level of hazard.

⚠ DANGER

- **Indicates an imminently hazardous situation which, if not avoided, will result in death or serious injury. This signal word is to be limited to most extreme situations.**

⚠ WARNING

- **Indicates a potentially hazardous situation which, if not avoided, could result in death or serious injury.**

⚠ CAUTION

- **Indicates a potentially hazardous situation which, if not avoided, may result in minor or moderate injury. It may also be used to alert against unsafe practices.**

Other signal words

In addition to the above, the following signal words are used to indicate precautions that should be followed to protect the machine or to give information that is are useful to know.

IMPORTANT

- **This word is used for precautions that must be taken to avoid actions which could shorten the life of the machine.**

NOTE

- This gives information that is useful to know.

Komatsu cannot reasonably predict every circumstance that might involve a potential hazard during the operation or maintenance of the machine; for this reason, the safety messages included in this manual and applied on to the machine plates may not include all possible safety precautions.
If all the procedures and operations prescribed for this machine are kept to, you can be sure that the operator and the persons in the vicinity of the machine will work in total safety, with no risk of injuries or damage. In case of doubt regarding the safety measures necessary for some procedures, contact Komatsu or your local Dealer.

⚠ DANGER

- **Before starting any maintenance operation, position the machine on a firm and level surface, lower the equipment to the ground, engage the safety locks of the equipment and of the controls and stop the engine.**

⚠ DANGER

- **To make the information clearer, some illustrations in this manual represent the machine without safety guards. Do not use the machine without guards and do not start the engine when the engine hood is open, unless this is expressly prescribed for some specific maintenance operations.**

https://truckmanualshub.com/

WARNING

- **It is strictly forbidden to modify the setting of the hydraulic system safety valves; Komatsu cannot be held liable for any damage to persons, property or the machine, if this has been tampered with by modifying the standard setting of the hydraulic system.**

WARNING

- **Before carrying out any electrical welding, disconnect the battery and the alternator (see "2.8.13 PRECAUTIONS CONCERNING THE BATTERY AND THE ALTERNATOR").**

WARNING

- **Install only authorized additional equipment (see "6.1.4 CHARACTERISTICS OF THE OPTIONAL EQUIPMENT OF THE MACHINE VERSION WITH HIGH FLOW AND SUPER-FLOW HYDRAULIC SYSTEM").**

WARNING

- **Travel on roads is allowed only if the machine is provided with appropriate lighting, signalling and safety devices and properly authorized by the relevant papers.**
  Before travelling on roads, make sure that the equipment installed on the machine is homologated and that the safety locks are correctly engaged.

DANGER

- **It is absolutely forbidden to operate the machine while standing on the ground.**
  Every single manoeuvre must be carried out by the operator, correctly seated in driving position.

https://truckmanualshub.com/

1.3 INTRODUCTION

1.3.1 INTENDED USES

The Komatsu MACHINES described in this manual have been designed and constructed to be used by duly trained personnel mainly for EXCAVATION and EARTH-MOVING OPERATIONS.

If provided with suitable safety devices, they can be used with authorized optional equipment having the characteristics illustrated at point "6.1 AUTHORIZED OPTIONAL EQUIPMENT".

1.3.2 IMPROPER OR UNAUTHORIZED USES

⚠ CAUTION

- **This paragraph describes some of the improper or unauthorized uses of the machine; since it is impossible to predict all the possible improper uses, if the machine happens to be used for particular applications, contact your Komatsu Dealer before carrying out the work.**

IMPORTANT

- **The instructions regarding the authorized optional equipment are given in the relevant operation and maintenance manuals; if the equipment is supplied by Komatsu, these publications are attached to this manual.**
- **The instructions regarding the assembly of the authorized equipment, the controls requiring special arrangements on the machine and the hydraulic couplings necessary for the operation of the equipment are grouped in the final section of this manual.**

Komatsu MACHINES are constructed exclusively for the handling, excavation and treatment of inert materials; therefore, the following uses are absolutely forbidden:

- USE OF THE MACHINE BY MINORS OR INEXPERIENCED PERSONS.
- USE OF THE MACHINE FOR LIFTING PERSONS OR OBJECTS.
- TRANSPORT OF CONTAINERS WITH FLAMMABLE OR DANGEROUS FLUIDS.
- USE OF THE BUCKET FOR DRIVING OR EXTRACTING PILES.
- USE OF THE MACHINE FOR TOWING DAMAGED VEHICLES.

1.3.3 MAIN CHARACTERISTICS

- Simple and easy operation.
- Hydrostatic transmission obtained through a double variable displacement pump and axial piston motors operating epicyclic reduction gears.
- Four driving wheels always engaged through oil-immersed roller chains.
- Main equipment and travel control through servo levers ensuring also combined movements that can be modulated proportionally and continually.
- Foot control for the optional equipment (if installed).
- Foot accelerator.
- Lever accelerator.
- Parking brake control.
- Complete series of instruments visible from the operating position.
- Easy maintenance with simplified intervals.
- Road travel (on request).

https://truckmanualshub.com/

1.3.4 RUNNING-IN

Every machine is scrupulously adjusted and tested before delivery.
A new machine, however, must be used carefully for the first 100 hours, in order to ensure proper running-in of the various components.
If the machine is subjected to excessive work load at the beginning of operation, its potential yield and its functionality will be untimely reduced.
Every new machine must be used carefully, paying special attention to the following indications:

- After starting the engine, let it idle for 5 minutes, in such a way as to warm it up gradually before actual operation.
- Avoid operating the machine with the limit loads allowed or at high speed.
- Avoid abrupt starts or accelerations, useless sudden decelerations and abrupt reversals.
- After the first 50 hours of use, carry out the following operations, in addition to those to be performed every 50 hours:
  1 - Check the gearing chain tension.
  2 - Check the wheel nut tightening.
- After the first 250 hours of use, carry out the following operations, in addition to those to be performed every 250 hours:
  1 - Change the hydraulic circuit drain filter.

SYNTHETIC BIODEGRADABLE OIL TYPE HEES

On machines in which the synthetic biodegradable oil type HEES is used, carry out the following operations in addition to the routine maintenance:

- After the first 50 hours of operation, change the hydraulic circuit drain filter.
- After the first 500 hours of operation, change the hydraulic circuit oil.

IMPORTANT

- **When changing the oil filters (cartridges), check their inner part to make sure that there are no deposits. If considerable deposits can be observed, find out what may have caused them before restarting the machine.**
- **The number of operating hours is indicated by the hour meter.**

https://truckmanualshub.com/

1.4 PRODUCT IDENTIFICATION

The Komatsu COMPACT LOADER and its main components are identified by serial numbers stamped on the identification plates.
The serial number and the identification numbers of the components are the only numbers that must always be indicated to the Dealer when requiring assistance and ordering spare parts.

1.4.1 MACHINE SERIAL NUMBER

The machine serial number is stamped on the inner wall of the rear right pillar.

1.4.2 MACHINE IDENTIFICATION PLATE AND PRODUCT IDENTIFICATION NUMBER (PIN)

The Komatsu MACHINES described in this manual are provided with the CE mark, which certifies that they are in compliance with the CE harmonized standards.
The plate with the mark is applied on to the inner wall of the rear right pillar.

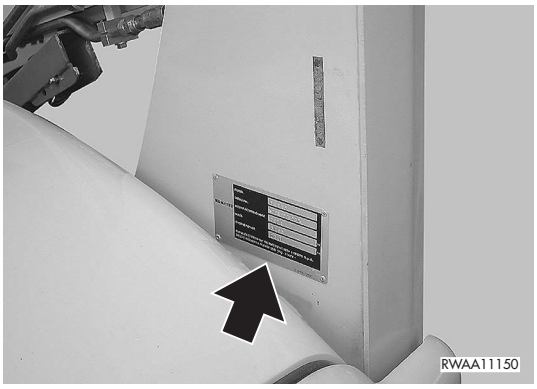

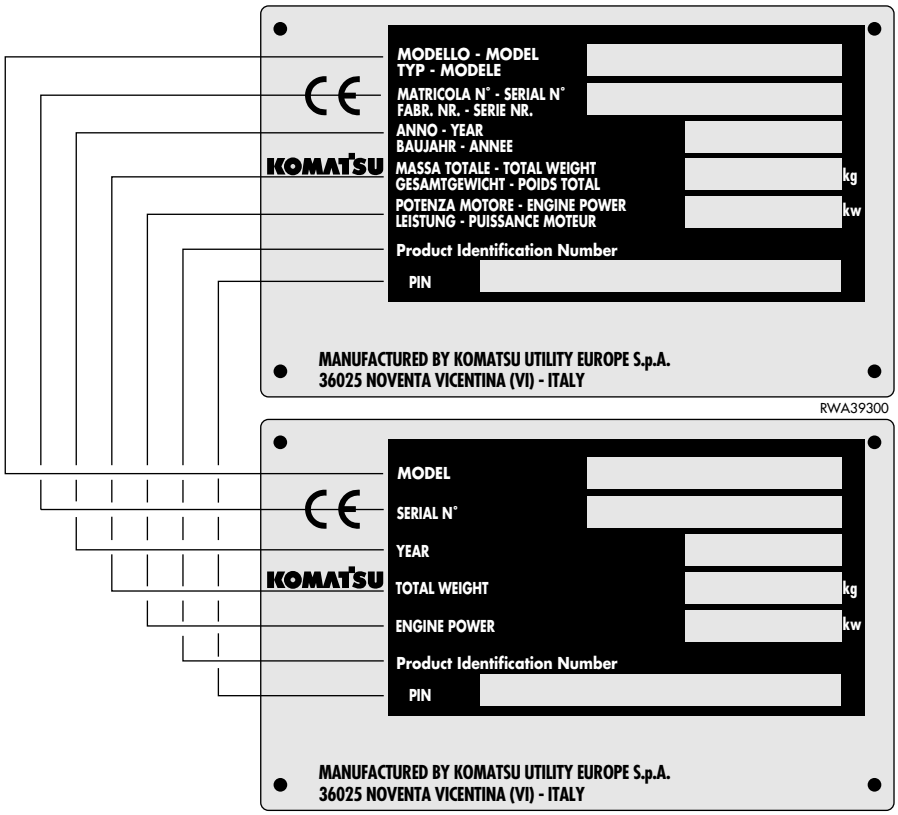

https://truckmanualshub.com/

1.4.3 ENGINE SERIAL NUMBER AND EXHAUST GAS EMISSION PLATE

The plate (1) indicating the engine serial number and the exhaust gas emission plate are positioned on the upper side of the tappet cover.

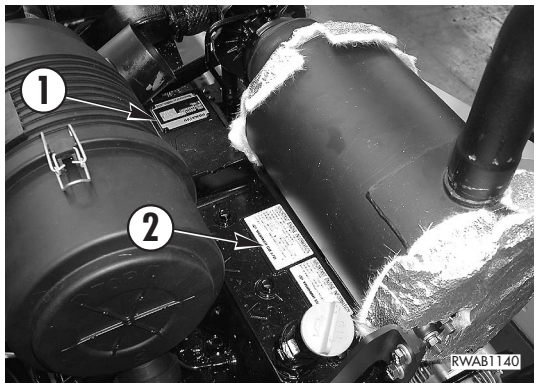

1.4.4 TRAVEL REDUCTION GEAR SERIAL NUMBER

The serial number of the travel reduction gear is stamped on the plate positioned on the hydraulic motor cover.

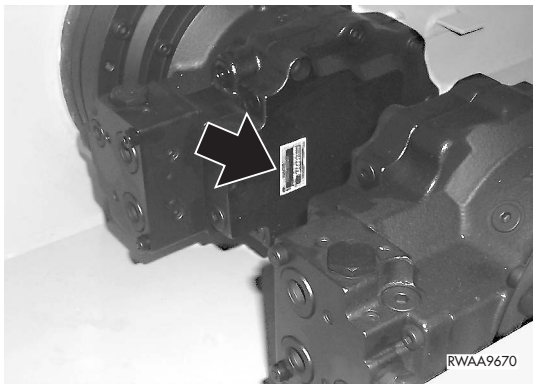

1.4.5 CAB SERIAL NUMBER

The cab serial number is stamped on the plate positioned on the right side of the base cross member.

1.4.6 EXCAVATOR IDENTIFICATION PLATE (if installed)

The excavator identification number is stamped on the plate positioned on the left side of the control panel.

https://truckmanualshub.com/

1.4.7 SERIAL NUMBERS AND DEALER'S ADDRESS

Machine N° _____ Model _____

Engine N° _____

Product identification number (PIN) _____

Travel reduction gear N° _____

Cab N° _____

Excavator (if installed) N° _____

Dealer:

_____

_____

_____

_____

Address: _____

_____

_____ Tel. _____

Person to contact: _____

NOTES: _____

_____

_____

_____

_____

_____

_____

_____

_____

_____

_____

_____

https://truckmanualshub.com/

TABLE OF CONTENTS

FOREWORD

1.1 FOREWORD 1

1.2 INFORMATION ON SAFETY 2

1.3 INTRODUCTION 4

1.3.1 INTENDED USES 4
1.3.2 IMPROPER OR UNAUTHORIZED USES 4
1.3.3 MAIN CHARACTERISTICS 4
1.3.4 RUNNING-IN 5

1.4 PRODUCT IDENTIFICATION 6

1.4.1 MACHINE SERIAL NUMBER 6
1.4.2 MACHINE IDENTIFICATION PLATE AND PRODUCT IDENTIFICATION NUMBER (PIN) ... 6
1.4.3 ENGINE SERIAL NUMBER AND EXHAUST GAS EMISSION PLATE 7
1.4.4 TRAVEL REDUCTION GEAR SERIAL NUMBER 7
1.4.5 CAB SERIAL NUMBER 7
1.4.6 EXCAVATOR IDENTIFICATION PLATE (if installed) 7
1.4.7 SERIAL NUMBERS AND DEALER’S ADDRESS 8

SAFETY AND ACCIDENT PREVENTION

2.1 SAFETY, NOISE AND VIBRATION PLATES 16

2.1.1 POSITION OF THE SAFETY PLATES 16
2.1.1.1 SAFETY PLATES 16
2.1.1.2 SAFETY PLATES FOR MACHINES WITH EXCAVATOR 18
2.1.2 PICTOGRAMS AND RELEVANT MEANINGS 20
2.1.3 POSITION OF THE NOISE PLATES 23
2.1.4 VIBRATIONS TO WHICH THE OPERATOR IS SUBJECTED 23

2.2 GENERAL PRECAUTIONS 24

2.2.1 GENERAL SAFETY RULES 24
2.2.2 SAFETY DEVICES AND GUARDS 24
2.2.3 CLOTHING AND PERSONAL PROTECTION ITEMS 24
2.2.4 UNAUTHORIZED MODIFICATIONS 25
2.2.5 LEAVING THE OPERATORS SEAT 25
2.2.6 GETTING ON AND OFF THE MACHINE 26
2.2.7 CHECKING THE REAR-VIEW MIRRORS (if installed) 26
2.2.8 PREVENTING FIRES DUE TO FUEL AND OIL 27
2.2.9 PREVENTING BURNS 27
2.2.10 PREVENTING DAMAGE DUE TO ASBESTOS POWDER 28
2.2.11 PREVENTING DAMAGE CAUSED BY THE WORK EQUIPMENT 28
2.2.12 FIRE EXTINGUISHERS AND FIRST AID KIT 29
2.2.13 PRECAUTIONS CONCERNING THE CAB STRUCTURE 29
2.2.14 PRECAUTIONS CONCERNING THE EQUIPMENT 29

2.3 PRECAUTIONS TO BE TAKEN BEFORE STARTING THE ENGINE 30

2.3.1 SAFETY ON THE WORK SITE 30
2.3.2 FIRE PREVENTION 30
2.3.3 PRECAUTIONS TO BE TAKEN FOR THE OPERATOR'S CAB 30
2.3.4 ROOM VENTILATION 31
2.3.5 PRECAUTIONS TO BE TAKEN FOR THE LIGHTS (if installed) 31
2.3.6 CLEANING THE WINDOWS AND THE REAR-VIEW MIRRORS - CHECKING THE WINDSHIELD WIPER BLADES (if installed) 31

https://truckmanualshub.com/

2.4 PRECAUTIONS TO BE TAKEN WHEN WORKING 32
2.4.1 STARTING THE ENGINE 32
2.4.2 RULES TO BE FOLLOWED WHEN TRAVELLING ON ROADS 32
2.4.3 CHECKS FOR TRAVELLING IN REVERSE 33
2.4.4 MOVING THE MACHINE 34
2.4.5 WORKING ON SLOPES 34
2.4.6 PREVENTING ELECTROCUTION 36
2.4.7 VISIBILITY 37
2.4.8 WORKING ON ICY OR SNOW-COVERED SURFACES 37
2.4.9 PREVENTING DAMAGE CAUSED BY THE WORK EQUIPMENT 37
2.4.10 WORKING ON LOOSE GROUND 37
2.4.11 PARKING THE MACHINE 38

2.5 TRANSPORTING THE MACHINE ON OTHER VEHICLES 39
2.5.1 LOADING AND UNLOADING THE MACHINE 39
2.5.2 THE ROUTE 39

2.6 BATTERY 40
2.6.1 SAFETY PRECAUTIONS FOR WORK ON BATTERIES 40
2.6.2 STARTING WITH BOOSTER CABLES 40

2.7 PRECAUTIONS FOR EMERGENCY RECOVERY 41

2.8 PRECAUTIONS TO BE TAKEN DURING MAINTENANCE 43
2.8.1 WARNING PLATES 43
2.8.2 TOOLS 43
2.8.3 PERSONNEL 44
2.8.4 EQUIPMENT 44
2.8.5 WORKING UNDER THE MACHINE 44
2.8.6 KEEPING THE MACHINE CLEAN 44
2.8.7 USE OF THE ENGINE DURING MAINTENANCE 45
2.8.8 PERIODICAL CHANGE OF THE PARTS THAT ARE CRITICAL FOR SAFETY 45
2.8.9 STOP THE ENGINE BEFORE CARRYING OUT ANY MAINTENANCE OPERATION OR INSPECTION 45
2.8.10 RULES FOR REFUELLING AND ADDING OIL 46
2.8.11 CHECKING THE COOLANT LEVEL IN THE RADIATOR 46
2.8.12 USING LAMPS 46
2.8.13 PRECAUTIONS CONCERNING THE BATTERY AND THE ALTERNATOR 47
2.8.14 PRECAUTIONS CONCERNING THE STARTER 47
2.8.15 PRECAUTIONS CONCERNING HIGH-PRESSURE HOSES 48
2.8.16 PRECAUTIONS TO BE TAKEN WHEN WORKING ON HIGH-PRESSURE SYSTEMS 48
2.8.17 PRECAUTIONS FOR MAINTENANCE WORK INVOLVING HIGH TEMPERATURES AND PRESSURES 48
2.8.18 COOLING FAN AND FAN BELT 49
2.8.19 WASTE MATERIALS 49
2.8.20 PRECAUTIONS TO BE TAKEN WHEN INFLATING THE TYRES 49
2.8.21 PRECAUTIONS TO BE TAKEN WHEN USING THE SYNTHETIC BIODEGRADABLE OIL TYPE «HEES» 50

https://truckmanualshub.com/

DESCRIPTION AND USE OF THE MACHINE

3.1 SAFETY LOCKS 52
3.1.1 LOADER LOCKS 52
3.1.2 EXCAVATOR LOCKS (if installed) 54
3.1.3 ASPHALT CUTTER LOCKS (if installed) 56

3.2 GENERAL VIEWS 57
3.2.1 FRONT GENERAL VIEW 57
3.2.2 REAR GENERAL VIEW 58
3.2.3 CAB INSIDE GENERAL VIEW 59

3.3 INSTRUMENTS AND CONTROLS 61
3.3.1 INSTRUMENTS 61
3.3.2 WARNING LIGHTS 63
3.3.3 SWITCHES UND PUSH BUTTONS 68
3.3.4 ELECTRICAL ACCESSORIES 74
3.3.5 MACHINE CONTROLS 76

3.4 FUSES AND RELAYS 96
3.4.1 MACHINE FUNCTION FUSES 96
3.4.2 MAIN FUSE 97
3.4.3 RELAYS 98

3.5 GUARDS AND DRIVER'S SEAT 100
3.5.1 ENGINE HOOD 100
3.5.2 REAR PANEL 101
3.5.3 CAB 102
3.5.3.1 STANDARD CAB 102
3.5.3.2 CAB WITH FRONT DOOR AND SIDE WINDOWS (available on request) 102
3.5.3.3 WINDSHIELD DETERGENT RESERVOIR (only for cab with front door) 104
3.5.3.4 RAISING THE CAB 105
3.5.4 STANDARD SEAT 107
3.5.5 CUSHIONED SEAT 107
3.5.6 SAFETY BELT 108
3.5.7 EMERGENCY EXIT 108
3.5.8 TECHNICAL DOCUMENTATION CASE 109
3.5.9 FIRE EXTINGUISHER 109
3.5.10 FIRST AID KIT 109

3.6 USE OF THE MACHINE 110
3.6.1 CHECKS BEFORE STARTING THE ENGINE 110
3.6.1.1 VISUAL CHECKS 110
3.6.1.2 DAILY CHECKS 110
3.6.1.3 OPERATIONAL CHECKS 111
3.6.2 STARTING THE ENGINE 112
3.6.2.1 STARTING WITH WARM ENGINE OR IN TEMPERATE CLIMATES 112
3.6.2.2 STARTING WITH COLD ENGINE OR IN COLD CLIMATES 113
3.6.3 WARMING THE ENGINE 114
3.6.4 HEATING THE HYDRAULIC OIL 114
3.6.5 HOW TO MOVE THE MACHINE (ISO PATTERN CONTROL SYSTEMERN) 114
3.6.5.1 STEERING (CHANGING DIRECTION) 116
3.6.6 HOW TO MOVE THE MACHINE (OPTIONAL PATTERN CONTROL SYSTEM) 118
3.6.6.1 STEERING (CHANGING DIRECTION) 120
3.6.7 MOVING ON SLOPES 122
3.6.8 MAXIMUM IMMERSION DEPTH 123

https://truckmanualshub.com/

3.7 PARKING THE MACHINE 124
3.7.1 PARKING ON LEVEL GROUND 124
3.7.2 PARKING ON SLOPES 125
3.8 STOPPING THE ENGINE 126
3.9 TRANSPORTING THE MACHINE ON OTHER VEHICLES 127
3.9.1 LOADING AND UNLOADING THE MACHINE 127
3.9.2 TRANSPORT 128
3.10 HOW TO LIFT THE MACHINE 129
3.11 PRECAUTIONS TO BE TAKEN IN THE COLD SEASON 130
3.11.1 FUEL AND LUBRICANTS 130
3.11.2 COOLANT 130
3.11.3 BATTERY 131
3.11.4 OTHER PRECAUTIONS 131
3.11.5 PRECAUTIONS TO BE TAKEN AT THE END OF WORK 131
3.12 PRECAUTIONS TO BE TAKEN IN THE WARM SEASON 132
3.13 USING THE WORK EQUIPMENT 133
3.13.1 LOWERING THE EQUIPMENT IN CASE OF MACHINE FAILURE 133
3.13.2 ORGANIZING THE WORK ARE 134
3.13.3 LOADING MATERIAL ON HEAPS AND ON LEVEL SURFACES 135
3.13.4 LOADING MATERIAL ON SLOPES 136
3.13.5 DIGGING METHOD 137
3.13.6 CHANGING THE BUCKET OR THE EQUIPMENT WITH STANDARD RAPID COUPLING 138
3.13.6.1 REMOVING THE BUCKET OR THE EQUIPMENT 139
3.13.6.2 CONNECTING THE BUCKET 140
3.13.6.3 CHECKING THE POSITION OF THE LOCKING PINS 141
3.13.6.4 ADJUSTING THE LOCKING PINS 142
3.14 LONG PERIODS OF INACTIVITY 143
3.14.1 BEFORE THE PERIOD OF INACTIVITY 143
3.14.2 DURING THE PERIOD OF INACTIVITY 144
3.14.3 AFTER THE PERIOD OF INACTIVITY 144
3.15 TROUBLESHOOTING 145
3.15.1 HOW TO REMOVE THE MACHINE 145
3.15.2 IF THE FUEL HAS BEEN COMPLETELY DEPLETED 145
3.15.3 IF THE BATTERY IS DEPLETED 146
3.15.3.1 STARTING WITH BOOSTER CABLES 147
3.15.4 OTHER TROUBLES 148
3.15.4.1 ELECTRICAL CIRCUIT 148
3.15.4.2 HYDRAULIC SYSTEM 148
3.15.4.3 ENGINE 149
3.15.4.4 HYDROSTATIC TRANSMISSION 150

https://truckmanualshub.com/

MAINTENANCE

4.1 GUIDE TO MAINTENANCE 154

4.2 MAINTENANCE NOTES 156
4.2.1 NOTES REGARDING THE ENGINE 156
4.2.1.1 ENGINE OIL 156
4.2.1.2 COOLANT 156
4.2.1.3 FUEL 157
4.2.2 NOTES REGARDING THE HYDRAULIC SYSTEM 157
4.2.3 NOTES REGARDING THE ELECTRICAL SYSTEM 157
4.2.4 NOTES REGARDING LUBRICATION 158
4.2.5 PARTS SUBJECT TO WEAR THAT PERIODICALLY NEED CHANGING 158

4.3 FUEL, COOLANT AND LUBRICANTS 159
4.3.1 HOMOLOGATED SYNTHETIC BIODEGRADABLE LUBRICANTS TYPE HEES 161

4.4 DRIVING TORQUES FOR SCREWS AND NUTS 162
4.4.1 STANDARD DRIVING TORQUES 162
4.4.2 SPECIFIC DRIVING TORQUES 162

4.5 LUBRICATION 163
4.5.1 LUBRICATION DIAGRAM 163

4.6 PERIODICAL CHANGE OF THE COMPONENTS CONNECTED WITH SAFETY 164
4.6.1 CRITICAL PARTS FOR SAFETY 165

4.7 MAINTENANCE PLAN 171

4.8 MAINTENANCE PROCEDURE 173
4.8.1 WHEN REQUIRED 173
4.8.1.a CHECKING, CLEANING OR CHANGING THE AIR CLEANER CARTRIDGE 173
4.8.1.b TYRE ROTATION 174
4.8.1.c DRAINING THE FUEL TANK 175
4.8.1.d RELEASING THE PARKING BRAKE 176
4.8.1.e CHECKING THE BATTERY CHARGE LEVEL 177
4.8.2 CHECKS BEFORE STARTING 178
4.8.2.a VARIOUS CHECKS 178
4.8.2.b CHECKING THE COOLANT LEVEL 178
4.8.2.c CHECKING THE FUEL LEVEL 179
4.8.2.d CHECKING THE ENGINE OIL LEVEL 180
4.8.2.e CHECKING THE OIL LEVEL IN THE HYDRAULIC CIRCUIT 181
4.8.2.f CHECKING THE WATER SEPARATOR FOR SEDIMENTS AND WATER 182
4.8.2.g CHECKING THE WIRING SYSTEM 182
4.8.3 MAINTENANCE AFTER THE FIRST 50 HOURS OF OPERATION 183
4.8.4 MAINTENANCE EVERY 50 HOURS OF OPERATION 183
4.8.4.a CHECKING THE TYRE PRESSURE 183
4.8.4.b CHECKING THE COOLANT LEVEL IN THE RADIATOR 183
4.8.5 MAINTENANCE AFTER THE FIRST 250 HOURS OF OPERATION 184
4.8.6 MAINTENANCE EVERY 250 HOURS OF OPERATION 184
4.8.6.a ADJUSTING THE FAN BELT TENSION 184
4.8.6.b CHECKING THE GEARING CHAIN TENSION 185
4.8.6.c CLEANING THE OUTSIDE OF THE RADIATORS 187
4.8.6.d CHECKING THE WHEEL NUT DRIVING TORQUE 187
4.8.6.e CHECKING THE OIL LEVEL IN THE FINAL TRANSMISSIONS 188
4.8.6.f LUBRICATING THE JOINTS 189
4.8.6.g CHANGING THE ENGINE OIL 190
4.8.6.h CHANGING THE ENGINE OIL FILTER 191
4.8.7 MAINTENANCE AFTER THE FIRST 500 HOURS OF OPERATION
(Only for machines filled with synthetic biodegradable oil type HEES) 192

https://truckmanualshub.com/

4.8.8 MAINTENANCE EVERY 500 HOURS OF OPERATION 192
4.8.8.a CHANGING THE FUEL FILTER 192
4.8.8.b CHANGING THE HYDRAULIC OIL DRAIN FILTER 194
4.8.8.c CLEANING THE WATER SEPARATOR 195
4.8.8.d DRAINING THE HYDRAULIC OIL TANK (Only for machines filled with synthetic biodegradable oil type HEES) 196
4.8.9 MAINTENANCE EVERY 1000 HOURS OF OPERATION 197
4.8.9.a CHANGING THE OIL IN THE FINAL TRANSMISSION 197
4.8.9.b CHANGING THE HYDRAULIC SYSTEM OIL AND CLEANING THE SUCTION FILTER 198
4.8.9.c CHECKING AND ADJUSTING THE ENGINE VALVE CLEARANCE 199
4.8.10 MANUTENZIONE OGNI 2000 ORE 200
4.8.10.a CHANGING THE COOLANT 200
4.8.10.b CHANGING THE SUCTION FILTER 201
4.8.10.c CHECKING THE ALTERNATOR AND THE STARTER 202

TECHNICAL SPECIFICATIONS

5.1 TECHNICAL DATA 204
5.1.1 STANDARD MACHINE OVERALL DIMENSIONS 204
5.1.2 MACHINE OVERALL DIMENSIONS WITH OPTIONAL EQUIPMENT 205
5.1.3 TECHNICAL CHARACTERISTICS 206

AUTHORIZED OPTIONAL EQUIPMENT

6.1 AUTHORIZED OPTIONAL EQUIPMENT 208
6.1.1 PRECAUTIONS REGARDING SAFETY 208
6.1.2 PRECAUTIONS REGARDING THE INSTALLATION OF EQUIPMENT 209
6.1.3 CHARACTERISTICS OF THE STANDARD MACHINE OPTIONAL EQUIPMENT 210
6.1.4 CHARACTERISTICS OF THE OPTIONAL EQUIPMENT OF THE MACHINE VERSION WITH HIGH FLOW AND SUPER-FLOW HYDRAULIC SYSTEM 211
6.2 CHANGING THE AUTHORIZED EQUIPMENT 212
6.2.1 CONNECTING THE EXCAVATOR 212
6.2.2 CONNECTING THE HYDRAULIC CIRCUIT 213
6.2.3 CONNECTING THE RETURN CIRCUIT WITH DIRECT DRAINAGE INTO THE TANK 215
6.2.4 PREPARING THE MACHINE FOR THE USE OF THE EXCAVATOR 216
6.2.5 USING THE MACHINE WITH THE EXCAVATOR 216
6.3 PALLET FORKS 217
6.4 CHANGING THE OPERATING PATTERN 218
6.4.1 HOW TO CHANGE THE OPERATING PATTERN 220
6.5 HAND & FOOT CONTROL SYSTEM 221
6.5.1 MACHINE CONTROLS 221
6.5.1.1 TRAVEL AND STEERING CONTROL LEVERS 222
6.5.1.2 WORK EQUIPMENT CONTROL PEDALS (LOADER ARM AND BUCKET) 224
6.5.1.3 AUXILIARY HYDRAULIC KIT CONTROL 227
6.5.2 HOW TO MOVE THE MACHINE (HAND & FOOT CONTROL SYSTEM) 230
6.5.2.1 STEERING (CHANGING DIRECTION) 232

https://truckmanualshub.com/

SAFETY AND ACCIDENT PREVENTION

https://truckmanualshub.com/

2.1 SAFETY, NOISE AND VIBRATION PLATES

2.1.1 POSITION OF THE SAFETY PLATES

- The safety plates must always be legible and in good conditions; for this reason, if they are dirty with dust, oil or grease, it is necessary to clean them with a solution made of water and detergent.
  Do not use fuel, petrol or solvents.
- If the plates are damaged, ask for new ones to Komatsu or to your Komatsu Dealer.
- In case of replacement of a component provided with a safety plate, make sure that this plate is applied also on the new part.
- The machine can be provided with other plates in addition to those indicated below; in any case, keep also to the instructions given in the additional plates.

2.1.1.1 SAFETY PLATES

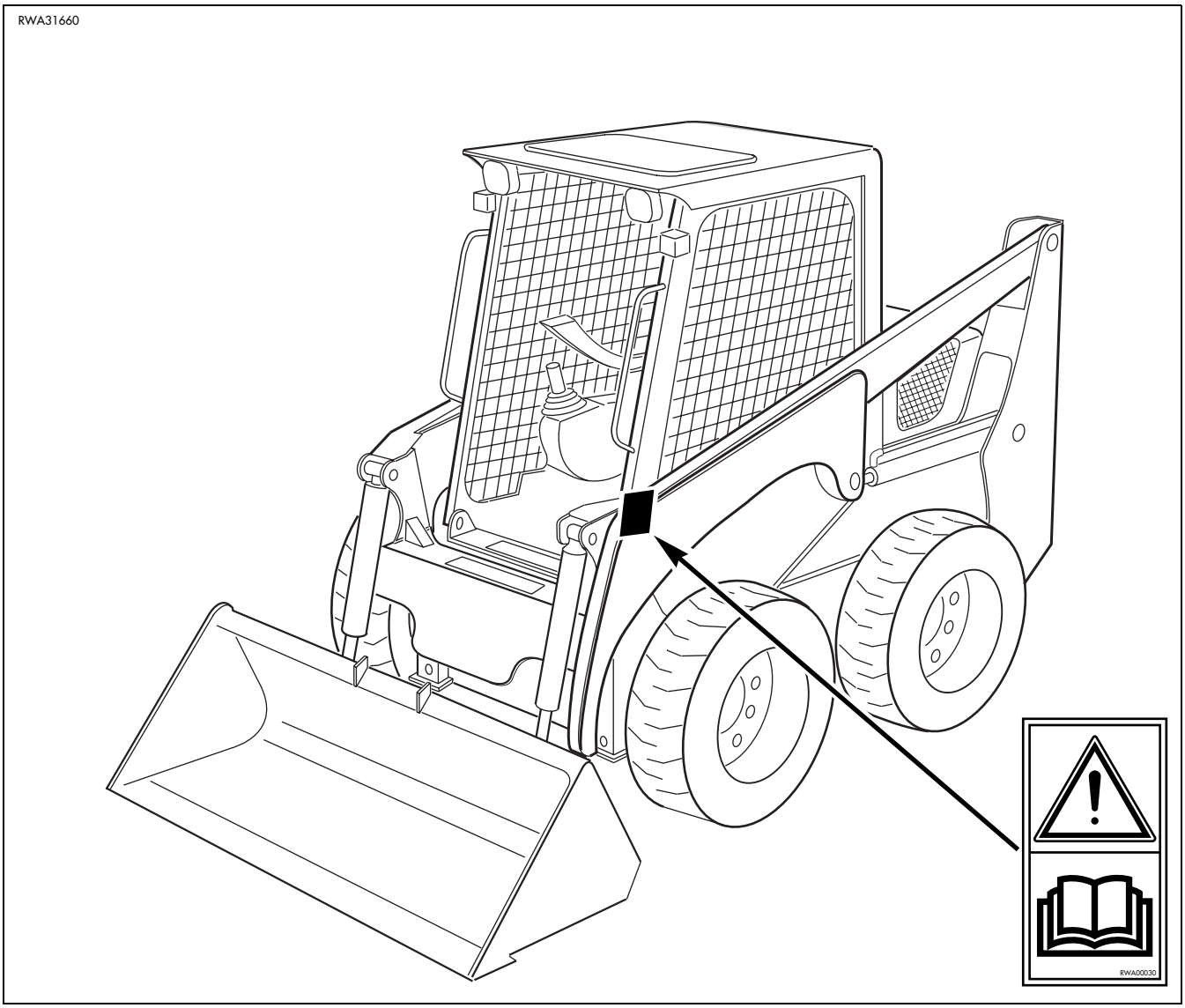

https://truckmanualshub.com/

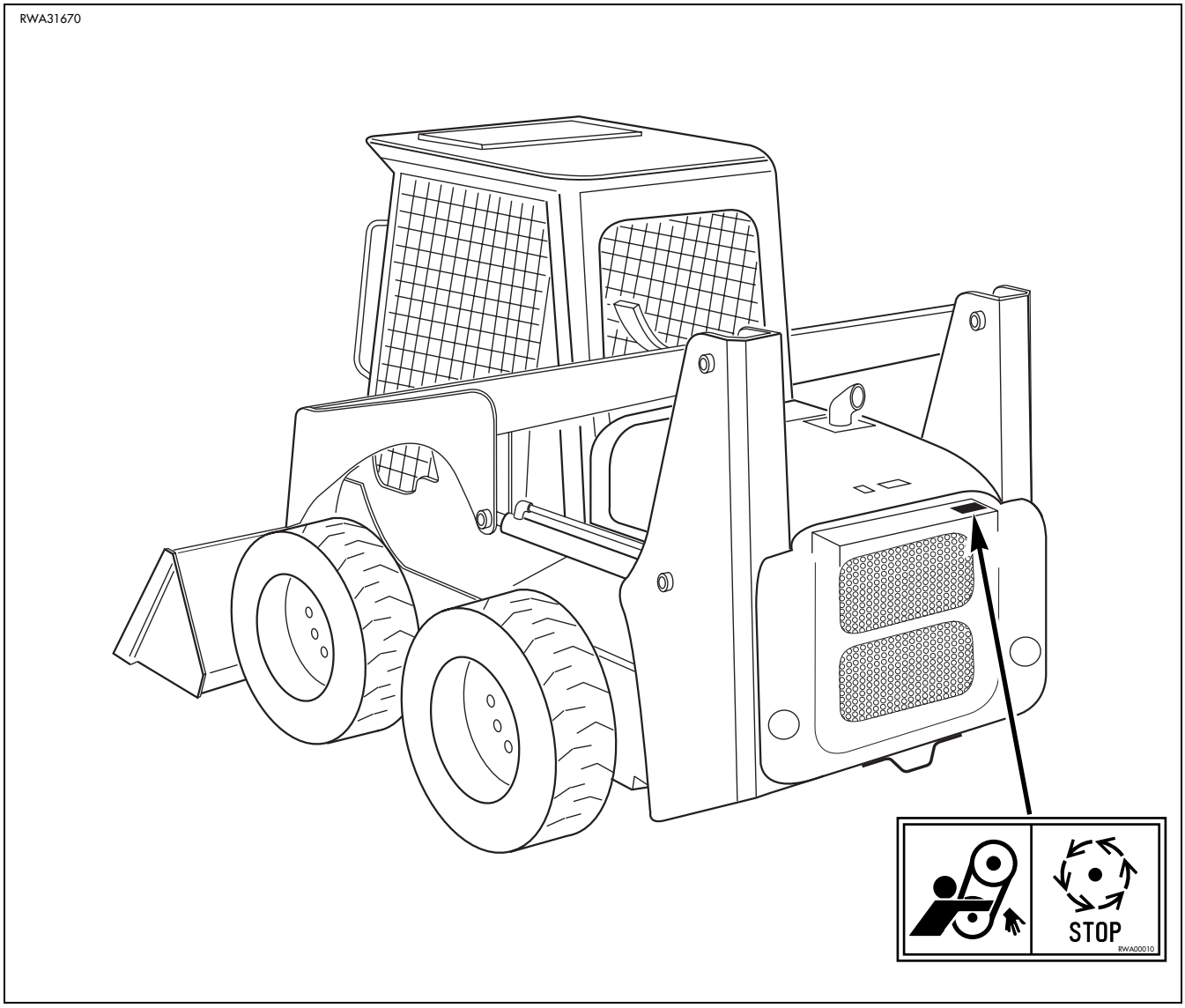

https://truckmanualshub.com/

2.1.1.2 SAFETY PLATES FOR MACHINES WITH EXCAVATOR

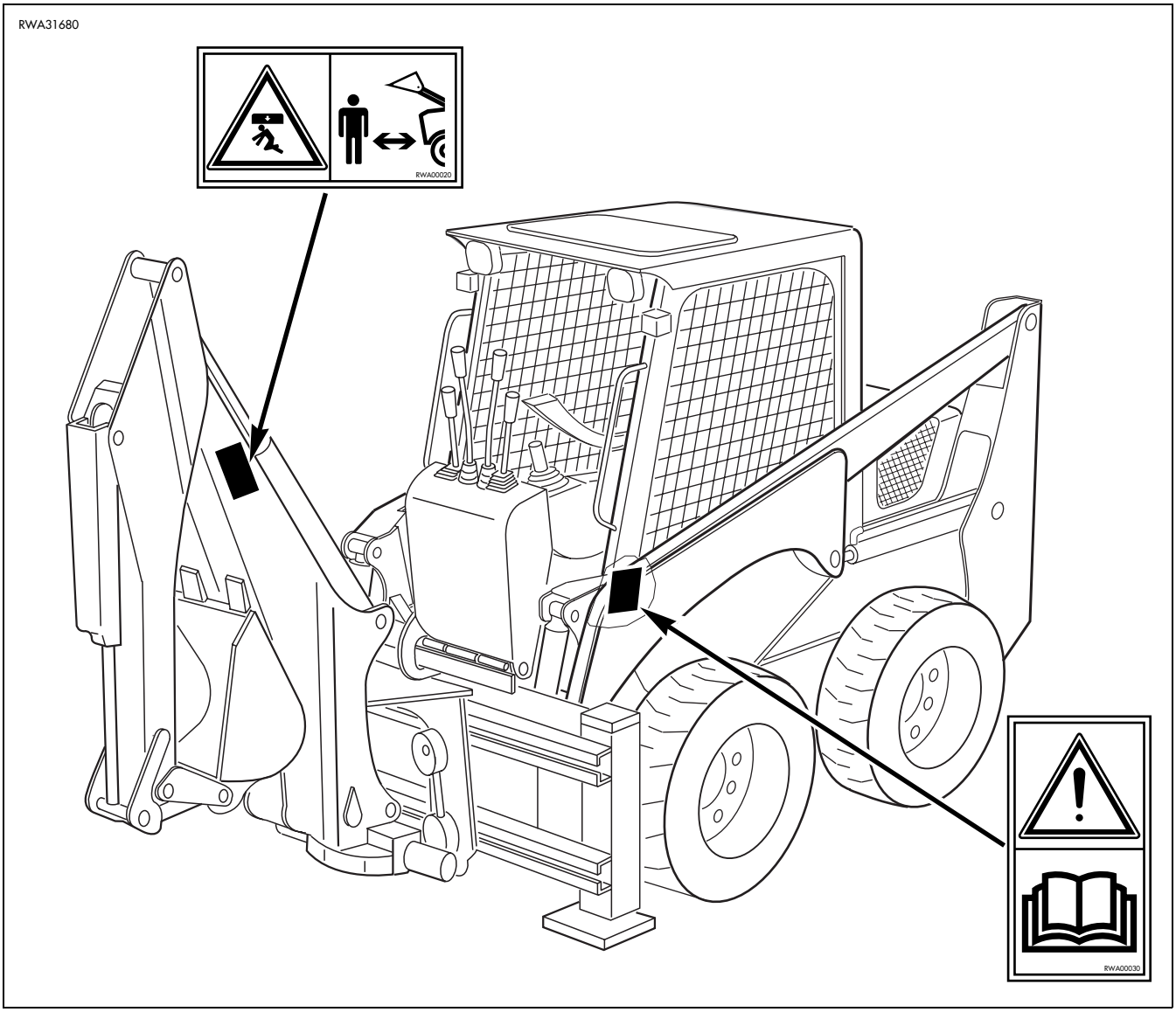

https://truckmanualshub.com/

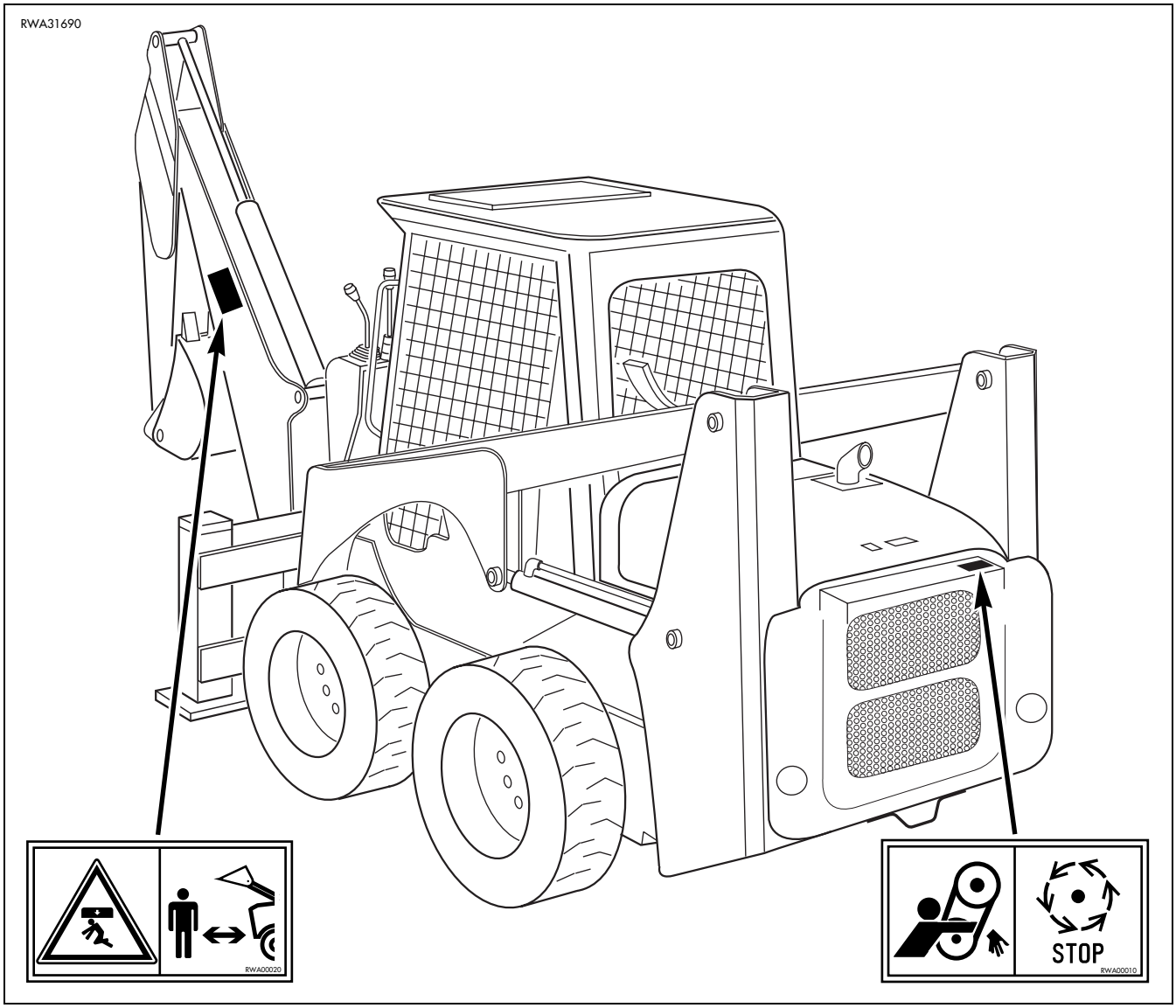

https://truckmanualshub.com/

2.1.2 PICTOGRAMS AND RELEVANT MEANINGS

The warning and danger plates applied on to the machine are accompanied or represented by pictograms.
The personnel in charge with the operation and maintenance of the machine must know the symbols contained in the pictograms perfectly; the following description illustrates what they look like and their respective meanings.

DANGER IN THE WORK AREA (Only for machines with excavator)

- Do not approach or stand within the equipment operating radius when the boom and the bucket of the excavator are raised.

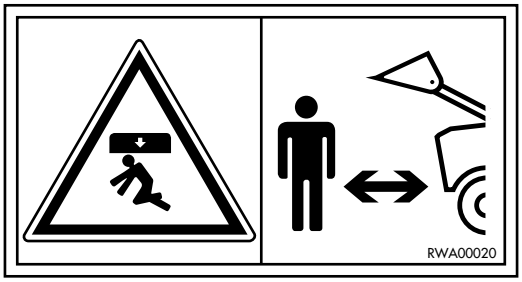

DO NOT OPEN THE HOOD

- Do not open or remove the hood while the engine is running.

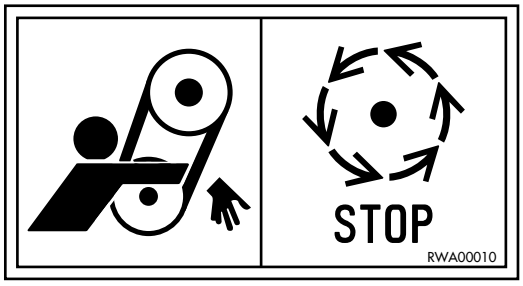

CONSULT THE MANUAL

- Carefully read the contents of the manual before using the machine or performing maintenance operations.

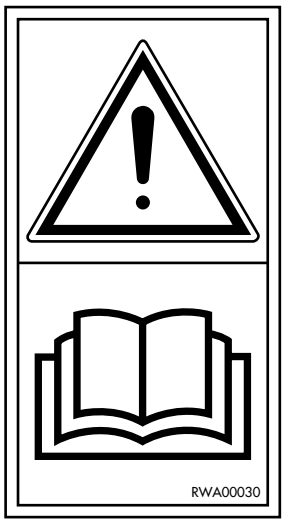

HYDRAULIC OIL TOPPING UP

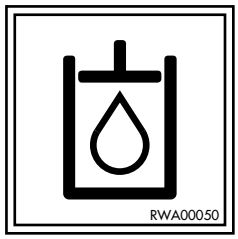

https://truckmanualshub.com/

BIOLOGICAL HYDRAULIC OIL TOPPING UP

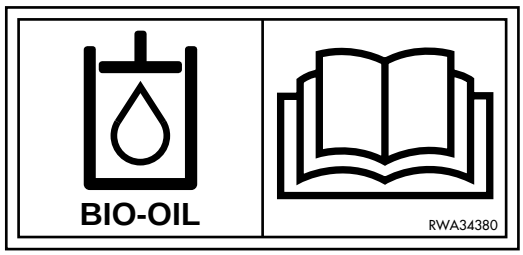

REFUELLING

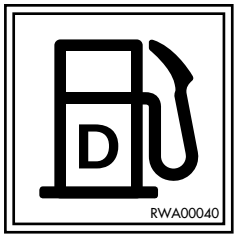

ENGINE LUBRICATING OIL FILTER

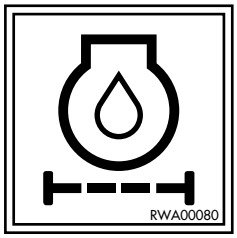

FUEL FILTER

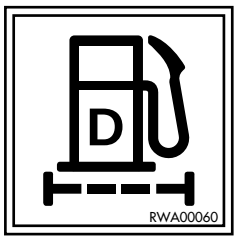

ENGINE AIR SUCTION FILTER

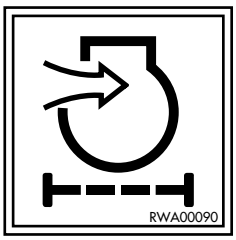

ENGINE COOLANT

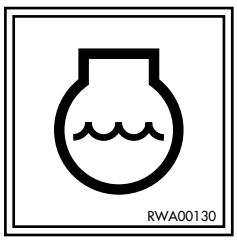

https://truckmanualshub.com/

ENGINE COOLANT PRESSURE

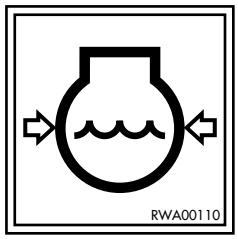

HYDRAULIC OIL LEVEL

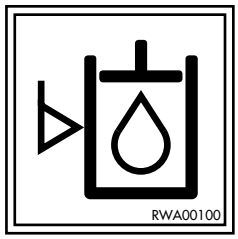

HYDRAULIC OIL FILTER

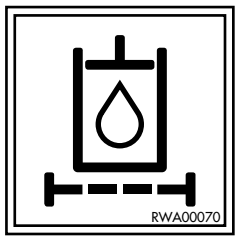

ELECTRIC OUTLET

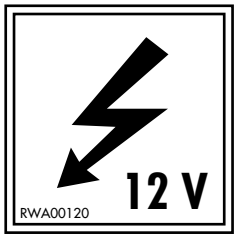

ANCHORAGE POINT

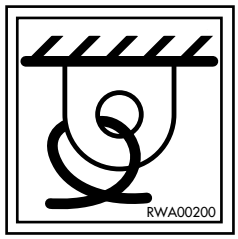

EMERGENCY EXIT

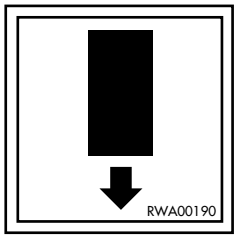

LIFTING POINT

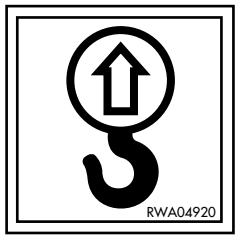

https://truckmanualshub.com/

2.1.3 POSITION OF THE NOISE PLATES

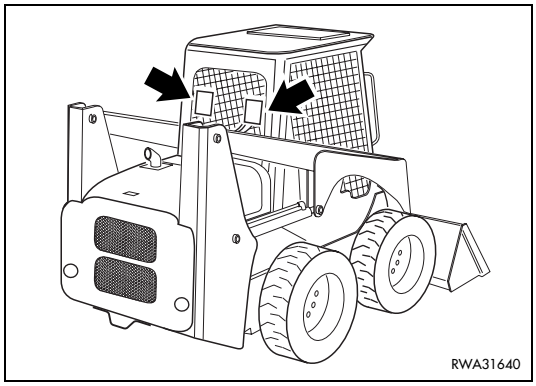

- The noise plates must always be legible and in good conditions; for this reason, if they are dirty with dust, oil or grease, it is necessary to clean them with a solution made of water and detergent.
  Do not use fuel, petrol or solvents.
- If the plates are damaged, ask for new ones to Komatsu or to your Komatsu Dealer.
- In case of replacement of a component provided with a noise plate, make sure that this plate is applied also on the new part.

NOISE OUTSIDE THE CAB

- This value indicates the noise level outside the machine and refers to the noise perceived by the persons who are in the vicinity of the work area.

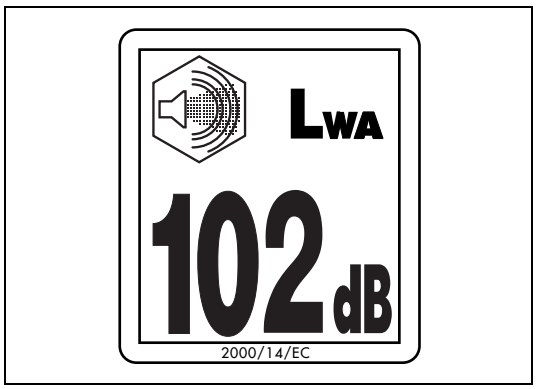

NOISE INSIDE THE CAB

- This value indicates the maximum noise level perceived by the operatorís ears inside the cab.

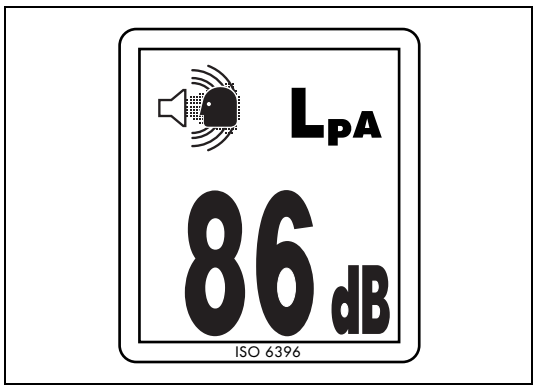

2.1.4 VIBRATIONS TO WHICH THE OPERATOR IS SUBJECTED

- According to the results of the tests carried out to determine the vibrations transmitted to the operator by the machine, the upper limbs are subjected to vibrations lower than 2.5 m/sq.sec., while the seated part of the body is subjected to vibrations lower than 0.5 m/sq sec.

https://truckmanualshub.com/

2.2 GENERAL PRECAUTIONS

2.2.1 GENERAL SAFETY RULES

- Only trained and authorized personnel can use the machine and perform maintenance operations.
- When using the machine or performing maintenance operations, follow all the safety rules, precautions and instructions.
- When working with other operators or when the work site is often occupied by other operators, make sure that everyone knows and understands all the agreed signals and, in any case, that everyone works in such a way as to be able to see the machine and to be visible to the operator.

2.2.2 SAFETY DEVICES AND GUARDS

- Make sure that all the guards and covers are in the correct position. Have guards and covers changed or repaired if damaged. Neither use the machine without guards, nor remove the guards when the engine is running.
- Always use the proper safety devices to lock the machine when parking and remember to fasten the safety belt.
- For the safety devices, see "3.1 SAFETY LOCKS".
- For the safety belt, see "3.5.6 SAFETY BELT".
- Do not remove the safety devices and always keep them in good operating conditions.
- Improper use of the safety devices may lead to serious injuries or even death.

2.2.3 CLOTHING AND PERSONAL PROTECTION ITEMS

- Do not wear large or loose clothes, rings and watches and do not approach the machine with loose long hair, since they can get entagled in the moving parts of the machine and cause serious injuries and damage.
  Avoid also wearing clothes dirty with oil or fuel, since they are flammable.
- Wear a hard hat, goggles, safety shoes, mask, gloves and headphones when operating the machine or performing maintenance operations.
- Always wear safety goggles, a hard hat and heavy gloves if your job involves scattering metal chips or minute materials; these precautions are particularly useful when driving the equipment connection pins with a hammer and when blowing compressed air into the air filter and the radiator to clean them.
  During these operations, make also sure that no one is standing or working near the machine without the necessary protections.
- When working for 8 hours with a noise level exceeding 90 dBA, it is necessary to use headphones or ear plugs and to be particularly careful, especially at the end of the work shift.

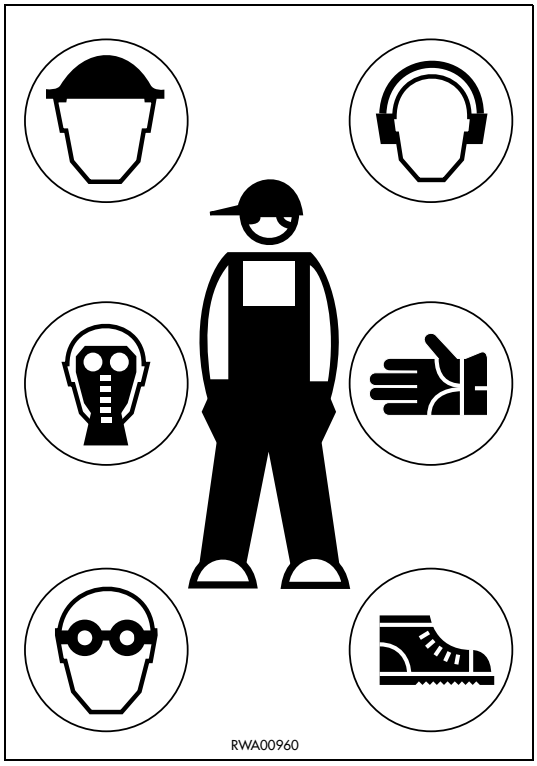

https://truckmanualshub.com/

2.2.4 UNAUTHORIZED MODIFICATIONS

- Any modification made without the authorization of Komatsu can involve hazards.
- Before making a modification, consult your Komatsu Dealer. Komatsu declines any responsibility for injuries or damage caused by unauthorized modifications.

2.2.5 LEAVING THE OPERATORS SEAT

- When leaving the operatorís seat, even if temporarily, make sure that the machine is in a safe position (see "2.4.11 PARKING THE MACHINE").
- Before leaving the operatorís seat, carry out the following operations in the sequence indicated below:

1 - Rest the equipment on the ground.

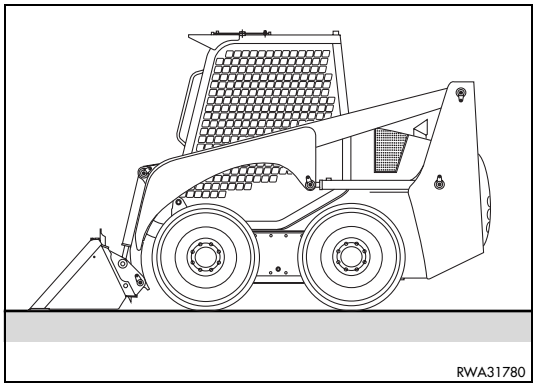

2 - Apply the parking brake.

3 - Engage the safety device of the optional equipment control pedal (if installed).

4 - Lock the equipment and travel control by shifting the safety bars to the lock position.

5- Stop the engine (see "3.8 STOPPING THE ENGINE").

If you have to go so far away that you will not be able to see the machine, extract the ignition key.

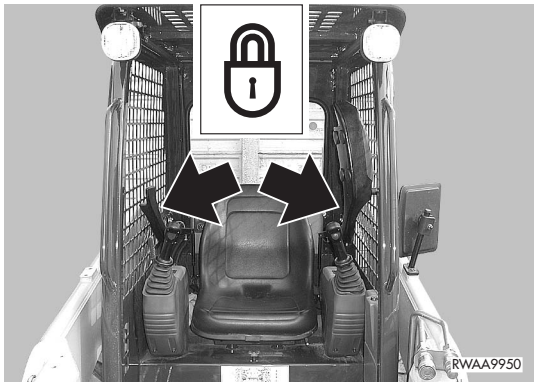

https://truckmanualshub.com/

2.2.6 GETTING ON AND OFF THE MACHINE

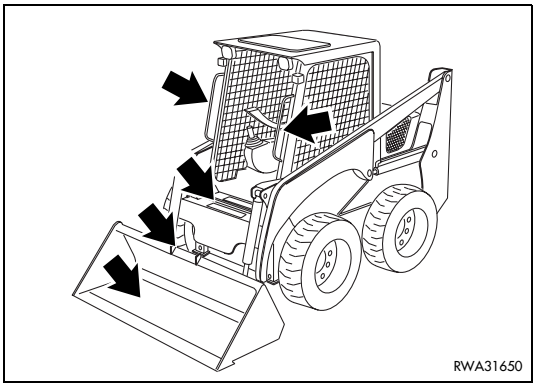

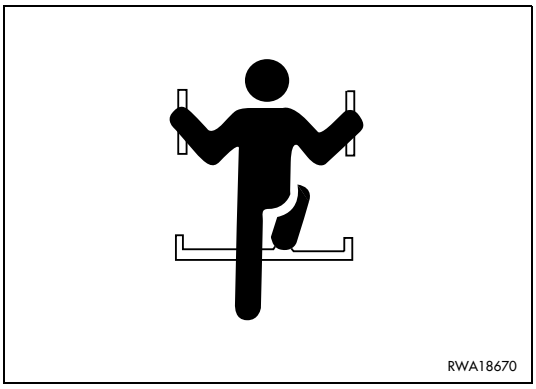

- Do not jump on or off the machine, either when it is at rest and when it is moving.
- When getting on or off the machine, always use the appropriate handles and footboards; get on and off the machine very carefully.
- Never hold or rest on the control levers.
- Either when getting on and when getting off the machine, always maintain three points of contact (holding or resting points), in order to avoid losing your balance and falling down.
- Clean the handles and footboards if they are dirty with oil or grease.
  Carefully clean the cab floor if it is dirty with oil, grease, mud or rubble.

2.2.7 CHECKING THE REAR-VIEW MIRRORS (if installed)

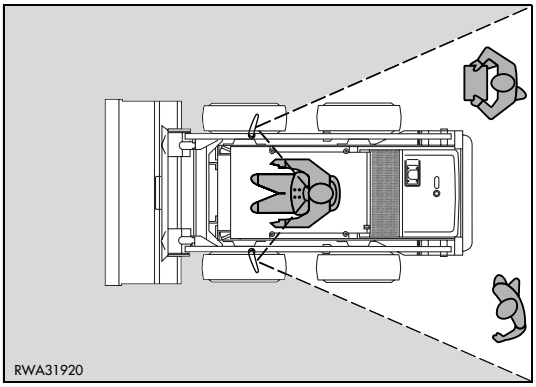

- Make sure that the rear-view mirrors are clean and correctly directed; the operator must be able to check the area behind the machine with no need to move the trunk with respect to his normal operating position.
- If the rear-view mirrors should move or break during the operations, stop the machine immediately and fix or change them.
- Working without checking the area behind the machine involves the risk of running over persons who have incautiously approached the machine or colliding with fixed obstacles or manoeuvring vehicles.

https://truckmanualshub.com/

2.2.8 PREVENTING FIRES DUE TO FUEL AND OIL

Fuel, oil and some types of antifreeze can be easily ignited if they get in contact with a flame. Fuel is particularly flammable and therefore extremely hazardous.

- Keep any naked flame away from flammable fluids.
- Stop the engine and do not smoke when refuelling.
- Top up with fuel and oil only after stopping the engine and in well ventilated areas.
- Top up with fuel and oil in a well delimited area and do not allow unauthorized persons to approach.
- When refuelling, hold the fuel gun firmly and keep it constantly in contact with the filler until you have finished, in order to avoid sparks due to static electricity.
- After topping up, tighten the safety caps of the fuel and oil tanks securely.
- Do not fill the tank completely, in order to leave room for the fuel to expand.
- In case some fuel is spilled, wipe it up immediately.

2.2.9 PREVENTING BURNS

- If the engine coolant, the engine oil and the hydraulic oil are hot, use heavy cloths and wear gloves, heavy clothing and safety goggles before carrying out any check or touching the hot parts.
- Before checking the coolant level, stop the engine and let the fluid cool down.
  If a check is necessary due to the overheating of the engine, slowly loosen the radiator cap to release any residual pressure before removing it. The hot fluid that spurts out may cause serious burns.
- Before checking the engine oil and the hydraulic circuit oil levels, stop the engine and let the oil cool down. The hot oil that can be sprayed out of the tank may cause serious burns.

https://truckmanualshub.com/

2.2.10 PREVENTING DAMAGE DUE TO ASBESTOS POWDER

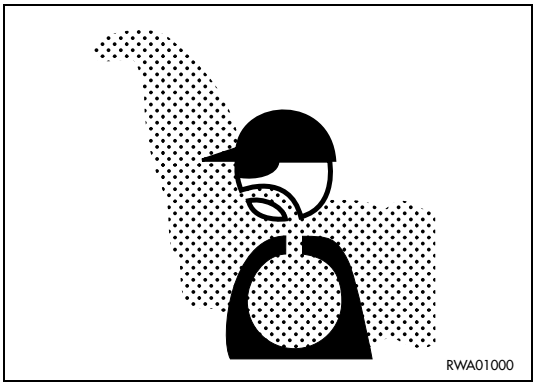

- Asbestos powder can be hazardous to your health if it is inhaled.
- If you handle materials containing asbestos fibers, keep to the instructions given below contenga fibre di amianto, utilizzare le seguenti precauzioni:

1 - **Do not use** compressed air, **but only aspirators** to clean the machine and make sure that the room in which you are working is properly ventilated.

2 - Use low-pressure water to keep down the dust when cleaning.

3 - If there is danger that there may be asbestos powder in the air, operate the machine with the wind to your back whenever possible.

4 - Even if the cab provides suitable protection, use an approved and homologated respirator.

5 - The powder gathered during the cleaning operations must be dampened and put in a sealed and marked container, so that it can be safely disposed of according to the regulations in force.

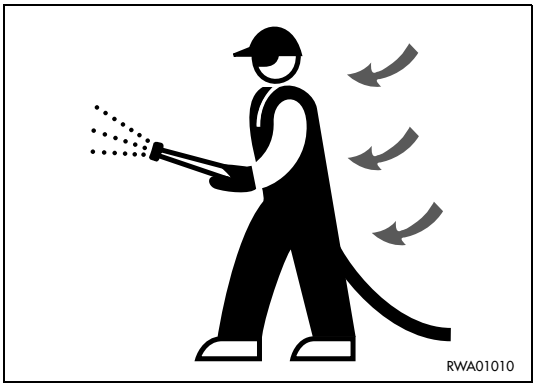

2.2.11 PREVENTING DAMAGE CAUSED BY THE WORK EQUIPMENT

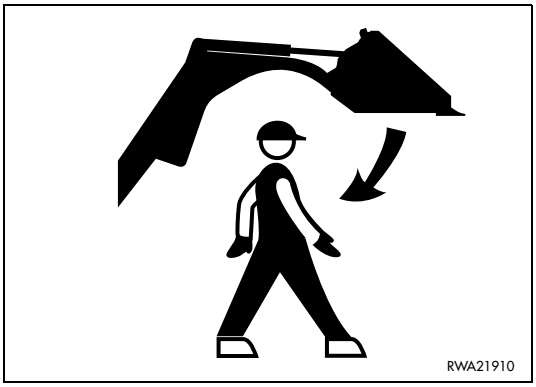

- Do not stand within or approach the operating radius of the work equipment, even when the operator is on board the machine and the engine is running.
- Do not stand or work under the arms or the articulated joints when the arms are lifted, if you are not sure that the safety locks have been duly engaged.
- Do not carry out any operation requiring the lifting of the arms, if you are not sure that the locks are correctly positioned and coupled to the arms.

https://truckmanualshub.com/

2.2.12 FIRE EXTINGUISHERS AND FIRST AID KIT

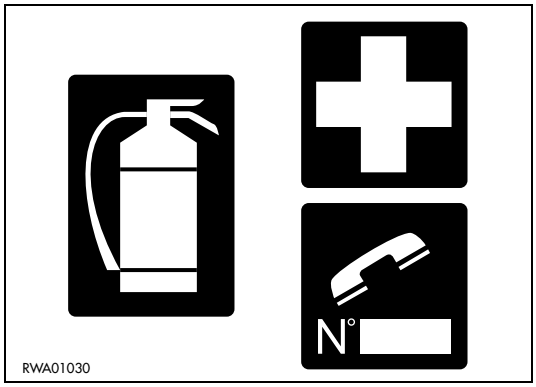

- Make sure that fire extinguishers have been provided and check their position.
- Periodically make sure that the fire extinguishers are loaded and that you know how to use them.
- Find out where the first aid kit has been located.
- Periodically make sure that the first aid kit contains the necessary disinfectants, bandages, medicins, etc.
- It is necessary to know what to do in case of fire.
- Make sure that the phone numbers of the persons or organizations/bodies you may need to contact in case of an emergency are at hand (either at the work site and where maintenance operations are performed).

2.2.13 PRECAUTIONS CONCERNING THE CAB STRUCTURE

- If the cab is inadvertently hit or the machine overturns during work, the cab may be damaged with consequent reduction of its stiffness and of the safety that must be guaranteed to the operator.
  Consult Komatsu or your Komatsu Dealer to have the cab structure and resistance checked in case of impact or damage.

2.2.14 PRECAUTIONS CONCERNING THE EQUIPMENT

- When installing and using optional equipment, carefully read the relevant instruction manual and keep to the indications given therein.
- Do not use optional or special equipment without the authorization of Komatsu or the Komatsu Dealer.
  The installation and use of unauthorized equipment may create safety problems and adversely affect the efficiency and life of the machine.
- Komatsu cannot be held liable for any damage, accident, product failure resulting from the installation and use of unauthorized equipment.

https://truckmanualshub.com/

2.3 PRECAUTIONS TO BE TAKEN BEFORE STARTING THE ENGINE

2.3.1 SAFETY ON THE WORK SITE

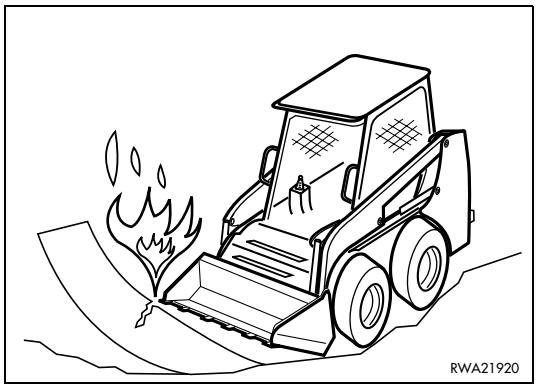

- Before starting the engine, thoroughly check the area for any unusual condition of the ground due to which work may be dangerous.
- Check the conditions of the ground at the work site and before starting the engine define the work plan and the best and safest operating procedure.
- Make the ground surface as level as possible before carrying out any operation.
- In case of work on the road, protect pedestrians and cars by designating a person for work site traffic duty and install fences around the work site.
- If water lines, gas lines, and telephone or high-voltage electrical lines are located under the work site, contact the relevant utility company in order to find out their exact positions or to make them ineffective until the end of the operations. Be careful not to sever or damage any of these lines.
- Check the depth and flow of water before operating in water or on river banks.

2.3.2 FIRE PREVENTION

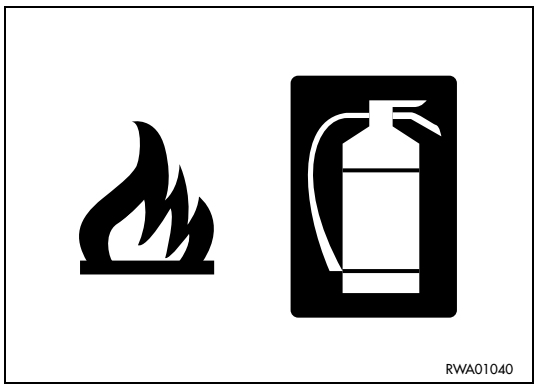

- Carefully remove all wood chips, rubbish, paper and other flammable materials that may have accumulated inside the engine compartment, since they can cause fires.
- Check the fuel and hydraulic system pipes for leaks and if necessary repair them. Wipe up any leakage of oil, fuel or other flammable fluids.
- Make sure that fire extinguishers are available for use in the work area.

2.3.3 PRECAUTIONS TO BE TAKEN FOR THE OPERATOR'S CAB

- Do not keep objects or tools in the operator's cab. They may hinder the operation of the controls and cause serious accidents.
- Keep the cab floor and the controls (pedals and levers) clean, by removing any trace of oil and grease and, as far as the floor is concerned, remove any excess dirt (earth, stones, etc.).
- Check the safety belt and change it if it is broken or damaged.
  Replace any component only with homologated parts supplied by Komatsu or its Dealers.

https://truckmanualshub.com/

2.3.4 ROOM VENTILATION

- Before starting the machine in confined or poorly ventilated places, make sure that there is proper ventilation or connect the engine exhaust pipe to a suction duct. The engine exhaust gases can be deadly.

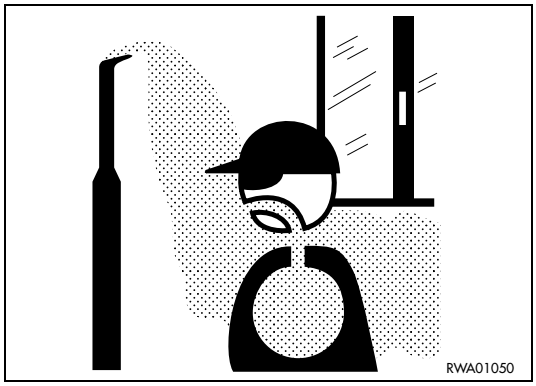

2.3.5 PRECAUTIONS TO BE TAKEN FOR THE LIGHTS (if installed)

- Remove any trace of dirt from the lights, in such a way as to ensure perfect visibility on the work area.
- Make sure that all the bulbs and the working lights are functioning properly. If necessary, replace any faulty bulbs with new ones, making sure that their power is correct.

2.3.6 CLEANING THE WINDOWS AND THE REAR-VIEW MIRRORS - CHECKING THE WINDSHIELD WIPER BLADES (if installed)

- Remove any trace of dirt from the cab windows and clean the rear-view mirrors, in order to ensure perfect visibility on the work area.
- Adjust the rear-view mirrors that may have moved, so that the operator seated in the driving position can clearly see the area behind the machine.
  If any glass is damaged, replace it with a new one.
- Check the conditions of the windshield wiper blades; the scraping wire must be smooth, with no indentations and attached to the rubber back of the blade.
  In case of doubts on the efficiency of the scraping wire, change the blades.

https://truckmanualshub.com/

2.4 PRECAUTIONS TO BE TAKEN WHEN WORKING

2.4.1 STARTING THE ENGINE

- Before getting on the machine, walk around it and check for people and objects that might be in the way.
- Do not start the engine if warning plates have been attached to the control levers.
- When starting the engine, sound the horn to give an alert signal to the persons in the vicinity.
- Start the engine only when seated with fastened safety belt.
- Do not allow anyone to get on the machine.

2.4.2 RULES TO BE FOLLOWED WHEN TRAVELLING ON ROADS

- The machines homologated for travel on roads are provided with safety locks to be used for this purpose.
- When it is necessary to travel on roads, proceed as follows:

1 - Lower the arm completely, fold the bucket, engage the antirotation lock (1) and apply the teeth guard (2).

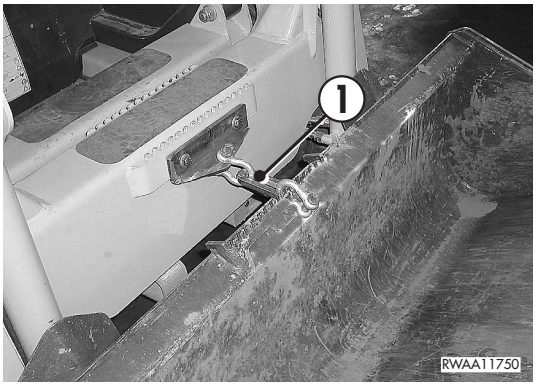

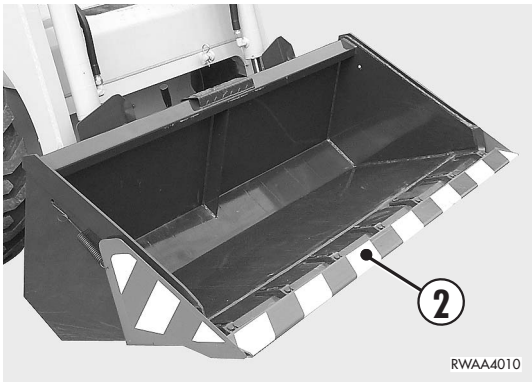

2 - Engage the safety lock (3) of the optional equipment control pedal (if installed).

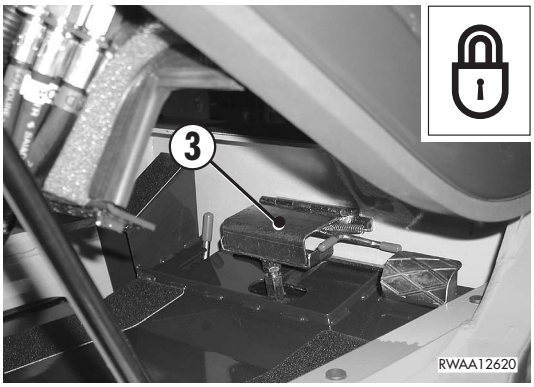

https://truckmanualshub.com/

3 - Lock the equipment control by shifting the safety device lever (4) to the lock position.

- When travelling on roads, keep to the traffic rules and operate the flashing light.

IMPORTANT

- **If the machine is provided with optional equipment, apply all the locks required according to the homologation and the traffic safety rules (see "3.1 SAFETY LOCKS").**

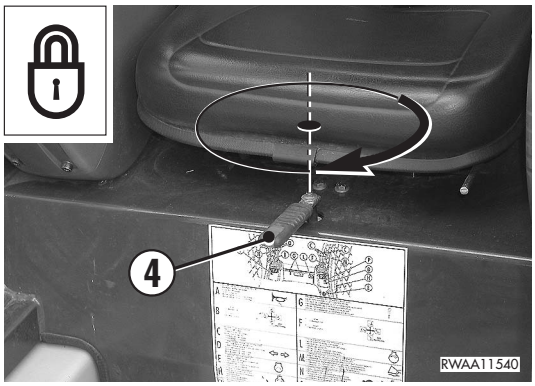

2.4.3 CHECKS FOR TRAVELLING IN REVERSE

- When operating in areas that may be hazardous or where visibility is poor, designate a person to direct the movements of the machine and the traffic on the work site.
- Make sure that no unauthorized person is standing within the machine operating radius or in its travel direction.
  If necessary, put up appropriate fences.
- Before moving the machine, sound the horn in order to warn the persons near the work area.
- There are blind spots behind the machine, which cannot be seen by the operator and where someone may be standing: therefore, it is necessary to make sure that there is no one behind the machine before travelling in reverse.

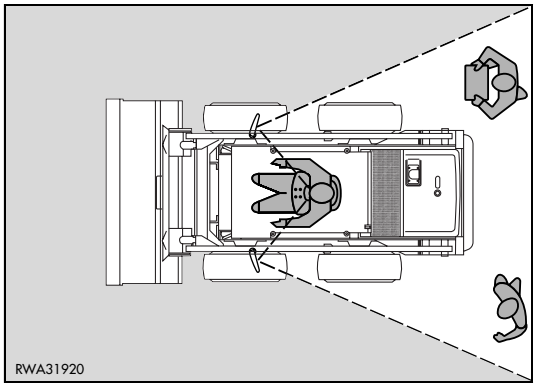

https://truckmanualshub.com/

2.4.4 MOVING THE MACHINE

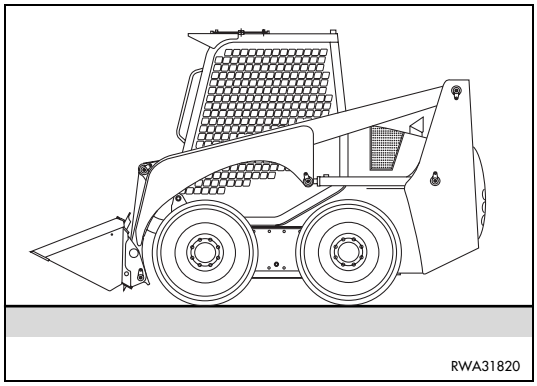

IMPORTANT

- **The use of the speed increase function is allowed only for the fast speed transfers of the machine.**
- When moving the machine, lower the arm and fold the bucket completely; this position makes it possible to evaluate the space required for the movements more precisely and at the same time ensures the stability of the machine.
- If the equipment control levers must be used during travel, avoid moving them abruptly; sudden manoeuvres change the attitude of the machine and make driving difficult.
- When travelling on rough ground, keep the speed low and avoid sudden movements of the bucket arm.
- If possible, avoid moving on obstacles.
  If the machine has to travel over an obstacle, keep the equipment as close to the ground as possible and travel at low speed.
  Never move on obstacles that may incline the machine considerably (over 10°).
- If one of the two wheels goes over an obstacle or gets into a hole in the ground, the machine may overturn.
  In these cases, reduce the speed to minimum and be very careful to the balance of the machine.

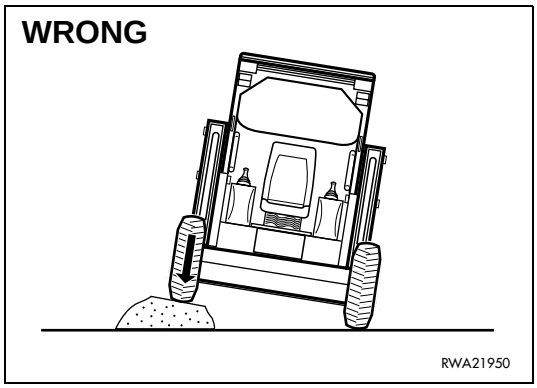

2.4.5 WORKING ON SLOPES

- Operations on slopes and on river or lake banks with damp ground may result in the tipping over or slipping of the machine.
- Do not operate with the bucket before the tractor.
- On hills, banks or slopes, keep the arm lowered and the bucket folded and in case of emergency quickly lower it to the ground to help the machine stop.
- Do not change direction and if possible avoid travelling obliquely when working on slopes. It is advisable to go down or up to a flat surface before performing these manoeuvres.

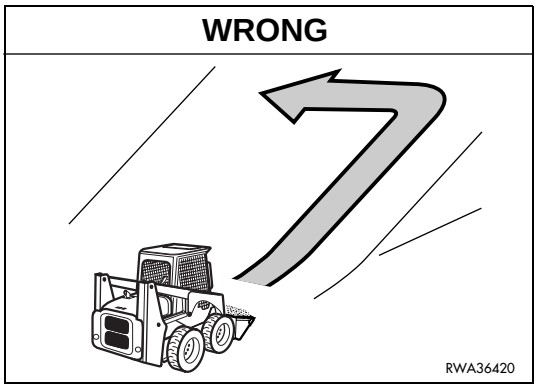

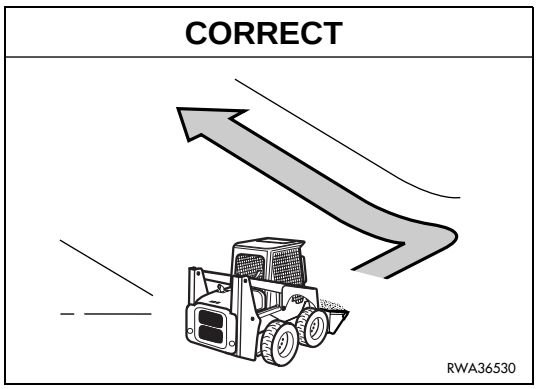

https://truckmanualshub.com/

- Travel up or down slopes with the heaviest part of the loader facing the top of the slope.
- Do not travel on wet grass or thick layers of leaves: if the machine moves obliquely in these conditions, it may slip.
- Before carrying out any operation on a slope, always check the functionality of the parking brake.
- Do not go down slopes at high speed; you may lose control of the machine and cause serious damage and even death.
- Do not move on slopes with inclination exceeding 15°, since the machine may overturn.
- When the fuel level indicator reaches the red reserve area during work on a slope, immediately provide for refuelling; due to the inclination of the machine, the engine may suck in air and stop suddenly, which represents a grave risk for the safety of the operator and of the persons before the machine.
- If the engine should stop all of a sudden, immediately lower the bucket to the ground and apply the parking brake.

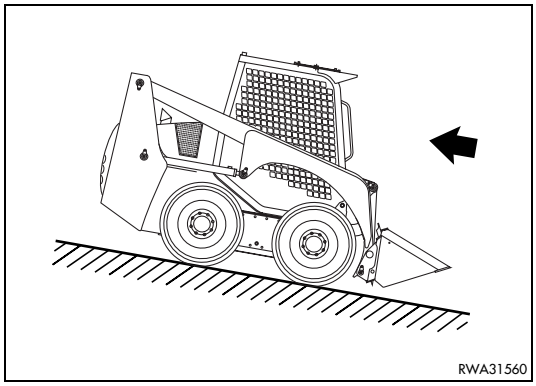

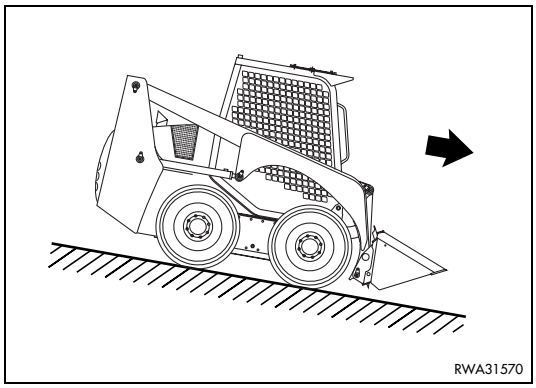

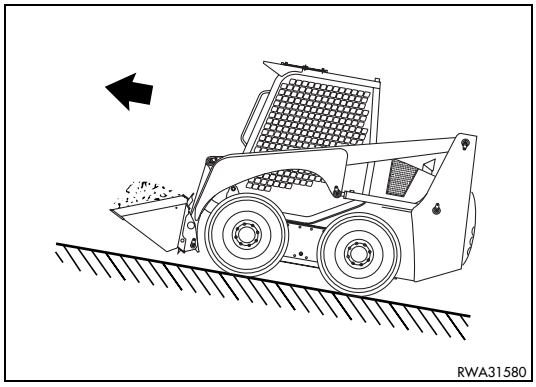

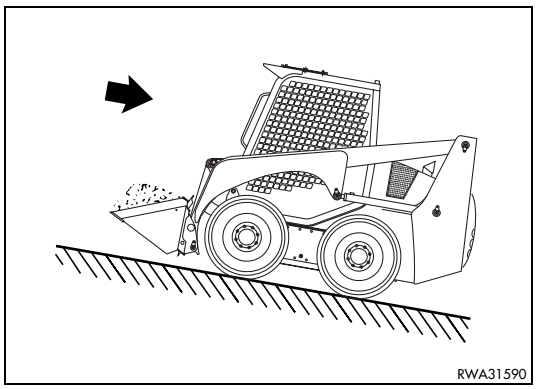

https://truckmanualshub.com/

2.4.6 PREVENTING ELECTROCUTION

- Digging operations near overhead electric lines are extremely dangerous and they may also cause death due to electrocution; for this reason, when working near overhead electrical lines, always respect the minimum safety distances prescribed by the competent authorities and by the accident-prevention rules in force.
- As far as underground long-distance lines are concerned, the minimum distance depends on the covering of the ducts in which the cables are laid.
- The basic safety precautions to be taken to prevent this risk are the following:
  1 - Wear shoes with thick rubber or leather soles.
  2 - Request the aid of another person who can warn you if the machine gets too close to the electric line.
  3 - Operate at low speed.
  4 - Learn what is to be done first in case of electrocution.
  5 - Keep the phone number of the electricity company and of the nearest first aid station at hand.
- If the work equipment accidentally gets entangled in the cables, the operator must remain still and must not leave the cab until the electricity company has insulated the line.
- When carrying out this kind of operations, warn everyone standing in the work area to keep at the minimum distance prescribed from the machine and the work equipment.
- Ask the electricity company in advance what are the voltage of the cables and the minimum safety distance.

⚠ DANGER

- **The minimum distances from overhead lines can vary in the different countries, according to the climate and to the percentage of humidity in the air.**
  Indicatively, the distances shown in the table should be respected.

Cable voltage	Min. safety distance
1.0 kV (distribution line)	5 m
6,6 kV (2÷3 insulators)	5.2 m
33 kV (min. 3 insulators)	5.5 m
66 kV (min. 6 insulators)	6 m
154 kV (min. 10 insulators)	8 m
275 kV (min. 19 insulators)	10 m

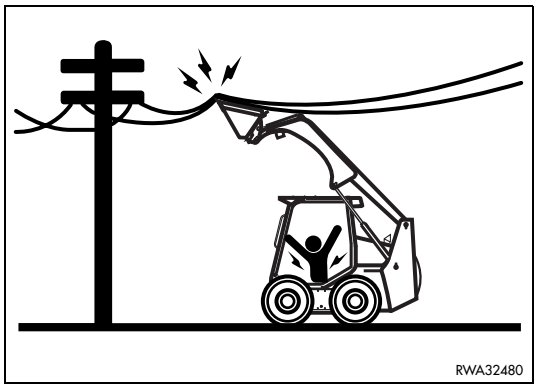

https://truckmanualshub.com/

2.4.7 VISIBILITY

- Switch on the working lights as soon as visibility starts decreasing.
- If visibility decreases due to mist, smoke or heavy rain, stop the machine in a safe position and wait for the weather to improve until visibility becomes accepta.

2.4.8 WORKING ON ICY OR SNOW-COVERED SURFACES

- If the ground is icy or covered with snow, even a slight slope may cause the machine to slip sidewards, therefore it is advisable to move at low speed and to avoid abrupt starts, stops or turns.
- When it has snowed heavily, the road shoulders and any obstacle are buried in the snow and are not visible, therefore proceed with care when clearing the snow.

2.4.9 PREVENTING DAMAGE CAUSED BY THE WORK EQUIPMENT

- When working in tunnels, galleries, under electric cables or other ducts (air, telephone lines) and wherever the height is limited, proceed with the greatest care to prevent the bucket or the arms from causing any damage.

2.4.10 WORKING ON LOOSE GROUND

- Avoid operating the machine too close to the edge of cliffs, overhangs and deep ditches.
  These areas may collapse, making the machine fall down or tip over and this could result in serious injuries or even death.
  Remember that after heavy rain or earthquakes these dangerous conditions usually get worse.
- The earth laid near ditches is loose and can easily collapse due to the weight or vibrations of the machine.
  Be extremely careful and remember to fasten the safety belt.

https://truckmanualshub.com/

2.4.11 PARKING THE MACHINE

- Park the machine on firm and level ground. If this is not possible and it is necessary to park on a slope, position the machine with the bucket directed downwards and carry out the following operations:

1 - Rotate the bucket forward and rest it on the ground.

2 - Apply the parking brake.

3 - Stop the engine.

4 - Put wedges or safety blocks under the wheels.

- Always rest the work equipment on the ground; if it is necessary to park with raised arms, make sure that the safety locks are engaged (see "3.1 SAFETY LOCKS").
- Always lock the equipment and travel control by shifting the safety bars to the lock position (see "3.3.5 MACHINE CONTROLS").
- When leaving the machine, always apply the parking brake and remove the ignition key.
- If it is necessary to park on public roads, provide for signalling the presence of the machine according to the local regulations in force (signalling fires, fences, road works ahead, alternated direction and direction signs, etc.).

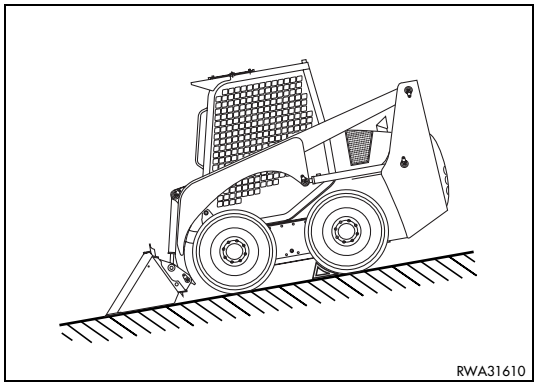

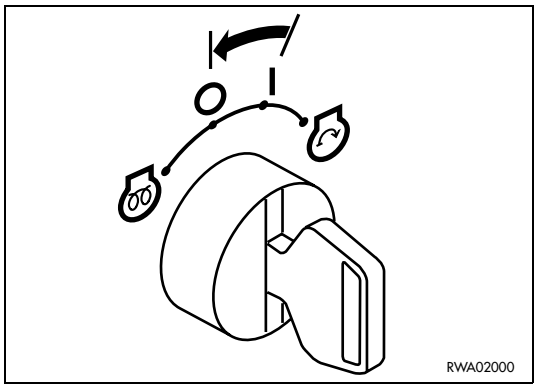

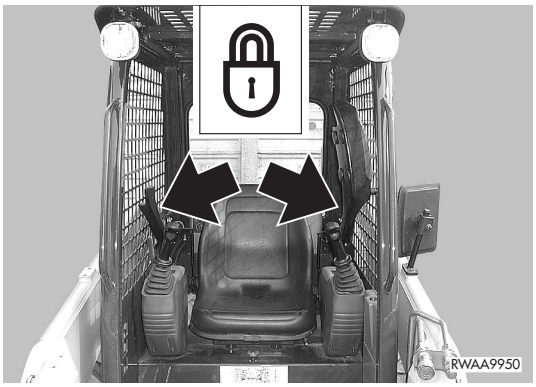

https://truckmanualshub.com/

2.5 TRANSPORTING THE MACHINE ON OTHER VEHICLES

2.5.1 LOADING AND UNLOADING THE MACHINE

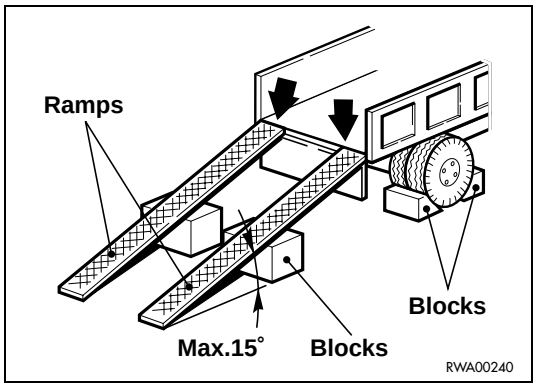

- Loading and unloading the machine on/from another vehicle always involve potential hazards. Proceed with extreme care.
- Perform loading and unloading on firm, level ground. Maintain a safety distance from the edges of ditches or from road sides.
- If the vehicles used have not been appositely equipped, put support blocks under the ramps, in order to avoid any bending.
- Always lock the wheels of the transporting vehicle with wedges.
- Always use ramps that are sufficiently wide and can support the weight of the machine. The longitudinal axes of the ramps must be parallel to each other and perpendicular to the loading board and their distance from each other must be suitable for the tread of the machine.
- Make sure that the ramps are securely positioned and anchored to the loading board and that they have the same length.
- Position the ramps with a maximum inclination of 15°.
- Make sure that the ramp surface is clean and there is no trace of grease, oil, soil and ice; remove any dirt from the wheels before starting to load the machine on the vehicle.
- If the bucket is empty or no optional accessories are fitted on the machine, this must be loaded on the transporting vehicle in reverse.
- Do not correct the trajectory of the machine on the ramps. If necessary, get down the ramps and start the operation again.
- After loading the machine, block the wheels with wedges and secure it with tie-downs or chains that prevent even any sideward shift (see "3.9 TRANSPORTING THE MACHINE ON OTHER VEHICLES").

2.5.2 THE ROUTE

- Define the route to be followed, taking into account the width, height and weight of the transporting vehicle plus the machine.
  Make sure that the overall dimensions of the vehicle and its load are compatible with the roads and any tunnel, underpass, bridge, power and telephone line, etc. along the route.
- Keep to the regulations in force regarding the permissible width, height, weight and speed of heavy vehicles.

https://truckmanualshub.com/

2.6 BATTERY

2.6.1 SAFETY PRECAUTIONS FOR WORK ON BATTERIES

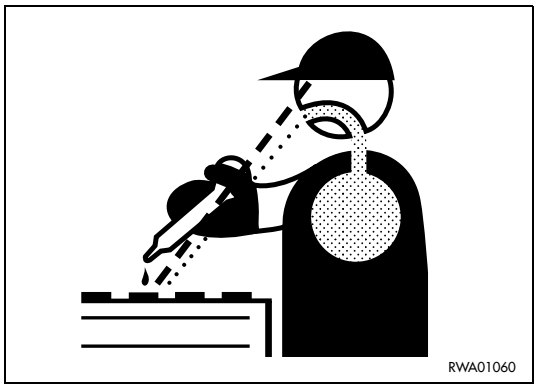

- Electrolytic batteries contain sulphuric acid which can cause burns. It can also corrode clothing and make holes in it. If you inadvertently splash battery acid on yourself or on someone else, immediately wash the affected part with plenty of water.
- Battery acid may cause blindness if it comes into contact with the eyes.
  If acid accidentally gets into your eyes, wash them immediately with plenty of water and consult a doctor right away.
- If you accidentally swallow battery acid, drink a large quantity of water or milk, beaten egg white or vegetable oil and in any case antiacid substances like magnesia, bicarbonate, etc.; call a doctor or a poison treatment center immediately.
- Always wear safety goggles when working on batteries.
- Batteries produce hydrogen, which is highly explosive and can be easily ignited with small sparks or naked flames.
- Before working with batteries, stop the engine and remove the ignition key.
- Avoid short-circuiting the battery terminals through accidental contact with metal objects or tools or through the inversion of the terminals.
- Tighten the battery terminals securely. Loose terminals may generate sparks and even cause the explosion of the battery.

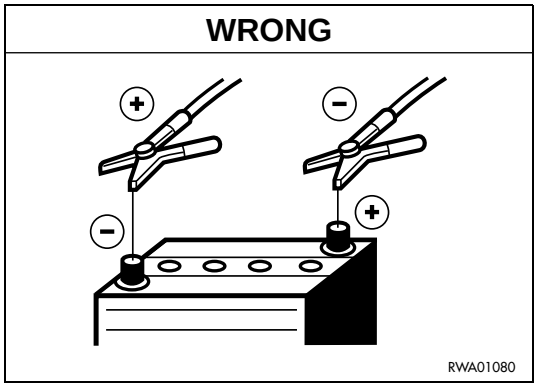

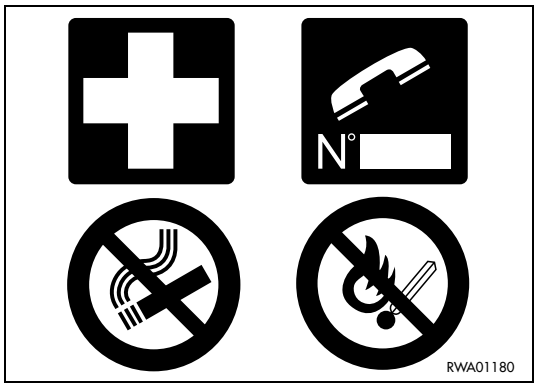

2.6.2 STARTING WITH BOOSTER CABLES

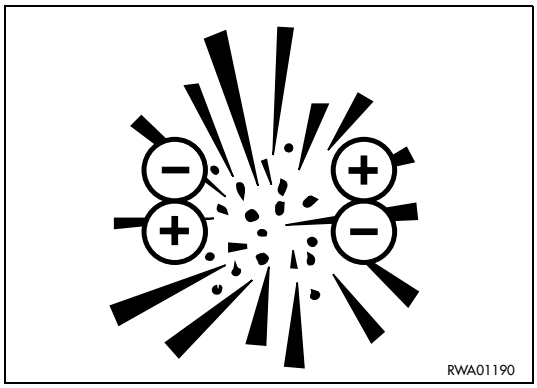

- When starting the machine with booster cables, always wear safety goggles.
- When starting the engine by means of another machine, avoid any contact between the two machines.
- Be sure to connect the positive cable (+) first and then the negative or earth cable (-) when connecting the booster cables. After the start, disconnect first the negative or earth (ñ) cable and then the positive cable (+).
- Connect the batteries in parallel: positive to positive and negative to negative.
- When connecting the earth cable to the frame of the machine to be started, operate as far as possible from the battery. (See "3.15.3 IF THE BATTERY IS DEPLETED").

https://truckmanualshub.com/

2.7 PRECAUTIONS FOR EMERGENCY RECOVERY

- The removal hooks are to be used exclusively for emergency recovery and not for towing vehicles.
- Before moving the machine, make sure that all the controls are in neutral.
- Release the parking brake of the travel hydraulic motors (see "4.8.1.d RELEASING THE PARKING BRAKE").
- Incorrect manoeuvres may result in serious injuries or even death.
- To move the machine, use properly dimensioned steel cables; do not use worn cables or cables with broken strands (A), twisted cables (B), deformed cables (C).
- During the recovery operation, no one can be allowed to approach the machines or the cable.
- Do not stand astride the cablecavo.

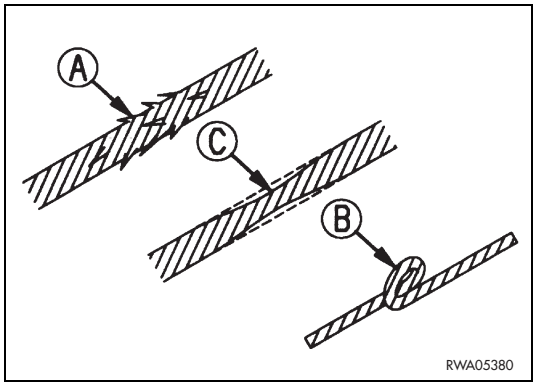

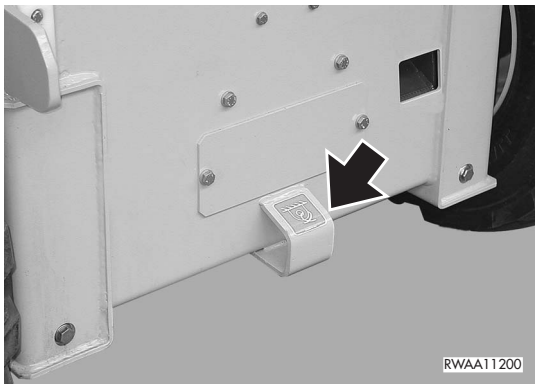

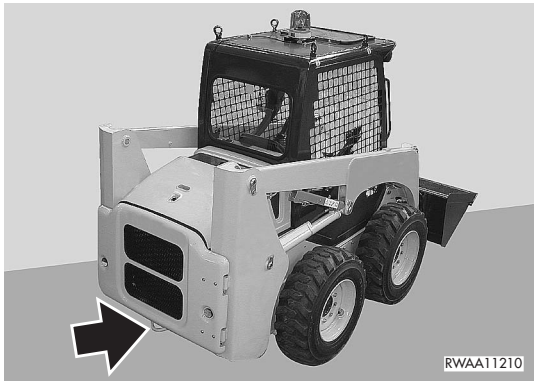

https://truckmanualshub.com/

- Move the machine just far enough to permit the required repairs.
- Do not remove the machine in any way other than that indicated in paragraph "3.15.1 HOW TO REMOVE THE MACHINE".

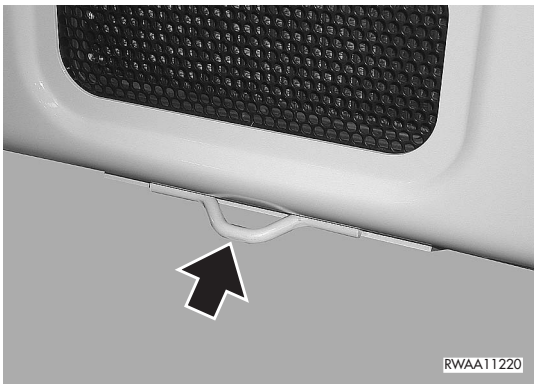

CAUTION

- **The maximum pulling force for the emergency recovery is the following**
  F=2750 kg.
- **Use cables having the same length and pull continuously, without jerks.**
- **Arrange and couple the machine to be removed by positioning it on the same axis as the towing vehicle; the force must be parallel to the axis of movement.**

https://truckmanualshub.com/

2.8 PRECAUTIONS TO BE TAKEN DURING MAINTENANCE

2.8.1 WARNING PLATES

- Before starting any maintenance operation, position the machine on a firm and level surface, rest the equipment on to the ground, engage the safety locks of either the equipment and the controls and stop the engine.
- If another person starts the engine and operates the control levers while the operator is providing for service, this may result in serious injuries or even death.
- To avoid these risks, always attach warning plates to the control levers and to the ignition key before performing any maintenance operation; if necessary, attach additional warning tags also around the machine and in particular on the cab handles.

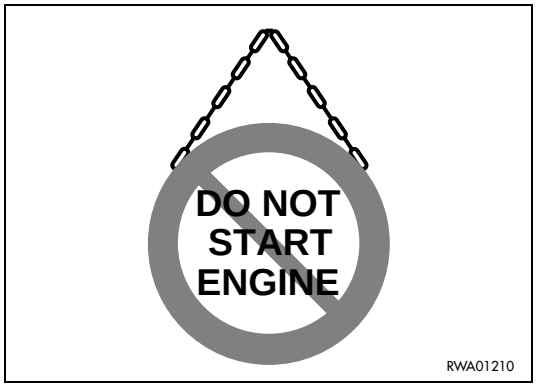

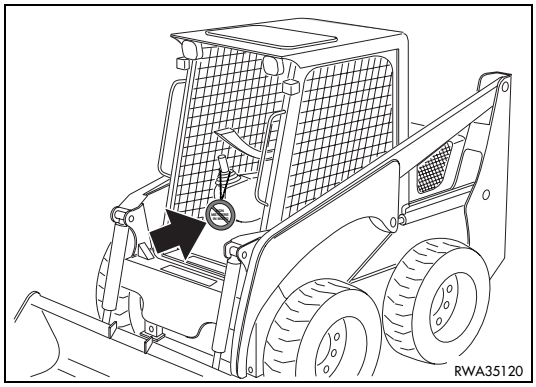

2.8.2 TOOLS

- Use only the tools provided with the machine and high-quality tools suitable for the tasks to be performed.
- Do not use worn, damaged, low-quality tools or tools that are not suitable for the tasks to be performed, in order to avoid any personal injury.
- After use, always put the tools in the appropriate compartment (1) positioned behind the driverís seat.

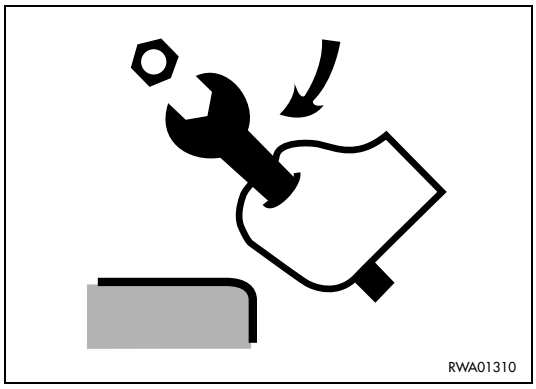

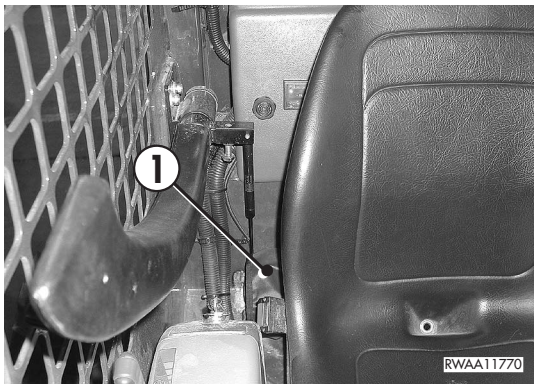

https://truckmanualshub.com/

2.8.3 PERSONNEL

- Only authorized and duly trained personnel can service and repair the machine; additional precautions must be taken when grinding, welding and using a sledge hammer or heavy hammers.
- When assemblying the equipment or cylinder connection pins, use wooden, plastic or in any case not excessively hard tools to check the centering of the holes.
  Do not use your fingers, since you run the risk of cutting them.

2.8.4 EQUIPMENT

- The normal or special equipment that must be installed on the machine or that have been removed must be stored in safe places, preventing them from falling down. If they fall on someone, they can cause serious bodily harm.
- When assemblying or removing any equipment, make sure that the cables and the lifting hook are in good conditions and properly dimensioned for the load to be lifted.

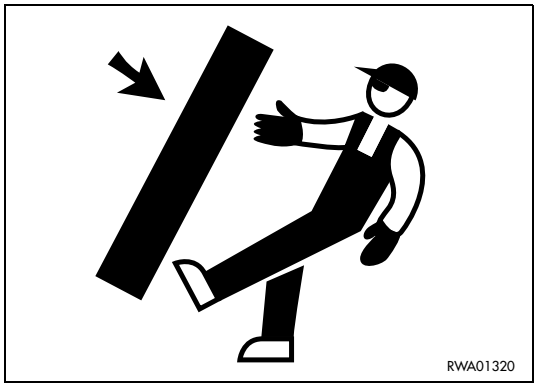

2.8.5 WORKING UNDER THE MACHINE

- Always lower the work equipment to the ground or in any case to its lowest position before performing service or repairs under the machine.
- Always lock the machine wheels securely.
- Do not work under the machine, if this is not sufficiently supported.

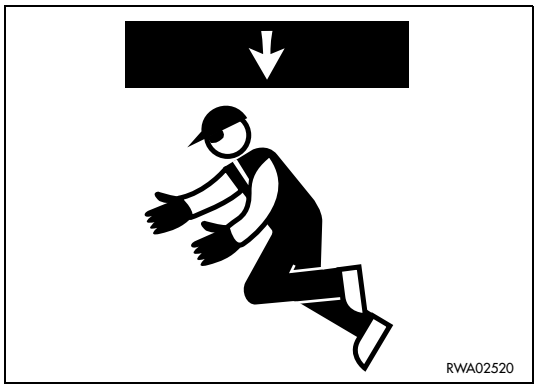

2.8.6 KEEPING THE MACHINE CLEAN

- Spilled oil or grease, scattered tools or broken pieces are dangerous, because they may cause someone to slip or trip. Always keep the machine and the work site clean and tidy.
- To clean the machine, use a pressurized jet of warm water or steam and the appropriate detergents available on the market. Do not use diesel oil, oil or solvents, since the former leave an oily coat that favours the sticking of dust, while the latter (even if weak) damage the painted surfaces and therefore facilitate rusting.
- While cleaning the machine, keep the pressurized jet at a minimum distance of approximately 60 cm, in order to avoid damaging the warning plates and the pictograms.
  If one or more plates should be damaged, request for spare ones to Komatsu or to your Komatsu Dealer and provide for replacing them.
- Water into the electrical system provokes the oxidation of the contacts and may hinder the start of the machine or even make it start suddenly and abruptly. For this reason, never use water or steam jets to clean sensors, connectors or the inside of the operator's cab.

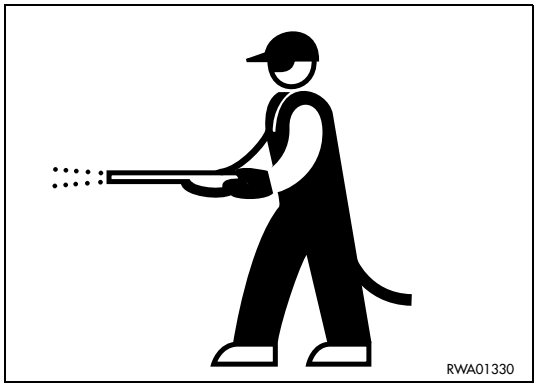

https://truckmanualshub.com/

2.8.7 USE OF THE ENGINE DURING MAINTENANCE

- During maintenance operations, run the engine only when indispensable. If it is necessary to have the engine running (for example, to wash the cooling circuit or to check the functionality of the alternator), an operator should constantly remain in the cab, in order to be able to stop the engine whenever this is required.
- During maintenance operations with running engine, never disengage the safety locks of the controls from the normal LOCK position.
  Service personnel must not move any control lever.
- When carrying out maintenance operations, do not touch the moving parts of the machine and avoid wearing large and loose clothes.

2.8.8 PERIODICAL CHANGE OF THE PARTS THAT ARE CRITICAL FOR SAFETY

- Periodically change the following parts, which are important to prevent fires.
  Fuel supply system: fuel delivery and return pipes.
  Hydraulic system: main delivery pipes of the hydraulic pump.
- Even if they seem to be in good conditions, these components must be periodically changed with new ones. In fact, these components tend to deteriorate over time.
- If one of these parts is defective, change or repair it even if the recommended change interval has not elapsed yet (see "4.6 PERIODICAL CHANGE OF THE COMPONENTS CONNECTED WITH SAFETY").

2.8.9 STOP THE ENGINE BEFORE CARRYING OUT ANY MAINTENANCE OPERATION OR INSPECTION

- Stop the machine only on firm and level ground and stop the engine before carrying out any maintenance operation or inspection.
- If the engine must be running during a maintenance operation, shift the safety bars to the LOCK position and carry out the maintenance operation with the help of another person; one operator must remain on the machine and the words and signs to be used must be agreed upon in advance.
- The person who carries out the maintenance operations must be very careful not to touch any moving part of the engine.

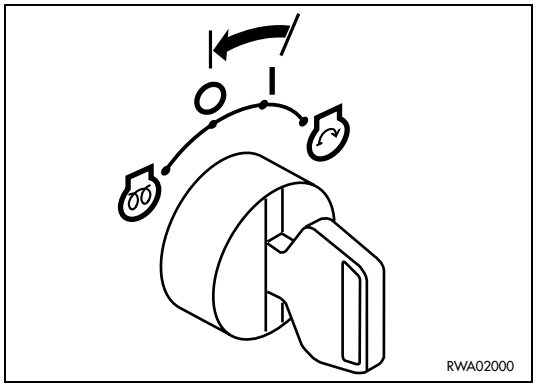

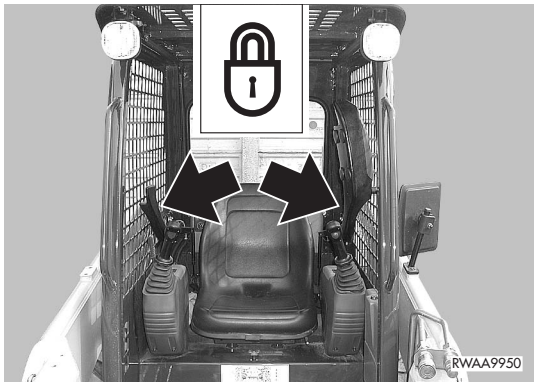

https://truckmanualshub.com/

2.8.10 RULES FOR REFUELLING AND ADDING OIL

- Keep away from naked flames while refuelling or adding oil.
- Spilled fuel or oil make the ground slippery and may cause accidents; clean any dirty area immediately and carefully.
- Always tighten the fuel tank and the hydraulic circuit oil safety caps securely.
- Do not use fuel to clean any part of the machine that is dirty with oil or dust.
- Always top up the fuel and oil tanks in properly ventilated areas and refrain from smoking.
- When refuelling, hold the fuel gun firmly and keep it constantly in contact with the filler until you have finished, in order to avoid sparks due to static electricity.
- Do not fill the tank completely, in order to leave room for the fuel to expand.

2.8.11 CHECKING THE COOLANT LEVEL IN THE RADIATOR

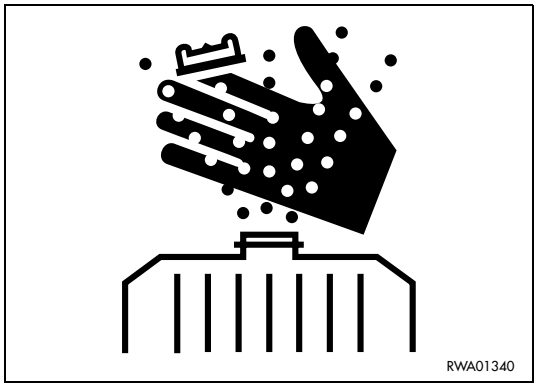

- Let the engine and the radiator cool down before checking the coolant level.
- If it is necessary to remove the cap with hot engine, wear suitable clothes and protections and loosen the cap slowly, in order to release the pressure gradually.

2.8.12 USING LAMPS

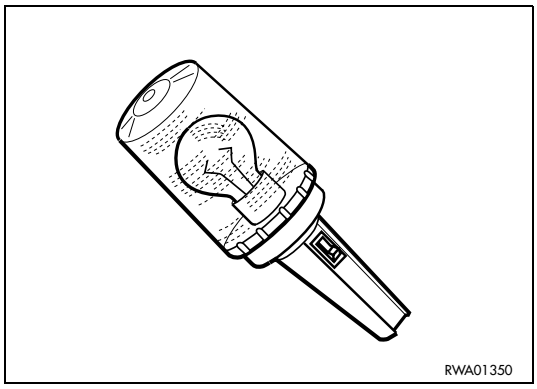

- Use only homologated explosion-proof lamps to check the fuel, oil, coolant and battery electrolyte levels.
  Unsuitable lamps can cause fires or explosions.

https://truckmanualshub.com/

2.8.13 PRECAUTIONS CONCERNING THE BATTERY AND THE ALTERNATOR

- When repairing the electrical system, disconnect the battery in order to stop the flow of current.

IMPORTANT

- **Disconnect first the negative earth cable (-) and then the positive cable (+).**
  At the end of the operation, reconnect first the positive cable (+) and then the negative cable (-).
- If electrical welding operations are to be carried out on the machine, it is necessary to disconnect the battery and also the alternator.

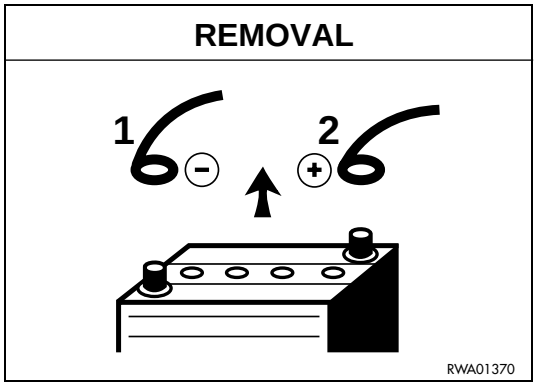

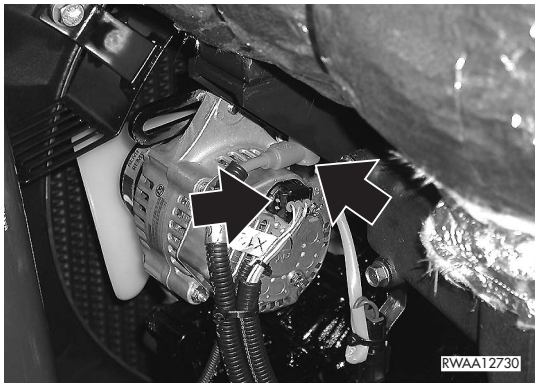

2.8.14 PRECAUTIONS CONCERNING THE STARTER

- Do not start the engine by tampering with the terminals of the starter, since the machine may move.
- Sudden or accidental movements of the machine may cause serious injuries or even death.

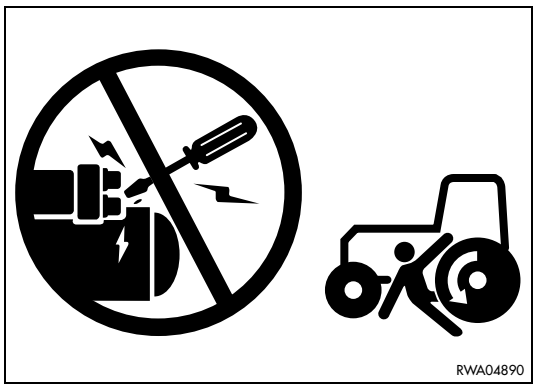

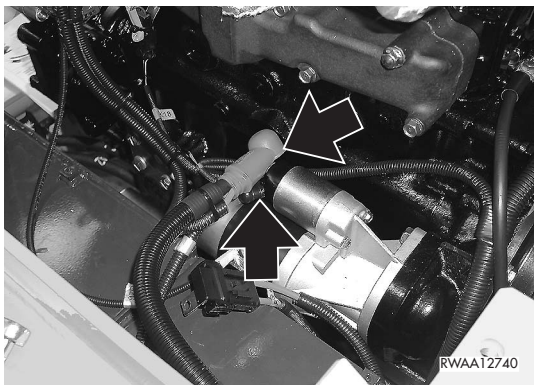

https://truckmanualshub.com/

2.8.15 PRECAUTIONS CONCERNING HIGH-PRESSURE HOSES

- Do not bend high-pressure hoses or rub them with sharp or abrasive objects.
  Do not use bent or cracked rigid tubes or hoses that were previously rejected because of leaks or fastening defects, since they may burst during use.
- Always repair or replace any loose or faulty fuel or oil pipe. Any leakage of fuel or oil may cause fires.

2.8.16 PRECAUTIONS TO BE TAKEN WHEN WORKING ON HIGH-PRESSURE SYSTEMS

- Do not forget that the work equipment circuits are always under pressure; for this reason, when it is necessary to add or drain hydraulic oil, or service or inspect the hydraulic circuit, it is advisable to lower the equipment to the ground and completely release the pressures and the residual pressure present in the tank.
  Small leakages from pipes under pressure and the resulting jets are extremely dangerous, since they can perforate the skin and penetrate in the blood circulation or injure the eyes.
  For this reason, always wear goggles and thick gloves during the inspections and use a piece of cardboard or a sheet of plywood to check for oil leakages.
  If you are struck by a jet of high-pressure oil or are injured, even if slightly, consult a doctor immediately.

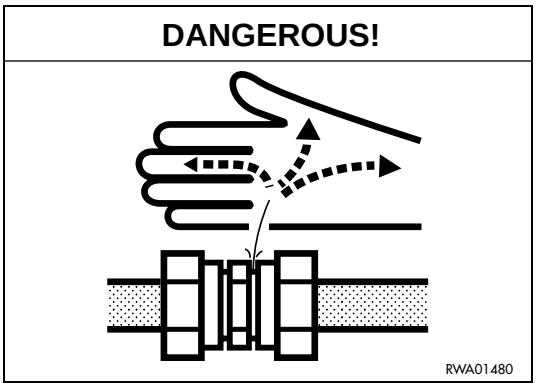

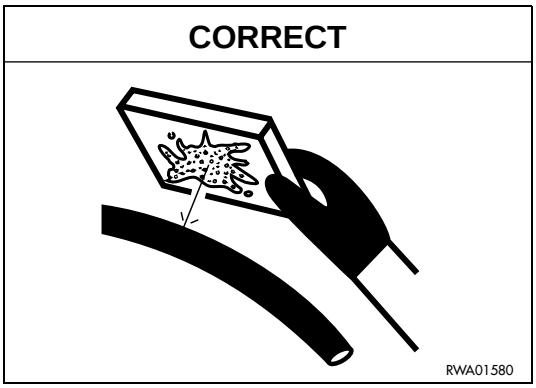

2.8.17 PRECAUTIONS FOR MAINTENANCE WORK INVOLVING HIGH TEMPERATURES AND PRESSURES

- When the machine is stopped at the end of work, the engine coolant, the oil and all the components are hot and the hydralic circuits are under pressure.
  In these conditions, if the coolant, the hydraulic oil and the engine oil are to be drained in order to change them or the filters, there are serious risks of injuries and burns.
  Wait for the temperature to lower within the normal operating range (40-45ºC) before carrying out the maintenance operations in accordance with the procedures indicated in the relevant sections of this manual.

https://truckmanualshub.com/

2.8.18 COOLING FAN AND FAN BELT

- Be careful to the rotating parts and do not allow anyone to get too close to these parts, since clothes or parts of the body may get caught into them.
- If hands, clothes, or tools get entangled in the fan blades or the fan belt, they may be cut, torn or seriously damaged; for this reason, avoid touching the rotating parts.

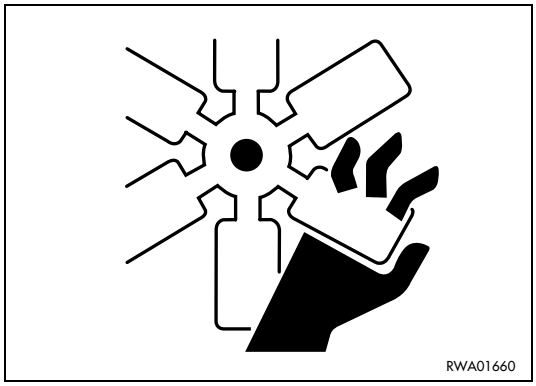

2.8.19 WASTE MATERIALS

- Do not dispose of used oil in the sewer system, rivers, etc.
- Always put used oil in containers. Never drain oil directly on to the ground.
- Keep to the laws and regulations in force when disposing of harmful substances such as oil, fuel, solvents, used filters and batteries.

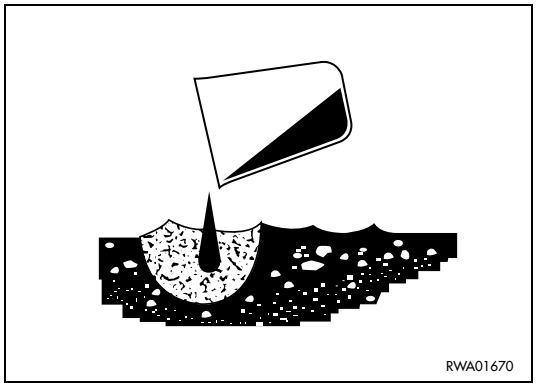

2.8.20 PRECAUTIONS TO BE TAKEN WHEN INFLATING THE TYRES

- Always bear in mind that tyres can burst while being inflated, causing serious accidents.
- Before inflating the tyres, always check the wheel rims and the tyre walls and tread for dents, cuts, broken plies, or other defects.
- Have a tyre expert perform checks and tyre maintenance.
- When inflating the tyres, use a compressed air gun with extension hose and pressure gauge.
- Make sure that there is nobody in the vicinity before starting to inflate a tyre. Stand at the tread or outer belt side of the tyre to inflate it.
- Never exceed the inflation pressures specified for each type of tyre. Always make sure that the tyre pressures are identical on both sides of the machine .

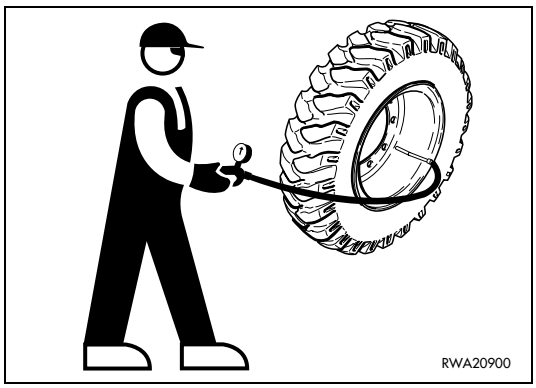

https://truckmanualshub.com/

2.8.21 PRECAUTIONS TO BE TAKEN WHEN USING THE SYNTHETIC BIODEGRADABLE OIL TYPE «HEES»

- It is not possible to mix the synthetic biodegradable oil type HEES with ordinary hydraulic oils, since when the temperature increases insoluble compounds are generated, which are deposited on the filters and clog them (the maximum concentration of ordinary oil cannot exceed 1% of the total quantity of oil).
- The biodegradable oil can be used only in the hydraulic system; it cannot be used for the endothermic engine, the transmissions, the braking system, etc.
- Before introducing the synthetic biodegradable oil in the hydraulic system, empty the system completely, disconnecting the cylinders and all the parts that may contain ordinary oil, and replace the drain filter with a new one. Start the engine and let it idle without using the work equipment , wait until the oil reaches a temperature of at least 40ºC, then start moving the equipment, so that all the parts of the system are filled with oil. Stop the engine and check the oil level (see "4.8.2.e CHECKING THE OIL LEVEL IN THE HYDRAULIC CIRCUIT").

https://truckmanualshub.com/

THE MACHINE AND ITS OPERATIONS

https://truckmanualshub.com/

3.1 SAFETY LOCKS

⚠ DANGER

- **If it is necessary to stop the machine with raised loader arm, always engage the mechanical safety lock on the arm and lock the equipment and travel control by lifting the safety bars (see "3.3.5 pos. 1 - SAFETY BARS").**
- **When travelling on roads with a machine homologated for this purpose, lower the loader arm completely, engage the bucket antirotation lock, apply the teeth guard and lock the equipment control by shifting the safety device lever to the lock position.**
- **When travelling on roads with a machine homologated for this purpose and equipped with excavator, fold the bucket completely, apply the lock between boom and arm, the antirotation lock between boom and sliding plate and the centre lock of the sliding plate.**
  Raise the stabilizer supports completely, couple the relevant safety chains and finally lock the equipment control by shifting the safety device lever to the lock position. If the machine is also equipped with rear stabilizers, raise the supports and lock them with the relevant safety chains.
- **When travelling on roads with a machine homologated for this purpose and equipped with asphalt cutter, apply the lock on the lifting jack in order to keep the equipment at a given distance from the ground, lower the loader arm completely, install the antirotation lock of the front equipment and finally lock the equipment control by shifting the safety device lever to the lock position.**
- **Non-compliance with these rules may lead to serious accidents.**

3.1.1 LOADER LOCKS

- The loader arm is provided with a safety lock (1) to be used to keep the arm raised when the machine is serviced or routine operations are carried out.
- The engagement of the safety lock must be carried out by two persons, one seated in driving position to check the movements of the machine and the other standing on the ground to engage the lock correctly.
- It is important to remember that in operating conditions the safety lock (1) must be positioned against the arm and kept in this position by means of the safety pin (2).

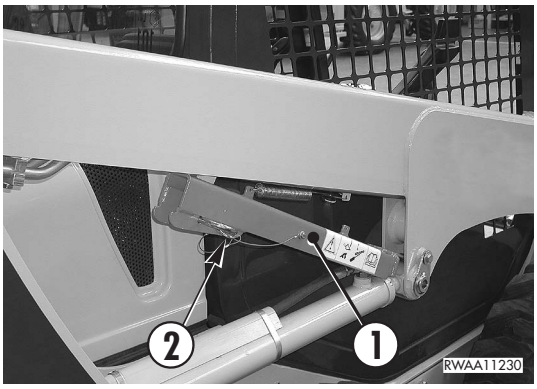

⚠ DANGER

- **After the coupling of the lock (1), keep it in position by means of the safety pin (2).**
- **Do not carry out any operation under the raised loader arm if the safety lock (1) has not been engaged.**

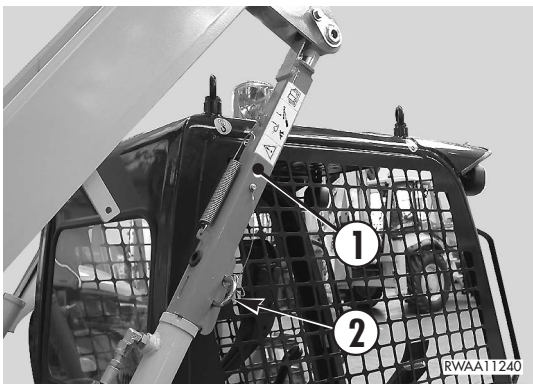

IMPORTANT

- **The safety lock must always adhere to the hydraulic cylinder rod.**
- **The safety lock must be brought to its definitive position by moving the contact surfaces slowly and continuously, in such a way as not to damage the cylinder head surface.**

https://truckmanualshub.com/

- The safety bars (3) positioned in front of the operator seated in the driving position make it possible to lock the equipment and travel control.
  For the operation of the safety bars (see "3.3.5 pos. 1 - SAFETY BARS".

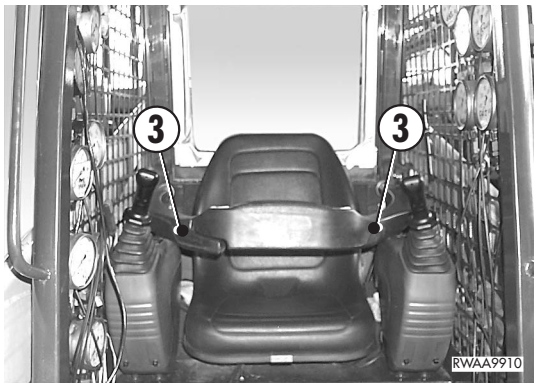

- The retainer (4) locks the optional equipment control pedal in the neutral position.

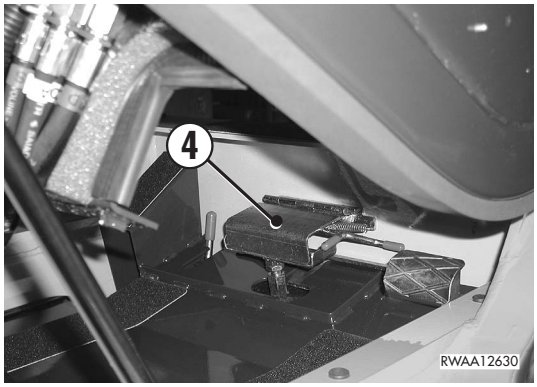

- The other applications of the safety locks concern exclusively the use of the machine for travelling on roads, and are the following:

1 - Installation of the front bucket swing lock (5).

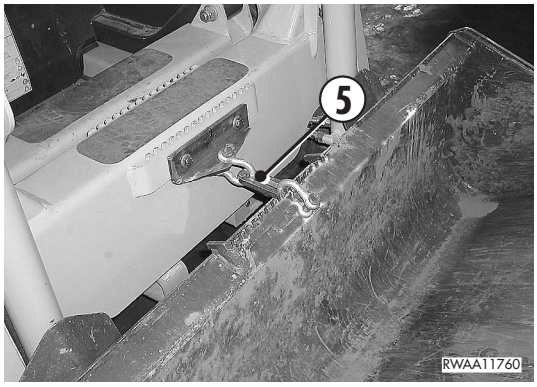

2 - Installation of the teeth guard (6).

https://truckmanualshub.com/

3 - Locking of the safety device (7) for the inhibition of the equipment control.

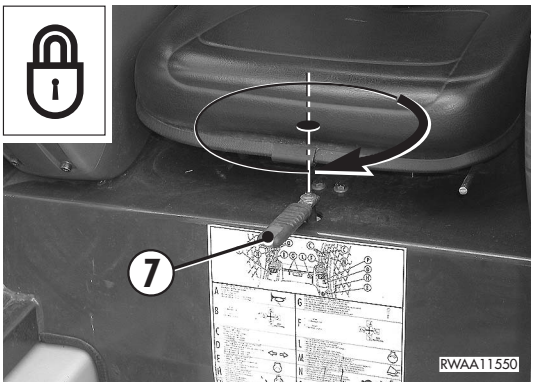

3.1.2 EXCAVATOR LOCKS (if installed)

IMPORTANT

- **When travelling on roads, always position the excavator following the longitudinal axis of the vehicle, apply the safety locks and lock the equipment control by shifting the safety device lever to the lock position.**

The excavator safety locks must be used for travelling on roads and applied by proceeding as follows.

- After folding the bucket completely, apply the lock (1) between boom and arm, the connection lock (2) between boom and sliding plate, the centre pin (3) that locks the sliding plate on the frame, raise the stabilizer supports completely and engage the relevant safety chains (4).

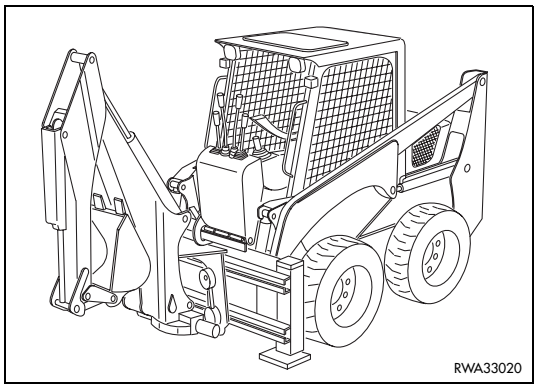

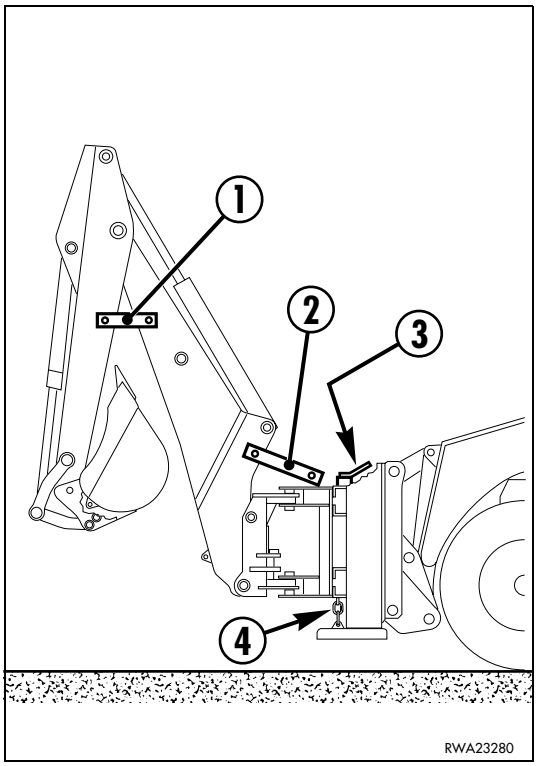

https://truckmanualshub.com/

- If the machine is equipped with rear stabilizers, raise the supports completely and engage the relevant safety chainsza (5).

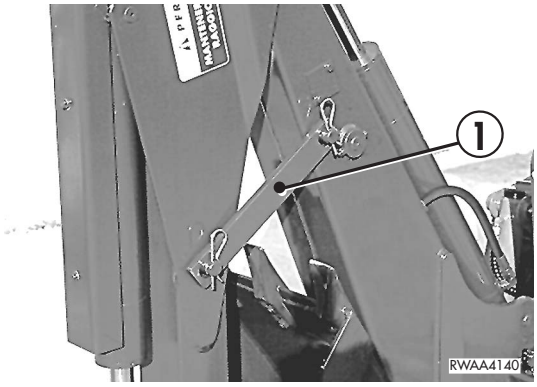

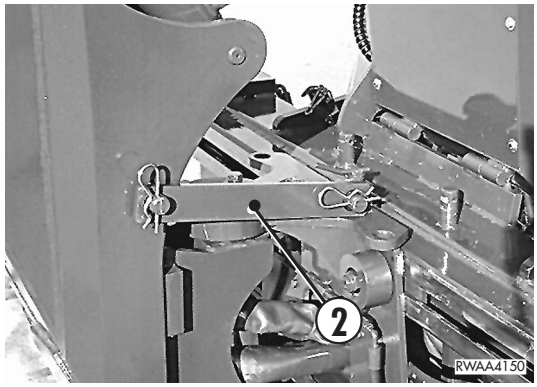

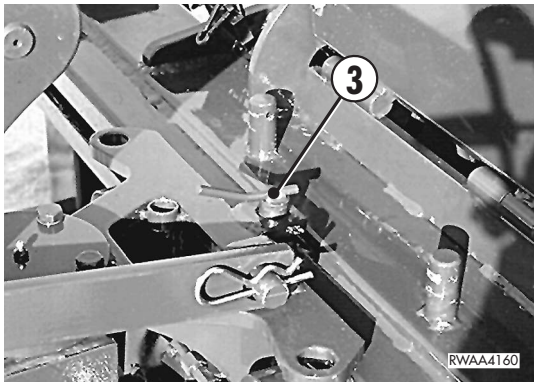

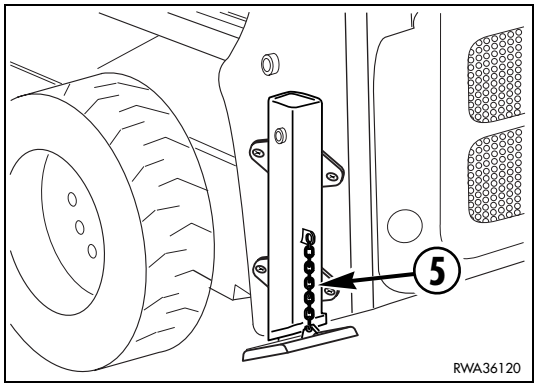

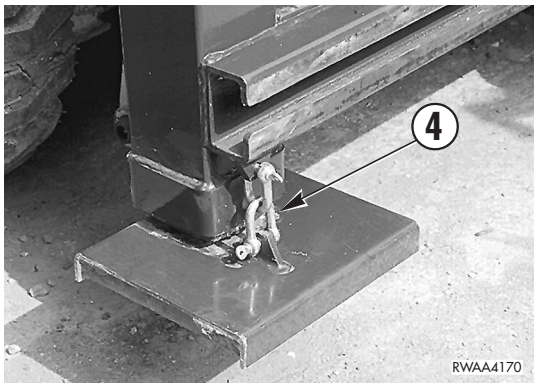

https://truckmanualshub.com/

3.1.3 ASPHALT CUTTER LOCKS (if installed)

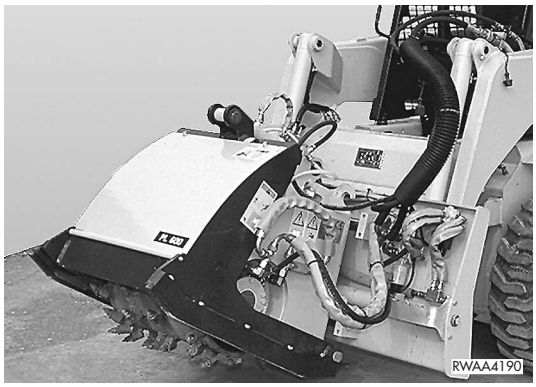

IMPORTANT

- **When travelling on roads, always position the asphalt cutter following the longitudinal axis of the vehicle, apply the safety locks and lock the equipment control by shifting the safety device lever to the lock position.**
- If the machine is equipped with asphalt cutter, besides applying the antirotation lock already described for the standard machine (see "3.1.1 LOADER LOCKS"), it is also necessary to apply the lock (1) on the lifting jacks, in such a way as to keep the equipment at a given distance from the ground.

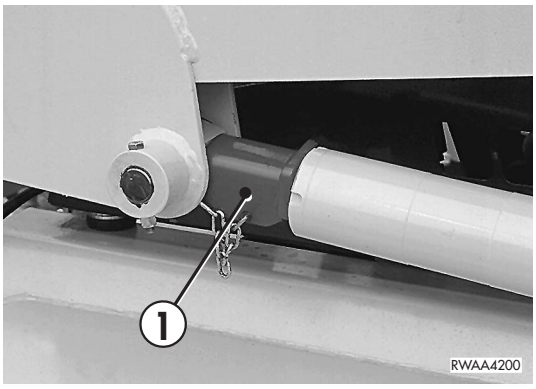

https://truckmanualshub.com/

3.2 GENERAL VIEWS

3.2.1 FRONT GENERAL VIEW

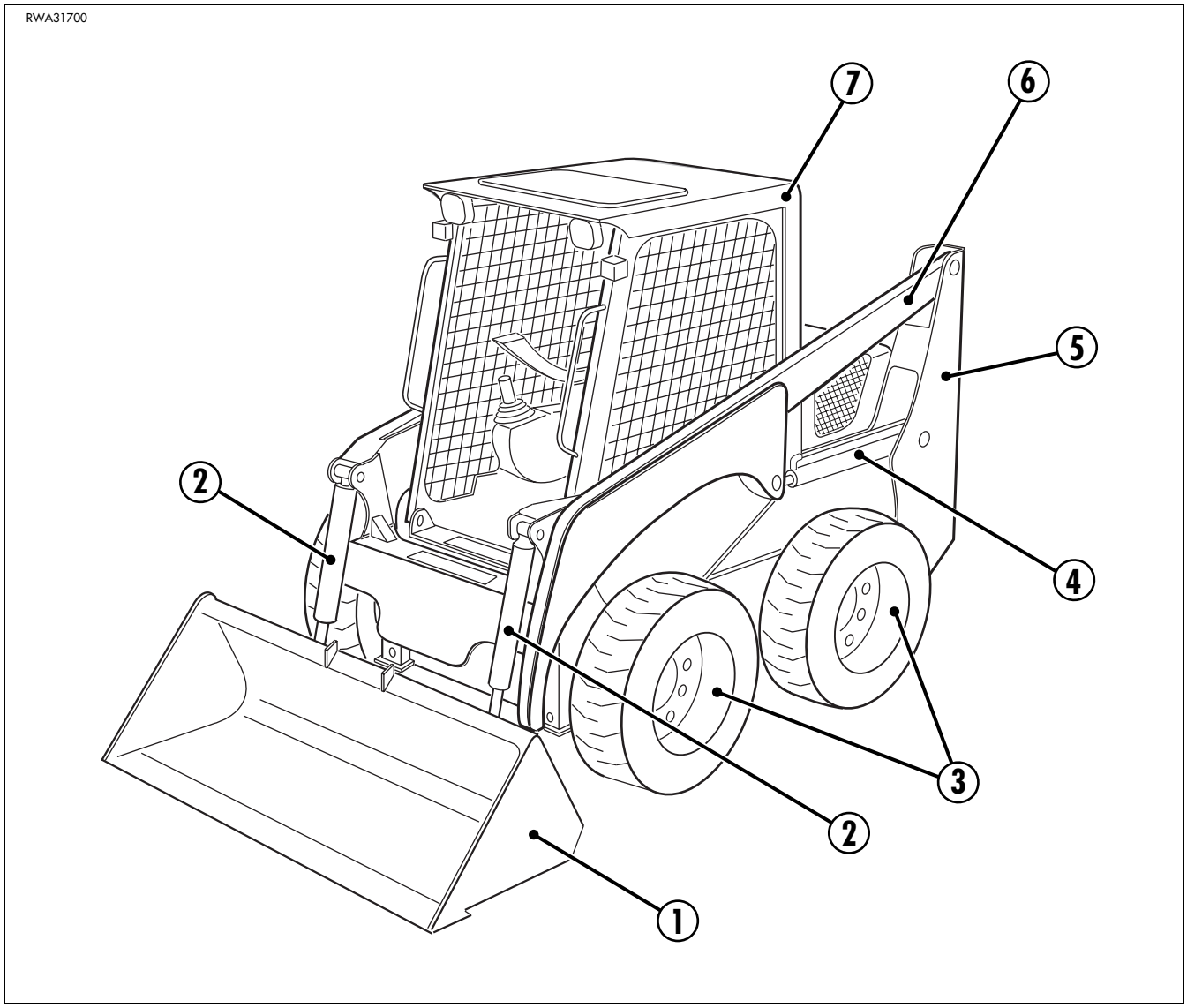

1 Bucket
2 Bucket cylinder
3 Wheels
4 Lifting cylinder
5 Frame
6 Arm
7 Cab

https://truckmanualshub.com/

3.2.2 REAR GENERAL VIEW

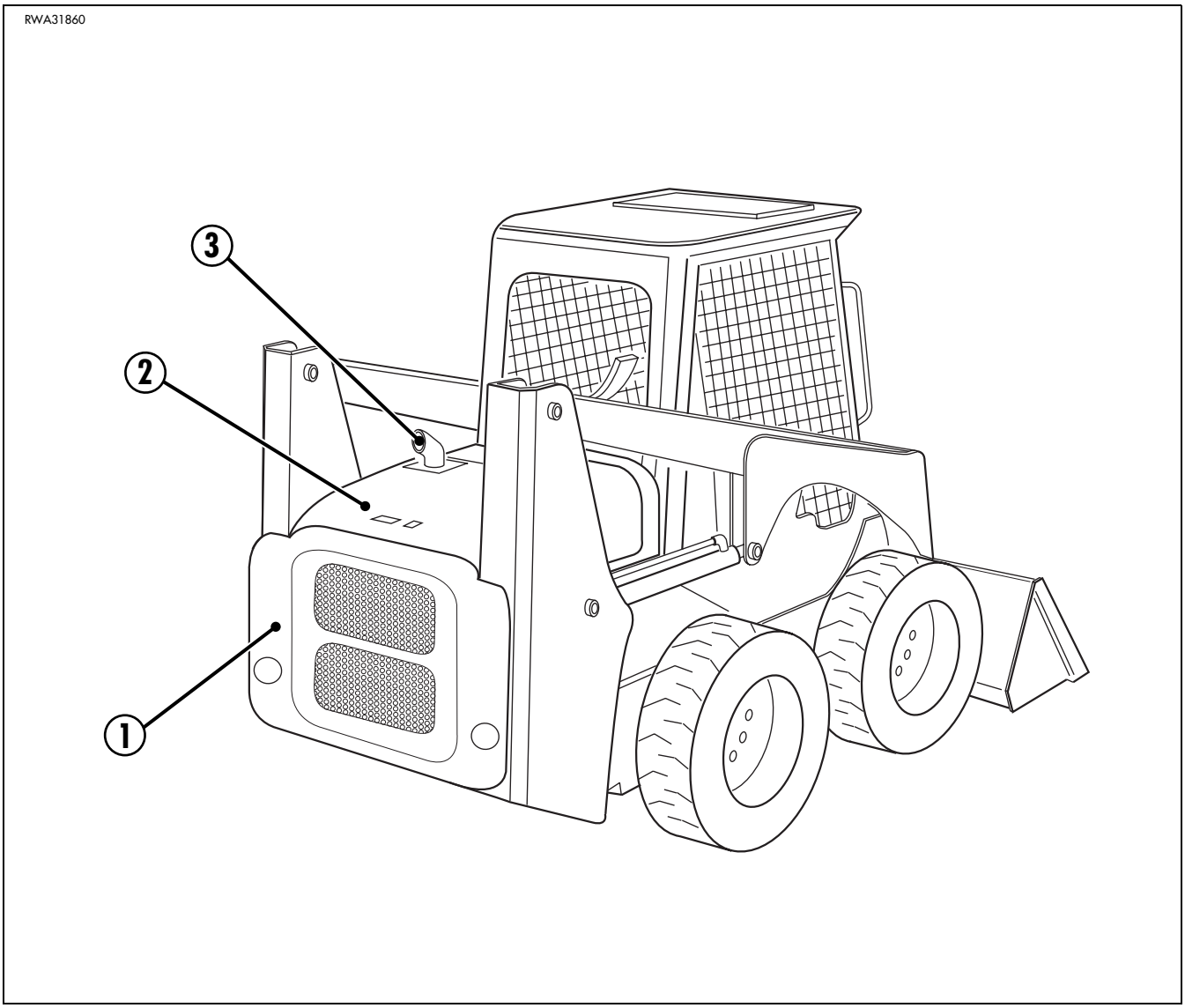

1 Rear panel
2 Engine hood
3 Exhaust silencer

https://truckmanualshub.com/

3.2.3 CAB INSIDE GENERAL VIEW

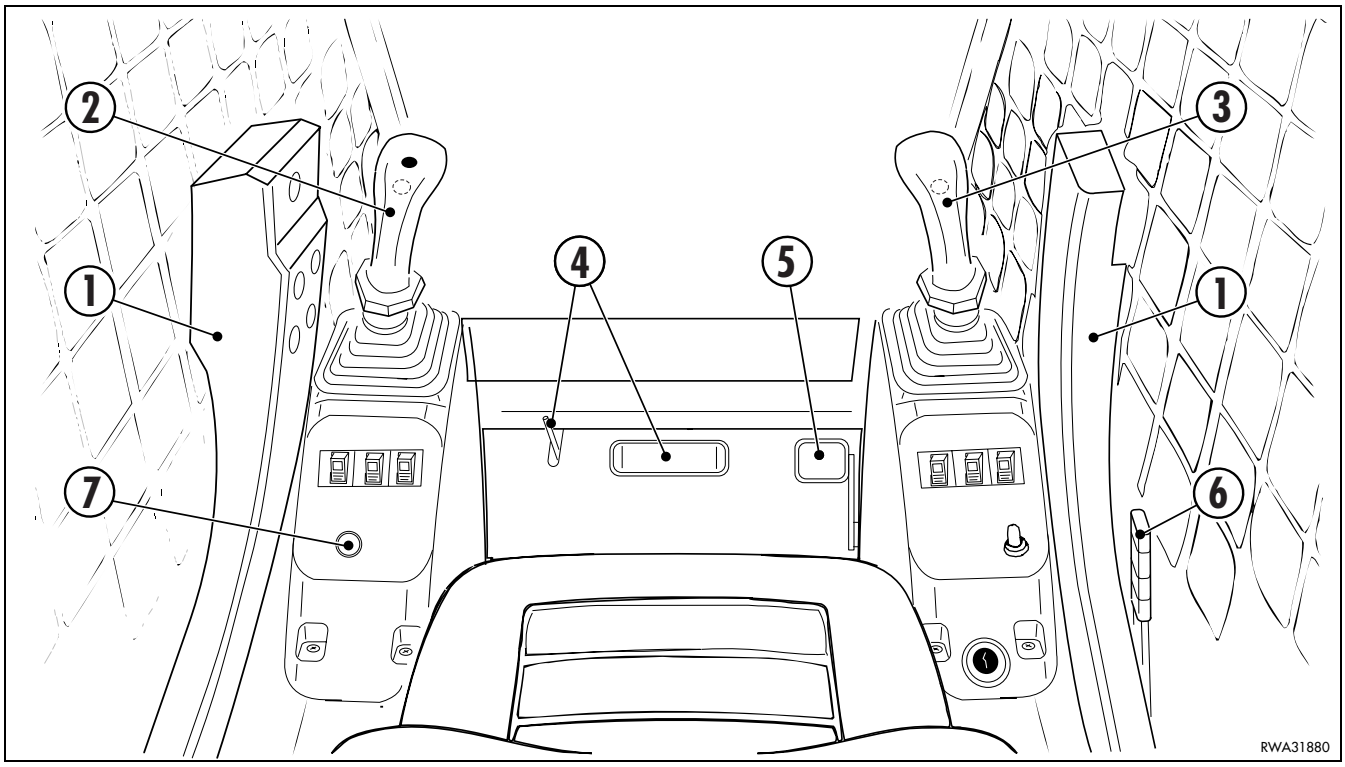

1 - Safety bars
2 - Left servo control lever
  - (ISO PATTERN) - travel and steering
  - (OPTION PATTERN) - left wheel travel and loader arm control
3 - Right servo control lever
  - (ISO PATTERN) - loader arm and bucket control
  - (OPTION PATTERN) - right wheel travel and bucket control
4 - Auxiliary hydraulic kit control pedal (if installed)
5 - Foot accelerator
6 - Hand accelerator
7 - Parking brake
8 - Equipment control locking lever (if installed)
9 - Dashboard

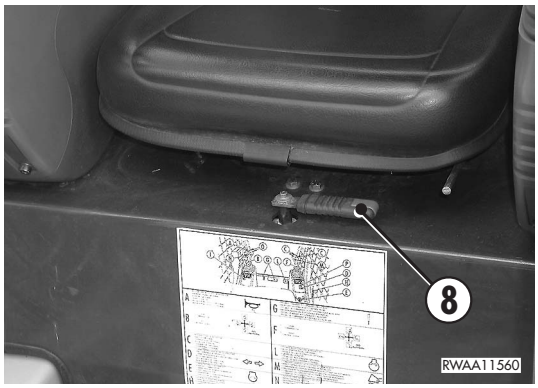

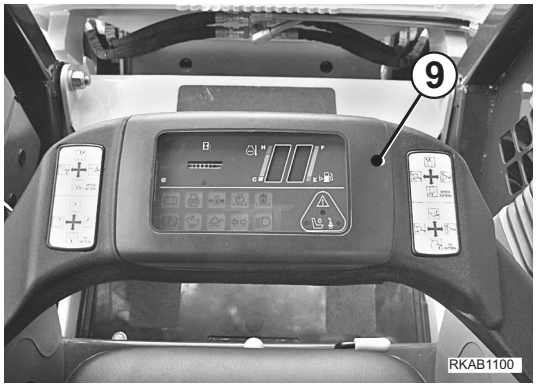

https://truckmanualshub.com/

10 - Left console switches
11 - Right console switches

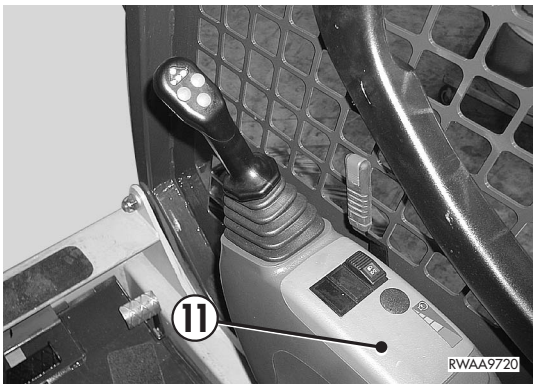

https://truckmanualshub.com/

3.3 INSTRUMENTS AND CONTROLS

3.3.1 INSTRUMENTS

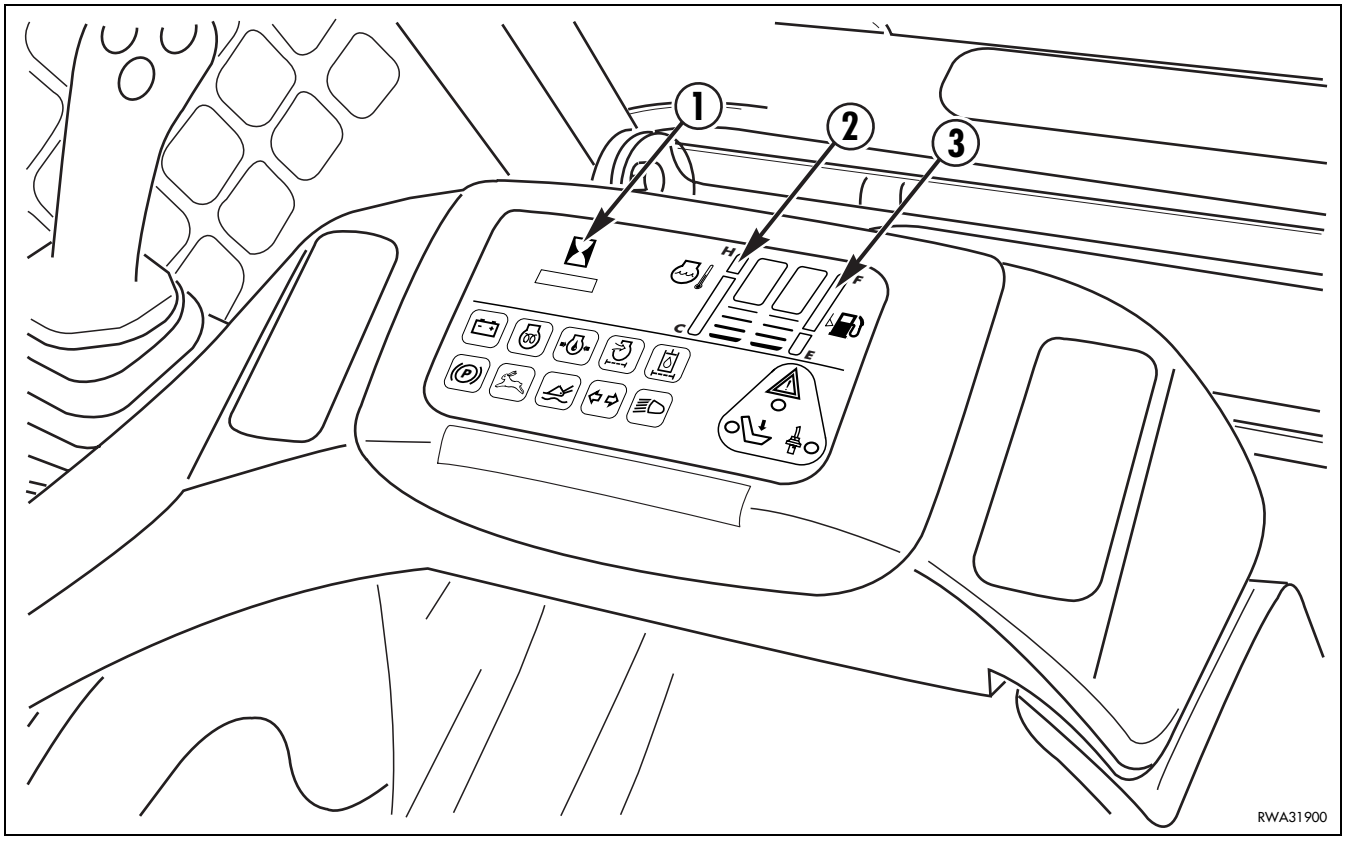

1 Hour meter
2 Engine coolant temperature indicator
3 Fuel level indicator

1 - HOUR METER

This instrument indicates the total number of operating hours of the engine. The count is continuous and the number is increased by 1 when the engine has run for one hour, independently of its speed. When the engine is running, the led (A) positioned under the instrument flashes for the count of the seconds.
The hour meter keeps functioning even if the machine is not travelling or working.
The reading of the hour meter is to be considered valid for the calculation of the maintenance intervals.

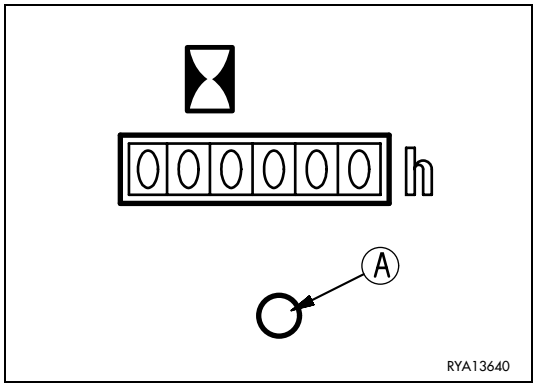

https://truckmanualshub.com/

2 - ENGINE COOLANT TEMPERATURE INDICATOR

This instrument indicates the temperature of the engine coolant, which in normal conditions should be 80-85°C.
After starting the engine and before starting work, let it warm up until the temperature indicator reaches the green range.
If the indicator exceeds the limit values while the engine is running and reaches the overheating red range, let the engine idle until the indicator returns to the normal temperature green range.

When the indicator reaches the overheating red range, the acoustic alarm sounds, too.
If this inconvenience occurs repeatedly, try to find out the cause (see TROUBLESHOOTING "3.15.4.3 ENGINE").

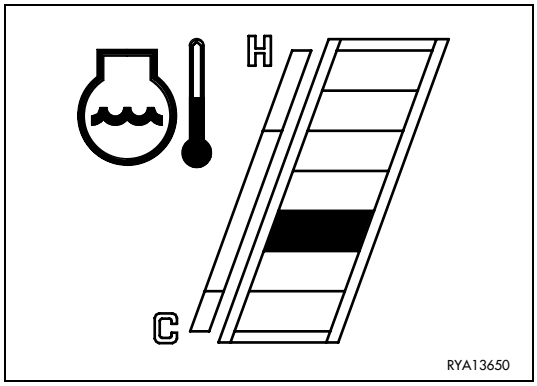

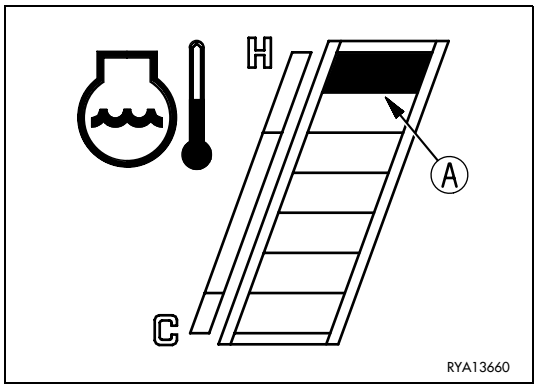

3 - FUEL LEVEL INDICATOR

This instrument indicates the fuel level in the tank; this information is available only with the ignition key in position «**I**» (see "3.3.3 pos. 9 - IGNITION SWITCH").
The green range indicates the normal fuel level, while the red range indicates that the fuel level is low.

NOTE

- If the indicator reaches the reserve red range while the machine is working, stop it and refuel it up to the correct level.

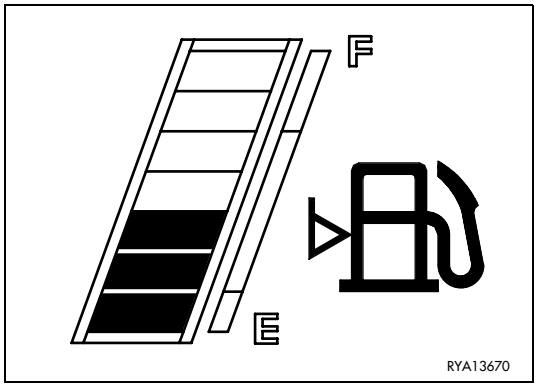

https://truckmanualshub.com/

3.3.2 WARNING LIGHTS

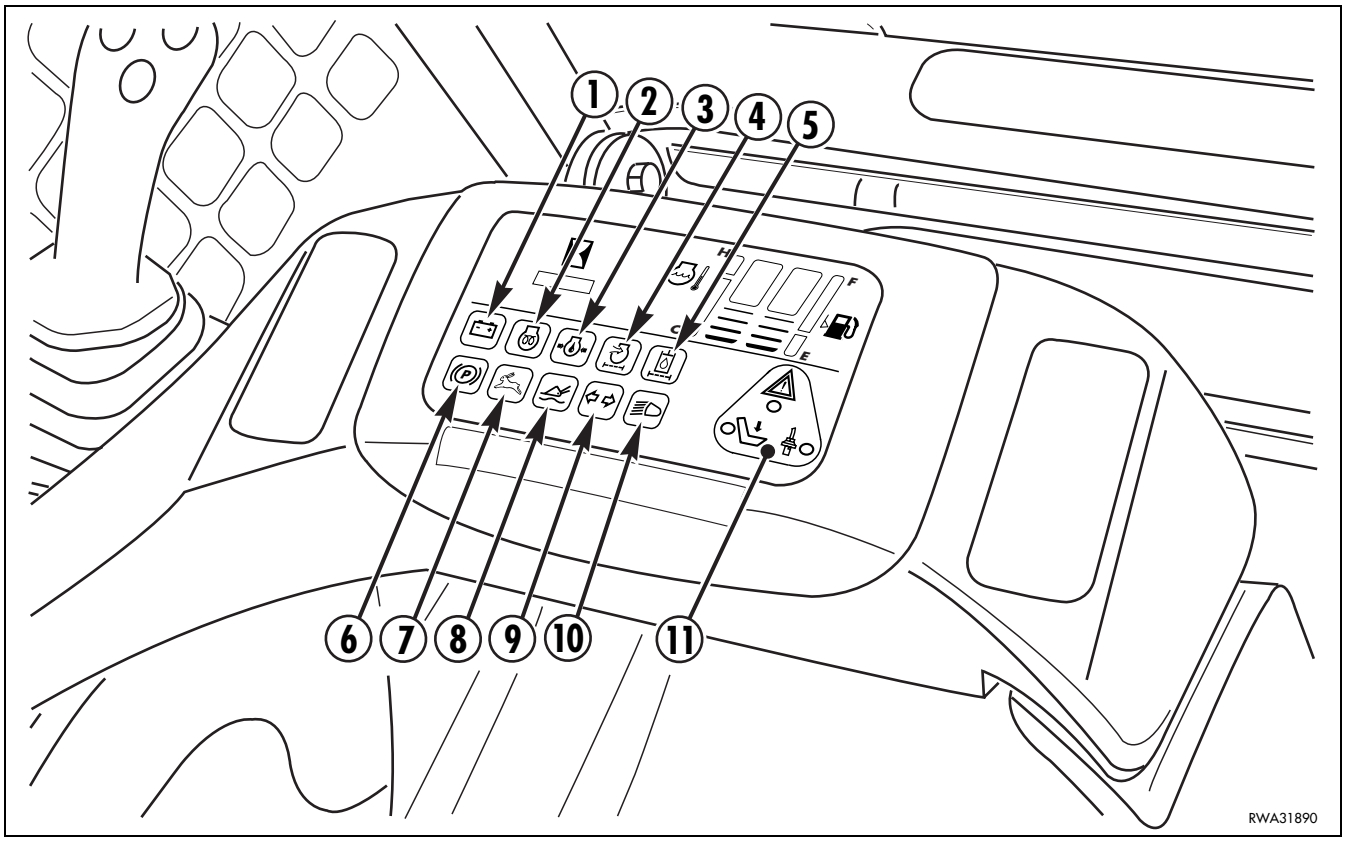

1 Generator warning light
2 Preheating warning light
3 Engine oil pressure warning light
4 Air cleaner clogging warning light
5 Hydraulic oil filter clogging warning light
6 Parking brake warning light
7 Speed increase warning light
8 Floating device warning light
9 Direction indicator warning light
10 Working light warning light
11 Safety device functionality control unit

1 - GENERATOR WARNING LIGHT

This warning light comes on when the starting circuit is energized and goes out when the engine exceeds the idling speed; if this warning light remains on even when the engine is running at the normal operating speed, this means that the alternator does not work and the battery is not charged correctly.

NOTE

- If the warning light remains off when the ignition key is turned to position «**I**» this means that the alternator is faulty or broken.

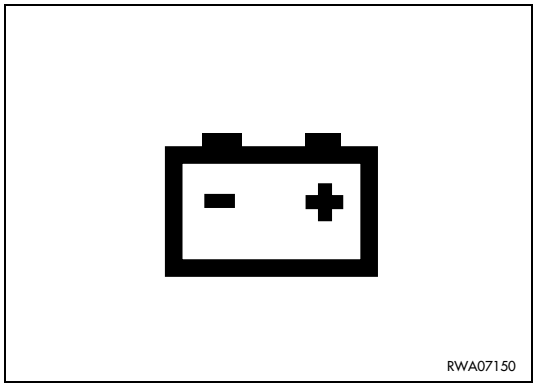

https://truckmanualshub.com/

2 - PREHEATING WARNING LIGHT

This warning light comes on when the ignition key is turned to position « » to start the engine at low temperatures and goes out automatically after approximately 13 seconds (see "3.6.2.2 STARTING WITH COLD ENGINE OR IN COLD CLIMATES").

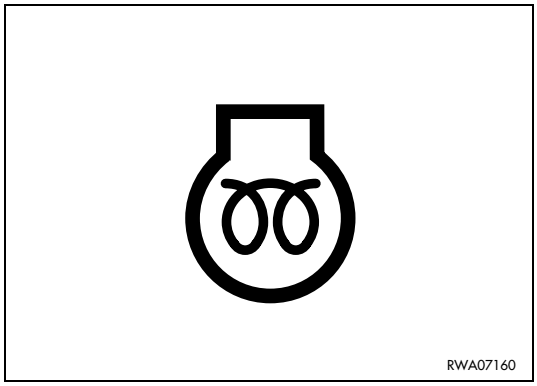

3 - ENGINE OIL PRESSURE WARNING LIGHT

This warning light comes on and activates the acoustic alarm with engine at rest when the starting circuit is energized and goes out as soon as the engine lubrication circuit is pressurized.
If this warning light remains on or comes on with the engine running, stop the machine immediately and try to locate the trouble.

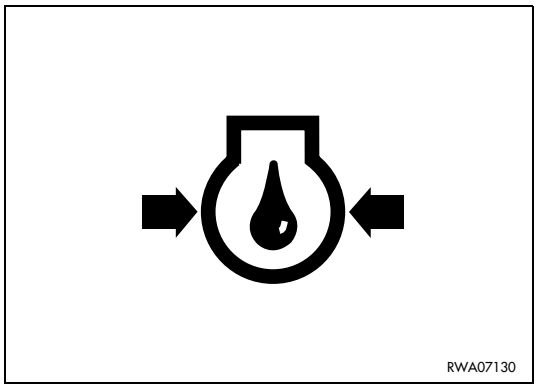

4 - AIR CLEANER CLOGGING WARNING LIGHT

This warning light comes on when the engine air filter needs cleaning.

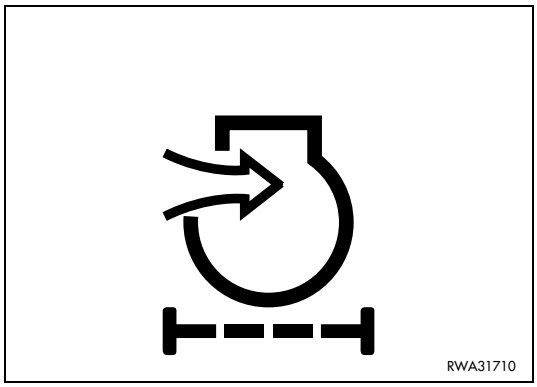

5 - HYDRAULIC OIL FILTER CLOGGING WARNING LIGHT

This warning light comes on when the hydraulic circuit filter needs replacing.

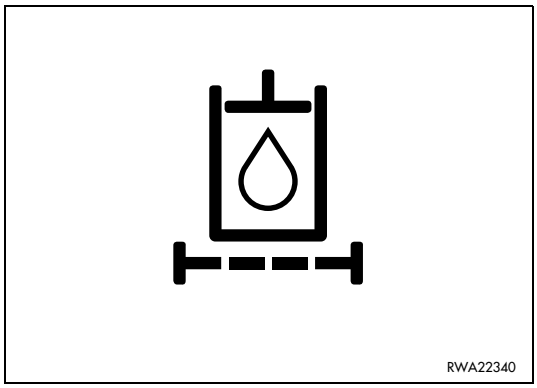

https://truckmanualshub.com/

6 - PARKING BRAKE WARNING LIGHT

This warning light comes on when the parking brake circuit isn't pressurised (brake applied).
If the warning light comes on during routine operations, stop the machine and try to locate the cause of the malfunction.

RWA20230

7 - SPEED INCREASE WARNING LIGHT

It comes on when the high speed is selected (see "3.3.3 pos. 13 - SPEED INCREASE BUTTON").

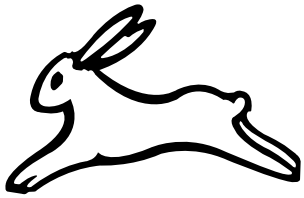

RWA18440

8 - FLOATING DEVICE WARNING LIGHT

It comes on when the floating device is connected (see "3.3.3 pos. 14 - FLOATING DEVICE SWITCH (if installed)").

RWA23300

9 - DIRECTION INDICATOR WARNING LIGHT

This warning light comes on intermittently when the lever on the dashboard is operated (see "3.3.3 pos. 8 - DIRECTION INDICATOR SWITCH") or when the emergency switch is operated (see «"3.3.3 pos. 6 - EMERGENCY SWITCH (HAZARD)").

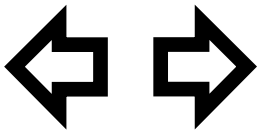

RWA20200

https://truckmanualshub.com/

10 - WORKING LIGHT WARNING LIGHT

It comes on when the working lights are turned on with the switch positioned on the dashboard (see "3.3.3 pos. 5 - WORKING LIGHT SWITCH").

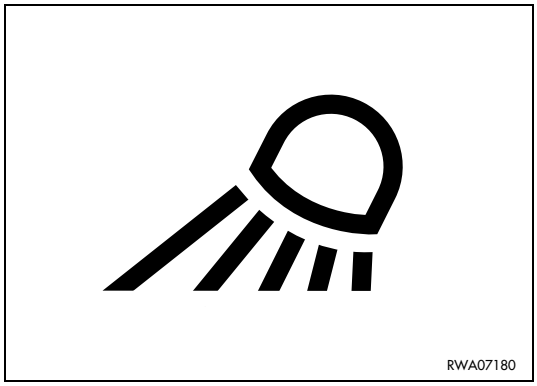

11 - SAFETY DEVICE FUNCTIONALITY CONTROL UNIT

This control unit is positioned on the dashboard and checks the condition of the safety devices installed on the machine.
The signals are shown on the display by the coming on and going out of the warning lights.

The functions are the following:

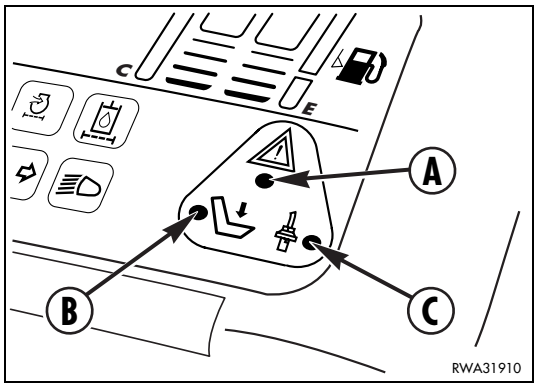

A - RED WARNING LIGHT

LED off - This means that all the safety devices are on and therefore all the machine functions are normal (the solenoid valve ensures the lifting of the work equipment and the machine travel).

LED on - This means that at least one safety function is lacking; in this case the solenoid valve is closed and does not permit the lifting and therefore the use of the work equipment and the machine travel.

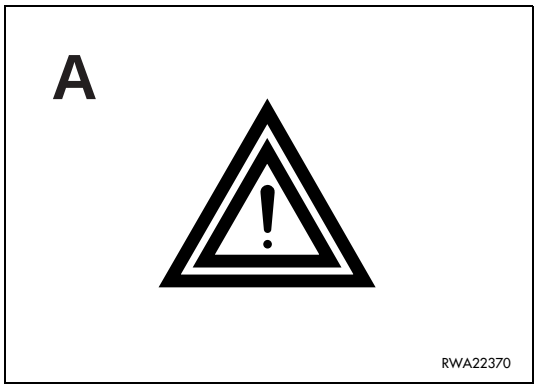

B - GREEN WARNING LIGHT

LED on - This means that the operator is correctly seated in the driving position and that the operator presence sensor is on.

LED off - (With the red warning light coming on at the same time) This means that the operator is standing or that he is not inside the cab.

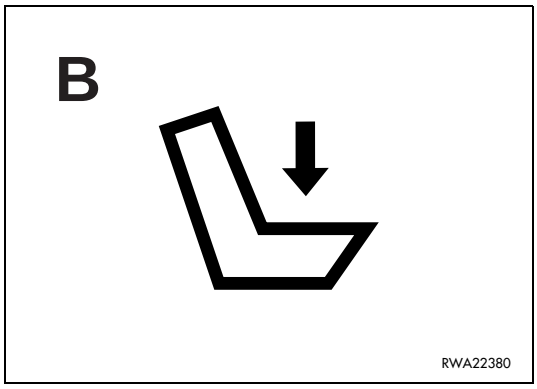

NOTE

- The operator presence signal (seat) starts the emergency condition with a delay of 1.5 seconds.
  With this solution the operatorís jerks (especially when working on uneven ground) are sensed without signalling repeated emergencies.

https://truckmanualshub.com/

C - GREEN WARNING LIGHT

LED on - This means that the safety bars are down and therefore safety is ensured.

LED off - (With the red warning light coming on at the same time) This means that the safety bars are not completely down and therefore the work equipment and the travel function cannot be used.

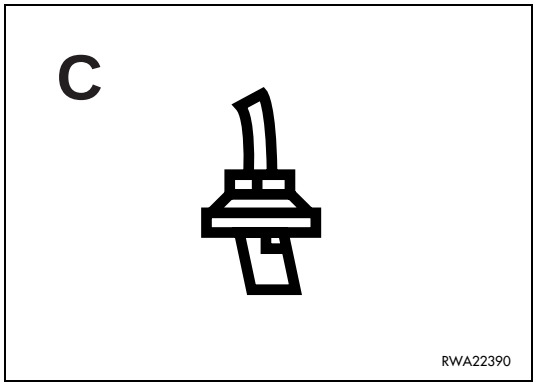

⚠ CAUTION

- **The sounding of the acoustic alarm (buzzer) signals that the solenoid valve coil is jammed. This alarm sounds even with the engine at rest and disconnected ignition key.**
- **Be particularly careful in the following conditions:**

  A) Safety bars lifted and temporary jamming of the valve. (The engine stops and the acoustic alarm sounds).
  Lower the work equipment to the ground (see "3.3.5 MACHINE CONTROLS"), get off the machine and try to locate the trouble.

  B) Coil jamming with engine off. (The acoustic alarm sounds).
  Lower the work equipment to the ground (see "3.3.5 MACHINE CONTROLS"), get off the machine and try to locate the trouble.
- **When the troubleshooting takes long, disconnect the negative pole (-) of the battery, in order not to deplete it completely.**

NOTE

- The green leds (seat and bar) come on only if the operator has engaged all the safety locks and released the parking brake (red led on). The leds go out whenever the bar is lifted (servocontrols off); to reactivate the servocontrols, seat in the driving position, lower the safety bar and press the parking brake push button (green and red leds on).

https://truckmanualshub.com/

3.3.3 SWITCHES UND PUSH BUTTONS

1 - Parking brake push button
2 - Revolving light switch
3 - Left stabilizer button (if installed)
4 - Right stabilizer button (if installed)
5 - Working light switch
6 - Emergency switch (HAZARD)
7 - Parking light and low beam switch
8 - Direction indicator switch
9 - Ignition switch
10 - Horn
11 - "High flow" hydraulic system switch (3 lines) for front equipment (if installed)
12 - “Super flow" hydraulic system switch (5 lines) for front equipment (if installed)
13 - Speed increase button

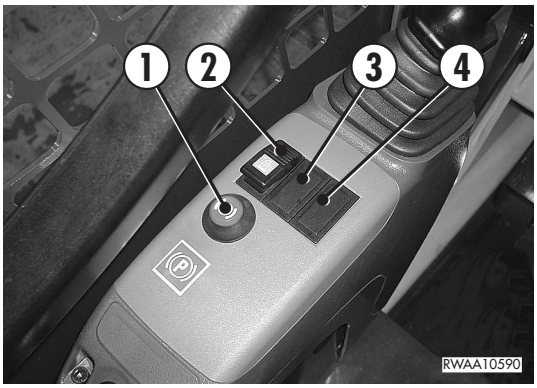

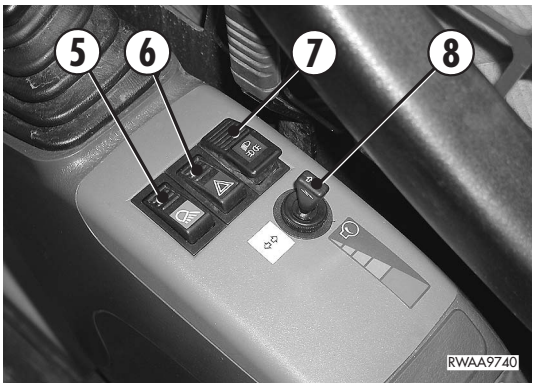

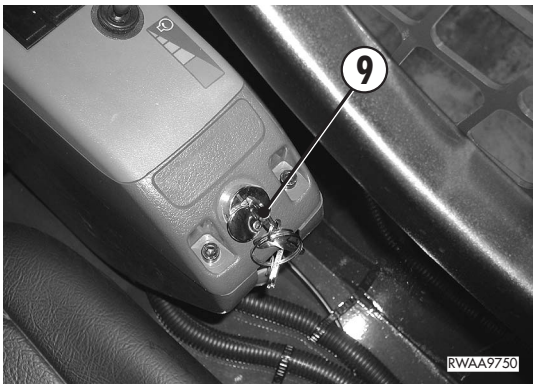

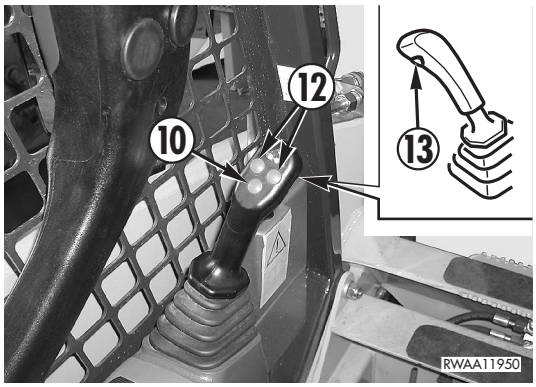

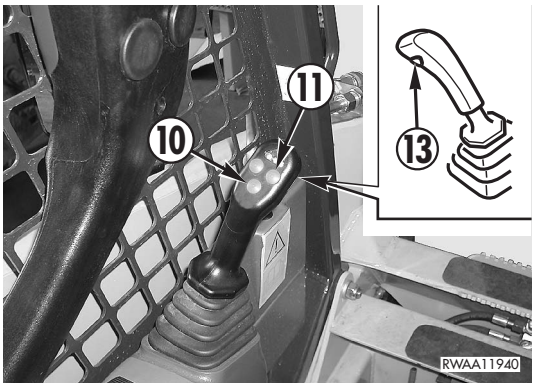

https://truckmanualshub.com/

14 - Floating device button (if installed)
15 - Available for other functions
16 - Windshield wiper/washer switch (if provided)

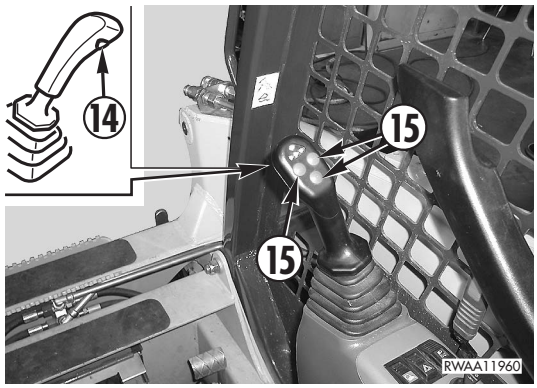

1 - PARKING BRAKE PUSH BUTTON

When pressed, this button comes on and applies the parking brake.
When pressed again (LED off), it releases the parking brake.

NOTE

- The parking brake is automatically engaged whenever the engine stops; this is due to the lack of pressure in the hydraulic circuit.
- The push button releases the brake only when the engine is running and all the safety devices are in function (warning lights off).

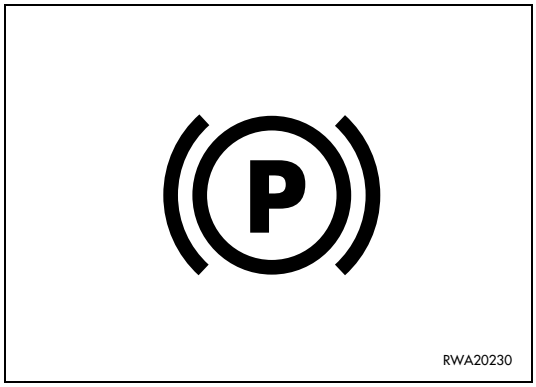

2 - REVOLVING LIGHT SWITCH

Switches on the revolving light and must be operated when it is necessary to travel on roads.

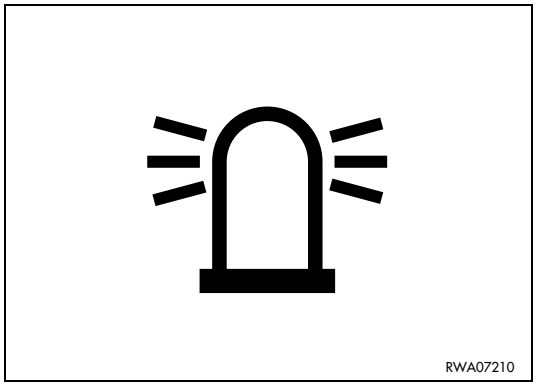

https://truckmanualshub.com/

3 - LEFT STABILIZER BUTTON (if installed)

This is a button with two temporary positions and the neutral position at its centre.
Press the button forward or backward to lower or raise the stabilizer.

For use, see "3.3.5 pos. 14 - LEFT STABILIZER CONTROL (IF INSTALLED)".

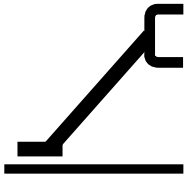

4 - RIGHT STABILIZER BUTTON (if installed)

This is a button with two temporary positions and the neutral position at its centre.
Press the button forward or backward to lower or raise the stabilizer.
For use, see "3.3.5 pos. 13 - RIGHT STABILIZER CONTROL (IF INSTALLED)".

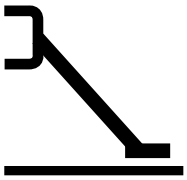

5 - WORKING LIGHT SWITCH

Enables the circuit of the working lights.

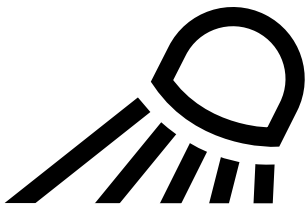

6 - EMERGENCY SWITCH (HAZARD)

Operates all the direction lights at the same time and must be used whenever the machine is temporarily parked on the roadside or in anomalous position while travelling on roads.

https://truckmanualshub.com/

7 - PARKING LIGHT AND LOW BEAM SWITCH

This is a two-position switch:

The 1st click enables the circuit of the instrument lights and the parking lights.

The 2nd click enables the general circuit of the low beam or working lights, according to the position of the switch (2).

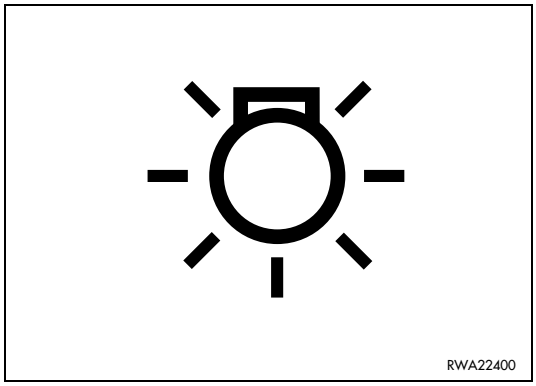

8 - DIRECTION INDICATOR SWITCH

This is a lever switch with three positions. The neutral position is at the centre.
Shift the switch lever to the right or to the left to indicate the turn direction.

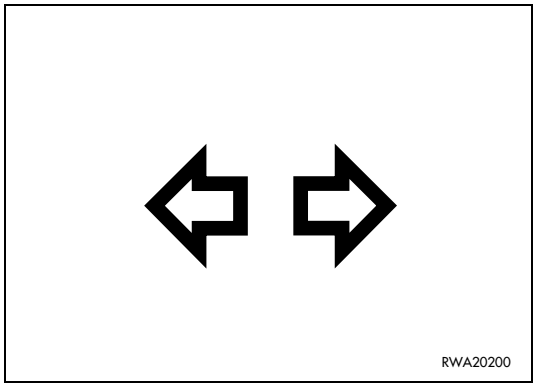

9 - IGNITION SWITCH

This is a rotary key switch with four positions marked by the following symbols « » - O (OFF) - I - « » (START).
For further details on the use of this switch, see "3.6.2 STARTING THE ENGINE".

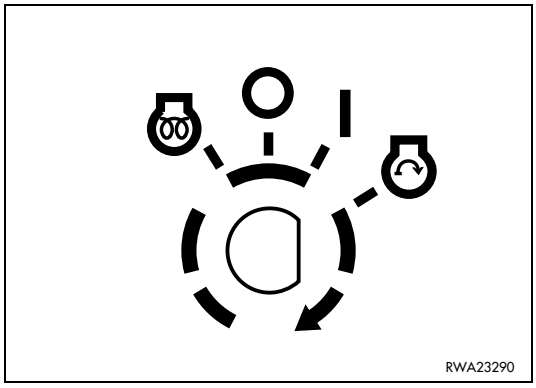

10 - HORN

This push button is positioned on the left lever grip and serves to warn the persons in the vicinity of the machine at the beginning of work and in case of danger.

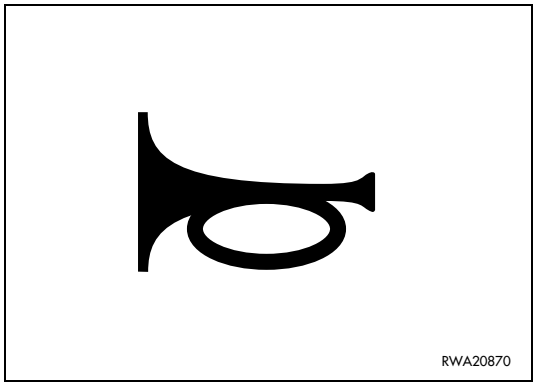

https://truckmanualshub.com/

11 - FRONT EQUIPMENT «HIGH-FLOW» HYDRAULIC SYSTEM SWITCH (3 LINES) (if installed)

This switch allows the oil delivery of the hydraulic pump to be constantly increased.

For use, see "3.3.5 pos. 9 - "HIGH FLOW" HYDRAULIC SYSTEM CONTROL (3 LINES) (IF INSTALLED)".

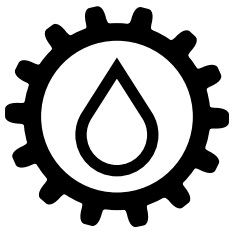

12 - FRONT EQUIPMENT «SUPER-FLOW» HYDRAULIC SYSTEM SWITCH (5 LINES) (if installed)

This is a double-function switch and allows the oil delivery of the hydraulic pump to be constantly increased.

For use, see "3.3.5 pos. 9 - "HIGH FLOW" HYDRAULIC SYSTEM CONTROL (3 LINES) (IF INSTALLED)".

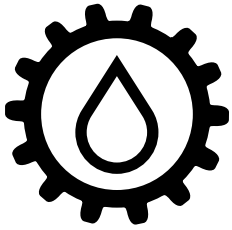

13 - SPEED INCREASE BUTTON

This button is positioned on the left joystick grip and serves to increase the machine speed.

For use, see "3.3.5 pos. 10 - SPEED INCREASE CONTROL".

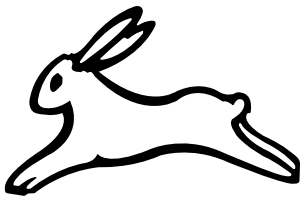

14 - FLOATING DEVICE SWITCH (if installed)

This switch is positioned on the right joystick grip and when pressed enables the electrohydraulic circuit of the floating device.
For use, see "3.3.5 pos. 11 - FLOATING DEVICE CONTROL (IF INSTALLED)".

15 - AVAILABLE FOR OTHER FUNCTIONS

https://truckmanualshub.com/

16 - WINDSHIELD WIPER/WASHER SWITCH (if provided)

With the first click it operates the windshield wiper, while with two clicks (with automatic return to the first click position) it operates the windshield washer.

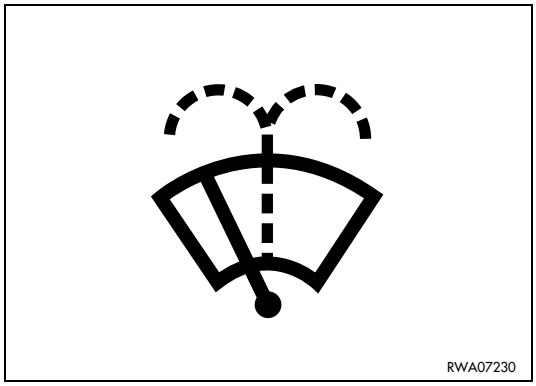

CAUTION

- **Before opening the front door, always stop the windshield wiper by pressing the switch to position OFF and make sure that the wiper blade returns to the rest position (vertical).**

https://truckmanualshub.com/

3.3.4 ELECTRICAL ACCESSORIES

1 - Acoustic alarm
2 - Electric outlet
3 - Accumulator disconnection switch (if provided)

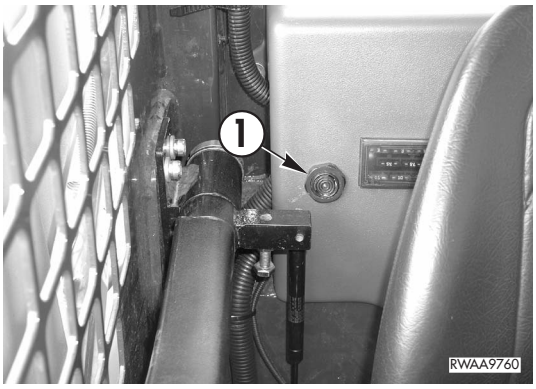

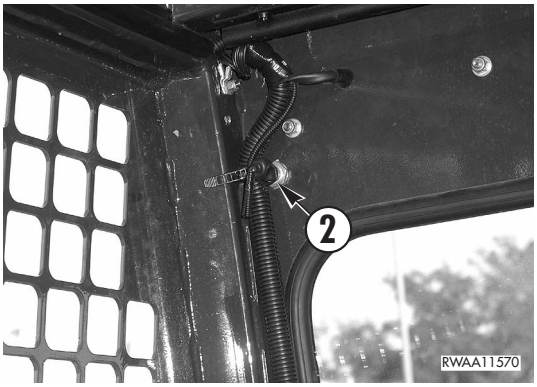

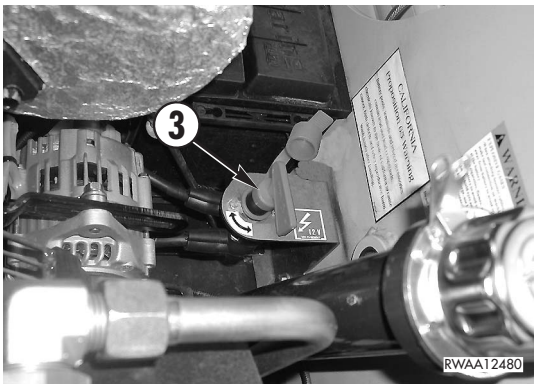

1 - ACOUSTIC ALARM

This acoustic alarm sounds when the circuits are energized with the ignition key (rotation to position ìIî) and is automatically disconnected when the engine is started.
The sounding of the alarm during operation signals:

- insufficient engine oil pressure;
- overheating of the engine cooling circuit;
- jamming of the servo control solenoid valve coil

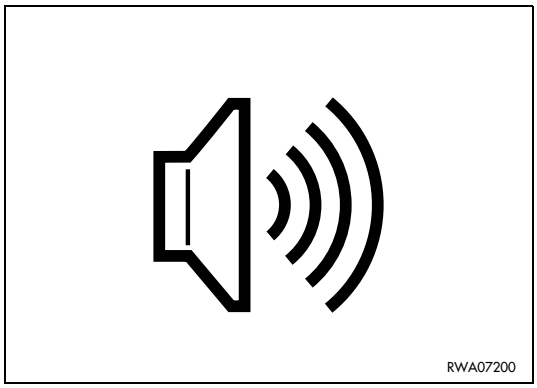

https://truckmanualshub.com/

2 - ELECTRIC OUTLET

An electric outlet is positioned on the right side of the cab inner wall for the connection of a lighting device for routine and maintenance operations.
It is a two-pole outlet and is in compliance with the ISO 4165-1979 standard.
Power supply 12 V.

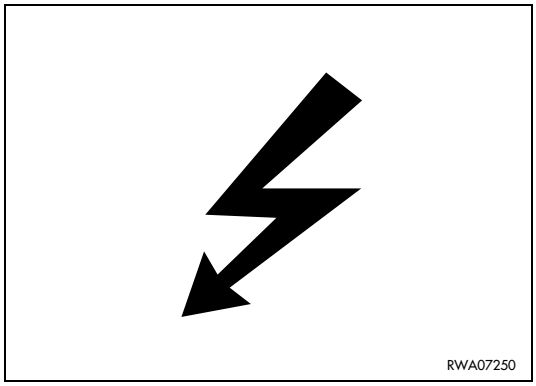

3 - ACCUMULATOR DISCONNECTION SWITCH (if provided)

This is a removable lever-type switch positioned near the accumulator; to reach it, it is necessary to open the engine hood (see "3.5.1 ENGINE HOOD").
The current transmitted by the accumulator to the electric system of the machine can be interrupted by rotating the switch clockwise (position B).
Always rotate the switch to “position B” if it is necessary to work on the accumulator or the electric system, or if electric welds must be carried out on the machine.
The electric contact can be restored by rotating the switch anticlockwise (position A).

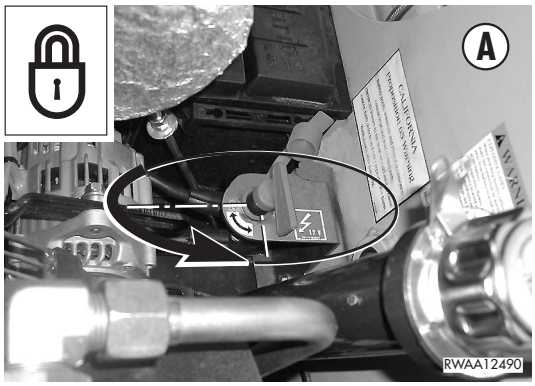

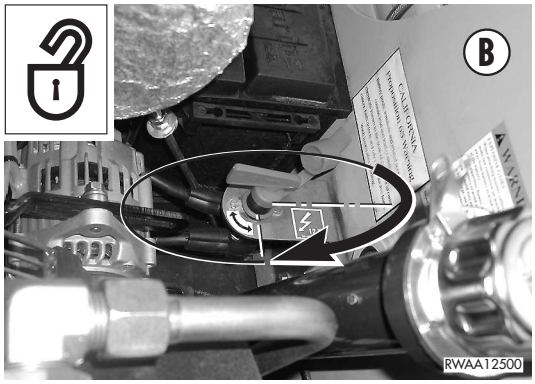

https://truckmanualshub.com/

3.3.5 MACHINE CONTROLS

CAUTION

- **The procedures to be followed to use any control systems different from the ISO and OPTION PATTERNS are described in section "OPTIONAL EQUIPMENT" (See "6.5 HAND & FOOT CONTROL SYSTEM"). Carefully read and be sure to understand the contents of this section before using the machine.**

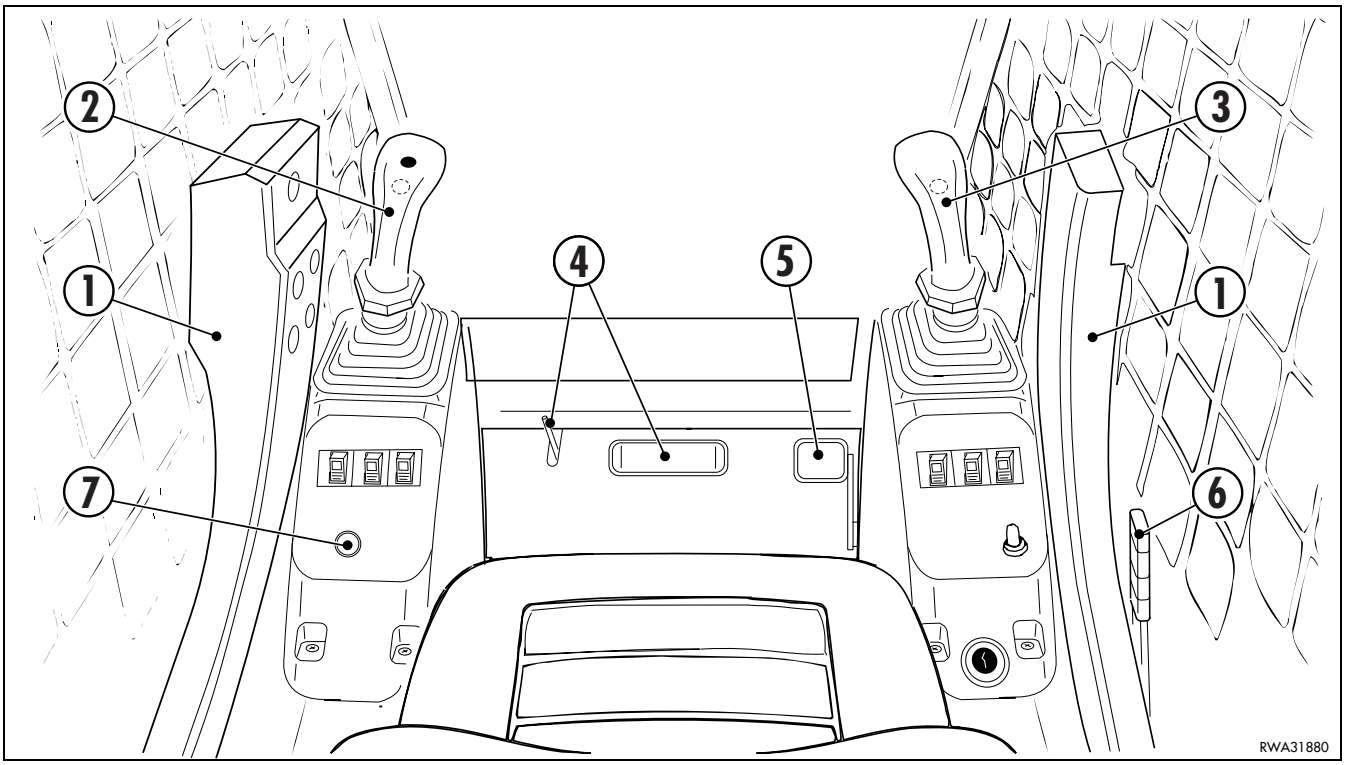

1 - Safety bars
2 - Left servo control lever
  - (ISO PATTERN) - travel and steering
  - (OPTION PATTERN) - left wheel travel and loader arm control
3 - Right servo control lever
  - (ISO PATTERN) - loader arm and bucket control
  - (OPTION PATTERN) - right wheel travel and bucket control
4 - Auxiliary hydraulic kit control pedal (if installed)
5 - Foot accelerator
6 - Hand accelerator
7 - Parking brake
8 - Equipment control locking lever (if installed)
9 - "High flow" hydraulic system control (3 lines) (if installed)
  - "Super flow" hydraulic system control (5 lines) (if installed)
10 - Speed increase control

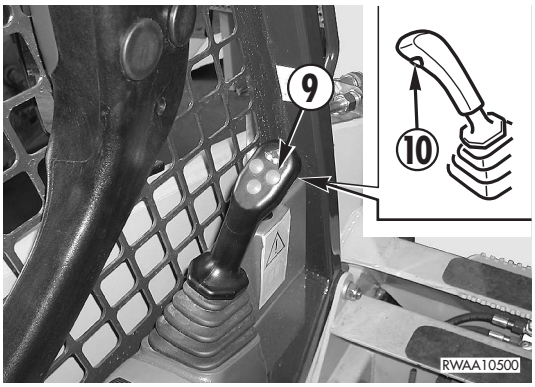

https://truckmanualshub.com/

11 - Floating device control (if installed)
12 - Pattern shifting control (if installed)
13 - Right stabilizer control (if installed)
14 - Left stabilizer control (if installed)
15 - Optionals

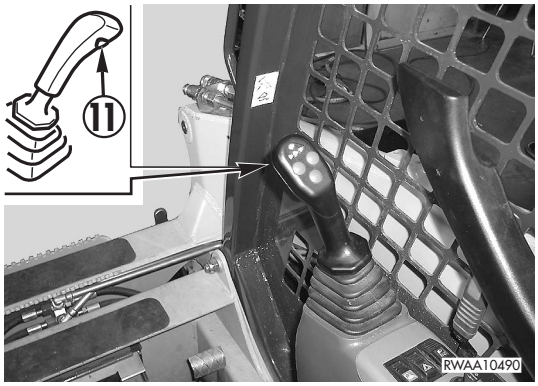

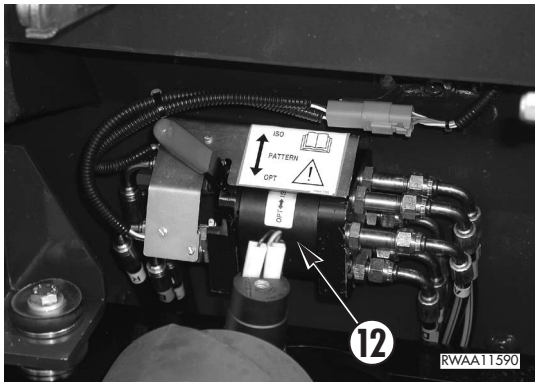

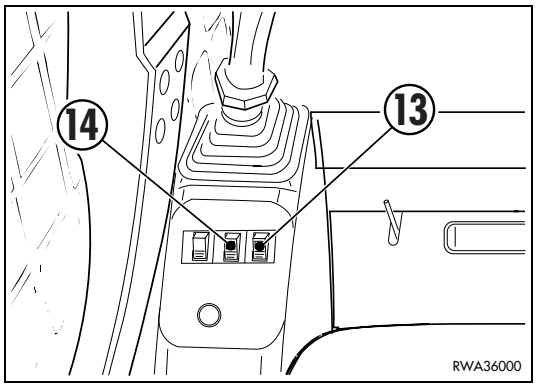

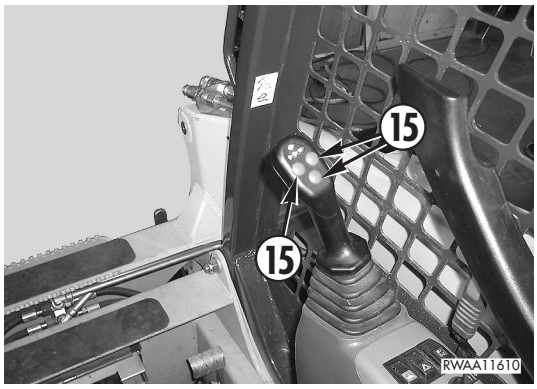

https://truckmanualshub.com/

1 - SAFETY BARS

WARNING

- **Before leaving the operating position, lower the equipment to the ground and lock the safety bars.**
- **The safety devices of the machine are composed of electric parts.**
  Therefore, before modifying or replacing wirings and electrical components, which may result in malfunctions of the devices, contact your Komatsu Dealer.

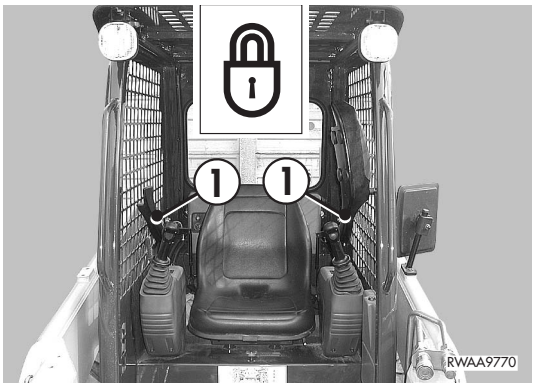

The locking of the servo control safety device is obtained by lifting the bars (1) in vertical position.
The safety device can be released by lowering the bars to the horizontal position and pressing the parking brake push button (warning light off).

NOTE

- The equipment movements and the travel function are inhibited when the safety bars (1) are locked.

https://truckmanualshub.com/

ISO PATTERN CONTROL SYSTEM

CAUTION

- **The procedures to be followed to use any control systems different from the ISO and OPTION PATTERNS are described in section "OPTIONAL EQUIPMENT" (See "6.5 HAND & FOOT CONTROL SYSTEM"). Carefully read and be sure to understand the contents of this section before using the machine.**

2 - LEFT SERVO CONTROL LEVER (TRAVEL AND STEERING)

WARNING

- **Before carrying out any manoeuvre with this lever, the operator must be seated in the work position with fastened safety belt; before every manoeuvre the operator must take all the precautions indicated "3.6.5 HOW TO MOVE THE MACHINE (ISO PATTERN CONTROL SYSTEMERN)".**
- **Before moving, make sure that the parking brake is disengaged.**
- **When travelling on roads, make sure that all the safety devices have been engaged.**
- **Failure to comply with these rules may lead to serious accidents.**

The travel control lever (2) is positioned on the operatorís left and serves to control the forward and reverse movements and the steering of the machine, according to the movements indicated in the diagram.

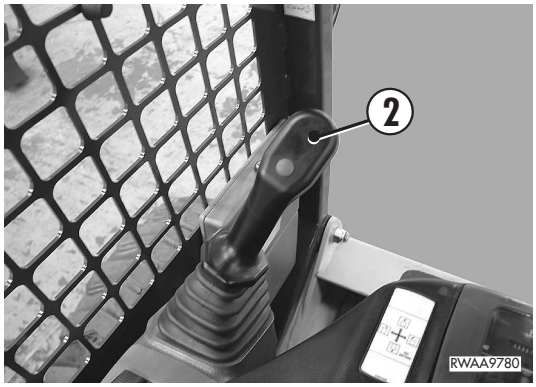

N - Neutral
A - Forward gear
B - Counterrotation to the right
C - Reverse gear
D - Counterrotation to the left

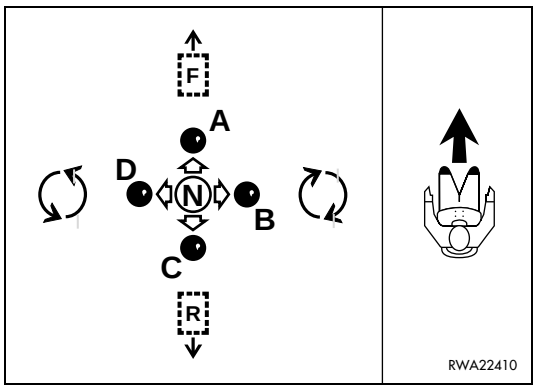

https://truckmanualshub.com/

If the lever is operated in directions that are inclined with respect to the machine axis, simultaneous steering movements proportional to the angle of inclination are obtained, since the two hydraulic pumps corresponding to each single function are engaged at the same time.

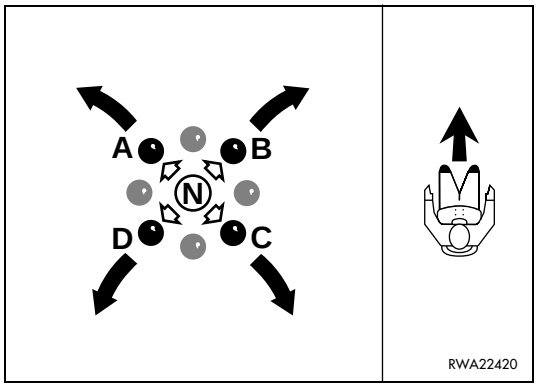

N - Neutral
A - Forward left steering
B - Forward right steering
C - Reverse left steering
D - Reverse right steering

⚠ CAUTION

- **Always travel at moderate speed, in order to obtain maximum precision and maximum efficiency during work.**
- **During work, the use of the lever must be proportional to the required effort and such as to obtain constant engine speed.**
- **Manoeuvre the lever smoothly, without abrupt movements and avoid counterrotations as much as possible, since these manoeuvres involve untimely wear of the tyres.**

NOTE

- The lever grip is provided with the horn, which must be used to warn the persons in the vicinity of the machine at the beginning of work and in case of danger.
- To inhibit all movements, lock the controls by lifting the safety bars in vertical position "3.3.5 pos. 1 - SAFETY BARS").

https://truckmanualshub.com/

3 - RIGHT SERVO CONTROL LEVER (LOADER ARM AND BUCKET)

WARNING

- **Before carrying out any manoeuvre with this lever, the operator must be seated in the work position with fastened safety belt; before any manoeuvre he must perform the operations described in"3.13 USING THE WORK EQUIPMENT".**
- **When travelling on roads, always lock the equipment control (see "3.3.5 pos. 8 - EQUIPMENT CONTROL LOCKING LEVER (IF INSTALLED)").**
- **Before leaving the operating position, lower the equipment to the ground and lock the safety bars (vertical position), then stop the engine.**
- **Failure to comply with these instructions may lead to serious accidents.**

CAUTION

- **The self-leveling system is operated automatically only when the loader arm is lifted with loaded bucket. When the arm is in the lowering phase the system cannot be operated.**
- **At the maximum height the self-leveling system keeps the bucket partially folded to prevent the material from falling out of the bucket itself.**

The equipment control lever (3) is positioned on the operatorís right and controls the loader arm lifting and lowering and the bucket dumping and folding functions.
The following diagrams show the basic manoeuvres and the possible combined manoeuvres.

BASIC MANOEUVRES

N - Neutral
A - Loader arm lowering
B - Bucket dumping
C - Loader arm lifting
D - Bucket folding

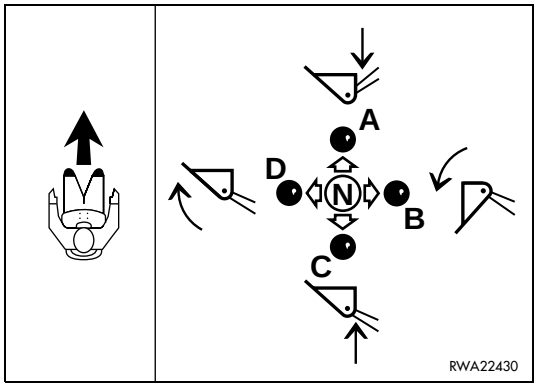

https://truckmanualshub.com/

If the lever is operated in directions that are inclined with respect to the machine axis, simultaneous movements proportional to the angle of inclination are obtained, since the two hydraulic distributors corresponding to each single function are engaged at the same time.

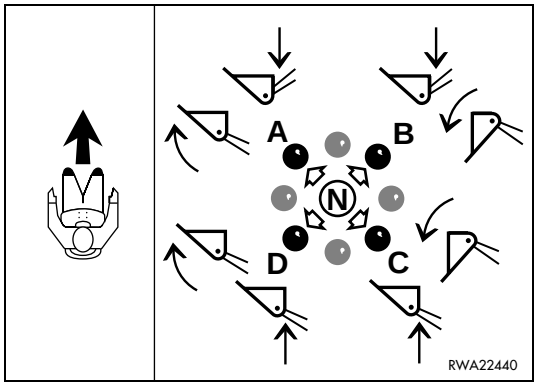

COMBINED MANOEUVRES

N - Neutral

A - Loader arm lowering - Bucket folding

B - Loader arm lowering - Bucket opening

C - Loader arm lifting - Bucket opening

D - Loader arm lifting - Bucket folding

NOTE

- To inhibit all movements, lock the controls by lifting the safety bars in vertical position . (see "3.3.5 pos. 1 - SAFETY BARS").

https://truckmanualshub.com/

OPTIONAL PATTERN CONTROL SYSTEM

CAUTION

- **The procedures to be followed to use any control systems different from the ISO and OPTION PATTERNS are described in section "OPTIONAL EQUIPMENT" (See "6.5 HAND & FOOT CONTROL SYSTEM"). Carefully read and be sure to understand the contents of this section before using the machine**

2 - LEFT SERVO CONTROL LEVER (LEFT WHEEL TRAVEL AND LOADER ARM CONTROL)

WARNING

- **Before carrying out any manoeuvre with this lever, the operator must be seated in the work position with fastened safety belt; before every manoeuvre the operator must take all the precautions indicated in "3.6.6 HOW TO MOVE THE MACHINE (OPTIONAL PATTERN CONTROL SYSTEM)" and "3.13 USING THE WORK EQUIPMENT".**
- **Before moving, make sure that the parking brake is disengaged.**
- **When travelling on roads, always lock the equipment control (see "3.3.5 pos. 8 - EQUIPMENT CONTROL LOCKING LEVER (IF INSTALLED)".**
- **When travelling on roads, make sure that all the safety devices have been engaged.**
- **Before leaving the work position, lower the equipment to the ground and lock the safety bars (vertical position), then stop the engine.**
- **Failure to comply with these rules may lead to serious accidents.**

CAUTION

- **The self-leveling system is operated automatically only when the loader arm is lifted with loaded bucket. When the arm is in the lowering phase the system cannot be operated.**
- **At the maximum height the self-leveling system keeps the bucket partially folded to prevent the material from falling out of the bucket itself.**

The servo control lever (2) is positioned on the Operator's left and controls the forward and reverse movements of the machine, as weel as the steering to the right and the lifting and lowering of the loader arm according to the movements indicated in the diagram.

IMPORTANT

- **To move the machine forward or backward, shift the control levers (2) and (3) at the same time and in the same direction.**

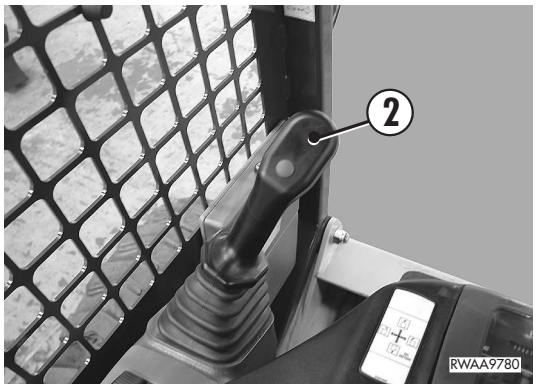

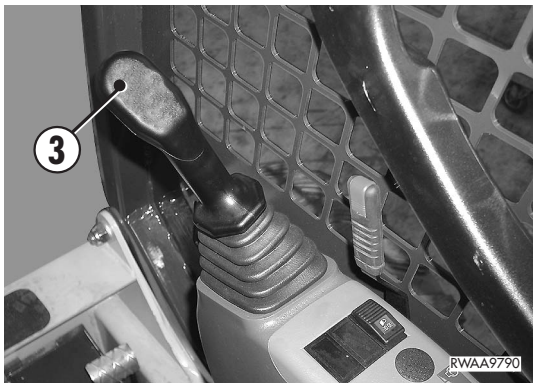

https://truckmanualshub.com/

N - Neutral
A - Forward right steering
B - Loader arm lowering
C - Reverse right steering
D - Loader arm lifting

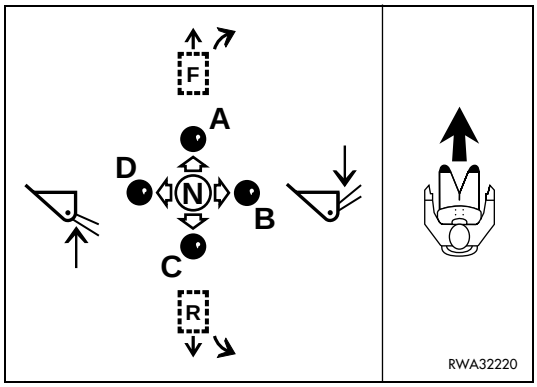

⚠ CAUTION

- **Always travel at moderate speed, in order to obtain maximum precision and maximum efficiency during work.**
- **During work, the use of the lever must be proportional to the required effort and such as to obtain constant engine speed.**
- **Manoeuvre the lever smoothly, without abrupt movements and avoid counterrotations as much as possible, since these manoeuvres involve untimely wear of the tyres.**

NOTE

- The lever grip is provided with the horn, which must be used to warn the persons in the vicinity of the machine at the beginning of work and in case of danger.
- To inhibit all movements, lock the controls by lifting the safety bars in vertical position "3.3.5 pos. 1 - SAFETY BARS").

https://truckmanualshub.com/

3 - RIGHT SERVO CONTROL LEVER (RIGHT WHEEL TRAVEL AND BUCKET FOLDING)

WARNING

- **Before carrying out any manoeuvre with this lever, the operator must be seated in the work position with fastened safety belt; before every manoeuvre the operator must take all the precautions indicated in "3.6.6 HOW TO MOVE THE MACHINE (OPTIONAL PATTERN CONTROL SYSTEM)" and "3.13 USING THE WORK EQUIPMENT".**
- **Before moving, make sure that the parking brake is disengaged.**
- **When travelling on roads, always lock the equipment control (see "3.3.5 pos. 8 - EQUIPMENT CONTROL LOCKING LEVER (IF INSTALLED)").**
- **When travelling on roads, make sure that all the safety devices have been engaged.**
- **Before leaving the work position, lower the equipment to the ground and lock the safety bars (vertical position), then stop the engine.**
- **Failure to comply with these rules may lead to serious accidents.**

The servo control lever (3) is positioned on the Operator's right and controls the forward and reverse movements of the machine, as weel as the steering to the left and the bucket folding and dumping according to the movements indicated in the diagram.

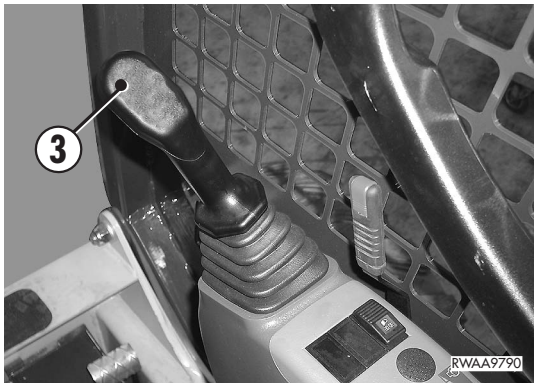

IMPORTANT

- **To move the machine forward or backward, shift the control levers (2) and (3) at the same time and in the same direction**

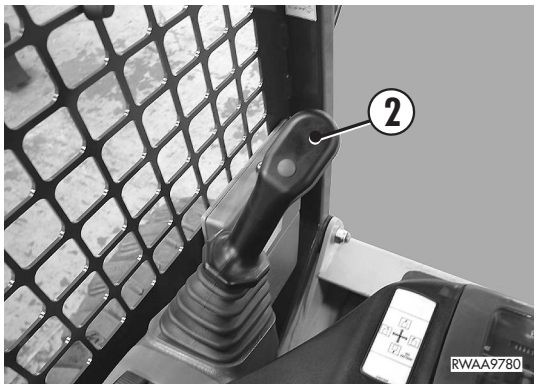

N - Neutral
A - Forward left steering
B - Bucket dumping
C - Reverse left steering
D - Bucket folding

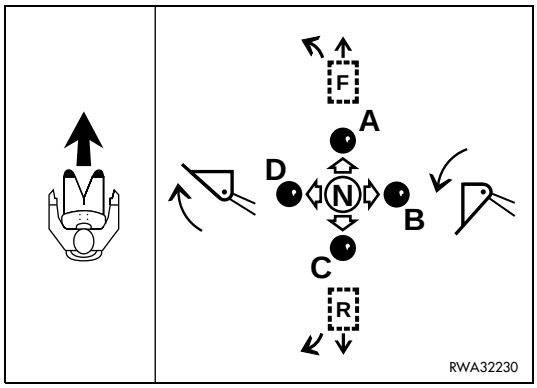

https://truckmanualshub.com/

CAUTION

- **Always travel at moderate speed, in order to obtain maximum precision and maximum efficiency during work.**
- **During work, the use of the lever must be proportional to the required effort and such as to obtain constant engine speed.**
- **Manoeuvre the lever smoothly, without abrupt movements and avoid counterrotations as much as possible, since these manoeuvres involve untimely wear of the tyres.**

NOTE

- To inhibit all movements, lock the controls by lifting the safety bars in vertical position (see "3.3.5 pos. 1 - SAFETY BARS").

https://truckmanualshub.com/

4 - AUXILIARY HYDRAULIC KIT CONTROL PEDAL (IF INSTALLED)

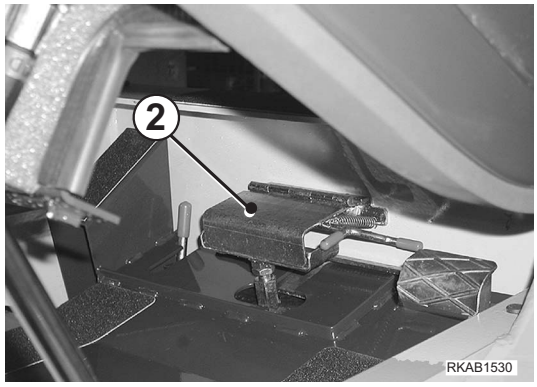

CAUTION

- **The procedures to be followed to use any control systems different from the ISO and OPTION PATTERNS are described in section "OPTIONAL EQUIPMENT" (See "6.5 HAND & FOOT CONTROL SYSTEM"). Carefully read and be sure to understand the contents of this section before using the machine.**

WARNING

- **Always apply the safety guard (2) when the use of this control is not required, during travel and when parking the machine.**
- **When installing any hydraulic control equipment, make sure that the control pedal (1) is always in neutral position and covered by the safety guard (2).**
- **Never set the control pedal in the "maximum flow" position (B), unless the machine is stationary, with raised safety bars, and the operator is seated in driving position with fastened safety belt.**

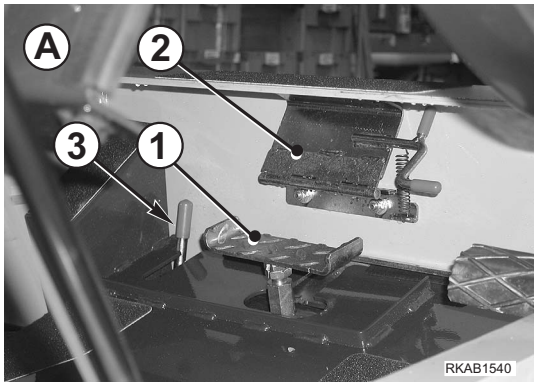

The pedal (1) controls the opening and closing of the oil flow to the equipment and has three fixed positions (left, neutral, right).

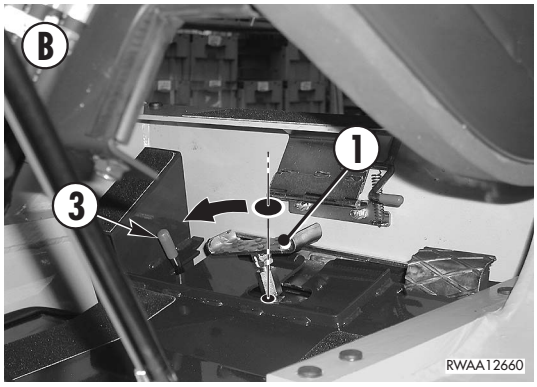

NOTE

- To use the pedal (1), lift the safety guard (2).

1 - Neutral position (A) (HYDRAULIC CIRCUIT CLOSED). When the pedal is in this position, it isn't possible to use the optional equipment in any way.

2 - Pressed pedal (B) (HYDRAULIC CIRCUIT OPEN)
When the pedal is pressed with the left side of the foot and locked in this position with the lever (3), a continuous oil flow is delivered to the equipment (excavator, demolition hammer, asphalt cutter, etc.).
To release the pedal (1) and set it in neutral or horizontal position, push the locking lever (3) forward as indicated in the figure (A).

3 - Bidirectional flow position.
The pedal is also used to control the oil flow to the equipment with bidirectional hydraulic circuit (multi-purpose buckets, drills, asphat cutters, etc.). Shift the locking lever (3) to the release position and press the pedal (1) to position L or R to control the oil flow to the equipment. The quantity of oil conveyed in each direction is proportional to the pressure exerted on the pedal.

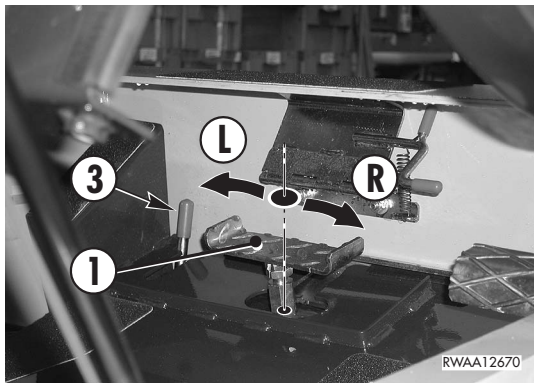

https://truckmanualshub.com/

5 - FOOT ACCELERATOR

The accelerator pedal (1) is positioned on the operator's right and serves to control the engine speed and power.
Use the accelerator pedal with care, especially when the machine is under strain or is working in difficult conditions.
Avoid useless accelerations, in order to reduce consumption and extend the life of both the engine and the machine.

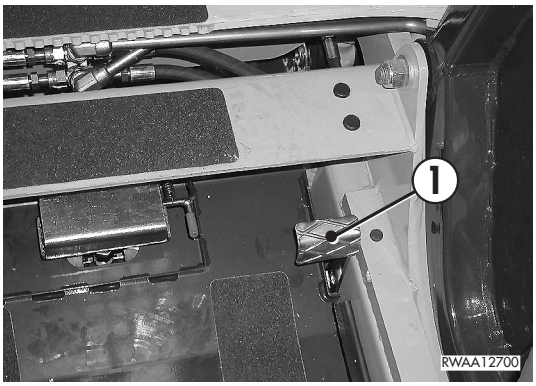

6 - HAND ACCELERATOR

⚠ WARNING

- **The use of the hand accelerator is allowed only under the indicated conditions; its use in other conditions may lead to accidents.**

The hand accelerator must be used during the warming up of the engine and successively when operations with the optional equipment are to be carried out; it can also be used for some maintenance operations.

- Idling position (A):
  lever completely pushed forward.
- Maximum speed position (B):
  lever completely pulled backward.

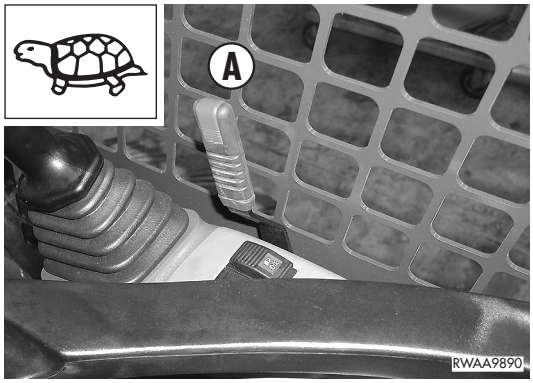

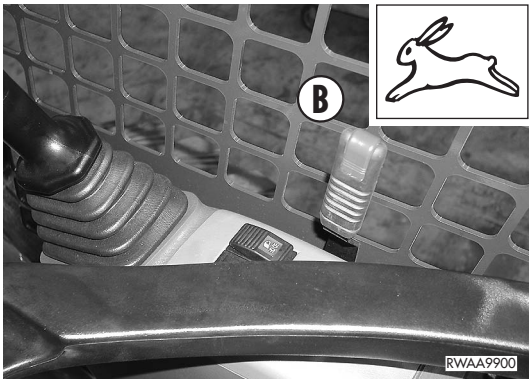

https://truckmanualshub.com/

7 - PARKING BRAKE

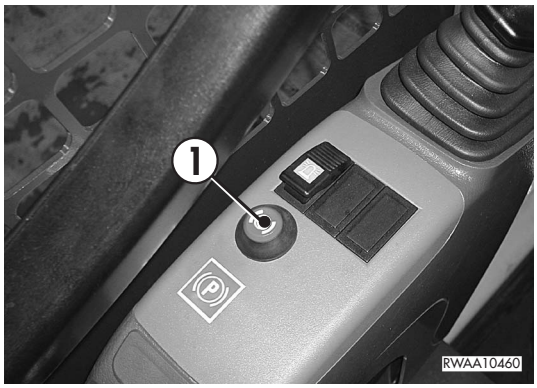

WARNING

- **The parking brake must be applied whenever the operator leaves the driving position, even if for a short time.**
- **The machine must be positioned with the wheels resting firmly on the ground. If one of the wheels is unstable or is resting on a small obstacle, the machine may move.**
- **Periodically check the functionality of the parking brake. Failure to comply with these instructions may lead to serious accidents or even death.**
- **In case of failure of the hydraulic system, before the recovery of the machine release the negative brake installed on the travel hydraulic motors (see "4.8.1.d RELEASING THE PARKING BRAKE").**

The braking action is obtained by pressing the switch (1) (LED ON); the release is obtained by pressing the switch again (LED OFF).

IMPORTANT

- **The parking brake is automatically engaged whenever the engine stops; this is due to the lack of pressure in the hydraulic system.**
- **Every time the engine is started or restarted, it is necessary to release the parking brake before moving the machine.**

8 - EQUIPMENT CONTROL LOCKING LEVER (IF INSTALLED)

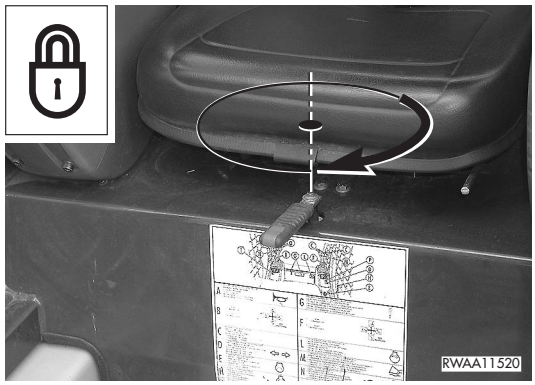

WARNING

- **When travelling on roads, always lock the equipment control.**

When shifted to the lock position, the lever inhibits the equipment control.
Before travelling on roads, always lock the equipment control.
The positions of use of the lever are those indicated in the figures.

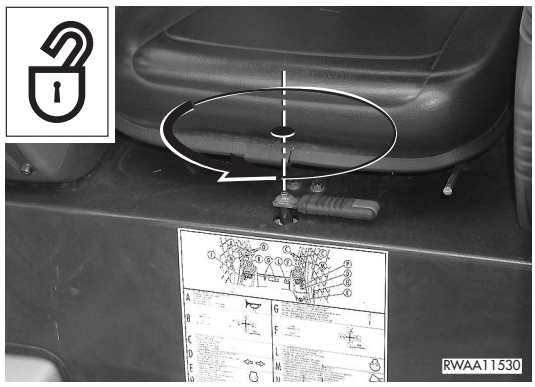

https://truckmanualshub.com/

9 - STANDARD FLOW HYDRAULIC SYSTEM CONTROL (2 LINES)

WARNING

- **Avoid connecting any equipment to the hydraulic lines before said equipment has been correctly installed from a mechanical point of view and secured to the machine front coupling.**
- **Avoid connecting any manually-controlled equipment or tool (for example, hand hammer) to the hydraulic lines while the equipment/tool is working.**
- **Connect the hydraulic lines only with the engine off and the parking brake applied.**
- **To avoid serious injury, always operate the equipment while seated in driving position. Do not allow anyone to get too close the machine or the equipment.**
- **Read the contents of the equipment instruction manual carefully before using the machine or carrying out maintenance operations.**

The bidirectional oil flow to the equipment is controlled by the pedal (A) (see "3.3.5 pos. 4 - AUXILIARY HYDRAULIC KIT CONTROL PEDAL (IF INSTALLED)") and is proportional to the pressure exerted on the pedal in both directions. The hydraulic lines are positioned on the left side of the arm.

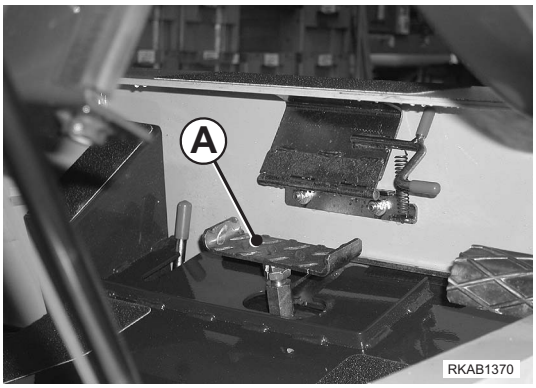

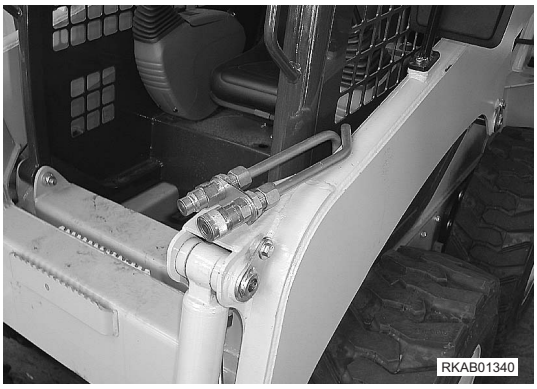

https://truckmanualshub.com/

9 - "HIGH FLOW" HYDRAULIC SYSTEM CONTROL (3 LINES) (IF INSTALLED)

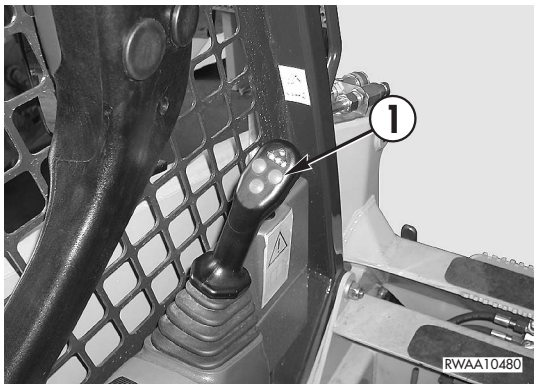

WARNING

- **Avoid connecting any equipment to the hydraulic lines before said equipment has been correctly installed from a mechanical point of view and secured to the machine front coupling.**
- **Avoid connecting any manually-controlled equipment or tool (for example, hand hammer) to the hydraulic lines while the equipment/tool is working.**
- **Connect the hydraulic and electric lines only with the engine off and the parking brake applied.**
- **To avoid serious injury, always operate the equipment while seated in driving position. Do not allow anyone to get too close the machine or the equipment.**
- **Read the contents of the equipment instruction manual carefully before using the machine or carrying out maintenance operations.**

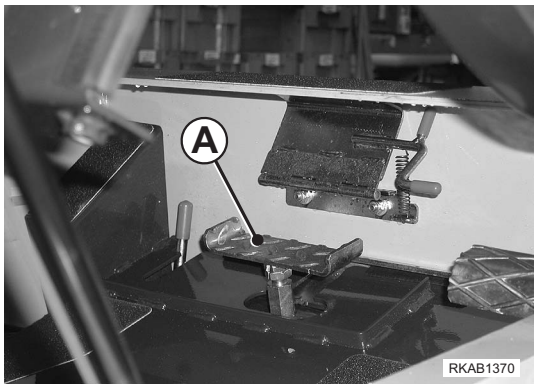

IMPORTANT

- **When the HIGH FLOW hydraulic button (1) is pressed, the flow conveyed to the hydraulic connections positioned on the left side of the loader arm for the operation of the equipment is higher than the standard flow.**

DANGER

- **If the engine is running and the parking brake isn't applied, when the HIGH FLOW button (1) is pressed the LED on the button comes on and the hydraulic oil flow rate through the front auxiliary rapid couplings is high.**
- **The HIGH FLOW hydraulic system can be operated only with the equipment installed on the machine.**
- **Press the HIGH FLOW button again to stop the increased hydraulic flow.**

The "High Flow" to the equipment is bidirectional, is controlled by the pedal (A) (see "3.3.5 pos. 4 - AUXILIARY HYDRAULIC KIT CONTROL PEDAL (IF INSTALLED)") and is proportional to the pressure exerted on the pedal in both directions. The hydraulic and electric lines are positioned on the left side of the loader arm.

https://truckmanualshub.com/

9 - "SUPER FLOW" HYDRAULIC SYSTEM CONTROL (5 LINEE) (IF INSTALLED)

WARNING

- **Avoid connecting any equipment to the hydraulic lines before said equipment has been correctly installed from a mechanical point of view and locked to the machine front coupling.**
- **Avoid connecting any manually-controlled equipment or tool (for example, hand hammer) to the hydraulic lines while the equipment/tool is working.**
- **Connect the hydraulic lines only with the engine off and the parking brake applied.**
- **To avoid serious injury, always operate the equipment while seated in driving position. Do not allow anyone to get too close the machine or the equipment.**
- **Read the contents of the equipment instruction manual carefully before using the machine or carrying out maintenance operations.**

The Super Flow hydraulic controls can be used when the operator needs to increase the oil delivery to the hydraulic system of the equipment. With the SUPER FLOW hydraulic system it is possible to use equipment that require a high-flow hydraulic line (left) and at the same time a standard-flow hydraulic line (right) with limited oil flow for secondary functions (auxiliary hydraulic kit control pedal).
Thanks to the Super Flow hydraulic control, the operator can use two independent hydraulic circuits (positioned on the right and on the left side of the loader arm). In the Super Flow hydraulic system, the standard-flow lines are positioned on the right side of the arm. The quantity of oil in the right hydraulic lines and the flow reversal are controlled by the pedal (see "3.3.5 pos. 4 - AUXILIARY HYDRAULIC KIT CONTROL PEDAL (IF INSTALLED)").
The left hydraulic lines are used only for equipment requiring high flow rates and are controlled by the buttons (1) and (2) on the left joystick.
To deliver oil to the equipment, press the push button (2) (red LED on the button ON); press the button again to stop the oil flow in the hydraulic lines completely (red LED OFF).
To deliver the oil flow in the reverse direction, press the button (1) and keep it pressed. Release the button (1) to restore normal operating conditions.

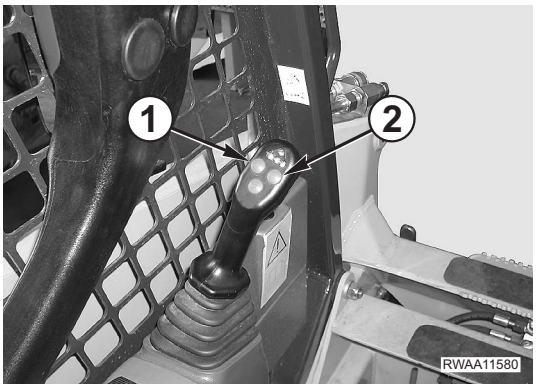

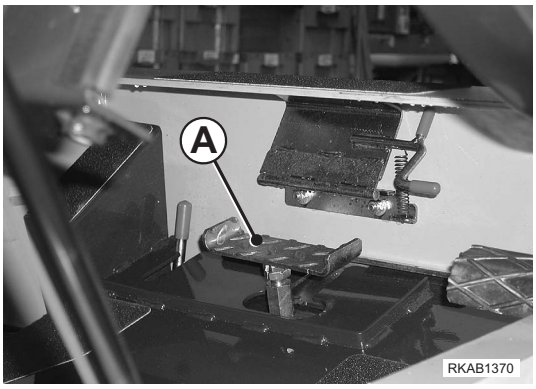

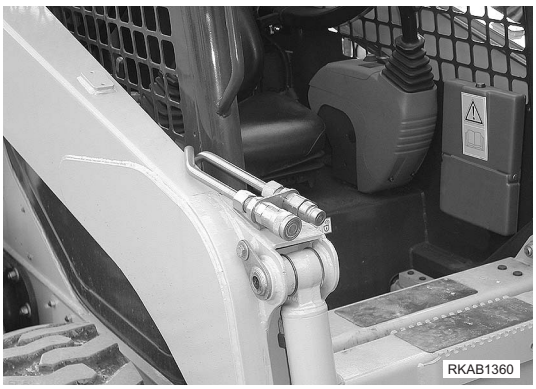

https://truckmanualshub.com/

10 - SPEED INCREASE CONTROL

The button (1) that allows the machine travel speed to be increased is positioned on the left joystick grip.
When the button is pressed, the speed increases; release the button to return to normal speed.

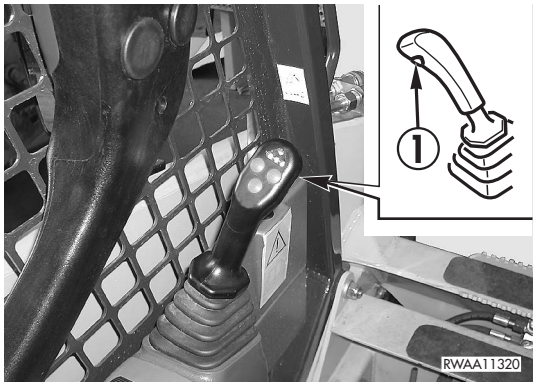

CAUTION

- **The speed increase function should be used only for the fast speed transfers of the machine; in any other case, it is advisable to use the normal speed.**
- **Do not use the speed increase control when performing steering or counterrotation manoeuvres.**

11 - FLOATING DEVICE CONTROL (IF INSTALLED)

The right joystick grip is provided with a switch (1) that when pressed (WARNING LIGHT ON) (see "3.3.2 pos. 8 - FLOATING DEVICE WARNING LIGHT"), frees the loader arm (floating position), that is, allows it to automatically follow the undulations of the ground.
Press the switch again to restore the standard operating conditions (WARNING LIGHT OFF) ("3.3.2 pos. 8 - FLOATING DEVICE WARNING LIGHT").

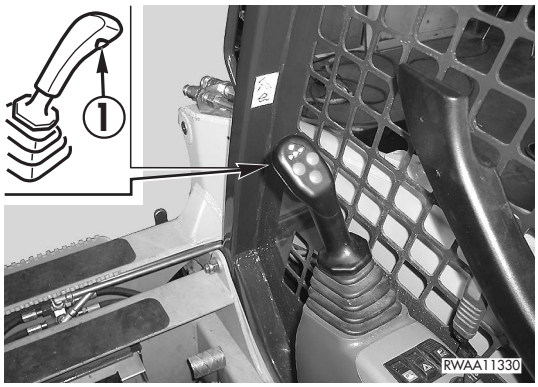

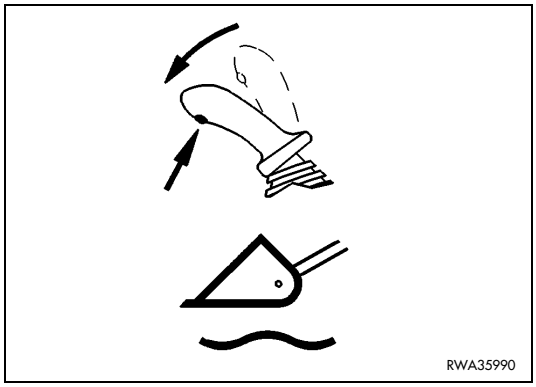

https://truckmanualshub.com/

12 - PATTERN SHIFTING CONTROL (IF INSTALLED)

WARNING

- **Before changing the setting of the pattern change valve, lower the equipment to the ground, engage the safety locks and stop the engine.**
- **After changing the control operating pattern, carry out the first manoeuvres slowly and very carefully, in order to understand the new controls correctly and avoid any damage or fatal injury that may be caused by incorrect movements.**

The pattern change valve (1) is positioned inside the engine hood, on the cab's rear wall, and it can be reached after opening the engine hood.
The valve controls the selection of:

- ISO PATTERN CONTROL SYSTEM
- OPTION PATTERN CONTROL SYSTEM

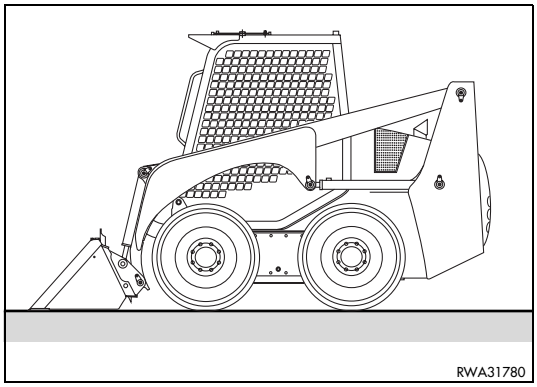

NOTE

- For details on the procedure to be followed to change the operating pattern of the machine, see "6.4 CHANGING THE OPERATING PATTERN".

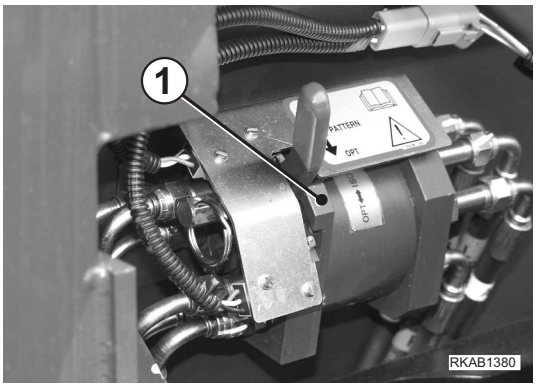

https://truckmanualshub.com/

13 - RIGHT STABILIZER CONTROL (IF INSTALLED)

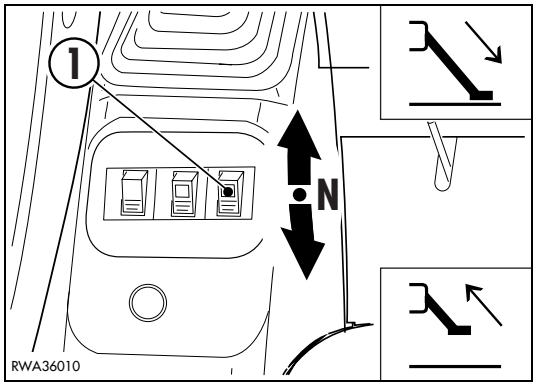

WARNING

- **Before moving the machine in any way, make sure that the stabilizer feet are completely raised.**
- **Before travelling on roads, make sure that the safety locks of the stabilizer feet have been applied.**

The right stabilizer is operated by means of the button (1) installed on the left console and according to the indicated positions.

1 - Press the button forward to lower the stabilizer feet.

2 - Press the button backward to raise the stabilizer feet.

14 - LEFT STABILIZER CONTROL (IF INSTALLED)

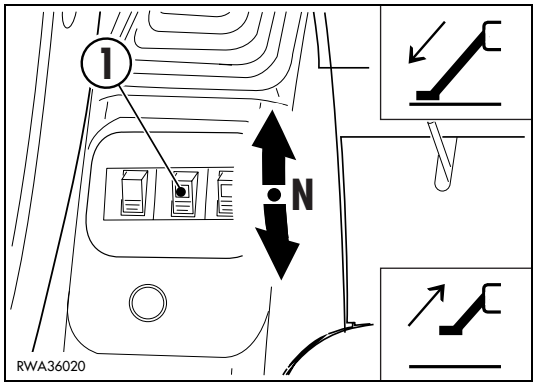

WARNING

- **Before moving the machine in any way, make sure that the stabilizer feet are completely raised.**
- **Before travelling on roads, make sure that the safety locks of the stabilizer feet have been applied.**

The left stabilizer is operated by means of the button (1) installed on the left console and according to the indicated positions.

1 - Press the button forward to lower the stabilizer feet.

2 - Press the button backward to raise the stabilizer feet.

15 - OPTIONALS

The right three-button joystick is used when the operator needs to connect electro-hydraulic equipment with several functions.

Each push button corresponds to an electric line activated by a pulse control: press the push button to activate the electric contact; release the push button to deactivate the contact.

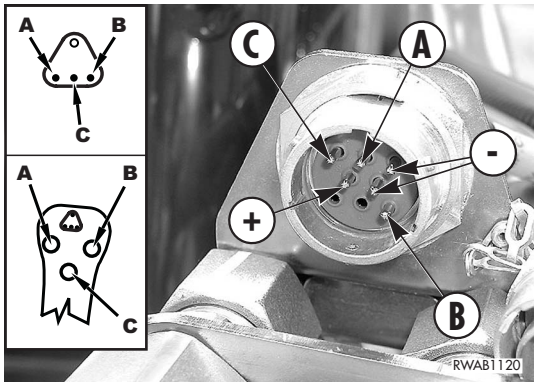

https://truckmanualshub.com/

3.4 FUSES AND RELAYS

⚠ CAUTION

- **When changing a fuse, make sure that the ignition key is in position «O».**
- **If the fuses are oxidized, corroded or do not fit perfectly in their seat, replace them only with new fuses having the same capacity.**
- **If the engine does not run when the ignition switch is brought to position «⏻» STARTcheck the main fuse and if necessary change it.**

3.4.1 MACHINE FUNCTION FUSES

The fuses relevant to the machine functions are grouped on a single base positioned on the dashboard behind the seat.

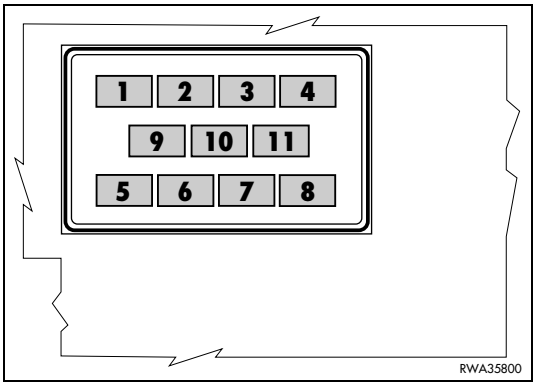

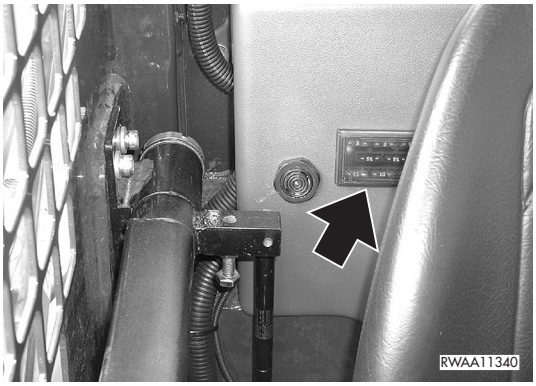

STANDARD VERSION

POSITION	COLOUR	CAPACITY (A)	INVOLVED CIRCUIT
1	Violet	3	Left parking lights
2	Violet	3	Control panel lights, (right parking lights)
3	Light blue	15	Horn, low beam or front working lights
4	Brown	7.5	Switch lights
5	Light blue	15	Rear working lights
6	Red	10	Power supply of joystick switches, floating device, pattern shifting
7	Red	10	12 V electric outlet, revolving light
8	Red	10	Power supply of control panel, safety unit, solenoid valve stop, control bar sensor, seat sensor, brake switch
9	Brown	7.5	Reverse alarm
10	Brown	7.5	Fuel pump, safety relay (against repeated starting), generator
11	Green	30	Solenoid pull relay, servo control safety pressure switch

https://truckmanualshub.com/

VERSION WITH OPTIONALS

POSITION	COLOUR	CAPACITY (A)	INVOLVED CIRCUIT
1	Violet	3	Left parking lights, number plate light
2	Violet	3	Control panel lights, right parking lights
3	Light blue	15	Horn, low beam or front working lights
4	Red	10	Switch, direction indicator lights
5	Light blue	15	Rear working lights, stop lights
6	Red	10	Power supply of joystick switches, floating device, pattern shifting
7	Red	10	12 V electric outlet, revolving light, emergency lights (HAZARD)
8	Red	10	Power supply of control panel, safety unit, solenoid valve stop, control bar sensor, seat sensor, brake switch
9	Brown	7.5	Reverse alarm, power supply of High-flow 3-way equipment hydraulic system, stabilizers, safety valves
10	Brown	7.5	Fuel pump, safety relay (against repeated starting), generator
11	Green	30	Solenoid pull relay, servo control safety pressure switch

3.4.2 MAIN FUSE

The main fuse (1) is positioned near the battery and can be reached by raising the cab (see "3.5.3.4 RAISING THE CAB").

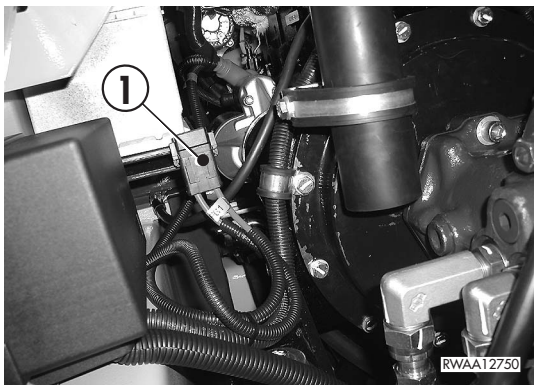

POSITION	COLOUR	CAPACITY (A)	INVOLVED CIRCUIT
1	Red	50	System general circuit

https://truckmanualshub.com/

3.4.3 RELAYS

The relays are positioned inside the engine compartment and can be reached by raising the cab (see "3.5.3.4 RAISING THE CAB").
Some relays are grouped inside the container fixed to the right side of the machine frame and can be reached by removing the cover (A).

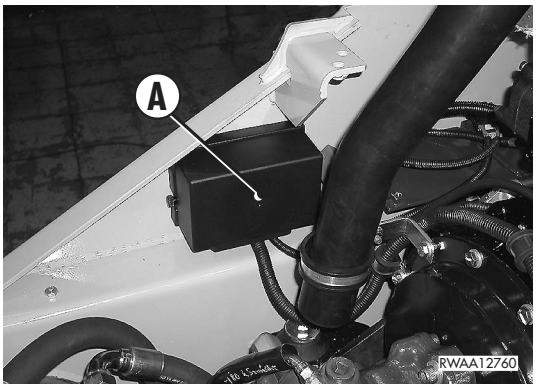

POSITION	DESCRIPTION
1	Engine stop relay
2	Safety relay (against repeated starting)

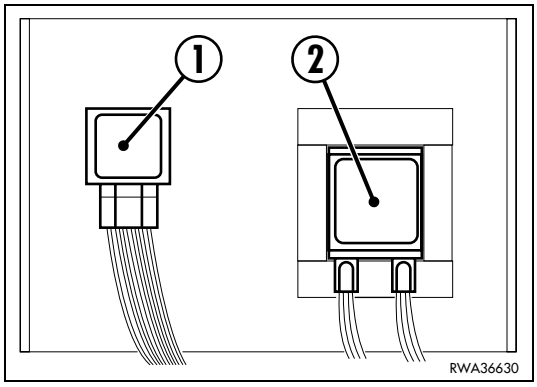

Other relays are grouped inside the base installed on the panel (B) behind the seat and can be reached by removing the panel (B).

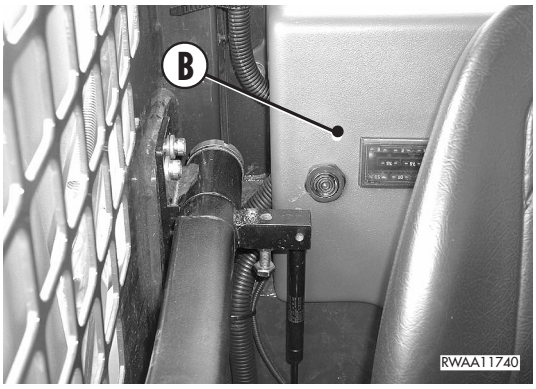

https://truckmanualshub.com/

POSITION	DESCRIPTION
3	Safety unit

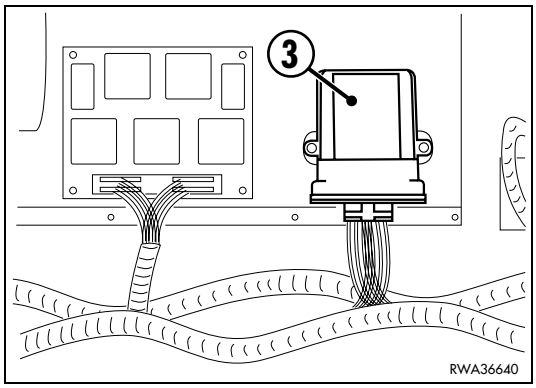

POSITION	DESCRIPTION
4	Relay board: A - Stop lights B - 1 way C - 3 way D - Momentary high-flow E - 2 way F - Blinking G - Detent high-flow

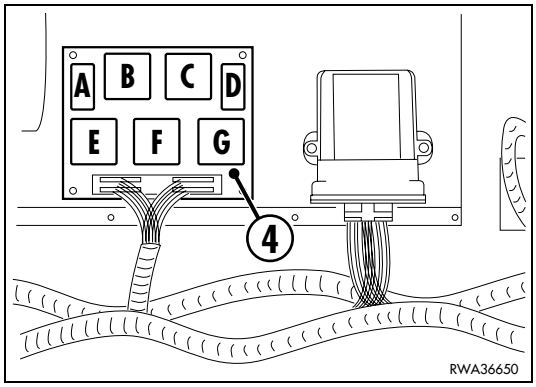

POSITION	DESCRIPTION
5	Stoplight relay
6	Floating device control relay
7	Parking brake relay

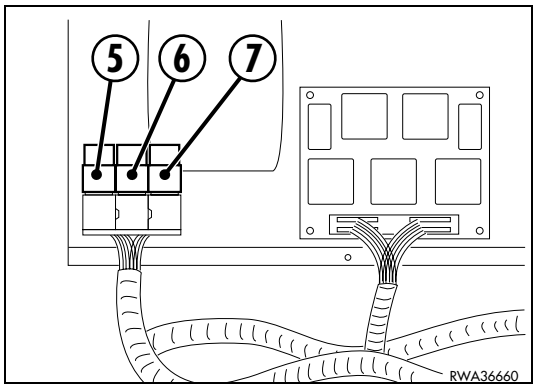

https://truckmanualshub.com/

3.5 GUARDS AND DRIVER'S SEAT

3.5.1 ENGINE HOOD

WARNING

- **Do not open the engine hood when the engine is running.**
- **Do not use the machine without engine hood and do not start the engine when the hood is open, unless this is expressly prescribed for certain maintenance operations.**
- **Non-compliance with these rules may lead to serious accidents.**

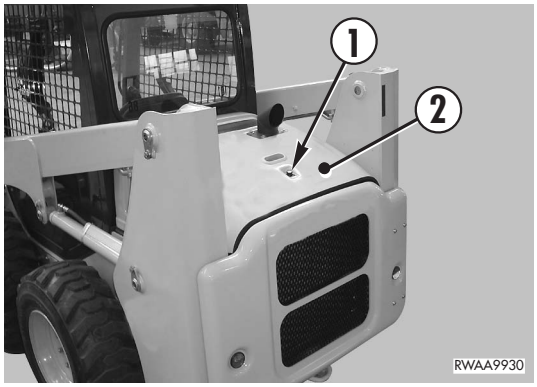

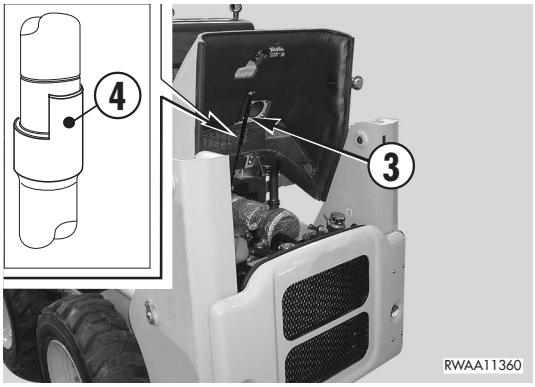

OPENING THE HOOD

After releasing the lock, press the push button (1) and raise the engine hood (2).
The maximum opening position is maintained by the lifting piston (3), which is locked in position by the safety retainer (4).

CLOSING THE HOOD

Press the safety retainer (4) of the lifting piston (3) and at the same time lower the hood.
Push it downwards until the lock snaps.
Lock the hood.

IMPORTANT

- **Make sure that the safety retainer (4) is engaged every time you open the hood.**

https://truckmanualshub.com/

3.5.2 REAR PANEL

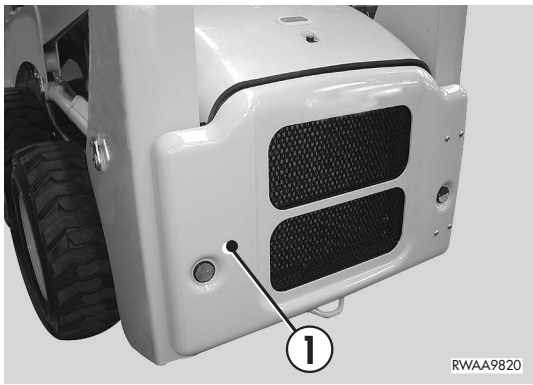

WARNING

- **Do not open the rear panel when the engine is running.**
- **Do not use the machine without the rear panel and do not start the engine with open panel if this is not expressly prescribed for certain maintenance operations.**
- **Non-compliance with these rules may lead to serious accidents.**
- **When inspecting or carrying out a maintenance operation inside the rear panel, always engage the panel in the safety coupling to keep it open.**

NOTE

- The rear panel can be opened only after opening the engine hood.

To reach the release lever (2) of the rear panel (1), raise the engine hood (see "3.5.1 ENGINE HOOD").

To open the rear cover (1), lift the lever (2) positioned on the inner left side of the machine, at the same time rotate the cover to the maximum opening position and fix it with the retainer (3), by proceeding as follows:

1 - Lift the retainer (3) and rotate it clockwise until it rests against the rear cover (1).

2 - Release the retainer (3) and make sure that it has been engaged correctly.

To close the rear cover (1), release the retainer (3), rotate it anticlockwise and make it rest against the rear cover (1).

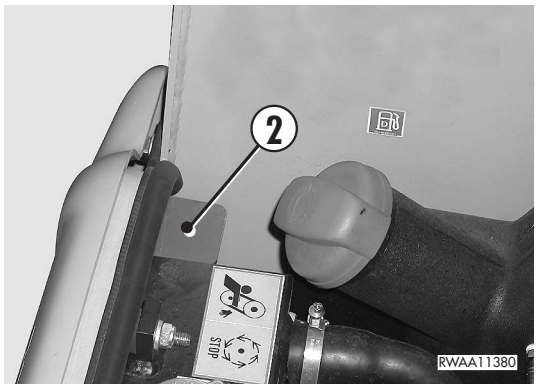

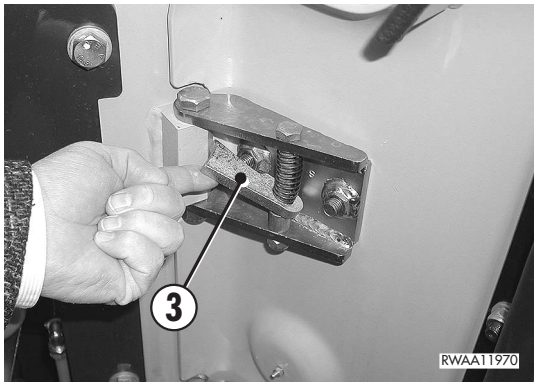

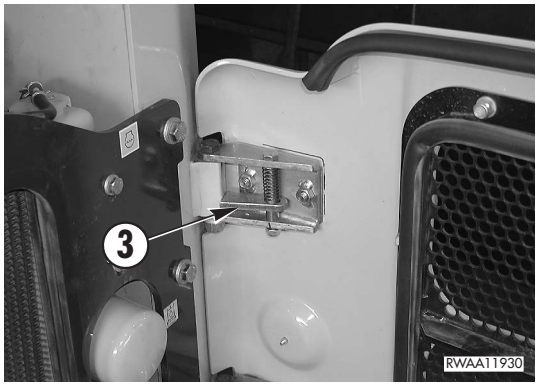

https://truckmanualshub.com/

3.5.3 CAB

3.5.3.1 STANDARD CAB

WARNING

- **The cab is ROPS and FOPS homologated - level I; if the cab is subjected to an impact, or if the machine overturns, immediately contact your Komatsu Dealer, who will check the stiffness of the cab and make sure that the operatorís safety is guaranteed.**
- **For maintenance or routine operations, the cab must be raised; carry out this operation according to the procedure described in section "3.5.3.4 RAISING THE CAB" and keep to all the safety precautions indicated therein.**

The cab is of the semi-closed type.
The windows are positioned on the rear and upper part and the rear window can be removed.
In a special version of the machine, available on request, the cab can be completely closed through the addition of side windows and front door.

3.5.3.2 CAB WITH FRONT DOOR AND SIDE WINDOWS (available on request)

CAUTION

- **When opening or closing the front door, always shift the safety bars to the lock position. The accidental shifting of the control levers when these aren't locked may cause serious accidents.**
- **When opening the front window, always hold the handles firmly with both hands and do not leave hold until the automatic lock is engaged.**
- **Pay the utmost attention when closing the door, since this will move more quickly due to its own weight.**
- **Do not open the front door with the windshield wiper in operation, to prevent the blade from stopping in an incorrect position and interfering between the windshield wiper and the cab structure, with inevitable damage to the moving parts.**
- **Before opening the front door, stop the windshield wiper by pressing the switch to position OFF and make sure that the wiper blade returns to the rest position (vertical). (See "3.3.3 pos. 16 - WINDSHIELD WIPER/ WASHER SWITCH (if provided)".**

https://truckmanualshub.com/

This version features the complete opening of the front door (1), which can be positioned and secured under the cab roof, and the partial opening of the side sliding windows (2). The upper and rear windows are fixed.
To open the front door completely, turn the handle (3) and open the door by lifting it until engaging the pin (4) in the upper lock (5).

NOTE

- To close the front door, release it by pressing or pulling the lever (6) of the upper lock (5) and hold the handles with both hands until the automatic lock is engaged.
  The handle (3) may be locked by means of the key lock (4).
- The right and left side windows (2) slide open.
  Press the button (7) on the handle and pull the window.

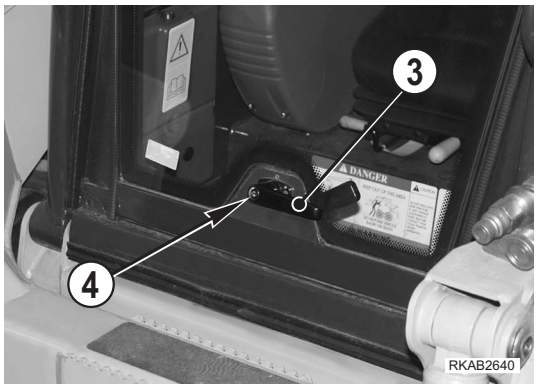

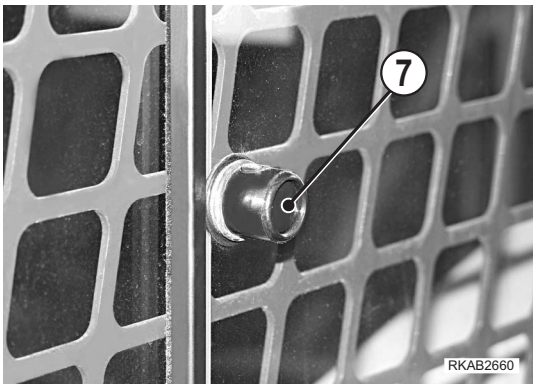

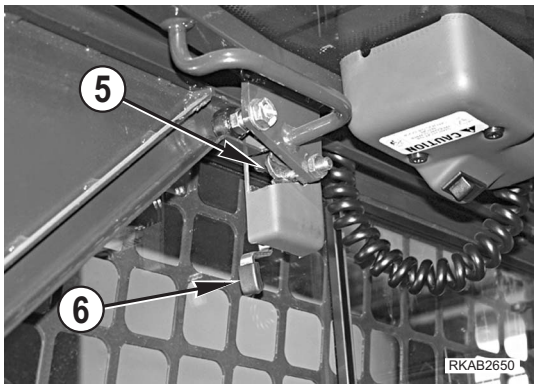

https://truckmanualshub.com/

3.5.3.3 WINDSHIELD DETERGENT RESERVOIR (only for cab with front door)

The reservoir (1) is positioned inside the engine compartment and contains the detergent for the front door.
Make sure that the reservoir is always full.
If necessary, add non-flammable detergent of the type used for cars. While topping up, be careful to prevent dust from getting into the reservoir.

IMPORTANT

- **To fill the reservoir, use only non-flammable detergent of the type used for cars.**
- **Do not use the antifreezes used in engine cooling systems.**

Quantity of detergent to be mixed with water

Proportions vary according to ambient temperature. Before topping up, it is advisable to dilute the detergent with water according to the quantities indicated in the following table.

Area, season	Proportions	Freezing temperature
Normal	Detergent 1/3 - Water 2/3	-4°C
Cold area - winter	Detergent 1/2 - Water 1/2	-6°C
Very cold area - winter	Undiluted detergent	-16°C

https://truckmanualshub.com/

3.5.3.4 RAISING THE CAB

WARNING

- **Raise the cab only with the machine parked on a firm and level surface and with arm lowered to the ground complete with bucket or any other optional equipment. Make sure that the surface on which the machine is parked is not slippery.**
- **Before raising the cab, make sure that the engine hood is open.**
- **The cab must be raised or lowered by two persons, one per side, and it is important to make sure that the handles and hold points are not dirty with oil or grease.**
- **After raising the cab, always engage the safety split pin of the cab overturning protection lock.**
- **Do not carry out any operation on the machine if the safety split pin of the cab overturning protection lock is not engaged.**
- **Always tighten the cab fastening screws with the torque indicated in "4.4.2 SPECIFIC DRIVING TORQUES".**

To carry out some maintenance or routine operations it is necessary to raise the cab, an operation that must be carried out by two persons according to the prescribed procedure.

1 - Stop the machine on firm and level ground.

2 - Lower the equipment to the ground.

3 - Apply the parking brake and lock the controls by lifting the safety bars.

4 - Stop the engine as indicated in "3.8 STOPPING THE ENGINE".

5 - Remove the rear screws (1) that fasten the cab. Use a 19 mm hexagon spanner.

6 - With the help of another person, raise the rear part of the cab using the appropriate handles and overturn it forwards until it stops.

7 - Engage the safety split pin (2) of the cab overturning protection lock (3).

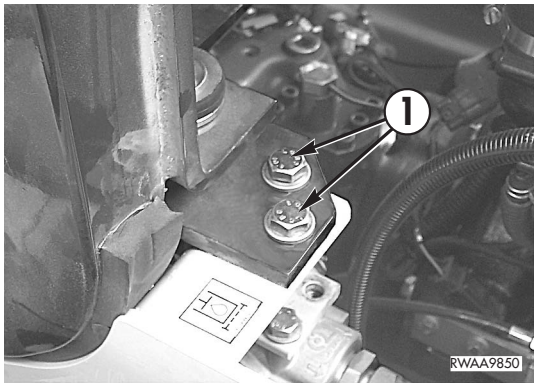

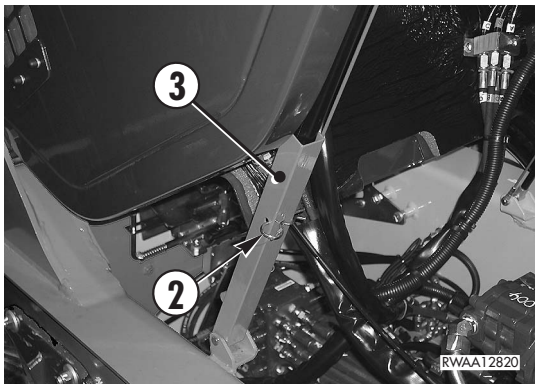

https://truckmanualshub.com/

CAUTION

- **When lowering the cab, be careful to the hold points and carry out the operation with the help of another person.**

1 - Remove the safety split pin (2) of the cab overturning protection lock (3) and put it in the appropriate seat (4).

2 - Lower the cab until it touches the support surface.

3 - Put back the fastening screws (1) and tighten them with the torque indicated in "4.4.2 SPECIFIC DRIVING TORQUES".

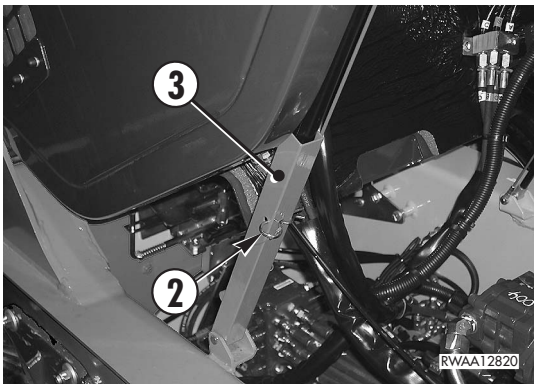

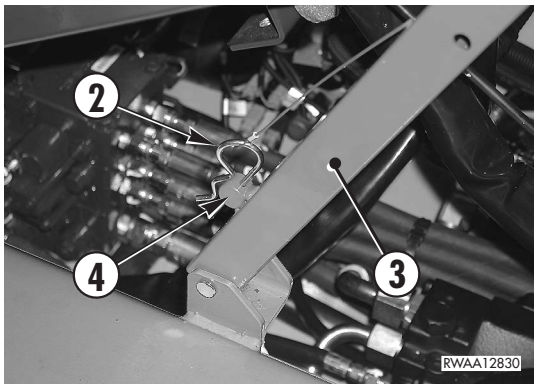

https://truckmanualshub.com/

3.5.4 STANDARD SEAT

The seat can be adjusted longitudinally and the operator can choose the driving position that is most suitable for his physique.
The longitudinal adjustment of the seat is obtained by operating the lever (1) and making the seat slide on the guides; once the desired position has been found, release the lever and carry out slight movements, in order to make sure that the lock pin is engaged in its seat.

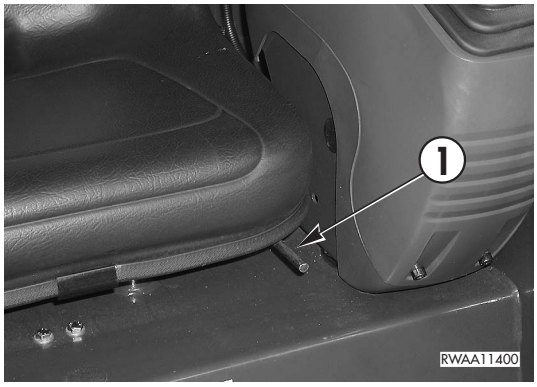

3.5.5 CUSHIONED SEAT

This seat is extremely comfortable, offering four adjustment options:

a - longitudinal adjustment;

b - back inclination adjustment;

c - adjustment of the suspension, aimed at dampening the inevitable vibrations and jerks as much as possible;

d - seat cushion inclination adjustment.

The operator can choose the driving position that is most suitable for his physique.
The longitudinal adjustment of the seat is obtained by operating the lever (1) and making the seat slide on the guides; once the desired position has been found, release the lever and carry out slight movements, in order to make sure that the lock pin is engaged in its seat.
The back adjustment is achieved by operating the lever (2); operate the lever and try to find the position that is most suitable for the operatorís physical structure. Three different degrees of inclination are possible.
The adjustment of the suspension is carried out with the lever (3), according to the operatorís weight. The suspension can be stiffened or lightened according to the operatorís needs; adjust the seat suspension by positioning the lever (3) in one of the five seats available for this purpose. Shift the lever to the left to stiffen the suspension or to the right to lighten it.
The inclination of the seat cushion is obtained by operating the lever (4) and positioning the front part of the cushion at the same time; it is possible to select 2 different positions.

https://truckmanualshub.com/

3.5.6 SAFETY BELT

WARNING

- **Before starting the engine, fasten the safety belt.**
- **The safety belt must be changed when it is frayed, damaged or worn and in any case every 4 years.**

The safety belt (1) is of the type with two coupling points and adjustable length (2); it must be well tightened and hold the operatorís hips, while leaving the upper part of his body completely free.

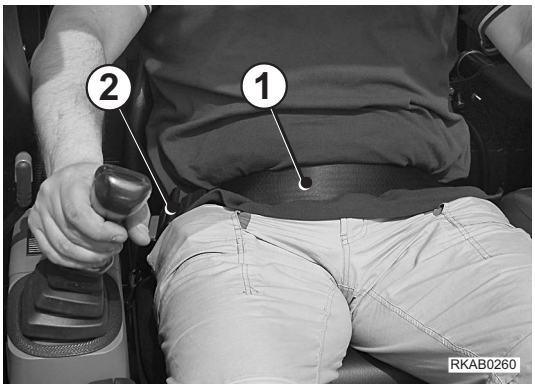

3.5.7 EMERGENCY EXIT

The machine is provided with an emergency exit located in the rear window (1).
In case of emergency, pull the plate (2) positioned on the upper side of the window and remove the weather strip completely.
Push the window toward the outside.

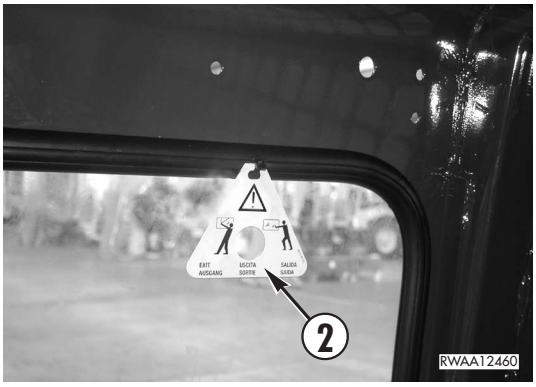

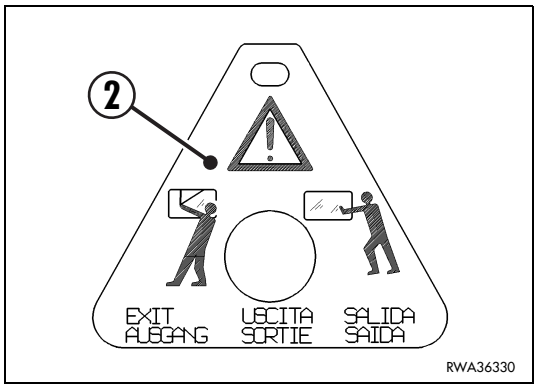

https://truckmanualshub.com/

3.5.8 TECHNICAL DOCUMENTATION CASE

CAUTION

- **The operation manual and the spare parts catalogue are integral parts of the machine and must accompany it even in case of resale.**

The operation and maintenance manual must be handled with care and kept aboard, so that it can be easily consulted at any moment; put the manual in the technical documentation case positioned inside the cab, where also the ownership documents and the logbook are usually kept.

3.5.9 FIRE EXTINGUISHER

CAUTION

- **The machineís owner must provide for installing and fixing the fire extinguisher where prescribed.**
- **Controllare periodicamente lo stato di carica dell'estintore.**

If the operator expects that he may need a fire extinguisher (1) on the machine, he must install it by fixing it on the rear left side of the cab

3.5.10 FIRST AID KIT

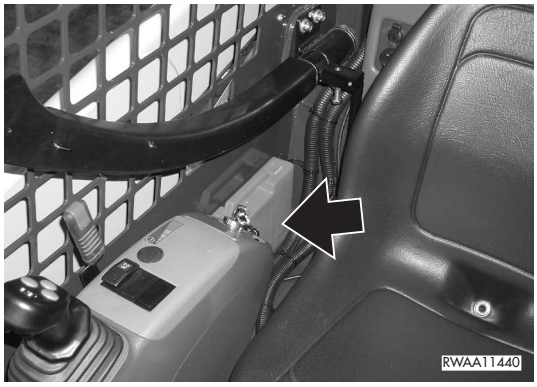

CAUTION

- **Periodically make sure that the first aid kit contains the necessary disinfectants, bandages, medicins, etc. and check their conditions and expiry date.**

The first aid kit must be installed by the owner of the machine and positioned inside the cab, on to the right side of the rear wall.

https://truckmanualshub.com/

3.6 USE OF THE MACHINE

3.6.1 CHECKS BEFORE STARTING THE ENGINE

3.6.1.1 VISUAL CHECKS

WARNING

- **Dirt, oil and fuel in the engine compartment near its hot parts may damage the machine and even cause fires.**
  Check frequently and eliminate any leakage; if leakages occur repeatedly, contact your Komatsu Dealer.

Before starting the engine, check around and under the machine to verify:

1 - if there are loose screws or nuts;

2 - if there are oil, fuel or coolant leakages;

3 - the wear of the work equipment;

4 - the fastening of the electrical connections;

5 - the fastening of the engine exhaust pipe and manifold;

6 - the condition of the rims and the wear and condition of the tyres;

7 - if the safety and warning plates are sufficiently clean;

8 - if the access handles and footboards of the operatorís cab are clean.

Any leak or anomaly must immediately be repaired and any trace of oil or grease must be removed.
Further visual checks concern:

9 - the condition of the safety belt;

10 - the efficiency of the instruments and of the dashboard;

11 - the condition of the cab windows and the efficiency of the working lights and direction indicators on the machines provided with them.

3.6.1.2 DAILY CHECKS

WARNING

- **Do not smoke while refuelling or topping up the oils and do not use naked flames or non-homologated lighting means to check the fuel and oil levels, in order not to cause fires.**
- **If fuel, oil, or lubricant are spilled while filling the tanks, clean the dirty areas immediately.**

Before starting any operation, check the engine coolant, engine oil and hydraulic circuit oil levels.
At the end of work, provide for refuelling, in order to avoid the formation of condensation, always checking the fuel level on the indicator provided on the dashboard.

IMPORTANT

- **Avoid filling the tank completely, in order to leave room for the diesel oil to expand.**
- **After refuelling, put back the filler cap, making sure that the breather hole is completely open.**
- **Check the engine oil level and the hydraulic circuit oil level with the machine in horizontal position and the bucket resting on the ground.**

https://truckmanualshub.com/

3.6.1.3 OPERATIONAL CHECKS

WARNING

- **All the checks must be carried out by the operator while seated, with fastened safety belt.**
- **If the machine has been stopped after use or in order to carry out maintenance operations, the safety devices may have been inadvertently disconnected; when the operator gets on the cab, he must make sure that all the safety locks of the equipment controls are in the correct position and therefore that the equipment cannot move suddenly and cause accidents.**

The checks concern:

1 - the locking of the safety bars;

2 - the hand accelerator idling position;

3 - the neutral position of the controls;

4 - the application of the parking brake.

The following check is carried out by turning the ignition key to position «I» in order to apply voltage to the control panel and check the functionality of the acoustic alarm, of the fuel level indicator and of the engine oil pressure, generator and preheating warning lights.

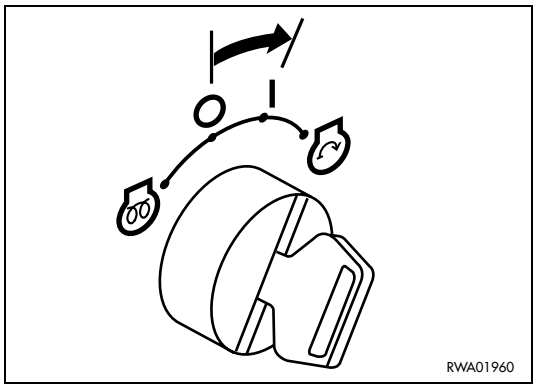

https://truckmanualshub.com/

3.6.2 STARTING THE ENGINE

⚠ WARNING

- **Before starting the engine, carefully read the instructions and information regarding safety given in this manual and make sure that you know the controls perfectly.**
  From the moment in which the engine is started, the operator is directly responsible for any damage that may be caused by wrong manoeuvres and non-compliance with the safety regulations in force.
- **Before starting the engine, make sure that there is no one within the operating radius of the machine and sound the horn.**

3.6.2.1 STARTING WITH WARM ENGINE OR IN TEMPERATE CLIMATES

1 - Turn the ignition key directly to position «⚙» (START).

2 - As soon as the engine starts, release the ignition key, which will automatically return to position «**I**».

IMPORTANT

- **If the engine does not start within 15 seconds, release the key, which will automatically return to position «I» and wait for 30 seconds before trying again.**

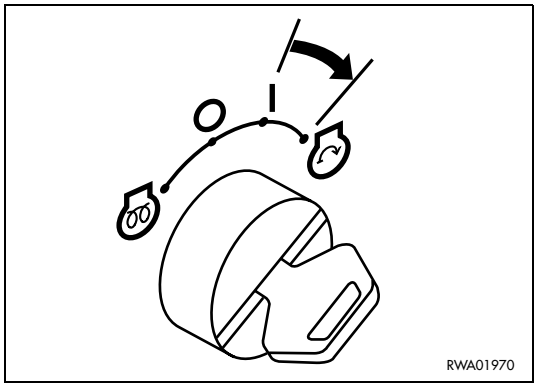

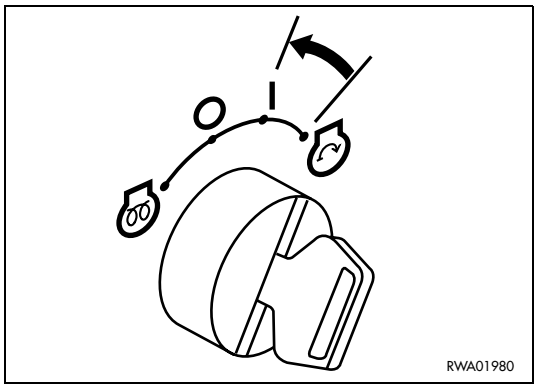

https://truckmanualshub.com/

3.6.2.2 STARTING WITH COLD ENGINE OR IN COLD CLIMATES

⚠ WARNING

- **Do not use any fluids or products that facilitate the cold starting of the engine, since these are ether-based and may cause explosions.**

1 - Pull the accelerator lever until reaching half of its stroke and turn the ignition key to the preheating position «⏲» for maximum 13 seconds in the coldest weather.
The preheating is signalled by the warning light positioned on the dashboard.

2 - Turn the ignition key to position «⏲» (START) until the engine starts and for maximum 15 seconds.

3 - As soon as the engine starts, release the ignition key, which will automatically return to position «I» release the ignition key, which will automatically return to position ´Iª and reduce the speed to idling.

IMPORTANT

- **If the engine does not start at the first attempt, repeat the operations 1 and 2 after waiting for at least 1 minute, in order not to overload the battery.**

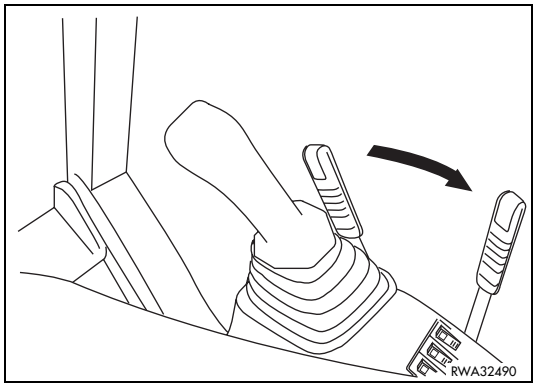

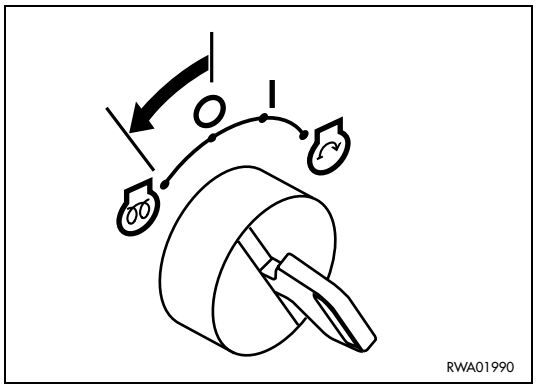

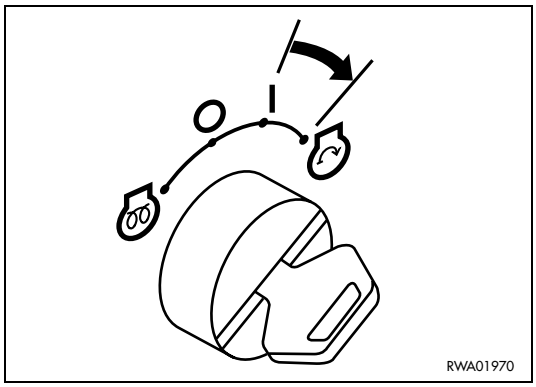

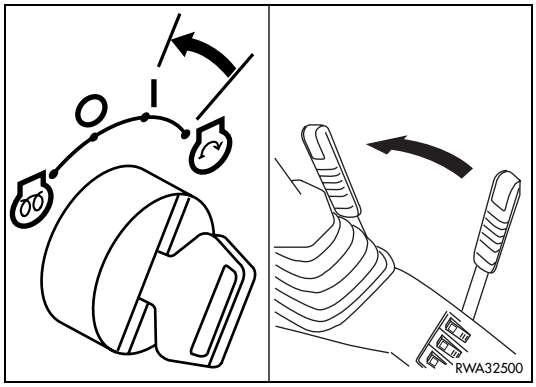

https://truckmanualshub.com/

3.6.3 WARMING THE ENGINE

1 - After starting the engine, let it warm up before starting work.

2 - The ideal warming up of the engine is achieved by making the engine run at idling speed by means of the hand accelerator.

IMPORTANT

- **Do not accelerate completely or abruptly until the coolant temperature has reached at least 60ºC, which can be checked on the indicator positioned on the dashboard.**

3 - To reduce the time necessary to warm up the engine, accelerate now and then.

4 - During the warming up of the engine, check the colour of the exhaust gas and if there are abnormal noises or vibrations; any anomaly must be verified and its cause must be eliminated.

3.6.4 HEATING THE HYDRAULIC OIL

When warming up the engine, especially in the cold season, it is advisable to heat also the hydraulic system oil.

For this reason, when the coolant temperature has reached approximately 60ºC, proceed as follows:

1 - Release the safety device of the controls by lowering the safety bars (see "3.3.5 pos. 1 - SAFETY BARS").

2 - Slowly extend and retract the lifting and bucket cylinders completely for several times.

3 - Lower the bucket to the ground and lock the safety device again by lifting the safety bars (see "3.3.5 pos. 1 - SAFETY BARS").

3.6.5 HOW TO MOVE THE MACHINE (ISO PATTERN CONTROL SYSTEMERN)

⚠ CAUTION

- **The procedures to be followed to use any control systems different from the ISO and OPTION PATTERNS are described in section "OPTIONAL EQUIPMENT" (See "6.5 HAND & FOOT CONTROL SYSTEM"). Carefully read and be sure to understand the contents of this section before using the machine.**

⚠ WARNING

- **Before moving the machine, make sure that you know the control functions and all the relevant safety regulations perfectly.**
- **The operator must be seated in the driving position with fastened safety belt.**
- **Before moving the machine, check the position of the rear-view mirrors and make sure that there is no one within the operating radius of the machine and that there are no obstacles in the surrounding area.**
- **Be extremely careful when engaging the reverse and make sure that there are no persons, working means or obstacles in the way.**
- **Avoid manoeuvres or changes of direction when travelling at full speed, since the manoeuvres carried out in these conditions cause abrupt movements.**
- **Do not use the speed increase function when changing direction or carrying out a counter-rotation.**
- **The use of the speed increase function is allowed only for the fast speed transfers of the machine.**

https://truckmanualshub.com/

Before moving the machine, check the instruments, warm up the engine and the hydraulic system oil, make sure that the safety device of the controls is released (safety bars down) and the bucket is folded; the equipment control lever must be in neutral position.
Release the parking brake.

1 - Pull the hand accelerator lever and set the engine running at idling speed.

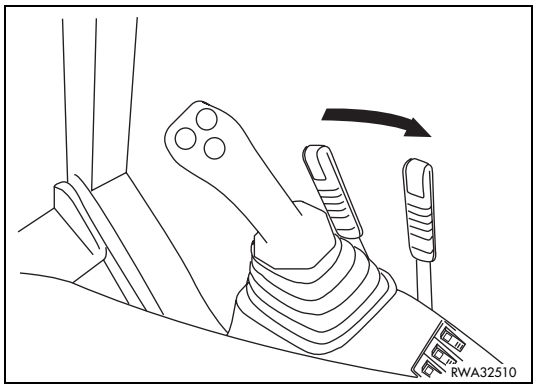

2 - Operate the lever (1), shifting it forward to make the machine advance or backward to make it move in reverse.

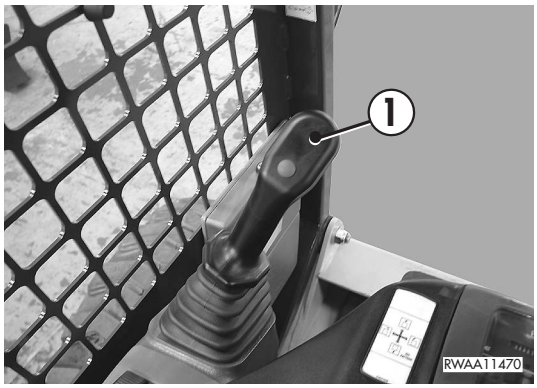

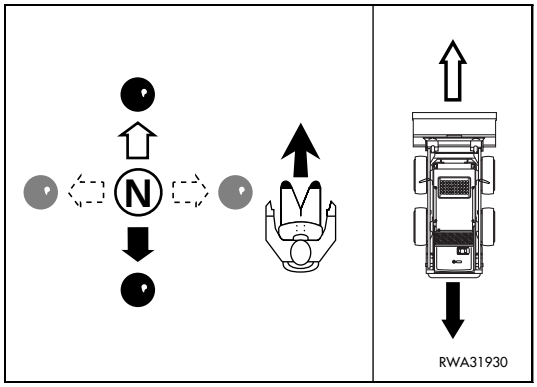

https://truckmanualshub.com/

3.6.5.1 STEERING (CHANGING DIRECTION)

WARNING

- **If possible, avoid any abrupt change of direction. Counterrotations should be carried out with the machine running at moderate speed.**
- **When travelling on roads, avoid carrying out counterrotations, since they may create dangerous situations; carry out counterrotations only during work.**

CHANGING DIRECTION WHEN THE MACHINE IS NOT MOVING

To turn to the LEFT, operate the travel lever as indicated below. To move FORWARD, push the lever to the left with 45º inclination. To move BACKWARD, pull the lever to the right with 45º inclination.

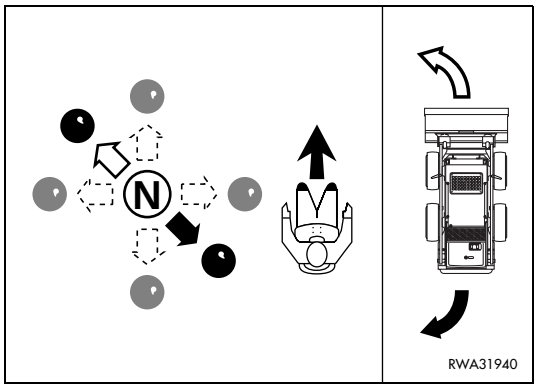

To turn to the RIGHT, operate the travel lever as indicated below. To move FORWARD, push the lever to the right with 45º inclination. To move BACKWARD, pull the lever to the left with 45º inclination.

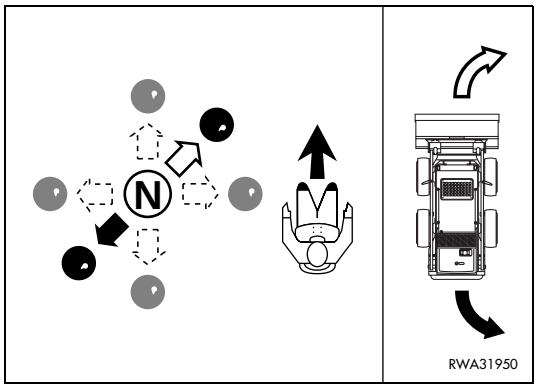

https://truckmanualshub.com/

CHANGING DIRECTION WHEN THE MACHINE IS MOVING

To turn to the LEFT, rotate the travel lever anticlockwise by approximately 45°.

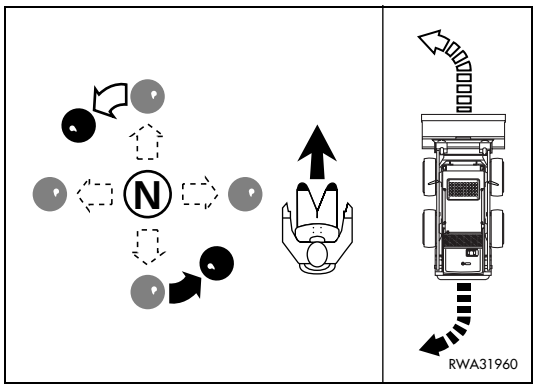

To turn to the RIGHT, rotate the travel lever clockwise by approximately 45°.

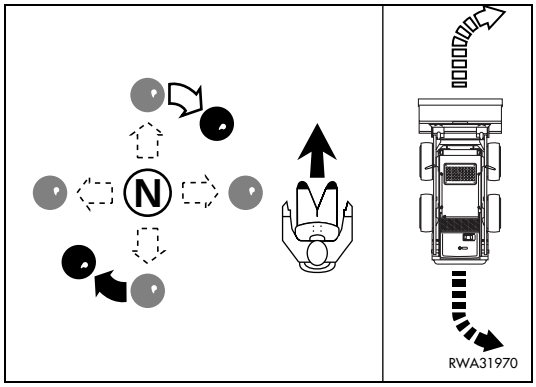

HOW TO CARRY OUT A COUNTERROTATION (with the machine not moving)

To turn to the LEFT, shift the travel lever to the left with an angle of 90º with respect to the longitudinal axis.

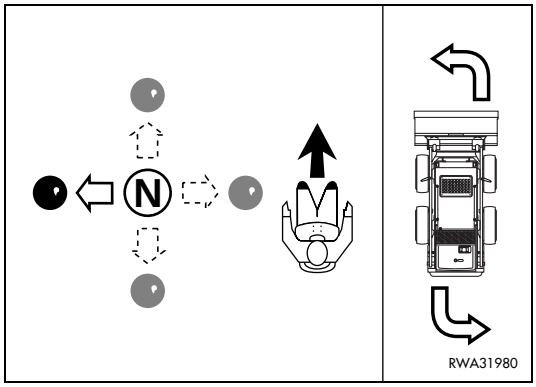

To turn to the RIGHT, shift the travel lever to the right with an angle of 90º with respect to the longitudinal axis.

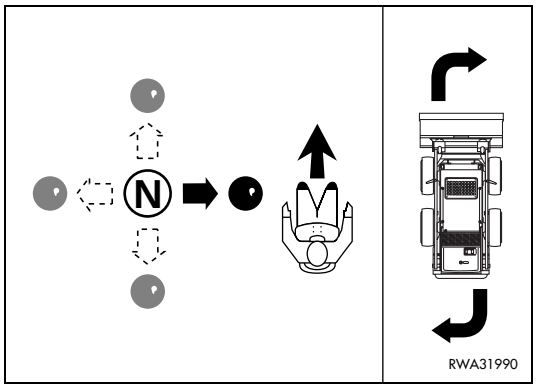

https://truckmanualshub.com/

3.6.6 HOW TO MOVE THE MACHINE (OPTIONAL PATTERN CONTROL SYSTEM)

CAUTION

- **The procedures to be followed to use any control systems different from the ISO and OPTION PATTERNS are described in section "OPTIONAL EQUIPMENT" (See "6.5 HAND & FOOT CONTROL SYSTEM"). Carefully read and be sure to understand the contents of this section before using the machine.**

WARNING

- **Before moving the machine, make sure that you know the control functions and all the relevant safety regulations perfectly.**
- **The operator must be seated in the driving position with fastened safety belt.**
- **Before moving the machine, check the position of the rear-view mirrors and make sure that there is no one within the operating radius of the machine and that there are no obstacles in the surrounding area.**
- **Be extremely careful when engaging the reverse and make sure that there are no persons, working means or obstacles in the way.**
- **Avoid manoeuvres or changes of direction when travelling at full speed, since the manoeuvres carried out in these conditions cause abrupt movements.**
- **Do not use the speed increase function when changing direction or carrying out a counter-rotation.**
- **The use of the speed increase function is allowed only for the fast speed transfers of the machine.**

Before moving the machine, check the instruments, warm up the engine and the hydraulic system oil, make sure that the safety device of the controls is released (safety bars down) and the bucket is folded; the equipment control levers must be in neutral position.
Release the parking brake.

1 - Pull the hand accelerator lever and set the engine running at idling speed.

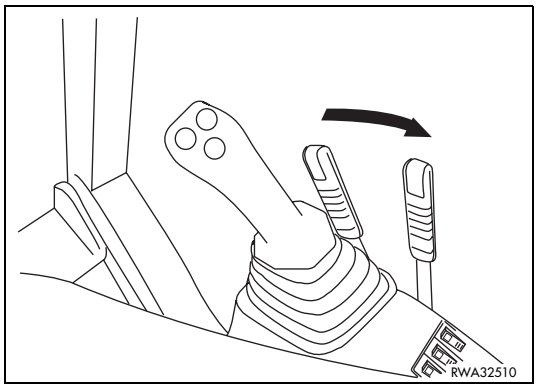

https://truckmanualshub.com/

2 - Operate the joysticks (1) and (2) at the same time, shifting them forward or backward to move the machine.

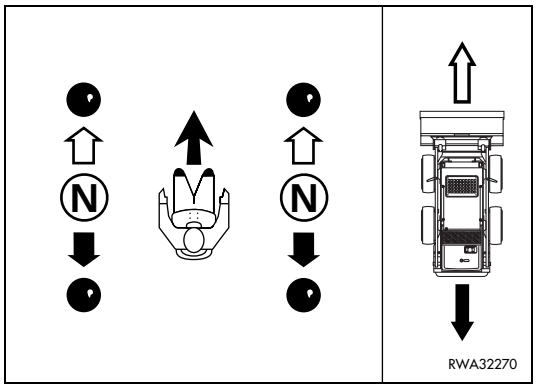

https://truckmanualshub.com/

3.6.6.1 STEERING (CHANGING DIRECTION)

WARNING

- **If possible, avoid any abrupt change of direction. Counterrotations should be carried out with the machine running at moderate speed.**
- **When travelling on roads, avoid carrying out counterrotations, since they may create dangerous situations; carry out counterrotations only during work.**

CHANGING DIRECTION WHEN THE MACHINE IS NOT MOVING

To turn to the LEFT, operate the right joystick by proceeding as follows: to move FORWARD, push the joystick; to move BACKWARD, pull the joystick.

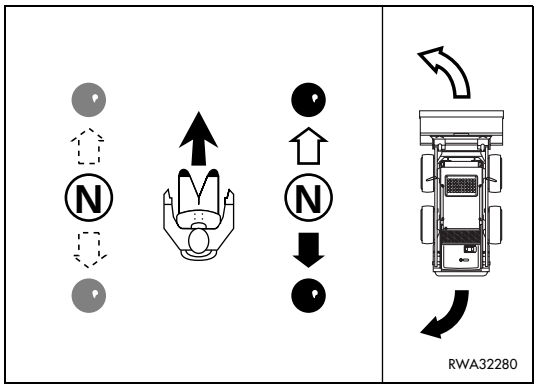

To turn to the RIGHT, operate the left joystick by proceeding as follows: to move FORWARD, push the joystick; to move BACKWARD, pull the joystick.

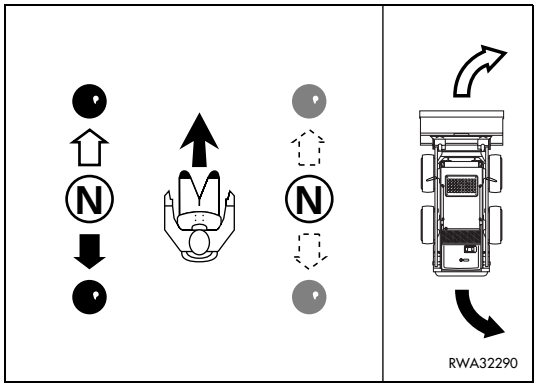

https://truckmanualshub.com/

CHANGING DIRECTION WHEN THE MACHINE IS MOVING (THE TWO JOYSTICKS ARE IN THE SAME POSITION)

To turn to the LEFT, shift the left joystick to the NEUTRAL position (N): the machine will turn to the LEFT.

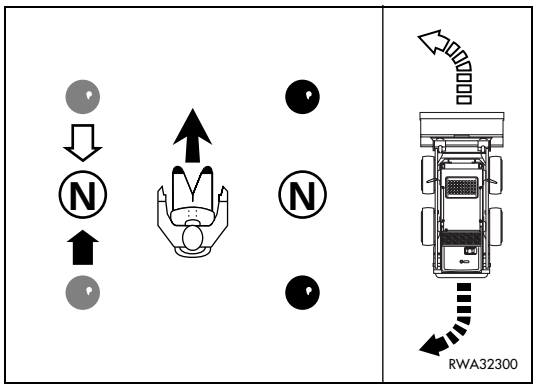

To turn to the RIGHT, shift the right joystick to the NEUTRAL position (N): the machine will turn to the RIGHT.

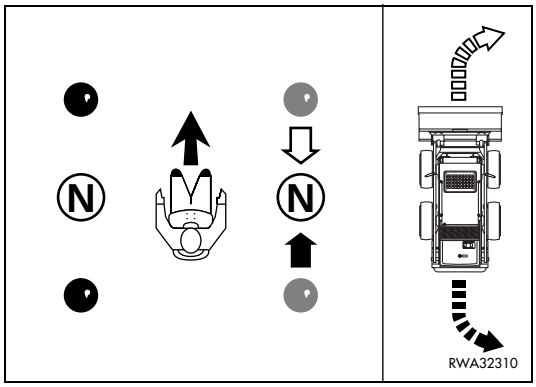

HOW TO CARRY OUT A COUNTERROTATION (with the machine not moving)

To turn to the LEFT, pull the left joystick backward and push the right joystick forward.

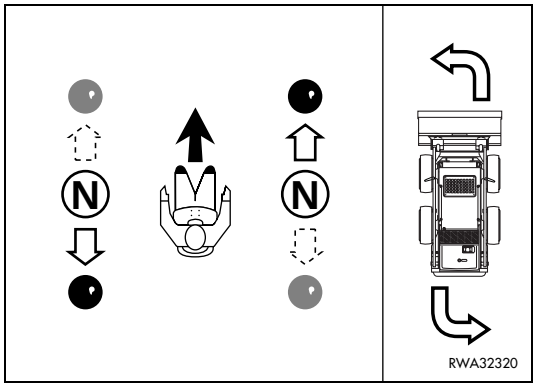

To turn to the RIGHT, pull the right joystick backward and push the left joystick forward

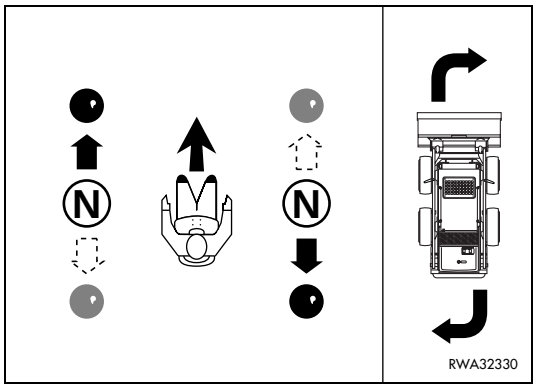

https://truckmanualshub.com/

3.6.7 MOVING ON SLOPES

⚠ WARNING

- **Before working on slopes, always check the functionality of the parking brake.**
- **Always go up or down slopes at moderate speed and with the heavier end of the loader always directed towards the top of the slope.**
- **When going up or down slopes, keep the equipment lowered; movements with raised arm may cause the machine to overturn.**
- **Do not use the speed increase function when the machine travels on slopes.**

When working on slopes some precautions should be taken to avoid risks for the operator and anyone in the vicinity; the checks and operations to be carried out are the following:

1 - Always check the work area for snow, landslips, gravel, loose ground and anything that may suddenly modify the work conditions and the stability of the machine.

2 - When going up or down a slope with empty bucket, make sure that the bucket is always directed downwards with respect to the machine body.

3 - When going up or down a slope with full bucket, make sure that the bucket is always directed upwards with respect to the machine body.

4 - When moving the machine during work, always lower the bucket.

5 - Carry out any lateral movement on a flat surface at the beginning or at the end of the slope; if this is not possible, move obliquely, keeping the machine axis as parallel to the slope direction as possible.
Do not move too obliquely or, even worse, with the machine axis rotated by 90º with respect to the slope direction.

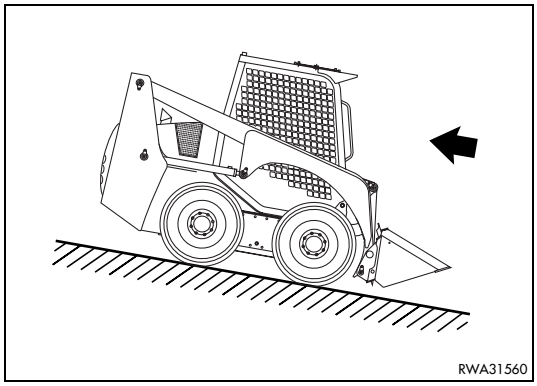

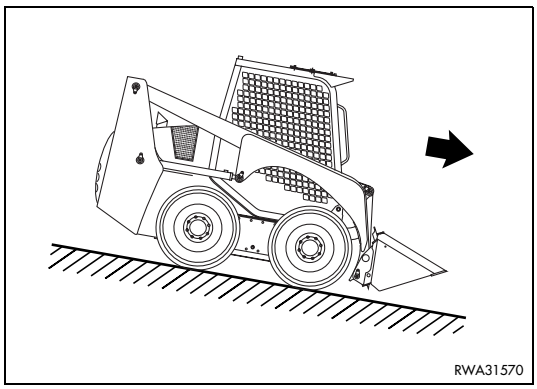

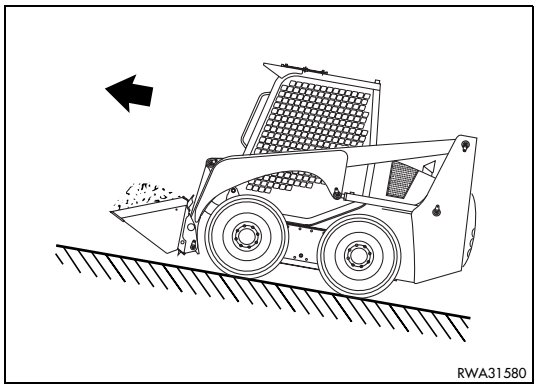

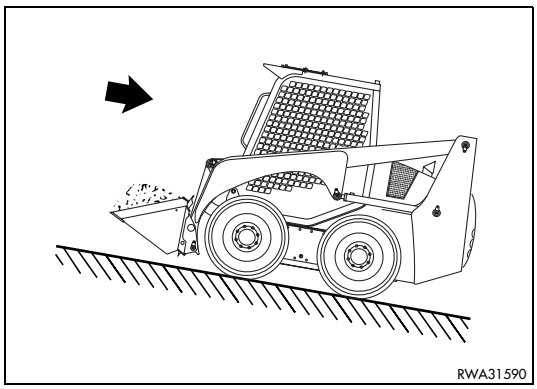

https://truckmanualshub.com/

3.6.8 MAXIMUM IMMERSION DEPTH

WARNING

- **If it is necessary to work with the machine immersed in water on river banks or sea shores, always check the water depth and the current flownte.**
- **Make sure that the surface on which you are working is sufficiently firm.**

If it is necessary to work with the machine immersed in water, make sure that the maximum immersion depth does not exceed 24 cm and in any case that the engine cooling fan does not touch the water, since it may get damaged or even break.

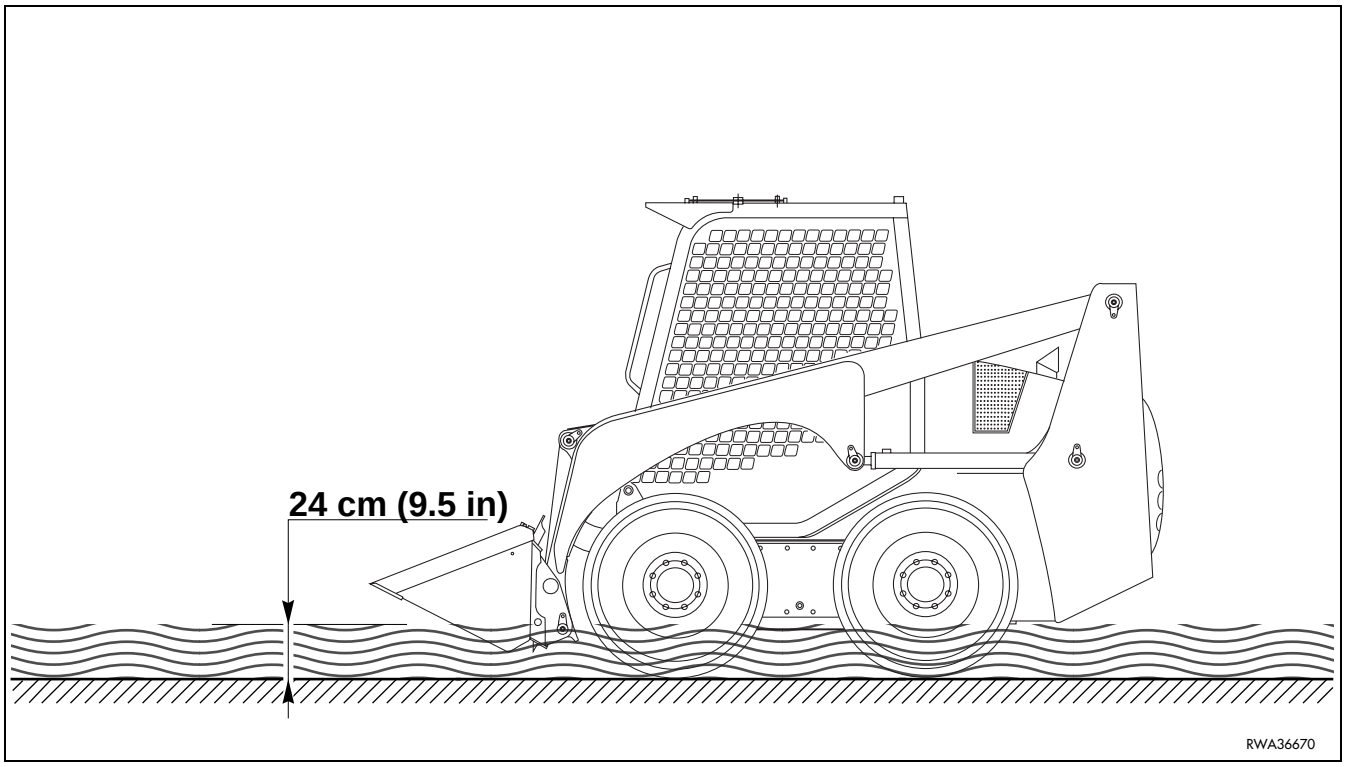

CAUTION

- **When working in water or on muddy ground, lubricate the articulated joints more frequently than usual.**
- **After work, remove any dirt or mud and lubricate the articulated joints.**

https://truckmanualshub.com/

3.7 PARKING THE MACHINE

3.7.1 PARKING ON LEVEL GROUND

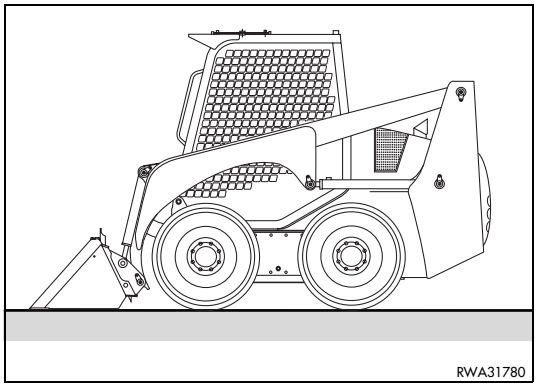

WARNING

- **Park the machine on firm and level ground, in a sufficiently wide space, so that checks, daily lubrication and refuelling can be carried out without problems.**
- **Lower the work equipment to the ground.**
- **Keep to all the safety rules, in order to avoid any movement of the machine when the operator is absent.**
- **When leaving the machine, remove the ignition key.**

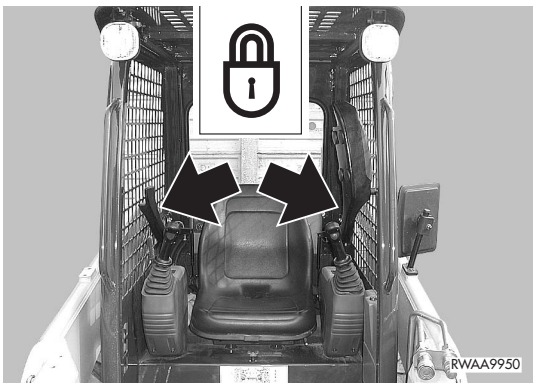

1 - Park the machine on firm and level ground, in a sufficiently wide space.
2 - Lower the bucket to the ground.
3 - Lock the equipment and travel hydraulic control by shifting the safety bars to the lock position (see "3.3.5 pos. 1 - SAFETY BARS").
4 - Engage the retainer to lock the optional equipment control pedal.
5 - Apply the parking brake.
6 - Stop the engine following the procedure indicated in paragraph "3.8 STOPPING THE ENGINE".
7 - Remove the ignition key.
8 - Leave the cab using the handles and the footboards.
9 - Refuel, taking the necessary precautions.

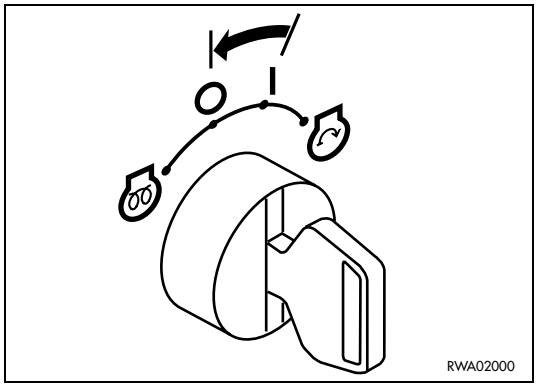

https://truckmanualshub.com/

3.7.2 PARKING ON SLOPES

WARNING

- **The movement of the machine when the operator is not on board may cause serious accidents and even death; to prevent this, carry out the operations described below.**
- **Park on slopes only when it is absolutely necessary.**
- **Park only with the bucket directed downwards.**

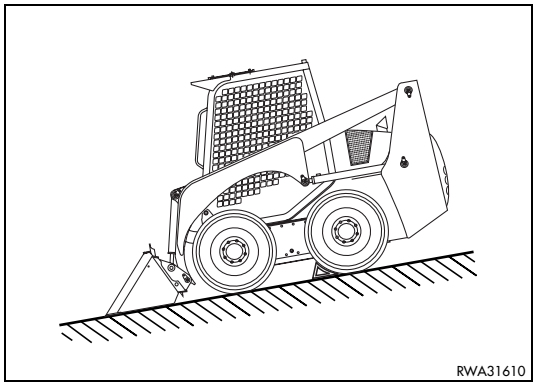

1 - Park the machine with the bucket directed downwards and resting against an obstacle.
If this is not possible due to the absence of natural obstacles, rotate the bucket forward and thrust its teeth into the ground.

2 - Lock the equipment and travel hydraulic control by shifting the safety bars to the lock position (see "3.3.5 pos. 1 - SAFETY BARS").

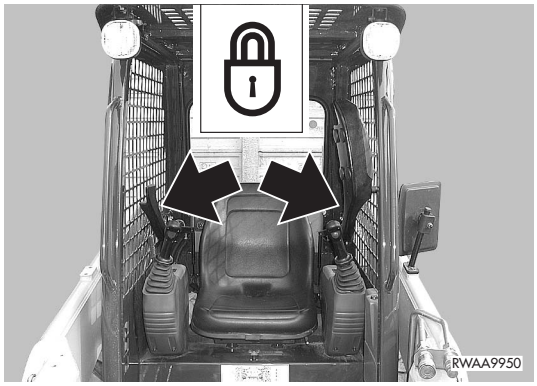

3 - Engage the retainer to lock the optional equipment control pedal.

4 - Apply the parking brake.

5 - Stop the engine following the procedure indicated in paragraph "3.8 STOPPING THE ENGINE".

6 - Remove the ignition key.

7 - Leave the cab using the handles and the footboards.

8 - Position safety wedges under the wheels.

9 - Refuel, taking the necessary precautions.

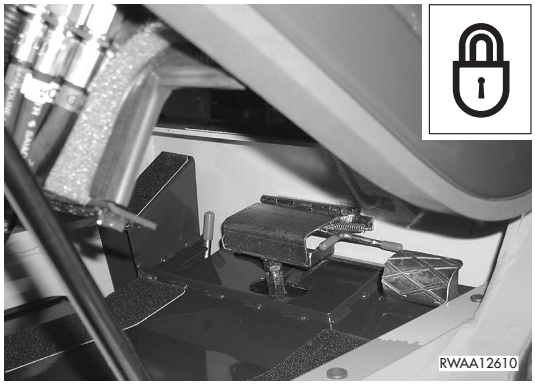

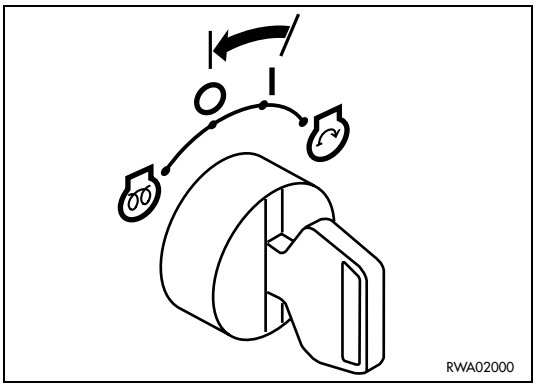

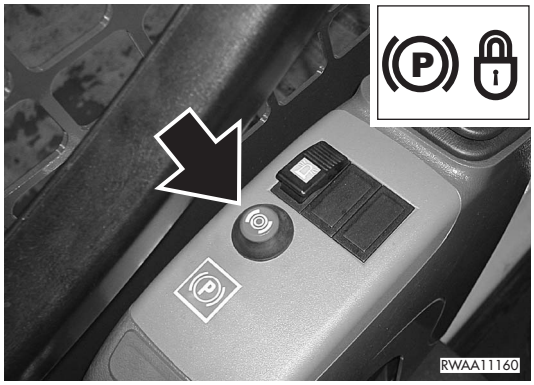

https://truckmanualshub.com/

3.8 STOPPING THE ENGINE

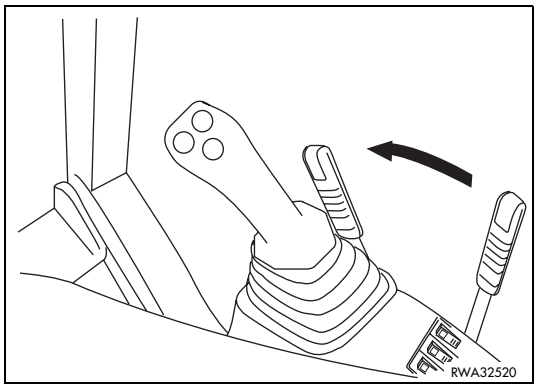

IMPORTANT

- **Do not stop the engine suddenly, except in case of emergency; the sudden stop of the engine while it is running shortens its life.**
- **It is likewise recommended not to stop the engine suddenly if it has been running for a long period and is still hot; in this case, let the engine idle for about 5 minutes, in order to allow it to cool down gradually before stopping it.**

Before stopping the engine, proceed as follows:

1 - Rest the work equipment on to the ground.

2 - Shift the levers to the neutral position and engage the safety devices.

3 - Shift the accelerator lever to the idling position.

Stop the engine by turning the ignition key to position «O» (OFF).

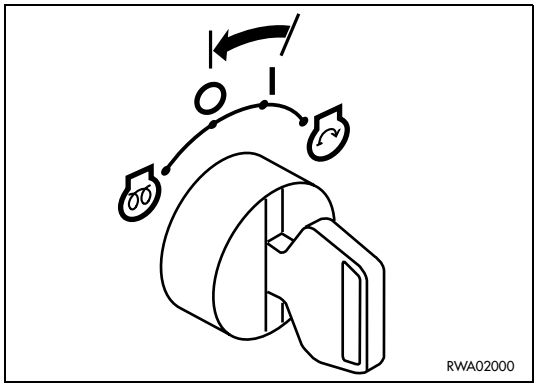

https://truckmanualshub.com/

3.9 TRANSPORTING THE MACHINE ON OTHER VEHICLES

3.9.1 LOADING AND UNLOADING THE MACHINE

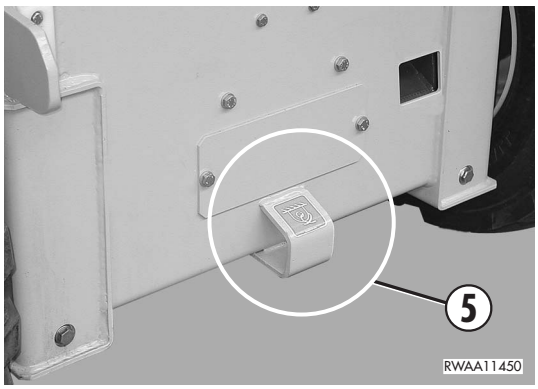

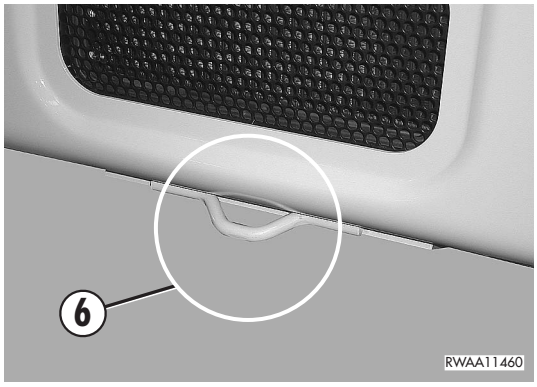

CAUTION

- **The procedures to be followed to use any control systems different from the ISO and OPTION PATTERNS are described in section "OPTIONAL EQUIPMENT" (See "6.5 HAND & FOOT CONTROL SYSTEM").**
  Carefully read and be sure to understand the contents of this section before using the machine.

WARNING

- **The loading and unloading of the machine on/from the means of transport must be carried out on a flat surface and at a safety distance from the edges of ditches or from roadsides.**
- **Block the means of transport by positioning wedges before and behind each wheel.**
- **Make sure that the ramps have the same length, are firmly anchored to the vehicle, are parallel to each other and perpendicular to the loading board; the distance between the ramps must be suitable for the machine gauge.**
- **Assicurarsi che le rampe siano di pari lunghezza, siano fermamente ancorate all'automezzo, siano parallele fra loro e perpendicolari alla sponda di carico; l'interasse deve essere adatto alla carreggiata della macchina.**
- **Position the ramps with a maximum inclination of 15º°.**
- **Remove any trace of oil, grease or ice from the ramps and the loading board.**
- **Do not change direction when the machine is already on the ramps; if necessary, go down and find the correct direction.**

https://truckmanualshub.com/

1 - The machine with empty bucket or without optional accessories must get on the ramps with the bucket (1) at the back and raised from the ground.
2 - Once the machine has been loaded, lower the work equipment to the ground and shift the safety bars to the lock position.
3 - Apply the parking brake.
4 - Stop the engine and remove the ignition key.
5 - Keep the machine in position by putting wedges (2) before and behind the wheels.
6 - Fix the machine with tie-downs or chains (3) in the anchorage points (5) and (6).
7 - Protect the end of the exhaust pipe (4).

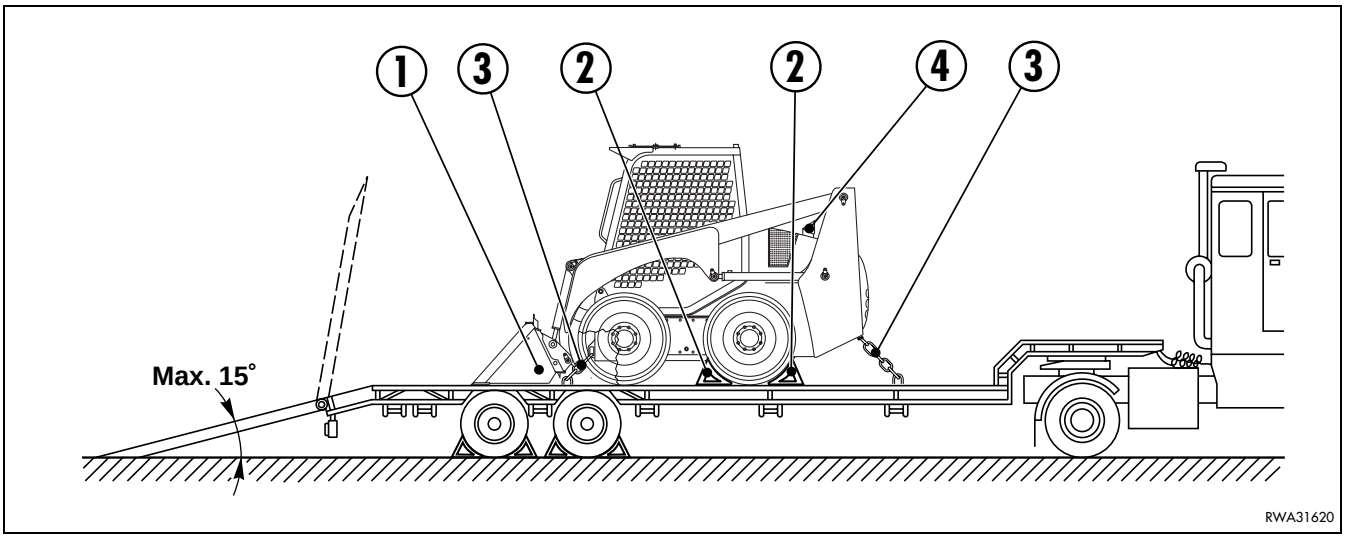

3.9.2 TRANSPORT

1 - Check the overall dimensions of the means of transport: the height, width and weight of the vehicle - machine included - must be compatible with the road and any tunnel, underpass, bridge, electric or telephone line that may be found on the way.
2 - Keep to the regulations in force regarding signals, speed limits, road traffic, authorizations, etc.

https://truckmanualshub.com/

3.10 HOW TO LIFT THE MACHINE

DANGER

- **To lift the machine use sufficiently dimensioned cables; do not use worn cables or cables with broken strands.**
- **Do not lift the machine with the operator on board and make sure that no one is approaching the machine before lifting it.**
- **Before lifting the machine, make sure that the eye bolts are correctly fixed to the cab roof.**

IMPORTANT

- **The owner of the machine is responsible for installing the eyebolts correctly on the cab roof.**
- **Use only eyebolts homologated by Komatsu for this specific type of machine.**
- **Homologated eyebolts must be requested to Komatsu Spare Parts Dpt., specifying the machine model and serial number.**

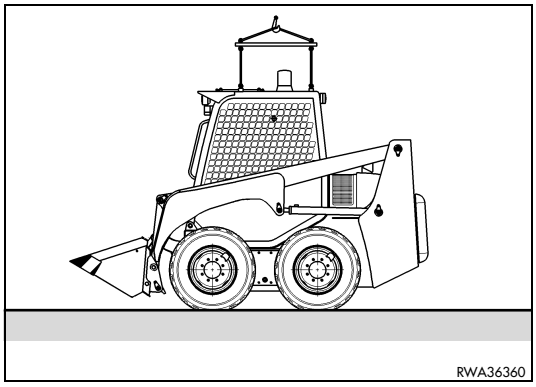

To lift the machine, proceed as follows:

1 - Lower the loader arm to the ground and fold the bucket completely.

2 - Shift the safety bars to the lock position and stop the engine.

3 - Insert metal or nylon ropes in the four eye bolts on the cab roof and fix with the appropriate retainers or safety pins.

4 - Connect the ropes to the upper lifting bar as indicated in the figure.

IMPORTANT

- **Always use the four coupling points provided for the lifting of the machine.**

5 - Lift slowly until the ropes are tensioned and make sure that the machine is fastened correctly before lifting it.

CAUTION

- **When lifting the machine, make sure that it is correctly balanced and that it can be lifted horizontally.**
- **Do not lift the machine with optional equipment installed on it.**

https://truckmanualshub.com/

3.11 PRECAUTIONS TO BE TAKEN IN THE COLD SEASON

During the cold season or in areas where the temperature is particularly low, especially during the night, it is necessary to take some countermeasures meant to limit the damage deriving from low temperatures.

3.11.1 FUEL AND LUBRICANTS

1 - Change the fuel and use the winter fuel ASTM D975 No. 1.

2 - Change the engine oil with an oil with suitable viscosity.
For the relevant specifications, see "4.3 FUEL, COOLANT AND LUBRICANTS".

3.11.2 COOLANT

⚠ WARNING

- **The coolant containing antifreeze is flammable; do not smoke and do not use naked flames during the checks and when preparing the mixture.**

1 - Use only red permanent antifreeze compatible with aluminium radiators. Pure red antifreeze must be diluted with water (50%) to ensure protection down to -36°C.

2 - Do not mix different brands of antifreeze.

3 - The use of red permanent antifreeze requires only the check of the level and the periodical change of the fluid. It is not necessary to wash the cooling circuit.

4 - In case of doubt regarding the applicable standards for the use of permanent antifreeze, contact your Komatsu Dealer, who will supply you with exhaustive and precise information.

https://truckmanualshub.com/

3.11.3 BATTERY

WARNING

- **To avoid explosions due to the presence of gas, do not provoke sparks and do not use naked flames near the battery.**
- **The battery electrolyte is dangerous. If it comes in contact with the eyes or the skin, immediately rinse with plenty of water and consult a doctor without delay.**

1 - When the ambient temperature decreases, the battery capacity decreases accordingly and, if the battery charge is low, the electrolyte may freeze.
Keep the battery completely charged and insulate it to protect it from low temperatures, so that the machine can be started without problems the following day.

2 - Measure the specific weight of the fluid and check the battery charge percentage, making reference to the following table:

CHARGE PERCENTAGE	FLUID TEMPERATURE			
	20°C	0°C	-10°C	-20°C
100%	1.28	1.29	1.30	1.31
90%	1.26	1.27	1.28	1.29
80%	1.24	1.25	1.26	1.27
75%	1.23	1.24	1.25	1.26

3 - When the electrolyte level is low, add distilled water before starting work, rather than after work, in order to prevent the fluid from freezing during the night.

3.11.4 OTHER PRECAUTIONS

1 - Before using the machine in normal operating conditions, carry out some slow movements either forward and in reverse, and operate all the work equipment cylinders slowly more than once.
These operations serve to warm up and decrease the viscosity of the oil in the hydraulic circuit and the transmission.

3.11.5 PRECAUTIONS TO BE TAKEN AT THE END OF WORK

1 - Completely remove mud and water from the machine body.
Park the machine on firm ground; if the machine must be parked near banks or ditches, park it on wooden boards in order to distribute the weight of the machine on a larger surface.

2 - Be careful to water drops forming on the hydraulic cylinder rods: these drops must be completely removed, since if they freeze the cylinder gaskets may be damaged.
After removing the water drops, protect the rods with oil.

3 - Drain the condensate that may have formed in the tank, to prevent the water from freezing during the night.

4 - Since the battery capacity may decrease considerably at low temperatures, after work cover the battery or remove it and store it at a suitable temperature.

https://truckmanualshub.com/

3.12 PRECAUTIONS TO BE TAKEN IN THE WARM SEASON

1 - At the end of the cold season, change lubricants and fuel.

IMPORTANT

- **The use of permanent antifreeze requires only the check of the level and the periodical change of the fluid. For the relevant specifications, see "4.3 FUEL, COOLANT AND LUBRICANTS".**

2 - Make sure that the cooling fan belt is in good conditions.

3 - Make sure that the fins of the radiator and of the heat exchanger are clean.

4 - Check the radiator cap gasket and spring; in case of doubt regarding tightness and setting, change the cap.>

https://truckmanualshub.com/

3.13 USING THE WORK EQUIPMENT

CAUTION

- **The procedures to be followed to use any control systems different from the ISO and OPTION PATTERNS are described in section "OPTIONAL EQUIPMENT" (See "6.5 HAND & FOOT CONTROL SYSTEM"). Carefully read and be sure to understand the contents of this section before using the machine.**

WARNING

- **Always fasten the safety belt before any manoeuvre.**
- **Before moving the equipment, make sure that there is no one standing in the work area.**
- **Carry out all the possible movements and make sure that the control levers operate correctly.**
- **If visibility is insufficient or there are ducts of any kind, proceed at low speed and ask the assistance of another person.**
- **Before starting work, warn the persons in the vicinity by sounding the horn positioned on the left lever.**

IMPORTANT

- **The basic illustrations shown are those necessary for a correct use and exploitment of the machine; the operator must get to know the controls and the described operating method and learn how to organize work in a free area while seated in the driving position.**

3.13.1 LOWERING THE EQUIPMENT IN CASE OF MACHINE FAILURE

WARNING

- **Carry out the operations remaining seated in the work position with fastened safety belt.**
- **After lowering the equipment to the ground, move the control levers more than once to release any residual pressure.**

If the machine should suddenly stop with raised work equipment due to a mechanical or hydraulic failure, the operator must lower the equipment to the ground before leaving the machine to locate the trouble.
Make sure that the safety bars are lowered (open hydraulic circuit), turn the ignition key to position «**I**» and lower the bucket to the ground by shifting the equipment control lever; only few movements are possible.

https://truckmanualshub.com/

3.13.2 ORGANIZING THE WORK ARE

If after a first inspection the area results to be uneven, encumbered with big obstacles or characterized by considerable height differences, before starting work it is advisable to level the ground as much as possible, both for the machine and for the vehicles to be loaded.
This preliminary operations will make work quicker, ensure better results and at the same time reduce the operatorís stress and the straining of the machine components; furthermore, this will considerably reduce the time necessary to load the trucks destined to transport the material.
To obtain the best performance from the machine it is necessary to synchronize the movements of the equipment with the travelling movements, by operating the levers smoothly and without jerks.
The changes of direction must be carried out correctly with ample steering radiuses; short steering radiuses or counterrotations involve useless efforts of the machine and untimely wear of the tyres.

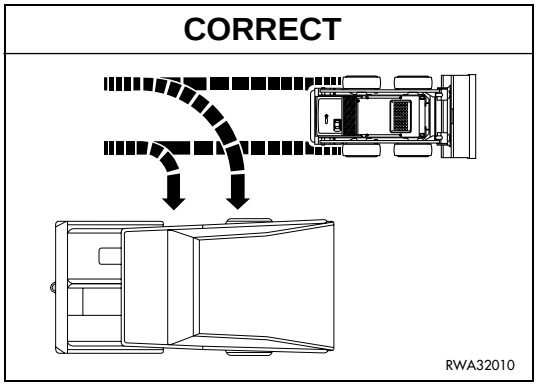

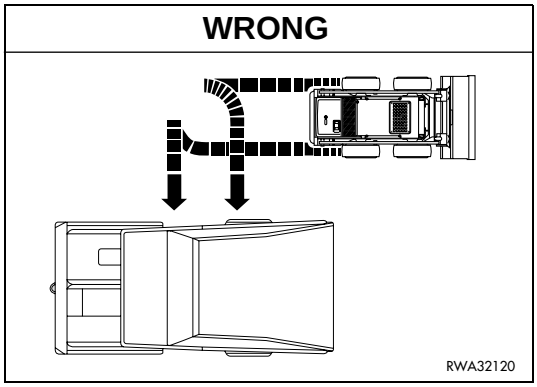

https://truckmanualshub.com/

3.13.3 LOADING MATERIAL ON HEAPS AND ON LEVEL SURFACES

The efficiency of the bucket depends on how the operator begins to load; keep to the following rules:

1 - Start moving with the arm completely lowered and direct the bucket toward the base of the heap.

2 - While the material on top of the heap falls into the bucket, gradually raise the arm and at the same time fold the bucket until reaching the end of stroke.

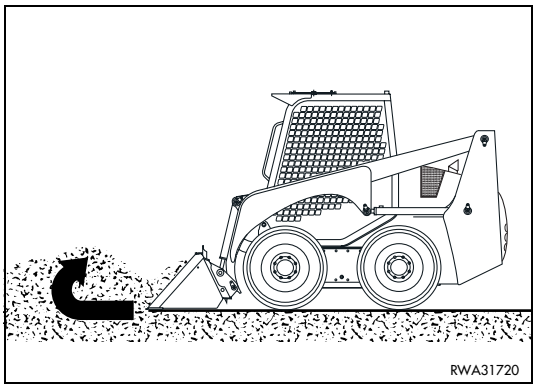

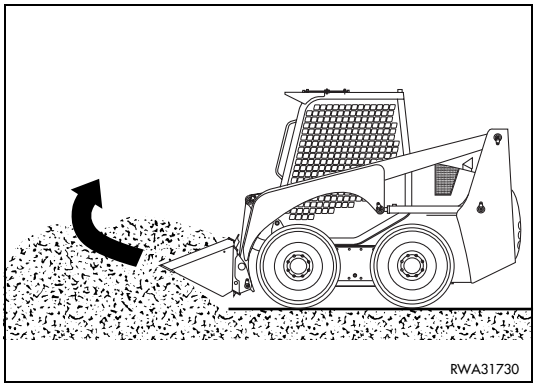

3 - Invert the machine motion and dump the bucket on to the truck.

NOTE

- Start loading the truck from the cab side and, if the material is sufficiently homogeneous, dump from the maximum height in order to increase the compactness of the material and its distribution on the loading surface.

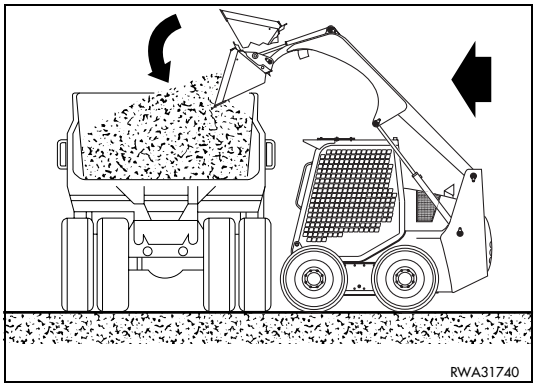

4 - After removing the heap completely, incline the bucket forward, lower the arm until raising the front wheels slightly and, proceeding in reverse, level the ground distributing the material uniformly.
Repeat the operation reducing the inclination of the bucket for the finishing work.

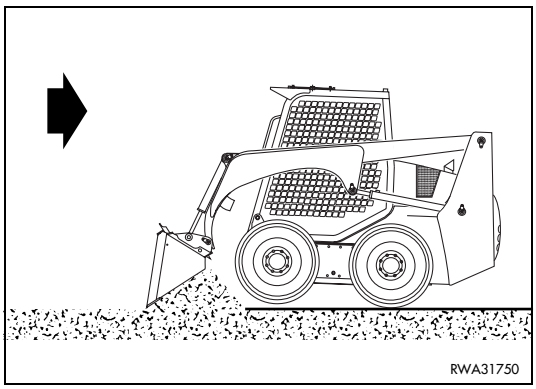

https://truckmanualshub.com/

3.13.4 LOADING MATERIAL ON SLOPES

WARNING

- **The loading of material on slopes is to be carried out only if absolutely necessary, always going up with the bucket directed forward.**
- **Go down slopes in reverse, with the loader directed forward and lowered bucket.**
- **Move changing direction slowly and with the bucket lowered as much as possible.**
- **Absolutely avoid reaching the transversal position with respect to the slope direction.**
- **Sudden movements of the bucket and dangerous positions may cause the machine to overturn and cause serious damage or even death.**

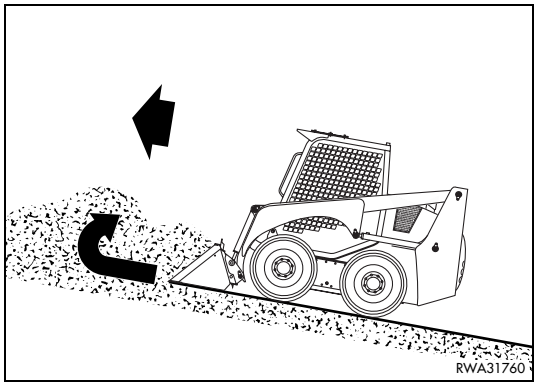

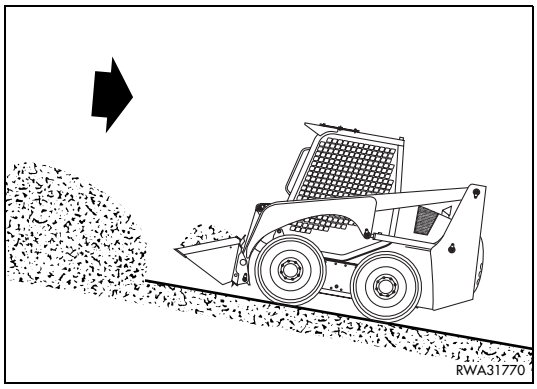

https://truckmanualshub.com/

3.13.5 DIGGING METHOD

1 - At the beginning of work, keep the bucket at the correct penetration angle.

2 - Once the desired digging depth has been reached, position the bucket with its back parallel to bottom of the excavation and then start filling.

3 - During the collection phase, make the bucket and the arm move simultaneously; combined movements facilitate the filling of the bucket and therefore increase productivity.

4 - The removal depth must be correct and suitable for the type of ground; an excessive digging depth may cause the locking of the movements due to the overloading of the engine and pump, and therefore slow down the digging operations.

5 - To dump material on heaps, unload the bucket as soon as it gets near the dumping area; the inertia resulting from the movement will ensure the compaction of the material with no need to use the bucket for this purpose, which avoids impacts and vibrations that facilitate the wear of pins and bushings.

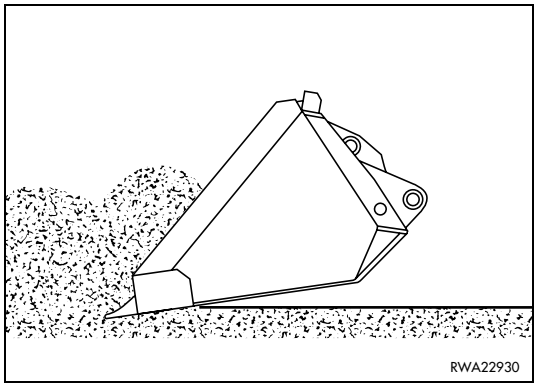

CORRECT
The bucket starts digging with a slight penetration angle.

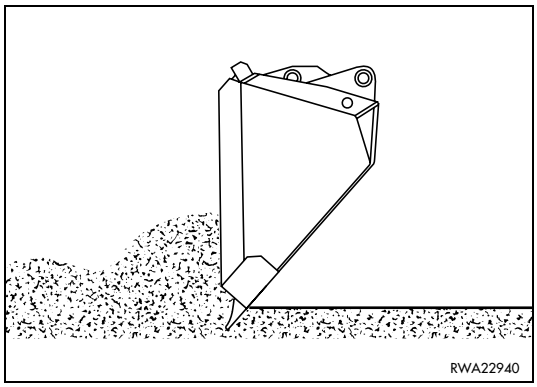

INCORRECT
If the penetration angle is too wide, the bucket is thrusted downwards, slowing down the digging work

DIGGING METHOD

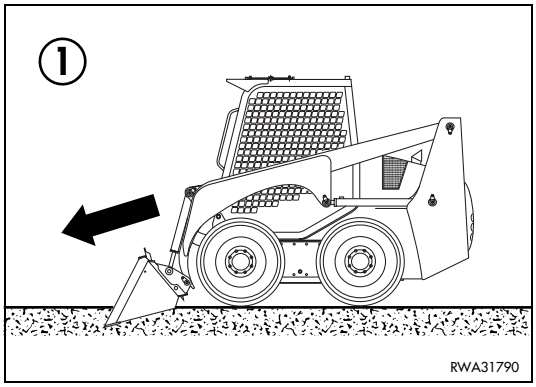

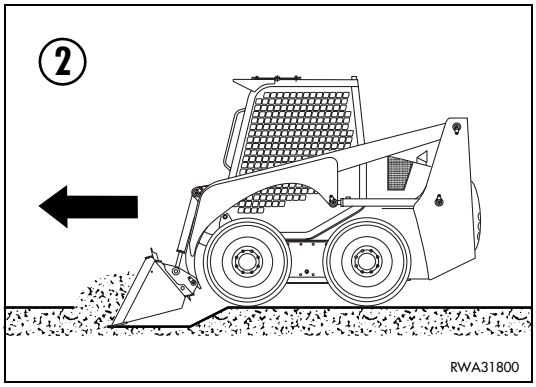

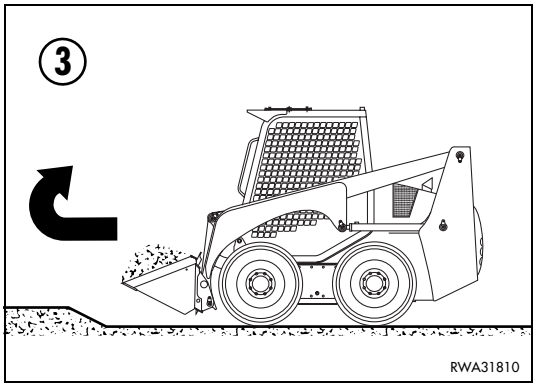

CORRECT DIGGING METHOD

(Sequence 1 - 2 - 3)

https://truckmanualshub.com/

3.13.6 CHANGING THE BUCKET OR THE EQUIPMENT WITH STANDARD RAPID COUPLING

WARNING

- **Stop the machine on a firm and level surface and lower the equipment to the ground.**
- **Before getting off the machine, stop the engine, release the residual pressure by moving the equipment control lever more than once in all directions and lock the controls (safety bars lifted in vertical position).**
- **Clean the upper and lower areas involved in the installation of the bucket or the equipment, removing any trace of dirt or debris, before connecting or disconnecting them to/from the rapid coupling.**
- **Before starting work, make sure that the rapid coupling pins are completely engaged, that they protrude from the tabs (slots) provided on the bucket or on the equipment and that the coupling levers are lowered in horizontal position.**
- **After locking the equipment and before starting work, make sure that the locking pins are correctly engaged and that the length of the protruding parts of the pins is in compliance with the prescribed safety values (see "3.13.6.3 CHECKING THE POSITION OF THE LOCKING PINS").**
- **Lubricate the levers as required and remove any dirt or debris. Lubricate the connection pins as required and keep the area around the pins free of dirt and debris. Always grease the pins with the bucket resting on the ground. Grease according to the routine maintenance schedule or when changing the bucket.**
- **Avoid using your fingers to align the holes, since they may be cut in case of sudden or uncontrolled movements.**

The loader has been designed in such a way as to allow various types of buckets or special equipment to be installed.
To facilitate the change procedure, the machine is equipped with a special universal tool carrier, called "PAN-TACH", which makes it possible to install and remove the bucket or the equipment by means of spring-loaded levers and a pin latching system that secures the machine coupling to the bucket or the equipment.

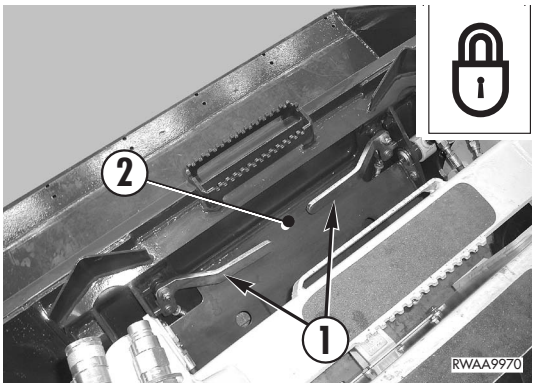

LOCKING THE BUCKET OR THE EQUIPMENT
Rotate the levers (1) downwards in horizontal position.

RELEASING THE BUCKET OR THE EQUIPMENT
Rotate the levers (1) upwards in vertical position.

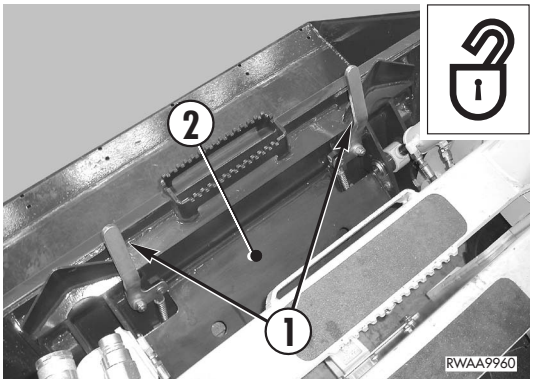

CAUTION

- **For the installation of equipment not described in this manual, read and keep to the instructions given in the user's manual supplied by the manufacturer of the equipment in question.**

https://truckmanualshub.com/

3.13.6.1 REMOVING THE BUCKET OR THE EQUIPMENT

WARNING

- **Do not remove the bucket or the equipment when they are lifted or when a suitable support is not available: if they fall down, they may cause serious damage and even death. Carry out all the operations with the bucket or the equipment resting on the ground.**

1 - Lower the arm completely and rest the bucket on to the ground in horizontal position.

2 - Stop the engine, release the residual pressure and lock the controls by lifting the safety bars in vertical position.

3 - Rotate the levers (1) towards the outside in vertical position to release the coupling pins (2).

4 - Start the machine again and move gradually in reverse, at the same time rotating the tool-holder plate (3) forward until releasing it from the upper seat on the bucket (4).

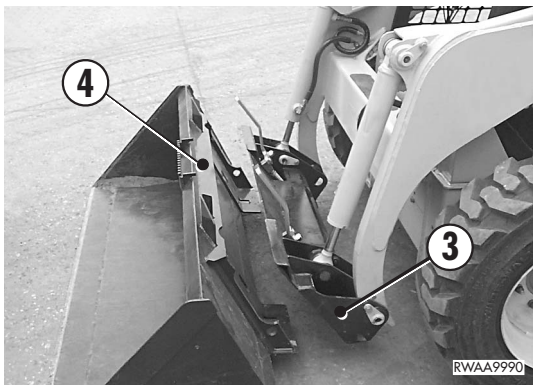

https://truckmanualshub.com/

3.13.6.2 CONNECTING THE BUCKET

WARNING

- **Avoid using your fingers to align the holes, since they may be cut in case of sudden or uncontrolled movements.**

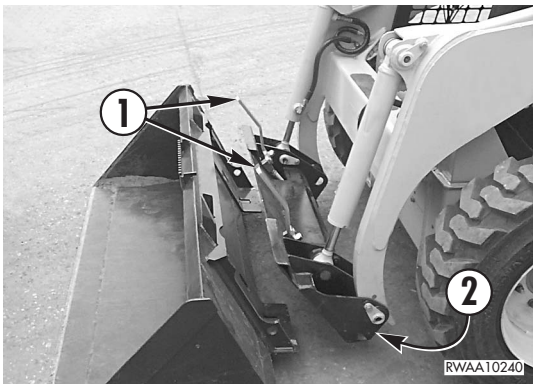

1 - Make sure that the lever (1) is rotated completely to the left and that the coupling pins (2) have moved completely backward.

2 - Incline the tool-holder (3) forward and gradually approach the bucket (4) until centering its upper lip with the edge of the tool-holder cross member.

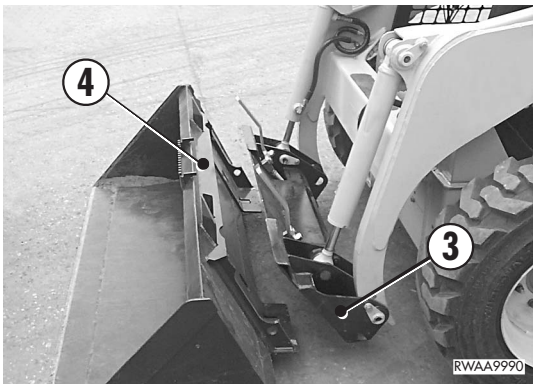

3 - Slowly raise the arm and at the same time fold the tool-holder until it is completely engaged in its seat.

4 - Fold the bucket completely.

5 - Stop the engine, release the residual pressures and lock the safety bars.

6 - Couple the bucket by rotating the lever (1) completely to the right and fix it in this position with the retainer (5).
Before moving the machine, make sure that the pins (2) are completely engaged in the seats provided on the bucket.

https://truckmanualshub.com/

3.13.6.3 CHECKING THE POSITION OF THE LOCKING PINS

The position of the pins (1) must be checked with the levers in locked or horizontal position. The length of the protruding part of the pins must be in compliance with the prescribed values, as indicated in the figure.

To check the length of the protruding part of the pins, proceed as follows:

1 - Slowly raise the arm.

2 - Rotate the bucket or the equipment forward, until the protruding part of the pins can be seen by the operator with no need to leave his seat.

3 - If the length (1) is not within the specified range of values, adjust it by proceeding as indicated in paragraph "3.13.6.4 ADJUSTING THE LOCKING PINS".

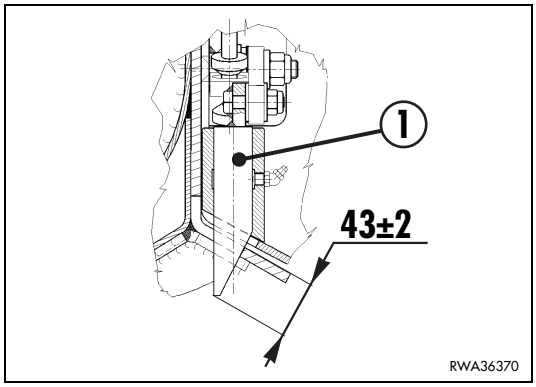

https://truckmanualshub.com/

3.13.6.4 ADJUSTING THE LOCKING PINS

The pins must be adjusted with the bucket resting flat on the ground and the levers (1) of the rapid coupling in horizontal or locking position, proceeding as indicated below:

1 - Check the protrusion of the locking pins, proceeding as indicated in paragraph "3.13.6.3 CHECKING THE POSITION OF THE LOCKING PINS".

2 - Loosen the lock nut (3).

3 - Adjust the nut (2) until reaching the prescribed value.

4 - Tighten the lock nut (3) until it makes contact with the adjusting nut (2), in order to maintain the specified length.

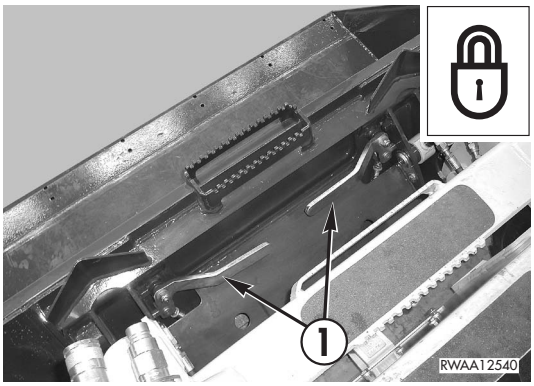

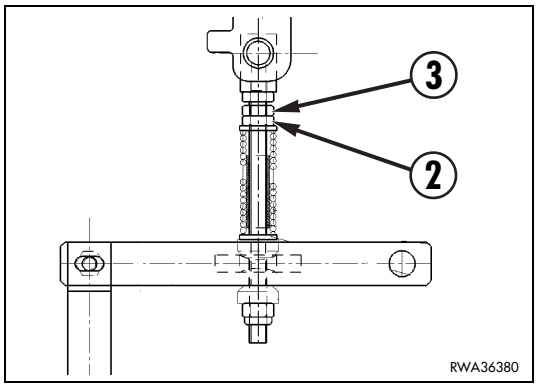

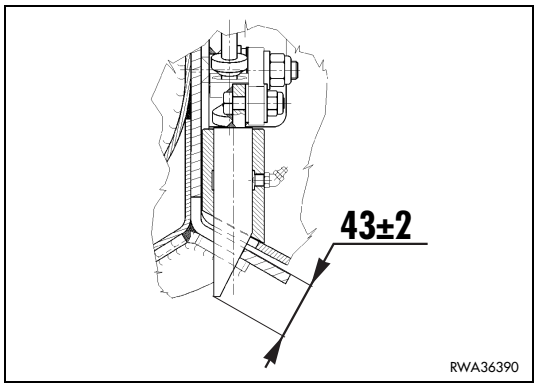

https://truckmanualshub.com/

3.14 LONG PERIODS OF INACTIVITY

3.14.1 BEFORE THE PERIOD OF INACTIVITY

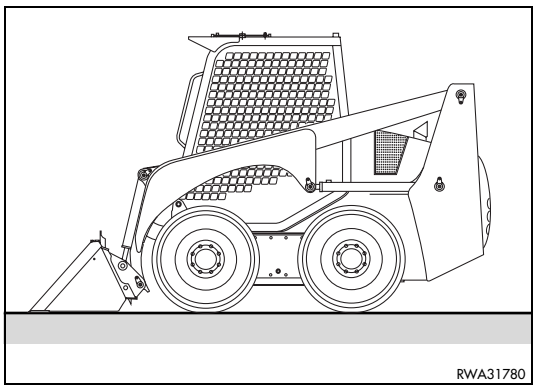

WARNING

- **When draining the fuel, do not smoke or bring naked flames near the machine.**
  Place a container under the machine to gather the fuel and prevent it from spreading around.
  If some fuel is spilled, clean the dirty surface immediately.

IMPORTANT

- **To protect the cylinder rods when the machine is not used, position the work equipment as shown in the figure.**
  (This serves to prevent the cylinder rods from rusting).

If the machine must be stored for a long period of inactivity, it is advisable to put it in a sheltered place and to take the following precautions, in order to keep all its components sound and efficient:

1 - Clean the machine thoroughly, repainting it where necessary in order to prevent oxidation.

2 - Drain and change all the fluids of the hydraulic circuits and the lubricants (engine and transmission), following the maintenance rules.

3 - Change all the filtering elements (air cleaner, engine oil filter, hydrulic circuit filters, diesel oil filter).

4 - Drain the coolant and replace it with a corrosion inhibitor (permanent fluid).

5 - Drain the normal fuel and fill the tank with at least 5 liters of special washing and protecting fuel.

6 - Let the engine run for about 10 minutes, in such a way as to eliminate the residual normal fuel from the filters, the injection pump and the entire fuel supply system. This operation avoids the locking of the injection pump and the injectors.
Stop the engine and refuel with normal diesel oil.

7 - Remove the battery, check the electrolyte level and make sure that the battery charge is sufficient.
Store the battery in a room with suitable temperature and periodically recharge it.

8 - Grease the hydraulic cylinder rods and the equipment joints.

9 - Seal the end of the exhaust pipe.

10 - Move the machine controls to the neutral position and engage all the safety locks.

11 - Hang a warning notice on the controls to indicate the condition of the machine.

12 - Lock the engine hood.

https://truckmanualshub.com/

3.14.2 DURING THE PERIOD OF INACTIVITY

WARNING

- **If it is necessary to carry out a rust-prevention treatment while the machine is kept indoors, open doors and windows to increase ventilation and avoid poisoning by gas.**

Start the engine and move the machine for a short distance once a month, so that a new oil film covers all the moving parts and the surfaces of the components. Provide also for charging the battery.

3.14.3 AFTER THE PERIOD OF INACTIVITY

IMPORTANT

- **If the machine is stored without carrying out the monthly rust-prevention treatment, have maintenance performed by your Komatsu Dealer.**

When using the machine after a long period of inactivity, proceed as follows:

1 - Free the exhaust pipe from the sealing covers.

2 - Check all the fluid levels (engine oil, coolant, fuel, hydraulic circuit and transmission oil).

3 - Make sure that the battery is charged and install it on the machine.

4 - Disconnect the engine stop solenoid.

5 - Turn the ignition key directly to the start position and keep it there until the engine oil pressure warning light goes out.
This operation serves to restore the lubricating oil circulation and to carry out a first lubrication cycle.

6 - Reconnect the engine stop solenoid and start the engine.

7 - Start the engine and let it idle for approximately 20 minutes.

8 - While warming up the engine, remove the protection grease from the hydraulic cylinder rods.

9 - Before moving the machine, make sure that the instruments, the warning lights and the working lights operate correctly.

10 - Warm up the hydraulic cylinders as soon as possible, by operating all the equipment slowly.

https://truckmanualshub.com/

3.15 TROUBLESHOOTING

3.15.1 HOW TO REMOVE THE MACHINE

DANGER

- **When removing the machine, use a wire rope suitable for the weight of the machine to be removed.**

If the machine gets stuck in mud and cannot get out using only its motive power, or in case of breakdown, use a wire rope as shown in the figure on the right.

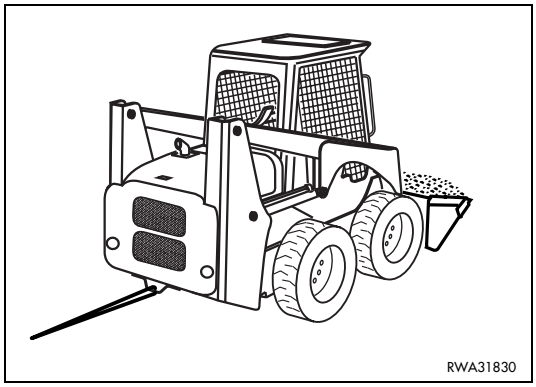

IMPORTANT

- **In case of failure of the hydraulic circuit, before recovering the machine release the negative brake installed on the rear axle ("4.8.1.d RELEASING THE PARKING BRAKE").**

3.15.2 IF THE FUEL HAS BEEN COMPLETELY DEPLETED

Before starting the engine when the fuel has been completely depleted and therefore air has entered the fuel supply circuit, it is necessary to bleed the fuel supply circuit.
For the necessary operations, see "4.8.8 MAINTENANCE EVERY 500 HOURS OF OPERATION".

https://truckmanualshub.com/

3.15.3 IF THE BATTERY IS DEPLETED

WARNING

- **When checking or carrying out any operation on the battery, stop the engine and make sure that the ignition key is in position «O».**
- **The battery produces hydrogen, which may explode. Do not use naked flames and do not smoke near the battery, and avoid producing sparks.**
- **The battery electrolyte is made of diluted sulphuric acid that may corrode the clothes and even the skin; in case of contact with this fluid, immediately rinse the involved part with plenty of water.**
  If the acid gets into the eyes, immediately rinse with plenty of water and consult a doctor without delay.
- **When working on the battery, always wear goggles and gloves.**
- **When removing the battery, disconnect first the earth cable (-); when installing the battery, connect first the positive cable (+).**
- **If a tool comes into contact with the positive terminal and with the machine structure at the same time, this may generate sparks with consequent risk of explosion.**
- **Tighten the connection terminals carefully, since false contacts may generate sparks with consequent risk of explosion.**

REMOVAL

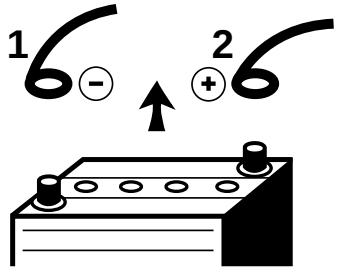

INSTALLATION

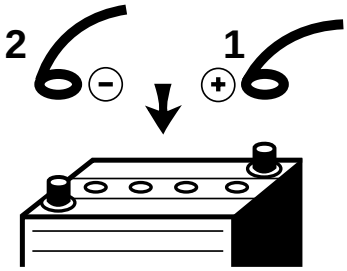

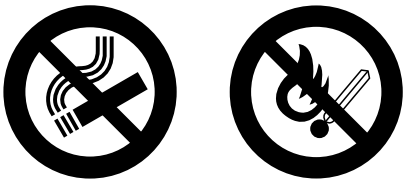

https://truckmanualshub.com/

3.15.3.1 STARTING WITH BOOSTER CABLES

⚠ WARNING

- **When starting the engine with the aid of another machine, connect the batteries in parallel.**
- **When connecting the cables, avoid any contact between the positive cable (+) and the negative cable (-).**
- **When starting the engine with booster cables, always wear safety goggles.**
- **Take care to avoid any contact between the machine to be started and the machine used as starting aid, in order to avoid sparks and therefore the explosion of the hydrogen produced by the batteries. The explosion of the battery causes serious damage and injuries.**
- **Take care not to invert the cables and connect the earth cable (-) last, as far from the battery as possible.**
- **Remove the cables with great care; prevent the cables disconnected from the battery from touching other parts of the machine, in order to avoid explosions due to the presence of hydrogen.**

IMPORTANT

- **The cables and pliers must be suitable for the current load that must be transferred.**
- **The battery to be used for the starting must have greater capacity or at least the same capacity as the battery of the machine to be started.**
- **Make sure that the cables and pliers are neither corroded, nor damaged.**
- **Make sure that the pliers hold the terminals firmly.**

CONNECTING THE CABLES AND STARTING THE ENGINE

1 - Make sure that the ignition key is in position «O».
2 - Connect the positive poles (+) of the two batteries with each other (A).
3 - Connect the cable of the negative terminal (-) of the charged battery to the earth block of the machine to be started (B).
4 - Start the engine of the machine that supplies current and increase its speed.
5 - Start the engine of the machine that does not work (see "3.6.2 STARTING THE ENGINE").

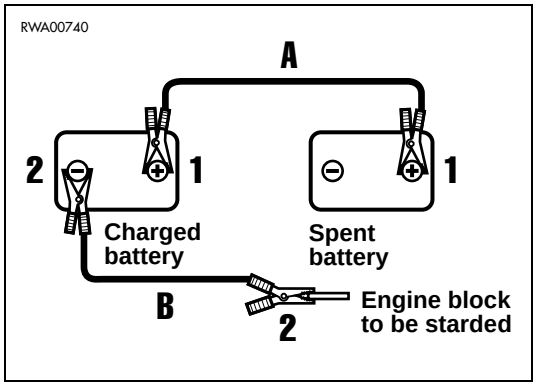

REMOVING THE CABLES

When the engine has started, remove the cables in the reverse order with respect to their connection.

1 - Disconnect the negative cable (-) from the earth block of the engine that has been started and then from the battery (B).
2 - Disconnect the positive cable (+) first from the battery used for the starting and then from the depleted battery (A)

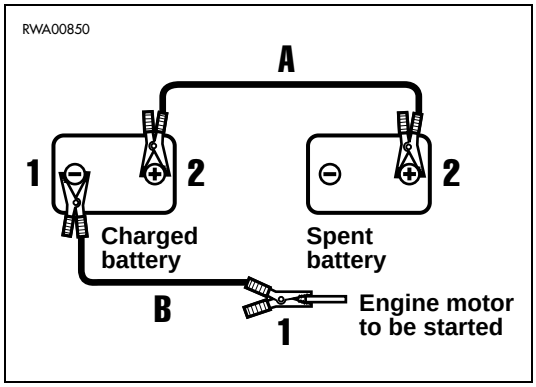

https://truckmanualshub.com/

3.15.4 OTHER TROUBLES

(•) Always contact your Komatsu Dealer when you have to carry out this operation.

- If the anomaly or its cause are not included in the failures indicated below, contact your Komatsu Dealer for the necessary repair.

3.15.4.1 ELECTRICAL CIRCUIT

TROUBLE	CAUSE	REMEDY
Lights do not work satisfactorily even with engine running at high speed	• Faulty cables • Faulty fan belt tension	(•) Check and repair any loose terminal and connection. • Adjust belt tension (see «EVERY 250 HOURS»).
Lights come on intermittently with engine running		
Alternator charge warning light does not go out with engine running and increasing speed	• Faulty alternator. • Faulty cables.	(•) Change. (•) Check and repair.
Alternator emits an abnormal noise	• Faulty alternator.	(•) Change.
Starter does not turn with key in START position	• Faulty cables. • Battery charge insufficient. • Faulty main fuse.	(•) Check and repair. • Charge battery. • Change.
Starter pinion engages and then disengages	• Battery charge insufficient.	• Charge battery.
Starter makes engine run slowly	• Battery charge insufficient. • Faulty starter.	• Charge battery. (•) Change.
Starter disengages before engine has started	• Faulty cables. • Battery charge insufficient.	(•) Check and repair. • Charge battery.
Engine oil pressure warning light does not come on when engine is stopped (ignition key in position «I»):	• Faulty bulb. • Faulty pressure sensor.	(•) Change. (•) Change.
Alternator charge warning light does not come on when engine is stopped (ignition key in position «I»):	• Faulty bulb. • Faulty cables.	(•) Change. (•) Check and repair.

3.15.4.2 HYDRAULIC SYSTEM

TROUBLE	CAUSE	REMEDY
Pump emits an abnormal noise	• No oil in the tank. • Faulty pump. • Hydraulic oil unsuitable for the temperature.	• Top up. (•) Repair or change. • Change.
Equipment moves only at low speed	• Faulty pump. • Max. pressure valve setting incorrect, or valves not closed due to impurities. • Dirty drain filter.	(•) Repair or change. (•) Set or change. • Change.

https://truckmanualshub.com/

3.15.4.3 ENGINE

TROUBLE	CAUSE	REMEDY
Oil pressure warning light remains on even with engine at high speed	• Oil level in oil pan too low. • Oil filter clogged. • Oil unsuitable for the season.	• Top up.. • Change filter. • Change.
Steam comes out of radiator breather pipe: Engine coolant temperature indicator reaches overheating red range:	• Fluid level low, fluid leakages. • Fan belt slackened. • Mud or limestone accumulated in cooling system. • Radiator fins damaged or closed. • Faulty thermostat. • Radiator cap loose or broken. Working at considerable altitude.	• Top up, repair. • Check belt tension. • Change fluid and clean cooling system. • Repair or clean. (•) Change. • Tighten cap or change unit.
Engine coolant temperature indicator always at the end of right scale	• Faulty instrument.	(•) Change.
Engine coolant temperature indicator always at the end of left scale:	• Faulty thermostat. • Faulty instrument.	(•) Change. (•) Change.
Engine does not start with starter running:	• No fuel. • Air in fuel system. • Compression defect (valves with wrong clearance).	• Refuel. • Bleed system. (•) Adjust valve clearance.
Exhaust gases white or light blue:	• Too much oil in oil pan. • Unsuitable fuel.	• Correct oil level. • Change with fuel in compliance with standards.
Exhaust gases occasionally tend to be black:	• Air cleaner clogged. • Faulty injectors. • Faulty compression.	• Clean or change. (•) Change. (•) Adjust valve clearance.
Combustion noise occasionally resembles a blow:	• Faulty injectors.	(•) Change.
Abnormal noises (during combustion or in mechanical parts):	• Fuel with low cetane rating. • Overheating. • Exhaust silencer inside damaged. • Excessive valve clearance.	• Change with fuel in compliance with standards. • See «defects of temperature indicator». (•) Change. (•) Adjust valve clearance.

https://truckmanualshub.com/

3.15.4.4 HYDROSTATIC TRANSMISSION

TROUBLE	CAUSE	REMEDY
Machine moves neither forward, nor backward:	• Oil level insufficient. • Suction filter clogged. • Faulty flexible coupling. • Max. pressure valves faulty or dirty. • Positioning hydraulic connection interrupted. • Travel motor faulty.	• Top up. • Change. (•) Change coupling. (•) Clean or change valves. (•) Restore connection. (•) Repair or change.
Machine moves with delay - Abnormal noise	• Oil level too low. • Presence of foam. • Suction pipe tightness. • Suction filter clogged. • Fuel supply max. pressure valve faulty. • Travel motor faulty.	• Top up. • Use the recommended oil. (•) Check and eliminate leakage. • Change. (•) Disassemble and clean or change. (•) Repair or change.
Traction force in the two travel directions is insufficient	• Endothermic engine does not reach max. speed. • Auxiliary fuel pump (gear pump) faulty. • Max. pressure valve setting incorrect. • Connection to servo control faulty ñ lever angle incorrect. • Pressure relief valve setting incorrect. • Excessive oil temperature. • Travel motor faulty.	(•) Change diesel oil filter and check injection pump. (•) Repair or change. (•) Set. (•) Restore connection ñ shift lever to correct position. (•) Set. • Check oil level and clean exchanger. (•) Repair or change.
Traction force is insufficient in one direction only	• Endothermic engine strongly overloaded. • Incorrect setting of the max. pressure valve relevant to that direction.	• Reduce loads due to lifting. (•) Set valve.
Oil overheating	• Oil level too low. • Exchanger clogged or dirty. • Unsuitable oil. • Suction pipe tightness. • Setting and operation of the max. pressure valves. • Travel pump faulty. • Pressure relief valve with high setting. • Travel motor faulty.	• Top up. (•) Check and change if necessary. • Use the recommended oil. (•) Check and eliminate leakage. (•) Check setting, repair or change. (•) Repair or change. (•) Set valve. (•) Repair or change.
Machine does not reach max. speed selected	• Suction filter clogged. • Endothermic engine does not reach max. speed. • Auxiliary pump (gear pump) faulty. • Pilot pressure insufficient. • Pressure relief valve setting incorrect.	• Change. (•) Change diesel oil filter and check injection pump. (•) Check delivery, repair or change. (•) Set. (•) Set to rated value
Machine decelerates discontinuously:	• Mechanical connection with servo control lever too hard.	(•) Check if rotation is smooth.

https://truckmanualshub.com/

TROUBLE	CAUSE	REMEDY
Machine accelerates slowly	• Engine power drop. • Pressure relief valve setting incorrect.	(•) Check clogging of diesel oil filter, injection pump and valves. (•) Set to rated value.
Oil leakages from engine propeller shaft and/or pump	• Sealing rings faulty. • Counterpressure in pump casing. • By-pass valve setting too high.	(•) Change. (•) Drain pipes clogged or damaged. (•) Check and restore.

https://truckmanualshub.com/

PAGE INTENTIONALLY LEFT BLANK

https://truckmanualshub.com/

MAINTENANCE

https://truckmanualshub.com/

4.1 GUIDE TO MAINTENANCE

- Before opening the engine hood, engage all the safety devices and stop the engine.
- If it is necessary to check the hydraulic oil level, lower the arm and rest the bucket on to the ground.
- Carry out any operation on firm and level ground, applying the parking brake.
- Raise the cab taking all the precautions indicated in "3.5.3.4 RAISING THE CAB".
- Use Komatsu genuine oils and greases; choose oils suitable for the ambient temperature.
- Use clean oils and greases. Keep the oil and grease containers clean. Keep any foreign matter away from oils and greases.
- Always keep the machine clean. This makes it easier to find out any part causing troubles.
  In particular, keep the grease nipples, the breathers and the areas near the openings for the level checks clean and prevent any impurities from getting into/on them.
- Draining hot oil or coolant immediately after stopping the engine is hazardous. Wait for the engine to cool down until reaching at least 40÷50º C.
- When changing the oils and the filters, check if metal particles are present. If you find large quantities of metal particles, contact your Komatsu Dealer.
- Check and change the oil in a clean place and prevent any impurities from getting into the tank.
- Before carrying out any maintenance operation, hang warning plates on the ignition switch and the control levers, in order to prevent anyone from starting the engine by mistake.
- When performing maintenance operations, always take the precautions indicated in the safety plates applied on to the machine.
- Instructions for arc welding:

1 - Turn the ignition key to position «O».
2 - Disconnect the battery (first the negative pole and then the positive pole).
3 - Disconnect the alternator.
4 - Do not apply more than 200 V continuously.
5 - Connect the earth cable within 1 m from the point in which the welding must be carried out.
6 - Avoid placing gaskets and bearings between the welding area and the earth cable.

- Do not use flammable fluids to clean the machine parts. Keep naked flames or lit cigarettes away from these fluids.
- When O-rings and gaskets are removed, clean the sealing surfaces thoroughly and replace the O-rings and gaskets with new ones.
  Fit the O-rings and gaskets correctly when reassembling.
- Avoid keeping loose objects or tools in your pockets: they may fall out and drop into the machine when you work on the machine while bending over it.
- When washing the machine, do not direct the high-pressure water jet on to the radiator and the heat exchanger.
- When washing the machine, protect the electric system connectors and avoid wetting the ignition switch.
- Before starting work in mud, under the rain, on seashores or river banks, carry out a general lubrication.
  Wash the machine immediately after work to protect the components from rust. Lubricate the equipment joints more frequently than usual.
- When working at dusty work sites, proceed as follows:

1 - Check the air cleaner for any clogging and clean it more frequently than usual.
2 - Clean the radiator and the heat exchanger frequently, to avoid any clogging of the fins.
3 - Change the diesel oil filter more frequently than usual.
4 - Clean the electrical components, especially the starter and the alternator, to avoid any accumulation of dust.

https://truckmanualshub.com/

- Never mix oils of different brands.
  Do not top up with any oil different from the oil used in the machine. If necessary, drain all the oil and fill the tank with oil of the available brand.

WARNING

- **Oils, filters, coolants and batteries are considered special waste and must be collected and disposed of according to the regulations in force.**
- **The combustible material of some components may become extremely dangerous if it burns. For this reason, avoid any contact of burnt material with your skin or eyes and do not inhale the fumes.**

https://truckmanualshub.com/

4.2 MAINTENANCE NOTES

- Use only Komatsu genuine spare parts.
- Do not mix different types of oil.
- Unless specified otherwise, the oils and the coolant used by Komatsu to fill the tanks before the delivery of the machine are the following:

ITEM	SPECIFICATIONS
• Engine oil	SAE 10W-30 API classification CD
• Hydraulic system and hydrostatic transmission oil	SAE 10W API classification CD
• Biodegradable hydraulic system oil (only for machines filled with synthetic biodegradable oil type HEES not of plant origin)	SHELL NATURELLE HFX-32
• Final transmission oil	SAE 10W-30 API classification CD
• Fuel	Ambient temperature above -10ºC: ASTM D975 no. 2 diesel oil
	Ambient temperature below -10ºC: ASTM D975 no. 1 diesel oil
• Radiator	Special permanent antifreeze, biodegradable, ethylene glycol based with corrosion inhibitor and with no silicates, borates, nitrates, phosphates and amines. Red antifreeze compatible with aluminium radiators, diluted with water (50%) to ensure protection down to -36°C.

4.2.1 NOTES REGARDING THE ENGINE

4.2.1.1 ENGINE OIL

- The engine oil must be selected very carefully, since it lubricates the engine, which is the machineís heart; the main maintenance operations required for the engine oil are the following:

1 - daily check of the oil level;
2 - check of the oil pollution degree;
3 - periodical change.

4.2.1.2 COOLANT

- The coolant serves to keep the engine at the correct temperature and therefore to ensure optimal operating conditions; check the coolant level in the expansion tank daily and top up if necessary.
- The coolant containing antifreeze is flammable; do not use naked flames near the coolant and do not smoke while topping up.
- Use only red permanent ethylene glycol based antifreeze, with corrosion inhibitors and antifoam products, compatible with aluminium radiators. If pure, dilute with water (50%)..
- The use of permanent antifreeze requires only the check of the level and the periodical change of the fluid.
  It is not necessary to wash the cooling circuit.
- Use drinkable water and in any case soft water.
- Do not use corrosion inhibitors containing soluble oil, since they damage the rubber couplings.
- In case of doubt regarding the applicable standards for the use of antifreeze, contact your Komatsu Dealer, who will supply you with exhaustive and precise information.

https://truckmanualshub.com/

4.2.1.3 FUEL

- Always use fuel suitable for the engine. Other fuels with different specifications may damage the engine or reduce its power.
- Always refuel at the end of the work day.
- When refuelling, make sure that there is no water on the fuel drum cover and take care not to draw the condensate from the drum bottom.
- If fuel runs out, or if the fuel filter has been replaced, it is necessary to bleed the pipes.

4.2.2 NOTES REGARDING THE HYDRAULIC SYSTEM

- Be extremely careful when performing maintenance operations on the hydraulic system, since soon after work the oil is very hot.
  The circuit is pressurized not only during work, but also at the end of work.
- The maintenance operations required for the hydraulic system are the following:

1 - daily check of the oil level in the tank;
2 - periodical change of the oil filter;
3 - periodical change of the oil.

- Always bleed the circuit after changing the oil filter or the oil.
- When a component is removed from the circuit, check the gaskets and O-rings and change them if they are damaged.
- When a cylinder or a component of the hydraulic circuit is removed, after reassembly bleed the circuit by proceeding as follows:

1 - start the engine and let it idle;
2 - make all the cylinders perform 4-5 movements, stopping them at approx. 100 mm from the end of their stroke;
3 - slowly make all the cylinders reach the end of their stroke for 3-4 times.

4.2.3 NOTES REGARDING THE ELECTRICAL SYSTEM

- If the cables are wet or their insulating material is damaged, the electrical system leaks and this may result in malfunctions of the machine.
- The maintenance operations required for the electrical system are the following:

1 - check of the alternator belt tension;
2 - check of the alternator belt for damage or breakages;
3 - check of the battery electrolyte level.

- Do not remove or eliminate any electrical component installed on the machine and do not install any electrical component with characteristics different from those specified and approved by Komatsu.
- Be careful to keep the electrical system dry.
- When working on seashores or river or lake banks, protect the jack plugs from corrosion.
- Do not connect any optional device to the fuses, ignition switch, battery, relays, etc.; for the installation of any optional equipment, contact your Komatsu Dealer.
- If any electric welding operation has to be carried out, disconnect the battery and the alternator.

https://truckmanualshub.com/

4.2.4 NOTES REGARDING LUBRICATION

- Lubrication makes the operations carried out with the machine and work equipment smoother, while preventing wear and the noise that may be produced if the articulated joints are dry.
  Lubrication is to be carried out with grease or oil.
- The maintenance operations required for the components that need lubricating are the following:

1 - check of the levels;

2 - oil change;

3 - injection of grease through the grease nipples.

- Use only the specified lubricants, according to the ambient temperature.
- Always clean the grease nipples before injecting grease and remove any excess grease after lubrication; this cleaning operation must be performed with extreme care on the revolving parts.
- Keep the lubricants at the correct levels; excessive or insufficient quantities are to be avoided.

4.2.5 PARTS SUBJECT TO WEAR THAT PERIODICALLY NEED CHANGING

The parts subject to wear such as filters, bucket teeth, etc. must be replaced according to the periodic maintenance intervals prescribed or when they reach the wear limit.
The timely change of these parts ensures an economic use of the machine.
Use only Komatsu genuine parts, which alone can guarantee excellent quality and interchangeability.

PARTICOLARE	CODICE	DENOMINAZIONE	Q.tà	FREQUENZA DI SOSTITUZIONE
Engine oil filter	YM129150-35151	Cartridge	1	EVERY 250 HOURS
Hydraulic oil filter	37C-62-13420	Cartridge (drain)	1	EVERY 500 HOURS
Fuel filter	YM123907-55800	Cartridge	1	EVERY 500 HOURS
Air cleaner	YM129935-12520	Main cartridge	1	WHEN REQUIRED
	YM119160-12570	Safety cartridge	1	WHEN REQUIRED
Front bucket	825010053	Tooth	6	—
	801015574	Screw	12	—
	801920106	Nut	12	—

https://truckmanualshub.com/

4.3 FUEL, COOLANT AND LUBRICANTS

RESERVOIR	FLUID	AMBIENT TEMPERATURE -30 -20 -10 0 10 20 30 40 50°C -22 -4 14 32 50 68 86 104 122°F	CAPACITY (l)	
			1st filling	Change
Engine oil pan	OIL API CD	SAE 10W SAE 30 SAE 40 SAE 10W-30 SAE 5W-30	10	10
Hydraulic system and hydrostatic transmission	OIL API CD	SAE 10W SAE 5W-30	50	32
Hydraulic system with biodegradable oil	SEE «4.3.1»		50	32
Final transmission case (ea.)	OIL API CD	SAE 10W-30	13.5	13.5
Fuel tank	DIESEL OIL	★ ASTM D975 N. 2	72	—
Engine cooling system	PERMANENT COOLANT (★★)		15	—

★ **ASTM D975 N.1**

★★ **Special red permanent antifreeze compatible with aluminium radiators. If pure, dilute with water (50%).**

LUBRICATION WITH GREASE

LUBRICATION POINTS	CONSISTENCY	TYPE
Articulated joints	NLGI 2	LITHIUM EP +MoS_2

https://truckmanualshub.com/

IMPORTANT

- **When the diesel oil sulphur content is less than 0.5%, change the engine oil according to the periodic maintenance intervals indicated in the operation and maintenance manual. If the diesel oil sulphur content exceeds 0.5%, change the engine oil according to the following table:**

Sulphur content	Engine oil change interval
da 0.5 a 1.0%	1/2 of regular interval
oltre 1.0%	1/4 of regular interval

- When starting the engine at temperatures below 0ºC, use engine oil SAE 10W, 10W-30, 5W-30, even if during the day the temperature increases by 10ºC.
- Use engine oil with CD classification; if oil with CC classification is used, reduce the engine oil change interval by a half.
- Use Komatsu genuine products whose characteristics have been specifically formulated and approved for use in the engine, in the equipment hydraulic circuit, in the reduction gears and in the transmission.

First filling quantity: total quantity of oil, including the oil for the components and pipes.

Oil change quantity: quantity of oil necessary to fill the system or unit during the normal inspection and maintenance operations.

ASTM: American Society of Testing and Materials
SAE: Society of Automotive Engineers
API: American Petroleum Institute

https://truckmanualshub.com/

4.3.1 HOMOLOGATED SYNTHETIC BIODEGRADABLE LUBRICANTS TYPE HEES

Our machines can be filled with synthetic biodegradable hydraulic oil type HEES not of plant origin and therefore the use of the oils indicated in the following table is authorized and recommended:

SUPPLIER	HEES SYNTHETIC BIODEGRADABLE OIL
KOMATSU	BO 46 G4 (KES 07.872)
AGIP	—
ARAL	—
AVIA	—
BP	—
CONDAT	CONDAT D 46 K
ELF	—
ESSO	—
FINA	BIOHYDRAN SE 46
FUCHS	—
KENDALL	—
KUWAIT PETROLEUM K8	—
MOBIL	EAL SYNDRAULIC
MOBIL (USA)	—
PAKELO	—
PANOLIN	HLP SYNTH 46
SHELL	NATURELLE HFX-32
TAMOIL	—
TEXACO	—
TOTAL	HYDROBIO 46
VALVOLINE	—

⚠ CAUTION

- **It is not possible to mix the synthetic biodegradable oil type HEES with ordinary hydraulic oils, since when the temperature increases insoluble compounds are generated, which are deposited on the filters and clog them (the maximum concentration of ordinary oil cannot exceed 1% of the total quantity of oil).**
- **The biodegradable oil can be used only in the hydraulic system; it cannot be used for the endothermic engine, the transmissions, the braking system, etc.**
- **Before introducing the synthetic biodegradable oil in the hydraulic system, empty the system completely, disconnecting the cylinders and all the parts that may contain ordinary oil, and replace the drain filter with a new one.**
  Start the engine and let it idle without using the work equipment, wait until the oil reaches a temperature of at least 40ºC, then start moving the equipment, so that all the parts of the system are filled with oil. Stop the engine and check the oil level (see "4.8.2.e CHECKING THE OIL LEVEL IN THE HYDRAULIC CIRCUIT").

https://truckmanualshub.com/

4.4 DRIVING TORQUES FOR SCREWS AND NUTS

4.4.1 STANDARD DRIVING TORQUES

Thread diameter (mm)	Pitch (mm)	Spanner size (mm)	8.8		10.9	
			kgm	Nm	kgm	Nm
6	1	10	0.96 ± 0.1	9.5 ± 1	1.3 ± 0.15	13.5 ± 1.5
8	1.25	13	2.3 ± 0.2	23 ± 2	3.2 ± 0.3	32.2 ± 3.5
10	1.5	17	4.6 ± 0.5	45 ± 4.9	6.5 ± 0.6	63 ± 6.5
12	1.75	19	7.8 ± 0.8	77 ± 8	11 ± 1	108 ± 11
14	2	22	12.5 ± 1	122 ± 13	17.5 ± 2	172 ± 18
16	2	24	19.5 ± 2	191 ± 21	27 ± 3	268 ± 29
18	2.5	27	27 ± 3	262 ± 28	37 ± 4	366 ± 36
20	2.5	30	38 ± 4	372 ± 40	53 ± 6	524 ± 57
22	2.5	32	52 ± 6	511 ± 57	73 ± 8	719 ± 80
24	3	36	66 ± 7	644 ± 70	92 ± 10	905 ± 98
27	3	41	96 ± 10	945 ± 100	135 ± 15	1329 ± 140
30	3.5	46	131 ± 14	1287 ± 140	184 ± 20	1810 ± 190

IMPORTANT

- **This driving torque table is not valid for screws or nuts that must lock parts made of nylon or similar materials on to washers or components made of nylon or nonferrous materials.**

4.4.2 SPECIFIC DRIVING TORQUES

ITEM	DESCRIPTION	kgm	Nm
Cab	Rear fastening screws	10 ± 0.75	98 ± 7.3
Engine	Front support central screw	15 ± 0.75	150 ± 7.3
	Rear support central screw	15 ± 0.75	150 ± 7.3
Wheels	Front	19 ± 1	186 ± 9.8
	Rear	19 ± 1	186± 9.8

https://truckmanualshub.com/

4.5 LUBRICATION

4.5.1 LUBRICATION DIAGRAM

IMPORTANT

- **For the lubrication procedures for the single points, see "4.7 MAINTENANCE PLAN".**
- **The type of lubricant to be used is indicated in the lubricant table (see "4.3 FUEL, COOLANT AND LUBRICANTS").**

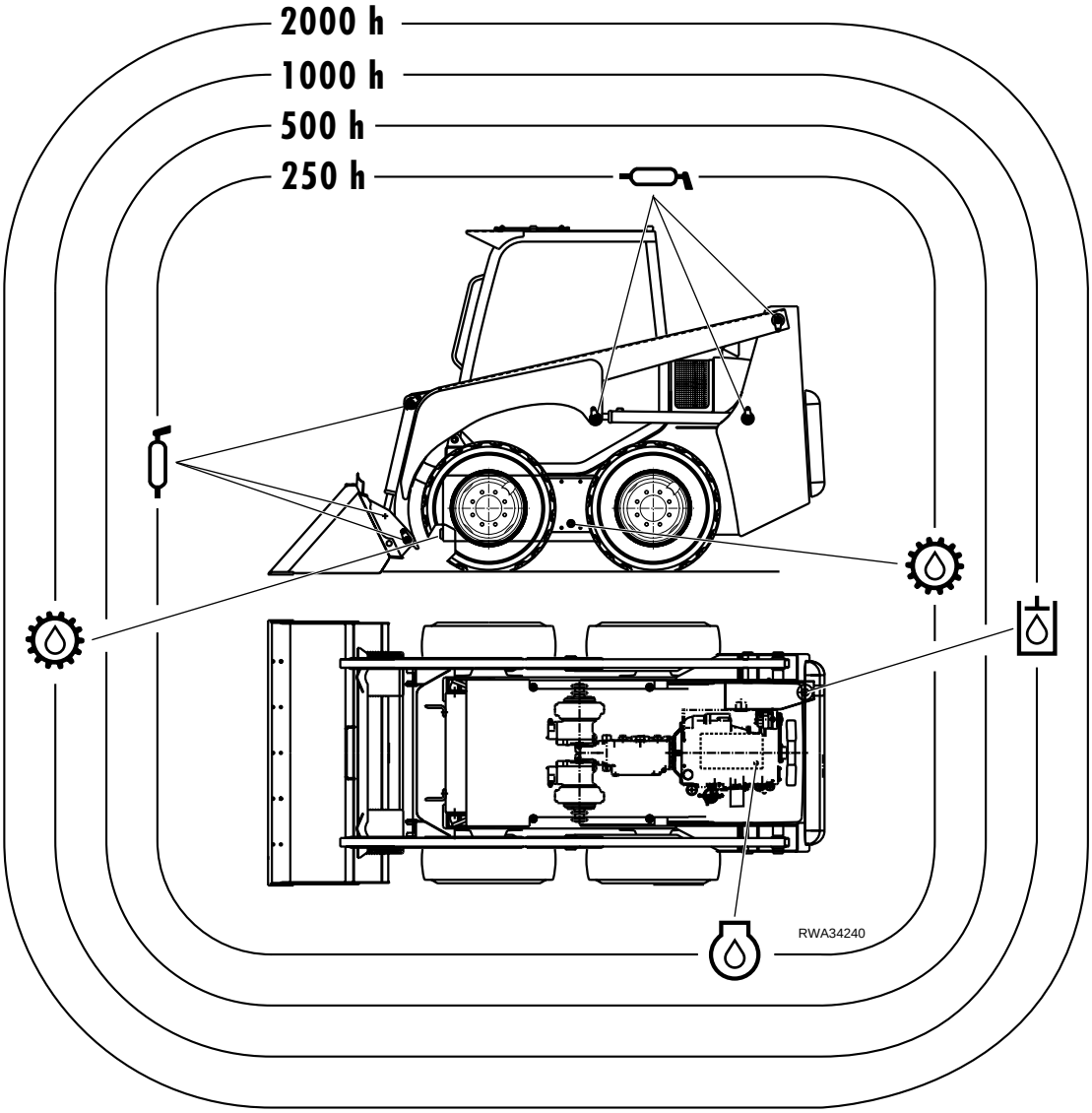

Engine oil

Hydraulic oil

Transmission oil

Grease

https://truckmanualshub.com/

4.6 PERIODICAL CHANGE OF THE COMPONENTS CONNECTED WITH SAFETY

To ensure safety at any moment while driving and using the machine, the operator must carry out all the periodic maintenance operations prescribed. Furthermore, the operator must periodically change the components indicated in the table in the following page, which are especially related to safety and fire-prevention rules. These components are subject to wear and since it is particularly difficult to evaluate their conditions through simple periodic maintenance, after a certain period it is advisable to change them independently of their state, in order to keep them efficient over time. Repair or replace these components immediately in case of failures or anomalies, even if the time interval prescribed for their change has not elapsed yet.

If the pipe clamps show signs of deterioration, like deformations or cracks, provide for changing them together with the pipes.

In addition to the periodical change of the components listed in the following page, carry out the inspections described here below on the hydraulic pipes. In case of anomalies, carry out the necessary adjustments and changes, or adopt any other measure required.

Type of check	Check item
Check before starting	Leakages from joints, hydraulic pipes or fuel pipes
Periodical check (monthly check)	Leakages from joints, hydraulic pipes or fuel pipes. Damaged hydraulic or fuel pipes (cracks, wear and tear)
Periodical check (annual check)	Leakages from joints, hydraulic pipes or fuel pipes. Deteriorated, twisted, damaged hydraulic or fuel pipes (cracks, wear and tear) or pipes in contact with other parts of the machine

https://truckmanualshub.com/

4.6.1 CRITICAL PARTS FOR SAFETY

FUEL SUPPLY SYSTEM

No.	Components related to safety that periodically need changing	Q.ty	Change interval
1	Fuel pipe (Fuel tank - Precleaner)	1	Every 2 years or 4000 hours, whichever occurs first
2	Fuel pipe (Precleaner - Fuel pump)	1	
3	Fuel pipe (Fuel pump - Fuel filter)	1	
4	Fuel pipe (Fuel filter - Injection pump)	1	
5	Fuel pipe (Fuel filter - Fuel tank)	1	
6	Fuel recovery pipe (Injection pump - Fuel filter)	1	
7	Fuel recovery pipe (Injector - Injection pump)	1	

- For the serial numbers and the quantity of the components that periodically need changing, consult the spare parts catalogue section regarding the components connected with safety and the components that must be periodically changed.
- When changing pipes, always change O-rings, gaskets and analogous components.

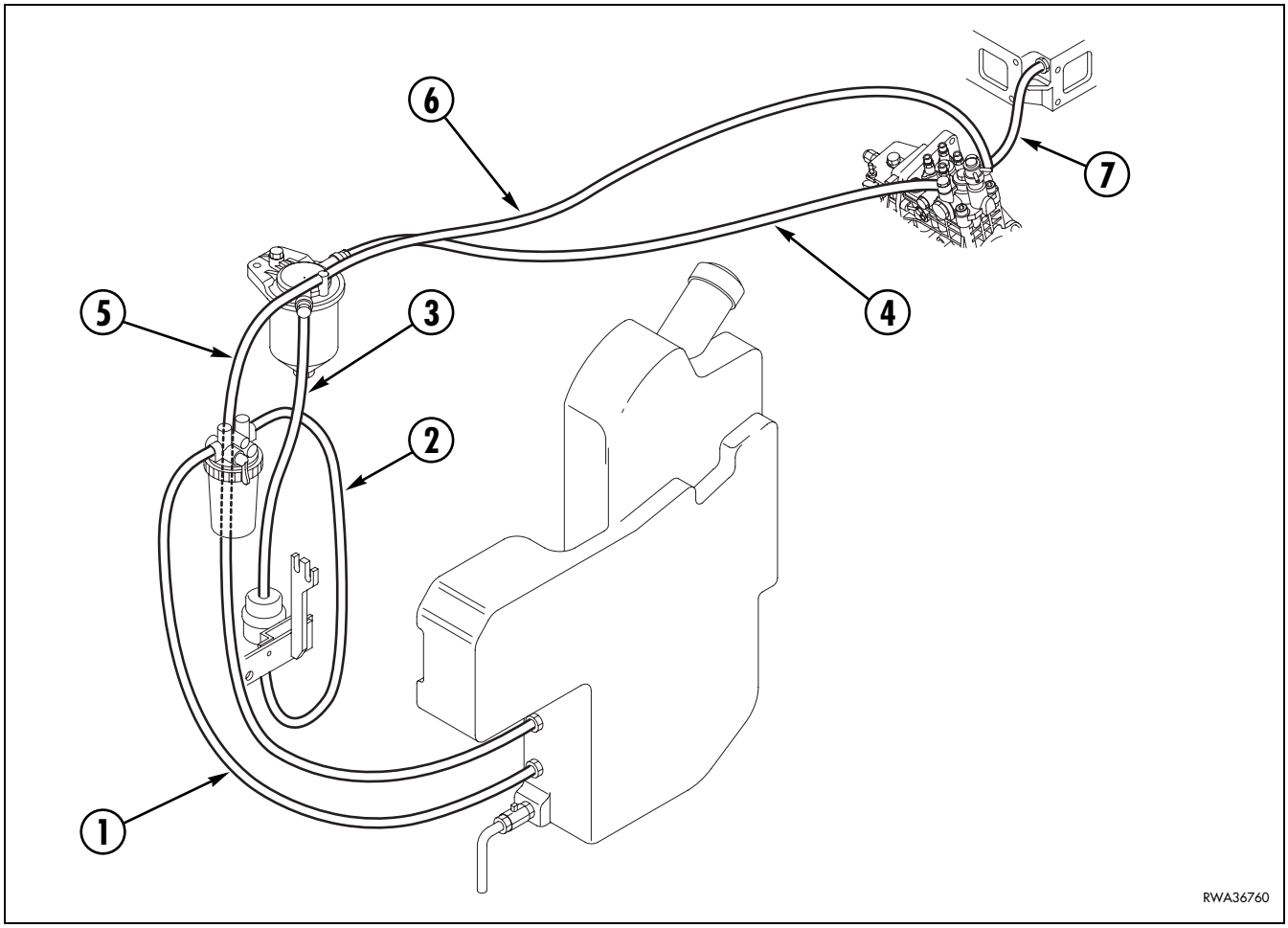

https://truckmanualshub.com/

STANDARD HYDRAULIC SYSTEM

No.	Components related to safety that periodically need changing	Q.ty	Change interval
1	Hydraulic pipe (Travel pump delivery)	4	Every 2 years or 4000 hours, whichever occurs first
2	Hydraulic pipe (Machine function pump delivery)	1	

- For the serial numbers and the quantity of the components that periodically need changing, consult the spare parts catalogue section regarding the components connected with safety and the components that must be periodically changed.
- When changing pipes, always change O-rings, gaskets and analogous components.

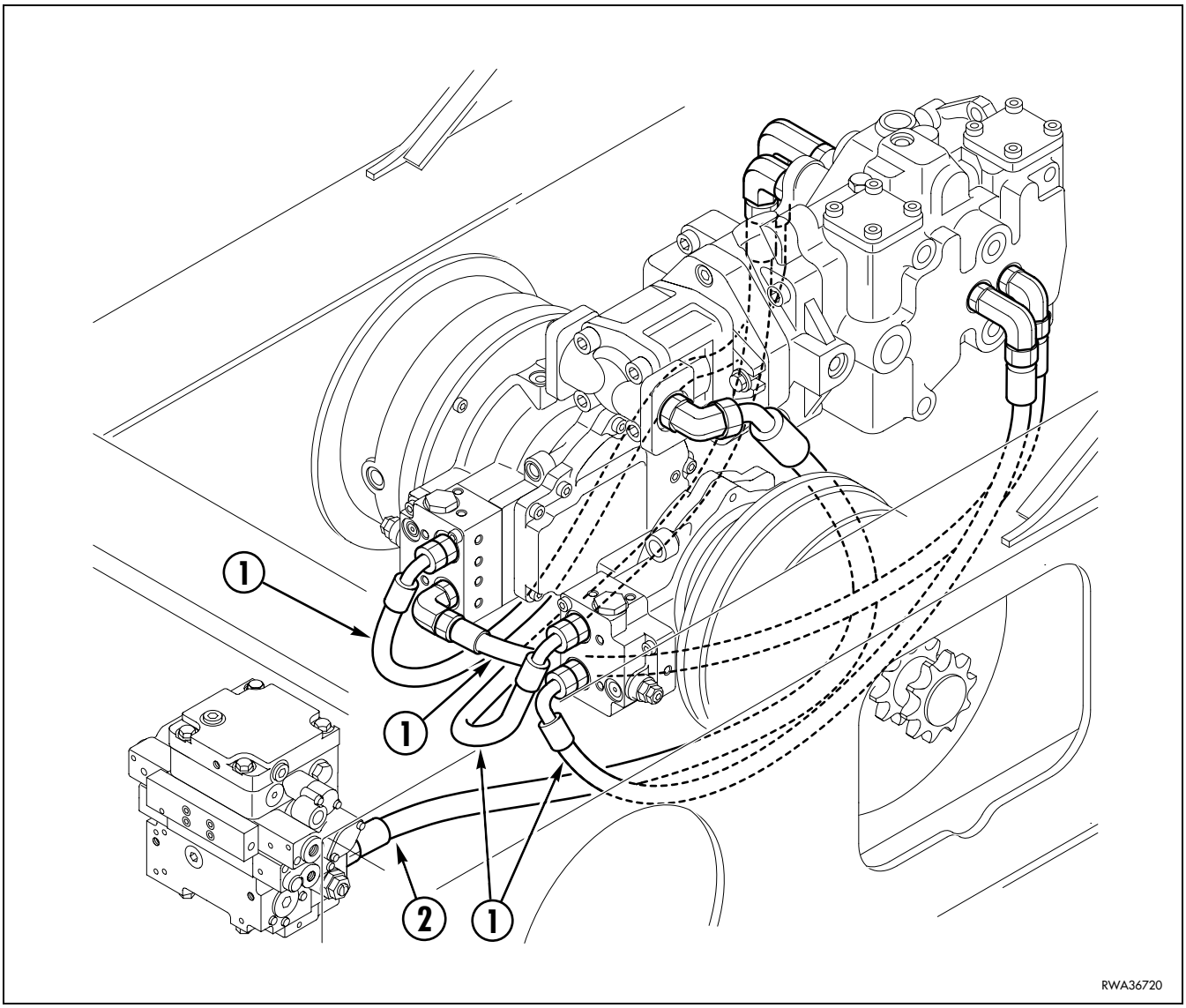

https://truckmanualshub.com/

No.	Components related to safety that periodically need changing	Q.ty	Change interval
3	Hydraulic pipe (Lifting cylinder)	6	Every 2 years or 4000 hours, whichever occurs first
4	Hydraulic pipe (Bucket cylinder)	6	
5	Hydraulic pipe (Auxiliary hydraulic kit)	2	

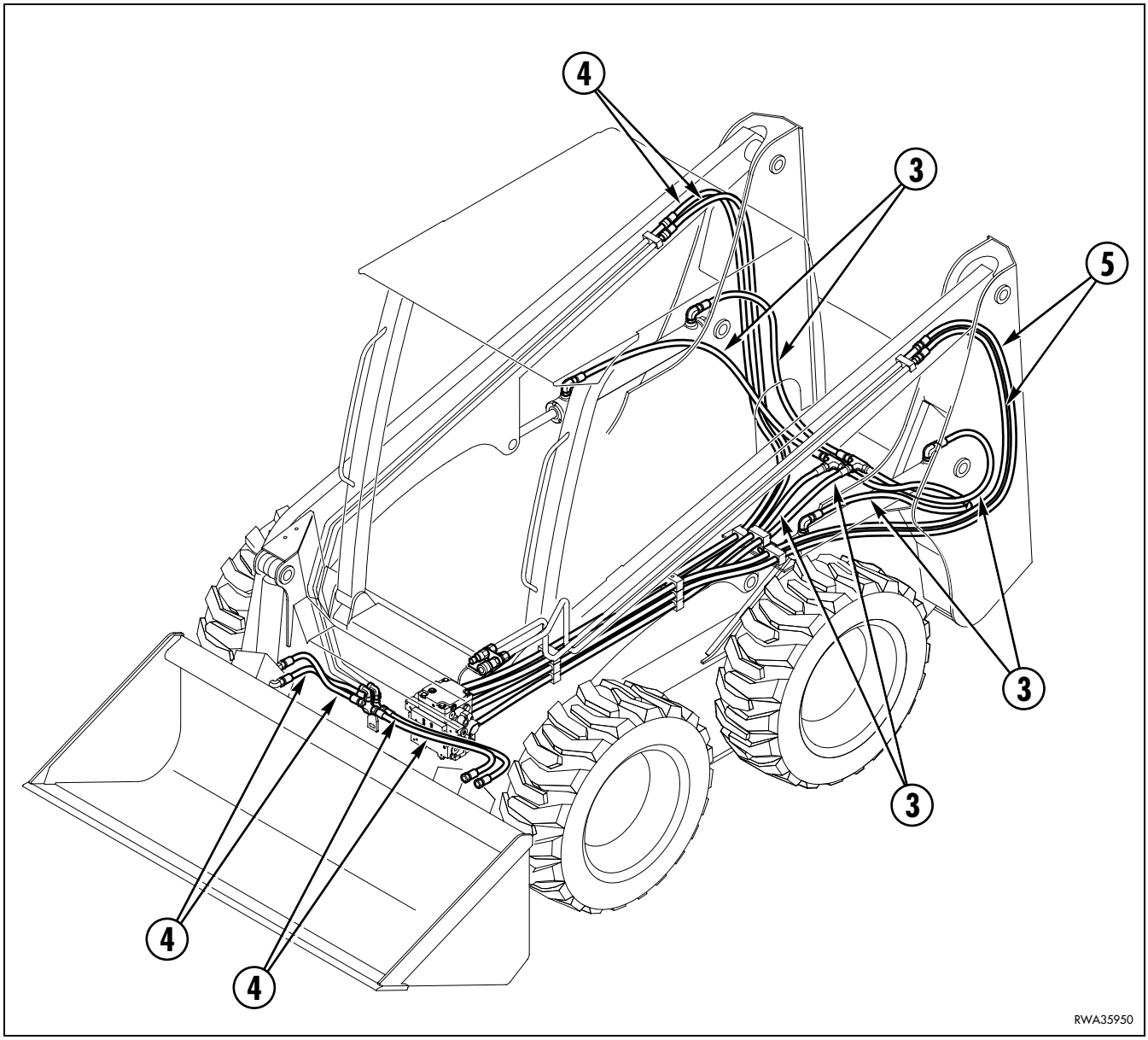

https://truckmanualshub.com/

HIGH-FLOW AND SUPER FLOW HYDRAULIC SYSTEM

No.	Components related to safety that periodically need changing	Q.ty	Change interval
1	Hydraulic pipe (Travel pump delivery)	4	Every 2 years or 4000 hours, whichever occurs first
2	Hydraulic pipe (Machine function pump delivery)	1	
3	Hydraulic pipe (Flow rate increase pump delivery)	1	

- For the serial numbers and the quantity of the components that periodically need changing, consult the spare parts catalogue section regarding the components connected with safety and the components that must be periodically changed.
- When changing pipes, always change O-rings, gaskets and analogous components.

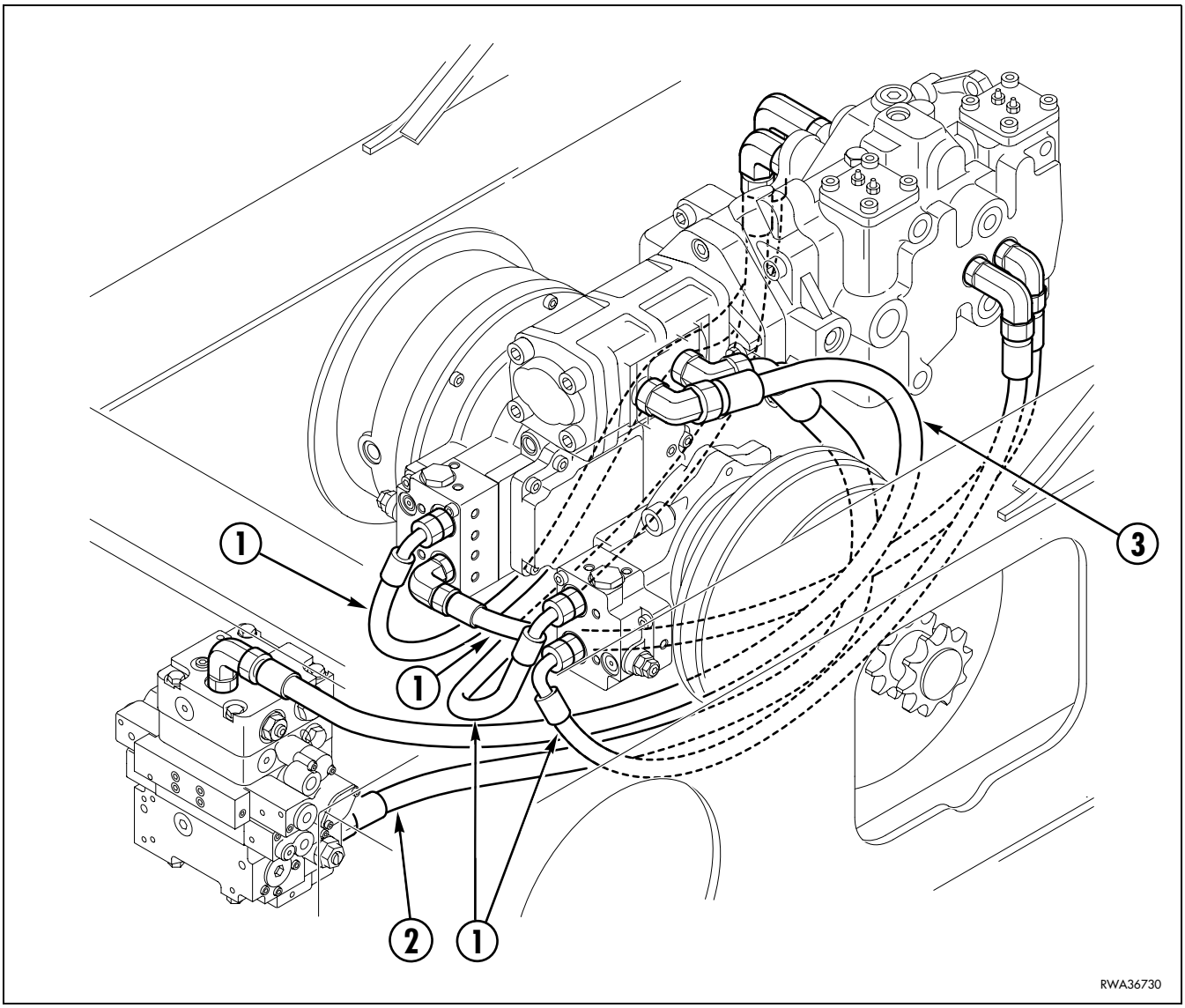

https://truckmanualshub.com/

No.	Components related to safety that periodically need changing	Q.ty	Change interval
4	Hydraulic pipe (Lifting cylinder)	6	Every 2 years or 4000 hours, whichever occurs first
5	Hydraulic pipe (Bucket cylinder)	6	
6	Hydraulic pipe (Auxiliary hydraulic kit)	2	

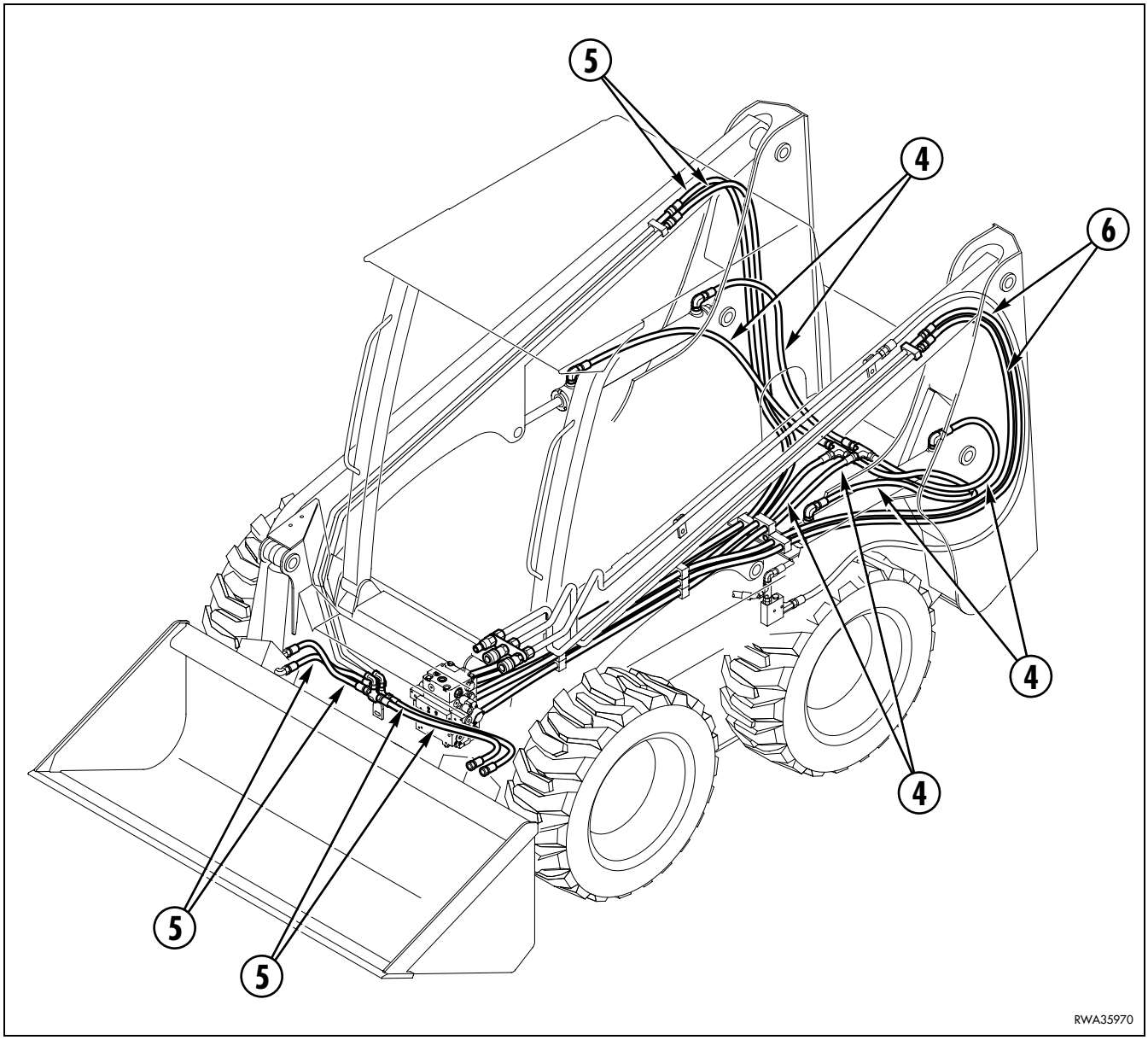

https://truckmanualshub.com/

OPERATORíS SAFETY

No.	Components related to safety that periodically need changing	Q.ty	Change interval
1	Safety belt	1	Every 4 years

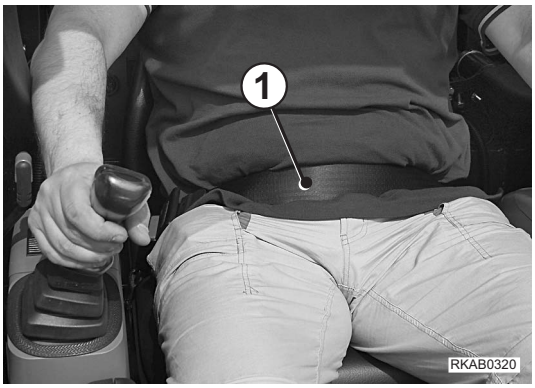

https://truckmanualshub.com/

4.7 MAINTENANCE PLAN

WHEN REQUIRED

a. CHECKING, CLEANING OR CHANGING THE AIR CLEANER CARTRIDGE 173
b. TYRE ROTATION 174
c. DRAINING THE FUEL TANK 175
d. RELEASING THE PARKING BRAKE 176
e. CHECKING THE BATTERY CHARGE LEVEL 177

CHECKS BEFORE STARTING

a. VARIOUS CHECKS 178
b. CHECKING THE COOLANT LEVEL 178
c. CHECKING THE FUEL LEVEL 179
d. CHECKING THE ENGINE OIL LEVEL 180
e. CHECKING THE OIL LEVEL IN THE HYDRAULIC CIRCUIT 181
f. CHECKING THE WATER SEPARATOR FOR SEDIMENTS AND WATER 182
g. CHECKING THE WIRING SYSTEM 182

MAINTENANCE AFTER THE FIRST 50 HOURS OF OPERATION

(Operations to be carried out together with those prescribed at point "4.8.4 MAINTENANCE EVERY 50 HOURS OF OPERATION")

a. CHECKING THE GEARING CHAIN TENSION 185
b. CHECKING THE WHEEL NUT DRIVING TORQUE 187
c. CHANGING THE HYDRAULIC OIL DRAIN FILTER 194

MAINTENANCE EVERY 50 HOURS OF OPERATION

a. CHECKING THE TYRE PRESSURE 183
b. CHECKING THE COOLANT LEVEL IN THE RADIATOR 183

MAINTENANCE AFTER THE FIRST 250 HOURS OF OPERATION

(Operations to be carried out together with those prescribed at point "4.8.6 MAINTENANCE EVERY 250 HOURS OF OPERATION")

a. CHANGING THE HYDRAULIC OIL DRAIN FILTER 194

MAINTENANCE EVERY 250 HOURS OF OPERATION

a. ADJUSTING THE FAN BELT TENSION 184
b. CHECKING THE GEARING CHAIN TENSION 185
c. CLEANING THE OUTSIDE OF THE RADIATORS 187
d. CHECKING THE WHEEL NUT DRIVING TORQUE 187
e. CHECKING THE OIL LEVEL IN THE FINAL TRANSMISSIONS 188
f. LUBRICATING THE JOINTS 189
g. CHANGING THE ENGINE OIL 190
h. CHANGING THE ENGINE OIL FILTER 191

https://truckmanualshub.com/

MAINTENANCE AFTER THE FIRST 500 HOURS OF OPERATION (only for machines filled with synthetic biodegradable oil type HEES)

(Operations to be carried out together with those prescribed at point "4.8.8 MAINTENANCE EVERY 500 HOURS OF OPERATION")

a. CHANGING THE HYDRAULIC SYSTEM OIL AND CLEANING THE SUCTION FILTER 198

MAINTENANCE EVERY 500 HOURS OF OPERATION

a. CHANGING THE FUEL FILTER 192
b. CHANGING THE HYDRAULIC OIL DRAIN FILTER 194
c. CLEANING THE WATER SEPARATOR 195
d. DRAINING THE HYDRAULIC OIL TANK (Only for machines filled with synthetic biodegradable oil type HEES) 192

MAINTENANCE EVERY 1000 HOURS OF OPERATION

a. CHANGING THE OIL IN THE FINAL TRANSMISSION 197
b. CHANGING THE HYDRAULIC SYSTEM OIL AND CLEANING THE SUCTION FILTER 198
c. CHECKING AND ADJUSTING THE ENGINE VALVE CLEARANCE 199

MAINTENANCE EVERY 2000 HOURS OF OPERATION

a. CHANGING THE COOLANT 200
b. CHANGING THE SUCTION FILTER 201
c. CHECKING THE ALTERNATOR AND THE STARTER 202

https://truckmanualshub.com/

4.8 MAINTENANCE PROCEDURE

4.8.1 WHEN REQUIRED

4.8.1.a CHECKING, CLEANING OR CHANGING THE AIR CLEANER CARTRIDGE

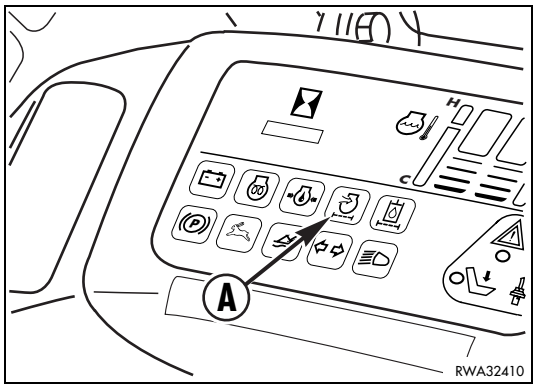

WARNING

- **Remove the air cleaner only after stopping the engine and do not start the engine if the air cleaner is open.**
- **Always wear goggles while cleaning the filter.**

IMPORTANT

- **The air filtering system comprises a primary filtering element with great capacity and a secondary cartridge that provides additional safety protection.**
  The primary element can be cleaned with compressed air, while the safety cartridge must only be changed.
- **The filtering element must be cleaned when the clogging warning light (A) positioned on the instrument panel blinks or comes on completely.**
  In any case, check whether the cartridge is clogged every 50 hours of operation.
- **The filtering element must be cleaned even when the need for cleaning is signalled by the clogging indicator.**

The air cleaner can be reached after lifting the engine hood (see "3.5.1 ENGINE HOOD") and opening the rear panel (see "3.5.2 REAR PANEL").
To clean the primary element, proceed as follows:

1 - Remove the couplings (1) and remove the clogging filter cover (2).

2 - Extract the main filtering element (3).

3 - Slightly strike the element on the palm of your hand to eliminate the dust and blow compressed air on the inner surface, keeping the air jet at a distance of approximately 15 cm and making sure that the pressure does not exceed 4-5 bars.

4 - Carefully clean the filter casing (4), taking care to avoid the introduction of foreign matters in the suction duct and reassemble the unit making sure that the ejector is positioned vertically and at the bottom.

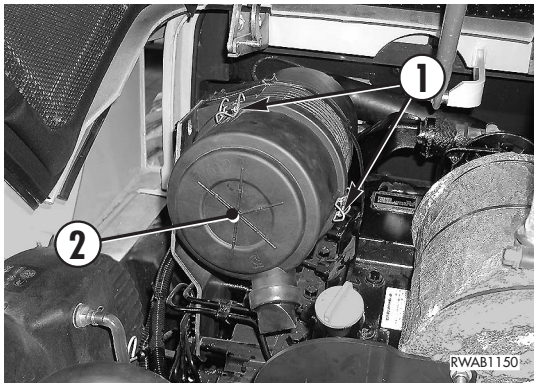

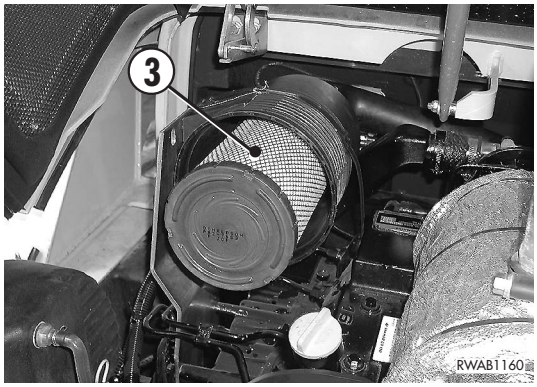

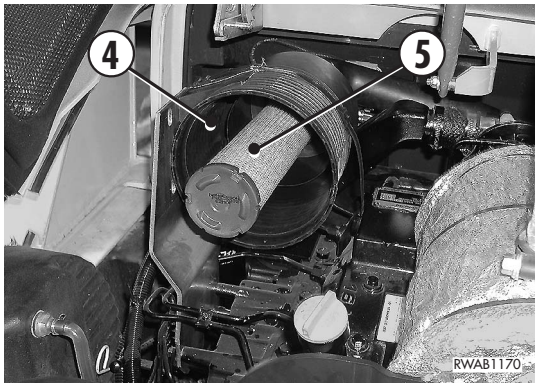

IMPORTANT

- **If the clogging warning light comes on after the engine has started, it is necessary to change the primary filtering element and the safety cartridge.**
- **Change the primary filtering element after 5 cleaning operations or after one year.**
  The safety cartridge must always be changed together with the primary filtering element.

https://truckmanualshub.com/

To change the safety cartridge after removing the primary element, proceed as follows:

1 - Remove the used safety cartridge (5) and replace it with a new one.

IMPORTANT

- **In case of doubts on the efficiency of the gasket, immediately change it.**

4 - Put back the air cleaner.

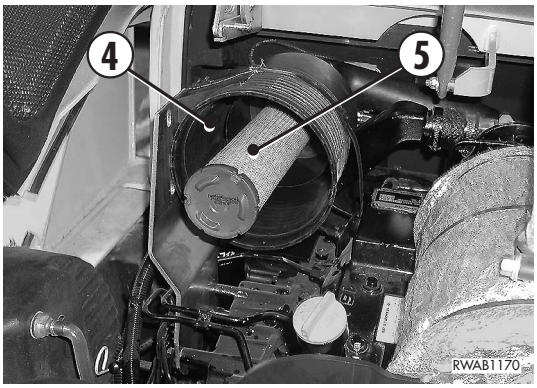

4.8.1.b TYRE ROTATION

WARNING

- **The tyres must not be inflated exceeding the recommended pressure (see "5.1.3 TECHNICAL CHARACTERISTICS").**
- **Inflate all the tyres with the same pressure.**

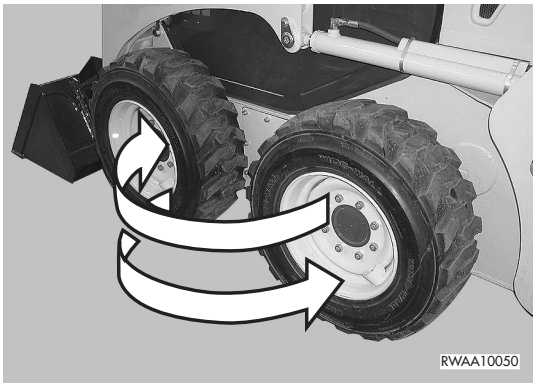

To avoid losing stability and manoeuvrability, always use the machine with properly inflated tyres and avoid incorrect manoeuvres that may shorten their life.
The manoeuvres to be avoided are the following:

1 - Excessive skidding when loading material.

2 - Abrupt steering, starting and stopping manoeuvres.

3 - Excessive use of counterrotations.

If excessive tyre wear is observed, it is advisable to exchange the front wheels with the rear wheels immediately, so that the wear gets uniform on the four wheels over time.
If two tyres are worn more than the others, change their position keeping them on the same side, so that the rolling diameter is the same on connected wheels.
When it is necessary to change two tyres, adopt the same procedure and eliminate the most worn ones, installing the new ones on the same side.

IMPORTANT

- **Use only tyres recommended by the manufacturer.**

https://truckmanualshub.com/

4.8.1.c DRAINING THE FUEL TANK

WARNING

- **When draining the fuel tank, avoid spilling fuel, since this may cause fires.**
- **If some fuel is accidentally spilled, clean the dirty area immediately, in order to prevent it from getting slippery and to avoid fires.**

This operation serves to let all the impurities and the condensate flow out of the tank.
Proceed as follows:

1 - Raise the engine hood (see "3.5.1 ENGINE HOOD").

2 - Rotate the lever (1) anticlockwise, until only clean fuel flows out of the pipe connected to the drain cock of the tank.

3 - Rotate the lever clockwise (1) to interrupt the fuel flow and close the engine hood.

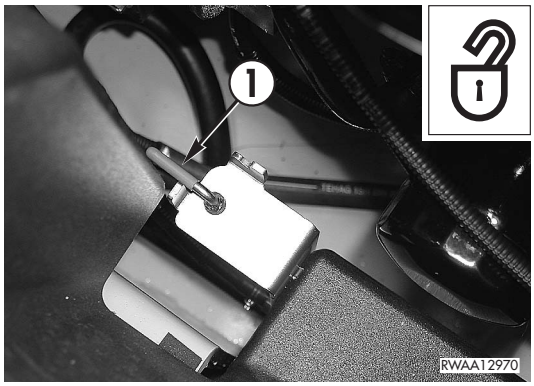

IMPORTANT

- **The tank must be drained before starting the engine, with temperatures exceeding 0ºC; when the temperature is below 0ºC, the tank must be drained at the end of work or in any case with the machine at operating temperature, to prevent the condensate from freezing.**
- **The condensate and the impurities that may have accumulated inside the tank must be eliminated before refuelling.**

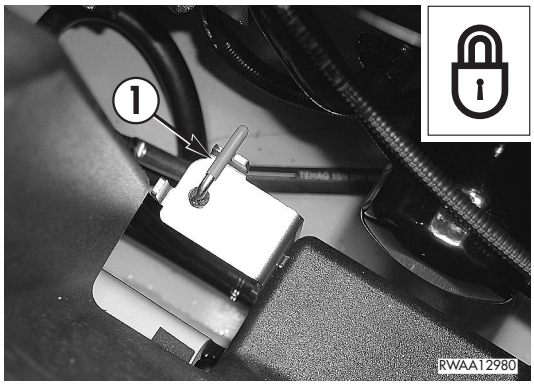

https://truckmanualshub.com/

4.8.1.d RELEASING THE PARKING BRAKE

WARNING

- **In case of failure of the hydraulic system and before removing the machine, release the negative brake installed on the travel motors.**

The release of the parking brake is obtained by acting on the negative brake installed on the travel motors, according to the following procedure.

1 - Raise the cab (see "3.5.3.4 RAISING THE CAB").

2 - Disconnect the pipe (1) that supplies pressure to the travel motors.

3 - Connect the grease nipple (3) to the union (2).

4 - Using the grease pump provided, inject grease until reaching the minimum pressure required to release the brake.

5 - After releasing the brake, lower the cab (see "3.5.3.4 RAISING THE CAB") and carry out the necessary maintenance operations.

6 - To restore the braking circuit to the standard configuration, remove the grease nipple (3) from the coupling (2) and put back the pipe (1).

NOTE

- After restoring the circuit to the standard configuration, it is not necessary to carry out any adjustment.

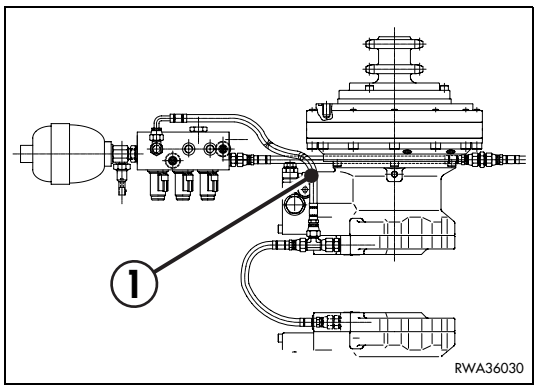

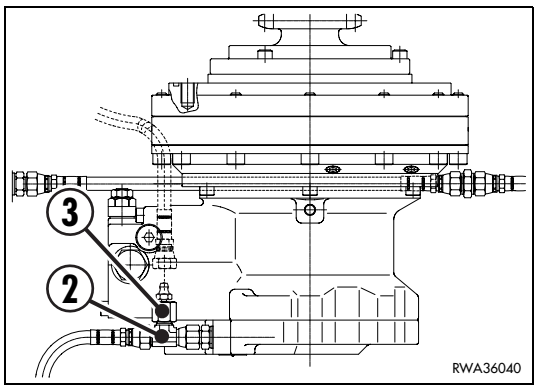

https://truckmanualshub.com/

4.8.1.e CHECKING THE BATTERY CHARGE LEVEL

WARNING

- **Check the battery charge level only with the engine at rest.**
- **To prevent gas explosions, do not use naked flames, do not smoke and avoid producing sparks due to short circuits.**
- **The battery electrolyte is dangerous: in case of contact with the eyes or the skin, wash with plenty of running water and consult a doctor. The battery is maintenance-free.**

IMPORTANT

- **Make sure that the connection terminals are not oxidized; if necessary, clean them and cover them with anti-oxidation grease.**

The battery (1) can be reached after opening the engine hood (see "3.5.1 ENGINE HOOD".
A visual indicator (2) signals the battery charge level with different colours, according to the table positioned beside the indicator:

- Green: the charge is correct
- Grey: the battery needs recharging
- White: the battery must be changed

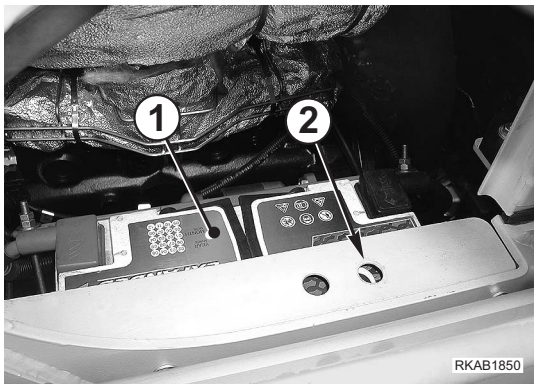

CAUTION

- **If a dry battery is installed, check the electrolyte level, which must be approximately 6 mm above the plate edge; if necessary, top up using distilled water only.**
  If, on the contrary, the level is low because some electrolyte has been spilt, add sulphuric acid, diluted as much as necessary to reach the concentration suitable for the ambient temperature (see "3.11.3 BATTERY").
- **It is advisable to add distilled water before starting work, in order to prevent it from freezing.**
- **Before putting back the cell plugs, make sure that the breather holes are not clogged.**

https://truckmanualshub.com/

4.8.2 CHECKS BEFORE STARTING

4.8.2.a VARIOUS CHECKS

WARNING

- **Dirt, oil and fuel spread in the engine compartment near the hot areas may cause fires and damage the machine.**
  Check if there are leakages frequently and carry out the necessary repairs immediately; if this occurs repeatedly, contact your Komatsu Dealer.

Before starting the engine, check:

1 - if there are loose screws or nuts;

2 - if there are oil, fuel or coolant leakages;

3 - if the work equipment is worn;

4 - the conditions of rims and tyres;

5 - the conditions and efficiency of: instruments and warning lights on the dashboard, acoustic alarm, working lights and horn.

The other general checks concern safety, and precisely:

6 - soundness of the safety belt;

7 - soundness and legibility of the warning plates;

8 - cleanliness of the handles and footboards used to reach the driver's cab, cleanliness inside the driver's cab.

4.8.2.b CHECKING THE COOLANT LEVEL

WARNING

- **Carry out this check with the machine parked on a level surface and the equipment resting on the ground.**
- **Do not remove the radiator cap; the coolant level must be checked with cold engine and by means of the compensation tank.**

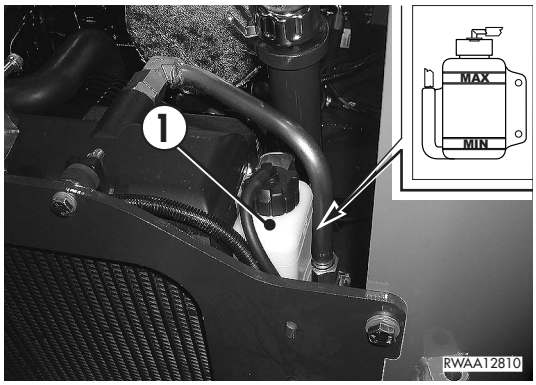

The coolant tank (1) can be reached by raising the engine hood (see "3.5.1 ENGINE HOOD") and opening the rear panel (see "3.5.2 REAR PANEL") and the level must be included between the MIN. and MAX. marks.
If necessary, add water or coolant and, if a constant and considerable decrease in the fluid level can be noticed, check the tightness of the radiator-engine unit and of the radiator casing.

https://truckmanualshub.com/

4.8.2.c CHECKING THE FUEL LEVEL

WARNING

- **When refuelling, avoid spilling fuel to prevent any risk of fire. If some fuel should inadvertently be spilled, clean the dirty area immediately.**
- **Fuel is flammable; neither use naked flames, nor smoke while refuelling.**
- **Thrust the filling gun into the filler.**

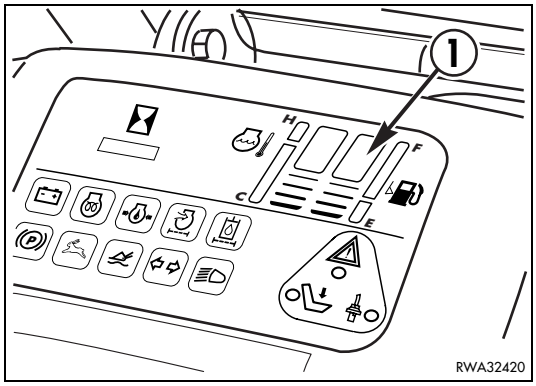

To check the fuel level, use the indicator (1) positioned on the dashboard, after turning the ignition key to position «**I**».
To refuel, if necessary, open the engine hood (see "3.5.1 ENGINE HOOD").
Do not fill the tank completely, in order to leave room for the fuel to expand.

IMPORTANT

- **It is advisable to refuel after work, in order to avoid the formation of water condensate.**
- **After refuelling, tighten the filler cap (2) thoroughly, lower the engine hood and lock the tank.**

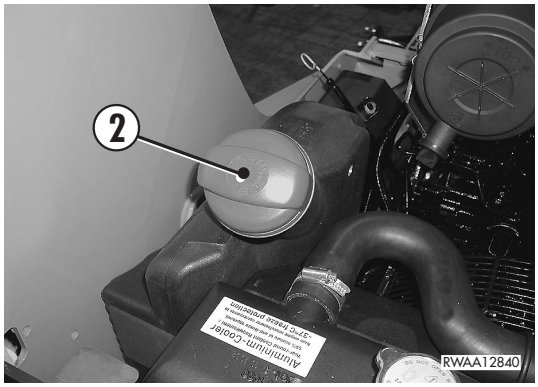

https://truckmanualshub.com/

4.8.2.d CHECKING THE ENGINE OIL LEVEL

WARNING

- **Soon after the machine has been stopped the engine is very hot and may cause burns; let the engine cool down before carrying out any check.**

The dipstick can be reached by raising the engine hood (see "3.5.1 ENGINE HOOD").
The check must be carried out with cold engine and the machine positioned on level ground.
The oil level must be checked on the graduated dipstick (1) and must be included between the MIN. and MAX. marks; if the level is near the MIN. mark, top up through the filler (2) with oil suitable for the ambient temperature, as prescribed in the lubricant chart (see "4.3 FUEL, COOLANT AND LUBRICANTS").

IMPORTANT

- **If it is necessary to check the oil level during or soon after work, stop the engine and wait for 15 minutes before carrying out the check.**

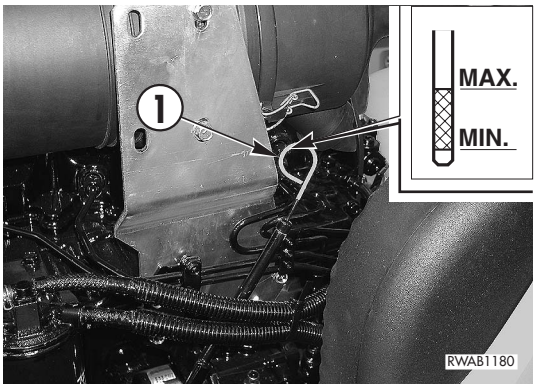

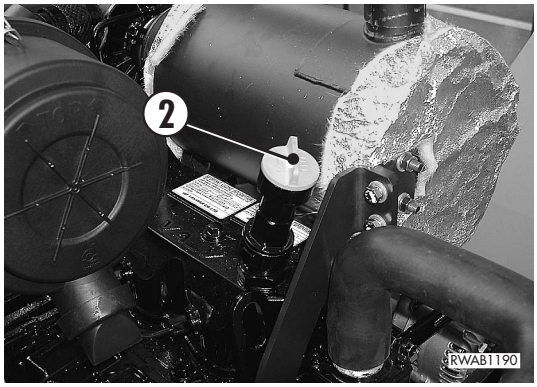

https://truckmanualshub.com/

4.8.2.e CHECKING THE OIL LEVEL IN THE HYDRAULIC CIRCUIT

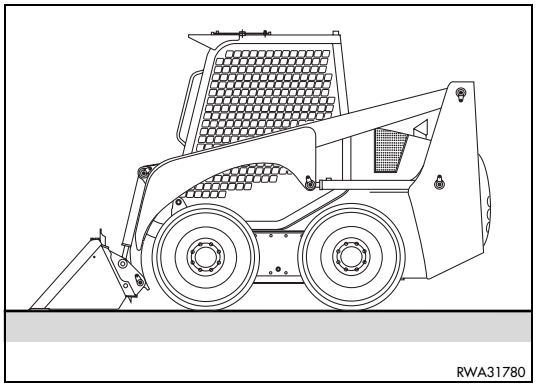

WARNING

- **The oil level in the hydraulic circuit must be checked with cold oil and the machine positioned on a level surface with the bucket resting on the ground.**
- **Top up after stopping the engine and eliminating the residual pressures from the equipment circuit (by operating the controls more than once) and from the tank (by slowly loosening the filling cap).**

The oil level must be visible through the gauge (1) positioned on the tank and must be included between the MIN. and MAX. marks.
If the level is near the MIN. mark, top up through the filling opening (2) with suitable hydraulic oil (see "4.3 FUEL, COOLANT AND LUBRICANTS").

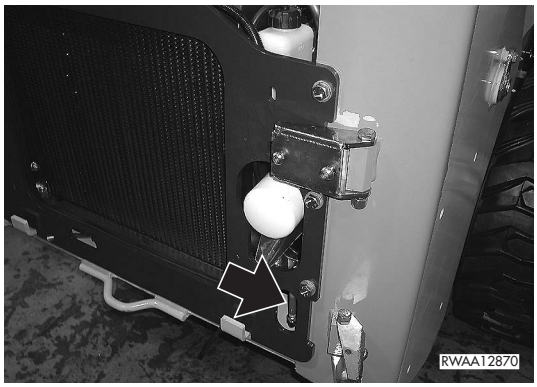

IMPORTANT

- **When topping up, do not exceed the MAX. level. This would damage the hydraulic circuit and make the oil flow out.**
- **If a constant or abnormal decrease in the oil level is observed, thoroughly check the hydraulic circuit, the pistons and the pump for leaks.**
- **After topping up, tighten the hydraulic tank cap (2) thoroughly.**

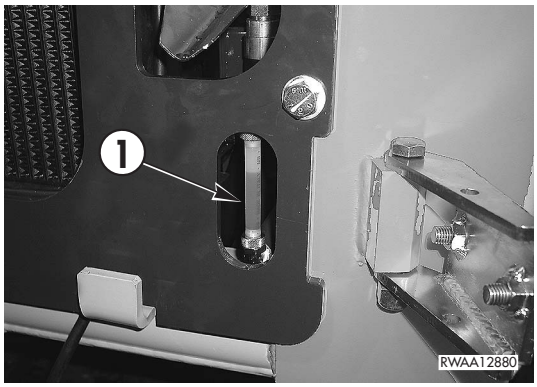

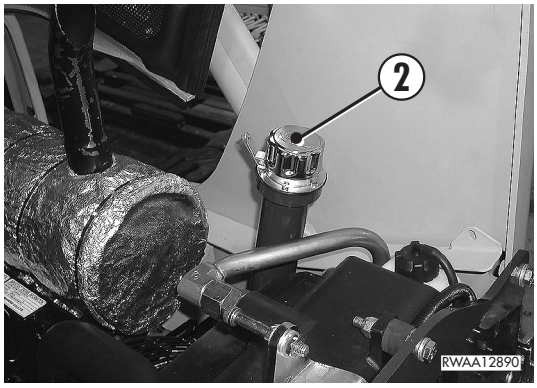

https://truckmanualshub.com/

4.8.2.f CHECKING THE WATER SEPARATOR FOR SEDIMENTS AND WATER

WARNING

- **Fuel is flammable; neither use naked flames, nor smoke while draining it.**
- **If some fuel should inadvertently be spilled, clean the dirty area immediately.**

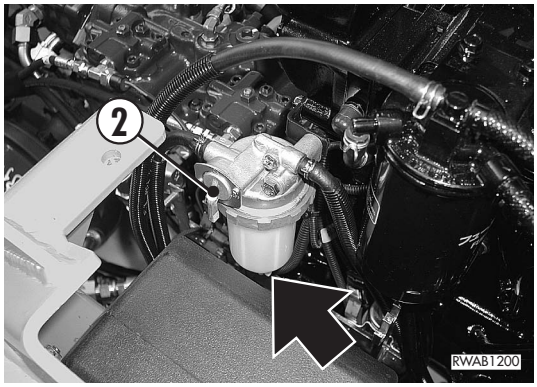

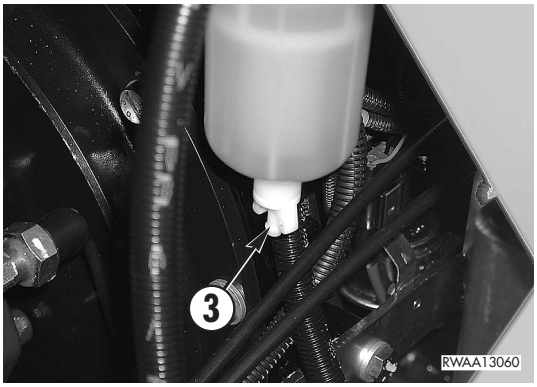

The water separator can be reached after opening the engine hood (see "3.5.1 ENGINE HOOD") and the check is carried out using the red ring (1) installed in the filter.
When the red ring floats on the surface of the water present in the water separator, it is necessary to drain it. Proceed as follows:

1 - Turn the cock (2) to close the fuel flow.
2 - Loosen the wing cap (3) and drain the condensate until clear Diesel oil flows out.
3 - Open the fuel cock (2).
4 - Drain the fuel tank as described in paragraph "4.8.1.c DRAINING THE FUEL TANK".
5 - Bleed the fuel supply circuit as described in paragraph "4.8.8.a CHANGING THE FUEL FILTER".

IMPORTANT

- **If the filtering element is considerably clogged or damaged, change it.**

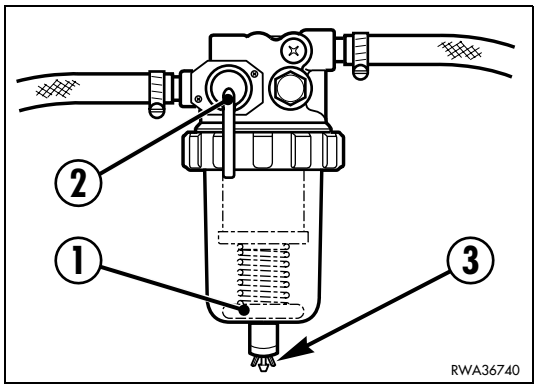

4.8.2.g CHECKING THE WIRING SYSTEM

WARNING

- **If the fuses are corroded, oxidized or they are not perfectly held in their seat, replace them only with fuses having the same capacity; before changing a fuse, make sure that the ignition key is in position «O».**
- **If there are signs of short circuit on the cables, find out the cause and repair them; always contact your Komatsu Dealer for the troubleshooting.**
- **Before checking the wiring, take all the necessary precautions to ensure safety.**

Make sure that there are no disconnected cables or signs of short circuits in the electrical system.
Make sure that all the cables are well tightened in the corresponding terminals; tighten any loose cables.

https://truckmanualshub.com/

4.8.3 MAINTENANCE AFTER THE FIRST 50 HOURS OF OPERATION

These maintenance operations must be carried out after the first 50 hours of operation, together with those to be carried out “EVERY 50 HOURS”.

- CHECK THE GEARING CHAIN TENSION
- CHECK THE TIGHTENING OF THE WHEEL FASTENING NUTS
- HYDRAULIC OIL DRAIN FILTER (only for machines filled with biodegradable oil)

For details on the various maintenance operations, see sections "4.8.6 MAINTENANCE EVERY 250 HOURS OF OPERATION" and "4.8.8 MAINTENANCE EVERY 500 HOURS OF OPERATION".

4.8.4 MAINTENANCE EVERY 50 HOURS OF OPERATION

4.8.4.a CHECKING THE TYRE PRESSURE

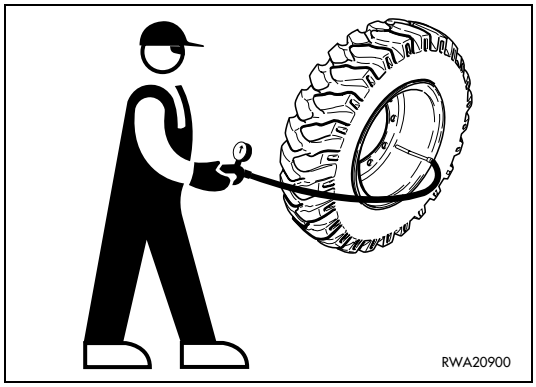

WARNING

- **Inflate the tyres standing beside the outer belt.**
- **Do not exceed the pressures recommended in the "TECHNICAL CHARACTERISTICS".**

This check is indispensable for the preservation, exploitment and duration of the tyres.
The pressure must be as indicated in the specifications (see "5.1.3 TECHNICAL CHARACTERISTICS").
While checking the tyre pressure, check also the conditions of the tread and sidewalls.

4.8.4.b CHECKING THE COOLANT LEVEL IN THE RADIATOR

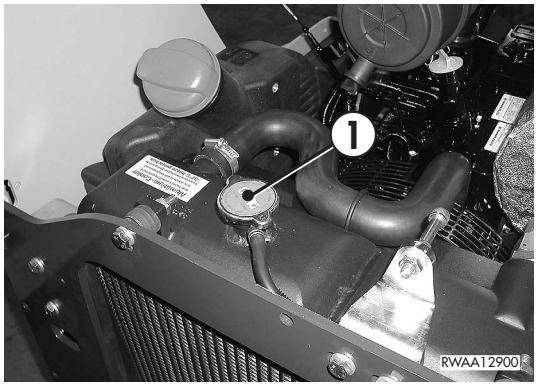

WARNING

- **Carry out this check with the machine parked on a level surface and the equipment resting on the ground.**
- **Do not remove the radiator cap when the fluid is hot, since it may be sprayed out violently and cause burns.**
- **Loosen the cap slowly in order to release the pressure before removing it.**

The radiator cap can be reached after raising the engine hood (see "3.5.1 ENGINE HOOD").
Remove the cap (1) and make sure that the fluid level reaches the filling hole.

IMPORTANT

- **If the fluid level in the radiator is low and the expansion tank is full of coolant, check the tightness of the radiator and make sure that there is no air leakage from the radiator-expansion tank coupling.**
  If this inconvenience occurs repeatedly, contact your Komatsu Dealer.

https://truckmanualshub.com/

4.8.5 MAINTENANCE AFTER THE FIRST 250 HOURS OF OPERATION

These maintenance operations must be carried out after the first 250 hours of operation, together with those to be carried out “EVERY 250 HOURS”.

- HYDRAULIC OIL DRAIN FILTER

For details on the various maintenance operations, see section "4.8.8 MAINTENANCE EVERY 500 HOURS OF OPERATION".

4.8.6 MAINTENANCE EVERY 250 HOURS OF OPERATION

These operations must be carried out together with those to be carried out “EVERY 50 HOURS”.

4.8.6.a ADJUSTING THE FAN BELT TENSION

The fan belt can be reached after raising the engine hood (see "3.5.1 ENGINE HOOD") and the rear panel (see "3.5.2 REAR PANEL").
The check is manual: press the belt (1) with your thumb on the indicated point with a force equal to approx. 10 kg; the resulting deflection must be approximately 10-15 mm.
If the deflection exceeds this value, loosen the screw (2) that fastens the alternator (3) and, with a lever inserted between the engine block and casing, make the alternator slide.
Lock the screw (2) and check again.
Use a 12 mm spanner.

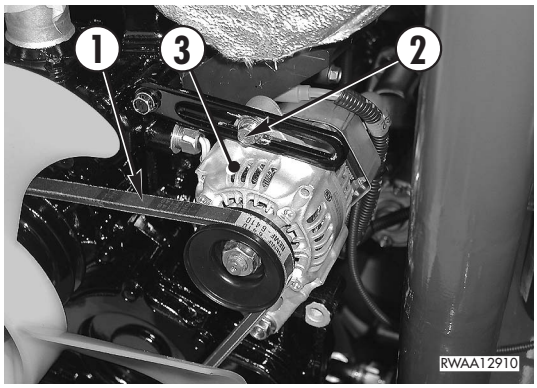

A - Fan pulley

B - Driving shaft pulley

C - Alternator pulley

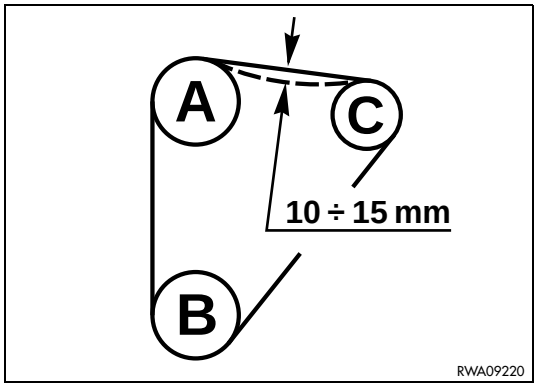

IMPORTANT

- **If the belt is worn, change it and check the tension again after a few hours of operation.**

https://truckmanualshub.com/

4.8.6.b CHECKING THE GEARING CHAIN TENSION

WARNING

- **Stop the machine on firm and level ground, raise the front and rear wheels until they are not in contact with the ground any longer and engage all the safety locks before stopping the engine.**
- **Secure the machine in this position by applying bearing blocks under the front part of the frame.**

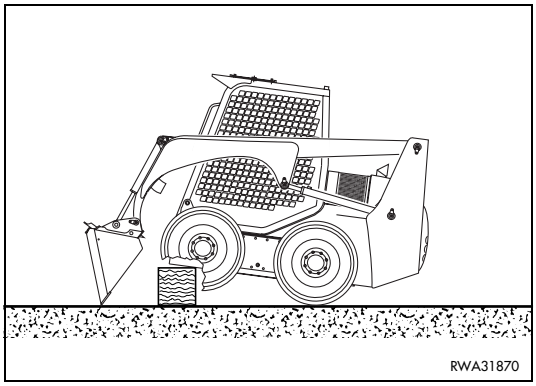

FRONT CHAINS

After raising the front part of the machine and securing it in this position with safety blocks, mark a point on the outer perimeter of the front rim and, moving the wheel, make sure that the point moves of a distance included between 2 and 6 mm. This range determines the correct tension of the chain.
Repeat this operation also for the opposite wheel.

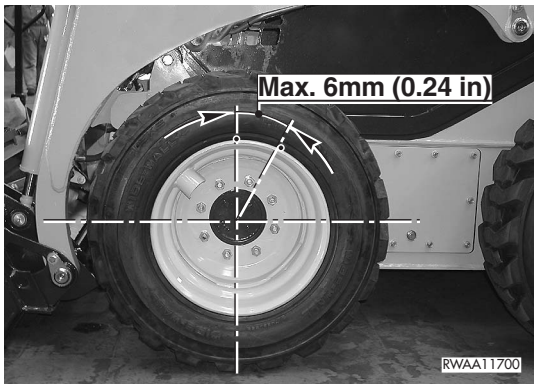

REAR CHAINS

After raising the rear part of the machine and securing it in this position with safety blocks, mark a point on the outer perimeter of the rear rim and, moving the wheel, make sure that the point moves of a distance included between 2 and 6 mm. This range determines the correct tension of the chain.
Repeat this operation also for the opposite wheel.

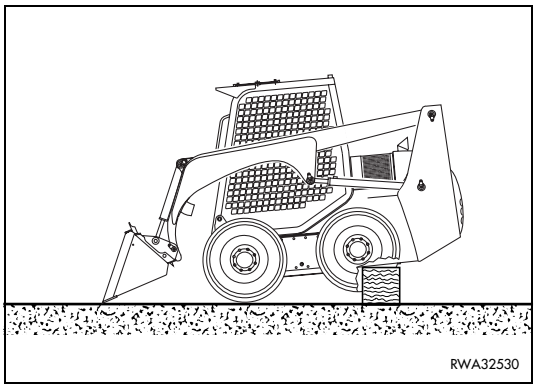

IMPORTANT

- **Check the tension on the front and rear wheels and if the slack exceeds 6 mm, contact your Komatsu Dealer.**

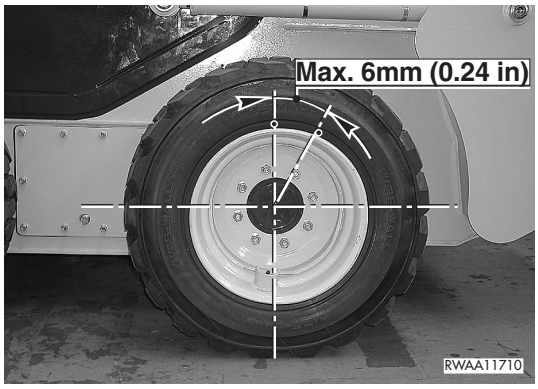

https://truckmanualshub.com/

ADJUSTING THE CHAINS

WARNING

- **The adjustment must be carried out with the machine parked on a firm, level and not slippery surface.**
- **Before carrying out the adjustment, take all the necessary safety precautions.**

CAUTION

- **When adjusting the hub-holding plate, do not loosen the fastening nuts by giving them more than 2 turns, in order to prevent any oil leakage.**

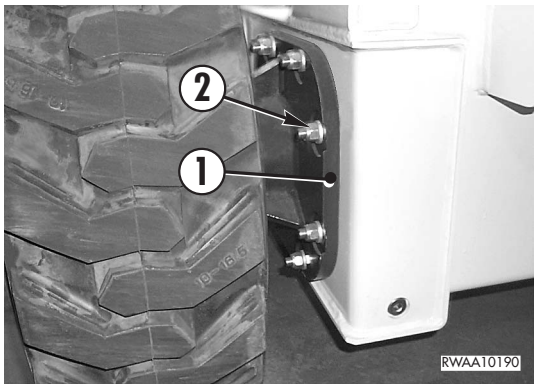

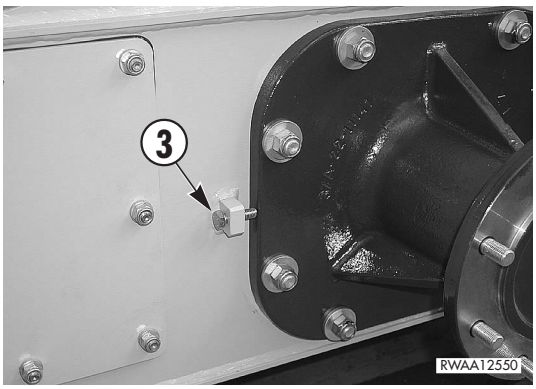

If the wheel slack exceeds 6 mm, carry out the following operations:

1 - Remove the wheel nuts using a 24 mm hexagon spanner.

2 - Position the adjusting screw (3) included in the supply on the appropriate hole and make it rest against the hub-holding plate (1). Use a 17 mm hexagon spanner.

3 - Loosen the nuts (2) of the hub-holding plate (1), giving them max. 2 turns. Use a 22 mm hexagon spanner.

4 - Adjust the screw (3), moving the hub-holding plate 1 or 2 mm forwards.

5 - Fasten at least 3 diametrically opposite nuts (2) of the hub-holding plate.

6 - Install the wheel and check the wheel slack.

If the wheel slack value is not included within the prescribed value range, repeat the operations described above.

If, on the contrary, the wheel slack value is included within this range, proceed as follows:

1 - Remove the wheel again.

2 - Tighten all the nuts (2) of the hub-holding plate (1) by applying the prescribed driving torque (see "4.4.1 STANDARD DRIVING TORQUES").

3 - Remove the adjusting screw (3).

4 - Put back the wheel definitively, tightening the nuts with the prescribed torque (see "4.4.2 SPECIFIC DRIVING TORQUES").

Repeat this procedure also for the other wheels.

IMPORTANT

- **It is important to remember that each side of the final transmission (right and left) is constituted by two chains (front and rear) that transmit motion to the corresponding wheels.**
  Each chain can be adjusted independently of the others.

https://truckmanualshub.com/

4.8.6.c CLEANING THE OUTSIDE OF THE RADIATORS

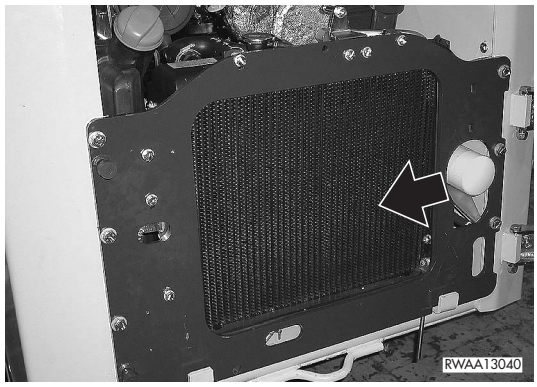

WARNING

- **If compressed air, steam or water are directed against a person, they may cause injuries.**
  Always wear an eye shield and safety shoes.

The outside of the radiators must be cleaned with a jet of compressed air and, if necessary, with a low-pressure water or steam washing cycle; the specific products available on the market can certainly be used, provided that the instructions given on the package are followed and that the washed parts are carefully dried at the end of the operations.

IMPORTANT

- **Do not use products containing oily substances, even if in slight quantities, since these facilitate the adhesion of dust, which affects the heat exchange adversely.**
- **Clean the outside of the radiators whenever the radiator and the heat exchanger are dirtied, even if accidentally, with oil, diesel oil, greasy or oily substances.**
- **If the machine is used in dusty places, clean the radiator and the heat exchanger more frequently, in order to avoid the clogging of the fins.**

4.8.6.d CHECKING THE WHEEL NUT DRIVING TORQUE

CAUTION

- **On new machines, check the wheel nut driving torque after the first 50 hours of operation and successively every 250 hours.**

This check serves to restore the correct driving torque of the wheels on the hubs.
The torque must be checked with a dynamometric spanner (1) calibrated with the values indicated in paragraph "4.4.2 SPECIFIC DRIVING TORQUES".
Use a 24 mm spanner.

IMPORTANT

- **Do not increase the specified driving torque and keep it within the prescribed values.**
- **When checking the driving torque, do not lubricate the thread.**

https://truckmanualshub.com/

4.8.6.e CHECKING THE OIL LEVEL IN THE FINAL TRANSMISSIONS

This check must be carried out on each transmission, with the machine at rest on level ground.
The check is visual and serves to verify that the lubricant reaches the height of the hole (1); if this is not the case, top up using the recommended type of oil.
(See "4.3 FUEL, COOLANT AND LUBRICANTS").
Use a 19 mm hexagon spanner.

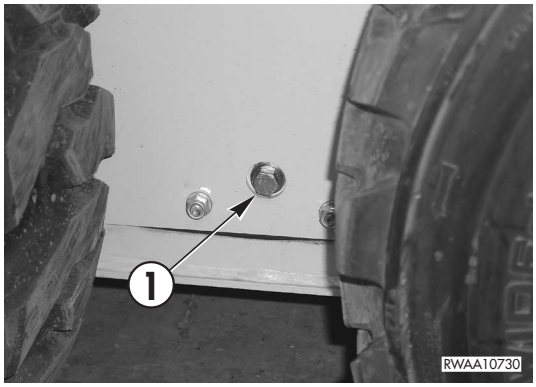

https://truckmanualshub.com/

4.8.6.f LUBRICATING THE JOINTS

IMPORTANT

- **Clean the grease nipples before applying the greasing pump.**
- **After lubrication, remove any excess grease.**
- **If the machine is used in difficult conditions, perform these maintenance operations more frequently.**

These maintenance operations must be carried out with the arm completely lowered and the bucket resting on the ground. For the lubrication, use a syringe and the recommended grease.
(See "4.3 FUEL, COOLANT AND LUBRICANTS").

NOTE

- As a general rule, consider that each cylinder is provided with two grease nipples positioned on the couplings and that each pin serving as fulcrum for a movement is provided with at least one grease nipple.

EQUIPMENT LUBRICATION POINTS

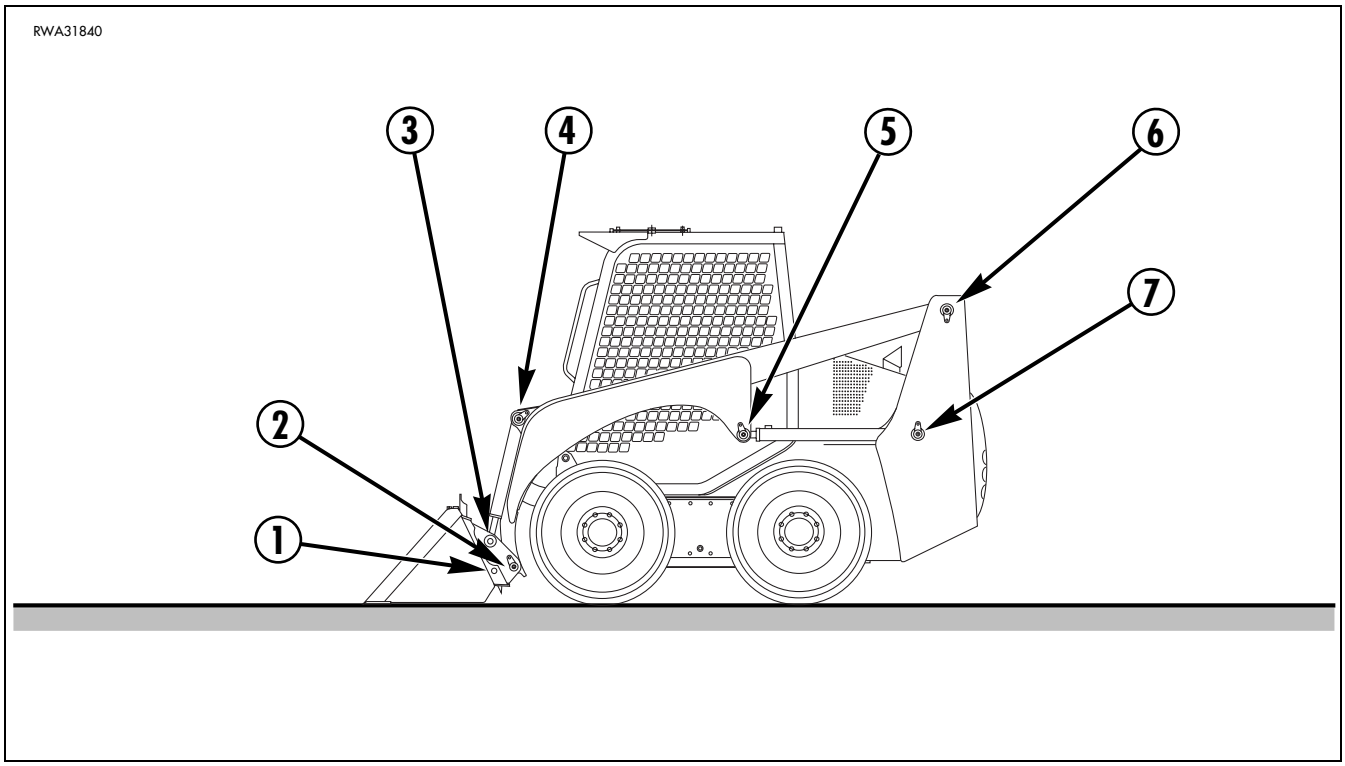

1 - Bucket coupling pin	(2 points)
2 - Tool-holder plate fulcrum pin	(2 points)
3 - Bucket cylinder head pin	(2 points)
4 - Bucket cylinder base pin	(2 points)
5 - Lifting cylinder head pin	(2 points)
6 - Arm fulcrum pin	(2 points)
7 - Lifting cylinder base pin	(2 points)

https://truckmanualshub.com/

4.8.6.g CHANGING THE ENGINE OIL

WARNING

- **Soon after the machine has been stopped the engine oil is very hot and may cause burns; let the engine cool down until it reaches a temperature of 40-45ºC before draining the oil.**
- **The oil that may be spilled during the change makes the ground slippery, therefore, use anti-slip shoes and immediately remove any trace of oil from the floor.**
- **Oils, filters, coolants and batteries are considered special waste and must be collected and disposed of according to the anti-pollution regulations in force.**

NOTE

- Drain the oil after positioning the flexible pipe outside the engine compartment.

Change the engine oil at the same time as the engine oil filter (see "4.8.6.h CHANGING THE ENGINE OIL FILTER").
This operation must be carried out with the machine parked on firm and level ground and the step succession is the following:

1 - Detach the lower cover (1) after removing the fastening screws (2). Use a 17 mm spanner.

2 - Extract the oil drain flexible pipe (3) from the lower opening.

3 - Raise the engine hood (see "3.5.1 ENGINE HOOD").

4 - Remove the drain plug (4) of the flexible pipe (3), gathering the used oil that flows out into a container with suitable capacity. Use a 27 mm spanner.
While the oil flows out, remove the filling cap (5), so that the oil can flow freely.

5 - Screw the plug (4) on to the flexible pipe and pour the prescribed quantity of new oil, using the dipstick (6) to make sure that the oil reaches the MAX. level.

6 - Put back the filling cap (5), start the engine, let it run for 5 minutes and then stop it.
Check the level again and top up if necessary.

7 - Close the lower cover (1).

8 - Close the engine hood.

Use oil suitable for the ambient temperature (see "4.3 FUEL, COOLANT AND LUBRICANTS").

CAUTION

- **After the oil change and after removing any trace of oil, put back the flexible pipe inside the engine compartment.**

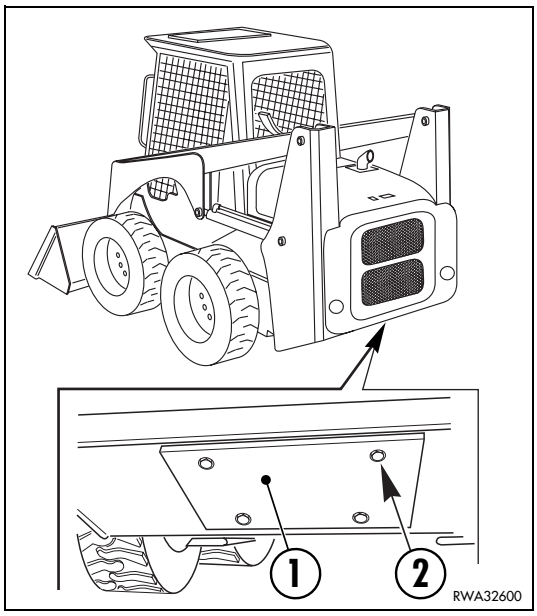

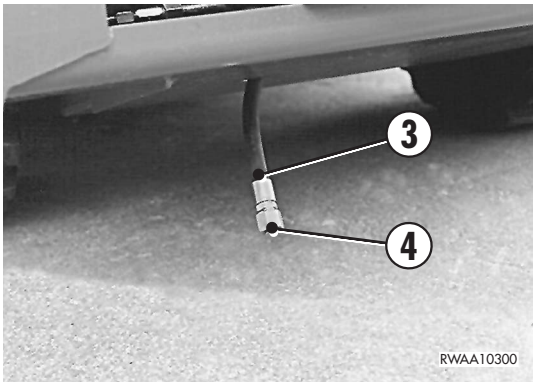

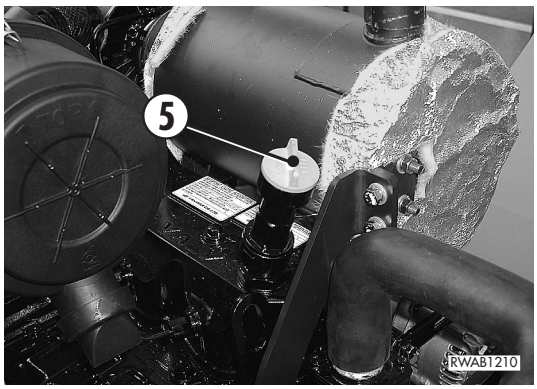

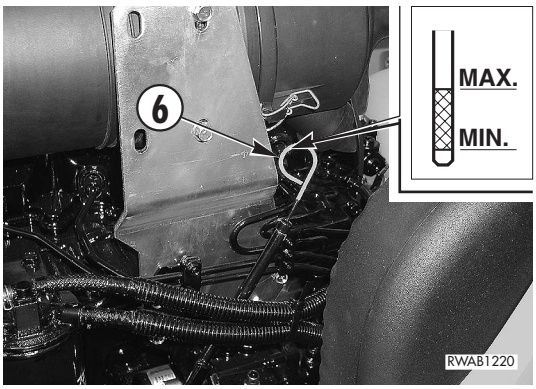

https://truckmanualshub.com/

Some versions of the machine come with special safety drain plugs and to change the oil it is necessary to proceed as follows.
Remove the plug (7), apply the special union provided and screw manually until the oil flows out.
At the same time, carry out the change procedures prescribed for the standard version.
At the end of the operation, remove the special union and put it in the appropriate tool container.
Put back the plug (7).

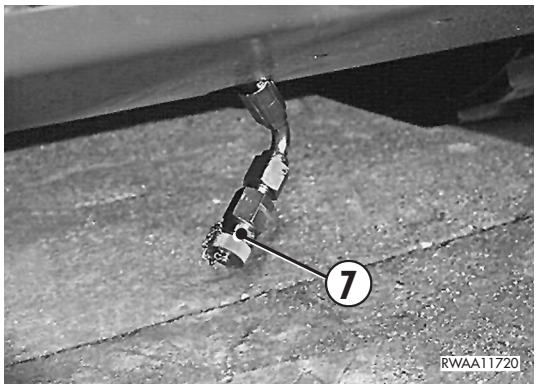

4.8.6.h CHANGING THE ENGINE OIL FILTER

⚠ WARNING

- **Soon after the machine has been stopped the engine oil is very hot and may cause burns; let the engine cool down until it reaches a temperature of 40-45ºC before draining the oil.**
- **The oil that may be spilled during the change makes the ground slippery, therefore, use anti-slip shoes and immediately remove any trace of oil from the floor.**
- **Oils, filters, coolants and batteries are considered special waste and must be collected and disposed of according to the anti-pollution regulations in force.**

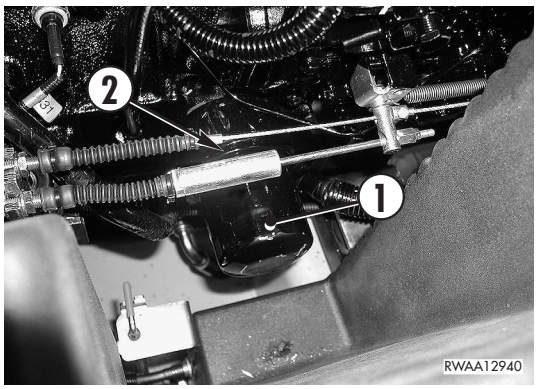

This operation must be carried out on every oil change.
Proceed as follows:

1 - Raise the engine hood (see "3.5.1 ENGINE HOOD").
2 - Drain the engine oil (see "4.8.6.g CHANGING THE ENGINE OIL").
3 - Unscrew the used filter (1) with the special spanner provided and discard it.
4 - Clean the contact surface between the seal and the filter support (2).
5 - Lubricate the seal of the new filter and screw thoroughly.
6 - Give a further half turn by hand.
7 - Fill the engine with new oil and complete the operations as described in "4.8.6.g CHANGING THE ENGINE OIL".

Start the engine, make sure that there are no leakages and that the oil pressure warning light goes out.
Close the engine hood.

IMPORTANT

- **Do not use the spanner to lock the filter, since this may be damaged and cause oil leakages.**

https://truckmanualshub.com/

4.8.7 MAINTENANCE AFTER THE FIRST 500 HOURS OF OPERATION (Only for machines filled with synthetic biodegradable oil type HEES)

These maintenance operations must be carried out after the first 500 hours of operation, together with those to be carried out “EVERY 500 HOURS”.

- HYDRAULIC OIL CHANGE AND CLEANING OF THE SUCTION FILTER

For details on the various maintenance operations, see section "4.8.9 MAINTENANCE EVERY 1000 HOURS OF OPERATION".

4.8.8 MAINTENANCE EVERY 500 HOURS OF OPERATION

These operations must be carried out together with those to be carried out EVERY 50 and 250 HOURS.

4.8.8.a CHANGING THE FUEL FILTER

WARNING

- **Change the filtering element after work, when the engine has cooled down to 40-45ºC.**
- **When these operations are carried out, fuel may be spilled; clean the dirty areas immediately, in order to prevent any risk of slipping or fire.**
- **Oils, filters, coolants and batteries are considered special waste and must be collected and disposed of according to the anti-pollution regulations in force.**

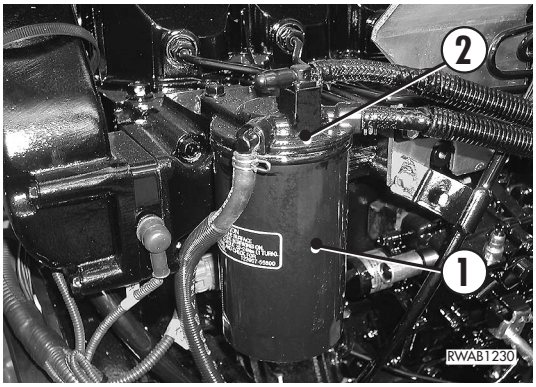

The fuel filter and the fuel pump can be reached after raising the engine hood (see "3.5.1 ENGINE HOOD").

FUEL FILTER

1 - Clean the outside surfaces of the unit and then unscrew the used filter (1) with the special spanner provided and throw it away.

2 - Clean the inside of the head (2).

3 - Lubricate the new filter seal and screw thoroughly.

4 - Give a further half turn by hand.

5 - Bleed the fuel supply circuit.

https://truckmanualshub.com/

BLEEDING THE CIRCUIT

After filling the tank, turn the ignition key to position «I» and wait for approximately 15-20 seconds, in such a way as to bleed the fuel supply circuit.

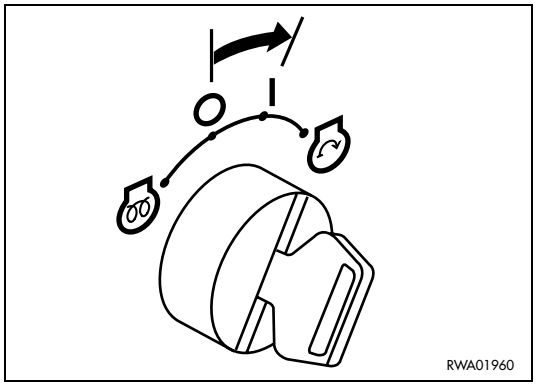

IMPORTANT

- **After bleeding the circuit, turn the ignition key to position «⏲» for a few seconds and wait at least 2 minutes before starting the engine.**
- **If the engine starts without problems and then stops or works irregularly, check if there is air in the circuit; if so, check the tightness of the fuel filter and of the fuel pump prefilter.**
- **After the fuel has run out, bleed the circuit by proceeding as described above and repeat the operation for at least 2-3 times.**

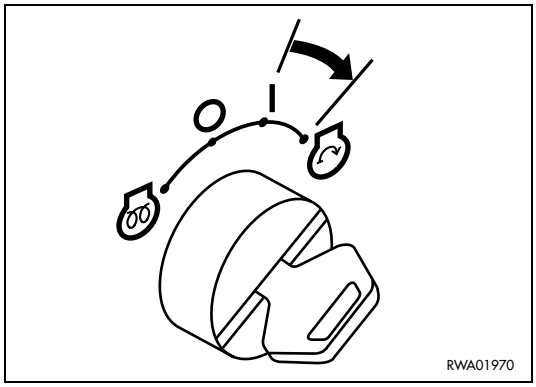

https://truckmanualshub.com/

4.8.8.b CHANGING THE HYDRAULIC OIL DRAIN FILTER

WARNING

- **Soon after the machine has been stopped the hydraulic oil is very hot; let it cool down until it reaches a temperature of 40-45ºC before changing the filter.**
- **The hydraulic system is pressurized; loosen the filling cap slowly to release the residual pressure.**
- **Oils, filters, coolants and batteries are considered special waste and must be collected and disposed of according to the anti-pollution regulations in force.**

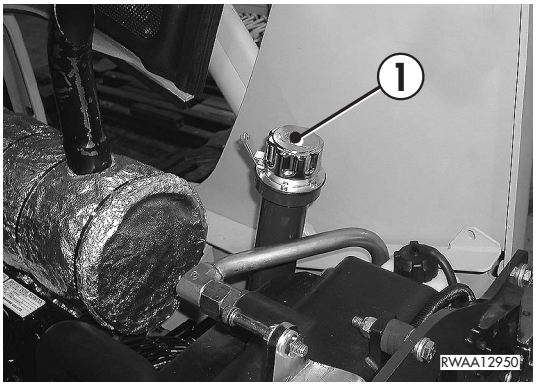

CAUTION

- **On new machines, change the hydraulic oil filter cartridge after the first 250 hours of operation and successively every 500 hours.**
- **On machines filled with synthetic biodegradable oil type HEES, the first change must be carried out after the first 50 hours of operation and the successive changes every 500 hours.**

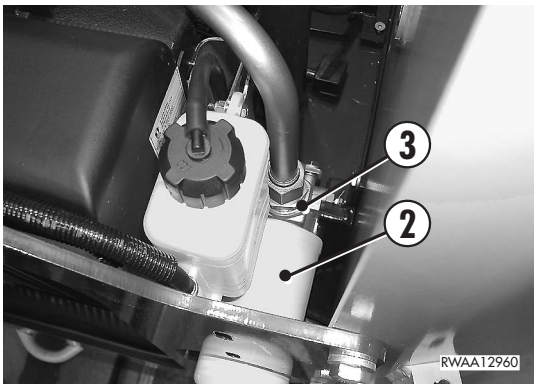

The filter is positioned on the hydraulic system drain outlet and blocks the metal particles that come off the various components due to their wear. The filter can be reached after opening the rear panel (see "3.5.2 REAR PANEL").
To change it, proceed as follows:

1 - Slowly loosen the filling cap (1) in order to release the residual pressure from the tank and then remove it.
2 - Unscrew the used filter (2) and discard it.
3 - Clean the contact surface between the seal and the filter support (3), lubricate the seal of the new filter and screw thoroughly.
4 - Give a further half turn by hand.
5 - Close the rear panel.

IMPORTANT

- **Do not use the spanner to lock the filter, since this may be damaged and cause oil leakages.**
- **If the machine contains synthetic biodegradable oil type HEES, the filter must be changed after the first 50 hours of operation.**

https://truckmanualshub.com/

4.8.8.c CLEANING THE WATER SEPARATOR

WARNING

- **Change the precleaner at the end of work, when the engine has cooled down to 40-45º C.**
- **When these operations are carried out, fuel may be spilled; clean the dirty areas immediately, in order to prevent any risk of slipping or fire.**

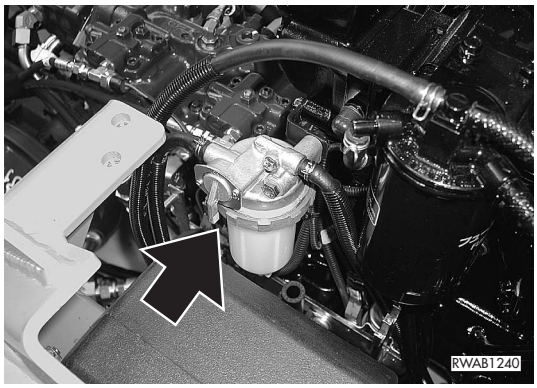

The water separator can be reached after opening the engine hood (see "3.5.1 ENGINE HOOD").

CLEANING THE WATER SEPARATOR

1 - Close the cock (1).

2 - Loosen the metal ring (2) and remove the cup (3) and the filtering element.

3 - Clean the inside of the cup and the filter with diesel oil or oil.

4 - Put back the filter and the cup (3), tighten the metal ring (2) and open the cock (1).

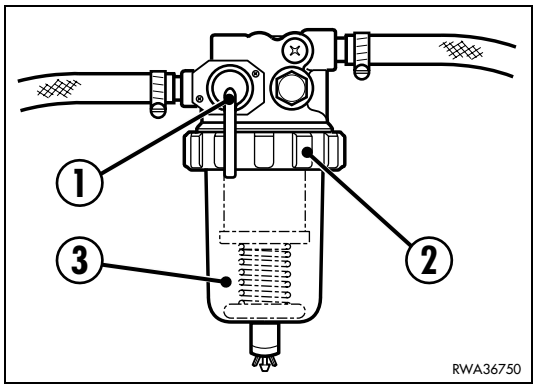

IMPORTANT

- **When disassembling the water separator, be careful not to lose the red ring contained in the cup.**
- **If the filtering element is clogged or damaged, change it.**

BLEEDING THE CIRCUIT

After filling the tank, turn the ignition key to position «**I**» and wait for approximately 15-20 seconds, in such a way as to bleed the fuel supply circuit.

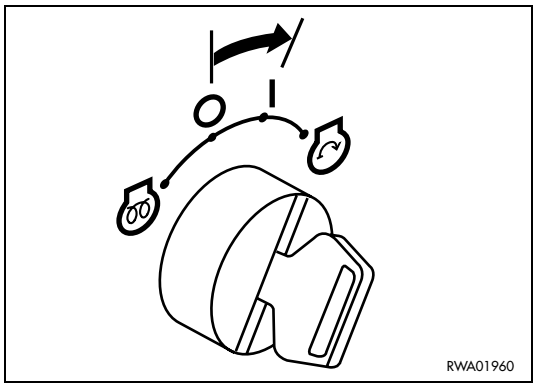

IMPORTANT

- **After bleeding the circuit, turn the ignition key to position «⏲» for a few seconds and wait at least 2 minutes before starting the engine.**
- **If the engine starts without problems and then stops or works irregularly, check if there is air in the circuit; if so, check the tightness of the fuel filter and of the fuel pump prefilter.**
- **After the fuel has run out, bleed the circuit by proceeding as described above and repeat the operation for at least 2-3 times.**

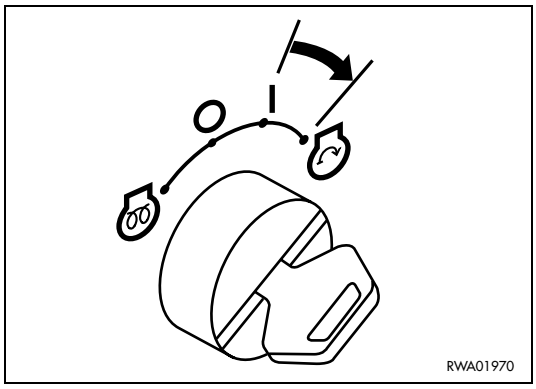

https://truckmanualshub.com/

4.8.8.d DRAINING THE HYDRAULIC OIL TANK (Only for machines filled with synthetic biodegradable oil type HEES)

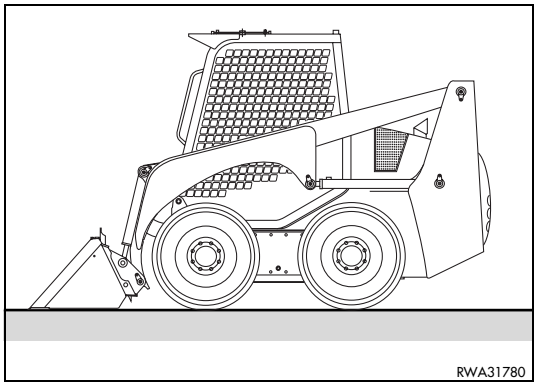

WARNING

- **Lower the loader arm completely, rest the bucket on to the ground and, after stopping the engine, eliminate the residual pressures that may be present in the equipment (by operating the controls more than once) and lock the safety bars (see "3.3.5 pos. 1 - SAFETY BARS").**
- **Let the oil cool down until it reaches 40-45ºC before performing any maintenance operation.**
- **Immediately clean any area dirty with oil.**

Stop the machine on a firm and level surface, lower the equipment to the ground, stop the engine and release the residual pressures that may be present in the equipment by operating the controls more than once.
Raise the engine hood (see "3.5.1 ENGINE HOOD") and open the rear panel (see "3.5.2 REAR PANEL").

1 - Slowly loosen the filling cap (1) to release the residual pressure from the tank and remove it.

2 - Loosen the lower plug (2) until the condensate has flown out of the tank completely.
Use a 12 mm hexagon spanner.

3 - Put back the lower plug (2), the filling cap (1) and close the rear panel and the engine hood.

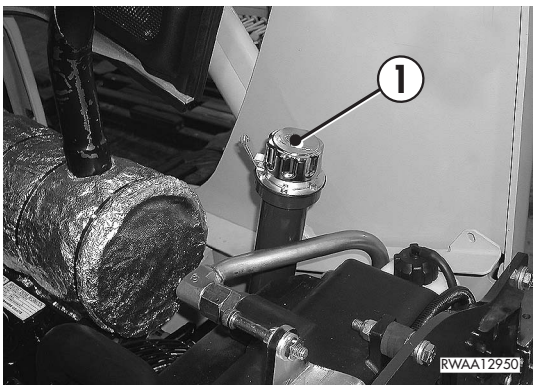

IMPORTANT

- **The draining of the tank must be carried out at temperatures exceeding 0ºC, before starting the engine; when the temperature is below 0ºC, the hydraulic oil tank must be drained at the end of work, or in any case when the temperature of the machine is sufficiently high to prevent the condensate from freezing and to allow it to flow out of the tank without problems.**

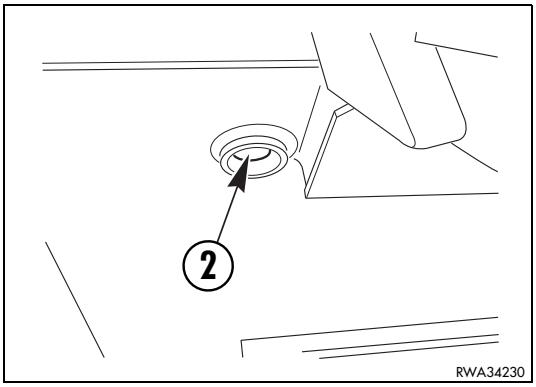

https://truckmanualshub.com/

4.8.9 MAINTENANCE EVERY 1000 HOURS OF OPERATION

These operations must be carried out together with those to be carried out EVERY 50, 250, 500 HOURS.

4.8.9.a CHANGING THE OIL IN THE FINAL TRANSMISSION

WARNING

- **Oils, filters, coolants and batteries are considered special waste and must be collected and disposed of according to the anti-pollution regulations in force.**

This operation must be carried out on each transmission with the machine parked on level ground and at operating temperature, so that the oil becomes fluid and can be drained easily together with the solid particles suspended in it.
Before changing the oil, lift the loader arm and secure it with the safety lock (see "3.1.1 LOADER LOCKS")

1 - Remove the drain plug (1) and let the used oil flow out completely. Use a 19 mm hexagon spanner.
While the oil flows out, remove the plug (2). Use a 19 mm hexagon spanner.

2 - After draining the used oil, put back the plug (1) and fill with the recommended oil through the hole (2) until the oil reaches the lower edge of the hole.

3 - Put back the plug (2).

Carry out some movements and check the level again with the machine at rest. Use only the recommended type of oil (see "4.3 FUEL, COOLANT AND LUBRICANTS").

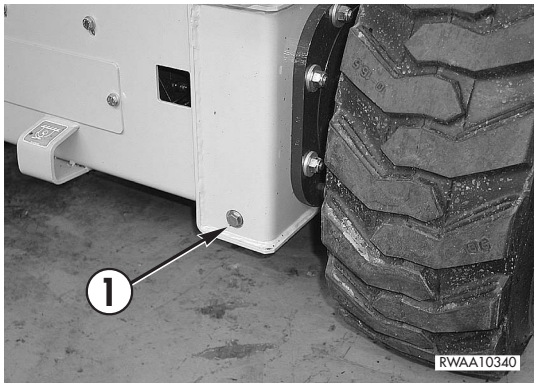

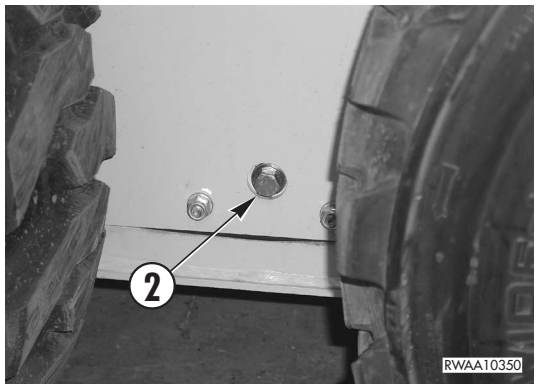

https://truckmanualshub.com/

4.8.9.b CHANGING THE HYDRAULIC SYSTEM OIL AND CLEANING THE SUCTION FILTER

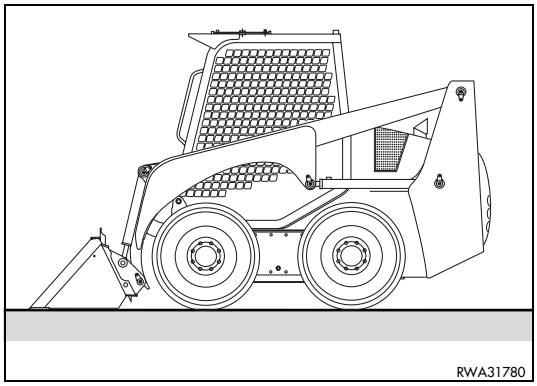

CAUTION

- **On machines filled with synthetic biodegradable hydraulic oil type HEES the oil must be changed after the first 500 hours of operation and successively every 1000 hours, and in any case at least once a year.**

WARNING

- **Lower the loader arm completely, lower the bucket to the ground, stop the engine, release the residual pressures from the work equipment circuits (by operating the controls more than once) and lock the safety bars (see "3.3.5 pos. 1 - SAFETY BARS").**
- **Let the oil cool down until it reaches 40-45ºC before carrying out any maintenance operation.**
- **Immediately clean any area dirty with oil.**
- **Oils, filters, coolants and batteries are considered special waste and must be collected and disposed of according to the anti-pollution regulations in force.**

Stop the machine on a firm and level surface, lower the equipment to the ground, stop the engine and release the residual pressures from the work equipment circuits by operating the controls more than once.
Raise the engine hood (see "3.5.1 ENGINE HOOD") and open the rear panel (see "3.5.2 REAR PANEL").

1 - Slowly loosen the filling cap (1) to release the residual pressure from the tank and then remove it.

2 - Remove the lower plug (2) and let the used oil flow out completely, gathering it in a container with suitable capacity.
Use a 12 mm hexagon spanner.

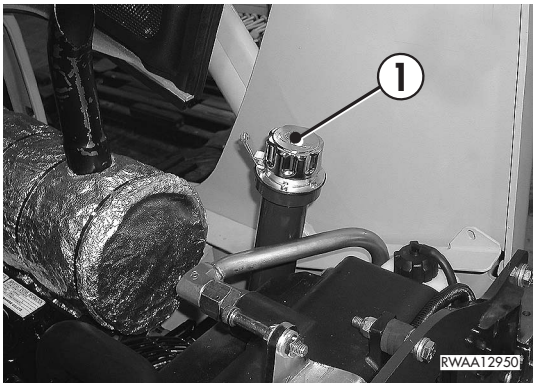

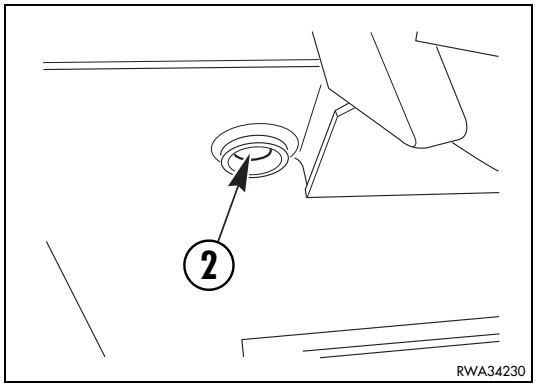

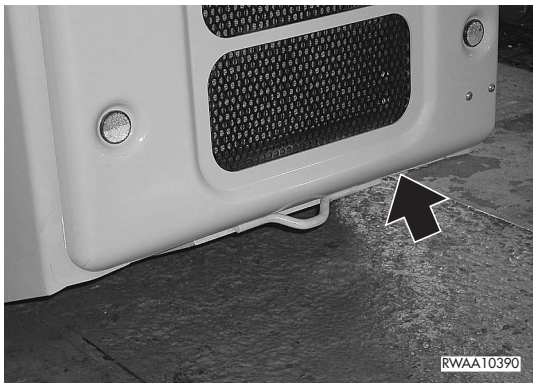

https://truckmanualshub.com/

3 - Once the oil has been drained, disconnect the suction pipe (3) and remove the flange (4) after removing the screws (5). Use a 17 mm hexagon spanner.

4 - Clean the filtering element (6).

5 - Put back the flange (4), the filter (6), the gasket (7) and the lower plug (2).

6 - Fill the tank with the prescribed oil until reaching the level (8). Use only the prescribed type of oil (see "4.3 FUEL, COOLANT AND LUBRICANTS").

7 - Raise the cab (see "3.5.3.4 RAISING THE CAB") sure that the oil in the hydraulic pump reaches the maximum level. To do this, remove the upper plug (9 and make sure that the hole is completely filled with oil. Use a 1/2” square section spanner.

8 - If the oil does not reach the maximum level, top up with the prescribed oil (see "4.3 FUEL, COOLANT AND LUBRICANTS").

9 - After the check, lower the cab, screw the filling cap (1), close the rear panel and the engine hood and deaerate the system.

10 - Make sure that all the control levers are in neutral position and let the engine idle for 2-3 minutes before operating the work equipment.
Move each piston more than once to deaerate the system; check again and top up if necessary.

CAUTION

- **Never start the engine with empty tank, since this would certainly damage the pump.**

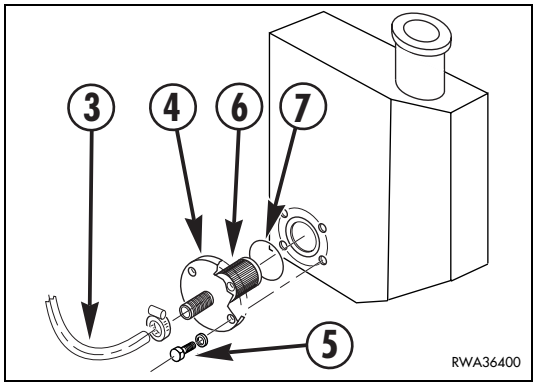

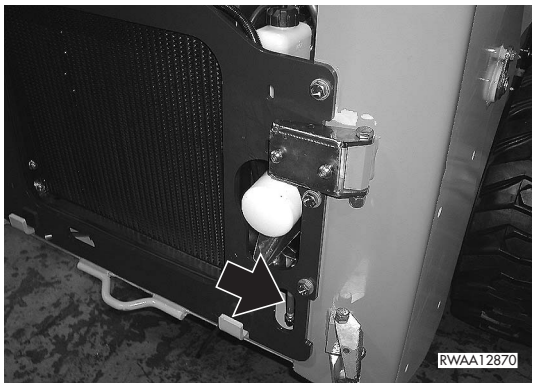

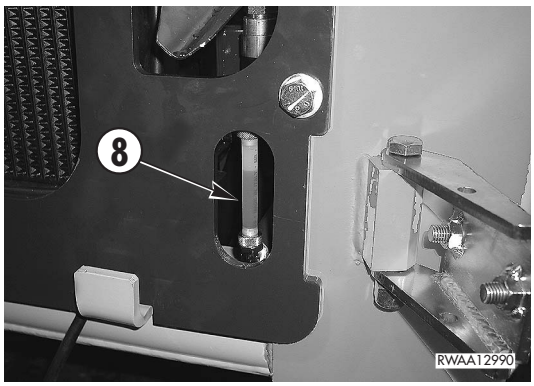

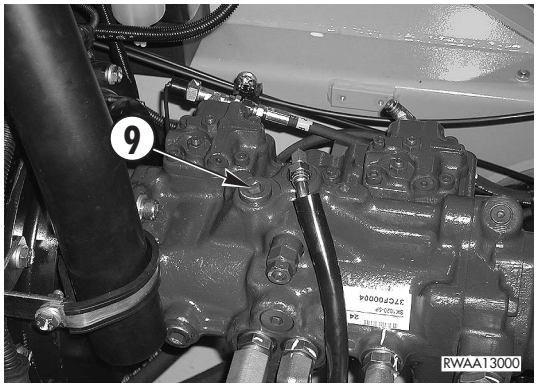

4.8.9.c CHECKING AND ADJUSTING THE ENGINE VALVE CLEARANCE

Since the check and adjustment of the engine valve clearance require the use of special tools, have these operations carried out by your Komatsu Dealer.

https://truckmanualshub.com/

4.8.10 MANUTENZIONE OGNI 2000 ORE

Carry out these operations together with those to be performed EVERY 50, 250, 500 and 1000 HOURS.

4.8.10.a CHANGING THE COOLANT

CAUTION

- **The coolant must be replaced every 2000 hours of operation or every 2 years, whichever occurs first.**

WARNING

- **Soon after the machine has been stopped the coolant is very hot and under pressure and it may cause serious burns; let the engine cool down until it reaches approximately 40-45ºC before changing the coolant.**
- **Slowly loosen the radiator cap, in order to release the residual pressure.**
- **Oils, filters, coolants and batteries are considered special waste and must be collected and disposed of according to the anti-pollution regulations in force.**

IMPORTANT

- **The change of the permanent coolant does not require the descaling of the circuit.**

Before changing the coolant, lift the loader arm and secure it with the safety lock (see "3.1.1 LOADER LOCKS").

1 - Raise the engine hood (see "3.5.1 ENGINE HOOD") and open the rear panel (see "3.5.2 REAR PANEL").

2 - Loosen and remove the upper cap (1) of the radiator.

3 - Open the drain cock (2) of the radiator, remove the drain plug (3) positioned on the engine block and let the fluid flow out. Use a 17 mm hexagon spanner.
While the fluid flows out, drain the coolant tank (4).

4 - Close the drain cock (2), the plug (3) on the engine block and fill the radiator with new fluid (see "4.3 FUEL, COOLANT AND LUBRICANTS").

5 - Start the engine and let it idle for a few minutes; check the level again and if necessary top up before putting back the upper cap (1).

6 - Fill the tank (4) until reaching the maximum level.

7 - Close the rear panel and the engine hood.

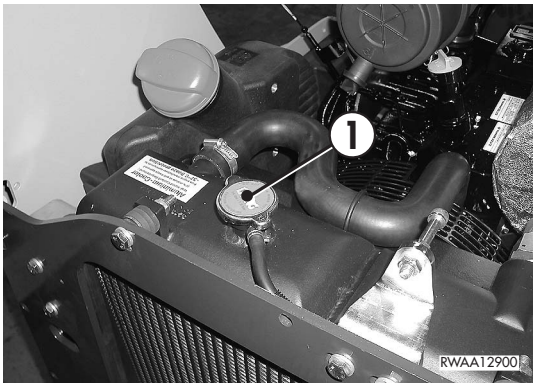

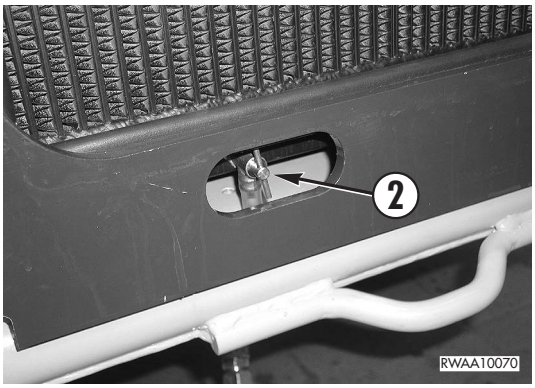

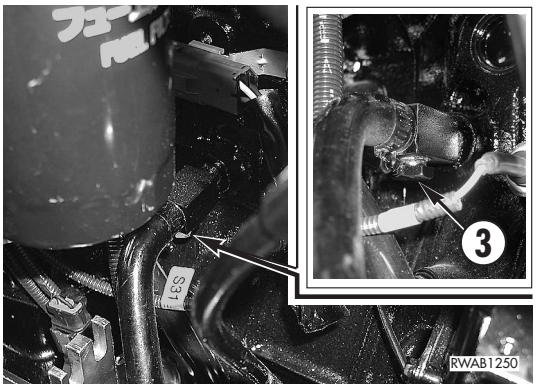

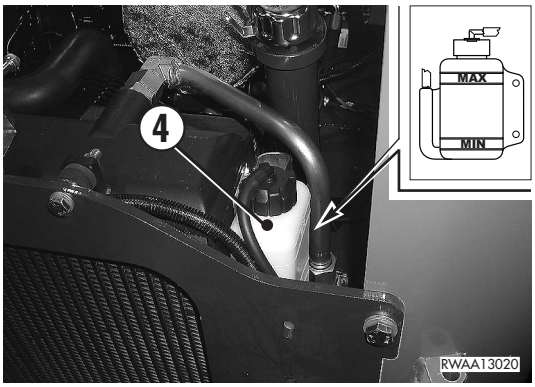

https://truckmanualshub.com/

4.8.10.b CHANGING THE SUCTION FILTER

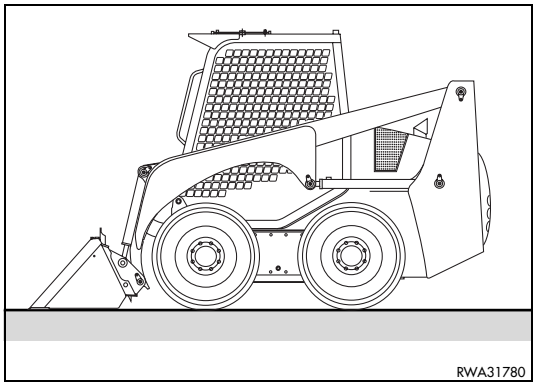

WARNING

- **Lower the loader arm completely, rest the bucket on to the ground, stop the engine, eliminate the residual pressures that may be present in the equipment (by operating the controls more than once) and lock the safety bars (see "3.3.5 pos. 1 - SAFETY BARS").**
- **Before carrying out any maintenance operation, let the oil cool down until it reaches 40-45º C.**
- **Immediately clean any area dirty with oil.**
- **Oils, filters, coolants and batteries are considered special waste and must be collected and disposed of according to the anti-pollution regulations in force.**

Stop the machine on a firm and level surface, lower the equipment to the ground, stop the engine and release the residual pressures from the equipment by operating the controls more than once.
Raise the engine hood (see "3.5.1 ENGINE HOOD") and open the rear panel (see "3.5.2 REAR PANEL").

The suction filter must be changed every two hydraulic oil changes.

1 - Slowly loosen the filling cap (1) in order to release the residual pressure from the tank and then remove it.

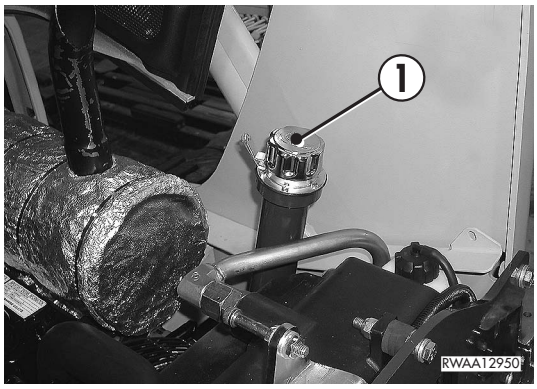

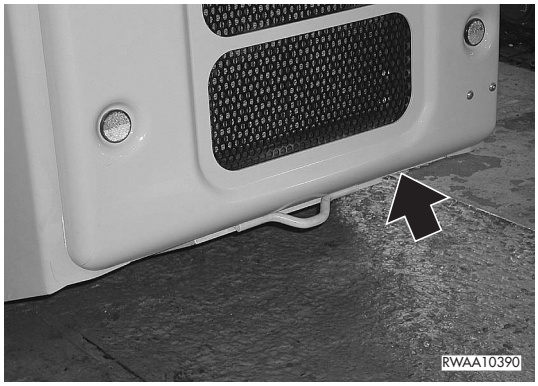

https://truckmanualshub.com/

2 - Drain the hydraulic oil (see "4.8.9.b CHANGING THE HYDRAULIC SYSTEM OIL AND CLEANING THE SUCTION FILTER").

3 - Once the oil has been drained, disconnect the suction pipe (3) and remove the flange (4) after removing the screws (5). Use a 17 mm hexagon spanner.

4 - Change the filtering element (6).

5 - Put back the flange (4), the filter (6), the gasket (7) and the lower plug (2).

6 - Complete the tank filling operations by proceeding as described in paragraph "4.8.9.b CHANGING THE HYDRAULIC SYSTEM OIL AND CLEANING THE SUCTION FILTER".

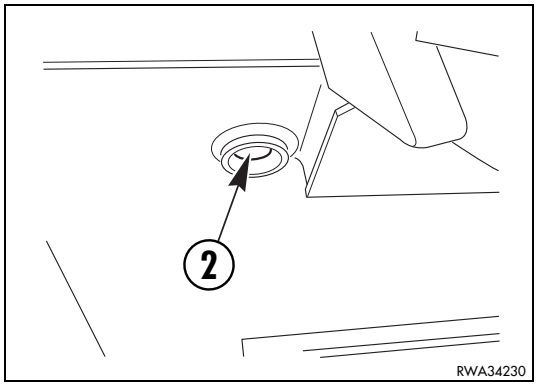

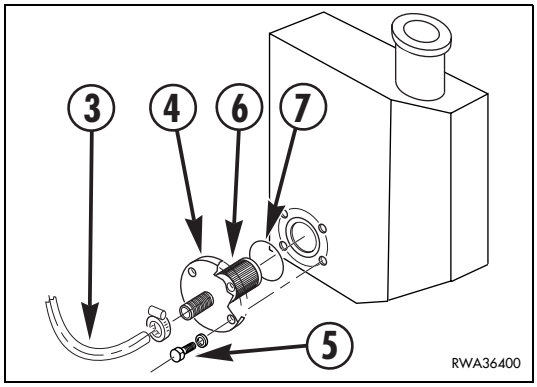

CAUTION

- **Never start the engine with empty tank, since this would certainly damage the pump.**

4.8.10.c CHECKING THE ALTERNATOR AND THE STARTER

For any inspection and/or repair, contact your Komatsu Dealer.
If the engine is started frequently, the alternator and the starter should be inspected every 1000 hours of operation.

https://truckmanualshub.com/

TECHNICAL SPECIFICATIONS

https://truckmanualshub.com/

5.1 TECHNICAL DATA

5.1.1 STANDARD MACHINE OVERALL DIMENSIONS

IMPORTANT

- **The weight of the machine increases by 200 kg when it is equipped with solid tyres.**
- **If the bucket is provided with teeth, the machine length increases by 100 mm.**
- **With extended bucket the machine length increases by 130 mm.**

OVERALL DIMENSIONS WITH STANDARD BUCKET L 1880 AND TYRES (12x16.5)

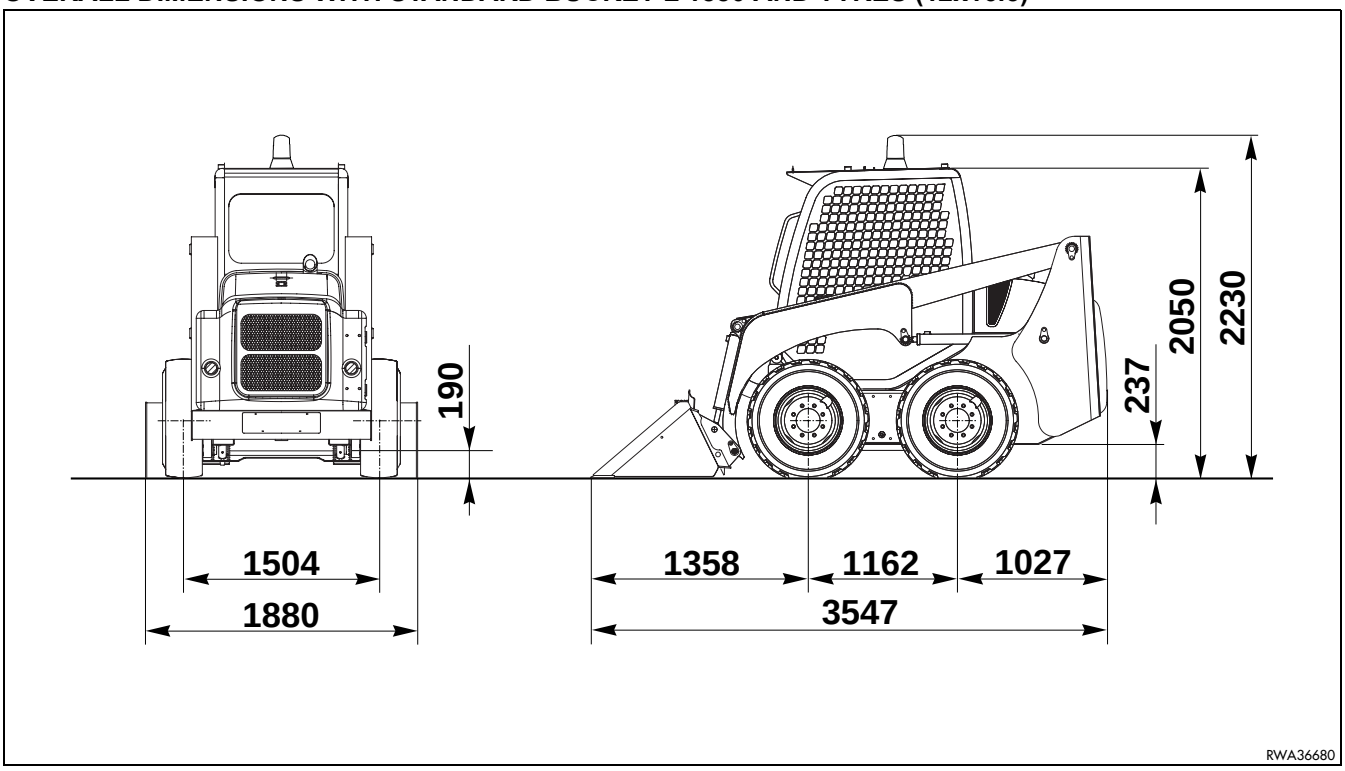

OVERALL DIMENSIONS WITH BUCKET L 1730 AND TYRES (12x16.5)

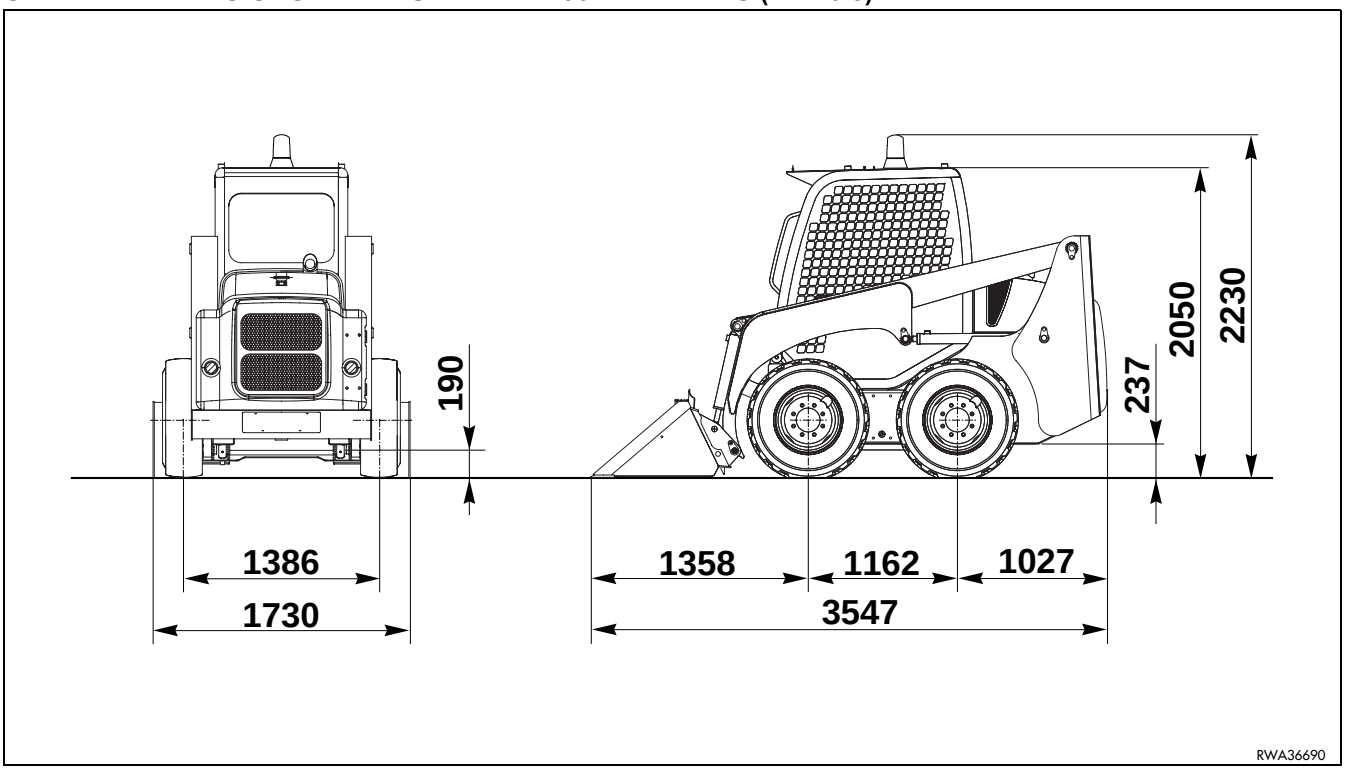

https://truckmanualshub.com/

5.1.2 MACHINE OVERALL DIMENSIONS WITH OPTIONAL EQUIPMENT

IMPORTANT

- **The weight of the machine increases by 200 kg when it is equipped with solid tyres.**

MACHINE OVERALL DIMENSIONS WITH EXCAVATOR (E35-2)

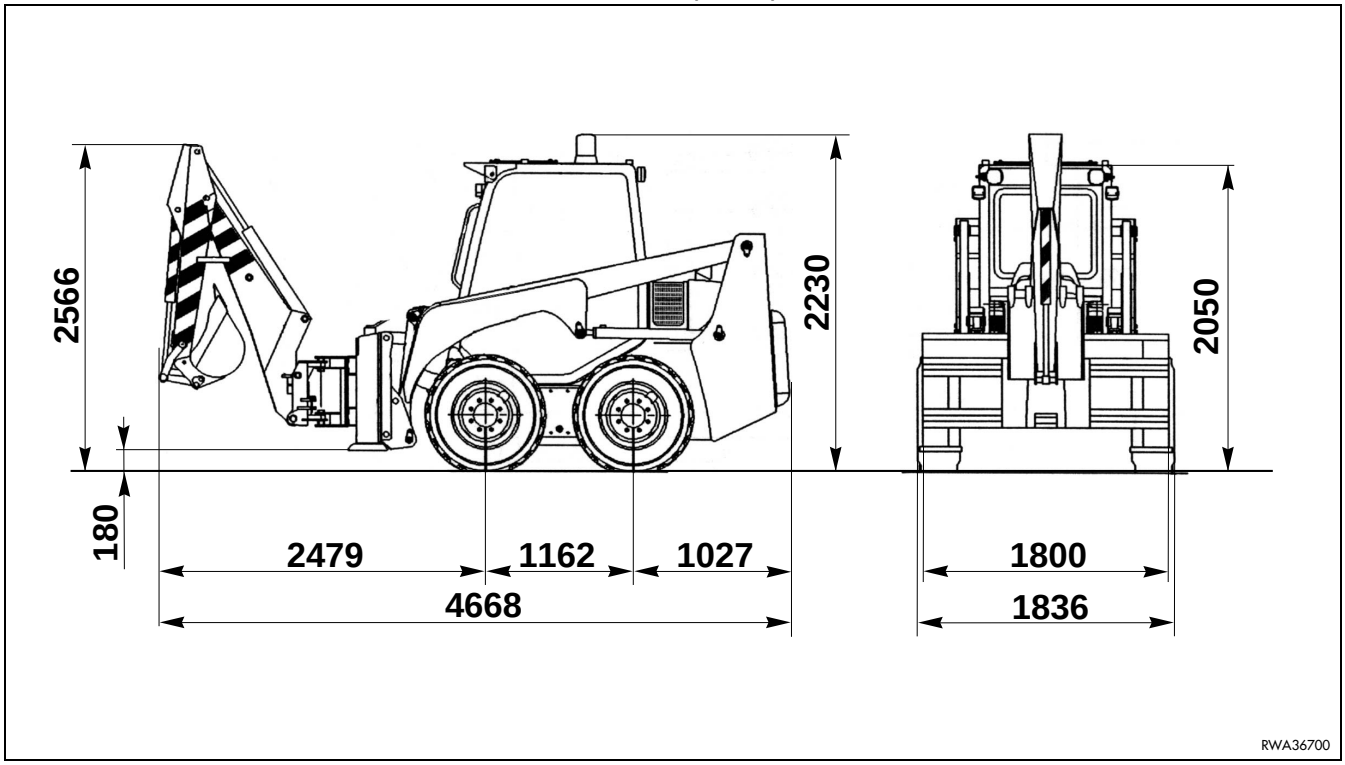

MACHINE OVERALL DIMENSIONS WITH ASPHALT CUTTER

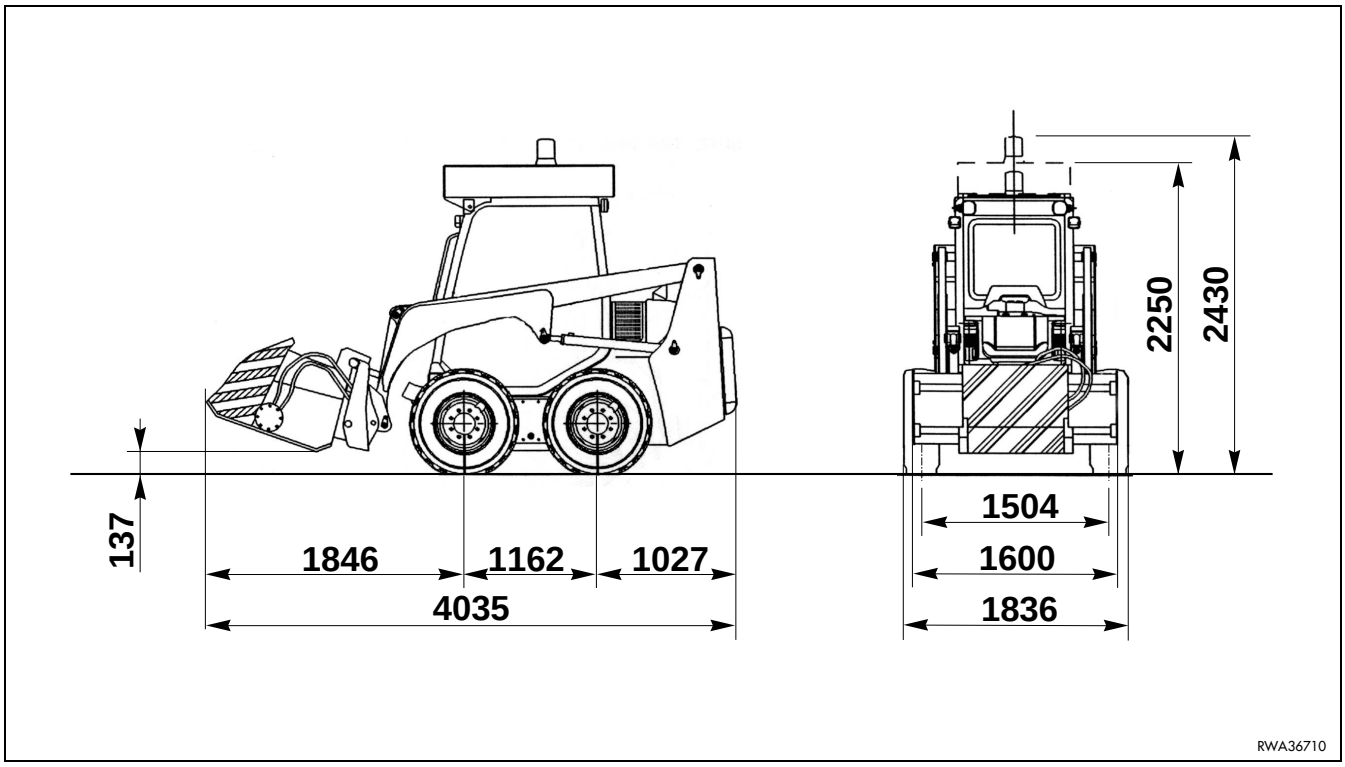

https://truckmanualshub.com/

5.1.3 TECHNICAL CHARACTERISTICS

TOTAL MASS

Standard machine max. total mass	kg	3350
Max. total mass with bucket L 1730	kg	3330
Max. total mass with bucket L 1880	kg	3350
Max. total mass with excavator E35-2	kg	4200
Max. total mass with asphalt cutter	kg	4250

BUCKET CAPACITY

Narrow bucket L 1730 capacity (SAE)	m^3	0.380
Standard bucket L 1880 capacity (SAE)	m^3	0.415

ENGINE

Komatsu diesel engine model		S4D98E-2NFE
Rated power (2500 rpm EEC 80/1269)	kW	64
Maximum torque (1600 rpm EEC 80/1269)	Nm	286

ELECTRICAL SYSTEM

Alternator		12 V
Electrical output		40 A
Earthing		negative
Battery		100 Ah-12 V
Starter	kW	3.0

SPEED

	FORWARD		REVERSE	
GEARS	**1**	**2**	**1**	**2**
km/h	10	15.5	10	15.5

TYRES

SIZE		MAKE	INFLATION PRESSURE
12x16.5	PR10	ECOMEGA	bar 4
12x16.5	PR10	HAULER	bar 4
12x16.5	PR10	GOOD-YEAR	bar 4

SOLID TYRES

SIZE	MAKE
12x16.5	AIR BOSS

https://truckmanualshub.com/

AUTHORISED OPTIONAL EQUIPMENT

https://truckmanualshub.com/

6.1 AUTHORIZED OPTIONAL EQUIPMENT

⚠ CAUTION

- **Komatsu machines can be supplied with optional equipment in addition to the standard equipment; if optional equipment is installed and used, carefully read the relevant operation manual and keep to the instructions given therein.**
- **Use exclusively optional or special equipment recommended and approved by Komatsu and complying with the requisites indicated in the table (see "6.1.4 CHARACTERISTICS OF THE OPTIONAL EQUIPMENT OF THE MACHINE VERSION WITH HIGH FLOW AND SUPER-FLOW HYDRAULIC SYSTEM").**
- **Komatsu cannot be held liable for any damage, accident, reduction of the machine efficiency due to the application and use of unauthorized equipment.**

6.1.1 PRECAUTIONS REGARDING SAFETY

The installation of optional accessories or equipment other than those authorized by Komatsu shortens the life of the machine and may also cause problems concerning safety.
It is advisable to contact a Komatsu Dealer before installing any accessory not indicated in this operation and maintenance manual.
In case of failure to comply with this recommendation, Komatsu declines any responsibility for accidents or damage.

⚠ WARNING

- **When removing or installing any equipment, take the following precautions and be careful to the safety conditions**
- **Carry out installation and removal on a firm and flat surface.**
- **When the operations are carried out by two or more operators, decide the communication signals in advance and respect them during the operations.**
- **Use a crane to handle objects weighing more than 25 kg.**
- **Always support any heavy part before removing it. When heavy parts are lifted, be always careful to the position of the center of gravity of the object being handled.**
- **It is very dangerous to carry out any operation with a suspended load; therefore, always position the load on a support and make sure that it is in a safe position.**
- **When installing or removing any equipment, make sure that it is stable and cannot fall down.**
- **Never stand under loads being lifted by a crane.**
  Take care to choose a safe position, where you do not run any risk in case the load should fall down.

IMPORTANT

- **Cranes must be operated by specialized personnel. Do not allow non-specialized personnel to use cranes.**

For further details regarding installation and removal operations, contact your Komatsu Dealer.

https://truckmanualshub.com/

6.1.2 PRECAUTIONS REGARDING THE INSTALLATION OF EQUIPMENT

WARNING

- **The use of lengthened work equipment reduces the stability of the machine.**
  If it is necessary to go up or down a slope, be particularly careful, since the machine may lose its balance and overturn.
- **When installing work equipment with dimensions exceeding those of the standard equipment, be careful to the space necessary for the movements of the equipment and of the machine.**

https://truckmanualshub.com/

6.1.3 CHARACTERISTICS OF THE STANDARD MACHINE OPTIONAL EQUIPMENT

(Specific weight of the handled material = 1,8 t/m^3)

EQUIPMENT	MAX. WEIGHT (kg)	MAX. DIMENSIONS		MAX. SAE CAPACITY (cu m)	MAX. OPERATING PRESSURE (bar)	MAX. FLOW RATE (l/min.)
		Width (mm)	Height (mm)			
Front bucket	197	1880	520	0.415	—	—
Multi-purpose front bucket	—	1880	550	—	206	80
Excavator	1100	● —	▲ 3200	Excavator —	206	80
Excavator bucket	73	800	—	—	—	—
Hydraulic hammer	150	—	—	—	206	80
Drill	190	★ 600	—	—	206	80
Pallet fork	160	1500	710	◆ 1000	206	—
Manure fork	120	1800	—	—	206	—
Grapple fork	190	1800	—	—	206	80

● Max. outreach

▲ Max. digging depth

★ The value is referred to the drill diameter

◆ Max. tooth length

https://truckmanualshub.com/

6.1.4 CHARACTERISTICS OF THE OPTIONAL EQUIPMENT OF THE MACHINE VERSION WITH HIGH FLOW AND SUPER-FLOW HYDRAULIC SYSTEM

(Specific weight of the handled material = 1,8 t/m^3)

EQUIPMENT	MAX. WEIGHT (kg)	MAX. DIMENSIONS		MAX. SAE CAPACITY (cu m)	MAX. OPERATING PRESSURE (bar)	MAX. FLOW RATE (l/min.)
		Width (mm)	Height (mm)			
Front bucket	197	1880	520	0.415	—	—
Multi-purpose front bucket	—	1880	550	—	206	80
Asphalt cutter	900	1000	□	—	206	130
Excavator	1100	● —	▲ 3200	Excavator —	206	80
Excavator bucket	73	800	—	—	—	—
Hydraulic hammer	150	—	—	—	206	80
Drill	190	★ 600	—	—	206	80
Pallet fork	160	1500	710	◆ 1000	206	—
Manure fork	120	1800	—	—	206	—
Grapple fork	190	1800	—	—	206	80

● Max. outreach

▲ Max. digging depth

★ The value is referred to the drill diameter

◆ Max. tooth length

□ Cutting depth

https://truckmanualshub.com/

6.2 CHANGING THE AUTHORIZED EQUIPMENT

WARNING

- **Stop the machine on a firm and level surface and lower the equipment to the ground.**
- **Before getting off the machine, stop the engine, release the residual pressures by moving the equipment control lever more than once in all directions and lock the safety bars (see "3.3.5 pos. 1 - SAFETY BARS").**
- **Before starting work, make sure that the PAN-TACH coupling pins are completely engaged in the seats provided on the equipment and that the control lever is completely turned rightwards.**
- **Do not use your fingers to center the holes, since they may be injured or even cut due to sudden or uncontrolled movements.**

The machine is provided with a special tool-holder, called «PAN-TACH», which is used for the installation of buckets or optional equipment.
Change the optional equipment adopting the same procedure adopted to change the bucket.
See "3.13.6 CHANGING THE BUCKET OR THE EQUIPMENT WITH STANDARD RAPID COUPLING".
Besides the assembly on the tool-holder, the hydraulic excavator requires also the fastening to the machine by means of two connection tie-rods and the hydraulic connection for the independent control of the equipment.
When changing equipment with independent hydraulic circuit, interrupt the oil flow to the equipment with the auxiliary kit pedal and disconnect the union pipes before releasing the equipment from the tool-holder.
See "6.2.2 CONNECTING THE HYDRAULIC CIRCUIT".

6.2.1 CONNECTING THE EXCAVATOR

Couple the excavator to the PAN-TACH with the same procedure adopted for the standard equipment and apply the connection tie-rods.

1 - Apply the tie-rods (1) to the excavator and secure them with the safety pins (2).
2 - Engage the tie-rods with the couplings (3) and connect the hydraulic circuit.
See "6.2.2 CONNECTING THE HYDRAULIC CIRCUIT".

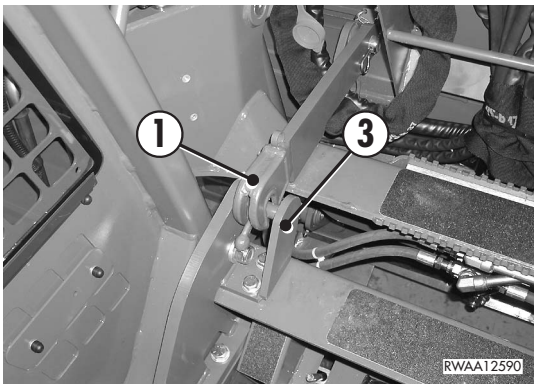

To disconnect the excavator from the PAN-TACH device, proceed as follows:

1 - Release the tie rods (1) from the plates (3) and disconnect the hydraulic circuit of the excavator.
2 - Raise the tie rods (1) and fix them with the safety locks (4).

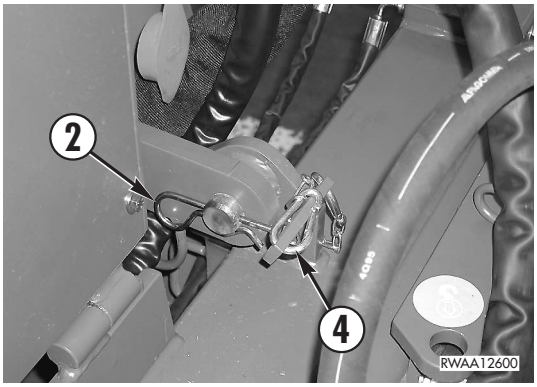

https://truckmanualshub.com/

6.2.2 CONNECTING THE HYDRAULIC CIRCUIT

WARNING

- **Before performing any operation on the hydraulic circuit, stop the engine and eliminate the residual pressures from the equipment circuits by operating the controls more than once, then lock the safety bars (see "3.3.5 pos. 1 - SAFETY BARS").**
- **Immediately clean any area dirty with oil.**

After the mechanical connection of equipment with independent hydraulic circuit, make sure that the auxiliary kit control pedal is in position A - flow interrupted - and introduce the flexible pipes of the equipment connection in the unions (1) and (2). See B,C and D
The rapid coupling must be in compliance with the ISO 8434-3 standard.

IMPORTANT

- **In case of doubts regarding the connection of the hydraulic circuit to the equipment, contact your Komatsu Dealer**

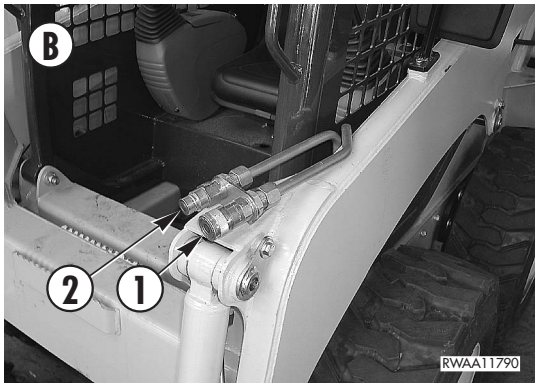

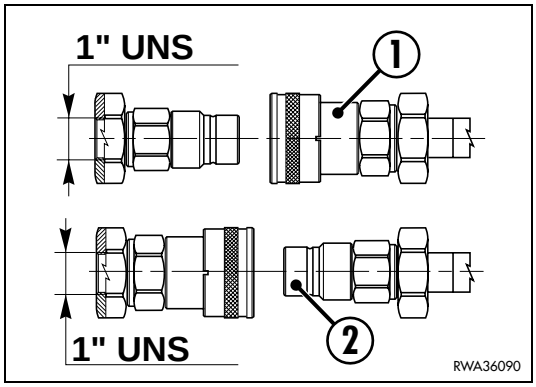

https://truckmanualshub.com/

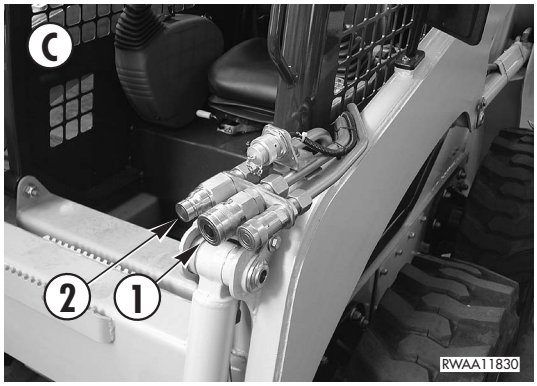

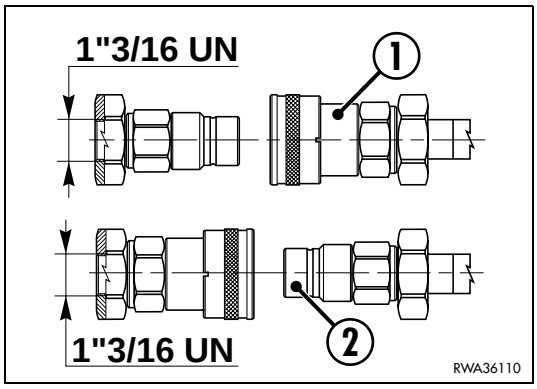

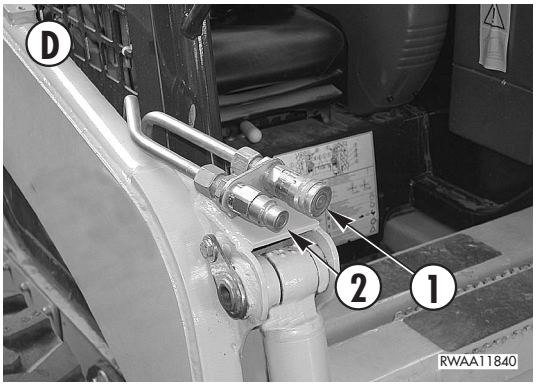

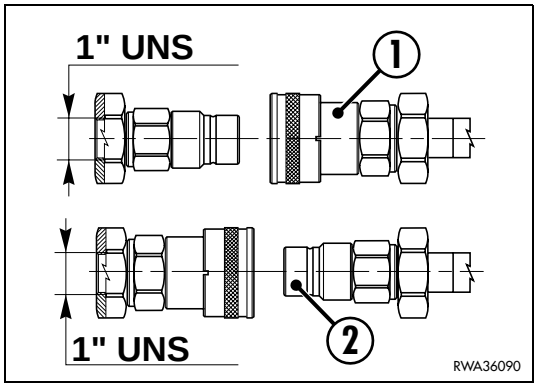

https://truckmanualshub.com/

6.2.3 CONNECTING THE RETURN CIRCUIT WITH DIRECT DRAINAGE INTO THE TANK

⚠ WARNING

- **Before performing any operation on the hydraulic circuit, stop the engine and eliminate the residual pressures from the equipment circuits by operating the controls more than once, then lock the safety bars (see "3.3.5 pos. 1 - SAFETY BARS").**
- **Immediately clean any area dirty with oil.**

The machine may be fitted for the application of equipment with separate return circuit directed into the tank.
The return system is positioned on the left side of the loader arm and the equipment drain pipe must be connected to the union (1).

IMPORTANT

- **In case of doubts regarding the connection of the hydraulic circuit to the equipment, contact your Komatsu Dealer.**

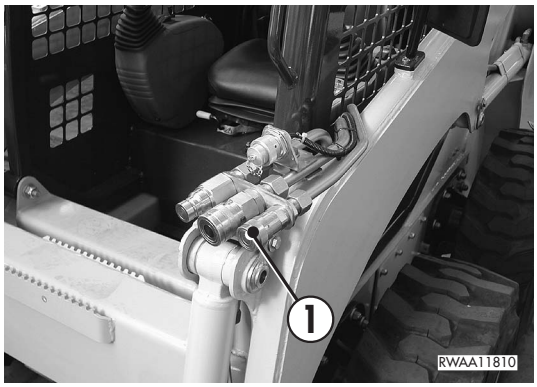

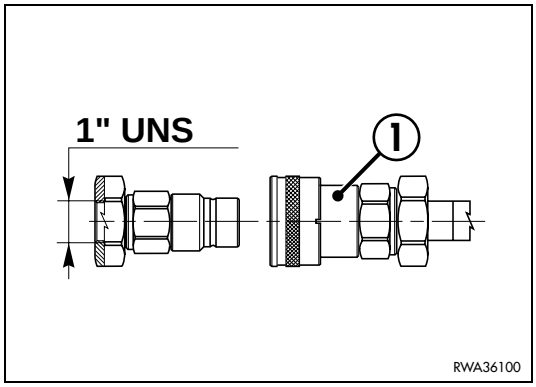

https://truckmanualshub.com/

6.2.4 PREPARING THE MACHINE FOR THE USE OF THE EXCAVATOR

After the installation of the excavator, make sure that the mechanical and hydraulic connections have been carried out correctly and proceed as follows.

1 - Press the auxiliary kit control pedal with your toe until engaging it in position (B); this position ensures the flow of oil to the equipment.

2 - For the use of the excavator, see the specific instruction manual.

3 - If the machine is equipped with rear stabilizers, lower them until the rear wheels are partially raised; this manoeuvre stabilizes the machine and avoids any tyre overload (see "3.3.5 pos. 13 - RIGHT STABILIZER CONTROL (IF INSTALLED)" e pos. 14 - LEFT STABILIZER CONTROL (IF INSTALLED)").

6.2.5 USING THE MACHINE WITH THE EXCAVATOR

⚠ WARNING

- **Before using the excavator, read the relevant operation and maintenance manual carefully and keep to the instructions contained therein.**
- **If the machine is equipped with rear stabilizers, always lower them before using the excavator.**
- **After the digging operation and before moving the machine, bring the stabilizers back to their original position.**
- **If it is necessary to travel on roads, engage all the safety locks provided. See "3.1 SAFETY LOCKS".**

https://truckmanualshub.com/

6.3 PALLET FORKS

CAUTION

- **Before using the forks for any operation, the operator must get acquainted with the increased dimensions of the machine and must also practise the use of the swinging movements.**
- **After grasping the material with the forks and before lifting the load, swing the equipment in such a way as to lift the points and prevent the load from slipping.**
- **Use the lifting, swing and travel controls slowly and smoothly, in order to avoid jerks that may cause the load to move.**
- **Use the maximum fork width possible.**
- **The forks must always be resting on the plate and be secured in their position by means of the safety pins.**

The pallet forks make it possible to use the machine like a normal lift truck and the controls for lifting and swinging the loads are the same used to control the standard bucket.
See "3.3.5 MACHINE CONTROLS".
The pallet forks may have different width (distance from each other) according to the load to be handled: it is sufficient to make them slide on the upper coupling bar; once the desired position has been found, carry out slight movements to make sure that the upper lock pin is engaged in its seat.

https://truckmanualshub.com/

6.4 CHANGING THE OPERATING PATTERN

WARNING

- **Before changing the setting of the pattern change valve to modify the operating pattern of the machine, lower the equipment to the ground, stop the engine and lock the controls by lifting the safety bars in vertical position (see "3.3.5 pos. 1 - SAFETY BARS")**
- **After changing the control operating pattern, carry out the first manoeuvres slowly and very carefully, in order to understand the new controls correctly and avoid any damage or fatal injury that may be caused by incorrect movements.**
- **After changing the control operating pattern and before checking the movements of the machine, make sure that the area is clear of obstacles and that no one is standing in the range of movement of the machine.**

The pattern change valve (1) is positioned inside the engine hood, on the cab's rear wall, and it can be reached after opening the engine hood ("3.5.1 ENGINE HOOD").

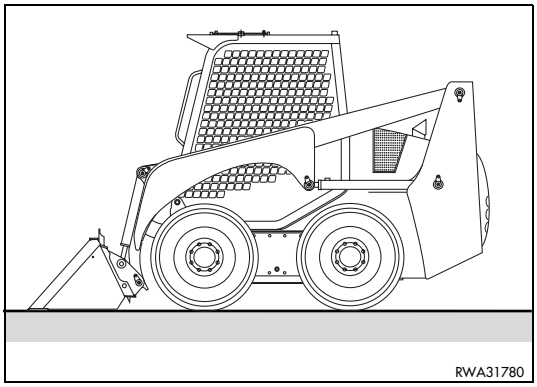

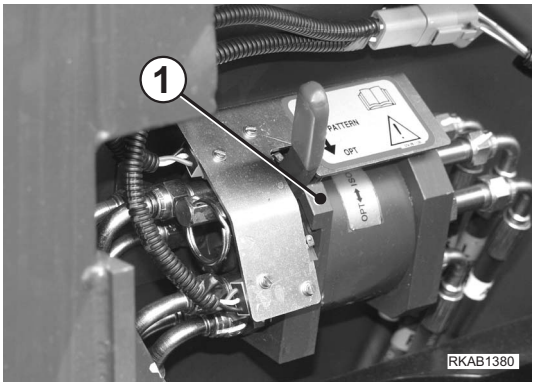

https://truckmanualshub.com/

The lever (2) controlling the pattern change valve has two positions:

A - Position for the ISO PATTERN CONTROL SYSTEM

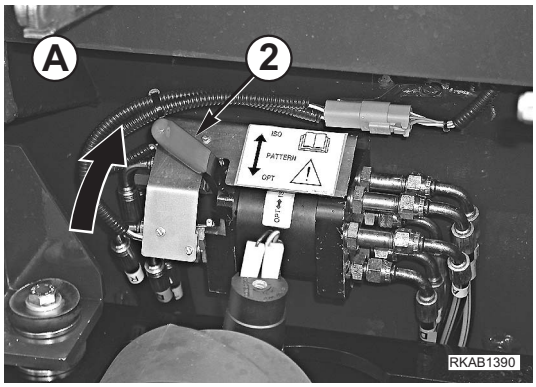

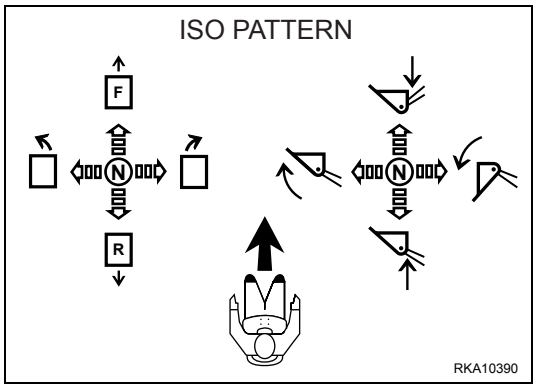

B - Position for the OPTION PATTERN CONTROL SYSTEM

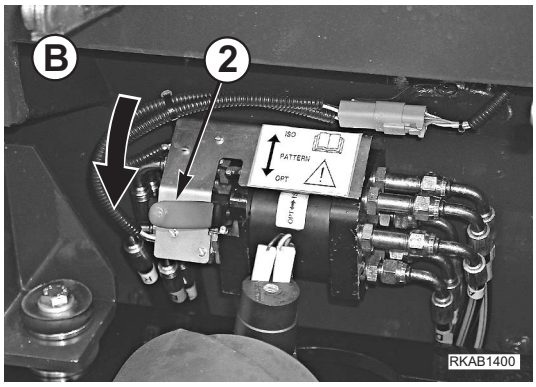

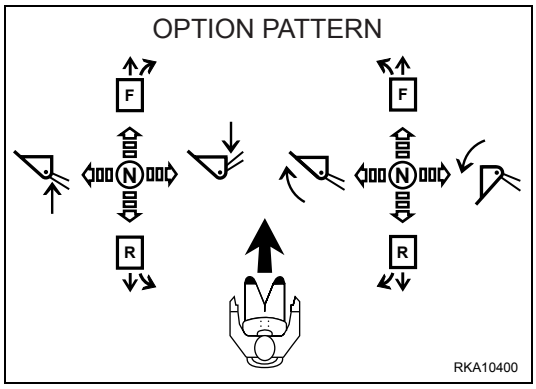

https://truckmanualshub.com/

6.4.1 HOW TO CHANGE THE OPERATING PATTERN

After stopping the machine on a firm and level surface, lower the equipment to the ground, stop the engine and lock the controls by lifting the safety bars in vertical position.
Open the engine hood and proceed as follows:

1 - Loosen the safety screw (3) that holds the selection lever (2) in position.
Use a 13 mm hexagon wrench.

2 - Select the desired operating pattern by rotating the lever (2) to position "**A**" for the ISO PATTERN or to position "**B**" for the OPTION PATTERN.

3 - Secure the lever in the selected position with the safety screw (3).

IMPORTANT

- **Before moving the machine, the operator must make sure that the selected operating pattern corresponds to the one desired.**
  The control panels (4) positioned at the sides of the central dashboard are backlit.
- **The lighting of the plates is useful for the operator to identify the type of operating system selected. (ISO PATTERN or OPTION PATTERN control system).**

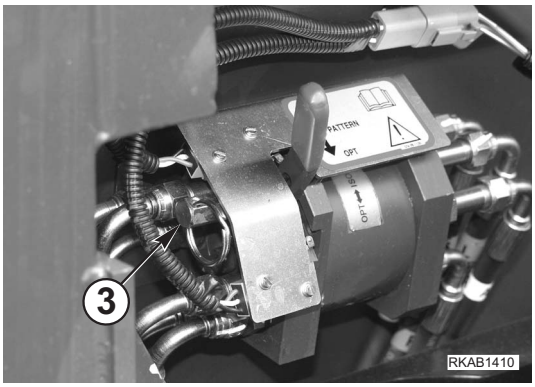

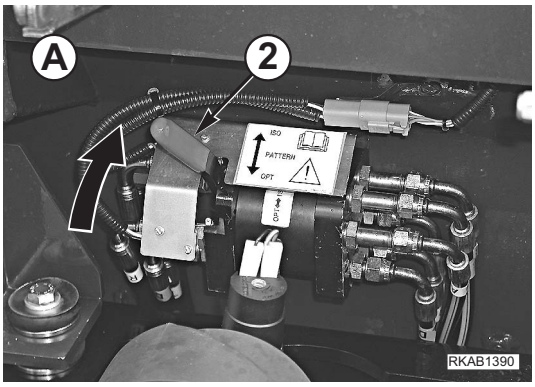

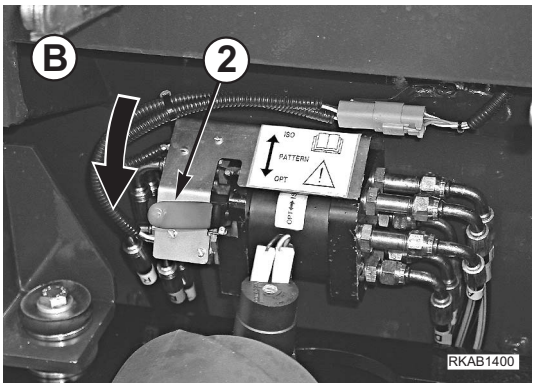

https://truckmanualshub.com/

6.5 HAND & FOOT CONTROL SYSTEM

6.5.1 MACHINE CONTROLS

⚠ CAUTION

- **The controls represented in the figure and not described in this section remain unchanged and are the same present on the standard version. For details on how to use them, see "3.3.5 MACHINE CONTROLS".**

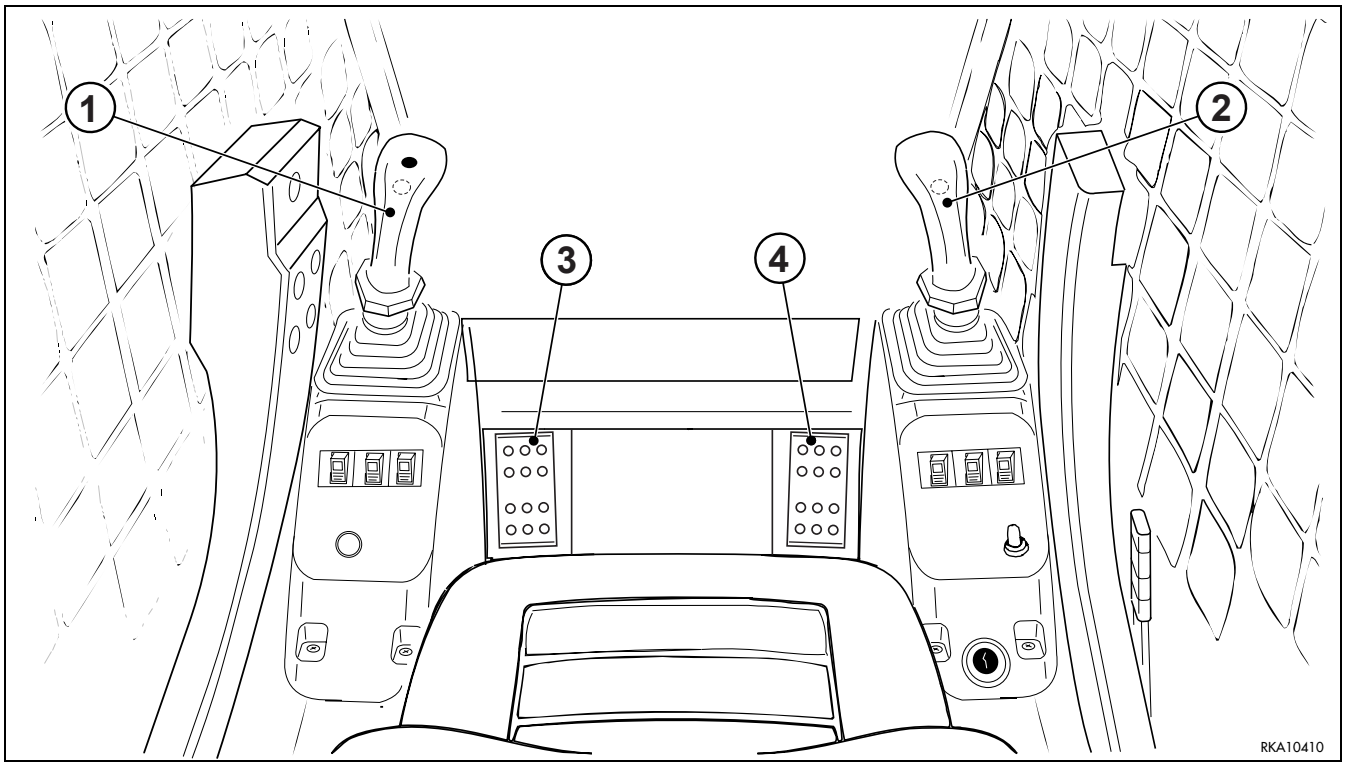

1 - Left joystick control lever
HAND & FOOT CONTROL SYSTEM
(Left wheel travel)

2 - Right joystick control lever
HAND & FOOT CONTROL SYSTEM
(Right wheel travel and auxiliary hydraulic kit control)

3 - Left foot-operated servo control
HAND & FOOT CONTROL SYSTEM
(Loader arm lifting and lowering control)

4 - Right foot-operated servo control
HAND & FOOT CONTROL SYSTEM
(Bucket opening and folding control)

https://truckmanualshub.com/

6.5.1.1 TRAVEL AND STEERING CONTROL LEVERS

WARNING

- **Before carrying out any manoeuvre with the levers, the operator must be seated in driving position with fastened safety belt and lowered safety bars; before any manoeuvre it is important to take all the precautions indicated in "6.5.2 HOW TO MOVE THE MACHINE (HAND & FOOT CONTROL SYSTEM)".**
- **Before moving the machine, make sure that the parking brake is released.**
- **When travelling on roads, always inhibit the equipment control (see "3.3.5 pos. 8 - EQUIPMENT CONTROL LOCKING LEVER (IF INSTALLED)").**
- **When travelling on roads, always make sure that all safety locks are engaged.**
- **Before leaving the operator seat, stop the engine only after lowering the equipment to the ground and locking the controls (safety bars lifted in vertical position).**
- **Non-compliance with these rules may lead to serious accidents.**

The travel control levers (1) and (2) are positioned on the Operator's left and right side, respectively, and they control the forward and reverse travel of the machine according to the movements shown in the diagram.

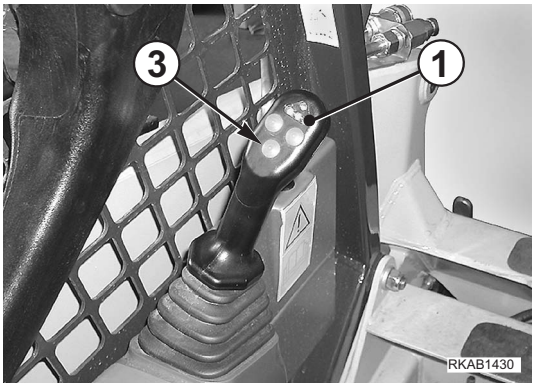

IMPORTANT

- **To move the machine forward or in reverse, shift the levers (1) and (2) at the same time and in the same direction.**
- **For further details on the use of the levers, see pos. 6.5.2 HOW TO MOVE THE MACHINE (HAND & FOOT CONTROL SYSTEM)"**

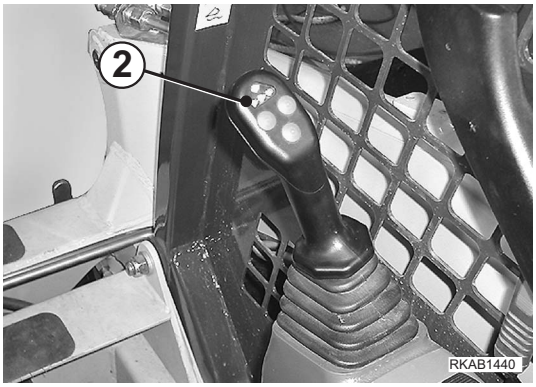

N - Neutral
A - Forward
B - Reverse

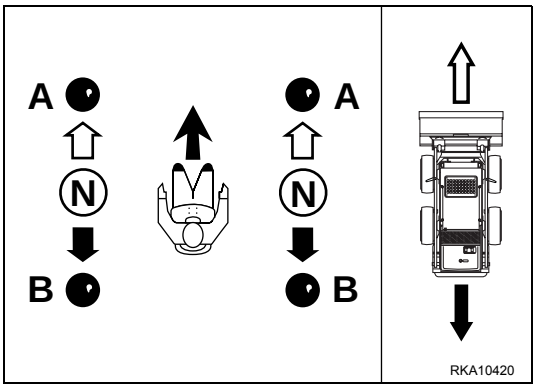

https://truckmanualshub.com/

The lever (2) is used to control the right wheels and also to control the auxiliary hydraulic kit according to the movements indicated in the following diagram:

N - Neutral

A - Right wheel forward travel

B - Right wheel reverse travel

C - Oil delivery from the male coupling of the auxiliary hydraulic kit

D - Oil delivery from the female coupling of the auxiliary hydraulic kit

For details on the use of the auxiliary hydraulic kit, see "6.5.1.3 AUXILIARY HYDRAULIC KIT CONTROL"

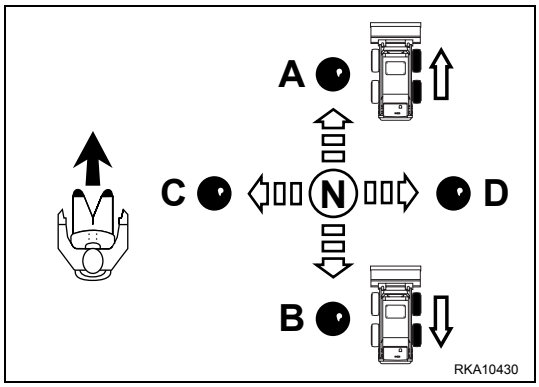

⚠ CAUTION

- **Always travel with the engine running at moderate speed, in order to obtain maximum precision and maximum productivity during work.**
- **During work, the use of the levers must be proportional to the effort required and such as to keep the engine running at constant speed.**
- **Operate the levers smoothly, without abrupt movements and avoid counter-rotations as much as possible, since this type of manoeuvre causes the untimely wear of the tyres.**

NOTE

- The horn (3) is positioned on the grip of the left lever (1) and must be used to warn all the people in the vicinity before starting work and in case of danger.
- All movements can be inhibited by shifting the safety bars to the vertical locking position. (See "3.3.5 pos. 1 - SAFETY BARS").

https://truckmanualshub.com/

6.5.1.2 WORK EQUIPMENT CONTROL PEDALS (LOADER ARM AND BUCKET)

WARNING

- **Before carrying out any manoeuvre with the pedals, the operator must be seated in driving position with fastened safety belt and lowered safety bars; before any manoeuvre it is important to take all the precautions indicated in "3.13 USING THE WORK EQUIPMENT".**
- **When travelling on roads, always inhibit the equipment control (see "3.3.5 pos. 8 - EQUIPMENT CONTROL LOCKING LEVER (IF INSTALLED)").**
- **Before leaving the operator seat, stop the engine only after lowering the equipment to the ground and locking the controls (safety bars lifted in vertical position).**
- **Non-compliance with these rules may lead to serious accidents.**

CAUTION

- **The self-leveling system is operated automatically only when the loader arm is lifted with full bucket. When the arm is being lowered, the self-leveling system doesn't start.**
- **At the maximum height, the self-leveling system keeps the bucket partially folded to prevent the material from being spread out.**

The control pedals (1) and (2) are positioned on the footboard under the operator seat and control the movements of the loader arm and the bucket.

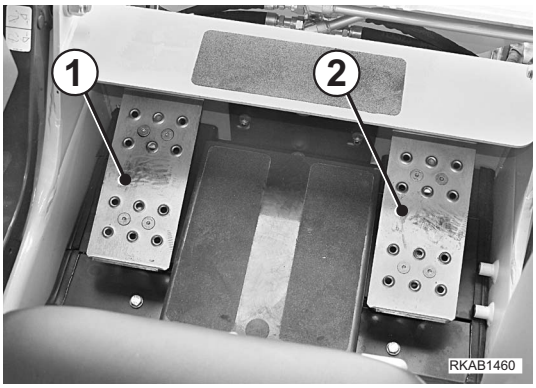

https://truckmanualshub.com/

The pedal (1), positioned on the operator's left, controls the lifting and lowering of the loader arm, as indicated in the following diagram:

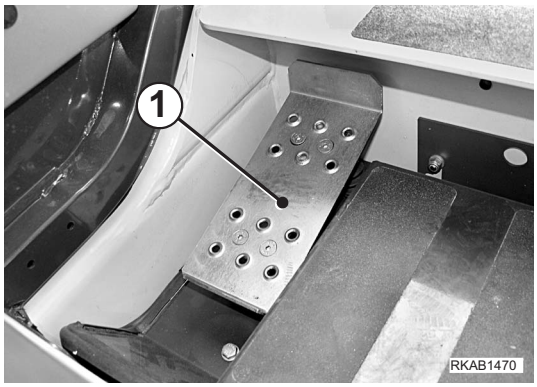

N - Neutral

A - Loader arm up

B - Loader arm down

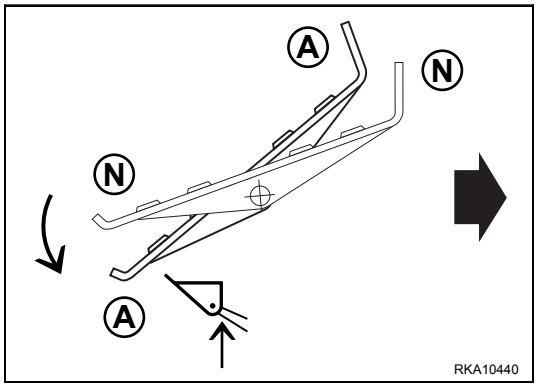

IMPORTANT

- **On machines provided with floating device, press the pedal to position B (arm down) and press the switch positioned under the right joystick (see "3.3.5 MACHINE CONTROLS").**

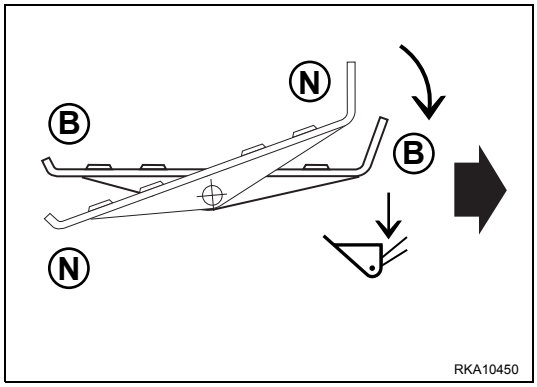

https://truckmanualshub.com/

The pedal (2), positioned on the operator's right, controls the folding and dumping of the bucket, as indicated in the following diagram:

N - Neutral
A - Bucket folding
B - Bucket dumping

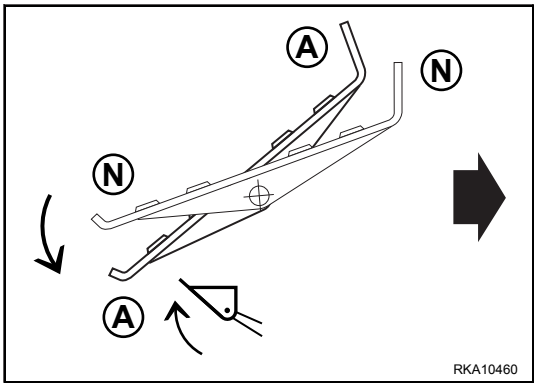

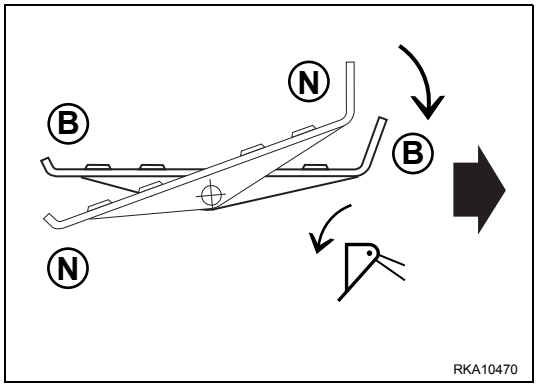

https://truckmanualshub.com/

6.5.1.3 AUXILIARY HYDRAULIC KIT CONTROL

WARNING

- **Before carrying out any manoeuvre with the control lever, the Operator must be seated in driving position with fastened safety belt and lowered safety bars.**

The control lever (1) is positioned on the operator's right and controls the movement of the right wheels and the auxiliary hydraulic kit, according to the movements indicated on the plate (2) and in the following diagram:

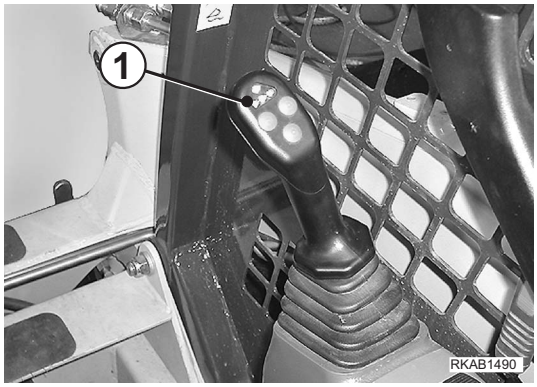

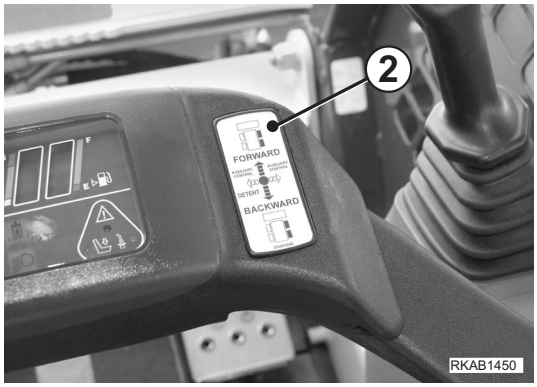

N - Neutral

A - Right wheel forward travel

B - Right wheel reverse travel

C - Oil delivery from the male coupling (3) of the auxiliary hydraulic kit

D - Oil delivery from the female coupling (4) of the auxiliary hydraulic kit

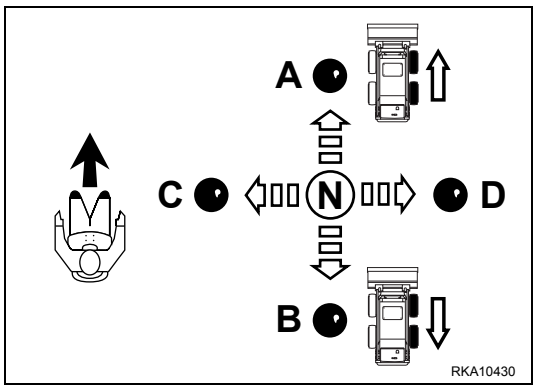

https://truckmanualshub.com/

The auxiliary hydraulic kit control starts and stops the oil flow to any optional equipment and has four positions (neutral, left, right and coupling position).

1 - Neutral position (N)
(CLOSED HYDRAULIC CIRCUIT)
This position doesn't allow the optional equipment to be used.

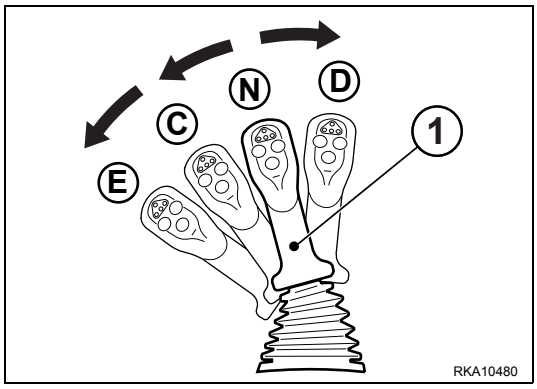

2 - Positions (C) and (D)
(OPEN HYDRAULIC CIRCUIT).
These positions are used to control optional equipment with bidirectional oil flow (multi-purpose bucket, drill, asphalt cutter, etc.). Rotate the lever (1) to position (C) to deliver oil from the male coupling (3) positioned on the left side of the loader arm, or to position (D) to deliver oil from the female coupling (4).

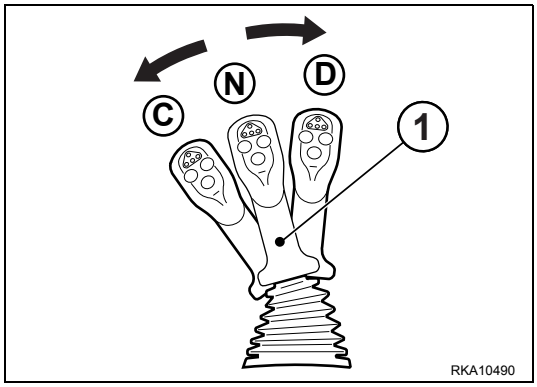

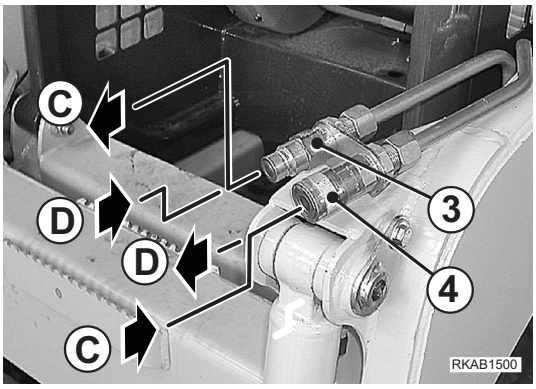

https://truckmanualshub.com/

3 - Coupling position (E)
(OPEN HYDRAULIC CIRCUIT).
This position is used to obtain a continuous unidirectional oil flow for the operation of equipment such as excavator, demolition hammer, sweeper, etc. To hold the lever (1) in coupling position (E), rotate the lever further to the left.

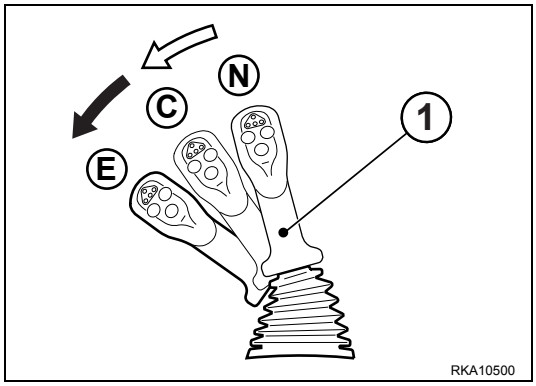

NOTE

- The lever (1) remains in coupling position (E) only with pressurised hydraulic system.
  When the lever (1) is in position (E), pressurised oil is delivered from the male coupling (3), with return to the female coupling (4).

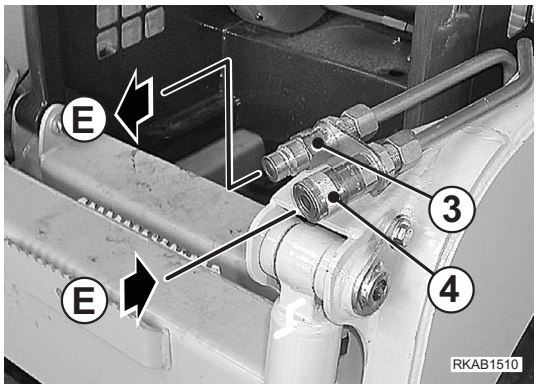

https://truckmanualshub.com/

6.5.2 HOW TO MOVE THE MACHINE (HAND & FOOT CONTROL SYSTEM)

⚠ WARNING

- **Before moving the machine, make sure that you know the control functions and all the relevant safety regulations perfectly.**
- **The operator must be seated in driving position with fastened safety belt and lowered safety bars.**
- **Before moving the machine, check the position of the rear-view mirrors (if installed) and make sure that there is no one within the operating radius of the machine and that there are no obstacles in the surrounding area.**
- **Be extremely careful when engaging the reverse and make sure that there are no persons, other equipment or obstacles in the way.**
- **Avoid any travel manoeuvre or change of direction with the accelerator at maximum speed, since manoeuvres carried out in these conditions may cause dangerous movements.**
- **Do not use the speed increase function when changing direction or carrying out a counter-rotation. The speed increase function must be used only for travelling at high speed**

Before moving the machine, after checking the instruments and heating the engine and the hydraulic system oil, make sure that the control safety device is released (safety bars lowered) and that the bucket is folded; the equipment control pedals must be in neutral position. At this point, release the parking brake.

1 - Pull the manual accelerator lever and run the engine at idle speed.

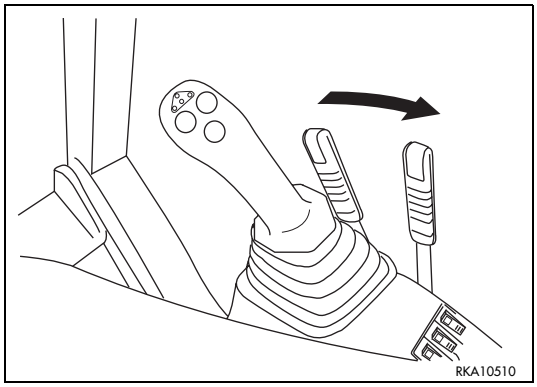

https://truckmanualshub.com/

2 - Shift the joysticks (1) and (2) forwards or backwards at the same time to move the machine.

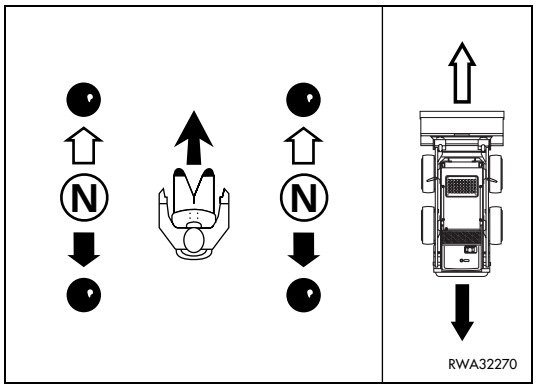

https://truckmanualshub.com/

6.5.2.1 STEERING (CHANGING DIRECTION)

WARNING

- Avoid abrupt changes of direction as much as possible. Carry out counter-rotations at moderate speed.
- Avoid carrying out counter-rotations when travelling on roads, since these manoeuvres may cause dangerous situations; make counter-rotations only during work.
- Do not use the speed increase function when changing direction or carrying out a counter-rotation.

CHANGING DIRECTION WITH MACHINE AT REST

To turn to the LEFT, use the right joystick as follows: to move FORWARD, push the joystick. To move BACKWARD, pull the joystick.

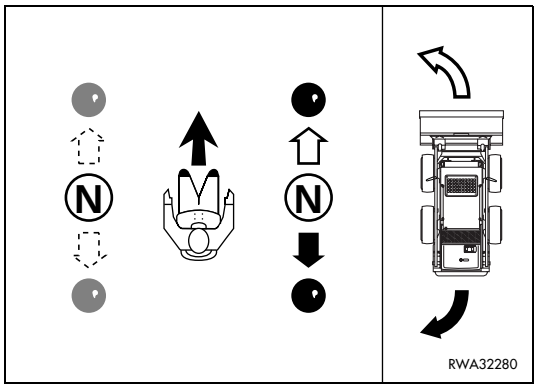

To turn to the RIGHT, use the left joystick as follows : to mode FORWARD, push the joystick. To move BACKWARD, pull the joystick.

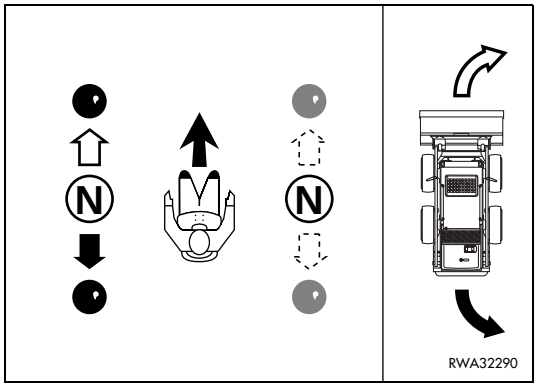

https://truckmanualshub.com/

CHANGING DIRECTION WITH MACHINE IN MOVEMENT (THE TWO JOYSTICKS ARE SHIFTED TO THE SAME POSITION)

To turn to the LEFT, shift the left joystick to the NEUTRAL position (N) and the machine will turn to the LEFT.

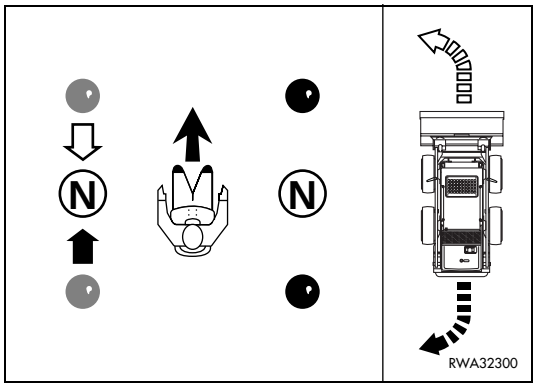

To turn to the RIGHT, shift the right joystick to the NEUTRAL position (N) and the machine will turn to the RIGHT.

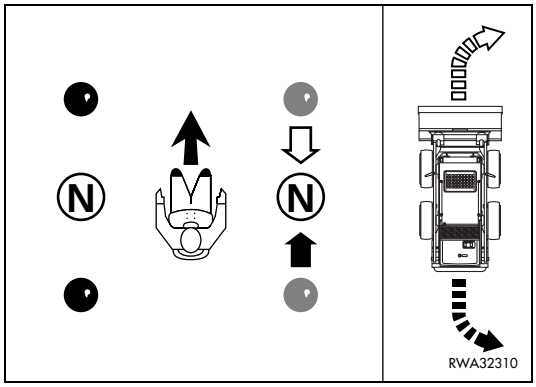

HOW TO PERFORM A COUNTER-ROTATION (with machine at rest)

To perform a counter-rotation to the LEFT, pull the left joystick backward and push the right joystick forward.

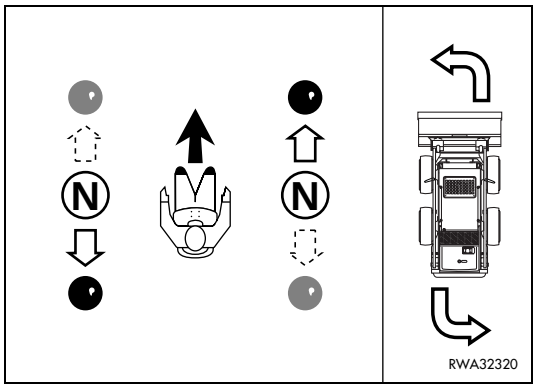

To perform a counter-rotation to the RIGHT, pull the right joystick backward and push the left joystick forward.

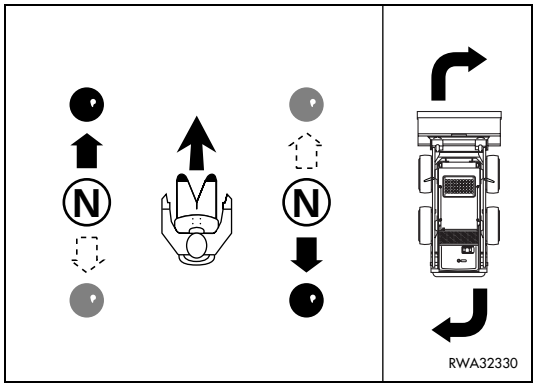

https://truckmanualshub.com/

PAGE INTENTIONALLY LEFT BLANK

https://truckmanualshub.com/

https://truckmanualshub.com/

© 2006 KOMATSU UTILITY EUROPE S.p.A.
All Rights Reserved
Printed in Europe