https://truckmanualshub.com/

Genie®
A TEREX BRAND

# Service Manual

Serial Number Range

## Z-45/25
## Z-45/25J
### IC Power

Deutz models: from 23041 to 34010
Ford models: from 23190 to 34010
Perkins models: from 23009 to 34010
All models: from A34011 to A47000
All models: from B101 to B3300

Part No. 107846
Rev C5
June 2012

https://truckmanualshub.com/



# Introduction

## Important

Read, understand and obey the safety rules and operating instructions in the *Genie Z-45/25* and *Genie Z-45/25J Operator's Manual* before attempting any maintenance or repair procedure.

This manual provides detailed scheduled maintenance information for the machine owner and user. It also provides troubleshooting fault codes and repair procedures for qualified service professionals.

Basic mechanical, hydraulic and electrical skills are required to perform most procedures. However, several procedures require specialized skills, tools, lifting equipment and a suitable workshop. In these instances, we strongly recommend that maintenance and repair be performed at an authorized Genie dealer service center.

## Compliance

**Machine Classification**
Group B/Type 3 as defined by ISO 16368

**Machine Design Life**
Unrestricted with proper opeation, inspection and scheduled maintenance.

## Technical Publications

Genie has endeavored to deliver the highest degree of accuracy possible. However, continuous improvement of our products is a Genie policy. Therefore, product specifications are subject to change without notice.

Readers are encouraged to notify Genie of errors and send in suggestions for improvement. All communications will be carefully considered for future printings of this and all other manuals.

## Contact Us:

http://www.genielift.com
e-mail: awp.techpub@terex.com

## Serial Number Information

Genie Industries offers the following Service Manuals for these models:

| Title | Part No. |
|---|---|
| Z-45/25 and Z-45/25J Service Manual<br>From serial number 9998 to 21179 | 52709 |
| Z-45/25 and Z-45/25J Service Manual<br>Deutz models: from 21180 to 23040<br>Ford models: from 21180 to 23189<br>Perkins models: from 21180 to 23008 | 77809 |
| Z-45/25 and Z-45/25J Service Manual<br>Deutz models: from 23041 to 34010<br>Ford models: from 23190 to 34010<br>Perkins models: from 23009 to 34010<br>All models: from A34011 to A47000<br>All models: from B101 | 107846 |
| Z-45/25 and Z-45/25J Service Manual<br>From serial number 13A-47001 | 219418 |

Copyright © 2011 Terex Corporation

107846 Rev C August 2006
Third Edition, Third Printing

"Genie" and "Z" are registered trademarks of Terex South Dakota, Inc. in the USA and many other countries.

Printed on recycled paper

Printed in U.S.A.

https://truckmanualshub.com/



## Serial Number Legend

Genie®
A TEREX COMPANY

**Serial number:** Z452506-12345
**Model year:** 2006 **Manufacture date:** 04/12/06
**Electrical schematic number:** ES0274
**Machine unladen weight:**

**Rated work load (including occupants):** 500 lb / 227 kg
**Maximum number of platfrm occupants:** 2
**Maximum allowable side force :** 150 lb / 670 N
**Maximum allowable inclination of the chassis:**
0 deg
**Maximum wind speed :** 28 mph/ 12.5 m/s
**Maximum platform height :** 45 ft 6 in/ 13.8 m
**Maximum platform reach :** 25 ft 3 in/ 7.7 m
**Gradeability:** N/A
**Country of manufacture: USA**
**This machine complies with:**
ANSI A92.5
CAN B.354.4

**Genie Industries**
**18340 NE 76th Street**
**Redmond, WA 98052**
**USA**

PN - 77055

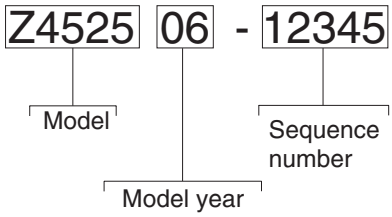


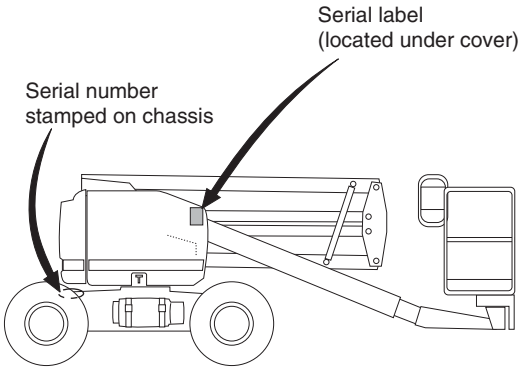

https://truckmanualshub.com/

This page intentionally left blank.

https://truckmanualshub.com/



# Safety Rules

## Danger

Failure to obey the instructions and safety rules in this manual, and the *Genie Z-45/25 and Genie Z-45/25J Operator's Manual* will result in death or serious injury.

Many of the hazards identified in the operator's manual are also safety hazards when maintenance and repair procedures are performed.

## Do Not Perform Maintenance Unless:

☑ You are trained and qualified to perform maintenance on this machine.

☑ You read, understand and obey:
- manufacturer's instructions and safety rules
- employer's safety rules and worksite regulations
- applicable governmental regulations

☑ You have the appropriate tools, lifting equipment and a suitable workshop.

https://truckmanualshub.com/



SAFETY RULES

## Personal Safety

Any person working on or around a machine must be aware of all known safety hazards. Personal safety and the continued safe operation of the machine should be your top priority.

Read each procedure thoroughly. This manual and the decals on the machine use signal words to identify the following:

Safety alert symbol—used to alert personnel to potential personal injury hazards. Obey all safety messages that follow this symbol to avoid possible injury or death.

**⚠DANGER** Used to indicate the presence of an imminently hazardous situation which, if not avoided, will result in death or serious injury.

**⚠WARNING** Used to indicate the presence of a potentially hazardous situation which, if not avoided, could result in death or serious injury.

**⚠CAUTION** With safety alert symbol—used to indicate the presence of a potentially hazardous situation which, if not avoided, may result in minor or moderate injury.

**CAUTION** Without safety alert symbol—used to indicate the presence of a potentially hazardous situation which, if not avoided, may result in property damage.

**NOTICE** Used to indicate operation or maintenance information.

Be sure to wear protective eye wear and other protective clothing if the situation warrants it.

Be aware of potential crushing hazards such as moving parts, free swinging or unsecured components when lifting or placing loads. Always wear approved steel-toed shoes.

## Workplace Safety

Be sure to keep sparks, flames and lighted tobacco away from flammable and combustible materials like battery gases and engine fuels. Always have an approved fire extinguisher within easy reach.

Be sure that all tools and working areas are properly maintained and ready for use. Keep work surfaces clean and free of debris that could get into machine components and cause damage.

Be sure any forklift, overhead crane or other lifting or supporting device is fully capable of supporting and stabilizing the weight to be lifted. Use only chains or straps that are in good condition and of ample capacity.

Be sure that fasteners intended for one time use (i.e., cotter pins and self-locking nuts) are not reused. These components may fail if they are used a second time.

Be sure to properly dispose of old oil or other fluids. Use an approved container. Please be environmentally safe.

Be sure that your workshop or work area is properly ventilated and well lit.

https://truckmanualshub.com/



# Table of Contents

**Introduction**

Important Information ..... *ii*
Serial Number Information ..... *ii*
Serial Number Legend ..... *iii*

**Section 1** **Safety Rules**

General Safety Rules ..... *v*

**Section 2** **Rev** **Specifications**

H Machine Specifications ..... 2 - 1
Performance Specifications ..... 2 - 2
Hydraulic Specifications ..... 2 - 3
Manifold Component Specifications ..... 2 - 5
Ford LRG-425 EFI Engine Specifications ..... 2 - 6
Ford DSG-423 EFI Engine Specifications ..... 2 - 7
Deutz F3L-2011 / D2011 L03i Engine Specifications ..... 2 - 8
Perkins 404-22 Engine Specifications ..... 2 - 10
Machine Torque Specifications ..... 2 - 12
Hydraulic Hose and Fitting Torque Specifications ..... 2 - 13
SAE and Metric Fastener Torque Chart ..... 2 - 14

https://truckmanualshub.com/



TABLE OF CONTENTS

**Section 3** **Rev** **Scheduled Maintenance Procedures**

Introduction ..... 3 - 1

Pre-Delivery Preparation ..... 3 - 3

Maintenance Inspection Report ..... 3 - 5

D **Checklist A Procedures**

A-1 Perform Pre-operation Inspection ..... 3 - 7

A-2 Perform Function Tests ..... 3 - 7

A-3 Perform Engine Maintenance ..... 3 - 8

A-4 Check the High Pressure Hydraulic Filter Condition Indicator ..... 3 - 9

A-5 Test the Oscillate Axle (if equipped) ..... 3 - 9

A-6 Perform 30 Day Service ..... 3 - 10

A-7 Perform Engine Maintenance - Ford Models ..... 3 - 10

A-8 Inspect the Fuel Filter/Water Separator - Diesel Models ..... 3 - 11

A-9 Grease the Turntable Rotation Bearing and Rotate Gear ..... 3 - 13

A-10 Perform Engine Maintenance - Ford Models ..... 3 - 13

C **Checklist B Procedures**

B-1 Inspect the Battery ..... 3 - 14

B-2 Inspect the Electrical Wiring ..... 3 - 15

B-3 Check the Exhaust System ..... 3 - 16

B-4 Inspect the Engine Air Filter ..... 3 - 17

B-5 Check the Oil Cooler and Cooling Fins - Deutz Models ..... 3 - 17

B-6 Inspect the Tires, Wheels and Lug Nut Torque ..... 3 - 18

B-7 Confirm the Proper Brake Configuration ..... 3 - 19

B-8 Check the Oil Level in the Drive Hubs ..... 3 - 19

https://truckmanualshub.com/



TABLE OF CONTENTS

**Section 3** **Rev** **Scheduled Maintenance Procedures**, continued

B-9 Check and Adjust the Engine RPM - All Models ..... 3 - 20
B-10 Test the Ground Control Override ..... 3 - 22
B-11 Check the Directional Valve Linkage ..... 3 - 23
B-12 Test the Platform Self-leveling ..... 3 - 23
B-13 Test the Engine Idle Select ..... 3 - 24
B-14 Test the Fuel Select Operation - Ford Models ..... 3 - 25
B-15 Test the Drive Brakes ..... 3 - 26
B-16 Test the Drive Speed - Stowed Position ..... 3 - 26
B-17 Test the Drive Speed - Raised or Extended Position ..... 3 - 27
B-18 Test the Alarm Package (if equipped) ..... 3 - 28
B-19 Perform Hydraulic Oil Analysis ..... 3 - 29
B-20 Inspect the Fuel and Hydraulic Tank Cap Venting Systems ..... 3 - 29
B-21 Replace the Fuel Filter Element - Perkins Models ..... 3 - 30
B-22 Perform Engine Maintenance - Perkins Models ..... 3 - 32
B-23 Replace the Engine Air Filter Element - Ford Models ..... 3 - 32
B-24 Perform Engine Maintenance - Ford Models ..... 3 - 33

D **Checklist C Procedures**

C-1 Perform Engine Maintenance - Deutz Models ..... 3 - 34
C-2 Grease the Platform Overload Mechanism (if equipped) ..... 3 - 34
C-3 Test the Platform Overload System (if equipped) ..... 3 - 35
C-4 Replace the Fuel Filter/Water Separator - Perkins Models ..... 3 - 38
C-5 Replace the Engine Air Filter Element - Deutz and Perkins Models ..... 3 - 40
C-6 Perform Engine Maintenance - Perkins Models ..... 3 - 40
C-7 Perform Engine Maintenance - Ford Models ..... 3 - 41

https://truckmanualshub.com/



TABLE OF CONTENTS


**Section 3** **Rev** **Scheduled Maintenance Procedures**, continued

D **Checklist D Procedures**

D-1 Check the Boom Wear Pads ..... 3 - 42

D-2 Check the Turntable Rotation Bearing Bolts ..... 3 - 42

D-3 Inspect for Turntable Bearing Wear ..... 3 - 44

D-4 Replace the Drive Hub Oil ..... 3 - 46

D-5 Check the Free-wheel Configuration ..... 3 - 46

D-6 Replace the Hydraulic Filters ..... 3 - 48

D-7 Perform Engine Maintenance - Deutz Models ..... 3 - 49

D **Checklist E Procedures**

E-1 Test or Replace the Hydraulic Oil ..... 3 - 50

E-2 Grease the Steer Axle Wheel Bearings, 2WD Models ..... 3 - 52

E-3 Perform Engine Maintenance - Deutz Models ..... 3 - 53

E-4 Perform Engine Maintenance - Deutz Models ..... 3 - 54

**Section 4** **Rev** **Repair Procedures**

Introduction ..... 4 - 1

B **Platform Controls**

1-1 ALC-500 Circuit Board ..... 4 - 2

1-2 Joysticks ..... 4 - 3

C **Platform Components**

2-1 Platform Leveling Slave Cylinder ..... 4 - 7

2-2 Platform Rotator ..... 4 - 8

2-3 Platform Overload System ..... 4 - 10

https://truckmanualshub.com/



TABLE OF CONTENTS

**Section 4** **Rev** **Repair Procedures,** continued

B **Jib Boom Components, Z-45/25J**

3-1 Jib Boom ..... 4 - 12

3-2 Jib Boom Lift Cylinder ..... 4 - 13

B **Primary Boom Components**

4-1 Cable Track ..... 4 - 15

4-2 Primary Boom ..... 4 - 19

4-3 Primary Boom Lift Cylinder ..... 4 - 21

4-4 Primary Boom Extension Cylinder ..... 4 - 23

4-5 Platform Leveling Master Cylinder ..... 4 - 24

B **Secondary Boom Components**

5-1 Secondary Boom ..... 4 - 27

5-2 Secondary Boom Lift Cylinders ..... 4 - 32

B **Engines**

6-1 RPM Adjustment - Ford and Deutz Models ..... 4 - 33

6-2 RPM Adjustment - Perkins Models ..... 4 - 33

6-3 Flex Plate ..... 4 - 33

6-4 Engine Fault Codes - Ford Models ..... 4 - 37

B **Hydraulic Pumps**

7-1 Lift/Steer Pump ..... 4 - 38

7-2 Drive Pump ..... 4 - 39

https://truckmanualshub.com/



TABLE OF CONTENTS

**Section 4** **Rev** **Repair Procedures,** continued

E **Manifolds**

8-1 Function Manifold Components (before serial number 27001) ..... 4 - 42

8-2 Valve Adjustments - Function Manifold (before serial number 27001) ..... 4 - 46

8-3 Function Manifold Components (after serial number 27000) ..... 4 - 48

8-4 Valve Adjustments - Function Manifold (after serial number 27000) ..... 4 - 52

8-5 Jib Boom / Platform Rotate Manifold Components (before serial number 27001) ..... 4 - 53

8-6 Jib Boom / Platform Rotate Manifold Components (after serial number 27000) ..... 4 - 54

8-7 Turntable Rotation Manifold Components (before serial number 27001) ..... 4 - 55

8-8 Turntable Rotation Manifold Components (after serial number 27000) ..... 4 - 56

8-9 Directional Valve Manifold Components ..... 4 - 57

8-10 Traction Manifold Components, 2WD (before serial number 27001) ..... 4 - 60

8-11 Traction Manifold Components, 2WD (after serial number 27000) ..... 4 - 62

8-12 Valve Adjustments, 2WD Traction Manifold ..... 4 - 64

8-13 Traction Manifold Components, 4WD (before serial number 27001) ..... 4 - 66

8-14 Traction Manifold Components, 4WD (after serial number 27000) ..... 4 - 68

8-15 Valve Adjustments, 4WD Traction Manifold ..... 4 - 70

8-16 Valve Coils ..... 4 - 70

https://truckmanualshub.com/



TABLE OF CONTENTS


| | | |
|---|---|---|
| **Section 4** | **Rev** | **Repair Procedures,** continued |
| | C | **Turntable Rotation Components** |
| | | 9-1 Turntable Rotation Assembly ..... 4 - 72 |
| | C | **Axle Components** |
| | | 10-1 Hub and Bearings, 2WD Models ..... 4 - 73 |
| | | 10-2 Oscillate Lock-out Cylinders ..... 4 - 74 |
| **Section 5** | **Rev** | **Fault Codes** |
| | | Introduction ..... 5 - 1 |
| | A | Fault Codes - Control System ..... 5 - 2 |
| | B | Fault Codes - Ford LRG-425 EFI Models ..... 5 - 6 |
| | A | Fault Codes - Ford DSG-423 EFI Models ..... 5 - 12 |
| **Section 6** | **Rev** | **Schematics** |
| | | Introduction ..... 6 - 1 |
| | A | Electrical Symbols Legend ..... 6 - 2 |
| | A | Hydraulic Symbols Legend ..... 6 - 3 |
| | A | Ford Engine Relay Layout ..... 6 - 4 |
| | | **Ford models** |
| | A | Ford LRG-425 EFI Engine Harness ..... 6 - 5 |
| | A | Ford DSG-423 EFI Engine Harness ..... 6 - 6 |
| | C | Electrical Schematic, Z-45/25<br>Ford LRG-425 EFI (before serial number 30142) ..... 6 - 7 |
| | A | Electrical Schematic, Z-45/25<br>Ford DSG-423 EFI (after serial number 30141) ..... 6 - 9 |

https://truckmanualshub.com/



TABLE OF CONTENTS


| Section 6 | Rev | **Schematics,** continued<br>**Ford models, continued** | |
|---|---|---|---|
| | A | Ground Control Box Terminal Strip Wiring Diagram, Z-45/25 | 6 - 11 |
| | B | Ground Control Box Switch Panel Wiring Diagram, Z-45/25 | 6 - 12 |
| | A | Platform Control Box Terminal Strip Wiring Diagram, Z-45/25 | 6 - 13 |
| | A | Platform Control Box Switch Panel Wiring Diagram, Z-45/25 | 6 - 14 |
| | C | Electrical Schematic, Z-45/25J<br>Ford LRG-425 EFI (before serial number 30142) | 6 - 15 |
| | A | Electrical Schematic, Z-45/25J<br>Ford DSG-423 EFI (after serial number 30141) | 6 - 17 |
| | A | Ground Control Box Terminal Strip Wiring Diagram, Z-45/25J | 6 - 19 |
| | B | Ground Control Box Switch Panel Wiring Diagram, Z-45/25J | 6 - 20 |
| | A | Platform Control Box Terminal Strip Wiring Diagram, Z-45/25J | 6 - 21 |
| | A | Platform Control Box Switch Panel Wiring Diagram, Z-45/25J | 6 - 22 |
| | | **Deutz F3L-2011 models** | |
| | C | Electrical Schematic, Z-45/25 | 6 - 23 |
| | C | Electrical Schematic, Z-45/25<br>CE models | 6 - 25 |
| | A | Ground Control Box Terminal Strip Wiring Diagram, Z-45/25 | 6 - 27 |
| | B | Ground Control Box Switch Panel Wiring Diagram, Z-45/25 | 6 - 28 |
| | A | Ground Control Box Terminal Strip Wiring Diagram, Z-45/25<br>CE Models | 6 - 29 |
| | B | Ground Control Box Switch Panel Wiring Diagram, Z-45/25<br>CE Models | 6 - 30 |
| | A | Platform Control Box Terminal Strip Wiring Diagram, Z-45/25 | 6 - 31 |
| | A | Platform Control Box Switch Panel Wiring Diagram, Z-45/25 | 6 - 32 |

https://truckmanualshub.com/



TABLE OF CONTENTS


| Section 6 | Rev | **Schematics,** continued<br>**Deutz F3L-2011 models, continued** | |
|---|---|---|---|
| | C | Electrical Schematic, Z-45/25J | 6 - 33 |
| | C | Electrical Schematic, Z-45/25J<br>CE models | 6 - 35 |
| | A | Ground Control Box Terminal Strip Wiring Diagram, Z-45/25J | 6 - 37 |
| | B | Ground Control Box Switch Panel Wiring Diagram, Z-45/25J | 6 - 38 |
| | A | Ground Control Box Terminal Strip Wiring Diagram, Z-45/25J<br>CE Models | 6 - 39 |
| | B | Ground Control Box Switch Panel Wiring Diagram, Z-45/25J<br>CE Models | 6 - 40 |
| | A | Platform Control Box Terminal Strip Wiring Diagram, Z-45/25J | 6 - 41 |
| | A | Platform Control Box Switch Panel Wiring Diagram, Z-45/25J | 6 - 42 |
| | | **Perkins 404-22 models** | |
| | C | Electrical Schematic, Z-45/25 | 6 - 44 |
| | A | Ground Control Box Terminal Strip Wiring Diagram, Z-45/25 | 6 - 48 |
| | B | Ground Control Box Switch Panel Wiring Diagram, Z-45/25 | 6 - 49 |
| | A | Platform Control Box Terminal Strip Wiring Diagram, Z-45/25 | 6 - 52 |
| | A | Platform Control Box Switch Panel Wiring Diagram, Z-45/25 | 6 - 53 |
| | C | Electrical Schematic, Z-45/25J | 6 - 56 |
| | B | Ground Control Box Terminal Strip Wiring Diagram, Z-45/25J | 6 - 60 |
| | B | Ground Control Box Switch Panel Wiring Diagram, Z-45/25J | 6 - 61 |
| | A | Platform Control Box Terminal Strip Wiring Diagram, Z-45/25J | 6 - 63 |
| | A | Platform Control Box Switch Panel Wiring Diagram, Z-45/25J | 6 - 65 |
| | | **Hydraulic Schematics** | |
| | D | Hydraulic Schematic, 2WD Models (before serial number 27001) | 6 - 67 |
| | B | Hydraulic Schematic, 2WD Models (after serial number 27000) | 6 - 69 |
| | C | Hydraulic Schematic, 4WD Models (before serial number 27001) | 6 - 71 |
| | B | Hydraulic Schematic, 4WD Models (after serial number 27000) | 6 - 73 |

https://truckmanualshub.com/



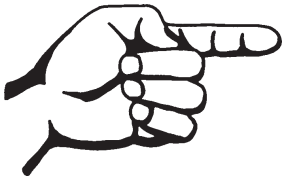

This page intentionally left blank.

https://truckmanualshub.com/



# Specifications

REV H

## Machine Specifications

| Tires and wheels | Rough terrain | Industrial |
|---|---|---|
| Tire size | 355/55 D625 | 9-14.5 LT |
| Tire ply rating | 14 | Tread 8<br>Sidewall 6 |
| Tire weight,<br>new foam-filled (minimum) | 390 lbs<br>177 kg | 175 lbs<br>79 kg |
| Overall tire diameter | 36.9 in<br>93.7 cm | 28 in<br>71 cm |
| Wheel diameter | 24.5 inches<br>62.2 cm | 14.5 inches<br>36.8 cm |
| Wheel width | 11.75 inches<br>29.8 cm | 7 inches<br>17.8 cm |
| Wheel lugs | 9 @ 5/8 -18 | 9 @ 5/8 -18 |
| Lug nut torque<br>(lubricated)<br><br>(dry) | <br>94 ft-lbs<br>127.4 Nm<br>125 ft-lbs<br>169.5 Nm | <br>94 ft-lbs<br>127.4 Nm<br>125 ft-lbs<br>169.5 Nm |
| Tire pressure (air-filled tires) | 50 psi<br>3.45 bar | 100 psi<br>6.9 bar |

| Tires and wheels | Hi-flotation (option) |
|---|---|
| Tire size | 33/16LL500 |
| Tire ply rating | 10 |
| Overall tire diameter | 33 in<br>84 cm |
| Wheel diameter | 19.5 inches<br>49.5 cm |
| Wheel width | 14 inches<br>35.6 cm |
| Wheel lugs | 9 @ 5/8 -18 |
| Lug nut torque<br>(lubricated)<br><br>(dry) | <br>94 ft-lbs<br>127.4 Nm<br>125 ft-lbs<br>169.5 Nm |
| Tire pressure | 38 psi<br>2.6 bar |

**For operational specifications, refer to the Operator's Manual.**

**Continuous improvement of our products is a Genie policy. Product specifications are subject to change without notice.**

https://truckmanualshub.com/



SPECIFICATIONS REV H

| Fluid capacities | |
|---|---|
| LPG tank | 33.5 pounds<br>15.2 kg |
| Fuel tank | 17 gallons<br>64.4 liters |
| Hydraulic tank | 24 gallons<br>91 liters |
| Hydraulic system<br>(including tank) | 30 gallons<br>113.6 liters |
| Drive hubs, 2WD models<br>(before serial number 24690) | 17 fl oz<br>0.5 liters |
| Drive hubs, 2WD models<br>(after serial number 24689) | 24 fl oz<br>0.7 liters |
| Drive hubs - Steer end, 4WD models | 17 fl oz<br>0.5 liters |
| Drive hubs, 48:1,<br>Non-steer end, 4WD models<br>(before serial number 23812) | 17 fl oz<br>0.5 liters |
| Drive hubs with brake, 57:1,<br>Non-steer end, 4WD models<br>(after serial number 23811) | 24 fl oz<br>0.7 liters |
| Drive hub oil type:<br>SAE 90 multipurpose hypoid gear oil API service classification GL5 | |

## Performance Specifications

| Drive speed, maximum | |
|---|---|
| Stowed position | 4.8 mph<br>7.7 km/h<br>40 ft / 5.7 sec<br>12.2 m / 5.7 sec |
| Raised or extended position | 0.6 mph<br>0.98 km/h<br>40 ft / 45 sec<br>12.2 m / 45 sec |
| Raised or extended position<br>(narrow models) | 0.38 mph<br>0.6 km/h<br>40 ft / 70 sec<br>12.2 m / 70 sec |
| **Gradeability** | See Operator's Manual |
| **Braking distance, maximum** | |
| High range on paved surface | 3 to 6 ft<br>0.9 to 1.8 m |
| **Boom function speeds, maximum from platform controls** | |
| Primary boom up | 24 to 28 seconds |
| Primary boom down | 24 to 28 seconds |
| Secondary boom up | 24 to 28 seconds |
| Secondary boom down<br>(before serial number 27001) | 38 to 42 seconds |
| Secondary boom down<br>(after serial number 27000) | 24 to 28 seconds |
| Turntable rotate, 359°<br>primary boom retracted | 62 to 68 seconds |

**Continuous improvement of our products is a Genie policy. Product specifications are subject to change without notice.**

https://truckmanualshub.com/



# Hydraulic Specifications

| Hydraulic Oil Specifications | |
|---|---|
| Hydraulic oil type | Chevron Rykon MV equivalent |
| Viscosity grade | Multi-viscosity |
| Viscosity index | 200 |
| Cleanliness level, minimum | 15/13 |
| Water content, maximum | 200 ppm |

**Chevron Rykon MV oil is fully compatible and mixable with Shell Donax TG (Dexron III) oils.**
Genie specifications require hydraulic oils which are designed to give maximum protection to hydraulic systems, have the ability to perform over a wide temperature range, and have a minimum viscosity index greater than 140. They should provide excellent antiwear, oxidation, corrosion inhibition, seal conditioning, and foam and aeration suppression properties.

| Optional fluids | |
|---|---|
| Biodegradable | Petro Canada Environ MV46<br>Statoil Hydra Way Bio Pa 32<br>BP Biohyd SE-S |
| Fire resistant | UCON Hydrolube HP-5046<br>Quintolubric 822 |
| Mineral based | Shell Tellus T32<br>Shell Tellus T46<br>Chevron Aviation A |

**NOTICE** Use Chevron Aviation A hydraulic oil when in ambient temperatures consistently below 0°F / -18°C.

**NOTICE** Use Shell Tellus T46 hydraulic oil when oil temperatures consistently exceed 205°F / 96°C.

**NOTICE** Genie specifications require additional equipment and special installation instructions for the approved optional fluids. Consult the Genie Industries Service Department before use.

| Drive pump | |
|---|---|
| Type: | bi-directional, variable displacement piston pump |
| Flow rate @ 2500 rpm | 32 gpm<br>121 L/min |
| Drive pressure, maximum | 3500 psi<br>241 bar |

| Charge pump | |
|---|---|
| Type: | gear |
| Displacement | 0.84 cu in<br>13.76 cc |
| Flow rate @ 2500 rpm | 9.1 gpm<br>34.4 L/min |
| Charge pressure @ 2500 rpm | 315 psi<br>21.7 bar |

| Function pump | |
|---|---|
| Type: | gear |
| Displacement | 0.67 cu in<br>11 cc |
| Flow rate @ 2500 rpm | 7.25 gpm<br>27.4 L/min |

| Auxiliary pump | |
|---|---|
| Type: | gear, fixed displacement |
| Displacement per revolution | 0.067 cu in<br>1.1 cc |
| Auxiliary pump relief pressure | 3200 psi<br>220.6 bar |

**Continuous improvement of our products is a Genie policy. Product specifications are subject to change without notice.**

https://truckmanualshub.com/



SPECIFICATIONS REV H

| Function manifold | |
|---|---|
| System relief valve pressure | 3200 psi<br>220.6 bar |
| Secondary boom down relief valve pressure | 2100 psi<br>145 bar |
| Platform level relief valve pressure | 2500 psi<br>172 bar |
| Steer flow regulator | 1.5 gpm<br>5.7 L/min |
| Boom extend flow regulator | 2 gpm<br>7.6 L/min |
| Jib boom / platform rotate flow regulator | 0.4 gpm<br>1.5 L/min |
| **Drive manifold** | |
| Hot oil relief pressure | 250 psi<br>17.2 bar |
| **Steer end drive motors (4WD models)** | |
| Displacement per revolution | 1.53 cu in<br>25 cc |
| **Non-steer end drive motors** | |
| Displacement per revolution, variable 4WD (2 speed motor) (before serial number 23812) | 0.12 to 2.14 cu in<br>1.97 to 35 cc |
| Displacement per revolution, variable 4WD (2 speed motor) (after serial number 23811) | 0.01 to 1.83 cu in<br>1.61 to 30 cc |
| Displacement per revolution, variable 2WD (before serial number 24690) | 1.37 to 2.14 cu in<br>22.5 to 35 cc |
| Displacement per revolution, variable 2WD (after serial number 24689) | 0.99 to 1.83 cu in<br>16.2 to 30 cc |

| Hydraulic filters | |
|---|---|
| High pressure filter | Beta 3 ≥ 200 |
| High pressure filter bypass pressure | 100 psi<br>6.89 bar |
| Medium pressure filter | Beta 3 ≥ 200 |
| Medium pressure filter bypass pressure | 50 psi<br>3.4 bar |
| Hydraulic return filter | 10 micron with<br>25 psi / 1.7 bar bypass |

**Continuous improvement of our products is a Genie policy. Product specifications are subject to change without notice.**

https://truckmanualshub.com/



# Manifold Component Specifications

| Plug torque | |
|---|---|
| SAE No. 2 | 36 in-lbs / 4 Nm |
| SAE No. 4 | 10 ft-lbs / 13 Nm |
| SAE No. 6 | 14 ft-lbs / 19 Nm |
| SAE No. 8 | 38 ft-lbs / 51 Nm |
| SAE No. 10 | 41 ft-lbs / 55 Nm |
| SAE No. 12 | 56 ft-lbs / 76 Nm |

| Valve Coil Resistance Specification | |
|---|---|
| Proportional directional solenoid valve, 10V DC (schematic items A, C, D, BP, BU and BY) | 6 to 8Ω |
| 3 position 4 way directional valve, 10V DC (schematic items B, F, H, BF, BM, CG) | 6 to 8Ω |
| 2 position 3 way solenoid valve, 10V DC (schematic items E, G, CA, CC, AD, OO, XX, AF, AG, AI and AK) | 6 to 8Ω |

**Continuous improvement of our products is a Genie policy. Product specifications are subject to change without notice.**

https://truckmanualshub.com/



SPECIFICATIONS REV H

# Ford LRG-425 EFI Engine

| | |
|---|---|
| **Displacement** | 153 cu in<br>2.5 liters |
| **Number of cylinders** | 4 |
| **Bore & stroke** | 3.78 x 3.4 inches<br>96.01 x 86.36 mm |
| **Horsepower** | 70 @ 2500 rpm<br>52 kW @ 2500 rpm |
| **Firing order** | 1 - 3 - 4 - 2 |
| **Low function idle** (computer controlled) | 1600 rpm<br>27 Hz |
| **High function idle** (computer controlled) | 2500 rpm<br>42 Hz |
| **Compression ratio** | 9.4:1 |

**Compression pressure (approx.)**
Pressure (psi or bar) of lowest cylinder must be at least 75% of highest cylinder

| | |
|---|---|
| **Valve clearances -** collapsed tappet | 0.035 to 0.055 inches<br>0.889 to 1.397 mm |

**Lubrication system**

| | |
|---|---|
| Oil pressure (operating temperature @ 2500 rpm) | 40 to 60 psi<br>2.75 to 4.1 bar |
| Oil capacity (including filter) | 4.5 quarts<br>4.3 liters |

**Oil pressure switch**

| | |
|---|---|
| Oil pressure switch point | 7.5 psi<br>0.51 bar |

**Oil viscosity requirements**

Extreme operating temperatures may require the use of alternative engine oils. For oil requirements, refer to the Engine Operator Handbook on your machine.

**Electronic fuel pump**

| | |
|---|---|
| Fuel pressure, static | 63 psi<br>4.3 bar |
| Fuel flow rate | 0.58 gpm<br>2.2 L/min |

**Fuel requirement**

For fuel requirements, refer to the engine Operator's Manual on your machine.

**Ignition system**

| | |
|---|---|
| Spark plug type | Motorcraft AGSF-32-FM |
| Spark plug gap | 0.042 to 0.046 inches<br>1.07 to 1.17 mm |

**Engine coolant**

| | |
|---|---|
| Capacity | 11.5 quarts<br>10.9 liters |

**Coolant temperature switch**

| | |
|---|---|
| Temperature switch point | 230°F<br>110°C |

**Starter motor**

| | |
|---|---|
| Normal engine cranking speed | 200 to 250 rpm |
| Current draw, normal load | 140-200A |
| Current draw, maximum load | 800A |

**Alternator**

| | |
|---|---|
| Output | 95A, 14.5V DC |

**Battery**

| | |
|---|---|
| Type | 12V DC, Group 34/78 |
| Quantity | 1 |
| Cold cranking ampere @ 0°F | 900A |
| Reserve capacity @ 25A rate | 200 minutes |

**Continuous improvement of our products is a Genie policy. Product specifications are subject to change without notice.**

https://truckmanualshub.com/



# Ford DSG-423 EFI Engine

| | |
|---|---|
| **Displacement** | 140.4 cu in<br>2.3 liters |
| **Number of cylinders** | 4 |
| **Bore & stroke** | 3.44 x 3.7 inches<br>87.5 x 94 mm |
| **Horsepower** | 59 @ 2500 rpm<br>44 kW @ 2500 rpm |
| **Firing order** | 1 - 3 - 4 - 2 |
| **Low function idle** (computer controlled) | 1600 rpm<br>27 Hz |
| **High function idle** (computer controlled) | 2500 rpm<br>42 Hz |
| **Compression ratio** | 9.7:1 |

**Compression pressure (approx.)**
Pressure (psi or bar) of lowest cylinder must be at least 75% of highest cylinder

| **Lubrication system** | |
|---|---|
| Oil pressure<br>(at operating temperature @ 2500 rpm) | 29 to 39 psi<br>2 to 2.7 bar |
| Oil capacity<br>(including filter) | 4 quarts<br>3.8 liters |

| **Oil pressure switch** | |
|---|---|
| Oil pressure switch point | 7.5 psi<br>0.51 bar |

Extreme operating temperatures may require the use of alternative engine oils. For oil requirements, refer to the Engine Operator Handbook on your machine.

| **Electronic fuel pump** | |
|---|---|
| Fuel pressure, static | 64 psi<br>4.4 bar |
| Fuel flow rate | 0.43 gpm<br>1.6 L/min |

**Fuel requirement**

For fuel requirements, refer to the engine Operator's Manual on your machine.

| **Ignition system** | |
|---|---|
| Spark plug type | Motorcraft AGSF-32-FEC |
| Spark plug gap | 0.044 to 0.045 inches<br>1.125 to 1.135 mm |

| **Engine coolant** | |
|---|---|
| Capacity | 10 quarts<br>9.5 liters |

| **Cylinder head temperature sending unit** | |
|---|---|
| Fault code set temperature | 280°F<br>138°C |
| Engine shut-down temperature | 300°F<br>149°C |

| **Starter motor** | |
|---|---|
| Normal engine cranking speed | 200 to 250 rpm |
| Current draw, normal load | 140-200A |
| Current draw, maximum load | 800A |

| **Alternator** | |
|---|---|
| Output | 95A, 13.8V DC |

| **Battery** | |
|---|---|
| Type | 12V DC, Group 34/78 |
| Quantity | 1 |
| Cold cranking ampere @ 0°F | 900A |
| Reserve capacity @ 25A rate | 200 minutes |

**Continuous improvement of our products is a Genie policy. Product specifications are subject to change without notice.**

https://truckmanualshub.com/



SPECIFICATIONS REV H

## Deutz F3L 2011 Engine
## Deutz D2011L03i

| | |
|---|---|
| **Displacement** | 142 cu in<br>2.33 liters |
| **Number of cylinders** | 3 |
| **Bore and stroke** | 3.7 x 4.4 inches<br>94 x 112 mm |
| **Horsepower** | 48 @ 2800 rpm<br>36 kW @ 2800 rpm |
| **Firing order** | 1 - 2 - 3 |
| **Low idle** | 1500 rpm<br>25 Hz |
| **High idle** | 2500 rpm<br>42 Hz |
| **Compression ratio** | 19:1 |
| **Compression pressure** | 362 to 435 psi<br>25 to 30 bar |
| **Governor** | centrifugal mechanical |
| **Valve clearance, cold** | |
| Intake | 0.012 in<br>0.3 mm |
| Exhaust | 0.020 in<br>0.5 mm |

| **Lubrication system** | |
|---|---|
| Oil pressure | 20 to 44 psi<br>1.4 to 3 bar |
| Oil capacity<br>(including filter)<br>**(Deutz F3L 2011 Engine)** | 8.5 quarts<br>8 liters |
| Oil capacity<br>(including filter)<br>**(Deutz D2011L03i Engine)** | 9.5 quarts<br>9 liters |
| **Oil viscosity requirements** | |
| -22° F to 86° F/ -30° C to 30° C | 5W-30<br>(synthetic) |
| -4° F to 90° F / -20° C to 32° C | 10W-40 |
| Above 23° F / -5° C | 20W-50 |

Units ship with 15W-40.
Extreme operating temperatures may require the use of alternative engine oils. For oil requirements, refer to the Engine Operator Handbook on your machine.

| **Oil temperature switch** | |
|---|---|
| Temperature switch point | 300°F<br>149°C |
| **Oil pressure switch** | |
| Oil pressure switch point<br>**(Deutz F3L 2011 Engine)** | 7 psi<br>0.5 bar |
| Oil pressure switch point<br>**(Deutz D2011L03i Engine)** | 22 psi<br>1.5 bar |

**Continuous improvement of our products is a Genie policy. Product specifications are subject to change without notice.**

https://truckmanualshub.com/



| | |
|---|---|
| **Fuel injection system** | |
| Injection pump make | Bosch |
| Injection pump pressure, maximum | 15000 psi<br>1034 bar |
| Injector opening pressure | 3046 psi<br>210 bar |
| **Fuel requirement** | |
| For fuel requirements, refer to the engine Operator's Manual on your machine. | |
| **Starter motor** | |
| Current draw, no load | 90A |
| Brush length, new | 0.72 in<br>18.5 mm |
| Brush length, minimum | 0.27 in<br>7 mm |
| **Battery** | |
| Type | 12V DC, Group 34/78 |
| Quantity | 1 |
| Cold cranking ampere | 900A |
| Reserve capacity @ 25A rate | 200 minutes |
| **Alternator output** | 60A @ 14V DC |
| **Fan belt deflection** | 3/8 to 1/2 inch<br>9 to 12 mm |

**Continuous improvement of our products is a Genie policy. Product specifications are subject to change without notice.**

https://truckmanualshub.com/



SPECIFICATIONS REV H

## Perkins 404-22 Engine

| | |
|---|---|
| **Displacement** | 134 cu in<br>2.2 liters |
| **Number of cylinders** | 4 |
| **Bore and stroke** | 3.31 x 3.94 inches<br>84 x 100 mm |
| **Horsepower** | 51 @ 2500 rpm<br>38 kW @ 2500 rpm |
| **Firing order** | 1 - 3 - 4 - 2 |
| **Low idle** | 1300 rpm<br>22 Hz |
| **High idle** | 2500 rpm<br>42 Hz |
| **Compression ratio** | 23.3:1 |
| **Compression pressure** | 426 psi<br>29.4 bar |

Pressure (psi) of lowest cylinder must be within 50 psi / 3.45 bar of highest cylinder

| | |
|---|---|
| **Governor** | centrifugal mechanical |
| **Valve clearance, cold** | |
| Intake | 0.008 in<br>0.2 mm |
| Exhaust | 0.008 in<br>0.2 mm |

| | |
|---|---|
| **Lubrication system** | |
| Oil pressure, cold<br>(at 2500 rpm) | 60 psi<br>4.1 bar |
| Oil capacity<br>(including filter) | 9.3 quarts<br>8.8 liters |
| **Oil viscosity requirements** | |
| Below 86°F / 30°C | 5W-20 |
| -4°F to 104°F / -20°C to 40°C | 10W-30 |
| Above 14°F / -10°C | 15W-40 |

Units ship with 15W-40.
Extreme operating temperatures may require the use of alternative engine oils. For oil requirements, refer to the Engine Operator Handbook on your machine.

| | |
|---|---|
| **Oil pressure sending unit** | |
| Oil pressure switch point | 14.2 psi<br>1 bar |
| **Fuel injection system** | |
| Injection pump make | Zexel |
| Injection pressure | 2133 psi<br>147 bar |

**Fuel requirement**

For fuel requirements, refer to the engine Operator's Manual on your machine.

| | |
|---|---|
| **Alternator output** | 55A @ 12V DC |
| **Fan belt deflection** | 3/8 in<br>10 mm |
| **Starter motor** | |
| Current draw, no load | 90A |
| Brush length, new | 0.7480 in<br>19 mm |
| Brush length, minimum | 0.5 in<br>12.7 mm |

**Continuous improvement of our products is a Genie policy. Product specifications are subject to change without notice.**

https://truckmanualshub.com/



| | |
|---|---|
| **Battery** | |
| Type | 12V DC, Group 34/78 |
| Quantity | 1 |
| Cold cranking ampere | 900A |
| Reserve capacity @ 25A rate | 200 minutes |
| **Engine coolant** | |
| Capacity | 7.7 quarts<br>7.3 liters |
| **Coolant temperature sending unit** | |
| Temperature switch point | 221° F<br>105° C |

**Continuous improvement of our products is a Genie policy. Product specifications are subject to change without notice.**

https://truckmanualshub.com/



SPECIFICATIONS REV H

## Machine Torque Specifications

| | |
|---|---|
| **Platform rotator** | |
| 3/4 -10 center bolt, GR 8 | 380 ft-lbs<br>515 Nm |
| 3/8 -16 bolts, GR 8 | 44 ft-lbs<br>60 Nm |
| **Turntable rotate assembly** | |
| Rotate bearing mounting bolts, lubricated | 180 ft-lbs<br>244 Nm |
| Drive motor/brake mounting bolts, dry | 110 ft-lbs<br>149 Nm |
| Drive motor/brake mounting bolts, lubricated | 80 ft-lbs<br>108 Nm |
| **Drive motor and hubs** | |
| Drive hub mounting bolts, lubricated | 180 ft-lbs<br>244 Nm |
| Drive motor mounting bolts, lubricated | 55 ft-lbs<br>75 Nm |

**Continuous improvement of our products is a Genie policy. Product specifications are subject to change without notice.**

https://truckmanualshub.com/



## Hydraulic Hose and Fitting Torque Specifications

Your machine is equipped with Parker Seal-Lok® fittings and hose ends. Genie specifications require that fittings and hose ends be torqued to specification when they are removed and installed or when new hoses or fittings are installed.

### SAE O-ring Boss Port
(tube fitting - installed into Aluminum)

| SAE Dash size | Torque |
|---|---|
| -4 | 11 ft-lbs / 14.9 Nm |
| -6 | 23 ft-lbs / 31.2 Nm |
| -8 | 40 ft-lbs / 54.2 Nm |
| -10 | 69 ft-lbs / 93.6 Nm |
| -12 | 93 ft-lbs / 126.1 Nm |
| -16 | 139 ft-lbs / 188.5 Nm |
| -20 | 172 ft-lbs / 233.2 Nm |
| -24 | 208 ft-lbs / 282 Nm |

### SAE O-ring Boss Port
(tube fitting - installed into Steel)

| SAE Dash size | Torque |
|---|---|
| -4 | 16 ft-lbs / 21.7 Nm |
| -6 | 35 ft-lbs / 47.5 Nm |
| -8 | 60 ft-lbs / 81.3 Nm |
| -10 | 105 ft-lbs / 142.4 Nm |
| -12 | 140 ft-lbs / 190 Nm |
| -16 | 210 ft-lbs / 284.7 Nm |
| -20 | 260 ft-lbs / 352.5 Nm |
| -24 | 315 ft-lbs / 427.1 Nm |

**Seal-Lok® fittings**

1 Replace the O-ring. The O-ring must be replaced anytime the seal has been broken. The O-ring cannot be re-used if the fitting or hose end has been tightened beyond finger tight.

**NOTICE** The O-rings used in the Parker Seal Lok® fittings and hose ends are custom-size O-rings. They are not standard SAE size O-rings. They are available in the O-ring field service kit (Genie part number 49612).

2 Lubricate the O-ring before installation.

3 Be sure that the face seal O-ring is seated and retained properly.

4 Position the tube and nut squarely on the face seal end of the fitting and tighten the nut finger tight.

5 Tighten the nut or fitting to the appropriate torque per given size as shown in the table.

6 Operate all machine functions and inspect the hoses and fittings and related components to confirm that there are no leaks.

### Seal-Lok® Fittings
(hose end)

| SAE Dash size | Torque |
|---|---|
| -4 | 18 ft-lbs / 25 Nm |
| -6 | 30 ft-lbs / 40 Nm |
| -8 | 40 ft-lbs / 55 Nm |
| -10 | 60 ft-lbs / 80 Nm |
| -12 | 85 ft-lbs / 115 Nm |
| -16 | 110 ft-lbs / 150 Nm |
| -20 | 140 ft-lbs / 190 Nm |
| -24 | 180 ft-lbs / 245 Nm |

https://truckmanualshub.com/



SPECIFICATIONS REV H

## SAE FASTENER TORQUE CHART

• This chart is to be used as a guide only unless noted elsewhere in this manual •

| SIZE | THREAD | Grade 5 | | | | Grade 8 | | | | A574 High Strength Black Oxide Bolts | |
|---|---|---|---|---|---|---|---|---|---|---|---|
| | | LUBED | | DRY | | LUBED | | DRY | | LUBED | |
| | | in-lbs | Nm | in-lbs | Nm | in-lbs | Nm | in-lbs | Nm | in-lbs | Nm |
| 1/4 | 20 | 80 | 9 | 100 | 11.3 | 110 | 12.4 | 140 | 15.8 | 130 | 14.7 |
| | 28 | 90 | 10.1 | 120 | 13.5 | 120 | 13.5 | 160 | 18 | 140 | 15.8 |
| | | LUBED | | DRY | | LUBED | | DRY | | LUBED | |
| | | ft-lbs | Nm | ft-lbs | Nm | ft-lbs | Nm | ft-lbs | Nm | ft-lbs | Nm |
| 5/16 | 18 | 13 | 17.6 | 17 | 23 | 18 | 24 | 25 | 33.9 | 21 | 28.4 |
| | 24 | 14 | 19 | 19 | 25.7 | 20 | 27.1 | 27 | 36.6 | 24 | 32.5 |
| 3/8 | 16 | 23 | 31.2 | 31 | 42 | 33 | 44.7 | 44 | 59.6 | 38 | 51.5 |
| | 24 | 26 | 35.2 | 35 | 47.4 | 37 | 50.1 | 49 | 66.4 | 43 | 58.3 |
| 7/16 | 14 | 37 | 50.1 | 49 | 66.4 | 50 | 67.8 | 70 | 94.7 | 61 | 82.7 |
| | 20 | 41 | 55.5 | 55 | 74.5 | 60 | 81.3 | 80 | 108.4 | 68 | 92.1 |
| 1/2 | 13 | 57 | 77.3 | 75 | 101.6 | 80 | 108.4 | 110 | 149 | 93 | 126 |
| | 20 | 64 | 86.7 | 85 | 115 | 90 | 122 | 120 | 162 | 105 | 142 |
| 9/16 | 12 | 80 | 108.4 | 110 | 149 | 120 | 162 | 150 | 203 | 130 | 176 |
| | 18 | 90 | 122 | 120 | 162 | 130 | 176 | 170 | 230 | 140 | 189 |
| 5/8 | 11 | 110 | 149 | 150 | 203 | 160 | 217 | 210 | 284 | 180 | 244 |
| | 18 | 130 | 176 | 170 | 230 | 180 | 244 | 240 | 325 | 200 | 271 |
| 3/4 | 10 | 200 | 271 | 270 | 366 | 280 | 379 | 380 | 515 | 320 | 433 |
| | 16 | 220 | 298 | 300 | 406 | 310 | 420 | 420 | 569 | 350 | 474 |
| 7/8 | 9 | 320 | 433 | 430 | 583 | 450 | 610 | 610 | 827 | 510 | 691 |
| | 14 | 350 | 474 | 470 | 637 | 500 | 678 | 670 | 908 | 560 | 759 |
| 1 | 8 | 480 | 650 | 640 | 867 | 680 | 922 | 910 | 1233 | 770 | 1044 |
| | 12 | 530 | 718 | 710 | 962 | 750 | 1016 | 990 | 1342 | 840 | 1139 |
| 1 1/8 | 7 | 590 | 800 | 790 | 1071 | 970 | 1315 | 1290 | 1749 | 1090 | 1477 |
| | 12 | 670 | 908 | 890 | 1206 | 1080 | 1464 | 1440 | 1952 | 1220 | 1654 |
| 1 1/4 | 7 | 840 | 1138 | 1120 | 1518 | 1360 | 1844 | 1820 | 2467 | 1530 | 2074 |
| | 12 | 930 | 1260 | 1240 | 1681 | 1510 | 2047 | 2010 | 2725 | 1700 | 2304 |
| 1 1/2 | 6 | 1460 | 1979 | 1950 | 2643 | 2370 | 3213 | 3160 | 4284 | 2670 | 3620 |
| | 12 | 1640 | 2223 | 2190 | 2969 | 2670 | 3620 | 3560 | 4826 | 3000 | 4067 |

## METRIC FASTENER TORQUE CHART

• This chart is to be used as a guide only unless noted elsewhere in this manual •

| Size (mm) | Class 4.6 | | | | Class 8.8 | | | | Class 10.9 | | | | Class 12.9 | | | |
|---|---|---|---|---|---|---|---|---|---|---|---|---|---|---|---|---|
| | LUBED | | DRY | | LUBED | | DRY | | LUBED | | DRY | | LUBED | | DRY | |
| | in-lbs | Nm | in-lbs | Nm | in-lbs | Nm | in-lbs | Nm | in-lbs | Nm | in-lbs | Nm | in-lbs | Nm | in-lbs | Nm |
| 5 | 16 | 1.8 | 21 | 2.4 | 41 | 4.63 | 54 | 6.18 | 58 | 6.63 | 78 | 8.84 | 68 | 7.75 | 91 | 10.3 |
| 6 | 19 | 3.05 | 36 | 4.07 | 69 | 7.87 | 93 | 10.5 | 100 | 11.3 | 132 | 15 | 116 | 13.2 | 155 | 17.6 |
| 7 | 45 | 5.12 | 60 | 6.83 | 116 | 13.2 | 155 | 17.6 | 167 | 18.9 | 223 | 25.2 | 1.95 | 22.1 | 260 | 29.4 |
| | LUBED | | DRY | | LUBED | | DRY | | LUBED | | DRY | | LUBED | | DRY | |
| | ft-lbs | Nm | ft-lbs | Nm | ft-lbs | Nm | ft-lbs | Nm | ft-lbs | Nm | ft-lbs | Nm | ft-lbs | Nm | ft-lbs | Nm |
| 8 | 5.4 | 7.41 | 7.2 | 9.88 | 14 | 19.1 | 18.8 | 25.5 | 20.1 | 27.3 | 26.9 | 36.5 | 23.6 | 32 | 31.4 | 42.6 |
| 10 | 10.8 | 14.7 | 14.4 | 19.6 | 27.9 | 37.8 | 37.2 | 50.5 | 39.9 | 54.1 | 53.2 | 72.2 | 46.7 | 63.3 | 62.3 | 84.4 |
| 12 | 18.9 | 25.6 | 25.1 | 34.1 | 48.6 | 66 | 64.9 | 88 | 69.7 | 94.5 | 92.2 | 125 | 81 | 110 | 108 | 147 |
| 14 | 30.1 | 40.8 | 40 | 54.3 | 77.4 | 105 | 103 | 140 | 110 | 150 | 147 | 200 | 129 | 175 | 172 | 234 |
| 16 | 46.9 | 63.6 | 62.5 | 84.8 | 125 | 170 | 166 | 226 | 173 | 235 | 230 | 313 | 202 | 274 | 269 | 365 |
| 18 | 64.5 | 87.5 | 86.2 | 117 | 171 | 233 | 229 | 311 | 238 | 323 | 317 | 430 | 278 | 377 | 371 | 503 |
| 20 | 91 | 124 | 121 | 165 | 243 | 330 | 325 | 441 | 337 | 458 | 450 | 610 | 394 | 535 | 525 | 713 |
| 22 | 124 | 169 | 166 | 225 | 331 | 450 | 442 | 600 | 458 | 622 | 612 | 830 | 536 | 727 | 715 | 970 |
| 24 | 157 | 214 | 210 | 285 | 420 | 570 | 562 | 762 | 583 | 791 | 778 | 1055 | 682 | 925 | 909 | 1233 |

https://truckmanualshub.com/



# Scheduled Maintenance Procedures

## Observe and Obey:

- ☑ Maintenance inspections shall be completed by a person trained and qualified on the maintenance of this machine.
- ☑ Scheduled maintenance inspections shall be completed daily, quarterly, six months, annually and every 2 years as specified on the *Maintenance Inspection Report.*

**⚠WARNING** Failure to perform each procedure as presented and scheduled may cause death, serious injury or substantial damage.

- ☑ Immediately tag and remove from service a damaged or malfunctioning machine.
- ☑ Repair any machine damage or malfunction before operating machine.
- ☑ Keep records on all inspections for three years.
- ☑ Unless otherwise specified, perform each maintenance procedure with the machine in the following configuration:
  - Machine parked on a firm, level surface
  - Boom in stowed position
  - Turntable rotated with the boom between the non-steer wheels
  - Turntable secured with the turntable rotation lock
  - Key switch in the off position with the key removed
  - Wheels chocked
  - All external AC power disconnected from the machine

## About This Section

This section contains detailed procedures for each scheduled maintenance inspection.

Each procedure includes a description, safety information and step-by-step instructions.

### Symbols Legend

⚠ Safety alert symbol—used to alert personnel to potential personal injury hazards. Obey all safety messages that follow this symbol to avoid possible injury or death.

**⚠DANGER** Used to indicate the presence of an imminently hazardous situation which, if not avoided, will result in death or serious injury.

**⚠WARNING** Used to indicate the presence of a potentially hazardous situation which, if not avoided, could result in death or serious injury.

**⚠CAUTION** With safety alert symbol—used to indicate the presence of a potentially hazardous situation which, if not avoided, may cause minor or moderate injury.

**CAUTION** Without safety alert symbol—used to indicate the presence of a potentially hazardous situation which, if not avoided, may result in property damage.

**NOTICE** Used to indicate operation or maintenance information.

⊙ Indicates that a specific result is expected after performing a series of steps.

⊠ Indicates that an incorrect result has occurred after performing a series of steps.

https://truckmanualshub.com/



# SCHEDULED MAINTENANCE PROCEDURES

## Maintenance Symbols Legend

**NOTICE** The following symbols have been used in this manual to help communicate the intent of the instructions. When one or more of the symbols appear at the beginning of a maintenance procedure, it conveys the meaning below.

Indicates that tools will be required to perform this procedure.

Indicates that new parts will be required to perform this procedure.

Indicates that a cold engine will be required to perform this procedure.

Indicates that a warm engine will be required to perform this procedure.

Indicates that dealer service is required to perform this procedure.

## Pre-delivery Preparation Report

The pre-delivery preparation report contains checklists for each type of scheduled inspection.

Make copies of the *Pre-delivery Preparation* report to use for each inspection. Store completed forms as required.

## Maintenance Schedule

There are five types of maintenance inspections that must be performed according to a schedule—daily, quarterly, every six months, annual and two years. The *Scheduled Maintenance Procedures Section* and the *Maintenance Inspection Report* have been divided into five subsections—A, B, C, D and E. Use the following chart to determine which group(s) of procedures are required to perform a scheduled inspection.

| Inspection | Table or Checklist |
|---|---|
| Daily or every 8 hours | A |
| Quarterly or every 250 hours | A + B |
| Six months or every 500 hours | A + B + C |
| Annual or every 1000 hours | A + B + C + D |
| Two years or every 2000 hours | A + B + C + D + E |

## Maintenance Inspection Report

The maintenance inspection report contains checklists for each type of scheduled inspection.

Make copies of the *Maintenance Inspection Report* to use for each inspection. Store completed forms for three years.

https://truckmanualshub.com/

# Pre-Delivery Preparation

## Fundamentals

It is the responsibility of the dealer to perform the Pre-delivery Preparation.

The Pre-delivery Preparation is performed prior to each delivery. The inspection is designed to discover if anything is apparently wrong with a machine before it is put into service.

A damaged or modified machine must never be used. If damage or any variation from factory delivered condition is discovered, the machine must be tagged and removed from service.

Repairs to the machine may only be made by a qualified service technician, according to the manufacturer's specifications.

Scheduled maintenance inspections shall be performed by qualified service technicians, according to the manufacturer's specifications and the requirements listed in the responsibilities manual.

## Instructions

Use the operator's manual on your machine.

The Pre-delivery Preparation consists of completing the Pre-operation Inspection, the Maintenance items and the Function Tests.

Use this form to record the results. Place a check in the appropriate box after each part is completed. Follow the instructions in the operator's manual.

If any inspection receives an N, remove the machine from service, repair and re-inspect it. After repair, place a check in the R box.

**Legend**

Y = yes, completed
N = no, unable to complete
R = repaired

**Comments**

| Pre-Delivery Preparation | Y | N | R |
|---|---|---|---|
| Pre-operation inspection completed | | | |
| Maintenance items completed | | | |
| Function tests completed | | | |

**Model**

**Serial number**

**Date**

**Machine owner**

**Inspected by (print)**

**Inspector signature**

**Inspector title**

**Inspector company**

Genie
A TEREX COMPANY

**Genie Industries USA**
18340 NE 76th Street
PO Box 97030
Redmond, WA 98073-9730
(425) 881-1800

**Genie UK**
The Maltings, Wharf Road
Grantham, Lincolnshire
NG31- 6BH England
(44) 1476-584333

Copyright © 2002 by Genie Industries. Genie® is a registered trademark of Genie Industries.
Rev B

https://truckmanualshub.com/



This page intentionally left blank.

https://truckmanualshub.com/



# Maintenance Inspection Report

**Model**

**Serial number**

**Date**

**Hour meter**

**Machine owner**

**Inspected by (print)**

**Inspector signature**

**Inspector title**

**Inspector company**

**Instructions**

- Make copies of both pages to use for each inspection.
- Select the appropriate checklist(s) for the type of inspection to be performed.

| | | |
|---|---|---|
| ☐ | **Daily or 8 hour Inspection:** | **A** |
| ☐ | **Quarterly or 250 hour Inspection:** | **A+B** |
| ☐ | **Six Month or 500 hour Inspection:** | **A+B+C** |
| ☐ | **Annual or 1000 hours Inspection:** | **A+B+C+D** |
| ☐ | **2 Year or 2000 hour Inspection:** | **A+B+C+D+E** |

- Place a check in the appropriate box after each inspection procedure is completed.
- Use the step-by-step procedures in this section to learn how to perform these inspections.
- If any inspection receives an “N”, tag and remove the machine from service, repair and re-inspect it. After repair, place a check in the “R” box.

**Legend**

Y = yes, acceptable

N = no, remove from service

R = repaired

| **Checklist A** - Rev D | **Y** | **N** | **R** |
|---|---|---|---|
| A-1 Pre-operation inspection | | | |
| A-2 Functions tests | | | |
| A-3 Engine maintenance | | | |
| A-4 Filter condition indicator | | | |
| A-5 Oscillate axle | | | |
| **Perform after 40 hours:** | | | |
| A-6 30 day service | | | |
| **Perform every 100 hours:** | | | |
| A-7 Engine maintenance - Ford models | | | |
| A-8 Fuel filter/separator - Diesel models | | | |
| A-9 Rotation bearing | | | |
| **Perform every 200 hours:** | | | |
| A-10 Engine maintenance - Ford models | | | |

| **Checklist B** - Rev C | **Y** | **N** | **R** |
|---|---|---|---|
| B-1 Battery | | | |
| B-2 Electrical wiring | | | |
| B-3 Exhaust system | | | |
| B-4 Inspect air filter | | | |
| B-5 Oil cooler and fins- Deutz models | | | |
| B-6 Tires and wheels | | | |
| B-7 Brake configuration | | | |
| B-8 Drive hub oil level | | | |
| B-9 Engine RPM - All models | | | |
| B-10 Ground control override | | | |
| B-11 Directional valve | | | |
| B-12 Platform leveling | | | |
| B-13 Engine idle select | | | |
| B-14 Fuel select - Ford models | | | |
| B-15 Drive brakes | | | |
| B-16 Drive speed - stowed position | | | |
| B-17 Drive speed - raised position | | | |
| B-18 Alarm package | | | |
| B-19 Hydraulic oil analysis | | | |
| B-20 Fuel and hydraulic tank cap venting | | | |
| B-21 Replace fuel filter - Perkins models | | | |
| B-22 Engine maintenance - Perkins models | | | |
| B-23 Air filter - Ford models | | | |
| **Perform every 400 hours:** | | | |
| B-24 Engine maintenance - Ford models | | | |

**Comments**

https://truckmanualshub.com/



# MAINTENANCE INSPECTION REPORT

**Model**

**Serial number**

**Date**

**Hour meter**

**Machine owner**

**Inspected by (print)**

**Inspector signature**

**Inspector title**

**Inspector company**

**Instructions**

- Make copies of both pages to use for each inspection.
- Select the appropriate checklist(s) for the type of inspection to be performed.

| | | |
|---|---|---|
| ☐ | **Daily or 8 hour Inspection:** | **A** |
| ☐ | **Quarterly or 250 hour Inspection:** | **A+B** |
| ☐ | **Six Month or 500 hour Inspection:** | **A+B+C** |
| ☐ | **Annual or 1000 hours Inspection:** | **A+B+C+D** |
| ☐ | **2 Year or 2000 hour Inspection:** | **A+B+C+D+E** |

- Place a check in the appropriate box after each inspection procedure is completed.
- Use the step-by-step procedures in this section to learn how to perform these inspections.
- If any inspection receives an “N”, tag and remove the machine from service, repair and re-inspect it. After repair, place a check in the “R” box.

**Legend**

Y = yes, acceptable

N = no, remove from service

R = repaired

| **Checklist C** - Rev D | | **Y** | **N** | **R** |
|---|---|---|---|---|
| C-1 | Engine maintenance - Deutz models | | | |
| C-2 | Grease platform overload (if equipped) | | | |
| C-3 | Test platform overload (if equipped) | | | |
| C-4 | Fuel filter/separator - Perkins models | | | |
| C-5 | Air filter - Deutz and Perkins models | | | |
| **Perform every 600 hours:** | | | | |
| C-6 | Engine maintenance - Perkins models | | | |
| **Perform every 800 hours:** | | | | |
| C-7 | Engine maintenance - Ford models | | | |

| **Checklist D** - Rev D | | **Y** | **N** | **R** |
|---|---|---|---|---|
| D-1 | Boom wear pads | | | |
| D-2 | Turntable bearing bolts | | | |
| D-3 | Turntable bearing wear | | | |
| D-4 | Drive hub oil | | | |
| D-5 | Free-wheel configuration | | | |
| D-6 | Hydraulic filters | | | |
| D-7 | Engine maintenance - Deutz models | | | |

| **Checklist E** - Rev D | | **Y** | **N** | **R** |
|---|---|---|---|---|
| E-1 | Hydraulic oil | | | |
| E-2 | Grease steer axle wheel bearings, 2WD models | | | |
| **Perform every 3000 hours:** | | | | |
| E-3 | Engine maintenance - Deutz models | | | |
| **Perform every 12,000 hours:** | | | | |
| E-4 | Engine maintenance - Deutz models | | | |

**Comments**

https://truckmanualshub.com/



# Checklist A Procedures

REV D

## A-1
## Perform Pre-operation Inspection

Completing a pre-operation inspection is essential to safe machine operation. The pre-operation inspection is a visual inspection performed by the operator prior to each work shift. The inspection is designed to discover if anything is apparently wrong with a machine before the operator performs the function tests. The pre-operation inspection also serves to determine if routine maintenance procedures are required.

Complete information to perform this procedure is available in the appropriate operator's manual. Refer to the Operator's Manual on your machine.

## A-2
## Perform Function Tests

Completing the function tests is essential to safe machine operation. Function tests are designed to discover any malfunctions before the machine is put into service. A malfunctioning machine must never be used. If malfunctions are discovered, the machine must be tagged and removed from service.

Complete information to perform this procedure is available in the appropriate operator's manual. Refer to the Operator's Manual on your machine.

https://truckmanualshub.com/



## A-3
## Perform Engine Maintenance

**NOTICE** Engine specifications require that this procedure be performed daily or every 8 hours, whichever comes first.

Proper engine maintenance, following the engine manufacturer's maintenance schedule, is essential to good engine performance and service life. Failure to perform the maintenance procedures can lead to poor engine performance and component damage.

Required maintenance procedures and additional engine information are available in the *Ford LRG-425 EFI Operator Handbook* (Ford part number FPP 194-302) OR the *Ford DSG-423 EFI Operator Handbook* (EDI part number 1060020) OR the *Deutz FL 2011 Operation Manual* (Deutz part number 0297-9929) OR the *Perkins 400 Series Operation Manual* (Perkins part number TPD 1443S).

| | |
|---|---|
| **Ford LRG-425 EFI Operator Handbook** | |
| Genie part number | 84792 |
| **Ford DSG-423 EFI Operator Handbook** | |
| Genie part number | 119488 |
| **Deutz FL 2011 Operation Manual** | |
| Genie part number | 84794 |
| **Perkins 400 Series Operation Manual** | |
| Genie part number | 94890 |

**To access the engine:**

1 Remove the safety pin from the engine pivot plate latch.

**NOTICE** The engine pivot plate latch is located under the engine turntable pivot plate at the counterweight end of the machine.

2 Open the engine pivot plate latch and swing the engine pivot plate out and away from the machine.

https://truckmanualshub.com/



## A-4
## Check the High Pressure Hydraulic Filter Condition Indicator

**NOTICE** Genie specifications require that this procedure be performed daily or every 8 hours, whichever comes first.

Maintaining the high pressure hydraulic filter in good condition is essential to good system performance and safe machine operation. The filter condition indicator will show when the hydraulic flow is bypassing a clogged filter. If the filter is not frequently checked and replaced, impurities will remain in the hydraulic system and cause component damage.

1 Open the engine side turntable cover.

2 Start the engine from the ground controls.

3 Change the engine idle to high rpm (rabbit symbol).

4 Visually inspect the filter condition indicator.

⊙ Result: The filter condition indicator should be operating with the plunger in the green area.

⊠ Result: If the indicator displays the plunger in the red area, this indicates that the hydraulic filter is being bypassed and the filter should be replaced. See D-6, *Replace the Hydraulic Filters.*

## A-5
## Test the Oscillate Axle (if equipped)

**NOTICE** Genie specifications require that this procedure be performed daily or every 8 hours, whichever comes first.

Proper axle oscillation is essential to safe machine operation. If the axle oscillation system is not operating correctly, the stability of the machine is compromised and it may tip over.

1 Start the engine from the platform controls.

2 Drive the right steer tire up onto a 6 inch / 15 cm block or curb.

⊙ Result: The three remaining tires should stay in firm contact with the ground and the chassis should remain level at all times.

3 Drive the left steer tire up onto a 6 inch / 15 cm block or curb.

⊙ Result: The three remaining tires should stay in firm contact with the ground and the chassis should remain level at all times.

4 Drive both steer tires up onto a 6 inch / 15 cm block or curb.

⊙ Result: The non-steer tires should stay in firm contact with the ground.

**NOTICE** If the chassis does not remain level during test, refer to Repair Procedure 8-9, *How to Set Up the Directional Valve Linkage.*

https://truckmanualshub.com/



## A-6
## Perform 30 Day Service

The 30 day maintenance procedure is a one time sequence of procedures to be performed after the first 30 days or 40 hours of usage, whichever comes first. After this interval, refer to the maintenance checklist for continued scheduled maintenance.

1 Perform the following maintenance procedures:

- A-9 Grease the Turntable Rotation Bearing and Rotate Gear
- A-10 Perform Engine Maintenance - Ford Models
- B-6 Inspect the Tires, Wheels and Lug Nut Torque
- B-8 Check the Oil Level in the Drive Hubs
- C-1 Perform Engine Maintenance - Deutz Models
- D-2 Check the Turnable Rotation Bearing Bolts
- D-6 Replace the Hydraulic Filters

## A-7
## Perform Engine Maintenance - Ford Models

**NOTICE** Engine specifications require that this procedure be performed every 100 hours. Perform this procedure more often if dusty conditions exist or the machine is subjected to extended low idle operation.

Proper engine maintenance, following the engine manufacturer's maintenance schedule, is essential to good engine performance and service life. Failure to perform the maintenance procedures can lead to poor engine performance and component damage.

Required maintenance procedures and additional engine information are available in the *Ford LRG-425 EFI Operator Handbook* (Ford part number FPP 194-302) OR the *Ford DSG-423 EFI Operator Handbook* (EDI part number 1060020).

| | |
|---|---|
| **Ford LRG-425 EFI Operator Handbook** | |
| Genie part number | 84792 |
| **Ford DSG-423 EFI Operator Handbook** | |
| Genie part number | 119488 |

https://truckmanualshub.com/



## A-8
## Inspect the Fuel Filter/ Water Separator - Diesel Models

**NOTICE** Genie specifications require that this procedure be performed every 100 hours or monthly, whichever comes first.

Proper maintenance of the fuel filter/water separator is essential for good engine performance. Failure to perform this procedure can lead to poor engine performance and/or hard starting, and continued use may result in component damge. Extremely dirty conditions may require this procedure be performed more often.

**DANGER** Explosion and fire hazard. Engine fuels are combustible. Perform this procedure in an open, well-ventilated area away from heaters, sparks, flames and lighted tobacco. Always have an approved fire extinguisher within easy reach.

**NOTICE** Perform this procedure with the engine off.

**Perkins models:**

1 Put on protective clothing and eye wear.

2 Open the engine side turntable cover.

3 Remove the safety pin from the engine pivot plate latch.

**NOTICE** The engine pivot plate latch is located under the engine turntable pivot plate at the counterweight end of the machine.

4 Open the engine pivot plate latch and swing the engine pivot plate out and away from the machine.

5 Locate the fuel filter/water separator mounted to the rear engine mounting bracket.

6 Visually inspect the filter bowl for water buildup.

⊙ Result: If water is present in the filter bowl, continue with steps 7 through 11.

7 Loosen the vent plug located on the fuel filter/ water separator head.

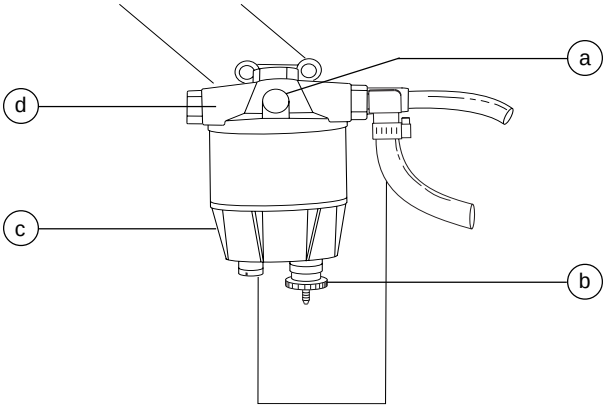


a vent plug
b drain plug
c filter bowl
d separator head

8 Loosen the drain plug located at the bottom of the bowl. Allow the water to drain into a suitable container until fuel starts to come out. Immediately tighten the drain plug.

9 Tighten the vent plug.

**NOTICE** If the fuel filter/water separator is completely drained, you must prime the fuel filter/water separator before starting the engine. See C-4, *Replace The Fuel Filter/ Water Separator Element - Perkins Models,* for instructions on how to prime the fuel filter/water separator.

https://truckmanualshub.com/



CHECKLIST A PROCEDURES REV D

10 Clean up any fuel that may have spilled.

11 Start the engine from the ground controls and check the fuel filter/water separator and vent plug for leaks.

**DANGER** Explosion and fire hazard. If a fuel leak is discovered, keep any additional personnel from entering the area and do not operate the machine. Repair the leak immediately.

12 Swing the engine back to its original position and close the engine pivot plate latch.

13 Install the engine pivot plate safety pin.

**Deutz models:**

1 Put on protective clothing and eye wear.

2 Remove the safety pin from the engine pivot plate latch.

**NOTICE** The engine pivot plate latch is located under the engine turntable pivot plate at the counterweight end of the machine.

3 Open the engine pivot plate latch and swing the engine pivot plate out and away from the machine.

4 Locate the fuel filter/water separator next to the oil filter.

5 Loosen the drain plug located at the bottom of the filter. Allow the water to drain into a suitable container until fuel starts to come out. Immediately tighten the drain plug.

**NOTICE** Do not completely drain the filter.

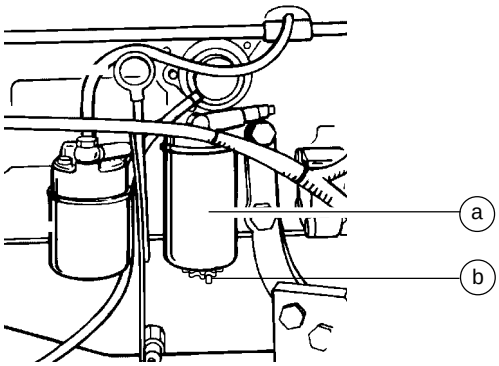


a fuel filter/water separator
b drain valve

6 Clean up any fuel that may have spilled.

7 Start the engine from the ground controls and check the fuel filter/water separator for leaks.

**DANGER** Explosion and fire hazard. If a fuel leak is discovered, keep any additional personnel from entering the area and do not operate the machine. Repair the leak immediately.

8 Swing the engine back to its original position and close the engine pivot plate latch.

9 Install the engine pivot plate safety pin.

https://truckmanualshub.com/



## A-9
## Grease the Turntable Rotation Bearing and Rotate Gear

**NOTICE** Genie specifications require that this procedure be performed every 100 hours of operation. Perform this procedure more often if dusty conditions exist.

Frequent application of lubrication to the turntable bearing and rotate gear is essential to good machine performance and service life. Continued use of an improperly greased bearing and gear will result in component damage.

1 **Before serial number 27001:** Locate the grease fitting on the front turntable cover.

**After serial number 27000:** Locate the grease fitting near the ground control box.

2 Pump grease into the turntable rotation bearing. Rotate the turntable in increments of 4 to 5 inches / 10 to 13 cm at a time and repeat this step until the entire bearing has been greased.

3 Apply grease to each tooth of the drive gear, located under the turntable.

| Grease Specification |
|---|
| Chevron Ultra-duty grease, EP NLGI 2 (lithium based) or equivalent |

## A-10
## Perform Engine Maintenance - Ford Models

**NOTICE** Engine specifications require that this procedure be performed every 200 hours.

Proper engine maintenance, following the engine manufacturer's maintenance schedule, is essential to good engine performance and service life. Failure to perform the maintenance procedures can lead to poor engine performance and component damage.

Required maintenance procedures and additional engine information are available in the *Ford LRG-425 EFI Operator Handbook* (Ford part number FPP 194-302) OR the *Ford DSG-423 EFI Operator Handbook* (EDI part number 1060020).

| | |
|---|---|
| **Ford LRG-425 EFI Operator Handbook** | |
| Genie part number | 84792 |
| **Ford DSG-423 EFI Operator Handbook** | |
| Genie part number | 119488 |

**To access the engine:**

1 Remove the safety pin from the engine pivot plate latch.

**NOTICE** The engine pivot plate latch is located under the engine turntable pivot plate at the counterweight end of the machine.

2 Open the engine pivot plate latch and swing the engine pivot plate out and away from the machine.

https://truckmanualshub.com/



# Checklist B Procedures

REV C

## B-1
## Inspect the Battery

**NOTICE** Genie specifications require that this procedure be performed every 250 hours or quarterly, whichever comes first.

Proper battery condition is essential to good engine performance and operational safety. Improper fluid levels or damaged cables and connections can result in engine component damage and hazardous conditions.

**WARNING** Electrocution hazard. Contact with hot or live circuits could result in death or serious injury. Remove all rings, watches and other jewelry.

**WARNING** Bodily injury hazard. Batteries contain acid. Avoid spilling or contacting battery acid. Neutralize battery acid spills with baking soda and water.

1 Put on protective clothing and eye wear.

2 Be sure that the battery cable connections are free of corrosion.

**NOTICE** Adding terminal protectors and a corrosion preventative sealant will help eliminate corrosion on the battery terminals and cables.

3 Be sure that the battery hold downs and cable connections are tight.

4 Be sure that the battery separator wire connections are tight (if equipped).

5 Fully charge the battery(s) and allow the battery(s) to rest at least 6 hours.

6 Remove the battery vent caps and check the specific gravity of each battery cell with a hydrometer. Note the results.

7 Check the ambient air temperature and adjust the specific gravity reading for each cell as follows:

- Add 0.004 to the reading of each cell for every 10° / 5.5° C above 80° F / 26.7° C.
- Subtract 0.004 from the reading of each cell for every 10° / 5.5° C below 80° F / 26.7° C.

Result: All battery cells display an adjusted specific gravity of 1.277 or higher. The battery is fully charged. Proceed to step 11.

Result: One or more battery cells display a specific gravity of 1.217 or below. Proceed to step 8.

8 Perform an equalizing charge OR fully charge the battery(s) and allow the battery(s) to rest at least 6 hours.

9 Remove the battery vent caps and check the specific gravity of each battery cell with a hydrometer. Note the results.

https://truckmanualshub.com/



10 Check the ambient air temperature and adjust the specific gravity reading for each cell as follows:

- Add 0.004 to the reading of each cell for every 10° / 5.5° C above 80° F / 26.7° C.
- Subtract 0.004 from the reading of each cell for every 10° / 5.5° C below 80° F / 26.7° C.

Result: All battery cells display a specific gravity of 1.277 or greater. The battery is fully charged. Proceed to step 13.

Result: The difference in specific gravity readings between cells is greater than 0.1 OR the specific gravity of one or more cells is less than 1.177. Replace the battery.

11 Check the battery acid level. If needed, replenish with distilled water to 1/8 inch / 3 mm below the bottom of the battery fill tube. Do not overfill.

12 Install the vent caps and neutralize any electrolyte that may have spilled.

## B-2
## Inspect the Electrical Wiring

**NOTICE** Genie specifications require that this procedure be performed every 250 hours or quarterly, whichever comes first.

Maintaining electrical wiring in good condition is essential to safe operation and good machine performance. Failure to find and replace burnt, chafed, corroded or pinched wires could result in unsafe operating conditions and may cause component damage.

**WARNING** Electrocution hazard. Contact with hot or live circuits could result in death or serious injury. Remove all rings, watches and other jewelry.

1 Open the engine side turntable cover.

2 Remove the safety pin from the engine pivot plate latch.

**NOTICE** The engine pivot plate latch is located under the engine turntable pivot plate at the counterweight end of the machine.

3 Open the engine pivot plate latch and swing the engine pivot plate out and away from the machine.

4 Inspect the following areas for burnt, chafed, corroded and loose wires:

- Engine wiring harness
- Hydraulic manifold wiring

https://truckmanualshub.com/



5 Open the ground controls side turntable cover.

6 Inspect the following areas for burnt, chafed, corroded and loose wires:

· Ground control box wire harnesses

· Inside of the ground control box

· Hydraulic manifold wiring

7 Inspect for a liberal coating of dielectric grease at the following location:

· All wire harnesses connectors to the ground control box

8 Start the engine from the ground controls and raise the secondary boom above the turntable covers.

9 Remove the center turntable cover retaining fasteners. Remove the center turntable cover from the machine.

10 Inspect the turntable area for burnt, chafed and pinched cables.

11 Lower the boom to the stowed position and turn the engine off.

12 Inspect the following areas for burnt, chafed, corroded, pinched and loose wires:

· Cable track on the primary boom

· Cables on the primary, and jib booms

· Jib boom/Platform rotate manifold

· Inside of the platform control box

13 Inspect for a liberal coating of dielectric grease at the following location:

· All wire harnesses connectors to the platform control box

14 Swing the engine back to its original position and close the engine pivot plate latch.

15 Install the engine pivot plate safety pin.

16 Install the center turntable cover and tighten the retaining fasteners.

## B-3
## Check the Exhaust System

**NOTICE** Engine specifications require that this procedure be performed every 250 hours or quarterly, whichever comes first.

Maintaining the exhaust system is essential to good engine performance and service life. Running the engine with a damaged or leaking exhaust system can cause component damage and unsafe operating conditions.

**⚠WARNING** Bodily injury hazard. Do not inspect while the engine is running. Remove the key to secure from operation.

**⚠CAUTION** Burn hazard. Beware of hot engine components. Contact with hot engine components may result in severe burns.

**Ford models:**

1 Remove the safety pin from the engine pivot plate latch.

**NOTICE** The engine pivot plate latch is located under the engine turntable pivot plate at the counterweight end of the machine.

2 Open the engine pivot plate latch and swing the engine pivot plate out and away from the machine to access the exhaust system.

**All models:**

3 Be sure that all nuts and bolts are tight.

4 Inspect all welds for cracks.

5 Inspect for exhaust leaks; i.e., carbon buildup around seams and joints.

**Ford models:**

6 Swing the engine back to its original position and close the engine pivot plate latch.

7 Install the engine pivot plate safety pin.

https://truckmanualshub.com/



## B-4
## Inspect the Engine Air Filter

**NOTICE** Genie specifications require that this procedure be performed every 250 hours or quarterly, whichever comes first.

Maintaining the engine air filter in good condition is essential to good engine performance and service life. Failure to perform this procedure can lead to poor engine performance and component damage.

**NOTICE** Perform this procedure with the engine off.

1 Release the latches from the air cleaner canister end cap. Remove the end cap.

2 Remove the filter element.

3 Clean the inside of the canister and the end cap with a damp cloth.

4 Inspect the air filter element. If needed, blow from the inside out using low pressure dry compressed air, or carefully tap out dust. Replace the filter if needed.

5 Install the filter element.

6 Install the air filter canister end cap and secure the end cap latches.

**NOTICE** Be sure the discharge valve is pointing down when the cap is instaled.

## B-5
## Check the Oil Cooler and Cooling Fins - Deutz Models

**NOTICE** Engine specifications require that this procedure be performed every 250 hours or quarterly, whichever comes first.

Maintaining the oil cooler in good condition is essential for good engine performance. Operating a machine with a damaged oil cooler may result in engine damage. Also, restricting air flow through the oil cooler will affect the performance of the cooling system.

**WARNING** Bodily injury hazard. Do not inspect while the engine is running. Remove the key to secure from operation.

**CAUTION** Burn hazard. Beware of hot engine components. Contact with hot engine components may result in severe burns.

**Oil cooler:**

1 Remove the safety pin from the engine pivot plate latch.

**NOTICE** The engine pivot plate latch is located under the engine turntable pivot plate at the counterweight end of the machine.

https://truckmanualshub.com/



2 Open the engine pivot plate latch and swing the engine pivot plate out and away from the machine.

3 Remove the fasteners from the engine side cover, then remove the cover.

4 Inspect the oil cooler for leaks and physical damage.

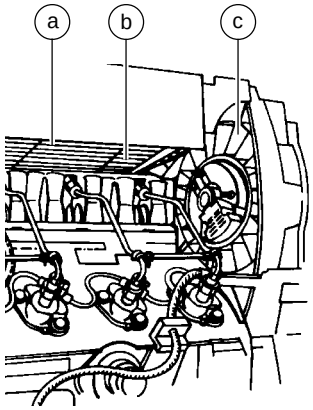


a oil cooler
b cylinder head cooling fins
c fan blower fins

5 Clean the oil cooler of debris and foreign material.

**Cooling and fan blower fins:**

6 Inspect the fan blower fins for physical damage.

7 Clean the fan blower fins of debris and foreign material.

8 Inspect the head cooling passages and fins for physical damage or foreign material, using a flashlight.

9 Clean the cylinder head cooling passages of debris and foreign material.

10 Install the engine side cover.

11 Swing the engine back to its original position and close the engine pivot plate latch.

12 Install the engine pivot plate safety pin.

## B-6
## Inspect the Tires, Wheels and Lug Nut Torque

**NOTICE** Genie specifications require that this procedure be performed every 250 hours or quarterly, whichever comes first.

Maintaining the tires and wheels, including proper wheel fastener torque, is essential to safe operation and good performance. Tire and/or wheel failure could result in a machine tip-over. Component damage may also result if problems are not discovered and repaired in a timely fashion.

**WARNING** Bodily injury hazard. An over-inflated tire can explode and could cause death or serious injury.

**WARNING** Tip-over hazard. Do not use temporary flat tire repair products.

**NOTICE** The tires on some machines are foam-filled and do not need air added to them.

1 Check all tire treads and sidewalls for cuts, cracks, punctures and unusual wear.

2 Check each wheel for damage, bends and cracked welds.

3 Check each lug nut for proper torque. Refer to Section 2, *Specifications*.

4 Check the pressure in each air-filled tire. Refer to Section 2, *Specifications*.

https://truckmanualshub.com/



## B-7
## Confirm the Proper Brake Configuration

**NOTICE** Genie specifications require that this procedure be performed every 250 hours or quarterly, whichever comes first.

Proper brake configuration is essential to safe operation and good machine performance. Hydrostatic brakes and hydraulically-released, spring-applied individual wheel brakes can appear to operate normally when they are actually not fully operational.

1 Check each drive hub disconnect cap to be sure it is in the engaged position.

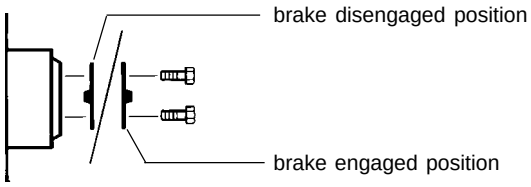


## B-8
## Check the Oil Level in the Drive Hubs

**NOTICE** Genie specifications require that this procedure be performed every 250 hours or quarterly, whichever comes first.

Failure to maintain proper drive hub oil levels may cause the machine to perform poorly and continued use may cause component damage.

1 Drive the machine to rotate the hub until the plugs are located one on top and the other at 90 degrees.

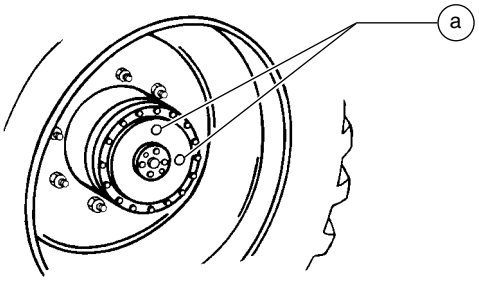


a drive hub plugs

2 Remove the plug located at 90 degrees and check the oil level.

⊙ Result: The oil level should be even with the bottom of the side plug hole.

3 If necessary, remove the top plug and add oil until the oil level is even with the bottom of the side plug hole.

4 Install the plug(s) into the drive hub.

5 Check the torque of the drive hub mounting bolts. Refer to Section 2, *Specifications*.

6 Repeat this procedure for each drive hub.

https://truckmanualshub.com/



## B-9
## Check and Adjust the Engine RPM - All Models

**NOTICE** Genie specifications require that this procedure be performed every 250 hours or quarterly, whichever comes first.

Maintaining the engine rpm at the proper setting for both low and high idle is essential to good engine performance and service life. The machine will not operate properly if the rpm is incorrect and continued use may cause component damage.

**Ford LRG-425 EFI models:**

**NOTICE** The engine rpm is controlled by the ECM and can only be adjusted by re-programming the ECM. If rpm adjustment or service is required, please contact the Genie Industries Service Department OR your local Ford dealer.

**Ford DSG-423 EFI models:**

**NOTICE** The engine rpm is controlled by the ECM and can only be adjusted by re-programming the ECM. If rpm adjustment or service is required, please contact your local EDI distributor. Refer to the engine operator's handbook on your machine for EDI distributor locations.

**Deutz models:**

**NOTICE** This procedure will require two people.

1 Remove the safety pin from the engine pivot plate latch.

**NOTICE** The engine pivot plate latch is located under the engine turntable pivot plate at the counterweight end of the machine.

2 Open the engine pivot plate latch and swing the engine pivot plate out and away from the machine.

3 Connect a tachometer to the engine, and then start the engine from the ground controls and check the rpm. Refer to Section 2, *Specifications*.

**Skip to step 5 if the low idle rpm is correct.**

4 Loosen the low idle lock nut, then turn the low idle adjustment screw clockwise to increase the rpm or counterclockwise to decrease the rpm. Tighten the low idle lock nut and recheck the rpm.

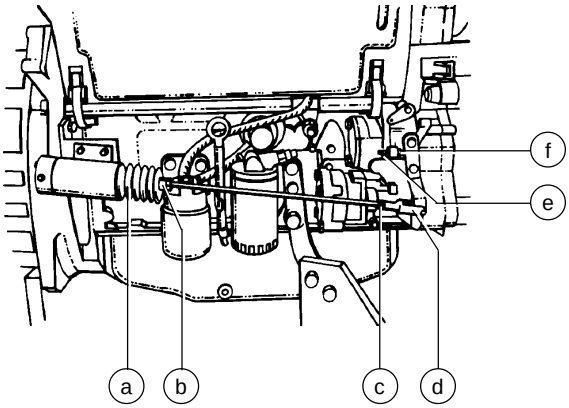


a solenoid boot
b high idle adjustment nut
c yoke lock nut
d yoke
e low idle adjustment screw
f low idle lock nut

https://truckmanualshub.com/



5 Move the function enable/rpm select toggle switch to the high idle (rabbit symbol) position at the ground controls and check the rpm. Refer to Section 2, *Specifications*.

**If high idle rpm is correct, disregard adjustment step 6.**

6 Loosen the yoke lock nut, then turn the high idle adjustment nut and solenoid boot counterclockwise to increase the rpm or clockwise to decrease the rpm. Tighten the yoke lock nut and recheck the rpm.

**NOTICE** Be sure the solenoid fully retracts when activating high idle.

7 Swing the engine back to its original position and close the engine pivot plate latch.

8 Install the engine pivot plate safety pin.

**Perkins models:**

**NOTICE** This procedure will require two people.

1 Open the engine side turntable cover.

2 Remove the safety pin from the engine pivot plate latch.

**NOTICE** The engine pivot plate latch is located under the engine turntable pivot plate at the counterweight end of the machine.

3 Open the engine pivot plate latch and swing the engine pivot plate out and away from the machine.

4 Connect a tachometer to the engine. Start the engine from the ground controls. Refer to Section 2, *Specifications*.

**Skip to step 6 if the low idle rpm is correct.**

5 Loosen the low idle lock nut and turn the low idle adjustment screw clockwise to increase the rpm, or counterclockwise to decrease the rpm. Tighten the low idle lock nut and confirm the rpm.

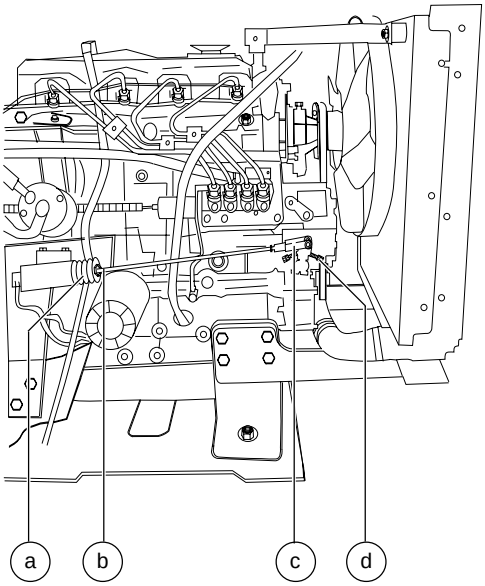


a solenoid boot
b high idle adjustment nut
c yoke
d low idle lock nut and adjustment screw

6 Move the function enable toggle switch to the high idle (rabbit symbol) position. Refer to Section 2, *Specifications*.

**If high idle rpm is correct, disregard adjustment step 7.**

https://truckmanualshub.com/



7 Loosen the yoke lock nut, then turn the high idle adjustment nut and solenoid boot counterclockwise to increase the rpm or clockwise to decrease the rpm. Tighten the yoke lock nut and recheck the rpm.

**NOTICE** Be sure the solenoid fully retracts when activating high idle.

8 Swing the engine back to its original position and close the engine pivot plate latch.

9 Install the engine pivot plate safety pin.

## B-10
## Test the Ground Control Override

**NOTICE** Genie specifications require that this procedure be performed every 250 hours or quarterly, whichever comes first.

A properly functioning ground control override is essential to safe machine operation. The ground control override function is intended to allow ground personnel to operate the machine from the ground controls whether or not the red Emergency Stop button on the platform controls is in the on or off position. This function is particularly useful if the operator at the platform controls cannot return the boom to the stowed position.

1 Push in the platform red Emergency Stop button to the off position.

2 Start the engine from the ground controls.

3 At the ground controls, operate each boom function through a partial cycle.

⊙ Result: All boom functions should operate.

https://truckmanualshub.com/



## B-11
## Check the Oscillate Directional Valve Linkage

**NOTICE** Genie specifications require that this procedure be performed every 250 hours or quarterly, whichever comes first.

**NOTICE** Perform this test only on models equipped with an oscillating axle.

Proper axle oscillation is essential to safe machine operation. If the oscillate directional valve linkage is not operating correctly, the stability of the machine is compromised and it may tip over.

1 Remove the drive chassis cover and the axle covers from the non-steer end of the drive chassis.

2 Locate the oscillate directional valve inside of the non-steer axle and inspect the linkage for the following:

- Lock nut is tight against yoke
- Yoke clevis pins are installed
- Cotter pins are installed through clevis pins
- Linkage is properly attached to directional valve

## B-12
## Test the Platform Self-leveling

**NOTICE** Genie specifications require that this procedure be performed every 250 hours or quarterly, whichever comes first.

Automatic platform self-leveling throughout the full cycle of boom raising and lowering is essential for safe machine operation. The platform is maintained at level by the platform leveling slave cylinder which operates in a closed loop hydraulic circuit with the master cylinder located at the base of the boom.
A platform self-leveling failure creates an unsafe working condition for platform and ground personnel.

1 Start the engine from the ground controls and lower the boom into the stowed position.

2 Hold the function enable toggle switch to either side and adjust the platform to a level position using the platform level toggle switch.

3 Raise and lower the primary boom through a full cycle.

⊙ Result: The platform should remain level at all times to within ±5 degrees.

https://truckmanualshub.com/



## B-13
## Test the Engine Idle Select

**NOTICE** Genie specifications require that this procedure be performed every 250 hours or quarterly, whichever comes first.

A properly operating engine idle select switch is essential to good engine performance and safe machine operation. There are two settings.

**Foot switch activated low idle** (turtle symbol) allows the operator to control individual boom functions. Drive functions will operate at low idle, but at reduced performance.

**Foot switch activated high idle** (rabbit symbol) should be used for normal machine operation. This selection activates high idle only when the foot switch is pressed down.

1 Pull out the red Emergency Stop button to the on position at both the ground and platform controls.

2 Start the engine from the ground controls then move the function enable toggle switch to the high idle (rabbit symbol) position and hold in the on position.

⊙ Result: The engine should change to high idle.

3 Release the function enable toggle switch.

⊙ Result: The engine should return to low idle.

4 Turn the key switch to platform controls.

5 Move the engine idle control switch to foot switch activated high idle (rabbit and foot switch symbol).

⊙ Result: The engine should not change to high idle.

6 Press down the foot switch.

⊙ Result: The engine should change to high idle.

7 Move the engine idle control switch to foot switch activated low idle (turtle symbol).

⊙ Result: The engine should change to low idle.

https://truckmanualshub.com/



## B-14
## Test the Fuel Select Operation - Ford Models

**NOTICE** Genie specifications require that this procedure be performed every 250 hours or quarterly, whichever comes first.

The ability to select and switch between gasoline and LPG fuels as needed is essential to safe machine operation. A fuel selection can be made when the engine is running or not. Switching malfunctions and/or the failure of the engine to start and run properly in both fuel modes and through all idle speeds can indicate fuel system problems that could develop into a hazardous situation.

**NOTICE** Perform this test after checking the gasoline and LPG fuel levels, and warming the engine to normal operating temperature.

1 At the platform controls, move the fuel select switch to gasoline and then move the engine idle control switch to foot switch activated high idle (rabbit and foot switch symbol).

2 Start the engine from the platform controls and allow it to run at low idle.

3 Press down the foot switch to allow the engine to run at high idle.

⊙ Result: The engine should start promptly and operate smoothly in low and high idle.

4 Release the foot switch and shut the engine off by pushing in the red Emergency Stop button in to the off position.

5 Move the fuel select switch to LPG.

6 Restart the engine and allow it to run at low idle.

7 Press down the foot switch to allow the engine to run at high idle.

⊙ Result: The engine should start promptly and operate smoothly in low and high idle.

**NOTICE** The engine may hesitate momentarily and then continue to run on the selected fuel if the fuel source is switched while the engine is running.

https://truckmanualshub.com/



## B-15
## Test the Drive Brakes

**NOTICE** Genie specifications require that this procedure be performed every 250 hours or quarterly, whichever comes first.

Proper brake action is essential to safe machine operation. The drive brake function should operate smoothly, free of hesitation, jerking and unusual noise. Hydrostatic brakes and hydraulically-released individual wheel brakes can appear to operate normally when they are actually not fully operational.

**WARNING** Collision hazard. Be sure that the machine is not in free-wheel or partial free-wheel configuration. See B-7, *Confirm the Proper Brake Configuration*.

**NOTICE** Select a test area that is firm, level and free of obstructions.

1 Mark a test line on the ground for reference.

2 Start the engine from the platform controls.

3 Move the engine idle control switch to foot switch activated high idle (rabbit and foot switch symbol), then lower the boom into the stowed position.

4 Choose a point on the machine; i.e., contact patch of a tire, as a visual reference for use when crossing the test line.

5 Bring the machine to top drive speed before reaching the test line. Release the drive joystick when your reference point on the machine crosses the test line.

6 Measure the distance between the test line and your machine reference point. Refer to Section 2, *Specifications.*

**NOTICE** The brakes must be able to hold the machine on any slope it is able to climb.

## B-16
## Test the Drive Speed - Stowed Position

**NOTICE** Genie specifications require that this procedure be performed every 250 hours or quarterly, whichever comes first.

Proper drive function movement is essential to safe machine operation. The drive function should respond quickly and smoothly to operator control. Drive performance should also be free of hesitation, jerking and unusual noise over the entire proportionally controlled speed range.

**NOTICE** Select a test area that is firm, level and free of obstructions.

1 Create start and finish lines by marking two lines on the ground 40 feet / 12.2 m apart.

2 Start the engine from the platform controls.

3 Move the engine idle control switch to foot switch activated high idle (rabbit and foot switch symbol), then lower the boom into the stowed position.

4 Choose a point on the machine; i.e., contact patch of a tire, as a visual reference for use when crossing the start and finish lines.

5 Bring the machine to top drive speed before reaching the start line. Begin timing when your reference point on the machine crosses the start line.

6 Continue at full speed and note the time when the machine reference point crosses the finish line. Refer to Section 2, *Specifications.*

https://truckmanualshub.com/



## B-17
## Test the Drive Speed - Raised or Extended Position

**NOTICE** Genie specifications require that this procedure be performed every 250 hours or quarterly, whichever comes first.

Proper drive function movement is essential to safe machine operation. The drive function should respond quickly and smoothly to operator control. Drive performance should also be free of hesitation, jerking and unusual noise over the entire proportionally controlled speed range.

**NOTICE** Select a test area that is firm, level and free of obstructions.

1 Create start and finish lines by marking two lines on the ground 40 feet / 12.2 m apart.

2 Start the engine from the platform controls.

3 Move the engine idle select switch to foot switch activated high idle (rabbit and foot switch symbol).

4 Press down the foot switch and raise the primary boom above horizontal.

5 Choose a point on the machine; i.e., contact patch of a tire, as a visual reference for use when crossing the start and finish lines.

6 Bring the machine to top drive speed before reaching the start line. Begin timing when your reference point on the machine crosses the start line.

7 Continue at full speed and note the time when the machine reference point crosses the finish line. Refer to Section 2, *Specifications.*

8 Lower the boom to the stowed position and extend the boom 1 foot / 30 cm.

9 Choose a point on the machine; i.e., contact patch of a tire, as a visual reference for use when crossing the start and finish lines.

10 Bring the machine to top drive speed before reaching the start line. Begin timing when your reference point on the machine crosses the start line.

11 Continue at top speed and note the time when the machine reference point crosses the finish line. Refer to Section 2, *Specifications.*

https://truckmanualshub.com/



## B-18
## Test the Alarm Package (if equipped)

**NOTICE** Genie specifications require that this procedure be performed every 250 hours or quarterly, whichever comes first.

The alarm package includes:

- Travel alarm
- Descent alarm
- Flashing beacon

Alarms and a beacon are installed to alert operators and ground personnel of machine proximity and motion. The alarm package is installed on the turntable covers.

**NOTICE** The alarms and beacon will operate with the engine running or not running.

1 Turn the key switch to ground control and pull out the red Emergency Stop button to the on position at both the ground and platform controls.

⊙ Result: The flashing beacon should be on and flashing.

2 Move the function enable switch to either side and activate the primary boom toggle switch in the down position, hold for a moment and then release it.

⊙ Result: The descent alarm should sound when the switch is held down.

3 Move the function enable switch to either side and activate the secondary boom toggle switch in the down position, hold for a moment and then release it.

⊙ Result: The descent alarm should sound when the switch is held down.

4 **Z-45/25J:** Move the function enable toggle switch to either side and activate the jib boom toggle switch in the down position, hold for a moment and then release it.

⊙ Result: The descent alarm should sound when the switch is held down.

5 Turn the key switch to platform control.

⊙ Result: The flashing beacon should be on and flashing.

6 Press down the foot switch. Move the primary boom control handle to the down position, hold for a moment and then release it.

⊙ Result: The descent alarm should sound when the control handle is held down.

7 Press down the foot switch. Move the secondary boom control handle to the down position, hold for a moment and then release it.

⊙ Result: The descent alarm should sound when the control handle is held down.

8 **Z-45/25J:** Press down the foot switch. Activate the jib boom toggle switch in the down position, hold for a moment and then release it.

⊙ Result: The descent alarm should sound when the switch is held down.

9 Press down the foot switch. Move the drive control handle off center, hold for a moment and then release it. Move the drive control handle off center in the opposite direction, hold for a moment and then release it.

⊙ Result: The travel alarm should sound when the drive control handle is moved off center in either direction.

https://truckmanualshub.com/



## B-19
## Perform Hydraulic Oil Analysis

**NOTICE** Genie specifications require that this procedure be performed every 250 hours or quarterly, whichever comes first.

Replacement or testing of the hydraulic oil is essential for good machine performance and service life. Dirty oil and a clogged suction strainer may cause the machine to perform poorly and continued use may cause component damage. Extremely dirty conditions may require oil changes to be performed more often. For hydraulic oil specifications, refer to Section 2, *Specifications*.

**NOTICE** Before replacing the hydraulic oil, the oil may be tested by an oil distributor for specific levels of contamination to verify that changing the oil is necessary. **If the hydraulic oil is not replaced at the two year inspection, test the oil quarterly. Replace the oil when it fails the test.**
See E-1, *Test or Replace the Hydraulic Oil.*

## B-20
## Inspect the Fuel and Hydraulic Tank Cap Venting Systems

**NOTICE** Genie requires that this procedure be performed every 250 hours or quarterly, whichever comes first. Perform this procedure more often if dusty conditions exist.

Free-breathing fuel and hydraulic tank caps are essential for good machine performance and service life. A dirty or clogged tank cap may cause the machine to perform poorly and continued use may cause component damage. Extremely dirty conditions may require that the caps be inspected more often.

**DANGER** Explosion and fire hazard. Engine fuels are combustible. Perform this procedure in an open, well-ventilated area away from heaters, sparks, flames and lighted tobacco. Always have an approved fire extinguisher within easy reach.

**NOTICE** Perform this procedure with the engine off.

1 Remove the cap from the fuel tank.

2 Check for proper venting.

⊙ Result: Air passes through the fuel tank cap. Proceed to step 4.

⊗ Result: If air does not pass through the cap, clean or replace the cap. Proceed to step 3.

**NOTICE** When checking for positive tank cap venting, air should pass freely through the cap.

https://truckmanualshub.com/



3 Using a mild solvent, carefully wash the cap venting system. Dry using low pressure compressed air. Repeat this procedure beginning with step 2.

4 Install the fuel tank cap onto the fuel tank.

5 Remove the breather cap from the hydraulic tank.

6 Check for proper venting.

⊙ Result: Air passes through the fuel tank cap. Proceed to step 8.

⊠ Result: If air does not pass through the cap, clean or replace the cap. Proceed to step 7.

**NOTICE** When checking for positive tank cap venting, air should pass freely through the cap.

7 Using a mild solvent, carefully wash the cap venting system. Dry using low pressure compressed air. Repeat this procedure beginning with step 6.

8 Install the breather cap onto the hydraulic tank.

## B-21
## Replace the Fuel Filter Element - Perkins Models

**NOTICE** Engine specifications require that this procedure be performed every 250 hours or quarterly, whichever comes first.

Replacing the diesel fuel filter element is essential for good engine performance and service life. A dirty or clogged filter may cause the engine to perform poorly and continued use may cause component damage. Extremely dirty conditions may required that the filter be replaced more often.

**DANGER** Explosion and fire hazard. Engine fuels are combustible. Perform this procedure in an open, well-ventilated area away from heaters, sparks, flames and lighted tobacco. Always have an approved fire extinguisher within easy reach.

**NOTICE** Perform this procedure with the engine off.

1 Remove the safety pin from the engine pivot plate latch.

**NOTICE** The engine pivot plate latch is located under the engine turntable pivot plate at the counterweight end of the machine.

2 Open the engine pivot plate latch and swing the engine pivot plate out and away from the machine.

https://truckmanualshub.com/



3 Thoroughly clean the outside surfaces of the fuel filter assembly.

4 Place a suitable container under the fuel filter element.

5 Disconnect and plug the fuel line from the fuel pump to the fuel filter element.

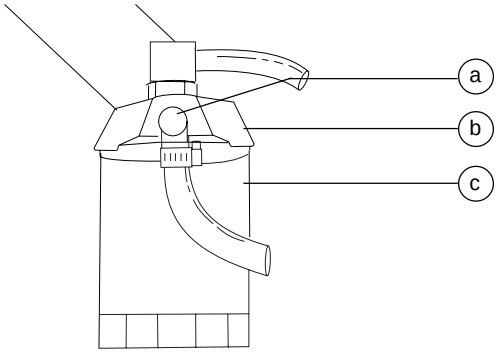


a fuel line
b filter head
c fuel filter element

6 Remove the fuel filter element with a filter wrench.

7 Apply a thin layer of fuel to the new fuel filter element O-ring.

8 Install the new fuel filter element and tighten it securely by hand. Clean up any fuel that may have spilled during the installation procedure.

9 Use a permanent ink marker to write the date and number of hours from the hour meter on the fuel filter housing.

**Prime the fuel system:**

10 Loosen the vent plug on top of the fuel injection pump.

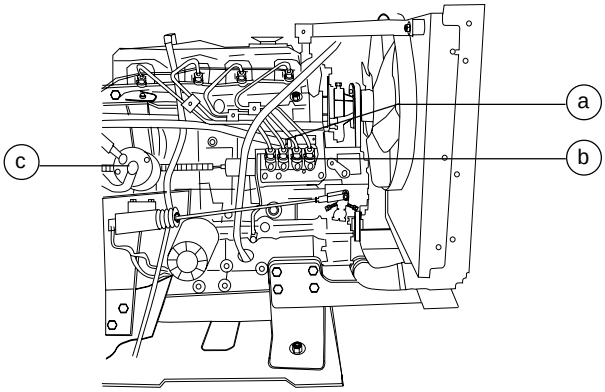


a vent plug
b fuel injection pump
c fuel lift pump

11 Operate the priming lever or priming bulb (if equipped) of the fuel lift pump until fuel, free from air, comes from the vent plug. Tighten the vent plug.

12 Clean up any fuel that may have spilled during this procedure.

13 Operate the starter motor for intervals of 15 seconds until the engine starts.

**NOTICE** It is important to allow the starter motor to cool for 30 seconds between each 15 second interval of operation.

**NOTICE** If the engine runs correctly for a short time and then stops or runs roughly, check for air in the fuel system. If there is air in the fuel system, there is probably a leak in the low pressure side of the system.

https://truckmanualshub.com/



## B-22
## Perform Engine Maintenance - Perkins Models

**NOTICE** Engine specifications require that this procedure be performed every 250 hours.

Proper engine maintenance, following the engine manufacturer's maintenance schedule, is essential to good engine performance and service life. Failure to perform the maintenance procedures can lead to poor engine performance and component damage.

Required maintenance procedures and additional engine information are available in the *Perkins 400 Series Operation Manual* (Perkins part number TPD 1443S).

| | |
|---|---|
| **Perkins 400 Series Operation Manual** | |
| Genie part number | 94890 |

## B-23
## Replace the Engine Air Filter Element - Ford Models

**NOTICE** Engine specifications require that this procedure be performed every 400 hours.

Maintaining the engine air filter in good condition is essential to good engine performance and service life. Failure to perform this procedure can lead to poor engine performance and component damage.

**NOTICE** Perform this procedure with the engine off.

1 Locate the engine air filter assembly.

2 Release the latches from the air cleaner canister end cap. Remove the end cap.

3 Remove and discard the filter element.

4 Clean the inside of the canister and the end cap with a damp cloth.

5 Install the new filter element.

6 Install the air filter canister end cap and secure the end cap latches.

**NOTICE** Be sure the discharge valve is pointing down when the cap is instaled.

https://truckmanualshub.com/



# B-24
# Perform Engine Maintenance - Ford Models

**NOTICE** Engine specifications require that this procedure be performed every 400 hours.

Proper engine maintenance, following the engine manufacturer's maintenance schedule, is essential to good engine performance and service life. Failure to perform the maintenance procedures can lead to poor engine performance and component damage.

Required maintenance procedures and additional engine information are available in the *Ford LRG-425 EFI Operator Handbook* (Ford part number FPP 194-302) OR the *Ford DSG-423 EFI Operator Handbook* (EDI part number 1060020).

| | |
|---|---|
| **Ford LRG-425 EFI Operator Handbook** | |
| Genie part number | 84792 |
| **Ford DSG-423 EFI Operator Handbook** | |
| Genie part number | 119488 |

https://truckmanualshub.com/



# Checklist C Procedures

REV D

## C-1
## Perform Engine Maintenance - Deutz Models

**NOTICE** Deutz engine specifications require that this procedure be performed every 500 hours.

Proper engine maintenance, following the engine manufacturer's maintenance schedule, is essential to good engine performance and service life. Failure to perform the maintenance procedures can lead to poor engine performance and component damage.

Required maintenance procedures and additional engine information are available in the *Deutz FL 2011 Operation Manual* (Deutz part number 0297-9929).

| **Deutz FL 2011 Operation Manual** | |
|---|---|
| Genie part number | 84794 |

**To access the engine:**

1 Remove the safety pin from the engine pivot plate latch.

**NOTICE** The engine pivot plate latch is located under the engine turntable pivot plate at the counterweight end of the machine.

2 Open the engine pivot plate latch and swing the engine pivot plate out and away from the machine.

## C-2
## Grease the Platform Overload Mechanism (if equipped)

**NOTICE** Genie specifications require that this procedure be performed every 500 hours or 6 months, whichever comes first. Perform this procedure more often if dusty conditions exist.

Application of lubrication to the platform overload mechanism is essential to safe machine operation. Continued use of an improperly greased platform overload mechanism could result in the system not sensing an overloaded platform condition and will result in component damage.

1 Locate the grease fittings on each pivot pin of the platform overload assembly.

2 Thoroughly pump grease into each grease fitting.

| **Grease Specification** |
|---|
| Chevron Ultra-duty grease, EP NLGI 2 (lithium based) or equivalent |

https://truckmanualshub.com/



## C-3
## Test the Platform Overload System (if equipped)

**NOTICE** Genie specifications require that this procedure be performed every 500 hours or six months, whichever comes first.

Testing the platform overload system regularly is essential to safe machine operation. Continued use of an improperly operating platform overload system could result in the system not sensing an overloaded platform condition. Machine stablity could be compromised resulting in the machine tipping over.

The platform overload system is designed to detect an overloaded platform and prevent machine operation anytime the machine is turned on. When activated, the system halts all normal boom operation, giving visual and audible warning to the operator.

Models equipped with the platform overload option are provided with additional machine components: an adjustable spring-loaded platform support subassembly, a limit switch, an electronic module which receives the overload signal and interrupts power, and an audio/visual warning indication to alert the operator of the overload.

The platform support subassembly utilizes two load support arms that are opposed in a full parallelogram link. This isolates platform loads into a shear or vertical state, which translates into a compressive load. A spring in the parallelogram link supports this purely compressive load regardless of where the load is placed in the platform.

As weight is added to the platform, the spring will compress until, when the platform is overloaded, the lower arm contacts a limit switch and thereby activating the overload signal. When adjusted correctly, the platform overload system will deactivate normal boom operation at platform capacity.

**NOTICE** Perform this procedure with the machine on a firm, level surface.

1 Turn the key switch to platform control. Start the engine and level the platform.

2 Determine the maximum platform capacity. Refer to the machine serial plate.

3 Remove all weight, tools and accessories from the platform.

**NOTICE** Failure to remove all weight, tools and accessories from the platform will result in an inaccurate test.

https://truckmanualshub.com/



CHECKLIST C PROCEDURES REV D

4 Using a suitable lifting device, place a test weight equal to that of the available capacity one of the locations shown.
Refer to Illustration 1.

⊙ Result: The platform overload indicator lights should be off at both the ground and platform controls and the alarm should not sound.

⊠ Result: The platform overload indicator lights are on and the alarm is sounding. Calibrate the platform overload system. Refer to Repair Proceedure 2-3, *How to Calibrate the Platform Overload System (if equipped).*

5 Carefully move the test weight to each remaining location. Refer to Illustration 1.

⊙ Result: The platform overload indicator lights should be off at both the ground and platform controls and the alarm should not sound.

⊠ Result: The platform overload indicator lights are on and the alarm is sounding. Calibrate the platform overload system. Refer to Repair Proceedure 2-3, *How to Calibrate the Platform Overload System (if equipped).*

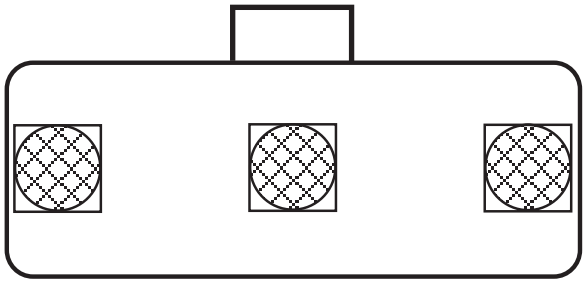

Illustration 1

6 Using a suitable lifting device, place an additional 50 lbs / 23 kg of weight onto the platform.

⊙ Result: The alarm should sound.
The platform overload indicator lights should be flashing at both the ground and platform controls.

⊠ Result: The alarm does not sound and the platform overload indicator lights are not flashing. Calibrate the platform overload system. Refer to Repair Proceedure 2-3, *How to Calibrate the Platform Overload System (if equipped).*

**NOTICE** There may be a 2 second delay before the overload indicator lights flash and the alarm sounds.

7 Carefully move the test weights to each remaining location on the platform.
Refer to Illustration 1.

⊙ Result: The alarm should sound.
The platform overload indicator lights should be flashing at both the ground and platform controls.

⊠ Result: The alarm does not sound and the platform overload indicator lights are not flashing. Calibrate the platform overload system. Refer to Repair Proceedure 2-3, *How to Calibrate the Platform Overload System (if equipped).*

**NOTICE** There may be a 2 second delay before the overload indicator lights flash and the alarm sounds.

https://truckmanualshub.com/



8 Test all machine functions from the platform controls.

⊙ Result: All platform control functions should not operate.

9 Turn the key switch to ground control.

10 Test all machine functions from the ground controls.

⊙ Result: All ground control functions should not operate.

11 Activate the auxiliary power toggle switch.

**NOTICE** The engine will turn off when the auxiliary power is activated.

12 Using auxiliary power, test all machine functions from the ground controls.

⊙ Result: All ground control functions should operate.

13 Using a suitable lifting device, lift the additional test weight from the platform.

⊙ Result: The platform overload indicator lights should turn off at both the ground and platform controls and the alarm should not sound.

**NOTICE** There may be an 2 second delay before the overload indicator lights and alarm turn off.

14 Start the engine and test all machine functions from the ground controls.

⊙ Result: All ground control functions should operate normally.

15 Turn the key switch to platform control.

16 Test all machine functions from the platform controls.

⊙ Result: All platform control functions should operate.

**NOTICE** If the platform overload system is not operating properly, Refer to Repair Procedure 2-3, *How to Calibrate the Platform Overload System (if equipped).*

17 Using a suitable lifting device, remove the remaining test weights from the platform.

https://truckmanualshub.com/



# C-4
# Replace the Fuel Filter/Water Separator - Perkins Models

**NOTICE** Genie specifications require that this procedure be performed every 500 hours or six months, whichever comes first.

Regular replacement of the fuel filter/water separator is essential for good engine performance. Failure to perform this procedure can lead to poor engine performance and/or hard starting, and continued use may result in component damge. Extremely dirty conditions may require this procedure be performed more often.

**DANGER** Explosion and fire hazard. Engine fuels are combustible. Perform this procedure in an open, well-ventilated area away from heaters, sparks, flames and lighted tobacco. Always have an approved fire extinguisher within easy reach.

**NOTICE** Perform this procedure with the engine off.

1 Put on protective clothing and eye wear.

2 Open the engine side turntable cover.

3 Remove the safety pin from the engine pivot plate latch.

**NOTICE** The engine pivot plate latch is located under the engine turntable pivot plate at the counterweight end of the machine.

4 Open the engine pivot plate latch and swing the engine pivot plate out and away from the machine.

5 Locate the fuel filter/water separator mounted to the rear engine mounting bracket.

6 Disconnect and plug the fuel supply hose from the fuel tank to the fuel filter/water separator.

7 Loosen the vent plug located on the fuel filter/water separator head.

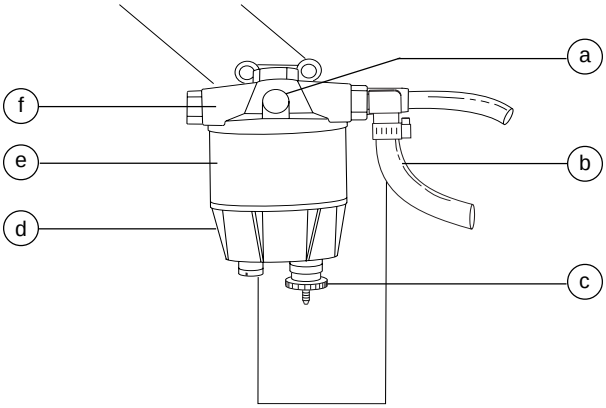


a vent plug
b main fuel line
c drain plug
d filter bowl
e filter element
f separator head

8 Place a suitable container under the filter bowl. Loosen the drain plug located at the bottom of the bowl. Completely drain the fuel.

9 Rotate the filter bowl counterclockwise and remove it from the element.

https://truckmanualshub.com/



10 Rotate the filter element counterclockwise and remove it from the filter head.

11 Install the bowl onto the new filter element.

12 Apply a thin layer of oil onto the element gasket. Install the filter/bowl assembly onto the filter head. Tighten the drain plug and vent plug.

**CAUTION** Component damage hazard. The drain plug and vent plug can be damaged if they are overtightened.

13 Clean up any diesel fuel that may have spilled during the installation procedure.

14 Install the fuel supply hose from the fuel tank to the fuel filter/water separator. Tighten the clamp.

15 Use a permanent ink marker to write the date and number of hours from the hour meter on the filter element housing.

**Prime the fuel system:**

16 Loosen the vent plug on top of the fuel injection pump.

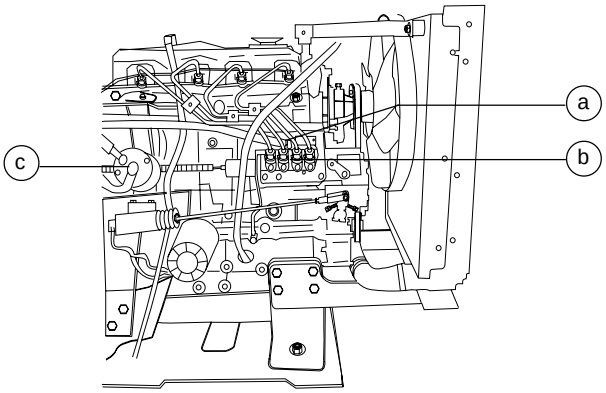


a vent plug
b fuel injection pump
c fuel lift pump

17 Operate the priming lever or priming bulb (if equipped) of the fuel lift pump until fuel, free from air, comes from the vent plug. Tighten the vent plug.

18 Clean up any fuel that may have spilled during this procedure.

19 Operate the starter motor for intervals of 15 seconds until the engine starts.

**NOTICE** It is important to allow the starter motor to cool for 30 seconds between each 15 second interval of operation.

**NOTICE** If the engine runs correctly for a short time and then stops or runs roughly, check for air in the fuel system. If there is air in the fuel system, there is probably a leak in the low pressure side of the system.

20 Swing the engine back to its original position and close the engine pivot plate latch.

21 Install the engine pivot plate safety pin.

https://truckmanualshub.com/



## C-5
## Replace the Engine Air Filter Element - Deutz and Perkins Models

**NOTICE** Genie specifications require that this procedure be performed every 500 hours or six months, whichever comes first.

Maintaining the engine air filter in good condition is essential to good engine performance and service life. Failure to perform this procedure can lead to poor engine performance and component damage.

**NOTICE** Perform this procedure with the engine off.

1 Locate the engine air filter assembly.

2 Release the latches from the air cleaner canister end cap. Remove the end cap.

3 Remove and discard the filter element.

4 Clean the inside of the canister and the end cap with a damp cloth.

5 Install the new filter element.

6 Install the air filter canister end cap and secure the end cap latches.

**NOTICE** Be sure the discharge valve is pointing down when the cap is instaled.

## C-6
## Perform Engine Maintenance - Perkins Models

**NOTICE** Engine specifications require that this procedure be performed every 600 hours.

Proper engine maintenance, following the engine manufacturer's maintenance schedule, is essential to good engine performance and service life. Failure to perform the maintenance procedures can lead to poor engine performance and component damage.

Required maintenance procedures and additional engine information are available in the *Perkins 400 Series Operation Manual* (Perkins part number TPD 1443S).

| | |
|---|---|
| **Perkins 400 Series Operation Manual** | |
| Genie part number | 94890 |

**To access the engine:**

1 Remove the safety pin from the engine pivot plate latch.

**NOTICE** The engine pivot plate latch is located under the engine turntable pivot plate at the counterweight end of the machine.

2 Open the engine pivot plate latch and swing the engine pivot plate out and away from the machine.

https://truckmanualshub.com/



# C-7
# Perform Engine Maintenance - Ford Models

**NOTICE** Engine specifications require that this procedure be performed every 800 hours.

Proper engine maintenance, following the engine manufacturer's maintenance schedule, is essential to good engine performance and service life. Failure to perform the maintenance procedures can lead to poor engine performance and component damage.

Required maintenance procedures and additional engine information are available in the *Ford LRG-425 EFI Operator Handbook* (Ford part number FPP 194-302) OR the *Ford DSG-423 EFI Operator Handbook* (EDI part number 1060020).

| | |
|---|---|
| **Ford LRG-425 EFI Operator Handbook** | |
| Genie part number | 84792 |
| **Ford DSG-423 EFI Operator Handbook** | |
| Genie part number | 119488 |

**To access the engine:**

1 Remove the safety pin from the engine pivot plate latch.

**NOTICE** The engine pivot plate latch is located under the engine turntable pivot plate at the counterweight end of the machine.

2 Open the engine pivot plate latch and swing the engine pivot plate out and away from the machine.

https://truckmanualshub.com/



# Checklist D Procedures

REV D

## D-1
## Check the Boom Wear Pads

**NOTICE** Genie specifications require that this procedure be performed every 1000 hours or annually, whichever comes first.

Maintaining the boom wear pads in good condition is essential to safe machine operation. Wear pads are placed on boom tube surfaces to provide a low friction, replaceable wear pad between moving parts. Improperly shimmed wear pads or continued use of worn wear pads may result in component damage and unsafe operating conditions.

1 Measure each wear pad. Replace the wear pad once it reaches the minimum allowable thickness. If the wear pad is still within specification, shim as necessary to obtain minimum clearance with zero binding.

2 Extend and retract the primary boom through the entire range of motion to check for tight spots that may cause binding or scraping of the boom.

**NOTICE** Always maintain squareness between the outer and inner boom tubes.

| Primary boom wear pad specifications | Minimum |
|---|---|
| Top, bottom and side wear pads (platform end of boom) | 5/8 inch<br>15.9 mm |
| Side and bottom wear pads (pivot end of boom) | 1/2 inch<br>12.7 mm |
| Top wear pads (pivot end of boom) | 5/8 inch<br>15.9 mm |

## D-2
## Check the Turntable Rotation Bearing Bolts

**NOTICE** Genie specifications require that this procedure be performed every 1000 hours or annually, whichever comes first.

Maintaining proper torque on the turntable bearing bolts is essential to safe machine operation. Improper bolt torque could result in an unsafe operating condition and component damage.

1 Raise the secondary boom and place a safety chock on the lift cylinder rods. Carefully lower the boom onto the lift cylinder safety chock.

**WARNING** Crushing hazard. Keep hands away from the cylinder and all moving parts when lowering the boom.

**NOTICE** The lift cylinder safety chock is available through the Genie Service Parts Department.

2 Turn the engine off.

3 Remove the safety pin from the engine pivot plate latch.

**NOTICE** The engine pivot plate latch is located under the engine turntable pivot plate at the counterweight end of the machine.

https://truckmanualshub.com/



4 Open the engine pivot plate latch and swing the engine pivot plate out and away from the machine.

5 Remove the center turntable cover retaining fasteners. Remove the center turntable cover from the machine.

6 Be sure that each turntable mounting bolt is torqued in sequence to specification. Refer to Section 2, *Specifications.*

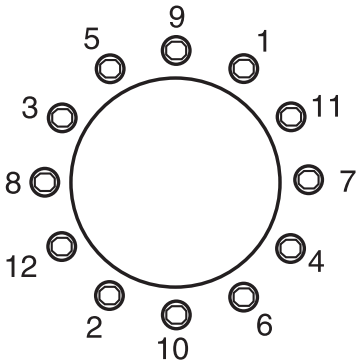


Bolt torque sequence
(before serial number 23332)

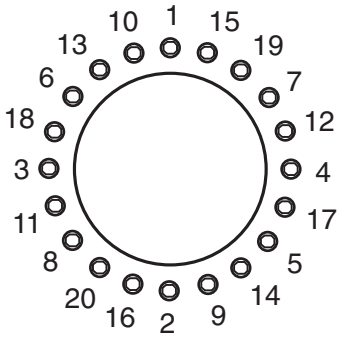


Bolt torque sequence
(from serial number 23332 to 27000)

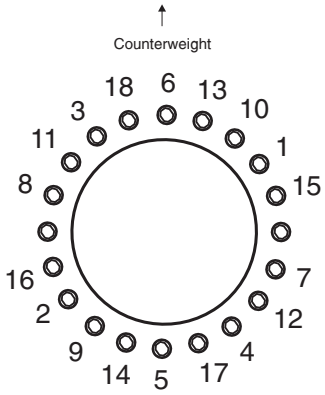


Bolt torque sequence
(after serial number 27000)

7 Start the engine from the ground controls.

8 Raise the secondary boom and remove the safety chocks.

9 Lower the boom to the stowed position.

10 Remove drive chassis covers from both the steer end and the non-steer end of the machine.

11 Remove the lower chassis cover mounting fasteners from inside of the drive chassis (if equipped).

12 Remove the lower chassis cover to access the lower turntable bearing bolts under the drive chassis.

https://truckmanualshub.com/



13 Check to ensure that each lower bearing mounting bolt under the drive chassis is torqued in sequence to specification. Refer to Section 2, *Specifications.*

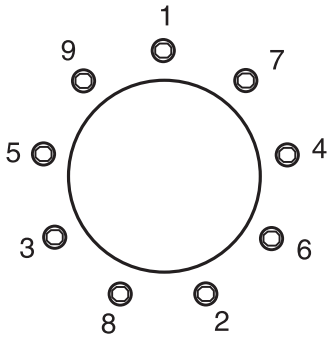


Bolt torque sequence
(before serial number 23332)

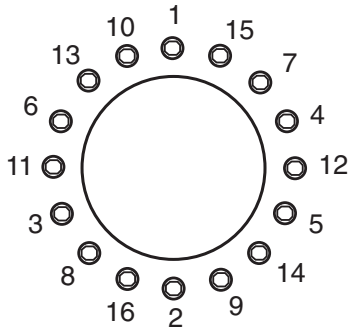


Bolt torque sequence
(after serial number 23331)

## D-3
## Inspect for Turntable Bearing Wear

**NOTICE** Genie specifications require that this procedure be performed every 1000 hours or annually, whichever comes first.

Periodic inspection of turntable bearing wear is essential to safe machine operation, good machine performance and service life. Continued use of a worn turntable bearing could create an unsafe operating condition, resulting in death or serious injury and component damage.

**NOTICE** Perform this procedure with the machine on a firm, level surface and the boom in the stowed position.

1 Grease the turntable bearing. See A-10, *Grease the Turntable Bearing and Rotate Gear.*

2 Torque the turntable bearing bolts to specification. See D-2, *Check the Turntable Rotation Bearing Bolts.*

3 Start the machine from the ground controls and raise the primary and secondary booms to full height. Do not extend the primary boom.

https://truckmanualshub.com/



4 Place a dial indicator between the drive chassis and the turntable at a point that is directly under, or inline with, the boom and no more than 1 inch / 2.5 cm from the bearing.

**NOTICE** To obtain an accurate measurement, place the dial indicator no more than 1 inch / 2.5 cm from the turntable rotation bearing.

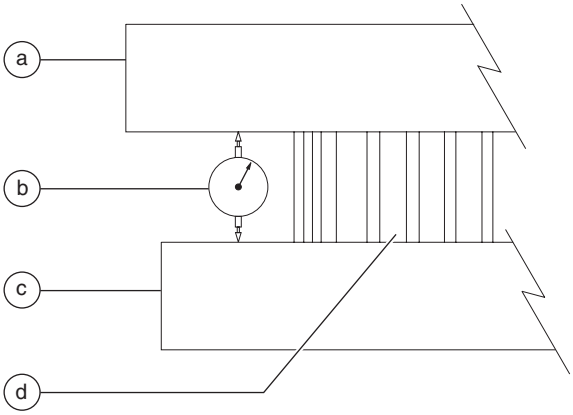


a turntable
b dial indicator
c drive chassis
d turntable rotation bearing

5 At the dial indicator, adjust it to "zero" the indicator.

6 Lower the secondary boom to the stowed position and lower the primary boom to a horizontal position. Fully extend the primary boom.

7 Note the reading on the dial indicator.

Result: The measurement is less than 0.055 inch / 1.4 mm. The bearing is good.

Result: The measurement is more than 0.055 inch / 1.4 mm. The bearing is worn and needs to be replaced.

8 Fully retract the primary boom. Raise the primary and secondary booms to full height. Visually inspect the the dial indicator to be sure the needle returns to the "zero" position.

9 Remove the dial indicator and rotate the turntable 90°.

10 Repeat steps 4 through 9 until the rotation bearing has been checked in at least four equally spaced areas 90° apart.

11 Lower the primary and secondary booms to the stowed position and turn the machine off.

12 Remove the dial indicator from the machine.

https://truckmanualshub.com/



CHECKLIST D PROCEDURES REV D

## D-4
## Replace the Drive Hub Oil

**NOTICE** Genie specifications require that this procedure be performed every 1000 hours or annually, whichever comes first.

Replacing the drive hub oil is essential for good machine performance and service life. Failure to replace the drive hub oil at yearly intervals may cause the machine to perform poorly and continued use may cause component damage.

1 Select the drive hub to be serviced. Then drive the machine until one of the two plugs is at the lowest point.

2 Remove both plugs and drain the oil.

3 Drive the machine until one plug is at the top and the other is at 90 degrees.

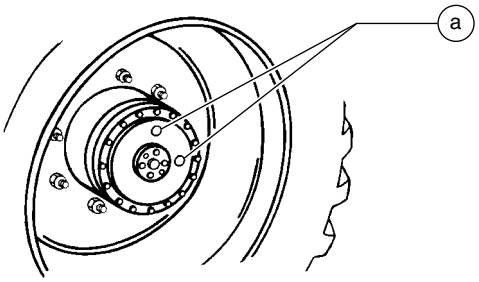


a drive hub plugs

4 Fill the hub with oil from the top hole until the oil level is even with the bottom of the side hole. Install the plugs.

5 Repeat steps 1 through 4 for all the other drive hubs.

6 Check the torque of the drive hub mounting bolts. Refer to Section 2, *Specifications*.

## D-5
## Check the Free-wheel Configuration

**NOTICE** Genie specifications require that this procedure be performed every 1000 hours or annually, whichever comes first.

Proper use of the free-wheel configuration is essential to safe machine operation. The free-wheel configuration is used primarily for towing. A machine configured to free-wheel without operator knowledge may cause death or serious injury and property damage.

**WARNING** Collision hazard. Select a work site that is firm and level.

**CAUTION** Component damage hazard. If the machine must be towed, do not exceed 2 mph / 3.2 km/h.

**Non-steer wheels: All models**

1 Chock the steer wheels to prevent the machine from rolling.

2 Center a lifting jack of ample capacity (20,000 lbs / 10,000 kg) under the drive chassis between the non-steer tires.

3 Lift the wheels off the ground and then place jack stands under the drive chassis for support.

https://truckmanualshub.com/



4 Disengage the drive hubs by turning over the drive hub disconnect caps on each non-steer wheel hub.

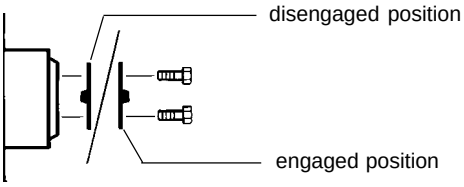


5 Manually rotate each non-steer wheel.

⊙ Result: Each non-steer wheel should rotate with minimum effort.

6 Re-engage the drive hubs by turning over the hub disconnect caps. Rotate each wheel to check for engagement. Raise the machine, remove the jack stands and lower the machine.

**⚠WARNING** Collision hazard. Failure to re-engage the drive hubs could result in death or serious injury and property damage.

**Steer wheels: 4WD models**

7 Chock the non-steer wheels to prevent the machine from rolling.

8 Center a lifting jack of ample capacity (20,000 lbs / 10,000 kg) under the drive chassis between the steer tires.

9 Lift the wheels off the ground and then place jack stands under the drive chassis for support.

10 Disengage the drive hubs by turning over the drive hub disconnect caps on each steer wheel hub.

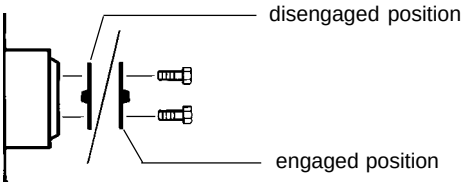


11 Manually rotate each steer wheel.

⊙ Result: Each steer wheel should rotate with minimum effort.

12 Re-engage the drive hubs by turning over the hub disconnect caps. Rotate each wheel to check for engagement. Raise the machine, remove the jack stands and lower the machine.

**⚠WARNING** Collision hazard. Failure to re-engage the drive hubs could result in death or serious injury and property damage.

https://truckmanualshub.com/



## D-6
## Replace the Hydraulic Filters

**NOTICE** Genie requires that this procedure be performed yearly or every 1000 hours, whichever comes first. Perform this procedure more often if dusty conditions exist.

Replacement of the hydraulic filters is essential for good machine performance and service life. A dirty or clogged filter may cause the machine to perform poorly and continued use may cause component damage. Extremely dirty conditions may require that the filters be replaced more often.

**CAUTION** Bodily injury hazard. Beware of hot oil. Contact with hot oil may cause severe burns.

**NOTICE** Perform this procedure with the engine off.

**Hydraulic return filter**

1 Open the ground controls side turntable cover and locate the hydraulic return filter housing on top of the hydraulic tank.

2 Remove the cap from the filter housing.

3 Lift the handle on the filter element and rotate the element counterclockwise to release the element from the housing.

4 Remove the filter element from the filter housing.

5 Install the new filter element into the filter housing.

6 Push the filter element down to be sure the O-ring on the element is fully seated into the housing.

7 Rotate the filter element clockwise to lock it in place.

8 Install the filter housing cap.

9 Use a permanent ink marker to write the date and number of hours from the hour meter on the oil filter housing.

**Medium and high pressure filters**

**NOTICE** The medium pressure filter is for the charge pump and the high pressure filter is for all machine functions except the drive circuit and oscillating axle circuit.

10 Open the engine side turntable cover and locate the medium and high pressure filters.

**NOTICE** The medium pressure filter is mounted near the pump. The high pressure filter, with filter condition indicator, is mounted to the bulkhead.

11 Place a suitable container under each filter.

12 Remove the filter housings by using a wrench on the nut provided on the bottom of the housings.

13 Remove the filter elements from the housings.

14 Inspect the housing seals and replace them if necessary.

https://truckmanualshub.com/



15 Install the new filter elements into the housings and tighten them securely.

**NOTICE** The medium and high pressure filters use the same elements.

16 Clean up any oil that may have spilled during the installation procedure.

17 Use a permanent ink marker to write the date and number of hours from the hour meter on the oil filter housings.

18 Start the engine from the ground controls.

19 Inspect the filter housings and related components to be sure that there are no leaks.

## D-7
## Perform Engine Maintenance - Deutz Models

**NOTICE** Engine specifications require that this procedure be performed every 1000 hours.

Proper engine maintenance, following the engine manufacturer's maintenance schedule, is essential to good engine performance and service life. Failure to perform the maintenance procedures can lead to poor engine performance and component damage.

Required maintenance procedures and additional engine information are available in the *Deutz FL 2011 Operation Manual* (Deutz part number 0297-9929).

| | |
|---|---|
| **Deutz FL 2011 Operation Manual** | |
| Genie part number | 84794 |

**To access the engine:**

1 Remove the safety pin from the engine pivot plate latch.

**NOTICE** The engine pivot plate latch is located under the engine turntable pivot plate at the counterweight end of the machine.

2 Open the engine pivot plate latch and swing the engine pivot plate out and away from the machine.

https://truckmanualshub.com/



# Checklist E Procedures

REV D

## E-1
## Test or Replace the Hydraulic Oil

**NOTICE** Genie requires that this procedure be performed every 2000 hours or every two years, whichever comes first. Perform this procedure more often if dusty conditions exist.

Replacement or testing of the hydraulic oil is essential for good machine performance and service life. Dirty oil and suction strainers may cause the machine to perform poorly and continued use may cause component damage. Extremely dirty conditions may require oil changes to be performed more often.

**NOTICE** Before replacing the hydraulic oil, the oil may be tested by an oil distributor for specific levels of contamination to verify that changing the oil is necessary. **If the hydraulic oil is not replaced at the two year inspection, test the oil quarterly. Replace the oil when it fails the test.**

**NOTICE** When removing a hose assembly or fitting, the O-ring (if equipped) on the fitting and/or the hose end must be replaced. All connections must be torqued to specification during installation. Refer to Section 2, *Hydraulic Hose and Fitting Torque Specifications*.

**NOTICE** Perform this procedure with the boom in the stowed position.

1 **Ford models:** Turn the valve on the LPG tank clockwise to the off position (if equipped). Then slowly disconnect the hose from the LPG tank.

2 **Ford models:** Open the clamps from the LPG tank straps and remove the LPG tank from the machine (if equipped).

3 **Models with hydraulic tank shut-off valves:** Locate the two hydraulic tank valves at the hydraulic tank through the access hole underneath the turntable. Close the valves.

**CAUTION** Component damage hazard. The engine must not be started with the hydraulic tank shut-off valves in the closed position or component damage will occur. If the tank valves are closed, remove the key from the key switch and tag the machine to inform personnel of the condition.

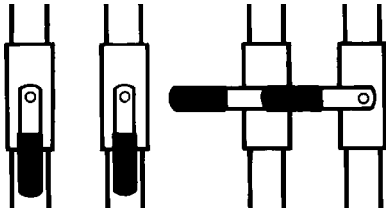


4 Remove the drain plug from the hydraulic tank and completely drain the tank into a container of suitable capacity. Refer to Section 2, *Specifications*.

https://truckmanualshub.com/



5 Tag, disconnect and plug the two suction hoses and supply hose for the auxiliary pump from the hydraulic tank. Cap the fittings on the tank.

**NOTICE** The hoses can be accessed through the access hole under the turntable.

6 Disconnect and plug the return filter hydraulic hose at the return filter. Cap the fitting on the filter housing.

7 Remove the ground controls side turntable cover.

8 Support the hydraulic tank with an appropriate lifting device.

9 Remove the hydraulic tank mounting fasteners.

10 Remove the hydraulic tank from the machine.

**WARNING** Crushing hazard. The hydraulic tank could become unbalanced and fall if not properly supported when removed from the machine.

11 Remove the hydraulic return filter housing mounting fasteners. Remove the hydraulic return filter housing from the hydraulic tank.

12 Remove the suction strainers from the tank and clean them using a mild solvent.

13 Rinse out the inside of the tank using a mild solvent.

14 Install the suction strainers using a thread sealant on the threads.

15 Install the drain plug using a thread sealant on the threads.

16 Install the hydraulic return filter housing onto the hydraulic tank.

17 Install the hydraulic tank onto the machine.

18 Install the two suction hoses to the suction strainers.

19 Install the supply hose for the auxiliary power unit and the return filter hose.

20 **Models with hydraulic tank shut-off valves:** Open the two hydraulic tank valves at the hydraulic tank.

21 Fill the tank with the proper hydraulic oil for your machine until the level is within the top 2 inches / 5 cm of the sight gauge. Do not overfill. Refer to Section 2, *Specifications.*

22 Clean up any oil that may have spilled.

23 Prime the pump. Refer to Repair Procedure 7-2, *How to Prime the Pump.*

**NOTICE** Always use pipe thread sealant when installing the suction hose fittings and the drain plug.

https://truckmanualshub.com/



## E-2
## Grease the Steer Axle Wheel Bearings, 2WD Models

**NOTICE** Genie requires that this procedure be performed every 2000 hours or every two years, whichever comes first. Perform this procedure more often if dusty conditions exist.

Maintaining the steer axle wheel bearings is essential for safe machine operation and service life. Operating the machine with loose or worn wheel bearings may cause an unsafe operating condition and continued use may result in component damage. Extremely wet or dirty conditions or regular steam cleaning and pressure washing of the machine may require that this procedure be performed more often.

1 Loosen the wheel lug nuts. Do not remove them.

2 Block the non-steer wheels, then center a lifting jack under the steer axle.

3 Raise the machine 6 inches / 15 cm and place blocks under the drive chassis for support.

4 Remove the lug nuts. Remove the tire and wheel assembly.

5 Check for wheel bearing wear by attempting to move the wheel hub side to side, then up and down.

⊙ Result: There should be no side to side or up and down movement.

**Skip to step 10 if there is no movement.**

6 Remove the dust cap from the hub. Remove the cotter pin from the castle nut.

7 Tighten the castle nut to 35 ft-lbs / 47 Nm to seat the bearings.

8 Loosen the castle nut and re-tighten to 8 ft-lbs / 11 Nm.

9 Check for wheel bearing wear by attempting to move the wheel hub side to side, then up and down.

⊙ Result: If there is no side to side or up and down movement, continue with step 11 and grease the wheel bearings.

⊗ Result: If there is side to side or up and down movement, continue to step 11 and replace the wheel bearings with new ones.

**NOTICE** When replacing a wheel bearing, both the inner and outer bearings, including the pressed-in races, must be replaced.

10 Remove the dust cap from the hub. Remove the cotter pin from the castle nut.

11 Remove the castle nut.

12 Pull the hub off of the spindle. The washer and outer bearing should fall loose from the hub.

13 Place the hub on a flat surface and gently pry the bearing seal out of the hub. Remove the rear bearing.

14 Pack both bearings with clean, fresh grease.

15 Place the large inner bearing into the rear of the hub.

https://truckmanualshub.com/



16 Install a new bearing grease seal into the hub by pressing it evenly into the hub until it is flush.

17 Slide the hub onto the yoke spindle.

**CAUTION** Component damage hazard. Do not apply excessive force or damage to the lip of the seal may occur.

18 Place the outer bearing into the hub.

19 Install the washer and castle nut.

20 Tighten the slotted nut to 35 ft-lbs / 47 Nm to seat the bearings.

21 Loosen the castle nut and re-tighten to 8 ft-lbs / 11 Nm.

22 Install a new cotter pin. Bend the cotter pin to lock it in.

**NOTICE** Always use a new cotter pin when installing a castle nut.

23 Install the dust cap, then the tire and wheel assembly. Torque the wheel lug nuts to specification. Refer to Section 2, *Specifications.*

## E-3
## Perform Engine Maintenance - Deutz Models

**NOTICE** Engine specifications require that this procedure be performed every 3000 hours.

Proper engine maintenance, following the engine manufacturer's maintenance schedule, is essential to good engine performance and service life. Failure to perform the maintenance procedures can lead to poor engine performance and component damage.

Required maintenance procedures and additional engine information are available in the *Deutz FL 2011 Operation Manual* (Deutz part number 0297-9929).

| | |
|---|---|
| **Deutz FL 2011 Operation Manual** | |
| Genie part number | 84794 |

**To access the engine:**

1 Remove the safety pin from the engine pivot plate latch.

**NOTICE** The engine pivot plate latch is located under the engine turntable pivot plate at the counterweight end of the machine.

2 Open the engine pivot plate latch and swing the engine pivot plate out and away from the machine.

https://truckmanualshub.com/



# E-4
# Perform Engine Maintenance - Deutz Models

**NOTICE** Engine specifications require that this procedure be performed every 12,000 hours.

Proper engine maintenance, following the engine manufacturer's maintenance schedule, is essential to good engine performance and service life. Failure to perform the maintenance procedures can lead to poor engine performance and component damage.

Required maintenance procedures and additional engine information are available in the *Deutz FL 2011 Operation Manual* (Deutz part number 0297-9929).

| | |
|---|---|
| **Deutz FL 2011 Operation Manual** | |
| Genie part number | 84794 |

**To access the engine:**

1 Remove the safety pin from the engine pivot plate latch.

**NOTICE** The engine pivot plate latch is located under the engine turntable pivot plate at the counterweight end of the machine.

2 Open the engine pivot plate latch and swing the engine pivot plate out and away from the machine.

https://truckmanualshub.com/



# Repair Procedures

## Observe and Obey:

- ☑ Repair procedures shall be completed by a person trained and qualified on the repair of this machine.
- ☑ Immediately tag and remove from service a damaged or malfunctioning machine.
- ☑ Repair any machine damage or malfunction before operating the machine.

## Before Repairs Start:

- ☑ Read, understand and obey the safety rules and operating instructions in the appropriate Operator's Manual on your machine.
- ☑ Be sure that all necessary tools and parts are available and ready for use.
- ☑ Read each procedure completely and adhere to the instructions. Attempting shortcuts may produce hazardous conditions.
- ☑ Unless otherwise specified, perform each repair procedure with the machine in the following configuration:
  - ☐ Machine parked on a firm, level surface
  - ☐ Boom in stowed position
  - ☐ Turntable rotated with the boom between the non-steer wheels
  - ☐ Turntable secured with the turntable rotation lock
  - ☐ Key switch in the off position with the key removed
  - ☐ Wheels chocked
  - ☐ All external AC power disconnected from the machine

## About This Section

Most of the procedures in this section should only be performed by a trained service professional in a suitably equipped workshop. Select the appropriate repair procedure after troubleshooting the problem.

Perform disassembly procedures to the point where repairs can be completed. To re-assemble, perform the disassembly steps in reverse order.

**Symbols Legend**

| | |
|---|---|
| ⚠ | Safety alert symbol—used to alert personnel to potential personal injury hazards. Obey all safety messages that follow this symbol to avoid possible injury or death. |
| ⚠ DANGER | Used to indicate the presence of an imminently hazardous situation which, if not avoided, will result in death or serious injury. |
| ⚠ WARNING | Used to indicate the presence of a potentially hazardous situation which, if not avoided, could result in death or serious injury. |
| ⚠ CAUTION | With safety alert symbol—used to indicate the presence of a potentially hazardous situation which, if not avoided, may cause minor or moderate injury. |
| CAUTION | Without safety alert symbol—used to indicate the presence of a potentially hazardous situation which, if not avoided, may result in property damage. |
| NOTICE | Used to indicate operation or maintenance information. |

⊙ Indicates that a specific result is expected after performing a series of steps.

☒ Indicates that an incorrect result has occurred after performing a series of steps.

https://truckmanualshub.com/



# Platform Controls

REV B

The platform control box contains one printed circuit board. The ALC-500 circuit board inside the platform control box controls all proportional machine functions from the platform. The joystick controllers at the platform controls utilize Hall Effect technology and require no adjustment. The operating parameters of the joysticks are stored in memory at the ECM circuit board at the platform controls. If a joystick error occurs or if a joystick is replaced, it will need to be calibrated before that particular machine function will operate. See 1-2, *How to Calibrate a Joystick.*

Each joystick controller should operate smoothly and provide proportional speed control over its entire range of motion.

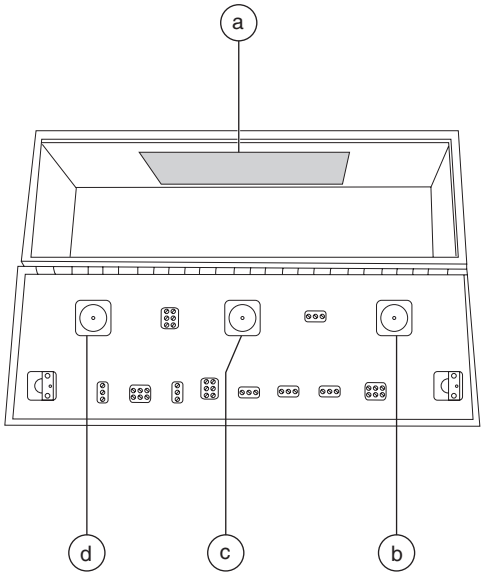


a ALC-500 circuit board
b drive/steer joystick controller
c secondary boom up/down joystick controller
d primary boom up/down and turntable rotate left/right joystick controller

## 1-1 ALC-500 Circuit Board

**WARNING** Electrocution hazard. Contact with electrically charged circuits could result in death or serious injury. Remove all rings, watches and other jewelry.

**NOTICE** When the ALC-500 circuit board is replaced, the joystick controllers will need to be calibrated. See 1-2, *How to Calibrate a Joystick.*

### How to Remove the ALC-500 Circuit Board

1 Push in the red Emergency Stop button to the off position at both the ground and platform controls.

2 Remove the platform control box lid retaining fasteners. Open the control box lid.

3 Locate the ALC-500 circuit board mounted to the inside of the platform control box.

**WARNING** Electrocution hazard. Contact with electrically charged circuits could result in death or serious injury. Remove all rings, watches and other jewelry.

https://truckmanualshub.com/



4 Attach a grounded wrist strap to the ground screw inside the platform control box.

**CAUTION** Component damage hazard. Electrostatic discharge (ESD) can damage printed circuit board components. Maintain firm contact with a metal part of the machine that is grounded at all times when handling printed circuit boards OR use a grounded wrist strap.

5 Carefully disconnect the wire connectors from the circuit board.

6 Remove the ALC-500 circuit board mounting fasteners.

7 Carefully remove the ALC-500 circuit board from the platform control box.

# 1-2 Joysticks

## How to Calibrate a Joystick

The joysticks on this machine utilize digital Hall Effect technology for proportional control. If a joystick is disconnected or replaced, it must be calibrated before that particular machine function will operate.

**NOTICE** The joystick must be calibrated before the threshold, max-out or ramp rate can be set.

**NOTICE** Perform this procedure with the engine off.

1 Open the platform control box.

2 Pull out the red Emergency Stop button to the on position at both the ground and platform controls.

3 Turn the key switch to platform control. Do not start the engine.

4 Select a joystick to calibrate.

5 Disconnect the wire harness connector from the joystick for approximately 10 seconds or until the alarm sounds. Connect the wire harness connector to the joystick.

6 Move the joystick full stroke in either direction and hold for 5 seconds.

7 Return the joystick to the neutral position, pause for a moment, then move the joystick full stroke in the opposite direction. Hold for 5 seconds and return the joystick to the neutral position.

⊙ Result: The alarm should sound indicating successful joystick calibration.

8 Repeat this procedure for each joystick controlled machine function including the thumb rocker steer switch.

**NOTICE** No machine fuction should operate while performing the joystick calibration procedure.

https://truckmanualshub.com/



## How to Adjust the Joystick Max-out Setting

The max-out setting of a joystick controls the maximum speed of a joystick-controlled machine function. Whenever a hydraulic cylinder, drive motor or hydraulic pump is replaced, the max-out setting should be adjusted to maintain optimum performance. The max-out settings on the joystick can be changed to compensate for hydraulic pump wear to maintain peak performance from the machine.

**NOTICE** Perform this procedure with the boom in the stowed position.

1 Pull out the red Emergency Stop button to the on position at both the ground and platform controls.

2 Turn the key switch to platform control. Do not start the engine.

3 Push in the platform controls red Emergency Stop button to the off position.

4 Do not press down the foot switch.

5 Move and hold the drive enable toggle switch in the right position and pull out the red Emergency Stop button to the on position.

6 When the alarm sounds, release the drive enable toggle switch.

7 Momentarily activate the drive enable toggle switch in the right direction 4 times.

⊙ Result: There should be a pause and the alarm should sound 4 times indicating that the machine is in max-out calibration mode.

8 Start the engine from the platform controls and press down the foot switch.

9 Start a timer and activate the machine function that needs to be adjusted. Record the time it takes for that function to complete a full cycle (ie; boom up).

10 Compare the machine function time with the function times listed in Section 2, *Specifications.* Determine whether the function time needs to increase or decrease.

11 While the joystick is activated, adjust the max-out setting to achieve the proper function cycle time. Momentarily move the drive enable toggle switch in the right direction to increase the function speed or momentarily move the drive enable toggle switch in the left direction to decrease the function speed.

**NOTICE** Each time the drive enable toggle switch is momentarily moved, the function speed will change in 2% increments.

12 Repeat steps 9 through 11 for each joystick controlled machine function.

13 Return the joystick to the neutral position and wait for approximately 10 seconds to allow the settings to be saved.

⊙ Result: The alarm should sound indicating that the settings have been saved in memory.

**NOTICE** Do not operate any machine function during the 10 second waiting time.

https://truckmanualshub.com/



## How to Adjust the Joystick Ramp Rate Setting

The ramp rate setting of a joystick controls the time at which it takes for the joystick to reach maximum output, when moved out of the neutral position. The ramp rate settings of a joystick can be changed to compensate for hydraulic pump wear to maintain peak performance from the machine.

**NOTICE** Perform this procedure with the boom in the stowed position.

1 Pull out the red Emergency Stop button to the on position at both the ground and platform controls.

2 Turn the key switch to platform control. Do not start the engine.

3 Push in the platform controls red Emergency Stop button to the off position.

4 Do not press down the foot switch.

5 Move and hold the drive enable toggle switch in the right position and pull out the red Emergency Stop button to the on position.

6 When the alarm sounds, release the drive enable toggle switch.

7 Momentarily activate the drive enable toggle switch in the right direction 6 times.

⊙ Result: There should be a pause and the alarm should sound 6 times indicating that the machine is in ramp rate calibration mode.

8 Start the engine from the platform controls and press down the foot switch.

9 Start a timer and simultaneously move the joystick in either direction full stroke. Note how long it takes the function to reach maximum speed. This is the ramp rate.

10 Compare the function ramp rate time with the table below and determine whether the ramp rate time needs to increase or decrease.

11 While the joystick is activated, set the ramp rate. Momentarily move the drive enable toggle switch in the right direction to increase the time or momentarily move the drive enable toggle switch in the left direction to decrease the time.

**NOTICE** Each time the drive enable toggle switch is momentarily moved, the time will change in 10% increments.

12 Repeat steps 9 through 11 for each joystick controlled machine function.

13 Return the joystick to the neutral position and wait for approximately 10 seconds to allow the settings to be saved.

⊙ Result: The alarm should sound indicating that the settings have been saved in memory.

**NOTICE** Do not operate any machine function during the 10 second waiting time.

| Ramp rate (factory settings) | |
|---|---|
| **Primary boom up/down** | |
| accelerate | 4 seconds |
| decelerate | 0.5 second |
| **Secondary boom up/down** | |
| accelerate | 2 seconds |
| decelerate | 0.5 second |
| **Turntable rotate** | |
| accelerate | 2 seconds |
| decelerate | 0.5 second |
| **Drive** | |
| accelerate | 3.3 seconds |
| accelerate (narrow models) | 3.8 seconds |
| decelerate to neutral | 0.5 second |
| decelerate, change of direction | 0.5 second |
| decelerate, coasting | 0.75 second |
| decelerate, braking | 1 second |
| decelerate, shift from low to high speed | 1 second |
| decelerate, shift from high to low speed | 2 seconds |

https://truckmanualshub.com/



## How to Adjust the Joystick Threshold Setting

The threshold setting of a joystick is the minimum output at which a function proportional valve can open and allow the function to operate.

**NOTICE** Perform this procedure with the boom in the stowed position.

1 Pull out the red Emergency Stop button to the on position at both the ground and platform controls.

2 Turn the key switch to platform control. Do not start the engine.

3 Push in the platform controls red Emergency Stop button to the off position.

4 Do not press down the foot switch.

5 Move and hold the drive enable toggle switch in the right position and pull out the red Emergency Stop button to the on position.

6 When the alarm sounds, release the drive enable toggle switch.

7 Momentarily activate the drive enable toggle switch in the right direction 8 times.

⊙ Result: There should be a pause and the alarm should sound 8 times indicating that the machine is in threshold calibration mode.

8 Start the engine from the platform controls and press down the foot switch.

9 Select a boom function joystick to set the threshold.

10 Slowly move the joystick off center in either direction just until the function begins to move.

11 Slowly move the joystick back to the neutral position. Just before the function stops moving, move the drive enable toggle switch to either side to set the threshold.

⊙ Result: The alarm should sound indicating a successful calibration.

12 Repeat steps 9 through 11 for each boom joystick controlled machine function (boom up/down, boom extend/retract and turntable rotate).

13 Return the joystick to the neutral position and wait for approximately 10 seconds to allow the settings to be saved.

⊙ Result: The alarm should sound indicating that the settings have been saved in memory.

**NOTICE** Do not operate any machine function during the 10 second waiting time.

https://truckmanualshub.com/



# Platform Components

REV C

## 2-1 Platform Leveling Slave Cylinder

The slave cylinder and the rotator pivot are the two primary supports for the platform. The slave cylinder keeps the platform level through the entire range of boom motion. It operates in a closed-circuit hydraulic loop with the master cylinder. The slave cylinder is equipped with counterbalance valves to prevent movement in the event of a hydraulic line failure.

### How to Remove the Platform Leveling Slave Cylinder

**NOTICE** Before cylinder removal is considered, bleed the slave cylinder to be sure there is no air in the closed loop.

**NOTICE** When removing a hose assembly or fitting, the O-ring (if equipped) on the fitting and/or the hose end must be replaced. All connections must be torqued to specification during installation. Refer to Section 2, *Hydraulic Hose and Fitting Torque Specifications..*

1 **Z-45/25J:** Extend the primary boom until the slave cylinder barrel-end pivot pin is accessible.

2 Raise the primary boom slightly and place blocks under the platform for support.

3 Lower the primary boom until the platform is resting on the blocks just enough to support the platform.

**NOTICE** Do not rest the entire weight of the boom on the blocks.

4 Tag, disconnect and plug the hydraulic hoses from the slave cylinder at the unions and connect them together using a connector. Connect the hoses from the cylinder together using a connector.

**⚠WARNING** Bodily injury hazard. Spraying hydraulic oil can penetrate and burn skin. Loosen hydraulic connections very slowly to allow the oil pressure to dissipate gradually. Do not allow oil to squirt or spray.

5 Remove the pin retaining fastener from the slave cylinder rod-end pivot pin. Do not remove the pin.

6 **Z-45/25J:** Remove the external snap rings from the slave cylinder barrel-end pivot pin. Do not remove the pin.

**Z-45/25:** Remove the pin retaining fastener from the slave cylinder barrel-end pivot pin. Do not remove the pin.

7 Place a block under the slave cylinder for support. Protect the cylinder rod from damage.

https://truckmanualshub.com/



8 **Z-45/25:** Support the platform rotator with a suitable lifting device.

9 Use a soft metal drift to drive the rod-end pivot pin out.

**WARNING** Crushing hazard. The platform could fall when the slave cylinder rod-end pivot pin is removed if not properly supported.

**CAUTION** Component damage hazard. The slave cylinder rod may become damaged if it is allowed to fall if not properly supported by the lifting device.

10 Use a soft metal drift and drive the barrel-end pin out.

11 Carefully pull the cylinder out of the primary boom.

## How to Bleed the Slave Cylinder

1 Simultaneously activate the boom up function and the platform level up function until the boom is fully raised.

2 Simultaneously activate the boom down function and the platform level down function until the boom is fully lowered.

# 2-2 Platform Rotator

## How to Bleed the Platform Rotator

**NOTICE** This procedure will require two people. Do not start the engine. Use auxiliary power for this procedure.

1 Move the function enable toggle switch to either side and activate the platform rotate toggle switch to the right then the left through two platform rotation cycles, then hold the switch to the right position until the platform is fully rotated to the right.

**Before serial number 24304:**

2 Connect a clear hose to the top bleed valve. Place the other end of the hose in a container to collect any drainage. Secure the container to the boom.

3 Open the top bleed valve on the rotator, but do not remove it.

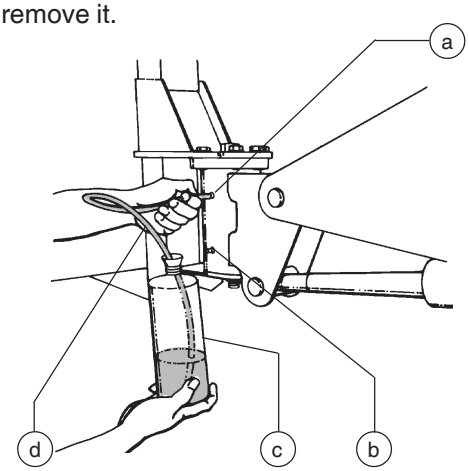


a top bleed valve
b bottom bleed valve
c container
d clear hose

https://truckmanualshub.com/



4 Move the function enable toggle switch to either side and hold the platform rotate toggle switch to the left position until the platform is fully rotated to the left. Continue holding the toggle switch until air stops coming out of the bleed valve. Close the bleed valve.

**WARNING** Crushing hazard. Keep clear of the platform during rotation.

5 Connect the clear hose to the bottom bleed valve and open the valve. Do not remove the bleed valve.

6 Move the function enable toggle switch to either side and hold the platform rotate toggle switch to the right position until the platform is fully rotated to the right. Continue holding the toggle switch until air stops coming out of the bleed valve. Close the bleed valve.

**WARNING** Crushing hazard. Keep clear of the platform during rotation.

7 Remove the hose from the bleed valve and clean up any hydraulic oil that may have spilled.

8 Rotate the platform fully in both directions and inspect the bleed valves for leaks.

**After serial number 24303:**

2 Place a suitable container underneath the platform rotator.

3 Open the top bleed screw on the rotator, but do not remove it.

**WARNING** Bodily injury hazard. Spraying hydraulic oil can penetrate and burn skin. Loosen hydraulic connections very slowly to allow the oil pressure to dissipate gradually. Do not allow oil to squirt or spray.

4 Move the function enable toggle switch to either side and hold the platform rotate toggle switch to the left position until the platform is fully rotated to the left. Continue holding the toggle switch until air stops coming out of the bleed screw. Close the bleed screw.

**WARNING** Crushing hazard. Keep clear of the platform during rotation.

5 Open the bottom bleed screw on the rotator, but do not remove it.

**WARNING** Bodily injury hazard. Spraying hydraulic oil can penetrate and burn skin. Loosen hydraulic connections very slowly to allow the oil pressure to dissipate gradually. Do not allow oil to squirt or spray.

6 Move the function enable toggle switch to either side and hold the platform rotate toggle switch to the right position until the platform is fully rotated to the right. Continue holding the toggle switch until air stops coming out of the bleed screw. Close the bleed screw.

**WARNING** Crushing hazard. Keep clear of the platform during rotation.

7 Clean up any hydraulic oil that may have spilled.

8 Rotate the platform fully in both directions and inspect the bleed screws for leaks.

https://truckmanualshub.com/



# 2-3 Platform Overload System

## How to Calibrate the Platform Overload System

Calibration of the platform overload system is essential to safe machine operation. Continued use of an improperly calibrated platform overload system could result in the system failing to sense an overloaded platform. The stability of the machine is compromised and it could tip over.

**NOTICE** Perform this procedure with the machine on a firm, level surface.

1 Turn the key switch to platform control. Start the engine and level the platform.

2 Determine the maximum platform capacity. Refer to the machine serial plate.

3 Remove all weight, tools and accessories from the platform.

**NOTICE** Failure to remove all weight, tools and accessories from the platform will result in an incorrect calibration.

4 Using a suitable lifting device, place a test weight equal to the maximum platform capacity at the center of the platform floor.

5 Move the platform up and down by hand, so it bounces approximately 2.5 to 5 cm / 1 to 2 inches. Allow the platform to settle.

Result: The overload indicator lights are off and the alarm does not sound. Proceed to step 6.

Result: The overload indicator lights are flashing at the platform and ground controls, and the alarm is sounding. Slowly tighten the load spring adjustment nut in a clockwise direction in 10° increments until the overload indicator light turns off, and the alarm does not sound. Proceed to step 8.

**NOTICE** The platform will need to be moved up and down and allowed to settle between each adjustment.

**NOTICE** There may be a 2 second delay before the platform overload indicator light and alarm responds.

6 Move the platform up and down by hand, so it bounces approximately 2.5 to 5 cm / 1 to 2 inches. Allow the platform to settle.

Result: The overload indicator lights are off at the platform and ground controls, and the alarm does not sound. Slowly loosen the load spring adjustment nut in a counterclockwise direction in 10° increments until the overload indicator light flashes at both the platform and ground controls, and the alarm sounds. Proceed to step 7.

Result: The overload indicator lights are flashing at the platform and ground controls, and the alarm is sounding. Repeat this procedure beginning with step 5.

**NOTICE** The platform will need to be moved up and down and allowed to settle between each adjustment.

**NOTICE** There may be a 2 second delay before the platform overload indicator lights and alarm responds.

https://truckmanualshub.com/



7 Move the platform up and down by hand, so it bounces approximately 2.5 to 5 cm / 1 to 2 inches. Allow the platform to settle.

⊙ Result: The overload indicator lights are off and the alarm does not sound. Proceed to step 8.

⊠ Result: The overload indicator lights are flashing at the platform and ground controls, and the alarm is sounding. Repeat this procedure beginning with step 5.

**NOTICE** There may be a 2 second delay before the platform overload indicator light and alarm responds.

8 Add an additional 10 lb / 4.5 kg test weight to the platform.

⊙ Result: The overload indicator light is flashing at both the ground and platform controls, and the alarm is sounding. Proceed to step 9.

⊠ Result: The overload indicator light is off at both the ground and platform controls, and the alarm does not sound. Remove the additional 10 lb / 4.5 kg test weight. Repeat this procedure beginning with step 6.

**NOTICE** There may be a 2 second delay before the platform overload indicator light and alarm responds.

9 Test all machine functions from the platform controls.

⊙ Result: All platform control functions should not operate.

10 Turn the key switch to ground control.

11 Test all machine functions from the ground controls.

⊙ Result: All ground control functions should not operate.

12 Using a suitable lifting device, lift the test weight off the platform floor.

⊙ Result: The platform overload indicator light should be off at both the ground and platform controls and the alarm should not sound.

**NOTICE** There may be a 2 second delay before the overload indicator lights and alarm turn off.

13 Test all machine functions from the ground controls.

⊙ Result: All ground control functions should operate normally.

14 Turn the key switch to platform control.

15 Test all machine functions from the platform controls.

⊙ Result: All platform control functions should operate normally.

https://truckmanualshub.com/



# Jib Boom Components, Z-45/25J

REV B

## 3-1
## Jib Boom

### How to Remove the Jib Boom

**NOTICE** Perform this procedure with the boom in the stowed position.

**NOTICE** When removing a hose assembly or fitting, the O-ring (if equipped) on the fitting and/or the hose end must be replaced. All connections must be torqued to specification during installation. Refer to Section 2, *Hydraulic Hose and Fitting Torque Specifications*.

1 Remove the platform.

2 Disconnect the electrical connector from the jib boom/platform rotate select valve manifold mounted to the platform support.

3 Tag, disconnect and plug all of the hydraulic hoses from the jib boom/platform rotate select valve manifold. Cap the fittings on the manifold and pull the hoses out through the platform rotator.

**⚠WARNING** Bodily injury hazard. Spraying hydraulic oil can penetrate and burn skin. Loosen hydraulic connections very slowly to allow the oil pressure to dissipate gradually. Do not allow oil to squirt or spray.

4 Remove the platform mounting weldment.

5 Attach a lifting strap from an overhead crane to the platform rotator for support.

6 Remove the pin retaining fastener from the jib boom lift cylinder rod-end pivot pin. Do not remove the pin.

7 Remove the pin retaining fasteners from both platform rotator pivot pins. Do not remove the pins.

8 Use a soft metal drift to remove the leveling arm pivot pin and let the leveling arms hang down.

9 Use a soft metal drift to remove the platform rotator pivot pin and remove the platform rotator from the machine.

10 Slide both of the jib boom leveling arms off of the jib boom cylinder rod-end pivot pin.

11 Remove the hose and cable cover from the side of the jib boom. Remove the hose and cable separators.

12 Attach a lifting strap from an overhead crane to the jib boom.

13 Support the barrel end of the jib boom lift cylinder with a suitable lifting device.

14 Tag, disconnect and plug the jib boom lift cylinder hydraulic hoses. Cap the fittings on the cylinder.

**⚠WARNING** Bodily injury hazard. Spraying hydraulic oil can penetrate and burn skin. Loosen hydraulic connections very slowly to allow the oil pressure to dissipate gradually. Do not allow oil to squirt or spray.

https://truckmanualshub.com/



15 Remove the pin retaining fastener from the jib boom lift cylinder barrel-end pivot pin.

16 Use a soft metal drift to remove the pin and let the cylinder hang down.

**WARNING** Crushing hazard. The jib boom could fall when when the barrel-end pivot pin is removed if not properly supported by the overhead crane.

17 Remove the pin retaining fastener from the jib boom pivot pin. Use a soft metal drift to remove the pin, then remove the jib boom from the bellcrank.

**WARNING** Crushing hazard. The jib boom could become unbalanced and fall when removed from the machine if not properly attached to the overhead crane.

18 Attach a lifting strap from an overhead crane to the lug on the rod end of the jib boom lift cylinder.

19 Use a soft metal drift to remove the jib boom lift cylinder rod-end pivot pin, then remove the jib boom lift cylinder from the bellcrank.

**WARNING** Crushing hazard. The jib boom lift cylinder could become unbalanced and fall when removed from the machine if not properly attached to the overhead crane.

## 3-2
## Jib Boom Lift Cylinder

### How to Remove the Jib Boom Lift Cylinder

**NOTICE** Perform this procedure with the boom in the stowed position.

**NOTICE** When removing a hose assembly or fitting, the O-ring (if equipped) on the fitting and/or the hose end must be replaced. All connections must be torqued to specification during installation. Refer to Section 2, *Hydraulic Hose and Fitting Torque Specifications*.

1 Raise the jib boom slightly and place blocks under the platform mounting weldment. Then lower the jib boom until the platform is resting on the blocks just enough to support the platform.

**NOTICE** Do not rest the entire weight of the boom on the blocks.

2 Tag, disconnect and plug the jib boom lift cylinder hydraulic hoses. Cap the fittings on the cylinder.

**WARNING** Bodily injury hazard. Spraying hydraulic oil can penetrate and burn skin. Loosen hydraulic connections very slowly to allow the oil pressure to dissipate gradually. Do not allow oil to squirt or spray.

https://truckmanualshub.com/



3 Remove the pin retaining fasteners from the jib boom lift cylinder rod-end pivot pin. Do not remove the pin.

4 Use a soft metal drift to tap the jib boom lift cylinder rod-end pivot pin half way out. Then lower one of the leveling arms to the ground. Tap the pin the other direction and lower the opposite leveling arm. Do not remove the pin.

5 Support the jib boom lift cylinder with a suitable lifting device.

6 Remove the pin retaining fastener from the jib boom lift cylinder barrel-end pivot pin. Use a soft metal drift to remove the barrel-end pin and let the cylinder hang down.

**⚠WARNING** Crushing hazard. The jib boom could fall when the barrel-end pivot pin is removed if not properly supported by the overhead crane.

7 Attach a lifting strap from an overhead crane to the lug on the rod end of the jib boom lift cylinder.

8 Use a soft metal drift to remove the jib boom lift cylinder rod-end pin. Remove the jib boom lift cylinder from the machine.

**⚠WARNING** Crushing hazard. The jib boom lift cylinder could become unbalanced and fall when removed from the machine if not properly attached to the overhead crane.

https://truckmanualshub.com/



REV B

# Primary Boom Components

## 4-1 Cable Track

The primary boom cable track guides the cables and hoses running up the boom. It can be repaired link by link without removing the cables and hoses that run through it. Removing the entire primary boom cable track is only necessary when performing major repairs that involve removing the primary boom.

## How to Remove the Cable Track, Z-45/25

**NOTICE** When removing a hose assembly or fitting, the O-ring (if equipped) on the fitting and/or the hose end must be replaced. All connections must be torqued to specification during installation. Refer to Section 2, *Hydraulic Hose and Fitting Torque Specifications*.

1 Locate the cables from the primary boom cable track to the platform control box. Number each cable and its entry location at the platform control box.

2 Disconnect the cables from the platform control box.

3 Pull all of the electrical cables out of the plastic cable track. Do not pull out the hydraulic hoses.

4 Raise the primary boom to a horizontal position.

5 Tag, disconnect and plug the platform rotator hydraulic hoses at the union located above the primary boom lift cylinder. Cap the fittings on the unions.

**⚠WARNING** Bodily injury hazard. Spraying hydraulic oil can penetrate and burn skin. Loosen hydraulic connections very slowly to allow the oil pressure to dissipate gradually. Do not allow oil to squirt or spray.

6 Tag, disconnect and plug the hydraulic hoses from the "V1" and "V2" ports on the counterbalance valve manifold located on the platform rotator. Cap the fittings on the manifold.

**⚠WARNING** Bodily injury hazard. Spraying hydraulic oil can penetrate and burn skin. Loosen hydraulic connections very slowly to allow the oil pressure to dissipate gradually. Do not allow oil to squirt or spray.

7 Tag, disconnect and plug the hydraulic hoses from the platform leveling master cylinder. Cap the fittings on the cylinder.

**⚠WARNING** Bodily injury hazard. Spraying hydraulic oil can penetrate and burn skin. Loosen hydraulic connections very slowly to allow the oil pressure to dissipate gradually. Do not allow oil to squirt or spray.

https://truckmanualshub.com/



8 Tag and disconnect the hydraulic hoses from the platform leveling slave cylinder and connect them together using a connector. Cap the fittings on the cylinder.

**WARNING** Bodily injury hazard. Spraying hydraulic oil can penetrate and burn skin. Loosen hydraulic connections very slowly to allow the oil pressure to dissipate gradually. Do not allow oil to squirt or spray.

9 Pull the four hydraulic hoses toward the platform to clear the rod end of the primary boom lift cylinder.

10 Place blocks in between the upper and lower cable tracks and secure the upper and lower tracks together.

**WARNING** Crushing hazard. If the upper and lower cable tracks are not properly secured together, the cable track could become unbalanced and fall when removed from the machine.

11 Remove all hose and cable clamps from the underside of the primary boom.

12 Attach a strap from an overhead crane to the cable track.

13 Remove the mounting fasteners from the upper cable track at the platform end of the extension boom.

14 Remove the cable track mounting fasteners that attach the lower cable track to the primary boom.

15 Remove the cable track from the machine and place it on a structure capable of supporting it.

**WARNING** Crushing hazard. The cable track could become unbalanced and fall if not properly attached to the overhead crane.

**CAUTION** Component damage hazard. Cables and hoses can be damaged if they are kinked or pinched.

## How to Remove the Cable Track, Z-45/25J

**NOTICE** When removing a hose assembly or fitting, the O-ring (if equipped) on the fitting and/or the hose end must be replaced. All connections must be torqued to specification during installation. Refer to Section 2, *Hydraulic Hose and Fitting Torque Specifications*.

1 Locate the cables from the primary boom cable track to the platform control box. Number each cable and its entry location at the platform control box.

2 Disconnect the cables from the platform control box.

3 Remove the hose and cable cover from the side of the jib boom. Remove the hose and cable separators.

4 Remove the hose clamp on the primary boom bellcrank.

5 Pull all of the electrical cables out of the plastic cable track. Do not pull out the hydraulic hoses.

https://truckmanualshub.com/



6 Tag, disconnect and plug the hydraulic hoses from the "V1" and "V2" ports on the counterbalance valve manifold located on the platform rotator. Cap the fittings on the manifold.

**⚠WARNING** Bodily injury hazard. Spraying hydraulic oil can penetrate and burn skin. Loosen hydraulic connections very slowly to allow the oil pressure to dissipate gradually. Do not allow oil to squirt or spray.

7 Tag and disconnect the hydraulic hoses from the platform leveling slave cylinder at the union and connect them together using a connector. Connect the hoses from the cylinder together using a connector.

**⚠WARNING** Bodily injury hazard. Spraying hydraulic oil can penetrate and burn skin. Loosen hydraulic connections very slowly to allow the oil pressure to dissipate gradually. Do not allow oil to squirt or spray.

8 Tag, disconnect and plug the hydraulic hoses from the jib boom/platform rotate manifold. Cap the fittings on the manifold.

**⚠WARNING** Bodily injury hazard. Spraying hydraulic oil can penetrate and burn skin. Loosen hydraulic connections very slowly to allow the oil pressure to dissipate gradually. Do not allow oil to squirt or spray.

9 Tag, disconnect and plug the platform rotator hydraulic hoses at the union located above the primary boom lift cylinder. Cap the fittings on the unions.

**⚠WARNING** Bodily injury hazard. Spraying hydraulic oil can penetrate and burn skin. Loosen hydraulic connections very slowly to allow the oil pressure to dissipate gradually. Do not allow oil to squirt or spray.

10 Tag, disconnect and plug the hydraulic hoses from the platform leveling master cylinder. Cap the fittings on the cylinder.

**⚠WARNING** Bodily injury hazard. Spraying hydraulic oil can penetrate and burn skin. Loosen hydraulic connections very slowly to allow the oil pressure to dissipate gradually. Do not allow oil to squirt or spray.

11 Raise the boom to a horizontal position.

12 Place blocks between the upper and lower cable tracks and secure the upper and lower tracks together.

**⚠WARNING** Crushing hazard. If the upper and lower cable tracks are not properly secured together, the cable track could become unbalanced and fall when removed from the machine.

13 Attach a lifting strap from an overhead 5 ton / 5,000 kg capacity crane to the platform end of the primary boom for support. Do not lift it.

https://truckmanualshub.com/



14 Remove all hose and cable clamps from the underside of the primary boom.

15 Support the rod end of the primary boom lift cylinder with a suitable lifting device.

16 Remove the pin retaining fasteners from the primary boom lift cylinder rod-end pivot pin. Do not remove the pin.

17 Raise the primary boom slightly with the overhead crane to relieve the pressure on the primary boom lift cylinder rod-end pivot pin.

18 Use a soft metal drift to remove the primary boom lift cylinder rod-end pivot pin.

**⚠WARNING** Crushing hazard. The primary boom lift cylinder could become unbalanced and fall if not properly supported by the lifting device.

19 Lower the rod end of the primary boom lift cylinder approximately 12 inches / 30 cm.

20 Pull all of the hoses and cables out and away from the mounting ears for the rod end of the primary boom lift cylinder.

21 Raise the rod end of the primary boom lift cylinder back into position and install the rod-end pivot pin. Install the pin retaining fasteners.

22 Attach a strap from an overhead crane to the cable track.

23 Remove the mounting fasteners from the upper cable track at the platform end of the extension boom.

24 Remove the cable track mounting fasteners that attach the lower cable track to the primary boom.

25 Remove the cable track from the machine and place it on a structure capable of supporting it.

**⚠WARNING** Crushing hazard. The cable track could become unbalanced and fall if not properly attached to the overhead crane.

**CAUTION** Component damage hazard. Cables and hoses can be damaged if they are kinked or pinched.

## How to Repair the Primary Boom Cable Track

**CAUTION** Component damage hazard. The primary boom cable track can be damaged if it is twisted.

**NOTICE** A 7 link repair section of cable track is available through the Genie Industries Service Parts Department.

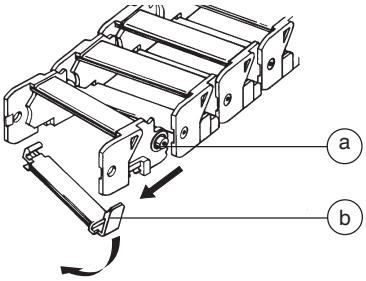


a link separation point
b lower clip

1 Use a slotted screwdriver to pry down on the lower clip.

2 To remove a single link, open the lower clip and then use a screw driver to pry the link to the side.

3 Repeat steps 1 and 2 for each link.

https://truckmanualshub.com/



# 4-2
# Primary Boom

## How to Remove the Primary Boom

**⚠WARNING** Bodily injury hazard. This procedure requires specific repair skills, lifting equipment and a suitable workshop. Attempting this procedure without these skills and tools could result in death or serious injury and significant component damage. Dealer service is strongly recommended.

**NOTICE** Perform this procedure with the boom in the stowed position.

**NOTICE** When removing a hose assembly or fitting, the O-ring (if equipped) on the fitting and/or the hose end must be replaced. All connections must be torqued to specification during installation. Refer to Section 2, *Hydraulic Hose and Fitting Torque Specifications*.

1 Remove the platform.

2 **Z-45/25:** Remove the platform rotator and platform mounting weldment.

**Z-45/25J:** Remove the jib boom. See 3-1, *How to Remove the Jib Boom.*

3 Remove the cable track. See 4-1, *How to Remove the Cable Track.*

4 Raise the primary boom to a horizontal position.

5 Remove the hose and cable cover from the upper pivot.

6 Remove the pin retaining fastener from the master cylinder barrel-end pivot pin. Use a soft metal drift to remove the pin. Then lower the cylinder and let it hang down.

**CAUTION** Component damage hazard. When lowering the master cylinder down, be sure not to damage the master cylinder hoses or fittings.

7 Locate the primary boom drive speed limit switch inside of the upper pivot.

8 Remove the primary boom drive speed limit switch mounting fasteners. Do not disconnect the wiring.

9 Locate the primary extension boom drive speed limit switch inside of the extension boom.

10 Remove the primary extension boom drive speed limit switch mounting fasteners. Do not disconnect the wiring.

11 Pull the limit switch and the wiring out of the extension tube and move it out of the way.

12 Tag, disconnect and plug the primary boom extension cylinder hydraulic hoses. Cap the fittings on the cylinder.

**⚠WARNING** Bodily injury hazard. Spraying hydraulic oil can penetrate and burn skin. Loosen hydraulic connections very slowly to allow the oil pressure to dissipate gradually. Do not allow oil to squirt or spray.

https://truckmanualshub.com/



13 Remove the hose clamp at the pivot end of the boom.

14 Attach a 5 ton / 5,000 kg overhead crane to the center point of the primary boom.

15 Attach a similar lifting device to the primary boom lift cylinder.

16 Place support blocks under the primary boom lift cylinder.

17 Remove the pin retaining fasteners from the primary boom lift cylinder rod-end pivot pin. Use a soft metal drift to remove the pin.

**WARNING** Crushing hazard. The boom lift cylinder and primary boom will fall if not properly supported.

18 Lower the rod end of the primary boom lift cylinder onto support blocks. Protect the cylinder rod from damage.

19 Remove the pin retaining fasteners from the primary boom pivot pin.

20 Remove the primary boom pivot pin with a soft metal drift, then carefully remove the primary boom from the machine and place it on a structure capable of supporting it.

**WARNING** Crushing hazard. The primary boom could become unbalanced and fall when removed from the machine if not properly attached to the overhead crane.

## How to Disassemble the Primary Boom

**NOTICE** Complete disassembly of the boom is only necessary if the outer or inner boom tube must be replaced. The extension cylinder can be removed without completely disassembling the boom. See 4-4, *How to Remove the Primary Boom Extension Cylinder*.

1 Remove the primary boom. See *How to Remove the Primary Boom*.

2 Place blocks under the barrel end of the primary boom extension cylinder for support.

3 Remove the pin retaining fastener from the extension cylinder barrel-end pivot pin at the pivot end of the primary boom. Use a soft metal drift to remove the pin.

4 Remove and label the location of the wear pads from the platform end of the primary boom.

**NOTICE** Pay careful attention to the location and amount of shims used with each wear pad.

5 Support and slide the extension tube and extension cylinder assembly out of the boom tube.

**WARNING** Crushing hazard. The primary boom extension tube could become unbalanced and fall when removed from the primary boom tube if not properly supported.

**NOTICE** During removal, the overhead crane strap will need to be carefully adjusted for proper balancing.

https://truckmanualshub.com/



6 Remove the external snap rings from the extension cylinder rod-end pivot pin at the platform end of the extension tube. Use a soft metal drift to remove the pin.

7 Support and slide the extension cylinder out of the base end of the extension tube. Place the extension cylinder on blocks for support.

**WARNING** Crushing hazard. The extension cylinder could become unbalanced and fall when removed from primary boom extension tube if not properly supported.

**NOTICE** During removal, the overhead crane strap will need to be carefully adjusted for proper balancing.

## 4-3 Primary Boom Lift Cylinder

The primary boom lift cylinder raises and lowers the primary boom. The primary boom lift cylinder is equipped with a counterbalance valve to prevent movement in the event of a hydraulic line failure.

### How to Remove the Primary Boom Lift Cylinder

**WARNING** Bodily injury hazard. This procedure requires specific repair skills, lifting equipment and a suitable workshop. Attempting this procedure without these skills and tools could result in death or serious injury and significant component damage. Dealer service is strongly recommended.

**NOTICE** When removing a hose assembly or fitting, the O-ring (if equipped) on the fitting and/or the hose end must be replaced. All connections must be torqued to specification during installation. Refer to Section 2, *Hydraulic Hose and Fitting Torque Specifications*.

1 Raise the primary boom to a horizontal position.

2 Raise the secondary boom until the primary boom lift cylinder barrel-end pivot pin is above the turntable covers.

3 Attach a 5 ton / 5000 kg overhead crane to the primary boom for support.

https://truckmanualshub.com/



4 Raise the primary boom with the overhead crane slightly to take the pressure off the primary boom lift cylinder pivot pins.

5 Support the rod end and the barrel end of the primary boom lift cylinder with a second overhead crane or similar lifting device.

6 Tag, disconnect and plug the primary boom lift cylinder hydraulic hoses. Cap the fittings on the cylinder.

**⚠WARNING** Bodily injury hazard. Spraying hydraulic oil can penetrate and burn skin. Loosen hydraulic connections very slowly to allow the oil pressure to dissipate gradually. Do not allow oil to squirt or spray.

7 Remove the pin retaining fasteners from the primary boom lift cylinder rod-end pivot pin. Use a soft metal drift to remove the pin.

**⚠WARNING** Crushing hazard. The primary boom will fall if not properly supported when the primary boom rod-end pivot pin is removed.

8 Place a support block across both turntable covers under the primary boom lift cylinder.

9 Lower the rod end of the lift cylinder onto the block. Protect the cylinder rod from damage.

**⚠WARNING** Crushing hazard. The primary boom lift cylinder could fall if not properly supported.

10 Remove the primary boom lift cylinder barrel-end pivot pin retaining fasteners. Do not remove the pin.

11 Use a slide hammer to remove the barrel-end pivot pin. Carefully remove the primary boom lift cylinder from the machine.

**⚠WARNING** Crushing hazard. The lift cylinder could become unbalanced and fall if not properly supported and secured to the lifting device.

https://truckmanualshub.com/



# 4-4 Primary Boom Extension Cylinder

The primary boom extension cylinder extends and retracts the primary boom extension tube.The primary boom extension cylinder is equipped with counterbalance valves to prevent movement in the event of a hydraulic line failure.

## How to Remove the Primary Boom Extension Cylinder

**WARNING** Bodily injury hazard. This procedure requires specific repair skills, lifting equipment and a suitable workshop. Attempting this procedure without these skills and tools could result in death or serious injury and significant component damage. Dealer service is strongly recommended.

**NOTICE** When removing a hose assembly or fitting, the O-ring (if equipped) on the fitting and/or the hose end must be replaced. All connections must be torqued to specification during installation. Refer to Section 2, *Hydraulic Hose and Fitting Torque Specifications*.

1 Raise the primary boom to a horizontal position.

2 Extend the primary boom until the primary boom extension cylinder rod-end pivot pin is accessible in the primary boom extension tube.

3 Remove the hose and cable guard from the upper pivot.

4 Tag, disconnect and plug the primary boom extension cylinder hydraulic hoses. Cap the fittings on the cylinder.

**WARNING** Bodily injury hazard. Spraying hydraulic oil can penetrate and burn skin. Loosen hydraulic connections very slowly to allow the oil pressure to dissipate gradually. Do not allow oil to squirt or spray.

5 At the platform end of the boom, remove the external snap rings from the extension cylinder rod-end pivot pin. Use a soft metal drift to remove the pin.

6 Remove the barrel-end pivot pin retaining fasteners.

7 Place a rod through the barrel-end pivot pin and twist to remove the pin.

8 Support and slide the extension cylinder out of the upper pivot.

**WARNING** Crushing hazard. The extension cylinder could fall when removed from the extension boom if not properly supported.

**CAUTION** Component damage hazard. Be careful not to damage the counterbalance valves on the primary boom extension cylinder when removing the cylinder from the primary boom.

**CAUTION** Component damage hazard. Hoses and cables can be damaged if the primary boom extension cylinder is dragged across them.

**NOTICE** Note the length of the cylinder after removal. The cylinder must be at the same length for installation.

https://truckmanualshub.com/



# 4-5 Platform Leveling Master Cylinder

The master cylinder acts as a pump for the slave cylinder. It's part of the closed circuit hydraulic loop that keeps the platform level through the entire range of boom motion. The master cylinder is located at the base of the primary boom.

## How to Remove the Platform Leveling Master Cylinder

**NOTICE** When removing a hose assembly or fitting, the O-ring (if equipped) on the fitting and/or the hose end must be replaced. All connections must be torqued to specification during installation. Refer to Section 2, *Hydraulic Hose and Fitting Torque Specifications*.

1 Raise the secondary boom until both the rod-end and barrel-end pivot pins on the master cylinder are accessible.

2 Tag, disconnect and plug the master cylinder hydraulic hoses. Cap the fittings on the cylinder.

**⚠WARNING** Bodily injury hazard. Spraying hydraulic oil can penetrate and burn skin. Loosen hydraulic connections very slowly to allow the oil pressure to dissipate gradually. Do not allow oil to squirt or spray.

3 Attach overhead crane or similar lifting device to the master cylinder.

4 Remove the pin retaining fasteners from the master cylinder barrel-end pivot pin.

5 Place a rod through the barrel-end pivot pin and twist to remove the pin.

6 Remove the pin retaining fastener from the rod-end pivot pin.

7 Place a rod through the rod-end pivot pin and twist to remove the pin.

8 Remove the master cylinder from the machine.

**⚠WARNING** Crushing hazard. The master cylinder could become unbalanced and fall if not properly attached to the overhead crane.

https://truckmanualshub.com/



This page intentionally left blank.

https://truckmanualshub.com/



# Secondary Boom Components

REV B

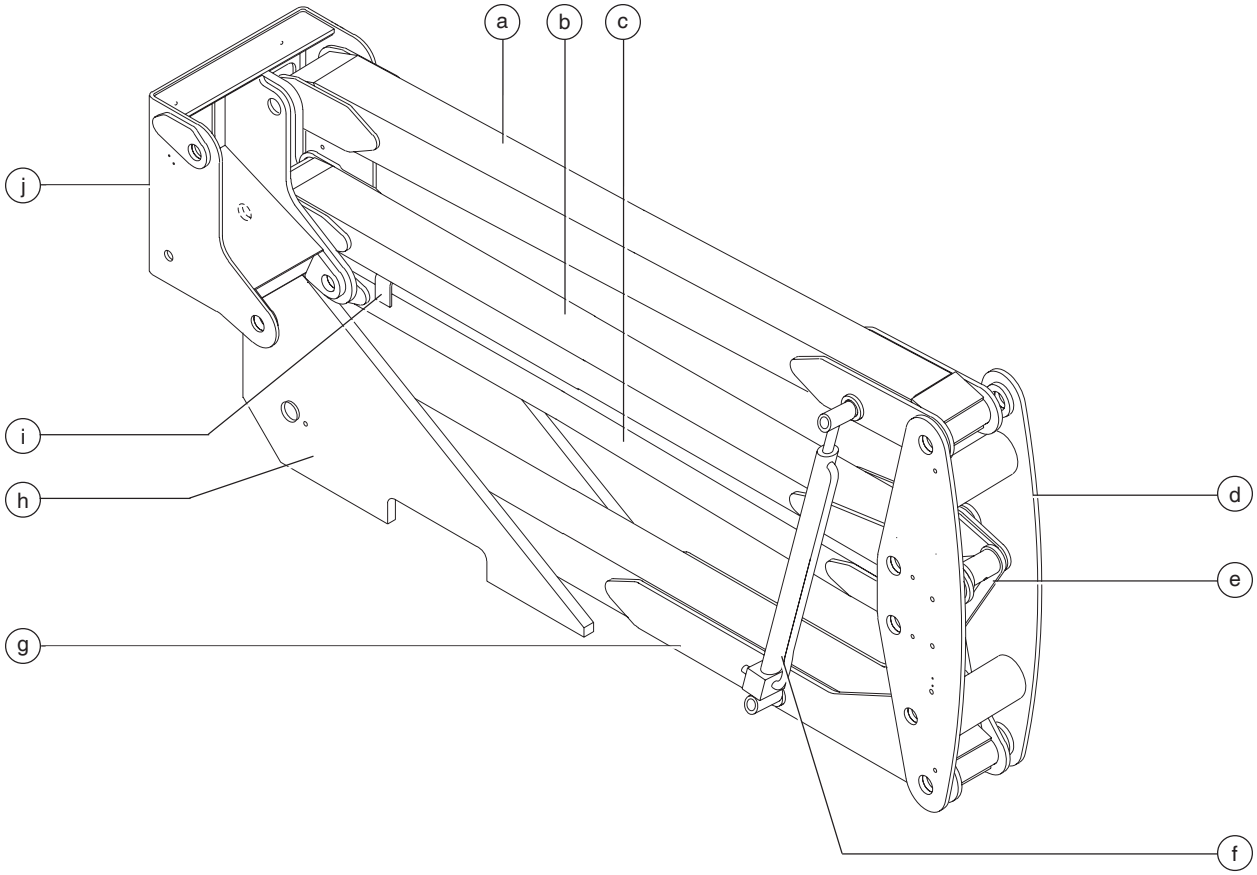


Secondary Boom components

a upper secondary boom (number 1 arm)
b upper tension link (number 2 arm)
c lower tension link (number 3 arm)
d mid-pivot
e compression link
f secondary boom lift cylinder (2)
g lower secondary boom (number 4 arm)
h turntable pivot
i boom rest
j upper pivot

https://truckmanualshub.com/



# 5-1 Secondary Boom

## How to Disassemble the Secondary Boom

**WARNING** Bodily injury hazard. The procedures in this section require specific repair skills, lifting equipment and a suitable workshop. Attempting this procedure without these skills and tools could result in death or serious injury and significant component damage. Dealer service is required.

Follow the disassembly steps to the point required to complete the repair. Then re-assemble the secondary boom by following the disassembly steps in reverse order.

**NOTICE** When removing a hose assembly or fitting, the O-ring (if equipped) on the fitting and/or the hose end must be replaced. All connections must be torqued to specification during installation. Refer to Section 2, *Hydraulic Hose and Fitting Torque Specifications*.

1 Remove the platform.

2 **Z-45/25J:** Remove the jib boom. See 3-1, *How to Remove the Jib Boom.*

3 Remove the primary boom. See 3-2, *How to Remove the Primary Boom*.

4 Remove the master cylinder. See 4-5, *How to Remove the Master Cylinder*.

5 Attach a lifting strap from an overhead crane to to the lug on the rod end of the primary boom lift cylinder. Then raise the primary boom lift cylinder with the crane, to a vertical position.

6 Tag, disconnect and plug the hydraulic hoses at the primary boom lift cylinder. Cap the fittings on the cylinder.

**WARNING** Bodily injury hazard. Spraying hydraulic oil can penetrate and burn skin. Loosen hydraulic connections very slowly to allow the oil pressure to dissipate gradually. Do not allow oil to squirt or spray.

7 Remove the pin retaining fastener from the primary boom lift cylinder barrel-end pivot pin.

8 Use a slide hammer to remove the pin. Remove the primary boom lift cylinder from the machine.

**WARNING** Crushing hazard. The primary boom lift cylinder could become unbalanced and fall if not properly supported by the overhead crane.

9 Tag, disconnect and plug the hydraulic hoses on both of the secondary boom lift cylinders. Cap the fittings on the cylinders.

**WARNING** Bodily injury hazard. Spraying hydraulic oil can penetrate and burn skin. Loosen hydraulic connections very slowly to allow the oil pressure to dissipate gradually. Do not allow oil to squirt or spray.

https://truckmanualshub.com/



10 Remove the pin retaining fasteners from both sides of the secondary boom lift cylinder rod-end pivot pin and barrel-end pivot pin. Do not remove the pins.

11 Attach a strap from an overhead crane to the lug on the rod end of one of the secondary boom lift cylinders for support. Do not apply any lifting pressure.

12 Use a soft metal drift to drive the barrel-end pivot pin half way out. Lower the barrel end of the secondary boom lift cylinder and let it hang down.

13 Use a soft metal drift to drive the rod-end pivot pin half way out.

14 Remove the secondary boom lift cylinder from the machine.

15 Repeat steps 11 through 14 for the other secondary boom lift cylinder.

**⚠WARNING** Crushing hazard. The secondary boom lift cylinder could become unbalanced and fall when removed from the machine if not properly attached to the overhead crane.

**CAUTION** Component damage hazard. When removing a secondary boom lift cylinder from the machine, be careful not to damage the counterbalance valve at the barrel end of the cylinder.

16 Attach a lifting strap from an overhead crane to the upper pivot for support. Do not lift it.

17 Attach a lifting strap from a second overhead crane to the number 1 arm at the mid-point between the upper pivot and mid-pivot.

18 Remove the pin retaining fasteners from the number 1 arm pivot pins at the mid-pivot and the upper pivot. Do not remove the pins.

19 Use a soft metal drift to drive both pins out.

20 Remove the number 1 arm from the machine.

**⚠WARNING** Crushing hazard. The number 1 arm could become unbalanced and fall when removed from the machine if not properly attached to the overhead crane.

**⚠CAUTION** Crushing hazard. The upper pivot could fall when the number 1 arm is removed from the machine if not properly supported by the overhead crane.

21 Using the overhead crane attached to the upper pivot, raise the secondary boom assembly approximately 30 inches / 76 cm.

22 Insert a 4 x 4 x 11 inch / 10 x 10 x 28 cm block between the number 2 arm and the boom rest. Then lower the secondary boom assembly onto the block.

**⚠WARNING** Crushing hazard. The secondary boom assembly could fall if not properly supported by the 4 x 4 x 11 inch / 10 x 10 x 28 cm block.

https://truckmanualshub.com/



23 Pull all of the cables and hoses out through the upper pivot.

**CAUTION** Component damage hazard. Cables and hoses can be damaged if they are kinked or pinched.

24 Remove the hose and cable covers from the top of the number 2 arm.

25 Pull all of the hoses and cables out of the upper pivot and out through the mid-pivot. Lay the hoses and cables on the ground.

**CAUTION** Component damage hazard. Cables and hoses can be damaged if they are kinked or pinched.

26 Remove the pin retaining fastener from the number 2 arm pivot pin at the upper pivot. Use a soft metal drift to remove the pin.

27 Remove the upper pivot from the machine.

**⚠WARNING** Crushing hazard. The upper pivot could become unbalanced and fall when removed from the machine if not properly attached to the overhead crane.

28 Attach the lifting strap from an overhead crane to the number 2 arm at the upper pivot end.

29 Raise the number 2 arm slightly and remove the 4 x 4 x 11 inch / 10 x 10 x 28 cm block.

30 Lower the number 2 arm onto the boom rest pad.

31 Insert a 4 x 4 x 8 1/2 inch / 10 x 10 x 22 cm block between the number 3 arm and the number 4 arm at the mid-pivot end.

32 Attach a lifting strap from the overhead crane to the mid-pivot for support. Do not lift it.

33 Remove the pin retaining fasteners from the number 2, 3 and 4 arm pivot pins at the mid-pivot. Do not remove the pins.

34 Use a soft metal drift to drive each pin out. Then remove the mid-pivot from the secondary boom assembly.

**⚠WARNING** Crushing hazard. The mid-pivot could become unbalanced and fall when removed from the secondary boom assembly if not properly supported by the overhead crane.

35 Attach the lifting strap from an overhead crane to the center point of the number 2 arm for support. Do not lift it.

36 Remove the pin retaining fasteners from both compression link pivot pins. Do not remove the pins.

37 Use a soft metal drift to remove the lower compression link pivot pin at the number 3 arm.

38 Support the compression link with an appropriate lifting device.

https://truckmanualshub.com/



39 Use a soft metal drift to remove the upper compression link pivot pin from the number 2 arm. Remove the compression link from the machine.

**WARNING** Crushing hazard. The number 2 arm could fall when the compression link is disconnected from the number 2 arm if not properly supported by the overhead crane.

**CAUTION** Crushing hazard. The compression link may fall if not properly supported when removed from the secondary boom assembly.

40 Remove the number 2 arm from the machine.

**WARNING** Crushing hazard. The number 2 arm could become unbalanced and fall when removed from the secondary boom assembly if not properly supported by the overhead crane.

41 Remove the upper and lower hose and cable covers from the number 3 arm.

42 Pull all of the cables and hoses from the number 3 arm and lay them over the turntable counterweight.

**CAUTION** Component damage hazard. Cables and hoses can be damaged if they are kinked or pinched.

43 Open the ground controls side turntable cover.

44 Remove the fuel tank filler cap.

45 Using an approved hand-operated pump, drain the fuel tank into a container of suitable capacity. Refer to Section 2, *Specifications*.

**DANGER** Explosion and fire hazard. Engine fuels are combustible. Perform this procedure in an open, well-ventilated area away from heaters, sparks, flames and lighted tobacco. Always have an approved fire extinguisher within easy reach.

**DANGER** Explosion and fire hazard. When transferring fuel, connect a grounding wire between the machine and pump or container.

**NOTICE** Be sure to only use a hand-operated pump suitable for use with gasoline and diesel fuel.

46 Tag, disconnect and plug the fuel hoses from the fuel tank. Clean up any fuel that may have spilled.

47 Remove the fuel tank mounting fasteners. Carefully remove the fuel tank from the machine.

**CAUTION** Component damage hazard. The fuel tank is plastic and may become damaged if allowed to fall.

**NOTICE** Clean the fuel tank and inspect for cracks and other damage before installing it onto the machine.

https://truckmanualshub.com/



48 Remove the retaining fastener from the ground control box and function manifold pivot plate.

49 Lower the ground control box and function manifold pivot plate to access the number 3 arm pivot pin.

50 Attach the lifting strap from the overhead crane to the centerpoint of the number 3 arm for support. Do not lift it.

51 Remove the mounting fasteners from the cover located in the boom storage area to access the number 3 and number 4 arm pivot pin retaining fasteners at the turntable riser.

52 Remove the pin retaining fasteners from the number 3 arm at the turntable riser. Do not remove the pin.

53 Use a slide hammer to remove the number 3 arm pivot pin from the turntable pivot through the access hole behind the ground control box.

54 Remove the number 3 arm from the machine.

**⚠WARNING** Crushing hazard. The number 3 arm could become unbalanced and fall when removed from the machine if not properly supported by the overhead crane.

55 Remove the upper and lower hose and cable covers from the number 3 arm.

56 Remove the secondary boom drive speed limit switch mounting fasteners from the number 4 arm at the mid-pivot end. Do not disconnect the wiring.

57 Remove the pin retaining fasteners from the number 4 arm at the turntable riser. Do not remove the pin.

58 Attach a lifting strap from the overhead crane to the center point of the number 4 arm. Do not lift it.

59 Use a slide hammer to remove the number 4 arm from the turntable riser through the ground controls side bulkhead.

60 Remove the number 4 arm from the machine.

**⚠WARNING** Crushing hazard. The number 4 arm could become unbalanced and fall when removed from the machine if not properly supported by the overhead crane.

https://truckmanualshub.com/



## 5-2
## Secondary Boom Lift Cylinders

There are two secondary boom lift cylinders incorporated in the structure of the secondary boom assembly. These cylinders operate in parallel and require hydraulic pressure to extend and retract. Each secondary boom lift cylinder is equipped with a counterbalance valve to prevent movement in the event of a hydraulic line failure.

## How to Remove a Secondary Boom Lift Cylinder

**WARNING** Bodily injury hazard. This procedure requires specific repair skills, lifting equipment and a suitable workshop. Attempting this procedure without these skills and tools could result in death or serious injury and significant component damage. Dealer service is strongly recommended.

**NOTICE** When removing a hose assembly or fitting, the O-ring (if equipped) on the fitting and/or the hose end must be replaced. All connections must be torqued to specification during installation. Refer to Section 2, *Hydraulic Hose and Fitting Torque Specifications*.

1 Lower the secondary boom to the stowed position.

2 Raise the primary boom so that it is above the secondary boom lift cylinder rod-end pivot pin.

3 Tag, disconnect and plug the hydraulic hoses on the secondary boom lift cylinder.

**WARNING** Bodily injury hazard. Spraying hydraulic oil can penetrate and burn skin. Loosen hydraulic connections very slowly to allow the oil pressure to dissipate gradually. Do not allow oil to squirt or spray.

4 Remove the pin retaining fasteners from the secondary boom lift cylinder rod-end pivot pin and barrel-end pivot pin. Do not remove the pins.

5 Attach a strap from an overhead crane to the lug on the rod end of the secondary boom lift cylinder for support. Do not apply any lifting pressure.

6 Use a soft metal drift to drive the barrel-end pivot pin half way out. Lower the barrel end of the secondary boom lift cylinder and let it hang down.

7 Use a soft metal drift to drive the rod-end pivot pin half way out.

8 Remove the secondary boom lift cylinder from the machine.

**WARNING** Crushing hazard. The secondary boom lift cylinder could become unbalanced and fall when removed from the machine if not properly attached to the overhead crane.

**CAUTION** Component damage hazard. When removing a secondary boom lift cylinder from the machine, be careful not to damage the counterbalance valve at the barrel end of the cylinder.

https://truckmanualshub.com/



# Engines

REV B

## 6-1 RPM Adjustment - Ford and Deutz Models

Refer to Maintenance Procedure B-9, *Check and Adjust the Engine RPM - All Models.*

## 6-2 RPM Adjustment - Perkins Models

Refer to Maintenance Procedure B-9, *Check and Adjust the Engine RPM - All Models.*

## 6-3 Flex Plate

The flex plate acts as a coupler between the engine and the pump. It is bolted to the engine flywheel and has a splined center to drive the pump.

### How to Remove the Flex Plate

1 Disconnect the positive battery cable from the battery.

**WARNING** Electrocution hazard. Contact with electrically charged circuits could result in death or serious injury. Remove all rings, watches and other jewelry.

2 Disconnect the electrical connectors at the electrical proportional controller, located on the drive pump.

**Ford LRG-425 EFI and Perkins models:**

3 Remove the engine starter mounting fasteners. Remove the starter from the engine. Do not disconnect the wiring.

4 Support the drive pump with an appropriate lifting device. Then remove all of the bell housing to engine mounting bolts. Leave the pump connected to the bell housing.

https://truckmanualshub.com/



5 Carefully pull the pump and bell housing away from the engine and secure it from moving.

**CAUTION** Component damage hazard. Hoses can be damaged if they are kinked or pinched.

6 Remove the flex plate mounting fasteners, then remove the flex plate from the engine flywheel.

**Ford DSG-423 EFI models:**

3 Support the drive pump assembly with an overhead crane or other suitable lifting device. Do not apply any lifting pressure.

4 Remove the drive pump retaining fasteners.

5 Carefully pull the drive pump out until the pump coupler separates from the flex plate.

**CAUTION** Component damage hazard. Hoses can be damaged if they are kinked or pinched.

6 Disconnect the electrical connector from the oxygen sensor at the tailpipe. Do not remove the oxygen sensor.

7 Support the muffler and bracket assembly with a suitable lifting device.

8 Remove the exhaust pipe fasteners at the muffler.

9 Remove the muffler bracket mounting fasteners from the bell housing. Carefully remove the muffler and bracket assembly from the engine.

10 Support the engine with an overhead crane or other suitable lifting device. Do not lift it.

11 Remove the engine mounting plate to bell housing fasteners.

12 Raise the engine slightly using the overhead crane and place a block of wood under the oil pan for support.

13 Remove all of the engine bell housing retaining fasteners.

14 Carefully remove the bell housing from the engine.

15 Remove the flex plate mounting fasteners. Remove the flex plate from the flywheel.

https://truckmanualshub.com/



## How to Install the Flex Plate

1 Install the flex plate onto the engine flywheel with the raised spline towards the pump.

2 **Ford models:** Torque the flex plate mounting bolts in sequence to 14 ft-lbs / 19 Nm. Then torque the flex plate mounting bolts in sequence to 20 ft-lbs / 27 Nm.

**Deutz models:** Torque the flex plate mounting bolts in sequence to 28 ft-lbs / 38 Nm. Then torque the flex plate mounting bolts in sequence to 40 ft-lbs / 54 Nm.

**Perkins models:** Torque the flex plate mounting bolts in sequence to 49 ft-lbs / 66 Nm. Then torque the flex plate mounting bolts in sequence to 70 ft-lbs / 95 Nm.

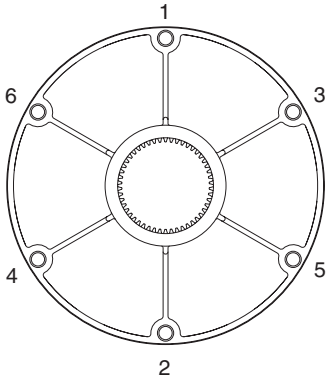


Ford and Deutz models

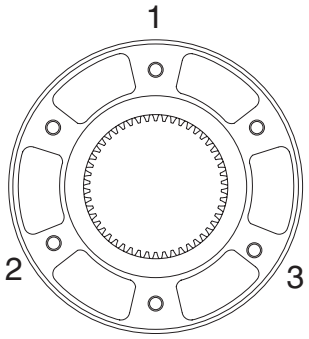


Perkins models

3 Install the pump coupler onto the pump shaft with the set screw toward the pump. Leave the appropriate gap between coupler and pump end plate for your engine.

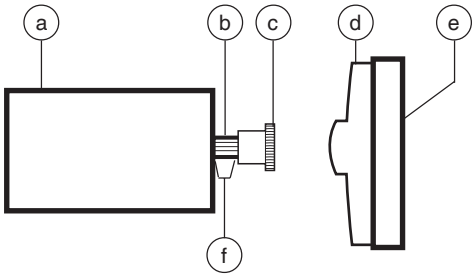


a pump
b pump shaft
c pump coupler
d flex plate with raised spline
e engine flywheel
f 3/16 inch / 4.8 mm gap - Diesel Models
1/16 inch / 1.5 mm gap - Ford LRG-425
0.080 inch / 2 mm gap - Ford DSG-423

4 Apply Loctite® removable thread sealant to the pump coupler set screw. Torque the set screw to 61 ft-lbs / 83 Nm.

https://truckmanualshub.com/



5 Install the pump and bell housing assembly.

**Ford LRG-425 and Deutz models:** Torque the bell housing mounting bolts labeled "C" in sequence to 28 ft-lbs / 38 Nm. Then torque the bell housing mounting bolts labeled "C" in sequence to 40 ft-lbs / 54 Nm.

**Ford DSG-423 models:** Torque the bell housing mounting bolts labeled "A" and "B" in sequence to 28 ft-lbs / 38 Nm and the mounting bolts labeled "C" to 49 ft-lbs / 66 Nm. Then torque the bell housing mounting bolts labeled "A" and "B" in sequence to 40 ft-lbs / 54 Nm and the mounting bolts labeled "C" to 70 ft-lbs / 95 Nm.

**Perkins models:** Torque the bell housing mounting bolts labeled "B" in sequence to 28 ft-lbs / 38 Nm and the mounting bolts labeled "A" to 49 ft-lbs / 66 Nm. Then torque the bell housing mounting bolts labeled "B" in sequence to 40 ft-lbs / 54 Nm and the mounting bolts labeled "A" to 70 ft-lbs / 95 Nm.

**CAUTION** Component damage hazard. When installing the pump, do not force the pump coupler into the flexplate or damage to the pump shaft seal may occur.

**CAUTION** Component damage hazard. Do not force the drive pump during installation or the flex plate teeth may become damaged.

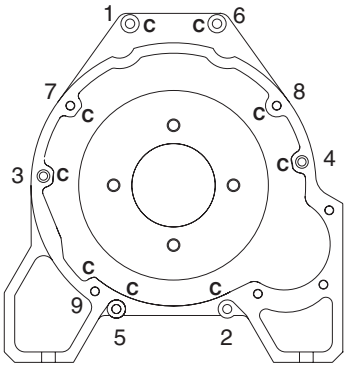


Ford LRG-425 EFI models

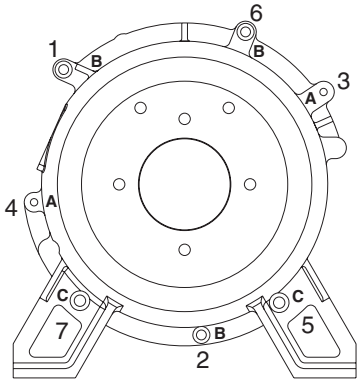


Ford DSG-423 EFI models

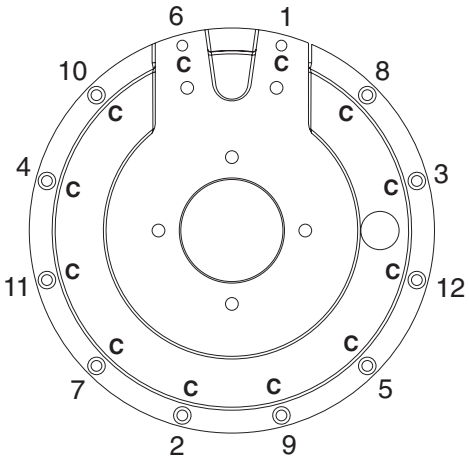


Deutz models

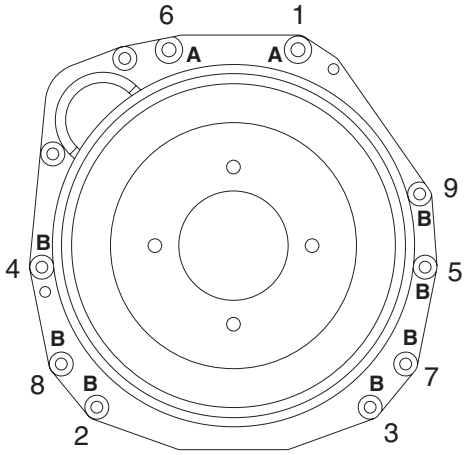


Perkins models

https://truckmanualshub.com/



# 6-4
# Engine Fault Codes - Ford Models

## How to Retrieve Engine Fault Codes

The ECM constantly monitors the engine by the use of sensors on the engine. The ECM also uses signals from the sensors to initiate sequential fuel injection and make constant and instantaneous changes to ignition timing, fuel delivery and throttle position to maintain the engine's running condition at its highest efficiency while at the same time keeping exhaust emissions to a minimum. When a sensor fails or returns signals that are outside of set parameters, the ECM will store a fault code in memory that relates to the appropriate sensor and will turn on the Check Engine Light.

Refer to Section 5, *How to Retrieve Engine Fault Codes* for your specific model of engine. Use the Fault Code Chart within Section 5 to aid in identifying the fault.

https://truckmanualshub.com/



# Hydraulic Pumps

REV B

## 7-1 Lift/Steer Pump

### How to Remove the Lift/Steer Pump

**NOTICE** When removing a hose assembly or fitting, the O-ring (if equipped) on the fitting and/or the hose end must be replaced. All connections must be torqued to specification during installation. Refer to Section 2, *Hydraulic Hose and Fitting Torque Specifications*.

1 **Models without hydraulic tank shut-off valves:** Remove the drain plug from the hydraulic tank and completely drain the tank into a container of suitable capacity. Refer to Section 2, *Specifications*.

**Models with hydraulic tank shut-off valves:** Locate the two hydraulic tank valves at the hydraulic tank through the access hole underneath the turntable. Close the valves.

**CAUTION** Component damage hazard. The engine must not be started with the hydraulic tank shut-off valves in the closed position or component damage will occur. If the tank valves are closed, remove the key from the key switch and tag the machine to inform personnel of the condition.

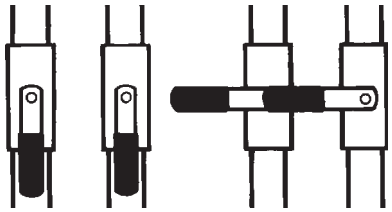

open closed

2 Tag, disconnect and plug the lift/steer pump hydraulic hoses. Cap the fittings on the pump.

**⚠WARNING** Bodily injury hazard. Spraying hydraulic oil can penetrate and burn skin. Loosen hydraulic connections very slowly to allow the oil pressure to dissipate gradually. Do not allow oil to squirt or spray.

3 Remove the pump mounting bolts. Carefully remove the pump.

**Models without hydraulic tank shut-off valves:**

**CAUTION** Component damage hazard. Be sure to fill the hydraulic tank to specification and prime the pump after installing the pump.

**Models with hydraulic tank shut-off valves:**

**CAUTION** Component damage hazard. Be sure to open the two hydraulic tank valves and prime the pump after installing the pump.

https://truckmanualshub.com/



## 7-2 Drive Pump

The drive pump is a bi-directional variable displacement piston pump. The pump output is controlled by the electro-proportional controller, located on the pump. The only adjustment that can be made to the pump is the neutral or null adjustment. Any internal service to the pump should only be performed at an authorized Eaton Hydraulics center. Call Genie Industries Service Department to locate your local authorized service center.

## How to Remove the Drive Pump

**CAUTION** Component damage hazard. The work area and surfaces where this procedure will be performed must be clean and free of debris that could get into the hydraulic system and cause severe component damage. Dealer service is recommended.

**NOTICE** When removing a hose assembly or fitting, the O-ring (if equipped) on the fitting and/or the hose end must be replaced. All connections must be torqued to specification during installation. Refer to Section 2, *Hydraulic Hose and Fitting Torque Specifications*.

1 Disconnect the electrical connectors at the electrical proportional controller located on the drive pump.

2 **Models without hydraulic tank shut-off valves:** Remove the drain plug from the hydraulic tank and completely drain the tank into a suitable container. See capacity specifications.

**Models with hydraulic tank shut-off valves:** Locate the two hydraulic tank valves at the hydraulic tank through the access hole underneath the turntable. Close the valves.

**CAUTION** Component damage hazard. The engine must not be started with the hydraulic tank shut-off valves in the closed position or component damage will occur. If the tank valves are closed, remove the key from the key switch and tag the machine to inform personnel of the condition.

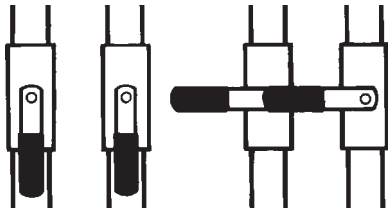


3 Tag and disconnect and plug the hydraulic hoses from the drive and lift/steer pumps. Cap the fittings on the pumps.

**⚠WARNING** Bodily injury hazard. Spraying hydraulic oil can penetrate and burn skin. Loosen hydraulic connections very slowly to allow the oil pressure to dissipate gradually. Do not allow oil to squirt or spray.

https://truckmanualshub.com/



4 Support the pump with a lifting device and remove the two drive pump mounting fasteners.

5 Carefully pull the drive pump out until the pump coupler separates from the flex plate.

6 Remove the drive pump from the machine.

**CAUTION** Component damage hazard. The hydraulic pump may become unbalanced and fall if not properly supported.

**CAUTION** Component damage hazard. When installing the pump, do not force the pump coupler into the flexplate or damage to the pump shaft seal may occur.

**Models without hydraulic tank shut-off valves:**

**CAUTION** Component damage hazard. Be sure to fill the hydraulic tank to specification and prime the pump after installing the pump.

**Models with hydraulic tank shut-off valves:**

**CAUTION** Component damage hazard. Be sure to open the two hydraulic tank valves and prime the pump after installing the pump.

## How to Prime the Pump

1 Connect a 0 to 600 psi / 0 to 41 bar pressure gauge to the test port on the drive pump.

2 Remove the safety pin (if equipped) from the engine pivot plate latch.

**NOTICE** The engine pivot plate latch is located under the engine turntable pivot plate at the counterweight end of the machine.

3 Open the engine pivot plate latch and swing the engine pivot plate out and away from the machine.

4 **Ford models:** Close the valve on the LPG tank then disconnect the hose from the tank. Then move the fuel select switch to the LPG position.

**Perkins models:** Disconnect the engine wiring harness from the fuel solenoid at the injector pump.

**Deutz models:** Hold the manual fuel shutoff valve clockwise to the closed position.

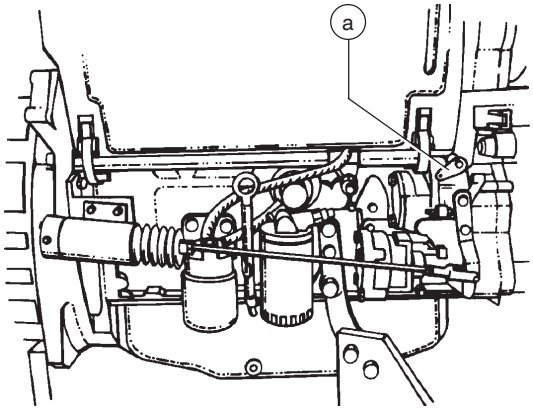


a manual fuel shutoff valve

https://truckmanualshub.com/



5 Have another person crank the engine with the starter motor for 15 seconds, wait 15 seconds, then crank the engine an additional 15 seconds or until the pressure reaches 320 psi / 22 bar.

6 **Ford models:** Connect the LPG hose to the LPG tank and open the valve on the tank.

**Perkins models:** Connect the engine wiring harness to the fuel solenoid.

7 Start the engine from the ground controls and check for hydraulic leaks.

https://truckmanualshub.com/



# Manifolds

REV E

## 8-1
## Function Manifold Components (before serial number 27001)

The function manifold is located next to the hydraulic tank underneath the ground controls side cover.

| Index No. | Description | Schematic Item | Function | Torque |
|---|---|---|---|---|
| 1 | Proportional directional solenoid valve, 3 position 4 way | A | Secondary boom up/down | 16-20 ft-lbs / 22-27 Nm |
| 2 | Solenoid valve, 3 position 4 way | B | Steer left/right | 25 ft-lbs / 34 Nm |
| 3 | Proportional directional solenoid valve, 3 position 4 way | C | Turntable rotate left/right | 16-20 ft-lbs / 22-27 Nm |
| 4 | Proportional directional solenoid valve, 3 position 4 way | D | Primary boom up/down | 16-20 ft-lbs / 22-27 Nm |
| 5 | Solenoid valve, 2 position 3 way | E | Primary boom extend | 20 ft-lbs / 27 Nm |
| 6 | Solenoid valve, 3 position 4 way | F | Platform rotate left/right and jib boom up/down (Z-45/25J) | 25 ft-lbs / 34 Nm |
| 7 | Solenoid valve, 2 position 3 way | G | Primary boom retract | 20 ft-lbs / 27 Nm |
| 8 | Solenoid valve, 3 position 4 way | H | Platform level up/down | 25 ft-lbs / 34 Nm |
| 9 | Check valve, dual pilot operated | I | Platform level circuit | 20 ft-lbs / 27 Nm |
| 10 | Check valve | J | Differential sensing circuit, platform rotate right and jib boom up (Z-45/25J) | 12-14 ft-lbs / 16-19 Nm |
| 11 | Check valve | K | Differential sensing circuit, platform rotate left and jib boom down (Z-45/25J) | 12-14 ft-lbs / 16-19 Nm |
| 12 | Differential sensing valve | L | Meters flow to functions | 25 ft-lbs / 34 Nm |
| 13 | Check valve | M | Differential sensing circuit, secondary boom down | 12-14 ft-lbs / 16-19 Nm |
| 14 | Check valve | N | Differential sensing circuit, secondary boom up | 12-14 ft-lbs / 16-19 Nm |
| 15 | Priority flow regulator valve, 1.5 gpm / 5.7 L/min | O | Steer circuit | 25 ft-lbs / 34 Nm |
| 16 | Relief valve, 3200 psi / 220.6 bar | P | System relief | 20 ft-lbs / 27 Nm |
| 17 | Flow regulator valve, 0.1 gpm / 0.38 L/min | Q | Primary boom load sense circuit | 20 ft-lbs / 27 Nm |
| 18 | Shuttle valve | R | Primary boom circuit | 4-5 ft-lbs / 5-7 Nm |
| 19 | Flow regulator valve, 2 gpm / 7.6 L/min | S | Boom extend/retract circuit | 20 ft-lbs / 27 Nm |
| 20 | Flow regulator valve, 0.4 gpm / 1.5 L/min | T | Jib boom and platform rotate circuit | 20 ft-lbs / 27 Nm |

**This list continues. Please turn the page.**

https://truckmanualshub.com/



REV E MANIFOLDS

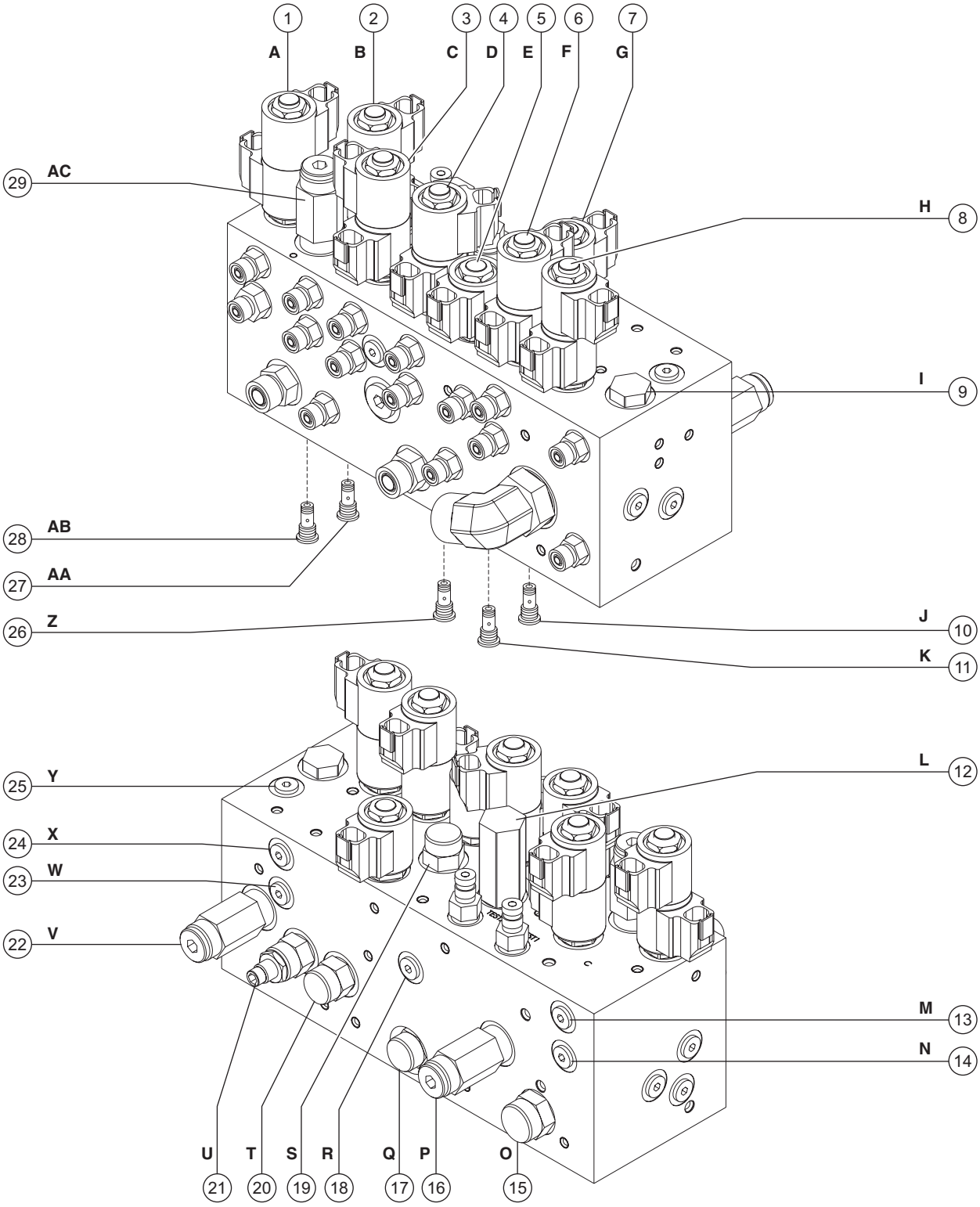

https://truckmanualshub.com/



## Function Manifold Components (before serial number 27001), continued

| Index No. | Description | Schematic Item | Function | Torque |
|---|---|---|---|---|
| 21 | Needle valve | U | Platform level flow control | 20 ft-lbs / 27 Nm |
| 22 | Relief valve, 2500 psi / 172 bar | V | Platform level circuit | 25 ft-lbs / 34 Nm |
| 23 | Check valve | W | Differential sensing circuit, platform level up | 12-14 ft-lbs / 16-19 Nm |
| 24 | Check valve | X | Differential sensing circuit, platform level down | 12-14 ft-lbs / 16-19 Nm |
| 25 | Shuttle valve | Y | Platform level circuit | 4-5 ft-lbs / 5-7 Nm |
| 26 | Check valve | Z | Differential sensing circuit, boom retract | 12-14 ft-lbs / 16-19 Nm |
| 27 | Check valve | AA | Differential sensing circuit, turntable rotate right | 12-14 ft-lbs / 16-19 Nm |
| 28 | Check valve | AB | Differential sensing circuit, turntable rotate left | 12-14 ft-lbs / 16-19 Nm |
| 29 | Relief valve, 2100 psi / 145 bar | AC | Secondary boom down | 25 ft-lbs / 34 Nm |

https://truckmanualshub.com/



REV E MANIFOLDS

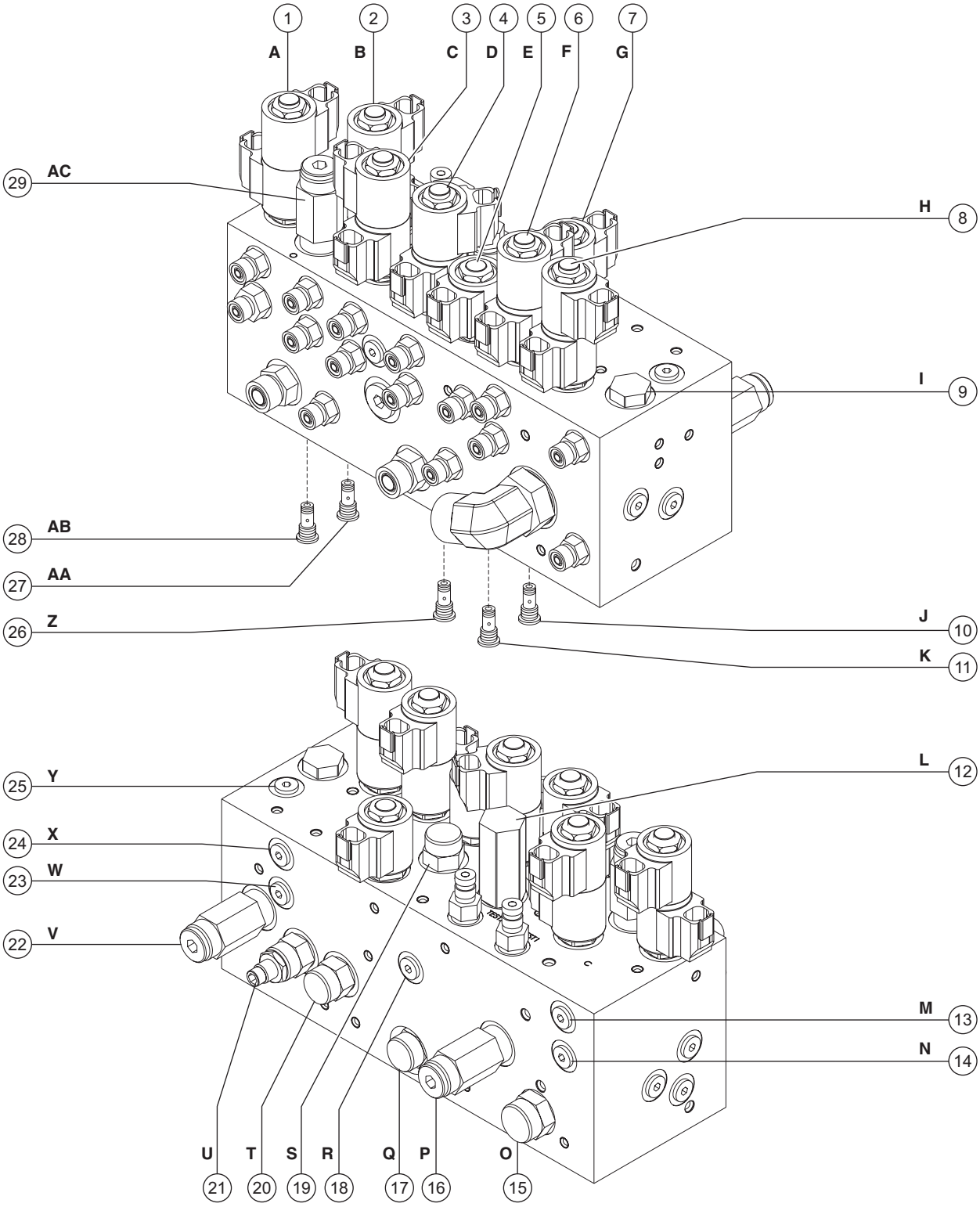

https://truckmanualshub.com/



# 8-2 Valve Adjustments - Function Manifold (before serial number 27001)

## How to Adjust the System Relief Valve

**NOTICE** Perform this procedure with the boom in the stowed position.

1 Connect a 0 to 5000 psi / 0 to 350 bar pressure gauge to the TEST1 port on the function manifold.

2 Start the engine from the ground controls.

3 Hold the function enable switch to the high rpm position and activate and hold the primary boom retract switch with the boom fully retracted.

4 Observe the pressure reading on the pressure gauge. Refer to Section 2, *Specifications.*

5 Turn the engine off. Use a wrench to hold the relief valve and remove the cap (item P).

6 Adjust the internal hex socket. Turn it clockwise to increase the pressure or counterclockwise to decrease the pressure. Install the relief valve cap.

**⚠WARNING** Tip-over hazard. Do not adjust the relief valve higher than specified.

7 Repeat steps 2 through 5 and recheck relief valve pressure.

8 Remove the pressure gauge.

## How to Adjust the Secondary Boom Down Relief Valve

**NOTICE** Perform this procedure with the boom in the stowed position.

1 Connect a 0 to 5000 psi / 0 to 350 bar pressure gauge to the TEST1 port on the function manifold.

2 Start the engine from the ground controls.

3 Hold the function enable switch to the high rpm position and activate and hold the secondary boom down switch with the secondary boom fully lowered.

4 Observe the pressure reading on the pressure gauge. Refer to Section 2, *Specifications.*

5 Turn the engine off. Use a wrench to hold the relief valve and remove the cap (item AC).

6 Adjust the internal hex socket. Turn it clockwise to increase the pressure or counterclockwise to decrease the pressure. Install the relief valve cap.

**⚠WARNING** Tip-over hazard. Do not adjust the relief valve higher than specified.

7 Repeat steps 2 through 5 and recheck relief valve pressure.

8 Remove the pressure gauge.

https://truckmanualshub.com/



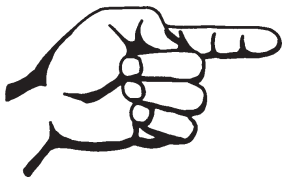

This page intentionally left blank.

https://truckmanualshub.com/



# 8-3
# Function Manifold Components (after serial number 27000)

The function manifold is located next to the hydraulic tank underneath the ground controls side cover.

| Index No. | Description | Schematic Item | Function | Torque |
|---|---|---|---|---|
| 1 | Solenoid valve, 3 position 4 way | BM | Platform level up/down | 25 ft-lbs / 34 Nm |
| 2 | Solenoid valve, 3 position 4 way | CG | Platform rotate left/right and jib boom up/down | 25 ft-lbs / 34 Nm |
| 3 | Flow regulator valve, 2 gpm / 7.6 L/min | BZ | Boom extend/retract circuit | 20 ft-lbs / 27 Nm |
| 4 | Solenoid valve, 2 position 3 way | CA | Primary boom extend | 20 ft-lbs / 27 Nm |
| 5 | Proportional directional solenoid valve, 3 position 4 way | BY | Primary boom up/down | 16-20 ft-lbs / 22-27 Nm |
| 6 | Differential sensing valve 160 psi / 11 bar | BG | Meters flow to functions | 25 ft-lbs / 34 Nm |
| 7 | Proportional directional solenoid valve, 3 position 4 way | BP | Turntable rotate left/right | 16-20 ft-lbs / 22-27 Nm |
| 8 | Proportional directional solenoid valve, 3 position 4 way | BU | Secondary boom up/down | 16-20 ft-lbs / 22-27 Nm |
| 9 | Solenoid valve, 3 position 4 way | BF | Steer left/right | 25 ft-lbs / 34 Nm |
| 10 | Relief valve, 2100 psi / 145 bar | BV | Secondary boom down | 20 ft-lbs / 27 Nm |
| 11 | Orifice, 0.046 inch / 1.17 mm | CF | Secondary boom down circuit | |
| 12 | Check valve, 5psi / 0.3 bar | BT | Differential sensing circuit, secondary boom down | 12-14 ft-lbs / 16-19 Nm |
| 13 | Check valve, 5psi / 0.3 bar | BW | Secondary boom circuit | 25 ft-lbs / 34 Nm |
| 14 | Check valve, 5psi / 0.3 bar | BS | Differential sensing circuit, secondary boom up | 12-14 ft-lbs / 16-19 Nm |
| 15 | Priority flow regulator valve, 1.5 gpm / 5.7 L/min | BB | Steer circuit | 25 ft-lbs / 34 Nm |
| 16 | Relief valve, 3200 psi / 220.6 bar | BA | System relief | 20 ft-lbs / 27 Nm |
| 17 | Shuttle valve | BO | Turntable rotate circuit | 12-14 ft-lbs / 16-19 Nm |
| 18 | Check valve, 5psi / 0.3 bar | BQ | Differential sensing circuit, turntable rotate | 12-14 ft-lbs / 16-19 Nm |
| 19 | Check valve, 5psi / 0.3 bar | CB | Differential sensing circuit, primary boom retract | 12-14 ft-lbs / 16-19 Nm |
| 20 | Check valve, 5psi / 0.3 bar | BC | Differential sensing circuit, platform rotate left and jib boom up | 25 ft-lbs / 34 Nm |

**This list continues. Please turn the page.**

https://truckmanualshub.com/



REV E MANIFOLDS

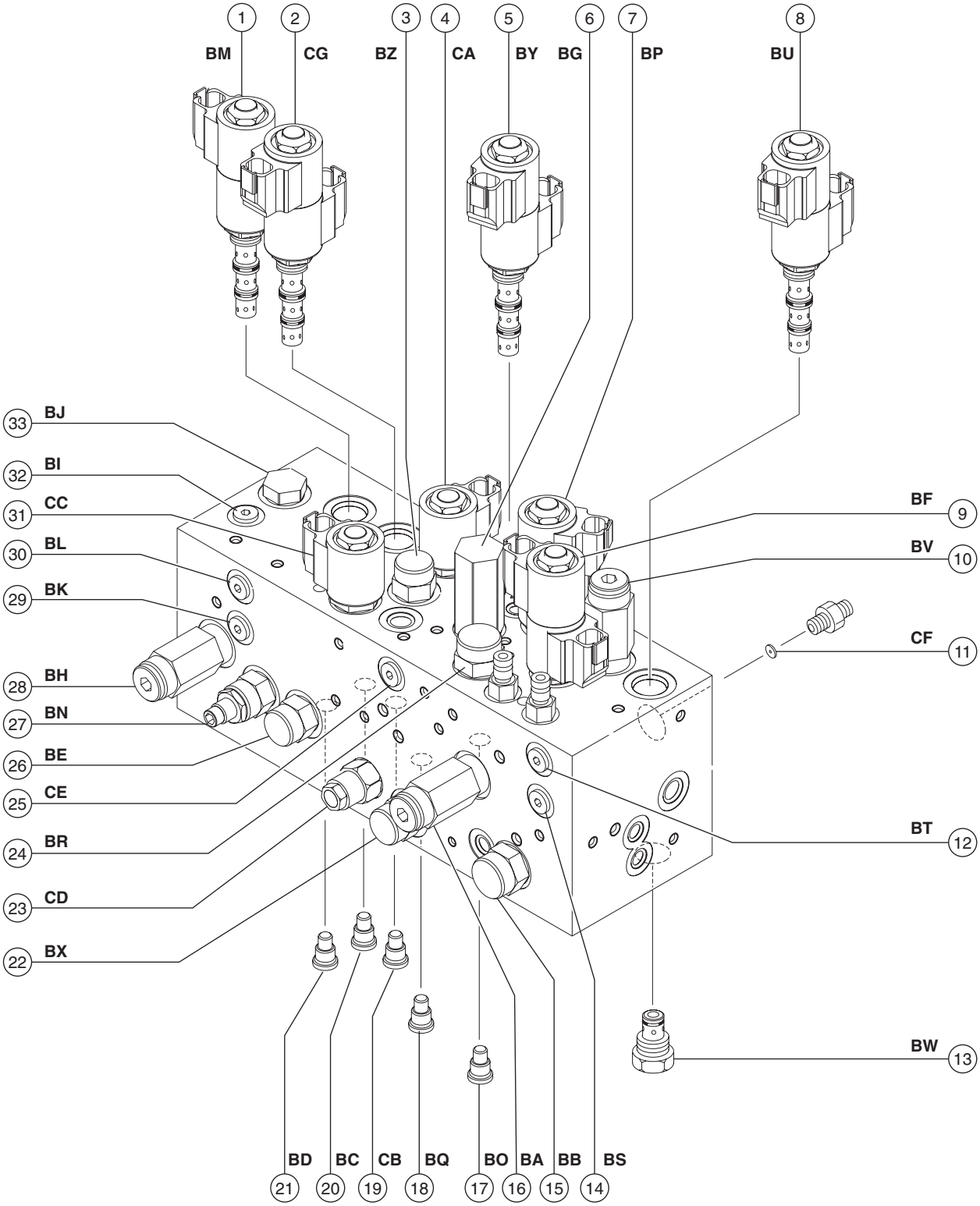

https://truckmanualshub.com/



## Function Manifold Components (after serial number 27000), continued

| Index No. | Description | Schematic Item | Function | Torque |
|---|---|---|---|---|
| 21 | Check valve, 5 psi / 0.3 bar | BD | Differential sensing circuit, platform rotate right and jib boom down | 25 ft-lbs / 34 Nm |
| 22 | Flow regulator valve, 0.1 gpm / 0.38 L/min | BX | Primary boom load sense circuit | 20 ft-lbs / 27 Nm |
| 23 | Counterbalance valve, 3000 psi / 207 bar | CD | Primary boom down circuit | 30-35 ft-lbs / 45-50 Nm |
| 24 | Pressure compensator valve, 80 psi / 5.5 bar | BR | Turntable rotate circuit | 25 ft-lbs / 34 Nm |
| 25 | Shuttle valve | CE | Differential sensing circuit, primary boom up/down | 12-14 ft-lbs / 16-19 Nm |
| 26 | Flow regulator valve, 0.4 gpm / 1.5 L/min | BE | Jib boom and platform rotate circuit | 20 ft-lbs / 27 Nm |
| 27 | Needle valve | BN | Platform level flow control | 20 ft-lbs / 27 Nm |
| 28 | Relief valve, 2500 psi / 172 bar | BH | Platform level circuit | 20 ft-lbs / 27 Nm |
| 29 | Check valve, 5psi / 0.3 bar | BK | Differential sensing circuit, platform level up | 12-14 ft-lbs / 16-19 Nm |
| 30 | Check valve, 5psi / 0.3 bar | BL | Differential sensing circuit, platform level down | 12-14 ft-lbs / 16-19 Nm |
| 31 | Solenoid valve, 2 position 3 way | CC | Primary boom retract | 20 ft-lbs / 27 Nm |
| 32 | Shuttle valve | BI | Platform level circuit | 12-14 ft-lbs / 16-19 Nm |
| 33 | Check valve, dual pilot operated, 135 psi / 9.3 bar | BJ | Platform level circuit | 20 ft-lbs / 27 Nm |

https://truckmanualshub.com/



REV E MANIFOLDS

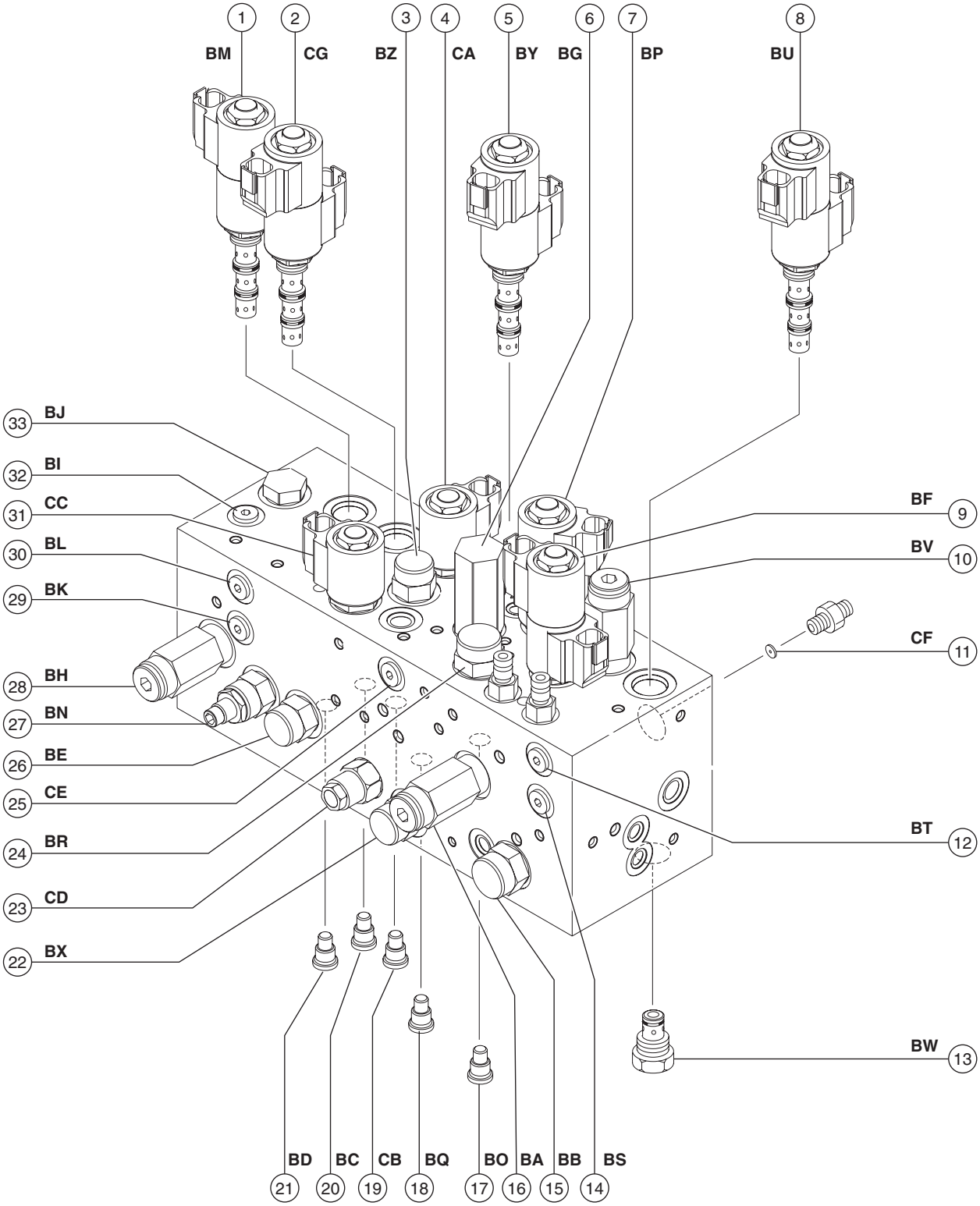

https://truckmanualshub.com/



# 8-4 Valve Adjustments - Function Manifold (after serial number 27000)

## How to Adjust the System Relief Valve

**NOTICE** Perform this procedure with the boom in the stowed position.

1 Connect a 0 to 5000 psi / 0 to 350 bar pressure gauge to the TEST1 port on the function manifold.

2 Start the engine from the ground controls.

3 Hold the function enable switch to the high rpm position and activate and hold the primary boom retract switch with the boom fully retracted.

4 Observe the pressure reading on the pressure gauge. Refer to Section 2, *Specifications.*

5 Turn the engine off. Use a wrench to hold the relief valve and remove the cap (item BA).

6 Adjust the internal hex socket. Turn it clockwise to increase the pressure or counterclockwise to decrease the pressure. Install the relief valve cap.

**⚠WARNING** Tip-over hazard. Do not adjust the relief valve higher than specified.

7 Repeat steps 2 through 5 and recheck relief valve pressure.

8 Remove the pressure gauge.

## How to Adjust the Secondary Boom Down Relief Valve

**NOTICE** Perform this procedure with the boom in the stowed position.

1 Connect a 0 to 5000 psi / 0 to 350 bar pressure gauge to the TEST1 port on the function manifold.

2 Start the engine from the ground controls.

3 Hold the function enable switch to the high rpm position and activate and hold the secondary boom down switch with the secondary boom fully lowered.

4 Observe the pressure reading on the pressure gauge. Refer to Section 2, *Specifications.*

5 Turn the engine off. Use a wrench to hold the relief valve and remove the cap (item BV).

6 Adjust the internal hex socket. Turn it clockwise to increase the pressure or counterclockwise to decrease the pressure. Install the relief valve cap.

**⚠WARNING** Tip-over hazard. Do not adjust the relief valve higher than specified.

7 Repeat steps 2 through 5 and recheck relief valve pressure.

8 Remove the pressure gauge.

https://truckmanualshub.com/



# 8-5
# Jib Boom / Platform Rotate Manifold Components (before serial number 27001)

The jib boom / platform rotate manifold is mounted to the platform support.

| Index No. | Description | Schematic Item | Function | Torque |
|---|---|---|---|---|
| 1 | Solenoid valve, 2 position 3 way | AD | Platform rotate/jib boom select | 8-10 ft-lbs / 11-14 Nm |

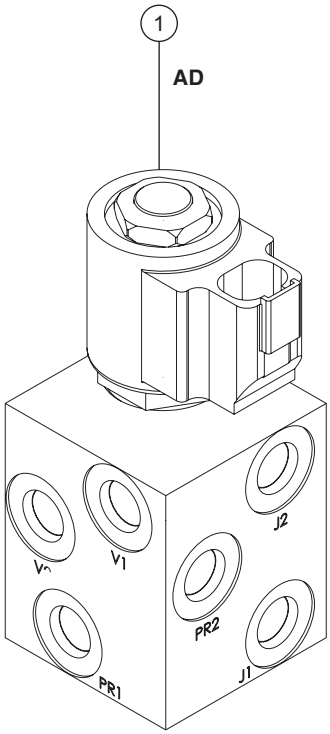

https://truckmanualshub.com/



# 8-6
# Jib Boom / Platform Rotate Manifold Components (after serial number 27000)

The jib boom / platform rotate manifold is mounted to the platform support.

| Index No. | Description | Schematic Item | Function | Torque |
|---|---|---|---|---|
| 1 | Solenoid valve, 2 position 3 way | G | Platform rotate/jib boom select | 8-10 ft-lbs / 11-14 Nm |

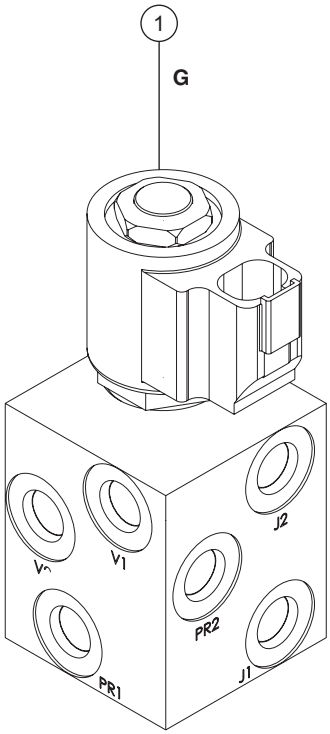

https://truckmanualshub.com/



# 8-7
# Turntable Rotation Manifold Components (before serial number 27001)

The turntable rotation manifold is mounted to the turntable rotation motor located in the boom storage compartment.

| Index No. | Description | Schematic Item | Function |
|---|---|---|---|
| 1 | Counterbalance valve | MM | Turntable rotate right |
| 2 | Counterbalance valve | NN | Turntable rotate left |

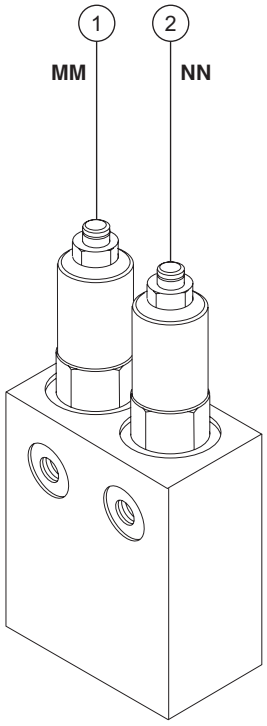

https://truckmanualshub.com/



# 8-8
# Turntable Rotation Manifold Components (after serial number 27000)

The turntable rotation manifold is mounted to the turntable rotation motor located in the boom storage compartment.

| Index No. | Description | Schematic Item | Function |
|---|---|---|---|
| 1 | Counterbalance valve | L | Turntable rotate right |
| 2 | Counterbalance valve | J | Turntable rotate left |

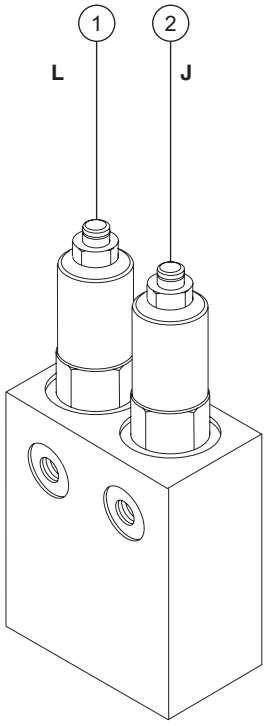

https://truckmanualshub.com/



## 8-9
## Directional Valve Manifold Components

The directional valve manifold is mounted inside the drive chassis at the non-steer end.

| Index No. | Description | Function | Torque |
|---|---|---|---|
| 1 | Cap | Breather | 20-25 ft-lbs / 27-33 Nm |
| 2 | Spool valve | Directional control | |

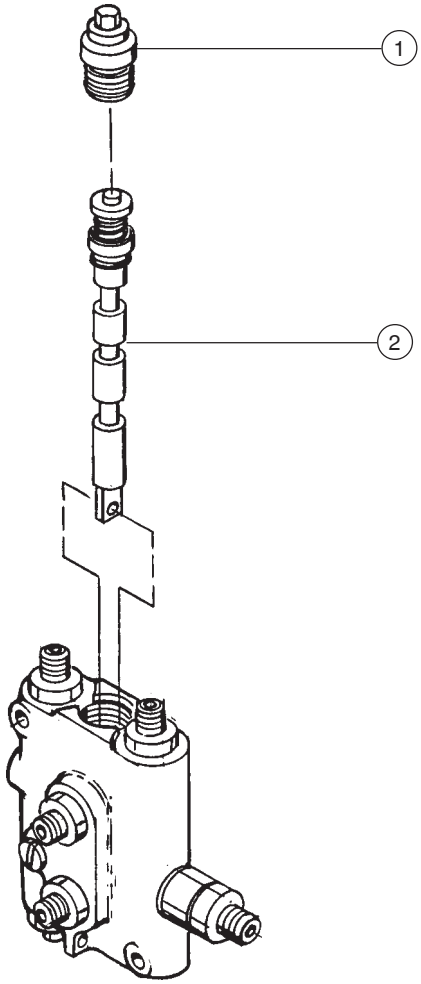

https://truckmanualshub.com/



## How to Set Up the Directional Valve Linkage

**NOTICE** Adjustment of the directional valve linkage is only necessary when the linkage or valve has been replaced.

1 Lower the boom to the stowed position.

2 Use a "bubble type" level to be sure the floor is completely level.

**⚠WARNING** Tip-over hazard. Failure to perform this procedure on a level floor could compromise the stability of the machine resulting in the machine tipping over.

3 Check the tire pressure in all four tires and add air if needed to meet specification.

4 Remove the drive chassis cover and the non-steer axle covers.

5 Place a "bubble type" level across the drive chassis non-steer end. Check to be sure the drive chassis is completely level.

6 To level the drive chassis, start the engine and loosen the lock nuts on both sides of the urethane cushions.

7 Push up or pull down on the threaded rod until the machine is completely level.

8 Verify that the ground and drive chassis are completely level.

9 Tighten the nuts on both sides of the urethane cushions until they are snug. Tighten the locknuts.

10 Check to be sure the drive chassis is completely level.

11 Measure the distance between the drive chassis and the non-steer axle on both sides (from the inside of the drive chassis).

**NOTICE** If the distance is not equal and the adjustment to the linkage was completed with the ground and drive chassis level, repeat steps 6 through 10 OR consult Genie Industries Service Department.

https://truckmanualshub.com/



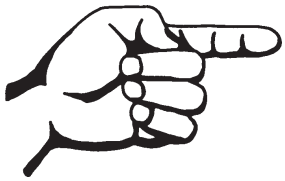

This page intentionally left blank.

https://truckmanualshub.com/



# 8-10
# Traction Manifold Components, 2WD (before serial number 27001)

The traction manifold is mounted inside the drive chassis at the non-steer end of the machine.

| Index No. | Description | Schematic Item | Function | Torque |
|---|---|---|---|---|
| 1 | Solenoid valve, 2 position 3 way | XX | Braking | 10-12 ft-lbs / 14-16 Nm |
| 2 | Relief valve, 250 psi / 17.2 bar | PP | Charge pressure circuit | 10-12 ft-lbs / 14-16 Nm |
| 3 | Flow divider/combiner valve | QQ | Controls flow to drive motors in forward and reverse | 25-30 ft-lbs / 34-41 Nm |
| 4 | Orifice, 0.070 in / 1.78 mm | RR | Drive circuit | |
| 5 | Check valve | SS | Drive circuit | 25-30 ft-lbs / 34-41 Nm |
| 6 | Check valve | TT | Drive circuit | 25-30 ft-lbs / 34-41 Nm |
| 7 | Shuttle valve, 3 position 3 way | UU | Charge pressure circuit that directs hot oil out of low pressure side of drive pump and allows low pressure flow path for brake release and 2-speed motor shift | 15-18 ft-lbs / 20-24 Nm |
| 8 | Diagnostic fitting | VV | Testing | |
| 9 | Orifice, 0.030 in / 0.76 mm | WW | Brake circuit | |
| 10 | Solenoid valve, 2 position 3 way | OO | 2-speed motor shift | 10-12 ft-lbs / 14-16 Nm |

https://truckmanualshub.com/



REV E MANIFOLDS

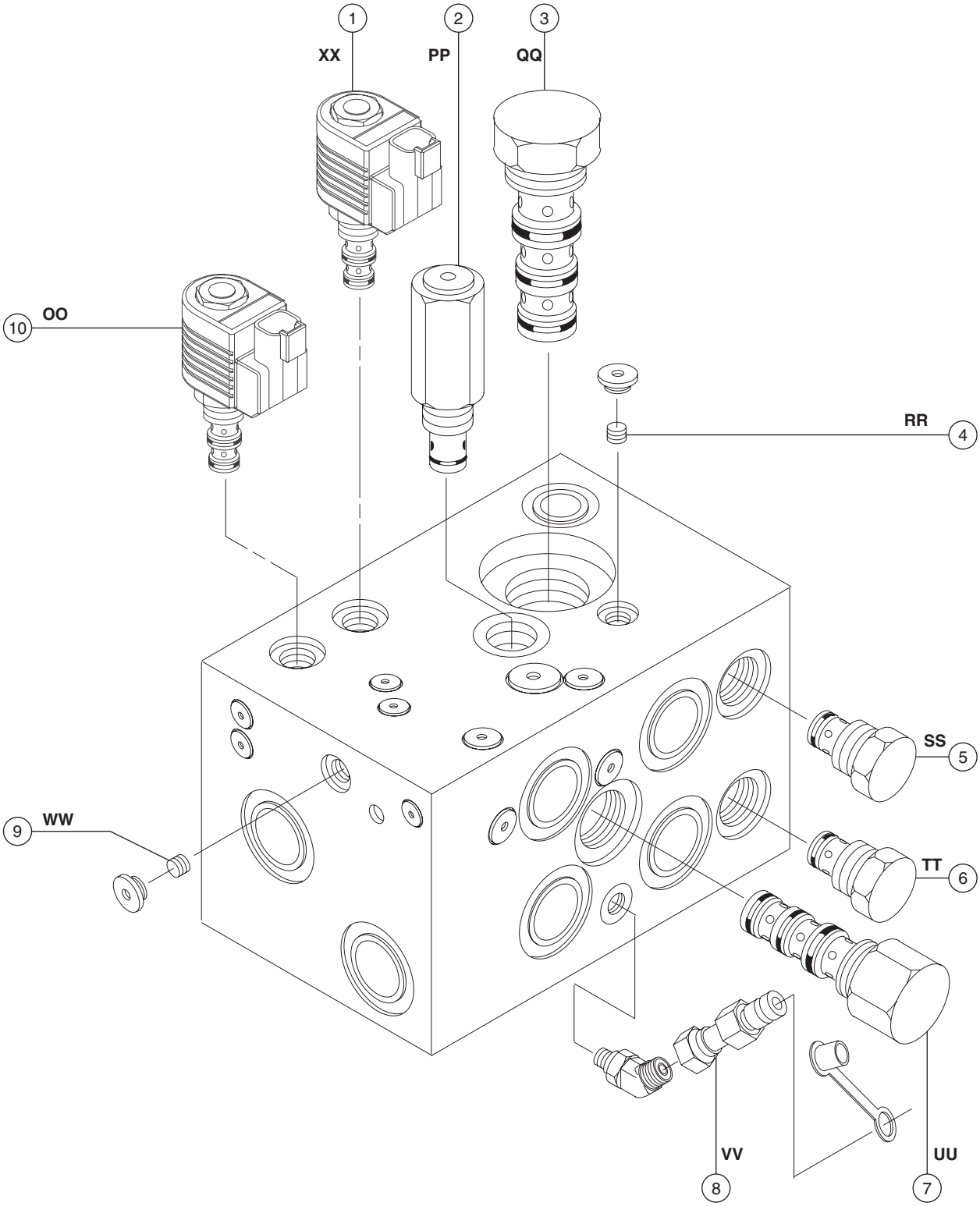

https://truckmanualshub.com/



# 8-11
# Traction Manifold Components, 2WD (after serial number 27000)

The traction manifold is mounted inside the drive chassis at the non-steer end of the machine.

| Index No. | Description | Schematic Item | Function | Torque |
|---|---|---|---|---|
| 1 | Solenoid valve, 2 position 3 way | AF | Braking | 10-12 ft-lbs / 14-16 Nm |
| 2 | Relief valve, 250 psi / 17.2 bar | AD | Charge pressure circuit | 10-12 ft-lbs / 14-16 Nm |
| 3 | Flow divider/combiner valve | U | Controls flow to drive motors in forward and reverse | 25-30 ft-lbs / 34-41 Nm |
| 4 | Orifice, 0.070 in / 1.78 mm | AL | Drive circuit | |
| 5 | Check valve | S | Drive circuit | 25-30 ft-lbs / 34-41 Nm |
| 6 | Check valve | AA | Drive circuit | 25-30 ft-lbs / 34-41 Nm |
| 7 | Shuttle valve, 3 position 3 way | R | Charge pressure circuit that directs hot oil out of low pressure side of drive pump and allows low pressure flow path for brake release and 2-speed motor shift | 15-18 ft-lbs / 20-24 Nm |
| 8 | Diagnostic fitting | | Testing | |
| 9 | Orifice, 0.030 in / 0.76 mm | AE | Brake circuit | |
| 10 | Solenoid valve, 2 position 3 way | AG | 2-speed motor shift | 10-12 ft-lbs / 14-16 Nm |

https://truckmanualshub.com/



REV E MANIFOLDS

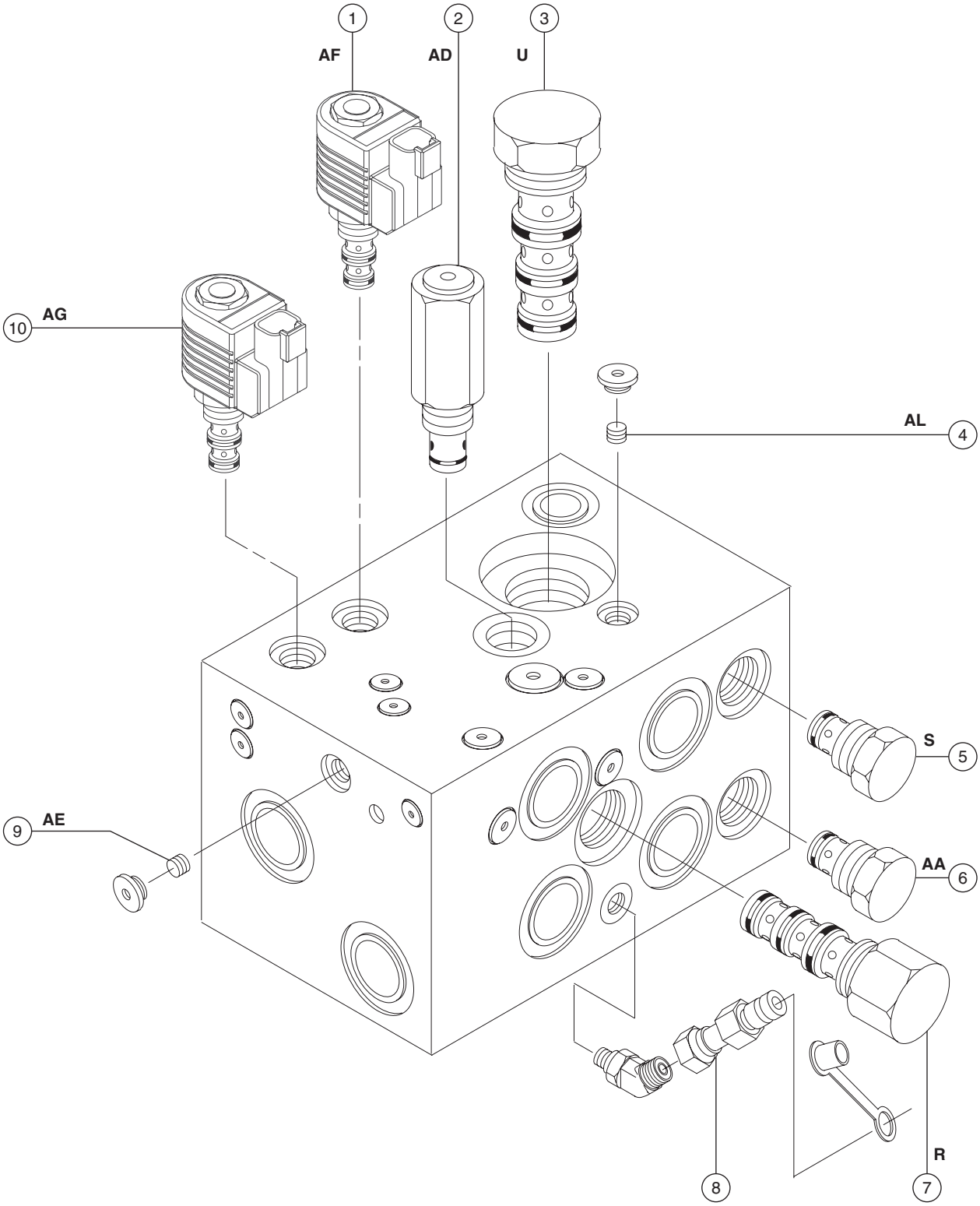

https://truckmanualshub.com/



# 8-12
# Valve Adjustments, 2WD Traction Manifold

## How to Adjust the Charge Pressure Relief Valve

1 Connect a 0 to 600 psi / 0 to 50 bar pressure gauge to the test port on the drive pump.

2 Hold the charge pressure relief valve and remove the cap (item PP or AD).

3 Turn the internal hex socket clockwise fully until it stops. Install the cap.

4 Start the engine and move and hold the function enable/rpm select toggle switch to the high rpm (rabbit symbol) position. Note the reading on the pressure gauge.

5 Turn the engine off.

6 Remove the pressure gauge from the drive pump. Connect the gauge to the test port located on the traction manifold.

7 Hold the charge pressure relief valve and remove the cap (item PP or AD).

8 Start the engine and move and hold the function enable/rpm select toggle switch to the high rpm (rabbit symbol) position.

9 Adjust the internal hex socket until the pressure reading on the gauge is 40 psi / 2.8 bar less than the pressure reading on the pump. Turn it clockwise to increase the pressure or counterclockwise to decrease the pressure. Install the valve cap.

10 Turn the engine off and remove the pressure gauge.

https://truckmanualshub.com/



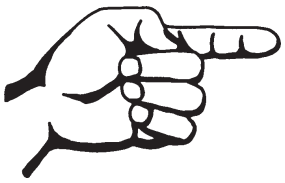

This page intentionally left blank.

https://truckmanualshub.com/



# 8-13
# Traction Manifold Components, 4WD (before serial number 27001)

The traction manifold is mounted inside the drive chassis at the non-steer end of the machine.

| Index No. | Description | Schematic Item | Function | Torque |
|---|---|---|---|---|
| 1 | Flow divider/combiner valve | AB | Controls flow to non-steer end drive motors in forward and reverse | 25-30 ft-lbs / 34-41 Nm |
| 2 | Bi-directional flow control valve, 2 gpm / 7.6 L/min | AC | Non-steer end drive motor circuit | 25-30 ft-lbs / 34-41 Nm |
| 3 | Bi-directional flow control valve, 1 gpm / 3.8 L/min | AD | Steer end drive motor circuit | 25-30 ft-lbs / 34-41 Nm |
| 4 | Directional control valve | AE | 2 speed motor shift circuit/ High speed bypass | 10-12 ft-lbs / 14-16 Nm |
| 5 | Diagnostic fitting | AF | Testing | |
| 6 | Shuttle valve, 3 position 3 way | AG | Charge pressure circuit that directs hot oil out of low pressure side of drive pump and allows low pressure flow path for brake release and 2-speed motor shift | 15-18 ft-lbs / 20-24 Nm |
| 7 | Relief valve, 250 psi / 17.2 bar | AH | Charge pressure circuit | 10-12 ft-lbs / 14-16 Nm |
| 8 | Solenoid valve, 2 position 3 way | AI | 2-speed motor shift | 10-12 ft-lbs / 14-16 Nm |
| 9 | Orifice, 0.030 inch / 0.76 mm | AJ | Brake and 2-speed motor shift circuit | |
| 10 | Solenoid valve, 2 position 3 way | AK | Braking | 10-12 ft-lbs / 14-16 Nm |
| 11 | Check valve | AL | 2 speed motor shift circuit | 10-12 ft-lbs / 14-16 Nm |
| 12 | Orifice, 0.025 inch / 0.64 mm | AM | 2 speed motor shift circuit | |
| 13 | Flow divider/combiner valve | AN | Controls flow to flow divider/combiner valves 1 and 17 | 25-30 ft-lbs / 34-41 Nm |
| 14 | Check valve | AO | Steer end drive motor circuit | 10-12 ft-lbs / 14-16 Nm |
| 15 | Orifice, 0.052 in / 1.32 mm | AP | Drive circuit | |
| 16 | Check valve | AQ | Steer end drive motor circuit | 10-12 ft-lbs / 14-16 Nm |
| 17 | Flow divider/combiner valve | AR | Controls flow to steer end drive motors in forward and reverse | 25-30 ft-lbs / 34-41 Nm |
| 18 | Check valve | AS | Non-steer end drive motor circuit | 10-12 ft-lbs / 14-16 Nm |
| 19 | Check valve | AT | Non-steer end drive motor circuit | 10-12 ft-lbs / 14-16 Nm |

https://truckmanualshub.com/



REV E MANIFOLDS

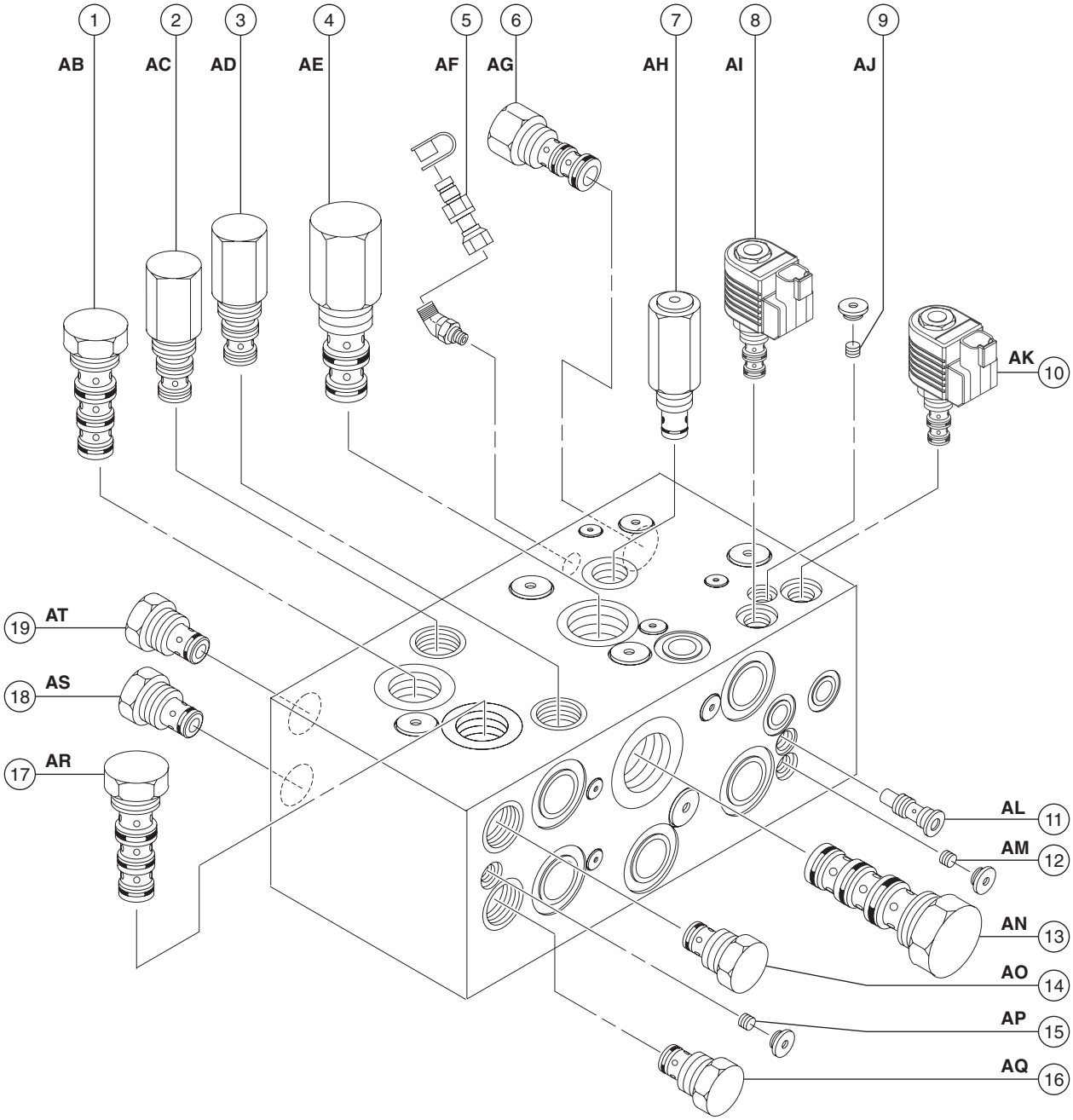

https://truckmanualshub.com/



# 8-14
# Traction Manifold Components, 4WD (after serial number 27000)

The traction manifold is mounted inside the drive chassis at the non-steer end.

| Index No. | Description | Schematic Item | Function | Torque |
|---|---|---|---|---|
| 1 | Flow divider/combiner valve | U | Controls flow to non-steer end drive motors in forward and reverse | 25-30 ft-lbs / 34-41 Nm |
| 2 | Bi-directional flow control valve, 2 gpm / 7.6 L/min | Z | Non-steer end drive motor circuit | 25-30 ft-lbs / 34-41 Nm |
| 3 | Bi-directional flow control valve, 1 gpm / 3.8 L/min | X | Steer end drive motor circuit | 25-30 ft-lbs / 34-41 Nm |
| 4 | Directional control valve | AV | 2 speed motor shift circuit/ High speed bypass | 10-12 ft-lbs / 14-16 Nm |
| 5 | Diagnostic fitting | | Testing | |
| 6 | Shuttle valve, 3 position 3 way | R | Charge pressure circuit that directs hot oil out of low pressure side of drive pump and allows low pressure flow path for brake release and 2-speed motor shift | 15-18 ft-lbs / 20-24 Nm |
| 7 | Relief valve, 250 psi / 17.2 bar | AD | Charge pressure circuit | 10-12 ft-lbs / 14-16 Nm |
| 8 | Solenoid valve, 2 position 3 way | AG | 2-speed motor shift | 10-12 ft-lbs / 14-16 Nm |
| 9 | Orifice, 0.030 inch / 0.76 mm | AE | Brake and 2-speed motor shift circuit | |
| 10 | Solenoid valve, 2 position 3 way | AF | Braking | 10-12 ft-lbs / 14-16 Nm |
| 11 | Check valve | AH | 2 speed motor shift circuit | 10-12 ft-lbs / 14-16 Nm |
| 12 | Orifice, 0.025 inch / 0.64 mm | AI | 2 speed motor shift circuit | |
| 13 | Flow divider/combiner valve | V | Controls flow to flow divider/combiner valves 1 and 17 | 25-30 ft-lbs / 34-41 Nm |
| 14 | Check valve | AC | Steer end drive motor circuit | 10-12 ft-lbs / 14-16 Nm |
| 15 | Orifice, 0.052 in / 1.32 mm | Y | Drive circuit | |
| 16 | Check valve | T | Steer end drive motor circuit | 10-12 ft-lbs / 14-16 Nm |
| 17 | Flow divider/combiner valve | W | Controls flow to steer end drive motors in forward and reverse | 25-30 ft-lbs / 34-41 Nm |
| 18 | Check valve | S | Non-steer end drive motor circuit | 10-12 ft-lbs / 14-16 Nm |
| 19 | Check valve | AA | Non-steer end drive motor circuit | 10-12 ft-lbs / 14-16 Nm |

https://truckmanualshub.com/



REV E MANIFOLDS

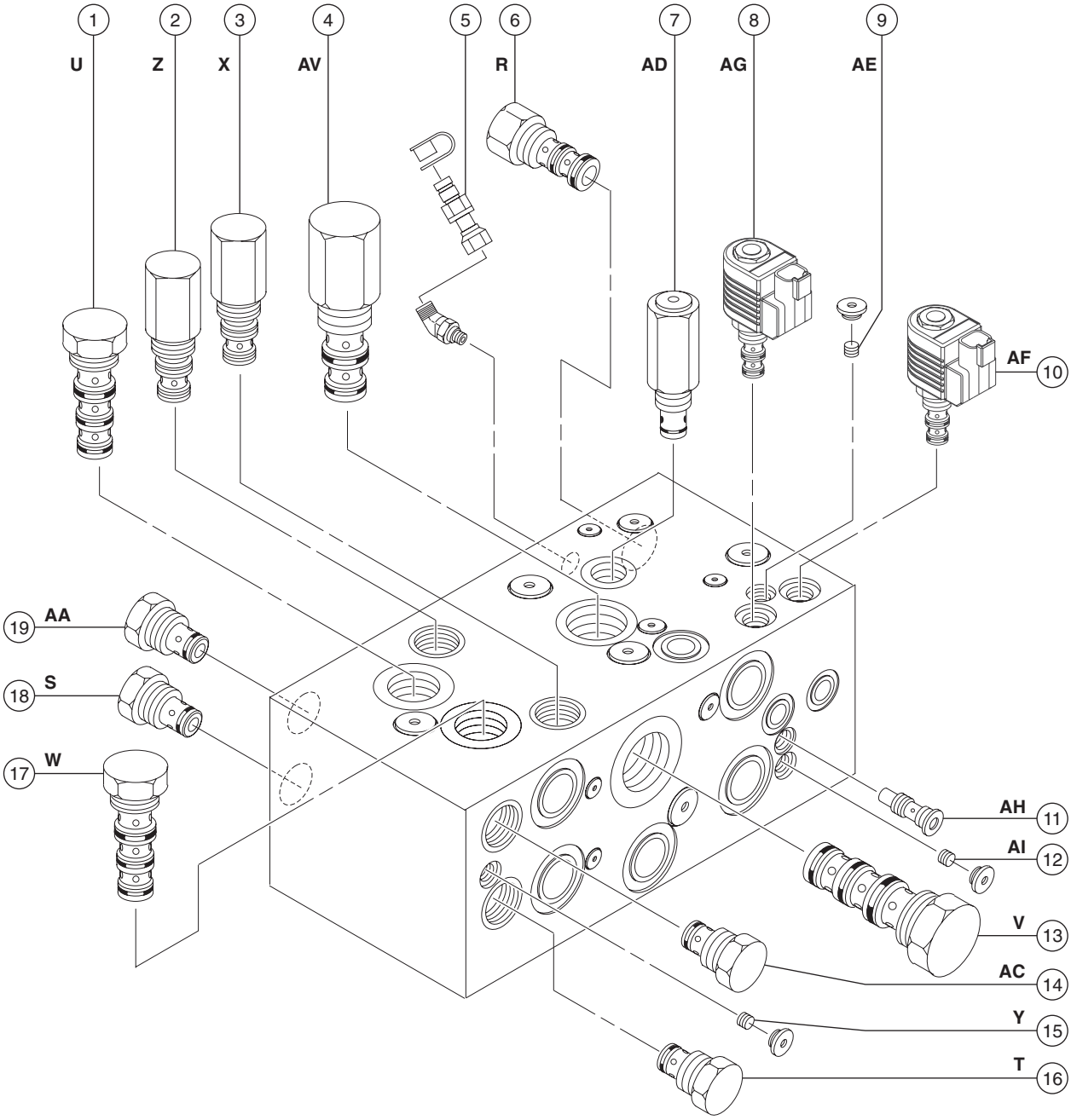

https://truckmanualshub.com/



# 8-15 Valve Adjustments, 4WD Traction Manifold

## How to Adjust the Charge Pressure Relief Valve

1 Connect a 0 to 600 psi / 0 to 50 bar pressure gauge to the test port on the drive pump.

2 Hold the charge pressure relief valve and remove the cap (item AH or AD).

3 Turn the internal hex socket clockwise fully until it stops. Install the cap.

4 Start the engine and move and hold the function enable/rpm select toggle switch to the high rpm (rabbit symbol) position. Note the reading on the pressure gauge.

5 Turn the engine off.

6 Remove the pressure gauge from the drive pump. Connect the gauge to the test port located on the traction manifold.

7 Hold the charge pressure relief valve and remove the cap (item AH or AD).

8 Start the engine and move and hold the function enable/rpm select toggle switch to the high rpm (rabbit symbol) position.

9 Adjust the internal hex socket until the pressure reading on the gauge is 40 psi / 2.8 bar less than the pressure reading on the pump. Turn it clockwise to increase the pressure or counterclockwise to decrease the pressure. Install the valve cap.

10 Turn the engine off and remove the pressure gauge.

# 8-16 Valve Coils

## How to Test a Coil

A properly functioning coil provides an electromotive force which operates the solenoid valve. Critical to normal operation is continuity within the coil that provides this force field.

**⚠WARNING** Electrocution hazard. Contact with electrically charged circuits could result in death or serious injury. Remove all rings, watches and other jewelry.

1 Tag and disconnect the wiring from the coil to be tested.

2 Test the coil resistance.

⊙ Result: The resistance should be within specification, plus or minus 30%.

⊙ Result: If the resistance is not within specification, plus or minus 30%, replace the coil.

| **Valve Coil Resistance Specification (before serial number 27001)** | |
|---|---|
| Proportional directional solenoid valve, 10V DC (schematic items A, C and D) | 6 to 8Ω |
| 3 position 4 way directional valve, 10V DC (schematic items B, F and H) | 6 to 8Ω |
| 2 position 3 way solenoid valve, 10V DC (schematic items E, G, AD, OO, XX, AI and AK) | 6 to 8Ω |

| **Valve Coil Resistance Specification (after serial number 27000)** | |
|---|---|
| Proportional directional solenoid valve, 10V DC (schematic items BP, BU and BY) | 6 to 8Ω |
| 3 position 4 way directional valve, 10V DC (schematic items BF, BM and CG) | 6 to 8Ω |
| 2 position 3 way solenoid valve, 10V DC (schematic items CA, CC, AF and AG) | 6 to 8Ω |

https://truckmanualshub.com/



## How to Test a Coil Diode

Properly functioning coil diodes protect the electrical circuit by suppressing voltage spikes. Voltage spikes naturally occur within a function circuit following the interruption of electrical current to a coil. Faulty diodes can fail to protect the electrical system, resulting in a tripped circuit breaker or component damage.

**WARNING** Electrocution hazard. Contact with electrically charged circuits could result in death or serious injury. Remove all rings, watches and other jewelry.

1 Test the coil for resistance. See, *How to Test a Coil.*

2 Connect a 10Ω resistor to the negative terminal of a known good 9V DC battery. Connect the other end of the resistor to a terminal on the coil.

| | |
|---|---|
| **Resistor, 10Ω** | |
| Genie part number | 27287 |

**NOTICE** The battery should read 9V DC or more when measured across the terminals.

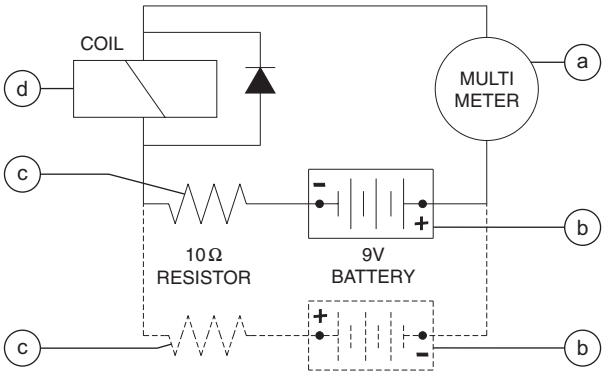


a multimeter
b 9V DC battery
c 10Ω resistor
d coil

Note: Dotted lines in illustration indicate a reversed connection as specified in step 6

3 Set a multimeter to read DC current.

**NOTICE** The multimeter, when set to read DC current, should be capable of reading up to 800 mA.

4 Connect the negative lead to the other terminal on the coil.

5 Momentarily connect the positive lead from the multimeter to the positive terminal on the 9V DC battery. Note and record the current reading.

6 At the battery or coil terminals, reverse the connections. Note and record the current reading.

Result: Both current readings are greater than 0 mA and are different by a minimum of 20%. The coil is good.

Result: If one or both of the current readings are 0 mA, or if the two current readings do not differ by a minimum of 20%, the coil and/or its internal diode are faulty and the coil should be replaced.

https://truckmanualshub.com/



# Turntable Rotation Components

REV C

## 9-1 Turntable Rotation Assembly

### How to Remove the Turntable Rotation Assembly

**NOTICE** When removing a hose assembly or fitting, the O-ring (if equipped) on the fitting and/or the hose end must be replaced. All connections must be torqued to specification during installation. Refer to Section 2, *Hydraulic Hose and Fitting Torque Specifications*.

1 Raise the secondary boom until the upper pivot is above the turntable covers. Turn the machine off.

2 Secure the turntable from rotating with the turntable rotation lock.

**⚠DANGER** Tip-over hazard. The machine could tip over when the turntable rotation assembly is removed if the turntable rotation lock is not in the locked position.

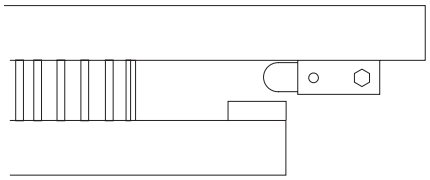

Unlocked position

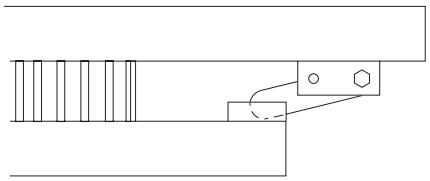

Locked position

3 Remove the safety pin from the engine pivot plate latch.

**NOTICE** The engine pivot plate latch is located under the engine turntable pivot plate at the counterweight end of the machine.

4 Remove the center turntable cover retaining fasteners. Remove the center turntable cover from the machine.

5 Open the engine pivot plate latch and swing the engine pivot plate out and away from the machine.

6 Tag, disconnect and plug the hydraulic hoses from the turntable rotation motor manifold. Cap the fittings on the manifold.

**⚠WARNING** Bodily injury hazard. Spraying hydraulic oil can penetrate and burn skin. Loosen hydraulic connections very slowly to allow the oil pressure to dissipate gradually. Do not allow oil to squirt or spray.

7 Attach a lifting strap from and overhead crane or other suitable lifting device to the turntable rotator assembly.

8 Remove the turntable rotation assembly mounting fasteners.

9 Carefully remove the turntable rotation assembly from the machine.

**⚠DANGER** Tip-over hazard. The machine could tip over when the turntable rotation assembly is removed if the turntable rotation lock is not in the locked position.

**⚠WARNING** Crushing hazard. The turntable rotation assembly could become unbalanced and fall when removed from the machine if not properly supported by the overhead crane.

https://truckmanualshub.com/



# Axle Components

REV C

## 10-1 Hub and Bearings, 2WD Models

### How to Remove the Hub and Bearings, 2WD Models

1 Loosen the wheel lug nuts. Do not remove them.

2 Block the non-steer wheels and place a lifting jack of ample capacity under the steer axle.

3 Raise the machine 6 inches / 15 cm and place blocks under the chassis for support.

**CAUTION** Crushing hazard. The machine may fall if not properly supported.

4 Remove the lug nuts. Remove the tire and wheel assembly.

5 Remove the dust cap, cotter pin and castle nut.

**NOTICE** Always use a new cotter pin when installing a castle nut.

6 Pull the hub off the spindle. The washer and outer bearing should fall loose from the hub.

7 Place the hub on a flat surface and gently pry the bearing seal out of the hub.

8 Remove the rear bearing.

### How to Install the Hub and Bearings, 2WD Models

**NOTICE** When replacing a wheel bearing, both the inner and outer bearings including the pressed-in races must be replaced.

1 Be sure that both bearings are packed with clean, fresh grease.

2 Place the large inner bearing into the rear of the hub.

3 Press the bearing seal evenly into the hub until it is flush.

4 Slide the hub onto the yoke spindle.

**CAUTION** Component damage. Do not apply excessive force or damage to the lip of the seal may occur.

5 Place the outer bearing into the hub.

6 Install the washer and castle nut.

7 Tighten the castle nut to 35 ft-lbs / 47 Nm to seat the bearing.

8 Fully loosen the castle nut, then re-tighten to 8 ft-lbs / 11 Nm.

9 Install a new cotter pin. Bend the cotter pin to secure the castle nut.

**NOTICE** Always use a new cotter pin when installing a castle nut.

10 Install the dust cap, then the tire and wheel assembly. Torque the wheel lug nuts to specification. Refer to Section 2, *Specifications.*

https://truckmanualshub.com/



# 10-2 Oscillating Axle Lock-out Cylinders

The oscillating axle cylinders extend and retract between the drive chassis and the oscillating axle. The cylinders are equipped with counterbalance valves to prevent movement in the event of a hydraulic line failure. The valves are not adjustable.

## How to Remove an Oscillating Axle Cylinder

**NOTICE** Perform this procedure on a firm, level surface with the boom in the stowed position.

**NOTICE** When removing a hose assembly or fitting, the O-ring (if equipped) on the fitting and/or the hose end must be replaced. All connections must be torqued to specification during installation. Refer to Section 2, *Hydraulic Hose and Fitting Torque Specifications*.

1 Tag, disconnect and plug the oscillating axle cylinder hydraulic hoses. Cap the fittings on the oscillate cylinder.

**⚠WARNING** Bodily injury hazard. Spraying hydraulic oil can penetrate and burn skin. Loosen hydraulic connections very slowly to allow the oil pressure to dissipate gradually. Do not allow oil to squirt or spray.

2 Remove the pin retaining fasteners from the rod-end pivot pin. Use a soft metal drift to remove the pin.

3 Attach a lifting strap from an overhead crane to the barrel end of the oscillating cylinder.

4 Remove the pin retaining fasteners from the barrel-end pivot pin. Use a soft metal drift to remove the pin.

**⚠CAUTION** Crushing hazard. The oscillate cylinder may become unbalanced and fall when removed from the machine if not properly attached to the overhead crane.

5 Remove the oscillate cylinder from the machine.

https://truckmanualshub.com/



# Fault Codes

## Observe and Obey:

- ☑ Troubleshooting and repair procedures shall be completed by a person trained and qualified on the repair of this machine.
- ☑ Immediately tag and remove from service a damaged or malfunctioning machine.
- ☑ Repair any machine damage or malfunction before operating the machine.
- ☑ Unless otherwise specified, perform each repair procedure with the machine in the following configuration:
  - Machine parked on a firm, level surface
  - Boom in stowed position
  - Turntable rotated with the boom between the non-steer wheels
  - Turntable secured with the turntable rotation lock
  - Key switch in the off position with the key removed
  - Wheels chocked
  - All external AC power disconnected from the machine

## Before Troubleshooting:

- ☑ Read, understand and obey the safety rules and operating instructions printed in the *Genie Z-45/25 and Genie Z-45/25J Operator's Manual* on your machine.
- ☑ Be sure that all necessary tools and test equipment are available and ready for use.
- ☑ Read each appropiate fault code thoroughly. Attempting shortcuts may produce hazardous conditions.
- ☑ Be aware of the following hazards and follow generally accepted safe workshop practices.

**⚠DANGER** Crushing hazard. When testing or replacing any hydraulic component, always support the structure and secure it from movement.

**⚠WARNING** Electrocution hazard. Contact with electrically charged circuits could result in death or serious injury. Remove all rings, watches and other jewelry.

**⚠WARNING** Bodily injury hazard. Spraying hydraulic oil can penetrate and burn skin. Loosen hydraulic connections very slowly to allow the oil pressure to dissipate gradually. Do not allow oil to squirt or spray.

**NOTICE** Perform all troubleshooting on a firm level surface.

**NOTICE** Two persons will be required to safely perform some troubleshooting procedures.

https://truckmanualshub.com/



# Control System

## How to Retrieve Control System Fault Codes

**NOTICE** At least one fault code is present when the alarm at the platform controls produces two short beeps every 30 seconds for 10 minutes.

**NOTICE** Perform this procedure with the engine off, the key switch turned to platform controls and the red Emergency Stop button pulled out to the on position at both the ground and platform controls.

1 Open the platform control box lid.

**⚠WARNING** Electrocution hazard. Contact with electrically charged circuits could result in death or serious injury. Remove all rings, watches and other jewelry.

2 Locate the red and yellow fault LEDs on the ALC-500 circuit board inside the platform control box. Do not touch the circuit board.

**CAUTION** Component damage hazard. Electrostatic discharge (ESD) can damage printed circuit board components. If the circuit board does need to be handled, maintain firm contact with a metal part of the machine that is grounded at all times when handling the printed circuit board OR use a grounded wrist strap.

3 **Determine the error source:** The red LED indicates the error source and will flash two separate codes. The first code will indicate the first digit of the two digit code, flashing once per second. It will then pause for 1.5 seconds and flash the second digit once per 0.5 second.

**NOTICE** When the red LED is flashing the code, the yellow LED will be on solid.

4 **Determine the error type:** The yellow LED indidates the error type and will flash two separate codes. The first code will indicate the first digit of the two digit code, flashing once per second. It will then pause for 1.5 seconds and flash the second digit once per 0.5 second.

**NOTICE** When the yellow LED is flashing the code, the red LED will be on solid.

5 Use the fault code table on the following pages to aid in troubleshooting the machine by pinpointing the area or component affected.

https://truckmanualshub.com/



REV A FAULT CODES

| Error Source | | Error Type | | Condition | Solution |
|---|---|---|---|---|---|
| ID | Name | ID | Name | | |
| 21 | Boom 1 Joystick (primary boom up/ down) | 11<br>12<br>15<br>16 | Value at 5V<br>Value too high<br>Value too low<br>Value at 0V | Limited speed and direction frozen at zero and neutral. Alarm sounds indicating fault. | Power up controller with problem corrected. |
| | | 17 | Not calibrated | Joystick speed and direction frozen at zero and neutral. | Calibrate joystick. |
| | | 18 | Just calibrated | Initiate 1-second beep of alarm. | Self-clearing. (transient) |
| 22 | Boom 1 directional valves | 21 | Fault | Limited speed and direction frozen at zero and neutral. Alarm sounds indicating fault. | Power up controller with problem corrected. |
| 23 | Boom 1 flow control valve | 12<br>15 | Value too high<br>Value too low | Limited speed and direction frozen at zero and neutral. Alarm sounds indicating fault. | Power up controller with problem corrected. |
| | | 17 | Not calibrated | Normal function **except** threshold for one or both directions is zero. | Calibrate valve thresholds. |
| | | 18 | Just calibrated | | Self-clearing. (transient) |
| 31 | Boom 2 Joystick (secondary boom up/down or primary boom extend/retract) | 11<br>12<br>15<br>16 | Value at 5V<br>Value too high<br>Value too low<br>Value at 0V | Limited speed and direction frozen at zero and neutral. Alarm sounds indicating fault. | Power up controller with problem corrected. |
| | | 17 | Not calibrated | Joystick speed and direction frozen at zero and neutral. | Calibrate joystick. |
| | | 18 | Just calibrated | Initiate 1 second beep of alarm. | Self-clearing. (transient) |
| 32 | Boom 2 directional valves | 21 | Fault | Limited speed and direction frozen at zero and neutral. Alarm sounds indicating fault. | Power up controller with problem corrected. |

Continued on next page

https://truckmanualshub.com/



FAULT CODES REV A

| Error Source | | Error Type | | Condition | Solution |
|---|---|---|---|---|---|
| ID | Name | ID | Name | | |
| 33 | Boom 2 flow control valve | 12<br>15 | Value too high<br>Value too low | Limited speed and direction frozen at zero and neutral. Alarm sounds indicating fault. | Power up controller with problem corrected. |
| | | 17 | Not calibrated | Normal function **except** threshold for one or both directions is zero. | Calibrate valve thresholds. |
| | | 18 | Just calibrated | | Self-clearing. (transient) |
| 41 | Turntable rotate joystick | 11<br>12<br>15<br>16 | Value at 5V<br>Value too high<br>Value too low<br>Value at 0V | Limited speed and direction frozen at zero and neutral. Alarm sounds indicating fault. | Power up controller with problem corrected. |
| | | 17 | Not calibrated | Joystick speed and direction frozen at zero and neutral. | Calibrate joystick. |
| | | 18 | Just calibrated | Initiate 1-second beep of alarm. | Self-clearing. (transient) |
| 42 | Turntable rotate directional valves | 21 | Fault | Limited speed and direction frozen at zero and neutral. Alarm sounds indicating fault. | Power up controller with problem corrected. |
| 43 | Turntable rotate flow control valve | 12<br>15 | Value too high<br>Value too low | Limited speed and direction frozen at zero and neutral. Alarm sounds indicating fault. | Power up controller with problem corrected. |
| | | 17 | Not calibrated | Normal function **except** threshold for one or both directions is zero. | Calibrate valve thresholds. |
| | | 18 | Just calibrated | | Self-clearing. (transient) |
| 44 | Drive enable override switches | 21 | Fault | Enable override direction is frozen at neutral. | Power up controller with problem corrected. |

https://truckmanualshub.com/



REV A FAULT CODES

| Error Source | | Error Type | | Condition | Solution |
|---|---|---|---|---|---|
| ID | Name | ID | Name | | |
| 51 | Drive joystick | 11<br>12<br>15<br>16 | Value at 5V<br>Value too high<br>Value too low<br>Value at 0V | Limited speed and direction frozen at zero and neutral. Alarm sounds indicating fault. | Power up controller with problem corrected. |
| | | 17 | Not calibrated | Joystick speed and direction frozen at zero and neutral. | Calibrate joystick |
| | | 18 | Just calibrated | Initiate 1-second beep of alarm. | Self-clearing. (transient) |
| 53 | Drive flow valve (EDC) | 12<br>15 | Value too high<br>Value too low | Limited speed and direction frozen at zero and neutral. Alarm sounds indicating fault. | Power up controller with problem corrected. |
| | | 17 | Not calibrated | Normal function **except** threshold for one or both directions is zero. | Calibrate valve thresholds |
| | | 18 | Just calibrated | | Self-clearing. (transient) |
| 54 | Drive brake valve | 21 | Fault | Limited speed and direction frozen at zero and neutral. Alarm sounds indicating fault. | Power up controller with problem corrected. |
| 55 | High speed drive motor Valve | 21 | Fault | Motor speed frozen in the low state. Alarm sounds indicating fault. | Power up controller with problem corrected. |
| 61 | Steer joystick | 11<br>12<br>15<br>16 | Value at 5V<br>Value too high<br>Value too low<br>Value at 0V | Limited speed and direction frozen at zero and neutral. Alarm sounds indicating fault. | Power up controller with problem corrected. |
| | | 17 | Not calibrated | Joystick speed and direction frozen at zero and neutral. | Calibrate Joystick |
| | | 18 | Just calibrated | Initiate 1-second beep of alarm. | Self-clearing. (transient) |
| 62 | Steer directional valves | 21 | Fault | Limited speed and direction frozen at zero and neutral. Alarm sounds indicating fault. | Power up controller with problem corrected. |

https://truckmanualshub.com/



# Ford LRG-425 EFI Engine

## How to Retrieve Ford Engine Fault Codes

The ECM constantly monitors the engine by the use of sensors on the engine. The ECM also uses signals from the sensors to initiate sequential fuel injection and make constant and instantaneous changes to ignition timing, fuel delivery and throttle position to maintain the engine's running condition at its highest efficiency while at the same time keeping exhaust emissions to a minimum. When a sensor fails or returns signals that are outside of set parameters, the ECM will store a fault code in memory that relates to the appropriate sensor and will turn on the Check Engine Light.

**NOTICE** Perform this procedure with the key switch in the off position.

1 Locate the run/test toggle switch on the side of the ground control box.

2 Pull out the red Emergency Stop button to the on position at both the ground and platform controls.

3 Quickly activate and release the start toggle switch/button. Do not start the engine.

4 Move and hold the run/test toggle switch to the test position.

⊙ Result: The check engine light should turn on. The check engine light should begin to blink.

5 Continue to hold the run/test toggle switch in the test position and count the blinks.

**NOTICE** Before the fault codes are displayed, the check engine light will blink a code 123 three times. After the fault codes, the check engine light will blink a code 123 three times again indicating the end of the stored codes.

**NOTICE** If any fault codes are present, the ECM will blink a three digit code three times for each code stored in memory. It will blink the first digit of a three digit code, pause, blink the second digit, pause, and then blink the third digit. For example: the check engine light blinks 5 consecutive times, blinks 3 times and then 1 time. That would indicate code 531.

**NOTICE** Once a fault code has been retrieved and the repair has been completed, the ECM memory must be reset to clear the fault code from the ECM. See *How to Clear Engine Fault Codes from the ECM.*

## How to Clear Engine Fault Codes from the ECM

**NOTICE** Perform this procedure with the engine off and the key switch in the off position.

1 Open the engine side turntable cover and locate the battery.

2 Disconnect the negative battery cable from the battery for a minimum of 5 minutes.

**⚠WARNING** Electrocution hazard. Contact with electrically charged circuits could result in death or serious injury. Remove all rings, watches and other jewelry.

3 Connect the negative battery cable to the battery.

https://truckmanualshub.com/



REV B FAULT CODES

| Code | Problem | Cause | Solution |
|---|---|---|---|
| **111** | Closed loop multiplier high (LPG) | Heated oxygen sensor wiring and/or connections open or shorted OR sensor is faulty OR there are vacuum leaks or exhaust leaks. | Repair wiring and/or connections OR replace sensor OR repair vacuum and exhaust leaks. |
| **112** | HO2S open/inactive (bank 1) | Heated oxygen sensor wiring and/or connections open or shorted OR sensor is faulty. | Repair wiring and/or connections OR replace sensor. |
| **113** | HO2S open/inactive (bank 2) | Heated oxygen sensor wiring and/or connections open or shorted OR sensor is faulty. | Repair wiring and/or connections OR replace sensor. |
| **114** | Post-cat oxygen sensor open | The post cat heated oxygen sensor wiring and/or connections are open or shorted OR sensor is cold, non-responsive or inactive for 60 seconds or longer. | Repair wiring and/or connections OR replace the post cat oxygen sensor. |
| **121** | Closed loop multiplier high (gasoline) | Heated oxygen sensor wiring and/or connections open or shorted OR sensor is faulty OR there are vacuum leaks or exhaust leaks OR fuel pressure is low OR the fuel injectors need cleaning or replacing. | Repair wiring and/or connections OR replace sensor OR repair any vacuum and exhaust leaks OR test the fuel pressure OR clean or replace the fuel injectors. |
| **122** | Closed loop multiplier low (gasoline) | MAP, IAT or ECT sensors not in correct position OR wiring and/or connections for sensors open or shorted OR sensor is faulty OR one or more fuel injectors are stuck open OR there is electro-magnetic interference from a faulty crankshaft and/or camshaft position sensor. | Adjust or replace sensors OR clean or repair fuel injectors. |
| **124** | Closed loop multiplier low (LPG) | Heated oxygen sensor wiring and/or connections open or shorted OR sensor is faulty OR fuel quality is poor OR fuel system components may be faulty. | Repair wiring and/or connections OR replace sensor OR replace fuel OR test and repair the fuel system components. |
| **133** | Gasoline cat monitor | There are exhaust leaks OR the catalyst system efficiency is below the acceptable level. | Repair exhaust leaks OR there is an emissions compliance issue. Contact Ford Power Products for assistance. |
| **134** | LPG cat monitor | There are exhaust leaks OR the catalyst system efficiency is below the acceptable level. | Repair exhaust leaks OR there is an emissions compliance issue. Contact Ford Power Products for assistance. |
| **135** | NG cat monitor | There are exhaust leaks OR the catalyst system efficiency is below the acceptable level. | Repair exhaust leaks OR there is an emissions compliance issue. Contact Ford Power Products for assistance. |
| **141** | Adaptive lean fault - High limit (Gasoline) | Heated oxygen sensor wiring and/or connections open or shorted OR sensor is faulty OR there are vacuum or exhaust leaks OR one or more fuel injectors faulty or stuck closed OR fuel quality is poor OR fuel pressure is too low. | Repair heated oxygen sensor wiring and/or connections OR replace sensor OR repair vacuum and exhaust leaks OR test the fuel pressure OR clean or replace the fuel injectors. |
| **142** | Adaptive rich fault - Low limit (Gasoline) | MAP, IAT or ECT sensors not in correct position OR wiring and/or connections for sensors open or shorted OR sensor is faulty OR one or more fuel injectors are stuck closed OR there is electro-magnetic interference from a faulty crankshaft and/or camshaft position sensor. | Adjust or replace sensors OR clean or repair fuel injectors. |
| **143** | Adaptive learn high (LPG) | Heated Oxygen Sensor wiring and/or connections open or shorted OR sensor is faulty OR there are vacuum leaks or exhaust leaks OR fuel quality is poor OR fuel system components may be faulty. | Repair wiring and/or connections OR replace sensor OR repair any vacuum and exhaust leaks OR replace fuel OR test and repair the fuel system components. |
| **144** | Adaptive learn low (LPG) | Engine wire harness may have an intermittent short to 5V DC or 12V DC OR fuel system components may be faulty. | Repair short in engine wire harness OR test and repair the fuel system components. |
| **161** | System voltage low | Battery is faulty OR alternator is not charging OR battery supply wiring to ECM is open or shorted. | Replace battery OR repair alternator OR repair battery supply wiring to ECM. |
| **162** | System voltage high | Alternator is overcharging the battery when engine RPM is greater than 1500 rpm. | Repair or replace the alternator. |
| **211** | IAT high voltage | IAT sensor wiring and/or connections are open or shorted OR sensor is faulty OR engine intake air temperature is too cold. | Repair wiring and/or connections OR replace sensor OR direct warmer air into air intake. |
| **212** | IAT low voltage | IAT sensor wiring and/or connections are open or shorted OR sensor is faulty OR engine intake air temperature is too hot. | Repair wiring and/or connections OR replace sensor OR direct cooler air into air intake. |

Continued on next page

https://truckmanualshub.com/



FAULT CODES REV B

| Code | Problem | Cause | Solution |
|---|---|---|---|
| **213** | IAT higher than expected (1) | Air intake temperature is greater than 200° F with the engine greater than 1000 rpm OR air intake system has leaks OR IAT sensor is faulty. | Check air intake system for damage and proper routing of air intake components OR replace the IAT sensor. |
| **214** | IAT higher than expected (2) | Air intake temperature is greater than 210° F with the engine greater than 1000 rpm OR air intake system has leaks OR IAT sensor is faulty. | Check air intake system for damage and proper routing of air intake components OR replace the IAT sensor. |
| **215** | Oil pressure low | Faulty oil pressure sensor OR sensor wiring and/or connections open or shorted OR engine oil level too low. | Replace oil pressure sensor OR repair sensor wiring and/or connections OR fill engine oil level to specification. |
| **221** | CHT/ECT high voltage | Engine cooling system is malfunctioning OR sensor wires and/or connections open or shorted OR sensor is faulty. | Repair engine cooling system problems OR repair open or shorted wiring to sensor OR replace sensor. |
| **222** | CHT/ECT low voltage | Engine cooling system is malfunctioning and overheating the engine OR sensor wires and/or connections open or shorted OR sensor is faulty OR coolant level is low. | Repair engine cooling system problems OR repair open or shorted wiring to sensor OR replace sensor OR fill engine coolant level to specification. |
| **223** | CHT higher than expected (1) | Coolant temperature at the cylinder head is 240° F. Engine cooling system is malfunctioning and overheating the engine OR sensor wires and/or connections open or shorted OR sensor is faulty OR coolant level is low. | Repair engine cooling system problems OR repair open or shorted wiring to sensor OR replace sensor OR fill engine coolant level to specification. |
| **224** | CHT higher than expected (2) | Coolant temperature at the cylinder head is 250° F. Engine cooling system is malfunctioning and overheating the engine OR sensor wires and/or connections open or shorted OR sensor is faulty OR coolant level is low. | Repair engine cooling system problems OR repair open or shorted wiring to sensor OR replace sensor OR fill engine coolant level to specification. |
| **231** | MAP high pressure | Open or shorted wiring and/or connections to MAP sensor OR sensor is faulty. | Repair wiring and/or connections to sensor OR replace MAP sensor. |
| **232** | MAP low voltage | Open or shorted wiring and/or connections to MAP sensor OR sensor is faulty. | Repair wiring and/or connections to sensor OR replace MAP sensor. |
| **234** | BP high pressure | MAP sensor is faulty OR ECM is faulty. | Replace MAP sensor OR replace the ECM. |
| **235** | BP low pressure | MAP sensor is faulty OR ECM is faulty. | Replace MAP sensor OR replace the ECM. |
| **242** | Crank sync noise | Crankshaft position sensor wiring and/or connections open or shorted OR there is a poor system ground connection OR sensor is faulty. | Be sure system ground connections are in place and secure OR repair wiring and/or connections to sensor OR replace sensor. |
| **243** | Never crank synced at start | Crankshaft position sensor wiring and/or connections open or shorted OR there is a poor system ground connection OR sensor is faulty. | Be sure system ground connections are in place and secure OR repair wiring and/or connections to sensor OR replace sensor. |
| **244** | Camshaft sensor loss | Camshaft position sensor wiring and/or connections open or shorted OR there is a poor system ground connection OR sensor is faulty. | Be sure system ground connections are in place and secure OR repair wiring and/or connections to sensor OR replace sensor. |
| **245** | Camshaft sensor noise | Camshaft position sensor wiring and/or connections open or shorted OR there is a poor system ground connection OR sensor is faulty. | Be sure system ground connections are in place and secure OR repair wiring and/or connections to sensor OR replace sensor. |
| **253** | Knock sensor open | Knock sensor wiring and/or connections open or shorted OR sensor is faulty. | Repair wiring and/or connections to knock sensor OR replace knock sensor. |
| **254** | Excessive knock signal | Knock sensor wiring and/or connections open or shorted OR there is excessive engine vibration OR sensor is faulty. | Check for excessive engine vibration OR repair wiring and/or connections to knock sensor OR replace knock sensor. |
| **311** | Injector driver #1 open | Open wiring and/or connections to fuel injector #1 OR fuel injector #1 is faulty OR ECM is faulty. | Repair wiring and/or connections to fuel injector #1 OR replace fuel injector #1 OR replace the ECM. |
| **312** | Injector driver #1 shorted | Wiring and/or connections to fuel injector #1 shorted OR fuel injector #1 is faulty OR ECM is faulty. | Repair wiring and/or connections to fuel injector #1 OR replace fuel injector #1 OR replace the ECM. |
| **313** | Injector driver #2 open | Open wiring and/or connections to fuel injector #2 OR fuel injector #2 is faulty OR ECM is faulty. | Repair wiring and/or connections to fuel injector #2 OR replace fuel injector #2 OR replace the ECM. |
| **314** | Injector driver #2 shorted | Wiring and/or connections to fuel injector #2 shorted OR fuel injector #2 is faulty OR ECM is faulty. | Repair wiring and/or connections to fuel injector #2 OR replace fuel injector #2 OR replace the ECM. |

https://truckmanualshub.com/



REV B FAULT CODES

| Code | Problem | Cause | Solution |
|---|---|---|---|
| **315** | Injector driver #3 open | Open wiring and/or connections to fuel injector #3 OR fuel injector #3 is faulty OR ECM is faulty. | Repair wiring and/or connections to fuel injector #3 OR replace fuel injector #3 OR replace the ECM. |
| **316** | Injector driver #3 shorted | Wiring and/or connections to fuel injector #3 shorted OR fuel injector #3 is faulty OR ECM is faulty. | Repair wiring and/or connections to fuel injector #3 OR replace fuel injector #3 OR replace the ECM. |
| **321** | Injector driver #4 open | Open wiring and/or connections to fuel injector #4 OR fuel injector #4 is faulty OR ECM is faulty. | Repair wiring and/or connections to fuel injector #4 OR replace fuel injector #4 OR replace the ECM. |
| **322** | Injector driver #4 shorted | Wiring and/or connections to fuel injector #4 shorted OR fuel injector #4 is faulty OR ECM is faulty. | Repair wiring and/or connections to fuel injector #4 OR replace fuel injector #4 OR replace the ECM. |
| **351** | Fuel pump loop open or high side short to ground | Open wiring and/or connections to fuel pump OR fuel pump power shorted to ground OR fuel pump is faulty. | Repair wiring and/or connections to fuel pump OR replace fuel pump. |
| **352** | Fuel pump high side shorted to power | Wiring and/or connections to fuel pump shorted to power OR fuel pump is faulty. | Repair wiring and/or connections to fuel pump OR replace fuel pump. |
| **353** | MegaJector delivery pressure higher than expected | Fuel pressure too high OR LPG lockoff not sealing correctly OR the line between the MegaJector and carburetor is kinked or restricted or is leaking OR engine cooling system is not operating properly OR MegaJector is faulty. | Check fuel pressure OR repair LPG lockoff OR repair the line between the MegaJector and carburetor OR repair engine cooling system OR replace MegaJector. |
| **354** | Megajector delivery pressure lower than expected | Fuel pressure too low OR LPG lockoff not opening completely OR the line between the MegaJector and carburetor is kinked or restricted or is leaking OR engine cooling system is not operating properly OR MegaJector is faulty. | Check fuel pressure OR repair LPG lockoff OR repair the line between the MegaJector and carburetor OR repair engine cooling system OR replace the MegaJector. |
| **355** | MegaJector communication lost | The ECM doesn't get any response from the MegaJector, or an incorrect response for 500ms period or longer. | Check CAN circuits for continuity and shorts to power or ground and for continuity and repair as necessary OR replace the MegaJector. |
| **361** | MegaJector voltage supply high | The MegaJector detects voltage greater than 18 volts for 5 seconds anytime the engine is cranking or running. | Repair charging system OR replace the MegaJector. |
| **362** | MegaJector voltage supply low | The MegaJector detects voltage less than 9.5 volts for 5 seconds anytime the engine is cranking or running. | Repair VBAT power or ground circuit to ECM and MegaJector OR replace battery OR repair charging system OR replace the MegaJector. |
| **363** | Megajector internal actuator fault detection | The MegaJector detects an internal fault. Open or short in power, ground or CAN circuits.s | Check power, ground and CAN circuits at MegaJector and all connections and repair as necessary OR MegaJector has an internal fault. Contact Ford Power Products for assistance. |
| **364** | Megajector internal circuitry fault detection | The MegaJector detects an internal circuitry failure. Open or short in power, ground or CAN circuits. | Check power, ground and CAN circuits at MegaJector and all connections and repair as necessary OR MegaJector has an internal fault. Contact Ford Power Products for assistance. |
| **365** | MegaJector internal communication fault detection | The MegaJector detects an internal communications failure. Open or short in power, ground or CAN circuits. | Check Power, Ground and CAN circuits at MegaJector and all connections and repair as necessary OR MegaJector has an internal fault. Contact Ford Power Products for assistance. |
| **411** | Coil driver #1 open | Open wiring and/or connections to ignition coil #1 OR ignition coil #1 is faulty. | Repair wiring and/or connections to ignition coil #1 OR replace ignition coil #1. |
| **412** | Coil driver #1 shorted | Wiring and/or connections to ignition coil #1 shorted OR ignition coil #1 is faulty. | Repair wiring and/or connections to ignition coil #1 OR replace ignition coil #1. |
| **413** | Coil driver #2 open | Open wiring and/or connections to ignition coil #2 OR ignition coil #2 is faulty. | Repair wiring and/or connections to ignition coil #1 OR replace ignition coil #1. |
| **414** | Coil driver #2 shorted | Wiring and/or connections to ignition coil #2 shorted OR ignition coil #2 is faulty. | Repair wiring and/or connections to ignition coil #2 OR replace ignition coil #2. |

Continued on next page

https://truckmanualshub.com/



FAULT CODES REV B

| Code | Problem | Cause | Solution |
|---|---|---|---|
| **511** | FPP1 high voltage | Not used. | If this fault appears on your machine, contact Genie Industries Service Department. |
| **512** | FPP1 low voltage | Not used. | If this fault appears on your machine, contact Genie Industries Service Department. |
| **513** | FPP1 higher than IVS Limit | Not used. | If this fault appears on your machine, contact Genie Industries Service Department. |
| **514** | FPP1 lower than IVS Limit | Not used. | If this fault appears on your machine, contact Genie Industries Service Department. |
| **521** | FPP2 high voltage | Not used. | If this fault appears on your machine, contact Genie Industries Service Department. |
| **522** | FPP2 low voltage | Not used. | If this fault appears on your machine, contact Genie Industries Service Department. |
| **531** | TPS1 (signal voltage) high | The #1 throttle position sensor wiring and/or connections open or shorted OR there is a poor system ground connection OR throttle position sensor #1 is faulty. | Be sure system ground connections are in place and secure OR repair wiring and/or connections to sensor OR replace throttle position sensor #1. |
| **532** | TPS1 (signal voltage) low | The #1 throttle position sensor wiring and/or connections open or shorted OR there is a poor system ground connection OR throttle position sensor #1 is faulty. | Be sure system ground connections are in place and secure OR repair wiring and/or connections to sensor OR replace throttle position sensor #1. |
| **533** | TPS2 (signal voltage) high | The #2 throttle position sensor wiring and/or connections open or shorted OR there is a poor system ground connection OR throttle position sensor #2 is faulty. | Be sure system ground connections are in place and secure OR repair wiring and/or connections to sensor OR replace throttle position sensor #2. |
| **534** | TPS2 (signal voltage) low | The #2 throttle position sensor wiring and/or connections open or shorted OR there is a poor system ground connection OR throttle position sensor #2 is faulty. | Be sure system ground connections are in place and secure OR repair wiring and/or connections to sensor OR replace throttle position sensor #2. |
| **535** | TPS1 higher than TPS2 | The throttle position sensor wiring and/or connections for either TPS1 or TPS2 open or shorted OR there is a poor system ground connection OR one or both throttle position sensors are faulty. | Be sure engine harness wiring and connections are in place and secure OR repair wiring and/or connections to one or both TPS sensors OR replace one or both TPS sensors. |
| **536** | TPS1 lower than TPS2 | The throttle position sensor wiring and/or connections for either TPS1 or TPS2 open or shorted OR there is a poor system ground connection OR one or both throttle position sensors are faulty. | Be sure engine harness wiring and connections are in place and secure OR repair wiring and/or connections to one or both TPS sensors OR replace one or both TPS sensors. |
| **537** | Throttle unable to open | Governor actuator is stuck closed OR wiring and/or connections open or shorted OR governor actuator is faulty. | Repair wiring and/or connections to governor actuator OR replace the governor actuator. |
| **538** | Throttle unable to close | Governor actuator is stuck open OR wiring and/or connections open or shorted OR governor actuator is faulty. | Repair wiring and/or connections to governor actuator OR replace the governor actuator. |
| **545** | Governor interlock failure | Engine harness wiring and/or connections open or shorted OR there is a poor system ground connection OR ECM is faulty. | Repair wiring and/or connections in engine harness OR replace the ECM. |
| **551** | Max governor speed override | ECM needs to be re-programmed OR throttle is sticking open OR there are air leaks between the throttle body and cylinder head. | Re-program ECM OR repair binding throttle operation OR repair any air leaks between the throttle body and cylinder head. |
| **552** | Fuel rev limit | ECM needs to be re-programmed OR throttle is sticking open OR there are air leaks between the throttle body and cylinder head. | Re-program ECM OR repair binding throttle operation OR repair any air leaks between the throttle body and cylinder head. |
| **553** | Spark rev limit | ECM needs to be re-programmed OR throttle is sticking open OR there are air leaks between the throttle body and cylinder head. | Re-program ECM OR repair binding throttle operation OR repair any air leaks between the throttle body and cylinder head. |
| **611** | COP failure | Loose wire connections to ECM OR ECM is faulty. | Locate and repair any engine harness wiring damage or shorts to ECM to be sure they are secure OR replace ECM. |
| **612** | Invalid interrupt | Loose wire connections to ECM OR ECM is faulty. | Locate and repair any engine harness wiring damage or shorts to ECM to be sure they are secure OR replace ECM. |
| **613** | A/D loss | Loose wire connections to ECM OR ECM is faulty. | Locate and repair any engine harness wiring damage or shorts to ECM to be sure they are secure OR replace ECM. |

https://truckmanualshub.com/



REV B FAULT CODES

| Code | Problem | Cause | Solution |
|---|---|---|---|
| **614** | RTI 1 loss | Loose wire connections to ECM OR ECM is faulty. | Locate and repair any engine harness wiring damage or shorts to ECM to be sure they are secure OR replace ECM. |
| **615** | Flash checksum invalid | Loose wire connections to ECM OR ECM is faulty. | Locate and repair any engine harness wiring damage or shorts to ECM to be sure they are secure OR replace ECM. |
| **616** | RAM failure | Loose wire connections to ECM OR ECM is faulty. | Locate and repair any engine harness wiring damage or shorts to ECM to be sure they are secure OR replace ECM. |
| **631** | External 5V DC ref lower than expected | Engine harness wiring and/or connections open or shorted to ground OR there is a faulty engine sensor OR ECM is faulty. | Locate and repair any engine harness wiring damage or shorts OR locate and troubleshoot or repair faulty engine sensor OR replace ECM. |
| **632** | External 5V DC ref higher than expected | Engine harness wiring and/or connections open or shorted to ground OR there is a faulty engine sensor OR ECM is faulty. | Locate and repair any engine harness wiring damage or shorts OR locate and troubleshoot or repair faulty engine sensor OR replace ECM. |
| **655** | RTI 2 loss | Loose wire connections to ECM OR ECM is faulty. | Locate and repair any engine harness wiring damage or shorts to ECM to be sure they are secure OR replace ECM. |
| **656** | RTI 3 loss | Loose wire connections to ECM OR ECM is faulty. | Locate and repair any engine harness wiring damage or shorts to ECM to be sure they are secure OR replace ECM. |

https://truckmanualshub.com/



# Ford DSG-423 EFI Engine

## How to Retrieve Ford Engine Fault Codes

The ECM constantly monitors the engine by the use of sensors on the engine. The ECM also uses signals from the sensors to initiate sequential fuel injection and make constant and instantaneous changes to ignition timing, fuel delivery and throttle position to maintain the engine's running condition at its highest efficiency while at the same time keeping exhaust emissions to a minimum. When a sensor fails or returns signals that are outside of set parameters, the ECM will store a fault code in memory that relates to the appropriate sensor and will turn on the Check Engine Light.

**NOTICE** Perform this procedure with the key switch in the off position.

1 Locate the run/test toggle switch on the side of the ground control box.

2 Pull out the red Emergency Stop button to the on position at both the ground and platform controls.

3 Quickly activate and release the start toggle switch/button. Do not start the engine.

4 Move and hold the run/test toggle switch to the test position.

⊙ Result: The check engine light should turn on. The check engine light should begin to blink.

5 Continue to hold the run/test toggle switch in the test position and count the blinks.

**NOTICE** Before the fault codes are displayed, the check engine light will blink a code 123 three times. After the fault codes, the check engine light will blink a code 123 three times again indicating the end of the stored codes.

**NOTICE** If any fault codes are present, the ECM will blink a three digit code three times for each code stored in memory. It will blink the first digit of a three digit code, pause, blink the second digit, pause, and then blink the third digit. For example: the check engine light blinks 5 consecutive times, blinks 3 times and then 1 time. That would indicate code 531.

**NOTICE** Once a fault code has been retrieved and the repair has been completed, the ECM memory must be reset to clear the fault code from the ECM. See *How to Clear Engine Fault Codes from the ECM.*

## How to Clear Engine Fault Codes from the ECM

**NOTICE** Perform this procedure with the engine off and the key switch in the off position.

1 Open the engine side turntable cover and locate the battery.

2 Disconnect the negative battery cable from the battery for a minimum of 5 minutes.

**⚠WARNING** Electrocution hazard. Contact with electrically charged circuits could result in death or serious injury. Remove all rings, watches and other jewelry.

3 Connect the negative battery cable to the battery.

https://truckmanualshub.com/



REV A FAULT CODES

| Code | Description |
|---|---|
| 111 | CL (Closed Loop) high LPG |
| 112 | EGO open / lazy pre-cat 1 |
| 113 | EGO open / lazy pre-cat 2/post-cat 1 |
| 114 | EGO open / lazy post-cat 1 |
| 115 | EGO open / lazy post-cat 2 |
| 121 | CL (Closed Loop) high gasoline bank 1 |
| 122 | CL (Closed Loop) low gasoline bank 1 |
| 124 | CL (Closed Loop) low LPG |
| 133 | Gasoline catalyst monitor 1 |
| 134 | LPG catalyst monitor |
| 141 | AL (Adaptive Learn) high gasoline bank1 |
| 142 | AL (Adaptive Learn) low gasoline bank 1 |
| 143 | AL (Adaptive Learn) high LPG |
| 144 | AL (Adaptive Learn) low LPG |
| 161 | Battery Voltage high |
| 162 | Battery Voltage low |
| 163 | AUX analog PD1 high |
| 164 | AUX analog PD1 low |
| 165 | AUX analog PU3 high |
| 166 | AUX analog PU3 low |
| 167 | AUX analog PUD1 high |
| 168 | AUX analog PUD1 low |
| 171 | AUX analog PUD2 high |
| 172 | AUX analog PUD2 low |
| 173 | AUX analog PUD3 high |
| 174 | AUX analog PUD3 low |
| 181 | AUX DIG1 high |
| 182 | AUX DIG1 low |
| 183 | AUX DIG2 high |
| 184 | AUX DIG2 low |
| 185 | AUX DIG3 high |
| 186 | AUX DIG3 low |

| Code | Description |
|---|---|
| 211 | IAT (Intake Air Temperature) high voltage |
| 212 | IAT (Intake Air Temperature) low voltage |
| 213 | IAT (Intake Air Temperature) higher than expected 1 |
| 214 | IAT (Intake Air Temperature) higher than expected 2 |
| 215 | Oil pressure low |
| 221 | ECT / CHT (Engine/Cylinder Head Coolant Temperature) high voltage |
| 222 | ECT / CHT (Engine/Cylinder Head Coolant Temperature) low voltage |
| 223 | CHT higher than expected 1 |
| 224 | CHT higher than expected 2 |
| 225 | ECT higher than expected 1 |
| 226 | ECT higher than expected 2 |
| 231 | MAP (Manifold Absolute Pressure) high pressure |
| 232 | MAP (Manifold Absolute Pressure) low voltage |
| 234 | BP (Barometric Pressure) high pressure |
| 235 | BP (Barometric Pressure) low pressure |
| 242 | Crank sync noise |
| 243 | Never crank synced at start |
| 244 | Cam loss |
| 245 | Cam sync noise |
| 246 | Crank loss |
| 253 | Knock1/2 sensor open 1 |
| 254 | Knock1/2 excessive signal 1 |

For further engine fault code troubleshooting and diagnostic information, refer to the *Ford DSG-423 EFI Service Manual* (EDI part number 1060040).

**Ford DSG 423 EFI Service Manual**
Genie part number 119494

https://truckmanualshub.com/



FAULT CODES REV A

| Code | Description |
|---|---|
| 261 | FP (Fuel Pressure) high voltage |
| 262 | FP (Fuel Pressure) low voltage |
| 271 | FT (Fuel Temperature) gasoline high voltage |
| 272 | FT (Fuel Temperature) gasoline low voltage |
| 273 | FT (Fuel Temperature) gaseous fuel high voltage |
| 274 | FT (Fuel Temperature) gaseous fuel low voltage |
| 311 | Injector Loop Open or Low-Side Short to Ground 1 |
| 312 | Injector Coil Shorted 1 |
| 313 | Injector Loop Open or Low-Side Short to Ground 2 |
| 314 | Injector Coil Shorted 2 |
| 315 | Injector Loop Open or Low-Side Short to Ground 3 |
| 316 | Injector Coil Shorted 3 |
| 321 | Injector Loop Open or Low-Side Short to Ground 4 |
| 322 | Injector Coil Shorted 4 |
| 351 | FPump motor loop open or high-side shorted to ground |
| 352 | FPump motor high-side shorted to power |
| 353 | EPR delivery pressure higher than expected |
| 354 | EPR delivery pressure lower than expected |
| 355 | EPR comm lost |
| 359 | Fuel run-out longer than expected |
| 361 | EPR voltage supply high |
| 362 | EPR voltage supply low |
| 363 | EPR internal actuator fault detection |
| 364 | EPR internal circuitry fault detection |
| 365 | EPR internal comm fault detection |
| 411 | Primary Loop Open or Low-Side Short to Ground 1 |
| 412 | Primary Coil Shorted 1 |

| Code | Description |
|---|---|
| 413 | Primary Loop Open or Low-Side Short to Ground 2 |
| 414 | Primary Coil Shorted 2 |
| 415 | Primary Loop Open or Low-Side Short to Ground 3 |
| 416 | Primary Coil Shorted 3 |
| 421 | Primary Loop Open or Low-Side Short to Ground 4 |
| 422 | Primary Coil Shorted 4 |
| 531 | TPS1 (Throttle Position Sensor) high voltage |
| 532 | TPS1 (Throttle Position Sensor) Low voltage |
| 533 | TPS2 (Throttle Position Sensor) high voltage |
| 534 | TPS2 (Throttle Position Sensor) low voltage |
| 535 | TPS1 (Throttle Position Sensor) higher than TPS2 |
| 536 | TPS1 (Throttle Position Sensor) lower than TPS2 |
| 537 | Unable to reach higher TPS (Throttle Position Sensor) |
| 538 | Unable to reach lower TPS (Throttle Position Sensor) |
| 539 | TPS1/2 simultaneous voltages |
| 541 | AUX analog PU1 high |
| 542 | AUX analog PU1 low |
| 543 | AUX analog PU2 high |
| 544 | AUX analog PU2 low |
| 551 | Max govern speed override |
| 552 | Fuel rev limit |
| 553 | Spark rev limit |

For further engine fault code troubleshooting and diagnostic information, refer to the *Ford DSG-423 EFI Service Manual* (EDI part number 1060040).

**Ford DSG 423 EFI Service Manual**
Genie part number 119494

https://truckmanualshub.com/



| Code | Description |
|---|---|
| 611 | COP failure |
| 612 | Invalid interrupt |
| 613 | A/D loss |
| 614 | RTI 1 loss |
| 615 | Flash checksum invalid |
| 616 | RAM failure |
| 631 | 5VE1 low voltage |
| 632 | 5VE1 high voltage |
| 633 | 5VE2 high voltage |
| 634 | 5VE2 low voltage |
| 635 | 5VE1/2 simultaneous out-of-range |
| 641 | Rx Inactive |
| 642 | Rx Noise |
| 643 | Invalid Packet Format |
| 644 | Shutdown Request |
| 646 | CAN Tx failure |
| 647 | CAN Rx failure |
| 648 | CAN address conflict failure |
| 655 | RTI 2 loss |
| 656 | RTI 3 loss |
| 711 | Relay control ground short |
| 712 | Relay coil open |
| 713 | Relay coil short to power |
| 714 | FPump relay control ground short |
| 715 | Fpump relay coil open |
| 716 | Fpump relay coil short to power |
| 721 | Start relay control ground short |
| 722 | Start relay coil open |
| 723 | Start relay coil short to power |
| 731 | PWM1-Gauge1 open / ground short |
| 732 | PWM1-Gauge1 short to power |
| 733 | PWM2-Gauge2 open / ground short |
| 734 | PWM2-Gauge2 short to power |
| 735 | PWM3-Gauge3 open / ground short |

| Code | Description |
|---|---|
| 736 | PWM3-Gauge3 short to power |
| 741 | PWM4 open / ground short |
| 742 | PWM4 short to power |
| 743 | PWM5 open / ground short |
| 744 | PWM5 short to power |
| 761 | MIL (Malfunction Indicator Light) control ground short |
| 762 | MIL (Malfunction Indicator Light) open |
| 763 | MIL (Malfunction Indicator Light) control short to power |
| 771 | Tach output ground short |
| 772 | Tach output short to power |
| 1629 | J1939 TSC1 message receipt lost |
| 1630 | J1939 ETC message receipt lost |

For further engine fault code troubleshooting and diagnostic information, refer to the *Ford DSG-423 EFI Service Manual* (EDI part number 1060040).

**Ford DSG 423 EFI Service Manual**
Genie part number 119494

https://truckmanualshub.com/



This page intentionally left blank.

https://truckmanualshub.com/



# Schematics

## Observe and Obey:

- ☑ Troubleshooting and repair procedures shall be completed by a person trained and qualified on the repair of this machine.
- ☑ Immediately tag and remove from service a damaged or malfunctioning machine.
- ☑ Repair any machine damage or malfunction before operating the machine.

## Before Troubleshooting:

- ☑ Read, understand and obey the safety rules and operating instructions in the appropriate Operator's Manual on your machine.
- ☑ Be sure that all necessary tools and test equipment are available and ready for use.

## About This Section

There are two groups of schematics in this section. An illustration legend precedes each group of drawings.

### Electrical Schematics

**WARNING** Electrocution hazard. Contact with electrically charged circuits could result in death or serious injury. Remove all rings, watches and other jewelry.

### Hydraulic Schematics

**WARNING** Bodily injury hazard. Spraying hydraulic oil can penetrate and burn skin. Loosen hydraulic connections very slowly to allow the oil pressure to dissipate gradually. Do not allow oil to squirt or spray.

### General Repair Process

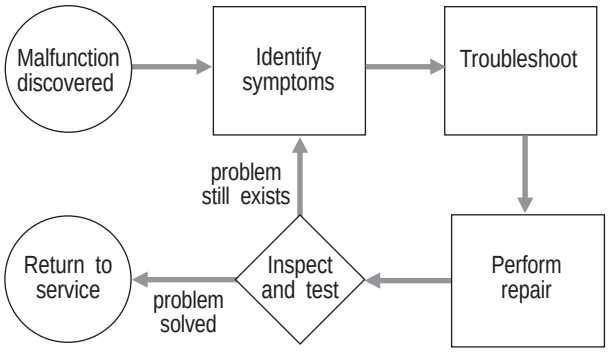

https://truckmanualshub.com/



# Electrical Symbols Legend

REV A

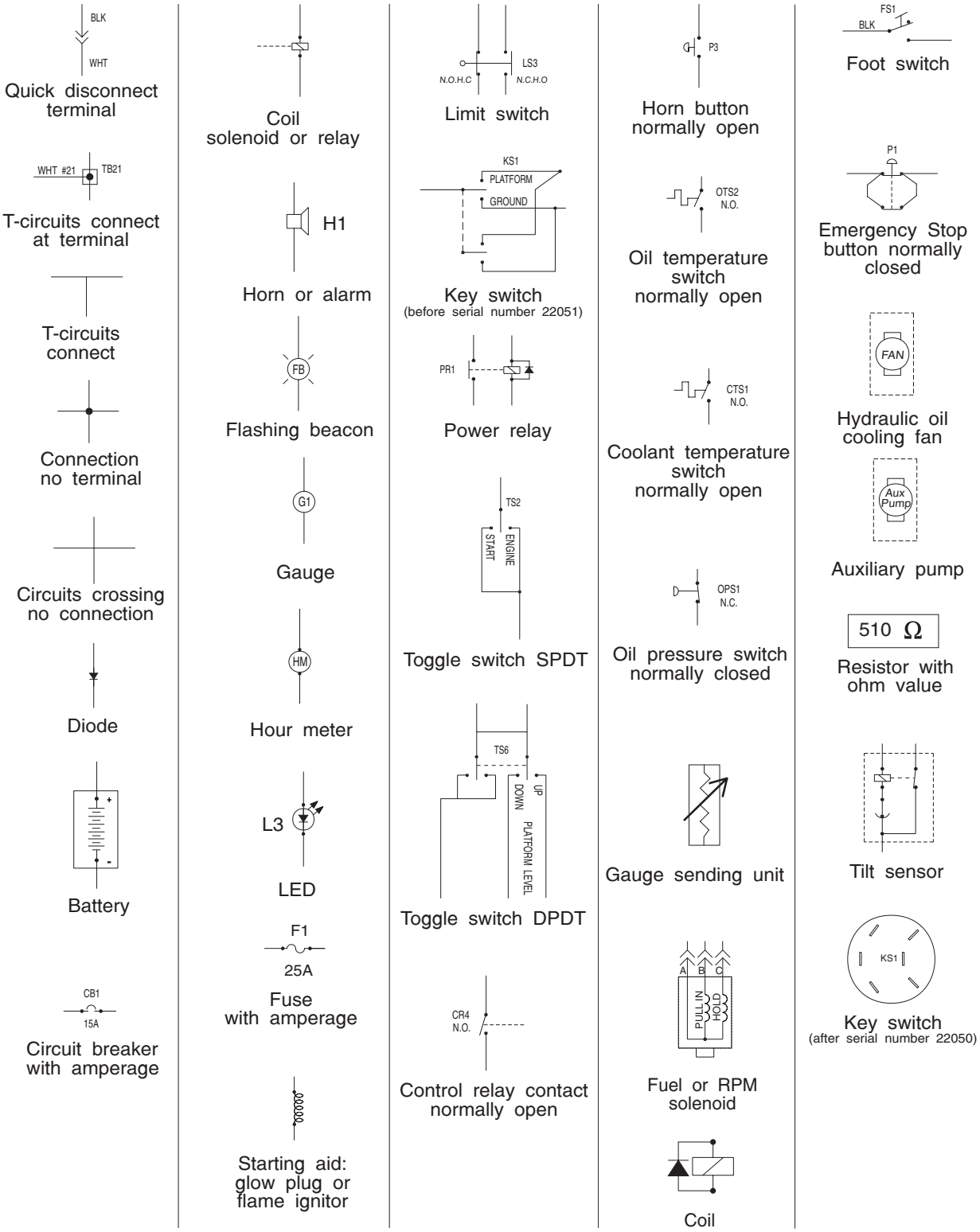

https://truckmanualshub.com/



# Hydraulic Symbols Legend

REV A

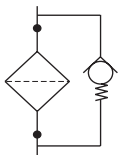


Filter with bypass valve relief setting

Pump fixed displacement

Pump bi-directional, variable displacement

Motor bi-directional

Motor 2-speed, bi-directional

Pump prime mover (engine or motor)

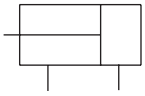

Double acting cylinder

Orifice with size

Check valve

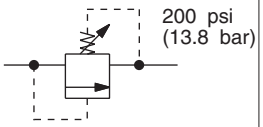


Relief valve with pressure setting

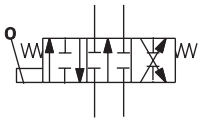

Directional valve (mechanically activated)

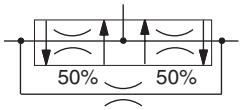


Flow divider/combiner valve with pressure balancing orifice and flow percentages

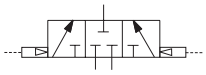

Pilot operated 3 position, 3 way, shuttle valve

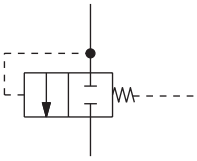

Differential sensing valve

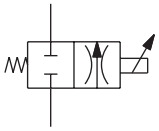

Solenoid operated proportional valve

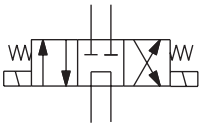

Solenoid operated 3 position, 4 way, directional valve

Priority flow regulator valve

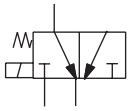

Solenoid operated 2 position, 3 way, directional valve

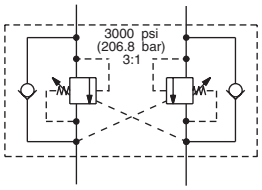


Counterbalance valve with pressure and pilot ratio

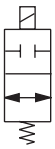

2 position, 2 way solenoid valve

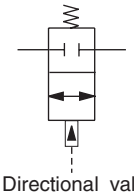

Directional valve pilot operated 2 position, 2 way

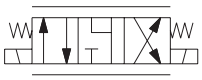

Solenoid operated 3 position, 4 way, proportional directional valve

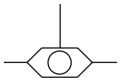

2 position, 3 way, shuttle valve

Brake

Shut off valve

https://truckmanualshub.com/



## Ford Engine Relay Layout

REV A

# Ford LRG-425 EFI (before serial number 30142)

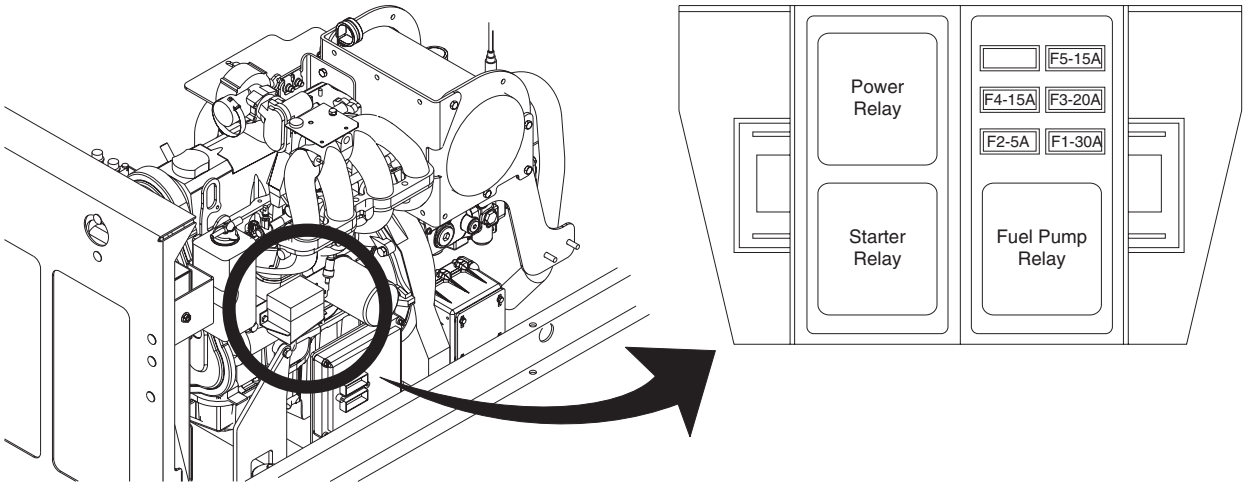


# Ford DSG-423 EFI (after serial number 30141)

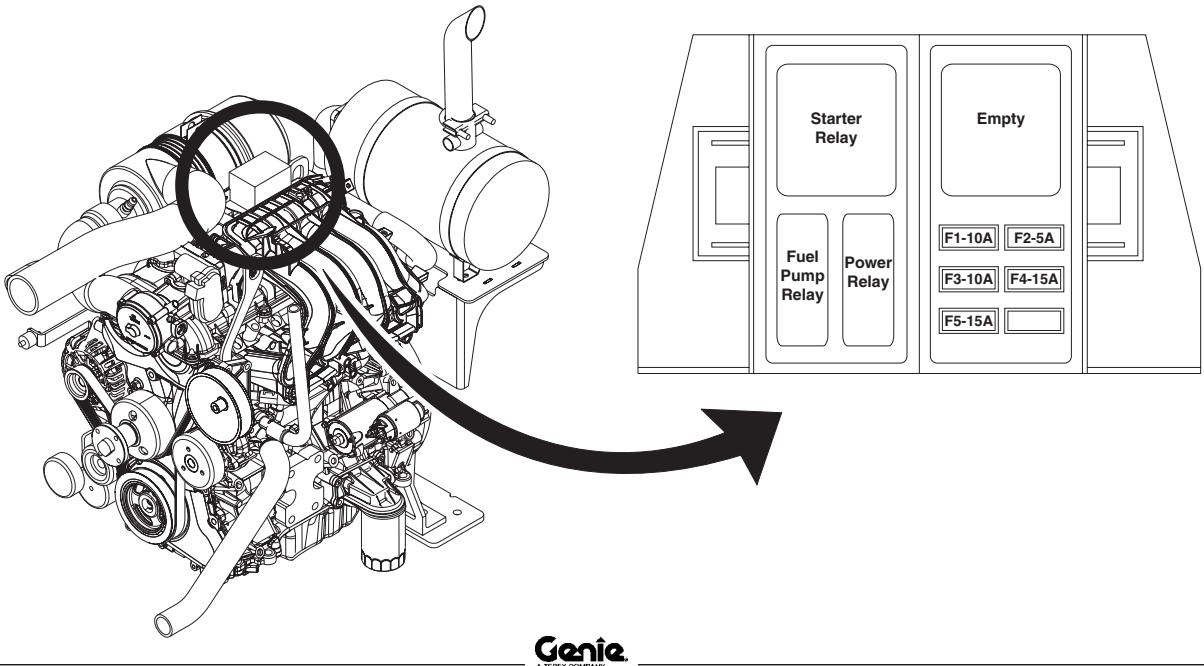

https://truckmanualshub.com/



# Ford LRG-425 EFI Engine Wire Harness

https://truckmanualshub.com/



## Ford LRG-425 EFI Engine Wire Harness

REV A

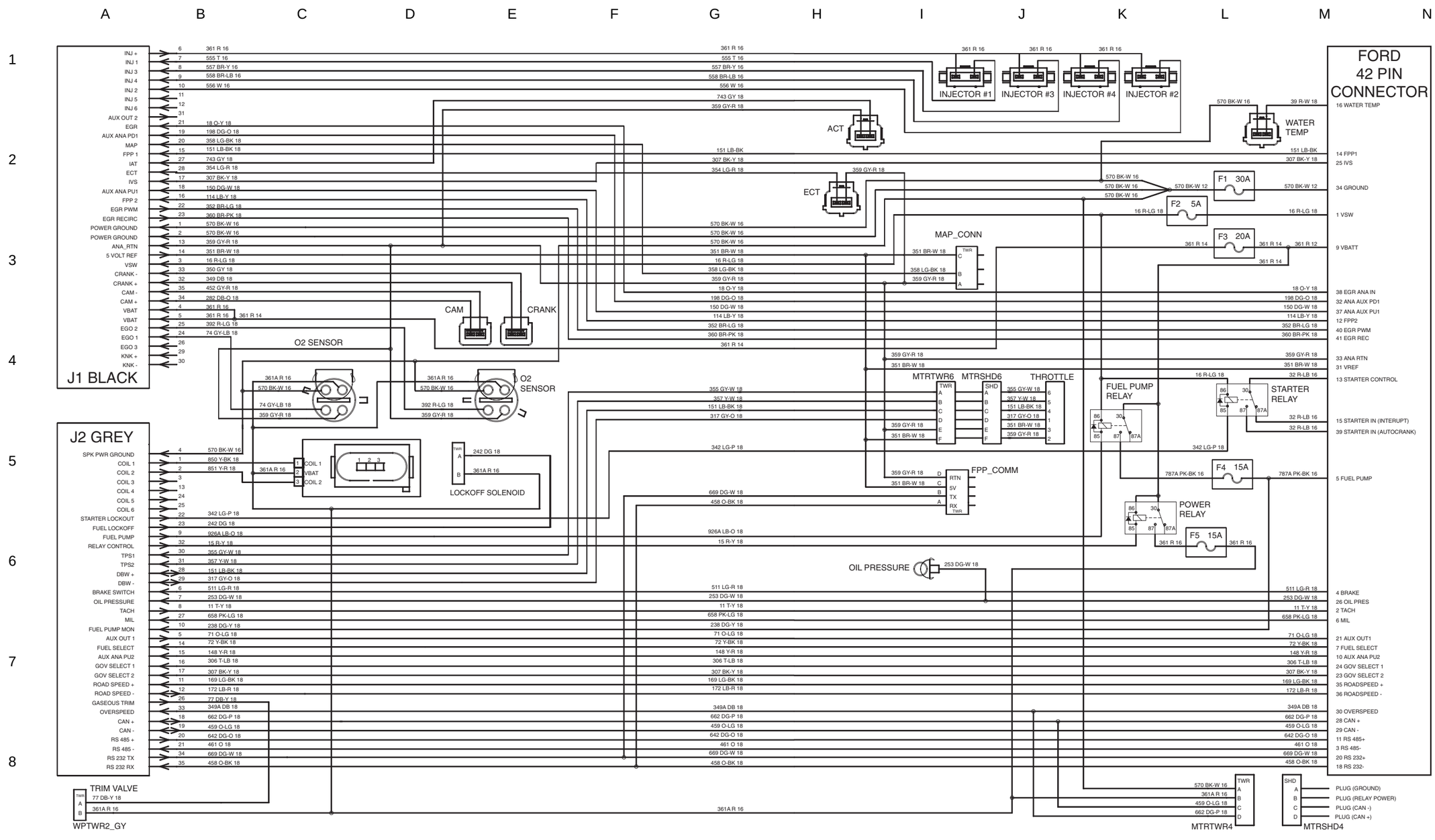

https://truckmanualshub.com/



REV A

# Ford DSG-423 EFI Engine Wire Harness

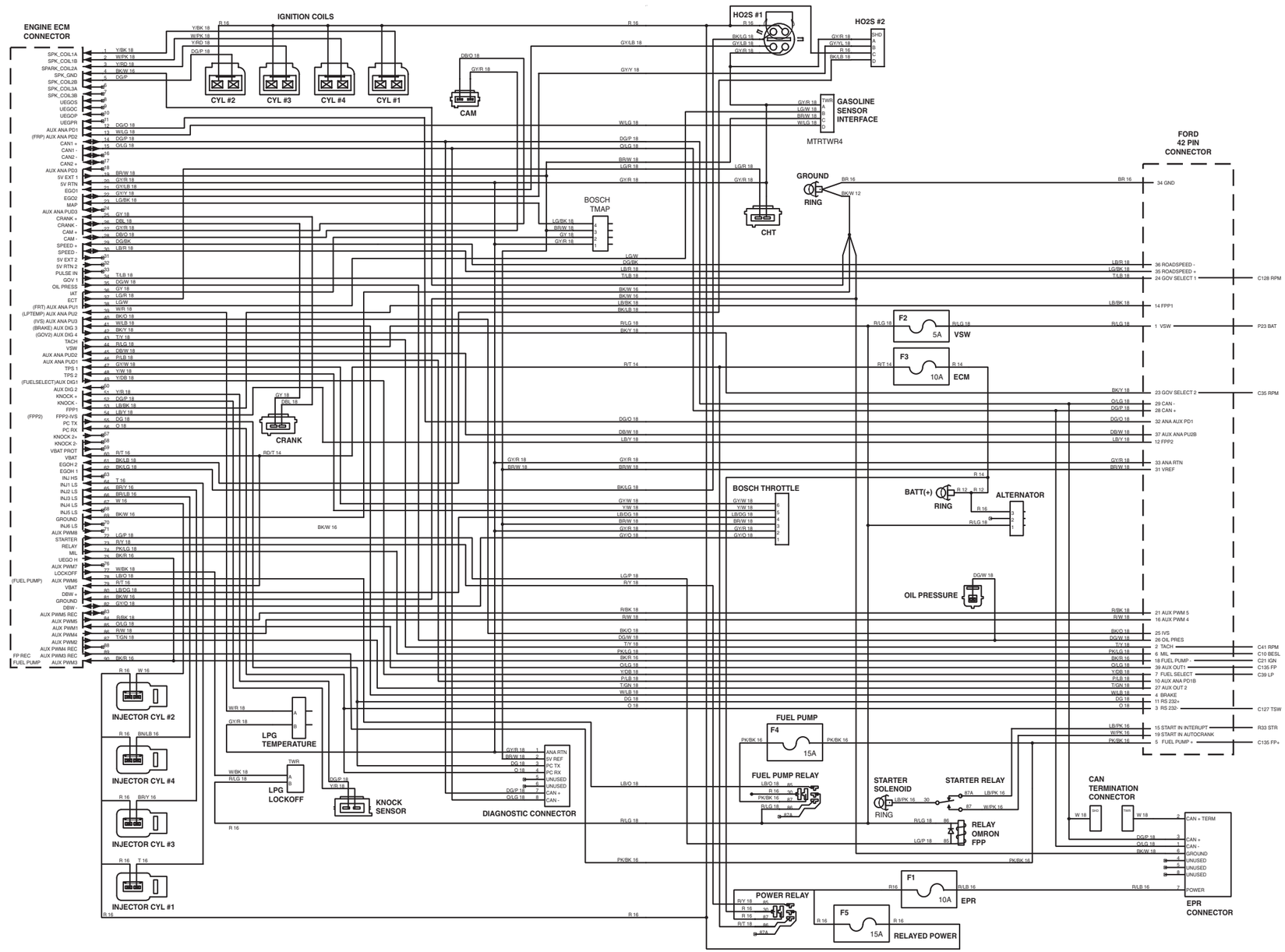

https://truckmanualshub.com/



# Ford DSG-423 EFI Engine Wire Harness

https://truckmanualshub.com/

https://truckmanualshub.com/



# Electrical Schematic, Z-45/25

REV C

## Ford LRG-425 EFI Models (before serial number 30142)

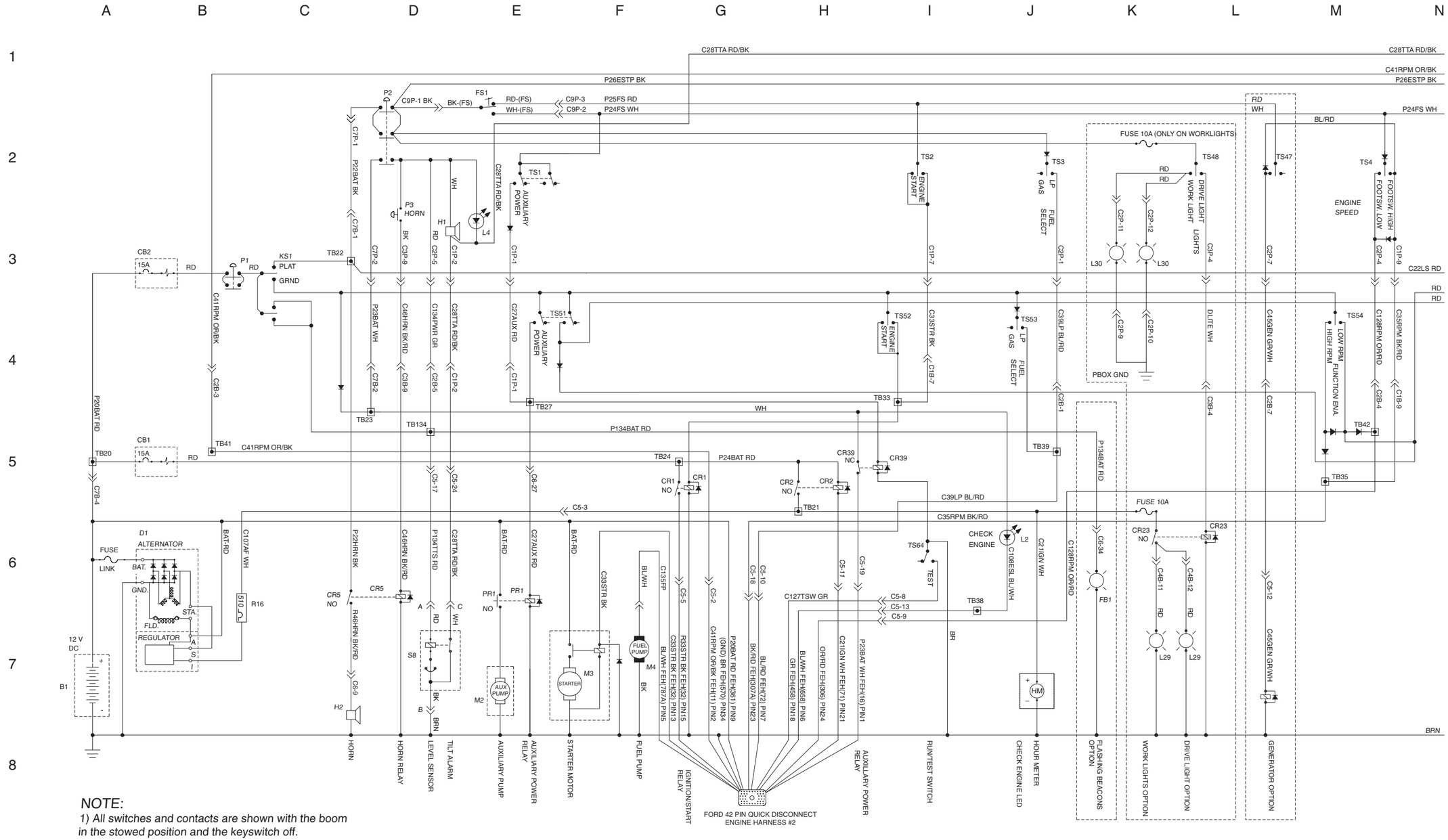


*NOTE:*
*1) All switches and contacts are shown with the boom in the stowed position and the keyswitch off.*

https://truckmanualshub.com/



REV C

# Electrical Schematic, Z-45/25

## Ford LRG-425 EFI Models (before serial number 30142)

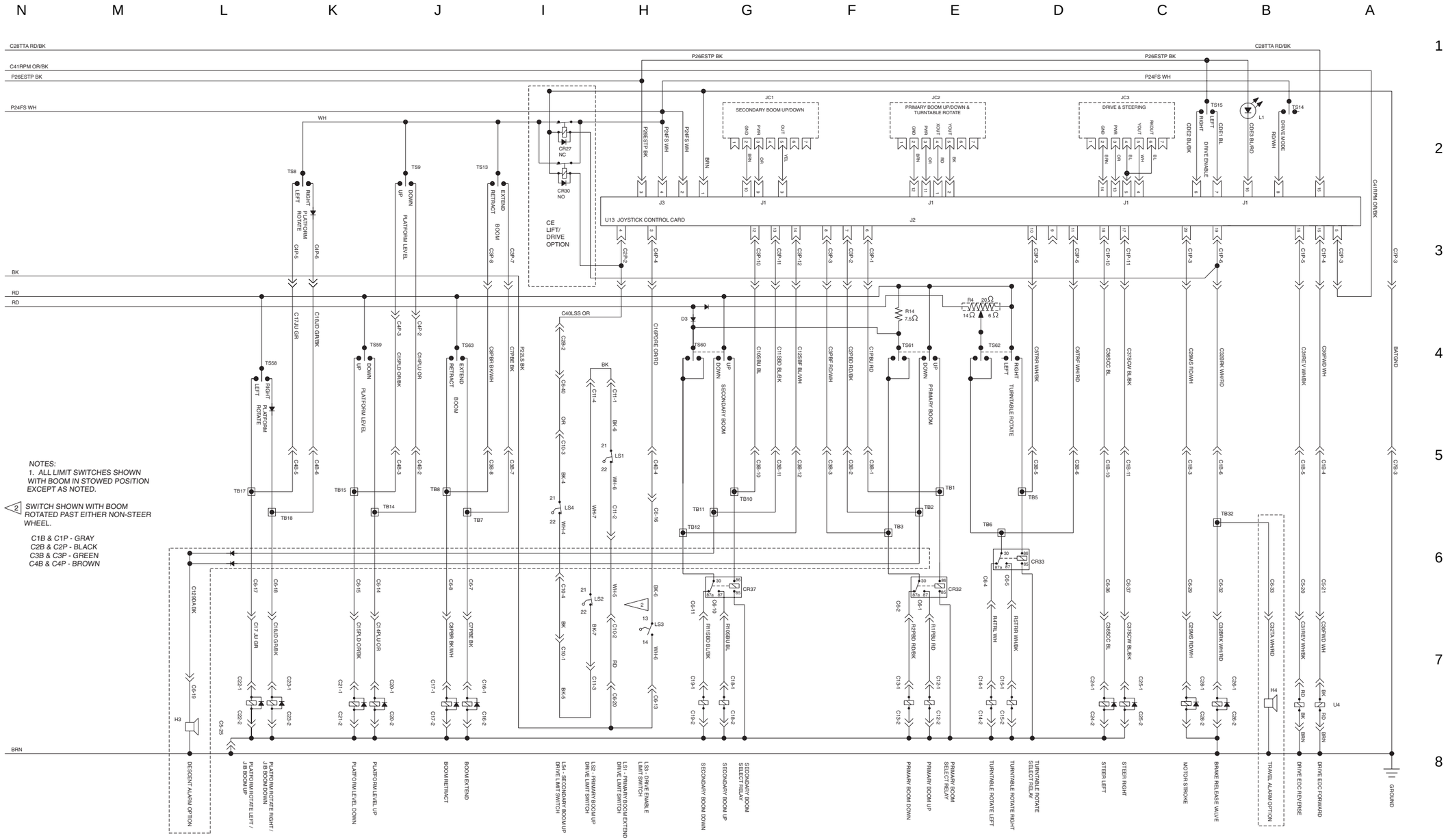

https://truckmanualshub.com/



# Electrical Schematic, Z-45/25

Ford LRG-425 EFI Models (before serial number 30142)

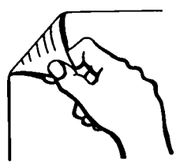

https://truckmanualshub.com/

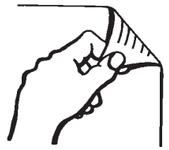

https://truckmanualshub.com/



## Electrical Schematic, Z-45/25

REV A

Ford DSG-423 EFI Models (after serial number 30141)

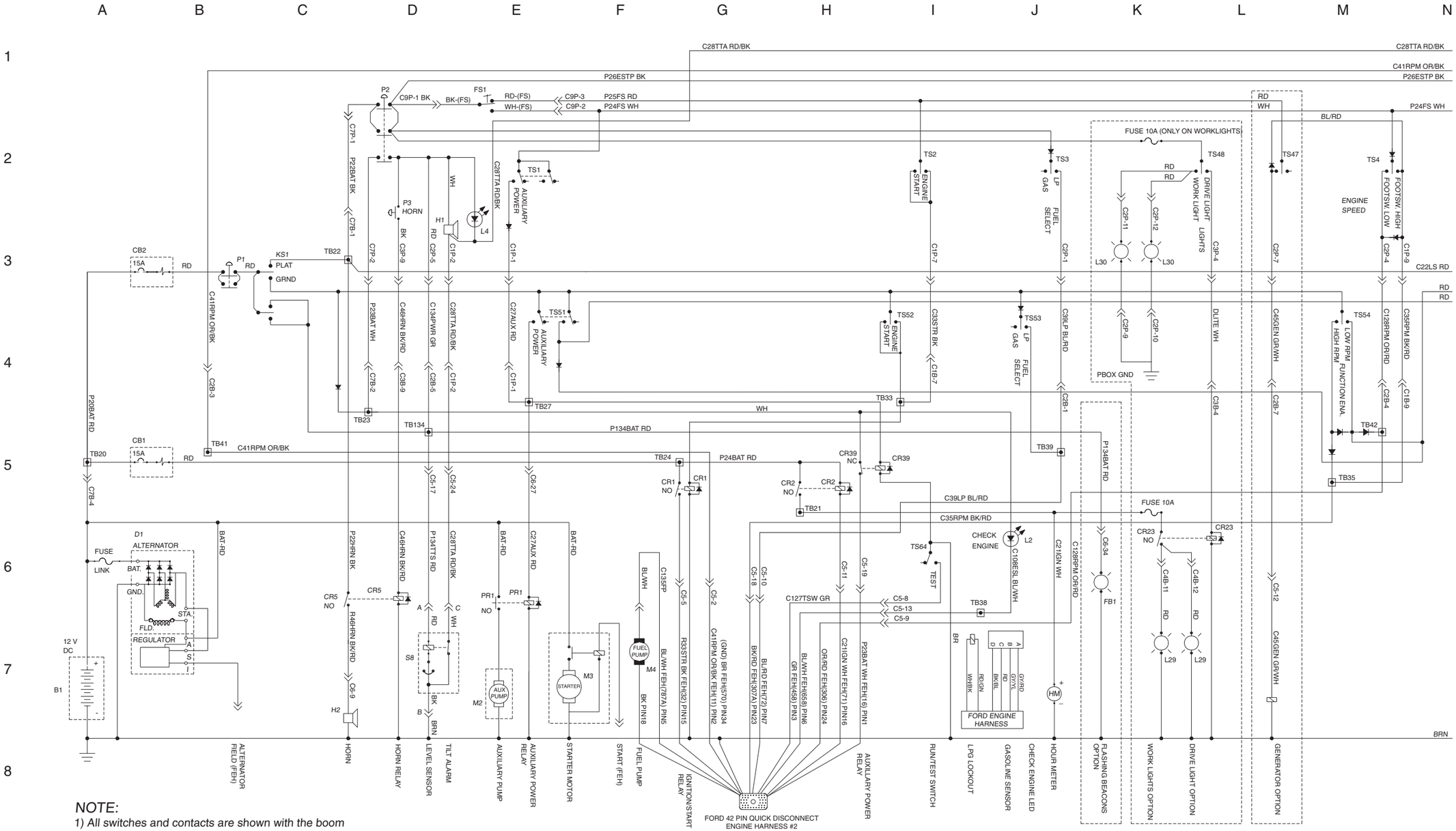


*NOTE:*

*1) All switches and contacts are shown with the boom in the stowed position and the keyswitch off.*

https://truckmanualshub.com/



REV A

# Electrical Schematic, Z-45/25

## Ford DSG-423 EFI Models (after serial number 30141)

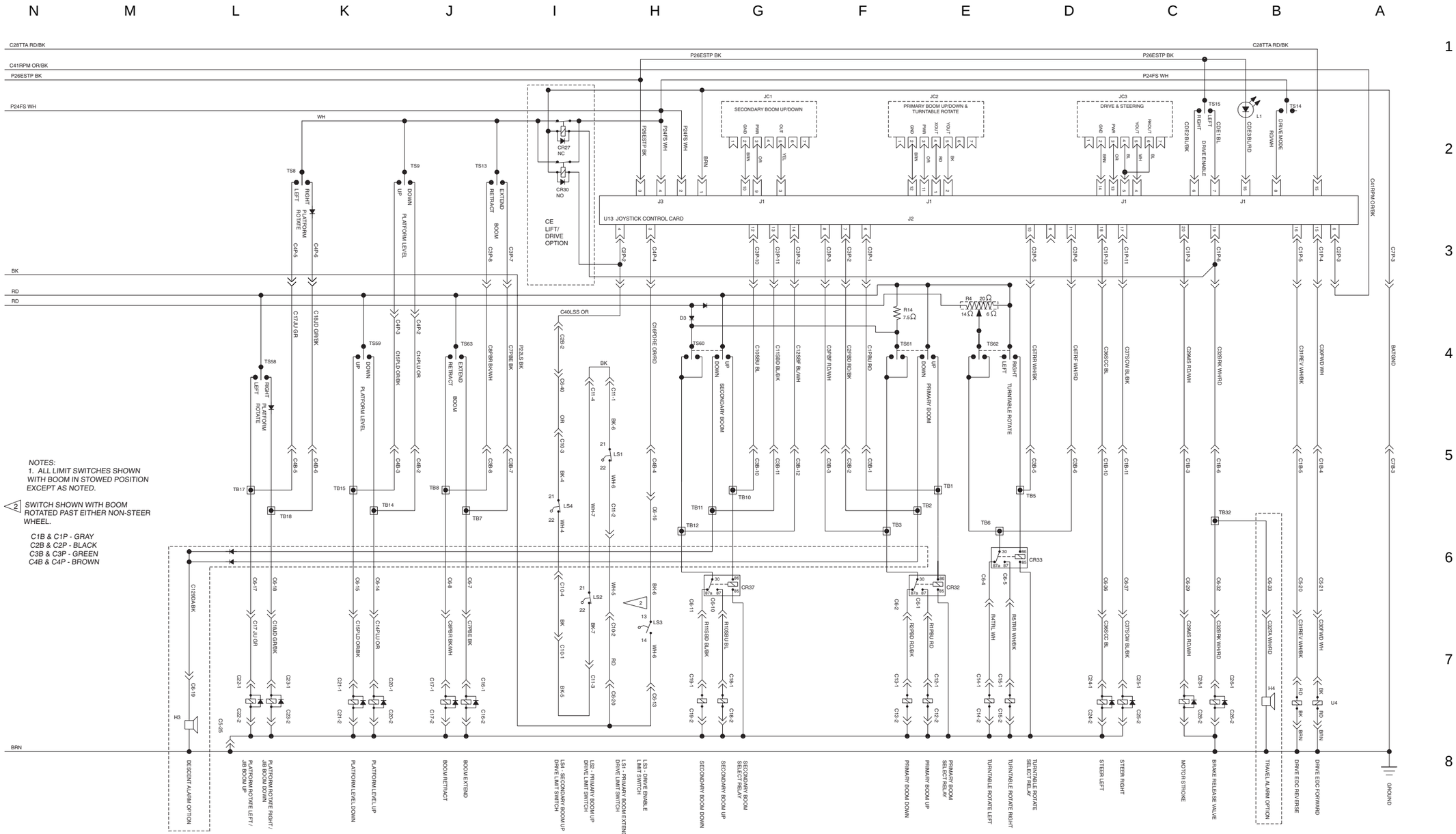

https://truckmanualshub.com/



# Electrical Schematic, Z-45/25

Ford DSG-423 EFI Models (after serial number 30141)

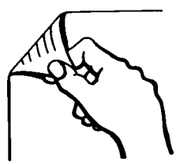

https://truckmanualshub.com/



# Ground Control Box Terminal Strip Wiring Diagram, Z-45/25

Ford Models

https://truckmanualshub.com/



# Ground Control Box Terminal Strip Wiring Diagram, Z-45/25

REV A

Ford Models

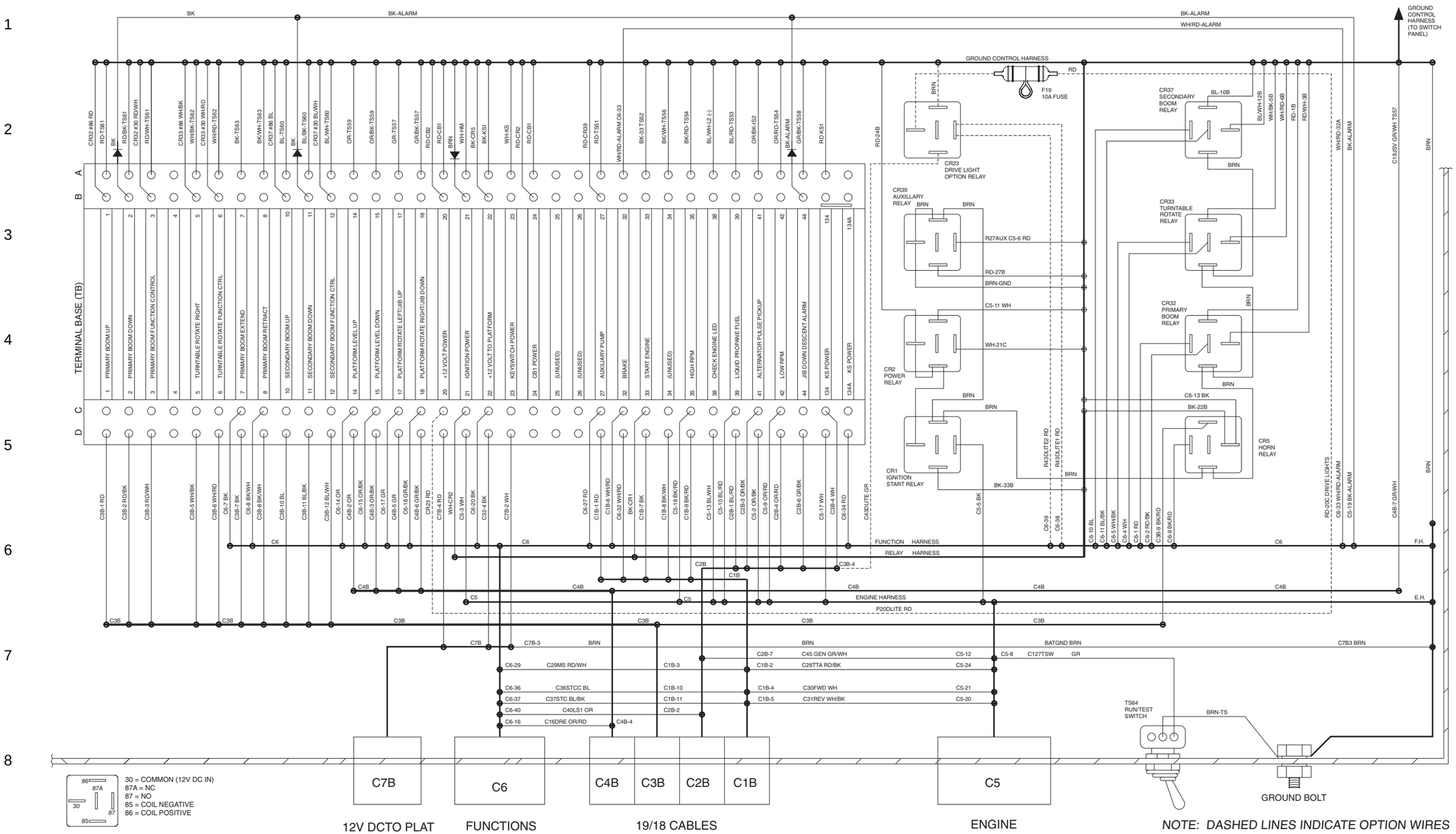

https://truckmanualshub.com/



REV B

# Ground Control Box Switch Panel Wiring Diagram, Z-45/25

## Ford Models

| LABEL | DESCRIPTION |
|---|---|
| CB1 | CIRCUIT BREAKER, ENGINE, 15A |
| CB2 | CIRCUIT BREAKER, CONTROLS, 15A |
| CR1 | IGNITION / START RELAY |
| CR2 | INGITION POWER RELAY |
| CR4 | HIGH IDLE RELAY |
| CR5 | HORN RELAY |
| HM | HOUR METER |
| KS1 | KEY SWITCH |
| L2 | CHECK ENGINE LED |
| P1 | RED EMERGENCY STOP BUTTON |
| R4 | SPEED LIMITING VARIABLE RESISTOR 20 OHMS |
| R14 | UP/DOWN SPEED RESISTER 7.5 OHMS |
| TS51 | AUXILIARY TOGGLE SWITCH |
| TS52 | ENGINE START TOGGLE SWITCH |
| TS53 | FUEL SELECT TOGGLE SWITCH |
| TS54 | FUNCTION ENABLE TOGGLE SWITCH |
| TS57 | PLATFORM ROTATE TOGGLE SWITCH |
| TS59 | PLATFORM LEVEL TOGGLE SWITCH |
| TS60 | SECONDARY BOOM UP/DOWN TOGGLE SWITCH |
| TS61 | PRIMARY BOOM UP/DOWN TOGGLE SWITCH |
| TS62 | TURNTABLE ROTATE TOGGLE SWITCH |
| TS63 | PRIMARY BOOM EXTEND/RETRACT TOGGLE SWITCH |
| TS64 | RUN/TEST TOGGLE SWITCH |

*NOTE: DASHED LINES INDICATE OPTION WIRES*

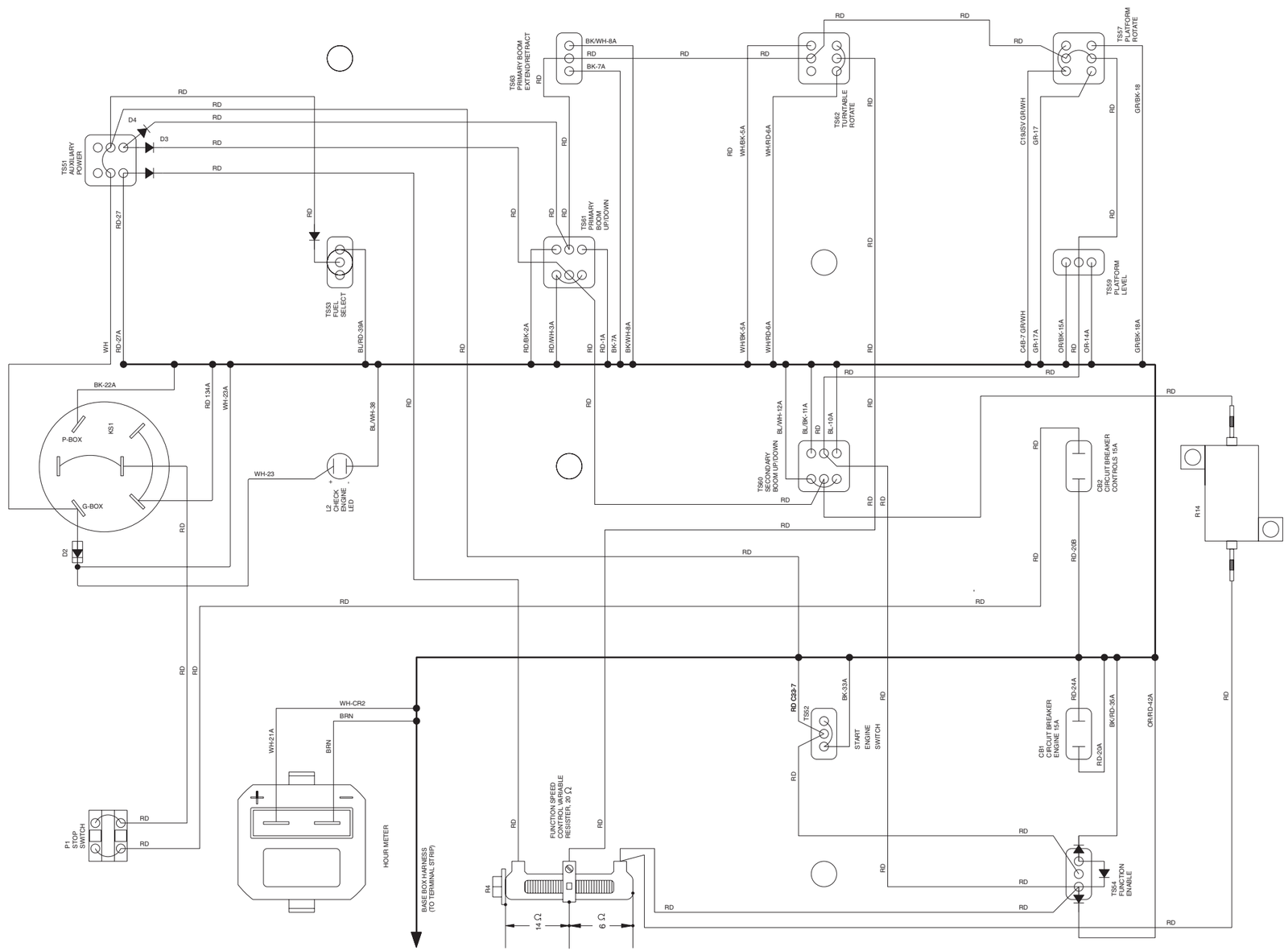

https://truckmanualshub.com/



## Ground Control Box Switch Panel Wiring Diagram, Z-45/25

Ford Models

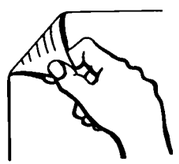

https://truckmanualshub.com/



# Platform Control Box Wiring Diagram, Z-45/25

Ford Models

https://truckmanualshub.com/



## Platform Box Wiring Diagram, Z-45/25

REV A

Ford Models

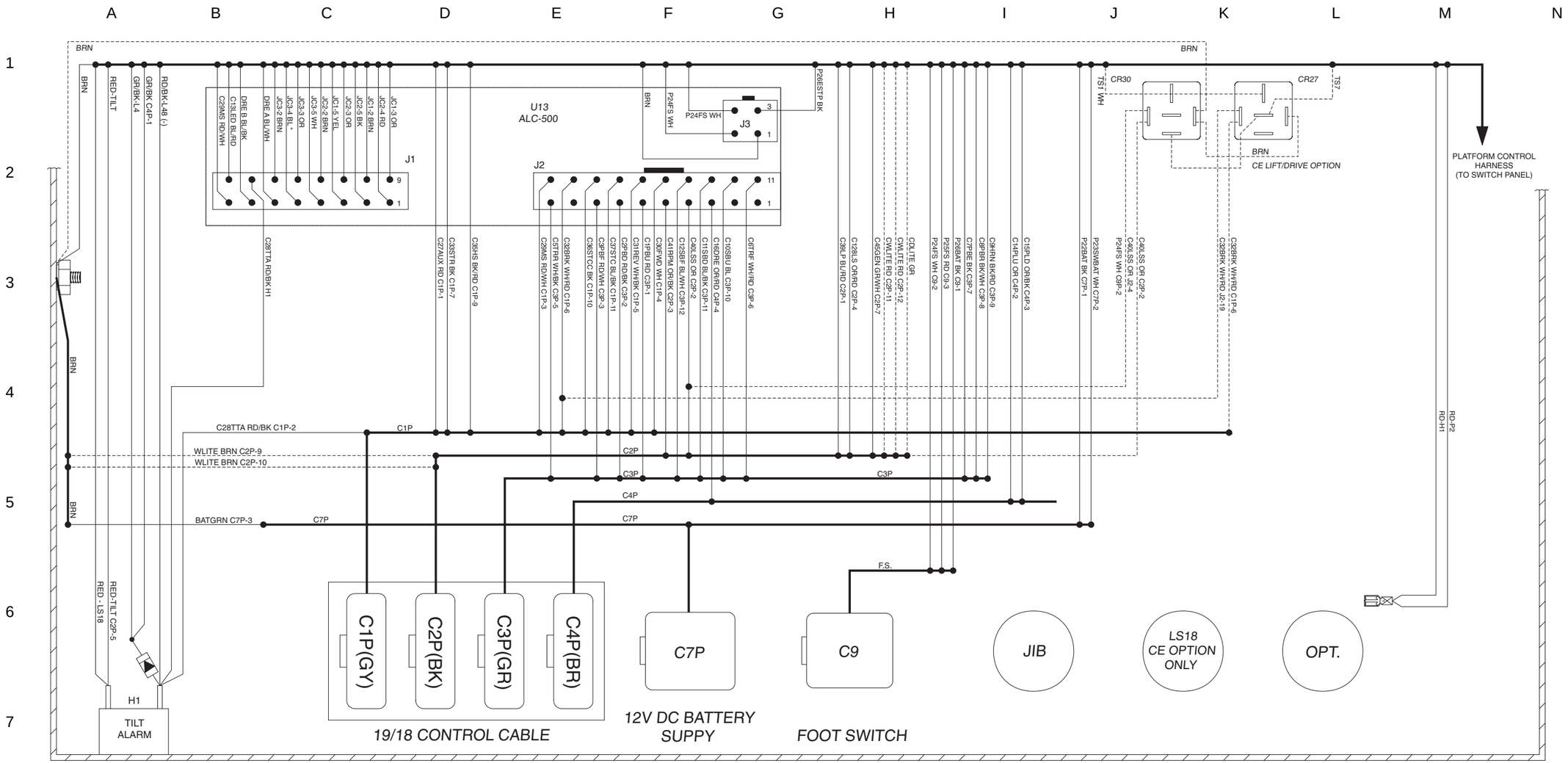


| ITEM | DESCRIPTION |
|---|---|
| H1 | TILT ALARM |
| C7P | 12V DC PLATFORM POWER CONNECTOR |
| C9 | FOOT SWITCH CONNECTOR |
| C1P - C4P | 48 PIN CONNECTOR BLOCK |
| U13 | ALC-500 CONTROL BOARD |
| J1 | CONTROL BOARD INPUT CONNECTOR |
| J2 | CONTROL BOARD OUTPUT CONNECTOR |
| J3 | CONTROL BOARD POWER CONNECTOR |
| CR27 | CONTROL RELAY (CE OPTION) |
| CR30 | CONTROL RELAY (CE OPTION) |
| LS18 | LOAD SENSE LIMIT SWITCH |

https://truckmanualshub.com/



REV A

# Platform Control Box Switch Panel Wiring Diagram, Z-45/25

Ford Models

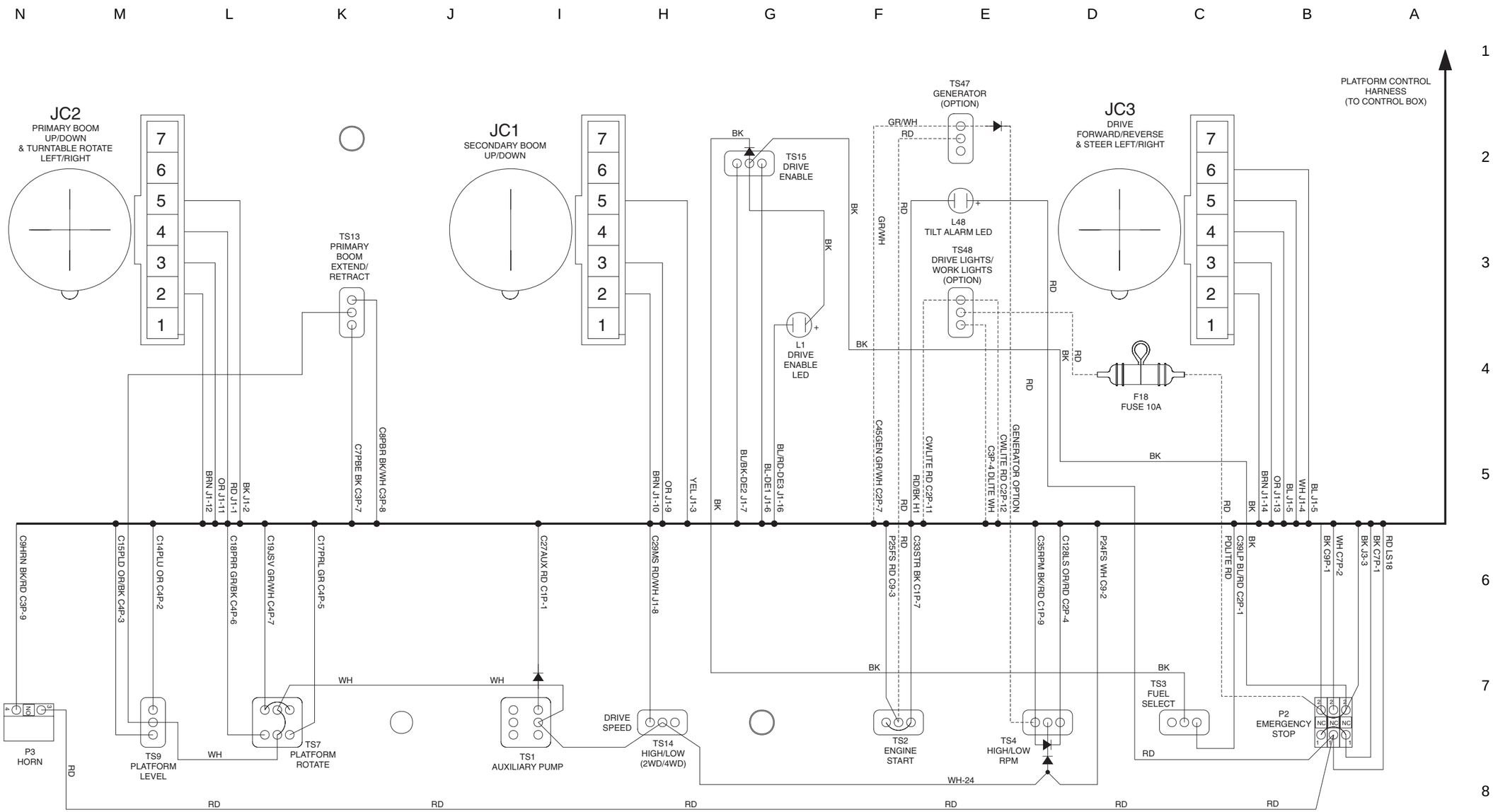


*NOTE: DASHED LINES INDICATE OPTION WIRES*

https://truckmanualshub.com/



## Platform Control Box Switch Panel Wiring Diagram, Z-45/25

Ford Models

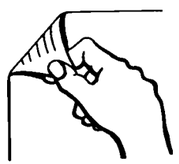

https://truckmanualshub.com/

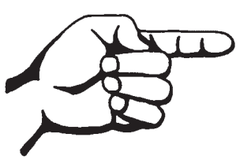

https://truckmanualshub.com/



## Electrical Schematic, Z-45/25J

REV C

Ford LRG-425 EFI Models (before serial number 30142)

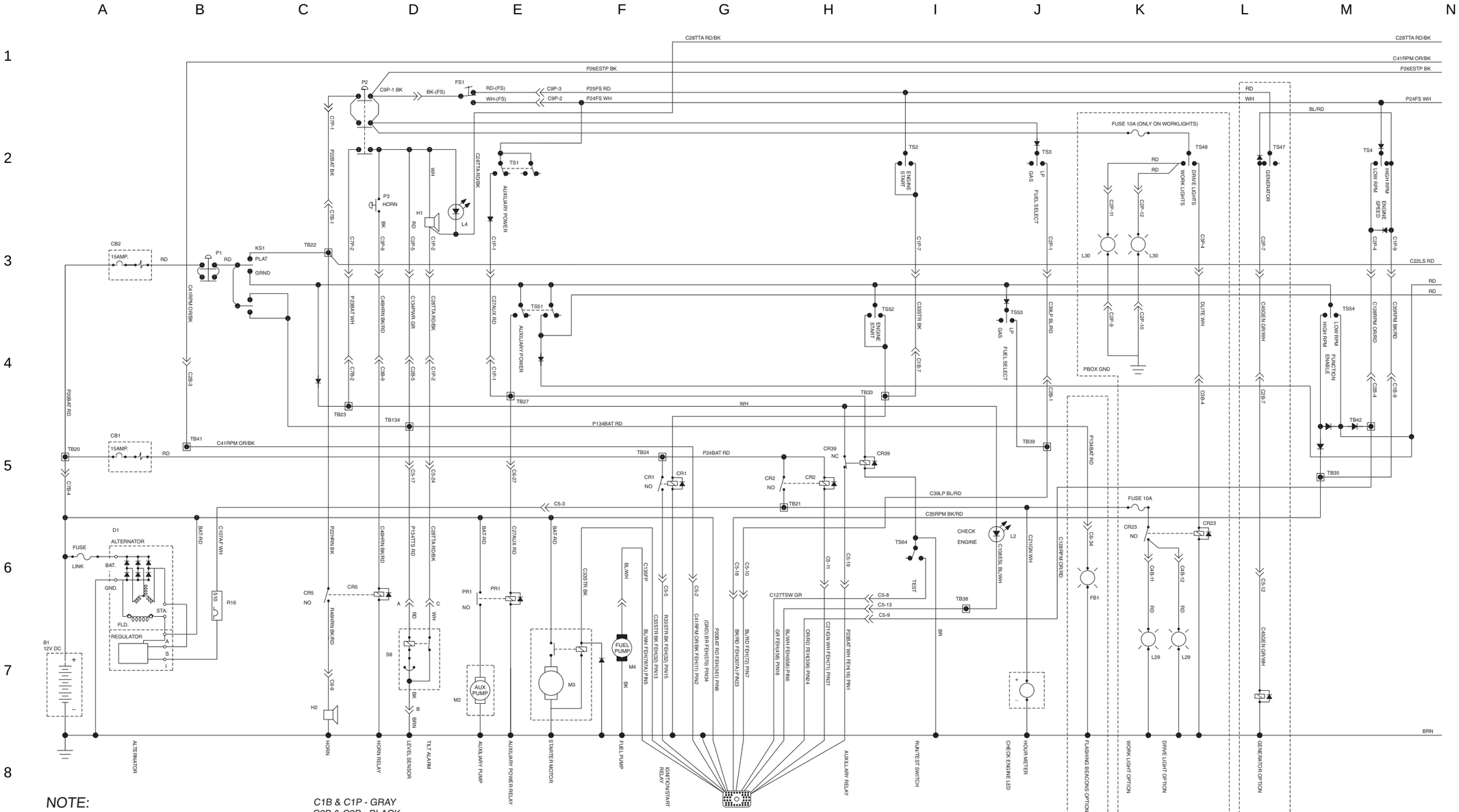


*NOTE:*
*1) All switches and contacts are shown with the boom in the stowed position and the keyswitch off.*

*C1B & C1P - GRAY*
*C2B & C2P - BLACK*
*C3B & C3P - GREEN*
*C4B & C4P - BROWN*

https://truckmanualshub.com/



REV C

# Electrical Schematic, Z-45/25J

## Ford LRG-425 EFI Models (before serial number 30142)

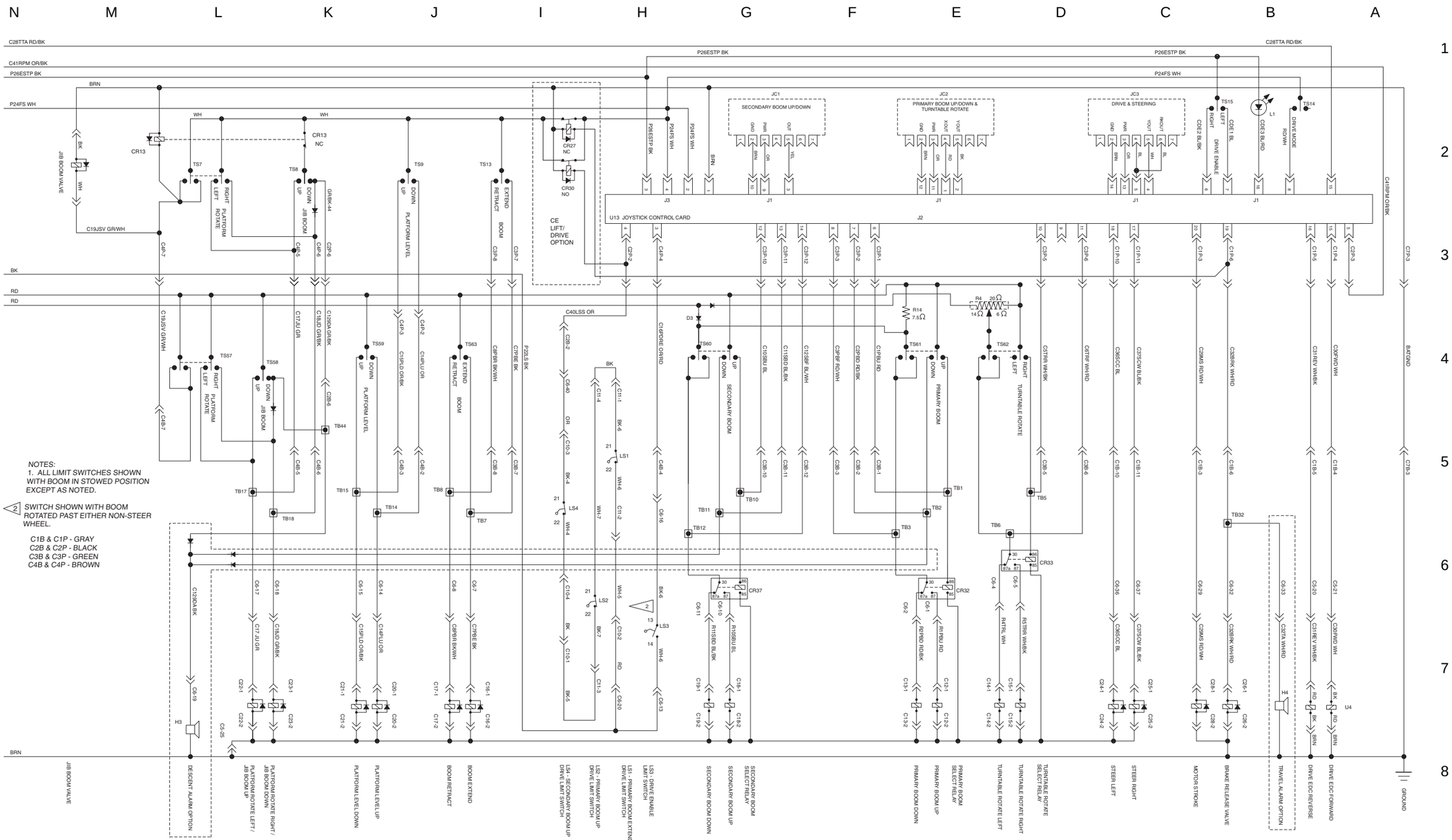

https://truckmanualshub.com/



# Electrical Schematic, Z-45/25J

Ford LRG-425 EFI Models (before serial number 30142)

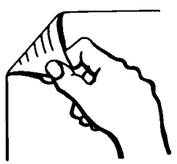

https://truckmanualshub.com/

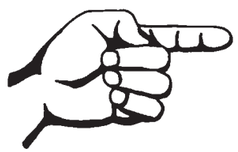

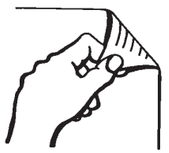

https://truckmanualshub.com/



## Electrical Schematic, Z-45/25J

REV A

Ford DSG-423 EFI Models (after serial number 30141)

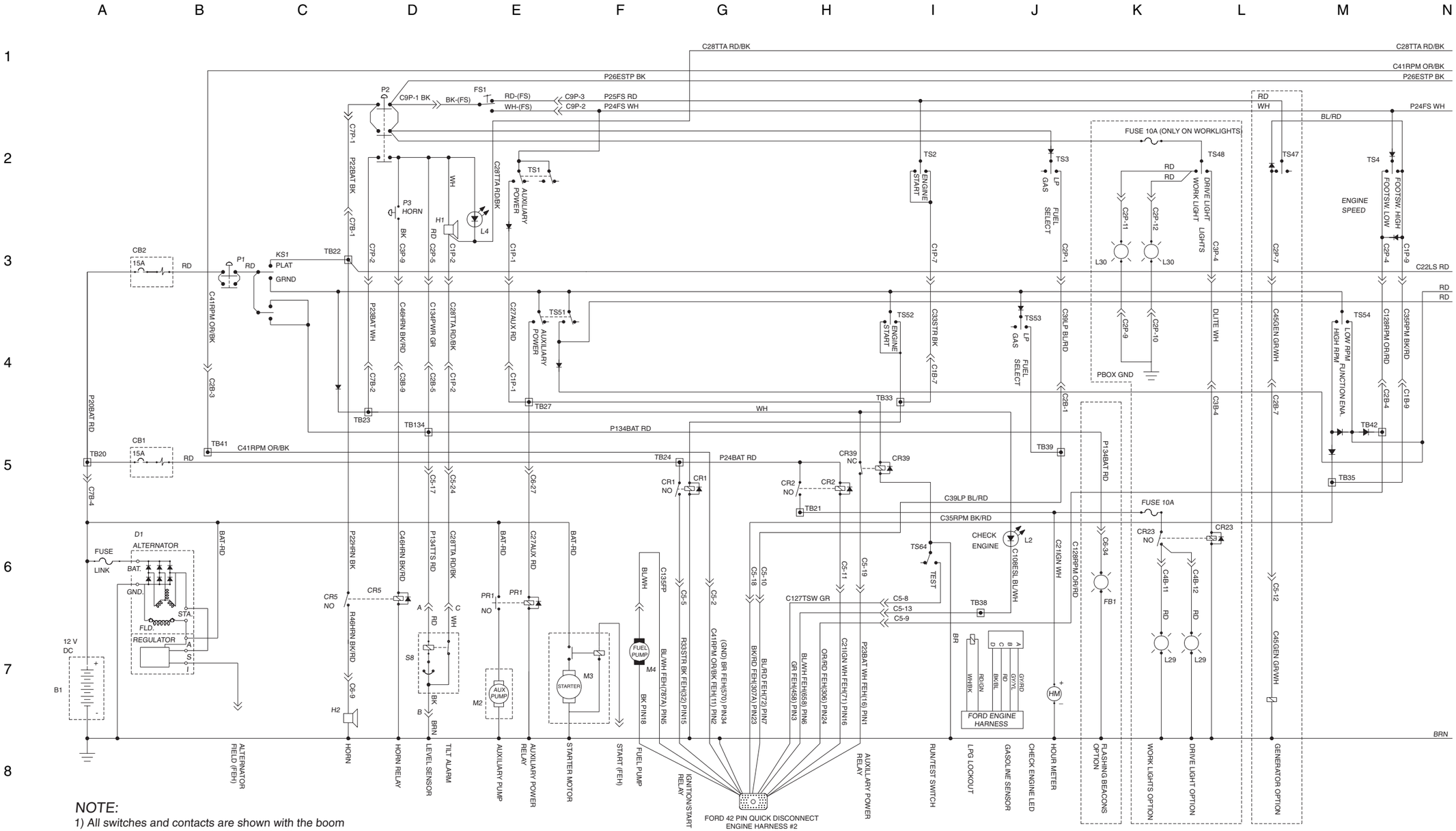


*NOTE:*

*1) All switches and contacts are shown with the boom in the stowed position and the keyswitch off.*

https://truckmanualshub.com/



REV A

# Electrical Schematic, Z-45/25J

## Ford DSG-423 EFI Models (after serial number 30141)

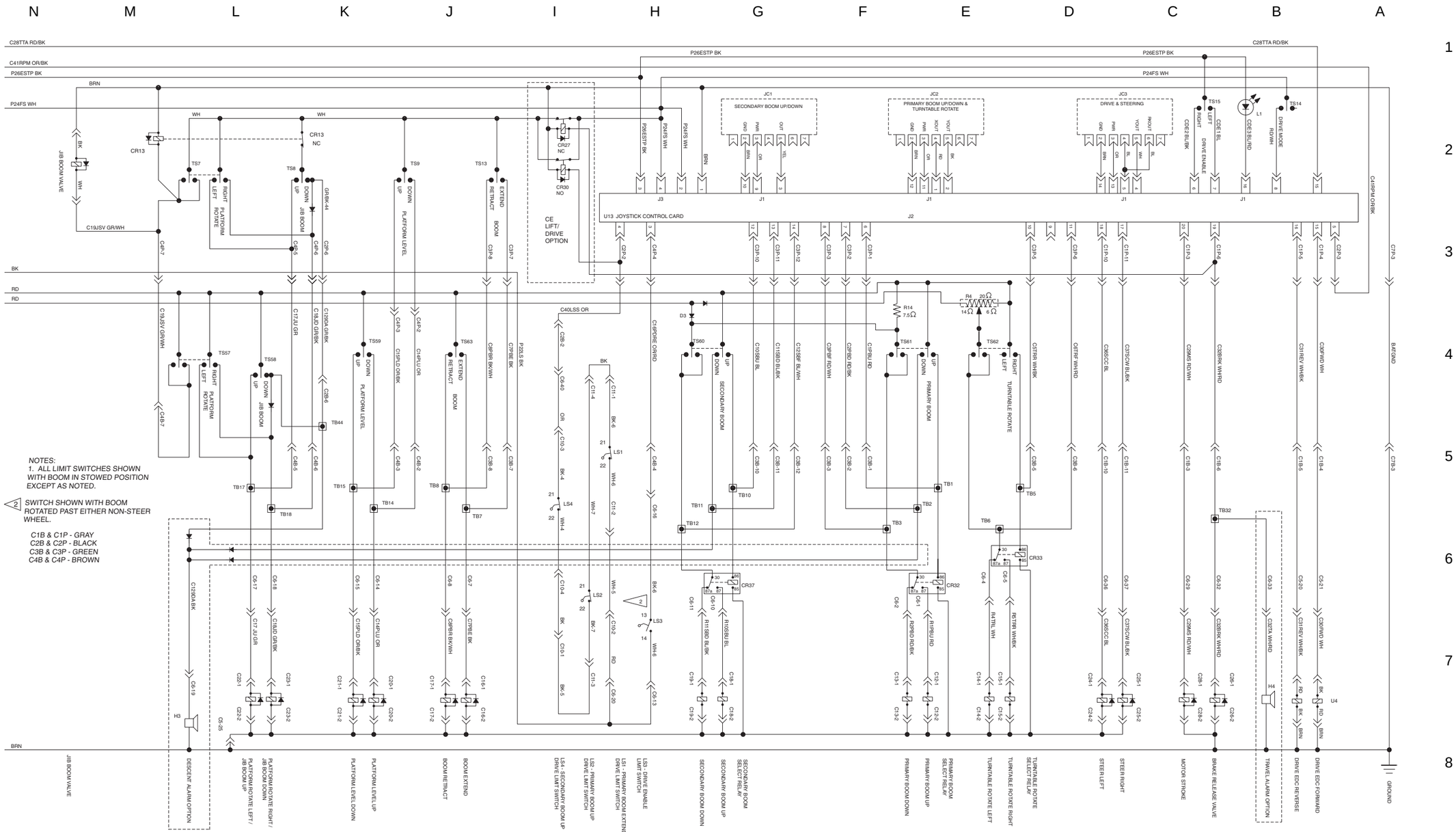


NOTES:
1. ALL LIMIT SWITCHES SHOWN WITH BOOM IN STOWED POSITION EXCEPT AS NOTED.

2 SWITCH SHOWN WITH BOOM ROTATED PAST EITHER NON-STEER WHEEL.

C1B & C1P - GRAY
C2B & C2P - BLACK
C3B & C3P - GREEN
C4B & C4P - BROWN

https://truckmanualshub.com/



# Electrical Schematic, Z-45/25

Ford DSG-423 EFI Models (after serial number 30141)

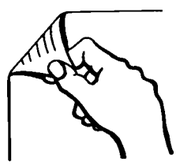

https://truckmanualshub.com/



# Ground Control Box Terminal Strip Wiring Diagram, Z-45/25J

Ford Models

https://truckmanualshub.com/



# Ground Control Box Terminal Strip Wiring Diagram, Z-45/25J

REV A

Ford Models

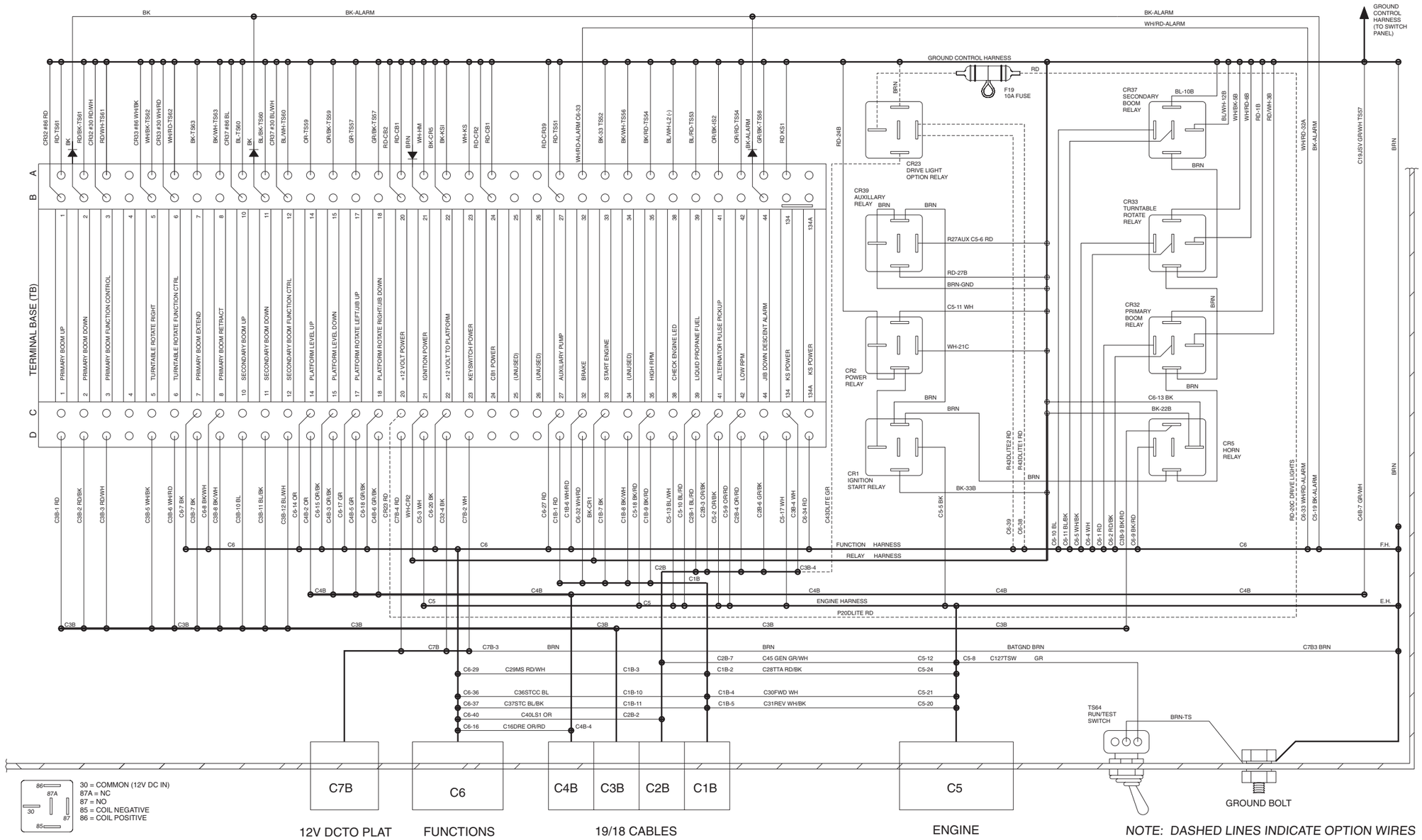

https://truckmanualshub.com/



REV B

# Ground Control Box Switch Panel Wiring Diagram, Z-45/25J

Ford Models

| LABEL | DESCRIPTION |
|---|---|
| CB1 | CIRCUIT BREAKER, ENGINE, 15A |
| CB2 | CIRCUIT BREAKER, CONTROLS, 15A |
| CR1 | IGNITION / START RELAY |
| CR2 | INGITION POWER RELAY |
| CR4 | HIGH IDLE RELAY |
| CR5 | HORN RELAY |
| HM | HOUR METER |
| KS1 | KEY SWITCH |
| L2 | CHECK ENGINE LED |
| P1 | RED EMERGENCY STOP BUTTON |
| R4 | SPEED LIMITING VARIABLE RESISTOR 20 OHMS |
| R14 | UP/DOWN SPEED RESISTER 7.5 OHMS |
| TS51 | AUXILIARY TOGGLE SWITCH |
| TS52 | ENGINE START TOGGLE SWITCH |
| TS53 | FUEL SELECT TOGGLE SWITCH |
| TS54 | FUNCTION ENABLE TOGGLE SWITCH |
| TS57 | PLATFORM ROTATE TOGGLE SWITCH |
| TS58 | JIB BOOM UP/DOWN TOGGLE SWITCH |
| TS59 | PLATFORM LEVEL TOGGLE SWITCH |
| TS60 | SECONDARY BOOM UP/DOWN TOGGLE SWITCH |
| TS61 | PRIMARY BOOM UP/DOWN TOGGLE SWITCH |
| TS62 | TURNTABLE ROTATE TOGGLE SWITCH |
| TS63 | PRIMARY BOOM EXTEND/RETRACT TOGGLE SWITCH |
| TS64 | RUN/TEST TOGGLE SWITCH |

*NOTE: DASHED LINES INDICATE OPTION WIRES*

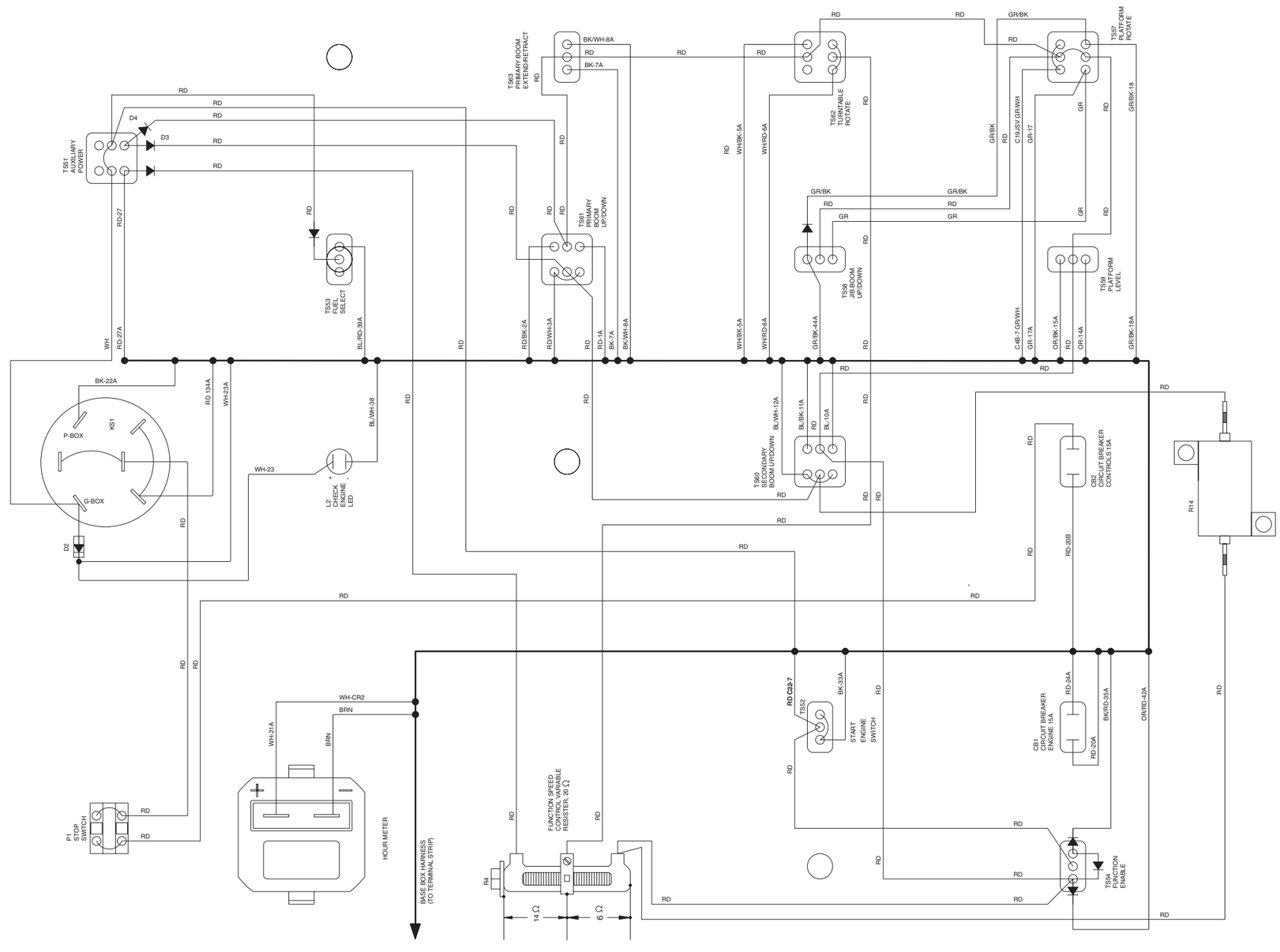

https://truckmanualshub.com/



## Ground Control Box Switch Panel Wiring Diagram, Z-45/25J

Ford Models

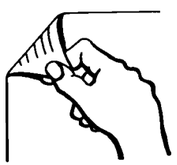

https://truckmanualshub.com/



# Platform Control Box Wiring Diagram, Z-45/25J

Ford Models

https://truckmanualshub.com/



## Platform Control Box Wiring Diagram, Z-45/25J

REV A

Ford Models

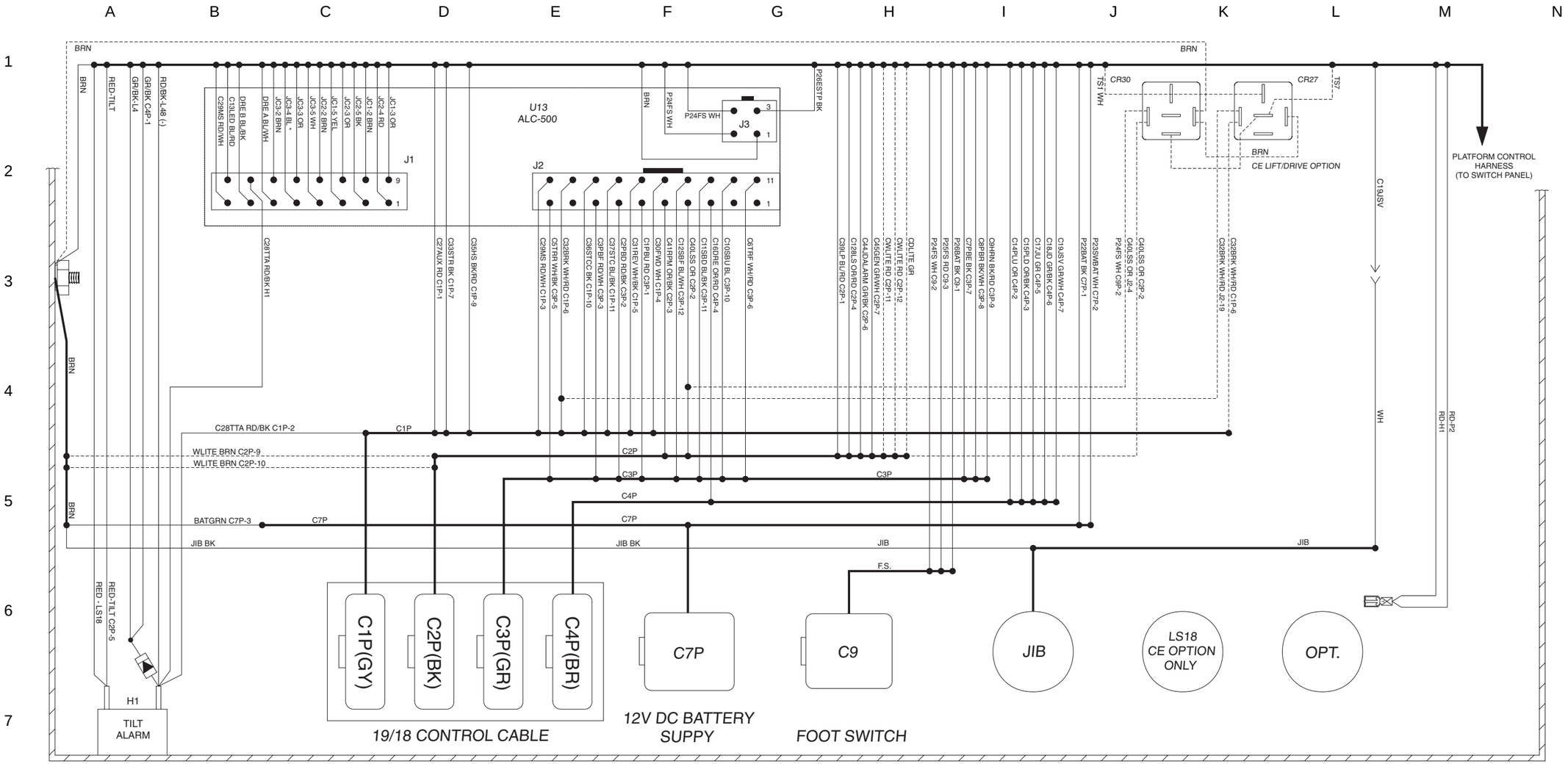


| ITEM | DESCRIPTION |
|---|---|
| H1 | TILT ALARM |
| C7P | 12V DC PLATFORM POWER CONNECTOR |
| C9 | FOOT SWITCH CONNECTOR |
| C1P - C4P | 48 PIN CONNECTOR BLOCK |
| U13 | ALC-500 CONTROL BOARD |
| J1 | CONTROL BOARD INPUT CONNECTOR |
| J2 | CONTROL BOARD OUTPUT CONNECTOR |
| J3 | CONTROL BOARD POWER CONNECTOR |
| CR27 | CONTROL RELAY (CE OPTION) |
| CR30 | CONTROL RELAY (CE OPTION) |
| LS18 | LOAD SENSE LIMIT SWITCH |

https://truckmanualshub.com/



REV A

# Platform Control Box Switch Panel Wiring Diagram, Z-45/25J
Ford Models

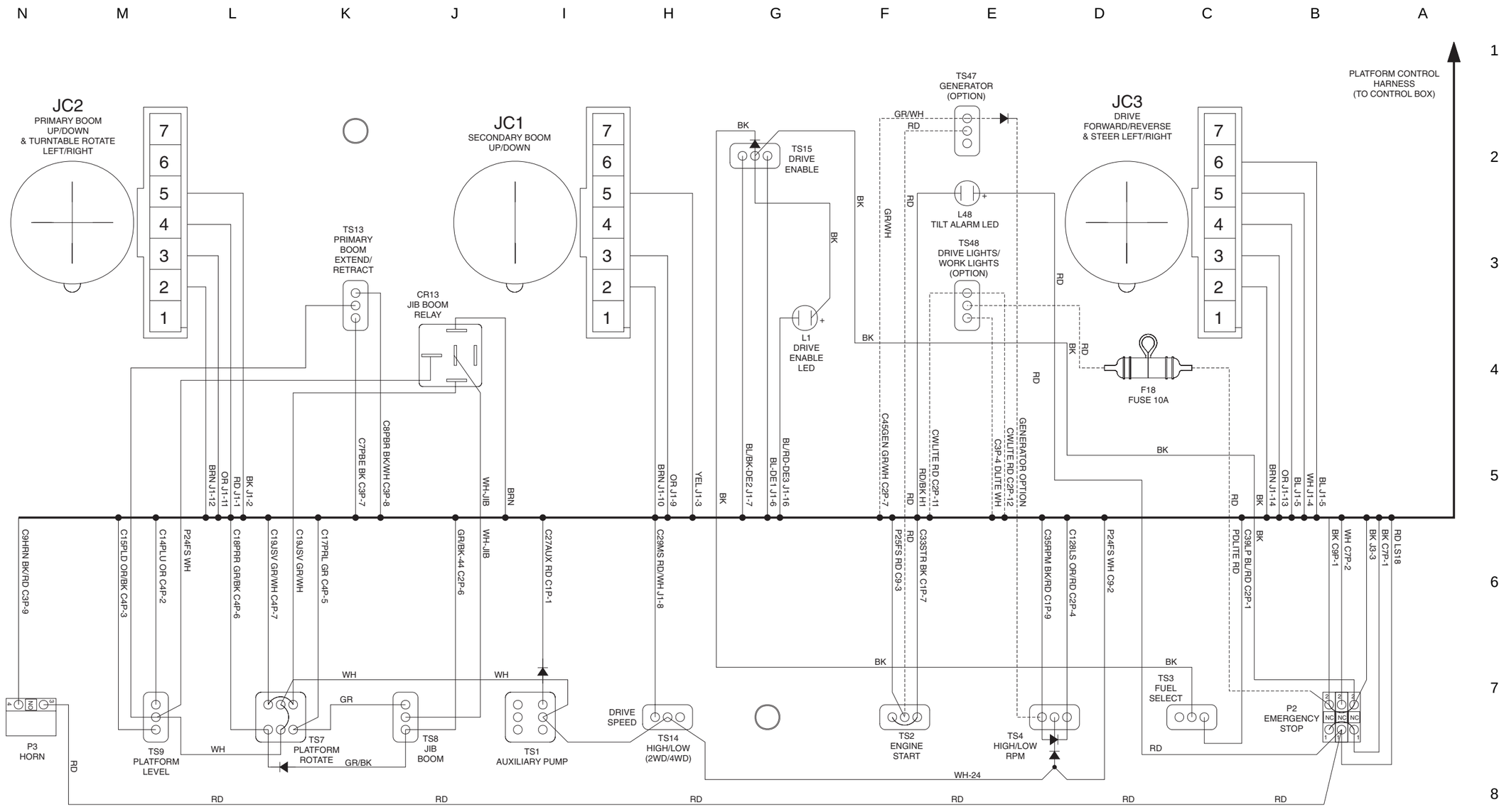


*NOTE: DASHED LINES INDICATE OPTION WIRES*

https://truckmanualshub.com/



## Platform Control Box Switch Panel Wiring Diagram, Z-45/25J

Ford Models

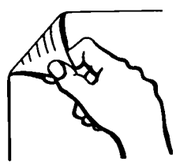

https://truckmanualshub.com/

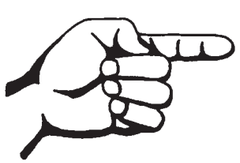

https://truckmanualshub.com/



# Electrical Schematic, Z-45/25

REV C

Deutz F3L-2011 Models

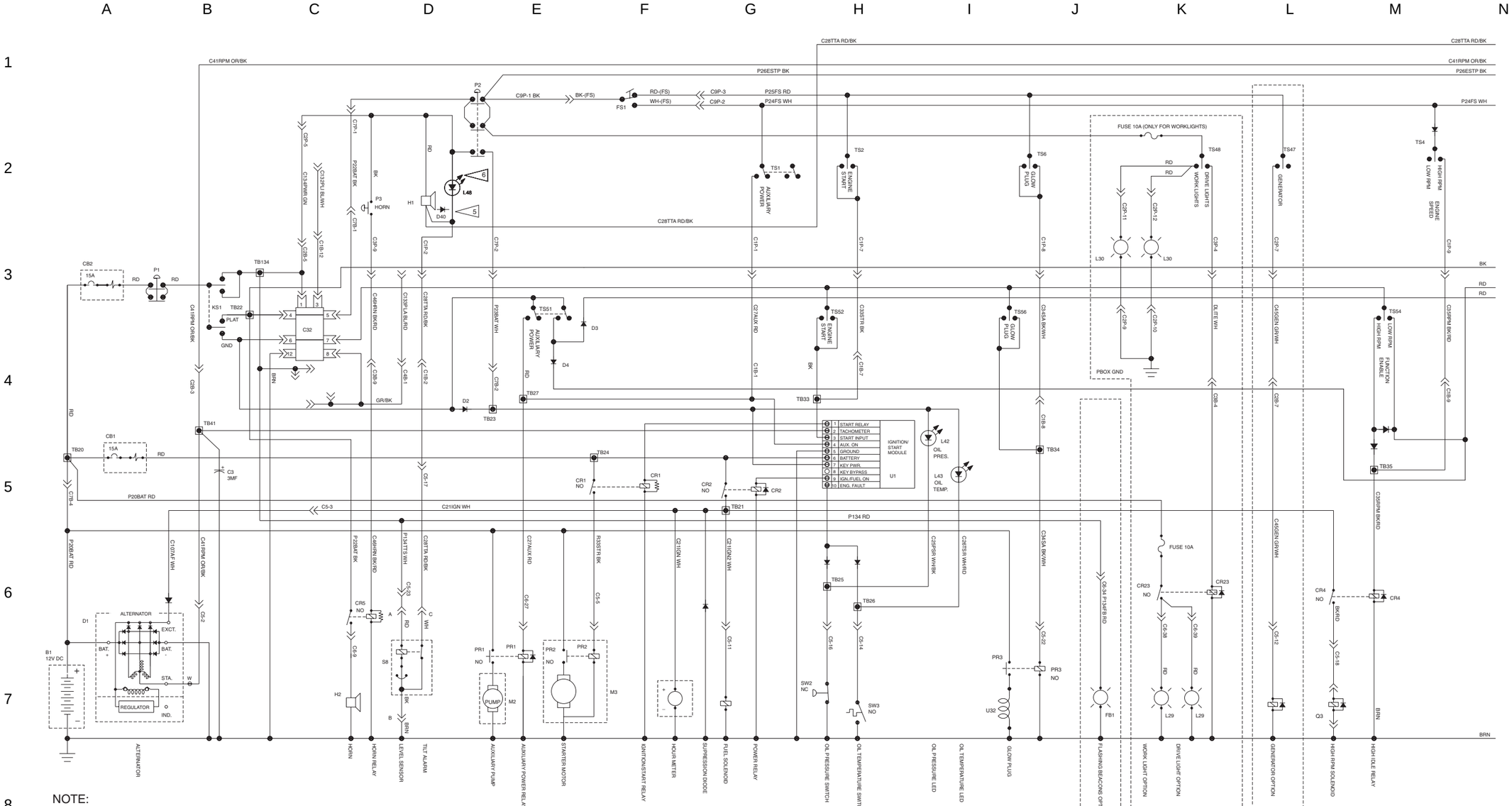


NOTE:

1. All switches and contacts are shown with the boom in the stowed position and the keyswitch off.

5 *Add D40 only if unit has L4 and L48.*

6 *ANSI/CSA (Domestic machine) add L48.*

*C1B & C1P = GRAY*
*C2B & C2P = BLACK*
*C3B & C3P = GREEN*
*C4B & C4P = BROWN*

https://truckmanualshub.com/



REV C

# Electrical Schematic, Z-45/25

## Deutz F3L-2011 Models

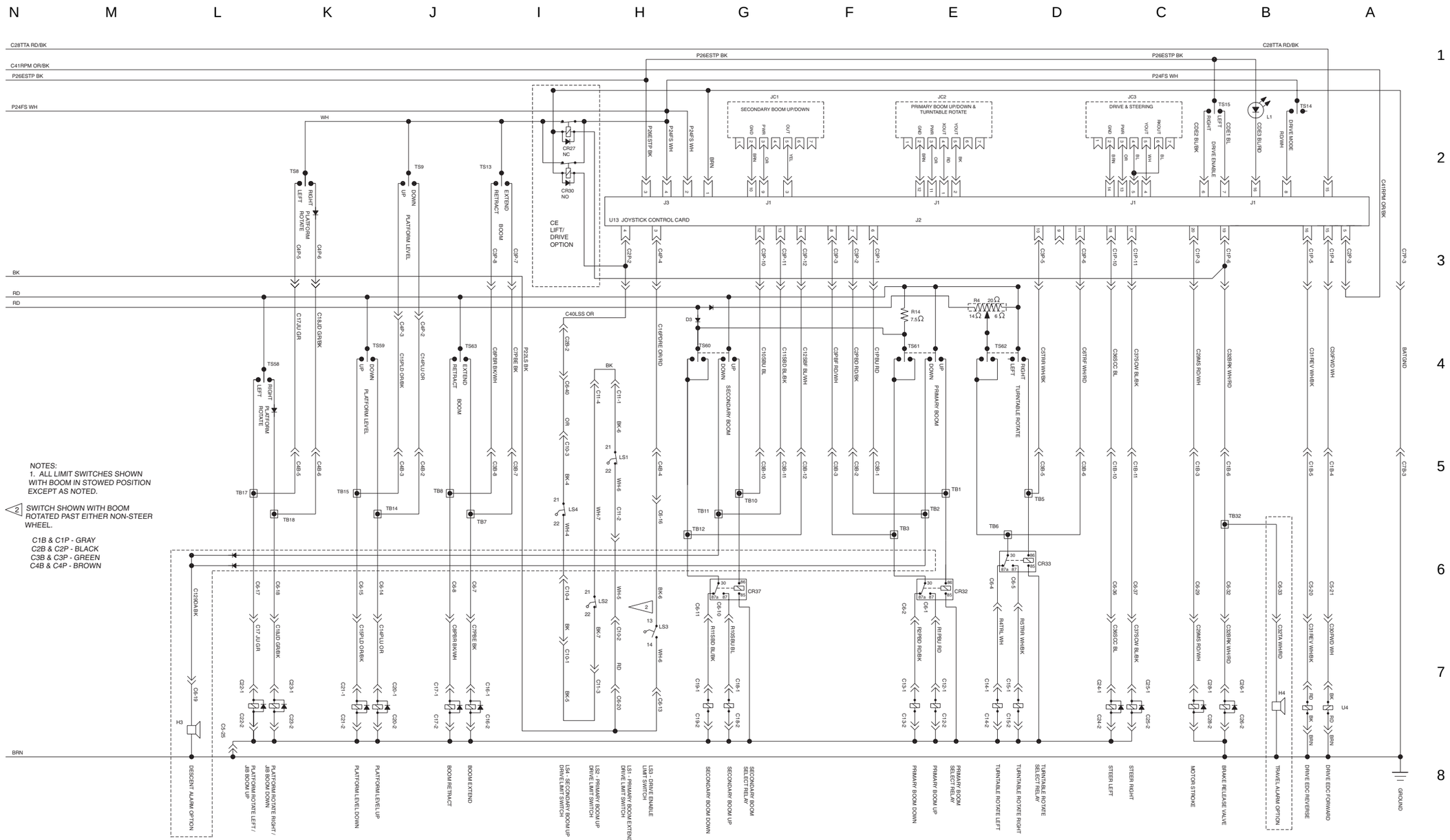
N M L K J I H G F E D C B A
1 2 3 4 5 6 7 8
C28TTA RD/BK
C41RPM OR/BK
P26ESTP BK
P24FS WH
BK
RD
BRN
WH
JC1 SECONDARY BOOM UP/DOWN
JC2 PRIMARY BOOM UP/DOWN & TURNTABLE ROTATE
JC3 DRIVE & STEERING
U13 JOYSTICK CONTROL CARD
CE LIFT/ DRIVE OPTION
CR27 NC
CR30 NO
TS8 LEFT RIGHT PLATFORM ROTATE
TS9 UP DOWN PLATFORM LEVEL
TS13 RETRACT EXTEND BOOM
TS15 LEFT RIGHT DRIVE ENABLE
TS14 DRIVE MODE
L1
TS58 LEFT RIGHT PLATFORM ROTATE
TS59 UP DOWN PLATFORM LEVEL
TS63 RETRACT EXTEND BOOM
TS60 UP DOWN SECONDARY BOOM
TS61 UP DOWN PRIMARY BOOM
TS62 LEFT RIGHT TURNTABLE ROTATE
R14 7.5Ω
R4 20Ω 14Ω 6Ω
D3
C40LSS OR
LS1
LS2
LS3
LS4
CR32
CR33
CR37
TB1 TB2 TB3 TB5 TB6 TB7 TB8 TB10 TB11 TB12 TB14 TB15 TB17 TB18 TB32
H3
H4
U4
BATGND
C7F-3
C1B-3
C1B-4
C1B-5
C1B-6
C1B-10
C1B-11
C2B-1
C2B-2
C2B-3
C2B-4
C2B-5
C2B-6
C2B-8
C2B-10
C2B-11
C2B-12
C3B-1
C3B-2
C3B-3
C4B-4
C4B-5
C4B-6
C4B-8
C4B-16
C5-20
C5-21
C5-25
C6-4
C6-5
C6-6
C6-8
C6-10
C6-11
C6-13
C6-14
C6-15
C6-17
C6-18
C6-19
C6-20
C6-29
C6-32
C6-33
C6-36
C6-37
C6-40
C10-1
C10-2
C10-3
C10-4
C11-1
C11-2
C11-4
C11-5
C11-6
C11-7
C13-1
C13-2
C14-1
C14-2
C15-1
C15-2
C16-1
C16-2
C17-1
C17-2
C18-1
C18-2
C19-1
C19-2
C20-1
C20-2
C21-1
C21-2
C22-1
C22-2
C23-1
C23-2
C24-1
C24-2
C25-1
C25-2
C26-1
C26-2
C28-1
C28-2
C28-3
C1F-3
C1F-4
C1F-5
C1F-6
C1F-10
C1F-11
C1P-3
C1P-4
C1P-5
C1P-6
C1P-10
C1P-11
C2P-1
C2P-2
C2P-3
C2P-4
C2P-5
C2P-6
C2P-8
C2P-10
C2P-11
C2P-12
C3P-1
C3P-2
C3P-3
C3P-5
C3P-6
C3P-7
C3P-8
C4P-4
C4P-5
C4P-6
C4P-8
C4P-10
C4P-11
C4P-12
C4P-13
C4P-14
C4P-15
C4P-16
C4P-17
C4P-18
C4P-19
C4P-20
C4P-21
C4P-22
C4P-23
C4P-24
C4P-25
C4P-26
C4P-27
C4P-28
C4P-29
C4P-30
C4P-31
C4P-32
C4P-33
C4P-34
C4P-35
C4P-36
C4P-37
C4P-38
C4P-39
C4P-40
C4P-41
C4P-42
C4P-43
C4P-44
C4P-45
C4P-46
C4P-47
C4P-48
C4P-49

https://truckmanualshub.com/



# Electrical Schematic, Z-45/25

Deutz F3L-2011 Models

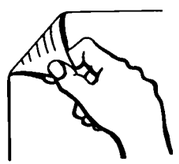

https://truckmanualshub.com/

https://truckmanualshub.com/



# Electrical Schematic, Z-45/25, CE Models

REV C

## Deutz F3L-2011 Models

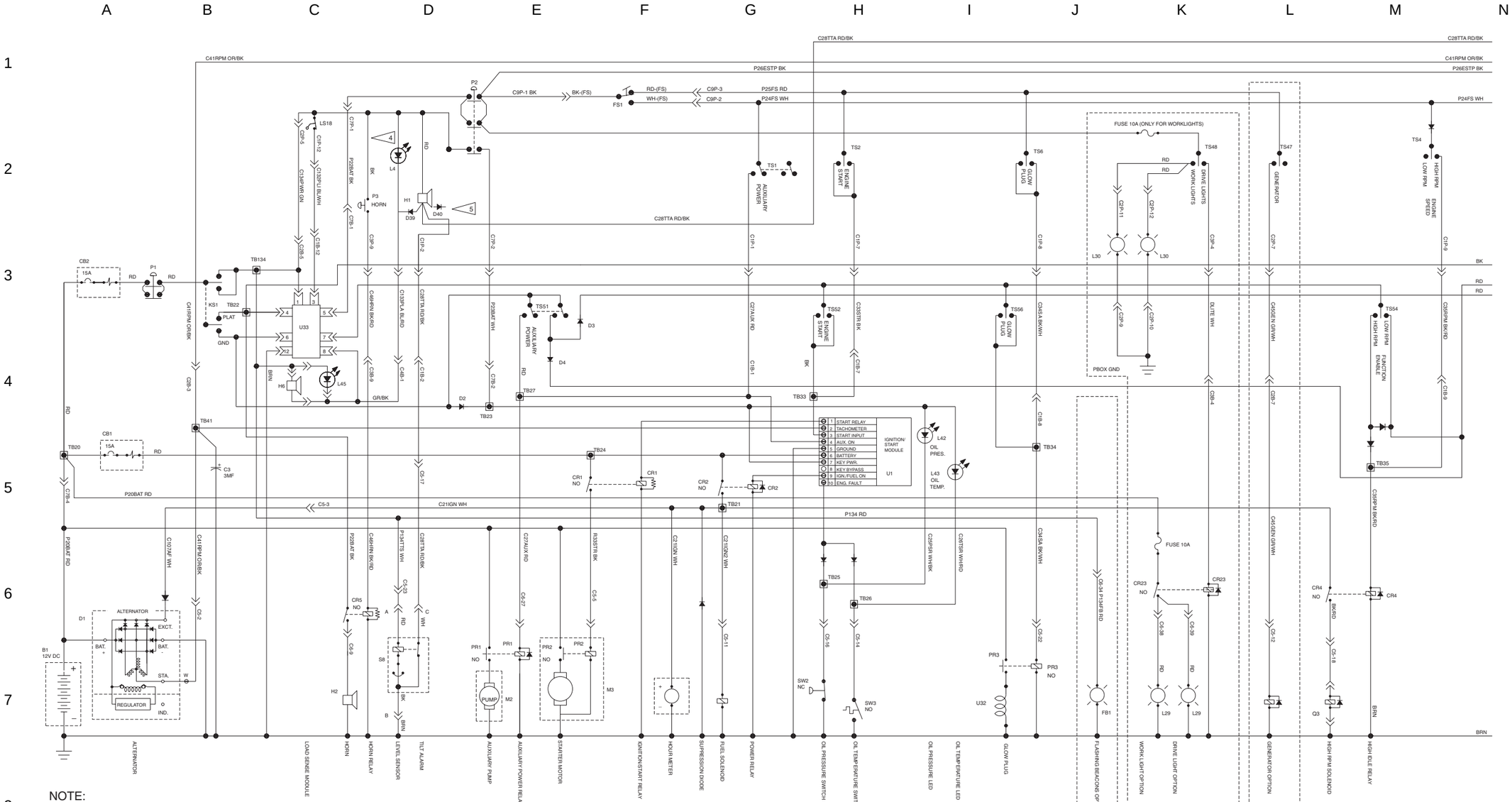


NOTE:

1. All switches and contacts are shown with the boom in the stowed position and the keyswitch off.

4 *CE and platform overload option*

5 *Add D40 only if unit has L4 and L48.*

*C1B & C1P = GRAY*
*C2B & C2P = BLACK*
*C3B & C3P = GREEN*
*C4B & C4P = BROWN*

https://truckmanualshub.com/



REV C

# Electrical Schematic, Z-45/25, CE Models

## Deutz F3L-2011 Models

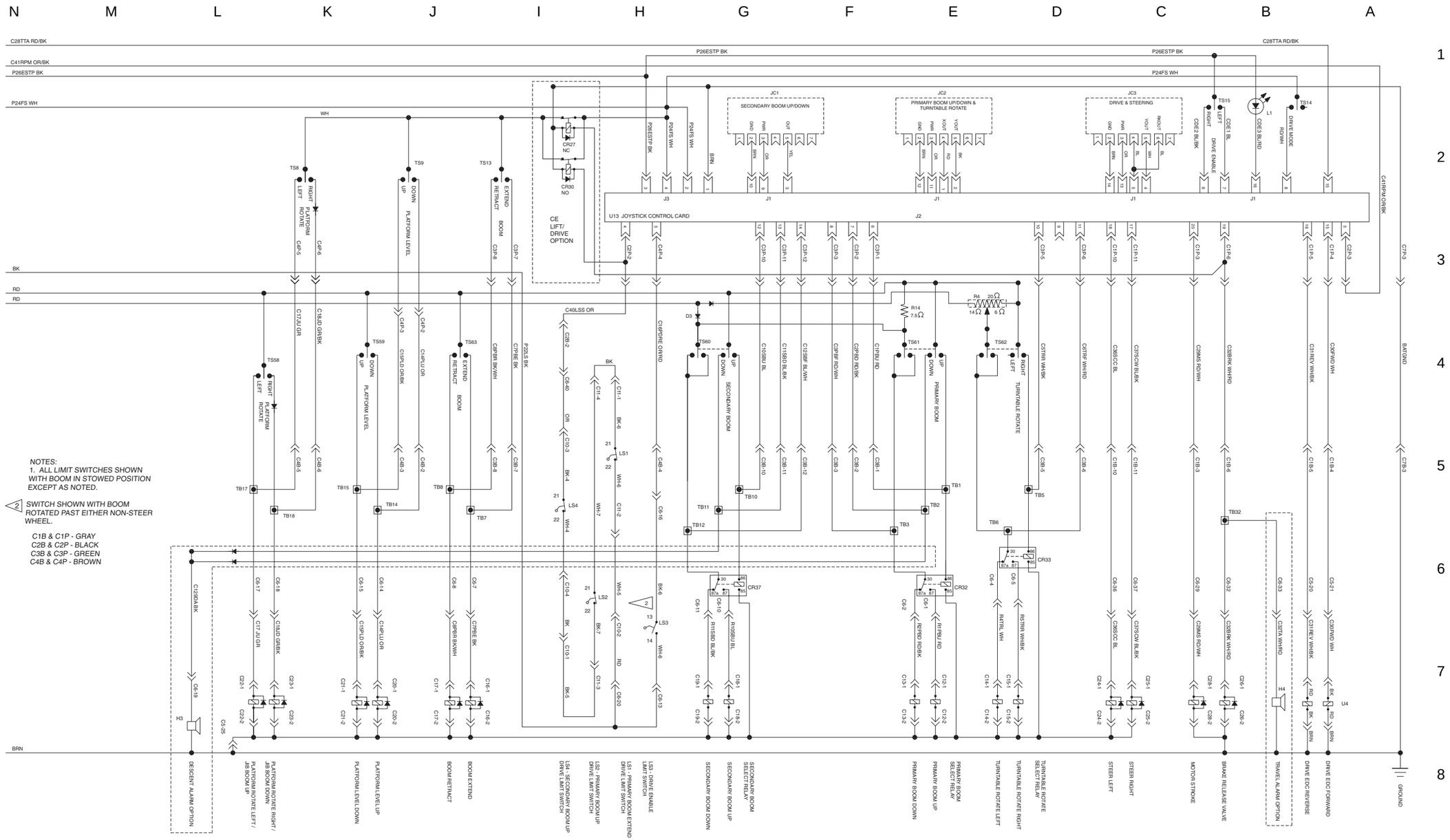


NOTES:
1. ALL LIMIT SWITCHES SHOWN WITH BOOM IN STOWED POSITION EXCEPT AS NOTED.

2 SWITCH SHOWN WITH BOOM ROTATED PAST EITHER NON-STEER WHEEL.

C1B & C1P - GRAY
C2B & C2P - BLACK
C3B & C3P - GREEN
C4B & C4P - BROWN

https://truckmanualshub.com/



# Electrical Schematic, Z-45/25, CE Models

Deutz F3L-2011 Models

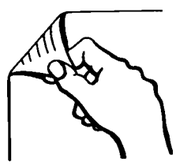

https://truckmanualshub.com/



# Ground Control Box Terminal Strip Wiring Diagram, Z-45/25

Deutz F3L-2011 Models

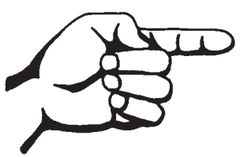

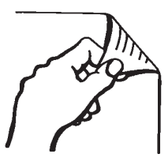

https://truckmanualshub.com/



# Ground Control Box Terminal Strip Wiring Diagram, Z-45/25

REV A

Deutz F3L-2011 Models

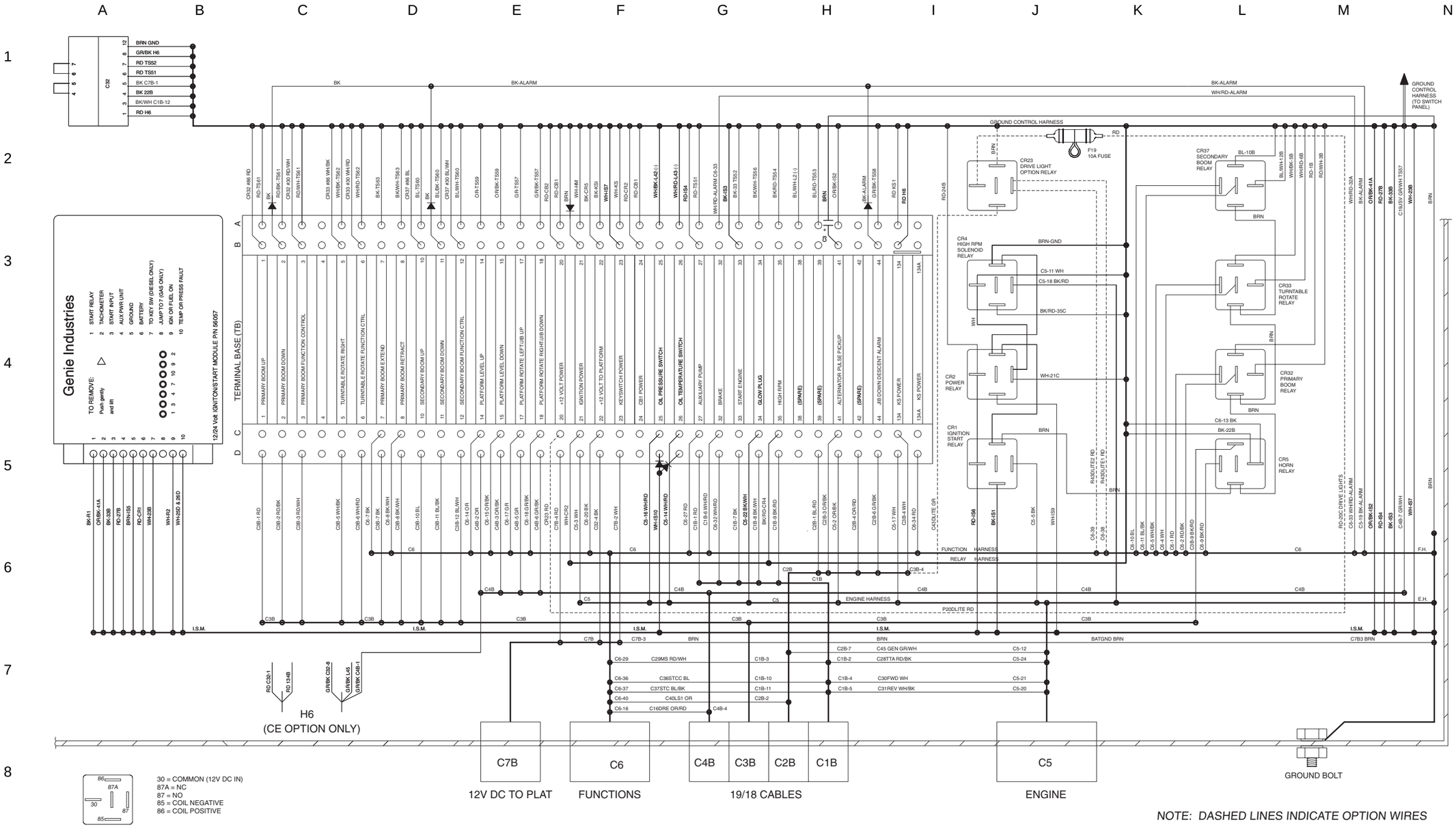


NOTE: DASHED LINES INDICATE OPTION WIRES

https://truckmanualshub.com/



REV B

# Ground Control Box Switch Panel Wiring Diagram, Z-45/25

Deutz F3L-2011 Models

| LABEL | DESCRIPTION |
|---|---|
| CB1 | CIRCUIT BREAKER, ENGINE, 15A |
| CB2 | CIRCUIT BREAKER, CONTROLS, 15A |
| CR1 | IGNITION / START RELAY |
| CR2 | IGNITION POWER RELAY |
| CR4 | HIGH IDLE RELAY |
| CR5 | HORN RELAY |
| HM | HOUR METER |
| KS1 | KEY SWITCH |
| L42 | OIL PRESSURE LED |
| L43 | OIL TEMPERATURE LED |
| L45 | PLATFORM OVERLOAD |
| P1 | RED EMERGENCY STOP BUTTON |
| R4 | SPEED LIMITING VARIABLE RESISTOR 20 OHMS |
| R14 | SECONDARY BOOM SPEED RESISTOR 7.5 OHMS |
| TS51 | AUXILIARY POWER TOGGLE SWITCH |
| TS52 | ENGINE START TOGGLE SWITCH |
| TS54 | FUNCTION ENABLE TOGGLE SWITCH |
| TS56 | GLOW PLUG TOGGLE SWITCH (OPTION) |
| TS57 | PLATFORM ROTATE TOGGLE SWITCH |
| TS59 | PLATFORM LEVEL TOGGLE SWITCH |
| TS60 | SECONDARY BOOM UP/DOWN TOGGLE SWITCH |
| TS61 | PRIMARY BOOM UP/DOWN TOGGLE SWITCH |
| TS62 | TURNTABLE ROTATE TOGGLE SWITCH |
| TS63 | PRIMARY BOOM EXTEND/RETRACT TOGGLE SWITCH |

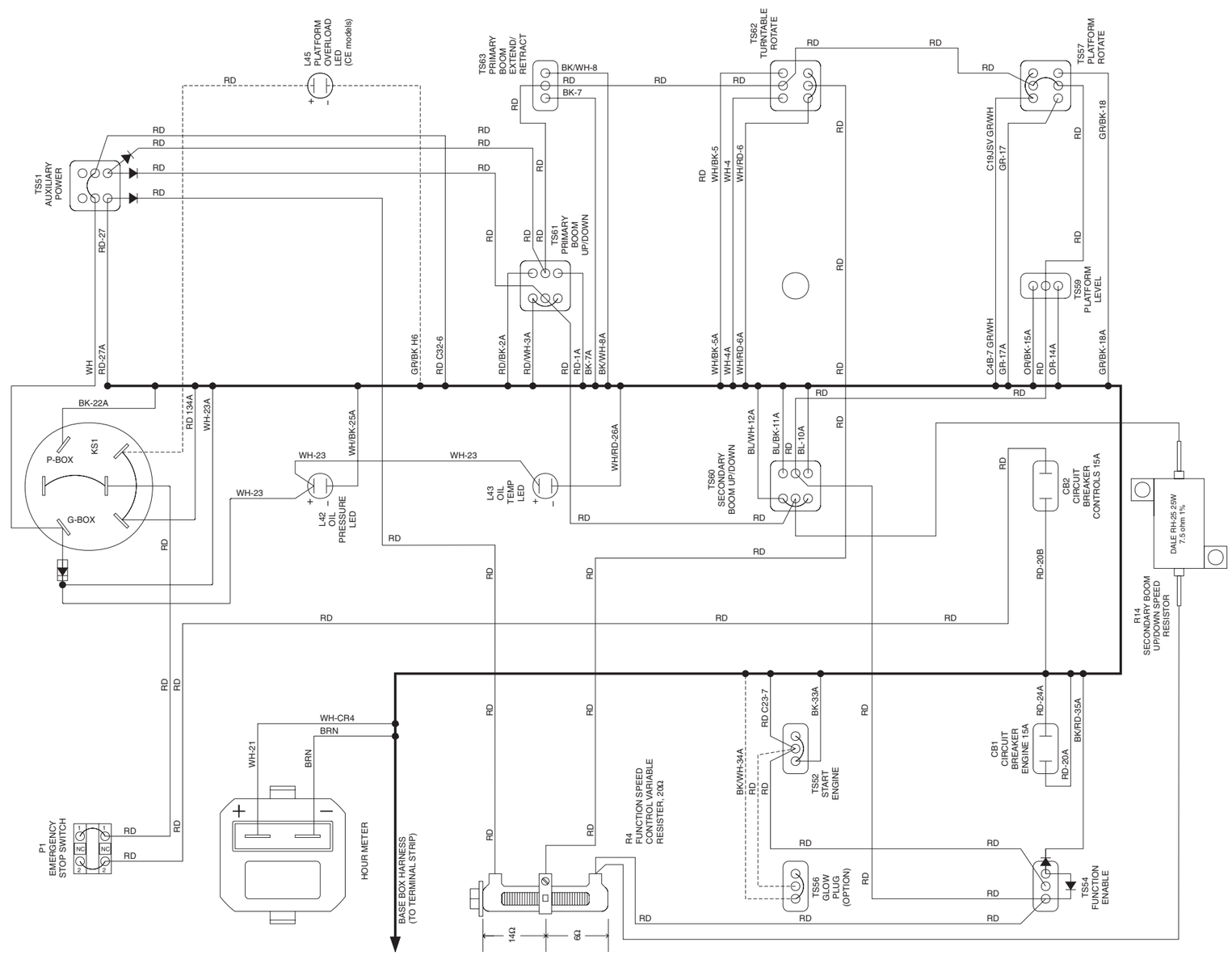

https://truckmanualshub.com/



## Ground Control Box Switch Panel Wiring Diagram, Z-45/25

Deutz F3L-2011 Models

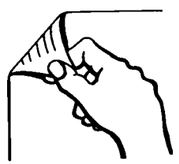

https://truckmanualshub.com/



# Ground Control Box Terminal Strip Wiring Diagram, Z-45/25 CE Models Deutz F3L-2011 Models

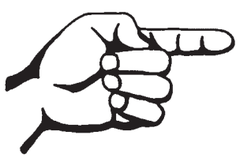

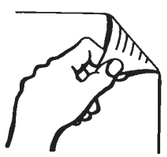

https://truckmanualshub.com/



# Ground Control Box Terminal Strip Wiring Diagram, Z-45/25, CE Models

REV A

Deutz F3L-2011 Models

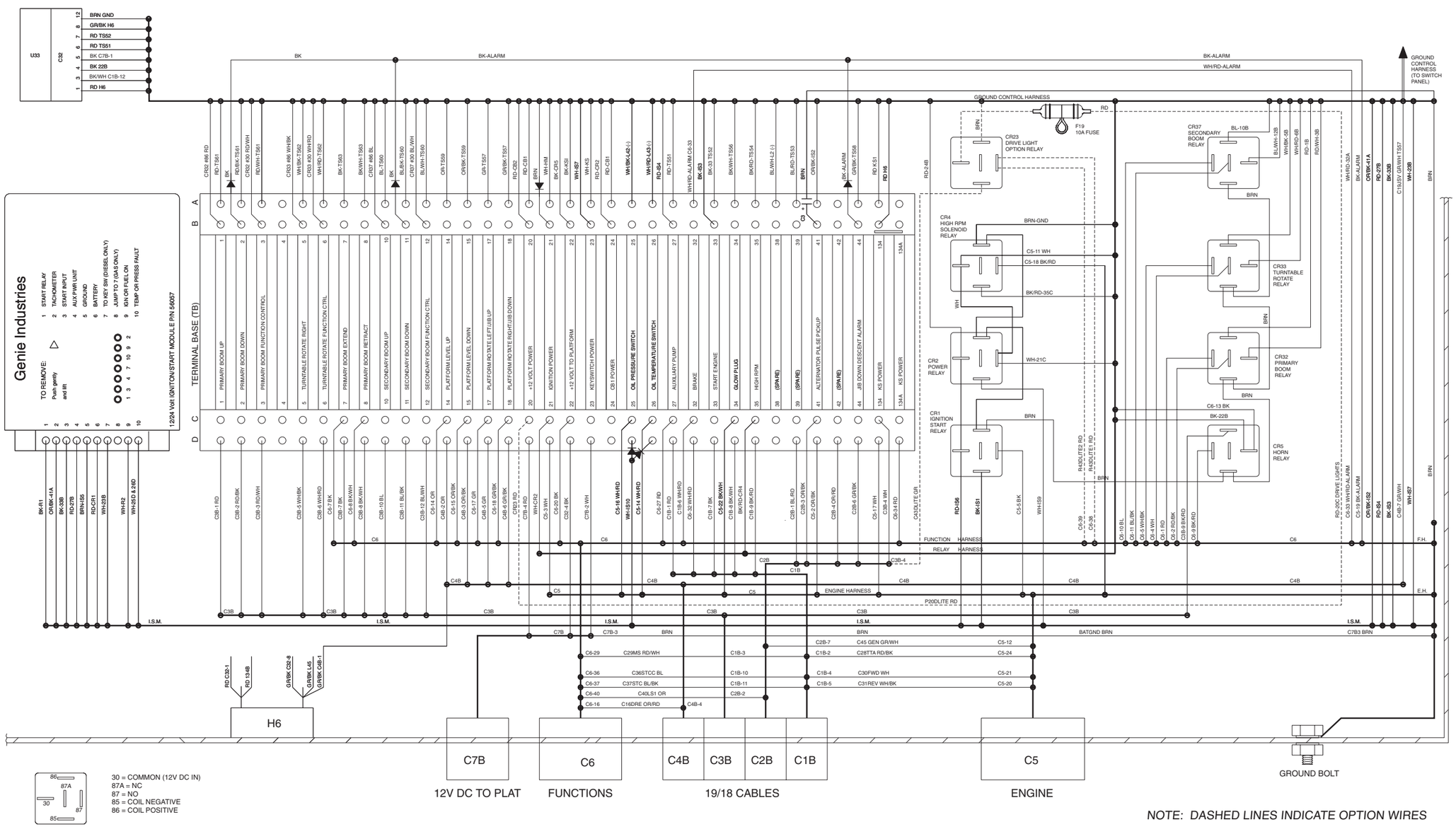


NOTE: DASHED LINES INDICATE OPTION WIRES

https://truckmanualshub.com/



REV B

# Ground Control Box Switch Panel Wiring Diagram, Z-45/25, CE Models

Deutz F3L-2011 Models

| LABEL | DESCRIPTION |
|---|---|
| CB1 | CIRCUIT BREAKER, ENGINE, 15A |
| CB2 | CIRCUIT BREAKER, CONTROLS, 15A |
| CR1 | IGNITION / START RELAY |
| CR2 | IGNITION POWER RELAY |
| CR4 | HIGH IDLE RELAY |
| CR5 | HORN RELAY |
| HM | HOUR METER |
| KS1 | KEY SWITCH |
| L42 | OIL PRESSURE LED |
| L43 | OIL TEMPERATURE LED |
| L45 | PLATFORM OVERLOAD |
| P1 | RED EMERGENCY STOP BUTTON |
| R4 | SPEED LIMITING VARIABLE RESISTOR 20 OHMS |
| R14 | SECONDARY BOOM SPEED RESISTOR 7.5 OHMS |
| TS51 | AUXILIARY POWER TOGGLE SWITCH |
| TS52 | ENGINE START TOGGLE SWITCH |
| TS54 | FUNCTION ENABLE TOGGLE SWITCH |
| TS56 | GLOW PLUG TOGGLE SWITCH (OPTION) |
| TS57 | PLATFORM ROTATE TOGGLE SWITCH |
| TS59 | PLATFORM LEVEL TOGGLE SWITCH |
| TS60 | SECONDARY BOOM UP/DOWN TOGGLE SWITCH |
| TS61 | PRIMARY BOOM UP/DOWN TOGGLE SWITCH |
| TS62 | TURNTABLE ROTATE TOGGLE SWITCH |
| TS63 | PRIMARY BOOM EXTEND/RETRACT TOGGLE SWITCH |

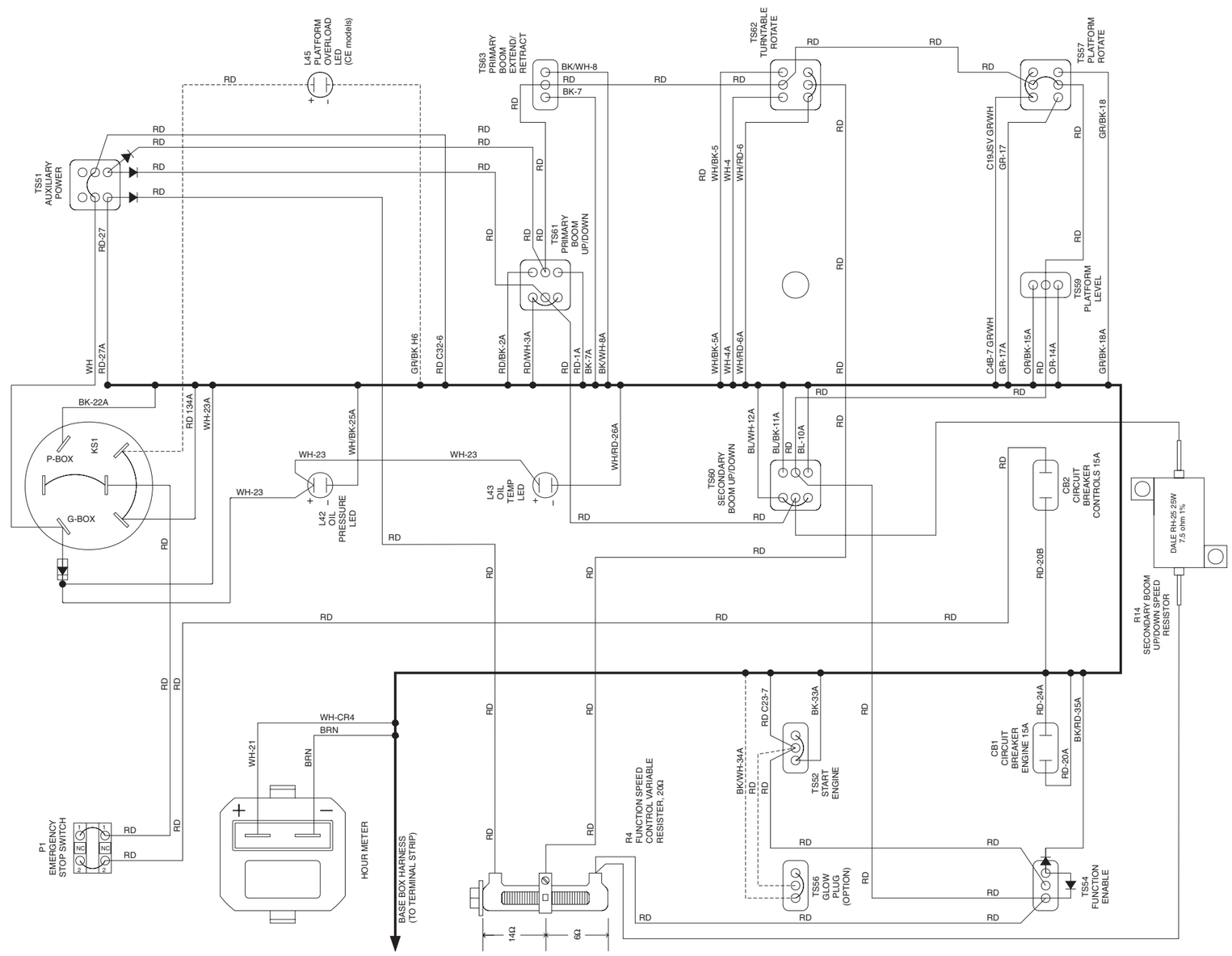

https://truckmanualshub.com/



# Ground Control Box Switch Panel Wiring Diagram, Z-45/25 CE Models Deutz F3L-2011 Models

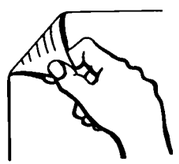

https://truckmanualshub.com/



# Platform Control Box Wiring Diagram, Z-45/25

Deutz F3L-2011 Models

https://truckmanualshub.com/



## Platform Control Box Wiring Diagram, Z-45/25

REV A

Deutz F3L-2011 Models

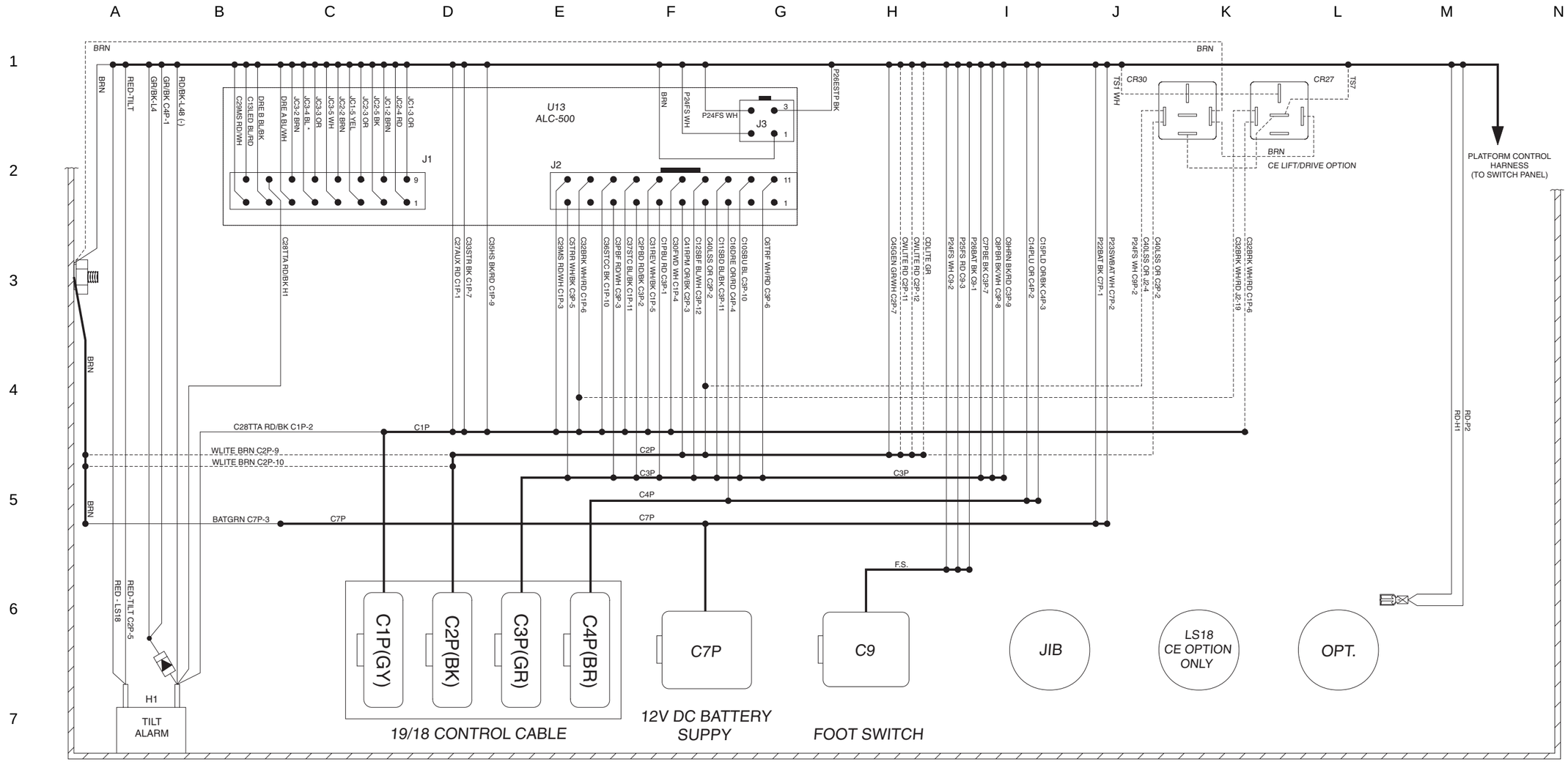


| ITEM | DESCRIPTION |
|---|---|
| H1 | TILT ALARM |
| C7P | 12V DC PLATFORM POWER CONNECTOR |
| C9 | FOOT SWITCH CONNECTOR |
| C1P - C4P | 48 PIN CONNECTOR BLOCK |
| U13 | ALC-500 CONTROL BOARD |
| J1 | CONTROL BOARD INPUT CONNECTOR |
| J2 | CONTROL BOARD OUTPUT CONNECTOR |
| J3 | CONTROL BOARD POWER CONNECTOR |
| CR27 | CONTROL RELAY (CE OPTION) |
| CR30 | CONTROL RELAY (CE OPTION) |
| LS18 | LOAD SENSE LIMIT SWITCH |

https://truckmanualshub.com/



REV A

# Platform Control Box Switch Panel Wiring Diagram, Z-45/25

Deutz F3L-2011 Models

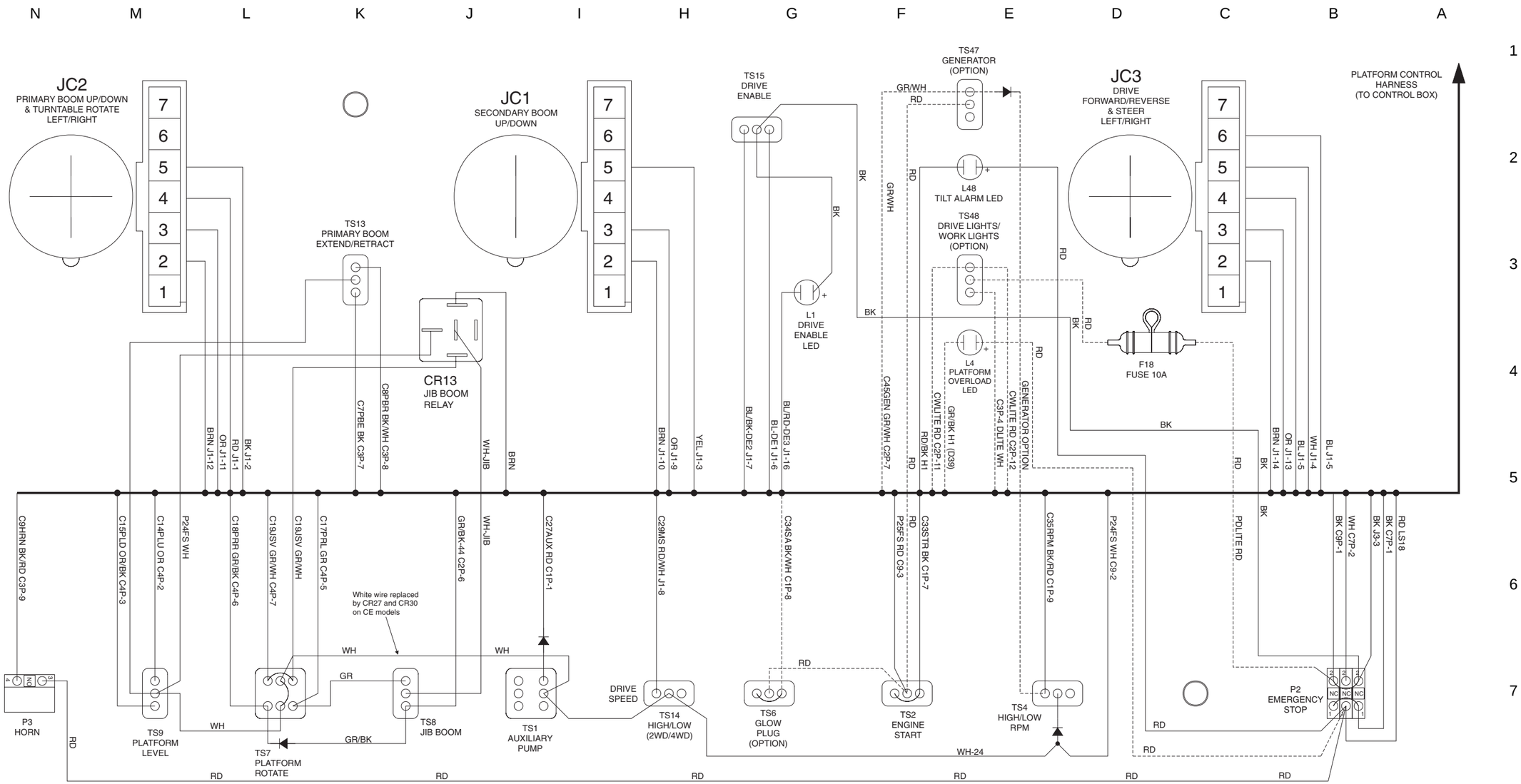


*NOTE:*
*DASHED LINES INDICATE OPTION WIRES*

https://truckmanualshub.com/



## Platform Control Box Switch Panel Wiring Diagram, Z-45/25

Deutz F3L-2011 Models

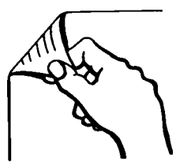

https://truckmanualshub.com/

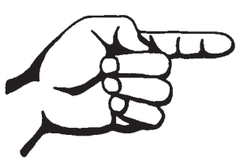

https://truckmanualshub.com/



# Electrical Schematic, Z-45/25J

REV C

Deutz F3L-2011 Models

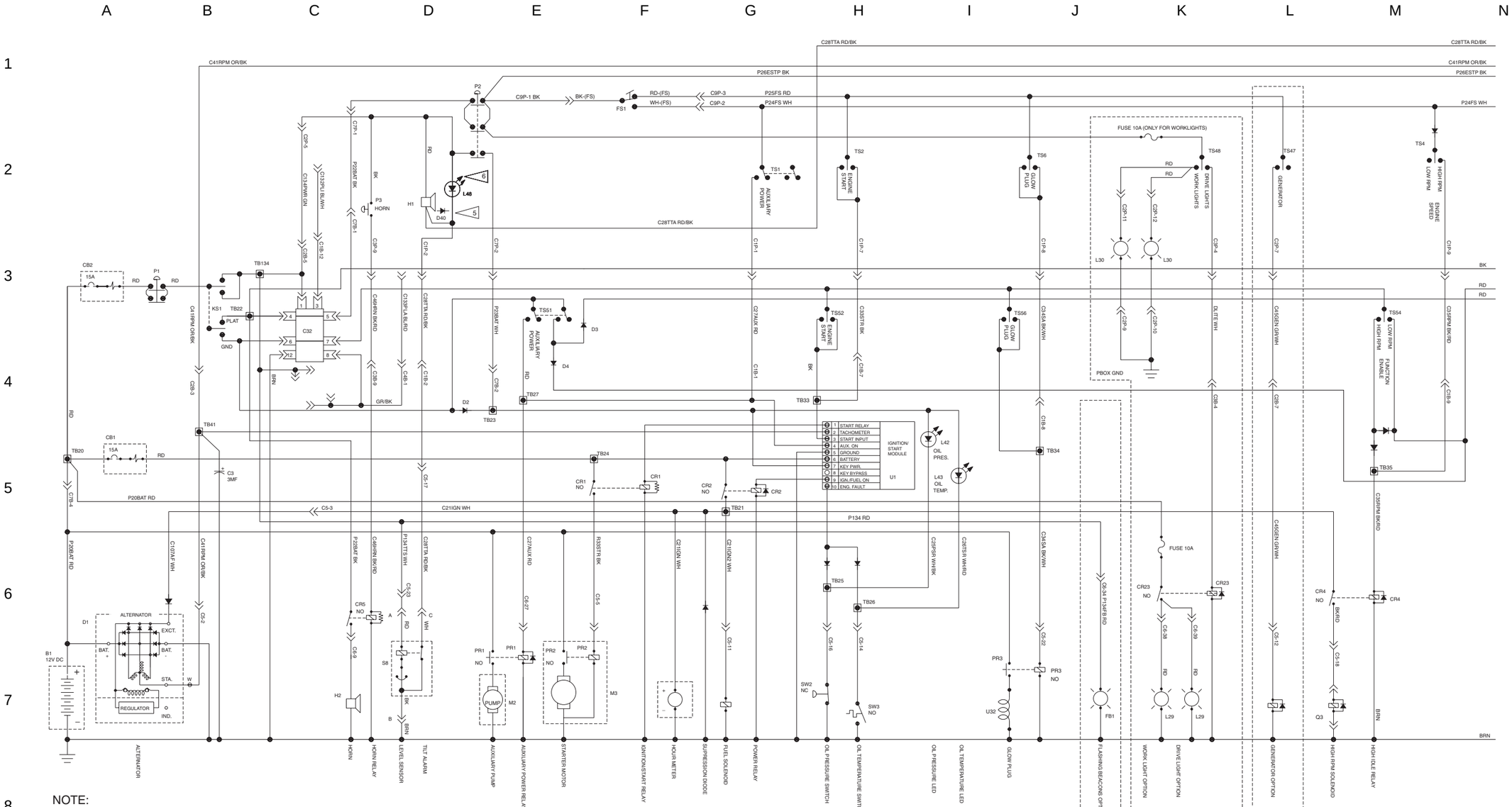


NOTE:

1. All switches and contacts are shown with the boom in the stowed position and the keyswitch off.

5 *Add D40 only if unit has L4 and L48.*

6 *ANSI/CSA (Domestic machine) add L48.*

*C1B & C1P = GRAY*
*C2B & C2P = BLACK*
*C3B & C3P = GREEN*
*C4B & C4P = BROWN*

https://truckmanualshub.com/



REV C

# Electrical Schematic, Z-45/25J

## Deutz F3L-2011 Models

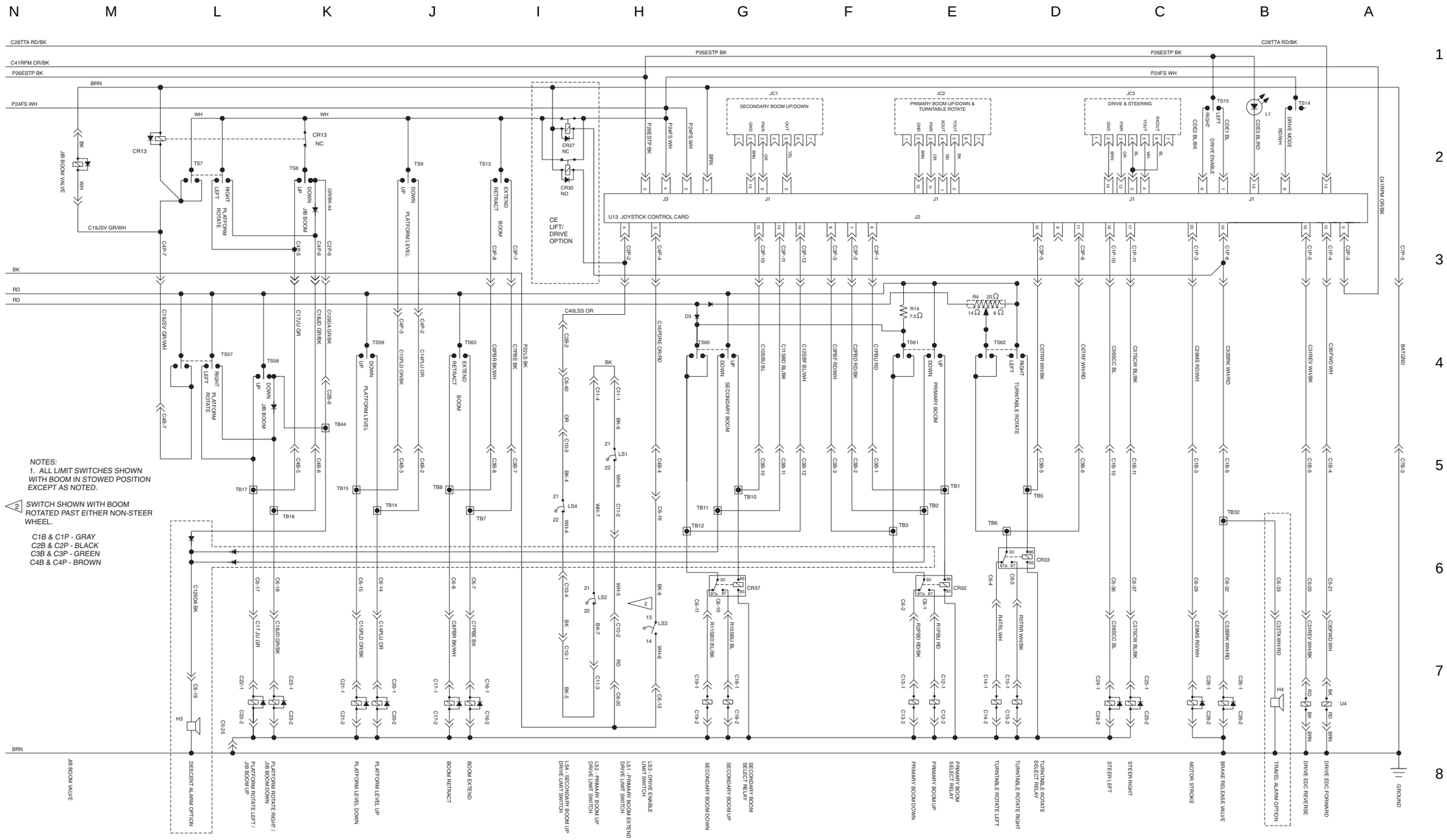

https://truckmanualshub.com/



# Electrical Schematic, Z-45/25J

Deutz F3L-2011 Models

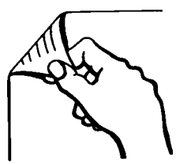

https://truckmanualshub.com/

https://truckmanualshub.com/



# Electrical Schematic, Z-45/25J, CE Models

REV C

## Deutz F3L-2011 Models

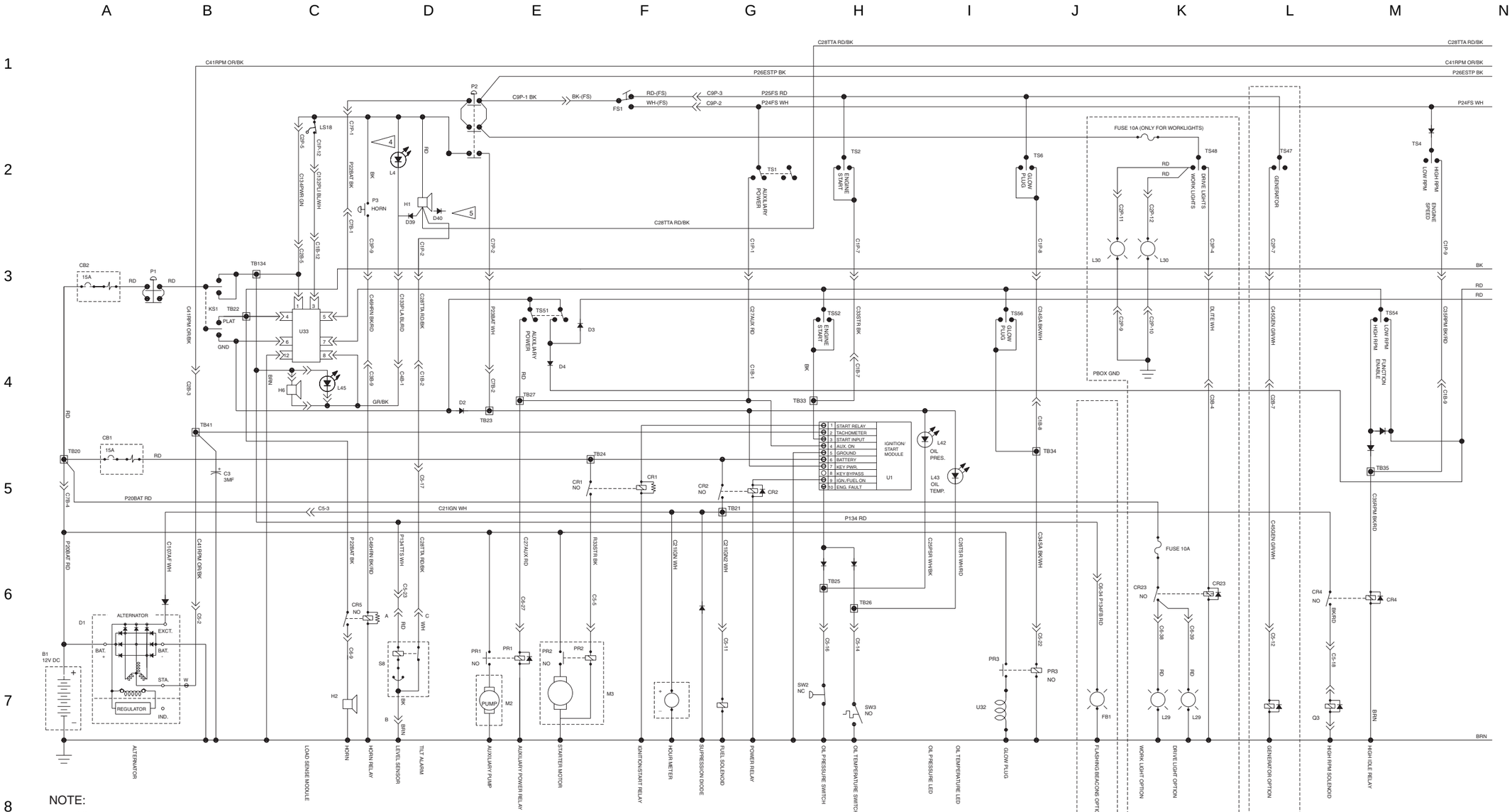


NOTE:

1. All switches and contacts are shown with the boom in the stowed position and the keyswitch off.

4 *CE and platform overload option*

5 *Add D40 only if unit has L4 and L48.*

*C1B & C1P = GRAY*
*C2B & C2P = BLACK*
*C3B & C3P = GREEN*
*C4B & C4P = BROWN*

https://truckmanualshub.com/



REV C

# Electrical Schematic, Z-45/25J, CE Models

## Deutz F3L-2011 Models

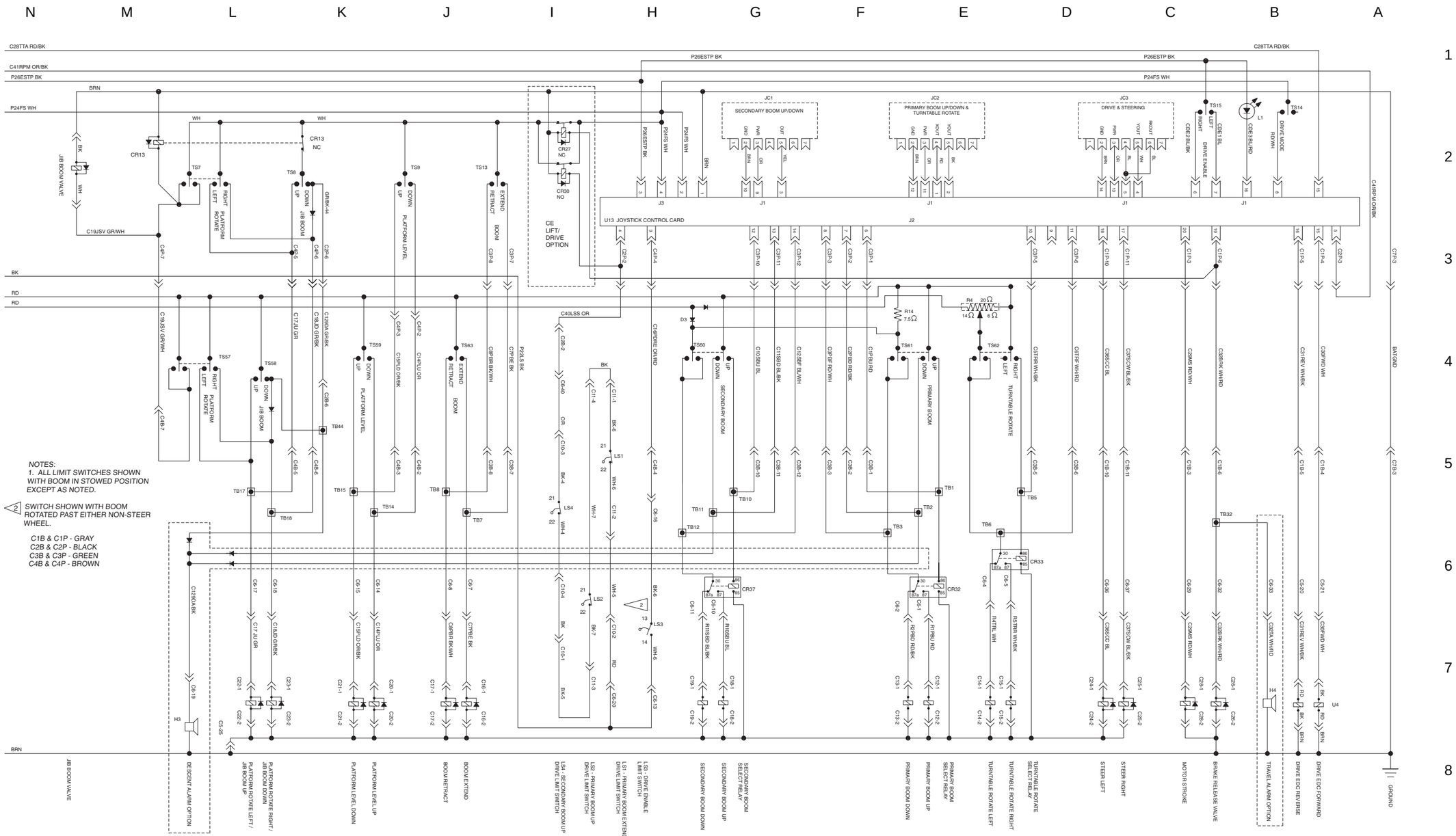


NOTES:
1. ALL LIMIT SWITCHES SHOWN WITH BOOM IN STOWED POSITION EXCEPT AS NOTED.
2. SWITCH SHOWN WITH BOOM ROTATED PAST EITHER NON-STEER WHEEL.

C1B & C1P - GRAY
C2B & C2P - BLACK
C3B & C3P - GREEN
C4B & C4P - BROWN

https://truckmanualshub.com/



# Electrical Schematic, Z-45/25J, CE Models

Deutz F3L-2011 Models

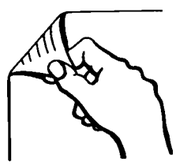

https://truckmanualshub.com/



# Ground Control Box Terminal Strip Wiring Diagram, Z-45/25J

Deutz F3L-2011 Models

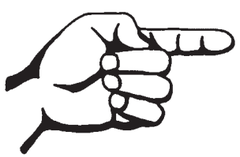

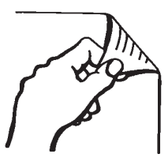

https://truckmanualshub.com/



# Ground Control Box Terminal Strip Wiring Diagram, Z-45/25J

REV A

Deutz F3L-2011 Models

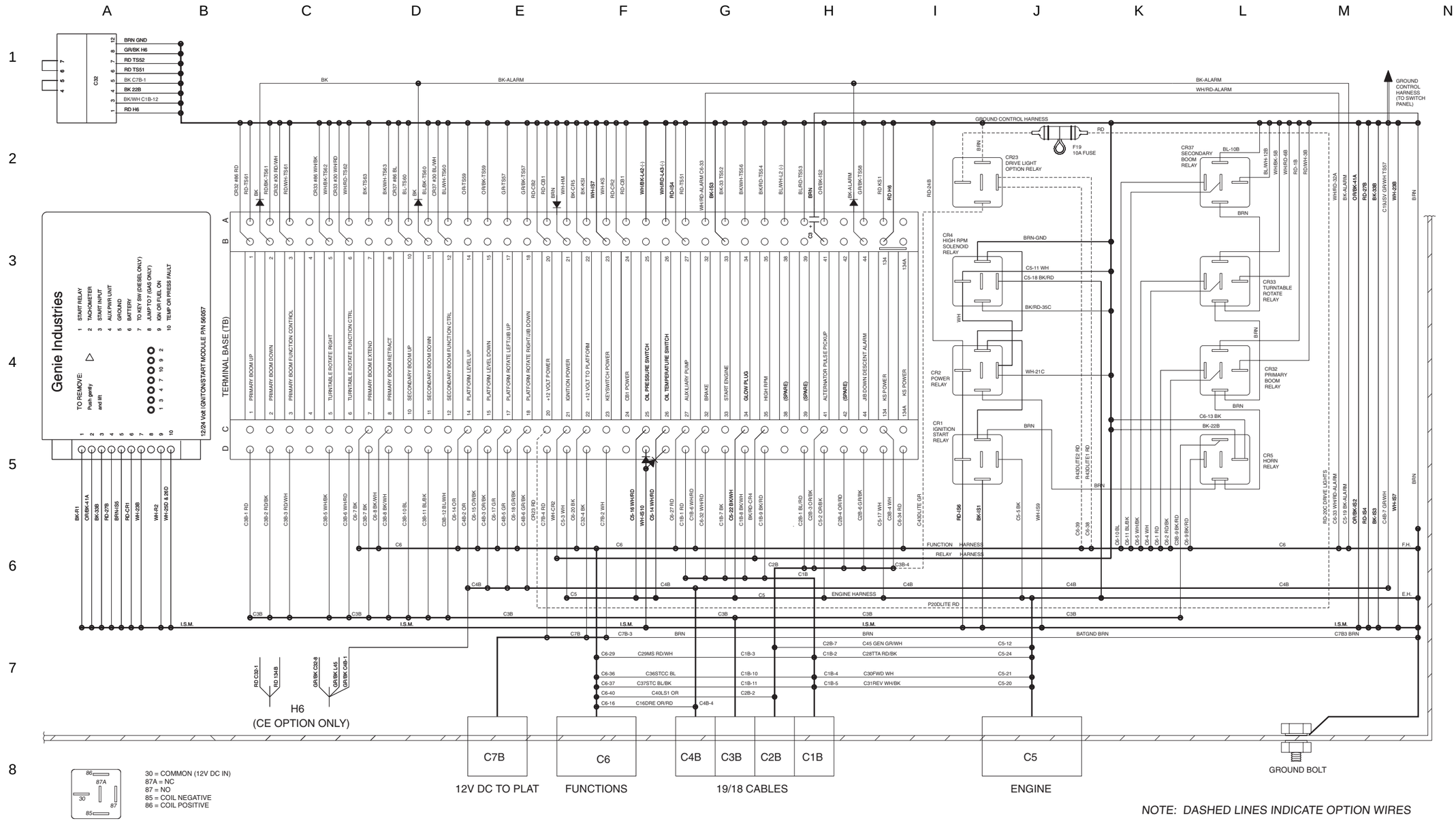


NOTE: DASHED LINES INDICATE OPTION WIRES

https://truckmanualshub.com/



REV B

# Ground Control Box Switch Panel Wiring Diagram, Z-45/25J

Deutz F3L-2011 Models

| LABEL | DESCRIPTION |
|---|---|
| CB1 | CIRCUIT BREAKER, ENGINE, 15A |
| CB2 | CIRCUIT BREAKER, CONTROLS, 15A |
| CR1 | IGNITION / START RELAY |
| CR2 | IGNITION POWER RELAY |
| CR4 | HIGH IDLE RELAY |
| CR5 | HORN RELAY |
| HM | HOUR METER |
| KS1 | KEY SWITCH |
| L42 | OIL PRESSURE LED |
| L43 | OIL TEMPERATURE LED |
| L45 | PLATFORM OVERLOAD |
| P1 | RED EMERGENCY STOP BUTTON |
| R4 | SPEED LIMITING VARIABLE RESISTOR 20 OHMS |
| R14 | SECONDARY BOOM SPEED RESISTOR 7.5 OHMS |
| TS51 | AUXILIARY POWER TOGGLE SWITCH |
| TS52 | ENGINE START TOGGLE SWITCH |
| TS54 | FUNCTION ENABLE TOGGLE SWITCH |
| TS56 | GLOW PLUG TOGGLE SWITCH (OPTION) |
| TS57 | PLATFORM ROTATE TOGGLE SWITCH |
| TS58 | JIB BOOM UP/DOWN TOGGLE SWITCH |
| TS59 | PLATFORM LEVEL TOGGLE SWITCH |
| TS60 | SECONDARY BOOM UP/DOWN TOGGLE SWITCH |
| TS61 | PRIMARY BOOM UP/DOWN TOGGLE SWITCH |
| TS62 | TURNTABLE ROTATE TOGGLE SWITCH |
| TS63 | PRIMARY BOOM EXTEND/RETRACT TOGGLE SWITCH |

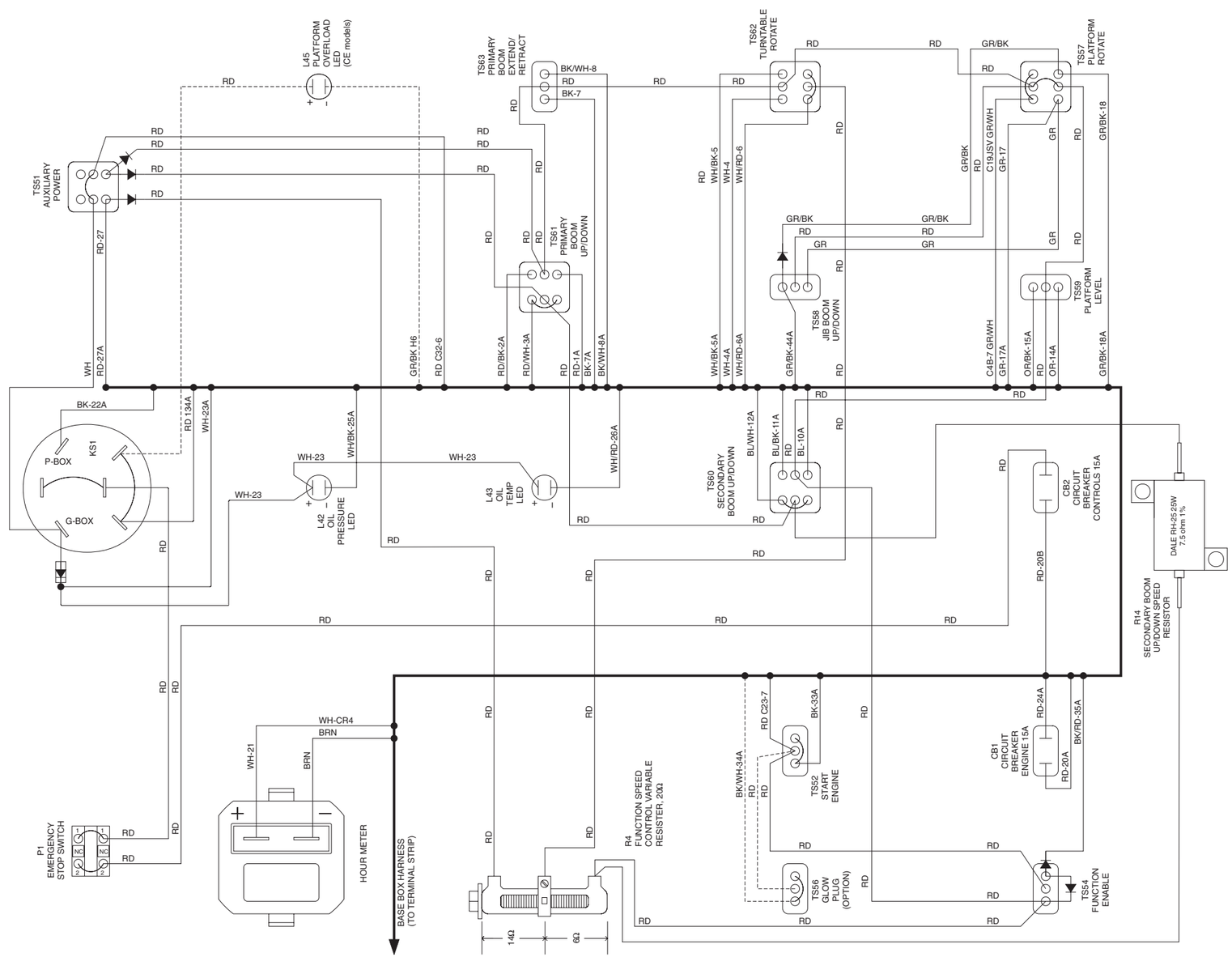

https://truckmanualshub.com/



## Ground Control Box Switch Panel Wiring Diagram, Z-45/25J

Deutz F3L-2011 Models

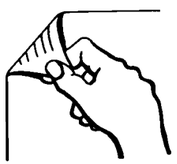

https://truckmanualshub.com/



# Ground Control Box Terminal Strip Wiring Diagram, Z-45/25J CE Models Deutz F3L-2011 Models

https://truckmanualshub.com/



# Ground Control Box Terminal Strip Wiring Diagram, Z-45/25J, CE Models

REV A

## Deutz F3L-2011 Models

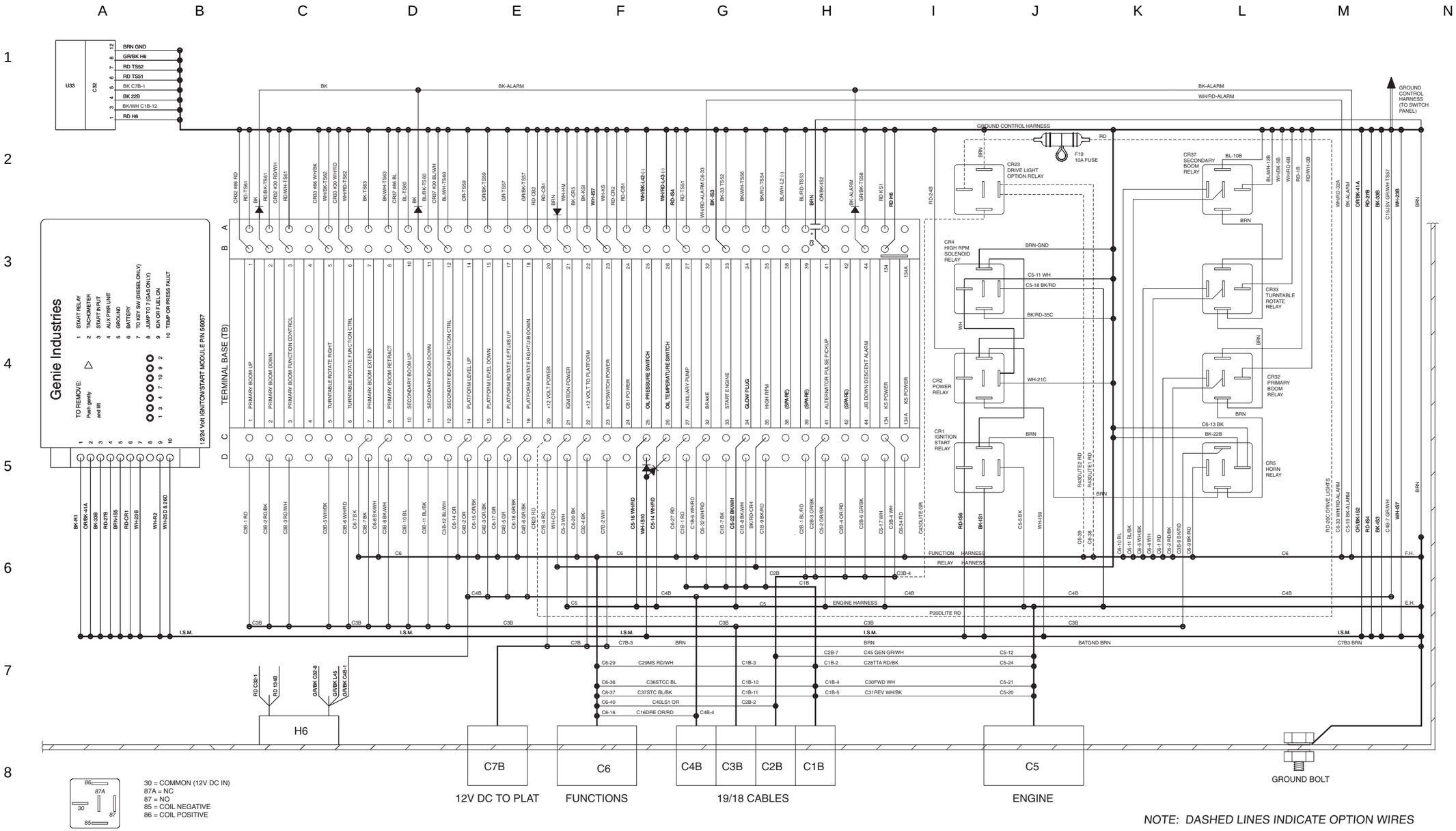


*NOTE: DASHED LINES INDICATE OPTION WIRES*

https://truckmanualshub.com/



REV B

# Ground Control Box Switch Panel Wiring Diagram, Z-45/25J, CE Models

Deutz F3L-2011 Models

| LABEL | DESCRIPTION |
|---|---|
| CB1 | CIRCUIT BREAKER, ENGINE, 15A |
| CB2 | CIRCUIT BREAKER, CONTROLS, 15A |
| CR1 | IGNITION / START RELAY |
| CR2 | IGNITION POWER RELAY |
| CR4 | HIGH IDLE RELAY |
| CR5 | HORN RELAY |
| HM | HOUR METER |
| KS1 | KEY SWITCH |
| L42 | OIL PRESSURE LED |
| L43 | OIL TEMPERATURE LED |
| L45 | PLATFORM OVERLOAD |
| P1 | RED EMERGENCY STOP BUTTON |
| R4 | SPEED LIMITING VARIABLE RESISTOR 20 OHMS |
| R14 | SECONDARY BOOM SPEED RESISTOR 7.5 OHMS |
| TS51 | AUXILIARY POWER TOGGLE SWITCH |
| TS52 | ENGINE START TOGGLE SWITCH |
| TS54 | FUNCTION ENABLE TOGGLE SWITCH |
| TS56 | GLOW PLUG TOGGLE SWITCH (OPTION) |
| TS57 | PLATFORM ROTATE TOGGLE SWITCH |
| TS58 | JIB BOOM UP/DOWN TOGGLE SWITCH |
| TS59 | PLATFORM LEVEL TOGGLE SWITCH |
| TS60 | SECONDARY BOOM UP/DOWN TOGGLE SWITCH |
| TS61 | PRIMARY BOOM UP/DOWN TOGGLE SWITCH |
| TS62 | TURNTABLE ROTATE TOGGLE SWITCH |
| TS63 | PRIMARY BOOM EXTEND/RETRACT TOGGLE SWITCH |

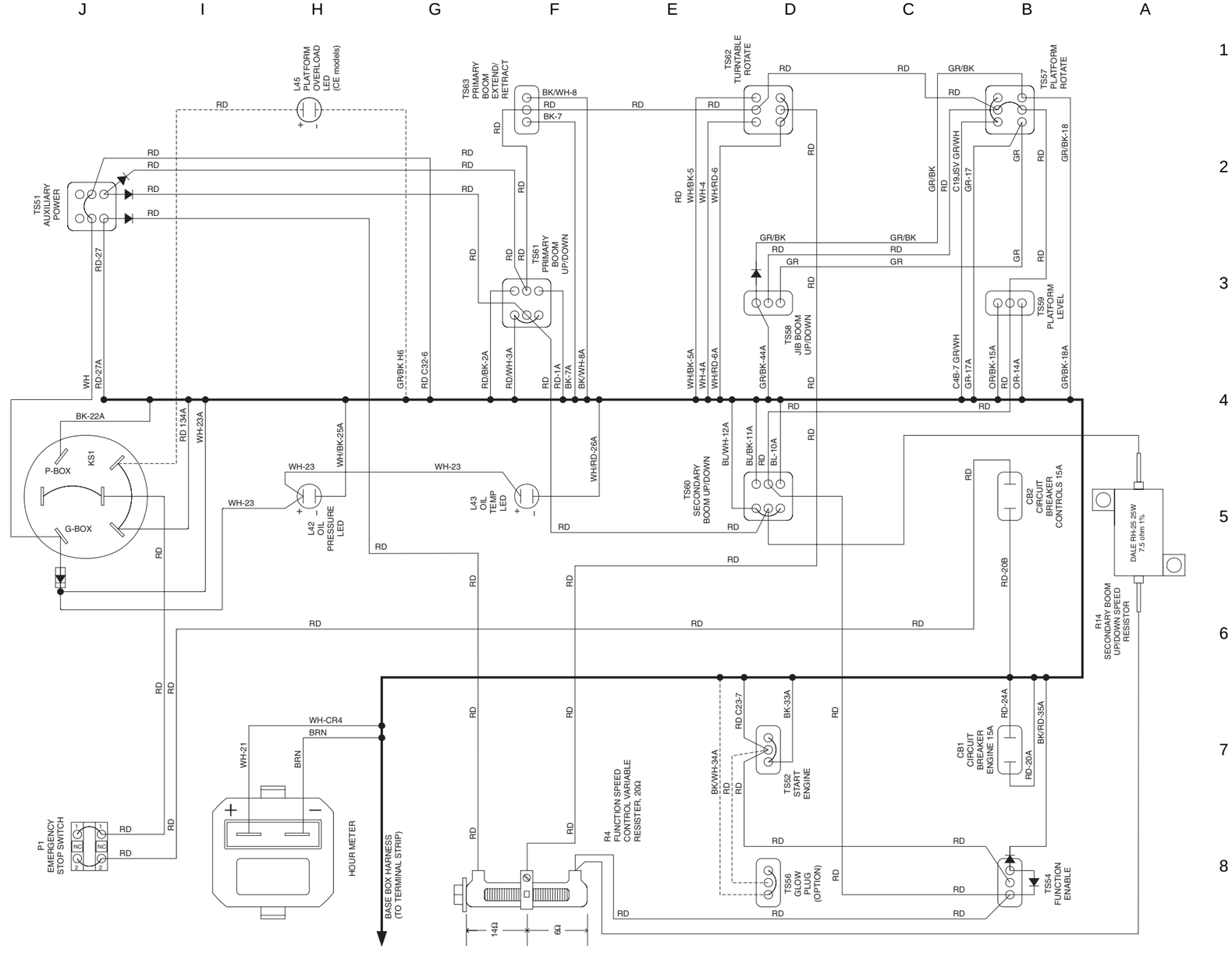

https://truckmanualshub.com/



# Ground Control Box Switch Panel Wiring Diagram, Z-45/25J CE Models Deutz F3L-2011 Models

https://truckmanualshub.com/



# Platform Control Box Wiring Diagram, Z-45/25J

Deutz F3L-2011 Models

https://truckmanualshub.com/



## Platform Control Box Wiring Diagram, Z-45/25J

REV A

Deutz F3L-2011 Models

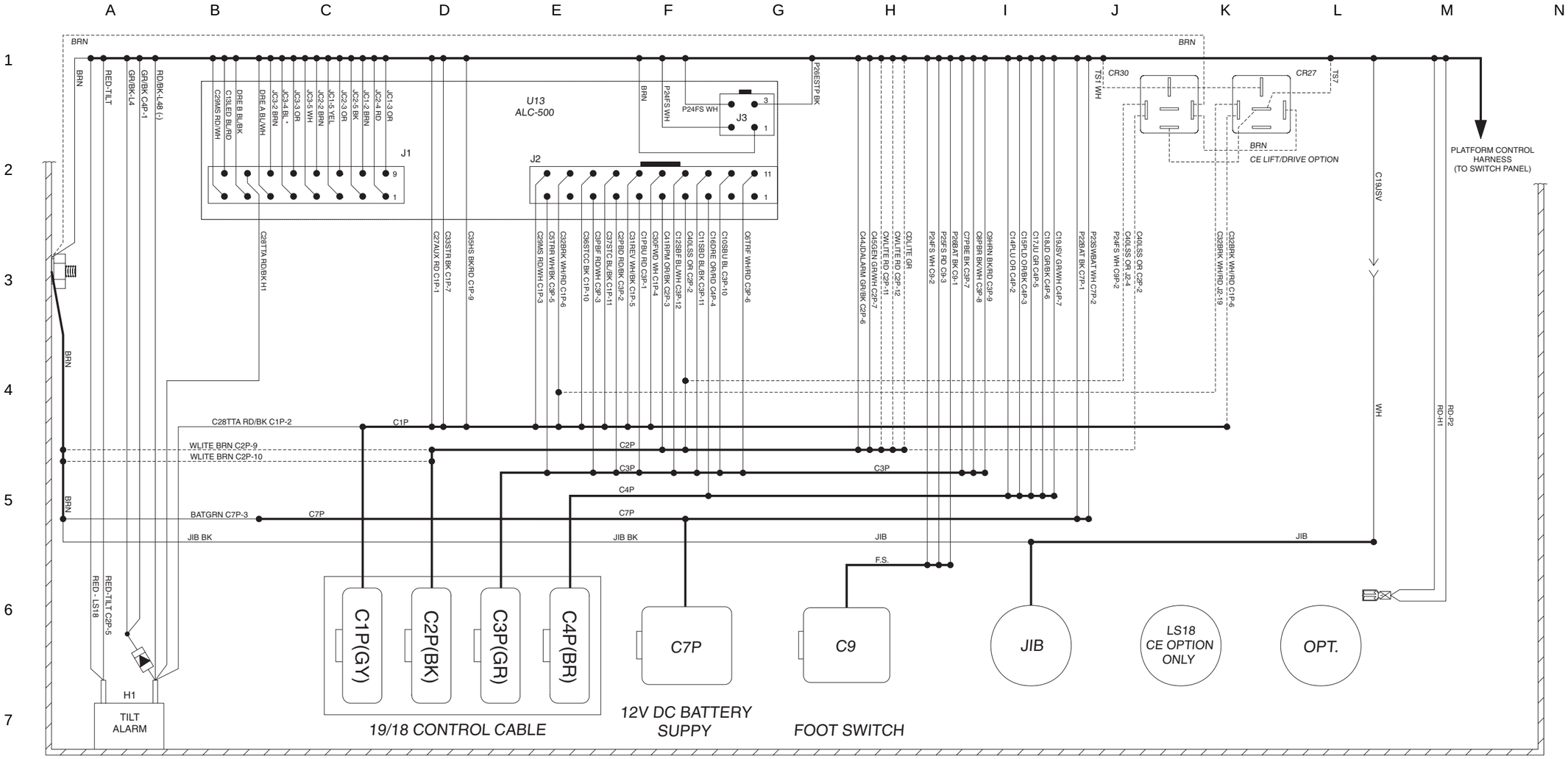


| ITEM | DESCRIPTION |
|---|---|
| H1 | TILT ALARM |
| C7P | 12V DC PLATFORM POWER CONNECTOR |
| C9 | FOOT SWITCH CONNECTOR |
| C1P - C4P | 48 PIN CONNECTOR BLOCK |
| U13 | ALC-500 CONTROL BOARD |
| J1 | CONTROL BOARD INPUT CONNECTOR |
| J2 | CONTROL BOARD OUTPUT CONNECTOR |
| J3 | CONTROL BOARD POWER CONNECTOR |
| CR27 | CONTROL RELAY (CE OPTION) |
| CR30 | CONTROL RELAY (CE OPTION) |
| LS18 | LOAD SENSE LIMIT SWITCH |

https://truckmanualshub.com/



REV A

# Platform Control Box Switch Panel Wiring Diagram, Z-45/25J

Deutz F3L-2011 Models

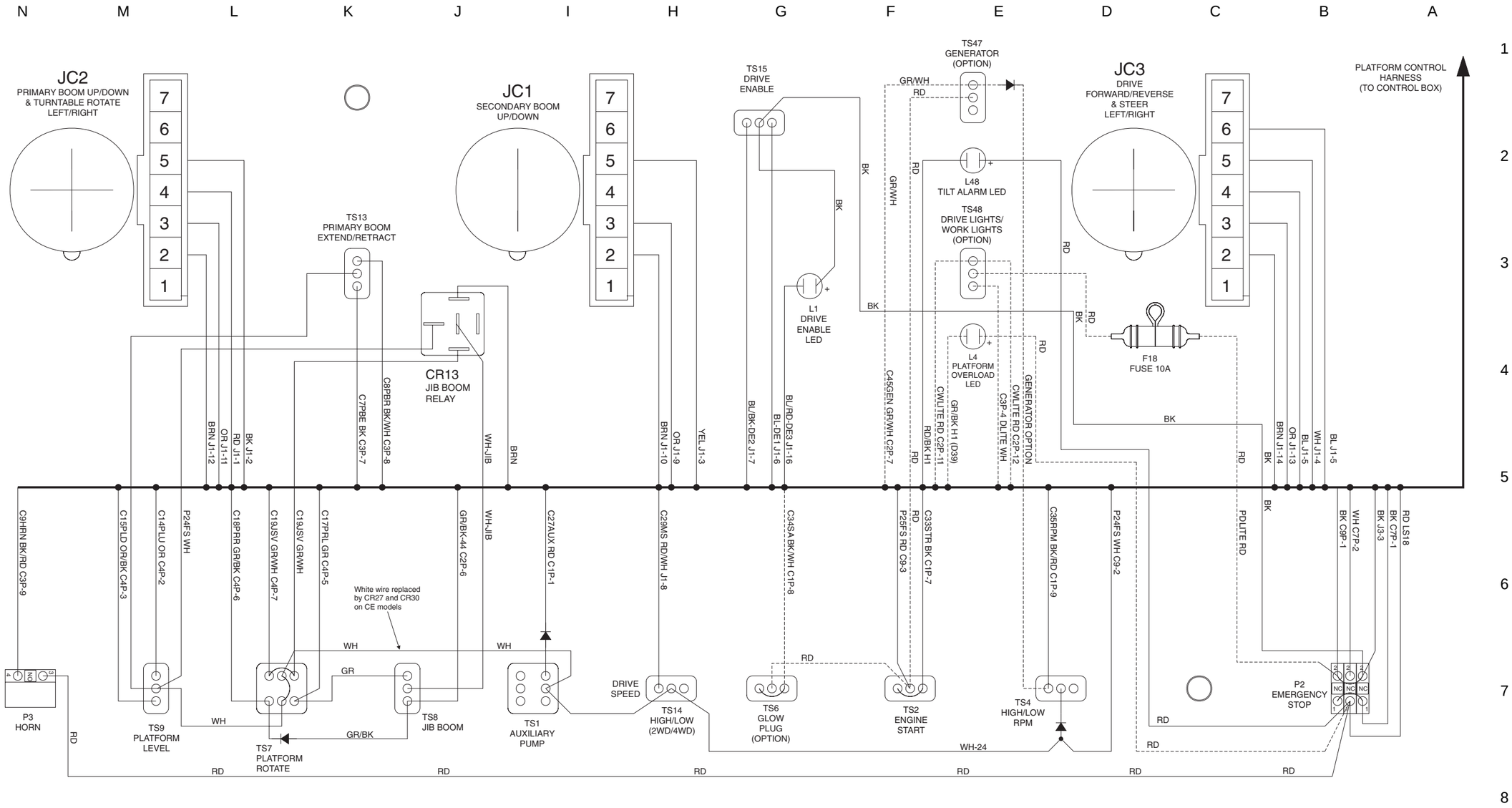


*NOTE:*
*DASHED LINES INDICATE OPTION WIRES*

https://truckmanualshub.com/



# Platform Control Box Switch Panel Wiring Diagram, Z-45/25J

Deutz F3L-2011 Models

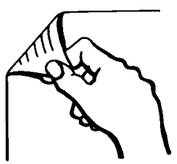

https://truckmanualshub.com/



# Electrical Schematic, Z-45/25

Perkins 404-22 Models

https://truckmanualshub.com/



# Electrical Schematic, Z-45/25

REV C

## Perkins 404-22 Models

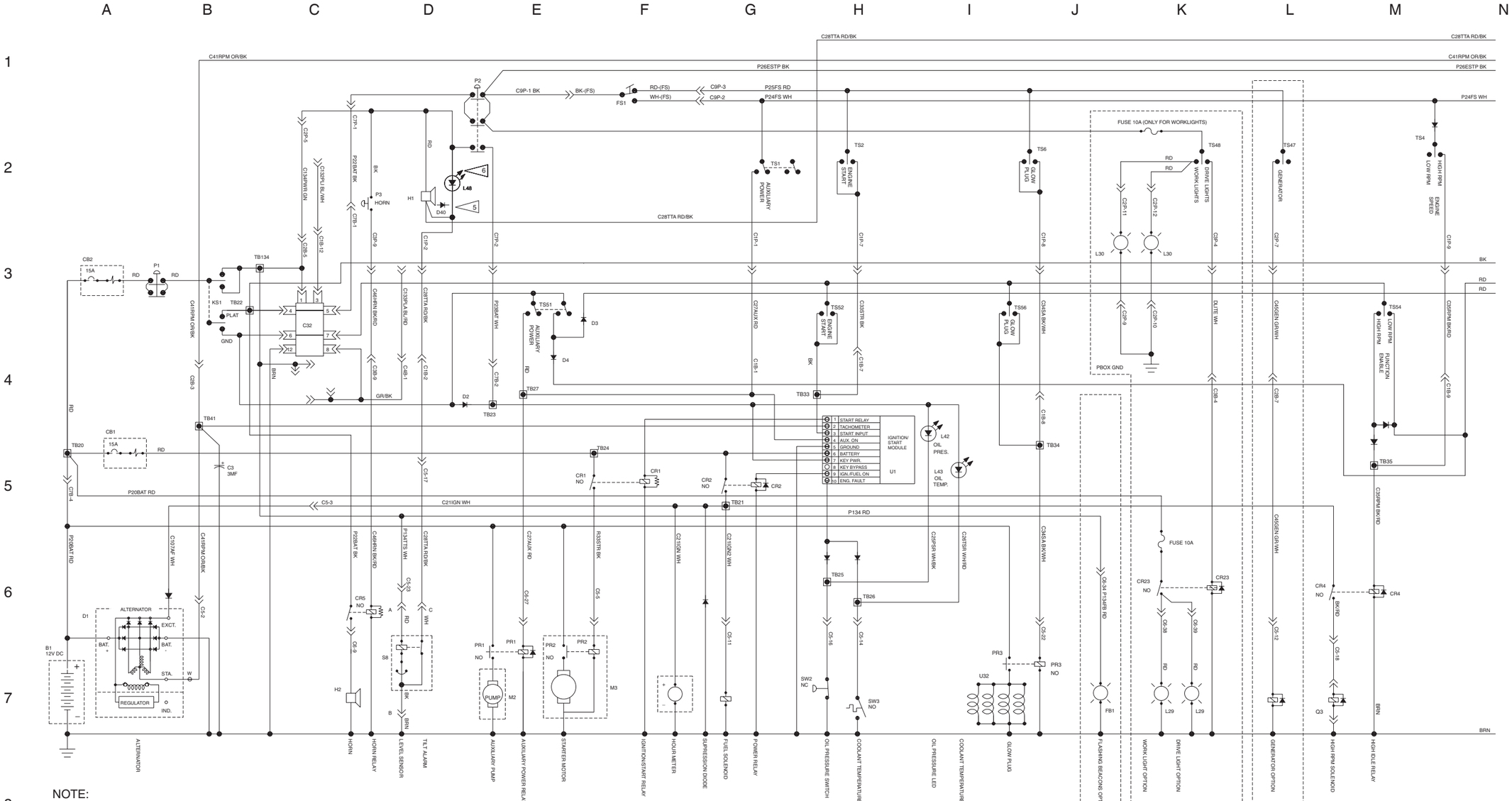


NOTE:

1. All switches and contacts are shown with the boom in the stowed position and the keyswitch off.

5 *Add D40 only if unit has L4 and L48.*

6 *ANSI/CSA (Domestic machine) add L48.*

*C1B & C1P = GRAY*
*C2B & C2P = BLACK*
*C3B & C3P = GREEN*
*C4B & C4P = BROWN*

https://truckmanualshub.com/



REV C

# Electrical Schematic, Z-45/25

## Perkins 404-22 Models

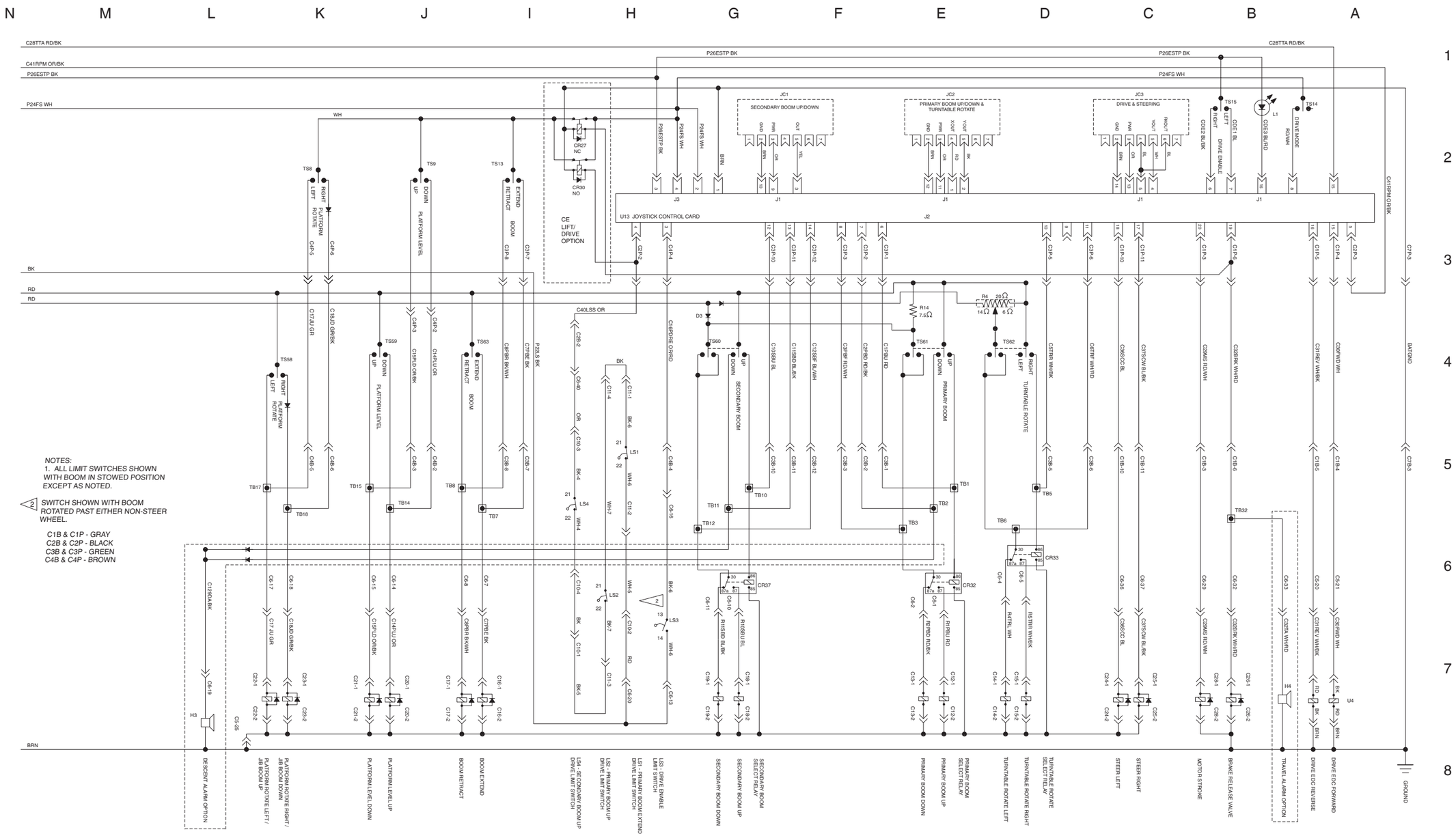


NOTES:
1. ALL LIMIT SWITCHES SHOWN WITH BOOM IN STOWED POSITION EXCEPT AS NOTED.

2 SWITCH SHOWN WITH BOOM ROTATED PAST EITHER NON-STEER WHEEL.

C1B & C1P - GRAY
C2B & C2P - BLACK
C3B & C3P - GREEN
C4B & C4P - BROWN

https://truckmanualshub.com/



# Electrical Schematic, Z-45/25

Perkins 404-22 Models

https://truckmanualshub.com/



# Ground Control Box Terminal Strip Wiring Diagram, Z-45/25

Perkins 404-22 Models

https://truckmanualshub.com/



# Ground Control Box Terminal Strip Wiring Diagram, Z-45/25

REV A

## Perkins 404-22 Models

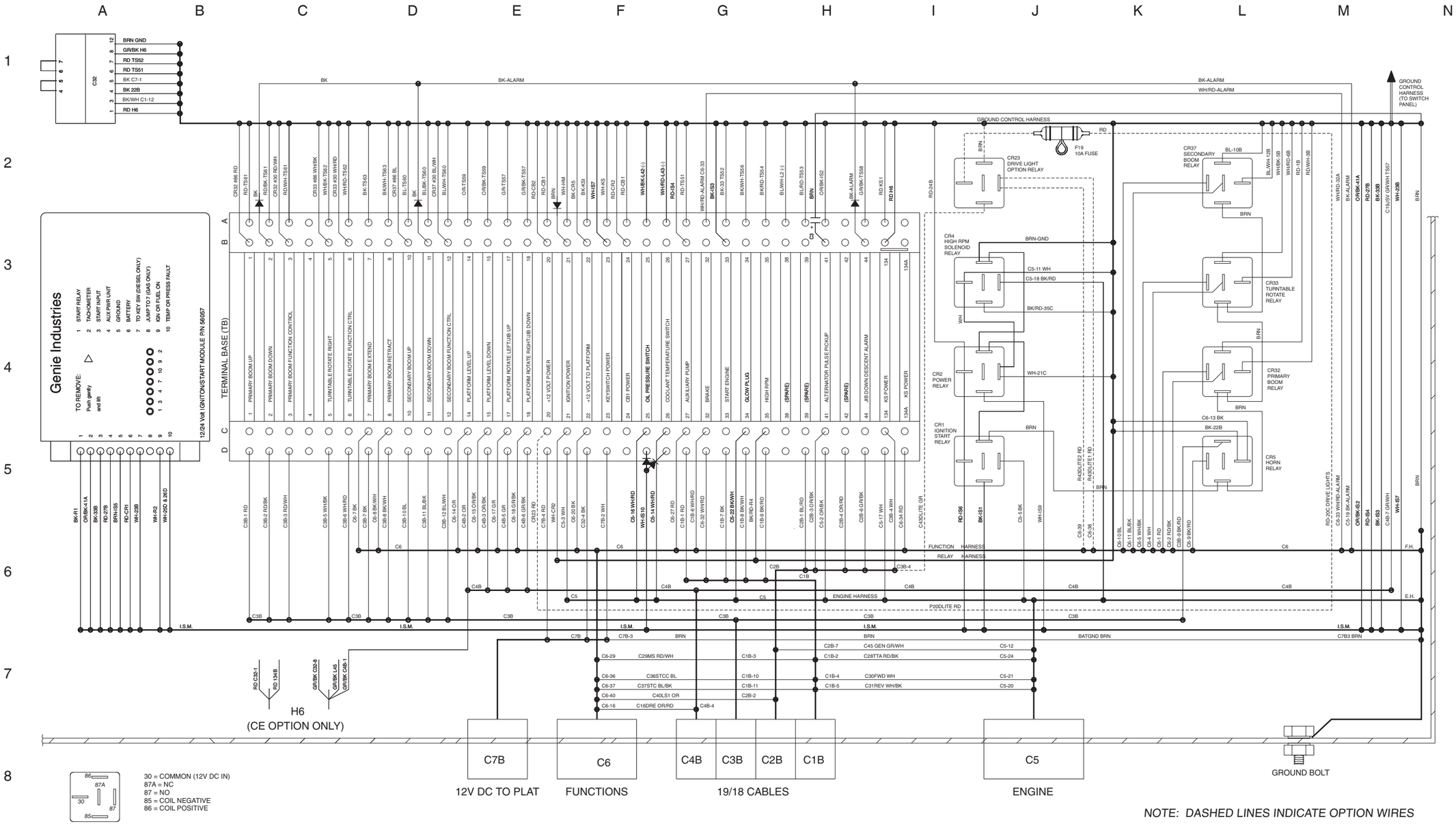


*NOTE: DASHED LINES INDICATE OPTION WIRES*

https://truckmanualshub.com/



REV B

# Ground Control Box Switch Panel Wiring Diagram, Z-45/25

Perkins 404-22 Models

| LABEL | DESCRIPTION |
|---|---|
| CB1 | CIRCUIT BREAKER, ENGINE, 15A |
| CB2 | CIRCUIT BREAKER, CONTROLS, 15A |
| CR1 | IGNITION / START RELAY |
| CR2 | IGNITION POWER RELAY |
| CR4 | HIGH IDLE RELAY |
| CR5 | HORN RELAY |
| HM | HOUR METER |
| KS1 | KEY SWITCH |
| L42 | OIL PRESSURE LED |
| L43 | COOLANT TEMPERATURE LED |
| L45 | PLATFORM OVERLOAD |
| P1 | RED EMERGENCY STOP BUTTON |
| R4 | SPEED LIMITING VARIABLE RESISTOR 20 OHMS |
| R14 | SECONDARY BOOM SPEED RESISTOR 7.5 OHMS |
| TS51 | AUXILIARY POWER TOGGLE SWITCH |
| TS52 | ENGINE START TOGGLE SWITCH |
| TS54 | FUNCTION ENABLE TOGGLE SWITCH |
| TS56 | GLOW PLUG TOGGLE SWITCH (OPTION) |
| TS57 | PLATFORM ROTATE TOGGLE SWITCH |
| TS59 | PLATFORM LEVEL TOGGLE SWITCH |
| TS60 | SECONDARY BOOM UP/DOWN TOGGLE SWITCH |
| TS61 | PRIMARY BOOM UP/DOWN TOGGLE SWITCH |
| TS62 | TURNTABLE ROTATE TOGGLE SWITCH |
| TS63 | PRIMARY BOOM EXTEND/RETRACT TOGGLE SWITCH |

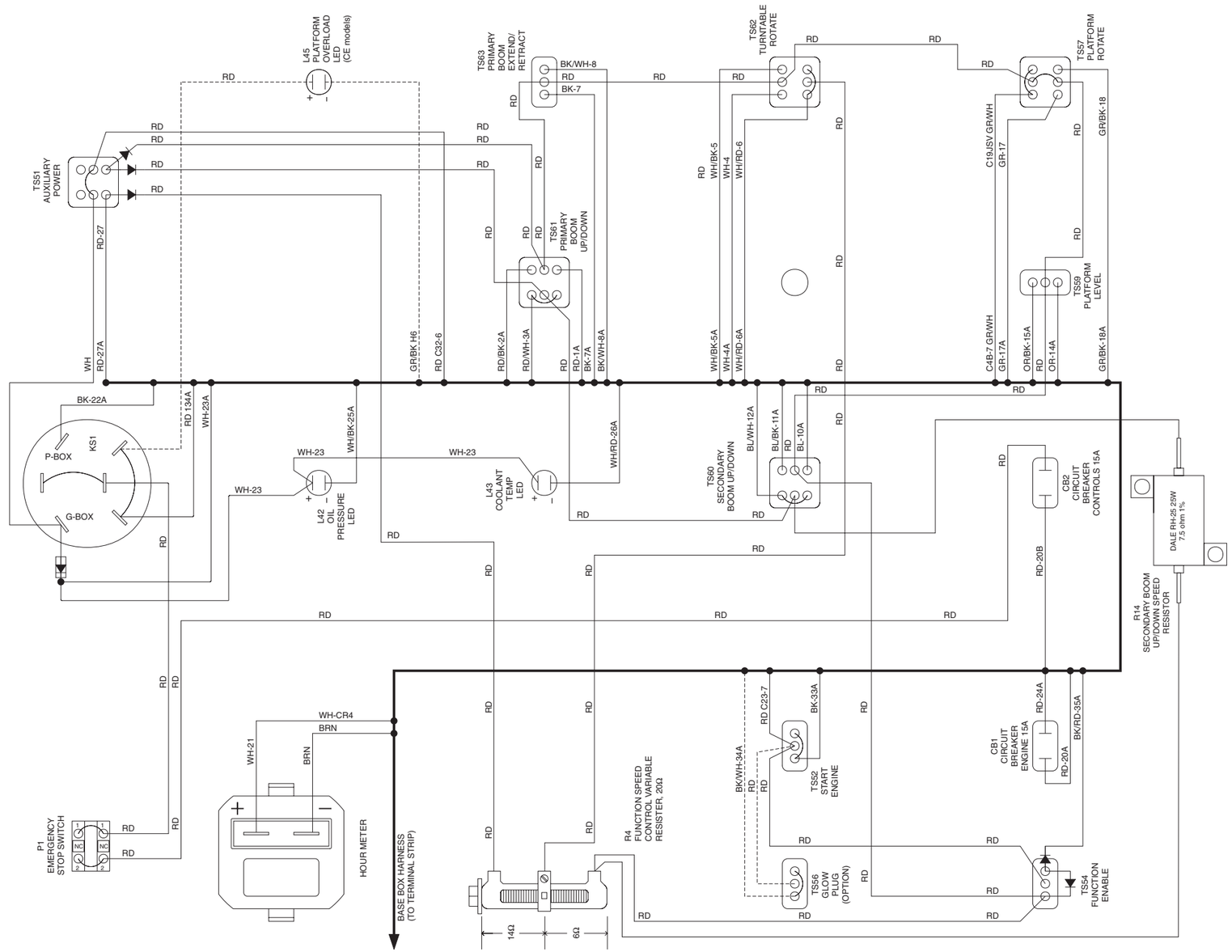

https://truckmanualshub.com/



# Ground Control Box Switch Panel Wiring Diagram, Z-45/25

Perkins 404-22 Models

https://truckmanualshub.com/



# Platform Control Box Wiring Diagram, Z-45/25

Perkins 404-22 Models

https://truckmanualshub.com/



# Platform Control Box Wiring Diagram, Z-45/25

REV A

Perkins 404-22 Models

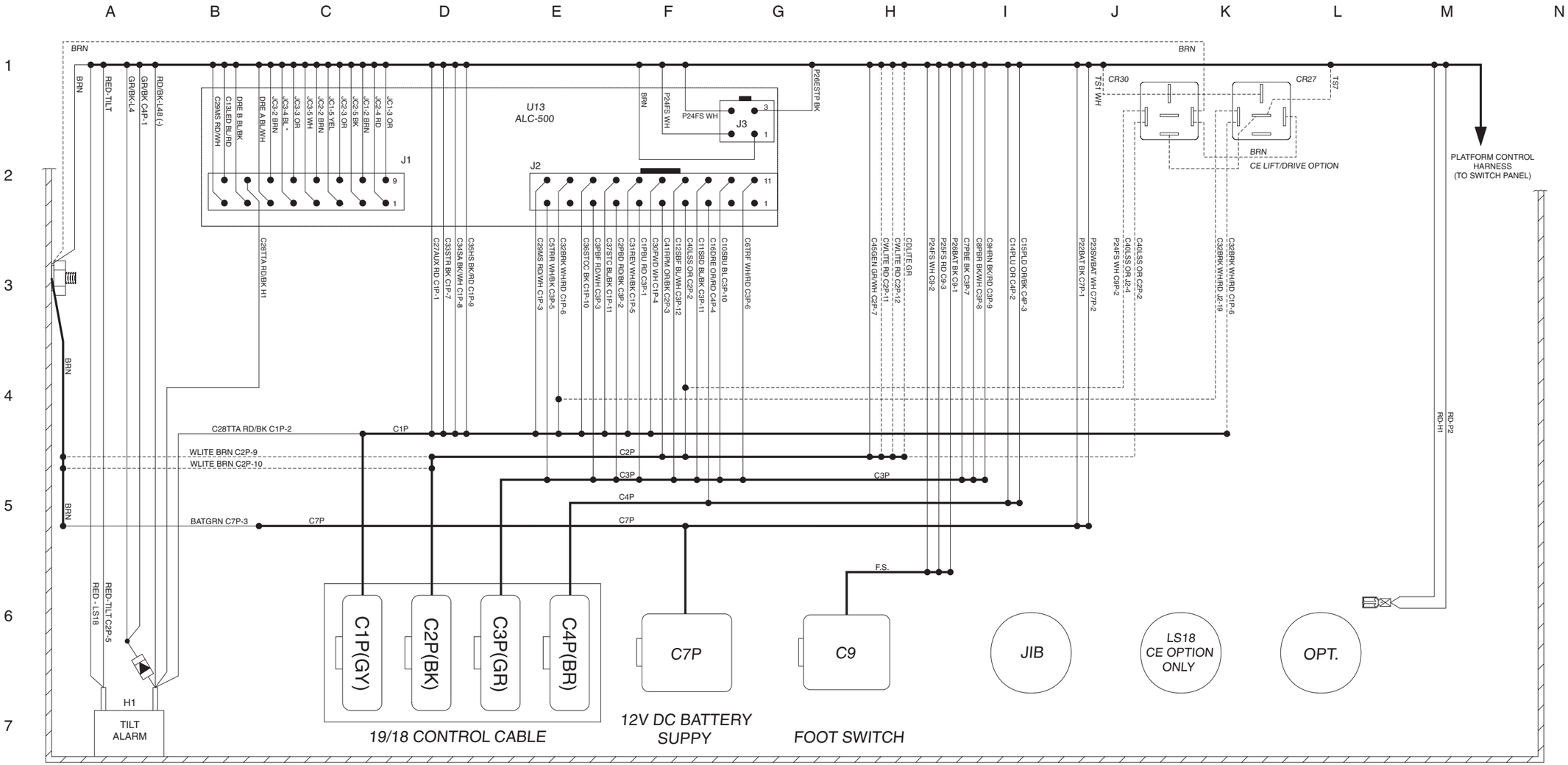


| ITEM | DESCRIPTION |
|---|---|
| H1 | TILT ALARM |
| C7P | 12V DC PLATFORM POWER CONNECTOR |
| C9 | FOOT SWITCH CONNECTOR |
| C1P - C4P | 48 PIN CONNECTOR BLOCK |
| U13 | ALC-500 CONTROL BOARD |
| J1 | CONTROL BOARD INPUT CONNECTOR |
| J2 | CONTROL BOARD OUTPUT CONNECTOR |
| J3 | CONTROL BOARD POWER CONNECTOR |
| CR27 | CONTROL RELAY (CE OPTION) |
| CR30 | CONTROL RELAY (CE OPTION) |
| LS18 | LOAD SENSE LIMIT SWITCH |

https://truckmanualshub.com/



REV A

# Platform Control Box Switch Panel Wiring Diagram, Z-45/25

Perkins 404-22 Models

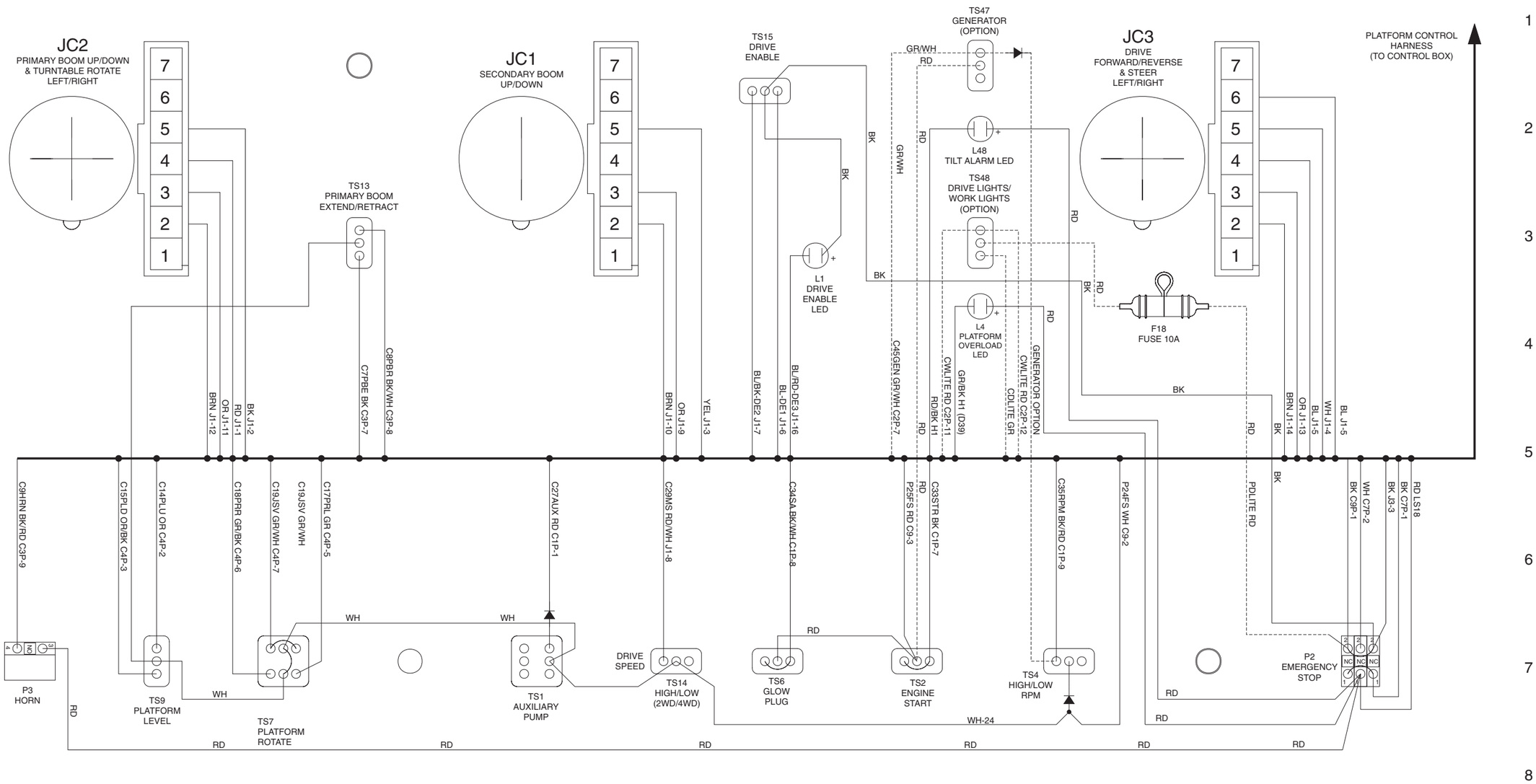


*NOTE:*
*DASHED LINES INDICATE OPTION WIRES*

https://truckmanualshub.com/



# Platform Control Box Switch Panel Wiring Diagram, Z-45/25

Perkins 404-22 Models

https://truckmanualshub.com/



# Electrical Schematic, Z-45/25J

Perkins 404-22 Models

https://truckmanualshub.com/



# Electrical Schematic, Z-45/25J

REV C

## Perkins 404-22 Models

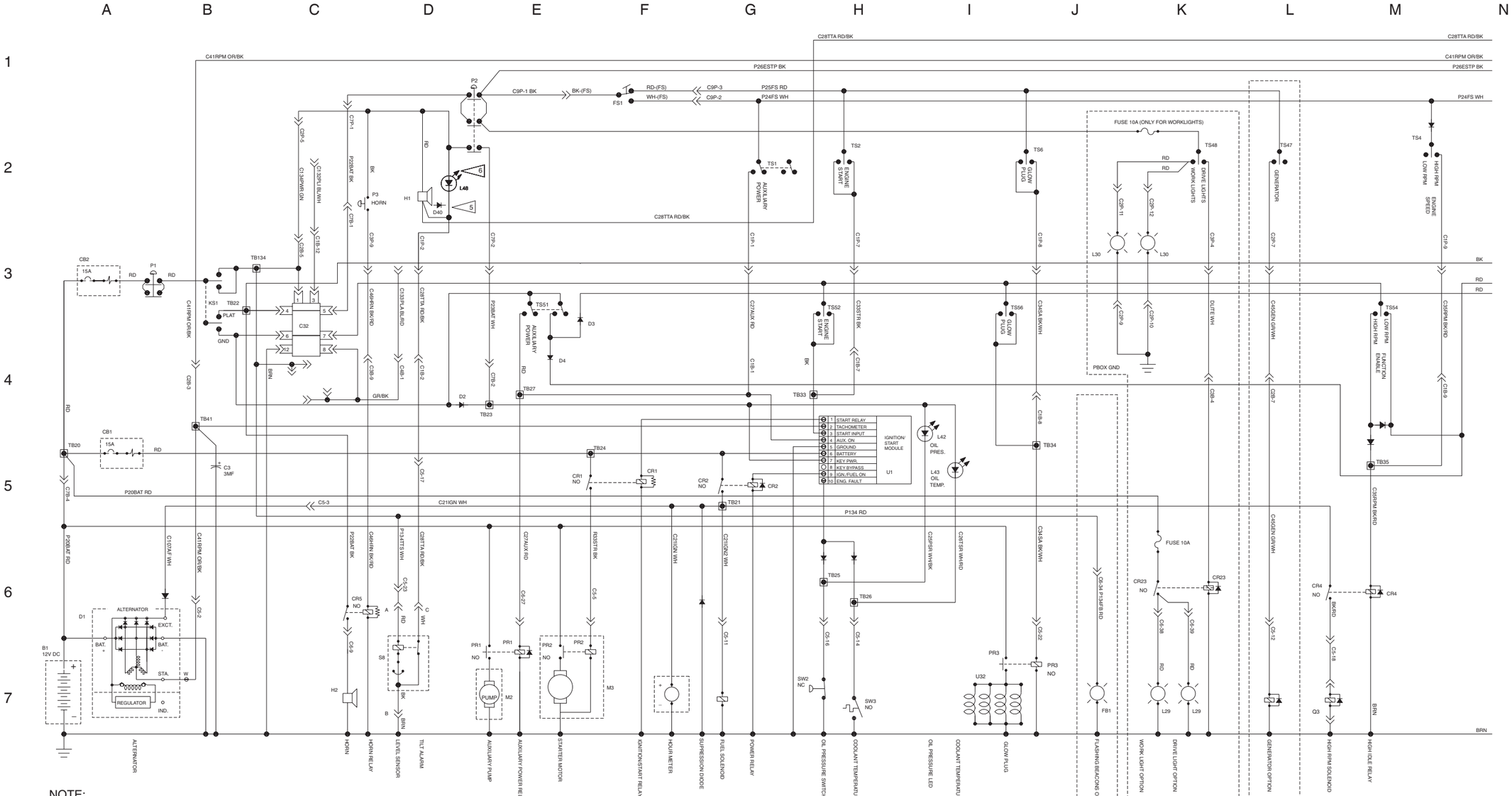


NOTE:

1. All switches and contacts are shown with the boom in the stowed position and the keyswitch off.

5 *Add D40 only if unit has L4 and L48.*

6 *ANSI/CSA (Domestic machine) add L48.*

*C1B & C1P = GRAY*
*C2B & C2P = BLACK*
*C3B & C3P = GREEN*
*C4B & C4P = BROWN*

https://truckmanualshub.com/



REV C

# Electrical Schematic, Z-45/25J

## Perkins 404-22 Models

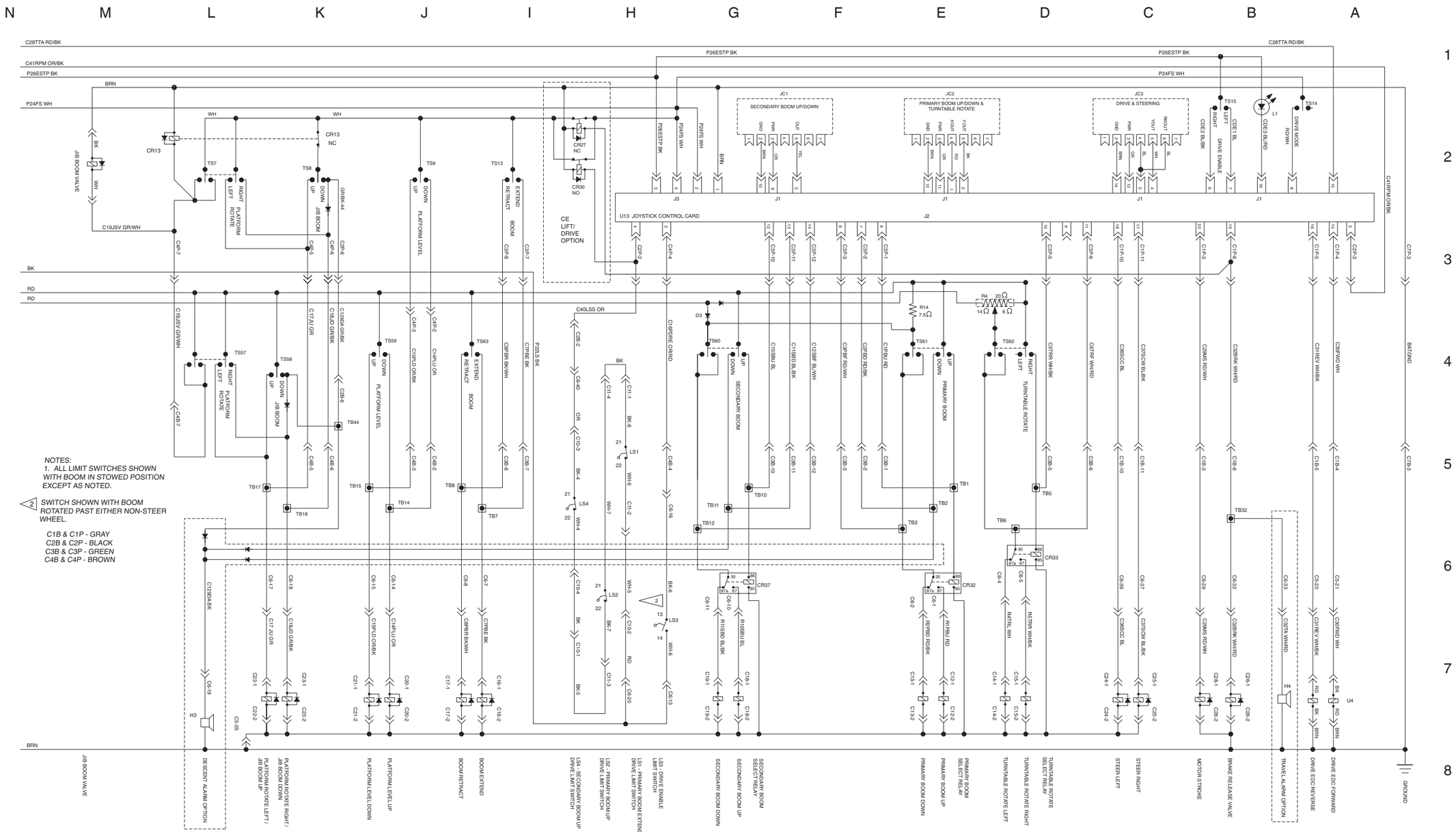

https://truckmanualshub.com/



# Electrical Schematic, Z-45/25J

Perkins 404-22 Models

https://truckmanualshub.com/



# Ground Control Box Terminal Strip Wiring Diagram, Z-45/25J

Perkins 404-22 Models

https://truckmanualshub.com/



# Ground Control Box Terminal Strip Wiring Diagram, Z-45/25J

REV B

## Perkins 404-22 Models

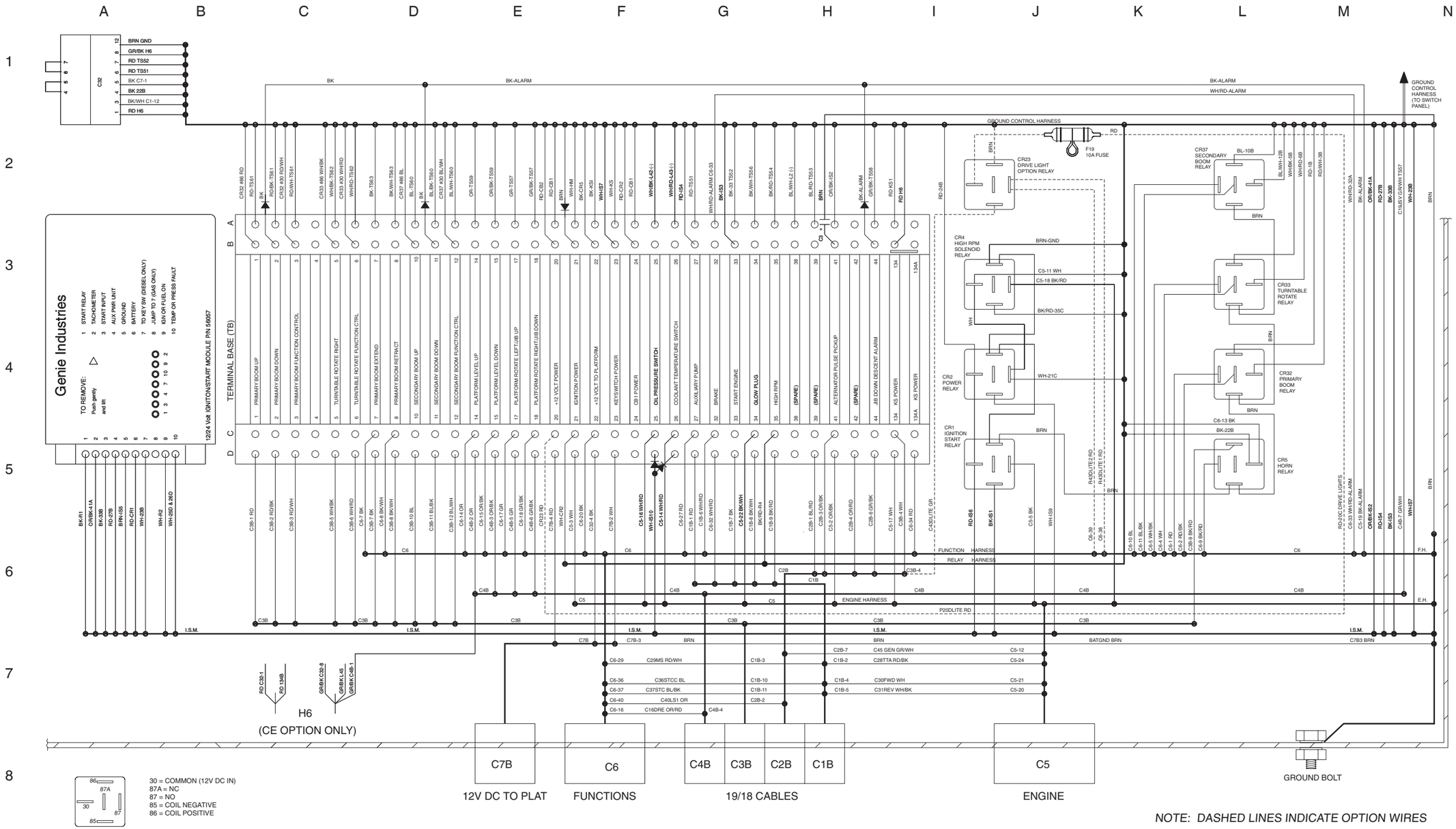


*NOTE: DASHED LINES INDICATE OPTION WIRES*

https://truckmanualshub.com/



REV B

# Ground Control Box Switch Panel Wiring Diagram, Z-45/25J

Perkins 404-22 Models

| LABEL | DESCRIPTION |
|---|---|
| CB1 | CIRCUIT BREAKER, ENGINE, 15A |
| CB2 | CIRCUIT BREAKER, CONTROLS, 15A |
| CR1 | IGNITION / START RELAY |
| CR2 | IGNITION POWER RELAY |
| CR4 | HIGH IDLE RELAY |
| CR5 | HORN RELAY |
| HM | HOUR METER |
| KS1 | KEY SWITCH |
| L42 | OIL PRESSURE LED |
| L43 | COOLANT TEMPERATURE LED |
| L45 | PLATFORM OVERLOAD |
| P1 | RED EMERGENCY STOP BUTTON |
| R4 | SPEED LIMITING VARIABLE RESISTOR 20 OHMS |
| R14 | SECONDARY BOOM SPEED RESISTOR 7.5 OHMS |
| TS51 | AUXILIARY POWER TOGGLE SWITCH |
| TS52 | ENGINE START TOGGLE SWITCH |
| TS54 | FUNCTION ENABLE TOGGLE SWITCH |
| TS56 | GLOW PLUG TOGGLE SWITCH (OPTION) |
| TS57 | PLATFORM ROTATE TOGGLE SWITCH |
| TS58 | JIB BOOM UP/DOWN TOGGLE SWITCH |
| TS59 | PLATFORM LEVEL TOGGLE SWITCH |
| TS60 | SECONDARY BOOM UP/DOWN TOGGLE SWITCH |
| TS61 | PRIMARY BOOM UP/DOWN TOGGLE SWITCH |
| TS62 | TURNTABLE ROTATE TOGGLE SWITCH |
| TS63 | PRIMARY BOOM EXTEND/RETRACT TOGGLE SWITCH |

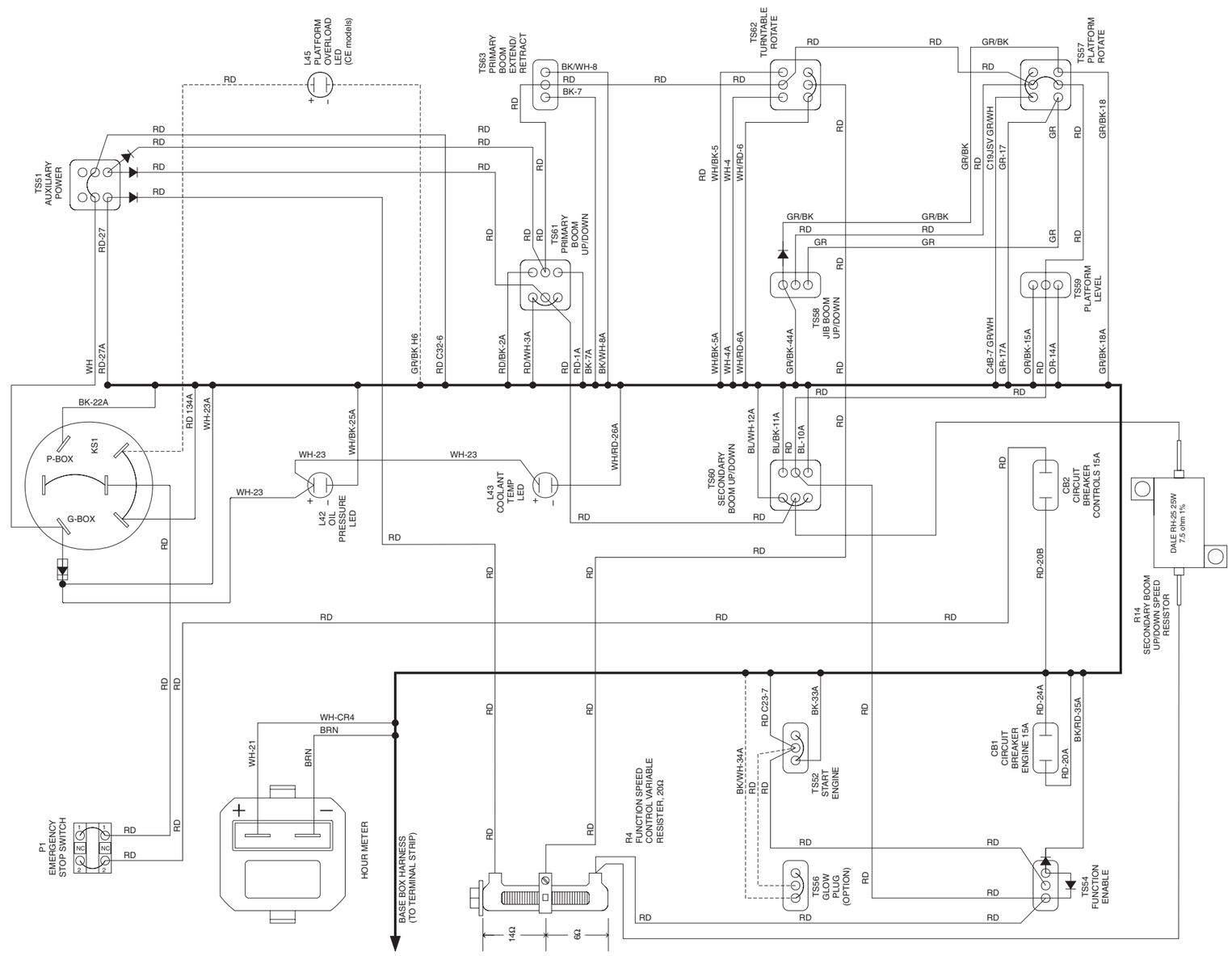

https://truckmanualshub.com/



## Ground Control Box Switch Panel Wiring Diagram, Z-45/25J

Perkins 404-22 Models

https://truckmanualshub.com/



# Platform Control Box Wiring Diagram, Z-45/25J

Perkins 404-22 Models

https://truckmanualshub.com/



# Platform Control Box Wiring Diagram, Z-45/25J

REV A

Perkins 404-22 Models

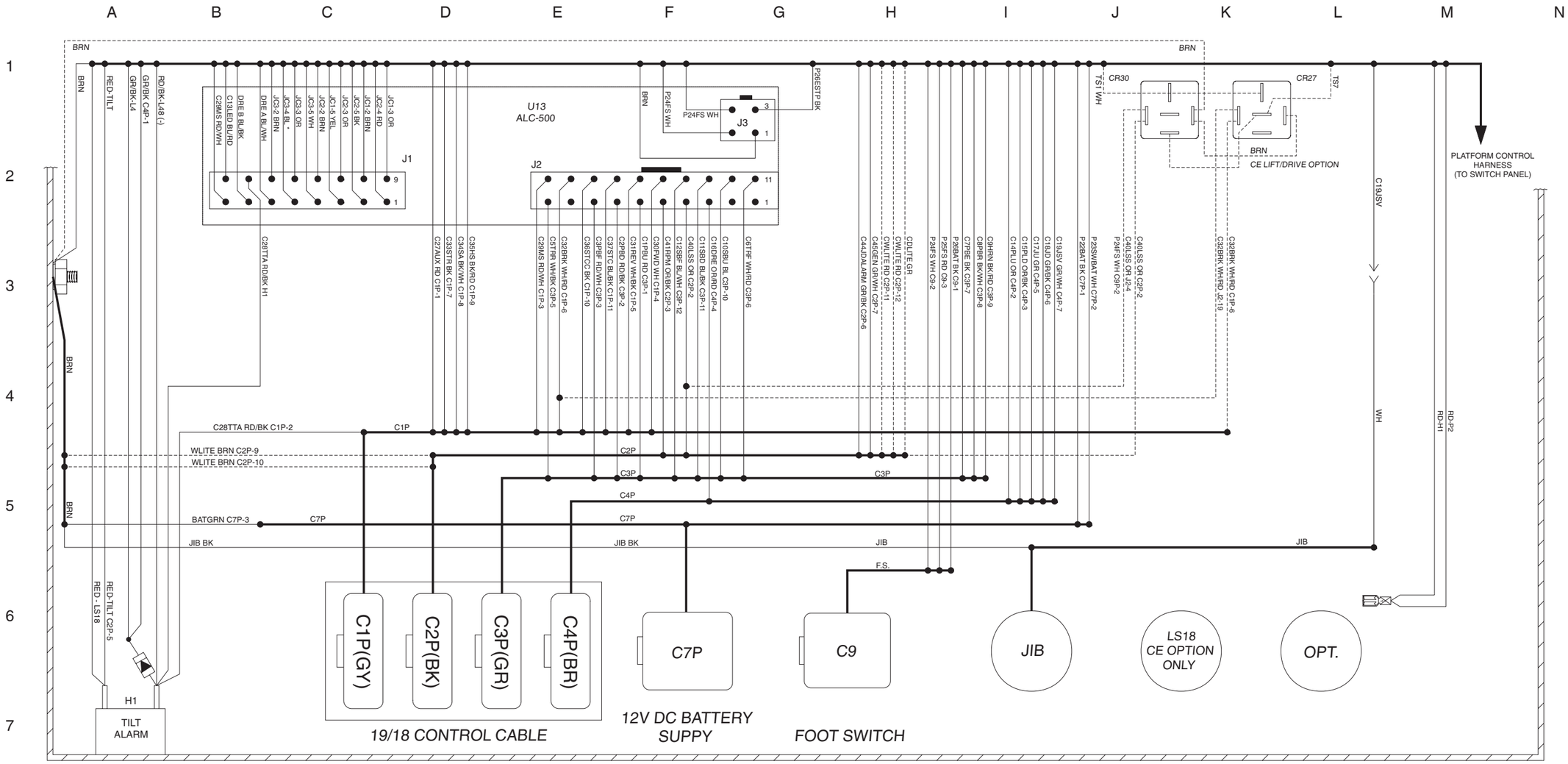


| ITEM | DESCRIPTION |
|---|---|
| H1 | TILT ALARM |
| C7P | 12V DC PLATFORM POWER CONNECTOR |
| C9 | FOOT SWITCH CONNECTOR |
| C1P - C4P | 48 PIN CONNECTOR BLOCK |
| U13 | ALC-500 CONTROL BOARD |
| J1 | CONTROL BOARD INPUT CONNECTOR |
| J2 | CONTROL BOARD OUTPUT CONNECTOR |
| J3 | CONTROL BOARD POWER CONNECTOR |
| CR27 | CONTROL RELAY (CE OPTION) |
| CR30 | CONTROL RELAY (CE OPTION) |
| LS18 | LOAD SENSE LIMIT SWITCH |

https://truckmanualshub.com/



REV A

# Platform Control Box Switch Panel Wiring Diagram, Z-45/25J

Perkins 404-22 Models

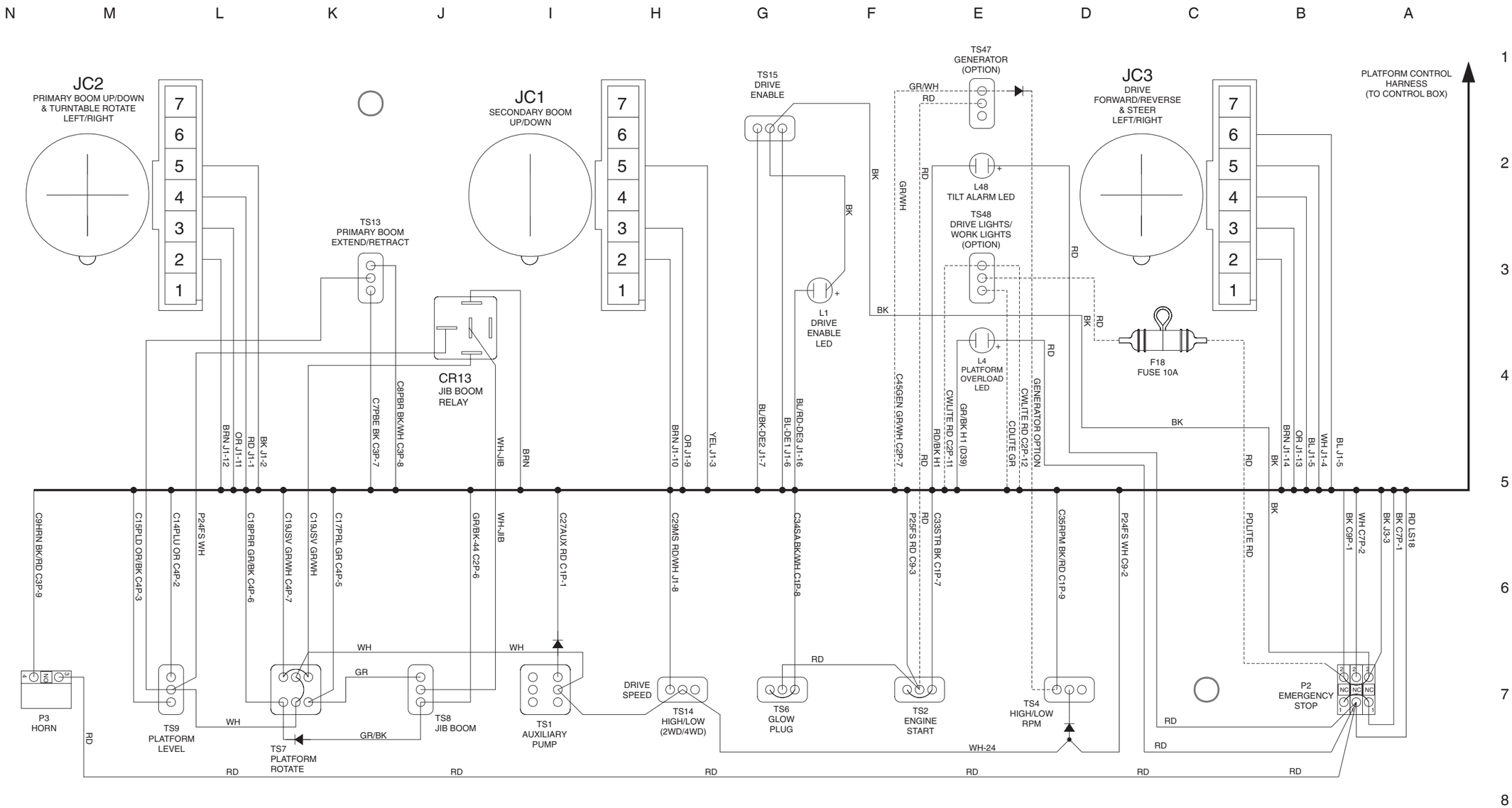


*NOTE:*
*DASHED LINES INDICATE OPTION WIRES*

https://truckmanualshub.com/



# Platform Control Box Switch Panel Wiring Diagram, Z-45/25J

Perkins 404-22 Models

https://truckmanualshub.com/



REV D

# Hydraulic Schematic, 2WD Models
(before serial number 27001)

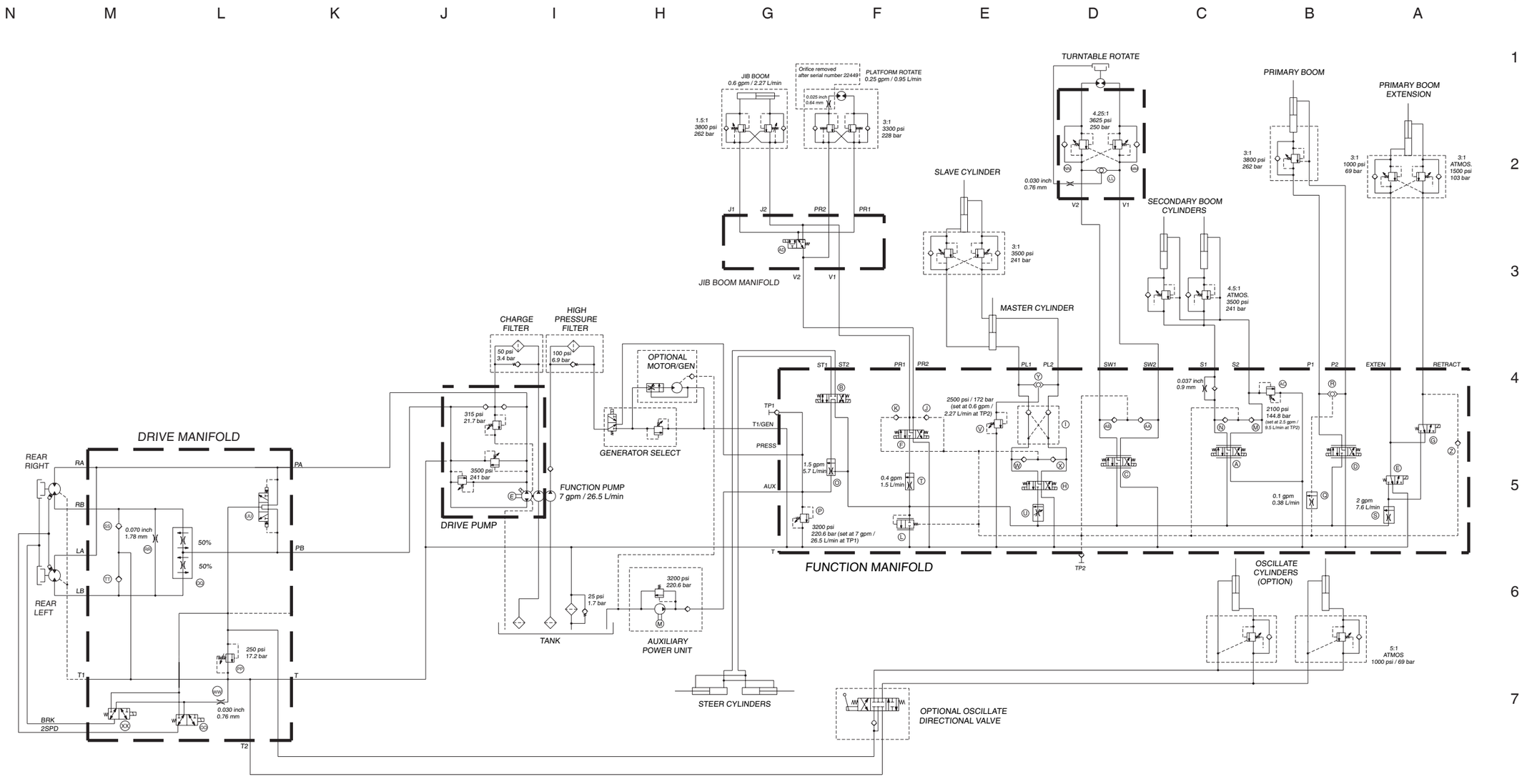

https://truckmanualshub.com/



# Hydraulic Schematic, 2WD Models
(before serial number 27001)

https://truckmanualshub.com/



REV B

# Hydraulic Schematic, 2WD Models
(after serial number 27000)

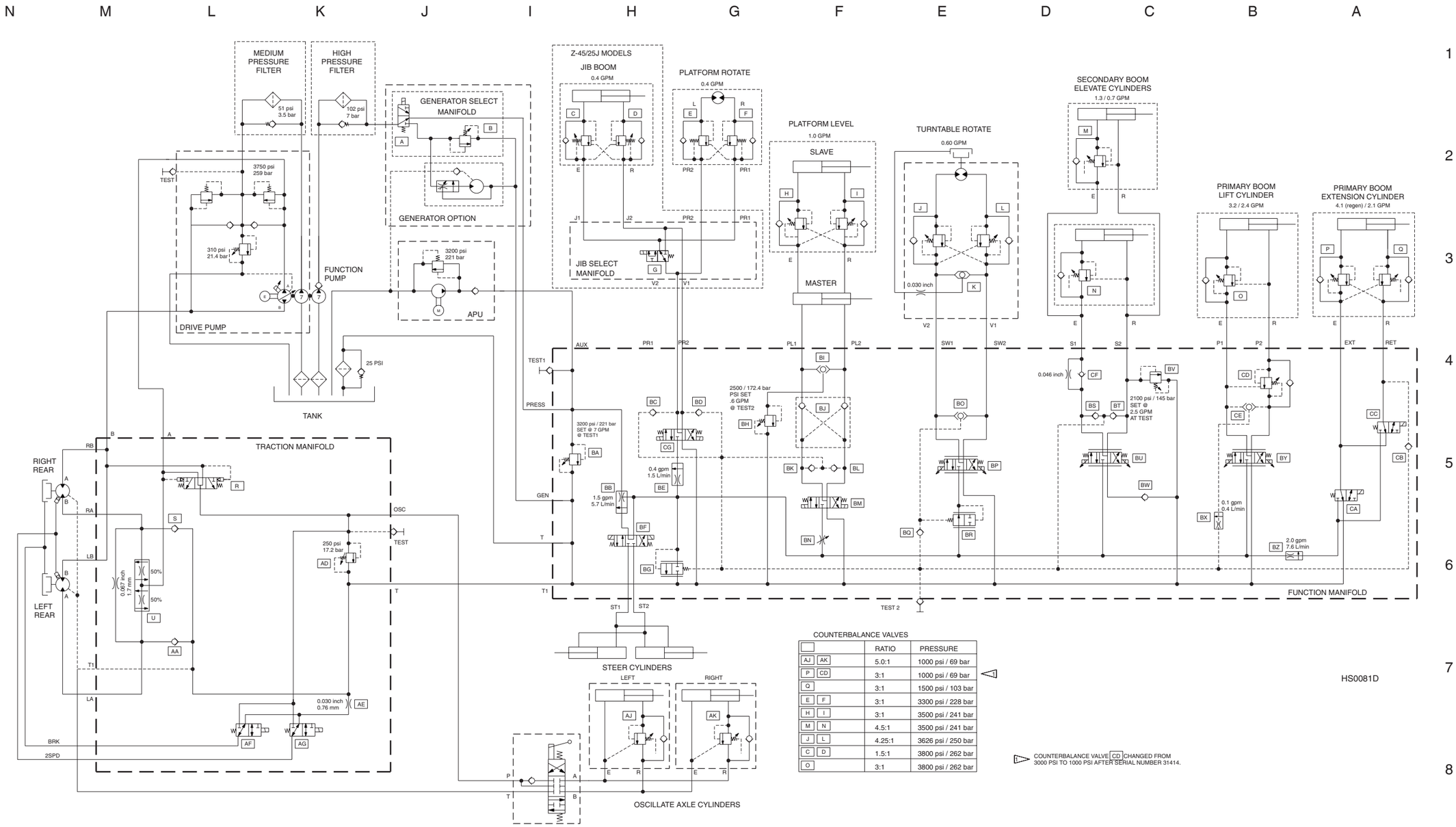


COUNTERBALANCE VALVES

| | RATIO | PRESSURE |
|---|---|---|
| AJ AK | 5.0:1 | 1000 psi / 69 bar |
| P CD | 3:1 | 1000 psi / 69 bar |
| Q | 3:1 | 1500 psi / 103 bar |
| E F | 3:1 | 3300 psi / 228 bar |
| H I | 3:1 | 3500 psi / 241 bar |
| M N | 4.5:1 | 3500 psi / 241 bar |
| J L | 4.25:1 | 3626 psi / 250 bar |
| C D | 1.5:1 | 3800 psi / 262 bar |
| O | 3:1 | 3800 psi / 262 bar |

COUNTERBALANCE VALVE CD CHANGED FROM 3000 PSI TO 1000 PSI AFTER SERIAL NUMBER 31414.

https://truckmanualshub.com/



# Hydraulic Schematic, 2WD Models
(after serial number 27000)

https://truckmanualshub.com/



REV C

# Hydraulic Schematic, 4WD Models
(before serial number 27001)

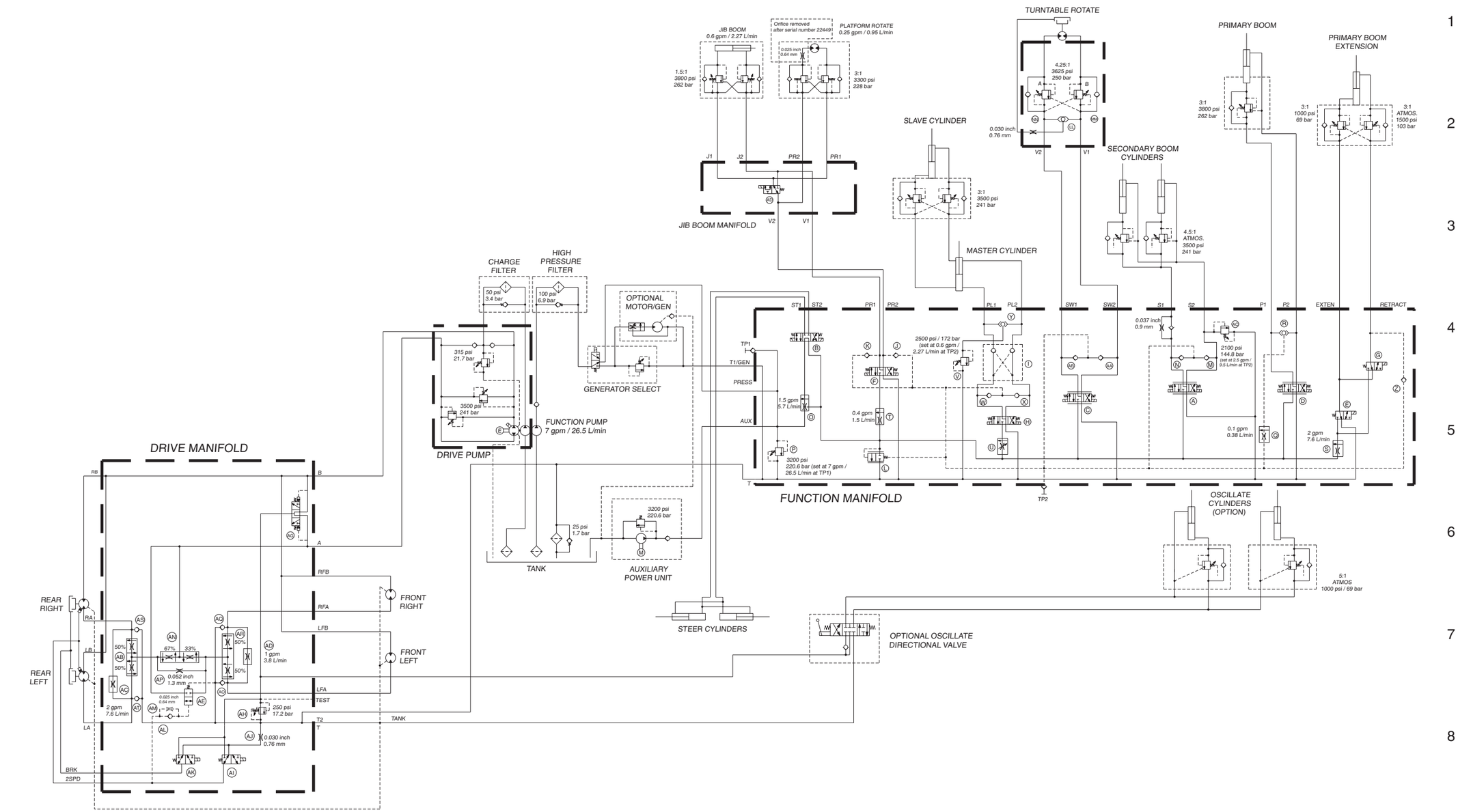

https://truckmanualshub.com/



# Hydraulic Schematic, 4WD Models
(before serial number 27001)

https://truckmanualshub.com/



REV B

# Hydraulic Schematic, 4WD Models
(after serial number 27000)

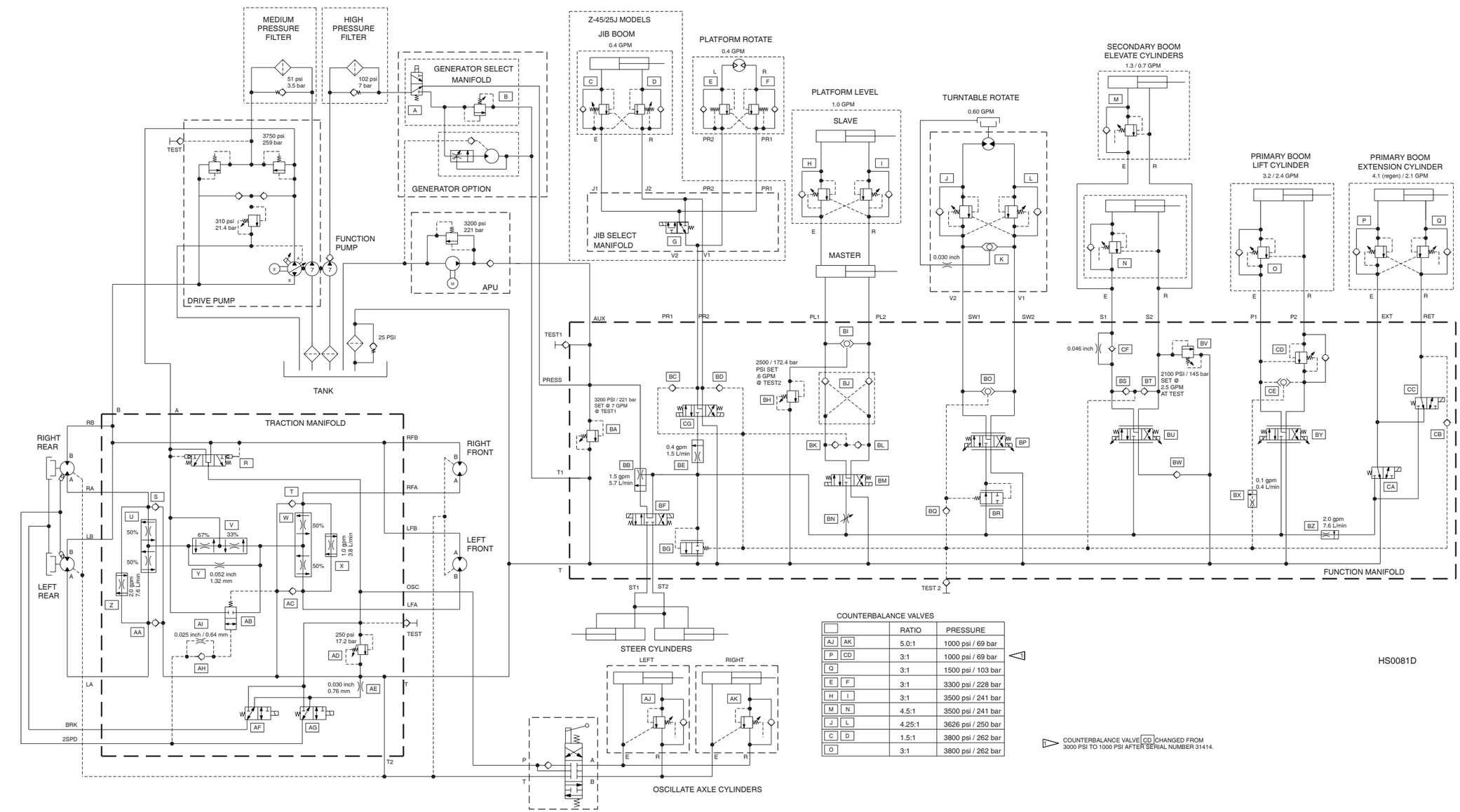


COUNTERBALANCE VALVES

| | RATIO | PRESSURE |
|---|---|---|
| AJ AK | 5.0:1 | 1000 psi / 69 bar |
| P CD | 3:1 | 1000 psi / 69 bar |
| Q | 3:1 | 1500 psi / 103 bar |
| E F | 3:1 | 3300 psi / 228 bar |
| H I | 3:1 | 3500 psi / 241 bar |
| M N | 4.5:1 | 3500 psi / 241 bar |
| J L | 4.25:1 | 3626 psi / 250 bar |
| C D | 1.5:1 | 3800 psi / 262 bar |
| O | 3:1 | 3800 psi / 262 bar |

1 COUNTERBALANCE VALVE CD CHANGED FROM 3000 PSI TO 1000 PSI AFTER SERIAL NUMBER 31414.

https://truckmanualshub.com/



# Hydraulic Schematic, 4WD Models
(after serial number 27000)

https://truckmanualshub.com/

# California Proposition 65

# WARNING

The exhaust from this product contains chemicals known to the State of California to cause cancer, birth defects or other reproductive harm.

Distributed By:


Genie North America
Phone 425.881.1800
Toll Free USA and Canada 800.536.1800
Fax 425.883.3475

Genie Australia Pty Ltd.
Phone +61 7 3375 1660
Fax +61 7 3375 1002

Genie China
Phone +86 21 53852570
Fax +86 21 53852569

Genie Malaysia
Phone +65 98 480 775
Fax +65 67 533 544

Genie Japan
Phone +81 3 3453 6082
Fax +81 3 3453 6083

Genie Korea
Phone +82 25 587 267
Fax +82 25 583 910

Genie Brasil
Phone +55 11 41 665 755
Fax +55 11 41 665 754

Genie Holland
Phone +31 183 581 102
Fax +31 183 581 566

Genie Scandinavia
Phone +46 31 575100
Fax +46 31 579020

Genie France
Phone +33 (0)2 37 26 09 99
Fax +33 (0)2 37 26 09 98

Genie Iberica
Phone +34 93 579 5042
Fax +34 93 579 5059

Genie Germany
Phone 0800 180 9017
Phone +49 422 149 1818
Fax +49 422 149 1820

Genie U.K.
Phone +44 (0)1476 584333
Fax +44 (0)1476 584334

Genie Mexico City
Phone +52 55 5666 5242
Fax +52 55 5666 3241