https://truckmanualshub.com/

SNAPPER™

Parts Manual

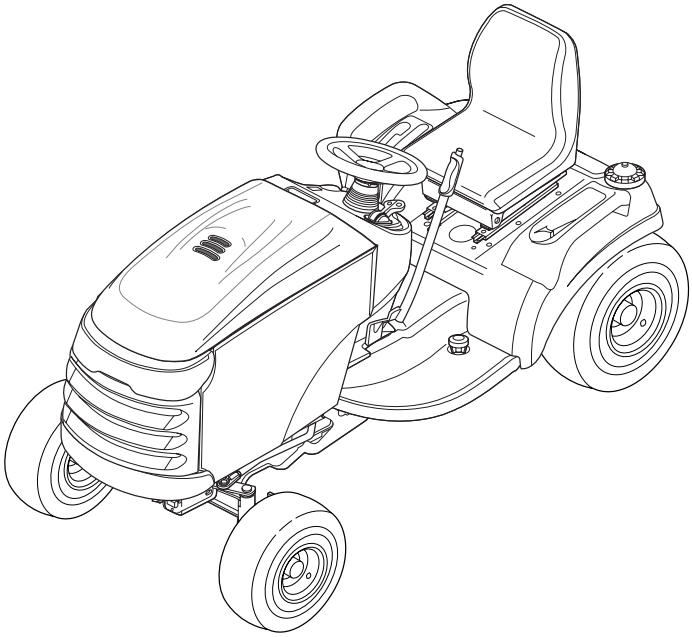

YT Series

Lawn Tractors & Mower Decks

16HP Tractors

Mfg. No.	Description
1694368	YT1644, 16HP Hydro

18HP Tractors

Mfg. No.	Description
1694369	YT1850, 18HP Hydro

Mower Decks

Mfg. No.	Description
1694371	44" Mower Deck
1694372	50" Mower Deck

Rev. 02/2003
TP 400-3821-00-CQ-N

Downloaded from www.Manualslib.com manuals search engine

https://truckmanualshub.com/

Downloaded from www.Manualslib.com manuals search engine

https://truckmanualshub.com/

TRACTOR / MOWER DECK COMPONENTS **PAGES**

Frame Group 2
Steering Group - Manual Steering 6
Engine & Electric Clutch Group - 16HP Briggs & Stratton, Vanguard 8
Transmission Group 10
Transmission SERVICE PARTS - Tuff Torq K-66L 14
Lift Group - Manual Lift 20
Controls Group 22
Cruise Control Group 26
Electrical Group 28
Hood, Grill & Dash Group 32
Seat & Seat Deck Group 34
Wheels & Tires Group 36
Decals Group - Brand & Model 38
Decals Group - Safety & Common 40
44" & 50" Mower Deck - Clutch & Support 42
44" & 50" Mower Decks - Housing, Arbors & Blades 44
44" Mower Deck - Height Adjustment & Roller Bar 48
50" Mower Deck - Height Adjustment & Roller Bar 52
Torque Specification Chart ..... Inside Back Cover

Downloaded from www.Manualslib.com manuals search engine

https://truckmanualshub.com/

Frame Group

NOTE: Unless noted otherwise, use the standard hardware torque specification chart.

985881

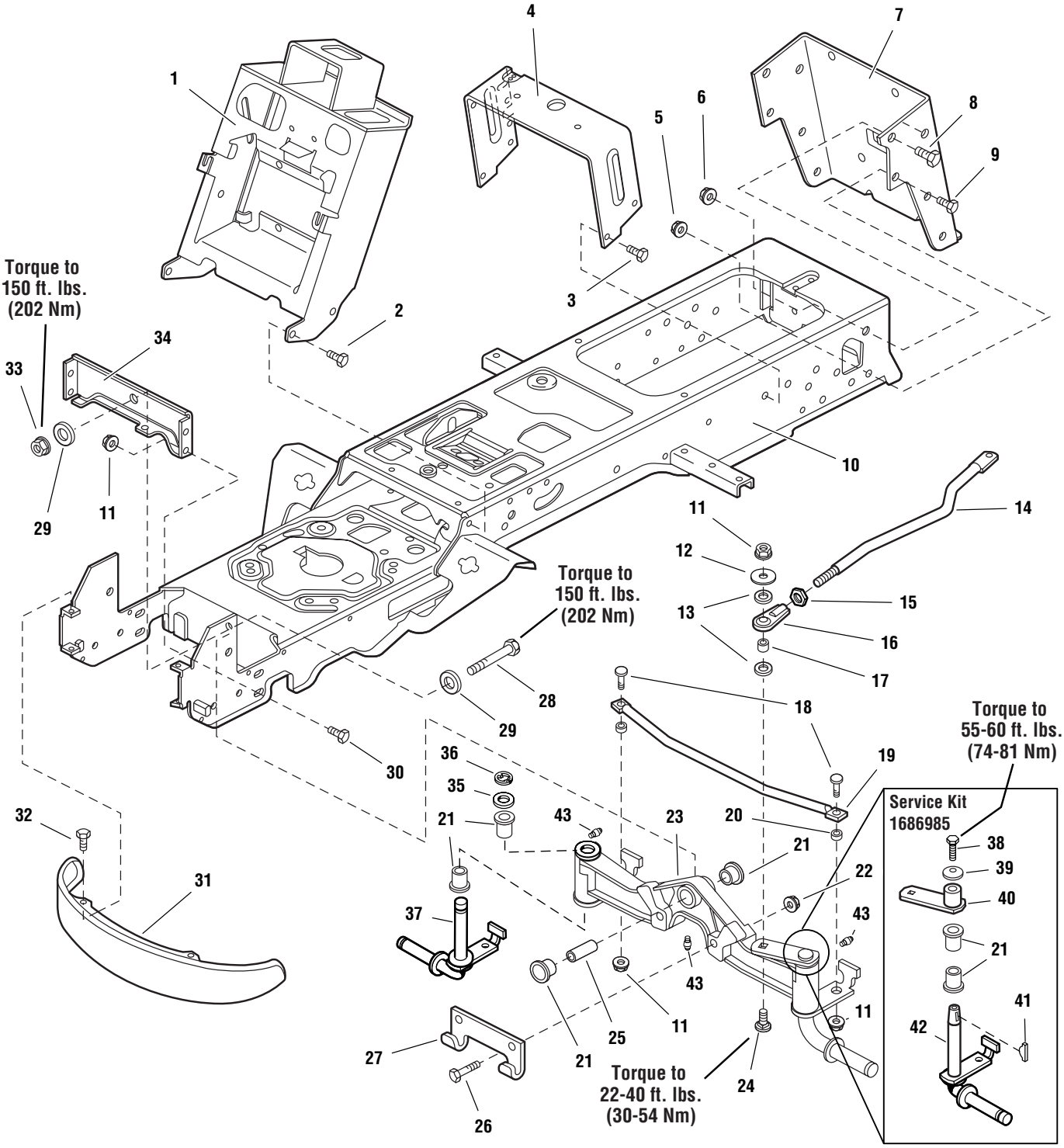

The above parts group applies to the following Mfg. Nos.:

1694368 - YT1644
1694369 - YT1850

© Copyright 2003 Simplicity Manufacturing, Inc. All Rights Reserved.

Downloaded from www.Manualslib.com manuals search engine

https://truckmanualshub.com/

Frame Group

REF NO.	PART NO.	QTY.	DESCRIPTION
1	1721748	1	TOWER & SUPPORT ASSEMBLY
2	1923683	4	CAPSCREW, Hex Washer Head Taptite, 3/8-16 x 3/4
3	1960541	4	CAPSCREW, Hex Washer Head Taptite, 5/16-18 x 3/4
4	1723528	1	SUPPORT, Seat Deck
5	1928352	2	NUT, Hex Flange 3/8-16 Whiz Lock, Large
6	1930644	2	NUT, Hex Flange Two-Way Lock, 1/2-13
7	1722602	1	BACKPLATE,
8	1923114	2	CAPSCREW, Hex Head 1/2-13 x 1, Black
9	1921210	2	CAPSCREW, Hex Head 3/8-16 x 1, Black
10	1721572	1	FRAME ASSEMBLY, Front & Rear
11	1930645	7	NUT, Hex Flange Two-Way Lock, 3/8-16
12	1922755	1	WASHER, 3/8, Black
13	1960103	2	WASHER, 3/8, Black
14	1722541	1	LINK, Drag
15	1919262	1	NUT, Hex Jam 1/2-20
16	1702779	1	JOINT, Ball
17	1708236	1	SPACER, 3/8 x 1/2 x 5/8
18	1931350	2	CARRIAGE BOLT, 3/8-16 x 1
19	1722626	1	ROD, Tie
20	1611705	2	SPACER, 25/64 x 5/8 x 5/16, Powder Metal
21	1721682	6	BUSHING, 31/32 x 1-1/4 x 3/4, Powder Metal
22	1930650	2	NUT, Hex Flange Two-Way Lock, 7/16-14
23	1722200	1	AXLE ASSEMBLY w/LH Spindle, (Includes Ref. Nos, 21, 35, 36, 37 & 43)
24	1931352	1	CARRIAGE BOLT, 3/8-16 x 1-1/2
25	1721752	1	SPACER, 11/16 x 21/32 x 2 3/32
26	1927531	2	CAPSCREW, Hex Head, 7/16-14 x 2 G8
27	1721918	1	HOOK, "J"
28	960645	1	CAPSCREW, Hex Head, 5/8-11 x 3-1/2
29	1960035	2	WASHER, 5/8
30	1933260	4	CAPSCREW, Hex Flange Whiz Lock, 3/8-16 x 3/4
31	1721805	1	BUMPER, Black
31	1723502	1	BUMPER, Chrome
32	1960086	4	SCREW, Truss Head Torque Drive, 5/16-18 x 7/8
33	960646	1	NUT, Hex Flange Two-Way Lock, 5/8-11
34	1722212	1	PLATE
35	1919394	1	WASHER, 1
36	932577	1	RETIANING RING
37	1722199	1	SPINDLE, RH
38	923485	1	CAPSCREW, 3/8-16 x 7/8, GR8
39	1663151	1	LOCKWASHER, 3/8

Footnotes

The above parts group applies to the following Mfg. Nos.:
1694368 - YT1644
1694369 - YT1850

© Copyright 2003 Simplicity Manufacturing, Inc. All Rights Reserved.

Downloaded from www.Manualslib.com manuals search engine

https://truckmanualshub.com/

Frame Group

NOTE: Unless noted otherwise, use the standard hardware torque specification chart.

985881

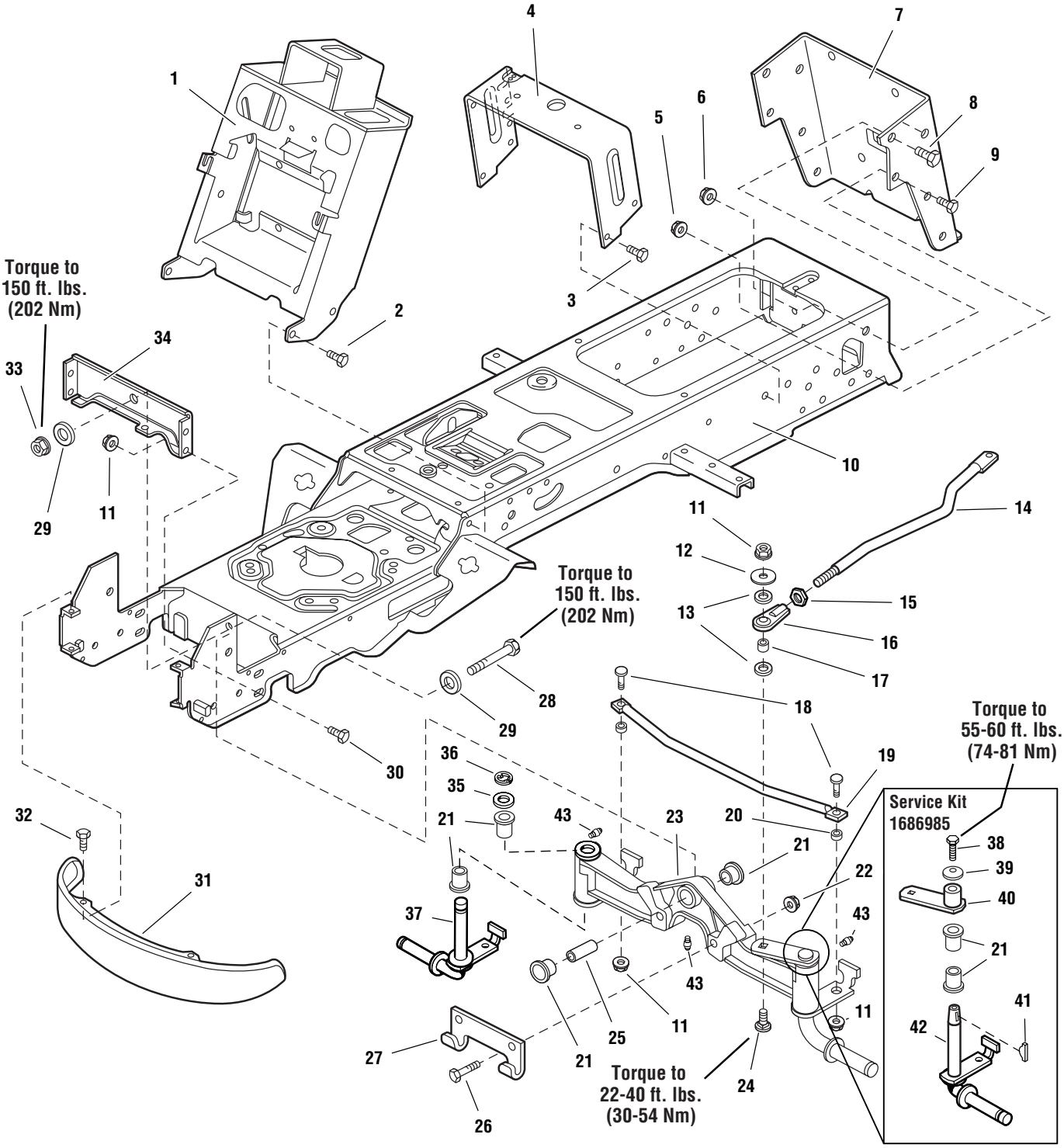

The above parts group applies to the following Mfg. Nos.:

1694368 - YT1644
1694369 - YT1850

© Copyright 2003 Simplicity Manufacturing, Inc. All Rights Reserved.

Downloaded from www.Manualslib.com manuals search engine

https://truckmanualshub.com/

Frame Group

REF NO.	PART NO.	QTY.	DESCRIPTION
40	1725112	1	HUB & ARM ASSEMBLY
41	930671	1	KEY, WOodruff
42	1724264	1	SPINDLE, LH
43	1704314	3	FITTING, Lube

Footnotes

The above parts group applies to the following Mfg. Nos.:
1694368 - YT1644
1694369 - YT1850

© Copyright 2003 Simplicity Manufacturing, Inc. All Rights Reserved.

Downloaded from www.Manualslib.com manuals search engine

https://truckmanualshub.com/

Steering Group - Manual Steering

NOTE: Unless noted otherwise, use the standard hardware torque specification chart.

986283

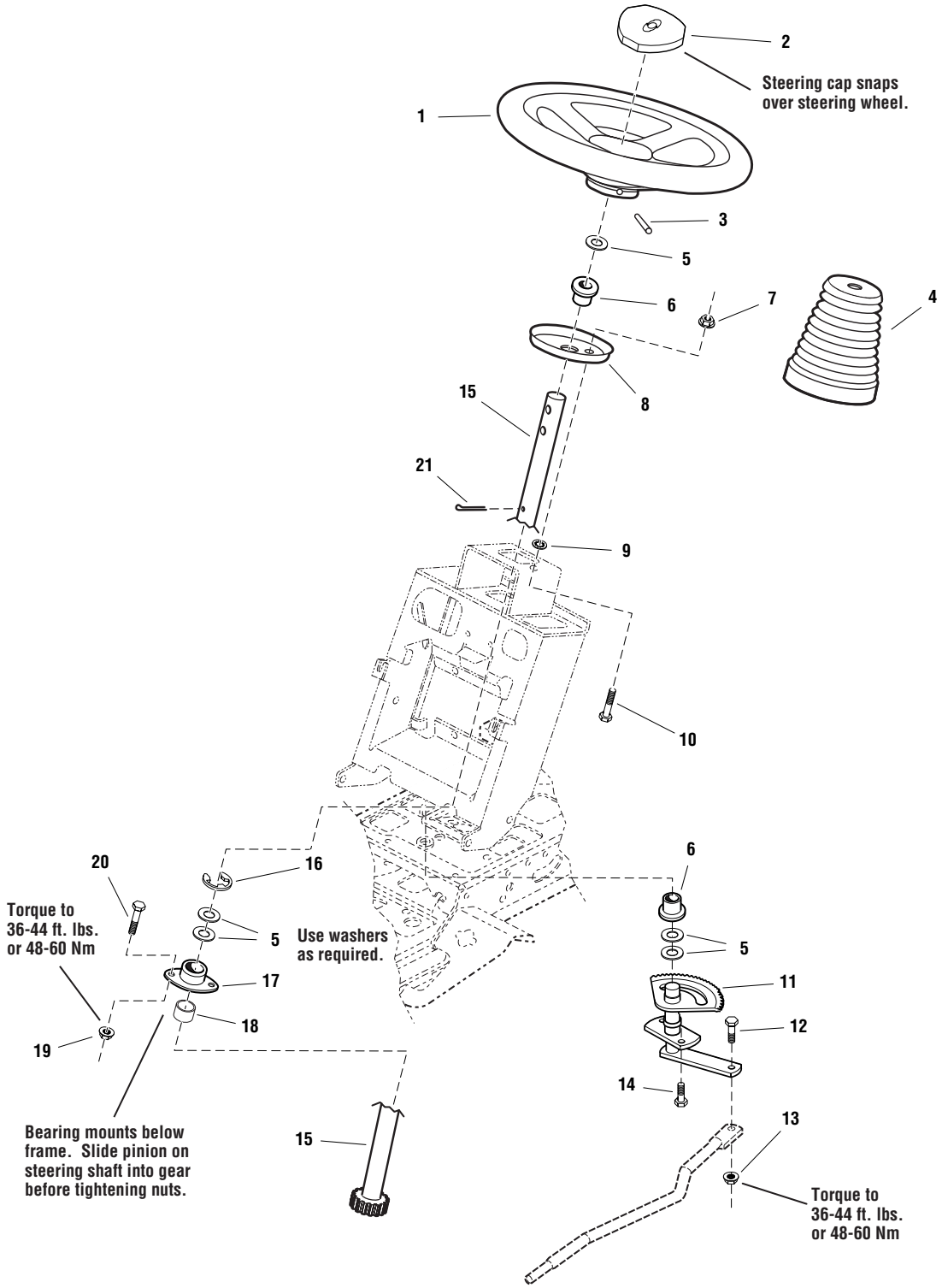

The above parts group applies to the following Mfg. Nos.:

1694368 - YT1644
1694369 - YT1850

© Copyright 2003 Simplicity Manufacturing, Inc. All Rights Reserved.

Downloaded from www.Manualslib.com manuals search engine

https://truckmanualshub.com/

Steering Group - Manual Steering

REF NO.	PART NO.	QTY.	DESCRIPTION
1	1722318	1	STEERING WHEEL, Straight, Shaft
2	1725024	1	CAP, Steering Wheel, Plain
3	1960540	1	PIN, Spring, 5/16 x 2-1/2
4	1722749	1	COVER, Rubber, Upper Steering Shaft
5	1960114	5	WASHER, 3/4
6	176440	2	BUSHING, 15/32 x 7/8 x 7/8, Nylon
7	928372	2	NUT, Hex KEPS 1/4-20
8	1721736	1	PLATE, Mounting Steering
9	1960518	2	NUT, Push
10	1931317	2	CARRIAGE BOLT, 1/4-20 x 3/4
11	1722385	1	GEAR & SHAFT ASSEMBLY, Steering
12	1960032	1	CAPSCREW, Hex Head, 3/8-16 x 1-1/4, Black
13	1930645	1	NUT, Hex Flange Two-Way Lock, 3/8-16
14	1664847	2	CAPSCREW, Hex Washer Head Taptite, 5/16-18 x 3/4
15	1721626	1	SHAFT & PINION ASSEMBLY, Steering Manual
16	1611710	1	RING, Clipring Extension
17	1722459	1	BEARING, 3/4 x 1-11/16 x 13/16, 3" Long Housing
18	1722461	1	SPACER, 3/4 x 1-1/16 x 3/8, Powder Metal
19	1931211	2	NUT, Hex Flange Whiz Lock, 3/8-16, Small
20	1933260	2	CAPSCREW, Hex Whiz Lock Flange, 3/8-16 x 3/4, Black
21	1919314	1	PIN, Cotter, 1-1/4, Black

Footnotes

The above parts group applies to the following Mfg. Nos.:
1694368 - YT1644
1694369 - YT1850

© Copyright 2003 Simplicity Manufacturing, Inc. All Rights Reserved.

Downloaded from www.Manualslib.com manuals search engine

https://truckmanualshub.com/

Engine & Electric Clutch Group - 16HP Briggs & Stratton, Vanguard

NOTE: Unless noted otherwise, use the standard hardware torque specification chart.

985902

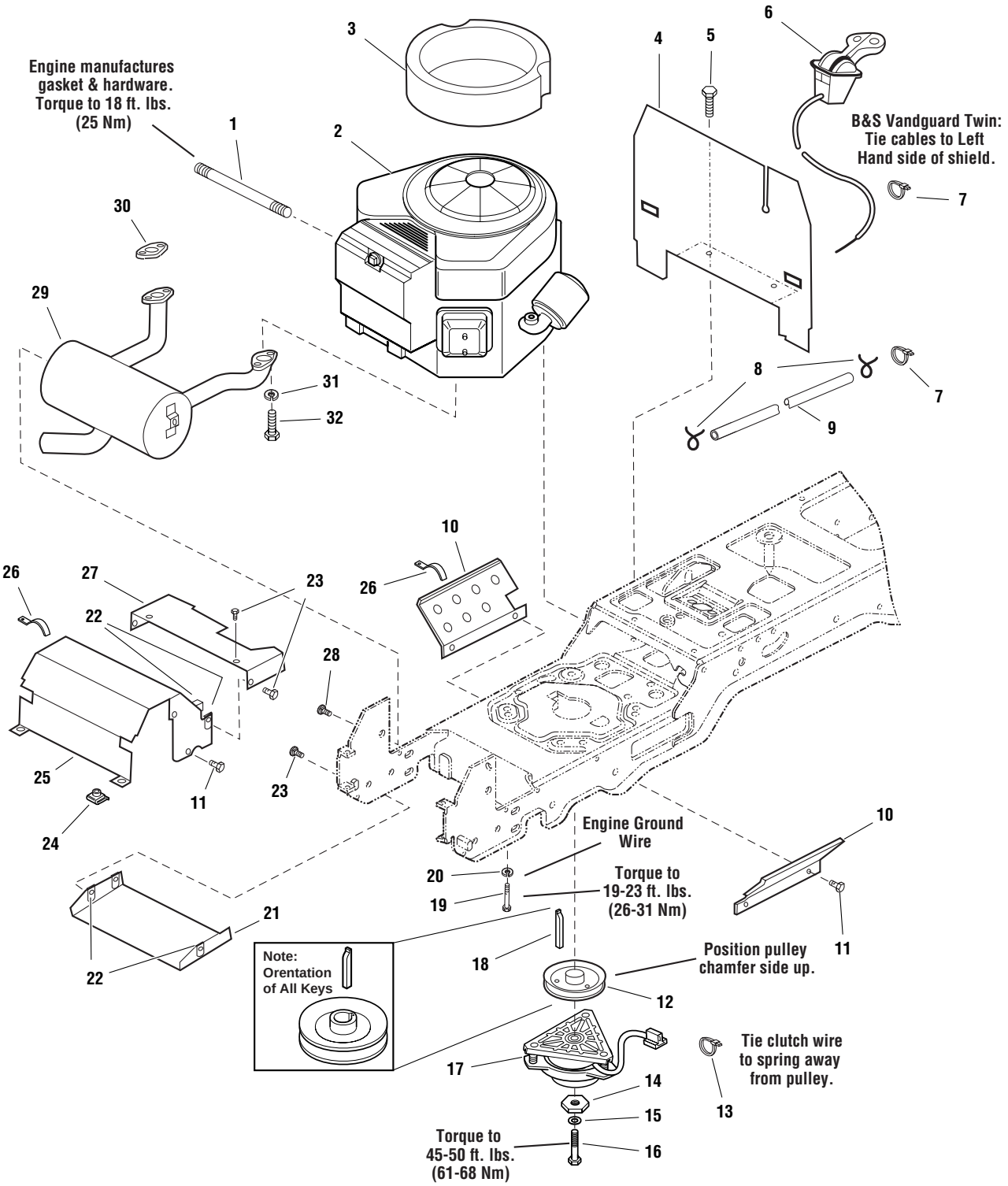

The above parts group applies to the following Mfg. Nos.:

1694368 - YT1644
1694369 - YT1850

© Copyright 2003 Simplicity Manufacturing, Inc. All Rights Reserved.

Downloaded from www.Manualslib.com manuals search engine

https://truckmanualshub.com/

Engine & Electric Clutch Group - 16HP Briggs & Stratton, Vanguard

REF NO.	PART NO.	QTY.	DESCRIPTION
1	1723165	1	HOSE, Oil Drain, 10-1/2" Long, 3/8-18 Fittings
2	*	1	ENGINE, 16HP Briggs & Stratton Vanguard Twin, Model 303777, Type 1114
3	1719847	1	SEAL, Circle
4	1722388	1	BULKHEAD
5	1925003	2	CAPSCREW, Hex Washer Head Taptite, 1/2-20 x 1/2, Black
6	1721950	1	CONTROL, Throttle Double 39" Long w/Knobs
7	1701011	2	TIE, Wire, 7-5/16" Long
8	960112	2	CLAMP, Hose Type E
9	1718678	1	HOSE, Fuel, 59" Long
10	1722392	2	SHIELD, Side
11	1929000	8	CAPSCREW, Hex Washer Head Taptite, 1/4-20 x 3/8
12	1722288	1	PULLEY & HUB ASSEMBLY
13	932747	1	TIE, Self Locking, 3-5/8 Long
14	1708264	1	WASHER, Hex, 7/16, Black
15	1918199	1	LOCKWASHER, 7/16
16	1960648	1	CAPSCREW, Hex Head, 7/16-20 x 3-3/4
17	1717664	1	CLUTCH, Electric
18	1720463	1	KEY, HI PRO, 1/4 x 2 1/2
19	930598	4	CAPSCREW, Hex Washer Head Taptite, 3/8-16 x 1-1/2
20	920427	1	LOCKWASHER, External Tooth, 3/8
21	1722414	1	SHIELD, Muffler Bottom
22	1960368	8	NUT, Speed, 1/4-20, Lug
23	1960295	4	CAPSCREW, Hex Flange Whiz Lock, 1/4-20 x 5/8
24	1935255	2	NUT, Speed, 5/16-18, Lug, Black
25	1722389	1	DUCT, Muffler Top
26	934683	2	CLIP, Wire 1/8
27	1722390	1	DUCT, Muffler Extension
28	1924856	2	CAPSCREW, Hex Washer Head Taptite, 5/16-18 x 1/2, Black
29	1722625	1	MUFFLER, Briggs & Stratton, Vanguard Twin
30	*	1	GASKET, Briggs & Stratton, Vanguard Twin
31	1917356	4	LOCKWASHER, 5/16
32	960660	4	CAPSCREW, Hex Flange Whiz Lock, 5/16-18 x 7/8

Footnotes

* See your local Briggs & Stratton distributor for parts and service.

The above parts group applies to the following Mfg. Nos.:

1694368 - YT1644
1694369 - YT1850

© Copyright 2003 Simplicity Manufacturing, Inc. All Rights Reserved.

Downloaded from www.Manualslib.com manuals search engine

https://truckmanualshub.com/

Transmission Group

NOTE: Unless noted otherwise, use the standard hardware torque specification chart.

985888

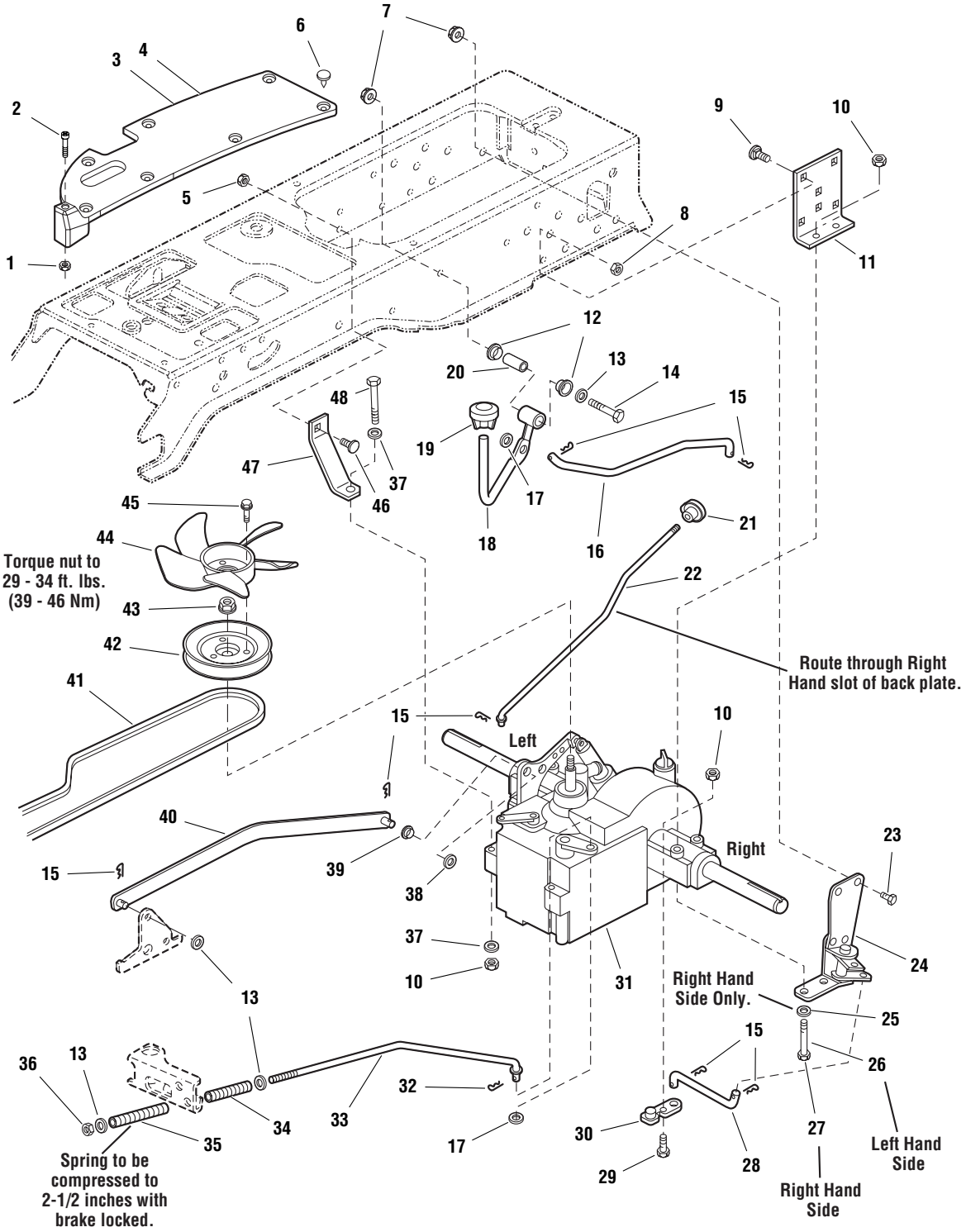

The above parts group applies to the following Mfg. Nos.:

1694368 - YT1644
1694369 - YT1850

© Copyright 2003 Simplicity Manufacturing, Inc. All Rights Reserved.

Downloaded from www.Manualslib.com manuals search engine

https://truckmanualshub.com/

Transmission Group

REF NO.	PART NO.	QTY.	DESCRIPTION
1	1920397	2	NUT, Hex Lock ESNA Light, 1/4-20
2	1960654	2	SCREW, Truss Head, 1/4-20 x 2
3	1722174	1	PAD, Footrest, LH, Differential Lock
4	1722173	1	PAD, Footrest, RH
5	1960636	1	NUT, Hex KEPS, 5/16-18
6	1704351	15	FASTENER, 11/16" Long, Stem Plastic
7	1928352	2	NUT, Hex Flange Whiz Lock, 3/8-16, Large
8	1960637	6	NUT, Hex KEPS, 3/8-16
9	1931350	6	CARRIAGE BOLT, 3/8-16 x 1
10	1919438	6	NUT, Hex Lock ESNA Light, 5/16-18
11	1721728	2	SUPPORT
12	1676148	2	BUSHING, 5/8 x 3/4 x 13/32, Powder Metal
13	1924940	4	WASHER, 3/8
14	1922130	1	CAPSCREW, Hex Head, 3/8-16 x 2-1/4
15	1722460	7	PIN, Quick
16	1722151	1	ROD, Differential Lock, 15-3/16 Long
17	1925125	2	WASHER, 7/16
18	1721360	1	ROD & TUBE ASSEMBLY, Differential Lock Pedal
19	1716289	1	KNOB
20	1669105	1	SPACER, 25/64 x 5/8 x 1-1/2, Hardened
21	1723126	1	KNOB, 3 Sided Soft
22	1721622	1	ROD, Free Wheel, 18-3/16 Long
23	1921210	1	CAPSCREW, Hex Head, 3/8-16 x 1, Black
24	1722903	1	PIVOT ASSEMBLY, Differential Lock
25	1919326	2	WASHER, 5/16, Black
26	1923141	2	CAPSCREW, Hex Head, 5/16-18 x 2 3/4, Black
27	1960590	2	CAPSCREW, Hex Head, 5/16-18 x 3, Black
28	1722152	1	ROD, Differential Latch, 2 Bends, 6-3/16 Long
29	1921333	1	CAPSCREW, Hex Head, 5/16-18 x 1
30	1722383	1	ARM, Differential Lock
31	1721952	1	TRANSMISSION ASSEMBLY, K66 Transmission
32	1918447	1	PIN, Cotter, 3/4, Black
33	1721424	1	ROD, Brake, 17-27/64 Long
34	1722684	1	SPRING, Compression
35	8191045	1	SPRING, Compression
36	1919439	1	NUT, Hex Lock, ESNA Light 3/8-16
37	1960141	2	WASHER, 5/16
38	1960027	1	WASHER, 1/2
39	1722648	1	BEARING, 1/2 x 9/16 x 3/4, Nylon
40	1721988	1	ARM & WELD PINS ASSEMBLY, Control K66

Footnotes

The above parts group applies to the following Mfg. Nos.:
1694368 - YT1644
1694369 - YT1850

© Copyright 2003 Simplicity Manufacturing, Inc. All Rights Reserved.

Downloaded from www.Manualslib.com manuals search engine

https://truckmanualshub.com/

Transmission Group

NOTE: Unless noted otherwise, use the standard hardware torque specification chart.

985888

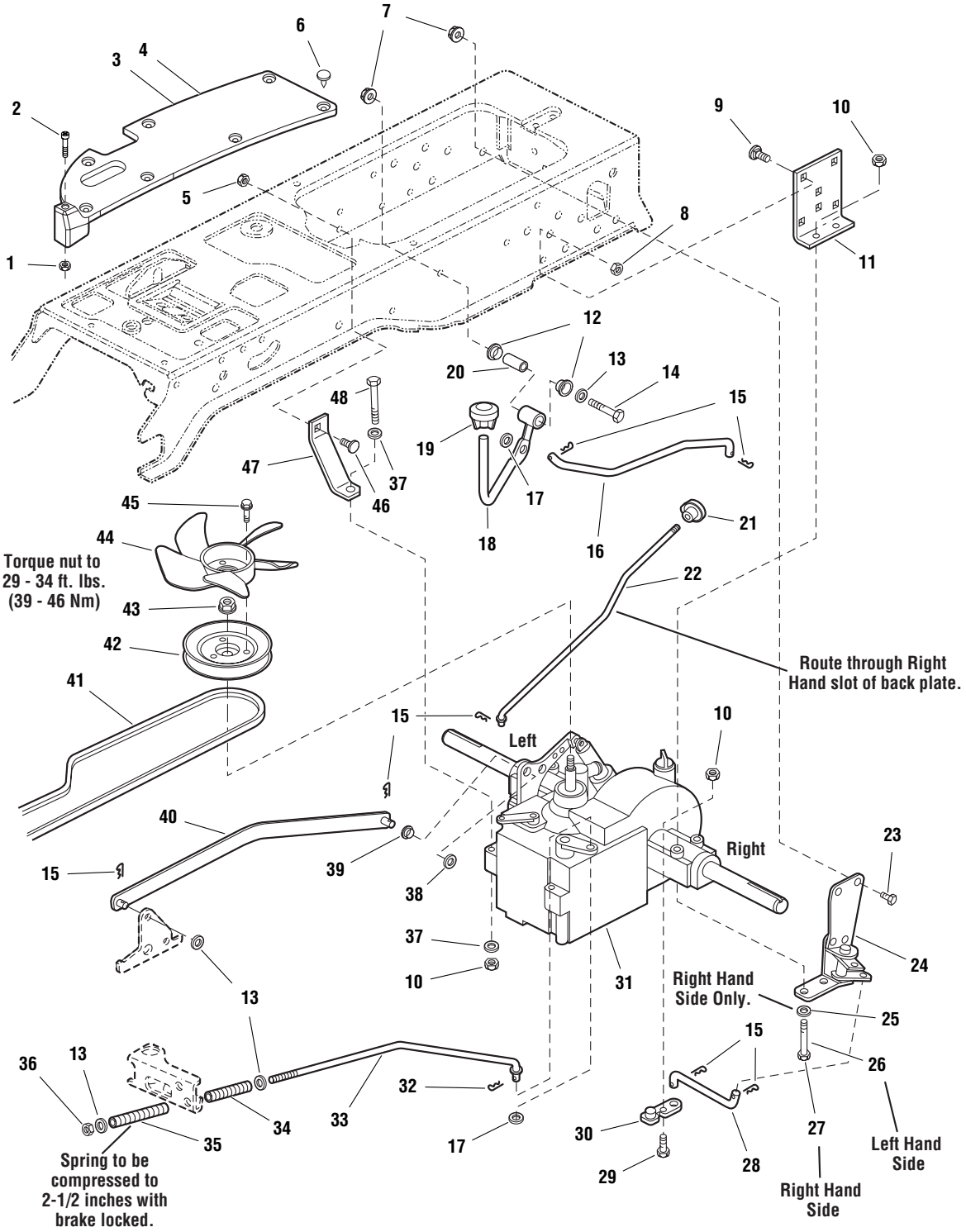

The above parts group applies to the following Mfg. Nos.:

1694368 - YT1644
1694369 - YT1850

© Copyright 2003 Simplicity Manufacturing, Inc. All Rights Reserved.

Downloaded from www.Manualslib.com manuals search engine

https://truckmanualshub.com/

Transmission Group

REF NO.	PART NO.	QTY.	DESCRIPTION
41	1721392	1	V-BELT
42	1722194	1	PULLEY & HUB ASSEMBLY, Transmission
43	1719968	1	NUT, Hex Flange, M10-1.5, Nylon Insert
44	1719233	1	FAN, 5 Blades, 3 Holes
45	1933958	3	CAPSCREW, Hex Washer Head Taptite, 1/4-20 x 1-1/8
46	1931335	1	CARRIAGE BOLT, 5/16-18 x 1
47	1721593	1	STRAP, 4-1/4 Long
48	1921719	1	CAPSCREW, Hex Head, 5/16-18 x 2-1/2

Footnotes

The above parts group applies to the following Mfg. Nos.:
1694368 - YT1644
1694369 - YT1850

© Copyright 2003 Simplicity Manufacturing, Inc. All Rights Reserved.

Downloaded from www.Manualslib.com manuals search engine

https://truckmanualshub.com/

Transmission SERVICE PARTS - Tuff Torq K-66L

NOTE: Unless noted otherwise, use the standard hardware torque specification chart.

1721952

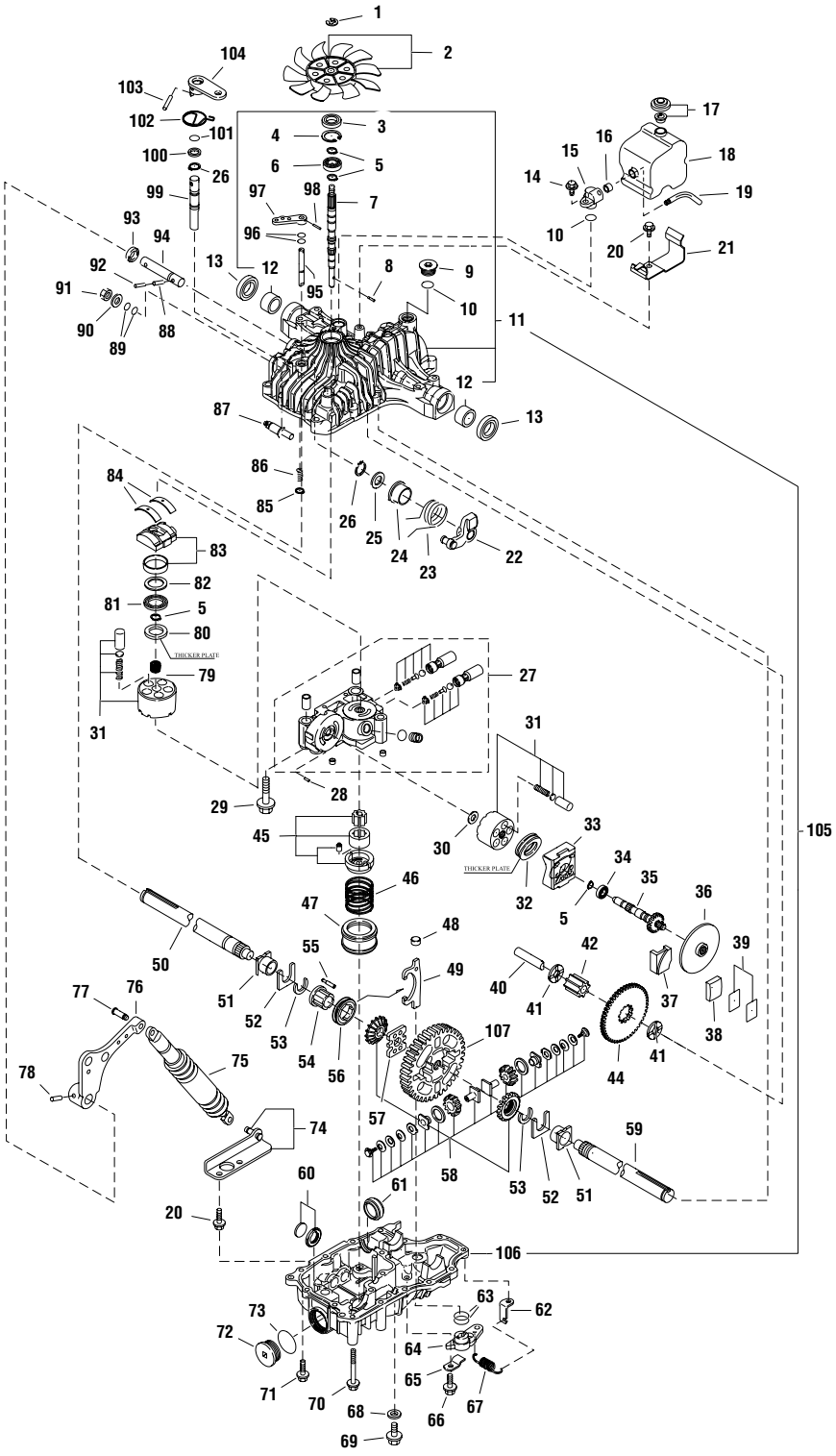

The above parts group applies to the following Mfg. Nos.:

1694368 - YT1644
1694369 - YT1850

© Copyright 2003 Simplicity Manufacturing, Inc. All Rights Reserved.

Downloaded from www.Manualslib.com manuals search engine

https://truckmanualshub.com/

Transmission SERVICE PARTS - Tuff Torq K-66L

REF NO.	PART NO.	QTY.	DESCRIPTION
1	1718076	1	RING E15
2	1724314	1	FAN
3	1708651	1	SEAL
4	1708650	1	RING 35
5	1708672	4	RING 15
6	1718083	1	BEARING 6202UC3
7	1724699	1	SHAFT, PUMP
8	1722223	1	PIN 3 x 13.8
9	1724696	1	CAP, M20B
10	1720789	2	O-RING, P18
11	1724692	1	HOUSING, UPPER
12	1724693	2	BUSHING, 25.4
13	1718264	2	SEAL S25.4 x 42 x 8
14	1724695	1	BOLT, 8 x 20
15	1724746	1	FITTING
16	1724745	1	SEAL, 8
17	1724740	1	VALVE, VENT 15
18	1724742	1	TANK, RESERVOIR
19	1724743	1	PIPE, 8
20	1707890	3	SCREW, TAPPING
21	1724744	1	BRACKET, TANK
22	1724708	1	ARM, CONTROL
23	1724709	1	SPRING, TORSION
24	1721181	1	COLLAR, CONTROL
25	1721966	1	WASHER 17 x 30 x 1
26	1707912	2	RING
27	1724697	1	CASE, CENTER
28	1718070	1	PIN 3 x 9.8
29	1724698	3	BOLT, 10 x 65
30	1718084	1	WASHER 12 x 24 x 1
31	1718079	2	CYLINDER BLOCK
32	1708675	1	BEARING, THRUST
33	1724700	1	HOUSING
34	1724702	1	BEARING, 6302UC3
35	1724701	1	SHAFT, MOTOR
36	1724723	1	DISC, BRAKE
37	1724726	1	ACTUATOR, BRAKE
38	1724724	1	SHOE, BRAKE
39	1724725	1	SHIM SET
40	1724714	1	SHAFT, FINAL PINION

Footnotes

The above parts group applies to the following Mfg. Nos.:
1694368 - YT1644
1694369 - YT1850

© Copyright 2003 Simplicity Manufacturing, Inc. All Rights Reserved.

Downloaded from www.Manualslib.com manuals search engine

https://truckmanualshub.com/

Transmission SERVICE PARTS - Tuff Torq K-66L

NOTE: Unless noted otherwise, use the standard hardware torque specification chart.

1721952

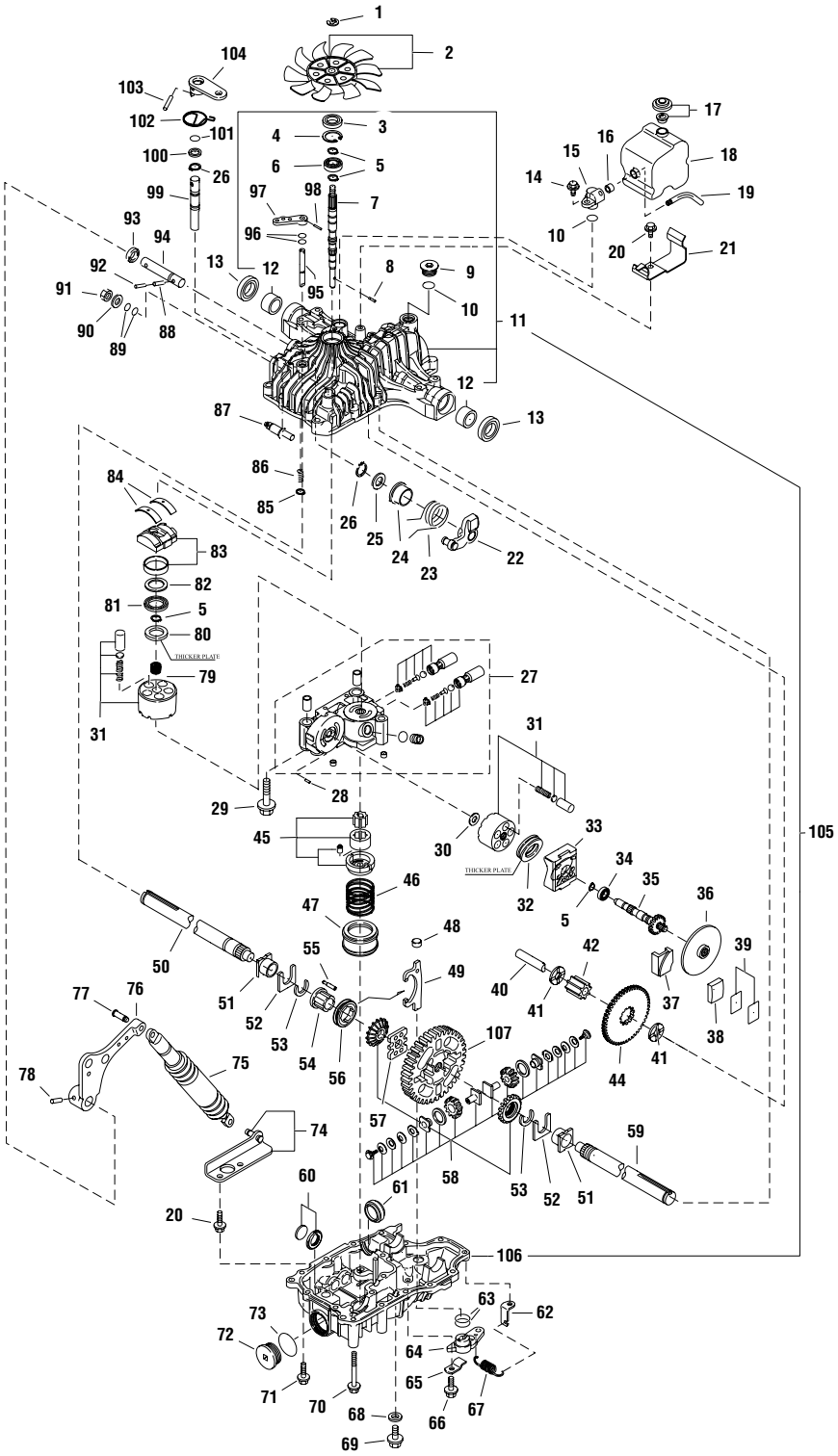

The above parts group applies to the following Mfg. Nos.:

1694368 - YT1644
1694369 - YT1850

© Copyright 2003 Simplicity Manufacturing, Inc. All Rights Reserved.

Downloaded from www.Manualslib.com manuals search engine

https://truckmanualshub.com/

Transmission SERVICE PARTS - Tuff Torq K-66L

REF NO.	PART NO.	QTY.	DESCRIPTION
41	1724715	2	WASHER, 15 x 32 x 3.2
42	1724717	1	PINION, FINAL
44	1724716	1	GEAR, REDUCTION
45	1720761	1	FILTER (25)
46	1724729	1	PUMP, CHARGE
47	1724730	1	SPRING, CHARGE PUMP
48	1724733	1	FORK, PIVOT
49	1724731	1	FORK, DIFF LOCK
50	1724719	1	SHAFT, AXLE RH #1
51	1720860	2	BUSHING
52	1720858	2	THRUST WASHER
53	1720859	2	RING
54	1724720	1	COLLAR, 25.4
55	1724737	8	PIN, DIFF LOCK
56	1724736	1	SLIDER, DIFF LOCK
57	1724738	1	PLATE, DIFF LOCK
58	1718262	1	DIFFERENTIAL GEAR KIT
59	1724718	1	SHAFT, AXLE LH #1
60	1718065	1	MAGNET
61	1720761	1	FILTER (25)
62	1724734	1	HOOK, SPRING
63	1724739	2	PACKING, 1AG25
64	1724732	1	ARM, DIFF LOCK
65	1724735	1	PLATE, ARM
66	1720788	2	BOLT 10 x 12
67	1724741	1	SPRING, RETURN
68	1720796	2	WASHER, SEAL
69	1720788	1	BOLT 10 x 12
70	1718226	5	BOLT, 8 x 75
71	1707789	5	SCREW, TAPPING
72	1720807	1	CAP (M40)
73	1720808	1	PACKING 1A 2040
74	1724704	1	STAY
75	1718039	1	SHOCK ABSORBER
76	1724706	1	LEVER, CONTROL
77	1724705	1	PIN
78	1724707	1	PIN, 3.5 x 25
79	1718234	1	PUMP SHAFT
80	1721267	1	THRUST PLATE A
81	1718237	1	BEARING K81106

Footnotes

The above parts group applies to the following Mfg. Nos.:
1694368 - YT1644
1694369 - YT1850

© Copyright 2003 Simplicity Manufacturing, Inc. All Rights Reserved.

Downloaded from www.Manualslib.com manuals search engine

https://truckmanualshub.com/

Transmission SERVICE PARTS - Tuff Torq K-66L

NOTE: Unless noted otherwise, use the standard hardware torque specification chart.

1721952

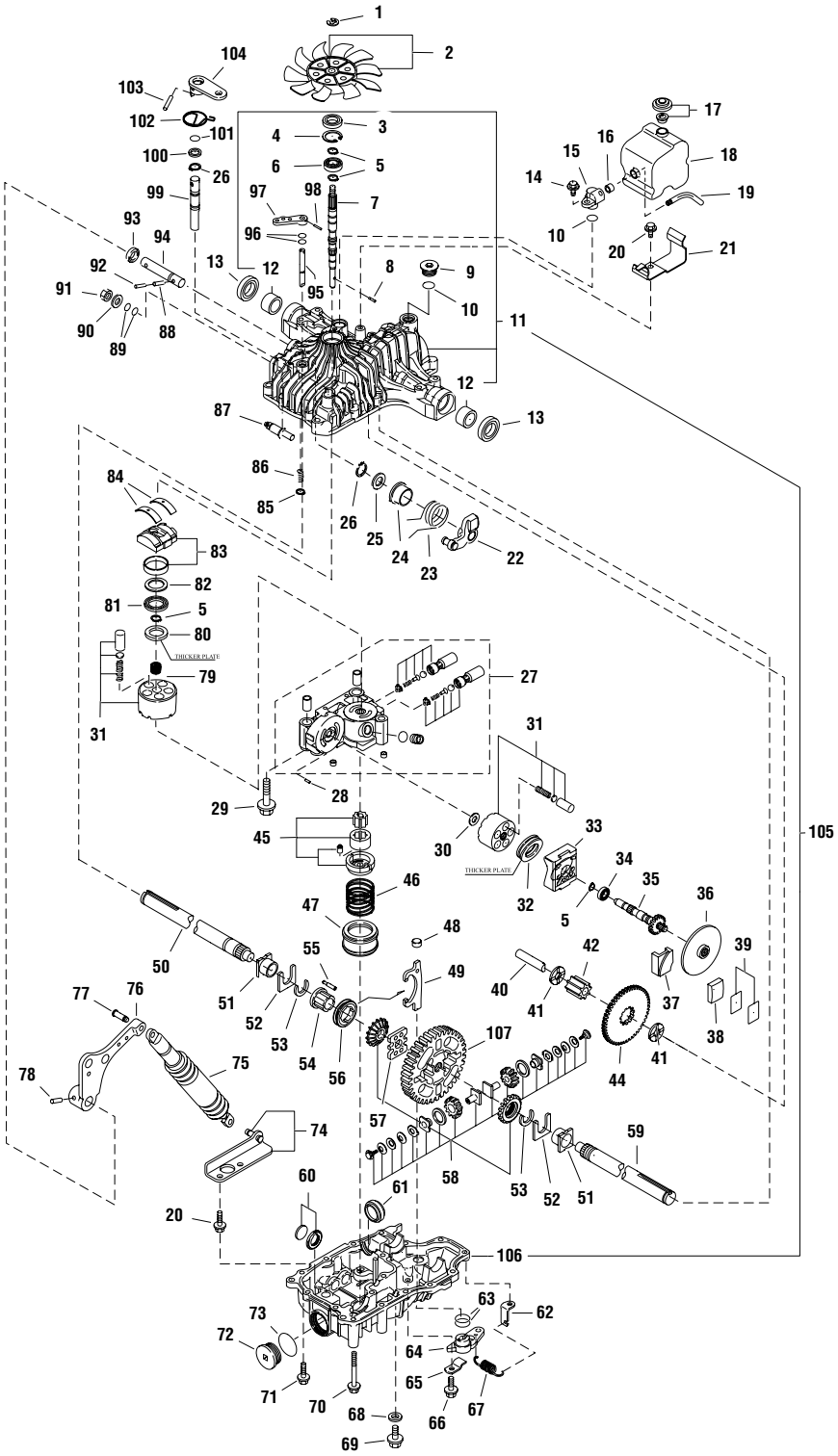

The above parts group applies to the following Mfg. Nos.:

1694368 - YT1644
1694369 - YT1850

© Copyright 2003 Simplicity Manufacturing, Inc. All Rights Reserved.

Downloaded from www.Manualslib.com manuals search engine

https://truckmanualshub.com/

Transmission SERVICE PARTS - Tuff Torq K-66L

REF NO.	PART NO.	QTY.	DESCRIPTION
82	1718239	1	THRUST PLATE B
83	1724703	1	PLATE, SWASH
84	1718089	2	THRUST METAL
85	1718061	1	RING
86	1708684	1	SPRING
87	1724711	1	FULCRUM, ECCENTRICIT
88	1718097	1	PIN 6.0A x 25
89	1707879	2	PACKING
90	1708689	1	WASHER
91	1708692	1	NUT 12
92	1724712	1	PIN, 4 x 28
93	1718120	1	SEAL TC162606
94	1724710	1	SHAFT, CONTROL
95	1720838	1	SHAFT (BYPASS)
96	1708691	2	PACKING
97	1720418	1	LEVER, BYPASS
98	1720421	1	PIN 3.0A x 20
99	1724727	1	SHAFT, BRAKE HL #10
100	1724728	1	WASHER, 16 x 23 x 1.6
101	1708690	1	PACKING
102	1724722	1	SPRING, BRAKE
103	1718100	2	PIN 6.0A x 4.0
104	1724721	1	ARM, BRAKE
105	1724691	1	HOUSING, COMPLETE SET
106	1724694	1	HOUSING, LOWER
107	1724713	1	GEAR, FINAL

Footnotes

The above parts group applies to the following Mfg. Nos.:
1694368 - YT1644
1694369 - YT1850

© Copyright 2003 Simplicity Manufacturing, Inc. All Rights Reserved.

Downloaded from www.Manualslib.com manuals search engine

https://truckmanualshub.com/

Lift Group - Manual Lift

NOTE: Unless noted otherwise, use the standard hardware torque specification chart.

985894

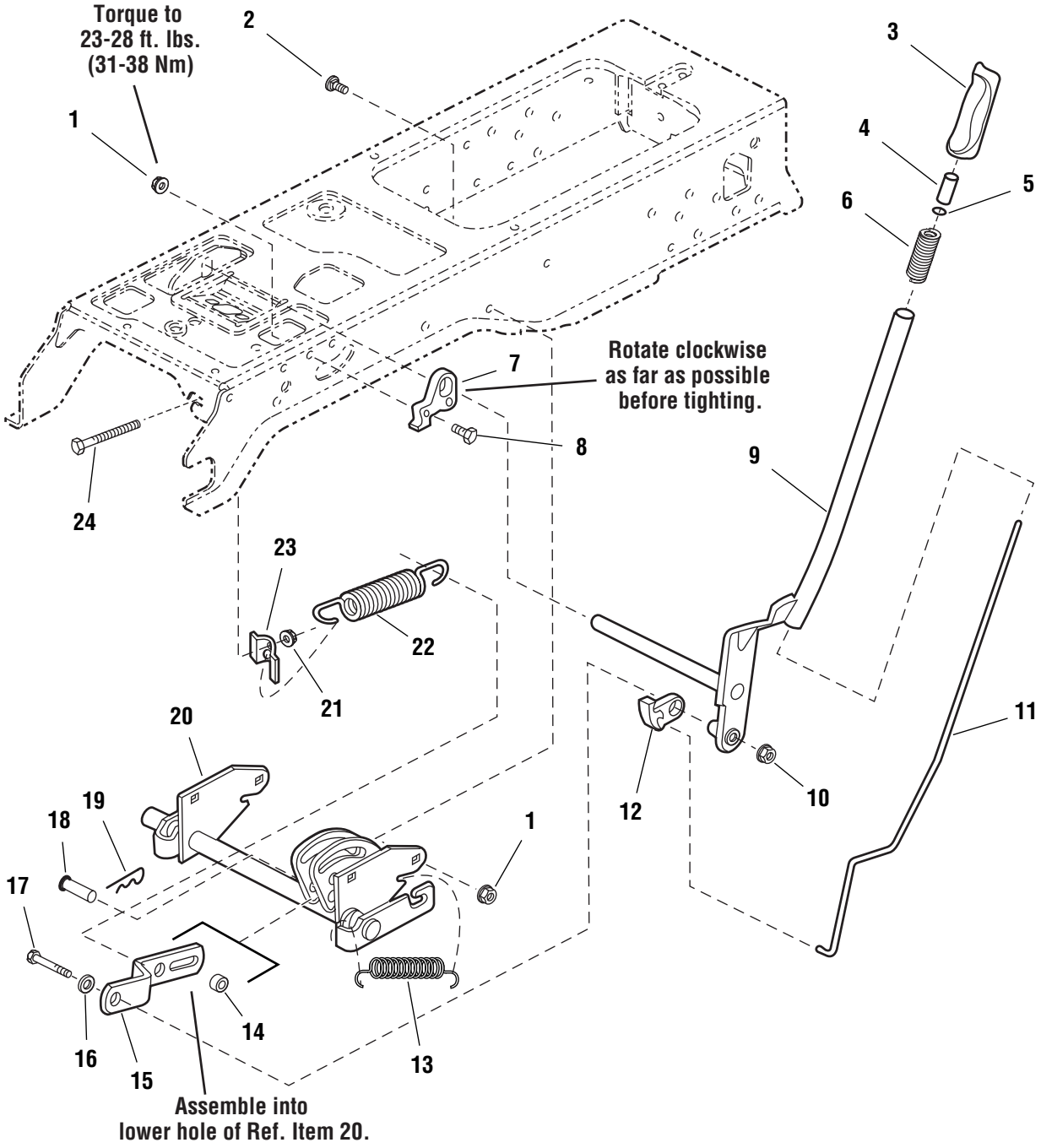

The above parts group applies to the following Mfg. Nos.:

1694368 - YT1644
1694369 - YT1850

© Copyright 2003 Simplicity Manufacturing, Inc. All Rights Reserved.

Downloaded from www.Manualslib.com manuals search engine

https://truckmanualshub.com/

Lift Group - Manual Lift

REF NO.	PART NO.	QTY.	DESCRIPTION
1	1927557	2	NUT, Hex Whiz Lock Flange, 5/16-18, Large, Black
2	1931333	4	CARRIAGE BOLT, 5/16-18 x 3/4
3	1722291	1	GRIP, Lift Lever
4	1723124	1	BUTTON, Red Nylon, for 1/4 Rod
5	1960518	1	NUT, Push
6	1723321	1	SPRING, Compression, Lift Lever
7	1721581	1	QUADRANT, Lift, Powdered Metal
8	1926149	2	CAPSCREW, Hex Head, 5/16-18 x 1, G8, Black
9	1721712	1	LEVER ASSEMBLY, Lift
10	1960636	5	NUT, Hex KEPS, 5/16-18
11	1722482	1	ROD, Latch
12	1722112	1	LOCK, Lift, Powdered Metal
13	156302	1	SPRING, Extension
14	1723163	1	SPACER, 1/2 x 3/4 x 23/32
15	1721652	1	BAR, Lift, 8-15/16 Long
16	1919381	1	WASHER, 5/16, Black
17	1921160	1	CAPSCREW, Hex Head, 5/16-18 x 2-1/4
18	1722819	1	PIN, Flat Head Drilled, 1/2 x 2-1/8 Long
19	1960033	1	CLIP, Hair Pin, 2-9/16 Long
20	1721654	1	SHAFT ASSEMBLY, Lift
21	1935255	1	NUT, Speed, 5/16-18, Lug
22	1675232	1	SPRING, Compression
23	1723499	1	RETAINER, Spring Flat
24	1722357	1	CAPSCREW, Hex Washer Head, 5/16-18 x 4-1/2

Footnotes

The above parts group applies to the following Mfg. Nos.:
1694368 - YT1644
1694369 - YT1850

© Copyright 2003 Simplicity Manufacturing, Inc. All Rights Reserved.

Downloaded from www.Manualslib.com manuals search engine

https://truckmanualshub.com/

Controls Group

NOTE: Unless noted otherwise, use the standard hardware torque specification chart.

985882

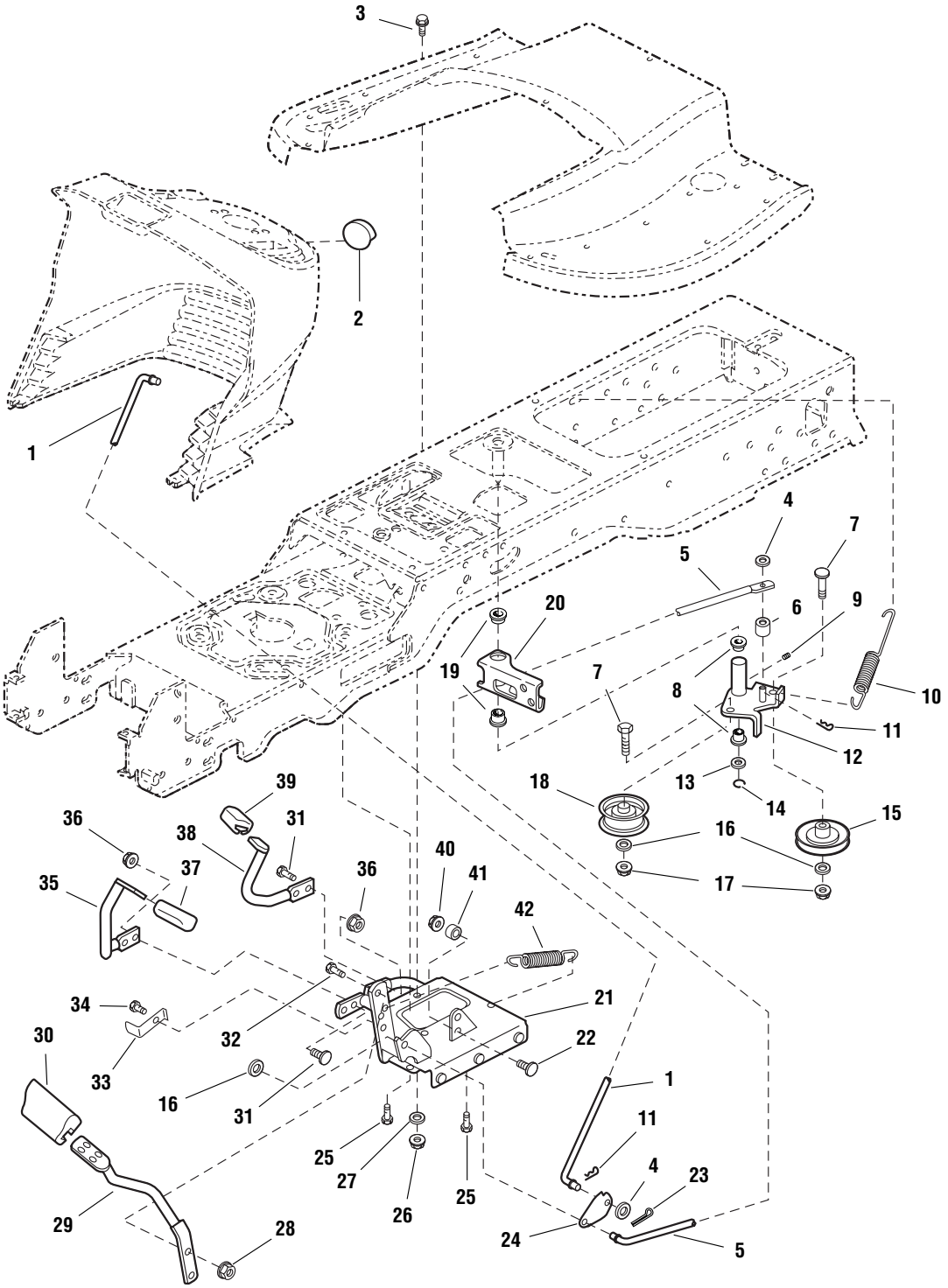

The above parts group applies to the following Mfg. Nos.:

1694368 - YT1644
1694369 - YT1850

© Copyright 2003 Simplicity Manufacturing, Inc. All Rights Reserved.

Downloaded from www.Manualslib.com manuals search engine

https://truckmanualshub.com/

Controls Group

REF NO.	PART NO.	QTY.	DESCRIPTION
1	1721353	1	ROD, Brake Lock
2	1721891	1	KNOB, Push On, Red Plastic "P"
3	1930591	1	CAPSCREW, Hex Flange Whiz Lock, 5/16-18 x 3/4
4	1919326	2	WASHER, 5/16, Black
5	1721476	1	ROD, Brake
6	1723242	1	SPACER, 11/32 x 9/16 x 1/2
7	1931353	2	CARRIAGE BOLT, 3/8-16 x 1 3/4
8	1663114	2	BUSHING, 5/8 x 3/4 x 3/4, Nylon
9	921133	1	FITTING, Lube, 1/4
10	1723278	1	SPRING, Extension
11	1722460	3	PIN, Quick
12	1724036	1	ARM & HUB ASSEMBLY, Idler
13	1960020	1	WASHER, 5/8
14	1704420	1	RING, Clipring Extension
15	1721134	1	PULLEY, w/Bearing
16	1924940	3	WASHER, 3/8
17	1919439	2	NUT, Hex Lock ESNA Light, 3/8-16
18	1721133	1	PULLEY, Idler
19	1723237	2	BUSHING, 1 x 1-1/8 x 5/8, Nylon
20	1722513	1	ARM, Brake
21	1722084	1	PEDAL ASSEMBLY, Foot
22	1931320	1	CARRIAGE BOLT, 1/4-20 x 1-1/4
23	1918447	1	PIN, Cotter, Black
24	1721354	1	LATCH, Brake
25	1664847	3	CAPSCREW, Hex Washer Head Taptite, 5/16-18 x 3/4
26	1919438	1	NUT, Hex Lock ESNA Light, 5/16-18
27	1919381	1	WASHER, 5/16, Black
28	1927557	2	NUT, Hex Flange Whiz Lock Large, 5/16-18
29	1722535	1	PEDAL, Brake
30	1721577	1	PAD, Brake Pedal
31	1931334	4	CARRIAGE BOLT, 5/16-18 x 7/8
32	1921333	2	CAPSCREW, 5/16-18 x 1
33	1722083	1	ACTUATOR, Switch 2.53" Long
34	1923683	1	CAPSCREW, Hex Washer Head Taptite, 3/8-16 x 3/4
35	1722070	1	PEDAL, Forward
36	1960636	4	NUT, Hex KEPS, 5/16-18
37	1721675	1	PAD, Foot Pedal Forward
38	1722071	1	PEDAL, Reverse
39	1721674	1	PAD, Foot Pedal Reverse
40	1920397	1	NUT, Hex Lock ESNA Light, 1/4-20

Footnotes

The above parts group applies to the following Mfg. Nos.:
1694368 - YT1644
1694369 - YT1850

© Copyright 2003 Simplicity Manufacturing, Inc. All Rights Reserved.

Downloaded from www.Manualslib.com manuals search engine

https://truckmanualshub.com/

Controls Group

NOTE: Unless noted otherwise, use the standard hardware torque specification chart.

985882

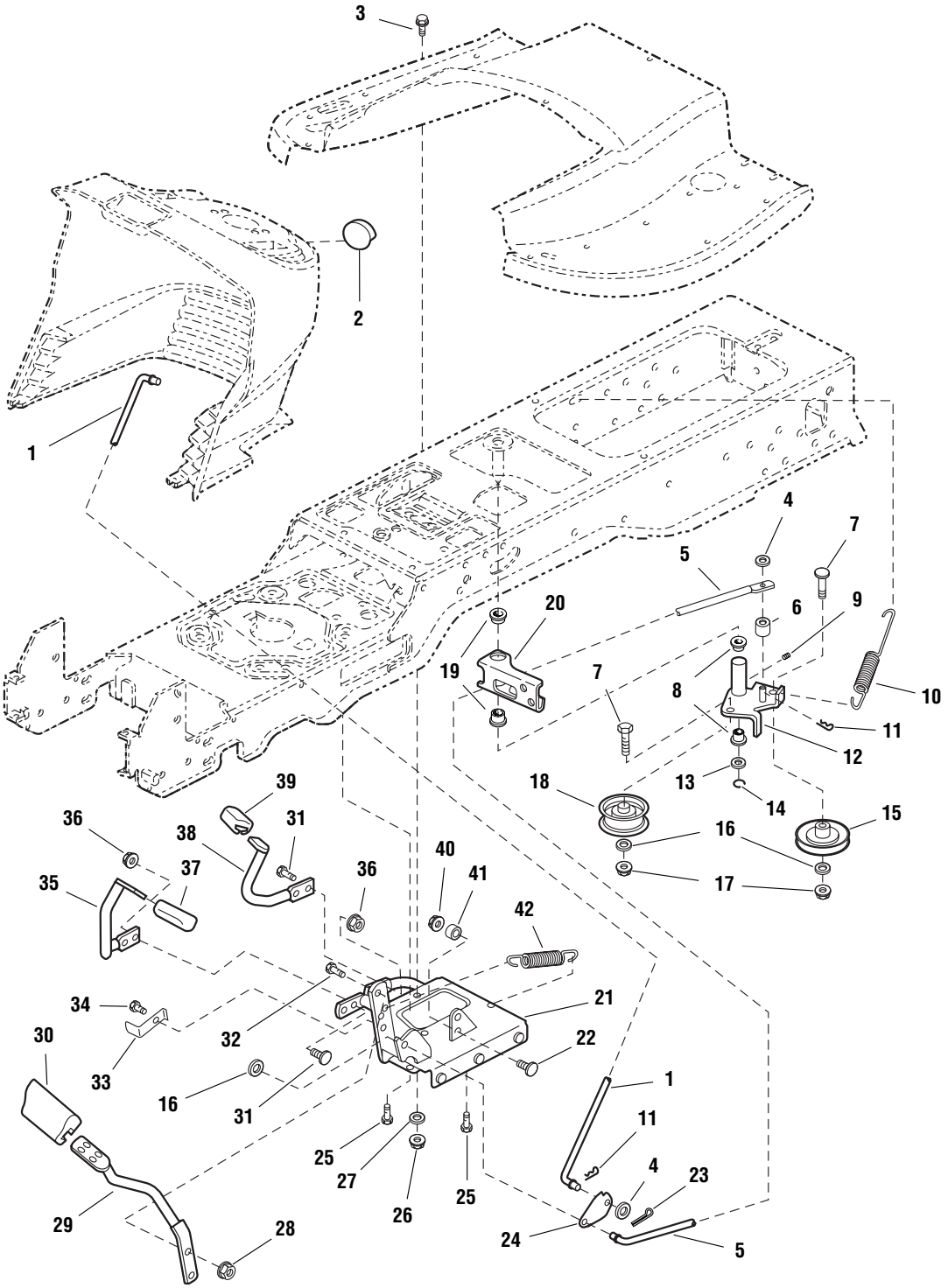

The above parts group applies to the following Mfg. Nos.:

1694368 - YT1644
1694369 - YT1850

© Copyright 2003 Simplicity Manufacturing, Inc. All Rights Reserved.

Downloaded from www.Manualslib.com manuals search engine

https://truckmanualshub.com/

Controls Group

REF NO.	PART NO.	QTY.	DESCRIPTION
41	1686612	1	CAM, Roller
42	1721995	1	SPRING, Extension

Footnotes

The above parts group applies to the following Mfg. Nos.:
1694368 - YT1644
1694369 - YT1850

© Copyright 2003 Simplicity Manufacturing, Inc. All Rights Reserved.

Downloaded from www.Manualslib.com manuals search engine

https://truckmanualshub.com/

Cruise Control Group

NOTE: Unless noted otherwise, use the standard hardware torque specification chart.

985883

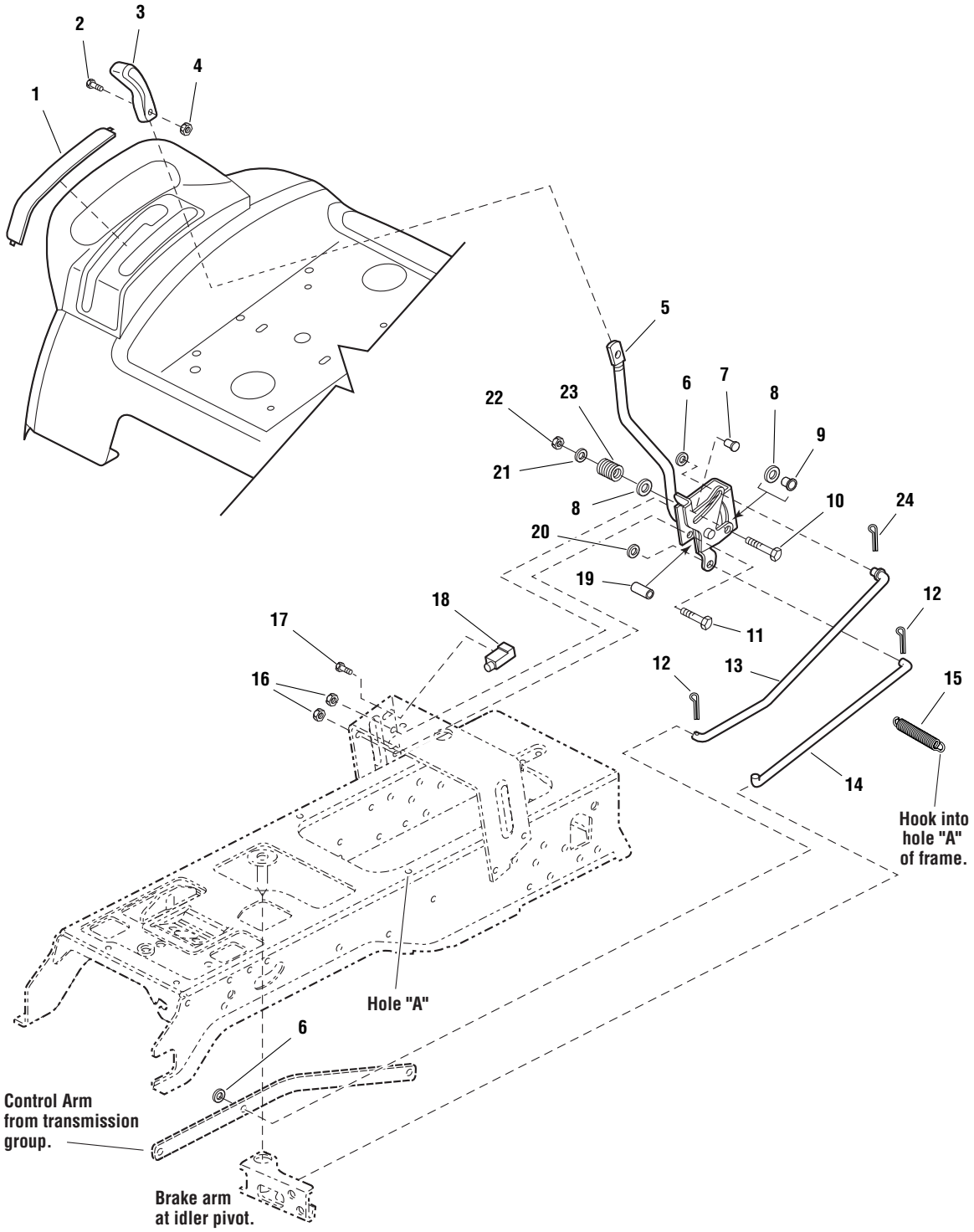

The above parts group applies to the following Mfg. Nos.:

1694368 - YT1644
1694369 - YT1850

© Copyright 2003 Simplicity Manufacturing, Inc. All Rights Reserved.

Downloaded from www.Manualslib.com manuals search engine

https://truckmanualshub.com/

Cruise Control Group

REF NO.	PART NO.	QTY.	DESCRIPTION
1	1722314	1	COVER, w/Cruise Icon
2	1722293	1	CAPSCREW, 1/4-20 x 7/8
3	1722303	1	KNOB, Cruise
4	1920397	1	NUT, Hex Lock ESNA Light, 1/4-20
5	1722003	1	LEVER & BRACKET ASSEMBLY, Cruise
6	1960103	2	WASHER, 3/8, Black
7	1931333	1	CARRIAGE BOLT, 5/16-18 x 3/4
8	1924361	2	WASHER, 1/2
9	1709043	1	SPACER, w/Flange, 11/32 x 15/32 x 3/4
10	1931342	1	CARRIAGE BOLT, 5/16-18 x 2 3/4
11	1960273	1	CARRIAGE BOLT, 5/16-18 x 2-1/4
12	1722460	2	PIN, Quick
13	1722117	1	ROD, Cruise
14	1722481	1	ROD, Return
15	159106	1	SPRING, Cruise Return to Frame
16	1960636	2	NUT, Hex KEPS, 5/16-18
17	1960001	2	CAPSCREW, Hex Washer Head Plastite, 10-14 x 5/8
18	1717050	1	SWITCH, Push, Neutral Start, Gray
19	1722080	1	SPACER, 11/32 x 5/8 x 1-13/32
20	1919326	1	WASHER, 5/16, Black
21	1919381	1	WASHER, 5/16, Black
22	1919438	1	NUT, Hex Lock ESNA Light, 5/16-18
23	1677746	1	SPRING, Compression
24	1918447	1	PIN, Cotter

Footnotes

The above parts group applies to the following Mfg. Nos.:
1694368 - YT1644
1694369 - YT1850

© Copyright 2003 Simplicity Manufacturing, Inc. All Rights Reserved.

Downloaded from www.Manualslib.com manuals search engine

https://truckmanualshub.com/

Electrical Group

NOTE: Unless noted otherwise, use the standard hardware torque specification chart.

985911

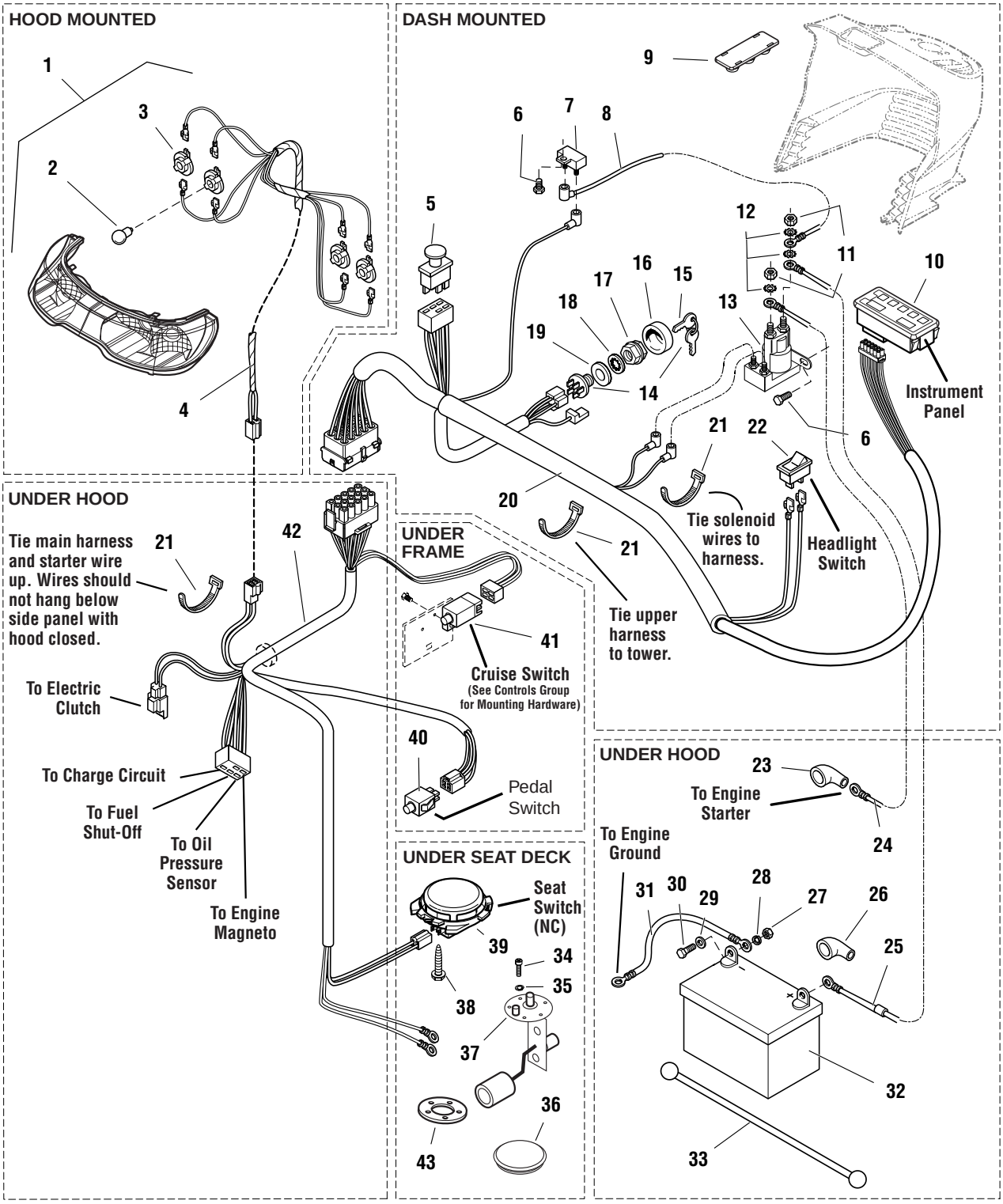

The above parts group applies to the following Mfg. Nos.:

1694368 - YT1644
1694369 - YT1850

© Copyright 2003 Simplicity Manufacturing, Inc. All Rights Reserved.

Downloaded from www.Manualslib.com manuals search engine

https://truckmanualshub.com/

Electrical Group

REF NO.	PART NO.	QTY.	DESCRIPTION
1	1721810	1	HEADLIGHT ASSEMBLY, 4 Bulb, (Includes Ref. Nos. 2 & 3)
2	1677371	4	BULB, Headlight, 12.8V
3	1723451	4	SOCKET ASSEMBLY, Headlight, Sealed
4	1722669	1	HARNESS, Headlight
5	1722887	1	SWITCH, PTO Push/Pull Symbols
6	1925003	2	CAPSCREW, Hex Washer Head Taptite, 1/4-20 x 1/2, Black
7	1665238	1	BREAKER, Circuit, 12 Volt 20 Amps
8	1665237	1	WIRE, 12GA 5-15/16 Long, Red
9	1722611	1	PLUG, Hole, Square
10	1722228	1	PANEL, Instrument w/ Fuel Gage & Hour Meter
11	1920263	2	NUT, Hex, 5/16-24
12	920426	3	LOCKWASHER, External Tooth, 5/16
13	1722739	1	SOLENOID
14	1686734	1	SWITCH ASSEMBLY, Ignition 5/8-32, 6 Pin INDAK, (Includes Ref. Nos. 15, 16, 17, 18 & 19)
15	1717163	1	KEYS, Set of 2
16	1717550	1	COVER, For Ignition Switch, Plastic
17	1717549	1	NUT, Hex Flange, 5/8-32, Ignition Switch
18	1960547	1	LOCKWASHER, Internal Tooth, 5/8, Thin
19	101025	1	WASHER, Shim
20	1722715	1	HARNESS, Wiring Upper
21	1701011	3	TIE, Strap, 7-5/16 Long
22	1716951	1	SWITCH, Headlights , 2 Terminal
23	1713535	1	BOOT, Insulator Cable Terminal, 1-15/16 Long, Red
24	1721830	1	CABLE, #6 x 25" Long, Ring Terminals
25	1603618	1	CABLE, #6 x 8" Long, Ring Terminals
26	1677296	1	BOOT, Insulator Battery Terminal
27	916622	2	NUT, Hex, 1/4-20
28	916964	2	LOCKWASHER, 1/4
29	921319	2	WASHER, 1/4
30	923341	2	CAPSCREW, Hex Head, 1/4-20 x 3/4
31	1713163	1	CABLE, #6 x 26 Long, Ring Terminal
32	1685215	1	BATTERY, 12 Volt
33	1722009	1	STRAP, Battery, 14 Long, Rubber
34	1930531	5	SCREW, Truss Head Phillips, #10-32 x 1/2
35	1917365	5	LOCKWASHER, 3/16 #10
36	1722309	1	PLUG, Hole 3", Round
37	1686921	1	SENDER, Fuel Tank
38	1960536	2	CAPSCREW, Hex Washer Head Plastite, 1/4 x 1/2
39	1716368	1	SWITCH, Seat, Grey, NC
40	1723249	1	SWITCH, Push Button, Foot Pedal

Footnotes

The above parts group applies to the following Mfg. Nos.:
1694368 - YT1644
1694369 - YT1850

© Copyright 2003 Simplicity Manufacturing, Inc. All Rights Reserved.

Downloaded from www.Manualslib.com manuals search engine

https://truckmanualshub.com/

Electrical Group

NOTE: Unless noted otherwise, use the standard hardware torque specification chart.

985911

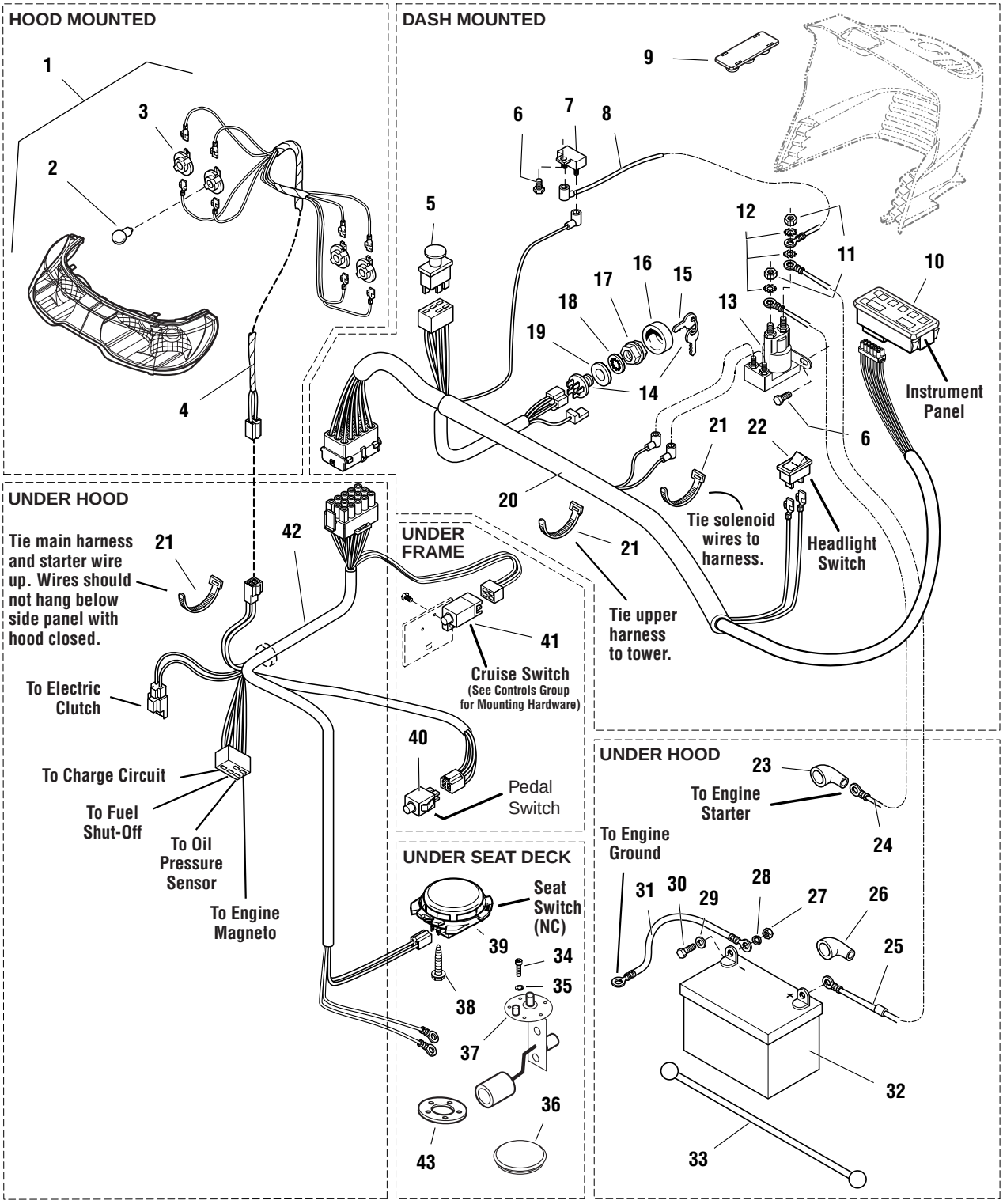

The above parts group applies to the following Mfg. Nos.:

1694368 - YT1644
1694369 - YT1850

© Copyright 2003 Simplicity Manufacturing, Inc. All Rights Reserved.

Downloaded from www.Manualslib.com manuals search engine

https://truckmanualshub.com/

Electrical Group

REF NO.	PART NO.	QTY.	DESCRIPTION
41	1717050	1	SWITCH, Cruise Control, Grey, NO
42	1722716	1	HARNESS, Wiring Lower
43	1685303		GASKET

Footnotes

The above parts group applies to the following Mfg. Nos.:
1694368 - YT1644
1694369 - YT1850

© Copyright 2003 Simplicity Manufacturing, Inc. All Rights Reserved.

Downloaded from www.Manualslib.com manuals search engine

https://truckmanualshub.com/

Hood, Grill & Dash Group

NOTE: Unless noted otherwise, use the standard hardware torque specification chart.

985897

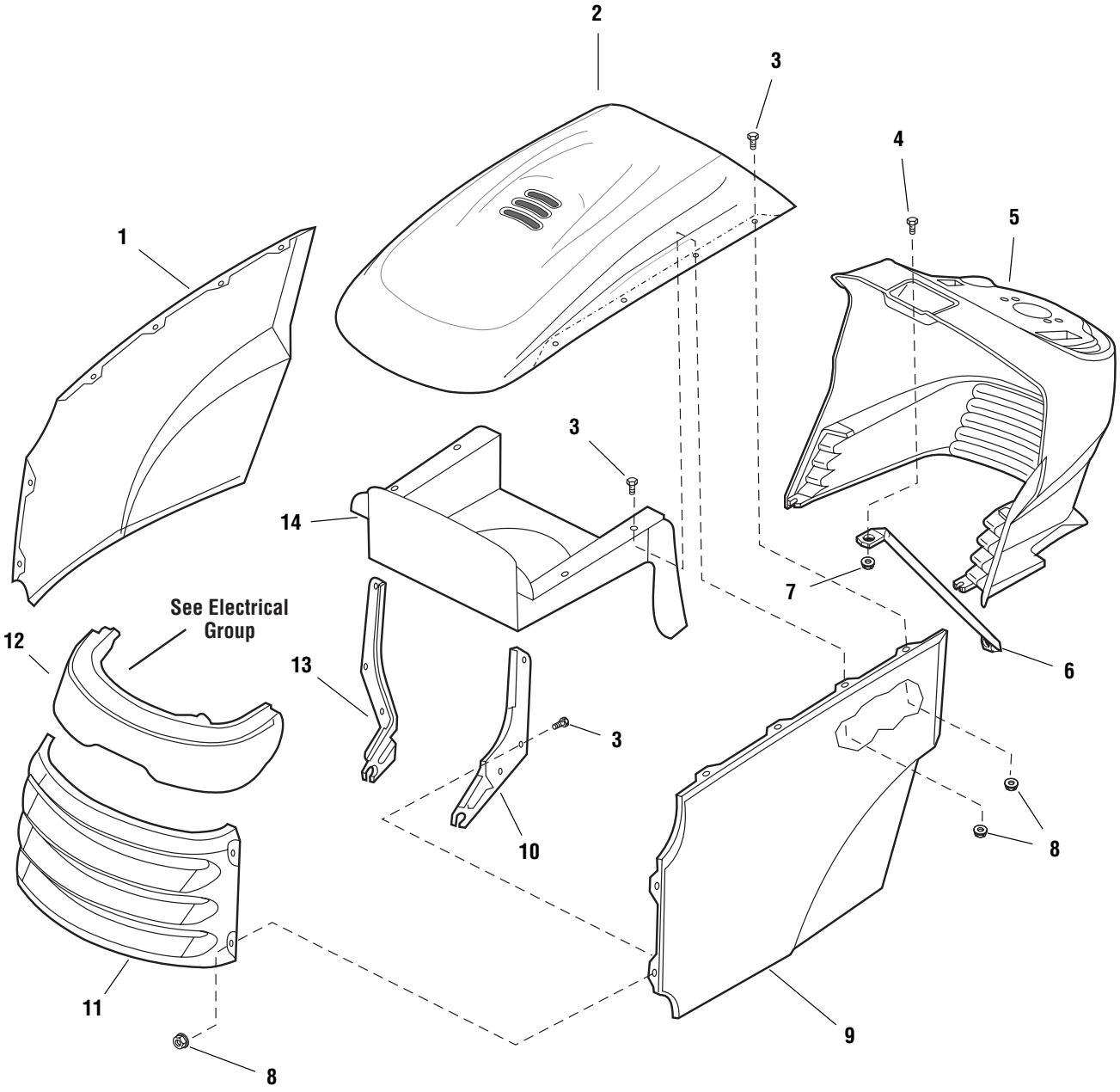

The above parts group applies to the following Mfg. Nos.:

1694368 - YT1644
1694369 - YT1850

© Copyright 2003 Simplicity Manufacturing, Inc. All Rights Reserved.

Downloaded from www.Manualslib.com manuals search engine

https://truckmanualshub.com/

Hood, Grill & Dash Group

REF NO.	PART NO.	QTY.	DESCRIPTION
1	1721804	1	PANEL, RH Side, Orange
1	41721804	1	PANEL, RH Side, Red
2	1722110	1	HOOD, w/Louver, Orange
2	41722110	1	HOOD, w/Louver, Red
3	1960295	12	CAPSCREW, Hex Flange Whiz Lock, 1/4-20 x 5/8
4	1960392	1	SCREW, Pan Head Phillips, #10-24 x 1/2
5	1722107	1	DASHBOARD
6	1723123	1	ROD, Dash Support
7	1933896	1	NUT, Hex Lock, w/Nylon Insert, 10-24
8	1930641	12	NUT, Hex Flange Whiz Lock, 1/4-20, Large, Black
9	1721803	1	PANEL, LH Side, Orange
9	41721803	1	PANEL, LH Side, Red
10	1721808	1	HINGE, LH
11	1721802	1	GRILLE, Orange
11	41721802	1	GRILLE, Red
12	1721810	1	HEADLIGHT ASSEMBLY, 4 Bulb (See Electrical Group for internal components)
13	1721809	1	HINGE, RH
14	1722391	1	DUCT, Air Inlet

Footnotes

The above parts group applies to the following Mfg. Nos.:
1694368 - YT1644
1694369 - YT1850

© Copyright 2003 Simplicity Manufacturing, Inc. All Rights Reserved.

Downloaded from www.Manualslib.com manuals search engine

https://truckmanualshub.com/

Seat & Seat Deck Group

NOTE: Unless noted otherwise, use the standard hardware torque specification chart.

985908

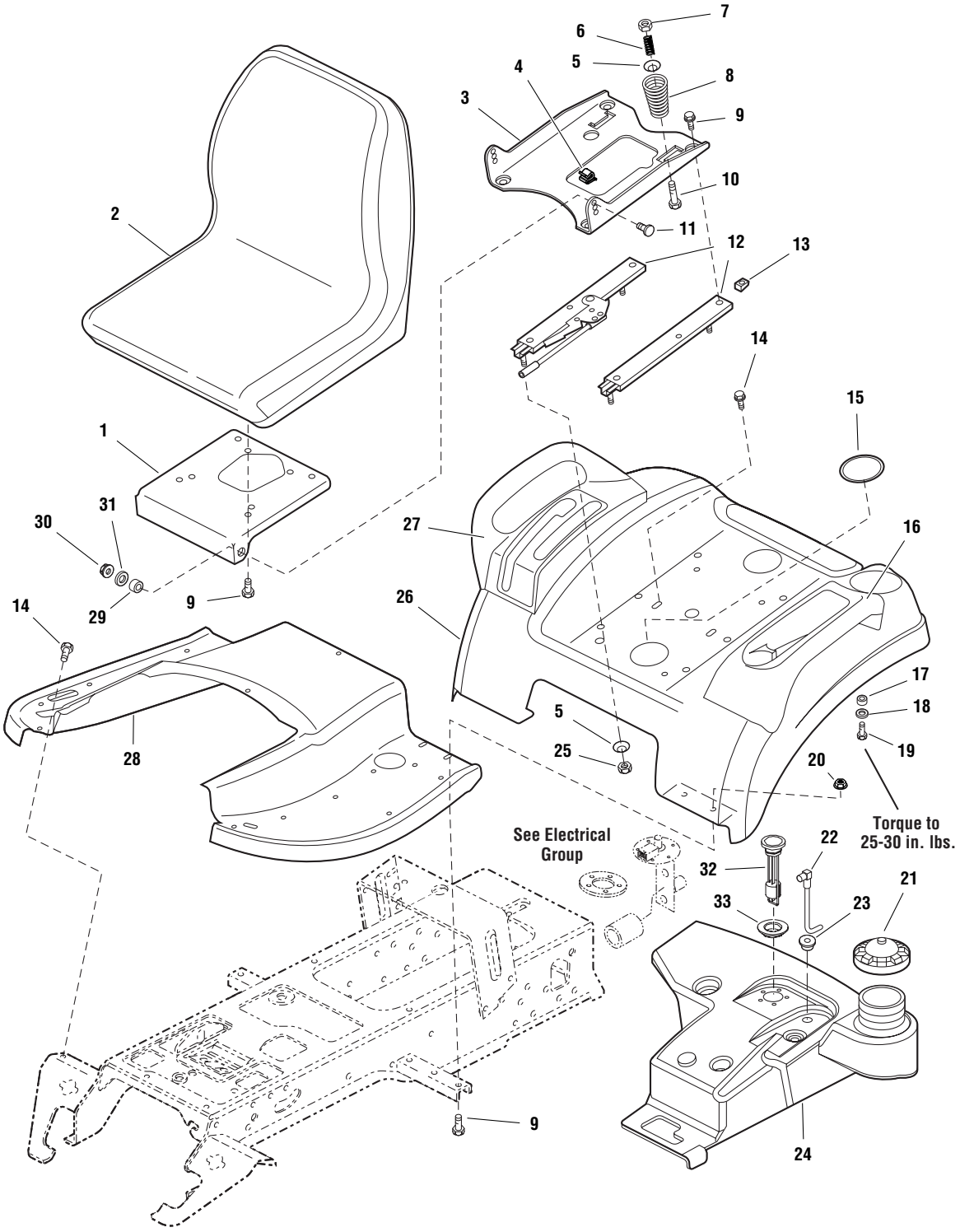

The above parts group applies to the following Mfg. Nos.:

1694368 - YT1644
1694369 - YT1850

© Copyright 2003 Simplicity Manufacturing, Inc. All Rights Reserved.

Downloaded from www.Manualslib.com manuals search engine

https://truckmanualshub.com/

Seat & Seat Deck Group

REF NO.	PART NO.	QTY.	DESCRIPTION
1	1722129	1	BRACKET, 1-5/8 x 1-3/4
2	1722307	1	* SEAT, 18" Back, Optional
2	1722306	1	* SEAT, 15" Back, Standard
3	1722128	1	SUPPORT,
4	172434	1	CLIP, Wire
5	1709256	2	WASHER, Spring, 5/16 x 1-1/4, Black
6	1714263	2	SPRING, Compression
7	1919438	10	NUT, Hex Lock, ESNA Light 5/16-18
8	1717051	2	SPRING, Compression
9	1930591	12	CAPSCREW, Hex Flange Whiz Lock, 5/16-18 x 3/4
10	1931339	2	CARRIAGE BOLT, 5/16-18 x 2
11	1931350	2	CARRIAGE BOLT, 3/8-16 x 1
12	1722356	1	SLIDE, Seat
13	1935255	4	NUT, Speed, 5/16-18, Lug
14	1930601	4	CAPSCREW, Hex Washer Head Taptite, 5/16-18 x 5/8
15	1722309	2	PLUG, Plastic
16	1722109	1	POD, with Cup Holder, LH
17	1921319	8	WASHER, 1/4
18	1916964	8	LOCKWASHER, 1/4
19	1921959	8	CAPSCREW, Hex Head, 1/4-20 x 5/8
20	1931277	4	NUT, Hex Flange, 5/16-18, Whiz Lock Small, Black
21	1715917	1	CAP, Gas
22	1722340	1	TUBE & ELBOW ASSEMBLY
23	1654930	1	BUSHING, 3/8 x 9/16 x 5/8, Rubber
24	1722432	1	TANK, Fuel
25	1960636	8	NUT, Hex KEPS, 5/16-18
26	1722106	1	DECK, Seat, Orange
26	41722106	1	DECK, Seat, Red
27	1722108	1	POD, RH with 2 Slots
28	1722105	1	TUNNEL, Orange
28	41722105	1	TUNNEL, Red
29	1663752	2	SPACER, 25/64 x 5/8 x 3/16, Hardened
30	1930645	2	NUT, Hex Flange Two-Way Lock, 3/8-16
31	1924940	2	WASHER, 3/8
32	1722300	1	FUEL GAUGE
33	1722337	1	GROMMET

Footnotes

* Arm Rest Kit - 1686907

The above parts group applies to the following Mfg. Nos.:

1694368 - YT1644
1694369 - YT1850

© Copyright 2003 Simplicity Manufacturing, Inc. All Rights Reserved.

Downloaded from www.Manualslib.com manuals search engine

https://truckmanualshub.com/

NOTE: Unless noted otherwise, use the standard hardware torque specification chart.

W985914

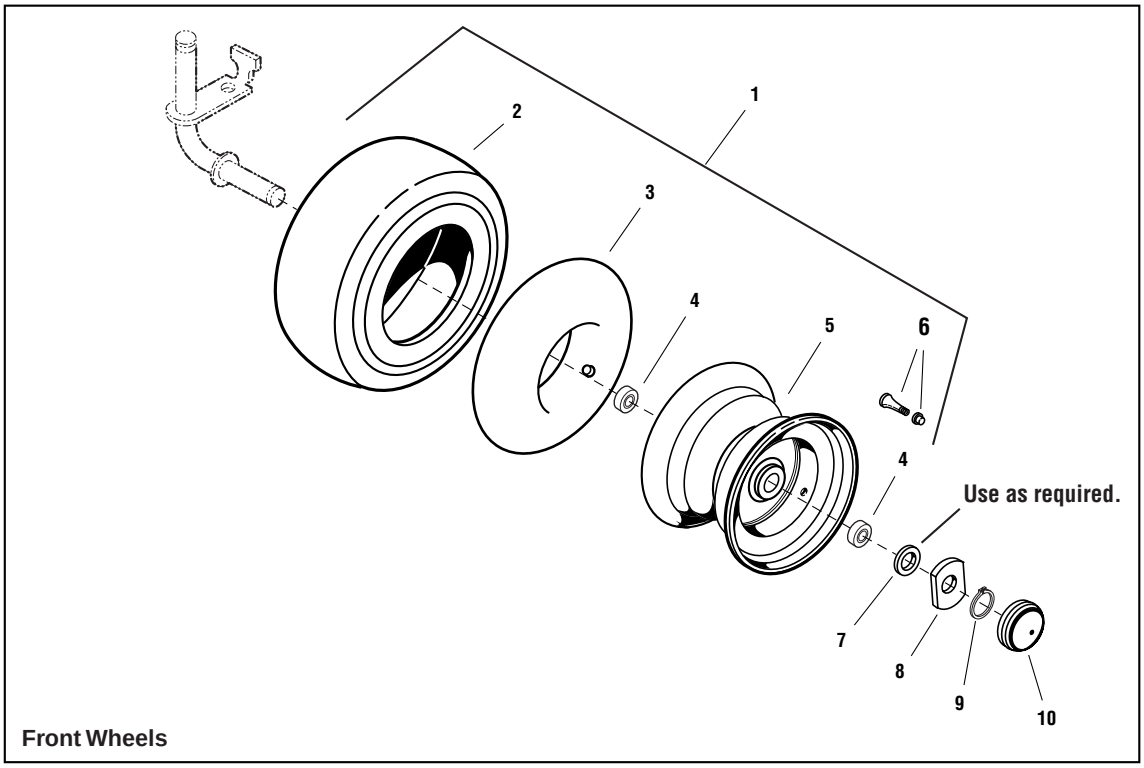

Front Wheels

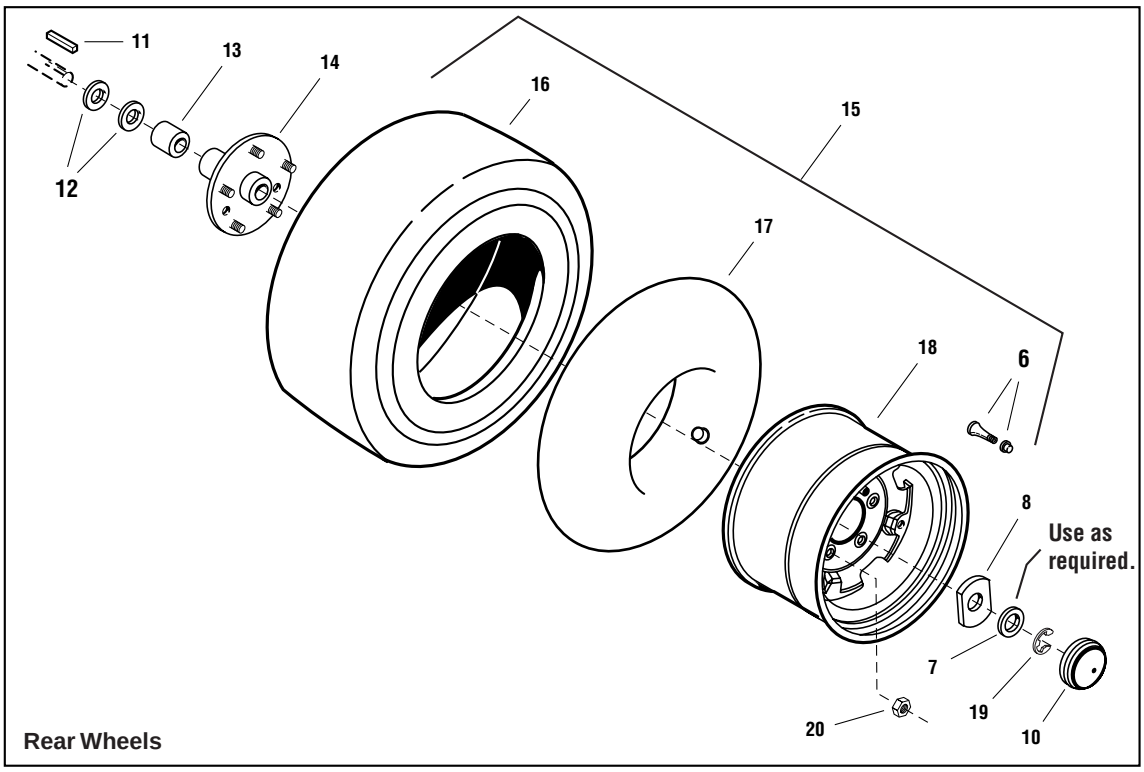

Rear Wheels

The above parts group applies to the following Mfg. Nos.:

1694368 - YT1644
1694369 - YT1850

© Copyright 2003 Simplicity Manufacturing, Inc. All Rights Reserved.

Downloaded from www.Manualslib.com manuals search engine

https://truckmanualshub.com/

Wheels & Tires Group

REF NO.	PART NO.	QTY.	DESCRIPTION
1	1722305	2	WHEEL & TIRE ASSEMBLY, Front, (Includes Ref. 2, 3, 4, 5 & 6)
2	1722833	2	TIRE, 16 x 6-1/2 - 8 Super Turf, Front
3	164247	2	TUBE, Tire 16 x 6-1/2 - 8, Front
4	1717056	4	BEARING, Ball
5	1722834	2	WHEEL, 5 3/8 x 7-15/16, Front
6	172353	4	VALVE STEM & CAP ASSEMBLY
7	1919394	4	WASHER
8	1722726	8	WASHER, Special, 1 x 2-1/2
9	932577	6	RING, Shaft
10	1722676	4	CAP, Hub Grey, 2-23/64
11	105337	2	KEY, HI PRO, 1/4 x 2
12	960200	4	WASHER
13	1723112	2	SPACER, 1-1/16 x 1-1/2 x 1-23/32, Black
14	1721400	2	PLATE & HUB ASSEMBLY, Rear Wheel w/Studs
15	1722766	2	WHEEL & TIRE ASSEMBLY, Rear 23"
16	1722830	2	TIRE, 23 x 10-1/2 - 12 Super Turf, Rear
17	157638	2	TUBE, Tire 23 x 10-1/2 - 12, Rear
18	1722831	2	WHEEL, 7 x 12, Rear
19	934712	2	RING, Shaft
20	177725	10	NUT, Hex 7/16-20, For Wheel Bolt

Footnotes

The above parts group applies to the following Mfg. Nos.:
1694368 - YT1644
1694369 - YT1850

© Copyright 2003 Simplicity Manufacturing, Inc. All Rights Reserved.

Downloaded from www.Manualslib.com manuals search engine

https://truckmanualshub.com/

Decals Group - Brand & Model

NOTE: Unless noted otherwise, use the standard hardware torque specification chart.

B986279

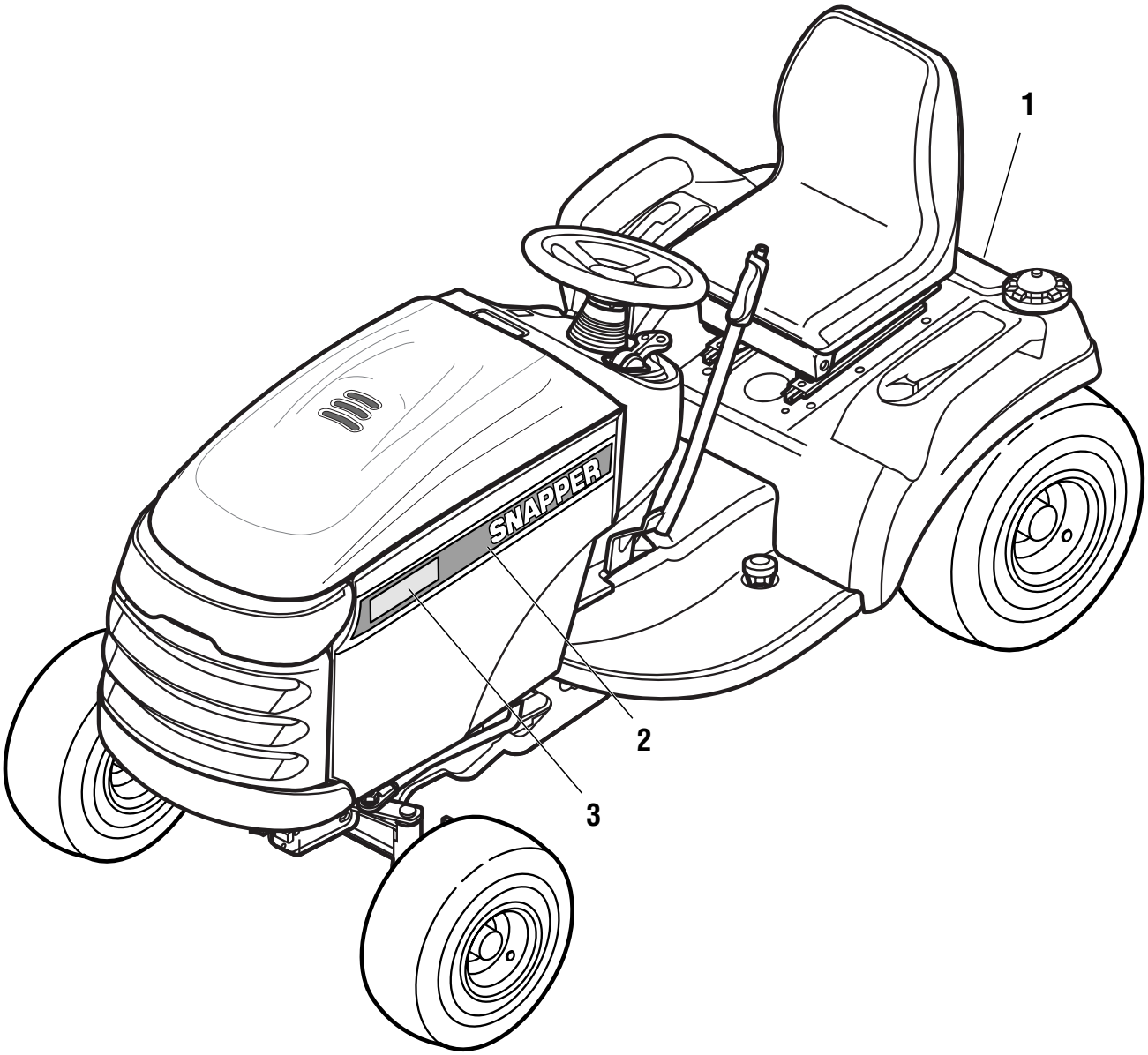

The above parts group applies to the following Mfg. Nos.:

1694368 - YT1644
1694369 - YT1850

© Copyright 2003 Simplicity Manufacturing, Inc. All Rights Reserved.

Downloaded from www.Manualslib.com manuals search engine

https://truckmanualshub.com/

Decals Group - Brand & Model

REF NO.	PART NO.	QTY.	DESCRIPTION
1	1725061	1	DECAL, Snapper
2	1725065	1	DECAL, Hood Stripe, Snapper, LH
2	1725066	1	DECAL, Hood Stripe, Snapper, RH
3	1725062	2	DECAL, YT1644
3	1725063	2	DECAL, YT1850

Footnotes

The above parts group applies to the following Mfg. Nos.:
1694368 - YT1644
1694369 - YT1850

© Copyright 2003 Simplicity Manufacturing, Inc. All Rights Reserved.

Downloaded from www.Manualslib.com manuals search engine

https://truckmanualshub.com/

Decals Group - Safety & Common

NOTE: Unless noted otherwise, use the standard hardware torque specification chart.

C985914

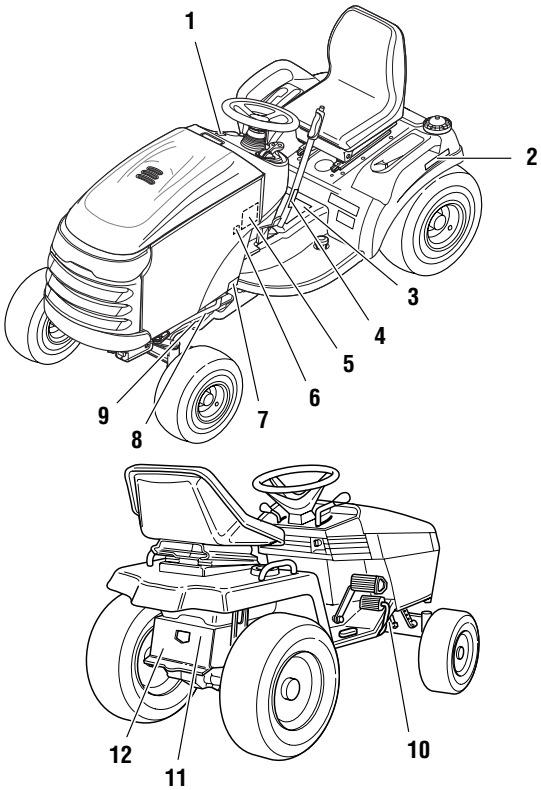

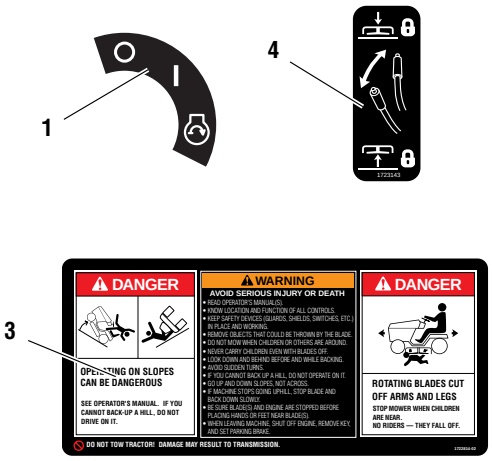

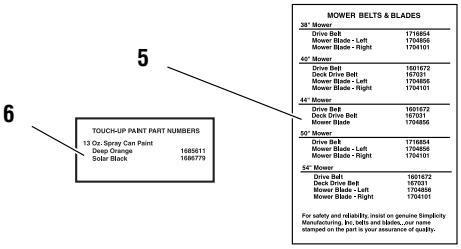

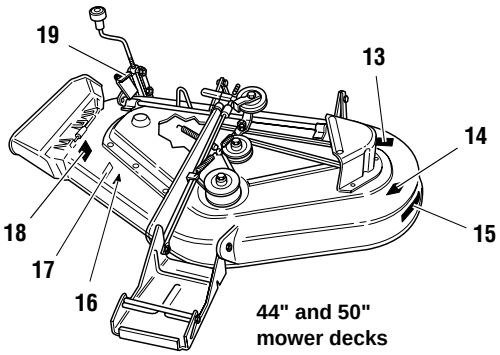

44" and 50" mower decks

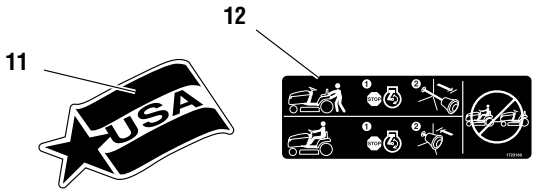

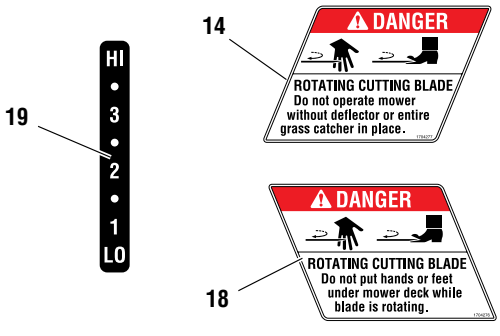

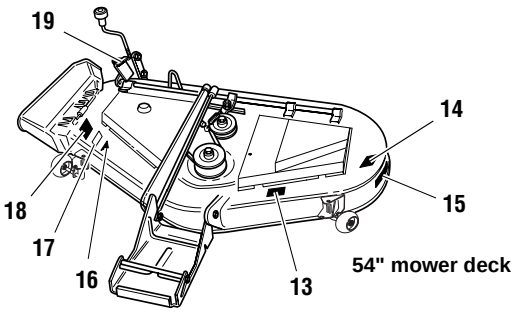

54" mower deck

The above parts group applies to the following Mfg. Nos.:

1694368 - YT1644
1694369 - YT1850

© Copyright 2003 Simplicity Manufacturing, Inc. All Rights Reserved.

Downloaded from www.Manualslib.com manuals search engine

https://truckmanualshub.com/

Decals Group - Safety & Common

REF NO.	PART NO.	QTY.	DESCRIPTION
1	1722806	1	DECAL, Ignition Switch Symbols, White/Black
2	1718025	1	DECAL, Automatic Control Traction
3	1722814	1	DECAL, Tunnel Cover, Danger Slopes/Blades
3	1723175	1	DECAL, Tunnel Cover, Danger Slopes/Blades, (Export)
4	1723143	1	DECAL, Lift Lever Symbols
5	1723410	1	DECAL, Drive Belts, Mower Blades
6	1720454	1	DECAL, Touch Up Paint, Deep Orange
6	1720456	1	DECAL, Touch-Up Paint, Red
7	1723296	2	DECAL, Protective Sticker
8	*	1	LABEL, Decibel, Power Mass
9	*	1	DECAL, I.D. Plate
10	*	1	DECAL, Patent
11	1708927	1	DECAL, USA Logo Stars & Stripe
12	1723160	1	DECAL, Transmission Release Valve
13	*	1	DECAL, I.D. Plate
14	1704276	1	DECAL, Danger Do Not Put Hands/Feet in Mower
15	1722771	1	DECAL, Free Floating Mower, Silver
16	*	1	DECAL, OPEI Certified
17	1722789	1	DECAL, 44", Silver on Black with Stripe
17	1722790	1	DECAL, 50", Silver on Black with Stripe
17	1722791	1	DECAL, 54", Silver on Black with Stripe
18	1704277	1	DECAL, Danger Do Not Operate Without Deflector
19	1721197	1	DECAL, Height of Cut

Footnotes

The above parts group applies to the following Mfg. Nos.:
1694368 - YT1644
1694369 - YT1850

© Copyright 2003 Simplicity Manufacturing, Inc. All Rights Reserved.

Downloaded from www.Manualslib.com manuals search engine

https://truckmanualshub.com/

44" & 50" Mower Deck - Clutch & Support

NOTE: Unless noted otherwise, use the standard hardware torque specification chart.

984271C

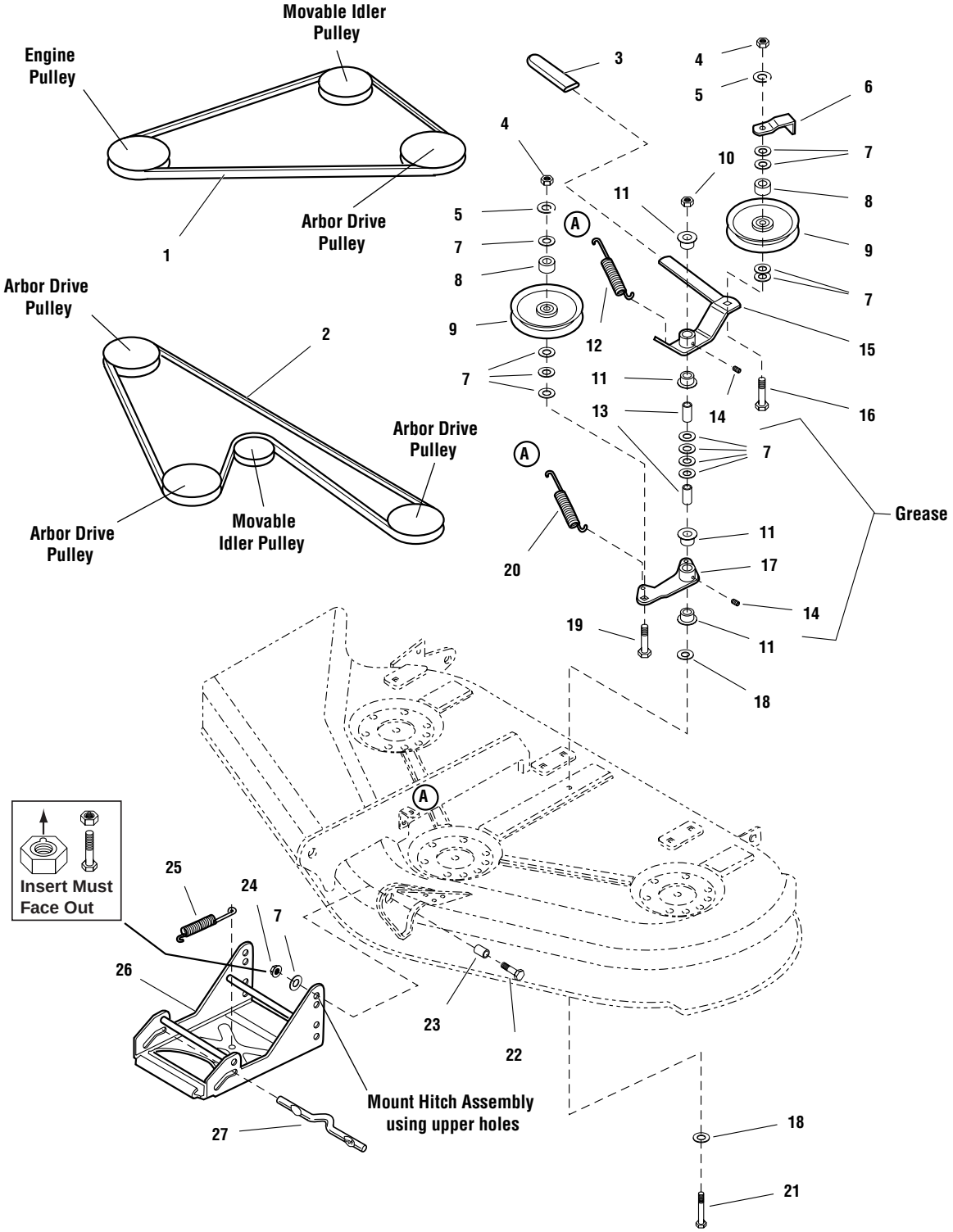

The above parts group applies to the following Mfg. Nos.:

1694371 - 44" Mower
1694372 - 50" Mower

© Copyright 2003 Simplicity Manufacturing, Inc. All Rights Reserved.

Downloaded from www.Manualslib.com manuals search engine

https://truckmanualshub.com/

44" & 50" Mower Deck - Clutch & Support

REF NO.	PART NO.	QTY.	DESCRIPTION
1	1601672	1	V-BELT, Mower Drive, (for 44" Mower Decks Only)
1	1707740	1	V-BELT, Mower Drive, (for 50" Mower Decks Only)
2	1703836	1	V-BELT, Arbor Drive, (for 50" Mower Decks Only)
2	1721532	1	V-BELT, Arbor Drive, (for 44" Mower Decks Only)
3	1665835	1	GRIP, Lever
4	1916950	2	NUT, Hex, 3/8-16
5	1916965	2	WASHER, Lock, 3/8
6	1677135	1	BELT STOP, Idler
7	1924940	14	WASHER, 3/8
8	1666294	2	SPACER, 25/64 x 21/32 x 7/16, Powder Metal
9	1685150	2	PULLEY, Idler, (Includes Ref. No. 8)
10	1960339	1	NUT, Hex Flange, 3/8-16, MAC Lock Large, Black
11	1676148	4	BUSHING, 5/8 x 3/4 x 13/32, Powder Metal
12	1715435	1	SPRING
13	1674669	2	SPACER, 25/64 x 5/8 x 1-1/8, Case Hardened
14	912808	2	GREASE FITTING
15	1704658	1	LEVER ASSEMBLY, Idler, (Includes Ref. Nos. 11 & 14)
16	1960315	1	CARRIAGE BOLT, 3/8-16 x 2
17	1718561	1	LEVER ASSEMBLY, Idler Arm, (Includes Ref. Nos. 11 & 14)
18	1924356	2	WASHER, 3/8, Black
19	1931352	1	CARRIAGE BOLT, 3/8-16 x 1-1/2
20	1656936	1	SPRING
21	1923938	1	CAPSCREW, Hex Head, 3/8-16 x 3-1/2
22	1921969	2	CAPSCREW, Hex Head, 3/8-16 x 1-1/2
23	157081	2	SPACER, 3/8 x 3/4 x 1/2
24	960641	2	NUT, Hex Aluminum Insert Lock, 3/8-16
25	156302	1	SPRING
26	1707432	1	HITCH ASSEMBLY
27	1715759	1	ROD, Latch

Footnotes

The above parts group applies to the following Mfg. Nos.:
1694371 - 44" Mower
1694372 - 50" Mower

© Copyright 2003 Simplicity Manufacturing, Inc. All Rights Reserved.

Downloaded from www.Manualslib.com manuals search engine

https://truckmanualshub.com/

44" & 50" Mower Decks - Housing, Arbors & Blades

NOTE: Unless noted otherwise, use the standard hardware torque specification chart.

5971

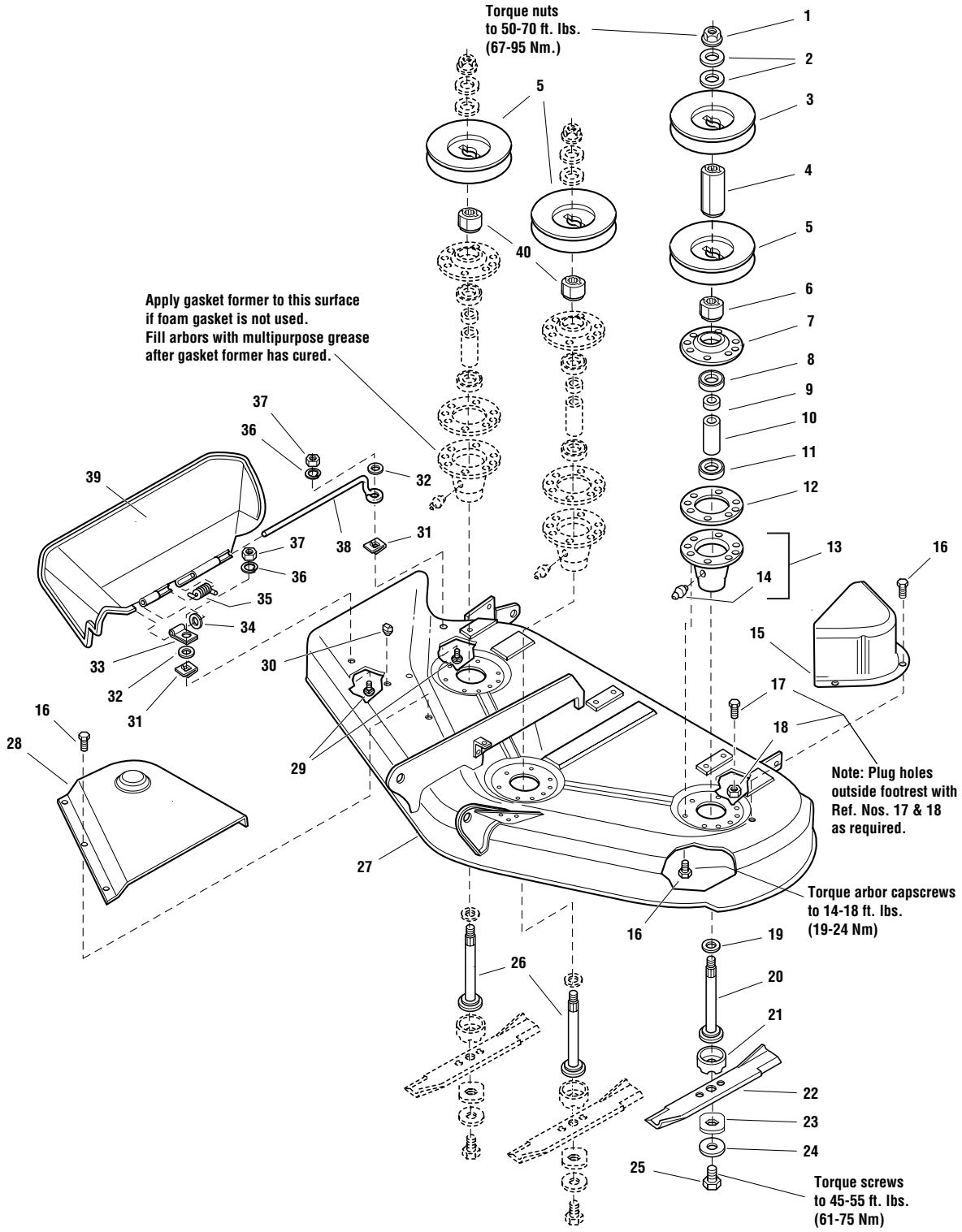

The above parts group applies to the following Mfg. Nos.:

1694371 - 44" Mower
1694372 - 50" Mower

© Copyright 2003 Simplicity Manufacturing, Inc. All Rights Reserved.

Downloaded from www.Manualslib.com manuals search engine

https://truckmanualshub.com/

44" & 50" Mower Decks - Housing, Arbors & Blades

REF NO.	PART NO.	QTY.	DESCRIPTION
1	1714419	3	NUT, Hex Flange, 9/16-18
2	1713675	6	WASHER, Bellevilled, 9/16
3	1713161	1	PULLEY
4	1713158	1	HUB, Double Pulley
5	1713098	3	PULLEY
6	1713533	1	HUB, Double Pulley
7	1655729	3	COVER, Arbor Housing
8	108202	3	BEARING, Ball, 3/4 x 1-3/4 x 5/8
9	1715724	3	SPACER, 21/32 x 3/4 x 5/8
10	1715723	3	SPACER, 11/16 x 5/32 x 2-11/16
11	1705897	3	BEARING, Ball, 11/16 x 1-9/16 x 15/32
12	1707335	3	GASKET, Foam
13	1713338	3	ARBOR HOUSING ASSEMBLY, (Includes Ref. No. 14)
14	1704314	3	FITTING, Grease
15	1720560	1	COVER, Arbor
16	1664847	26	CAPSCREW, Hex Head Taptite, 5/16-18 x 3/4
17	1924856	1	CAPSCREW, Hex Washer Head, 5/16-18 x 1/2, Black, (for 44" Mower Deck Only)
18	1931277	1	NUT, Hex Flange, 5/16, (for 44" Mower Deck Only)
19	1713619	3	WASHER, Bellevilled, 9/16, Black
20	1713612	1	SHAFT, Arbor (LH)
21	1713196	3	SHIELD, Grass, Lower
22	1704100	3	BLADE, Mower, 16-1/8 (for 44" Decks)
22	1708229	3	BLADE, Mower, 18-1/8 (for 50" Decks)
23	1713089	3	WASHER, Hex, 11/16 x 2
24	1656916	3	WASHER, Spring 15/32, Black
25	923471	3	CAPSCREW, Hex Head, 7/16-14 x 1
26	1713195	2	SHAFT, Arbor (Center & RH)
27	1685411	1	MOWER HOUSING ASSEMBLY, 44" Mower (Orange)
27	1685495	1	MOWER HOUSING ASSEMBLY, 50" Mower (Orange)
27	41685411	1	MOWER HOUSING ASSEMBLY, 44" Mower (Red)
27	41685495	1	MOWER HOUSING ASSEMBLY, 50" Mower (Red)
28	1703601	1	COVER, Arbor
29	1931318	2	CARRIAGE BOLT, 1/4-20 x 7/8
30	1705115	1	PLUG, Hole
31	1960518	2	NUT, Push
32	1960353	2	WASHER, 1/4, Black
33	1704873	1	CLAMP
34	1919326	1	WASHER, 5/16, Black
35	1705080	1	SPRING
36	1916964	2	WASHER, Lock, 1/4

Footnotes

The above parts group applies to the following Mfg. Nos.:
1694371 - 44" Mower
1694372 - 50" Mower

© Copyright 2003 Simplicity Manufacturing, Inc. All Rights Reserved.

Downloaded from www.Manualslib.com manuals search engine

https://truckmanualshub.com/

44" & 50" Mower Decks - Housing, Arbors & Blades

NOTE: Unless noted otherwise, use the standard hardware torque specification chart.

5971

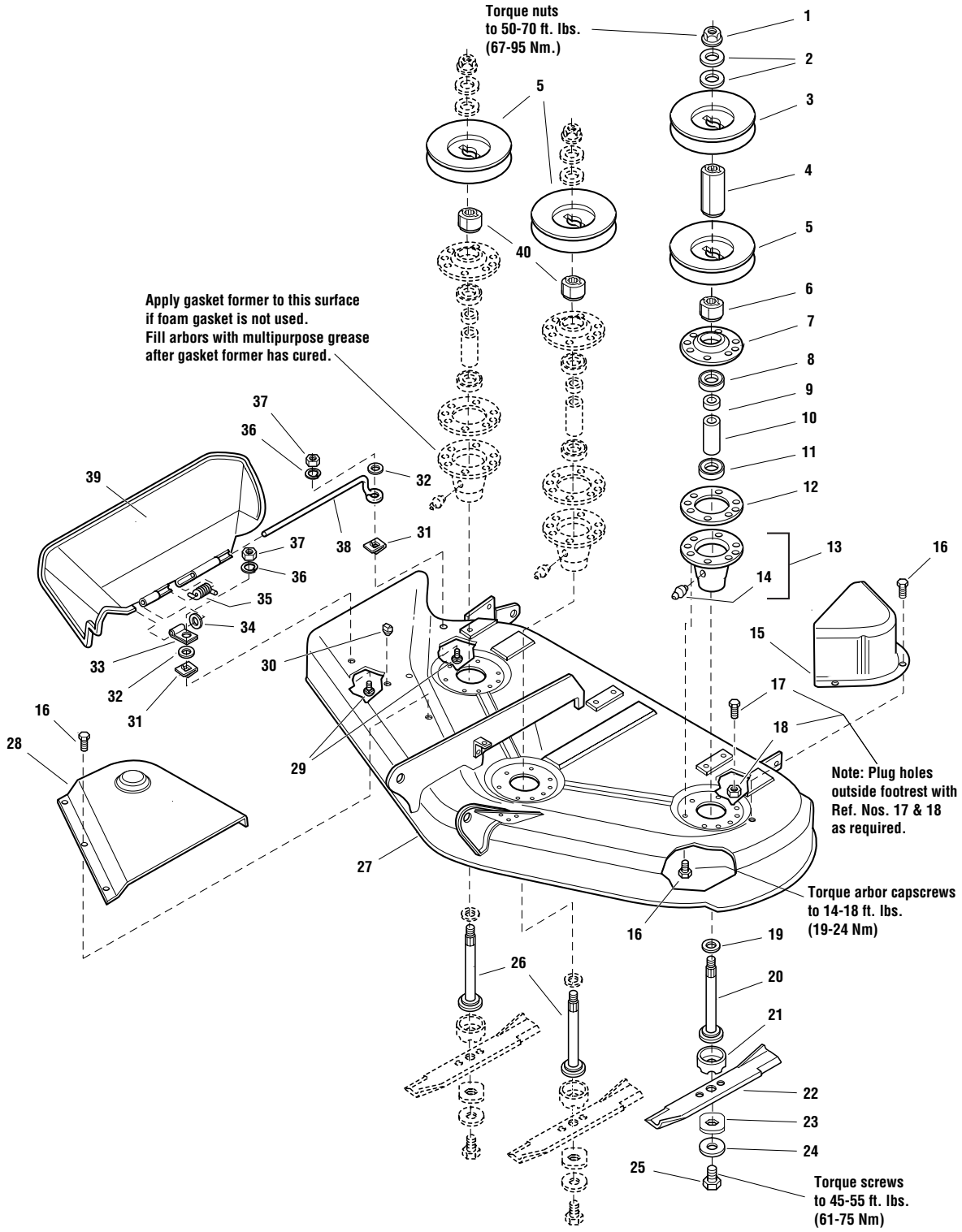

The above parts group applies to the following Mfg. Nos.:

1694371 - 44" Mower
1694372 - 50" Mower

© Copyright 2003 Simplicity Manufacturing, Inc. All Rights Reserved.

Downloaded from www.Manualslib.com manuals search engine

https://truckmanualshub.com/

44" & 50" Mower Decks - Housing, Arbors & Blades

REF NO.	PART NO.	QTY.	DESCRIPTION
37	1916622	2	NUT, Hex, 1/4-20
38	1706709	1	ROD, Deflector, Front
39	1705449	1	DEFLECTOR, Plastic
40	1713197	2	HUB, Pulley, Center & RH

Footnotes

The above parts group applies to the following Mfg. Nos.:
1694371 - 44" Mower
1694372 - 50" Mower

© Copyright 2003 Simplicity Manufacturing, Inc. All Rights Reserved.

Downloaded from www.Manualslib.com manuals search engine

https://truckmanualshub.com/

44" Mower Deck - Height Adjustment & Roller Bar

NOTE: Unless noted otherwise, use the standard hardware torque specification chart.

985974

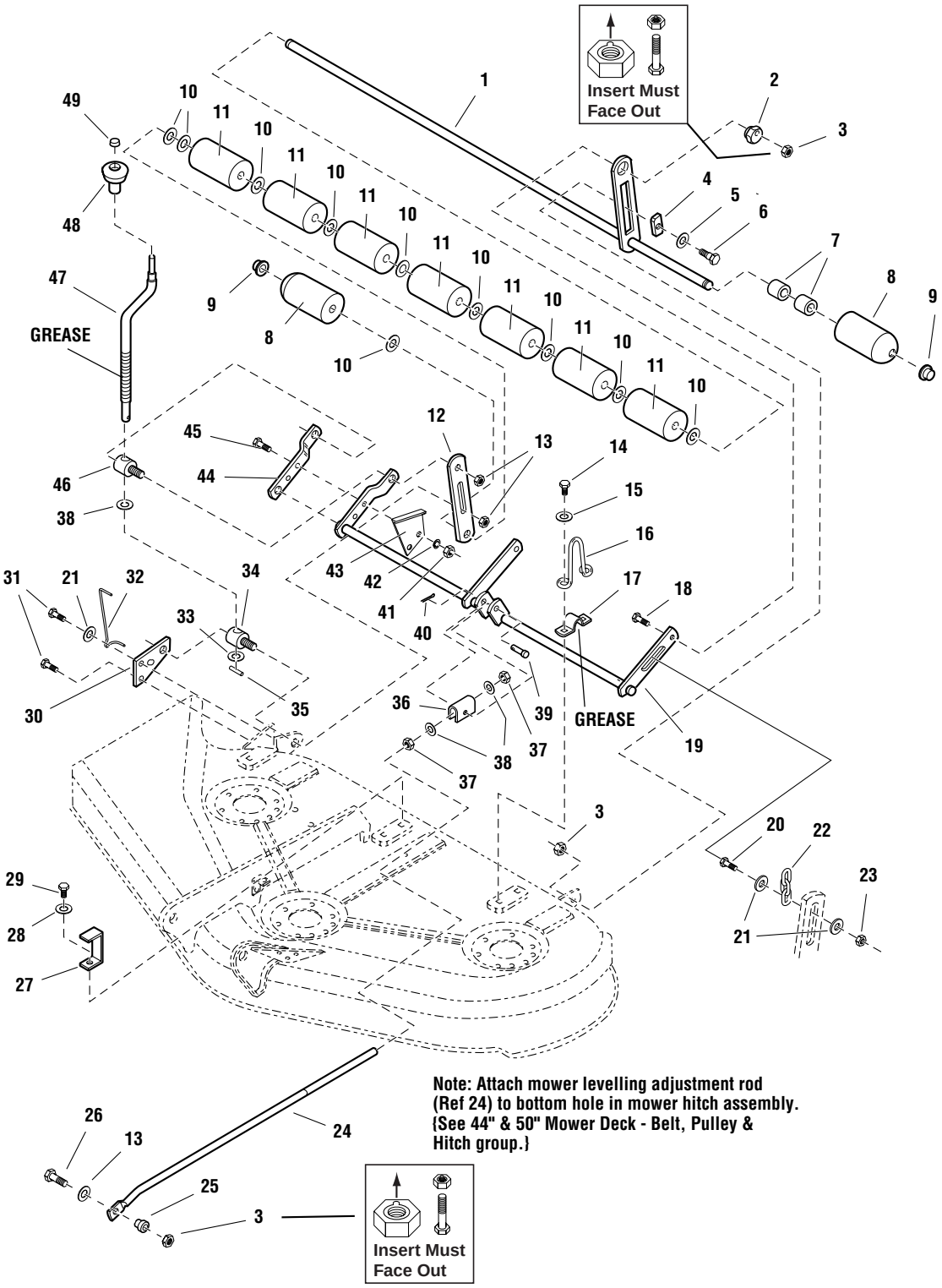

Note: Attach mower levelling adjustment rod (Ref 24) to bottom hole in mower hitch assembly. {See 44" & 50" Mower Deck - Belt, Pulley & Hitch group.}

The above parts group applies to the following Mfg. Nos.:
1694371 - 44" Mower

© Copyright 2003 Simplicity Manufacturing, Inc. All Rights Reserved.

Downloaded from www.Manualslib.com manuals search engine

https://truckmanualshub.com/

44" Mower Deck - Height Adjustment & Roller Bar

REF NO.	PART NO.	QTY.	DESCRIPTION
1	1685443	1	SHAFT ASSEMBLY, Roller, 44", (Includes Ref. Nos. 7 & 9)
2	1704082	1	NUT, Adjuster
3	960641	3	NUT, Hex Aluminum Insert Lock, 3/8-16
4	1677507	1	SLIDE
5	1924361	1	WASHER, Plain, 1/2
6	172622	1	BOLT, Shoulder, 3/8-16
7	1602946	2	SPACER, 25/64 x 13/16 x 13/16, Steel, Black
8	1722036	2	ROLLER, Rounded, 2-1/2 Long
9	1960520	2	NUT, Push
10	1924366	10	WASHER, Plain, 1-1/4
11	1668513	7	ROLLER
12	1704074	1	BAR, Roller
13	1930644	2	NUT, Hex, Flange, Lock, 1/2-13
14	1664847	5	CAPSCREW, Hex Head Taptite, 5/16 -18 x 3/4
15	1924940	3	WASHER, 3/8
16	1722747	1	UP-STOP, 6-1/4 High, Black
17	1665374	3	STRAP, Mower Arm Assembly
18	1931352	1	CARRIAGE BOLT, 3/8-16 x 1-1/2
19	1723407	1	ARM ASSEMBLY, Mower
20	1930570	2	CAPSCREW, Hex Head, 5/16-18 x 1 1/2, Black
21	1919381	5	WASHER, 5/16, Black
22	1707514	2	CHAIN, 3 Link, 4-1/2 Long
23	1919438	2	NUT, Hex Lock ESNA Light, 5/16-18, Black
24	1704093	1	ROD, Adjustment
25	1706644	1	SPACER, 3/8 x 3/4 x 15/16
26	1922606	1	CAPSCREW, Hex Head, 3/8-16 x 1-3/4
27	1722748	1	BRACKET, Up-Stop, 6" Long
28	1960020	1	WASHER, 5/8
29	1960373	2	CAPSCREW, Hex Washer Head Taptite, 5/16-18 x 1, Black
30	1704080	1	PLATE, Mower Support
31	1931202	2	CAPSCREW, Hex Head Taptite, 5/16-18 x 1-1/4
32	1704114	1	INDICATOR, Cutting Height
33	1704097	1	WASHER, Detent
34	1704086	1	TRUNNION
35	916001	1	PIN, Roll, 1
36	1704081	1	TRUNNION
37	1913744	2	NUT, Hex, Jam, 1/2-13
38	1960170	3	WASHER, 33/64
39	118053	1	PIN, Clevis
40	1918452	1	PIN, Cotter, 1, Black

Footnotes

The above parts group applies to the following Mfg. Nos.:
1694371 - 44" Mower

© Copyright 2003 Simplicity Manufacturing, Inc. All Rights Reserved.

Downloaded from www.Manualslib.com manuals search engine

https://truckmanualshub.com/

44" Mower Deck - Height Adjustment & Roller Bar

NOTE: Unless noted otherwise, use the standard hardware torque specification chart.

985974

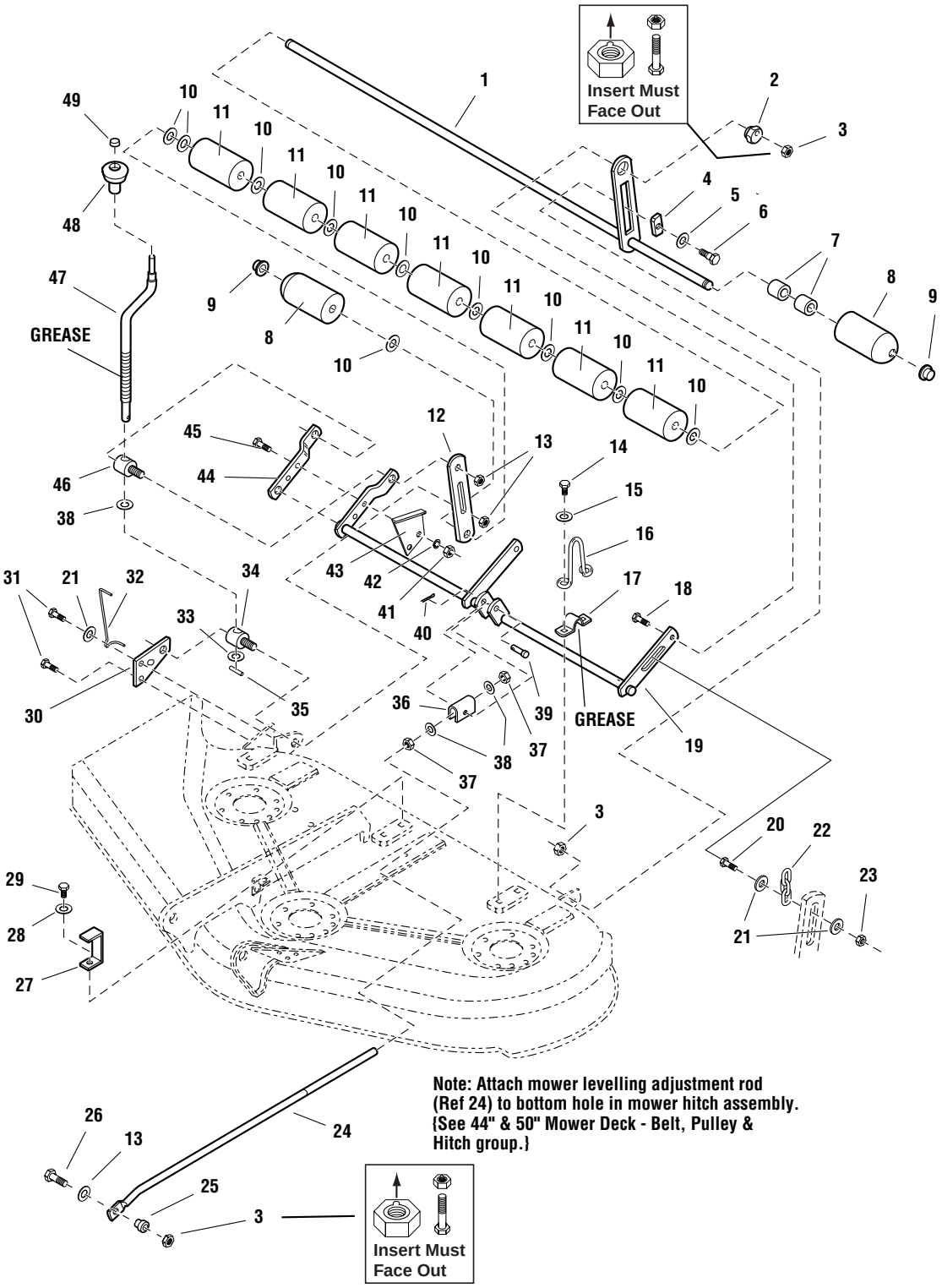

Note: Attach mower levelling adjustment rod (Ref 24) to bottom hole in mower hitch assembly. {See 44" & 50" Mower Deck - Belt, Pulley & Hitch group.}

The above parts group applies to the following Mfg. Nos.:
1694371 - 44" Mower

© Copyright 2003 Simplicity Manufacturing, Inc. All Rights Reserved.

Downloaded from www.Manualslib.com manuals search engine

https://truckmanualshub.com/

44" Mower Deck - Height Adjustment & Roller Bar

REF NO.	PART NO.	QTY.	DESCRIPTION
41	1917372	2	NUT, Hex, 5/16-18
42	1917356	2	WASHER, Lock, 5/16
43	1704116	1	BRACKET, Cutting Height
44	1704083	1	ARM, Rear, Mower, RH
45	1921977	2	CAPSCREW, Hex Head, 5/16-18 x 1-1/4
46	1704087	1	TRUNNION, Threaded
47	1719901	1	CRANK, Cutting Height
48	1714084	1	KNOB, Height Crank
49	1960093	1	PAL NUT

Footnotes

The above parts group applies to the following Mfg. Nos.:
1694371 - 44" Mower

© Copyright 2003 Simplicity Manufacturing, Inc. All Rights Reserved.

Downloaded from www.Manualslib.com manuals search engine

https://truckmanualshub.com/

50" Mower Deck - Height Adjustment & Roller Bar

NOTE: Unless noted otherwise, use the standard hardware torque specification chart.

986020

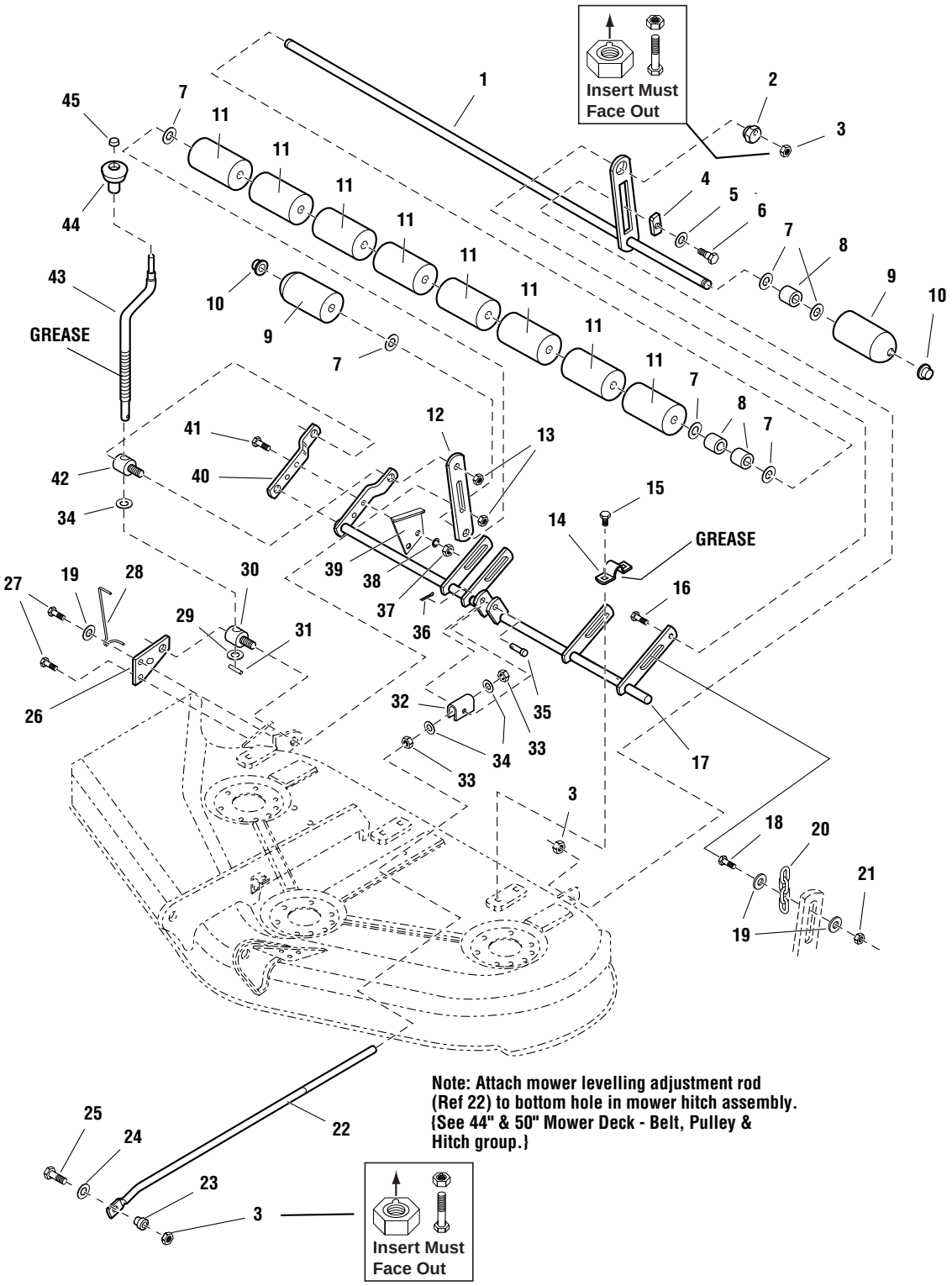

The above parts group applies to the following Mfg. Nos.:
1694372 - 50" Mower

© Copyright 2003 Simplicity Manufacturing, Inc. All Rights Reserved.

Downloaded from www.Manualslib.com manuals search engine

https://truckmanualshub.com/

50" Mower Deck - Height Adjustment & Roller Bar

REF NO.	PART NO.	QTY.	DESCRIPTION
1	1686687	1	SHAFT ASSEMBLY, Roller, 50", (Includes Ref. No. 10)
2	1704082	1	NUT, Adjuster
3	960641	3	NUT, Hex Aluminum Insert Lock, 3/8-16
4	1677507	1	SLIDE
5	1924361	1	WASHER, Plain, 1/2
6	172622	1	BOLT, Shoulder, 3/8-16
7	1924366	8	WASHER, Plain, 1 1/4
8	1709195	3	SPACER, 21/32 x 5/32 x 5/8
9	1722036	2	ROLLER, Rounded End
10	1960520	2	NUT, Push
11	1668513	8	ROLLER
12	1704074	1	BAR, Roller
13	1930644	2	NUT, Hex Flange, 2 Way Lock, 1/2-13
14	1665374	3	STRAP, Mower Arm Assembly
15	1664847	6	CAPSCREW, Hex Head Taptite, 5/16 -18 x 3/4
16	1931352	1	CARRIAGE BOLT, 3/8-16 x 1-1/2
17	1718828	1	ARM ASSEMBLY, Mower
18	1930570	2	CAPSCREW, Hex Head, 5/16-18 x 1-1/4, G8, 1/2 Thread
19	1919381	5	WASHER, 5/16, Black
20	1708088	2	CHAIN, 4 Link, 6 3/32 Long
21	1919438	2	NUT, Hex Lock ESNA Light, 5/16-18, Black
22	1722995	1	ROD, Adjustment
23	1706644	1	SPACER, 3/8 x 3/4 x 15/16
24	1924940	1	WASHER, 3/8
25	1922606	1	CAPSCREW, Hex Head, 3/8-16 x 1-3/4
26	1704080	1	PLATE, Mower Support
27	1931202	2	CAPSCREW, Hex Head Taptite, 5/16-18 x 1-1/4
28	1704114	1	INDICATOR, Cutting Height
29	1704097	1	WASHER, Detent
30	1704086	1	TRUNNION
31	916001	1	PIN, Roll, 1
32	1706645	1	TRUNNION
33	1915726	2	NUT, Hex, Jam, 1/2-13
34	1960170	1	WASHER, 11/32
35	118053	1	PIN, Clevis
36	1918452	1	PIN, Cotter, 1, Black
37	1917372	2	NUT, Hex, 5/16-18
38	1917356	2	WASHER, Lock, 5/16
39	1704116	1	BRACKET, Cutting Height
40	1704083	1	ARM, Rear, Mower, RH

Footnotes

The above parts group applies to the following Mfg. Nos.:
1694372 - 50" Mower

© Copyright 2003 Simplicity Manufacturing, Inc. All Rights Reserved.

Downloaded from www.Manualslib.com manuals search engine

https://truckmanualshub.com/

50" Mower Deck - Height Adjustment & Roller Bar

NOTE: Unless noted otherwise, use the standard hardware torque specification chart.

986020

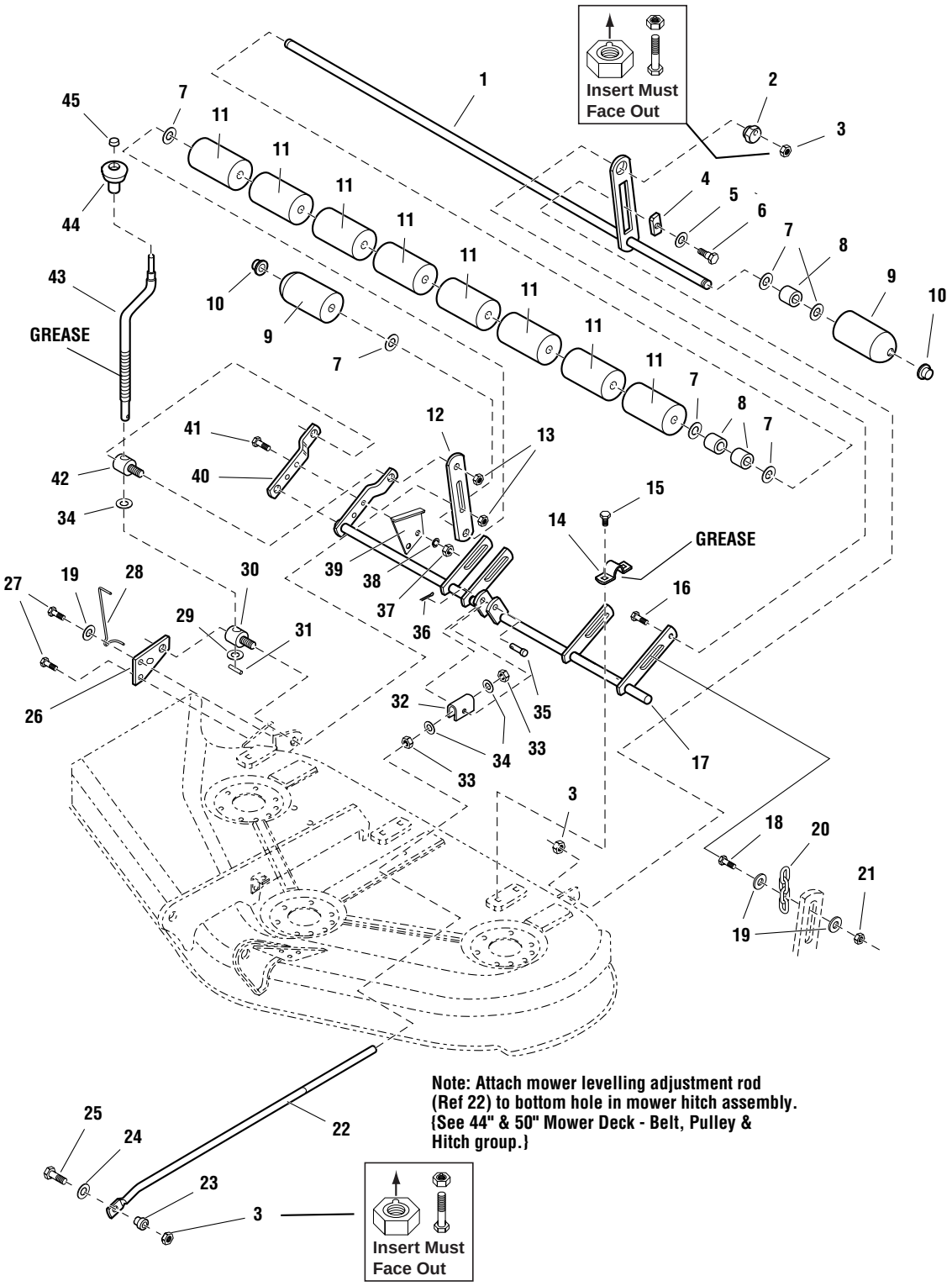

The above parts group applies to the following Mfg. Nos.:
1694372 - 50" Mower

© Copyright 2003 Simplicity Manufacturing, Inc. All Rights Reserved.

Downloaded from www.Manualslib.com manuals search engine

https://truckmanualshub.com/

50" Mower Deck - Height Adjustment & Roller Bar

REF NO.	PART NO.	QTY.	DESCRIPTION
41	1921977	2	CAPSCREW, Hex Head, 5/16-18 x 1-1/4
42	1704087	1	TRUNNION, Threaded
43	1719901	1	CRANK, Cutting Height
44	1714084	1	KNOB, Height Crank
45	1960093	1	PAL NUT

Footnotes

The above parts group applies to the following Mfg. Nos.:
1694372 - 50" Mower

© Copyright 2003 Simplicity Manufacturing, Inc. All Rights Reserved.

Downloaded from www.Manualslib.com manuals search engine

https://truckmanualshub.com/

Downloaded from www.Manualslib.com manuals search engine

https://truckmanualshub.com/

Hardware Identification & Torque Specifications

Common Hardware Types

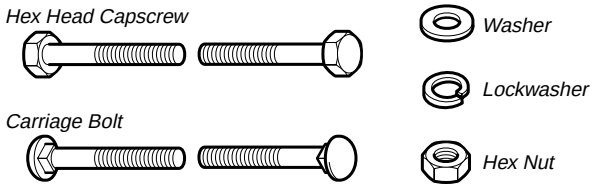

Standard Hardware Sizing

When a washer or nut is identified as **1/2"**, this is the *Nominal size*, meaning the *inside diameter* is 1/2 inch; if a second number is present it represent the *threads per inch*

When bolt or capscrew is identified as **1/2 - 16 x 2"**, this means the *Nominal size*, or *body diameter* is 1/2 inch; the second number represents the *threads per inch* (16 in this example, and the final number is the *body length* of the bolt or screw (in this example 2 inches long).

The guides and ruler furnished below are designed to help you select the appropriate hardware and tools.

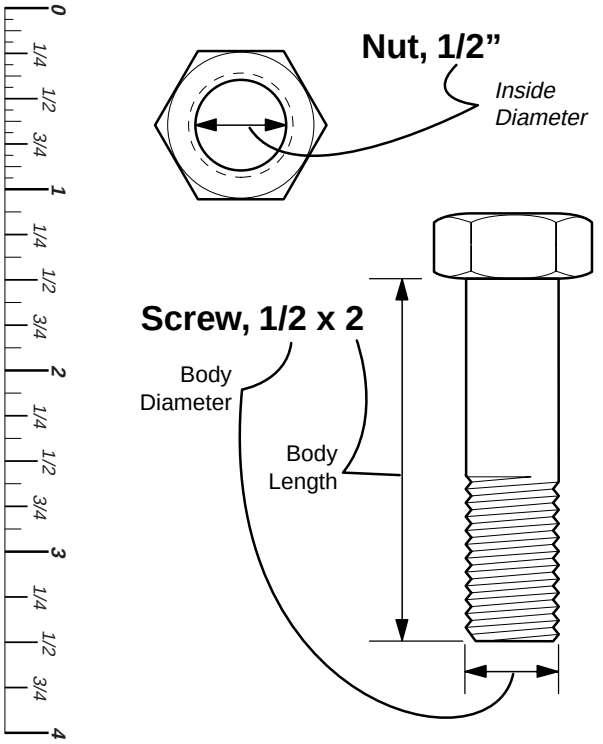

Torque Specification Chart

FOR STANDARD MACHINE HARDWARE (Tolerance ± 20%)

Hardware Grade	No Marks SAE Grade 2		SAE Grade 5		SAE Grade 8	
Size Of Hardware	*in/lbs* **ft/lbs**	Nm.	*in/lbs* **ft/lbs**	Nm.	**in/lbs** **ft/lbs**	Nm.
8-32	*19*	2.1	*30*	3.4	*41*	4.6
8-36	*20*	2.3	*31*	3.5	*43*	4.9
10-24	*27*	3.1	*43*	4.9	*60*	6.8
10-32	*31*	3.5	*49*	5.5	*68*	7.7
1/4-20	*66*	7.6	**8**	10.9	**12**	16.3
1/4-28	*76*	8.6	**10**	13.6	**14**	19.0
5/16-18	**11**	15.0	**17**	23.1	**25**	34.0
5/16-24	**12**	16.3	**19**	25.8	**27**	34.0
3/8-16	**20**	27.2	**30**	40.8	**45**	61.2
3/8-24	**23**	31.3	**35**	47.6	**50**	68.0
7/16-14	**30**	40.8	**50**	68.0	**70**	95.2
7/16-20	**35**	47.6	**55**	74.8	**80**	108.8
1/2-13	**50**	68.0	**75**	102.0	**110**	149.6
1/2-20	**55**	74.8	**90**	122.4	**120**	163.2
9/16-12	**65**	88.4	**110**	149.6	**150**	204.0
9/16-18	**75**	102.0	**120**	163.2	**170**	231.2
5/8-11	**90**	122.4	**150**	204.0	**220**	299.2
5/8-18	**100**	136	**180**	244.8	**240**	326.4
3/4-10	**160**	217.6	**260**	353.6	**386**	525.0
3/4-16	**180**	244.8	**300**	408.0	**420**	571.2
7/8-9	**140**	190.4	**400**	544.0	**600**	816.0
7/8-14	**155**	210.8	**440**	598.4	**660**	897.6
1-8	**220**	299.2	**580**	788.8	**900**	1,244.0
1-12	**240**	326.4	**640**	870.4	**1,000**	1,360.0

NOTES

1. These torque values are to be used for all hardware excluding: locknuts, self-tapping screws, thread forming screws, sheet metal screws and socket head setscrews.
2. Recommended seating torque values for locknuts:
   a. for prevailing torque locknuts - use 65% of grade 5 torques.
   b. for flange whizlock nuts and screws - use 135% of grade 5 torques.
3. Unless otherwise noted on assembly drawings, all torque values must meet this specification.

Wrench & Fastener Size Guide

1/4" Bolt or Nut
Wrench—7/16"

5/16" Bolt or Nut
Wrench—1/2"

3/8" Bolt or Nut
Wrench—9/16"

7/16" Bolt or Nut
Wrench (Bolt)—5/8"
Wrench (Nut)—11/16"

1/2" Bolt or Nut
Wrench—3/4"

Downloaded from www.Manualslib.com manuals search engine

https://truckmanualshub.com/

Simplicity®
MANUFACTURING, INC.
500 N. Spring Street / PO Box 997
Port Washington, WI 53074-0997 USA

www.simplicitymfg.com

© Copyright 2003 Simplicity Manufacturing, Inc.
All Rights Reserved. Printed In USA.

Downloaded from www.Manualslib.com manuals search engine