https://truckmanualshub.com/

MANITOU BF
BP 10249
44158 ANCENIS CEDEX - FRANCE
TEL: + 33 (0)2 40 09 10 11

YOUR DEALER

647382 EN (13/02/2015)

260 TJ
280 TJ

INSTRUCTIONS MANUAL

(ORIGINAL INSTRUCTIONS MANUAL)

THIS INSTRUCTIONS MANUAL MUST BE KEPT PERMANENTLY IN THE LIFT TRUCK
AND THE OPERATORS MUST HAVE READ AND FULLY UNDERSTOOD IT.

https://truckmanualshub.com/

Foreword

This instruction for use is to explain the how to operate the lifting platform and the maintenance that must be performed periodically to ensure that the platform remains in a completely safe and operational condition.

The platform has been designed and produced to enable you to perform your overhead work completely safely.

Before it was delivered, MANITOU and the dealer have carefully inspected the platform so that it comes to you in perfect working order.

647382 EN (01/02/2015)

https://truckmanualshub.com/

1 - INSTRUCTIONS AND SAFETY ADVICE

2 - DESCRIPTION

3 - MAINTENANCE

4 - ELECTRICITY

27/02/2012	1st PUBLICATION DATE
14/06/2012	Update (1-20; 1-21; 2-4; 2-6; 2-8; 2-12; 2-13; 2-14; 2-17; 3-6; 3-9; 4)
13/02/2015	Update EN280

THE TEXT AND THE ILLUSTRATIONS IN THIS DOCUMENT MAY NOT BE REPRODUCED,
EITHER IN WHOLE OR IN PART.

647382 EN (01/02/2015)

https://truckmanualshub.com/

260 TJ / 280 TJ

647382 EN (01/02/2015)

https://truckmanualshub.com/

1 - OPERATING AND SAFETY INSTRUCTIONS

https://truckmanualshub.com/

https://truckmanualshub.com/

TABLE OF CONTENTS

INSTRUCTIONS TO THE COMPANY MANAGER **1-4**

PREAMBLE 1-4

LE SITE 1-4

THE OPERATOR 1-4

THE PLATFORM 1-4

THE INSTRUCTIONS 1-5

THE MAINTENANCE 1-5

INSTRUCTIONS FOR THE OPERATOR **1-6**

PREAMBLE 1-6

GENERAL INSTRUCTIONS 1-6

DRIVING INSTRUCTIONS 1-8

INSTRUCTIONS FOR WELDING AND BLOW TORCH WORK ON THE EXTERNAL STRUCTURE 1-15

PLATFORM MAINTENANCE INSTRUCTIONS **1-16**

GENERAL INSTRUCTIONS 1-16

MAINTENANCE 1-16

LUBRICANT AND FUEL LEVELS 1-16

LEVEL OF ELECTROLYTE IN THE BATTERY 1-16

HYDRAULIC 1-17

ELECTRICITY 1-17

WELDING ON THE ACCESS PLATFORM 1-17

WASHING THE PLATFORM 1-17

IF THE PLATFORM IS NOT TO BE USED FOR A LONG TIME **1-18**

INTRODUCTION 1-18

PREPARING THE PLATFORM 1-18

PROTECTING THE I.C. ENGINE 1-18

CHARGING THE BATTERIES 1-19

PROTECTING THE PLATFORM 1-19

BRINGING THE PLATFORM BACK INTO SERVICE 1-19

SCRAPPING THE PLATFORM **1-20**

SAFETY DECALS **1-22**

647382 EN (01/02/2015)

https://truckmanualshub.com/

INSTRUCTIONS TO THE COMPANY MANAGER

PREAMBLE

WHENEVER YOU SEE THIS SYMBOL IT MEANS :

WARNING ! BE CAREFUL ! YOUR SAFETY OR THE SAFETY OF THE PLATFORM IS AT RISK.

THE SITE

- Good personal control of the lifting platform's operating area reduces the risk of accidents:
  - The floor must not be unnecessarily broken or cluttered,
  - No excessive slopes,
  - Controlled pedestrian traffic, etc.

THE OPERATOR

- Only qualified, authorized personnel can use the platform. This authorization is given in writing by the appropriate person in the establishment with respect to the use of platform and must be carried permanently by the operator.

On the basis of experience, there are a number of possible situations in which operating the platform is contra-indicated. Such foreseeable abnormal uses, the main ones being listed below, are strictly forbidden.
- The foreseeable abnormal behaviour resulting from ordinary neglect, but does not result from any wish to put the machinery to any improper use.
  The reflex reactions of a person in the event of a malfunction, incident, fault, etc. during operation of the platform.
- Behaviour resulting from application of the "principle of least action" when performing a task.
- For certain machines, the foreseeable behaviour of such persons as : apprentices, teenagers, handicapped persons, trainees tempted to drive a platform, operator tempted to operate a truck to win a bet, in competition or for their own personal experience.
- The person in charge of the equipment must take these criteria into account when assessing whether or not a person will make a suitable driver.

OBTAIN INFORMATION ON :
- How to behave when there is a fire.
- The location of the nearest first aid kit and fire extinguisher.
- The emergency telephone numbers for calling (the doctors, ambulance, hospital and fire brigade).

THE PLATFORM

A - THE PLATFORM'S SUITABILITY FOR US

- MANITOU has ensured that this platform is suitable for use under the standard operating conditions defined in this operator's manual, with an overload test coefficient of 1,25 and an operational test coefficient of 1,1, as stipulated in standardised norm EN 280 for MPLPs (Mobile Personnel Lifting Platforms).
  Before commissioning, the company manager must make sure that the platform is appropriate for the work to be done, and perform certain tests (in accordance with current legislation).

B - ADAPTATING THE PLATFORM TO THE USUAL ENVIRONMENTAL CONDITIONS

- In addition to series equipment mounted on your platform, many options are available, such as : flashing light, working headlight, etc.
  Contact your dealer.
- Take into account climatic and atmospheric conditions of the site of utilisation.
  - Protection against frost (see chapter 3 - MAINTENANCE, LUBRICANTS page).
  - Adaptation of lubricants (ask your dealer for information).
  - I.C. engine filtration (see chapter 3 - MAINTENANCE, FILTER ELEMENTS page).

https://truckmanualshub.com/

- The machines designed by MANITOU are designed to be used in the following temperature range:
  - Minimum temperature: -20°C
  - Maximum temperature: +45°C
- Special features are available, as an option, for particularly cold environments.

For operation under average climatic conditions, i.e. : between -15 °C and + 35 °C, correct levels of lubricants in all the circuits are checked in production. For operation under more severe climatic conditions, before starting up, it is necessary to drain all the circuits, then ensure correct levels of lubricants using lubricants properly suited to the relevant ambient temperatures. It is the same for the cooling liquid.

- A platform operating in an area without fire extinguishing equipment must be equipped with an individual extinguisher. There are solutions, consult your dealer.

Your platform is designed for outdoor use (see chapter: 2 - DESCRIPTION, CHARACTERISTICS pages) under normal atmospheric conditions and indoor use in suitably aerated and ventilated premises. It is prohibited to use the platform in areas where there is a risk of fire or which are potentially explosive (e.g. Refineries, fuel or gas depots, stores of inflammable products…). For use in these areas, specific equipment is available (ask your dealer for information).

C - Modifying the platform

- For your safety and that of others, you must not change the structure and settings of the various components used in your platform (hydraulic pressure, calibrating limiters, I.C. engine speed, addition of extra equipment, addition of counterweight, unapproved attachments, alarm systems, etc.) yourself. In this event, the manufacturer cannot be held responsible.
- Your lifting platform is delivered with standard wheels or all-terrain wheels. It is FORBIDDEN to switch from one type of wheels to another: RISK OF THE LIFTING PLATFORM BECOMING UNSTABLE.

The instructions

- The operator's manual must always be in good condition and kept in the place provided on the platform and in the language used by the operator.
- You must necessarily replace the instructions manual, as well as any plates or stickers, if they are no longer legible or are missing or damaged.

The maintenance

- Maintenance or repairs other than those detailed in the chapter 3 - MAINTENANCE must be carried out by qualified personnel (consult your dealer) and under the necessary safety conditions to maintain the health of the operator and any third party.

Your patform must be inspected periodically to ensure that it remains in compliance. The frequency of this inspection is defined by current legislation in the country in which the platform is use

- Example for France : The manager of the compagny using the platform must set up a maintenance book for each machine and keep up-to-date (Ministerial Order of 2nd March 2004).

https://truckmanualshub.com/

PREAMBLE

WHENEVER YOU SEE THIS SYMBOL IT MEANS :

WARNING ! BE CAREFUL ! YOUR SAFETY OR

THE SAFETY OF THE PLATFORM IS AT RISK.

The risk of accident while using, servicing or repairing your platform can be restricted if you follow the safety instructions and safety measures detailed in these instruction.

- Only the operations and manœuvres described in these operator's manual must be performed. The manufacturer cannot predict all possible risky situations. Consequently, the safety instructions given in the operator's manual and on the platform itself are not exhaustive.
- At any time, as an operator, you must envisage, within reason, the possible risk to yourself, to others or to the platform itself when you use it.

Failure to respect the safety and operating instructions, or the instructions for repairing or servicing your platform may lead to serious, even fatal accident.

GENERAL INSTRUCTIONS

A - operator's manual

- Carefully read and understand the operator's manual.
- The operator's manual must always be kept in the place provided for it on the platform and be written in the language used by the operator.
- Any operations or manoeuvres not described in the operator's manual must necessarily be forbidden right from the start.
- Follow the safety advice and the instructions on the platform.
- Ypu must necessarily replace the operator's manual, as well as any plates or stickers, if they are no longer legible or are damaged.
- A second operator must necessaily be present on the ground as a safety measure when using the platform.
- Familiarise yourself with the platform on the terrain it has to travel over.
- The machine must also be used in accordance with good engineering practice.
- Do not use the platform if the wind speed is over 45 km/h. The platform's arms must not be subjected to a lateral force of more than 40 kg (platforms for indoor use must not be used outside the building).

B - AUTHORIZATION FOR USE IN FRANCE
(OR SEE CURRENT LEGISLATION IN OTHER COUNTRIES)

- Only qualified, authorized personnel may use the platform. This authorization is given in writing by the appropriate person in the company, in charge of using the platform, and must be permanently carried by the operator.
- The operator is not competent to authorise the driving of the platform by another person.

https://truckmanualshub.com/

C - Maintenance

- The operator must immediately advise his superior if his platform is not in good working order or does not comply with the safety notice.
- The operator is prohibited from carrying out any repairs or adjustments himself, unless he has been trained for this purpose. He must keep the platform properly cleaned if this is among his responsibilities.
- The operator must carry out daily maintenance (see chapter : 3 - MAINTENANCE, A - DAILY pages).
- The operator must ensure tyres are adapted to the nature of the ground (see area of the contact surface of the tyres in the chapter : 2 - DESCRIPTION : CHARACTERISTICS pages). There are optional solutions, consult your dealer.

Do not use the platform if the tyres are damaged or excessively worn, because this could put your own safety or that of others at risk, or cause damage to the platformk itself.

In the case of electric platforms, the operator must ensure that:
- The batteries are not replaced with lighter ones (compromising stability).
- Safety goggles are always worn when charging the batteries.
- The batteries are not charged in an explosive environment.
- There is no smoking and no naked flame directed towards the batteries when they are being handled during removal, re-installation and checking the levels.

D - Modifying the platform

- For your safety and that of others, you must not change the structure and settings of the various components used in your platform yourself:
  - hydraulic pressure,
  - calibrating limiters,
  - I.C. engine speed,
  - addition of extra equipment,
  - addition of counterweight,,
  - unapproved attachments,
  - alarm systems, etc...
- In this event, the manufacturer cannot be held responsible.

Your lifting platform is delivered with standard wheels or all-terrain wheels. It is FORBIDDEN to switch from one type of wheels to another: RISK OF THE LIFTING PLATFORM BECOMING UNSTABLE.

E - IC platform axles

- Standard axle :

The chassis is rigid, so the platform can have a ground reach on only three wheels.

- Oscillating axle (if this option is available) :

An oscillating axle enables the platform, when in transport position, to have a ground reach on four wheels. When moving in working position over uneven terrain, the oscillating axle is locked (the chassis is rigid) so the platform can have a ground reach on only three wheels.

https://truckmanualshub.com/

DRIVING INSTRUCTIONS

A - BEFORE STARTING THE PLATFORM

- Ensure that the intermediate rail is fully in the locked position before operating the platform from the basket.
- If the platform is new, see the paragraph : before starting the platform for the first time in Chapter : 1 - safety advice and instructions.
- Carry out daily maintenance (see chapter 3 - MAINTENANCE, A - DAILY pages).
- Before starting the platform, check the levels :

• IC PLATFORMS :	• ELECTRIC PLATFORMS :
• IC engine oil	• Hydraulic reservoir oil
• Hydraulic reservoir oil	• Battery charge level
• Fuel	
• Coolant	

- The lifting platform must be in transport position (with the arms completely folded back or the scissors in the low position) before you enter it.
- Make sure the horn works.
- Check before you use the lifting platform that the access door is properly locked.

B - DRIVER'S OPERATING INSTRUCTIONS

- Whatever his experience, the operator is advised to familiarize himself with the position and operation of all the controls and instruments before operating the platform.

Wear suitable clothing for driving the platform, do not wear baggy clothes.

- Make sure you have the appropriate protective equipment for the job to be done.
- Prolonged exposure to high noise levels may cause hearing problems. It is recommended to wear ear muffs to protect against excessive noise.
- Always pay attention when using the platform. Do not listen to the radio or music using headphones or earphones
- For increased comfort, adopt the correct position in the driver's cab.
- The operator must always be in his normal position in the driver's seat : extending arms or legs (or, in general, any part of the body), outside the basket is forbidden.
- Safety helmets must be worn.
- MANITOU recommends a safety harness in the operator's size be provided when the platform is in use (for the harness attachement in the basket , see chapter 2 - DESCRIPTION, CHECKING AND CONTROL INSTRUMENTS pages).
- The control units must never in any event be used for any other than their intended purposes (e.g. climbing onto or down from the platform, coat-rack, etc.).
- In the case of scissors-type platforms, it is forbidden to use the platform without the guardrails in place.
- Suspending a load under the basket or on any part of the lifting apparatus is strictly forbidden.
- The operator must not climb into or get down from the basket unless it is at ground level (with the lifting system folded).
- If the nacelle is equipped with a step, the basket must be situated directly below it before mounting or dismounting.
- The platform must not be fitted with any accessory increasing the machine's wind profile.
- Do not use a ladder or any improvised constructions in the basket to reach greater heights.
- Do not climb on the sides of the basket to reach greater heights.
- Never use the lifting platform with wet or greasy hands and shoes.

C - ENVIRONMENT

- Comply with site safety regulations.
- The platform can be manoeuvred from the ground: ensure that you forbid access.
- If you have to use the platform in a dark area or at night, make sure it is equipped with working lights.
- The platforms may not be used as cranes or elevators for the permanent transport of people or materials, nor as jacks or supports.
- When operating, ensure that there is no one or anything impeding the platform's progress ans operation.
- When raising the platform, ensure that no one or anything inpedes the platform's operation and do not perform any inappropriate manœuvres.

https://truckmanualshub.com/

- Do not allow anybody to come near the working area of the platform or pass beneath an elevated load. To do this, mark your operating area with warning signs.
- Travelling on a longitudinal slope :
  - Ensure that you adapt the platform's travelling speed by controlling the speed with the travelling manipulator.
- Take into account the platform's dimensions and its load before trying to negotiate a narrow or low passageway.
- Never move onto a loading platform without having first checked :
  - That it is suitably positioned and made fast.
  - That the unit to which it is connected (wagon, lorry, etc.) will not shift.
  - That this platform is prescribed for the size and the total weight of the platform.
  - That the slope is not greater than the platform's maximum authorised slope.
- Never move onto a foot bridge, floor or freight lift, without being certain that they are prescribed for the weight and size of the platform to be loaded and without having checked that they are in sound working order.
- Be careful in the area of loading bays, trenches, scaffolding, soft land and manholes.
- Ensure that the ground under the wheels and/or stabilisers is firm and stable before raising the basket.
- Do not attempt any operations outside the plarform's capabilities.
- Ensure that the materials on the platform (pipes, cables, containers, etc ...) cannot slip off and fall. Do not heap up these materials to the pint where you have to step over them.

If the basket must remain stationary over a structure for a long period, there is a risk that the basket will rest on this structure because of the oil cooling in the cylinders or a minor leak in the cylinder locking system. To eliminate this risk :
- Regularly check the distance between the basket and the structure and re-adjust if necessary.
- If possible use the platform at an oil temperature as close as possible to ambient temperature.

- In the case of work near aerial lines, ensure that the safety distance is sufficient between the working area of the platform and the aerial line.

You must consult your local electrical agency. You could be electrocuted or seriously injured if you operate or park the platform too close to power cables.

If the platform comes into contact with electric wires, press the Emergency Stop button. If you can, jump from the basket without simultaneously being in contact with the basket and the ground.
If not, call for help, wam people not to touch the basket and to switch off the power supply to the wires or have it switched off.

- It is forbidden to use the lifting platform close to electrical power lines; observe the safety distances.

NOMINAL VOLTAGE IN VOLTS	DISTANCE ABOVE THE GROUND OR THE FLOOR IN METRES
50 < U < 1000	2,30 M
1000 < U < 30000	2,50 M
30000 < U < 45000	2,60 M
45000 < U < 63000	2,80 M
63000 < U < 90000	3,00 M
90000 < U < 150000	3,40 M
150000 < U < 225000	4,00 M
225000 < U < 400000	5,30 M
400000 < U < 750000	7,90 M

https://truckmanualshub.com/

If the wind is in excess of 45Km/h, do not perform any movements liable to endanger the lifting platform's stability.

- To recognise this speed by eye, please refer to the empirical wind evaluation scale below:

BEAUFORT scale (wind speed at a height of 10m over flat terrain)						
Degree	Type of wind	Speed (knots)	Speed (km/h)	Speed (m/s)	Ground effects	Sea conditions
0	Calm	0 - 1	0 - 1	< 0,3	Smoke rises vertically.	The sea is like a mirror.
1	Very light breeze	1 - 3	1 - 5	0,3 - 1,5	The smoke drift indicates the wind direction.	Some wavelets, like fish scales, but no foam.
2	Light breeze	4 - 6	6 - 11	1,6 - 3,3	Wind felt on exposed skin, leaves rustle.	Small but noticeable wavelets.
3	Gentle breeze	7 - 10	12 - 19	3,4 - 5,4	Leaves and small twigs constantly moving.	Very small waves, crests beginning to break.
4	Moderate breeze	11 - 16	20 - 28	5,5 - 7,9	The wind raises dust and scraps of paper, it moves small branches.	Small waves stretching, many sheeps.
5	Fresh breeze	17 - 21	29 - 38	8 - 10,7	Small trees in leaf start to sway.	Wavelets form on stretches of water, moderate waves of some length.
6	Strong breeze	22 - 27	39 - 49	10,8 - 13,8	Large branches are moved, overhead wires whistle, umbrella use becomes difficult.	Waves form with white foam crests and airborne spray.
7	High wind	28 - 33	50 - 61	13,9 - 17,1	Whole trees are moving, effort required to walk against the wind.	The sea heaps up; some foam from breaking waves is blown into streaks in the wind direction.
8	Gale	34 - 40	62 - 74	17,2 - 20,7	The wind breaks off twigs, walking against the wind is very difficult.	Moderate height longer waves with breaking crests forming spindrift.
9	Strong gale	41 - 47	75 - 88	20,8 - 24,4	The wind damages roofs (chimneys, tiles, etc.).	Large waves, dense spindrift wrenched from the waves, airborne spray reducing visibility.
10	Storm	48 - 55	89 - 102	24,5 - 28,4	Rarely seen on land, trees uprooted, dwellings incur significant damage.	Very large waves, foam forming large amounts of airborne spray, reducing visibility.
11	Violent storm	56 - 63	103 - 117	28,5 - 32,6	Very rare, extensive damage.	Waves of exceptional height capable of sinking medium-sized ships, reduced visibility.
12	Hurricane	64 +	118 +	32,7 +	Disastrous damage.	Sea completely white, air full of spray and foam, severely reduced visibility.

https://truckmanualshub.com/

D - Visibility

- Maintain permanently good visibility throughout the route. To increase your visibility, you can move forwards with the pendular arm slightly raised (pay attention to the risk of falls in the basket from knocking into a low doorway, overhead electric wires, travelling cranes, highway bridges, tracks or any obstacle in the area in front of the platform). In reverse, look directly behind you. In any case, avoid reversing over long distances.
- If visibility of your road is inadequate, ask someone to help, standing outside the area in which the platform will be moving, and make sure you always have a good view of this person.

https://truckmanualshub.com/

PLATFORMS WITH IC ENGINES

SAFETY NOTICE

- Do not pull or push the lifting platform to start it. This type of manoeuvre would cause severe damage to the transmission. In cases of necessity, towing requires that the lifting platform be placed in freewheeling mode (See chapter 3 - MAINTENANCE).
- If using an emergency battery for start-up, use a battery with the same characteristics and respect battery polarity when connecting it. Connect at first the positive terminals before the negative terminals.

Failure to respect polarity between batteries can cause serious damage to the electrical circuit. The electrolyte in the battery may produce an explosive gas. Avoid flames and generation of sparks close to the batteries.
Never disconnect a battery while it is charging.

INSTRUCTIONS

- Check the closing and locking of the hood(s).
- Turn the ignition key to notch I to switch on the electrical power, which automatically starts the pre-heating system (all the bars must be displayed), the message “OK” is displayed.
- Check that everything is operating correctly by ensuring that no fault pages are displayed on the screen and no warning about the fuel level
  (a pump icon is present on the screen)
  (see chapter 2 - DESCRIPTION, CHECKING AND CONTROL INSTRUMENTS pages).
- To start, turn the ignition switch to position I.
- Press the starter button.
- Do not engage the starter motor for more than 15 seconds and carry out the preheating for 10 seconds between unsuccessful attempts.
- Check all control instruments when the I.C. engine is warm and at regular intervals during use, so as to quickly detect any faults and to be able to correct them without any delay.
- If any faults are displayed on the screen, stop the engine and immediately take the necessary measures.

ELECTRIC PLATFORMS

SAFETY NOTICÉ

- Do not use the platform if the battery is discharged to the point that movements are slowed down. In certain cases, the platform may stop (see chapter 3 - MAINTENANCE : EVERY DAY OR EVERY 10 HOURS FOR OPERATION pages, for the minimum permissible charge level).

INSTRUCTIONS

- Set the battery cut-out to the ON position.
- Check the closing and locking of the hood(s).
- Turn the ignition key to the basket position.
- Check that everything is operating correctly by ensuring that no error messages are displayed on the screen and that the machine maintenance light is not flashing (see chapter 2 - DESCRIPTION, CHECKING AND CONTROL INSTRUMENTS pages).

  NB: For machines not fitted with a display or a maintenance warning light, faults can be identified from the light directly on the variable speed drive unit (to access: open the cowl on the control size, remove the casing from the variable speed drive and see whether the light is flashing).

- If any error messages are constantly displayed or the machine maintenance light is flashing, return the key to the neutral position.
- Set the battery cut-off to the OFFposition.
- Immediately take the necessary measures.

https://truckmanualshub.com/

SAFETY NOTICE

Operators should be aware of the risks connected with using the platform, notably:
- Risk of losing control.
- Risk of losing lateral and frontal stability of the platform.

The operator must remain in control of the platform.

- Do not carry out operations which exceed the capacities of your platform.
- Familiarise yourself with the platform on the terrain where it will be used.
- Ensure that the brakes work efficiently when stopping a travelling movement, taking into account the braking distances.
- Drive smoothly at an appropriate speed for the operating conditions (land configuration, load in the basket).
- take extreme care if manoeuvring the platform with the basket in the high position. Ensure you have adequate visibility.
- Take bends slowly.
- In all circumstances make sure you are in control of your speed.
- Travel slowly on damp, slippery or uneven terrain or on truck ramps.
- Always remember that the hydraulic form of steering is very sensitive to movements.
- Never leave the I.C. engine on when the platform is unattended.
- Look where you are going and always make sure you have good visibility along the route.
- Drive round obstacles.
- Never drive on the edge of a ditch or steep slope.
- Whatever your travelling speed, you must reduce the speed as much as possible before stopping.
- The lifting platform must work in an obstacle-free area, where there is no danger descending to the ground.
- The operator using the lifting platform must be assisted by an appropriately instructed person on the ground.
- Comply with the limits shown on the lifting platform's load graph.

INSTRUCTIONS

- When moving the platform a long distance, always travel with the arms folded or the scissors in the low position.
- Engage the appropriate gear (see chapter 2 - DESCRIPTION, CHECKING AND CONTROL INSTRUMENTS pages).

https://truckmanualshub.com/

G - Stopping the platform

SAFETY NOTICE

- Never leave the ignition key in the platform during the operator's absence.
- Make sure that the platform is not stopped in any position that will interfere with the traffic flow and at less than one meter from the track of a railway.
- In the event of prolonged parking on a site, protect the platform from bad weather, particularly from frost (check the level of antifreeze), close and lock all the platform accesses (cowls…).
- Park the lifting platform on a flat surface or on a slight slope of less than 10%.

INSTRUCTIONS

PLATFORMS WITH IC ENGINES

- Before stopping the platform after a long working period, leave the I.C. engine idling for a few moments, to allow the coolant liquid and oil to lower the temperature of the I.C. engine and transmission.

Do not forget this precaution, in the event of frequent stops or warm stalling of the I.C. engine, or else the temperature of certain parts will rise significantly due to the stopping of the cooling system, with the risk of badly damaging such parts.

- Stop the I.C. engine with the ignition switch.
- Remove the ignition key.
- Check that all the accesses on the platform are closed and locked (cowls…).

ELECTRIC PLATFORMS

- Remove the ground/platform control selection key.
- Check that all the accesses on the platform are closed and locked (cowls…).
- Set the battery cut-out to the OFF position (ELECTRIC PLATFORM).

https://truckmanualshub.com/

INSTRUCTIONS FOR WELDING AND BLOW TORCH WORK ON THE EXTERNAL STRUCTURE

Ensure that there are no hydraulic or electrolyte leaks on the platform.

When welding, work in the opposite direction from the control console to avoid sparks damaging it .

- Any welding and cutting (blow torch) work from the basket on a building's metallic structures requires the following precautions to be taken:

A - WITH ELECTRIC WELDING EQUIPMENT

- It is essential that the machine has a discharge braid connecting the platform's chassis to the ground.
- It is also essential that the external structure to be welded is connected to the earth. If the above conditions are observed, the platform can, in this case, be in contact with the structure or the elements to be welded without damaging the electronic components.
- The power supply to the welding equipment must be via an earthed socked and any extension required just also be earthed.
- In all cases, ensure that there are no electrical arcs in the basket or on the platform (contact between the brazing rod or the torch and the welding equipment's earth). To ensure this, at any time the welding equipment's earth must not be positioned on the platform's basket but instead only as close as possible to the element to be welded.
- Switch off the welding equipment before disconnecting the earth clamp from the element or elements to be welded.

B - WITH A BLOW TORCH

- Attach the blow torch's bottles to the basket's handrails.
- instructions for welding and blow torch work on the external structure
- Do not set the blow torch down on the lip of the basket while it is still operating or point it towards the control console or its power cables.

https://truckmanualshub.com/

GENERAL INSTRUCTIONS

- Ensure the area is sufficiently ventilated before starting the platform.
- Wear clothes suitable for the maintenance of the platform, avoid wearing jewellery and loose clothes. Tie and protect your hair, if necessary.
- Stop the I.C. engine before conducting any work on the platform, remove the ignition key and disconnect the “Minus” battery terminal.
- Set the battery cut-out to the OFF position (ELECTRIC PLATFORM).
- Read the operator’s manual carefully.
- Carry out all repairs immediately, even if the repairs concerned are minor.
- Repair all leaks immediately, even if the leak concerned is minor.
- Make sure that the disposal of process materials and of spare parts is carried out in total safety and in a ecological way.
- Be careful of the risk of burning and splashing (exhaust, radiator, I.C. engine, etc.).

MAINTENANCE

- Perform the periodic service (see : 3 - MAINTENANCE) to keep your platform in good working conditions. Failure to perform the periodic service may cancel the contractual guarantee.

MAINTENANCE LOG

- The maintenance work performed following the recommendations in Part 3 - MAINTENANCE and the other inspection, servicing, repair and modification work performed on the lifting platform must be recorded in a maintenance log. A note must be made, for each operation, of the date of the work, the names of the persons or companies that have performed them, the nature of the ’operation and, where applicable, the maintenance intervals. When components in the lifting platform have to be replaced, the components’ references must be noted.

LUBRICANT AND FUEL LEVELS

- Use the recommended lubricants (never use contaminated lubricants).
- Do not fill the fuel tank when the I.C. engine is running.
- Only fill up the fuel tank in areas specified for this purpose.
- Do not fill the fuel tank to the maximum level.
- Do not smoke or approach the platform with a flame, when the fuel tank is open or is being filled.

LEVEL OF ELECTROLYTE IN THE BATTERY

- Check the level of the battery or batteries.

When doing this, ensure you take all the safety precautions (See : 3 - MAINTENANCE).

https://truckmanualshub.com/

HYDRAULIC

- Make any repairs and fix any leaks, including minor ones, immediately.
- Do not attempt to loosen unions, hoses or any hydraulic component with the circuit under pressure.

BALANCING VALVE : It is dangerous to change the setting and remove the balancing valves or safety valves which may be fitted to your platform cylinders. These operations must only be performed by approved personnel (consult your dealer).

Ensure that all consumables and replacement parts are disposed of safety, in an environmentally friendly manner.

The HYDRAULIC ACCUMULATORS that can be fitted on your lifting platform are pressurised components; removal of these components and their hoses can be a dangerous operation. It should only be performed by accredited personnel (please contact your dealer).

ELECTRICITY

- Do not drop metallic items on the battery (between the “Plus” and “Minus terminals”).
- Disconnect the battery or batteries before working on the electrical circuit.
- The electrical box must only be opened by authorized personnel.

WELDING ON THE ACCESS PLATFORM

- Disconnect the battery or batteries before welding on the platform.
- When carrying out electric welding work on the platform, connect the negative cable from the equipment directly to the part being welded, so as to avoid high tension current passing through the alternator or the live ring.
- If the platform is equipped with an electronic control unit, disconnect this before starting to weld, to avoid the risk of causing irreparable damage to electronic components.

Welding operations on the structure for maintenance or repair operations must only be performed by MANITOU-certified personnel.

WASHING THE PLATFORM

- Clean the platform or at least the area concerned before any intervention.
- Remember to close and lock all accesses to the platform (cowls…).
- When cleaning with a pressure washer, avoid the articulation joints, and the electrical components and connections.
- If necessary, protect components likely to be damaged, and in particular the electrical components (variable speed drive, charger) and connections and the injection pump from penetration by water, steam or cleaning products.
- Dry the electrical components.
- Clean the platform of any fuel, oil or grease trace.
- Grease the shafts.

FOR ANY INTERVENTION OTHER THAN REGULAR MAINTENANCE,
CONSULT YOUR DEALER.

https://truckmanualshub.com/

IF THE PLATFORM IS NOT TO BE USED FOR A LONG TIME

INTRODUCTION

The following recommendations are intended to prevent the platform from being damaged when it is withdrawn from service for an extended period.
For these operations, we recommend the use of a MANITOU protective product, reference 603726.
Instructions for using the product are given on the packaging.

Procedures to follow if the platform is not to be used for a long time and for starting it up again afterwards must be performed by your dealership.

PREPARING THE PLATFORM

- Clean the platform thoroughly.
- Check and repair any leakage of fuel, oil, water or air.
- Replace or repair any worn or damaged parts.
- Wash the painted surfaces of the platform in clear and cold water and wipe them.
- Touch up the paintwork if necessary.
- Shut down the platform (see vacuous and in load DRIVING INSTRUCTIONS).
- Make sure the cylinder rods are all in retracted position.
- Release the pressure in the hydraulic circuits.

PROTECTING THE I.C. ENGINE

- Fill the tank with fuel (see : 3 - MAINTENANCE).
- Empty and replace the cooling liquid (see : 3 - MAINTENANCE).
- Leave the I.C. engine running at idling speed for a few minutes, then switch off.
- Replace the I.C. engine oil and oil filter (see : 3 - MAINTENANCE).
- Add the protective product to the engine oil.
- Run the I.C. engine for a short time so that the oil and cooling liquid circulate inside.
- Disconnect the battery and store it in a safe place away from the cold, after charging it to a maximum.
- Remove the injectors and spray the protective product into each cylinder for two seconds with the piston in low neutral position.
- Turn the crankshaft once slowly and refit the injectors (see I.C. engine REPAIR MANUAL).
- Remove the intake hose from the manifold or turbocharger and spray the protective product into the manifold or turbocharger.
- Cap the intake manifold hole with waterproof adhesive tape.
- Remove the exhaust pipe and spray the protective product into the exhaust manifold.
- Refit the exhaust pipe and block the outlet with waterproof adhesive tape.

NB : The spray time is noted on the product packaging.

- Open the filler plug, spray the protective product around the rocker arm shaft and refit the filler plug.
- Cap the fuel tank using waterproof adhesive tape.
- Remove the drive belts and store them in a safe place.
- Disconnect the engine cut-off solenoid on the injection pump and carefully insulate the connection.

https://truckmanualshub.com/

CHARGING THE BATTERIES

- In the case of electric platforms, in order to preserve the batteries'life and their capacity, check them periodically and keep the charge level constant (see : 3 - MAINTENANCE).

PROTECTING THE PLATFORM

- Protect cylinder rods which will not be retracted, from corrosion.
- Wrap the tyres.
  NB : If the platform is to be stored outdoors, cover it with a waterproof tarpaulin.

BRINGING THE PLATFORM BACK INTO SERVICE

- Remove the waterproof adhesive tape from all the holes.
- Refit the intake hose.
- Reconnect the engine cut-off solenoid.
- Refit and reconnect the battery.
- Remove the protection from the cylinder rods.
- Perform the daily service (see : 3 - MAINTENANCE
- Empty and replace the fuel and replace the fuel filter (see : 3 - MAINTENANCE).
- Refit and set the tension in the drive belts (see : 3 - MAINTENANCE).
- Turn the I.C. engine using the starter, to allow the oil pressure to rise.
- Lubricate the platform completely (see : 3 - MAINTENANCE, MAINTENANCE TABLE).

Make sure the area is adequately ventilated before starting up the platform.

- Start up the platform, following the safety instructions and regulations (see DRIVING INSTRUCTIONS).
- Carry out all the lifting system's hydraulic movements right up to the limit switches for each cilinder.

https://truckmanualshub.com/

SCRAPPING THE PLATFORM

MANITOU complies with the regulations issued under the directive 2000/53/CE relating to the end of the life of the platform.
This platform does not contain any substance or material forbidden by the directive 2000/53/CE.

NOTE: Before scrapping the nacelle, consult your dealer.

RECYCLING OF MATERIALS

METALS
- These are 100% recoverable and recyclable.

PLASTIC MATERIALS
- The plastic parts are marked, in accordance with the regulations in force.
- To facilitate the recycling process, the range of materials used has been limited.
- The majority of the plastic materials are made up of thermoplastics which are easily recyclable by melting, granulating or grinding.

RUBBERS
- The tyres and seals can be ground to be used in the manufacture of cement or to create reusable granules.

LENSES
- These can be removed and collected for processing by glass manufacturers.

ENVIRONMENTAL PROTECTION

- If you entrust the maintenance of your platform to the MANITOU network, the risk of pollution is limited and the contribution to the protection of the environment is respected.

WORN OR DAMAGED PARTS
- Do not discard parts into the environment.
- MANITOU and its network take an approach that protects the environment through recycling.

WASTE OIL
- The MANITOU ensures that it is collected and treated.
- By entrusting them with your oil changes, the risk of pollution is limited.

WASTE BATTERIES
- Do not throw away any batteries, they contain metals that are harmful to the environment.
- Bring them to the MANITOU network or any other approved collection point.

NOTE: MANITOU's objective is to manufacture nacelle with the best performance and limit polluting emissions.

https://truckmanualshub.com/

https://truckmanualshub.com/

SAFETY LABELS 260 ATJ - 280 TJ

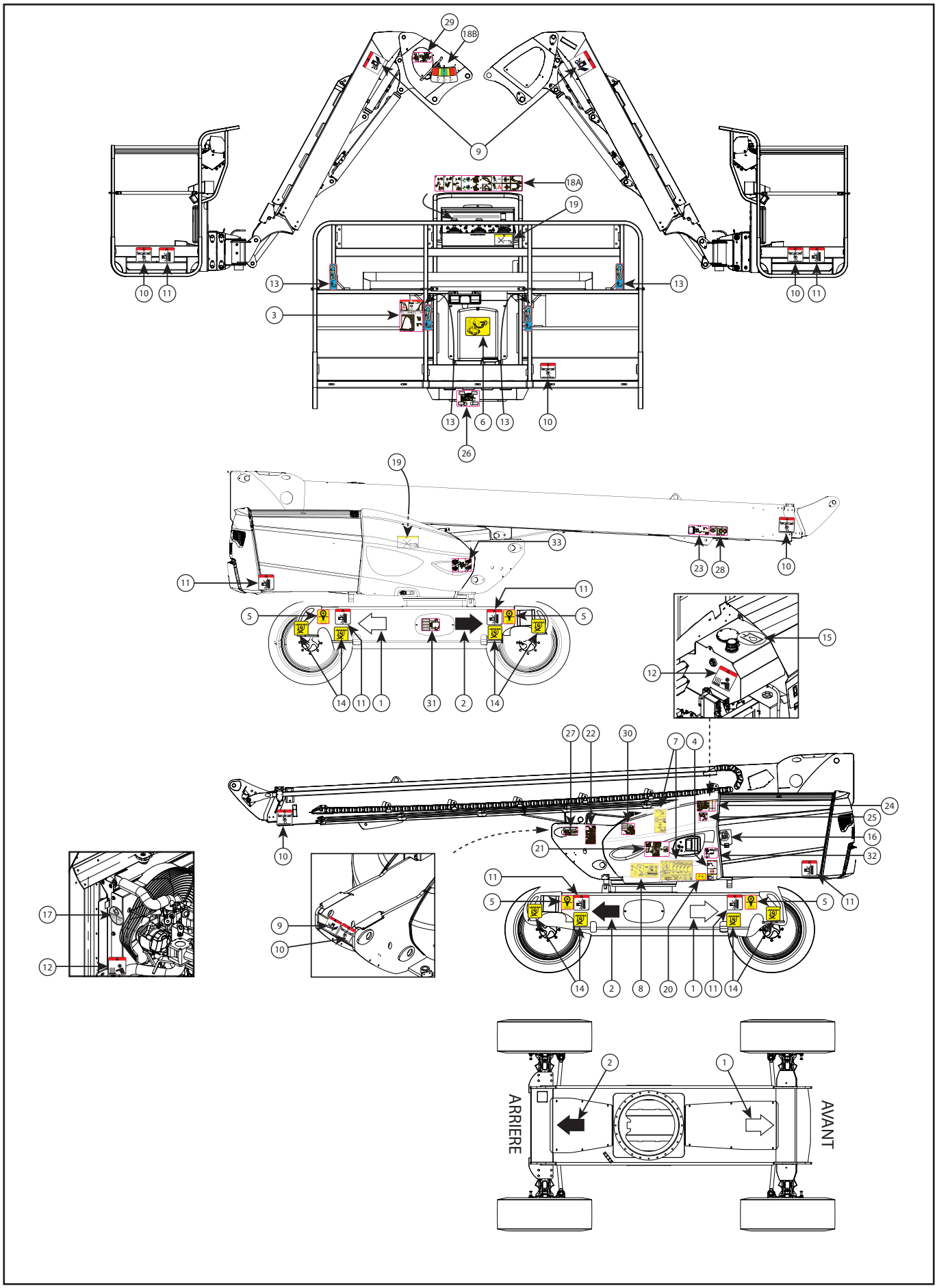

647382 EN (01/02/2015)

https://truckmanualshub.com/

1 - White arrow	(Ref: 833 553)	1-22
2 - Black arrow	(Ref: 833 554)	1-22
3 - Basket instructions / load capacity	(Ref: 833 551 & 525 14 665)	1-22
4a - Safety instructions	(Ref: 685 608)	1-23
4b - Towing	(Ref: 685 608)	1-23
4c - Washing recommendations	(Ref: 598 892)	1-23
5 - Wheel load	(Ref: 833 552 & 525 23 351)	1-23
6 - Location of the platform key	(Ref: 598 897)	1-24
7 - Manual control procedure	(Ref: 833 547 & 833 548)	1-24
8 - Emergency pump	(Ref: 833 549)	1-24
9 - Risk of being crushed	(Ref: 676 988)	1-25
10 - Danger keep away	(Ref: 679 450)	1-25
11 - Danger risk of crushing	(Ref: 679 452)	1-25
12 - Risk of burns	(Ref: 683 112)	1-25
13 - Safety attachments	(Ref: 684 503)	1-26
14 - Tie-down hook	(Ref: 833 041)	1-26
15 - Hydraulic oil	(Ref: 597 652)	1-26
16 - Diesel	(Ref: 683 437)	1-26
17 - Anti-freeze	(Ref: 597 649)	1-27
18-a XY Drivenable Pendular arm	(Ref: 833 675)	1-27
18-b Pendular arm Angle	(Ref: 833 523)	1-28

https://truckmanualshub.com/

19 - **WASHING RECOMMENDATIONS**	**(REF: 313 672)**	1-29
20 - **B**ATTERY LOCATION	**(REF: 525 09 705)**	1-29
21 - EMERGENCY STOP LOCATION	**(REF: 834 644)**	1-30
22 - LOAD CARRIER LOADING	**(REF: 833 703 & 525 15 335)**	1-30
23 - CABLES SETTING	**(REF: 833 559)**	1-30
24 - SENSORS AND COILS	**(REF: 833 687)**	1-31
25 - TURRET ROTATION SENSORS	**(REF: 833 688)**	1-31
26 - OVERLOAD SENSORS	**(REF: 833 694 & 525 23 374)**	1-31
27 - ANGLE SENSORS	**(REF: 833 696)**	1-32
28 - ABACUS SENSORS	**(REF: 833 697 & 525 23 378)**	1-32
29 - PENDULAR ARM BLOCK COILS	**(REF: 834 211)**	1-32
30 - TURRET BLOCK COILS	**(REF: 833 700)**	1-33
31 - BRAKE BLOCK COILS	**(REF: 833 702)**	1-33
32 - POWER FUSES	**(REF: 833 705)**	1-33
33- POINT OF CENTRALIZED GREASING	**(REF: 834 206)**	1-33

https://truckmanualshub.com/

Meanings

1 - White arrow

This indicates the translation direction when moving forward.

Identify the direction of forward travel by looking at the arrows on the chassis and those on the basket control console.

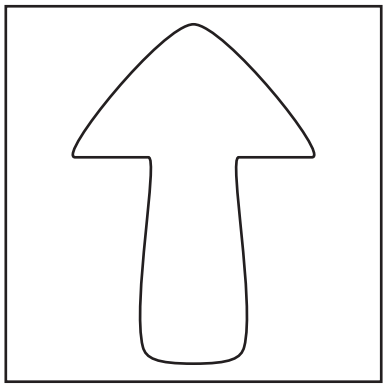

2 - Black arrow

This indicates the translation direction when reversing.

Identify the direction of forward travel by looking at the arrows on the chassis and those on the basket control console.

3 - Basket instructions and load capacity

This describes several points:
- The platform's capacity in indoor and outdoor use.
- The risks of electric shocks.
- An invitation to check the instructions for more details on the safety instructions.

NOTE: The capacities are individual to each platform; please refer to this sticker for your own machine.

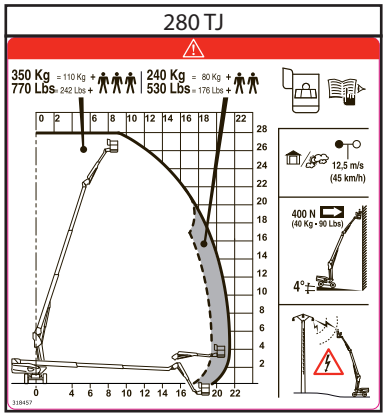

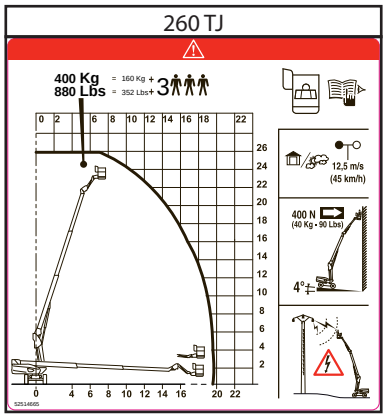

https://truckmanualshub.com/

4A - Safety advice

Read and take note of the operating instructions and safety measures before starting the lifting platform.

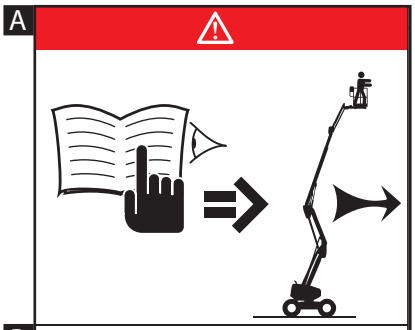

4B - Towing

This sticker states that the machine must not be towed if it breaks down.

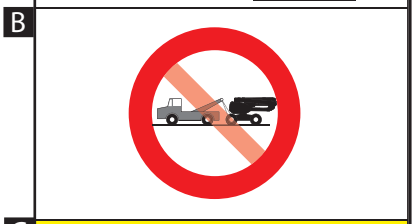

4C - Washing recommendations

It is strictly forbidden to use a pressure washer to clean the control knobs and the electrical components.

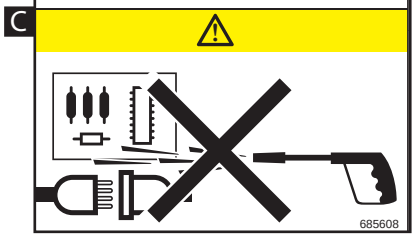

5 - Wheel load

This shows the maximum load that a wheel may exert on the ground (see 2 - DESCRIPTION: CHARACTERISTICS for the value).

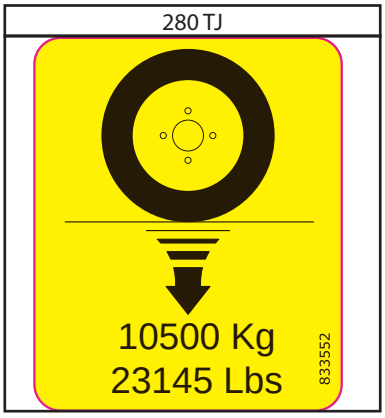

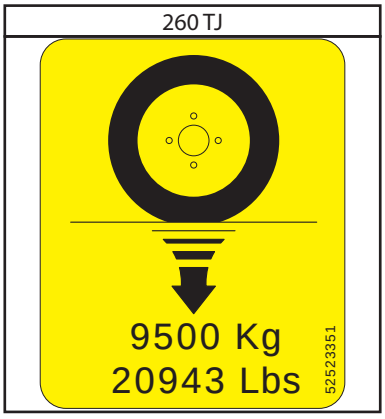

https://truckmanualshub.com/

6 - Location of the platform key

The duplicate platform keys (ignition, control selection, cover-opening keys...) are stored in this location specially provided.

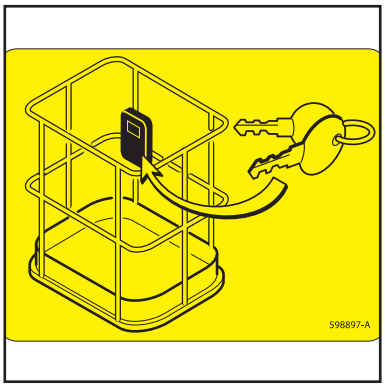

7 - Manual control procedure

This describes the procedure for performing movements with the emergency pump and the manual controls when an accident or breakdown occurs that makes the electrical control box inoperative.
(see the description in SECTION 2).

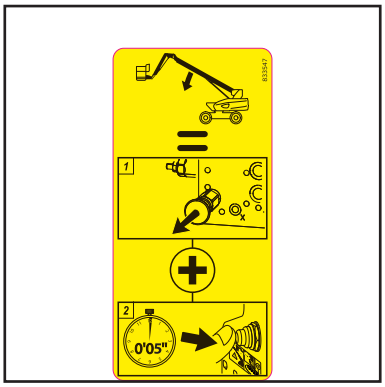

8 - Emergency pump

The emergency pump must only be used in the event of a problem or breakdown occurring. It must not be used for longer than 4 minutes in every 10-minute period.

https://truckmanualshub.com/

9 - Risk of being crushed

It is strictly forbidden to insert your fingers, or any other part of your body, in the lifting structure's components (arms, pendular arm, etc.); there is a risk of being crushed.

10 - Danger, keep away

It is strictly forbidden to walk under or park under the structure (arms, jib-mounted platform, basket...) and in the lifting platform's operating area.

11 - Danger of being crushed

It is strictly forbidden to park in this area when the lifting platform is moving (translation, rotation, etc.). The components to which the stickers are attached could hit you; there is a risk of your being crushed.

12 - Risk of burns

This sticker indicates that there is a significant risk of your being burnt in this region (engine silencer, IC engine, etc.).

https://truckmanualshub.com/

13- Safety attachments

This sticker shows where the safety harness should be attached and the number of people that can use it.

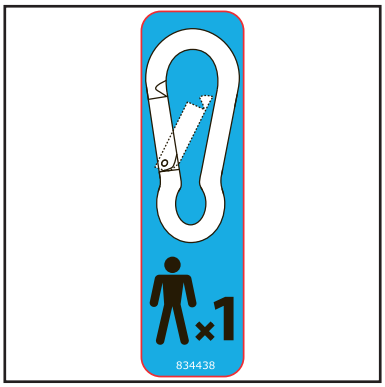

14 - Tie-down hook

This sticker shows the location of the anchoring points for tying the platform on a lorry bed. (see 3 – OCCASIONAL MAINTENANCE).

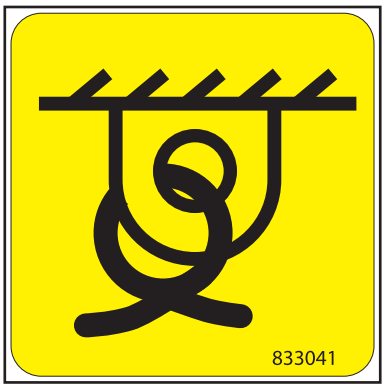

15 - Hydraulic oil

This indicates that this reservoir is designed only to hold hydraulic oil.

NB: see MAINTENANCE: LUBRICANTS

16 - Diesel

This indicates that this reservoir is designed only to hold fuel for diesel vehicles.

647382 EN (01/02/2015)

https://truckmanualshub.com/

17 - Anti-freeze

This sticker indicates that there is anti-freeze in the engine.
When protection is provided by anti-freeze with properties differing from the original, the -30°or - 40°C box must be ticked.

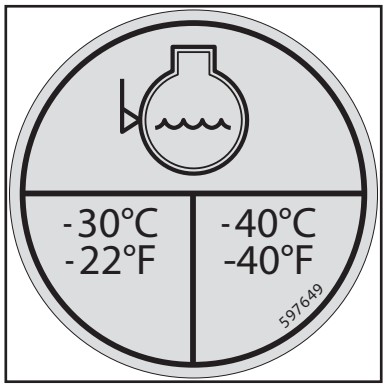

18 - A XY drivenable Pendular arm

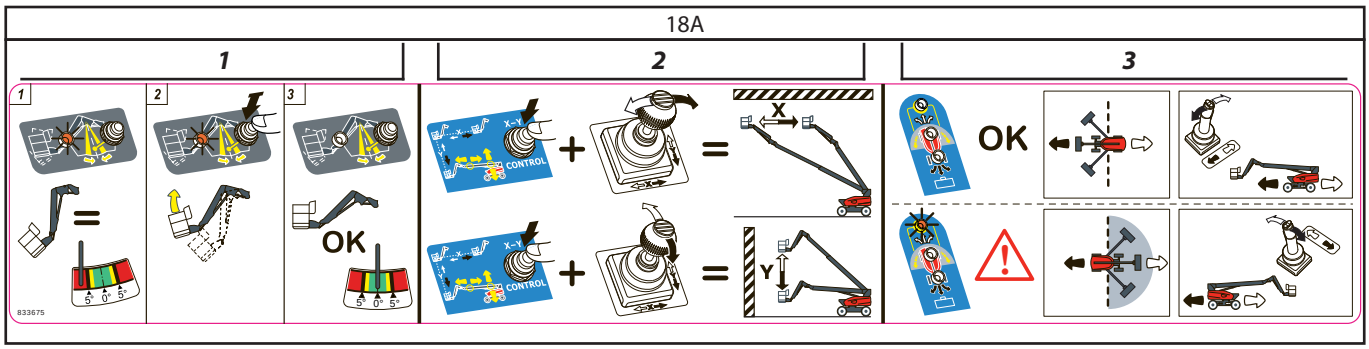

1 - BASKET HORIZONTAL LEVELLING FUNCTION
Lifting platforms 260 TJ and 280 TJ are fitted with a horizontal alignment system for the basket. The sticker (see Fig. 18A-2) on the pendular unit joint enables you to see the inclination of the pendular unit.
When the basket pendular unit assembly is within the red and yellow zones, the orange indicator light comes on. In this zone, continuously pressing the basket horizontal levelling button causes the pendular unit to move until the basket is horizontal.

2 - X-Y CONTROL FUNCTION
X function:
- Pressing the XY-Control button simultaneously with a telescope extension or retraction control enables the basket to remain in the same horizontal position while moving.

Y function:
- Pressing the XY-Control button simultaneously with a raising or lowering control enables the basket to remain in the same vertical position while moving.

3 - TRANSLATION DIRECTION REVERSAL WARNING
When the telescope crosses beyond the lifting platform's median axis (represented by the hatched line) and is in the grey zone, the orange indicator light on the basket console comes on. This light indicates that the basket's direction of travel is opposite to that of the chassis.
Reminder: white arrow = forward motion.
Identify the lifting platform's direction of travel by referring to the black and white arrows on the chassis (See § 1 and 2).

https://truckmanualshub.com/

18 - B Pendular arm Angle

This adhesive allows to see the inclination of the pendular arm.

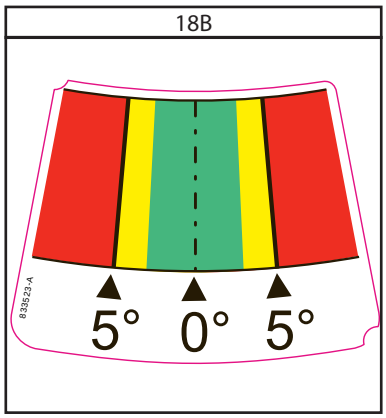

19 - Washing recommendations

It is strictly forbidden to use a pressure washer to clean the control knobs and the electrical components.

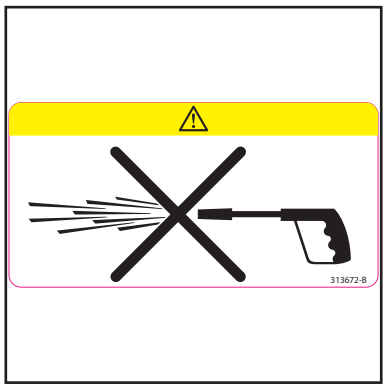

20 - Battery location

This sticker shows the location of the battery.

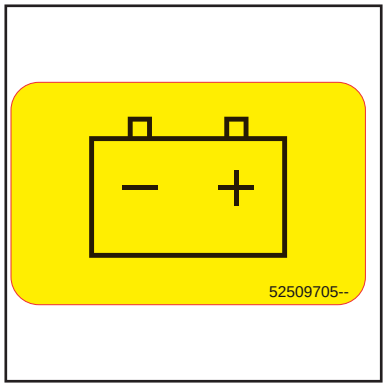

https://truckmanualshub.com/

21 - Emergency stop location

This adhesive indicates the location of the emergency stop buttons on the lifting platform.

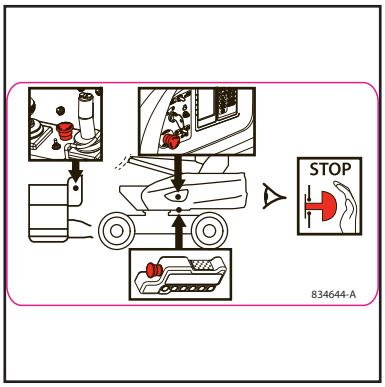

22 - Load-carrier loading

This adhesive describes the procedure to perform to load the lifting platform on the truck load carrier.

280 TJ

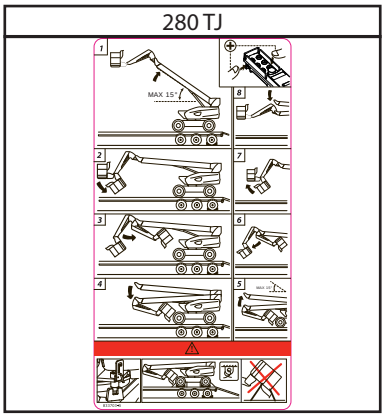

260 TJ

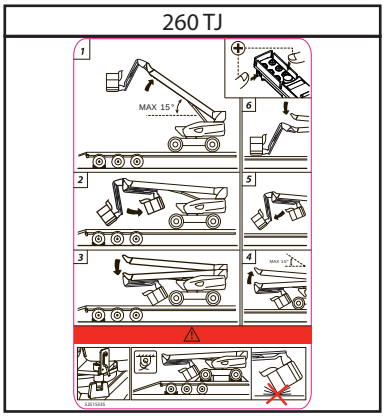

23 - Cables setting

This adhesive describes the procedure to adjust chain tension of the telescopic arm.

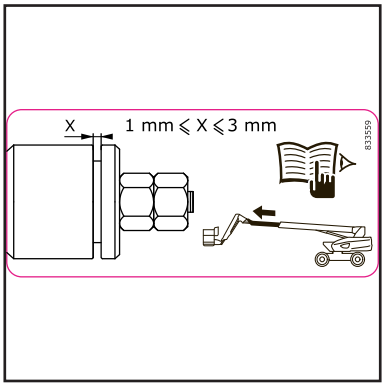

https://truckmanualshub.com/

24 - Sensors and coils

This adhesive shows the fault codes and the location of the electrical components, such as sensors (DS, AS, IS), the solenoid valves (EV) and the solenoid coils (EW).

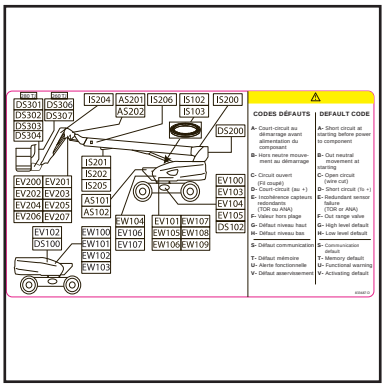

25 - Turret rotation sensors

This adhesive shows the location of turret rotation sensors and the corresponding fault codes.

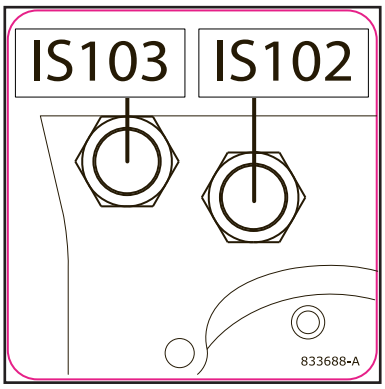

26 - Overload sensors

This adhesive shows the location of overload sensors and the corresponding fault codes.

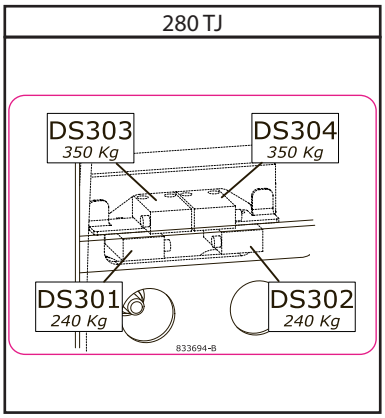

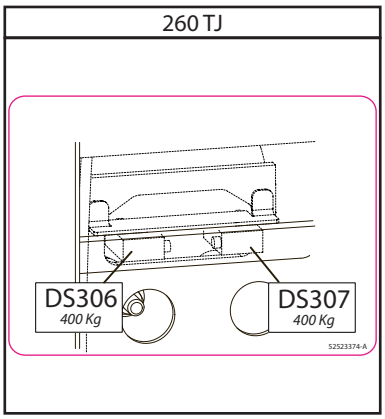

https://truckmanualshub.com/

27 - Lower arm angle sensors

This adhesive shows the location of angle sensors of the lower arm and the corresponding fault codes.

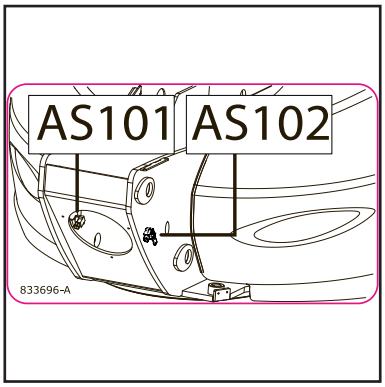

28 - Abacus sensors

This adhesive shows the location of Abacus sensors and the corresponding fault codes.

280 TJ

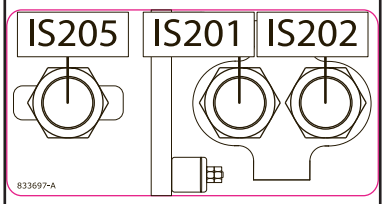

260 TJ

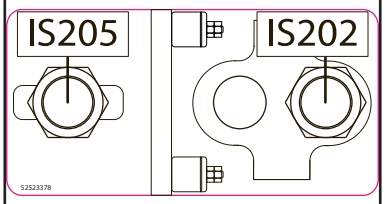

29 - Pendular arm block coils

This adhesive shows the location of the pendular arm block coils.

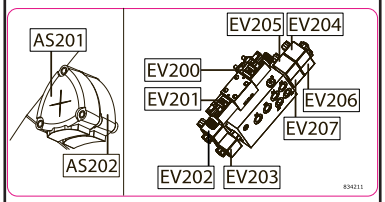

https://truckmanualshub.com/

30 - Turret block coils

This adhesive shows the location of the turret block coils.

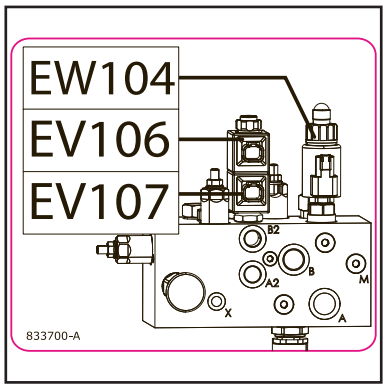

31 - Brake block coils

This adhesive shows the location of the brake block coils.

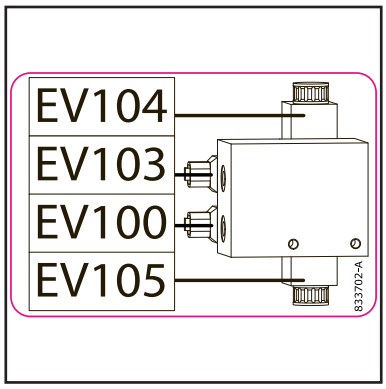

32 - Power fuses

This adhesive shows the location of the power fuses.

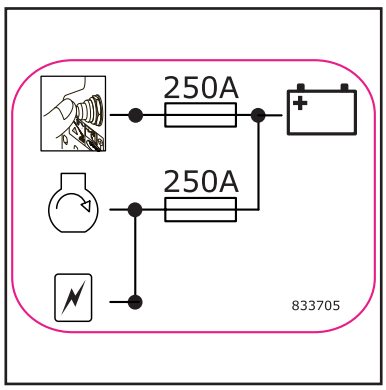

33 - Point of centralized greasing

This adhesive indicates the element which will profit from the greasing according to the selected letter.

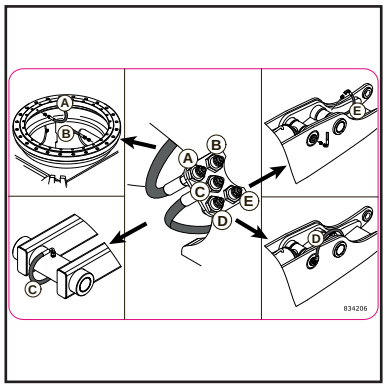

https://truckmanualshub.com/

https://truckmanualshub.com/

2 - DESCRIPTION

https://truckmanualshub.com/

https://truckmanualshub.com/

CONTENTS

"CE" CONFORMITY DECLARATION - 260 TJ 2-4

"CE" CONFORMITY DECLARATION - 280 TJ 2-6

LIFTING PLATFORM IDENTIFICATION 2-8

CHARACTERISTICS 260 TJ - 280 TJ 2-10

DIMENSIONS 260 TJ 2-14

DIAGRAM 260 TJ 2-15

DIMENSIONS 280 TJ 2-16

DIAGRAM 280 TJ 2-17

LIFTING PLATFORM'S OPERATION 2-18

BASE CONTROL INSTRUMENTS 2-20

BASKET CONTROL INSTRUMENTS 2-22

GROUND MAINTENANCE AND RESCUE STATION 2-24

BASKET CONTROL STATION 2-32

DESCRIPTION OF THE SUB-MENUS 2-40

USING THE LIFTING PLATFORM 2-42

RESCUE PROCEDURE 2-47

ACCESSORIES 2-51

647382 EN (01/02/2015)

https://truckmanualshub.com/

1) DÉCLARATION «CE» DE CONFORMITÉ (originale)
« EC» DECLARATION OF CONFORMITY (original)

2) La société, ***The company*** : MANITOU BF

3) Adresse, ***Address*** : 430, rue de l'Aubinière - BP 10249 - 44158 - ANCENIS CEDEX - FRANCE

4) Dossier technique,***Technical file*** : MANITOU BF - 430, rue de l'Aubinière
BP 10249 - 44158 - ANCENIS CEDEX - FRANCE

5) Constructeur de la machine décrite ci-après, ***Manufacturer of the machine described below*** :

260 TJ

6) Déclare que cette machine, ***Declares that this machine*** :

7) Est conforme aux directives suivantes et à leurs transpositions en droit national, ***Complies with the following directives and their transpositions into national law*** :

2006/42/CE

8) Pour les machines annexe IV , ***For annex IV machines*** :

9) Numéro d'attestation, ***Certificate number*** : 0062 5131 760 02 15 305

10) Organisme notifié, ***Notified body*** : VERITAS
61/71 Boulevard du Château
92 571 NEUILLY SUR SEINE FRANCE

2000/14/CE + 2005/88/CE

11) Numéro d'attestation, ***Certificate number*** :

10) Organisme notifié, ***Notified body*** :

12) Niveau de puissance acoustique, ***Sound power level*** :

13) Mesuré, ***Measured*** : 104,72 dB (A)

14) Garanti, ***Guaranteed*** : 105 dB (A)

2004/108/CE

11) Numéro d'attestation, ***Certificate number*** :

10) Organisme notifié, ***Notified body*** :

15) Normes harmonisées utilisées, ***Harmonised standards used*** : EN12895

16) Normes ou dispositions techniques utilisées, ***Standards or technical provisions used*** :

17) Fait à, ***Done at*** : Ancenis

18) Date, ***Date*** :

19) Nom du signataire, ***Name of signatory*** : **Fernand MIRA**

20) Fonction, ***Function*** : **Président division MHA**

21) Signature, ***Signature*** :

647382 EN (01/02/2015)

https://truckmanualshub.com/

bg : 1) удостоверение за « CE » съответствие (оригинална), 2) Фирмата, 3) Адрес, 4) Техническо досие, 5) Фабрикант на описаната по-долу машина, 6) Обявява, че тази машина, 7) Отговаря на следните директиви и на тяхното съответствие национално право, 8) За машините към допълнение IV, 9)Номер на удостоверението, 10) Наименувана фирма, 15) хармонизирани стандарти използвани, 16) стандарти или технически правила, използвани, 17) Изработено в, 18) Дата, 19) Име на разписалия се, 20) Функция, 21) Функция.

cs : 1) ES prohlášení o shodě (původní), 2) Název společnosti, 3) Adresa, 4) Technická dokumentace, 5) Výrobce níže uvedeného stroje, 6) Prohlašuje, že tento stroj, 7) Je v souladu s následujícími směrnicemi a směrnicemi transponovanými do vnitrostátního práva, 8) Pro stroje v příloze IV, 9) Číslo certifikátu, 10) Notifikační orgán, 15) harmonizované normy použity, 16) Norem a technických pravidel používaných, 17) Místo vydání, 18) Datum vydání, 19) Jméno podepsaného, 20) Funkce, 21) Podpis.

da : 1) EF Overensstemmelseserklæring (original), 2) Firmaet, 3) Adresse, 4) tekniske dossier, 5) Konstruktør af nedenfor beskrevne maskine, 6) Erklærer, at denne maskine, 7) Overholder nedennævnte direktiver og disses gennemførelse til national ret, 8) For maskiner under bilag IV, 9) Certifikat nummer, 10) Bemyndigede organ, 15) harmoniserede standarder, der anvendes, 16) standarder eller tekniske regler, 17) Udfærdiget i, 18) Dato, 19) Underskrivers navn, 20) Funktion, 21) Underskrift.

de : 1) EG-Konformitätserklärung (original), 2) Die Firma, 3) Adresse, 4) Technischen Unterlagen, 5) Hersteller der nachfolgend beschriebenen Maschine, 6) Erklärt, dass diese Maschine, 7) den folgenden Richtlinien und deren Umsetzung in die nationale Gesetzgebung entspricht, 8) Für die Maschinen laut Anhang IV, 9) Bescheinigungsnummer, 10) Benannte Stelle, 15) angewandten harmonisierten Normen, 16) angewandten sonstigen technischen Normen und Spezifikationen, 17) Ausgestellt in, 18) Datum, 19) Name des Unterzeichners, 20) Funktion, 21) Unterschrift.

el : 1) Δήλωση συμμόρφωσης CE (πρωτότυπο), 2) Η εταιρεία, 3) Διεύθυνση, 4) τεχνικό φάκελο, 5) Κατασκευάστρια του εξής περιγραφόμενου μηχανήματος, 6) Δηλώνει ότι αυτό το μηχάνημα, 7) Είναι σύμφωνο με τις εξής οδηγίες και τις προσαρμογές τους στο εθνικό δίκαιο, 8) Για τα μηχανήματα παραρτήματος IV, 9) Αριθμός δήλωσης, 10) Κοινοποιημένος φορέας, 15) εναρμονισμένα πρότυπα που χρησιμοποιούνται, 16) Πρότυπα ή τεχνικούς κανόνες που χρησιμοποιούνται, 16) Είναι σύμφωνο με τα εξής πρότυπα και τεχνικές διατάξεις, 17) Εν, 18) Ημερομηνία, 19) Όνομα του υπογράφοντος, 20) Θέση, 21) Υπογραφή.

es : 1)Declaración DE de conformidad (original), 2) La sociedad, 3) Dirección, 4) expediente técnico, 5) Constructor de la máquina descrita a continuación, 6) Declara que esta máquina, 7) Está conforme a las siguientes directivas y a sus transposiciones en derecho nacional, 8) Para las máquinas anexo IV, 9) Número de certificación, 10) Organismo notificado, 15) normas armonizadas utilizadas, 16) Otras normas o especificaciones técnicas utilizadas, 17) Hecho en, 18) Fecha, 19) Nombre del signatario, 20) Función, 21) Firma.

et : 1) EÜ vastavusdeklaratsioon (algupärane), 2) Äriühing, 3) Aadress, 4) Tehniline dokumentatsioon, 5) Seadme tootja, 6) Kinnitab, et see toode, 7) On vastavuses järgmiste direktiivide ja nende riigisisesesse õigusesse ülevõtmiseks vastuvõetud õigusaktidega, 8) IV lisas loetletud seadmete puhul, 9) Tunnistuse number, 10) Sertifitseerimisasutus, 15) kasutatud ühtlustatud standarditele, 16) Muud standardites või spetsifikatsioonides kasutatakse, 17) Väljaandmise koht, 18) Väljaandmise aeg, 19) Allkirjastaja nimi, 20) Amet, 21) Allkiri.

fi : 1) EY-vaatimustenmukaisuusvakuutus (alkuperäiset), 2) Yritys, 3) Osoite, 4) teknisen eritelmän, 5) Jäljessä kuvatun koneen valmistaja, 6) Vakuuttaa, että tämä kone, 7) Täyttää seuraavien direktiivien sekä niitä vastaavien kansallisten säännösten vaatimukset, 8) Liitteen IV koneiden osalta, 9) Todistuksen numero, 10) Ilmoitettu laitos, 15) yhdenmukaistettuja standardeja käytetään, 16) muita standardeja tai eritelmät, 17) Paikka, 18) Aika, 19) Allekirjoittajan nimi, 20) Toimi, 21) Allekirjoitus.

ga : 1) « EC »dearbhú comhréireachta (bunaidh), 2) An comhlacht, 3) Seoladh, 4) comhad teicniúil, 5) Déantóir an innill a thuairiscítear thíos, 6) Dearbhaíonn sé go bhfuil an t-inneall, 7) Go gcloíonn sé le na treoracha seo a leanas agus a trasuímh isteach i ndlí náisiúnta, 8) Le haghaidh innill an aguisín IV, 9) Uimhir teastais, 10) Comhlacht a chuireadh i bhfios, 15) caighdeáin comhchuibhithe a úsáidtear, 16) caighdeáin eile nó sonraíochtaí teicniúla a úsáidtear, 17) Déanta ag, 18) Dáta, 19) Ainm an tsínitheora, 20) Feidhm, 21) Síniú.

hu : 1) CE megfelelőségi nyilatkozat (eredeti), 2) A vállalat, 3) Cím, 4) műszaki dokumentáció, 5) Az alábbi gép gyártója, 6) Kijelenti, hogy a gép, 7) Megfelel az alábbi irányelveknek valamint azok honosított előírásainak, 8) A IV. melléklet gépeihez, 9) Bizonylati szám, 10) Értesített szervezet, 15) felhasznált harmonizált szabványok, 16) egyéb felhasznált műszaki szabványok és előírások hivatkozásai, 17) Kelt (hely), 18) Dátum, 19) Aláíró neve, 20) Funkció, 21) Aláírás.

is : 1) (Samræmisvottorð ESB (upprunalega), 2) Fyrirtækið, 3) Aðsetur, 4) Tæknilegar skrá, 5) Smiður tækisins sem lýst er hér á eftir, 6) Staðfestir að tækið, 7) Samræmist eftirfarandi stöðlum og staðfærslu þeirra með hliðsjón af þjóðarrétti, 8) Fyrir tækin í aukakafla IV, 9) Staðfestingarnúmer, 10) Tilkynnt til, 15) samhæfða staðla sem notaðir, 16) önnur staðlar eða forskriftir notað, 17) Staður, 18) Dagsetning, 19) Nafn undirritaðs, 20) Staða, 21) Undirskrift.

it : 1) Dichiarazione CE di conformità (originale), 2) La società, 3) Indirizzo, 4) fascicolo tecnico, 5) Costruttore della macchina descritta di seguito, 6) Dichiara che questa macchina, 7) È conforme alle direttive seguenti e alle relative trasposizioni nel diritto nazionale, 8) Per le macchine Allegato IV, 9) Numero di Attestazione, 10) Organismo notificato, 15) norme armonizzate applicate, 16) altre norme e specifiche tecniche applicate, 17) Stabilita a, 18) Data, 19) Nome del firmatario, 20) Funzione, 21) Firma.

lt : 1) CE atitikties deklaracija (originalas), 2) Bendrovė, 3) Adresas, 4) Techninė byla, 5) Žemiau nurodytas įrenginio gamintojas, 6) Pareiškia, kad šis įrenginys, 7) Atitinka toliau nurodytas direktyvas ir į nacionalinius teisės aktus perkeltas jų nuostatas, 8) IV priedas dėl mašinų, 9) Sertifikato Nr, 10) Paskelbtoji įstaiga, 15) suderintus standartus naudojamus, 16) Kiti standartai ir technines specifikacijas, 17) Pasirašyta, 18) Data, 19) Pasirašiusio asmens vardas ir pavardė, 20) Pareigos, 21) Parašas.

lv : 1) EK atbilstības deklarācija (oriģināls), 2) Uzņēmums, 3) Adrese, 4) tehniskās lietas, 5) Tālāk aprakstītās iekārtas ražotājs, 6) Apliecina, ka šī iekārta, 7) Ir atbilstoša tālāk norādītajām direktīvām un to transpozīcijai nacionālajā likumdošanā, 8) Iekārtām IV pielikumā, 9) Apliecības numurs, 10) Reģistrētā organizācija, 15) lietotajiem saskaņotajiem standartiem, 16) lietotajiem tehniskajiem standartiem un specifikācijām, 17) Sastādīts, 18) Datums, 19) Parakstītāja vārds, 20) Amats, 21) Paraksts.

mt : 1) Dikjarazzjoni ta' Konformità KE (oriġinali), 2) Il-kumpanija, 3) Indirizz, 4) fajl tekniku, 5) Manifattriċi tal-magna deskritta hawn isfel, 6) Tiddikjara li din il-magna, 7) Hija konformi hija konformi mad-Direttivi segwenti u l-liġijiet li jimplimentawhom fil-liġi nazzjonali, 8) Għall-magni fl-Anness IV, 9) Numru taċ-ċertifikat, 10) Entità nnotifikata, 15) l-istandards armonizzati użati, 16) standards tekniċi u speċifikazzjonijiet oħra użati, 17) Magħmul f', 18) Data, 19) Isem il-firmatarju, 20) Kariga, 21) Firma.

nl : 1) EG-verklaring van overeenstemming (oorspronkelijke), 2) Het bedrijf, 3) Adres, 4) technisch dossier, 5) Constructeur van de hierna genoemde machine, 6) Verklaart dat deze machine, 7) In overeenstemming is met de volgende richtlijnen en hun omzettingen in het nationale recht, 8) Voor machines van bijlage IV, 9) Goedkeuringsnummer, 10) Aangezegde instelling, 15) gehanteerde geharmoniseerde normen, 16) andere gehanteerde technische normen en specificaties, 17) Opgemaakt te, 18) Datum, 19) Naam van ondergetekende, 20) Functie, 21) Handtekening.

no : 1) CE-samsvarserklæring (original), 2) Selskapet, 3) Adresse, 4) tekniske arkiv, 5) Fabrikant av følgende maskin, 6) Erklærer at denne maskinen, 7) Oppfyller kravene i følgende direktiver, med nasjonale gjennomføringsbestemmelser, 8) For maskinene i tillegg IV, 9) Attestnummer, 10) Notifisert organ, 15) harmoniserte standarder som brukes, 16) Andre standarder og spesifikasjoner brukt, 17) Utstedt i, 18) Dato, 19) Underskriverens navn, 20) Stilling, 21) Underskrift.

pl : 1) Deklaracja zgodności CE (oryginalne), 2) Spółka, 3) Adres, 4) dokumentacji technicznej, 5) Wykonawca maszyny opisanej poniżej, 6) Oświadcza, że ta maszyna, 7) Jest zgodna z następującymi dyrektywami i odpowiadającymi przepisami prawa krajowego, 8) Dla maszyn załącznik IV, 9) Numer certyfikatu, 10) Jednostka certyfikująca, 15) zastosowanych norm zharmonizowanych, 16) innych zastosowanych norm technicznych i specyfikacji, 17) Sporządzono w, 18) Data, 19) Nazwisko podpisującego, 20) Stanowisko, 21) Podpis.

pt : 1) Declaração de conformidade CE (original), 2) A empresa, 3) Morada, 4) processo técnico, 5) Fabricante da máquina descrita abaixo, 6) Declara que esta máquina, 7) Está em conformidade às directivas seguintes e às suas transposições para o direito nacional, 8) Para as máquinas no anexo IV, 9) Número de certificado, 10) Entidade notificada, 15) normas harmonizadas utilizadas, 16) outras normas e especificações técnicas utilizadas, 17) Elaborado em, 18) Data, 19) Nome do signatário, 20) Cargo, 21) Assinatura.

ro : 1) Declaraţie de conformitate CE (originală), 2) Societatea, 3) Adresa, 4) cărtii tehnice, 5) Constructor al maşinii descrise mai jos, 6) Declară că prezenta maşină, 7) Este conformă cu directivele următoare şi cu transpunerea lor în dreptul naţional, 8) Pentru maşinile din anexa IV, 9) Număr de atestare, 10) Organism notificat, 15) standardele armonizate utilizate, 16) alte standarde si specificatii tehnice utilizate, 17) Întocmit la, 18) Data, 19) Numele persoanei care semnează, 20) Funcţia, 21) Semnătura.

sk : 1) ES vyhlásenie o zhode (pôvodný), 2) Názov spoločnosti, 3) Adresa, 4) technickej dokumentácie, 5) Výrobca nižšie opísaného stroja, 6) Vyhlasuje, že tento stroj, 7) Je v súlade s nasledujúcimi smernicami a smernicami transponovanými do vnútroštátneho práva, 8) Pre stroje v prílohe IV, 9) Číslo certifikátu, 10) Notifikačný orgán, 15) použité harmonizované normy, 16) použité iné technické normy a predpisy, 17) Miesto vydania, 18) Dátum vydania, 19) Meno podpisujúceho, 20) Funkcia, 21) Podpis.

sl : 1) ES Izjava o ustreznosti (izvirna), 2) Družba. 3) Naslov. 4) tehnične dokumentacije, 5) Proizvajalac tukaj opisanega stroja, 6) Izjavlja, da je ta stroj, 7) Ustreza naslednjim direktivam in njihovi transpoziciji v državno pravo, 8) Za stroje priloga IV, 9) Številka potrdila, 10) Obvestilo organu, 15) uporabljene harmonizirane standarde, 16) druge uporabljene tehnične standarde in zahteve, 17) V, 18) Datum, 19) Ime podpisnika, 20) Funkcija, 21) Podpis.

sv : 1) CE-försäkran om överensstämmelse (original), 2) Företaget, 3) Adress, 4) tekniska dokumentationen, 5) Konstruktör av nedan beskrivna maskin, 6) Försäkrar att denna maskin, 7) Överensstämmer med nedanstående direktiv och införlivandet av dem i nationell rätt, 8) För maskinerna i bilaga IV, 9) Nummer för godkännande, 10) Organism som underrättats, 15) Harmoniserade standarder som använts, 16) andra tekniska standarder och specifikationer som använts, 17) Upprättat i, 18) Datum, 19) Namn på den som undertecknat, 20) Befattning, 21) Namntecknin.

https://truckmanualshub.com/

• UP PLATFORM No. 950123

1) DÉCLARATION «CE» DE CONFORMITÉ (originale)

« EC» DECLARATION OF CONFORMITY (original)

2) La société, ***The company*** : MANITOU BF

3) Adresse, ***Address*** : 430, rue de l'Aubinière - BP 10249 - 44158 - ANCENIS CEDEX - FRANCE

4) Dossier technique,***Technical file*** : MANITOU BF - 430, rue de l'Aubinière
BP 10249 - 44158 - ANCENIS CEDEX - FRANCE

5) Constructeur de la machine décrite ci-après, ***Manufacturer of the machine described below*** :

280 TJ

6) Déclare que cette machine, ***Declares that this machine*** :

7) Est conforme aux directives suivantes et à leurs transpositions en droit national, ***Complies with the following directives and their transpositions into national law*** :

2006/42/CE

8) Pour les machines annexe IV , ***For annex IV machines*** :

9) Numéro d'attestation, ***Certificate number*** : 0526 5131 760 04 12 4967

10) Organisme notifié, ***Notified body*** : CETIM NB N° 0526
52 avenue Felix Louat - BP 80067
60304 SENLIS CEDEX FRANCE

2000/14/CE + 2005/88/CE

11) Numéro d'attestation, ***Certificate number*** :

10) Organisme notifié, ***Notified body*** :

12) Niveau de puissance acoustique, ***Sound power level*** :

13) Mesuré, ***Measured :*** 104.72 dB (A)

14) Garanti, ***Guaranteed*** : 105 dB (A)

2004/108/CE

11) Numéro d'attestation, ***Certificate number*** :

10) Organisme notifié, ***Notified body*** :

15) Normes harmonisées utilisées, ***Harmonised standards used*** : EN12895

16) Normes ou dispositions techniques utilisées, ***Standards or technical provisions used*** :

17) Fait à, ***Done at*** : Ancenis

18) Date, ***Date*** : 29/12/2009

19) Nom du signataire, ***Name of signatory*** : **Éric LAMBERT**

20) Fonction, ***Function*** : **Président division RTH**

21) Signature, ***Signature*** :

647382 EN (01/02/2015)

https://truckmanualshub.com/

bg : 1) удостоверение за « CE » съответствие (оригинална), 2) Фирмата, 3) Адрес, 4) Техническо досие, 5) Фабрикант на описаната по-долу машина, 6) Обявява, че тази машина, 7) Отговаря на следните директиви и на тяхното съответствие национално право, 8) За машините към допълнение IV, 9)Номер на удостоверението, 10) Наименувана фирма, 15) хармонизирани стандарти използвани, 16) стандарти или технически правила, използвани, 17) Изработено в, 18) Дата, 19) Име на разписалия се, 20) Функция, 21) Функция.

cs : 1) ES prohlášení o shodě (původní), 2) Název společnosti, 3) Adresa, 4) Technická dokumentace, 5) Výrobce níže uvedeného stroje, 6) Prohlašuje, že tento stroj, 7) Je v souladu s následujícími směrnicemi a směrnicemi transponovanými do vnitrostátního práva, 8) Pro stroje v příloze IV, 9) Číslo certifikátu, 10) Notifikační orgán, 15) harmonizované normy použity, 16) Norem a technických pravidel používaných, 17) Místo vydání, 18) Datum vydání, 19) Jméno podepsaného, 20) Funkce, 21) Podpis.

da : 1) EF Overensstemmelseserklæring (original), 2) Firmaet, 3) Adresse, 4) tekniske dossier, 5) Konstruktør af nedenfor beskrevne maskine, 6) Erklærer, at denne maskine, 7) Overholder nedennævnte direktiver og disses gennemførelse til national ret, 8) For maskiner under bilag IV, 9) Certifikat nummer, 10) Bemyndigede organ, 15) harmoniserede standarder, der anvendes, 16) standarder eller tekniske regler, 17) Udfærdiget i, 18) Dato, 19) Underskrivers navn, 20) Funktion, 21) Underskrift.

de : 1) EG-Konformitätserklärung (original), 2) Die Firma, 3) Adresse, 4) Technischen Unterlagen, 5) Hersteller der nachfolgend beschriebenen Maschine, 6) Erklärt, dass diese Maschine, 7) den folgenden Richtlinien und deren Umsetzung in die nationale Gesetzgebung entspricht, 8) Für die Maschinen laut Anhang IV, 9) Bescheinigungsnummer, 10) Benannte Stelle, 15) angewandten harmonisierten Normen, 16) angewandten sonstigen technischen Normen und Spezifikationen, 17) Ausgestellt in, 18) Datum, 19) Name des Unterzeichners, 20) Funktion, 21) Unterschrift.

el : 1) Δήλωση συμμόρφωσης CE (πρωτότυπο), 2) Η εταιρεία, 3) Διεύθυνση, 4) τεχνικό φάκελο, 5) Κατασκευάστρια του εξής περιγραφόμενου μηχανήματος, 6) Δηλώνει ότι αυτό το μηχάνημα, 7) Είναι σύμφωνο με τις εξής οδηγίες και τις προσαρμογές τους στο εθνικό δίκαιο, 8) Για τα μηχανήματα παραρτήματος IV, 9) Αριθμός δήλωσης, 10) Κοινοποιημένος φορέας, 15) εναρμονισμένα πρότυπα που χρησιμοποιούνται, 16) Πρότυπα ή τεχνικούς κανόνες που χρησιμοποιούνται, 16) Είναι σύμφωνο με τα εξής πρότυπα και τεχνικές διατάξεις, 17) Εν, 18) Ημερομηνία, 19) Όνομα του υπογράφοντος, 20) Θέση, 21) Υπογραφή.

es : 1)Declaración DE de conformidad (original), 2) La sociedad, 3) Dirección, 4) expediente técnico, 5) Constructor de la máquina descrita a continuación, 6) Declara que esta máquina, 7) Está conforme a las siguientes directivas y a sus transposiciones en derecho nacional, 8) Para las máquinas anexo IV, 9) Número de certificación, 10) Organismo notificado, 15) normas armonizadas utilizadas, 16) Otras normas o especificaciones técnicas utilizadas, 17) Hecho en, 18) Fecha, 19) Nombre del signatario, 20) Función, 21) Firma.

et : 1) EÜ vastavusdeklaratsioon (algupärane), 2) Äriühing, 3) Aadress, 4) Tehniline dokumentatsioon, 5) Seadme tootja, 6) Kinnitab, et see toode, 7) On vastavuses järgmiste direktiivide ja nende riigisisesesse õigusesse ülevõtmiseks vastuvõetud õigusaktidega, 8) IV lisas loetletud seadmete puhul, 9) Tunnistuse number, 10) Sertifitseerimisasutus, 15) kasutatud ühtlustatud standarditele, 16) Muud standardites või spetsifikatsioonides kasutatakse, 17) Väljaandmise koht, 18) Väljaandmise aeg, 19) Allkirjastaja nimi, 20) Amet, 21) Allkiri.

fi : 1) EY-vaatimustenmukaisuusvakuutus (alkuperäiset), 2) Yritys, 3) Osoite, 4) teknisen eritelmän, 5) Jäljessä kuvatun koneen valmistaja, 6) Vakuuttaa, että tämä kone, 7) Täyttää seuraavien direktiivien sekä niitä vastaavien kansallisten säännösten vaatimukset, 8) Liitteen IV koneiden osalta, 9) Todistuksen numero, 10) Ilmoitettu laitos, 15) yhdenmukaistettuja standardeja käytetään, 16) muita standardeja tai eritelmät, 17) Paikka, 18) Aika, 19) Allekirjoittajan nimi, 20) Toimi, 21) Allekirjoitus.

ga : 1) « EC »dearbhú comhréireachta (bunaidh), 2) An comhlacht, 3) Seoladh, 4) comhad teicniúil, 5) Déantóir an innill a thuairiscítear thíos, 6) Dearbhaíonn sé go bhfuil an t-inneall, 7) Go gcloíonn sé le na treoracha seo a leanas agus a trasuímh isteach i ndlí náisiúnta, 8) Le haghaidh innill an aguisín IV, 9) Uimhir teastais, 10) Comhlacht a chuireadh i bhfios, 15) caighdeáin comhchuibhithe a úsáidtear, 16) caighdeáin eile nó sonraíochtaí teicniúla a úsáidtear, 17) Déanta ag, 18) Dáta, 19) Ainm an tsínitheora, 20) Feidhm, 21) Síniú.

hu : 1) CE megfelelőségi nyilatkozat (eredeti), 2) A vállalat, 3) Cím, 4) műszaki dokumentáció, 5) Az alábbi gép gyártója, 6) Kijelenti, hogy a gép, 7) Megfelel az alábbi irányelveknek valamint azok honosított előírásainak, 8) A IV. melléklet gépeihez, 9) Bizonylati szám, 10) Értesített szervezet, 15) felhasznált harmonizált szabványok, 16) egyéb felhasznált műszaki szabványok és előírások hivatkozásai, 17) Kelt (hely), 18) Dátum, 19) Aláíró neve, 20) Funkció, 21) Aláírás.

is : 1) (Samræmisvottorð ESB (upprunalega), 2) Fyrirtækið, 3) Aðsetur, 4) Tæknilegar skrá, 5) Smiður tækisins sem lýst er hér á eftir, 6) Staðfestir að tækið, 7) Samræmist eftirfarandi stöðlum og staðfærslu þeirra með hliðsjón af þjóðarrétti, 8) Fyrir tækin í aukakafla IV, 9) Staðfestingarnúmer, 10) Tilkynnt til, 15) samhæfða staðla sem notaðir, 16) önnur staðlar eða forskriftir notað, 17) Staður, 18) Dagsetning, 19) Nafn undirritaðs, 20) Staða, 21) Undirskrift.

it : 1) Dichiarazione CE di conformità (originale), 2) La società, 3) Indirizzo, 4) fascicolo tecnico, 5) Costruttore della macchina descritta di seguito, 6) Dichiara che questa macchina, 7) È conforme alle direttive seguenti e alle relative trasposizioni nel diritto nazionale, 8) Per le macchine Allegato IV, 9) Numero di Attestazione, 10) Organismo notificato, 15) norme armonizzate applicate, 16) altre norme e specifiche tecniche applicate, 17) Stabilita a, 18) Data, 19) Nome del firmatario, 20) Funzione, 21) Firma.

lt : 1) CE atitikties deklaracija (originalas), 2) Bendrovė, 3) Adresas, 4) Techninė byla, 5) Žemiau nurodytas įrenginio gamintojas, 6) Pareiškia, kad šis įrenginys, 7) Atitinka toliau nurodytas direktyvas ir į nacionalinius teisės aktus perkeltas jų nuostatas, 8) IV priedas dėl mašinų, 9) Sertifikato Nr, 10) Paskelbtoji įstaiga, 15) suderintus standartus naudojamus, 16) Kiti standartai ir technines specifikacijas, 17) Pasirašyta, 18) Data, 19) Pasirašiusio asmens vardas ir pavardė, 20) Pareigos, 21) Parašas.

lv : 1) EK atbilstības deklarācija (oriģināls), 2) Uzņēmums, 3) Adrese, 4) tehniskās lietas, 5) Tālāk aprakstītās iekārtas ražotājs, 6) Apliecina, ka šī iekārta, 7) Ir atbilstoša tālāk norādītajām direktīvām un to transpozīcijai nacionālajā likumdošanā, 8) Iekārtām IV pielikumā, 9) Apliecības numurs, 10) Reģistrētā organizācija, 15) lietotajiem saskaņotajiem standartiem, 16) lietotajiem tehniskajiem standartiem un specifikācijām, 17) Sastādīts, 18) Datums, 19) Parakstītāja vārds, 20) Amats, 21) Paraksts.

mt : 1) Dikjarazzjoni ta' Konformità KE (oriġinali), 2) Il-kumpanija, 3) Indirizz, 4) fajl tekniku, 5) Manifattriċi tal-magna deskritta hawn isfel, 6) Tiddikjara li din il-magna, 7) Hija konformi hija konformi mad-Direttivi segwenti u l-liġijiet li jimplimentawhom fil-liġi nazzjonali, 8) Għall-magni fl-Anness IV, 9) Numru taċ-ċertifikat, 10) Entità nnotifikata, 15) l-istandards armonizzati użati, 16) standards tekniċi u speċifikazzjonijiet oħra użati, 17) Magħmul f', 18) Data, 19) Isem il-firmatarju, 20) Kariga, 21) Firma.

nl : 1) EG-verklaring van overeenstemming (oorspronkelijke), 2) Het bedrijf, 3) Adres, 4) technisch dossier, 5) Constructeur van de hierna genoemde machine, 6) Verklaart dat deze machine, 7) In overeenstemming is met de volgende richtlijnen en hun omzettingen in het nationale recht, 8) Voor machines van bijlage IV, 9) Goedkeuringsnummer, 10) Aangezegde instelling, 15) gehanteerde geharmoniseerde normen, 16) andere gehanteerde technische normen en specificaties, 17) Opgemaakt te, 18) Datum, 19) Naam van ondergetekende, 20) Functie, 21) Handtekening.

no : 1) CE-samsvarserklæring (original), 2) Selskapet, 3) Adresse, 4) tekniske arkiv, 5) Fabrikant av følgende maskin, 6) Erklærer at denne maskinen, 7) Oppfyller kravene i følgende direktiver, med nasjonale gjennomføringsbestemmelser, 8) For maskinene i tillegg IV, 9) Attestnummer, 10) Notifisert organ, 15) harmoniserte standarder som brukes, 16) Andre standarder og spesifikasjoner brukt, 17) Utstedt i, 18) Dato, 19) Underskriverens navn, 20) Stilling, 21) Underskrift.

pl : 1) Deklaracja zgodności CE (oryginalne), 2) Spółka, 3) Adres, 4) dokumentacji technicznej, 5) Wykonawca maszyny opisanej poniżej, 6) Oświadcza, że ta maszyna, 7) Jest zgodna z następującymi dyrektywami i odpowiadającymi przepisami prawa krajowego, 8) Dla maszyn załącznik IV, 9) Numer certyfikatu, 10) Jednostka certyfikująca, 15) zastosowanych norm zharmonizowanych, 16) innych zastosowanych norm technicznych i specyfikacji, 17) Sporządzono w, 18) Data, 19) Nazwisko podpisującego, 20) Stanowisko, 21) Podpis.

pt : 1) Declaração de conformidade CE (original), 2) A empresa, 3) Morada, 4) processo técnico, 5) Fabricante da máquina descrita abaixo, 6) Declara que esta máquina, 7) Está em conformidade às directivas seguintes e às suas transposições para o direito nacional, 8) Para as máquinas no anexo IV, 9) Número de certificado, 10) Entidade notificada, 15) normas harmonizadas utilizadas, 16) outras normas e especificações técnicas utilizadas, 17) Elaborado em, 18) Data, 19) Nome do signatário, 20) Cargo, 21) Assinatura.

ro : 1) Declaraţie de conformitate CE (originală), 2) Societatea, 3) Adresa, 4) cărtii tehnice, 5) Constructor al maşinii descrise mai jos, 6) Declară că prezenta maşină, 7) Este conformă cu directivele următoare şi cu transpunerea lor în dreptul naţional, 8) Pentru maşinile din anexa IV, 9) Număr de atestare, 10) Organism notificat, 15) standardele armonizate utilizate, 16) alte standarde si specificatii tehnice utilizate, 17) Întocmit la, 18) Data, 19) Numele persoanei care semnează, 20) Funcţia, 21) Semnătura.

sk : 1) ES vyhlásenie o zhode (pôvodný), 2) Názov spoločnosti, 3) Adresa, 4) technickej dokumentácie, 5) Výrobca nižšie opísaného stroja, 6) Vyhlasuje, že tento stroj, 7) Je v súlade s nasledujúcimi smernicami a smernicami transponovanými do vnútroštátneho práva, 8) Pre stroje v prílohe IV, 9) Číslo certifikátu, 10) Notifikačný orgán, 15) použité harmonizované normy, 16) použité iné technické normy a predpisy, 17) Miesto vydania, 18) Dátum vydania, 19) Meno podpisujúceho, 20) Funkcia, 21) Podpis.

sl : 1) ES Izjava o ustreznosti (izvirna), 2) Družba. 3) Naslov. 4) tehnične dokumentacije, 5) Proizvajalac tukaj opisanega stroja, 6) Izjavlja, da je ta stroj, 7) Ustreza naslednjim direktivam in njihovi transpoziciji v državno pravo, 8) Za stroje priloga IV, 9) Številka potrdila, 10) Obvestilo organu, 15) uporabljene harmonizirane standarde, 16) druge uporabljene tehnične standarde in zahteve, 17) V, 18) Datum, 19) Ime podpisnika, 20) Funkcija, 21) Podpis.

sv : 1) CE-försäkran om överensstämmelse (original), 2) Företaget, 3) Adress, 4) tekniska dokumentationen, 5) Konstruktör av nedan beskrivna maskin, 6) Försäkrar att denna maskin, 7) Överensstämmer med nedanstående direktiv och införlivandet av dem i nationell rätt, 8) För maskinerna i bilaga IV, 9) Nummer för godkännande, 10) Organism som underrättats, 15) Harmoniserade standarder som använts, 16) andra tekniska standarder och specifikationer som använts, 17) Upprättat i, 18) Datum, 19) Namn på den som undertecknat, 20) Befattning, 21) Namntecknin.

https://truckmanualshub.com/

• FROM THE PLATFORM No. 949267

1) DÉCLARATION «CE» DE CONFORMITÉ (originale)

« EC» DECLARATION OF CONFORMITY (original)

2) La société, ***The company*** : MANITOU BF

3) Adresse, ***Address*** : 430, rue de l'Aubinière - BP 10249 - 44158 - ANCENIS CEDEX - FRANCE

4) Dossier technique, ***Technical file*** : MANITOU BF - 430, rue de l'Aubinière
BP 10249 - 44158 - ANCENIS CEDEX - FRANCE

5) Constructeur de la machine décrite ci-après, ***Manufacturer of the machine described below*** :

280 TJ

6) Déclare que cette machine, ***Declares that this machine*** :

7) Est conforme aux directives suivantes et à leurs transpositions en droit national, ***Complies with the following directives and their transpositions into national law*** :

2006/42/CE

8) Pour les machines annexe IV , ***For annex IV machines*** :

9) Numéro d'attestation, ***Certificate number*** : 0062 5131 760 02 15 306

10) Organisme notifié, ***Notified body*** : VERITAS
61/71 Boulevard du Château
92 571 NEUILLY SUR SEINE FRANCE

2000/14/CE + 2005/88/CE

11) Numéro d'attestation, ***Certificate number*** :

10) Organisme notifié, ***Notified body*** :

12) Niveau de puissance acoustique, ***Sound power level*** :

13) Mesuré, ***Measured*** : 104,72 dB (A)

14) Garanti, ***Guaranteed*** : 105 dB (A)

2004/108/CE

11) Numéro d'attestation, ***Certificate number*** :

10) Organisme notifié, ***Notified body*** :

15) Normes harmonisées utilisées, ***Harmonised standards used*** : EN12895

16) Normes ou dispositions techniques utilisées, ***Standards or technical provisions used*** :

17) Fait à, ***Done at*** : Ancenis

18) Date, ***Date*** :

19) Nom du signataire, ***Name of signatory*** : **Fernand MIRA**

20) Fonction, ***Function*** : **Président division MHA**

21) Signature, ***Signature*** :

647382 EN (01/02/2015)

https://truckmanualshub.com/

bg : 1) удостоверение за « CE » съответствие (оригинална), 2) Фирмата, 3) Адрес, 4) Техническо досие, 5) Фабрикант на описаната по-долу машина, 6) Обявява, че тази машина, 7) Отговаря на следните директиви и на тяхното съответствие национално право, 8) За машините към допълнение IV, 9)Номер на удостоверението, 10) Наименувана фирма, 15) хармонизирани стандарти използвани, 16) стандарти или технически правила, използвани, 17) Изработено в, 18) Дата, 19) Име на разписалия се, 20) Функция, 21) Функция.

cs : 1) ES prohlášení o shodě (původní), 2) Název společnosti, 3) Adresa, 4) Technická dokumentace, 5) Výrobce níže uvedeného stroje, 6) Prohlašuje, že tento stroj, 7) Je v souladu s následujícími směrnicemi a směrnicemi transponovanými do vnitrostátního práva, 8) Pro stroje v příloze IV, 9) Číslo certifikátu, 10) Notifikační orgán, 15) harmonizované normy použity, 16) Norem a technických pravidel používaných, 17) Místo vydání, 18) Datum vydání, 19) Jméno podepsaného, 20) Funkce, 21) Podpis.

da : 1) EF Overensstemmelseserklæring (original), 2) Firmaet, 3) Adresse, 4) tekniske dossier, 5) Konstruktør af nedenfor beskrevne maskine, 6) Erklærer, at denne maskine, 7) Overholder nedennævnte direktiver og disses gennemførelse til national ret, 8) For maskiner under bilag IV, 9) Certifikat nummer, 10) Bemyndigede organ, 15) harmoniserede standarder, der anvendes, 16) standarder eller tekniske regler, 17) Udfærdiget i, 18) Dato, 19) Underskrivers navn, 20) Funktion, 21) Underskrift.

de : 1) EG-Konformitätserklärung (original), 2) Die Firma, 3) Adresse, 4) Technischen Unterlagen, 5) Hersteller der nachfolgend beschriebenen Maschine, 6) Erklärt, dass diese Maschine, 7) den folgenden Richtlinien und deren Umsetzung in die nationale Gesetzgebung entspricht, 8) Für die Maschinen laut Anhang IV, 9) Bescheinigungsnummer, 10) Benannte Stelle, 15) angewandten harmonisierten Normen, 16) angewandten sonstigen technischen Normen und Spezifikationen, 17) Ausgestellt in, 18) Datum, 19) Name des Unterzeichners, 20) Funktion, 21) Unterschrift.

el : 1) Δήλωση συμμόρφωσης CE (πρωτότυπο), 2) Η εταιρεία, 3) Διεύθυνση, 4) τεχνικό φάκελο, 5) Κατασκευάστρια του εξής περιγραφόμενου μηχανήματος, 6) Δηλώνει ότι αυτό το μηχάνημα, 7) Είναι σύμφωνο με τις εξής οδηγίες και τις προσαρμογές τους στο εθνικό δίκαιο, 8) Για τα μηχανήματα παραρτήματος IV, 9) Αριθμός δήλωσης, 10) Κοινοποιημένος φορέας, 15) εναρμονισμένα πρότυπα που χρησιμοποιούνται, 16) Πρότυπα ή τεχνικούς κανόνες που χρησιμοποιούνται, 16) Είναι σύμφωνο με τα εξής πρότυπα και τεχνικές διατάξεις, 17) Εν, 18) Ημερομηνία, 19) Όνομα του υπογράφοντος, 20) Θέση, 21) Υπογραφή.

es : 1)Declaración DE de conformidad (original), 2) La sociedad, 3) Dirección, 4) expediente técnico, 5) Constructor de la máquina descrita a continuación, 6) Declara que esta máquina, 7) Está conforme a las siguientes directivas y a sus transposiciones en derecho nacional, 8) Para las máquinas anexo IV, 9) Número de certificación, 10) Organismo notificado, 15) normas armonizadas utilizadas, 16) Otras normas o especificaciones técnicas utilizadas, 17) Hecho en, 18) Fecha, 19) Nombre del signatario, 20) Función, 21) Firma.

et : 1) EÜ vastavusdeklaratsioon (algupärane), 2) Äriühing, 3) Aadress, 4) Tehniline dokumentatsioon, 5) Seadme tootja, 6) Kinnitab, et see toode, 7) On vastavuses järgmiste direktiivide ja nende riigisisesesse õigusesse ülevõtmiseks vastuvõetud õigusaktidega, 8) IV lisas loetletud seadmete puhul, 9) Tunnistuse number, 10) Sertifitseerimisasutus, 15) kasutatud ühtlustatud standarditele, 16) Muud standardites või spetsifikatsioonides kasutatakse, 17) Väljaandmise koht, 18) Väljaandmise aeg, 19) Allkirjastaja nimi, 20) Amet, 21) Allkiri.

fi : 1) EY-vaatimustenmukaisuusvakuutus (alkuperäiset), 2) Yritys, 3) Osoite, 4) teknisen eritelmän, 5) Jäljessä kuvatun koneen valmistaja, 6) Vakuuttaa, että tämä kone, 7) Täyttää seuraavien direktiivien sekä niitä vastaavien kansallisten säännösten vaatimukset, 8) Liitteen IV koneiden osalta, 9) Todistuksen numero, 10) Ilmoitettu laitos, 15) yhdenmukaistettuja standardeja käytetään, 16) muita standardeja tai eritelmät, 17) Paikka, 18) Aika, 19) Allekirjoittajan nimi, 20) Toimi, 21) Allekirjoitus.

ga : 1) « EC »dearbhú comhréireachta (bunaidh), 2) An comhlacht, 3) Seoladh, 4) comhad teicniúil, 5) Déantóir an innill a thuairiscítear thíos, 6) Dearbhaíonn sé go bhfuil an t-inneall, 7) Go gcloíonn sé le na treoracha seo a leanas agus a trasuímh isteach i ndlí náisiúnta, 8) Le haghaidh innill an aguisín IV, 9) Uimhir teastais, 10) Comhlacht a chuireadh i bhfios, 15) caighdeáin comhchuibhithe a úsáidtear, 16) caighdeáin eile nó sonraíochtaí teicniúla a úsáidtear, 17) Déanta ag, 18) Dáta, 19) Ainm an tsínitheora, 20) Feidhm, 21) Síniú.

hu : 1) CE megfelelőségi nyilatkozat (eredeti), 2) A vállalat, 3) Cím, 4) műszaki dokumentáció, 5) Az alábbi gép gyártója, 6) Kijelenti, hogy a gép, 7) Megfelel az alábbi irányelveknek valamint azok honosított előírásainak, 8) A IV. melléklet gépeihez, 9) Bizonylati szám, 10) Értesített szervezet, 15) felhasznált harmonizált szabványok, 16) egyéb felhasznált műszaki szabványok és előírások hivatkozásai, 17) Kelt (hely), 18) Dátum, 19) Aláíró neve, 20) Funkció, 21) Aláírás.

is : 1) (Samræmisvottorð ESB (upprunalega), 2) Fyrirtækið, 3) Aðsetur, 4) Tæknilegar skrá, 5) Smiður tækisins sem lýst er hér á eftir, 6) Staðfestir að tækið, 7) Samræmist eftirfarandi stöðlum og staðfærslu þeirra með hliðsjón af þjóðarrétti, 8) Fyrir tækin í aukakafla IV, 9) Staðfestingarnúmer, 10) Tilkynnt til, 15) samhæfða staðla sem notaðir, 16) önnur staðlar eða forskriftir notað, 17) Staður, 18) Dagsetning, 19) Nafn undirritaðs, 20) Staða, 21) Undirskrift.

it : 1) Dichiarazione CE di conformità (originale), 2) La società, 3) Indirizzo, 4) fascicolo tecnico, 5) Costruttore della macchina descritta di seguito, 6) Dichiara che questa macchina, 7) È conforme alle direttive seguenti e alle relative trasposizioni nel diritto nazionale, 8) Per le macchine Allegato IV, 9) Numero di Attestazione, 10) Organismo notificato, 15) norme armonizzate applicate, 16) altre norme e specifiche tecniche applicate, 17) Stabilita a, 18) Data, 19) Nome del firmatario, 20) Funzione, 21) Firma.

lt : 1) CE atitikties deklaracija (originalas), 2) Bendrovė, 3) Adresas, 4) Techninė byla, 5) Žemiau nurodytas įrenginio gamintojas, 6) Pareiškia, kad šis įrenginys, 7) Atitinka toliau nurodytas direktyvas ir į nacionalinius teisės aktus perkeltas jų nuostatas, 8) IV priedas dėl mašinų, 9) Sertifikato Nr, 10) Paskelbtoji įstaiga, 15) suderintus standartus naudojamus, 16) Kiti standartai ir technines specifikacijas, 17) Pasirašyta, 18) Data, 19) Pasirašiusio asmens vardas ir pavardė, 20) Pareigos, 21) Parašas.

lv : 1) EK atbilstības deklarācija (oriģināls), 2) Uzņēmums, 3) Adrese, 4) tehniskās lietas, 5) Tālāk aprakstītās iekārtas ražotājs, 6) Apliecina, ka šī iekārta, 7) Ir atbilstoša tālāk norādītajām direktīvām un to transpozīcijai nacionālajā likumdošanā, 8) Iekārtām IV pielikumā, 9) Apliecības numurs, 10) Reģistrētā organizācija, 15) lietotajiem saskaņotajiem standartiem, 16) lietotajiem tehniskajiem standartiem un specifikācijām, 17) Sastādīts, 18) Datums, 19) Parakstītāja vārds, 20) Amats, 21) Paraksts.

mt : 1) Dikjarazzjoni ta' Konformità KE (oriġinali), 2) Il-kumpanija, 3) Indirizz, 4) fajl tekniku, 5) Manifattriċi tal-magna deskritta hawn isfel, 6) Tiddikjara li din il-magna, 7) Hija konformi hija konformi mad-Direttivi segwenti u l-liġijiet li jimplimentawhom fil-liġi nazzjonali, 8) Għall-magni fl-Anness IV, 9) Numru taċ-ċertifikat, 10) Entità nnotifikata, 15) l-istandards armonizzati użati, 16) standards tekniċi u speċifikazzjonijiet oħra użati, 17) Magħmul f', 18) Data, 19) Isem il-firmatarju, 20) Kariga, 21) Firma.

nl : 1) EG-verklaring van overeenstemming (oorspronkelijke), 2) Het bedrijf, 3) Adres, 4) technisch dossier, 5) Constructeur van de hierna genoemde machine, 6) Verklaart dat deze machine, 7) In overeenstemming is met de volgende richtlijnen en hun omzettingen in het nationale recht, 8) Voor machines van bijlage IV, 9) Goedkeuringsnummer, 10) Aangezegde instelling, 15) gehanteerde geharmoniseerde normen, 16) andere gehanteerde technische normen en specificaties, 17) Opgemaakt te, 18) Datum, 19) Naam van ondergetekende, 20) Functie, 21) Handtekening.

no : 1) CE-samsvarserklæring (original), 2) Selskapet, 3) Adresse, 4) tekniske arkiv, 5) Fabrikant av følgende maskin, 6) Erklærer at denne maskinen, 7) Oppfyller kravene i følgende direktiver, med nasjonale gjennomføringsbestemmelser, 8) For maskinene i tillegg IV, 9) Attestnummer, 10) Notifisert organ, 15) harmoniserte standarder som brukes, 16) Andre standarder og spesifikasjoner brukt, 17) Utstedt i, 18) Dato, 19) Underskriverens navn, 20) Stilling, 21) Underskrift.

pl : 1) Deklaracja zgodności CE (oryginalne), 2) Spółka, 3) Adres, 4) dokumentacji technicznej, 5) Wykonawca maszyny opisanej poniżej, 6) Oświadcza, że ta maszyna, 7) Jest zgodna z następującymi dyrektywami i odpowiadającymi przepisami prawa krajowego, 8) Dla maszyn załącznik IV, 9) Numer certyfikatu, 10) Jednostka certyfikująca, 15) zastosowanych norm zharmonizowanych, 16) innych zastosowanych norm technicznych i specyfikacji, 17) Sporządzono w, 18) Data, 19) Nazwisko podpisującego, 20) Stanowisko, 21) Podpis.

pt : 1) Declaração de conformidade CE (original), 2) A empresa, 3) Morada, 4) processo técnico, 5) Fabricante da máquina descrita abaixo, 6) Declara que esta máquina, 7) Está em conformidade às directivas seguintes e às suas transposições para o direito nacional, 8) Para as máquinas no anexo IV, 9) Número de certificado, 10) Entidade notificada, 15) normas harmonizadas utilizadas, 16) outras normas e especificações técnicas utilizadas, 17) Elaborado em, 18) Data, 19) Nome do signatário, 20) Cargo, 21) Assinatura.

ro : 1) Declaraţie de conformitate CE (originală), 2) Societatea, 3) Adresa, 4) cărtii tehnice, 5) Constructor al maşinii descrise mai jos, 6) Declară că prezenta maşină, 7) Este conformă cu directivele următoare şi cu transpunerea lor în dreptul naţional, 8) Pentru maşinile din anexa IV, 9) Număr de atestare, 10) Organism notificat, 15) standardele armonizate utilizate, 16) alte standarde si specificatii tehnice utilizate, 17) Întocmit la, 18) Data, 19) Numele persoanei care semnează, 20) Funcţia, 21) Semnătura.

sk : 1) ES vyhlásenie o zhode (pôvodný), 2) Názov spoločnosti, 3) Adresa, 4) technickej dokumentácie, 5) Výrobca nižšie opísaného stroja, 6) Vyhlasuje, že tento stroj, 7) Je v súlade s nasledujúcimi smernicami a smernicami transponovanými do vnútroštátneho práva, 8) Pre stroje v prílohe IV, 9) Číslo certifikátu, 10) Notifikačný orgán, 15) použité harmonizované normy, 16) použité iné technické normy a predpisy, 17) Miesto vydania, 18) Dátum vydania, 19) Meno podpisujúceho, 20) Funkcia, 21) Podpis.

sl : 1) ES Izjava o ustreznosti (izvirna), 2) Družba. 3) Naslov. 4) tehnične dokumentacije, 5) Proizvajalac tukaj opisanega stroja, 6) Izjavlja, da je ta stroj, 7) Ustreza naslednjim direktivam in njihovi transpoziciji v državno pravo, 8) Za stroje priloga IV, 9) Številka potrdila, 10) Obvestilo organu, 15) uporabljene harmonizirane standarde, 16) druge uporabljene tehnične standarde in zahteve, 17) V, 18) Datum, 19) Ime podpisnika, 20) Funkcija, 21) Podpis.

sv : 1) CE-försäkran om överensstämmelse (original), 2) Företaget, 3) Adress, 4) tekniska dokumentationen, 5) Konstruktör av nedan beskrivna maskin, 6) Försäkrar att denna maskin, 7) Överensstämmer med nedanstående direktiv och införlivandet av dem i nationell rätt, 8) För maskinerna i bilaga IV, 9) Nummer för godkännande, 10) Organism som underrättats, 15) Harmoniserade standarder som använts, 16) andra tekniska standarder och specifikationer som använts, 17) Upprättat i, 18) Datum, 19) Namn på den som undertecknat, 20) Befattning, 21) Namntecknin.

https://truckmanualshub.com/

LIFTING PLATFORM IDENTIFICATION

LIFTING PLATFORM'S MANUFACTURER'S PLATE (FIG.A)

- Type :
- Serial No.:
- Year of manufacture:

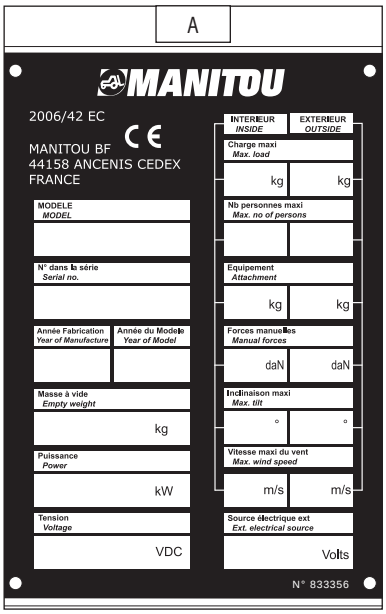

LOCATION OF THE MANUFACTURER'S PLATE (FIG. B - REP B1)

The manufacturer's plate is fixed on the chassis.

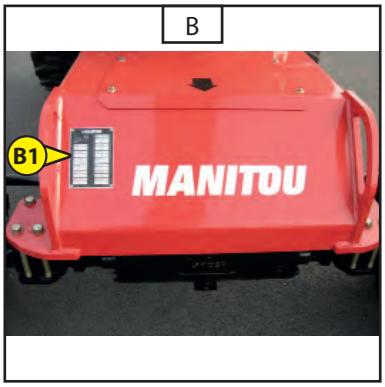

IC ENGINE (FIG. C - NO. C1)

- Engine no.

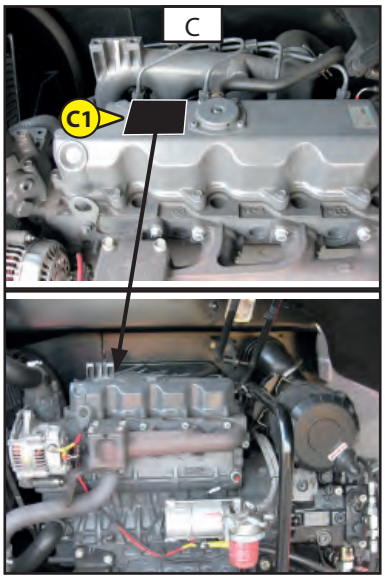

https://truckmanualshub.com/

Hydrostatic pump (fig. D)

- Pump No.
- Coding type
- Manufacture No
- Year of manufacture

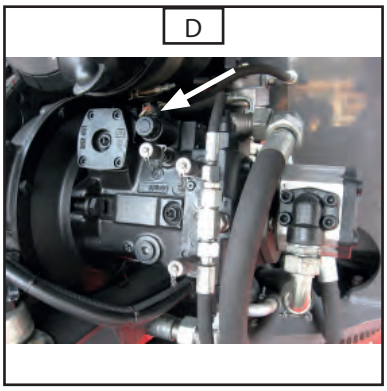

Front axle (fig. E)

- Axle type
- Serial No.
- Manufacture No.

Rear axle (fig. F)

- Axle type
- Serial No.
- Manufacture No.

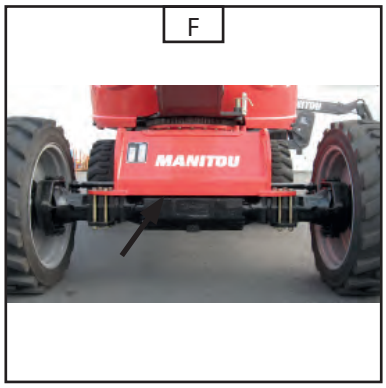

https://truckmanualshub.com/

CHARACTERISTICS 260 TJ - 280 TJ

LOAD SPECIFICATIONS	UNIT	280 ATJ	260 TJ	TOL ±
Lifting platform				
Nominal capacity for indoor use	Kg	240 / 350	400	-
Nominal capacity for outdoor use	Kg	240 / 350	400	-
Maximum wind during outdoor use		45		-
Number of persons in the basket	-	2 / 3	3	-
Turret rotation		CONTINUOUS		
Lifting platform unladen weight (actual / announced)	Kg	16 550 / 16 650	16 380 / 16 450	-
Lifting platform unladen weight (min / max)	Kg	16 300 / 16 650	16 130 / 16 480	-
Max permissible tilt	°	4	4	0.1
Traversable slope - commercial value	%	40	40	2
Traversable slope - theoretical value	%	34,5	34,5	-
Working speed	Km/h	0.8		0.1
Transport speed (1) tortoise (slow speed)	Km/h	2.5		0.2
Transport speed (2) ramp	Km/h	2.5		0.2
Transport speed (3) hare (high speed)	Km/h	4.7		0.2
Wheels				
Tyre		SOLIDEAL 385/45-28		
Inflation / pressure	bar	7.5		
Overload radius, front/rear, transport position	mm	500 / 504	520 / 532	5
Load on one front wheel (in transport position)	Kg	5 500	5 675	10
Load on one rear wheel (transport position)	Kg	2 800	2 550	10
Maximum load on one wheel, working position	Kg	10 500	9 500	
Contact surface on the ground (hard / soft ground)	cm^2	623 / 1 160	635 / 1 471	
Surface penetration (hard / soft ground)	daN/cm^2	16,85 / 9,05	14,96 / 6,46	

HYDRAULIC MOVEMENT (basket control)	UNIT	280 ATJ	260 TJ	TOL ±
Structure, telescope retracted				
Raising unladen / laden	s	45 / -	45 / -	1
Lowering unladen / laden	s	42 / -	42 / -	1
Structure, telescope extended				
Raising unladen / laden	s	70 / -	70 / -	1
Lowering unladen / laden	s	70 / -	70 / -	1
Telescope				
Extended unladen / laden	s	30 / -	30 / -	1
Retracted unladen / laden	s	30 / -	30 / -	1
Pendular unit, telescope retracted				
Raising unladen / laden	s	22 / -	23 / -	1
Lowering unladen / laden	s	18 / -	18 / -	1
Pendular unit, telescope extended				
Raising unladen / laden	s	30 /	_	1
Lowering unladen / laden	s	25 /	_	1
Pendular unit telescope				
Extended unladen / laden	s	16 /	_	1
Retracted unladen / laden	s	13 /	_	1
Turret rotation				
Rotation 360°, telescope extended / retracted	s	50 / 30 / 28	50 / 30 / 28	1
Basket rotation				
Rotation over 180°	s	14	14	2

https://truckmanualshub.com/

CHARACTERISTICS 260 TJ - 280 TJ

DIMENSIONS	UNIT	280 TJ	260 TJ	TOL ±
Transport position				
Width	mm	2 430		1%
Length	mm	11 355	10 840	1%
Height	mm	2 750		1%
Length (truck transport)	mm	8 040	8 000	1%
Height (truck transport)	mm	2 750		1%
Floor / ground height, during transport	mm	500	400	1%
Turret overlap	mm	1 450		1%
Clearance under the chassis	mm	430		2%
Clearance under the axle	mm	375		2%
Max chassis clearance angle	%	80		2%
INT / EXT 2-wheel drive gyration radius (measured)	mm	-	-	3%
INT / EXT 4-wheel drive gyration radius (measured)	mm	1 750 / 7 235	1 750 / 6 845	3%
Work Position				
Working height	mm	27 750	25 910	1%
Floor height	mm	25 750	23 910	1%
Working offset (interior of basket + 500 mm) Abacus 1	mm	21 450 - Load 240 Kg	19 700	1%
Working offset (interior of basket + 500 mm) Abacus 2	mm	19 450 - Load 350 Kg	-	1%
Floor height, basket at max offset	mm	3 050	2 900	1%
Overhang under upper arm	mm	-	-	1%
Pendular arm clearance angle + / -	°	+ 56,8 / - 62	+ 70,3 / - 63	1%
Basket				
External dimensions	mm	2 300 x 900		1%
Floor area	mm	2 235 x 840		1%

CAPACITY	UNIT	280 TJ	260 TJ	TOL ±
Hydraulic oil reservoir	l	94		2
Diesel tank	l	72		2
Engine oil sump	l	9.5		2
Coolant circuit	l	9		2

STANDARD EQUIPMENT	UNIT	280 TJ	260 TJ	TOL ±
Hour counter		YES		-
230V pre-configuration		YES		-
Diesel level proportional display		YES		-
Low fuel level / battery alarm		YES		-
Dead Man's handle		YES		-
Toolbox in the basket		YES		-
User interface (diagnostic help)		YES		-
Oscillating axle		YES		-

OPTIONS	UNIT	280 TJ	260 TJ	TOL ±
Audible beep on all movements		YES		-
Rotating flashing light		SERIE		-

647382 EN (01/02/2015)

https://truckmanualshub.com/

CHARACTERISTICS 260 TJ - 280 TJ

INTERNAL COMBUSTION ENGINE	UNIT	280 TJ	260 TJ	TOL ±
Type		KUBOTA V2403-M		-
Fuel		GASOIL		-
No. of cylinders		4		-
Cubic capacity	cm^3	2,434		-
Idling speed, unladen	rpm	1 050		50
Max engine revs, unladen	rpm	2 550		20
ISO power/ rpm (at 2400 rpm)	CV/KW	46 - 34.1		-
Max torque (at 1800 rpm)	Nm	162,5		-
Fuel consumption per hour	l/h	3,455		
No. of cycles / fuel consumption test	No. of cycles / h	6		
Unladen weight	Kg	184		5
Air filtration	µm	-		-
Type of cooling		AIR		-
Fan		SUCTION		-
LwA acoustic pressure level	dBA	105		-

TRANSMISSION	UNIT	280 TJ	260 TJ	TOL ±
Type		HYDRAULIC		
Hydrostatic pump		BOSCH-REXROTH 14VG56		
Cubic capacity	Cm^3	46		
Max service pressure	bar	400		5
Hydrostatic motor		BOSCH-REXROTH A2FM125		
Cubic capacity	Cm^3	125		
Axle		DANA		
Reduction ratio		47.06		
Traction power (mesured)	daNm	5 850		
Front axle differential		SLIPPAGE LIMIT 45%		
Rear axle differential		HYDRAULIC LOCKING 100%		
Number of steered wheels Front / Rear		2 / 2		
Number of driven wheels Front / Rear		2 / 2		-
BRAKING CIRCUIT (parking brake)	UNIT	280 TJ	260 TJ	TOL ±
Type of brake		NEGATIVE		-
Type of control		HYDRAULIC		-
Braked wheels		4 WHEELS INDIVIDUALLY		-
Anti-skid system (freewheeling)		MANUAL ON AXLE		-
Braking torque	daNm	3100 on each of the 4 wheels at 40°		-

LEVEL OF VIBRATIONS	**UNIT**	**280 TJ**	**260 TJ**	**TOL ±**
Vibrations received to the body in the basket				
Quadratic average values for the body	m/s^2	< 0,5		-

https://truckmanualshub.com/

CHARACTERISTICS 260 TJ - 280 TJ

CIRCUIT HYDRAULIC	UNIT	280 TJ	260 TJ	TOL ±
Auxiliary hydraulic pump				
Type		GEARS – FIXED CUBIC CAPACITY		-
Cubic capacity	cm^3	28		-
Max flow rate, unladen	l/min	70		-
Max permanent service pressure	bar	250		5
Filtration				
Return	µm			-
Suction	µm	10 ABSOLUTE		-
Pressure	µm	10 ABSOLUTE		-
ELECTRICAL CIRCUIT	UNIT	280 TJ	260 TJ	TOL ±
Battery				
Supplier (Initial mounting)		EXIDE		
C5 capacity	Ah	145		-
Nominal voltage	V	12		-
Type		START-UP		-
Alternator				
Type				-
Intensity	A	60		-
Voltage	V	12		-
Starter				
Type				-
Power output	KW	1.4		-
Voltage	V	12		-
EMERGENCY PUMP	UNIT	280 TJ	260 TJ	TOL ±
Type		ELECTRICAL		-
Cubic capacity	cm^3	2.0		-
Power output	KW	1.3		-
Voltage	V	12		-
Intensity at 150 bars	A	-	-	-
Integral thermal cut-out		YES		
S2		6.2 at 100 b		-
S3	%	10.3 at 100 b		-

https://truckmanualshub.com/

DIMENSIONS 260 TJ

A	10840 mm
A1	7880 mm
B	2800 mm
C	2510 mm
C1	2705 mm
D	2430 mm
E	410 mm
F	355 mm
G	385 mm
H	2000 mm
I	4330 mm
J	4420 mm
K	5180 mm
L	9270 mm
M	6845 mm
N	4030 mm
O	5160 mm
P	39° - 80%

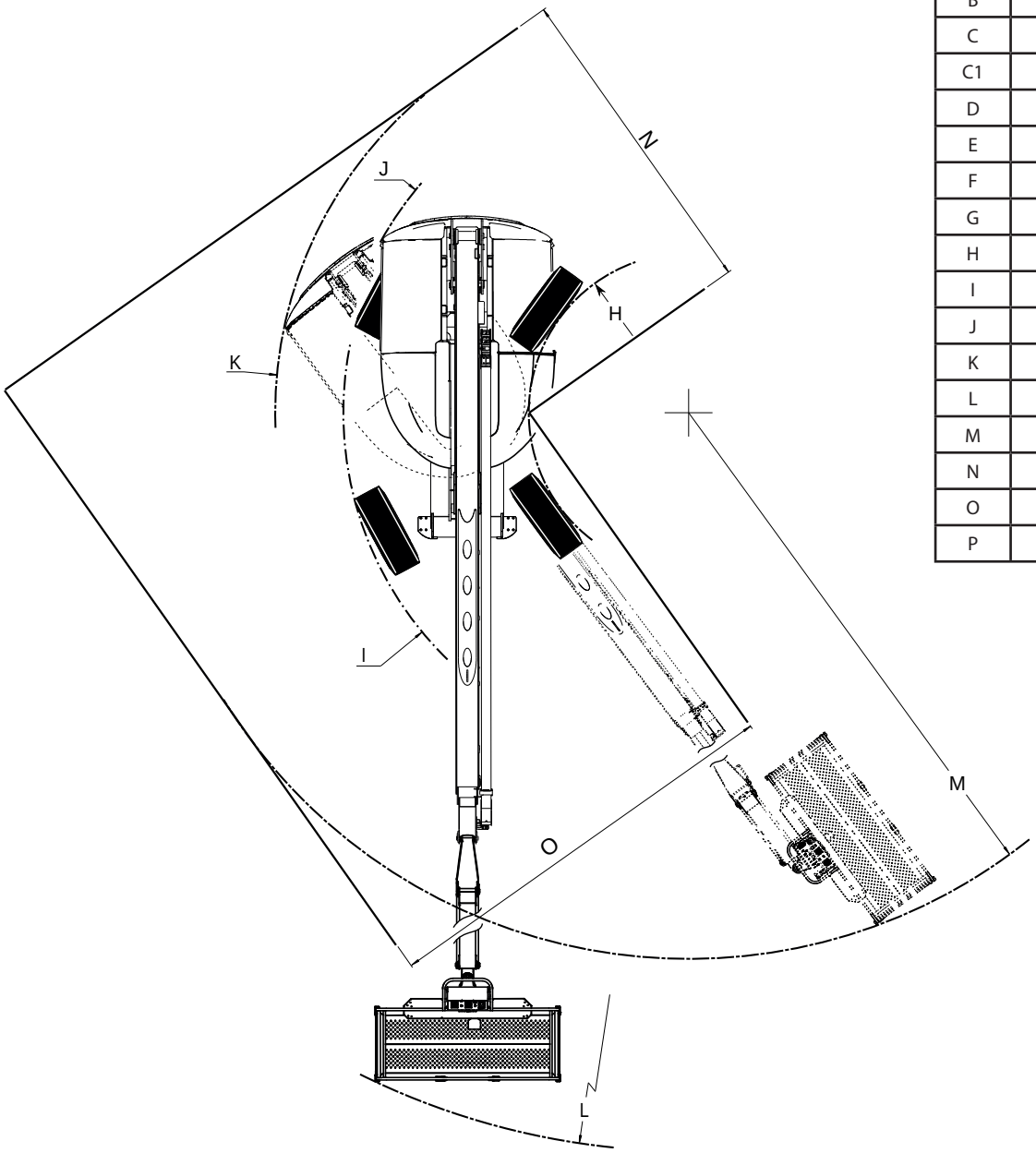

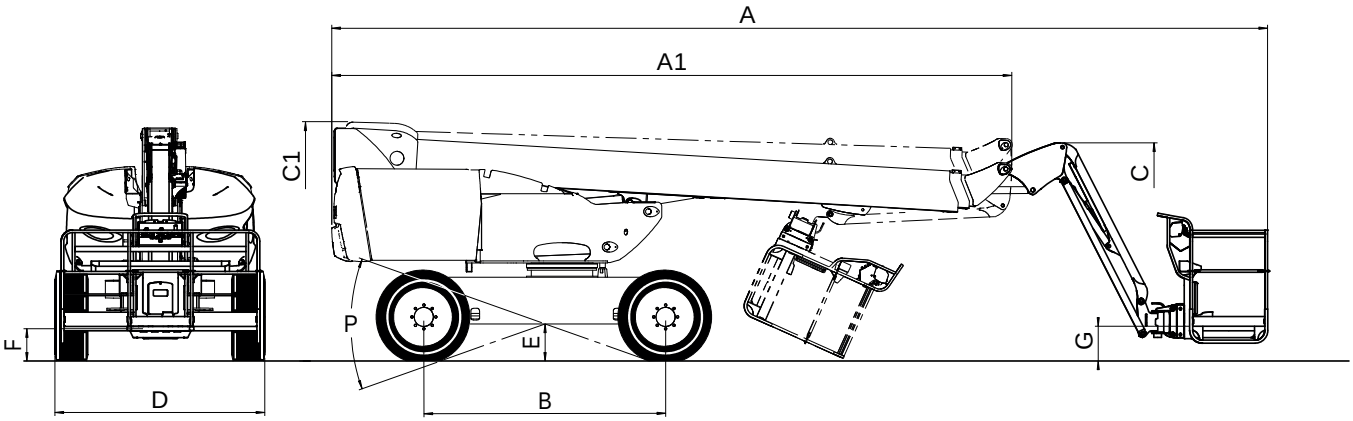

647382 EN (01/02/2015)

https://truckmanualshub.com/

DIAGRAM 260 TJ

D1	8285 mm
H1	23909 mm
D2	19202 mm
H2	2798 mm
H3	- 180 mm

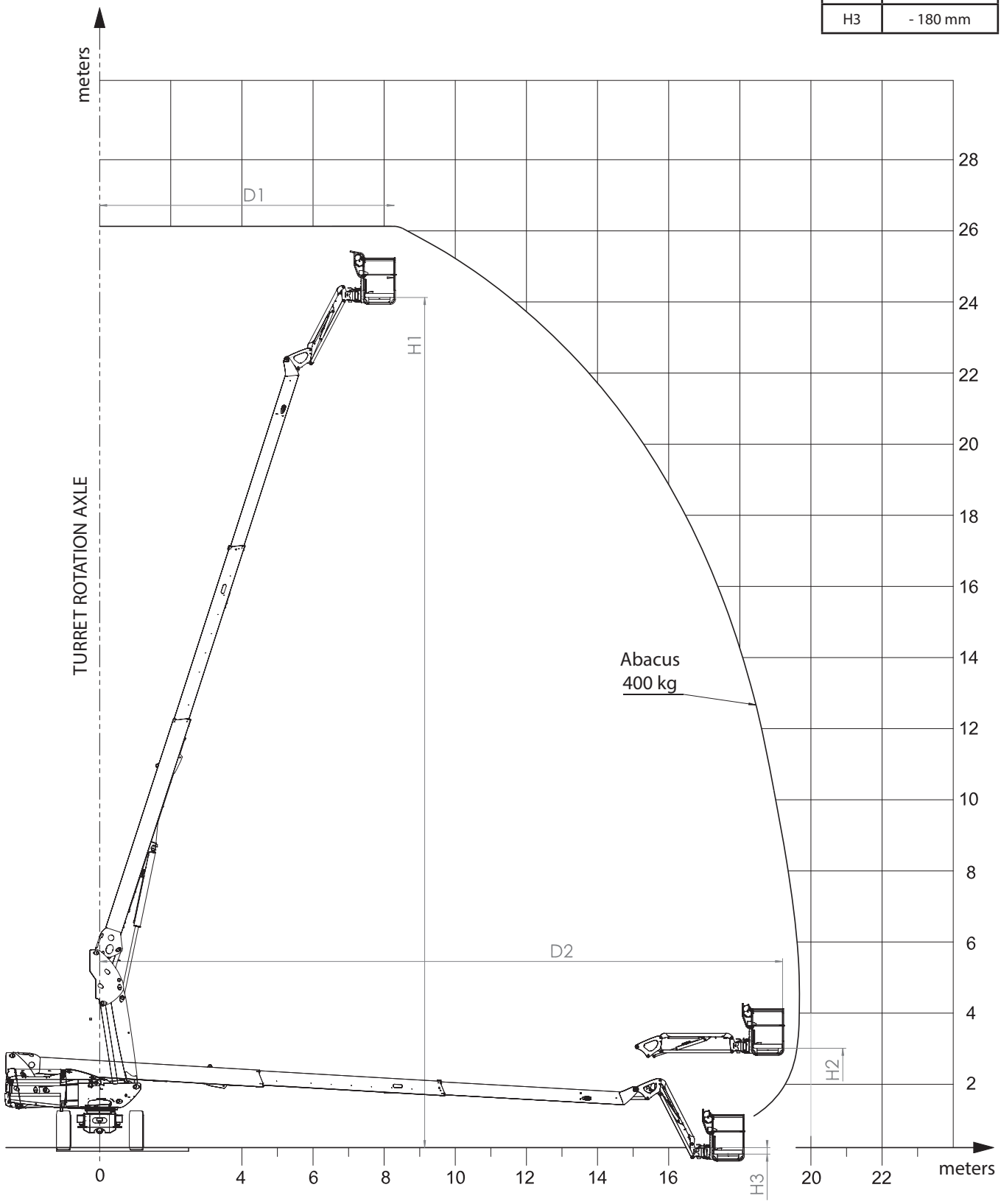

647382 EN (01/02/2015)

https://truckmanualshub.com/

DIMENSIONS 280 TJ

A	11355 mm
A1	8040 mm
B	2800 mm
C	2750 mm
C1	2725 mm
D	2430 mm
E	430 mm
F	375 mm
G	500 mm
H	2000 mm
I	4330 mm
J	4420 mm
K	5180 mm
L	9750 mm
M	7340 mm
N	4030 mm
O	5710 mm
P	39° - 80%

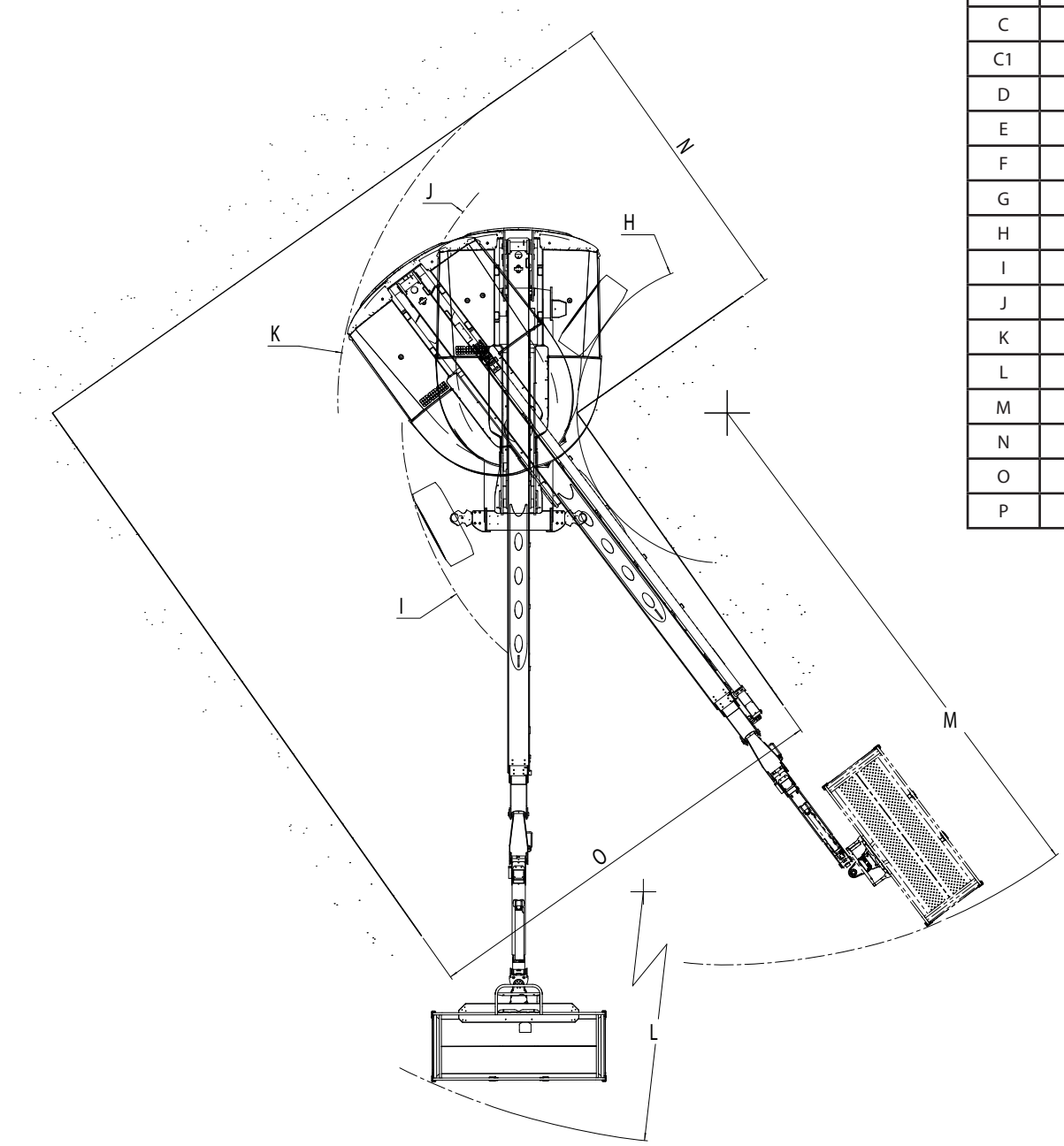

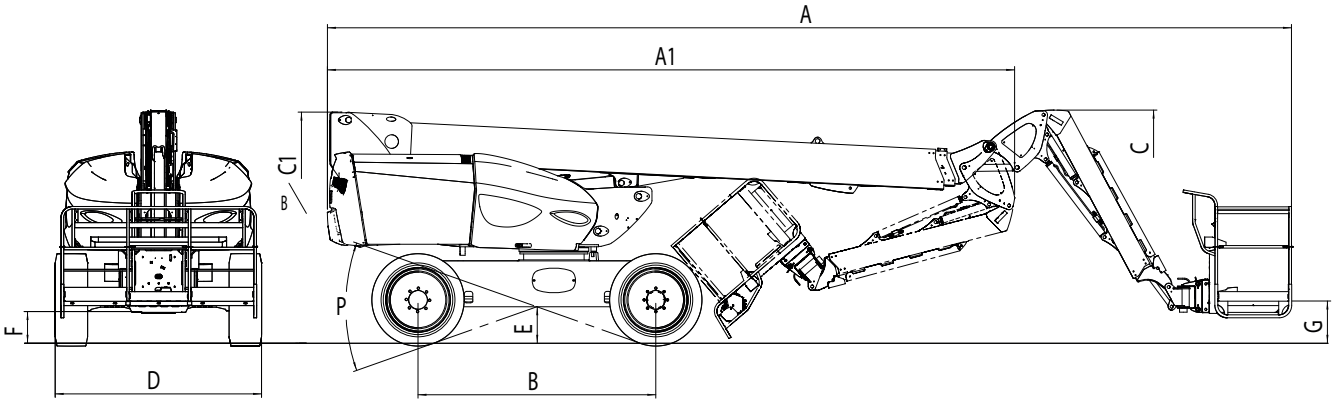

647382 EN (01/02/2015)

https://truckmanualshub.com/

DIAGRAM 280 TJ

D1	9100 mm
H1	25750 mm
D2	20950 mm
H2	3050 mm
H3	- 1150 mm
D3	18950 mm

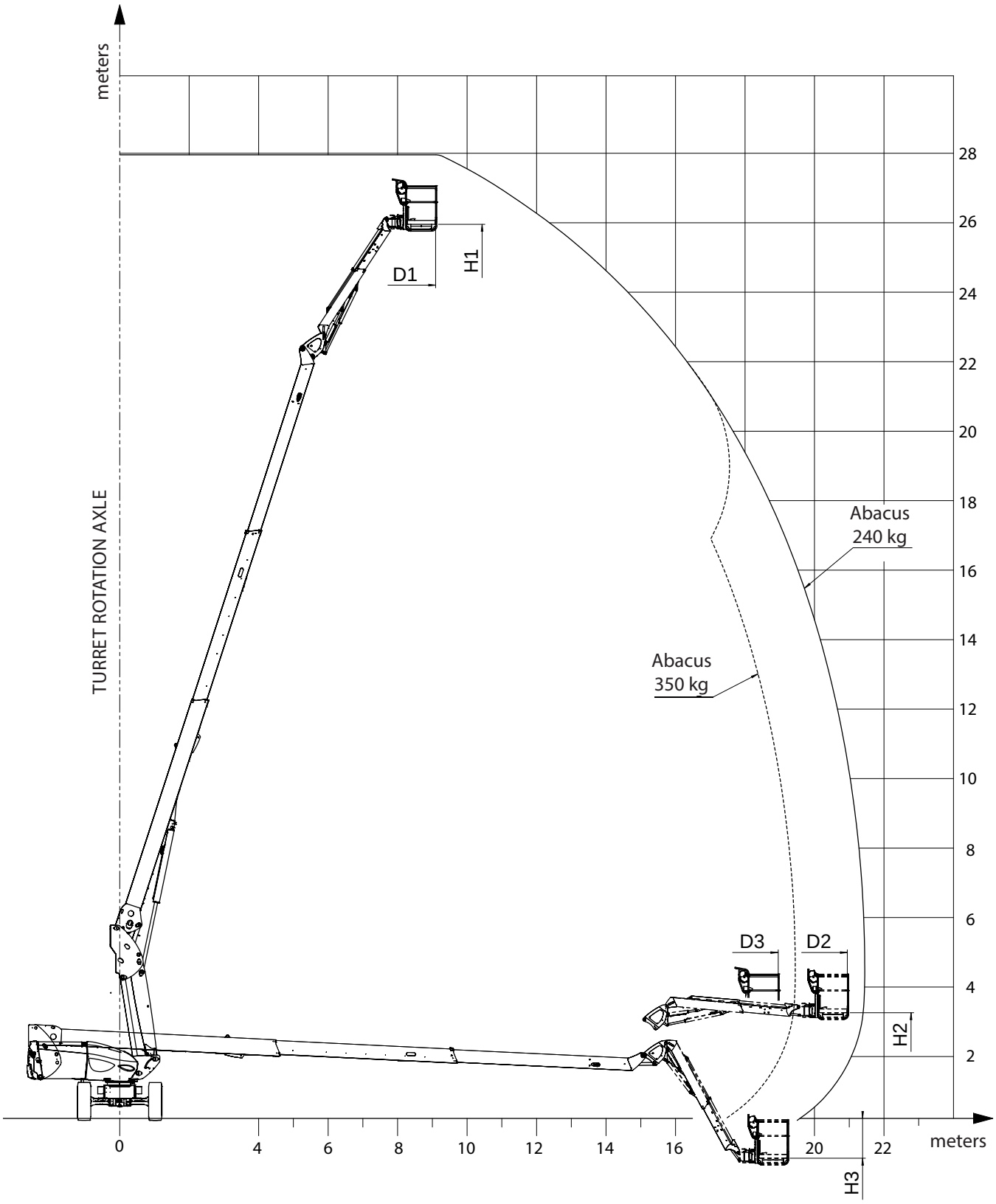

https://truckmanualshub.com/

DESCRIPTION

- This machine is a mobile personnel lifting platform. It consists of a work platform fixed on the end of a pendular unit which, in turn, is fixed on the end of a telescopic arm, the whole assembly being mounted on an articulated arm.

- MANITOU lifting platforms are solely for the purpose of bringing people, with their tools and supplies (within the limits of the authorised weight, see "SPECIFICATIONS" paragraph), to a desired working height in order to reach hard to access locations above installations and buildings.

- The lifting platform is fitted with a control station in the basket. From this control station, the operator can drive and move his machine forwards and backwards. The operator can raise or lower the arm assembly, extend or retract the telescopic arm and turn the turret or the basket to the right or the left.

- The basket, arm and turret assembly can rotate continuously to the left or to the right.

- The lifting platform is also fitted with a ground maintenance and emergency station, from which all the raising commands can be made except for translation. The base controls are only to be used in the event of an emergency to bring the operator back down to the ground if he is incapable of doing so himself.

- The operator must check on a daily basis that the ground maintenance, emergency and basket station controls are working correctly.

Stickers concerning the characteristics, safety and rescue procedure are affixed to the machine. The operator must be aware of these and fully understand their content. In order to avoid any risk of wrongly interpreting the pictograms, please refer to the "SAFETY STICKERS" paragraph in section 1 – SAFETY INSTRUCTIONS AND ADVICE.

- The lifting platform is moved by a hydraulic pump operated by the engine. The hydraulic components are controlled by electro-valves actuated by contactors and control joysticks.

- The rocker switch controls on the base console and the basket console are either in GO or STOP mode.

- The base console is fitted with a so-called "Dead Man's push button (8*). This must be held down in the base position at the same time as pressing a base control. Releasing it stops the movement.

- The lifting platform is a 4-wheel drive machine driven by an internal combustion engine. The driven wheels are provided with hydraulic release spring brakes. These brakes tighten automatically as soon as the translation joystick is returned to the Neutral position.

- The lifting platform can be raised to the limit of its capabilities (see "SPECIFICATIONS" in this section). A load of no more than the maximum capacity in the basket enables you to make movements in any position provided that the machine is on a surface with no more than the maximum permissible inclination.

GENERAL

- Over the following pages, you will find all the information you require to use the machine. This includes the procedures for using, driving, parking, loading and transporting the lifting platform.

* : The reference numbers above correspond to those used in the description of these components over the following pages.

647382 EN (01/02/2015)

https://truckmanualshub.com/

TILT

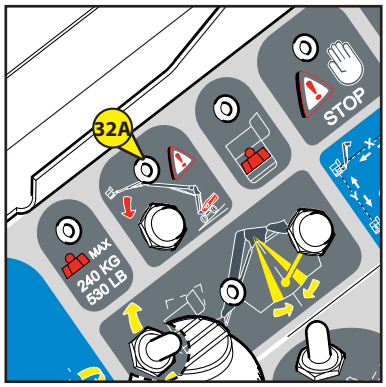

When the lifting platform reaches the maximum authorised level of tilt (see the CHARACTERISTICS section), LED 32A on the basket console flashes regularly. The basket's buzzer 46* also sounds intermittently.
All the "AGGRAVATING" movements of raising the arms and extending the telescope are forbidden as a safety measure.

To resume control, make no aggravating movements:
- Return to safety position by retracting the telescope, lowering the arms, and then setting the lifting platform back on a more horizontal surface so that you can make raising and extension movements.

FRONT BRIDGE OSCILLATION LOCKING FAULT

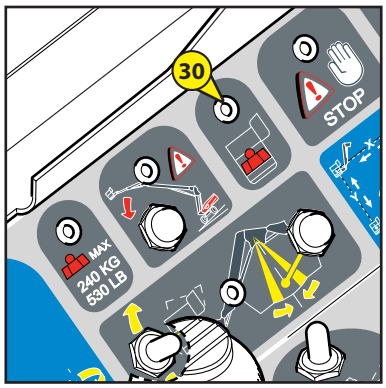

- FROM THE PLATFORM No. 950124

When the system detects a closing fault of the front bridge oscillation cylinders, the LED 32A* on the control panel blinks rapidly and the warning buzzer is activated at a high frequency.
All "DANGEROUS" arm lifting or telescopic movements are forbidden for safety reasons.

To regain control, only perform non-dangerous manoeuvres:
- return to a safe position by withdrawing the telescopic arm and lowering the arms.
- To re-enable lifting movements once the nacelle is returned to the "transport" position, cancel the fault by pressing "OK" 7c*.

If the fault persists, contact your dealership.

OVERLOAD

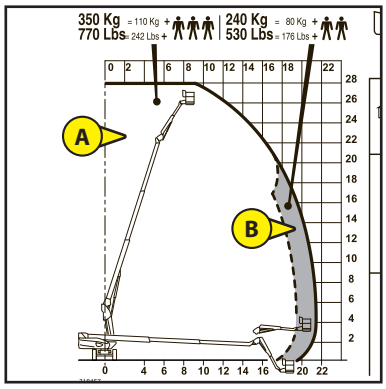

- Operation of the overload LED, Ref. 30:
- When the lifting platform reaches the authorized weight limit according to the basket is in the abacus 240 kg or 350 kg (280 TJ) and the abacus 400 kg (260 TJ):
  - LED 30* flashes regularly.
  - The basket's buzzer 46* sounds continuously.
  - All movements are prohibited as a safety measure

To resume control:
- Relieve the load on the basket by removing the item or items causing the overload, OR,
- Ask someone on the ground to instruct lowering of the basket from the base control station to bring the basket back to the ground.

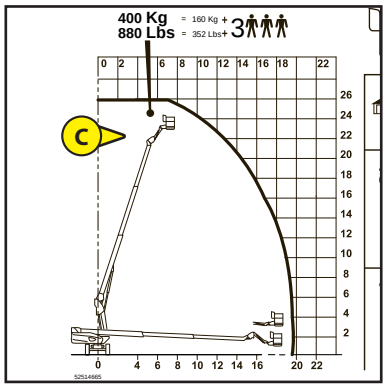

Permissible load in the 350kg zone: white zone A*
- namely: 110Kg of equipment and 3 people

Permissible load in the 240kg zone: grey zone B*
- namely: 80Kg of equipment and 2 people

Permissible load in the 400kg zone: white zone C*
- namely: 160Kg of equipment and 3 people

* : The reference numbers above correspond to those used in the description of these components over the following pages.

647382 EN (01/02/2015)

https://truckmanualshub.com/

A - GROUND MAINTENANCE AND RESCUE STATION

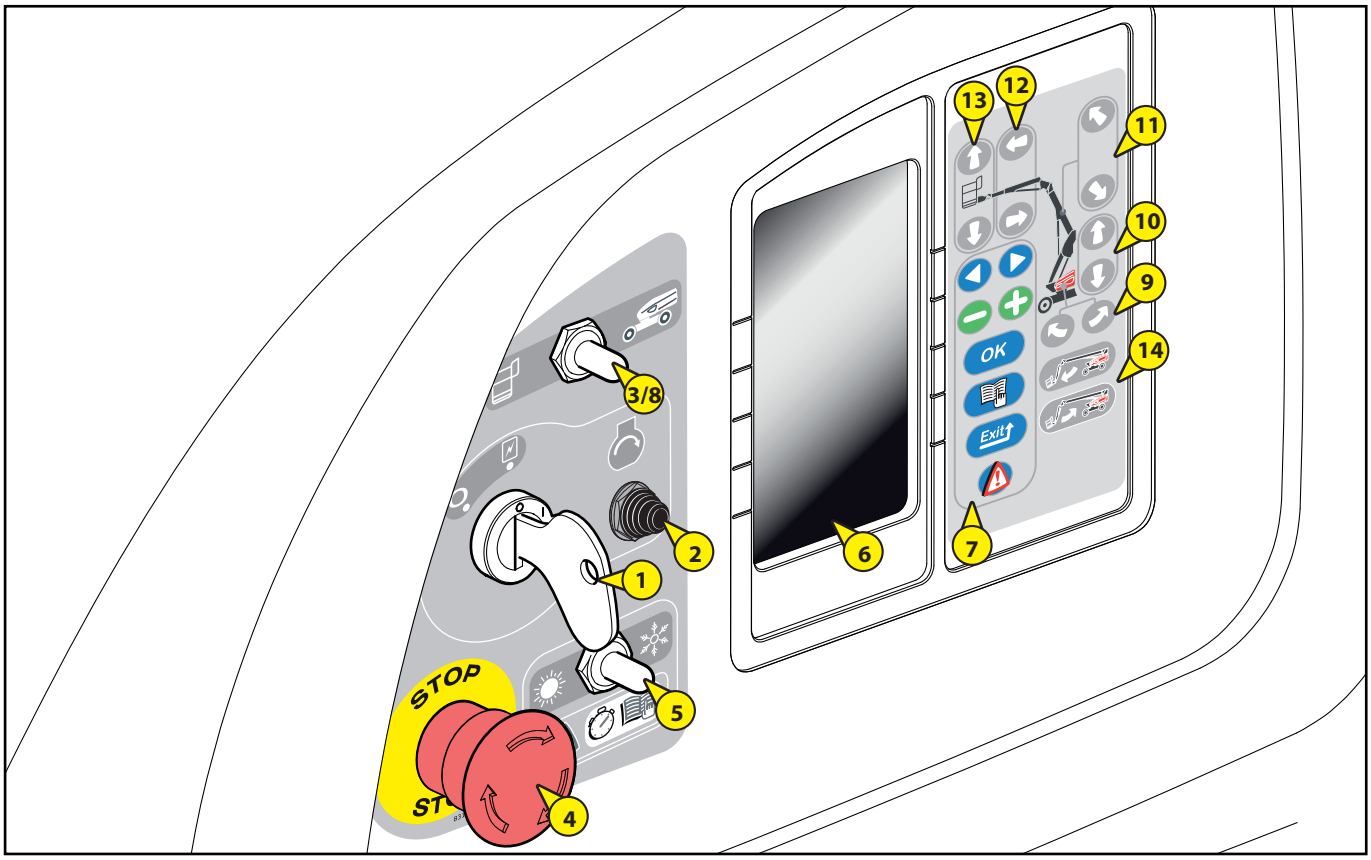

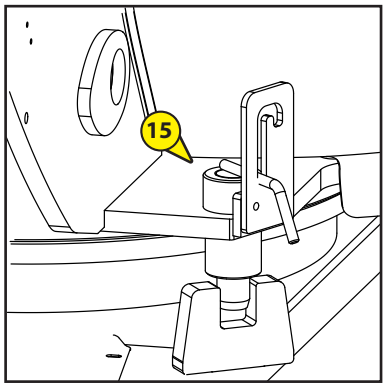

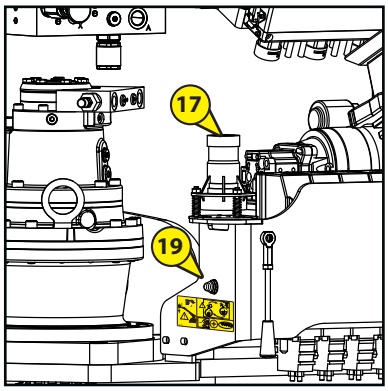

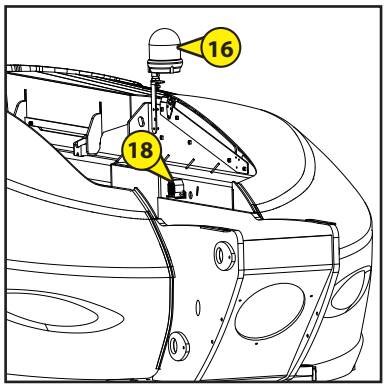

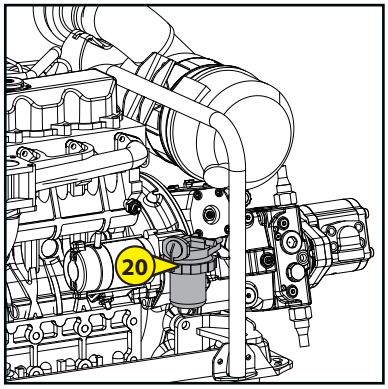

647382 EN (01/02/2015)

https://truckmanualshub.com/

1 - Key-operated ignition switch 2-26

2 - Starter button 2-26

3 - Ground or platform control selectro switch 2-26

4 - Emergency stop 2-27

5 - Engine start-up assistance selector switch 2-27

6 - Interface screen 2-28

7 - Navigation key in the interface screen 2-28

8 - Dead man's function 2-29

9 - Turret rotation keys 2-29

10 - Raising and lowering of the arm 2-29

11 - Extension and retraction of the telescope 2-30

12 - Telescopic pendular unit extension and retraction (except 260 TJ) 2-30

13 - Raising and lowering of the pendular unit 2-30

14 - Tilting of the basket downwards and upwards 2-30

15 - Blocking turret rotation 2-31

16 - Rotating flashing light 2-31

17 - Tilt sensor 2-31

18 - Buzzer 2-31

19 - Emergency pump button 2-32

20 - Fuel cock 2-32

https://truckmanualshub.com/

B - BASKET CONTROL STATION

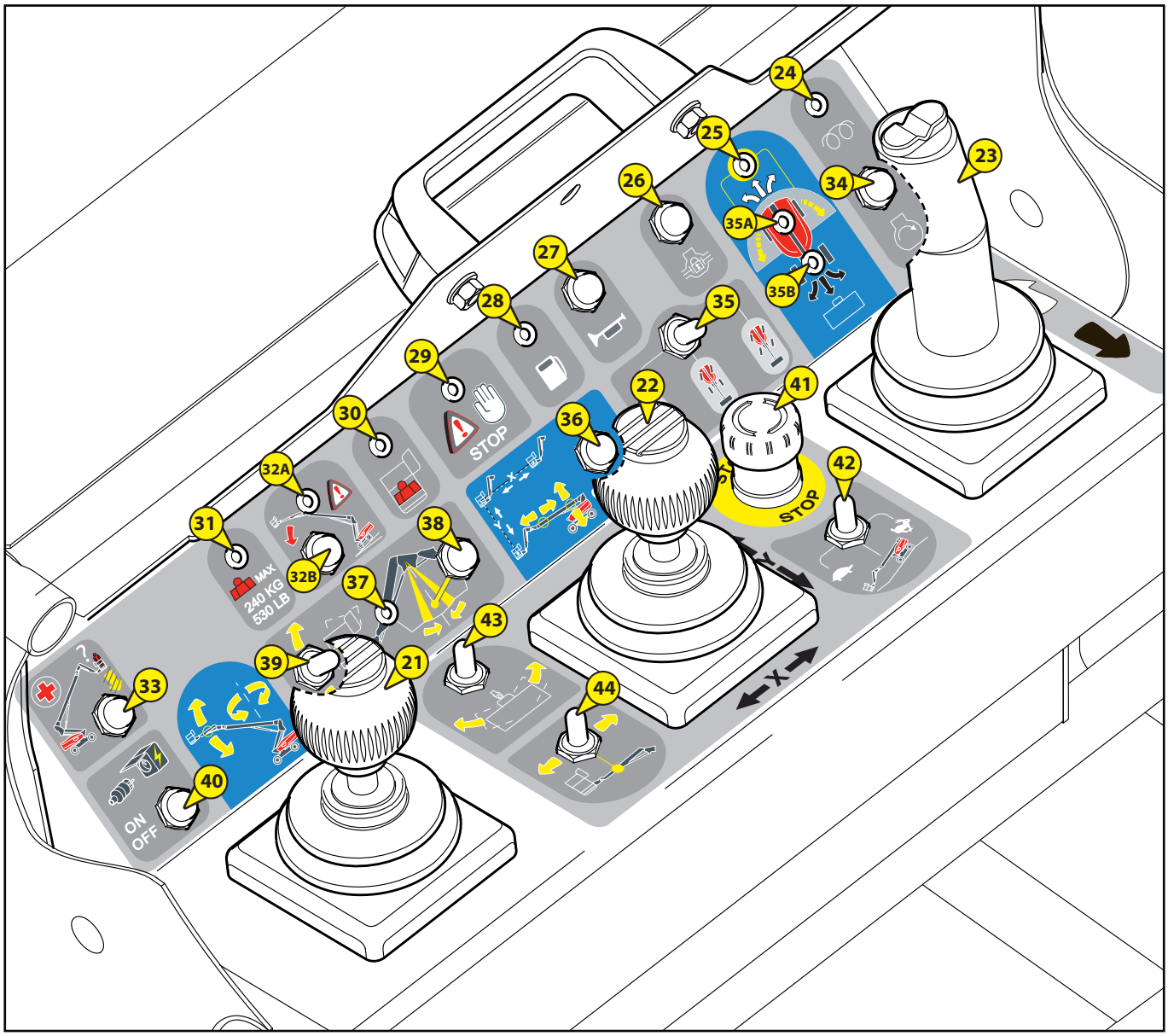

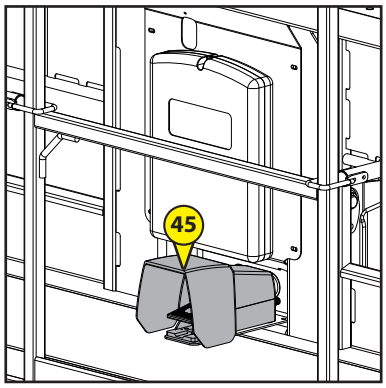

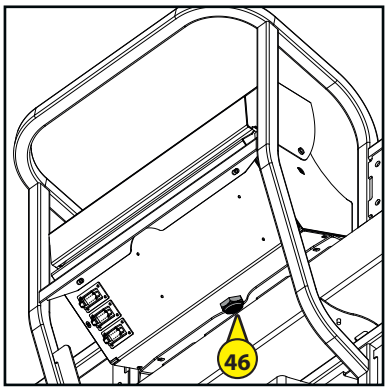

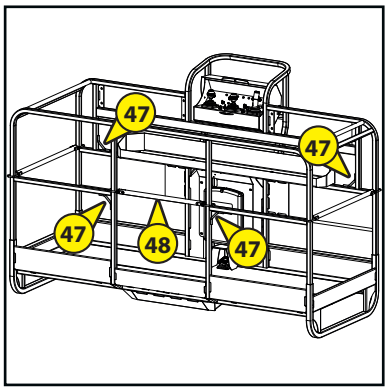

647382 EN (01/02/2015)

https://truckmanualshub.com/

21 - Pendular arm raising and lowering and turret rotation control 2-34

22 - Arm raising and lowering, telescope extension and retraction control 2-34

23 - Platform forward/reverse movement control lever 2-35

24 - Pre-heating LED 2-35

25 - Turret orientation over 90° LED 2-35

26 - Differential locking control button 2-36

27 - Buzzer control button 2-36

28 - Low fuel indicator 2-36

29 - Machine fault LED 2-36

30 - "Overload" LED 2-37

31 -240 kg load and zone LED (except 260 TJ) 2-37

32 a - "Tilt" LED 2-37

32 b - Use while under tilt 2-37

33 - Emergency pump 2-37

34 - Starting control 2-38

35 - Steering selection mode and axle alignment LED 2-38

36 - X-Y control function 2-38

37 - Pendular unit zero function LED 2-39

38 - Pendular unit zero position control 2-39

39 - Basket tilt (except 260 TJ) 2-39

40 - Generator option 2-39

41 - Emergency stop 2-40

42 - Translation speed selection contactor 2-40

43 - Basket rotation 2-40

44 - Pendular unit telescope extension and retraction (except 260 TJ) 2-40

45 - "Dead Man's" pedal 2-41

46 - Buzzer 2-41

47 - Safety harness attachment points 2-41

48 - Safety rail 2-41

https://truckmanualshub.com/

1 - KEY-OPERATED IGNITION SWITCH

This key-operated contactor has two positions.

POSITION 1
- Engine stop and electrical circuit supply off.

POSITION 2
- Electrical circuit supply on and automatic engine preheating.

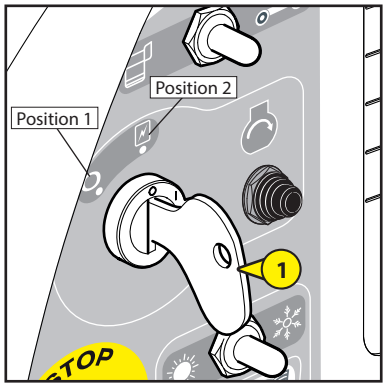

2 - STARTER BUTTON

BUTTON 2
- Engine start-up.

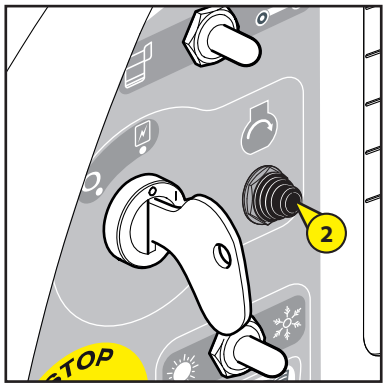

3 - GROUND OR PLATFORM CONTROL SELECTION SWITCH

This contactor has two positions.

POSITION 1
- Control is from the basket.

POSITION 2
- The commands come from the ground (base control). The button must be held down in position 2 (dead Man's system) to provide power to the base control. Releasing it prevents any movements from being made.

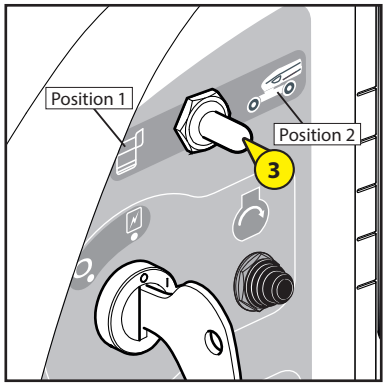

https://truckmanualshub.com/

4 - Emergency stop

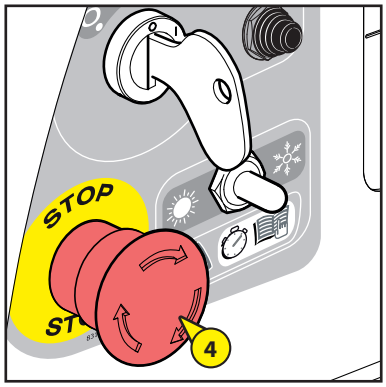

This red mushroom-headed switch cuts off all the machine's movements in the event of an anomaly or any danger.

- Press the knob to cut off the movements.
- Turn the knob a quarter turn to the right to restore the power supply (the switch automatically returns to its initial position).

In all cases, this command takes precedence, even when the movements are being controlled from the basket control station.

If the Emergency Stop is activated, the movements may stop very suddenly.

Do not use the emergency stop to simply shut down the lifting platform. Otherwise, rearm it immediately as no action can be performed on the control panels at ground level or in the basket.

5 - Low-temperature engine start-up aid

This selector switch has two positions to be selected according to the ambient air temperature.

1 : SUN POSITION
- If the temperature is over - 10°C, start the engine at tickover rpm.

2 : SNOW POSITION
- If the temperature is less than around - 10°C, set the selector switch to this position before starting: the engine will be held at maximum rpm (only for the first start of the day).
- Leave the engine at maximum rpm for 30 to 60 seconds, depending on the temperature (no movement is possible during this time).
- Switch the selector switch from SNOW to SUN position and the rpm drop to tickover level (normal position, warm engine).

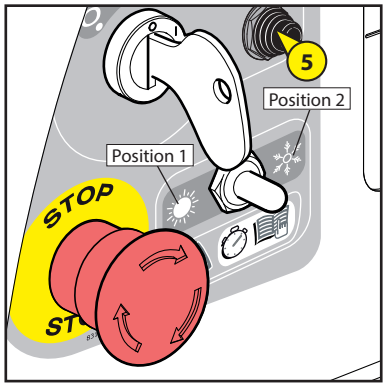

https://truckmanualshub.com/

6 - Interface screen

- This screen enables you to view all the platform's start-up, parametering, maintenance and fault stages.
- NB: The current system time is displayed at the top of each page.

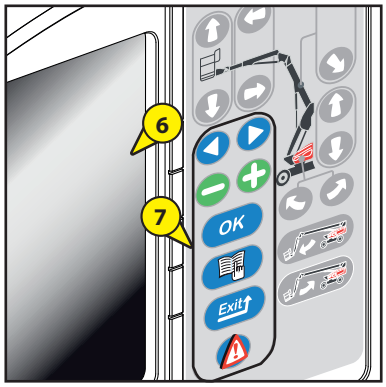

7 - Information validation screen keys

- These keys enable you to validate the different information on the screens.

FUNCTIONS OF THE KEYBOARD KEYS:

7A : Selection keys for the proposals on the menu pages.

7B : Selection keys for the proposals on the sub-menu pages.

7C : This "OK" key has two functions:
"Confirmation" key for the selections made by the plus and minus keys,
Fault acknowledgement key (the fault has been viewed; this key enables you to make the fault disappear from the screen without necessarily clearing it).

7D : This "Menu" key has two functions:
This enables you to open the "Menu Access" page
Enter the code to get the menu you are looking for (this code is retained in the memory as long as the platform remains switched on).
This enables you to leave and return to the screen Work page.

7E : This "Exit" key has 2 functions:
Cancellation of a confirmation in progress.
This enables you to return to the previous level in a menu.

7F : The "Fault" key enables you to display the faults present in the platform when the Fault triangle appears.

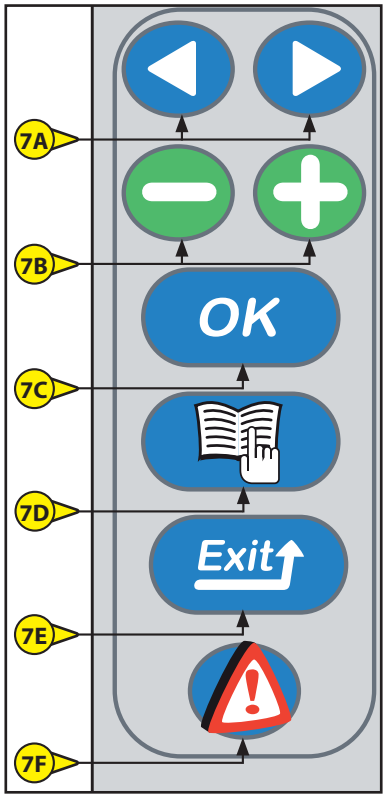

https://truckmanualshub.com/

8 - "Dead Man's" function

- The button must be held in the "Dead Man's" position (position 2) to provide power to the base control at the same time as the raising or rotation functions.

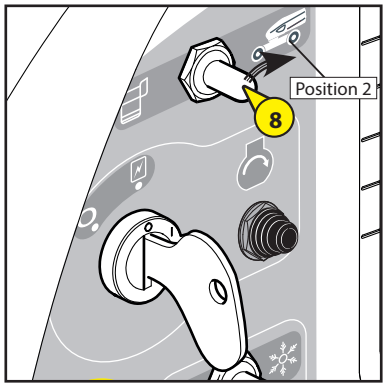

9 - Turret rotation keys

These keys, when used at the same time as button 8 in the "Dead Man's" position, enable you to rotate the turret.

A : TURRET ROTATION TO THE LEFT
- Hold down the Dead Man's button 8 and press key 9A.

B : TURRET ROTATION TO THE RIGHT
- Hold down the Dead Man's button 8 and press key 9B.

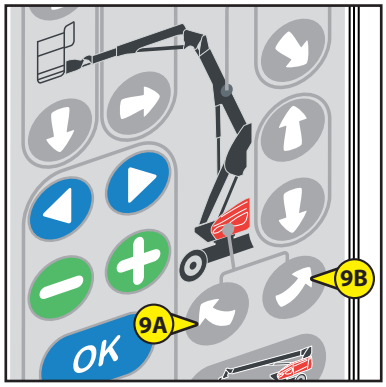

10 - Raising and lowering of the arm

- These keys, used simultaneously with button 8 in 'Dead Man's" position, enable the telescope and the arm to be raised and lowered.

A : TO RAISE THE ARM AND THE TELESCOPE
- Hold down the Dead Man's function 8 and press key 10A.

B : TO LOWER THE ARM AND THE TELESCOPE
- Hold down the Dead Man's function 8 and press key 10B.

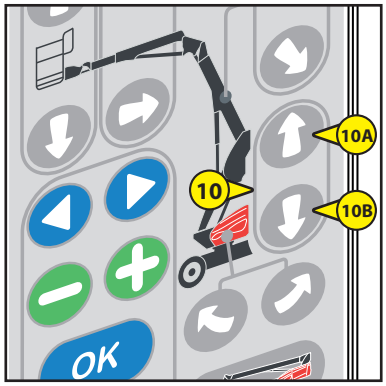

https://truckmanualshub.com/

11 - Telescope extension and retraction

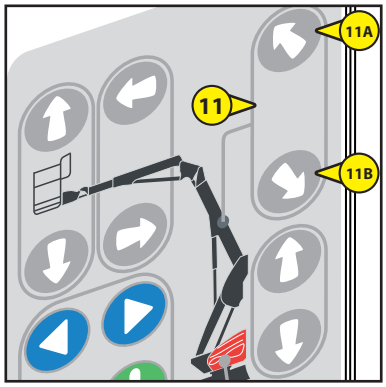

- These keys, used simultaneously with button 8 in the 'Dead Man's" position, enable you to extend and retract the telescope.

A: TELESCOPE EXTENSION
- Hold down the Dead Man's function 8 and press key 11B.

B: TÉLESCOPE RETRACTION
- Hold down the Dead Man's function 8 and press key 11A.

12- Extension and retraction of the telescopic pendular unit

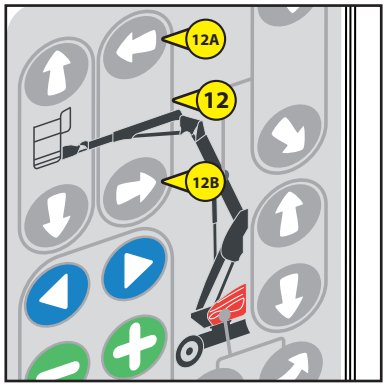

- These keys, used simultaneously with button 8 in 'Dead Man's" position, enable you to extend and retract the telescopic pendular arm.

A: TO EXTEND THE TELESCOPIC PENDULAR UNIT
- Hold down the Dead Man's function 8 and press key 12B.

B: TO RETRACT THE TELESCOPIC PENDULAR UNIT
- Hold down the Dead Man's function 8 and press key 12A.

13 - Raising and lowering of the pendular unit

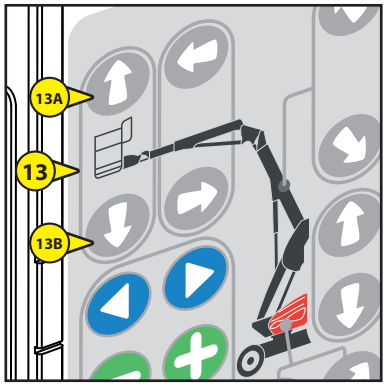

- These keys, used simultaneously with button 8 in the "Dead Man's" position, enable you to raise and lower the pendular arm.

A: TO RAISE THE PENDULAR ARM
- Hold down the Dead Man's function 8 and press key 13A.

B: TO LOWER THE PENDULAR ARM
- Hold down the Dead Man's function 8 and press key 13B.

14 - Tilting the basket downwards and upwards

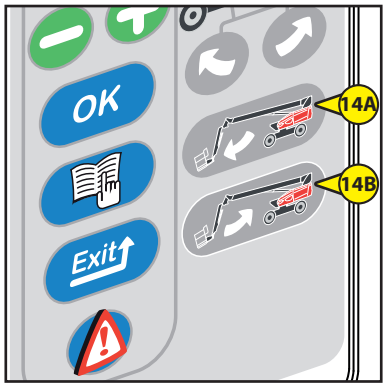

- These keys, used simultaneously with button 8 in 'Dead Man's" position, enable the basket's horizontality to be corrected and the basket to be folded back completely into transport position.

A : TILTING OF THE PENDULAR ARM ASSEMBLY UPWARDS
- Hold down the Dead Man's function 8 and press key 14A..

B : TILTING OF THE PENDULAR ARM ASSEMBLY DOWNWARDS
- Hold down the Dead Man's function 8 and press key 14

https://truckmanualshub.com/

15 - Blocking turret rotation

- This pin must be used to lock the turret rotation when the lifting platform is transported by truck or by some other means of transport (train, etc...).
- Swivel the pin to the left.
- Push the pin into the hole in the turret provided for this purpose to lock it.

Remember to remove the turret locking pin when using the lifting platform.

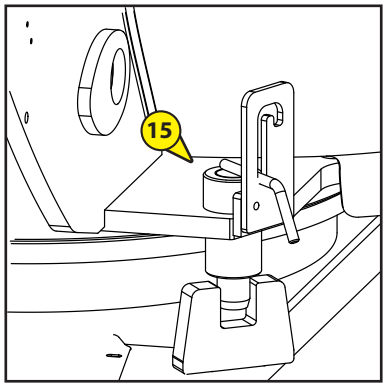

16 - Flashing light

- The flashing light comes on automatically when the lifting platform is in translation or when a raising or lowering movement is instructed.

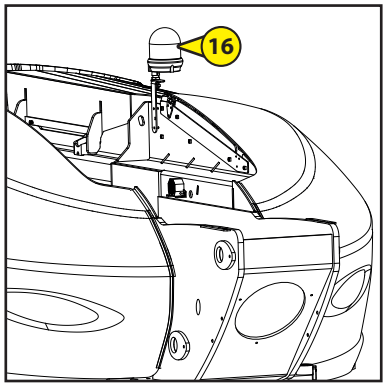

17 - Tilt sensor

- This sensor controls the safety buzzer 47 when the lifting platform has reached the maximum authorised level of tilt. The buzzer sounds intermittently (see the "SAFETIES" section).

- Two LEDs located under the tilt sensor show its operating status:
  - Red LED lit: maximum permissible tilt not yet reached.
  - Yellow and red LEDs lit: maximum permissible tilt reached.

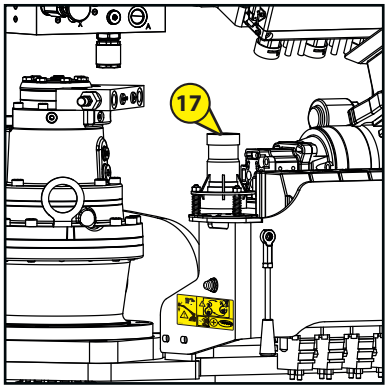

18 - Buzzer

- This buzzer (fixed to the inside of the turret near to the flashing light) is activated when button 27 on the basket control station is pressed.

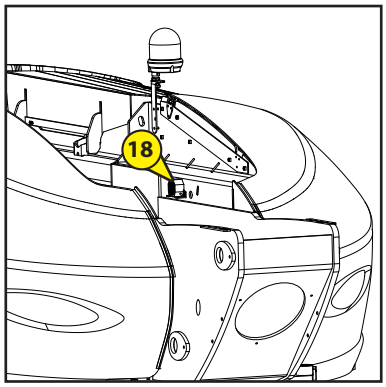

https://truckmanualshub.com/

19 - Emergency pump button

- This button starts the emergency pump, which enables you to make all the basket's movements and return to the ground in the event of a breakdown occurring (see the: RESCUE PROCEDURE section).

Only use this if the engine or the electrical system has broken down. The emergency pump should not be used for more than 4 minutes. Pausing for 10 minutes between each use of the pump is strongly recommended. Failure to follow this instruction could damage the emergency pump.

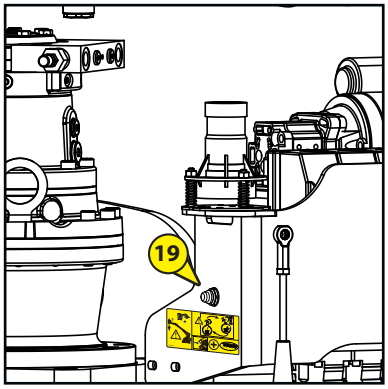

20 - Fuel cock

- The fuel cock (20) located on the diesel fuel filter must be between the two "ON" positions before starting the engine.
- The "OFF" position on the cock shuts off the fuel supply to the engine.

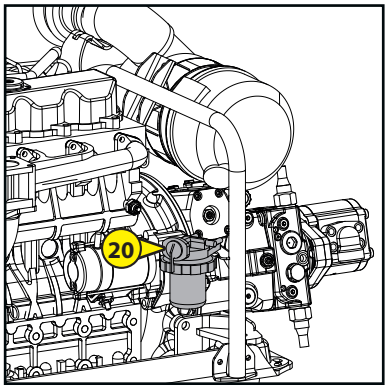

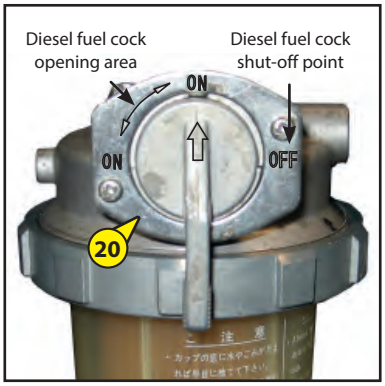

https://truckmanualshub.com/

https://truckmanualshub.com/

21 - PENDULAR ARM RAISING AND LOWERING AND TURRET ROTATION CONTROL

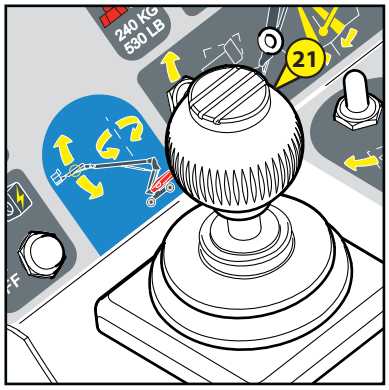

- Lever 21 enables you to raise the pendular unit and rotate the turret.

NB: This is a progressive control lever, which provides you with great accuracy in approach. It must be manipulated flexibly, without jerking.

TO RAISE THE PENDULAR UNIT
- Push the lever upwards.

TO LOWERING THE PENDULAR UNIT
- Pull the lever downwards.

ROTATING RIGHT
- Push the lever to the right.

ROTATING LEFT
- Push the lever to the left.

22 - ARM – TELESCOPE RAISING AND LOWERING, TELESCOPE EXTENSION AND RETRACTION CONTROL

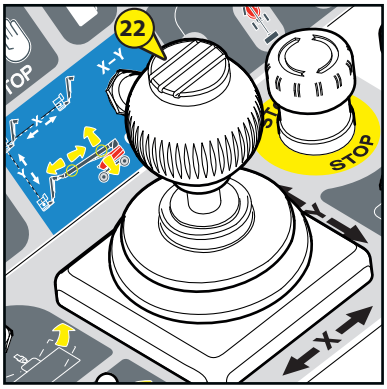

- Lever 21 enables you to raise the arm and the telescope and to extend or retract the telescope.

NB: This is a progressive control lever, which provides you with great accuracy in approach. It must be manipulated flexibly, without jerking.

TO RAISE THE ARM
- Push the lever upwards.

TO LOWER THE ARM
- Pull the lever downwards.

EXTENDING THE TELESCOPE
- Push the lever to the left.

RETRACTING THE TELESCOPE
- Push the lever to the right.

https://truckmanualshub.com/

23 - Lifting platform forward / reverse motion control lever

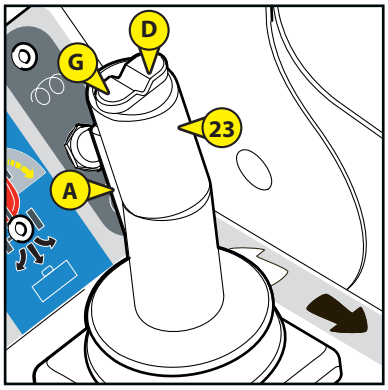

- Lever 23 enables you to move the lifting platform.
- You must press trigger A together with the Dead Man's pedal (see Rep.46) to perform movements from the lifting platform's control box.
- When the pedal or trigger A is released, no commands can be issued.

NB: This is a progressive control lever, which provides you with great accuracy in approach. It must be manipulated flexibly, without jerking.

FORWARD TRANSLATION
- Push the lever forwards.

REAR TRANSLATION
- Pull the lever backwards.

STEER RIGHT
- Press button D.

STEER LEFT
- Press button G.

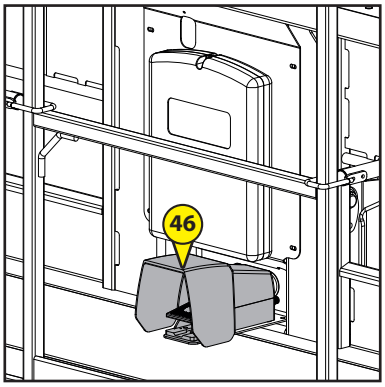

When the turret / arm structure is rotated more than 90° with respect to the chassis, there is a correspondence between the direction of translation shown by the arrows affixed to the chassis and those on the basket control console (white and black arrows). Always refer to the arrows on the machine's chassis to learn the translation direction.

24 - Pre-heating LED

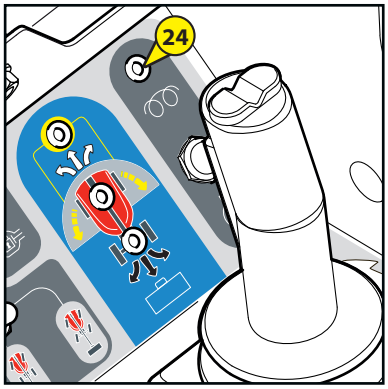

The LED comes on when the machine is switched on:
- Either by turning the ignition key on the base (the timing is identical to that shown on the bar graph on the screen).
- Or by rearming the Emergency Stop on the basket console in the lifting platform.Wait until the indicator light goes out before operating the starter button.

25 - Turret orientation over 90° LED

This orange LED comes on when the telescope crosses over the lifting platform's median axis and is in the grey zone. It is advisable to identify the lifting platform's direction of travel by referring to the black and white arrows on the chassis (seer SECTION 1 - §: SAFETY STICKERS).

This LED shows that the direction of travel in the basket is opposite to that of the chassis.

Reminder: white arrow = forward travel.

https://truckmanualshub.com/

26 - Differential locking control button

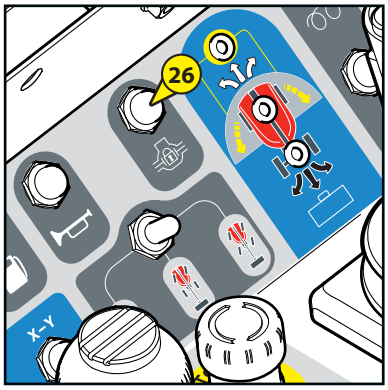

NB : This control must be used at the same time as translation.

Differential locking enables the two rear driven wheels to turn at the same speed.

- To utilise this, press this button 26; to stop using it, release the button and indicate stoppage of translation.

Preferably use differential locking by keeping the wheels in the machine axis.

27 - Buzzer control button

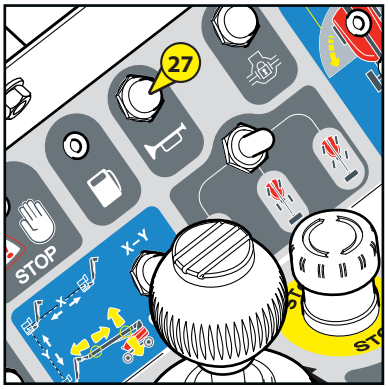

- When this button 27 is pressed, the buzzer 17 sounds.

28 - Fuel low indicator

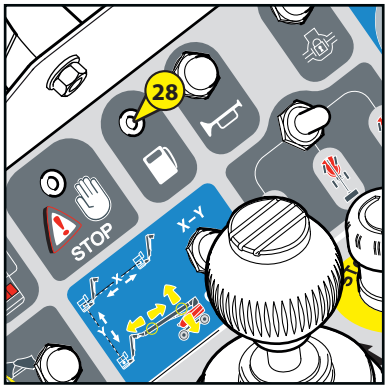

- This indicator light comes on when the fuel level is low; the basket buzzer is activated:
  - Level 1 alert: 3 beeps every 10 minutes,
  - Level 2 alert: 3 beeps every minute,
  - Level 3 alert: 3 beeps every 10 seconds and locking of the lifting movements after 5 seconds of activation.

29 - Machine fault LED

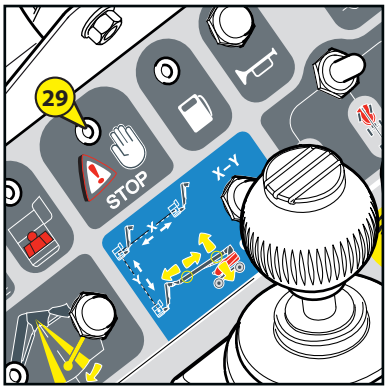

- This indicator light comes on and a short intermittent buzzer signal sounds when a major fault occurs (see the SCREEN DISPLAY paragraph – page descriptions).
- Put the lifting platform out of service immediately.
- See the fault code display on the base screen.
- Types of major faults:
  - Engine oil pressure
  - Engine water temperature
  - Overload sensor incoherence
  - Pendular unit horizontality sensor incoherence
  - Arm angle sensor incoherence.

https://truckmanualshub.com/

30 - "Overload" LED

- If there is an overload in the basket in the 240 Kg, 350 kg or 400 Kg zone, this LED flashes and the buzzer 47 sounds continuously (see the "SAFETY SYSTEMS" section).

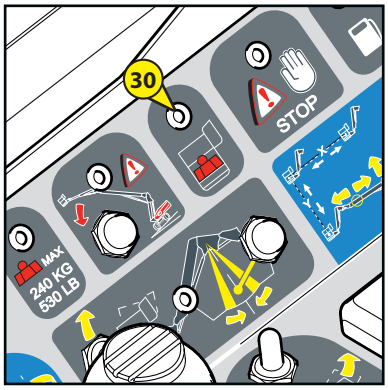

31 - 240kg load and zone LED (except 260 TJ)

	350 Kg zone	240 Kg zone
Load < 240 Kg	Inactive	Intermittent
Load > 240 Kg	Intermittent	Continuously active

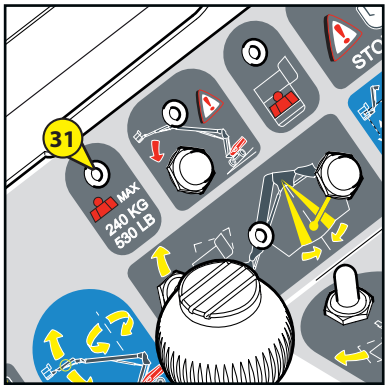

32 a - "Tilt" LED

- When the lifting platform reaches the maximum authorized level of tilt, the LED flashes and the buzzer 46 on the basket console sounds intermittently. Any "aggravating" movements are prohibited as a safety measure (see the "SAFETY SYSTEMS" section).

32 b - Use while under tilt

- This button neutralizes the ban on movements when the lifting platform is tilting (see the "SAFETY SYSTEMS" section).

If you are using the lifting platform while it is tilted, there is a risk of loss of stability. The basket overload still remains activated.

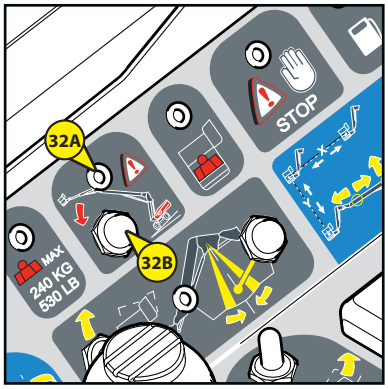

33 - Emergency pump

- This button enables you to make all the basket's movements to bring it back to the ground in the event of a breakdown (see the RESCUE PROCEDURE section).

Only to be used in the event of a breakdown in the electrical system or the engine

Check the engine battery's charge; this must be charged, otherwise the emergency pump cannot be operated.

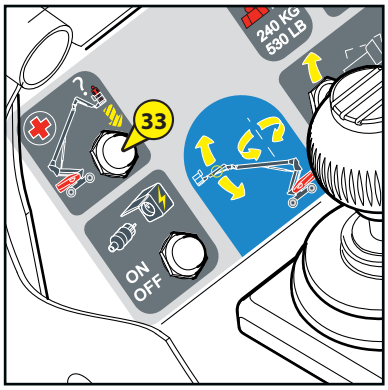

https://truckmanualshub.com/

34 - Starting control

- Wait for the "Preheating" light to go out and then press button 34 to start the lifting platform from the basket console.

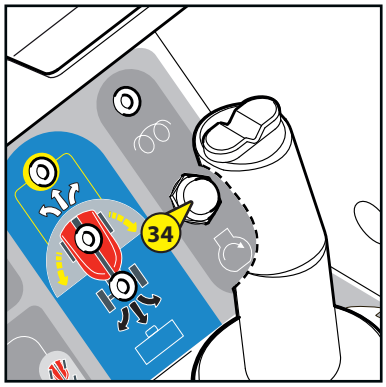

35 - Steering selection mode and axle alignment LED

This contactor has three positions.

POSITION P1
- Select "Crab" mode.

POSITION P2
- Select 2-wheel drive mode.

POSITION P3
- Select 4-wheel drive mode. In this configuration, the possible translation speeds are only : Turtle or ramp.

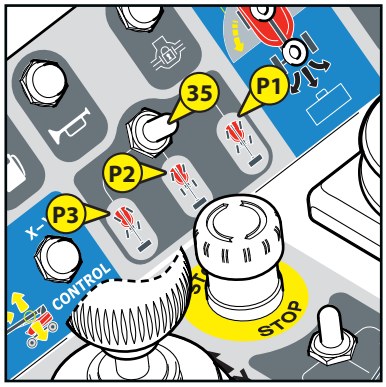

35A FRONT WHEEL ALIGNMENT
- This indicator light illuminates when the front wheels are correctly aligned with the machine's axis.

35B REAR WHEEL ALIGNMENT
- This indicator light illuminates when the rear wheels are correctly aligned with the machine's axis.

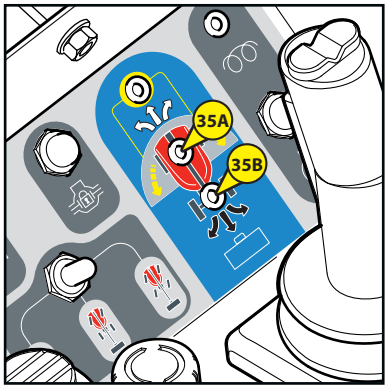

36 - X-Y control function

This control must be operated simultaneously with operation of lever 22.

X function:
- A pressure maintened on the XY control button simultaneously with a telescope extension or retraction command enables you to keep the same horizontal position for the basket during the movement.

Y function:
- A pressure maintened on the XY control button simultaneously with a raising or lowering command enables you to keep the same vertical position for the basket during the movement.

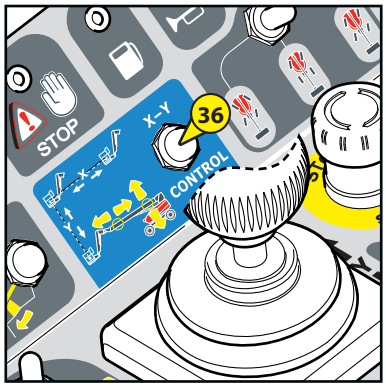

https://truckmanualshub.com/

37 - Pendular unit zero function LED

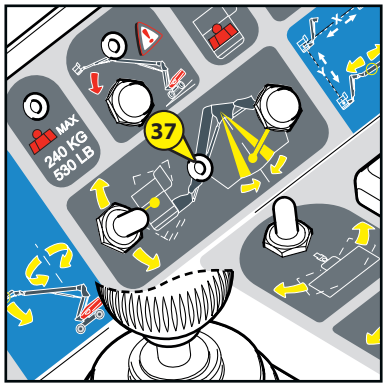

This LED comes on when the basket/pendular unit assembly is in the red zones on the sticker affixed to the pendular unit's joint (see SECTION 1 - §: SAFETY STICKERS).

- Correct the pendular unit's horizontality by pressing button 38.

38 - Pendular unit zero position control

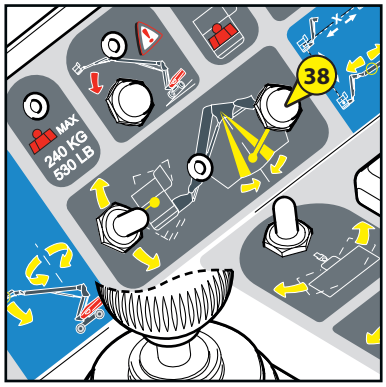

This contactor automatically corrects the basket's horizontality when the basket/pendular unit assembly is in the red zones on the sticker affixed to the pendular unit's joint (see SECTION 1 - §: SAFETY STICKERS).

- Automatic stop on "0".

39 - Basket tilt (except 260TJ)

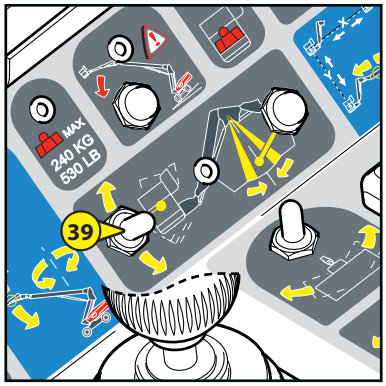

This contactor enables you to raise and lower the basket and can be used to correct the basket's horizontality manually.

TO RAISE THE BASKET
- Push the contactor upwards.

TO LOWER THE BASKET
- Pull the contactor downwards.

Only the basket tilt function is inactive when the pendular unit is outside the green zone.

40 - Generator option

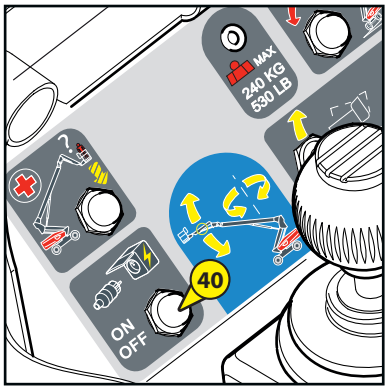

This contactor activates or deactivates the generator option.

Please do not connect electrical appliances not fitted with a shut-off switch. Voltage spikes may occur when starting the generator.

https://truckmanualshub.com/

41 - Emergency stop

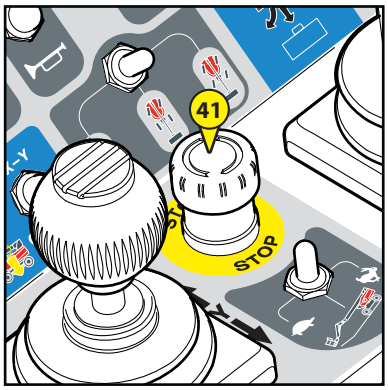

- This switch enables you to cut off all the machine's movements in the event of an anomaly or danger arising.

- Press the knob to cut off all movements.
- Turn the knob a quarter turn to the right to deactivate it (the switch will automatically return to its initial position).

In all cases, this control has priority; except when movements are being made from the base control station.

Do not use the emergency stop to simply shut down the nacelle, otherwise, rearm it immediately as no action can be performed on the control panel in the basket.

42 - Translation speed selection contactor

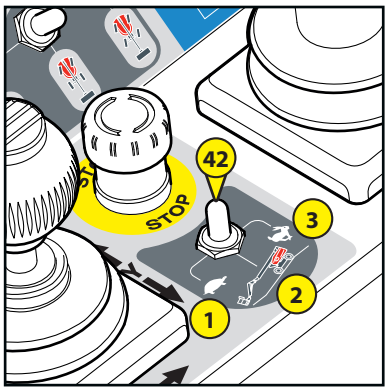

- This contactor has 3 positions.
POSITION 1 : TORTOISE (SLOW SPEED)
POSITION 2 : RAMP (SLOW SPEED WITH FULL POWER) Only if crossing a very steep ramp.
POSITION 3 : HARE (HIGH SPEED), Only with steering selector mode 35 in the "crab position" or "two wheel drive position".

NB : When the selector switch is in **position 3** (high speed) and the machine is in **4-wheel drive**, the switch moves automatically to **position 2** (ramp speed).

NB : When the selector switch is in **position 3** (high speed), and the machine is **in reverse mode,** the switch moves automatically to **position 2** (ramp speed).

While in Hare/high speed mode (position 3), the turret must be in the machine's axis.

43 - Basket rotation

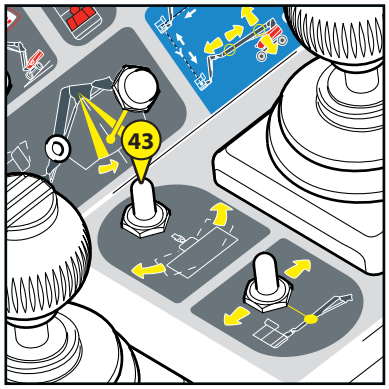

- This contactor enables you to rotate the basket left and right

RIGHT ROTATION
- Push the contactor to the right.

LEFT ROTATION
- Push the contactor to the left**.**

44 - Pendular unit telescope extension and retraction (except 260TJ)

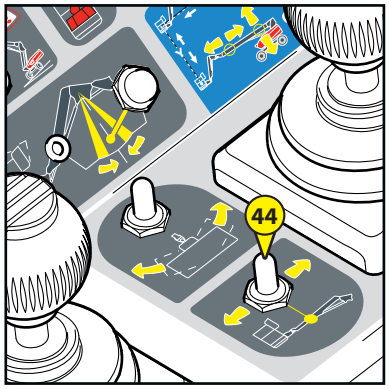

- This contactor enables you to extend and retract the pendular unit telescope.

TO EXTEND THE PENDULAR UNIT TELESCOPE
- Push the contactor to the left**.**

TO RETRACT THE PENDULAR TELESCOPE
- Push the contactor to the right.

https://truckmanualshub.com/

45 - "Dead Man's" pedal

- This pedal is fixed on the platform's floor.
- This pedal must be pressed to perform movements from the basket console.
- When the pedal is released, no control can be used.

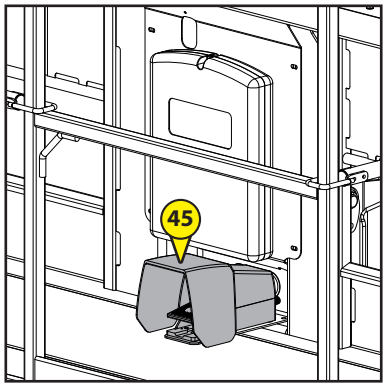

46 - Buzzer

- This buzzer is activated when the machine reaches the maximum authorized level of tilt or is overloaded, and notifies the presence of certain faults.
- Intermittent buzzing: machine tilted.
- Continuous buzzing: machine overloaded.
- Various faults.

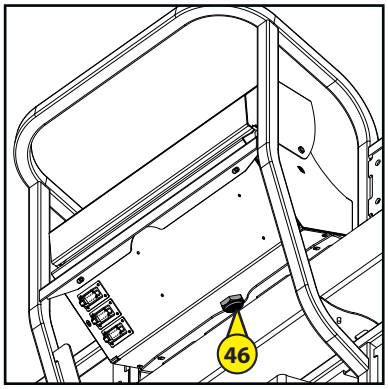

47 - Safety harness attachment points

- These attachments must be used to fasten the harness when operators are in the basket.

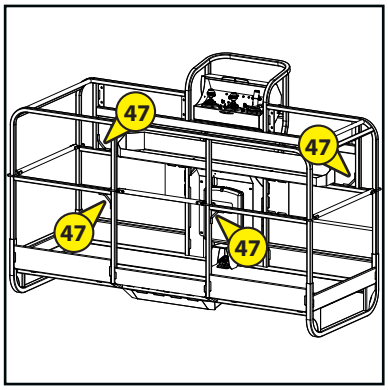

48 - Safety rail

- You must hold the rail to climb into the basket so that the rail does not fall back as the operator climbs in.

Do not hold the safety rail with a collar or string.

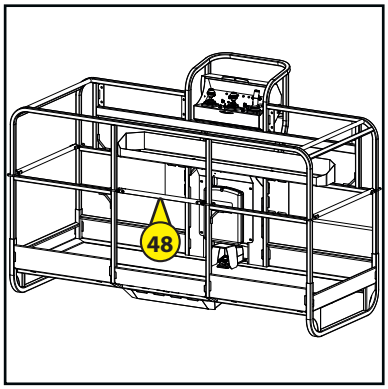

https://truckmanualshub.com/

DESCRIPTION OF THE SUB-MENUS

Icons	Menu	Sub-menu	Parameters	User		Dealer/lessor	
				View	Maintenance	View	Maintenance
	Access codes			Without		****	
	Screen settings	Screen setting: contrast, brightness.			X		X
		Date, time			X		X
	Coding	View programme and equipment code.		X		X	
		View Machine No. history by unit.				X	
	Diagnostics	1 -Engine hour counters	Hire counter	X			X
			Engine hour counter	X		X	
		2 - Daily engine operating hours.		X		X	
		3 - View Inputs/outputs		X		X	
		4 - Diagnostics		X		X	
		5 - Fault history		X		X	
	Parameters	User options	Translation and movement beep options.		X		X
			Rotating flashing light option on switching on.		X		X
		General options	Telescope locking				X
			Prohibition on travel during Work mode				X
			Prohibition on basket tilting during Work mode				X
			Activation of wheel realignment				X
			Safe Man System Activation				X
		Manufacturer's options	Encoded anti-starting			X	
		Languages > French, English, German, Dutch only					X
		System parameters	Engine management				X
			Arm control				X
			Arm end stop				X
			Telescope				X
			Telescope end stop				X
			Pendular arm				X
			Turret rotation				X
			Basket tilt				X
			Basket rotation				X
			Pendular arm trim				X
			X - Y control				X
			Pendular arm tilt				X
			Pendular arm telescope				X
			Pendular arm telescope end stop				X
			Steering control				X
			Auxiliary PVG				X
			Position and stop				X
			Maintenance intervals				X
	Maintenance	Maintenance	View of next expected maintenance times	X		X	
			Confirmation of maintenances completed				X
		Maintenance history	View of maintenances completed			X	

https://truckmanualshub.com/

Icons	Menu	Sub-menu	Parameters	User		Dealer/lessor	
				View	Maintenance	View	Maintenance
Display of the "CALIBRATION" icon after entry of a code.							
	Calibrations	1 - Engine revs calibration					X
		2 - Joystick calibration					X
		3 - Speed calibration	Raising lower arms, max speed				X
			Lowering lower arms, max speed				X
			Raising upper arm, max speed				X
			Lowering upper arm, max speed				X
			Telescope extension, max speed				X
			Telescope retraction, max speed				X
			Pendular unit raising, max speed				X
			Pendular unit lowering, max speed				X
			Basket tilt extension, max speed				X
			Basket tilt retraction, max speed				X
			Turret rotation RIGHT, maximum speed				X
			Turret rotation LEFT, maximum speed				X
			Basket rotation RIGHT, maximum speed				X
			Basket rotation LEFT, maximum speed				X
			FORWARD work translation, max speed			X	
			REVERSE work translation, max speed			X	
		4 - Telescope calibration					X
		5 - 240 Kg overload calibration (280TJ)					X
		6 - 350 Kg overload calibration (280TJ)					X
		7 - 400 Kg overload calibration (260TJ)					X
		8 - Arm angle calibration					X
		9 - Pendular arm tilt calibration					X
		10 - Generator calibration					X
		11 - Hydraulic adjustment					X
		12 - Parameter management	Save machine parameters				X
			Call up machine parameters				X
			Return to factory settings				X

https://truckmanualshub.com/

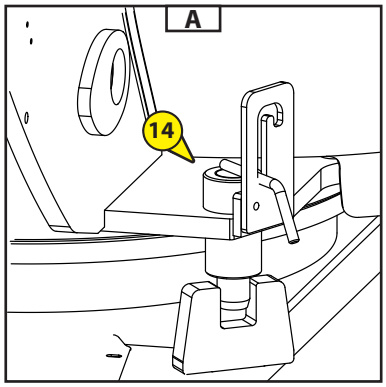

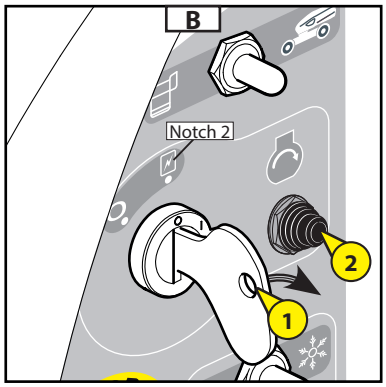

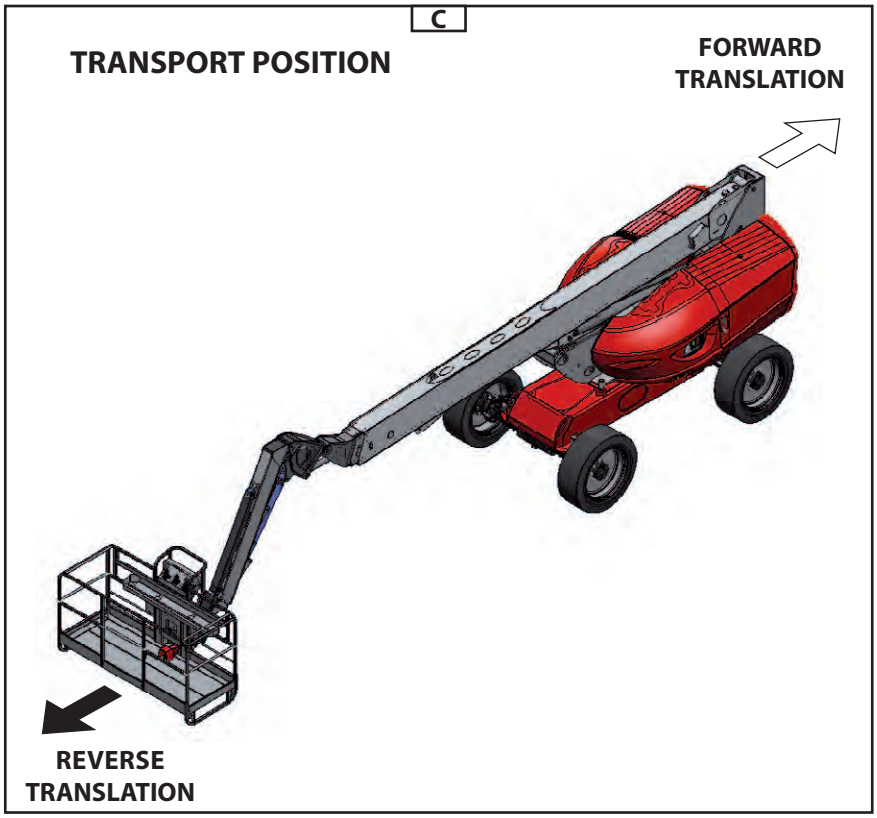

BEFORE STARTING THE LIFTING PLATFORM

- Check the following levels:

  - Engine oil.
  - Oil in the hydraulic reservoir.
  - Coolant.

STARTING THE LIFTING PLATFORM

- Turn the ignition key 1 to notch 2 to make the electrical contact (Fig. B).
- Press button 2 to start up the IC engine (Fig. B).

Do not operate the starter for more than 30 seconds and run a pre-heating cycle between all failed attempts to start.

- Release the button as soon as the engine starts and let the engine run at tickover speed

Never try to push or pull the lifting platform to start it. Such an action would cause severe damage to the transmission.

https://truckmanualshub.com/

MOVEMENT IN TRANSPORT / WORK MODE

- Before moving and using the machine, remove the turret lock 14 (see Fig. A).

- The platform has two distinct movement modes: Transport mode (Fig. D) and Work mode (Fig. E) (forward direction (Fig. C).

- **Transport mode**: the lifting platform's arms are in the low position and the pendular unit may be raised to the fullest extent (Fig. D). This mode enables you to move at high speed and to go beyond the machine's tilt limit (See the CHARACTERISTICS section).

- **Work mode**: the lifting platform's arms are raised and/or the telescope is extended. In this mode, translations are made at slow speed and the tilt and overload safety systems are activated (Fig. E).

NB: *You must use ramp speed (full power – speed restricted to 2 km/h) to cross a steep slope or move over very broken ground. This can prove very useful when, for example, you must borrow an access ramp to load the lifting platform onto a truck's flatbed.*

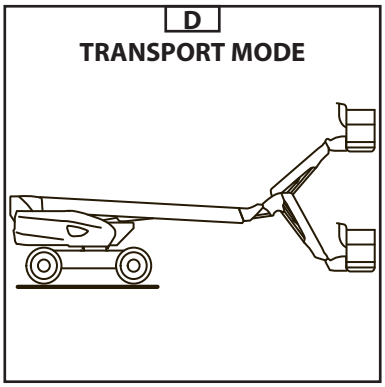

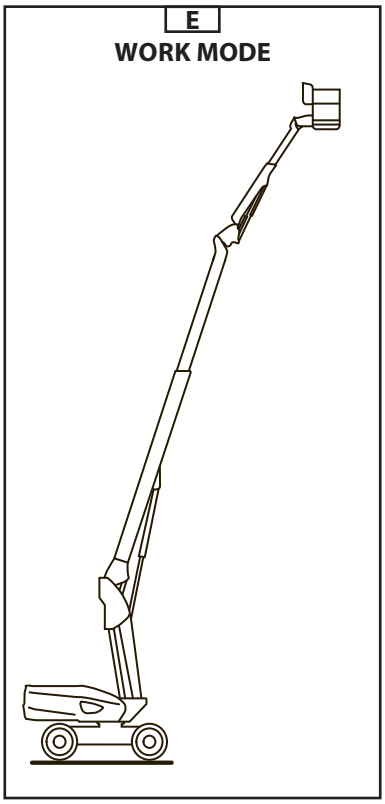

In Work mode, all movement over broken ground, unstable ground and slopes over the authorised tilt limit (see the CHARACTERISTICS section), which are likely to cause the platform to overturn or become unbalanced, are PROHIBITED.

The turret must be in the platform's axis during translations in Fast Speed (Hare) mode.

Before driving the platform, ensure that turret is correctly oriented with respect to the chassis, i.e. in the translation direction (black and white arrows).

When crossing a steep slow, there must be no load in the basket.

https://truckmanualshub.com/

INSTALLATION ON THE WORK SITE AND LIFTING

- The lifting platform has been designed to work on a flat, horizontal surface; it is important to clear the space in which the lifting platform will be working.
- Bring the lifting platform to the work site.
- If necessary, load the equipment to be carried (stack so as not to inconvenience the operator and prevent anything falling).
- Climb into the lifting platform.

Wearing a safety helmet and a harness is compulsory.

- Press the "Dead Man's" pedal and start to manoeuvre to position yourself in the work area.

NB : *When the lifting platform is free of the chassis, translation switches automatically to slow speed.*
Only the pendular arm can be raised completely while maintaining Transport speed.

When manoeuvring the lifting platform (lifting, rotation...), look around and above you. Pay particular attention to the electric cables and any items that may be in the lifting platform's operating space.

Familiarise yourself with the instruments on the ground maintenance and emergency station and in the basket, described in the previous pages and in particular the warnings specifying the risks involved in performing certain manoeuvres.

SAFETY SYSTEMS

- When the lifting platform is overloaded, the buzzer sounds continuously and all movements are blocked.
  - Solution : unburden the basket.

LOWERING

- When the work is complete: retract the telescope and lower the arms to bring the lifting platform back to Transport position.

Pay attention to the people on the ground when you are descending.

STOPPING THE LIFTING PLATFORM

- When the lifting platform is not being used, cut off the electrical power supply by setting the ignition key to the Neutral position (see 1 – Ignition).

https://truckmanualshub.com/

LOADING / UNLOADING THE PLATFORM

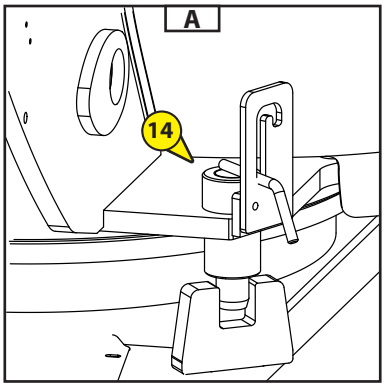

Check that the safety instructions for the transporting truck's flatbed are being correctly applied before loading the lifting platform and ensure that the vehicle's driver is aware of the lifting platform's dimensions and weight characteristics (See the CHARACTERISTICS section).

- When being loaded on a flatbed, the lifting platform must be in transport position:
  - Arms in the low position
  - Pendular unit telescope retracted
  - Telescope retracted
  - The pendular unit can be raised so that it does not touch the ground but it is inadvisable to make a translation movement with the basket raised excessively; keep this in the lowest possible position during the manoeuvres: there is a risk of falls or impacts (see section 1 – Safety instructions and advice - § driving instructions).
  - Lock the lifting platform's turret rotation using the pin 14 (Fig. A).
  - Use "Ramp" speed

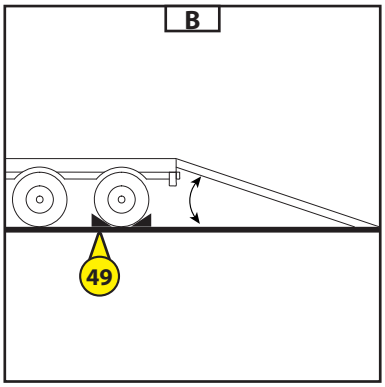

Ensure that the transporting truck's flatbed is large enough and has a sufficient load capacity to transport the lifting platform. Also check the flatbed's permissible ground contact pressure with respect to the lifting platform.

There is a risk of the platform losing grip (slipping or skidding) when going up or down the loading ramps when these are wet, muddy or have damp patches. To counter this, stability must be ensured with a hoist attached to the machine's attachment points.

LOADING

- Fit the loading ramps to the truck's flatbed so that there is the shallowest possible angle for loading the platform (Fig. B).
- Chock the flatbed's wheels 49 (Fig. B).

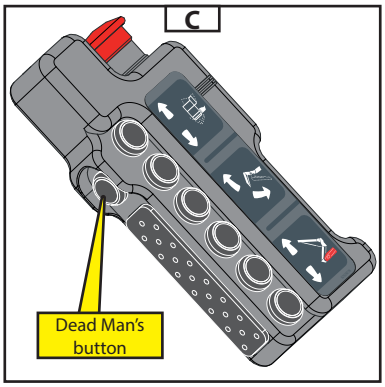

Carefully adjust the platform's translation speed by controlling the speed with the translation joystick.

PROCEDURE FOR FOLDING THE LIFTING PLATFORM (FIG. D)

- Step 1: Raise the arm and the telescope with the remote control (Fig. C)*.
- Step 2: Activate basket tilting to fold the basket under the arm.
- Step 3: Activate basket tilting again to fold the pendular unit under the telescopic arm.

Take care not to hit the basket under the jib.

- Step 4: Lower the telescopic arm down to the bottom stop.

Take care not to hit the basket on the ground.

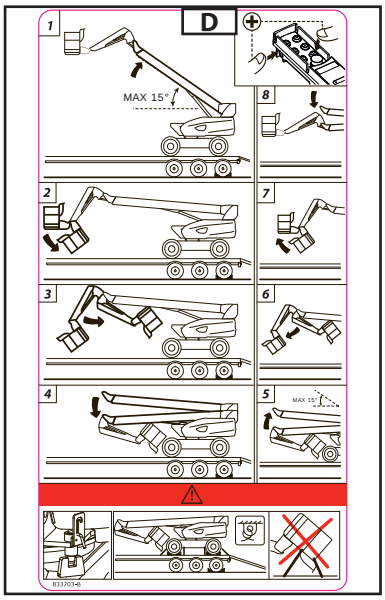

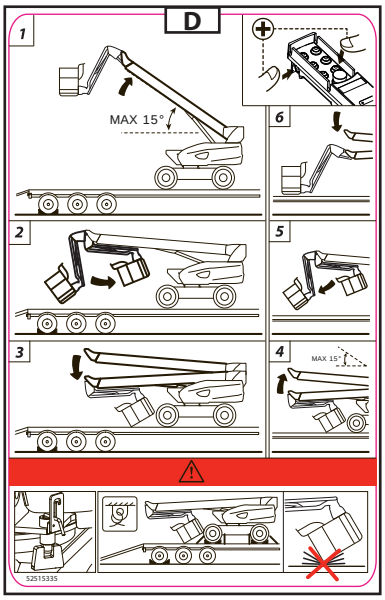

- Non-contractual image

647382 EN (01/02/2015)

https://truckmanualshub.com/

Lashing down the lifting platform

- Set chocks on the truck bed on each of the lifting platform's tyres, front and rear 50 (Fig D).
- Also set chocks on the truck bed on the inside and the outside of each tyre 51 (Fig E).
- Lash the lifting platform down on the truck bed with sufficiently strong ropes 52 (Fig D), to the front and the rear, passing the ropes through the slinging eyes (Fig D).
- Do not sling the basket (Fig. F).

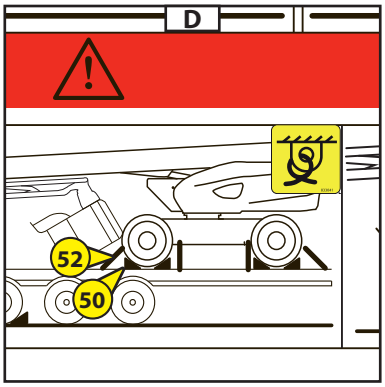

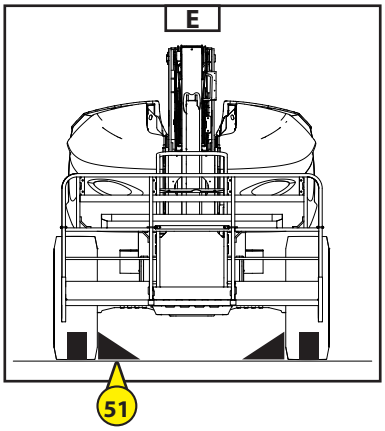

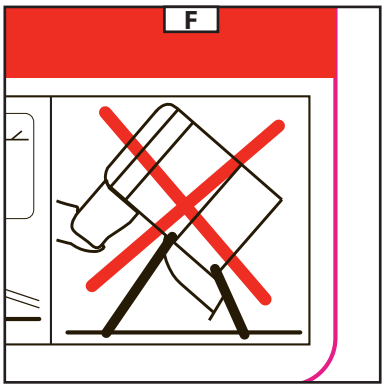

https://truckmanualshub.com/

RESCUE PROCEDURE

- This paragraph describes the procedures to follow, the controls to use in the event of a problem (breakdown of the lifting platform or someone trapped in the basket) while the lifting platform is working.
- When taking over the machine and regularly afterwards, the details of this procedure must be read and fully understood by the operator and everyone whose duties are centred on activities in contact with the machine.

IN THE EVENT OF THE OPERATOR FALLING ILL

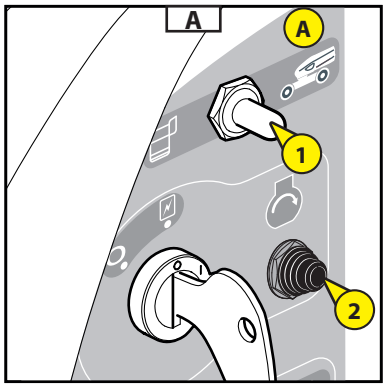

- In the case where the user is taken ill or finds themselves unable to manoeuvre, the person on the ground can take control of the lifting platform from the backup and maintenance control panel.
- Follow the instructions below.
- Turn switch 1 (Fig. A) to position A and hold it in place in order to take control of the lifting platform movements.
- Lower the lifting platform using the base controls.

  • FROM THE PLATFORM No. 950065

- In the case where the user accidently triggers the basket emergency stop, the person on the ground can take control of the lifting platform from the backup and maintenance control panel.
- Follow the instructions below.
- Turn switch 1 (Fig. A) to position A and hold it in place in order to take control of the lifting platform movements.
- Restart the engine 2 (Fig. A).
- Lower the lifting platform using the base controls.

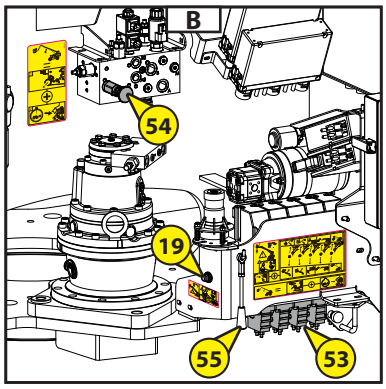

Pay attention to any constructions or objects that may be under the lifting platform.

IN THE EVENT OF AN ACCIDENT OR BREAKDOWN – RESCUE SYSTEM

ELECTRICAL BREAKDOWN

- When an accident or breakdown occurs, which makes the electrical control boxes unusable, the machine has systems for performing all the machine's movements manually.
- Raise the turret's right-hand cowl and locate the manual repair control components (See Fig. C):
  - Ref. 19: emergency pump button.
  - Ref. 53: manual repair controls on the proportional distributor,
  - Ref. 54: emergency valve on the distributor,
  - Ref. 55: manual repair control lever.

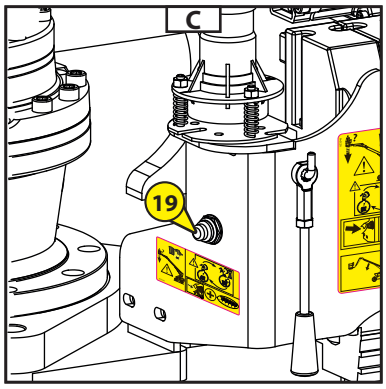

- **Manual repair from the distributor 53 (Figs. B and E):**
  - Take the lever 55 (Fig. B) and position it on one of the proportional distributor's components (Fig. D) depending on the desired movement (See Fig. E).
  - To perform a manual repair movement, press the button 19 (Fig. C) to activate the emergency pump and simultaneously push the lever simultaneously 55 (Fig. D) upwards or downwards, depending on the desired movement (Fig. E).

NB: Please refer to the sticker in Fig. E to learn how the manual repair movements are assigned on the proportional distributor.

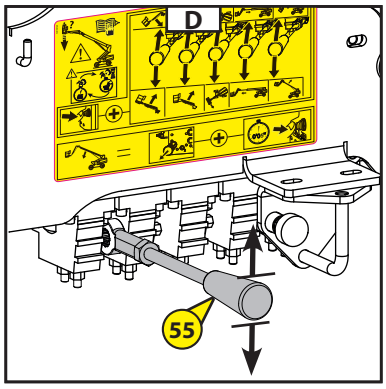

- **Manual repair from the emergency valve 54 (Fig. B):**
  - To manually lower the lower arm – telescope – basket compensation assembly, pull the emergency valve 54 and simultaneously press the emergency pump activation button 19 (Fig. C) for 5 seconds, then release the button while holding the emergency valve 54 pulled towards you.

During these operations, the system does not control:
- The tilt safety system.
- The basket overload system

NB: please refer to the sticker in Fig. F for the assignment of the manual repair movements for the arm-telescope-basket compensation assembly.

647382 EN (01/02/2015)

https://truckmanualshub.com/

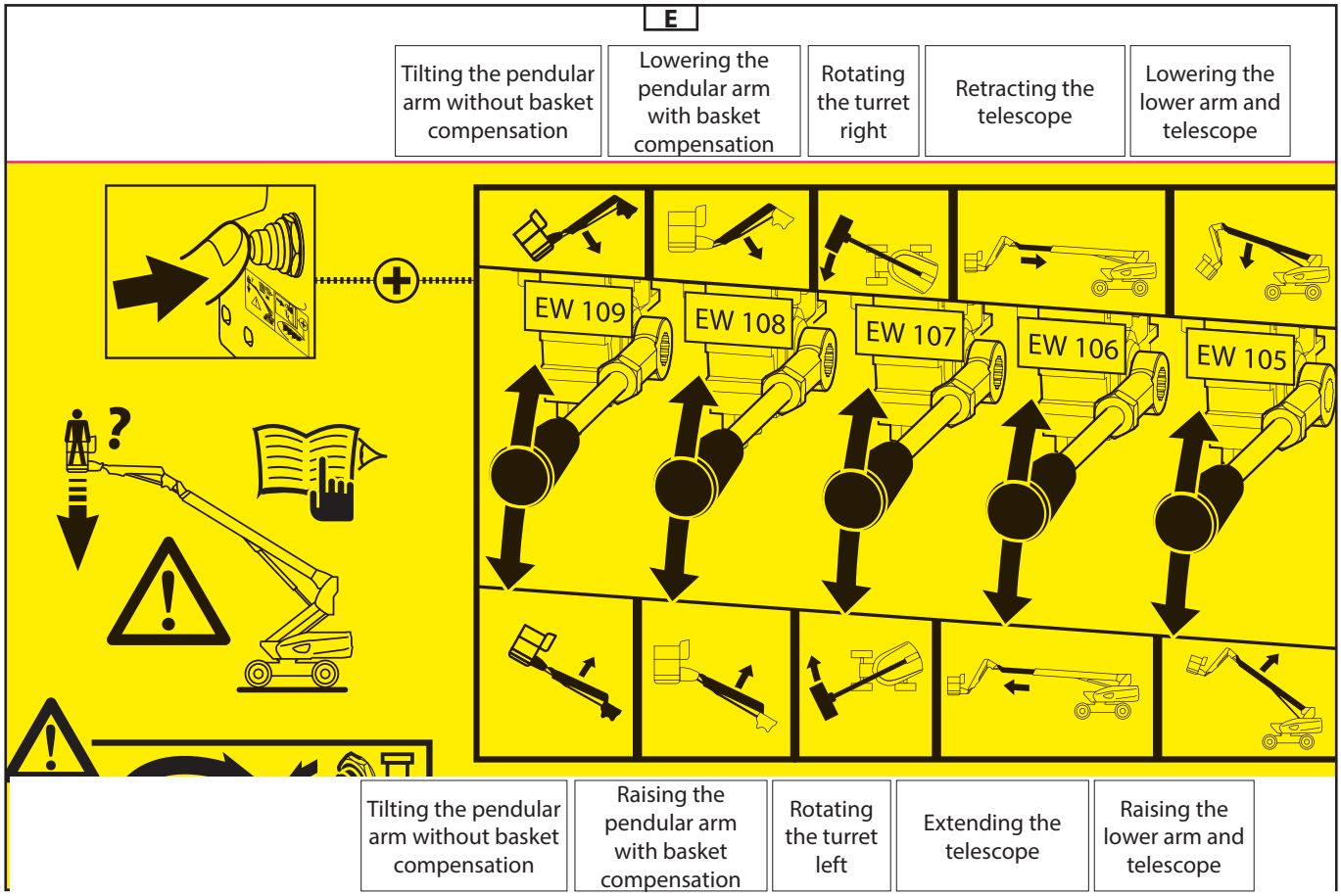

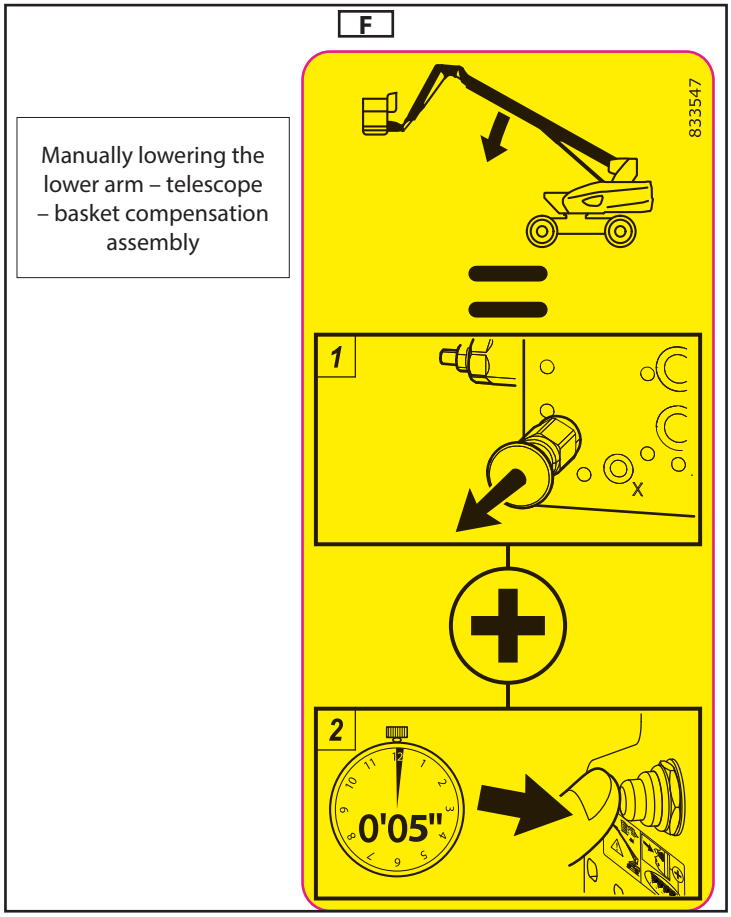

https://truckmanualshub.com/

Repairing A Breakdown From The Basket

- Press button 33 (Fig.D) to activate the emergency pump and, at the same time, use the basket controls. (See the CONTROL INSTRUMENTS section B - LIFTING PLATFORM CONTROL STATION

Only to be used to bring the basket down to the ground in the event of the engine breaking down

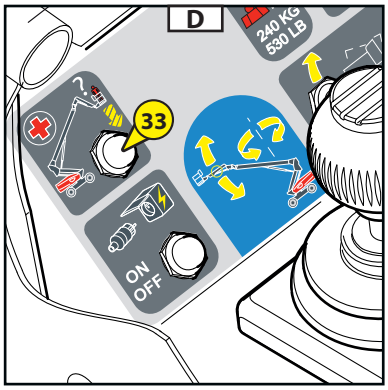

https://truckmanualshub.com/

https://truckmanualshub.com/

1 - SAFE MAN SYSTEM OPTION

The safe man system option is a system used to disable all of the basket control panel controls when activated by the nacelle user.

OPERATION

- Each time the nacelle is switched on, a system test is performed: there is a beep and the blue warning light flashes (Fig. C).

- If the pressure-sensitive edge is pressed (Fig. A), the system cuts all of the nacelle controls. The blue warning light and an audible alarm are activated.

- If the user releases the pressure-sensitive edge:
  By pressing the nacelle "OFF" rearming button (Fig. B) once, the user can regain control of the nacelle controls. The blue warning light and the audible alarm are turned off.

- If the user continues to press on the pressure-sensitive edge:
  By pressing the nacelle "OFF" rearming button (Fig. B) once, the user can regain control of the nacelle controls. The blue warning light and the audible alarm are turned off when the user releases the pressure-sensitive edge.

A

B

C

https://truckmanualshub.com/

https://truckmanualshub.com/

3 - MAINTENANCE

https://truckmanualshub.com/

https://truckmanualshub.com/

CONTENTS

MANITOU REPLACEMENT PARTS AND ORIGINAL EQUIPMENT 3-4

COMMISSIONING CHECK LIST 3-5

FILTER ELEMENTS AND BELTS 3-6

SAFETY COMPONENTS 3-7

LUBRICANTS AND FUEL 3-8

MAINTENANCE TABLE 260 TJ & 280 TJ 3-10

A - DAILY OR EVERY 10 HOURS OF OPERATION 3-12

B - EVERY 50 HOURS OF OPERATION 3-15

C - EVERY 250 HOURS OF OPERATION 3-19

D - EVERY 500 HOURS OF OPERATION 3-25

E - EVERY 1000 HOURS OF OPERATION 3-31

F - EVERY 2000 HOURS OF OPERATION 3-34

G - OCCASIONAL MAINTENANCE 3-36

647382 EN (01/02/2015)

https://truckmanualshub.com/

MANITOU ORIGINAL EQUIPMENT AND REPLACEMENT PARTS

OUR PERSONNEL LIFTING PLATFORMS MUST ONLY BE SERVICED USING MANITOU ORIGINAL PARTS.

BY AUTHORISING THE USE OF MANITOU NON-ORIGINAL PARTS,

YOU RISK

- From a legal viewpoint, becoming liable in the event of an accident.
- From a technical viewpoint, causing operating breakdowns or reducing the lifting platform's operating life.

THE USE OF COUNTERFEIT PARTS OR COMPONENTS NOT APPROVED BY THE MANUFACTURER,
RESCINDS THE BENEFITS ACCRUING FROM THE CONTRACTUAL WARRANTY.

BY USING MANITOU ORIGINAL PARTS IN YOUR SERVICING OPERASTIONS,

YOU BENEFIT FROM KNOW-HOW

Through its network, MANITOU provides the operator with,

- Know-how and competence.
- Guarantee of the quality of the work performed.
- Original replacement parts.
- Help with preventive maintenance.
- Efficient diagnostic assistance.
- Improvements based on feedback from experience.
- Training of the operating personnel.
- Only the Manitou network knows the lifting platform's design in detail and therefore has the best technical capabilities to provide for its maintenance.

ORIGINAL REPLACEMENT PARTS ARE ONLY DISTRIBUTED BY MANITOU
AND ITS DEALER NETWORK.
The list of dealers in the network is available on the MANITOU site www.manitou.com

https://truckmanualshub.com/

COMMISSIONING CHECK LIST

0 = Good 1 = Missing 2 = Incorrect

100	IC ENGINE	
01	Air filter	
02	Fuel tank	
03	Fuel lines - Filter	
04	Injection or carburettor system	
05	Radiator and cooling system	
06	Belts	
07	Hoses	
101	TRANSMISSION	
01	Reversing system	
02	Gearbox control	
03	Cut-off pedal	
04	Clutch	
102	AXLES / TRANSFER BOX	
01	Function and sealing	
02	Endstop adjustment	
103	HYDRAULIC / HYDROSTATIC CIRCUIT	
01	Tank	
02	Pumps and attachments	
03	Tightness of the connections	
04	Lifting cylinder(s)	
05	Tilting cylinder(s)	
06	Accessory cylinder(s)	
07	Telescope cylinder(s)	
08	Compensation cylinder(s)	
09	Steering cylinder(s)	
10	Distributor	
11	Balancing valve	
104	BRAKING CIRCUIT	
01	Operation of the service and parking brake	
02	Brake fluid level	
105	LUBRICATION AND GREASING	
106	JIB / MANISCOPIC / MANIACCES ASSEMBLY	
01	Beam and telescope(s)	
02	Skid	
03	Joints	
04	Protective plate	
05	Forks	
107	MAST ASSEMBLY	
01	Fixed and mobile uprights	
02	Protective plate	
03	Chains	
04	Pulleys	
05	Forks	

108	ACCESSORIES	
01	Adaptations to the machine	
02	Hydraulic connections	
109	CAB / PROTECTOR / ELECTRICAL CIRCUIT	
01	Seat	
02	Dashboard and radio	
03	Buzzer and alarm light / safety system	
04	Heating / Air conditioning	
05	Windscreen wiper / Windscreen washer	
06	Operating warning	
07	Reversing warning	
08	Road lights	
09	Additional lights	
10	Flashing light	
11	Battery	
110	WHEEL	
01	Rims	
02	Tyres / Pressure	
111	NUTS AND BOLTS	
112	CHASSIS AND BODYWORK	
113	PAINTWORK	
114	GENERAL OPERATION	
115	INSTRUCTIONS MANUAL	
116	CUSTOMER'S INSTRUCTIONS	

https://truckmanualshub.com/

FILTER ELEMENTS AND BELTS

IC ENGINE			
	IC ENGINE OIL FILTER Reference: 749613 Replace: 500 H		FAN BELT Reference: 823930 Replace: 500 H
	DRY AIR FILTER CARTRIDGE Reference: 227959 Clean: 50 H Replace: 500 H		
	DRY AIR FILTER SAFETY CARTRIDGE Reference: 227960 Replace: 1000 H*		
	FUEL FILTER CARTRIDGE Reference: 781909 Replace: 500 H		

*: This interval is provided only as an indication (see: 3 - MAINTENANCE: MAINTENACE TABLE) for cleaning and replacing this.

HYDRAULIC SYSTEM			
	HYDROSTATIC TRANSMISSION OIL FILTER CARTRIDGE Reference : 518250 Replace : 500 H		HYDRAULIC OIL RESERVOIR SUCTION STRAINER Reference : 19910 Clean : 1000 H
	AUXILIARY HYDRAULIC OIL FILTER CARTRIDGE Reference : 518251 Replace : 500 H		HYDRAULIC RESERVOIR FILLING STRAINER Reference : 832750

https://truckmanualshub.com/

SAFETY COMPONENTS

ELECTRICAL COMPONENTS			
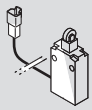	OVERLOAD SENSOR Reference : 833434	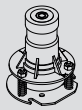	TILT SENSOR Reference : 52521691
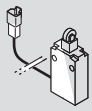	TELESCOPE CHAINE RUPTURE ROLLER SENSOR Reference : 833440	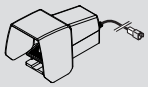	DEAD MAN'S PEDAL Reference : 831136
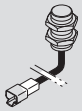	TELESCOPE BASE INDUCTIVE SENSOR Reference : 833436	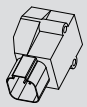	LOWER ARM ANGULAR SENSOR Reference : 831471
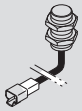	TURRET ROTATION INDUCTIVE SENSOR Reference : 833439		PENDULAR UNIT ANGULAR SENSOR Reference : 831430
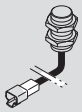	LOAD TABLE INDUCTIVE SENSOR Reference : 833438		
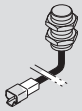	TELESCOPE ARM MAGNETIC SENSOR Reference : 833435		
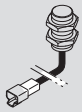	PEDULAR UNIT TELESCOPE MAGNETIC SENSOR Reference : 833439 (except 260 TJ)		

https://truckmanualshub.com/

LUBRICANTS AND FUEL

USE THE RECOMMENDED LUBRICANTS AND FUEL:
- Oils may not be mixed when topping up
- MANITOU oils are perfectly suitable for easy draining.

OIL DIAGNOSTIC ANALYSIS
If you set up a maintenance or servicing contract with the dealer, a diagnostic analysis of the engine and axle oils may be requested, depending on the usage level.

(*) CHARACTERISTICS OF THE RECOMMENDED FUEL
Use a quality fuel to obtain optimum performance from the engine.

- Diesel fuels
- CE No.: 269-822-7
- REACH Registration No.: 01-2119484664-27
- CAS No.: 68334-30-5

IC ENGINE				
COMPONENTS TO BE LUBRICATED	CAPACITY	RECOMMENDATION	PACKAGING	REFERENCE
IC ENGINE	9,5 Litres	MANITOU SAE 15W/40 engine oil	5 l 20 l 55 l 209 l 1000 l	661706 582357 582358 582359 490205
COOLANT	9 Litres	Cooling circuit (protection - 25°)	2 l 5 l 20 l	554002 788246 788247
FUEL TANK	78 Litres	Diesel (*)		

TRANSMISSION			
COMPONENTS TO BE LUBRICATED	RECOMMENDATION	PACKAGING	REFERENCE
TRANSFER BOX	TRACTELF axle oil SF3	5 l 20 l 209 l	545 976 582 391 894 257
TRANSMISSION UNIVERSAL JOINT	MANITOU BLUE multi-purpose oil	400 g 1 kg 5 kg 20 kg 50 kg	161589 720683 554974 499233 489670

HYDRAULIC SYSTEM				
COMPONENTS TO BE LUBRICATED	CAPACITY	RECOMMENDATION	PACKAGING	REFERENCE
HYDRAULIC OIL RESERVOIR	94 Litres	MANITOU Hydraulic ISO VG 46 oil	5 l 20 l 55 l 209 l	545500 582297 546108 546109

https://truckmanualshub.com/

LIFTING STRUCTURE				
COMPONENTS TO BE LUBRICATED	CAPACITY	RECOMMENDATION	PACKAGING	REFERENCE
GENERAL LUBRICATION		MANITOU high-performance grease	Cartridge 400 g	479330
TURRET CROWN GEAR BEARING RACEWAYS LUBRICATION				
TURRET CROWN GEAR TEETH LUBRICATION		SHELL MALLEUS GL 205 oil	Aerosol	744802
TURRET GEAR MOTOR BRAKE REDUCER	3 Litres	MANITOU SAE80W90 axle / gearbox mechanical transmission oil SAE80W90	2 l 20 l 55 l 209 l	499237 546330 546221 546220

FRONT AXLE				
COMPONENTS TO BE LUBRICATED	CAPACITY	RECOMMENDATION	PACKAGING	REFERENCE
FRONT AXLE DIFFERENTIAL		Axle oil TRACTELF SF3	5 l 20 l 209 l 1000 l	545976 582391 894257 720149
FRONT WHEEL REDUCER		Oil SHELL SPIRAX A 90	20 l 209 l	661950 662000

REAR AXLE				
COMPONENTS TO BE LUBRICATED	CAPACITY	RECOMMENDATION	PACKAGING	REFERENCE
REAR AXLE DIFFERENTIAL		Axle oil TRACTELF SF3	5 l 20 l 209 l 1000 l	545976 582391 894257 720149
REAR WHEEL REDUCER		Oil SHELL SPIRAX A 90	20 l 209 l	661950 662000

https://truckmanualshub.com/

MAINTENANCE TABLE 260 TJ - 280 TJ

(1):COMPULSORY OVERHAUL AFTER 500 HOURS or 6 MONTHS

This overhaul must compulsorily be performed after approximately the first 500 hours of operation or 6 months after the machine is put into service (when the earlier of the two periods is reached).

(2):The internal-combustion engine oil and its oil filter must be replaced after the first 50 hours of operation, and subsequently every 500 hours of operation.

A = REGULATE, C = CHECK, G = GREASE, N = CLEAN, P = BLEED, R = REPLACE, V = DRAIN	PAGE	(1)	DAILY OR EVERY 10 HOURS OF OPERATION	EVERY 50 HOURS OF OPERATION	EVERY 250 HOURS OF OPERATION	EVERY 500 HOURS OF OPERATION OR 6 MONTHS	EVERY 1000 HOURS OF OPERATION OR 1 YEAR	EVERY 2000 HOURS OF OPERATION OR 2 YEARS	EVERY 4000 HOURS OF OPERATION	OCCASIONAL
IC ENGINE										
Engine oil **(2)**	3-13/3-31	V/R	C	<<<	<<<	V/R	<<<	<<<	<<<	
Coolant	3-13/3-35	C	C	<<<	<<<	<<<	<<<	V/R	<<<	
Fuel level	3-13	C	C	<<<	<<<	<<<	<<<	<<<	<<<	
Fuel circuit hose	3-15/3-37			C	<<<	<<<	<<<	<<<	<<<	P
Radiator core	3-17	N		N	<<<	<<<	<<<	<<<	<<<	
Dry air filter cartridge	3-18/3-26	R		N	<<<	R	<<<	<<<	<<<	
Alternator/crankshaft/fan belt tension	3-17/3-24/3-30	C/A		C	C/A	R	<<<	<<<	<<<	
Cooling circuit	3-23	C			C	<<<	<<<	<<<	<<<	
Fuel filter	3-24	N			N	R	<<<	<<<	<<<	
Fuel filter cartridge **(2)**	3-24/3-26	R			N	R	<<<	<<<	<<<	
Engine oil filter **(2)**	3-31	R				R	<<<	<<<	<<<	
Fuel tank	3-32						V/N	<<<	<<<	
Dry air filter safety cartridge	3-32						R	<<<	<<<	
Engine silentblocks	3-34						C**	<<<	<<<	
Engine speeds	3-34						C**	<<<	<<<	
Valve sets	3-34	C**					C**	<<<	<<<	
Injectors	3-36							C	<<<	
Radiator	3-36							C**	<<<	
Water pump and thermostat	3-36							C**	<<<	
Alternator and starter	3-36							C**	<<<	
Fuel injection pressure	3-36							C**	<<<	
Turbocompressor	3-36							C**	<<<	
Injection pump	3-36							C**	<<<	
TRANSMISSION										
Brakes	3-12/3-30	C	C	<<<	<<<	C	<<<	<<<	<<<	
Axles	3-16	G		G	<<<	<<<	<<<	<<<	G/C**	
Tightness of the universal joint bolts	3-28	C			C	<<<	<<<	<<<	<<<	
Hydrostatic transmission circuit pressure	3-33						C**	<<<	<<<	
Start of hydrostatic transmission control	3-33						C/A*	<<<	<<<	
TYRES										
Condition of the wheels and tyres	3-14	C	C	<<<	<<<	<<<	<<<	<<<	<<<	
Tightness of the wheel nuts	3-20				C**	<<<	<<<	<<<	<<<	
Wheels	3-38									R
LIFTING STRUCTURE										
Telescope adjustment	3-20				C	<<<	<<<	<<<	<<<	
Brake reducer on the turret reduction gear	3-21/3-29				C	V/R	<<<	<<<	<<<	
Tightness of the bolts on the turret rotation motor	3-28					C	<<<	<<<	<<<	
HYDRAULIC SYSTEM										
Hydraulic oil	3-14/3-28/3-36	C	C	<<<	<<<	V/R	<<<	<<<	<<<	
Hydrostatic transmission oil filter cartridge	3-27	R				R	<<<	<<<	<<<	
Auxiliary oil filter cartridge	3-27					R	<<<	<<<	<<<	
Condition of the hoses	3-28					C**	<<<	<<<	<<<	
Hydraulic circuit strainer	3-34						N	<<<	<<<	
Hydraulic movement speeds	3-34						C**	<<<	<<<	
Condition of the cylinders (leaks, rods)	3-34						C**	<<<	<<<	
Hydraulic oil reservoir	3-36							N	<<<	
Hydraulic circuit pressures	3-36							C**	<<<	
Hydraulic circuit flows	3-36							C**	<<<	

https://truckmanualshub.com/

A = REGULATE, C = CHECK, G = GREASE, N = CLEAN, P = BLEED, R = REPLACE, V = DRAIN	PAGE	(1)	DAILY OR EVERY 10 HOURS OF OPERATION	EVERY 50 HOURS OF OPERATION	EVERY 250 HOURS OF OPERATION	EVERY 500 HOURS OF OPERATION OR 6 MONTHS	EVERY 1000 HOURS OF OPERATION OR 1 YEAR	EVERY 2000 HOURS OF OPERATION OR 2 YEARS	EVERY 4000 HOURS OF OPERATION	OCCASIONAL
ELECTRICITY										
Condition of the joystick bellows	3-14		C	<<<	<<<	<<<	<<<	<<<	<<<	
Level of electrolyte in the battery	3-15	C		C	<<<	<<<	<<<	<<<	<<<	
Emergency pump	3-20	C			C	<<<	<<<	<<<	<<<	
Arm position sensors	3-23	C			C	<<<	<<<	<<<	<<<	
Tilt sensor	3-23	C			C	<<<	<<<	<<<	<<<	
Overload sensors	3-23	C			C	<<<	<<<	<<<	<<<	
Density of the electrolyte in the battery	3-29	C			C	<<<	<<<	<<<	<<<	
Condition of the cable bundles and the cables themselves	3-34	C					C**	<<<	<<<	
Sensors and coils	3-39	C								XXX
FRONT AND REAR AXLE										
Front and rear axle differential oil	3-19/3-33	C			C	<<<	V/R	<<<	<<<	
Front and rear Transfer box oil	3-19/3-33	C			C	<<<	V/R	<<<	<<<	
Front and rear wheel reducer oil	3-20/3-33	C			C	<<<	V/R	<<<	<<<	
CHASSIS										
Turret orientation crown	3-21	G			G	<<<	<<<	<<<	<<<	
Shafts	3-22				G	<<<	<<<	<<<	<<<	
Tightness of the bolts fixing the axle assemblies on the chassis	3-23	C			C	<<<	<<<	<<<	<<<	
Tightness of the turret orientation crown bolts	3-30	C				C	<<<	<<<	<<<	
LIFTING PLATFORM										
General inspection	3-12	C	<<<	<<<	<<<	<<<	<<<	<<<	<<<	
Functional checks	3-12	C	<<<	<<<	<<<	<<<	<<<	<<<	<<<	
Lifting platform stickers	3-24				C	<<<	<<<	<<<	<<<	
Setting in Freewheeling mode	3-40									XXX
Transporting the lifting platform on a truck bed	3-40									XXX
SafeManSystem State	3-14	C	<<<	<<<	<<<	<<<	<<<	<<<	<<<	
Overload	3-25				C	<<<	<<<	<<<	<<<	
Stopping distance	3-25				C	<<<	<<<	<<<	<<<	

(*): Every 10 hours for the first 50 hours and then a final time after 250 hours.
(**): Contact your dealer.

https://truckmanualshub.com/

A - DAILY OR EVERY 10 HOURS OF OPERATION

A1 - GENERAL INSPECTION

CHECK

- Scrupulously inspect the machine and check that there are no cracked welds, corrosion or structural damage, loose or missing nuts and bolts, hydraulic leaks, damaged control cables or loose electrical connections."

A2 - FUNCTIONAL CHECKS

CHECK

Any malfunction of the platform must be detected every day before putting it into service. Identify any malfunction and take the platform out of service if any malfunction is detected.
Choose a testing area on a sturdy level unencumbered surface.
When manoeuvring the platform (raising, rotation...), look all around and above you. Pay particular attention to any electrical cables or other objects that may be in the platform's operating area.

EMERGENCY STOP
- Press the Emergency Stop knobs on the base control station.
  > Result: the engine should stop and no functions should be active.
- Pull the Emergency Stop knob to the Go position and restart the engine.
- Perform the test with the basket Emergency Stop knob with a view to achieving the same result.

DEAD MAN'S FUNCTIONS
- Without pressing the raising confirmation button, the so-called "Dead Man's" button, select a function for raising the platform.
  > Result: the platform should not rise.
- Press the raising confirmation button, the so-called "Dead Man's" button, and select a function for raising the platform.
  > Result: the platform should rise.
- Perform this test on the raising, lowering, turret rotation and translation functions with a view to achieving the same result.

BUZZER
- Press the basket's buzzer
  > Result: the buzzer should sound.

RAISING / LOWERING FUNCTIONS
- Select all the raising functions and then the lowering ones from the base console (lower arm and telescope – pendular unit – pendular unit telescope extension and retraction – telescope arm extension and retraction).
  > Result: the lifting platform should raise and then lower.
- Select all the raising functions and then the lowering ones from the basket console (lower arm and telescope – pendular unit – pendular unit telescope extension and retraction – telescope arm extension and retraction).
  > Result: the lifting platform should raise and then lower.

STEERING
Remark: when testing the steering and translation functions, stand on the platform and turn in the direction the machine is moving.
- From the basket console, select the steering control.
  > Result: the steering wheels should turn in the instructed direction.

TRANSLATION AND BRAKING
- Select a translation control
  > Result: the machine should move in the direction indicated by the white arrow for forward motion and by the black arrow for reverse and then stop when the control is released.

TRANSLATION SPEEDS IN WORK MODE
- Raise the lower arm and the telescope and/or extend the telescope and/or extend the pendular unit telescope.
- Perform a translation.
  > Result: translation should be performed at work speed.

https://truckmanualshub.com/

TILT SENSOR
Fold back the arms for this operation.
- Set the lifting platform in such a position that it is tilting more than the authorized amount.
  > Result: the raising and telescope extension movements should be blocked. The Tilt light is lit in the basket and the buzzer is ON intermittently in the basket.

OVERLOAD SENSOR
Fold the arms into transport position for this operation.
- Place a weight in the basket that is heavier than that indicated.
  > Result: all movements should be blocked. The Overload light is lit in the basket and the buzzer is ON continuously in the basket.

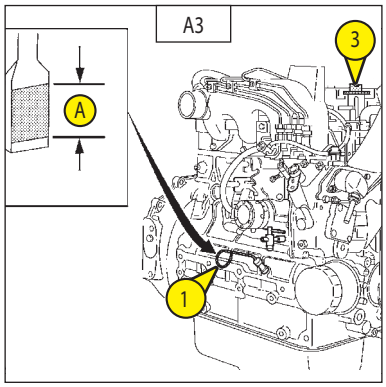

A3 - IC ENGINE OIL LEVEL

CHECK

Set the lifting platform on a horizontal surface with the engine switched off and let the oil drain back into the sump.

- Open the left-hand cover
- Remove the dipstick 1 (Fig. A3).
- Wipe the dipstick and check that the oil level is between the two upper notches. Ref. A (Fig. A3).
- If necessary, add oil (see the LUBRICANTS section) via the filling hole 2 (Fig.A3).

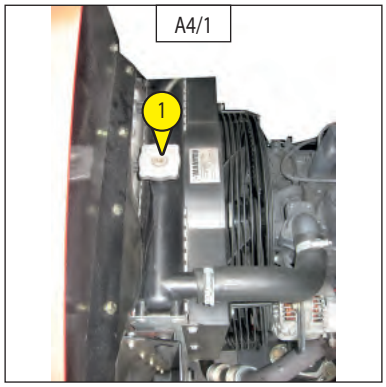

A4 - COOLANT LEVEL

CHECK

Set the platform on a horizontal surface with the engine off and wait for the engine to cool down.
- Open the left-hand cover.
- Remove the radiator cap 1 (Fig. A4/1)
- Check that the coolant level is up to the supply opening.

If the radiator cap must be removed, follow the above precautions and then retighten it securely.
Use pure fresh water and an antifreeze solution to refill the emergency reservoir.
If a water leak occurs, contact your dealer
Ensure that muddy water or sea water does not get into the radiator.
Do not refill the emergency reservoir with coolant above the 'FULL' marking.
Take care to tighten the cap firmly. If the cap is loose or badly closed, water can escape and the engine can overheat.

Do not remove the radiator cap when the engine is hot. Then, gently loosen the cap up to the stop to release any excessive pressure before removing the cap completely. If the engine overheats, steam may spurt from the radiator or the emergency reservoir, possibly causing severe burns.

A5 - FUEL LEVEL

CHECK

Keep the fuel tank as full as possible to reduce any condensation due to atmospheric conditions as much as possible.
- Remove the cap 1 (Fig. A5)
- Top up the tank via the filling hole with clean Diesel, filtered through a strainer or a clean, lint-free cloth.

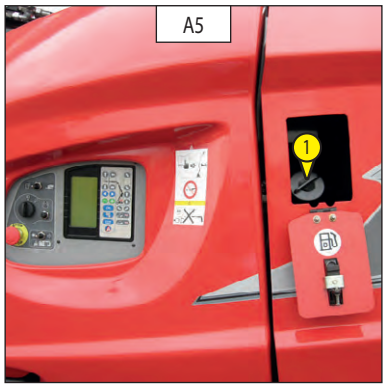

Do not smoke or bring a naked flame near to the tank during filling or when the tank is open. Never fill the tank with the engine running.

The fuel tank is vented by the filling cap. When changing the cap, always use an original cap with the vent hole.

https://truckmanualshub.com/

A6 - HYDRAULIC OIL LEVEL

CHECK

- Set the platform on a horizontal surface in transport position with the engine switched off.
- The oil level should be in the middle of the visual indicator 1 (Figs. A6/1 and A6/2).
- If necessary, top up the oil (See the "LUBRICANTS section) via the filling hole 2 (Fig. A6/3).

There may be a difference in the oil level of 10 to 20mm between warm and cold oil.
It is advisable to top up the oil when the oil is warm.

A6/1

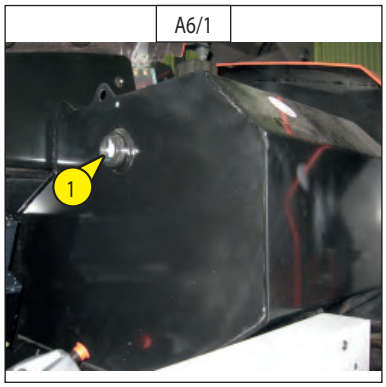

A6/2

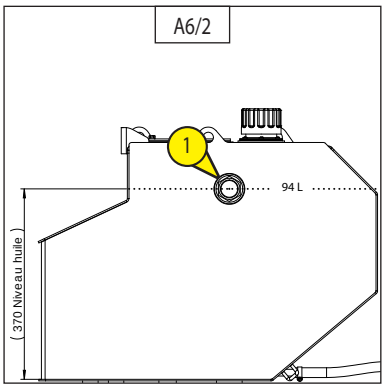

A6/3

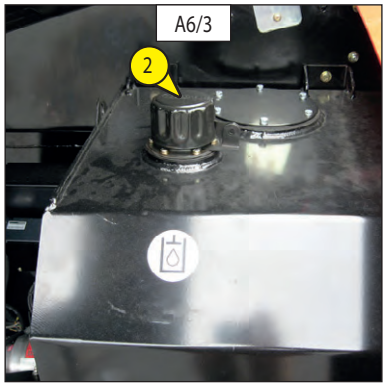

A7 - CONDITION OF THE JOYSTICK BELLOWS

CHECK

To check their condition, climb into the basket with the engine switched off.
- Check that the rubber bellows 1 (Fig. A7) on the joysticks are in good condition by operating them as if you were making a movement.
The bellows should not have any cracks or tears, through which water could penetrate risking damage to the machine's operation.

A7

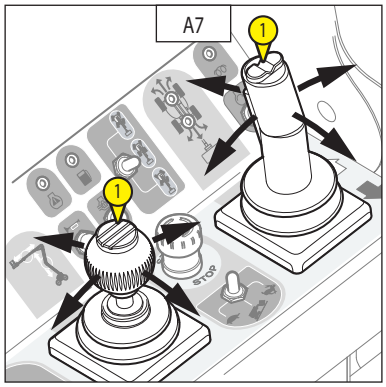

A8 - CONDITION OF THE WHEELS AND TYRES

CHECK

- Check the condition of the tyres for any cuts, tears, bulges, worn patches, etc.

A9 - CONDITION OF THE WHEELS AND TYRES

CHECK

A10 - SAFE MAN SYSTEM (OPTION) STATUS

CHECK

Press on the pressure-sensitive edge (Fig, A8/1) and confirm:
> All nacelle movements stop.
>The blue warning light and the audible alarm operate.
>The operation of the nacelle movements when the "OFF" button is pressed once (Fig.8/2).

If the pressure-sensitive edge is defective, the blue warning light flashes faster and a special alarm sounds. However, the machine can be operated normally.

If the "OFF" rearming button does not work, use the emergency stop to rearm the nacelle.

In the case of malfunction off the option, consult your dealer.

A8/1

A8/2

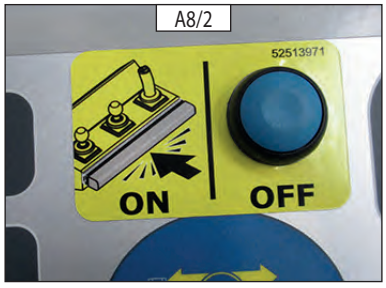

647382 EN (01/02/2015)

https://truckmanualshub.com/

B - EVERY 50 HOURS OF OPERATION

Perform the operations described above as well as the following operations.

B1 - LEVEL OF BATTERY ELECTROLYTE

CHECK

Check the electrolyte level in each battery.
If the ambient temperature is high, check the level more often than every 50 hours of operation.

- Remove the battery fasteners 1 (Fig. B1/1).
- Release the caps over the elements 2 (Fig. B1/2).
- The level should be 1cm above the battery plates.
- If necessary, top up with distilled water, kept in a glass container.
- Clean and dry the caps 2 (Fig. B1/2) and refit them.
- Check the terminals and apply Vaseline to prevent them from oxidizing.
- Refit the battery fasteners 1 (Fig. B1/2).

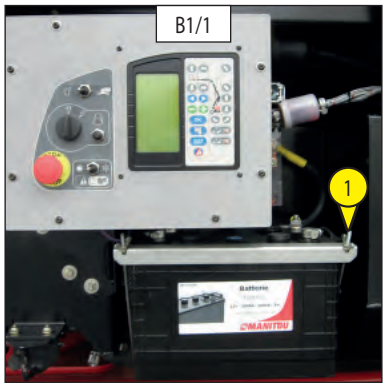

B1/1

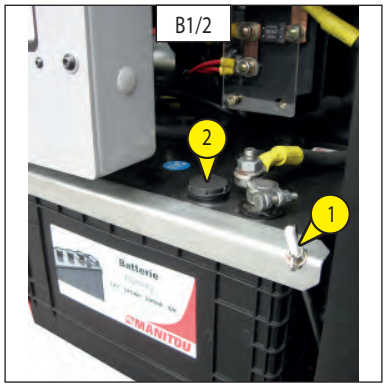

B1/2

Manipulating and servicing a battery can be dangerous; take the following precautions:
- Wear protective goggles.
- Keep the battery horizontal when manipulating it.
- Never smoke or work close to a naked flame.
- Work in a sufficiently well-ventilated area.
- If some electrolyte splashes onto your skin or in your eyes, rinse the affected area thoroughly with cold water for 15 minutes and call a doctor.

B2 - FUEL CIRCUIT HOSE

CHECK

Set the lifting platform on a horizontal surface, with the engine switched off, and wait for the engine to cool down.

Check the condition of the fuel circuit hoses after switching off the engine. If the fuel supply hoses are damaged, this can cause a fire.

- Open the engine cover. Open the engine support to facilitate access to the engine.
- Visually inspect the condition of the fuel circuit's supply hoses 1 (Figs. B2/1 & B2/2) and the tightening collars. If these are damaged, replace them immediately.

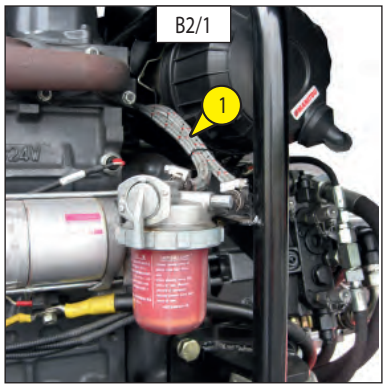

B2/1

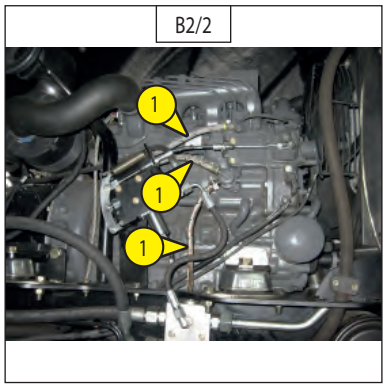

B2/2

https://truckmanualshub.com/

B3 - AXLES

GREASE

- Grease the front and rear wheel reducer pivots 1 (Figs. B3/1, B3/3 and B3/4) and 2 (Figs. B3/2, B3/3 and B3/4) (8 grease nipples)

REAR AXLE

B3/1

FRONT AXLE

B3/2

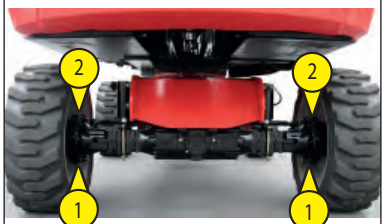

FRONT and REAR AXLES

B3/3

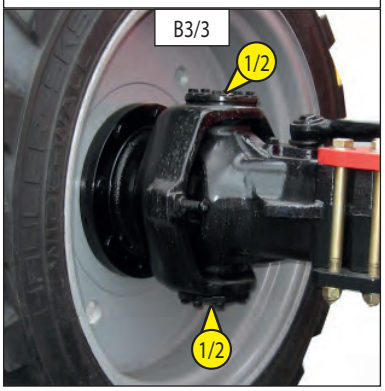

FRONT and REAR AXLES

B3/4

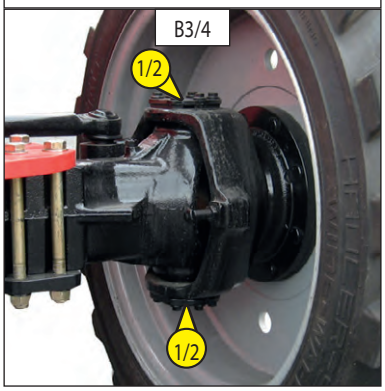

- Grease the front axle's oscillation shaft 3 (Figs. B3/2, B3/5 and B3/6) (2 grease nipples).

FRONT AXLE

B3/5

FRONT AXLE

B3/6

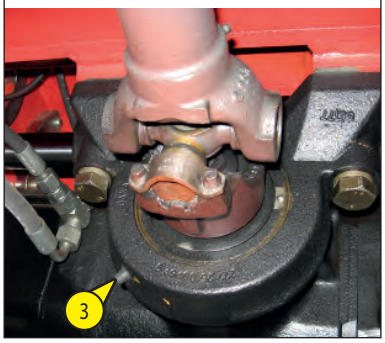

- Grease the transmission's universal joint at the front 4 (Fig. B3/7).

UNIVERSAL JOINT – AT THE FRONT

B3/7

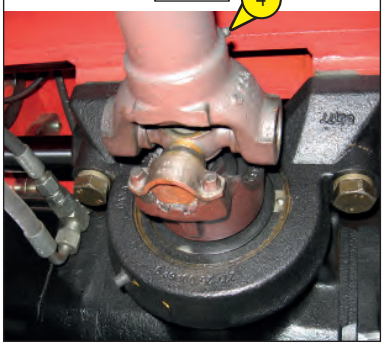

https://truckmanualshub.com/

B4 - ALTERNATOR/CRANKSHAFT/FAN BELT TENSION

ADJUST

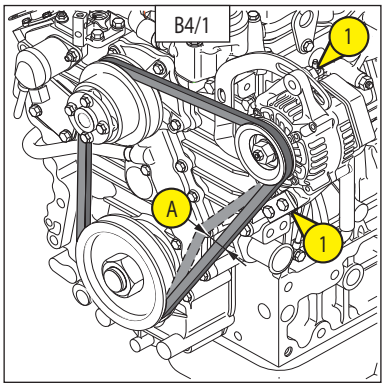

- Open the left-hand cowl.
- Check the condition of the belt for any signs of wear or cracking and replace it, if necessary (see: 3 - MAINTENANCE: FILTER ELEMENTS AND BELTS).
- Check the tension between the crankcase and alternator pulleys.
- Under thumb pressure (98 N), the tension Ref. A (Fig. B4/1) must be 7 to 9 mm (Fig.B4/1).
- Adjust, if necessary.
- Loosen the bolts 1 (Fig. B4/2) two or three turns.
- Swivel the alternator assembly to obtain the requisite belt tension.
- Retighten the bolts 1 (fig. B4/1).

When changing an alternator belt, recheck the tension after the first 20 hours of operation.

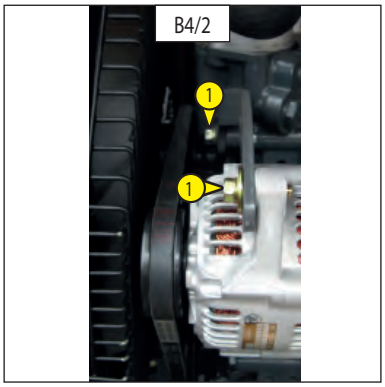

B5 - RADIATOR CORE

CLEAN

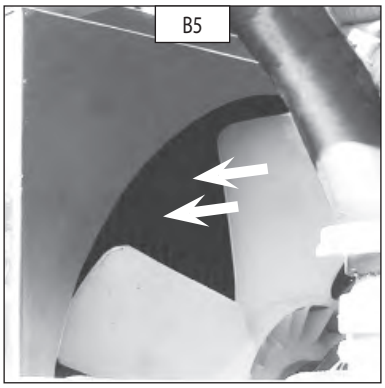

- Open the bonnet.

To avoid clogging the radiator core, clean it with a jet of compressed air directed from the front towards the back (Fig. B5). This is the only way to expel any dirt effectively.

Clean the radiator core daily when the lifting platform is being used in a very dusty area.

https://truckmanualshub.com/

B6 - DRY AIR FILTER CARTRIDGE

CLEAN

If the machine is being used in a very dusty atmosphere, reduce these maintenance intervals and see the FILTER ELEMENTS AND BELTS section.
- Open the left-hand cover.
- Locate the air filter1 (Fig. B6/1).
- Unclip the cover 2 (Fig. B6/2).
- Release the filter cartridge 3 (Fig. B6/3) by pulling it.
- Leave the safety filter 4 (Fig. B6/4) in place.
- Use a jet of compressed air to clean the filter cartridge, blowing only from the inside towards the outside.

Observe the safety distance of 30 mm between the jet of air and the cartridge to avoid tearing or piercing the cartridge. You must not blow out the cartridge near the air filter casing. Never clean the cartridge by tapping it against a hard surface. Protect your eyes during this operation.

- Clean the inside of the filter with a clean, damp, lint-free cloth.
- Check the condition of the filter cartridge and replace it, if necessary.
- Refit the cartridge and the cover.

Never wash a dry air filter cartridge. You must not clean the safety cartridge located inside the filter cartridge under any circumstances; replace it with a new one if it is clogged or damaged.

B6/1

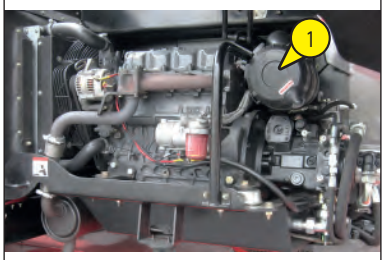

B6/2

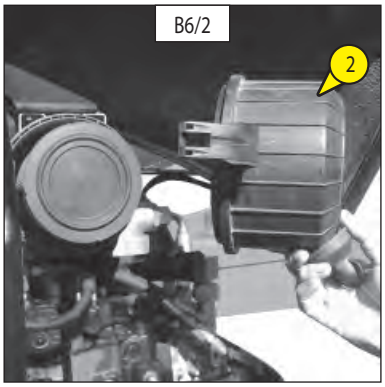

B6/3

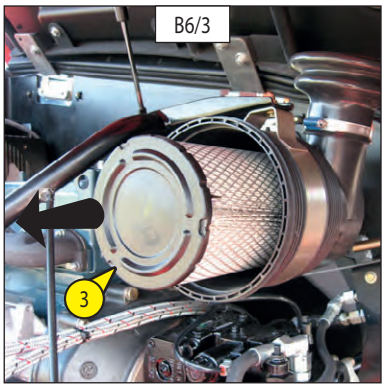

B6/4

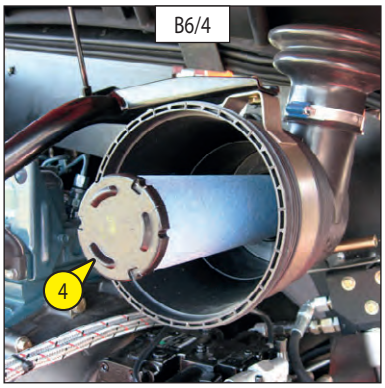

B7 - FUEL FILTER CARTRIDGE

REPLACE

- Open the left-hand cowl.
- Carefully clean the exterior of the filter and its holder to prevent dust from entering the system.
- Close the fuel tap 1 (Fig. B7/1) to the OFF position.
- Unscrew the retaining ring 2, remove the container 3 (Fig. B7/2) and clean the interior with a paintbrush impregnated with clean diesel.
- Throw away the filter cartridge 4 (Fig. B7/2).
- Reinstall the assembly with a new filter (see 3 – MAINTENANCE: FILTER ELEMENTS AND BELTS section).

B7/1

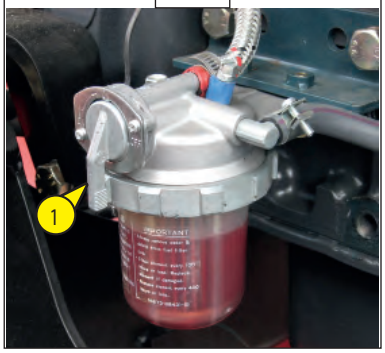

B7/2

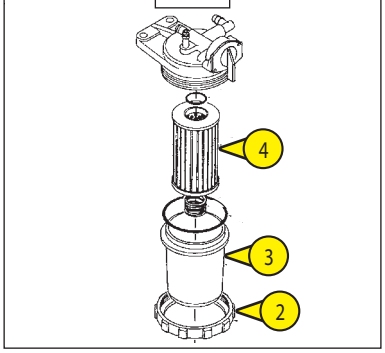

https://truckmanualshub.com/

C - EVERY 250 HOURS OF OPERATION

C1 - TRANSFER BOX OIL LEVEL

CHECK

Set the platform on a horizontal surface with the engine off.

- Note the position of the differential on the rear axle, inside the chassis.
- Remove the plug 1 (Fig. C1); the oil level should be flush with the hole.
- Add oil, if necessary (see the LUBRICANTS section), via the filling hole 2 (Fig. C1).
- Screw the plug 1 (Fig. C1) back in tightly.

DIFFERENTIAL ON THE REAR AXLE

C1

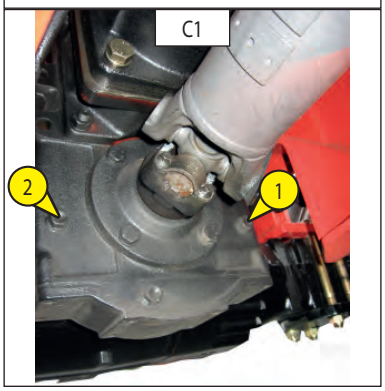

C2 - FRONT AND REAR DIFFERENTIAL OIL LEVEL

CHECK

Set the platform on a horizontal surface with the engine off.

- Remove the level plug 2 (Fig. C2/1: front axle) (Fig. C2/2: rear axle); the oil should be flush with the hole.
- If necessary, add oil (See the "LUBRICANTS" section) via the filling hole1 (Fig. C2/1: front axle) (Fig. C2/2: rear axle).
- Screw the plug 2 (Fig. C2/1: front axle) (Fig. C2/2: rear axle) back in tightly.

FRONT AXLE

C2/1

REAR AXLE

C2/2

C3 - TIGHTNESS OF THE UNIVERSAL JOINT BOLTS

CHECK

- Set the lifting platform on a horizontal surface with the engine off.
- Check the tightness of the 8 screws (four on each end) 1 (Fig. C3/1) and 2 (Fig. C3/2) under the chassis.
- The screws' tightness is 3.7 daN.m ± 10%.

FRONT AXLE

C3/1

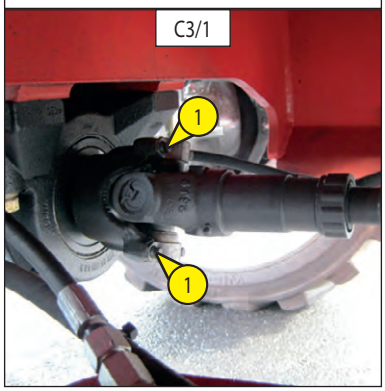

REAR AXLE

C3/2

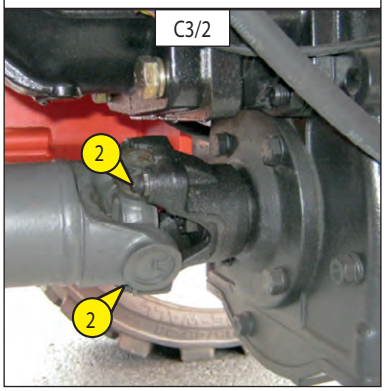

https://truckmanualshub.com/

C4 - FRONT AND REAR WHEEL REDUCER OIL LEVEL

CHECK

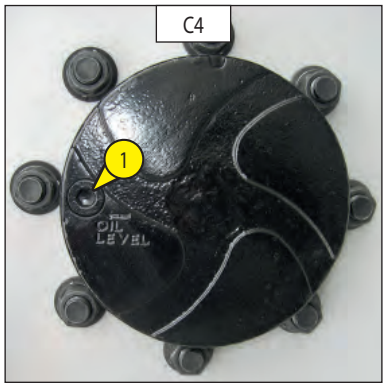

Set the platform on a horizontal surface with the engine off.

- Check the oil level in each of the front and rear wheel reducers.
- Set the level plug 1 (Fig. C4) horizontal.
- Remove the level plug; the oil should be flush with the hole.
- Add oil, if necessary (see the LUBRICANTS section), via the same hole.
- Screw the plug back in tightly 1 (Fig. C4).
- Perform the same operation on each of the rear wheel reducers.

C5 - WHEELS NUTS TIGHTENING

CONTROLER

Check the tightness of the wheel nuts: 37 daNm ± 15%

Failure to observe this instruction may cause the wheel pins to be damaged and break, as well as the wheels to deform.

C6 - EMERGENCY PUMP

CHECK

- Switch off the engine.

Check that the emergency pump is operating correctly by pressing the switch on the side of the base control box or the basket control box.

- Perform an arm lowering movement (example...)

You must not use the lifting platform under any circumstances if the pump is not working.

C7 - ADJUSTMENT OF THE TELESCOPE ARM AND THE TELESCOPIC PENDULAR UNIT

CHECK

Check the tightness of the 48 nuts on the telescope skids1 (Figs. C7/1 and C7/2) on all four faces of the telescopic arms.

Failure to observe this instruction may result in loss of the skids and damage to the telescope.

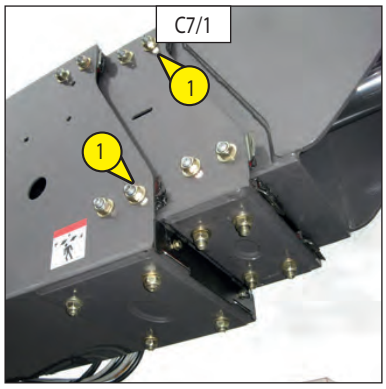

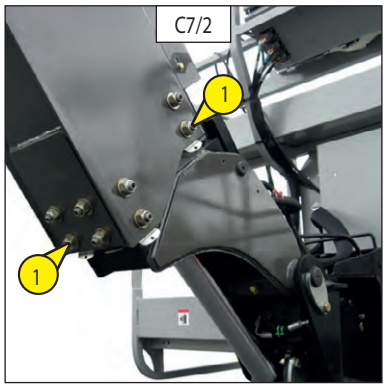

647382 EN (01/02/2015)

https://truckmanualshub.com/

C8 - LEVEL IN THE BRAKE REDUCER IN THE TURRET'S REDUCTION GEAR

CHECK

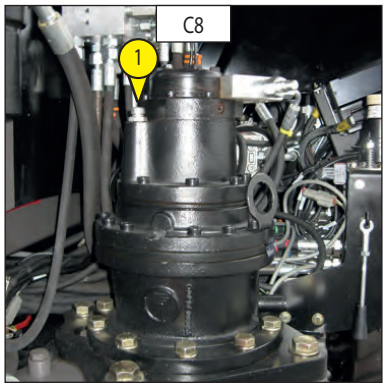

C8

Set the platform on a horizontal surface with the engine switched off.

- Remove the cover inside the turret.
- The reduction gear has the valve block towards the back.
- Remove the filling-sniffler cap 1 (Fig. C8)
- The level is correct when the sniffler is full of oil.
- If necessary, top up with a syringe, filling the reducer via the filling-sniffler cap (See the tables on pages 3-8 and 3-9).
- Refit the filling-sniffler cap 1 (Fig. C8).

C9 - TURRET AND AXLES ORIENTATION CROWN

GREASE

- The bearing raceways and the teeth must be lubricated every 250 hours of operation and after a long stoppage period.
- Grease to be used: See the LUBRICANTS section.
- Open the bonnet.
- Find the 5 grease points1 (Fig. C9/1) and grease thoroughly.
- Close the bonnet.

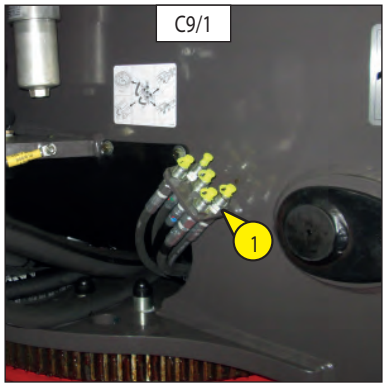

C9/1

- Spread lubricant over the crown's teeth and the pinion with a paint brush (Fig. C9/2).
- Lubricant to be used: See the LUBRICANTS section.

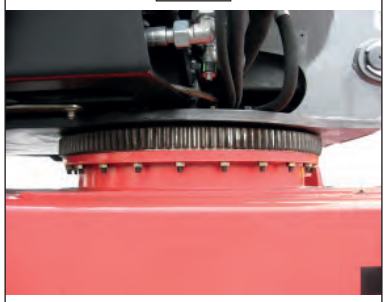
C9/2

https://truckmanualshub.com/

- Clean and then grease the following points (see the LUBRICANTS section for details of the grease) and remove the surplus.

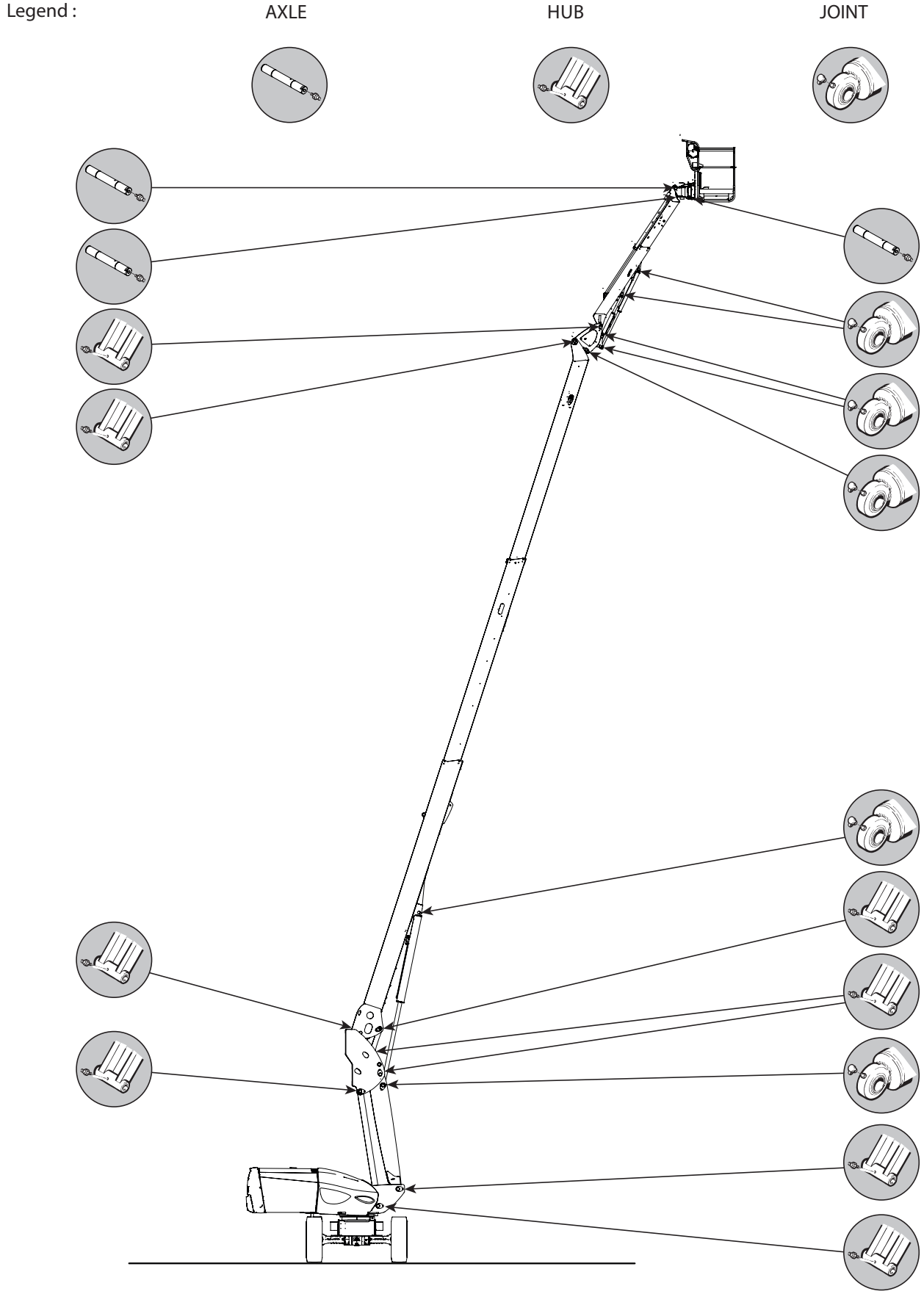

https://truckmanualshub.com/

C11 - TIGHTNESS OF THE AXLE FIXING BOLTS ON THE CHASSIS

CHECK

- The tightness of these bolts must be checked, at the latest, after 50 hours of operation. This check must then be repeated after every 250 hours of operation.
- The bolts' tightening torque is 28 daN.m ± 10 %.
- 1 daN = 1 Kg.

C12 - ARM POSITION SENSORS

CHECK

For this operation, fold the arms into transport position.
- Make a translation movement at transport speed
- Raise the arm and the telescope or extend the telescope
- Move forward
- The platform should switch to Work speed.

If a malfunction occurs, prohibit use of the platform. Contact your dealer.

C13 - TILT SENSOR

CHECK

For this operation, unfold the arms.
- Set the platform in a position where the tilt is greater than the permissible level (see: 2 – DESCRIPTION: SPECIFICATIONS).
- The movements for extending the telescope and raising the arms should be blocked (the tilt light is lit in the basket; the buzzer is activated intermittently in the basket).

If a malfunction occurs, prohibit use of the platform. Contact your dealer.

C14 - OVERLOAD SENSORS

CHECK

For this operation, fold the arms into transport position.
- Place a weight larger than that indicated in the basket (see: 2 - DESCRIPTION: SPECIFICATIONS).
- The movements for extending the telescope and raising the arms should be blocked (the overload light is lit in the basket; the buzzer is activated continuously in the basket).

If a malfunction occurs, prohibit use of the platform. Contact your dealer.

C15 - COOLANT CIRCUIT HOSES

CHECK

If the coolant circuit hoses are damaged or the coolant is leaking, this may cause overheating or severe burns.

- Open the bonnet.
- Visually check the condition of the cooling circuit hoses and the tightening collars. If these are blistered, hardened or cracked, replace them immediately.
  (Contact your dealer)

https://truckmanualshub.com/

C16 - FUEL FILTER

CLEAN

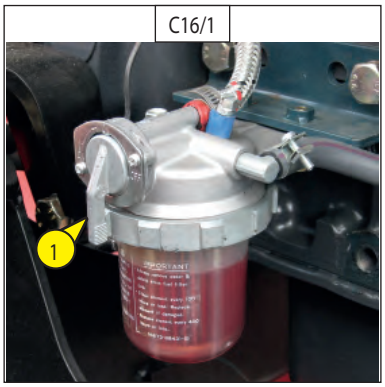

C16/1

- Set the lifting platform on a horizontal surface, with the engine switched off.
- Open the left-hand cowl.
- Close the fuel tap 1 (Fig. C16/1) to the OFF position.
- Carefully clean the exterior of the filter and its holder to prevent dust from entering the system.
- Unscrew the retaining ring 2, remove the container 3 (Fig. C16/2) and clean the interior with a paintbrush impregnated with clean diesel.
- Remove the filter cartridge 4 (Fig. C16/2) and plunge it in diesel to rinse it.
- Refit the assembly.
- Open the fuel tap 1 (Fig. C16/1) to the ON position.
- Bleed the fuel supply circuit (see: 3 - MAINTENANCE: G1 – FUEL SUPPLY CIRCUIT).

If the fuel is contaminated with dust or dirt, the injection pump and the injectors wear more rapidly. To avoid this, regularly clean the fuel filter container.

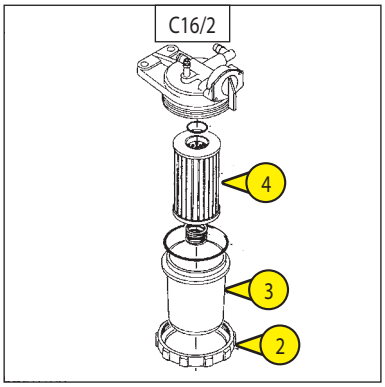

C16/2

C17 - ALTERNATOR/FAN/CRANKSHAFT BELT TENSION

ADJUST

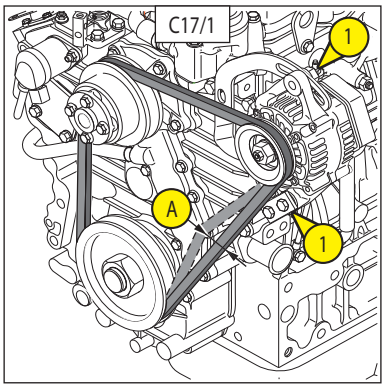

C17/1

- Open the left-hand cowl.
- Check the condition of the belt for signs of wear or cracking and replace, it if necessary (see 3 - MAINTENANCE: FILTER ELEMENTS AND BELTS).
- Check the tension between the crankshaft and alternator pulleys.
- Under thumb pressure (98 N), the tension A (Fig. C17/1) should be 7 to 9 mm (Fig. C17/1).
- Adjust, if necessary.
- Loosen the bolts 1 (Fig. C17/2) two or three turns.
- Swivel the alternator assembly to get the required belt tension.
- Retighten the bolts 1 (Fig. C17/1).

If you replace the alternator belt, recheck the belt tension after the first 20 hours of operation.

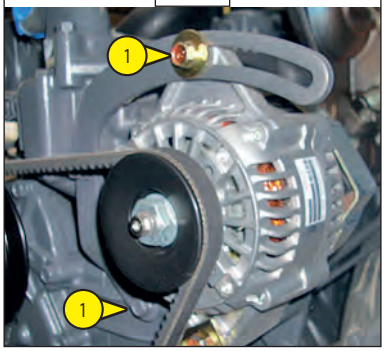

C17/2

C18 - MACHINE STICKERS

CHECK

- Check that the safety stickers are present (see: 1 – SAFETY STICKERS).

https://truckmanualshub.com/

C19 - OVERLOAD

CHECK

- The overload must activate at between 1.1 and 1.2 times the nominal load (see CHAPTER 2 - General characteristics).

Expected result:

- 280 TJ Nominal load 240 Kg: activation load between 264 kg and 288 kg
- 280 TJ Nominal load 350 Kg: activation load between 385 kg and 420 kg
- 260 TJ Nominal load 400 Kg: activation load between 440 kg and 480 kg

- The overload sensors must activate at the same time.

Refer to the repair manual for information about adjusting the overload

In the case of malfunction, forbid usage of the nacelle. Consult your dealership.

C20 - STOPPING DISTANCE

CHECK

STOPPING DISTANCE ON HORIZONTAL GROUND:

- The stopping distance is tested on flat ground with 1.1 times the nominal load in the basket.
- Reach maximum speed and then release the control.

Expected result:

On horizontal ground	Stopping distance
Transport speed	1 400 mm +or- 300 mm
Working speed	160 mm +or- 50 mm

CHECK BRAKE HOLDING ON A SLOPE

- Place the nacelle on a nominal 25% slope static with 1.1 times the nominal load in the basket.

Expected result: no slipping of the nacelle must be detected after one minute.

https://truckmanualshub.com/

D - EVERY 500 HOURS OF OPERATION

D1 - DRY AIR FILTER CARTRIDGE

REPLACE

The air used for combustion is purified by a dry air filter. It is therefore forbidden to use the lifting platform with the cartridge removed or damaged.

- Open the left-hand cowl.
- Unclip the clips 1 (Fig. D1/1) and remove the cover 2 (Fig. D1/1).
- Carefully remove the cartridge 3 (Fig. D1/2) to reduce any dust falling as much as possible.
- Leave the safety cartridge in place.
- Carefully clean the following parts with a clean, damp, lint-free cloth.
  - The interior of the filter and the cover.
  - The interior of the filter inlet hose.
  - The seal holders in the filter and the cover.
- Check the condition of the engine connection pipework and its fasteners as well as the connection and the condition of the clogging indicator on the filter.
- Before fitting, check the condition of the new filter cartridge (see: 3 - MAINTENANCE: FILTER ELEMENTS AND BELTS).
- Insert the cartridge in the axis of the filter and push it in by pressing on the circumference and not on the centre.
- Refit the lid, orienting the valve to the rear.

When using the machine in a very dusty atmosphere, see the FILTER ELEMENTS AND BELTS section.

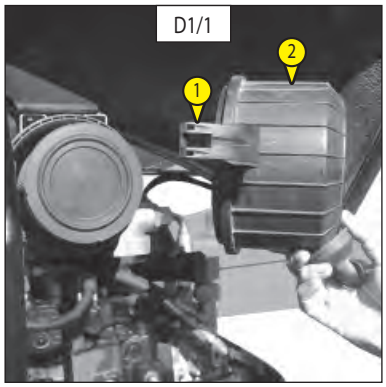

D1/1

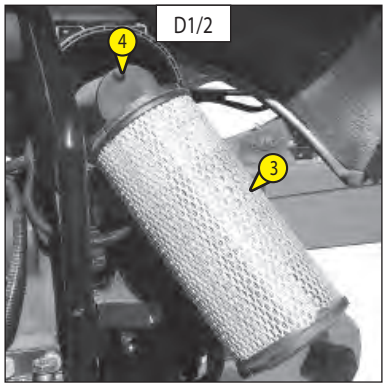

D1/2

D2 - FUEL FILTER CARTRIDGE

REPLACE

- Open the left-hand cowl.
- Carefully clean the exterior of the filter and its holder to prevent dust from entering the system.
- Close the fuel tap 1 (Fig. D2/1) to the OFF position.
- Unscrew the retaining ring 2, remove the container 3 (Fig. D2/2) and clean the interior with a paintbrush impregnated with clean diesel.
- Throw away the filter cartridge 4 (Fig. D2/2).
- Reinstall the assembly with a new filter (see 3 – MAINTENANCE: FILTER ELEMENTS AND BELTS section).

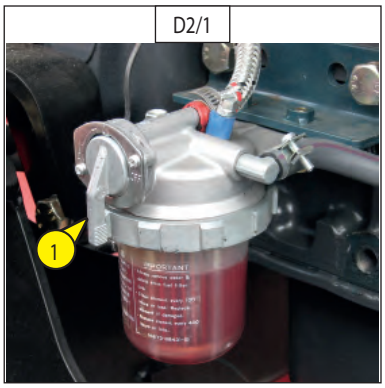

D2/1

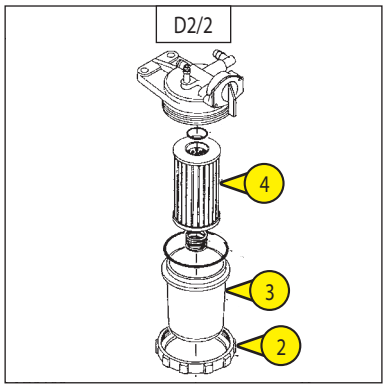

D2/2

D3 - FUEL PRE-FILTER CARTRIDGE

REPLACE

- Open the right cover.
- Remove the collars on each end of the diesel pre-filter and remove the pre-filter 1 (Fig. D3).
- Fit the new diesel pre-filter using new collars.
- Check that there are no leaks of diesel fuel.

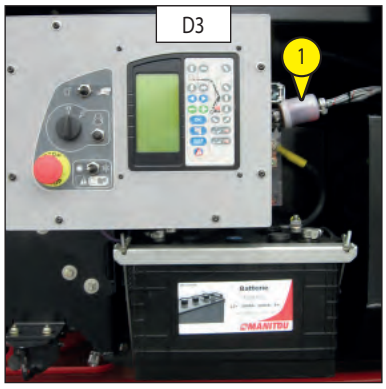

D3

647382 EN (01/02/2015)

https://truckmanualshub.com/

D4 - HYDROSTATIC TRANSMISSION OIL FILTER CARTRIDGE

REPLACE

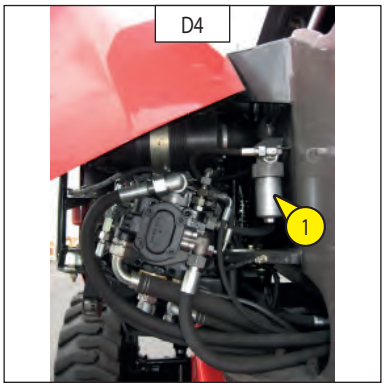

REPLACING THE HYDROSTATIC TRANSMISSION OIL FILTER CARTRIDGE

- Switch off the engine.
- Lift the cowl on the engine side.
- Unscrew the filter body 1 (Fig. D4).
- Remove the hydrostatic transmission oil filter cartridge and replace it with a new one.
- Ensure that the cartridge is correctly positioned and refit the cover.

Do not operate the lifting platform without a cartridge; this would immediately cause damage to the hydrostatic pump's hydraulic transmission circuit.

CLEANING OUT THE HYDRAULIC CIRCUIT

- Let the engine turn over for 5 minutes without using the lifting platform.

D5 - AUXILIARY HYDRAULIC OIL FILTER CARTRIDGE

REPLACE

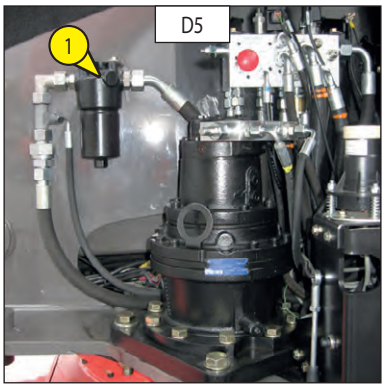

- With the machine stopped and the battery cutout in the OFF position.
- Unscrew the filter body 1 (Fig. D5).
- Remove the filter cartridge and replace it with a new one (see "FILTER ELEMENT" section).

  NB: Pay attention to the direction for fitting.
- Refit the filter body 1 (Fig. D5).

Carefully clean the exterior of the filter and its surroundings before performing any work in order to avoid any risk of pollution getting into the hydraulic circuit.

https://truckmanualshub.com/

D6 - HYDRAULIC OIL

DRAIN - REPLACE

- Set the lifting platform on a horizontal surface in transport position with the engine off.

DRAINING THE OIL

- Set a receptacle under the drain plug 1 (Fig. D6/1) and loosen the collar on the end of the rubber hose.
- Remove the drain plug 1 (Fig. D6/1).
- Remove the filling cap 2 (Fig. D6/2) to facilitate draining.

CLEANING THE SIEVE

- Remove the sieve 3 (Fig. D6/3); clean it with a jet of compressed air.
- Refit the sieve.CLEANING THE STRAINER
- Remove the hatch 4 (Figs. D6/2 and Fig. D6/3) to access the strainer 5 (Fig. D6/3).
- Remove the strainer 5 (Fig. D6/3) and clean it wish a compressed air jet.
- Refit the strainer in place.

REFILLING THE OIL

Use an oil bath and a very clean funnel; clean the top of the oil can before filling.

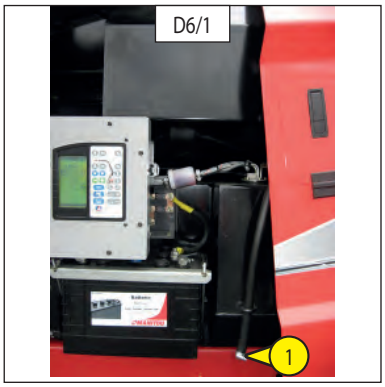

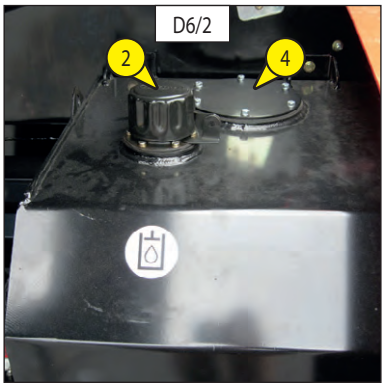

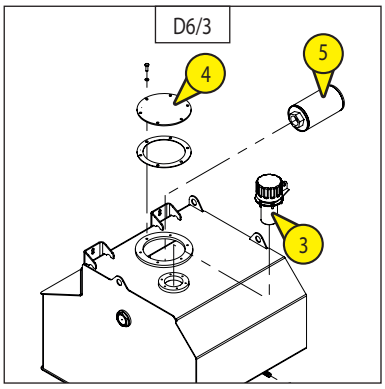

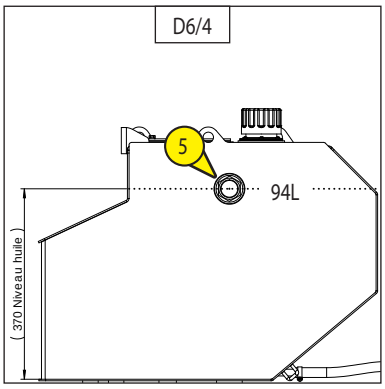

- Refit the drain plug 1 (Fig. D6/1) and tighten it.
- Refill with hydraulic oil (see the LUBRICANTS section) via the filling hole 2 (Fig. D6/2).
  - The oil level should be above the red mark on the gauge 5 (Fig. D6/4).

Dispose of the drained oil in an environmentally-friendly manner.

D7 - CONDITION OF THE HOSES

CHECK

- Check the apparent condition (cracking) of the hoses subject to heat stresses and UV; their technical characteristics may have altered (porosities).

BEWARE OF LEAKS
Hydraulic oil escaping under high pressure can pierce the skin and cause severe lesions. If you are injured by a jet of oil under pressure, immediately consult a doctor.
If you are in doubt about any leak, do not search with your hand: check with a piece of cardboard while protecting your hands and your body.
For your safety's sake, replace worn hose

D8 - TIGHTENING THE TURRET ROTATION MOTOR'S BOLTS

CHECK

Set the lifting platform on a horizontal surface with the engine switched off.

- Check the tightness of the 10 M16 screws 1 (Fig. D8): the screws' tightening toque 1 (Fig. D8) is 17 daN.m ± 10%.
- Check the tightness of the 4 M20 screws 2 (Fig. D8): the screws' tightening torque 1 (Fig. D8) is 28 daN.m ± 10%.

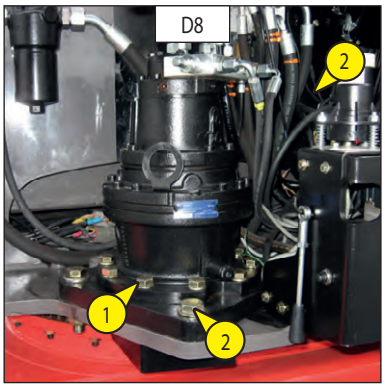

647382 EN (01/02/2015)

https://truckmanualshub.com/

D9 - TURRET MOTOR REDUCER BRAKE REDUCER

DRAIN - REPLACE

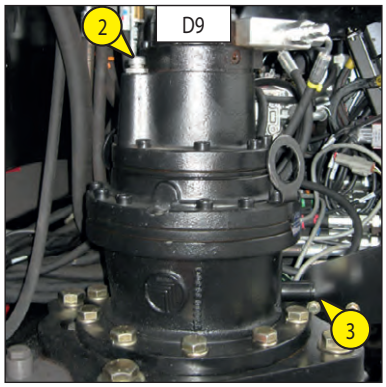

Set the lifting platform on a horizontal surface with the engine switched off.
- Remove the turret's inner cover.
- The motor reducer is presented with the valve unit to the rear.
- Remove the sniffler/filling cap 2 (Fig. D9) to ensure good drainage.
- Note the drain plug 3 located on the right-hand side reducer unit's sole plate (Fig. D9).
- Place a (small) receptacle to catch the oil.
- Unscrew the drain plug.

Dispose of the drained oil in an environmentally friendly manner.

- Use a syringe to fill the reducer via the sniffler/filling hole 2 (Fig. D9). The oil capacity is 1.3 litres and the level is correct when the sniffler is full of oil.
- Refit the sniffler/filling cap 2 (Fig. D9).

D11 - DENSITY OF THE BATTERY ELECTROLYTE

CHECK

The electrolyte's density varies according to the temperature but a minimum level of 1260 at 16°C must be maintained.
In the hatched section (Fig. D11), the battery is normally charged.
Above the hatched section, the battery must be recharged.

The density must not vary by 0.025 unit from one battery element to another.

- Open the battery cover.
- Check the electrolyte density in each battery element with an acidometer.
- Never check after having added distilled water. Recharge the battery and wait 1 hour before checking the battery electrolyte's density.

Manipulating and servicing a battery can be dangerous; take the following precautions:
- Wear protective goggles.
- Keep the battery horizontal when manipulating it.
- Never smoke or work close to a naked flame.
- Work in a sufficiently well-ventilated area.
- If some electrolyte splashes onto your skin or in your eyes, rinse the affected area thoroughly with cold water for 15 minutes and call a doctor.

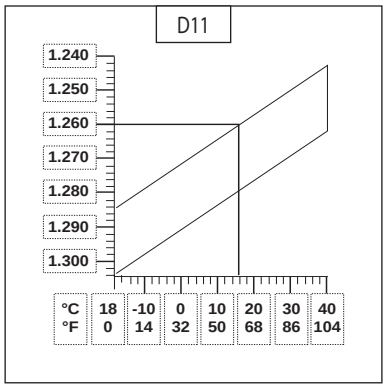

647382 EN (01/02/2015)

https://truckmanualshub.com/

D12 - TIGHTENING THE BOLTS ON THE TURRET ORIENTATION CROWN GEAR

CHECK

- The tightness of the screws must be checked at the latest after 50 hours of operation. This check must then be repeated every 500 hours of operation.
- The tightening torque for the screws is 18,4 daN.m ± 10 %.

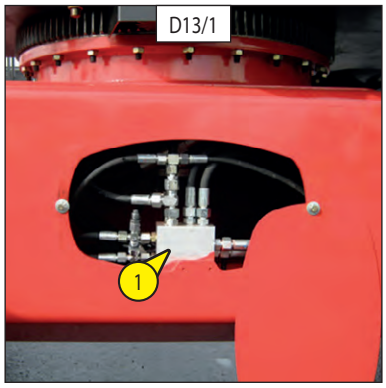

D13 - BRAKING

CHECK

- Check the braking system by disconnecting the coil 1 (Fig. D13/1 and D13/2) from the hydraulic unit on the chassis (to access the unit, remove the casing on the left-hand side of the chassis) and make a translation movement.

The lifting platform must not move forward.

- After the test, reconnect the coil.

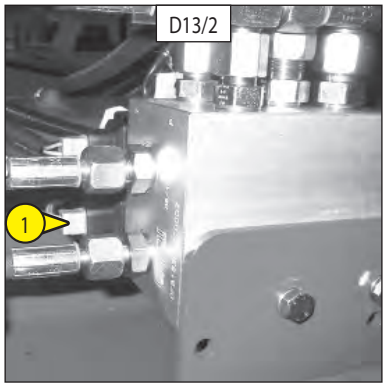

D14 - ALTERNATOR/FAN/CRANKCASE BELT

REPLACE

- Open the left-hand cowl.
- Loosen the bolts 1 (fig. D14) two or three turns.
- Swivel the alternator assembly to free the belt and the replace it with a new one (see: 3 - MAINTENANCE: FILTER ELEMENTS AND BELTS).
- Adjust the tension between the crankcase and alternator pulleys.
- Under thumb pressure (98 N), the tension should be 7 to 9 mm (Rep. A-Fig. D14)
- Retighten the bolts 1 (Fig. D14).

Recheck the belt tension after the first 20 hours of operation.

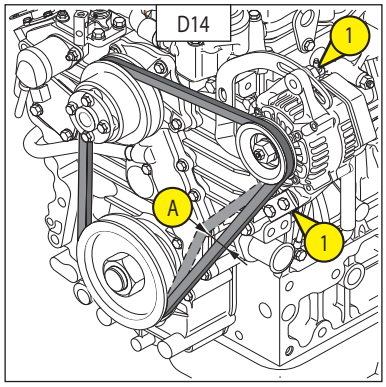

647382 EN (01/02/2015)

https://truckmanualshub.com/

D15 - IC ENGINE OIL

DRAIN - REPLACE

The internal-combustion engine oil and its oil filter must be replaced after the first 50 hours of operation, and subsequently every 500 hours of operation.

D16 - IC ENGINE OIL FILTER

REPLACE

The internal-combustion engine oil and its oil filter must be replaced after the first 50 hours of operation, and subsequently every 500 hours of operation.

- Set the platform on a horizontal surface, leave the engine running at idling speed for a few minutes and then switch it off.

DRAINING THE OIL

- Open the right cover.
- Open the engine seat.
- Place a receptacle on the ground
- Remove the filling cap 2 (Fig. D16/2) to ensure good drainage.
- When drainage is complete, screw the plug back in

Dispose of the drained oil in an environmentally friendly manner.

FILTER REPLACEMENT

- Remove the engine oil filter 3 (Fig. D16/3) and throw it away, together with its seal.
- Clean the filter bracket with a clean lint-free cloth.
- Lightly oil the new seal.
- Refit the oil filter on its bracket.

Tighten the oil filter only by hand and then lock it with a quarter turn from the filter wrench.

REFILLING WITH OIL

- Ensure that the plug 1 (Fig. D16/1) is correctly in place and tighten it.
- Top up with oil (See the LUBRICANTS section) via the filling hole 2 (Fig. D16/2).
- Wait a few minutes to let the oil flow into the sump.
- Check the level with a dipstick 4 (Fig. D16/4).
- Start the engine and leave it to run for a few minutes.
- Check for any leaks from the drain plug and the engine oil filter.
- Stop the engine, wait a few minutes and check that the level is between the 2 notches on the dipstick A (Fig. D16/4).
- Top up, if necessary.

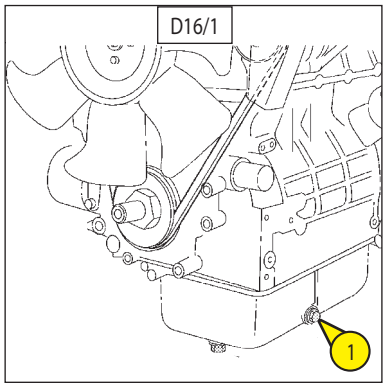

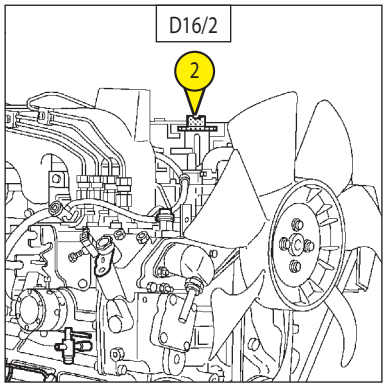

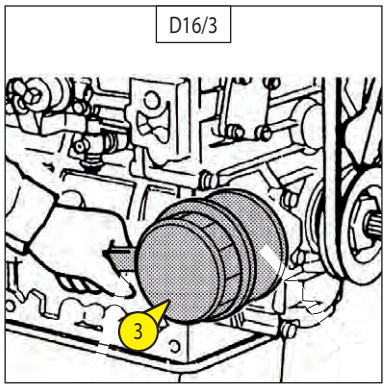

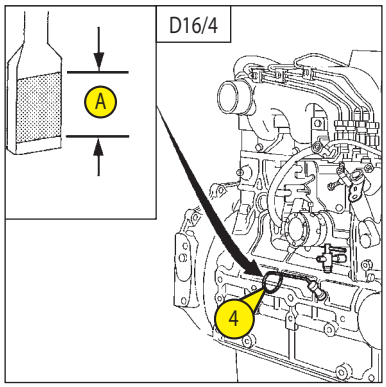

https://truckmanualshub.com/

E - EVERY 1000 HOURS OF OPERATION

E1 - FUEL TANK

DRAIN - CLEAN

Never smoke or approach the machine with a naked flame during this operation.

- Set the lifting platform on a horizontal surface with the engine off.
- Check visually and by touch the parts likely to have leaks in the fuel circuit and the tank.
- In the even of a leak, contact your dealer.

Never attempt to make a weld or any other operation by yourself; this could cause an explosion or a fire.

- Set a receptacle under the drain plugs 1 & 2 (Fig. E1/1) and loosen the drain plugs.
- Let the diesel flow out and rinse out with ten litres of diesel poured through the filling hole 1 (Fig. E1/2).
- Refit and tighten the filling caps 1 & 2 (Fig. E1/1).
- Refill the fuel tank with clean diesel filtered through a strainer or a clean lint-free cloth and refit the filling cap (Fig. E1/2).

NB: two compartments make up the diesel tank. A main tank drained via plug 1 (Fig. E1/1) and a secondary one drained by plug 2 (Fig. E1/1). The secondary compartment provides an operating reserve in case the lifting platform is being used on a slope.

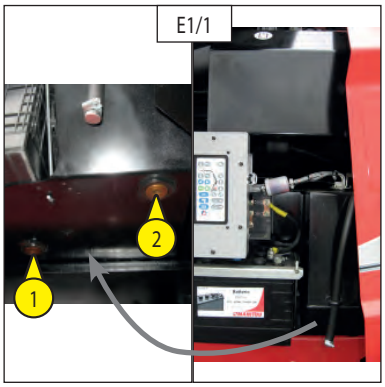

E1/1

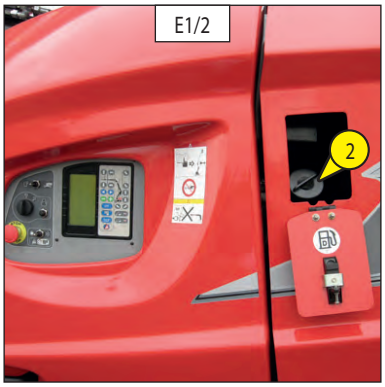

E1/2

E2 - DRY AIR FILTER SAFETY CARTRIDGE

REPLACE

- Open the left-hand cover.
- Remove the dry air filter cartridge Ref. 1 (Fig. E2/1) (See § D1).
- Remove the dry air filter safety cartridge Ref. 2 (Fig. E2/2) and replace it with a new one.
- Refit the assembly (see § D1).

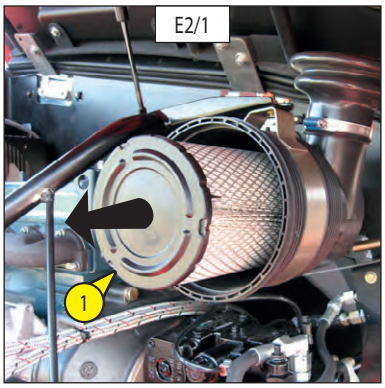

E2/1

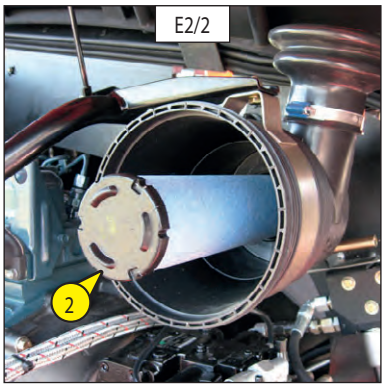

E2/2

https://truckmanualshub.com/

E3 - FRONT AND REAR AXLE DIFFERENTIAL OIL

DRAIN - REPLACE

Set the lifting platform on a horizontal surface with the engine off and the differential oil still warm.
- Set a receptacle under the drain plugs 3 (Fig. E3/1: front axle) and 3 (Fig. E3/2: rear axle).
- Remove the level plug and filling cap 1 and 2 (Fig. E3/1: front axle) (Fig. E3/2: rear axle) to ensure good drainage.

Dispose of the drained oil in an environmentally friendly manner.

- Refit and tighten the drain plugs 3 (Fig. E3/1: front axle) and 3 (Fig. E3/2: rear axle).
- Top up with oil (see the "LUBRICANTS" section) via the filling holes 1 (Fig. E3/1: front axle) and 1 (Fig. E3/2: rear axle).
- The level is correct when the oil is flush with the hole 2 (Figs. E3/1 & E3/2).
- Check for any leaks around the drain plugs.
- Refit and tighten the level plug and filler cap1 and 2 (Fig. E3/1: front axle & Fig. E3/2: rear axle).

FRONT AXLE

E3/1

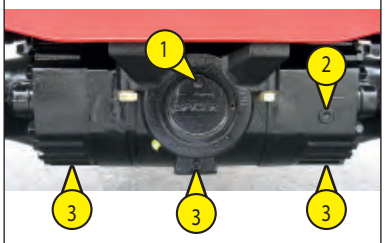

REAR AXLE

E3/2

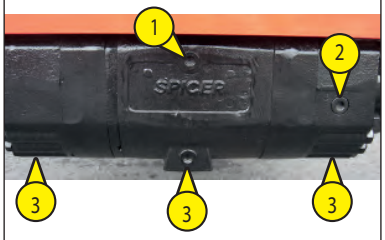

E4 - TRANSFER BOX OIL

DRAIN - REPLACE

Set the platform on a horizontal surface with the engine off and the differential oil still warm.
- Place a receptacle under the drain plug 3 (Fig. E4/1) and remove the filling plug 1 (Fig. E4/1) to ensure good drainage.
- Refill with oil (see the LUBRICANTS section) via the filling hole 1 (Fig. E4/1).
- The level is correct when the oil is flush with the hole 2 (Fig. E4/1).
- Refit the filling plug 3 (Fig. E4/1) and tighten it.
- Check the level using the hole 2 (Fig. E4/1); the oil must be flush with the hole.

E4/1

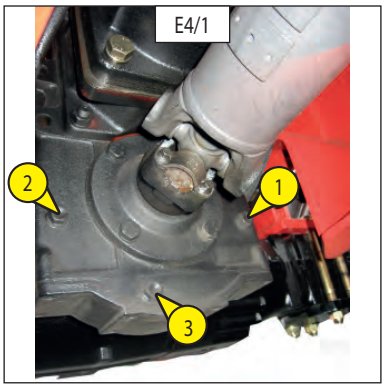

E5 - FRONT AND REAR WHEEL REDUCER OIL

DRAIN - REPLACE

Set the platform on a horizontal surface with the engine off and the reducers' oil still warm.
- Drain and replace the oil of each of the front and rear wheel reducers.
- Set the drainage plug 1 (Fig. E5) to position A.
- Place a receptacle under the drain plug and unscrew it.
- Leave the oil to drain out completely.

Dispose of the drained oil in an environmentally-friendly manner.

- Set the drain hole to position B, i.e. to level hole.
- Refill with oil (see the LUBRICANTS section) via the level hole 1 (Fig. E5).
- The level is correct when the oil is flush with the hole.
- Refit the drain plug 1 (Fig. E5) and tighten it.
- Perform the same operation for each of the wheel reducers.

E5

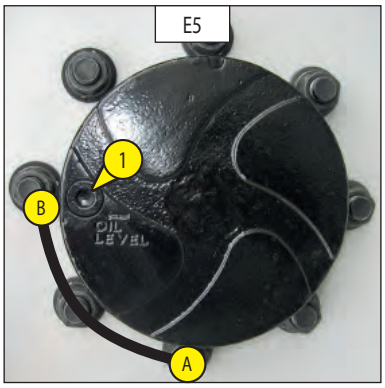

https://truckmanualshub.com/

E6 - CONDITION OF THE CYLINDERS (LEAKS, RODS)

CHECK

- Check the condition of the cylinders. There must be no:
• Hydraulic leaks from the seals and the valve blocks
• Impacts on the cylinder rods

E7 - CONDITION OF THE CABLE BUNDLES AND THE CABLES THEMSELVES

CHECK

- Inspect the following sectors, check the condition of the bundles: no deterioration and nothing loose.

• Base control console,
• Hydraulic block,
• Battery,
• Intermediate joint,
• Basket control console.

E8 - ENGINE SILENTBLOCKS (*)

CHECK

E9 - ENGINE SPEEDS (*)

CHECK

E10 - HYDROSTATIC TRANSMISSION CIRCUIT PRESSURES (*)

CHECK

E11 - START OF HYDROSTATIC TRANSMISSION CONTROL (*)

CHECK - ADJUST

E12 - MOVEMENT SPEEDS (*)

CHECK

E13 - SET OF VALVES (*)

CHECK - ADJUST

*(Contact your dealer)

https://truckmanualshub.com/

F - EVERY 2000 HOURS OF OPERATION

Perform the operations described above as well as the following operations.

F1 - COOLANT

DRAIN - REPLACE

This series of operations must only be performed as necessary or once a year, on the approach of winter.
Set the lifting platform on a horizontal surface with the engine switched off and cold.

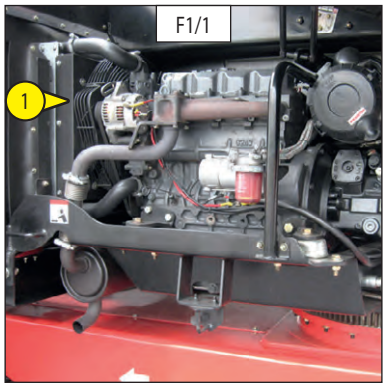

F1/1

Do not remove the radiator cap when the engine is hot. Then, gently loosen the cap up to the stop to release any excessive pressure before removing the cap completely. If the engine overheats, steam may spurt from the radiator or the emergency reservoir, possibly causing severe burns.

DRAINING THE COOLANT

Open the left cover and locate the radiator 1 (Fig. F1/1) and the drain tap 2 (Fig. F1/2). Open the engine support to facilitate access to the engine.
- To drain the coolant, always open the drain tap (Fig. F1/2) and radiator cap 3 (Fig. F1/2) both at the same time.

NB: The coolant cannot drain from the radiator while the radiator cap is still closed.
- Let the coolant circuit drain completely, ensuring that the holes are not blocked.
- Check the conditions of the rubber hoses and the fasteners and change the rubber hoses, if necessary.

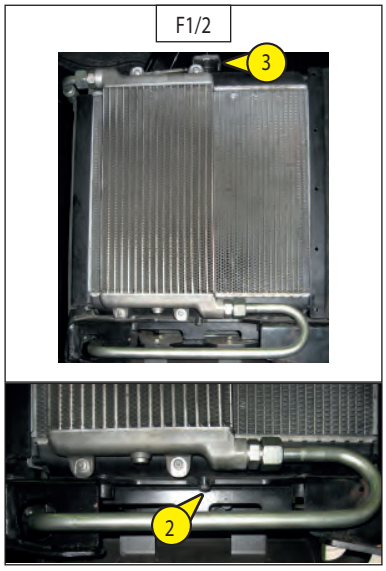

F1/2

REFILLING WITH COOLANT

- Close the drain cocks 2 (Fig. F1/2).
- Prepare the coolant (Fig. F1/3).
- Fill the cooling circuit slowly and completely via the filling hole 3 (Fig. F1/2).
- Refit the filling plug 3 (Fig. F1/2).
- Turn over the engine at idling speed for a few minutes.
- Check for any leaks.
- Check the level and top up if necessary.

The engine does not contain any anti-corrosion element and must be filled every year with a mixture containing at least 25% ethyl glycol based antifreeze.

F1/3

FREEZING POINT BASED ON % OF ANTFREEZE	
ANTIFREEZE 5110 NF	TEMPERATURE
30 %	-16° C
33 %	-18° C
40 %	-25° C
50 %	-37° C

https://truckmanualshub.com/

Perform the operations described above as well as the following operations.

F3 - WATER PUMP AND THERMOSTAT (*)

CHECK

F4 - ALTERNATOR AND STARTER (*)

CHECK

F5 - HYDRAULIC OIL RESERVOIR (*)

CLEAN

F6 - HYDRAULIC CIRCUIT PRESSURES (*)

CHECK

F7 - HYDRAULIC CIRCUIT OUTPUTS (*)

CHECK

F8 - FUEL INJECTION PRESSURE (*)

CHECK

F9 - INJECTION PUMP (*)

CHECK

F10 - INJECTORS

(CONTACT YOUR DEALER)

F11 - RADIATOR (*)

CHECK - DESCALE

F12 - TURBOCOMPRESSOR (*)

CHECK

*(Contact your dealer)

https://truckmanualshub.com/

G1 - FUEL SUPPLY CIRCUIT

BLEEDING

This series of operations should only in the following case:
- A component in the supply circuit needs to be replaced or drained.
- The fuel tank is empty.
- Before the engine is used after a long period of inactivity.

- Ensure that there is sufficient fuel in the tank and turn the ignition key to the second notch to switch the machine on.
- Open the left-hand cover.

BLEEDING THE FUEL FILTER

- Refill the tank.
- Open the fuel filter tap 1 (Figs. G1/1 and G1/2).
- Slightly loosen the fuel filter vent plug 2 (Fig. G1/2).
- Use the lever 4 (Fig. G1/3) to operate the feed pump manually.
- Retighten the plug when no more bubbles form.
- Open the vent plug in the top of the injection pump 3 (Fig. G1/3).
- Use the lever 4 (Fig. G1/4) to operate the feed pump manually.
- Retighten the plug when no more bubbles form.

G1/1

G1/2

G1/3

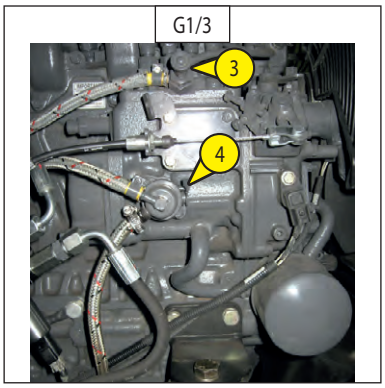

https://truckmanualshub.com/

G2 - WHEEL

CHANGE

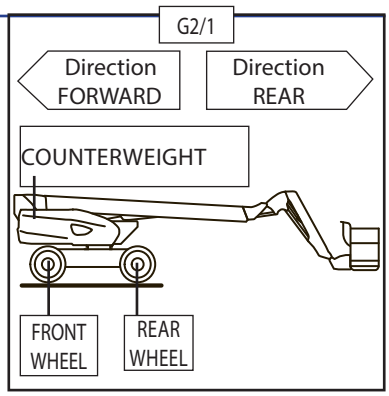

G2/1

- Stop the lifting platform on a firm, horizontal surface if possible.
- Proceed to switch off the machine (see: 1 – SAFETY INSTRUCTIONS AND ADVICE: DRIVING INSTRUCTIONS WHILE UNLADEN AND LOADED).
- Chock the lifting platform in both directions on the axle opposite the wheel to be changed.

Reminder:
-> Load on one front wheel (Fig. G2/1): 5500kg
-> Load on one rear wheel (Fig. G2/1): 2800kg

Recommendations :
For using the MANITOU hydraulic jack Ref. 505507 and the MANITOU safety stay Ref. 554772:
- You are recommended to replace the rear wheels then, after turning the turret half a turn, to replace the front wheels. This operation enables you to distribute the load on the axles by positioning the counterweight on the axle opposite the wheel change.

G2/2

- Unlock the nuts on the wheel to be changed.
- Set a jack under the axle housing as close as possible to the wheel and adjust the jack (Fig. G2/2).
- Raise the wheel until it is slightly off the ground and place the safety stay under the axle (Fig. G2/3).

One wheel weighs 300kg.

- Release the wheel by to and fro movements.
- Slip the new wheel over the hub.
- Screw on the nuts by hand, greasing them, if necessary.
- Remove the safety stay and lower the lifting platform with the jack.
- Tighten the wheel nuts with a torque wrench (see: 3 - MAINTENANCE: B - EVERY 250 HOURS OF OPERATION for the tightening torque).

G2/3

https://truckmanualshub.com/

G4 - LIFTING PLATFORM ON A TRUCK BED

TRANSPORT

- See Section 2: LOADING / UNLOADING THE LIFTING PLATFORM

G5 - FREEWHEELING MODE

ACTIVATION

In the event that the lifting platform must be towed, follow the instructions below.

The lifting platform may only be towed a short distance and necessarily by a machine with significant braking power in order to hold it and with a connection bar between the two machines.

1 - Wedge the lifting platform in place.
2 – Hydrostatic declutching

Warning: before performing this operation, take the necessary precautions because the machine will no longer have any brakes.

- Lift the engine cover.
- Screw in the hydrostatic pump's HP restrictors 1 (Fig. G5/1) to the sticking point + a turn and a half.

3 - Mechanical declutching of the front and rear axles
- Unscrew the four lock nuts at ref. 2 (Fig. G5/2 & Fig. G5/3) on each axle (front and rear).
- Screw in the screws 2 (Fig. G5/3) up to the mechanical stop, following the pre-defined tightening order: tighten screw 2A a quarter turn and then tighten screw 2B a quarter turn (and so on up to the mechanical stop). Perform the same operation on screws. 2C - 2D.

Do not forcibly tighten the screws at the mechanical stop.
Failure to follow this progressive alternating procedure may damage the axle.

Warning: after this operation, remember to remove the mechanical brake release. Follow the pre-defined loosening order: loosen screw 2A a quarter turn and then loosen screw 2 B a quarter turn (and so on). Perform the same operation on screws 2C - 2D.

4 - Testing the axle brake
- Check the braking system by disconnecting the coil 3 (Fig. G5/4) from the hydraulic block on the chassis (to access the block, remove the casing on the right side of the chassis)
- Perform a translation movement.

The lifting platform must not move forward.

- After the test, reconnect the coil.

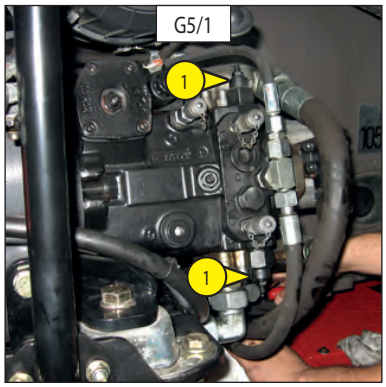

G5/1

G5/2

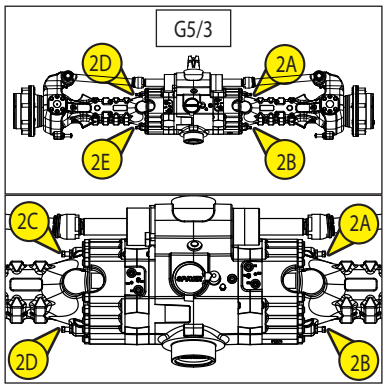

G5/3

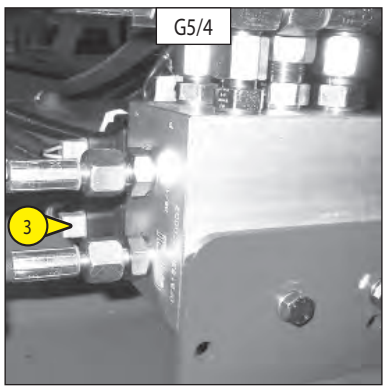

G5/4

https://truckmanualshub.com/

G6 - SENSORS AND COILS

SET/REPLACE

- A sticker (Fig. G6/2) in the base console compartment 1 (Fig. G6/1) enables you to identify the faulty components, the type of fault and the location of the components on the lifting platform.

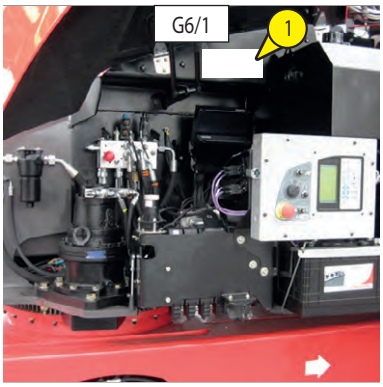

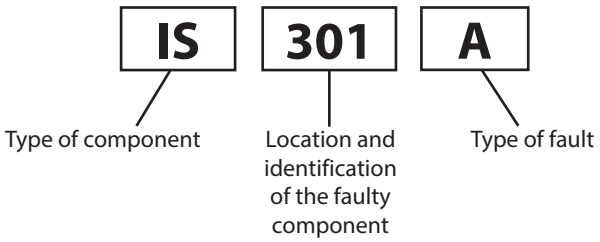

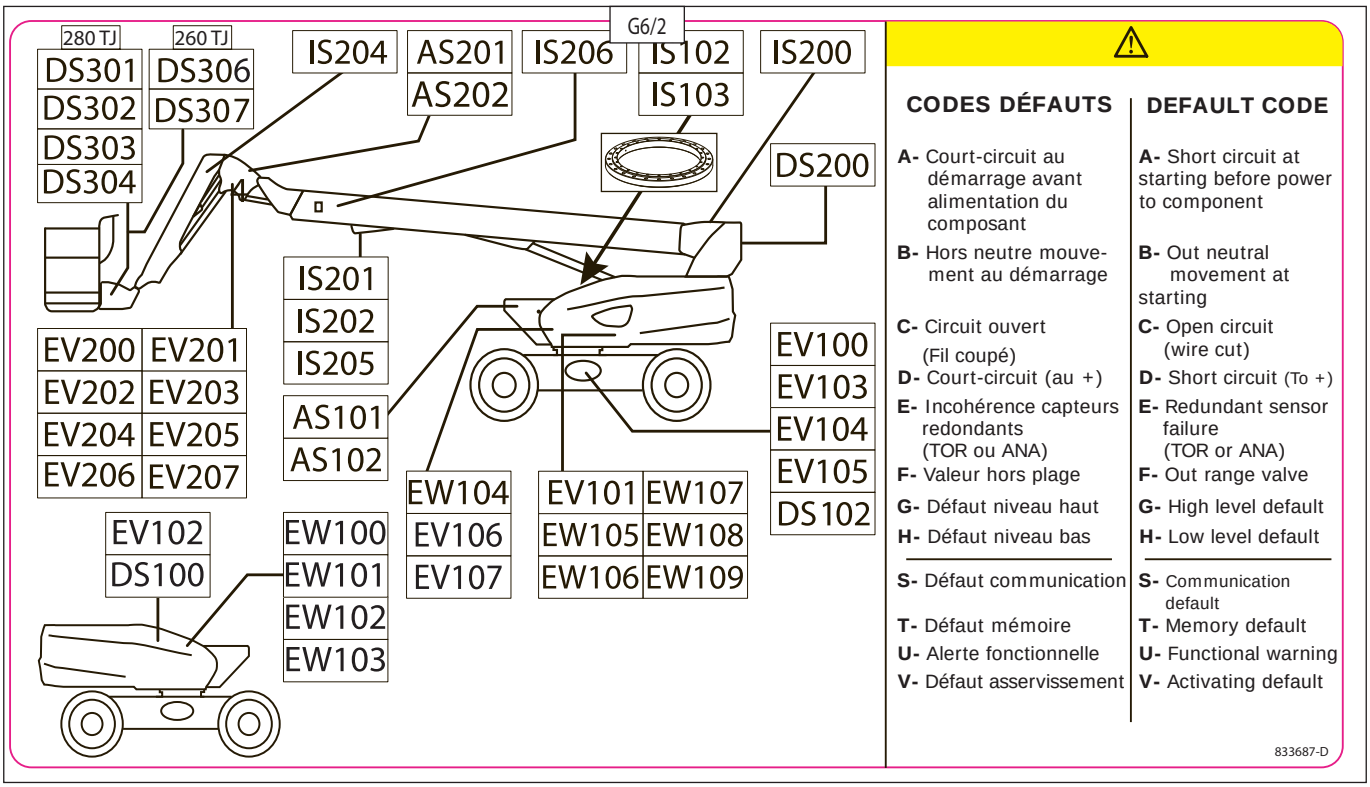

G7 - ENGINE SUPPORT

- To facilitate access to the engine, unscrew the screw on Ref. 1 (Fig. G7) and then pull the engine support.

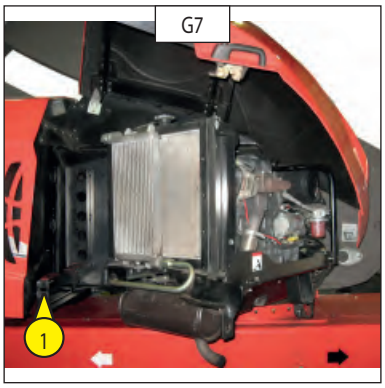

https://truckmanualshub.com/

4 - ELECTRICITY

647382 EN (01/02/2015)

https://truckmanualshub.com/

https://truckmanualshub.com/

DESCRIPTION OF THE FUSES AND THEIR REPLACEMENT

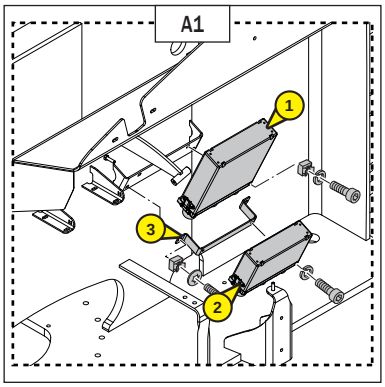

The fuses are located in the connection box BRC30 1 (Fig. A1) and BRC20 2 (Fig. A1) fixed to the turret above the base control box.

Switched off

To access the fuses, remove the the flat bracket 3 (Fig. A1).
Unlock the two toggle clips 4 (Fig. A1).

Release the guard 5 (Fig. A2) upwards.

Examine the defective fuses (Fig. A3 - A5):

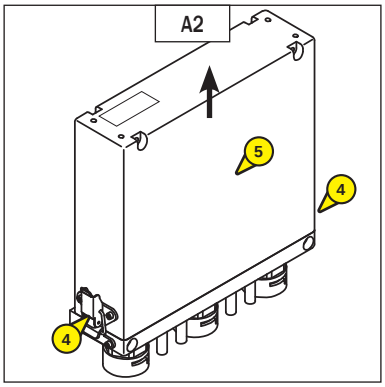

F1: Start button	5 Amps
F2: UPC30 power supply 1	30 Amps
F3: UPC30 power supply 2	30 Amps
F4: Supply to emergency pump	10 Amps
F5: Harness assembly 1	5 Amps
F6: Base power supply	10 Amps
F7: Starter field excitation	30 Amps
F8: Preheating power supply 1	30 Amps
F9: Preheating power supply 2	30 Amps
F10: Harness assembly 2	5 Amps
F11: Ground protection of UPC30	10 Amps
F12: Protection electrical wires	30 Amps
F13: Protection electrical wires	30 Amps
F14: Ground protection of Harness assembly	5 Amps
F17: Emergency motors/components power supply (power)	250 Amps
F18: Emergency pump power supply (power)	250 Amps

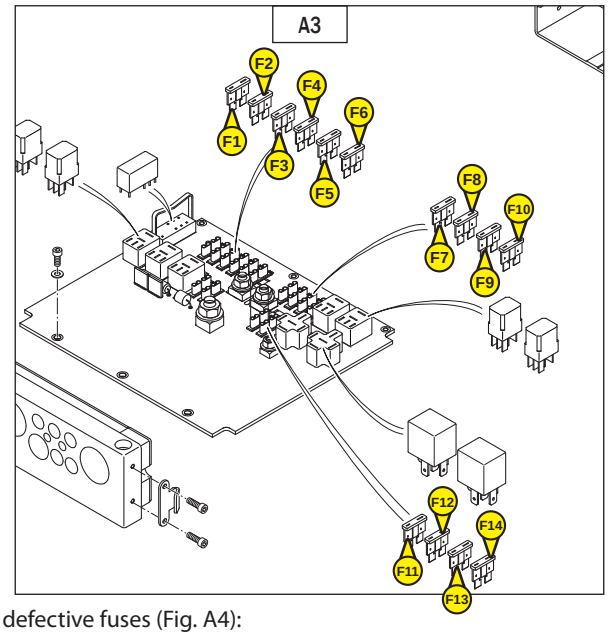

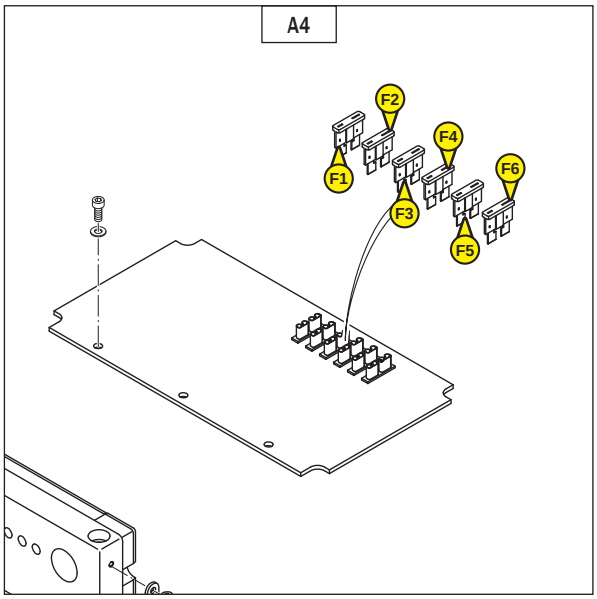

Examine the defective fuses (Fig. A4):

F1: UPC20 power supply 1 (+BAT)	25 Amps
F2: UPC20 power supply 2 (+BAT)	25 Amps
F3: Protection electrical wires	25 Amps
F4: Protection electrical wires	25 Amps
F5: UPC30 power supply 3 (+APC)	5 Amps
F6: working light protection	10 Amps

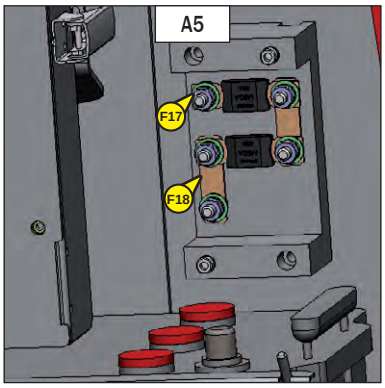

Fuse status LED:

- When one of the fuses has blown, the corresponding LED lights off (Fig. A3):

647382 EN (01/02/2015)

https://truckmanualshub.com/