https://truckmanualshub.com/

Kubota

U.S.A. : **KUBOTA TRACTOR CORPORATION**
3401 Del Amo Blvd., Torrance, CA 90503, U.S.A.
Telephone : (310)370-3370
Western Division : 1175 S. Guild Avc., Lodi, CA 95240
Telephone : (209)334-9910
Central Division : 14855 FAA Blvd., Fort Worth, TX 76155
Telephone : (817)571-0900
Northern Division : 6300 at One Kubota Way, Groveport, OH 43125
Telephone : (614)835-1100
Southeast Division : 1025 Northbrook Parkway, Suwanee, GA 30024
Telephone : (770)995-8855
Canada : **KUBOTA CANADA LTD.**
5900 14th Avenue, Markham, Ontario, L3S 4K4, Canada
Telephone : (905)294-7477
France : **KUBOTA EUROPE S.A.S**
19-25, Rue Jules Vercruysse, Z.I. BP88, 95101 Argenteuil Cedex, France
Telephone : (33)1-3426-3434
Italy : **KUBOTA EUROPE S.A.S Italy Branch**
Via Grandi, 29 20068 Peschiera Borrome (MI) Italy
Telephone : (39)02-51650377
Germany : **KUBOTA (DEUTSCHLAND) GmbH**
Senefelder Str. 3-5 63110 Rodgau /Nieder-Roden, Germany
Telephone : (49)6106-873-0
U.K. : **KUBOTA (U.K.) LTD.**
Dormer Road, Thame, Oxfordshire, OX9 3UN, U.K.
Telephone : (44)1844-214500
Spain : **KUBOTA ESPAÑA S.A.**
Avenida Recomba No.5, Poligno Industrial la Laguna, Leganes, 28914 (Madrid) Spain
Telephone : (34)91-508-6442
Australia : **KUBOTA TRACTOR AUSTRALIA PTY LTD.**
25-29 Permas Way, Truganina, VIC 3029, Australia
Telephone : (61)-3-9394-4400
Malaysia : **SIME KUBOTA SDN. BHD.**
No.3 Jalan Sepadu 25/123 Taman Perindustrian Axis,
Seksyen 25, 40400 Shah Alam, Selangor Darul Ehsan Malaysia
Telephone : (60)3-736-1388
Philippines : **KUBOTA PHILIPPINES, INC.**
232 Quirino Highway, Baesa, Quezon City 1106, Philippines
Telephone : (63)2-422-3500
Taiwan : **SHIN TAIWAN AGRICULTURAL MACHINERY CO., LTD.**
16, Fengping 2nd Rd, Taliao Shiang Kaohsiung 83107, Taiwan R.O.C.
Telephone : (886)7-702-2333
Indonesia : **PT KUBOTA MACHINERY INDONESIA**
Tower A at EightyEight@Kasablanka Lantai 16
Jalan Raya Casablanka Kav. 88, Jakarta 12870 Indonesia
Telephone : (62)-21-29568-720
Thailand : **SIAM KUBOTA CORPORATION CO., LTD.**
101/19-24 Moo 20, Navanakorn Industrial Estate, Tambon Khlongnueng, Amphur Khlongluang,
Pathumthani 12120, THAILAND
Telephone : (66)2-909-0300
Korea : **KUBOTA KOREA CO., LTD.**
41-27, Jayumuyeok-gil, Baeksan-myeon, Gimje-si, Jeollabuk-do, Korea
Telephone : (82)-63-544-5822
India : **KUBOTA AGRICULTURAL MACHINERY INDIA PVT. LTD.**
No.15, Medavakkam Road, Sholinganallur, Chennai-600119, T.N., India
Telephone : (91)44-6104-1500
Vietnam : **KUBOTA VIETNAM CO., LTD.**
Lot B-3A2-CN, My Phuoc 3 Industrial Park, Ben Cat District, Binh Duong Province, Vietnam
Telephone : (84)-650-3577-507

KUBOTA Corporation

English (U.S.A.)
Code No. 32741-6312-3

B26TL

OPERATOR'S MANUAL

KUBOTA TRACTOR

MODEL B26TL

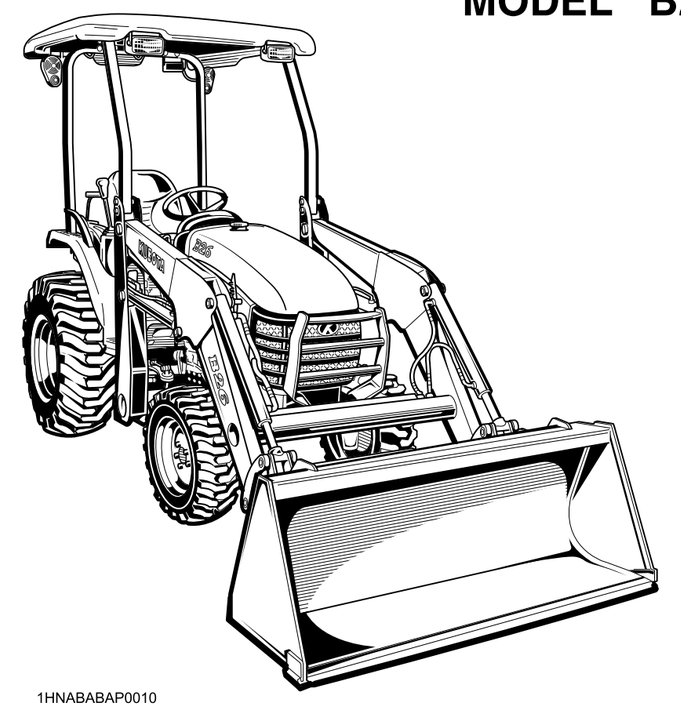

1HNABABAP0010

PRINTED IN JAPAN

© KUBOTA Corporation 2006

READ AND SAVE THIS MANUAL

Kubota

https://truckmanualshub.com/

ABBREVIATION LIST

Abbreviations	Definitions
2WD	2 Wheel Drive
4WD	4 Wheel Drive
API	American Petroleum Institute
ASABE	American Society of Agricultural and Biological Engineers, USA
ASTM	American Society of Testing and Materials, USA
DIN	Deutsches Institut für Normung, GERMANY
DT	Dual Traction [4WD]
fpm	Feet Per Minute
GST	Glide Shift Transmission
Hi-Lo	High Speed-Low Speed
HST	Hydrostatic Transmission
m/s	Meters Per Second
PTO	Power Take Off
RH/LH	Right-hand and left-hand sides are determined by facing in the direction of forward travel
ROPS	Roll-Over Protective Structures
rpm	Revolutions Per Minute
r/s	Revolutions Per Second
SAE	Society of Automotive Engineers, USA
SMV	Slow Moving Vehicle

California Proposition 65

⚠ WARNING ⚠

Engine exhaust, some of its constituents, certain vehicle components and fluids, contain or emit chemicals known to the State of California to cause cancer and birth defects or other reproductive harm.

IMPORTANT

The engine in this machine is equipped by the manufacture with a standard spark arrester.
It is a violation of California Public Resource Code Section 4442 to use or operate this engine on or near any forest-covered, brush-covered land, or grass- covered land unless the exhaust system is equipped with a working spark arrester meeting state laws. Other states or federal areas may have similar laws.

KUBOTA Corporation is· · ·

Since its inception in 1890, KUBOTA Corporation has grown to rank as one of the major firms in Japan.

To achieve this status, the company has through the years diversified the range of its products and services to a remarkable extent. Nineteen plants and 16,000 employees produce over 1,000 different items, large and small.

All these products and all the services which accompany them, however, are unified by one central commitment.
KUBOTA makes products which, taken on a national scale, are basic necessities. Products which are indispensable. Products which are intended to help individuals and nations fulfill the potential inherent in their environment. KUBOTA is the Basic Necessities Giant.

This potential includes water supply, food from the soil and from the sea, industrial development, architecture and construction, and transportation.

Thousands of people depend on KUBOTA's know-how, technology, experience and customer service. You too can depend on KUBOTA.

B26TL
AT. E. 11-14. 3. K

https://truckmanualshub.com/

UNIVERSAL SYMBOLS

As a guide to the operation of your tractor, various universal symbols have been utilized on the instruments and controls. The symbols are shown below with an indication of their meaning.

- Safety Alert Symbol
- Diesel Fuel
- Fuel-Level
- Engine-Rotation Speed
- Hourmeter/Elapsed Operating Hours
- Engine Coolant-Temperature
- Diesel Preheat/Glow Plugs (Low Temperature Start Aid)
- Parking Brake
- Engine Intake/Combustion Air-Filter
- Battery Charging Condition
- Engine Oil-Pressure
- Turn Signal
- Engine-Stop
- Engine-Run
- Starter Control
- Engine Shut-Off Control
- Power Take-Off Clutch Control-Off Position
- Power Take-Off Clutch Control-On Position
- Differential Lock
- Position Control-Raised Position
- Position Control-Lowered Position
- Draft Control-Shallow Position
- Draft Control-Deep Position
- 3-Point Lowering Speed Control
- Remote Cylinder-Retract
- Remote Cylinder-Extend
- Steering Wheel-Tilt Control
- Hazard Warning Lights
- Master Lighting Switch
- Position Lamps
- Headlight - Low Beam
- Headlight/Work light
- Audible Warning Device
- Four-Wheel Drive-On
- Four-Wheel Drive-Off
- Fast
- Slow
- Creep
- Read Operator's Manual
- Tractor-Forward Movement-Overhead View of Machine
- Tractor-Rearward Movement-Overhead View of Machine
- Engine Speed Control

https://truckmanualshub.com/

FOREWORD

You are now the proud owner of a KUBOTA Tractor. This tractor is a product of KUBOTA quality engineering and manufacturing. It is made of fine materials and under a rigid quality control system. It will give you long, satisfactory service. To obtain the best use of your tractor, please read this manual carefully. It will help you become familiar with the operation of the tractor and contains many helpful hints about tractor maintenance. It is KUBOTA's policy to utilize as quickly as possible every advance in our research. The immediate use of new techniques in the manufacture of products may cause some small parts of this manual to be outdated. KUBOTA distributors and dealers will have the most up-to-date information. Please do not hesitate to consult with them.

SAFETY FIRST

This symbol, the industry's "Safety Alert Symbol", is used throughout this manual and on labels on the machine itself to warn of the possibility of personal injury. Read these instructions carefully. It is essential that you read the instructions and safety regulations before you attempt to assemble or use this unit.

DANGER : Indicates an imminently hazardous situation which, if not avoided, will result in death or serious injury.

WARNING : Indicates a potentially hazardous situation which, if not avoided, could result in death or serious injury.

CAUTION : Indicates a potentially hazardous situation which, if not avoided, could result in minor or moderate injury.

IMPORTANT : Indicates that equipment or property damage could result if instructions are not followed.

NOTE : Gives helpful information.

https://truckmanualshub.com/

CONTENTS

⚠SAFE OPERATION ..... ⚠-1
TRACTOR 1
LOADER 6

SERVICING 1

SPECIFICATIONS OF THE TRACTOR 2
SPECIFICATION TABLE 2
TRAVELING SPEEDS 3

SPECIFICATIONS OF THE LOADER 4
LOADER SPECIFICATIONS 4
BUCKET SPECIFICATIONS 4
DIMENSIONAL SPECIFICATIONS 4
OPERATIONAL SPECIFICATIONS 5
LOADER TERMINOLOGY 6

IMPLEMENT LIMITATIONS 7

INSTRUMENT PANEL AND CONTROLS 9

PRE-OPERATION CHECK OF THE TRACTOR 11
DAILY CHECK 11

PRE-OPERATION CHECK OF THE LOADER 12
PRE-OPERATION CHECKS 12
REAR BALLAST 12
Liquid Ballast in Rear Tires 12

OPERATING THE ENGINE 13
STARTING THE ENGINE 13
Block Heater (Option) 15
STOPPING THE ENGINE 15
WARMING UP 15
Warm-up Transmission Oil at Low Temperature Range 16
JUMP STARTING 16

OPERATING THE TRACTOR 17
OPERATING NEW TRACTOR 17
Do not Operate the Tractor at Full Speed for the First 50 Hours 17
Changing Lubricating Oil for New Tractors 17
STARTING 17
Operator's Seat 18
Glove Box 18
Seat Belt 18
Tilt Steering Adjustment 19
Head Light / Turn Signal / Hazard Light Switch 19
Horn Button (if equipped) 20
Tractor Lights 20
Brake Pedals (Right and Left) 20

https://truckmanualshub.com/

Range Gear Shift Lever (L-M-H) 21
Front Wheel Drive Lever 22
Hand Throttle Lever 22
Parking Brake Lever 22
Speed Control Pedal 23
STOPPING 23
Stopping 23
CHECK DURING DRIVING 23
Immediately Stop the Engine if: 23
Easy Checker(TM) 23
Fuel Gauge 24
Coolant Temperature Gauge 24
Hourmeter / Tachometer 24
PARKING 25
Parking 25
OPERATING TECHNIQUES 25
Differential Lock 25
Operating the Tractor on a Road 26
Operating on Slopes and Rough Terrain 26
Directions for Use of Power Steering 26
REVERSING THE SEAT 27

OPERATING THE LOADER 28
CONTROL LEVER 28
OPERATING THE LOADER 28
FILLING THE BUCKET 28
LIFTING THE LOAD 29
CARRYING THE LOAD 29
DUMPING THE BUCKET 30
LOWERING THE BUCKET 30
OPERATING WITH FLOAT CONTROL 30
LOADING FROM A BANK 30
PEELING AND SCRAPING 31
LOADING LOW TRUCKS OR SPREADERS FROM A PILE 32
BACKFILLING 32
HANDLING LARGE HEAVY OBJECTS 33
VALVE LOCK 33
Standard valve 33
BUCKET LEVEL INDICATOR 33
ATTACHING ATTACHMENTS 34
DETACHING ATTACHMENTS 35

PTO 36
PTO OPERATION 36
PTO Clutch Lever 36
Stationary PTO 36
PTO shaft Cover and Shaft Cap 37

3-POINT HITCH & DRAWBAR 38
3-POINT HITCH (OPTION) 39
Installing the Lower Link 39
Selecting the Holes of Lifting Rods and Lower Links 39

Selecting the Top Link Mounting Holes 39
Drawbar (option) 39
Lifting Rod (Right) 40
Top Link 40
Check Chains 40
DRAWBAR (OPTION) 41
Adjusting Drawbar Length 41
STORING THE 3-POINT HITCH 41

HYDRAULIC UNIT 43
3-POINT HITCH CONTROL SYSTEM 43
Position Control 43
3-point Hitch Lowering Speed 43
REAR REMOTE HYDRAULIC CONTROL SYSTEM (if equipped) 44
Remote Control Valve Coupler Connecting and Disconnecting 44
Remote Control Valve Lever 44
Remote Control Valve 44
FRONT REMOTE HYDRAULIC CONTROL SYSTEM (if equipped) 45
Install the Coupler 45
Control Switch 45
Remote Control Coupler Connecting and Disconnecting 46
Hydraulic Control Unit Use Reference Chart 47

TIRES, WHEELS AND BALLAST 48
TIRES 48
Inflation Pressure 48
Dual Tires 48
WHEEL ADJUSTMENT 48
Front Wheels 48
Rear Wheels 48
Treads 49
BALLAST 50
Front Ballast 50
Rear Ballast 50

MAINTENANCE OF THE TRACTOR 51
SERVICE INTERVALS 51
LUBRICANTS, FUEL AND COOLANT 53

PERIODIC SERVICE OF THE TRACTOR 56
HOW TO OPEN THE HOOD 56
Hood 56
Side Cover 56
Front Cover 57
DAILY CHECK 57
Walk Around Inspection 57
Checking and Refueling 57
Checking Engine Oil Level 58
Checking Transmission Fluid Level 58
Checking Coolant Level 59
Cleaning Grill, Radiator Screen and Oil Cooler 59
Checking Brake Pedals 59
Checking Gauges, Meter and Easy Checker(TM) 59

https://truckmanualshub.com/

Checking Head Light, Hazard Light etc. 59
Checking Seat Belt, ROPS and FOPS 60
Checking and Cleaning of Electrical Wiring and Battery Cables 60
Checking Movable Parts 60
EVERY 50 HOURS 60
Lubricating Grease Fittings 60
Checking Engine Start System 61
Checking Wheel Bolt Torque 62
Checking Main Frame Bolt Torque 62
EVERY 100 HOURS 63
Cleaning Air Cleaner Primary Element 63
Cleaning Fuel Filter 63
Adjusting Fan Belt Tension 64
Checking Fuel Line 64
Adjusting Brake Pedal 65
Checking Battery Condition 65
Cleaning Spark Arrester 66
EVERY 200 HOURS 67
Changing Engine Oil 67
Replacing Engine Oil Filter 67
Replacing HST Oil Filter 68
Checking Radiator Hose and Clamp 68
Checking Intake Air Line 68
Adjusting Toe-in 69
Checking Power Steering Line 69
EVERY 400 HOURS 70
Changing Transmission Fluid / Replacing Hydraulic Oil Filter 70
Replacing Fuel Filter Element 71
Changing Front Axle Case Oil 71
Adjusting Front Axle Pivot [4WD] 72
EVERY 800 HOURS 72
Adjusting Engine Valve Clearance 72
EVERY 1500 HOURS 72
Checking Fuel Injection Nozzle Injection Pressure 72
EVERY 3000 HOURS 72
Checking Injection Pump 72
EVERY 1 YEAR 72
Replacing Air Cleaner Primary Element and Secondary Element 72
EVERY 2 YEARS 72
Flush Cooling System and Changing Coolant 72
Anti-Freeze 73
Replacing Radiator Hose (Water pipes) 74
Replacing Power Steering Hose 74
Replacing Fuel Hose 74
Replacing Intake Air Line 74
SERVICE AS REQUIRED 74
Bleeding Fuel System 74
Draining Clutch Housing Water 74
Replacing Fuse 75
Replacing Light Bulb 75
MAINTENANCE OF THE LOADER 76

https://truckmanualshub.com/

DAILY CHECKS 76
LUBRICATION 76
ADJUSTMENT OF SPILL GUARD LINK 77
TIRE INFLATION 77
Inflation pressure 77
GENERAL TORQUE SPECIFICATION 78

STORAGE OF THE TRACTOR 79
TRACTOR STORAGE 79
REMOVING THE TRACTOR FROM STORAGE 79

TROUBLESHOOTING 80
ENGINE TROUBLESHOOTING 80

OPTIONS 81

APPENDICES 82
INDEX 82

https://truckmanualshub.com/

https://truckmanualshub.com/

SAFE OPERATION

TRACTOR

Careful operation is your best insurance against an accident.

Read and understand this manual carefully before operating the tractor.

All operators, no matter how much experience they may have, should read this and other related manuals before operating the tractor or any implement attached to it. It is the owner's obligation to instruct all operators in safe operation.

1. BEFORE OPERATING THE TRACTOR

1. Know your equipment and its limitations. Read this entire manual before attempting to start and operate the tractor.
2. Pay special attention to the danger, warning and caution labels on the tractor.
3. KUBOTA recommends the use of a Roll Over Protective Structures (ROPS) and seat belt in almost all applications. This combination will reduce the risk of serious injury or death, should the tractor be upset.
   If the ROPS is loosened or removed for any reason, make sure that all parts are reinstalled correctly before operating the tractor.
   Never modify or repair a ROPS because welding, bending, drilling, grinding, or cutting any portion may weaken the structure.
   A damaged ROPS structure must be replaced, not repaired or revised. If any structural member of the ROPS is damaged, replace the entire structure at your local KUBOTA dealer.

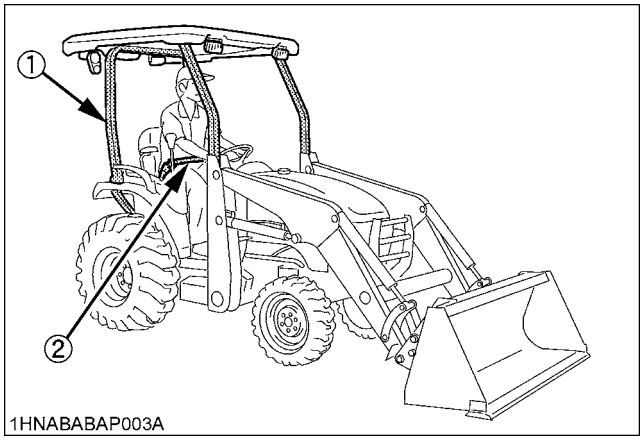

(1) ROPS
(2) Seat belt

4. To ensure ROPS protection, do not operate tractor without loader main frame.
5. Always use the seat belt if the tractor has a ROPS. Do not use it if there is no ROPS. Check the seat belt regularly and replace if frayed or damaged.
6. Do not operate the tractor or any implement attached to it while under the influence of alcohol, medication, controlled substances or while fatigued.
7. Carefully check the vicinity before operating tractor or any implement attached to it. Check for overhead clearance which may interfere with a ROPS. Do not allow any bystanders around or near tractor during operation.
8. Before allowing other people to use your tractor, explain how to operate and have them read this manual before operation.
9. Never wear loose, torn, or bulky clothing around tractor. It may catch on moving parts or controls, leading to the risk of an accident. Use additional safety items, e.g. hard hat, safety boots or shoes, eye and hearing protection, gloves, etc., as appropriate or required.
10. Do not allow passengers to ride on any part of the tractor at anytime. The operator must remain in the tractor seat during operation.
11. Check brakes, clutch, linkage pins and other mechanical parts for improper adjustment and wear. Replace worn or damaged parts promptly. Check the tightness of all nuts and bolts regularly. (For further details, see "MAINTENANCE" section.)
12. Keep your tractor clean. Dirt, grease, and trash build up may contribute to fires and lead to personal injury.
13. Use only implements meeting the specifications listed under "IMPLEMENT LIMITATIONS" in this manual or implements approved by KUBOTA.
14. Use proper weights on the front or rear of the tractor to reduce the risk of upsets. When using the front loader, put an implement or ballast on the 3-point hitch to improve stability. Follow the safe operating procedures specified in the implement or attachment manual.
15. Do not modify the tractor. Unauthorized modification may affect the function of the tractor, which may result in personal injury.

https://truckmanualshub.com/

2. OPERATING THE TRACTOR

Operator safety is a priority. Safe operation, specifically with respect to overturning hazards, entails understanding the equipment and environmental conditions at the time of use. Some prohibited uses which can affect overturning hazards include traveling and turning with implements and loads carried too high etc. This manual sets forth some of the obvious risks, but the list is not, and cannot be, exhaustive. It is the operator's responsibility to be alert for any equipment or environmental condition that could compromise safe operation.

◆ Starting

1. Always sit in the operator's seat when starting engine or operating levers or controls. Adjust seat per instructions in the operating the tractor section. Never start engine while standing on the ground.
2. Before starting the engine, make sure that all levers (including auxiliary control levers) are in their neutral positions, that the parking brake is engaged, and that both the clutch and the Power Take-Off (PTO) are disengaged or "OFF".
   Fasten the seat belt if the tractor has a ROPS.
3. Do not start engine by shorting across starter terminals or bypassing the safety start switch. Machine may start in gear and move if normal starting circuitry is bypassed.
4. Do not operate or idle engine in a non-ventilated area. Carbon monoxide gas is colorless, odorless, and deadly.
5. Check before each use that operator presence controls are functioning correctly. Test safety systems. (See "Checking Engine Start System" in "EVERY 50 HOURS" in "PERIODIC SERVICE" section.)
   Do not operate unless they are functioning correctly.

◆ Working

1. Pull only from the drawbar. Never hitch to axle housing or any other point except drawbar; such arrangements will increase the risk of serious personal injury or death due to a tractor upset.

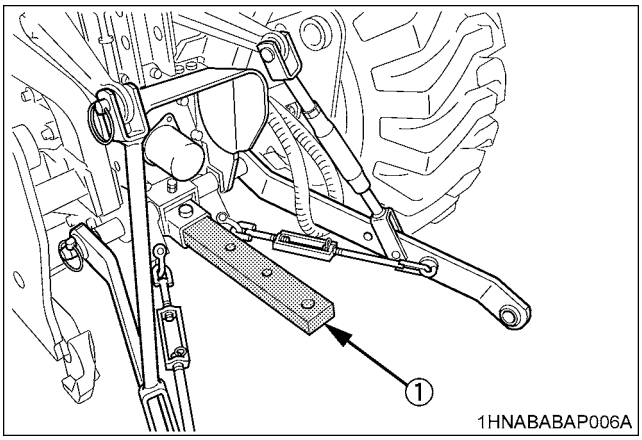

(1) Drawbar (option)

2. Keep all shields and guards in place. Replace any that are missing or damaged.
3. Avoid sudden starts. To avoid upsets, slow down when turning, on uneven ground, and before stopping.
4. The tractor cannot turn with the differential locked and attempting to do so could be dangerous.
5. Do not operate near ditches, holes, embankments, or other ground surface features which may collapse under the tractor's weight. The risk of tractor upset is even higher when the ground is loose or wet. Tall grass can hide obstacles, walk the area first to be sure.
6. Watch where you are going at all times. Watch for and avoid obstacles. Be alert at row ends, near trees, and other obstructions.
7. When working in groups, always let the others know what you are going to do before you do it.
8. Never try to get on or off a moving tractor.
9. Do not stand between tractor and implement or trailed vehicle unless parking brake is applied.

◆ Safety for children

Tragedy can occur if the operator is not alert to the presence of children. Children generally are attracted to machines and the work they do.

1. Never assume that children will remain where you last saw them.
2. Keep children out of the work area and under the watchful eye of another responsible adult.
3. Be alert and shut your machine down if children enter the work area.
4. Never carry children on your machine. There is no safe place for them to ride. They may fall off and be run over or interfere with your control of the machine.
5. Never allow children to operate the machine even under adult supervision.
6. Never allow children to play on the machine or on the implement.

https://truckmanualshub.com/

7. Use extra caution when backing up. Look behind and down to make sure area is clear before moving.
8. When parking your machine if at all possible park on a firm, flat and level surface; if not, park across a slope. Set the parking brake(s), lower the implements to the ground, remove the key from the ignition and lock the cab door (if equipped) and chock the wheels.

◆ Operating on slopes

Slopes are a major factor related to loss-of-control and tip-over accidents, which can result in severe injury or death. All slopes require extra caution.

1. To avoid upsets, always back up steep slopes. If you cannot back up the slope or if you feel uneasy on it, do not operate on it. Stay off slopes too steep for safe operation.
2. Driving forward out of a ditch, mired condition or up a steep slope increases the risk of a tractor to be upset backward. Always back out of these situations. Extra caution is required with 4-wheel drive models because their increased traction can give the operator false confidence in the tractor's ability to climb slopes.
3. Keep all movement on slopes slow and gradual. Do not make sudden changes in speed, direction or apply brake and make sudden motions of the steering wheel.
4. Avoid changing gears speed when climbing or going down a slope. If on a slope changing gears to neutral could cause loss of control.
5. Special attention should be made to the weight and location of implements and loads as such will affect the stability of the tractor.

◆ Driving the tractor on the road

1. Lock the 2 brake pedals together to help assure straight-line stops. Uneven braking at road speeds could cause the tractor to tip over.

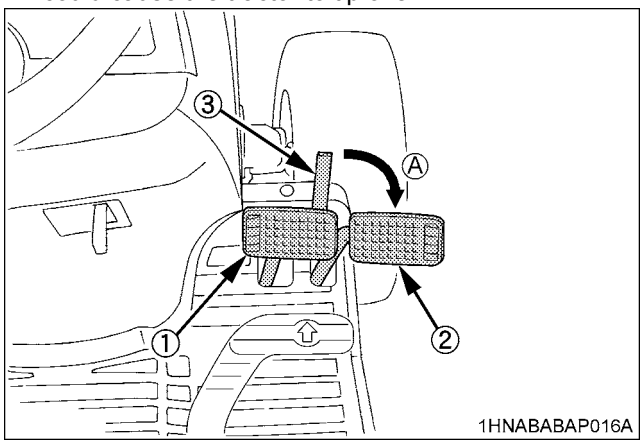

(1) Brake Pedal (LH) *(A) Whenever travelling on the road*
(2) Brake Pedal (RH)
(3) Brake Pedal Lock

2. Check the front wheel engagement. The braking characteristics are different between 2 and 4-wheel drive. Be aware of the difference and use carefully.
3. Always slow the tractor down before turning. Turning at high speed may tip the tractor over.
4. Make sure that the Slow Moving Vehicle (SMV) sign is clean and visible. Use hazard lights and turn signals as required.

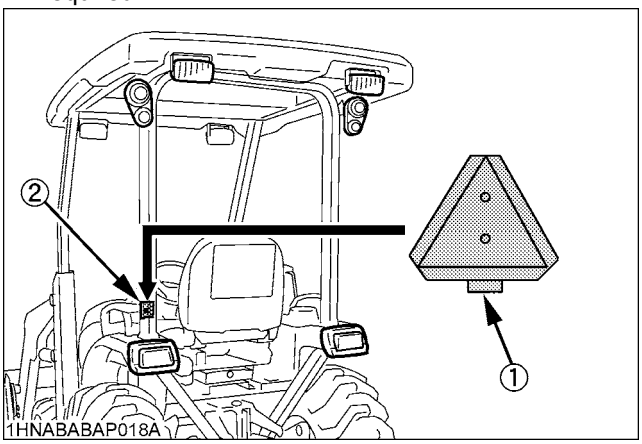

(1) SMV emblem
(2) Bracket

5. Observe all local traffic and safety regulations.
6. Turn the headlights on. Dim them when meeting another vehicle.
7. Drive at speeds that allow you to maintain control at all times.
8. Do not apply the differential lock while traveling at road speeds. The tractor may run out of control.
9. Avoid sudden motions of the steering wheel as they can lead to a dangerous loss of stability. The risk is especially great when the tractor is traveling at road speeds.
10. Do not operate an implement while the tractor is on the road. Lock the 3-point hitch in the raised position.
11. When towing other equipment, use a safety chain and place an SMV emblem on it as well.

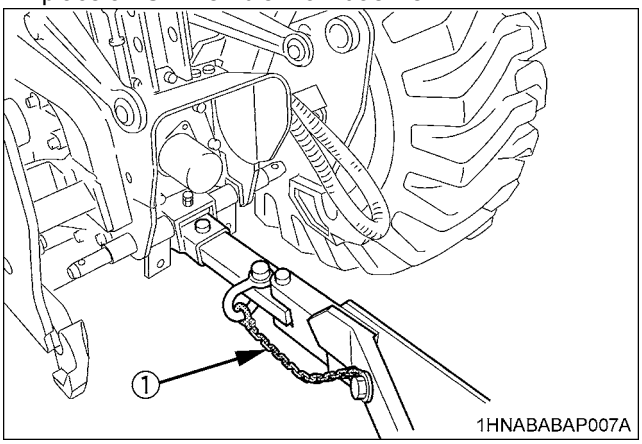

(1) Safety chain

https://truckmanualshub.com/

3. PARKING THE TRACTOR

1. Disengage the PTO, lower all implements to the ground, place all control levers in their neutral positions, set the parking brake, stop the engine, and remove the key.
2. Make sure that the tractor has come to a complete stop before dismounting.
3. Avoid parking on steep slopes, if at all possible park on a firm and level surface; if not, park across a slope with chock the wheels.
   Failure to comply with this warning may allow the tractor to move and could cause injury or death.

4. OPERATING THE PTO

1. Wait until all moving components have completely stopped before getting off the tractor, connecting, disconnecting, adjusting, cleaning, or servicing any PTO driven equipment.
2. Keep the PTO shaft cover in place at all times. Replace the PTO shaft cap when the shaft is not in use.

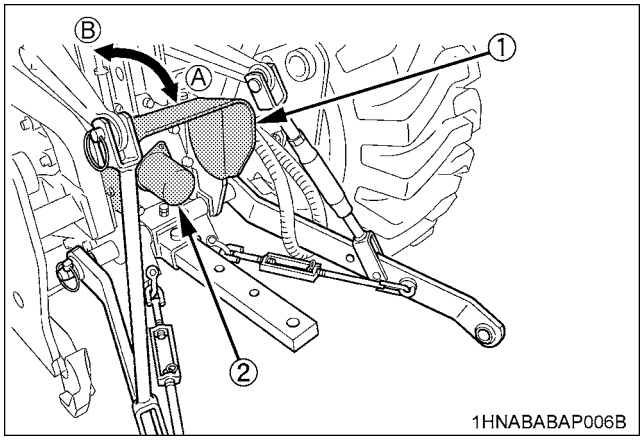

(1) PTO Shaft cover *(A) "NORMAL POSITION"*
(2) PTO Shaft cap *(B) "RAISED POSITION"*

3. Before installing or using PTO driven equipment, read the manufacturer's manual and review the safety labels attached to the equipment.
4. When operating stationary PTO driven equipment, always apply the tractor parking brake and place chocks behind and in front of the rear wheels. Stay clear of all rotating parts. Never step over rotating parts.

5. USING 3-POINT HITCH

1. Use the 3-point hitch only with equipment designed for 3-point hitch usage.
2. When using a 3-point hitch mounted implement, be sure to install the proper counterbalance weight on the tractor.
3. When transporting on the road, set the implement lowering speed knob in the "LOCK" position to hold the implement in the raised position.

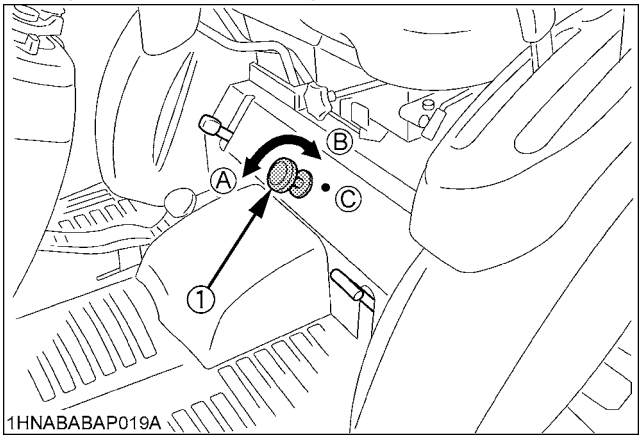

(1) 3-point hitch lowering speed knob *(A) "FAST"*
(B) "SLOW"
(C) "LOCK"

6. SERVICING THE TRACTOR

Before servicing the tractor, park it on a firm, flat and level surface, set the parking brake, lower all implements to the ground, place the gear shift lever in neutral, stop the engine and remove the key.

1. Allow the tractor time to cool off before working on or near the engine, muffler, radiator, etc.
2. Do not remove radiator cap while coolant is hot. When cool, slowly rotate cap to the first stop and allow sufficient time for excess pressure to escape before removing the cap completely. If the tractor has a coolant recovery tank, add coolant or water to the tank, not the radiator. (See "Checking Coolant Level" in "DAILY CHECK" in "PERIODIC SERVICE" section.)
3. Always stop the engine before refueling. Avoid spills and overfilling.
4. Do not smoke when working around battery or when refueling. Keep all sparks and flames away from battery and fuel tank. The battery presents an explosive hazard, because it gives off hydrogen and oxygen especially when recharging.
5. Before "jump starting" a dead battery, read and follow all of the instructions. (See "JUMP STARTING" in "OPERATING THE ENGINE" section.)
6. Keep first aid kit and fire extinguisher handy at all times.

https://truckmanualshub.com/

7. Disconnect the battery's ground cable before working on or near electric components.
8. To avoid the possibility of battery explosion, do not use or charge the refillable type battery if the fluid level is below the LOWER (lower limit level) mark. Check the fluid level regularly and add distilled water as required so that the fluid level is between the UPPER and LOWER levels.
9. To avoid sparks from an accidental short circuit, always disconnect the battery's ground cable (-) first and reconnect it last.

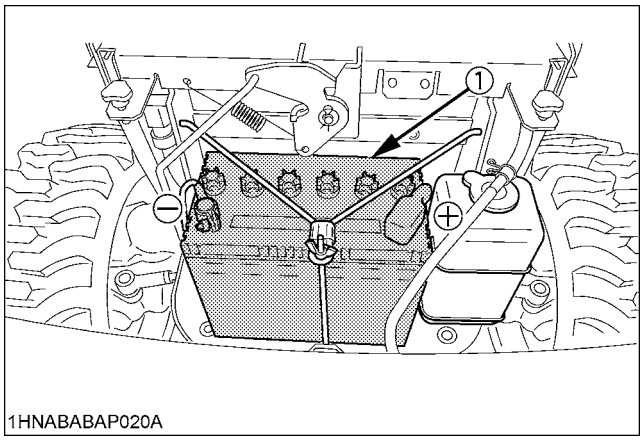

(1) Battery

10. Do not attempt to mount a tire on a rim. This should be done by a qualified person with the proper equipment.
11. Always maintain the correct tire pressure. Do not inflate tires above the recommended pressure shown in the operator's manual.

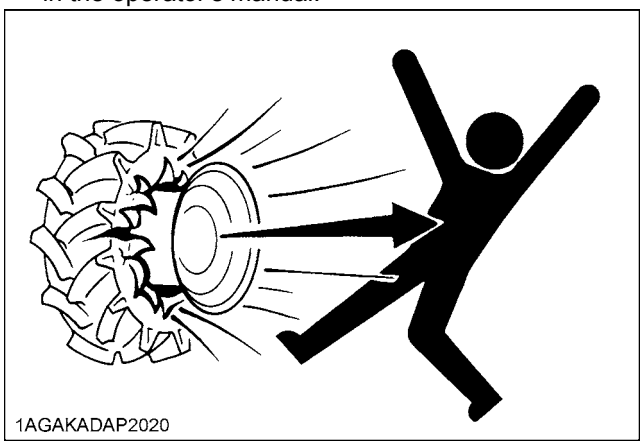

12. Securely support the tractor when either changing wheels or adjusting the wheel tread width.
13. Make sure that wheel bolts have been tightened to the specified torque.
14. Do not work under any hydraulically supported devices. They can settle, suddenly leak down, or be accidentally lowered. If it is necessary to work under tractor or any machine elements for servicing or adjustment, securely support them with stands or suitable blocking beforehand.
15. Escaping hydraulic fluid under pressure has sufficient force to penetrate skin, causing serious personal injury. Before disconnecting hydraulic lines, be sure to release all residual pressure. Before applying pressure to the hydraulic system, make sure that all connections are tight and that all lines, pipes, and hoses are free of damage.

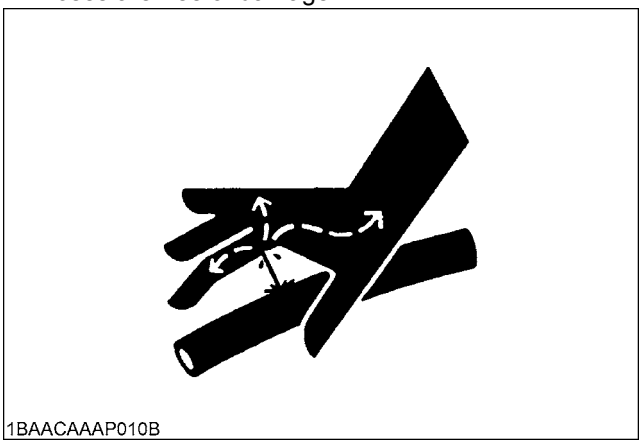

16. Fluid escaping from pinholes may be invisible. Do not use hands to search for suspected leaks; use a piece of cardboard or wood. Use of safety goggles or other eye protection is also highly recommended. If injured by escaping fluid, see a medical doctor at once. This fluid will produce gangrene or severe allergic reaction.

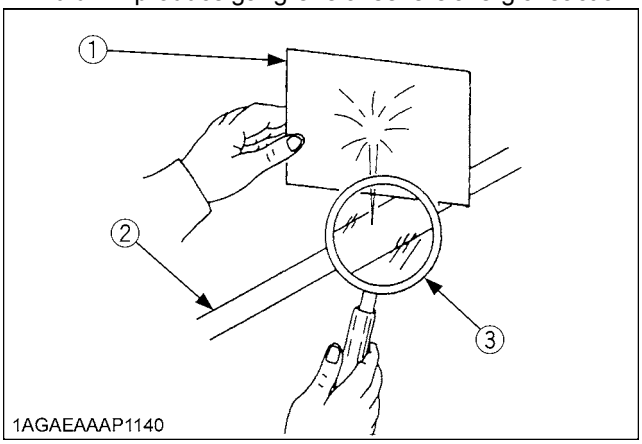

(1) Cardboard
(2) Hydraulic line
(3) Magnifying glass

https://truckmanualshub.com/

LOADER

Most loader equipment accidents can be avoided by following simple safety precautions.
These safety precautions, if followed at all times, will help you operate your loader safely.

1. BEFORE OPERATING THE LOADER

1. Read and understand all instructions and precautions found in both the tractor and the loader operator's manuals before using the loader.
   Lack of knowledge can lead to accidents.
2. It is the owner's responsibility to ensure that anyone who will operate the loader reads this manual first and becomes familiar with the safe operation of the loader.
3. For your safety, a ROPS with a seat belt is strongly recommended by KUBOTA in almost all applications. If the tractor is not equipped with ROPS, it should not be operated in a situation where ROPS is recommended. If you have any questions, consult your local KUBOTA Dealer.
   Always use the seat belt when the tractor is equipped with a ROPS. Never use the seat belt when the tractor is not equipped with a ROPS.
4. Visually check for hydraulic leaks and broken, missing, or malfunctioning parts.
   Make necessary repairs before operating.
5. Replace damaged or illegible safety labels. See following pages for required labels.
6. Enter and exit the operator's seat only from left side of the tractor.
7. Engage the loader control valve lock to prevent accidental actuation when the implement is not in use or during transport. Do not utilize the valve lock for machine maintenance or repair.
8. Follow the precautions below when attaching implements.

- Make sure both handles (LH, RH) contact the ear plates at the points (A) and are all the way down.
- Make sure both lock pins (LH, RH) protrude through the pin slots.
- Kubota recommends the use of Kubota attachments on Kubota loaders. Non-Kubota attachments, if used, must comply with ISO 24410, first edition 2005-04-15.
- Use of a non-Kubota attachment that does not comply with ISO 24410 or the improper positioning of handle(s) or non-protrusion of pin(s) may result in detachment of the attachment or deformation, causing loss of performance, personal injury or death.

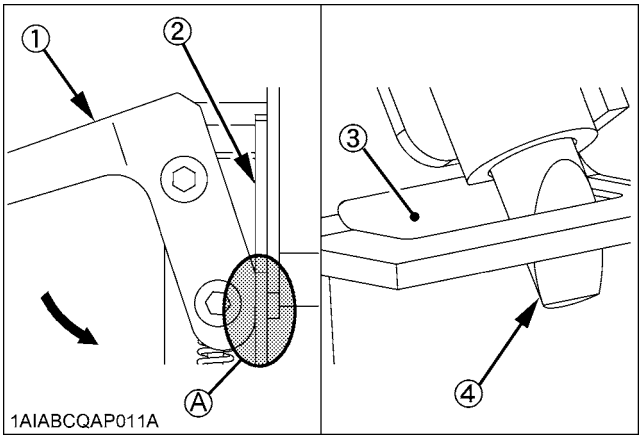

(1) Handle
(2) Ear plate
(3) Pin slot
(4) Lock pin
(A) The handle contacts the ear plate at the points.

https://truckmanualshub.com/

2. OPERATING THE LOADER

1. Operate the loader only when properly seated at the controls. Do not operate from the ground.
2. Move and turn the tractor at low speeds.
3. Never allow anyone to get under the loader bucket or reach through the boom when the bucket is raised.
4. Keep children, others and livestock away when operating loader and tractor.
5. Do not walk or work under a raised loader bucket or attachment unless it is securely blocked and held in position.
6. For tractor stability and operator safety, rear ballast must be added to the 3-point hitch and to the rear wheels when using loader.
7. Exercise extra caution when operating the loader with a raised bucket or attachment.
8. Do not lift or carry any person on the loader, in the bucket, or other attachment.
9. Avoid loose fill, rocks and holes. They can be dangerous for loader operation or movement.
10. Avoid overhead wires and obstacles when the loader is raised. Contacting electric lines can cause electrocution.
11. Gradually stop the loader boom when lowering or lifting.
12. Use caution when handling loose or shiftable loads.
13. Using loaders for handling large, heavy, or shiftable objects is not recommended without proper handling attachments.
14. Handling large heavy objects can be extremely dangerous due to :
    - Danger of rolling the tractor over.
    - Danger of upending the tractor.
    - Danger of the object rolling or sliding down the loader boom onto the operator.
15. If you must perform this sort of work (item 14), protect yourself by :
    - Never lift the load higher than necessary to clear the ground.
    - Add rear ballast to the tractor to compensate for the load or use rear implement.
    - Never lift large objects with equipment that may permit them to roll back onto the operator.
    - Move slowly and carefully, avoiding rough terrain.
16. Never lift or pull a load from any point on the loader with a chain, rope, or cable. Doing so could cause a rollover or serious damage to the loader.
17. Be extra careful when operating the tractor on a slope, always operate up and down, never across the slope. Do not operate on steep slopes or unstable surfaces.
18. Carry loader boom at a low position during transport. (You should be able to see over the bucket.)
19. Allow for the loader length when making turns.

3. AFTER OPERATING THE LOADER

1. When loader work is complete and parking or storing, choose flat and hard ground. Lower the loader boom to the ground, stop the engine, set the brakes and remove the key before leaving the tractor seat.

4. SERVICING THE LOADER

1. Always wear safety goggles when servicing or repairing the machine.
2. Do not modify the loader. Unauthorized modification may affect the function of the loader, which may result in personal injury.
3. Do not use the loader as a work platform or a jack to support the tractor for servicing or maintenance.
   Securely support the tractor or any machine elements with stands or suitable blocking before working underneath.
   For your safety, do not work under any hydraulically supported devices. They can settle or suddenly leak down or be accidentally lowered.
4. Escaping hydraulic oil under pressure can have sufficient force to penetrate the skin, causing serious personal injury. Do not use hands to search for suspected leaks. If injured by escaping fluid, obtain medical treatment immediately.
5. Do not tamper with the relief valve setting. The relief valve is pre-set at the factory. Changing the setting can cause overloading of the loader and tractor which may result in serious personal injury.
6. When servicing or replacing pins in cylinder ends, bucket, etc., always use a brass drift and hammer. Failure to do so could result in injury from flying metal fragments.

https://truckmanualshub.com/

DANGER, WARNING AND CAUTION LABELS OF THE TRACTOR

(1) Part No. 6C070-4742-2

⚠ C A U T I O N

TO AVOID PERSONAL INJURY:

1. Read and understand the operator's manual before operation.
2. Before starting the engine, make sure that everyone is at a safe distance from the tractor and that the PTO is OFF.
3. Do not allow passengers on the tractor at any time.
4. Before allowing other people to use the tractor, have them read the operator's manual.
5. Check the tightness of all nuts and bolts regularly.
6. Keep all shields in place and stay away from all moving parts.
7. Lock the two brake pedals together before driving on the road.
8. Slow down for turns, or rough roads, or when applying individual brakes.
9. On public roads use SMV emblem and hazard lights, if required by local traffic and safety regulations.
10. Pull only from the drawbar.
11. Before dismounting, lower the implement to the ground, set the parking brake, stop the engine and remove the key.
12. Securely support tractor and implements before working underneath.

1AGAEBMAP068E

(2) Part No. 32771-4925-1

⚠ WARNING

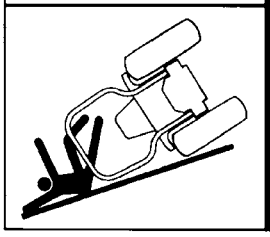

TO AVOID PERSONAL INJURY OR DEATH FROM ROLL-OVER :

1. Kubota recommends the use of a Roll-Over Protective structures (ROPS) and seat belt in almost all applications.
2. To ensure ROPS protection, do not operate tractor without loader mainframe.
3. Never use just the seat belt or just the ROPS. They must be used together. For further details, consult your Operator's Manual or your local dealer.

1HNACABAP0880

(3) Part No. 6C150-4743-1

⚠ WARNING

BEFORE DISMOUNTING TRACTOR:

1. **ALWAYS SET PARKING BRAKE.**
   Leaving transmission in gear with the engine stopped will not prevent tractor from rolling.
2. **PARK ON LEVEL GROUND WHENEVER POSSIBLE.**
   If parking on a slope, position tractor across the slope.
3. **LOWER ALL IMPLEMENTS TO THE GROUND.**
4. **STOP THE ENGINE.**

1AGAEBMAP069E

(4) Part No. 32741-4751-1

⚠ C A U T I O N

TO AVOID PERSONAL INJURY:
BEFORE STARTING THE ENGINE

1. Make sure the parking brake is set.
2. Make sure the range gear shift lever (L-M-H) is in "NEUTRAL" position.

1HNABABAP065E

(5) Part No. 6C090-4965-1

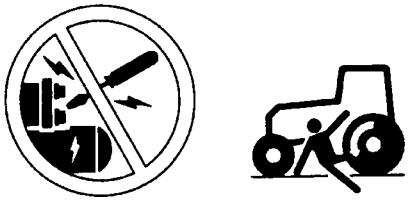

⚠ DANGER

TO AVOID POSSIBLE INJURY OR DEATH FROM A MACHINE RUNAWAY.

1. Do not start engine by shorting across starter terminals or bypassing the safety start switch. Machine may start in gear and move if normal starting circuitry is bypassed.
2. Start engine only from operator's seat with transmission and PTO OFF.
   Never start engine while standing on the ground.

1AGAEBMAP074E

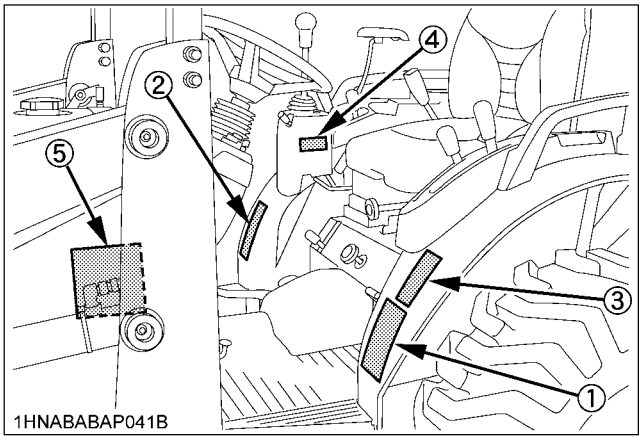

1HNABABAP041B

https://truckmanualshub.com/

(1) Part No. 6C200-4959-1

⚠WARNING

TO AVOID PERSONAL INJURY:
1. Attach pulled or towed loads to the drawbar only.
2. Use the 3-point hitch only with equipment designed for 3-point hitch usage.

⚠ WARNING

TO AVOID PERSONAL INJURY:
1. Keep PTO shield in place at all times.
2. Do not operate the PTO at speeds faster than the speed recommended by the implement manufacturer.
3. For trailing PTO-driven implements, set drawbar at towing position. (see operator's manual)

1AGAECEAP013E

(3) Part No. TC420-4956-1

Diesel fuel only No fire

ULTRA LOW SULFUR DIESEL FUEL ONLY

1AGAIDHAP154E

(4) Part No. 6C300-4744-1

⚠WARNING

Operation of this equipment may create sparks that can start fires around dry vegetation.
A spark arrester may be required.
The operator should contact local fire agencies for laws or regulations relating to fire prevention requirements.

1AGAIHFAP069A

(2) Part No. 6C040-5559-1

DANGER EXPLOSIVE GASES
Cigarettes, flames or sparks could cause battery to explode. Always shield eyes and face from battery. Do not charge or use booster cables or adjust post connections without proper instruction and training.
KEEP VENT CAPS TIGHT AND LEVEL
POISON CAUSES SEVERE BURNS
Contains sulfuric acid. Avoid contact with skin, eyes or clothing. In event of accident flush with water and call a physician immediately.
KEEP OUT OF REACH OF CHILDREN

1AGAEBMAP072E

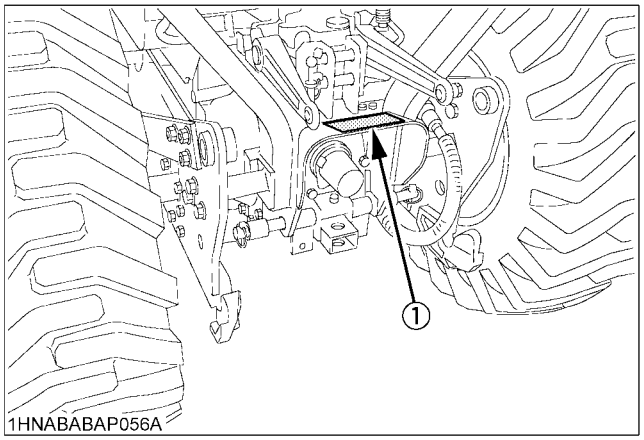

1HNABABAP056A

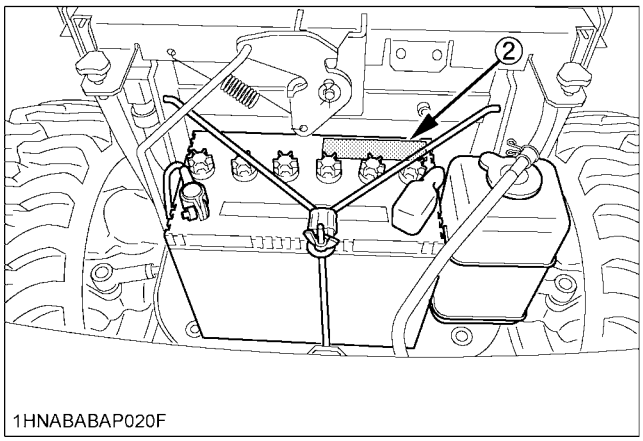

1HNABABAP020F

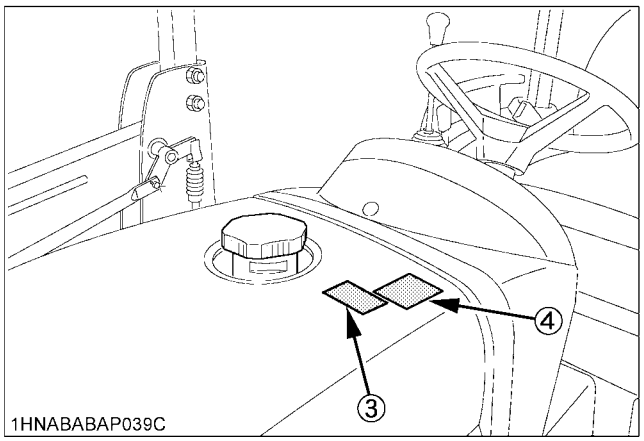

1HNABABAP039C

https://truckmanualshub.com/

(1) Part No. 32751-4921-2

⚠ WARNING

TO AVOID SERIOUS PERSONAL INJURY OR DEATH:

1. Keep tractor seat in forward position except when operating backhoe.
2. Using seat in reversed position while operating attachments other than backhoe may result in entanglement with PTO shaft or 3-point hitch.

1HNACABAP0770

(2) Part No. 6C140-4746-1

⚠ WARNING

TO AVOID PERSONAL INJURY:

Do not modify or repair a ROPS because welding grinding, drilling or cutting any portion may weaken the structure.

1AGAMAAAP3870

(3) Part No. TA040-4958-1
Do not touch hot surface like muffler, etc.

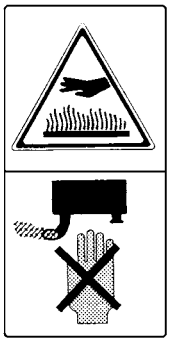

1AGAMAAAP2400

(4) Part No. 32751-4958-1
Do not get your hands close to engine fan and fan belt.

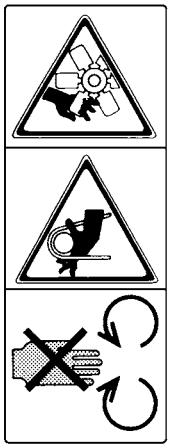

1AGAMAAAP2620

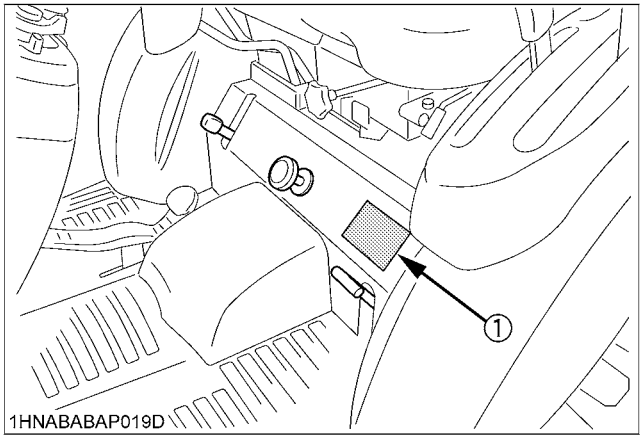

1HNABABAP019D

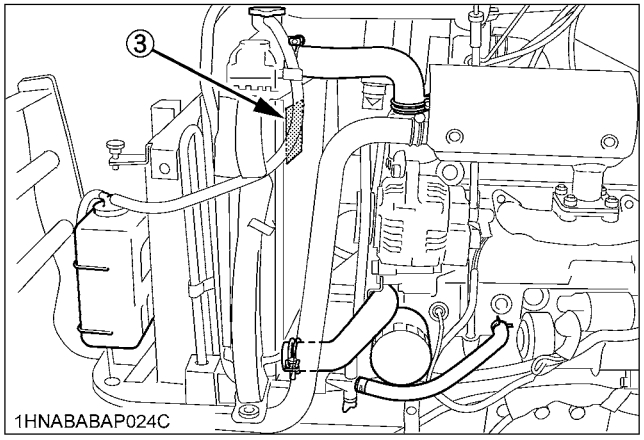

1HNABABAP024C

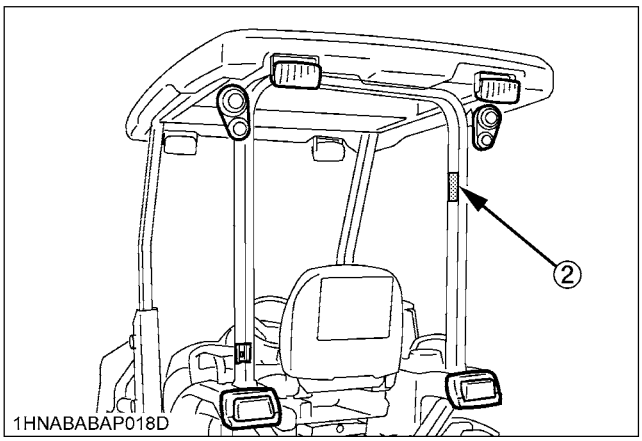

1HNABABAP018D

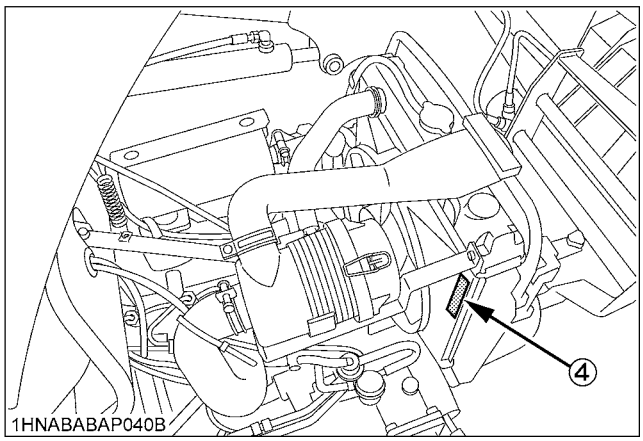

1HNABABAP040B

https://truckmanualshub.com/

DANGER, WARNING AND CAUTION LABELS OF THE LOADER

(1) Part No. 7J246-5643-1

1AIABAHAP016A

(2) Part No. 7J246-5645-1

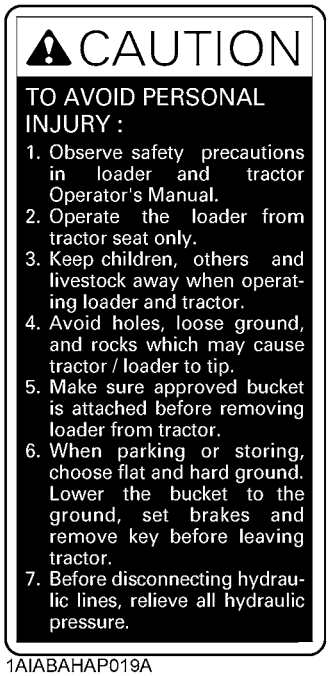

1AIABAHAP019A

(3) Part No. 7J246-5642-1

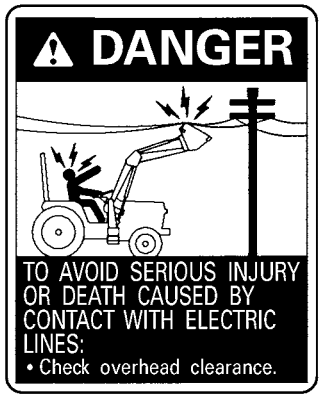

1AIABAHAP018A

(4) Part No. 7J246-5641-1

1AIABAHAP017A

(5) Part No. 7J266-5649-2

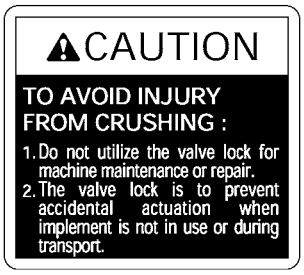

1AIABACAP077A

(6) Part No. 7J246-5644-2 (Both sides)

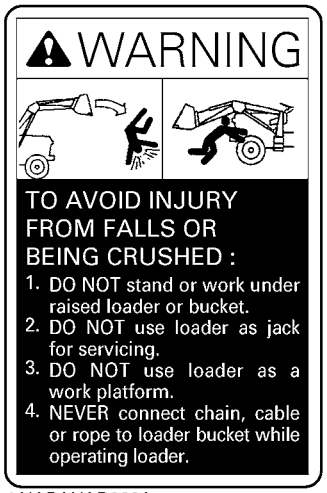

1AIABAHAP020A

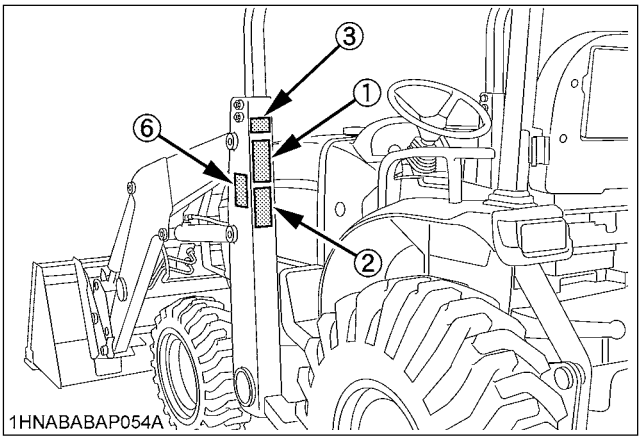

1HNABABAP054A

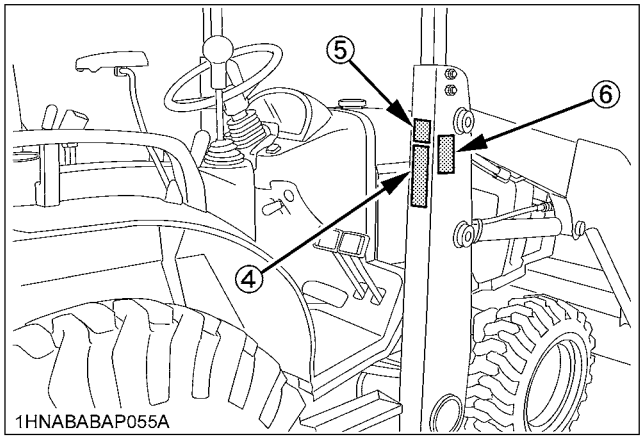

1HNABABAP055A

https://truckmanualshub.com/

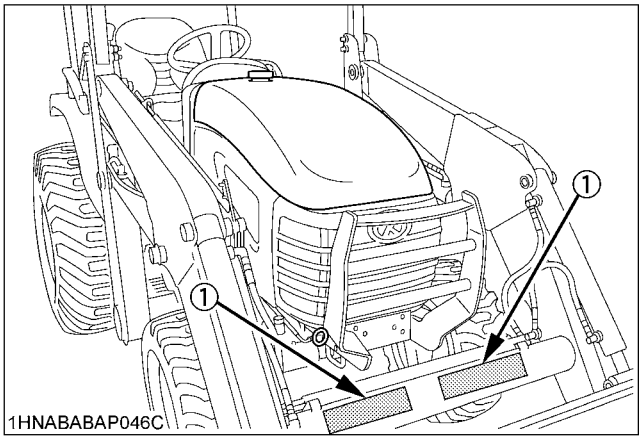

(1) Part No. 7J802-3648-5

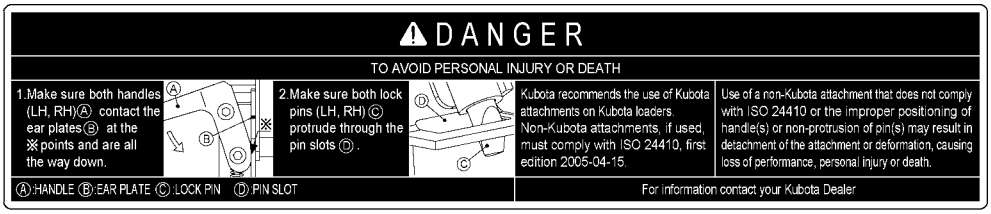

1AIABAAAP119A

CARE OF DANGER,WARNING AND CAUTION LABELS

1. Keep danger, warning and caution labels clean and free from obstructing material.
2. Clean danger, warning and caution labels with soap and water, dry with a soft cloth.
3. Replace damaged or missing danger, warning and caution labels with new labels from your local KUBOTA dealer.
4. If a component with danger, warning and caution label (s) affixed is replaced with new part, make sure new label (s) is (are) attached in the same location (s) as the replaced component.
5. Mount new danger, warning and caution labels by applying on a clean dry surface and pressing any bubbles to outside edge.

https://truckmanualshub.com/

SERVICING

Your dealer is interested in your new tractor and has the desire to help you get the most value from it. After reading this manual thoroughly, you will find that you can do some of the regular maintenance yourself.
However, when in need of parts or major service, be sure to see your KUBOTA Dealer.
For service, contact the KUBOTA Dealership from which you purchased your tractor or your local KUBOTA Dealer.
When in need of parts, be prepared to give your dealer the tractor, CAB and engine serial numbers.
Locate the serial numbers now and record them in the space provided.

	Type	Serial No.
Tractor		
Engine		
Loader		
Date of Purchase		
Name of Dealer		
(To be filled in by purchaser)		

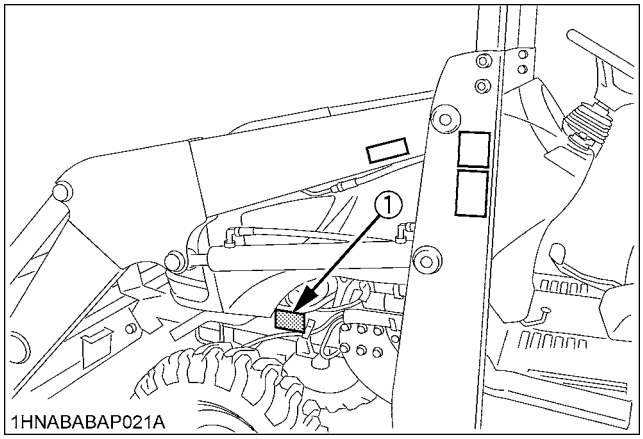

(1) Tractor identification plate

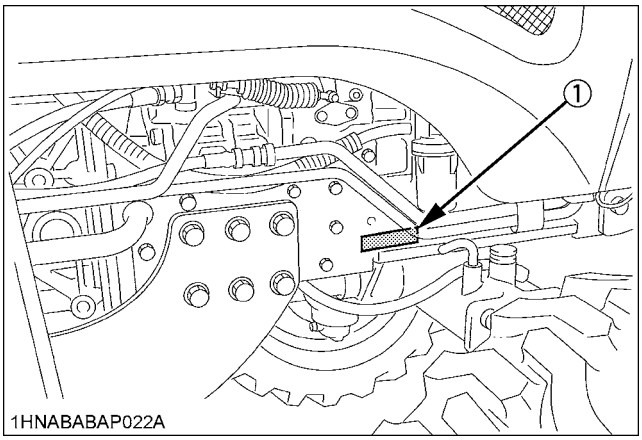

(1) Tractor serial number

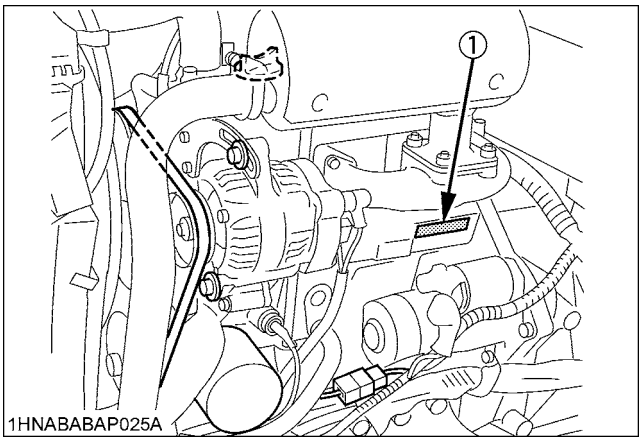

(1) Engine serial number

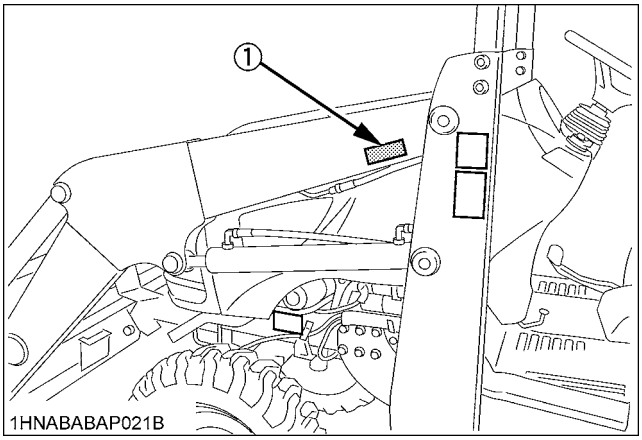

(1) Loader serial number

https://truckmanualshub.com/

SPECIFICATIONS OF THE TRACTOR

SPECIFICATION TABLE

Model				B26
				4WD
PTO power			kW (HP)	14.5 (19.5)*
Engine	Maker			KUBOTA
	Model			D1105-E4-TLB-1
	Type			Indirect Injection. Vertical, water-cooled 4 cycle diesel
	Number of cylinders			3
	Bore and stroke		mm (in.)	ϕ78x78.4 (ϕ3.1x3.1)
	Total displacement		cm^3 (cu.in.)	1123 (68.5)
	Engine gross power		kW (HP)	19.4 (26.0)*
	Rated revolution		rpm	2800
	Low idling revolution		rpm	1050 to 1150
	Maximum torque		N-m (ft-lbs.)	77.6 (57.2)
	Battery			12 V, RC : 79 min, CCA : 433 A
	Fuel			Diesel fuel No.1 [below-10°C(14°F)], Diesel fuel No.2 [above-10°C(14°F)]
Capacities	Fuel tank		L (U.S.gals.)	31 (8.1)
	Engine crankcase (with filter)		L (U.S.qts.)	3.0 (3.2)
	Engine coolant		L (U.S.qts.)	4.5 (4.7)
	Transmission case (with oil tank)		L (U.S.gals.)	26 (6.9)
Dimensions	Overall length (without 3P)		mm (in.)	2557 (100.7)
	Overall width (min. tread)		mm (in.)	1365 (53.7)
	Overall height (with canopy)		mm (in.)	2273 (89.5)
	Wheel base		mm (in.)	1581 (62.2)
	Minimum ground clearance		mm (in.)	350 (13.8)
	Tread	Front	mm (in.)	905 (35.6)
		Rear	mm (in.)	1050 (41.3)
Weight (with ROPS & FOPS, main frame)			kg (lbs.)	1182 (2606)
Clutch				N/A
Traveling system	Tires	Front		23 x 8.50-14
		Rear		12.4-16
	Steering			Hydrostatic type power steering
	Transmission			Main-hydrostatic transmission, 3 range gear shift (3 forward, 3 reverse)
	Brake			Wet disk type
	Minimum turning radius (without brake)		m (feet)	2.5 (8.2)

https://truckmanualshub.com/

Model				B26
				4WD
Hydraulic unit	Hydraulic control system			Position control
	Pump capacity		L / min (gals / min)	3P: 26.3 (7.0) Power steering: 16.0 (4.2)
	3 point hitch			SAE Category 1
	Max. lift force	At lift points	kg (lbs.)	970 (2139)
		24 in.behind lift point	kg (lbs.)	760 (1676)
PTO	Rear-PTO			SAE 1-3/8, 6 splines
	PTO / Engine speed		rpm	1 speed 540 / 2768

NOTE: * Manufacturer's estimate The company reserves the right to change the specifications without notice.

TRAVELING SPEEDS

(At rated engine rpm)

Model		B26			
Tire size (Rear)		12.4 - 16 R4 IND		12.4 - 16 Farm	
	Range gear shift lever	km / h	mph	km / h	mph
Forward	Low	0 to 4.5	0 to 2.8	0 to 4.8	0 to 3.0
	Middle	0 to 8.4	0 to 5.2	0 to 8.9	0 to 5.5
	High	0 to 17.8	0 to 11.1	0 to 18.6	0 to 11.5
Reverse	Low	0 to 4.0	0 to 2.5	0 to 4.2	0 to 2.6
	Middle	0 to 7.4	0 to 4.6	0 to 7.9	0 to 4.9
	High	0 to 15.8	0 to 9.8	0 to 16.5	0 to 10.3

Model		B26	
Tire size (Rear)		13.6 - 16 Turf	
	Range gear shift lever	km / h	mph
Forward	Low	0 to 4.9	0 to 3.1
	Middle	0 to 9.1	0 to 5.7
	High	0 to 19.0	0 to 11.8
Reverse	Low	0 to 4.3	0 to 2.7
	Middle	0 to 8.1	0 to 5.0
	High	0 to 16.9	0 to 10.5

The company reserves the right to change the specification without notice.

https://truckmanualshub.com/

SPECIFICATIONS OF THE LOADER

LOADER SPECIFICATIONS

LOADER MODEL		**TL500**
TRACTOR MODEL		B26
BOOM CYLINDER	BORE mm (in.)	50 (1.97)
	STROKE mm (in.)	399 (15.7)
BUCKET CYLINDER	BORE mm (in.)	55 (2.17)
	STROKE mm (in.)	382.5 (15.1)
CONTROL VALVE		1 Detent Float Position, Power Beyond Circuit
MAXIMUM PRESSURE	MPa (kg/cm^2, psi)	16.6 (169, 2402)
NET WEIGHT (APPROXIMATE)	kg (lbs.)	285 (628)

BUCKET SPECIFICATIONS

LOADER MODEL		**TL500**	
MODEL		HD ROUND 60	LM ROUND 66
TYPE		QUICK ATTACH	
WIDTH	mm (in.)	1524 (60)	1676 (66)
DEPTH (L)	mm (in.)	453 (17.8)	623 (24.5)
HEIGHT (M)	mm (in.)	584 (23.0)	584 (23.0)
LENGTH (N)	mm (in.)	646 (25.4)	816 (32.1)
CAPACITY	STRUCK m^3 (CU.FT.)	0.22 (7.8)	0.32 (11.3)
	HEAPED m^3 (CU.FT.)	0.27 (9.5)	0.39 (13.8)
WEIGHT	kg (lbs.)	126 (278)	149 (328)

DIMENSIONAL SPECIFICATIONS

	LOADER MODEL		**TL500**
	TRACTOR MODEL		B26
A	MAX. LIFT HEIGHT (TO BUCKET PIVOT PIN)	mm (in.)	2400 (94.5)
B	MAX. LIFT HEIGHT UNDER LEVEL BUCKET	mm (in.)	2189 (86.2)
C	CLEARANCE WITH BUCKET DUMPED	mm (in.)	1778 (70)
D	REACH AT MAX. LIFT HEIGHT (DUMPING REACH)	mm (in.)	567 (22.3)
E	MAX. DUMP ANGLE	deg.	45
F	REACH WITH BUCKET ON GROUND	mm (in.)	1561 (61.5)
G	BUCKET ROLL-BACK ANGLE	deg.	46
H	DIGGING DEPTH	mm (in.)	177 (7.0)
J	OVERALL HEIGHT IN CARRYING POSITION	mm (in.)	1258 (49.5)

https://truckmanualshub.com/

OPERATIONAL SPECIFICATIONS

LOADER MODEL			**TL500**
TRACTOR MODEL			B26
LIFT CAPACITY TO MAX. HEIGHT (BUCKET BOTTOM MID POINT)		kg (lbs.)	500 (1102)
U	LIFT CAPACITY (BUCKET PIVOT PIN, MAX. HEIGHT)	kg (lbs.)	590 (1301)
V	LIFT CAPACITY (500 mm (20 in.) FORWARD, MAX. HEIGHT)	kg (lbs.)	429 (946)
W	LIFT CAPACITY (BUCKET PIVOT PIN, 1500 mm (59 in.) HEIGHT)	kg (lbs.)	723 (1594)
X	LIFT CAPACITY (500 mm (20 in.) FORWARD, 1500 mm (59 in.) HEIGHT)	kg (lbs.)	563 (1241)
Y	BREAKOUT FORCE (BUCKET PIVOT PIN)	N (lbf.)	10417 (2343)
Z	BREAKOUT FORCE (500 mm (20 in.) FORWARD)	N (lbf.)	7771 (1748)
VV	BUCKET ROLL-BACK FORCE AT MAX. HEIGHT	N (lbf.)	10035 (2258)
XX	BUCKET ROLL-BACK FORCE AT 1.5M (59 in.)	N (lbf.)	15190 (3417)
ZZ	BUCKET ROLL-BACK FORCE AT GROUND LEVEL	N (lbf.)	17645 (3969)
RAISING TIME		sec.	3.5
LOWERING TIME		sec.	3.1
BUCKET DUMPING TIME		sec.	1.7
BUCKET ROLLBACK TIME		sec.	3.0

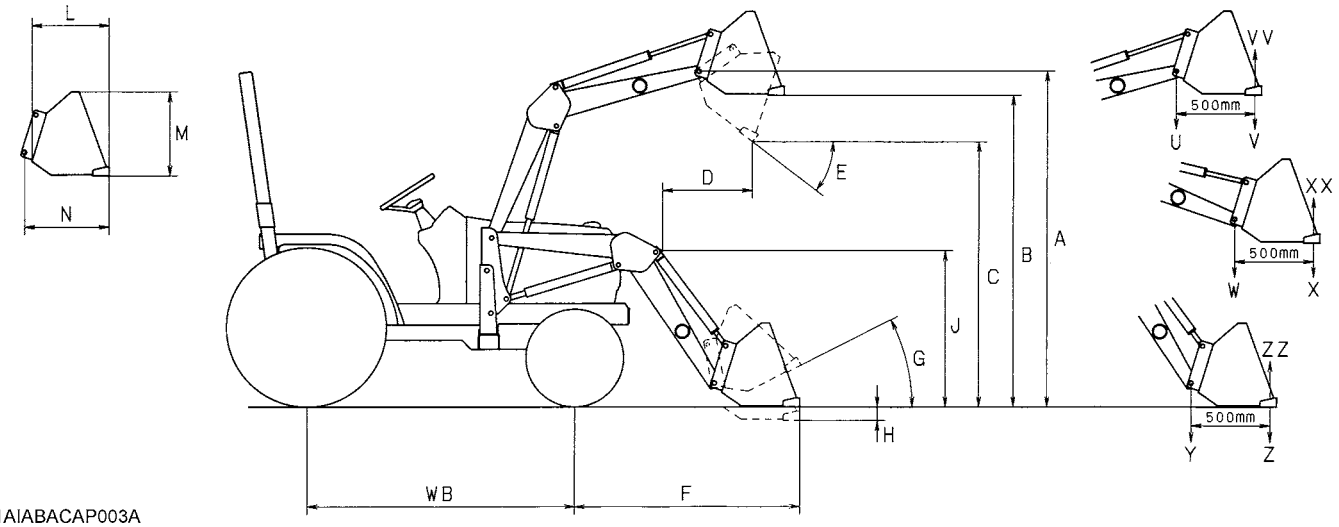

1AIABACAP003A

[TL500]

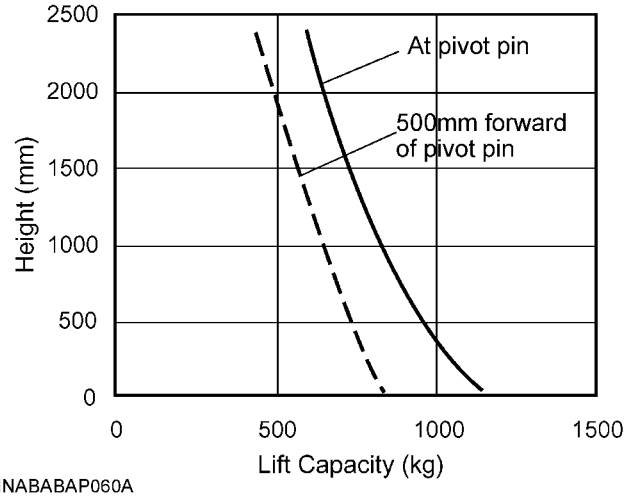

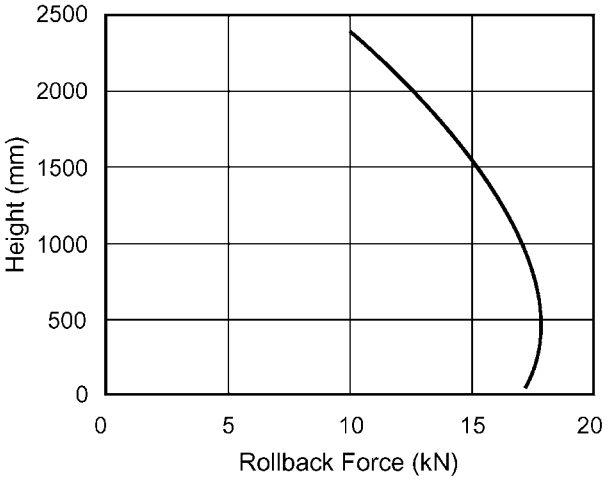

1HNABABAP060A

https://truckmanualshub.com/

LOADER TERMINOLOGY

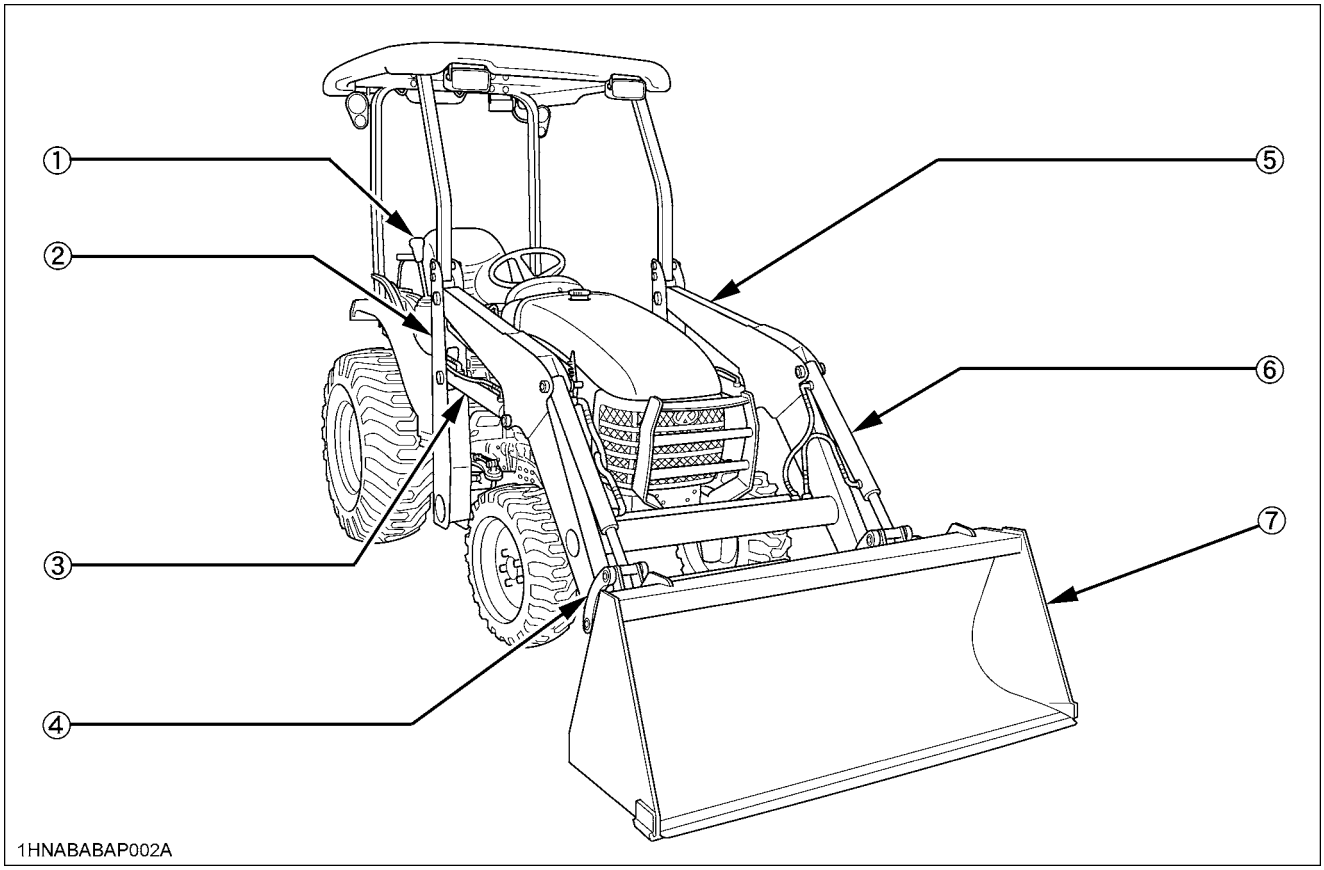

(1) Front control valve lever
(2) Side frame
(3) Boom cylinder
(4) Bucket linkage
(5) Boom
(6) Bucket cylinder
(7) Bucket

https://truckmanualshub.com/

IMPLEMENT LIMITATIONS

The KUBOTA Tractor has been thoroughly tested for proper performance with implements sold or approved by KUBOTA. Use with implements which are not sold or approved by KUBOTA and which exceed the maximum specifications listed below, or which are otherwise unfit for use with the KUBOTA Tractor may result in malfunctions or failures of the tractor, damage to other property and injury to the operator or others. [Any malfunctions or failures of the tractor resulting from use with improper implements are not covered by the warranty.]

Tread (max. width) with industry tires		Lower link end max. lifting weight W 0
Front	Rear	
905 mm (35.6 in.)	1050 mm (41.3 in.)	360 kg (800 lbs.)

Actual figures		
Implement weight W 1 and / or size	Max. Drawbar Load W 2	Trailer loading weight W 3 Max. capacity
As in the following list (Shown on the next page)	500 kg (1100 lbs.)	1500 kg (3300 lbs.)

Lower link end max. lifting weight.....The max. allowable load which can be put on the lower link end : W 0
Implement weight.....The implement's weight which can be put on the lower link : W 1
Max. drawbar load.....W 2
Trailer loading weight .....The max. loading weight for trailer (without trailer's weight) : W 3

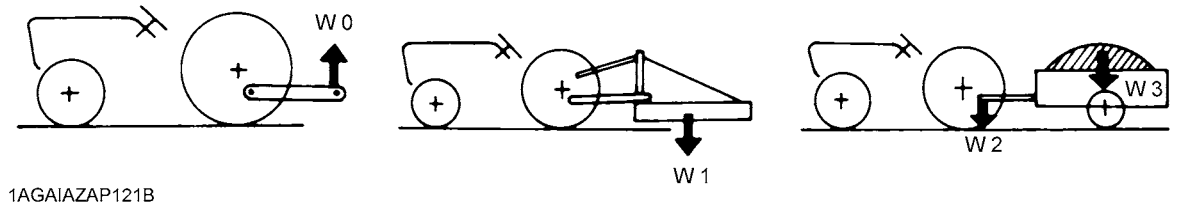

NOTE :
- Implement size may vary depending on soil operating conditions.

https://truckmanualshub.com/

Implement		Remarks		B26
Mower	Rotary-cutter (1 Blade)	Max. cutting width Max. weight	mm (in.) kg (lbs.)	1220 (48) 227 (500)
	Rear-mount (2 or 3 Blades)	Max. cutting width Max. weight	mm (in.) kg (lbs.)	1830 (72) 227 (500)
	Flail-mower	Max. cutting width	mm (in.)	1220 (48)
	Sickle bar	Max. cutting width	mm (in.)	1524 (60)
Rotary tiller		Max. tilling width Max. weight Slip clutch	mm (in.) kg (lbs.)	1270 (50) 250 (550) Necessary
Bottom plow		Max. size	mm (in.)	305 (12) x 2
Disc plow		Max. size	mm (in.)	559 (22) x 2
Cultivator		Max. size	mm (in.)	1524 (60) 1 Row
Disc harrow		Max. harrowing width Max. weight	mm (in.) kg (lbs.)	1676 (66) 250 (550)
Sprayer		Max. tank capacity	L (U.S.gals.)	246 (65)
Front blade		Max. cutting width Sub frame	mm (in.)	1676 (66) Necessary
Rear blade		Max. cutting width Max. weight	mm (in.) kg (lbs.)	1676 (66) 250 (550)
Front loader		Max. lifting capacity Max. width	kg (lbs.) mm (in.)	500 (1102) 1544 (61)
Box blade		Max. cutting width Max. weight	mm (in.) kg (lbs.)	1372 (54) 227 (500)
Backhoe		Max. digging depth Max. weight Sub frame	mm (in.) kg (lbs.)	2535 (100) 465 (1025) Necessary
Snow blower		Max. working width Max. weight	mm (in.) kg (lbs.)	1524 (60) 227 (500)
Trailer		Max. load capacity Max. drawbar load	kg (lbs.) kg (lbs.)	1500 (3300) 500 (1100)

NOTE :
- Implement size may vary depending on soil operating conditions.

https://truckmanualshub.com/

INSTRUMENT PANEL AND CONTROLS

■ Instrument Panel, Switches and Hand Controls

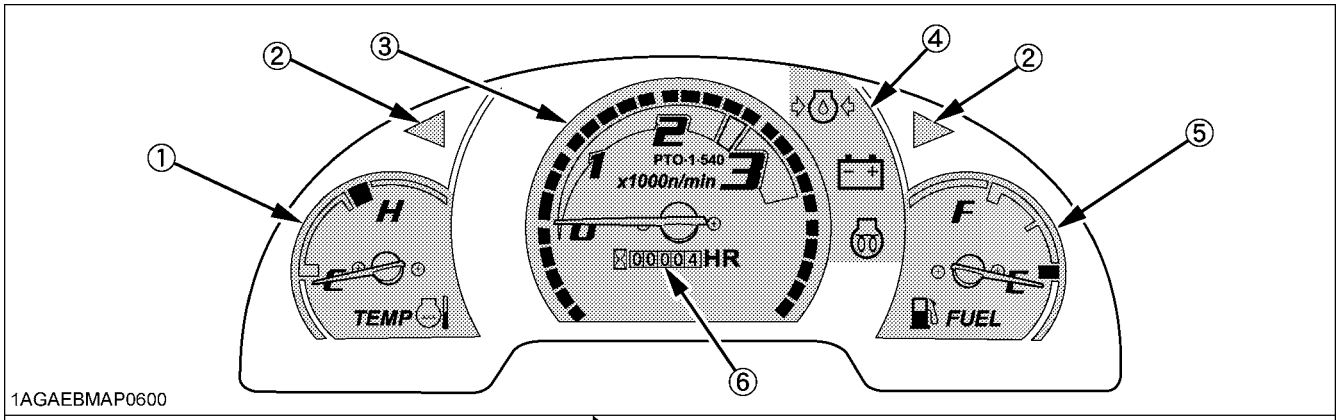

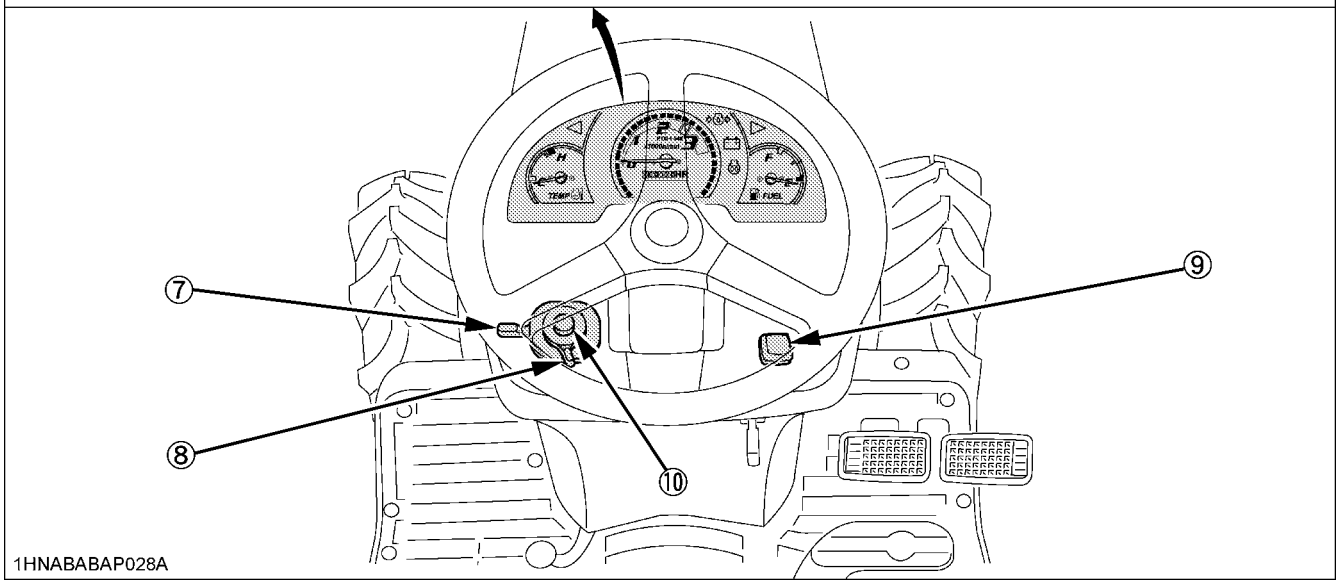

ILLUSTRATED CONTENTS

(1) Coolant temperature gauge 24
(2) Turn signal / Hazard light indicator 19
(3) Tachometer 24
(4) Easy Checker(TM) 23
(5) Fuel gauge 24
(6) Hourmeter 24
(7) Turn signal light switch 19
(8) Head light switch 19
(9) Hazard light switch 19
(10) Horn button (if equipped) 20

https://truckmanualshub.com/

■ Foot and Hand Controls

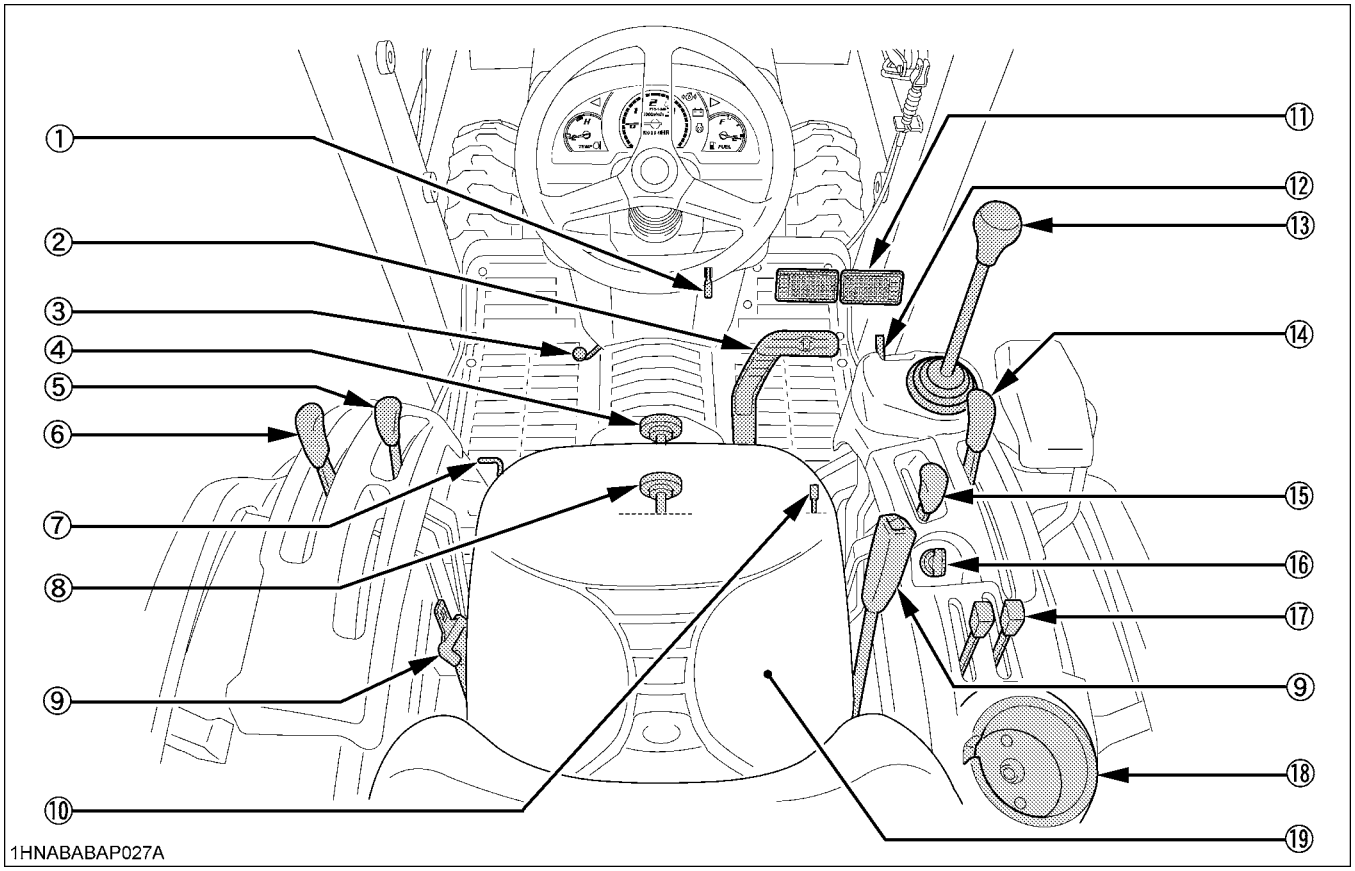

■ Pedal Location Label

The label is located on the cover under seat.

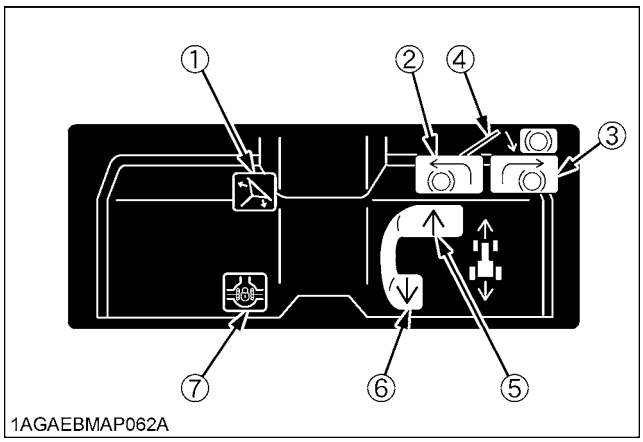

(1) Steering wheel tilt pedal
(2) Brake pedal (left)
(3) Brake pedal (right)
(4) Brake pedal lock
(5) Speed control pedal (forward)
(6) Speed control pedal (reverse)
(7) Differential lock pedal

ILLUSTRATED CONTENTS

(1) Parking brake lever 22,25
(2) Speed control pedal 23
(3) Steering wheel tilt pedal 19
(4) 3-Point hitch lowering speed knob 43
(5) PTO clutch lever 36
(6) Range gear shift lever 21
(7) Differential lock pedal 25
(8) Suspension adjust knob 18
(9) Seat belt 18
(10) Front wheel drive lever 22
(11) Brake pedal 20
(12) Lock lever 33
(13) Front control valve lever 28
(14) Position control lever 43
(15) Hand throttle lever 22
(16) Key switch 13
(17) Rear remote control valve lever (if equipped) 44
(18) Cup holder ..... ---
(19) Operator's seat 18

https://truckmanualshub.com/

PRE-OPERATION CHECK OF THE TRACTOR

DAILY CHECK

To prevent trouble from occurring, it is important to know the condition of the tractor well. Check it before starting.

WARNING

To avoid personal injury or death:

- **Be sure to check and service the tractor on a level surface with the engine shut off and the parking brake "ON" and implement lowered to the ground.**

Check item

- Walk around inspection
- Check engine oil level
- Check transmission oil level
- Check coolant level
- Clean grill, radiator screen and oil cooler
- Check air cleaner evacuator valve
  (When used in a dusty place)
- Check brake pedal
- Check indicators, gauges and meter
- Check lights
- Check wire harness
- Check seat belt and ROPS & FOPS
- Check movable parts
- Refuel
  (See "DAILY CHECK" in "PERIODIC SERVICE OF THE TRACTOR" section)
- Care of danger, warning and caution labels
  (See "DANGER, WARNING AND CAUTION LABELS" in "SAFE OPERATION" section)

https://truckmanualshub.com/

PRE-OPERATION CHECK OF THE LOADER

PRE-OPERATION CHECKS

Prior to starting the engine, make pre-operation checks according to "MAINTENANCE" section.

CAUTION

To avoid personal injury:

- **Read "Safe Operation" section in the front of this manual.**
- **Read the caution label located on the loader.**

REAR BALLAST

WARNING

To avoid serious injury:

- **For tractor stability and operator's safety, rear ballast should be added to the rear of the tractor in the form of 3-point counter weight and rear wheel ballast. The amount of rear ballast will depend on the application.**

Implement as Counter Weight	
4' Land Scraper	Approx. 225 kg (495 lbs.)
Backhoe (BT820)	Approx. 465 kg (1025 lbs.)

■Liquid Ballast in Rear Tires

Water and calcium chloride solution provides a safe and economical ballast. Used properly, it will not damage tires, tubes or rims. The addition of calcium chloride is recommended to prevent the water from freezing. Use of this method of weighting the wheels has full approval of the tire manufacturers. See your tire dealer for this service.

Liquid weight per tire (75 Percent filled)

Tire sizes	12.4-16
Slush free at -10℃(14℉) Solid at -30℃(-22℉) [Approx. 1 kg (2 lbs.) $CaCl_2$ per 4 L (1 gal.) of water]	85 kg (187 lbs.)
Slush free at -24℃(-11℉) Solid at -47℃(-52℉) [Approx. 1.5 kg (3.5 lbs.) $CaCl_2$ per 4 L (1 gal.) of water]	89 kg (196 lbs.)
Slush free at -47℃(-52℉) Solid at -52℃(-62℉) [Approx. 2.25 kg (5 lbs.) $CaCl_2$ per 4 L (1 gal.) of water]	94 kg (207 lbs.)

IMPORTANT :

- Do not fill tires with water or solution more than 75% of full capacity (to the valve stem level at 12 o'clock position).

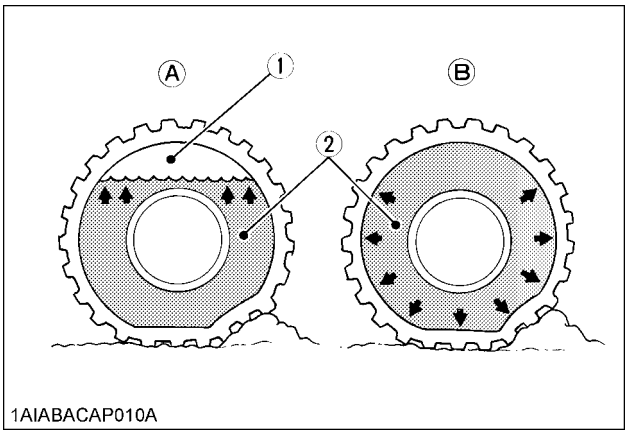

(1) Air
(2) Water

(A) Correct: 75% Full
Air compresses like a cushion
(B) Incorrect: 100% Full
Water can not be compressed

NOTE :

- When mounting a heavy rear implement, liquid in the tires may not be required.

IMPORTANT :

- Do not add liquid ballast or any other weights to the front tires.

https://truckmanualshub.com/

OPERATING THE ENGINE

WARNING

To avoid personal injury or death:

- **Read "Safe Operation" in the front of this manual.**
- **Read the danger, warning and caution labels located on the tractor.**
- **To avoid the danger of exhaust fume poisoning, do not operate the engine in a closed building without proper ventilation.**
- **Never start engine while standing on ground. Start engine only from operator's seat.**
- **Make it a rule to set all shift levers to the "NEUTRAL" positions and to place PTO lever in "OFF" position before starting the engine.**

IMPORTANT :

- Do not use starting fluid or ether.
- To protect the battery and the starter, make sure that the starter is not continuously turned for more than 30 seconds.

STARTING THE ENGINE

1. Make sure the parking brake is set.

1. To set the parking brake;
   (1) Interlock the brake pedals.
   (2) Depress the brake pedals.
   (3) Latch the brake pedals with the parking brake lever.
2. To release the parking brake, depress the brake pedals again.

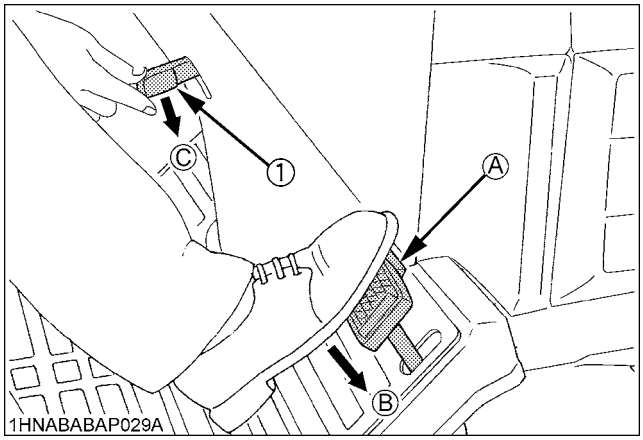

(1) Parking brake lever
(A) Interlock the brake pedals
(B) "DEPRESS"
(C) "PUSH-DOWN"

NOTE :

- It is recommended that the operator practice engaging and disengaging the parking brake on a flat surface without the engine running before operating the tractor for the first time.

2. Place the PTO clutch lever in "OFF" position.

3. Place the speed control pedal in "NEUTRAL" position. Place the range gear shift lever (L-M-H) in "NEUTRAL" position.

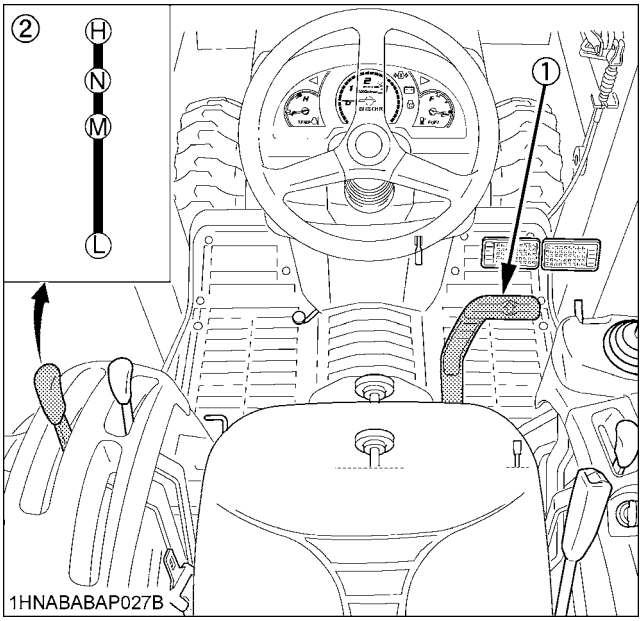

(1) Speed control pedal
(2) Range gear shift lever (L-M-H)
(N) "NEUTRAL POSITION"

NOTE :

- Step out the foot from speed control pedal, doing so the pedal automatically returns to the neutral position.

https://truckmanualshub.com/

4. Place the position control lever in "LOWEST" position.

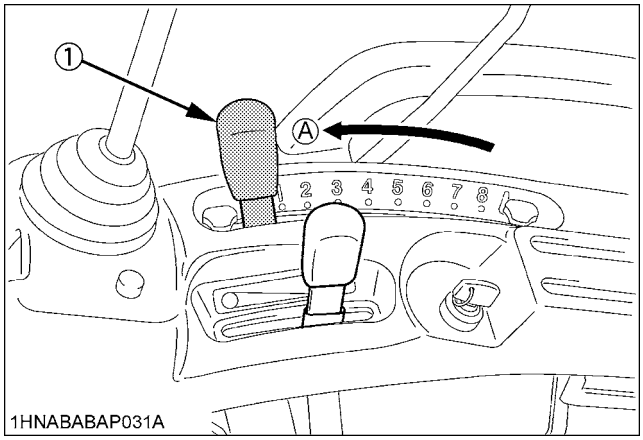

(1) Position control lever *(A) "DOWN"*

5. Set the throttle lever to about 1/2 way.

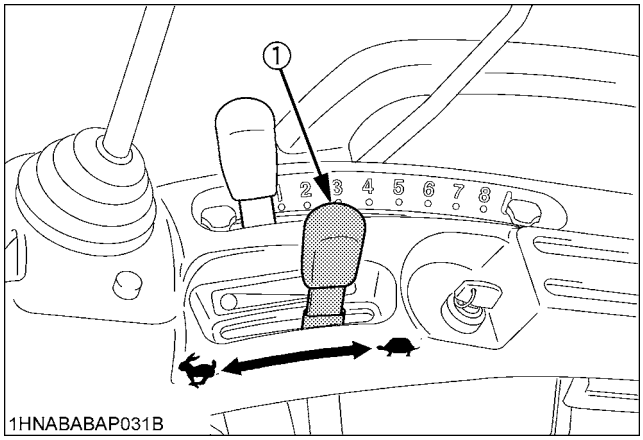

(1) Hand throttle lever *"INCREASE"* *"DECREASE"*

6. Insert the key into the key switch and turn it "ON".

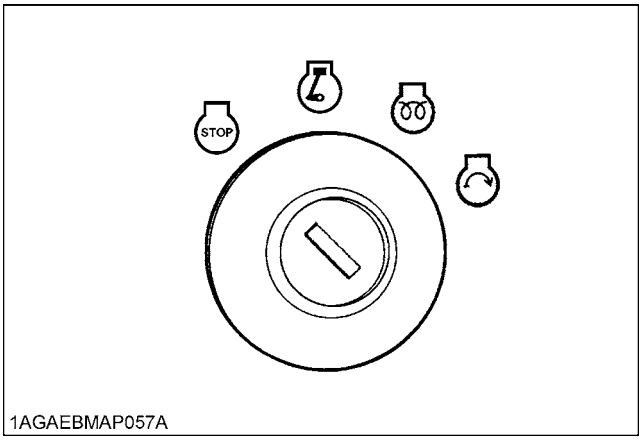

"OFF"
"ON"
"PREHEAT"
"START"

◆ **Check Easy Checker(TM) lamps:**

1. When the key is turned "ON", lamps (2) (3) should come on. If trouble should occur at any location while the engine is running, the warning lamp corresponding to that location comes on.

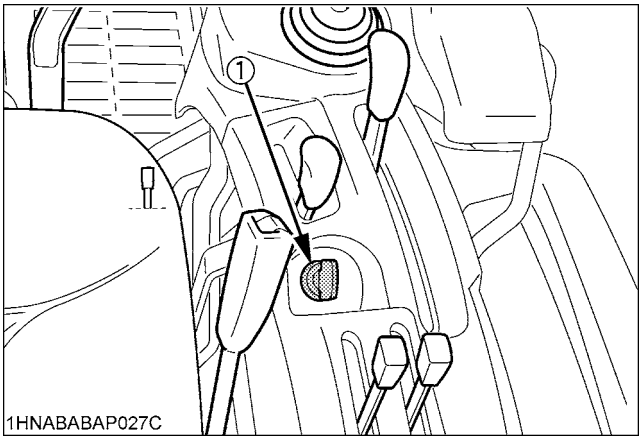

(1) Key switch

https://truckmanualshub.com/

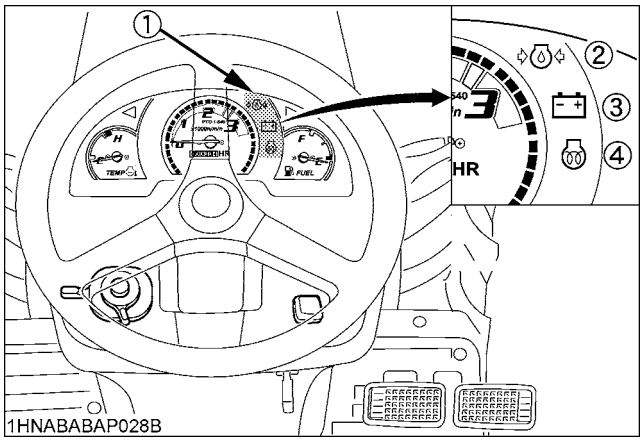

(1) Easy checker(TM)
(2) Engine oil pressure
(3) Electrical charge
(4) Glow plug indicator

IMPORTANT :
- Daily checks with the Easy Checker(TM) only are not sufficient. Never fail to conduct physical daily checks carefully by referring to Daily Check section.
  (See "DAILY CHECK" in "PERIODIC SERVICE OF THE TRACTOR" section)

7. Turn the key to "PREHEAT" position and hold it for about 2 to 3 seconds.

For the appropriate preheating time, refer to the table below:

Temperature	Preheating Time
Over 0 °C (32 °F)	2 to 3 sec.
0 to -5 °C (32 to 23 °F)	5 sec.
-5 to -15 °C (23 to 5 °F)	10 sec.

NOTE :
- Glow plug indicator (4) comes on while engine is being preheated.

8. Turn the key to "START" position and release when the engine starts.

IMPORTANT :
- Because of the safety devices, the engine will not start except when the PTO clutch lever is placed in the "OFF" position and speed control pedal is placed in the "NEUTRAL" position.

◆ **Cold Weather Starting**
When the ambient temperature is below -5℃ (23℉) and the engine is very cold. If the engine fails to start, turn off the key for 30 seconds. Then repeat steps **7** and **8**. To protect the battery and the starter, make sure that the starter is not continuously turned for more than 30 seconds.

■Block Heater (Option)
A block heater is available as an option from your dealer. It will assist you in starting your tractor when the ambient temperature is below -15℃ (5℉)

9. Check to see that all the lamps on the Easy Checker(TM) are "OFF".

If a lamp is still on, immediately stop the engine and determine the cause.

STOPPING THE ENGINE

1. After slowing the engine to idle, turn the key to "OFF".
2. Remove the key.

NOTE :
- If key does not stop the engine, consult your local KUBOTA Dealer.

WARMING UP

⚠ CAUTION
To avoid personal injury:
- **Be sure to set the parking brake during warm-up.**
- **Be sure to set all shift levers to the "NEUTRAL" positions and to place PTO clutch lever in "OFF" position during warm-up.**

For 5 minutes after engine start-up, allow engine to warm up without applying any load, this is to allow oil to reach every engine part. If load should be applied to the engine without this warm-up period, trouble such as seizure, breakage or premature wear may develop.

https://truckmanualshub.com/

■Warm-up Transmission Oil at Low Temperature Range

Hydraulic oil serves as transmission fluid. In cold weather, the oil may be cold with increased viscosity. This can cause delayed oil circulation or abnormally low hydraulic pressure for some time after engine start-up. This in turn can result in trouble in the hydraulic system. To prevent the above, observe the following instructions:
Warm up the engine at about 50% of rated rpm according to the table below:

Ambient temperature	Warm-up time requirement
Above 0 °C (32 °F)	At least 5 minutes
0 to -10 °C (32 to 14 °F)	5 to 10 minutes
-10 to -20 °C (14 to -4 °F)	10 to 15 minutes
Below -20 °C (-4 °F)	More than 15 minutes

IMPORTANT :
- Do not operate the tractor under full load condition until it is sufficiently warmed up.

JUMP STARTING

WARNING

To avoid personal injury or death:
- **Battery gases can explode. Keep cigarettes, sparks, and flames away from battery.**
- **If tractor battery is frozen, do not jump start engine.**
- **Do not connect the other end of the negative (-) jumper cable to the negative (-) terminal of the tractor battery.**

When jump starting the engine, follow the instructions below to safely start the engine.
1. Bring the helper vehicle with a battery of the same voltage as disabled tractor within easy cable reach. "THE VEHICLES MUST NOT TOUCH".
2. Engage the parking brakes of both vehicles and put the shift levers in neutral. Shut both engines off.
3. Wear eye protection and rubber gloves.
4. Attach the red clamp to the positive (red, (+) or pos.) terminal of the dead battery and clamp the other end of the same cable to the positive (red, (+) or pos.) terminal of the helper battery.
5. Clamp the other cable to the negative (black, (-) or neg.) terminal of the helper battery.
6. Clamp the other end to the engine block or frame of the disabled tractor as far from the dead battery as possible.
7. Start the helper vehicle and let its engine run for a few moments. Start the disabled tractor.
8. Disconnect the jumper cables in the exact reverse order of attachment. (Steps 6, 5 and 4).

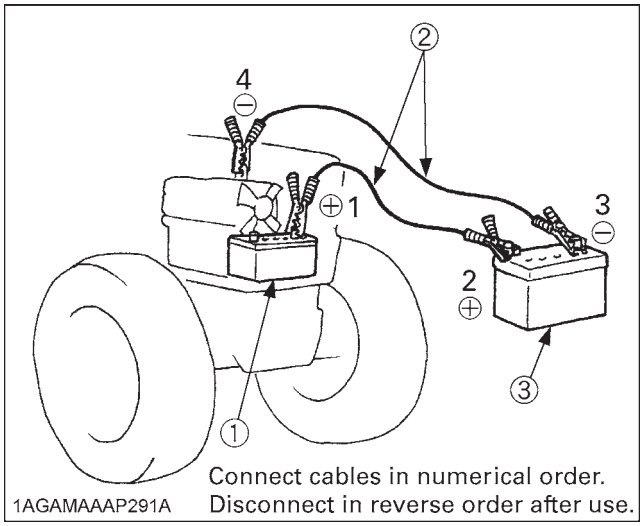

(1) Dead battery
(2) Jumper cables
(3) Helper battery

IMPORTANT :
- This machine has a 12 volt negative (-) ground starting system.
- Use only same voltage for jump starting.
- Use of a higher voltage source on tractor's electrical system could result in severe damage to tractor's electrical system.
  Use only matching voltage source when "Jump starting" a low or dead battery condition.
- Do not operate the tractor with the battery cable disconnected from the battery.
- Do not operate the tractor without the battery mounted.
- Do not operate the tractor with the battery dead. Charge the battery fully enough before operating the tractor.
  Otherwise the tractor might malfunction.

https://truckmanualshub.com/

OPERATING THE TRACTOR

OPERATING NEW TRACTOR

How a new tractor is handled and maintained determines the life of the tractor.

A new tractor just off the factory production line has been, of course, tested, but the various parts are not accustomed to each other, so care should be taken to operate the tractor for the first 50 hours at a slower speed and avoid excessive work or operation until the various parts become "broken-in." The manner in which the tractor is handled during the "breaking-in." period greatly affects the life of your tractor. Therefore, to obtain the maximum performance and the longest life of the tractor, it is very important to properly break-in your tractor. In handling a new tractor, the following precautions should be observed.

■Do not Operate the Tractor at Full Speed for the First 50 Hours

- Do not start quickly nor apply the brakes suddenly.
- In winter, operate the tractor after fully warming up the engine.
- Do not run the engine at speeds faster than necessary.
- On rough roads, slow down to suitable speeds.
  Do not operate the tractor at fast speed.

The above precautions are not limited only to new tractors, but to all tractors. But it should be especially observed in the case of new tractors.

■Changing Lubricating Oil for New Tractors

The lubricating oil is especially important in the case of a new tractor. The various parts are not "broken-in" and are not accustomed to each other; small metal grit may develop during the operation of the tractor; and this may wear out or damage the parts. Therefore, care should be taken to change the lubricating oil a little earlier than would ordinarily be required.

For further details of change interval hours.

(See "MAINTENANCE OF THE TRACTOR" section)

STARTING

1. Adjusting the driving position.

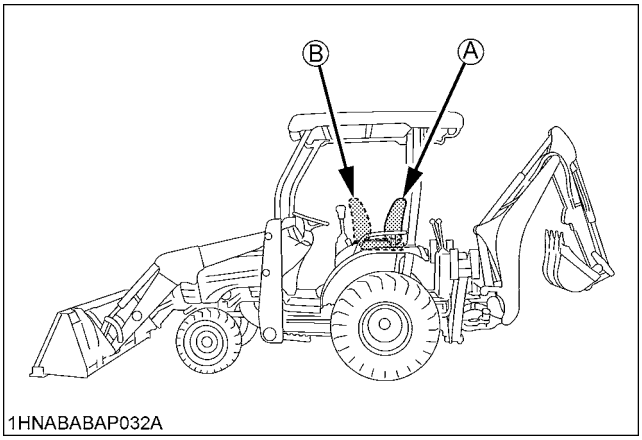

(A) "TRACTOR DRIVING POSITION"
(B) "BACKHOE POSITION"

https://truckmanualshub.com/

■Operator's Seat

WARNING

To avoid personal injury or death:

- **Make adjustments to the seat only while the tractor is stopped.**
- **Make sure that the seat is completely secured after each adjustment.**
- **Do not allow any person other than the operator to ride on the tractor.**

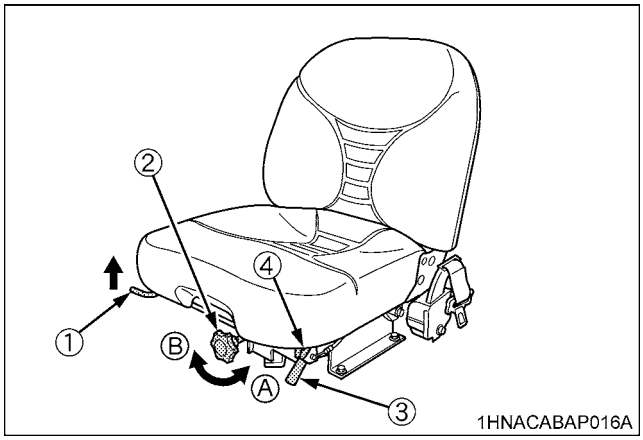

(1) Travel adjust lever
(2) Suspension adjust knob
(3) Seat lock lever
(4) Seat rail
(A) To decrease tension
(B) To increase tension

◆ Travel adjustment

Pull the travel adjust lever and slide the seat backward or forward, as required. The seat will lock in position when the lever is released.

NOTE :

- The operator's seat base has a slope. When lifting the lever, be careful not to allow the seat to slide down forward.

◆ Suspension adjustment knob

Turn the suspension adjust knob to achieve the optimum suspension setting.

■Glove Box

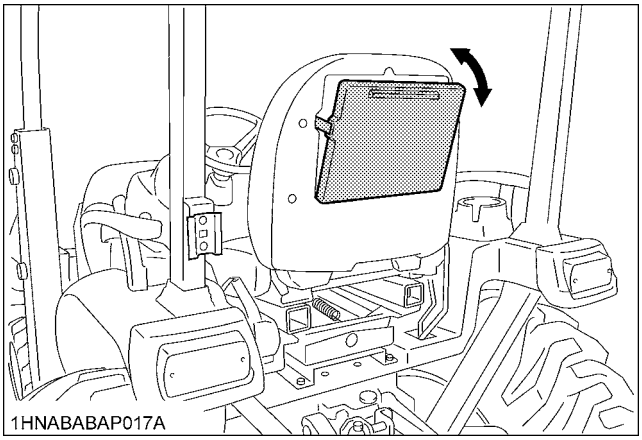

(1) Glove box

■Seat Belt

WARNING

To avoid personal injury:

- **Always use the seat belt while driving tractors, when the ROPS is installed.**
- **Do not use the seat belt if the tractor is not equipped with ROPS.**

Adjust the seat belt for proper fit and connect the buckle. This seat belt is auto-locking retractable type.

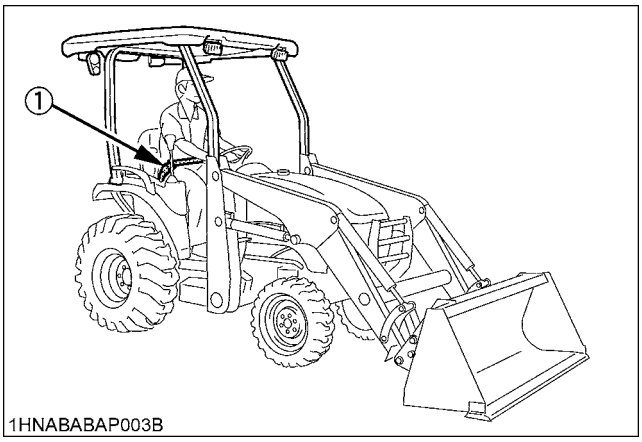

(1) Seat belt

https://truckmanualshub.com/

■Tilt Steering Adjustment

CAUTION

To avoid personal injury:

- **Do not adjust the steering wheel while the tractor is in motion.**

Press down the steering wheel tilt pedal, to release the lock so the steering wheel can be adjusted to one of three desired positions.

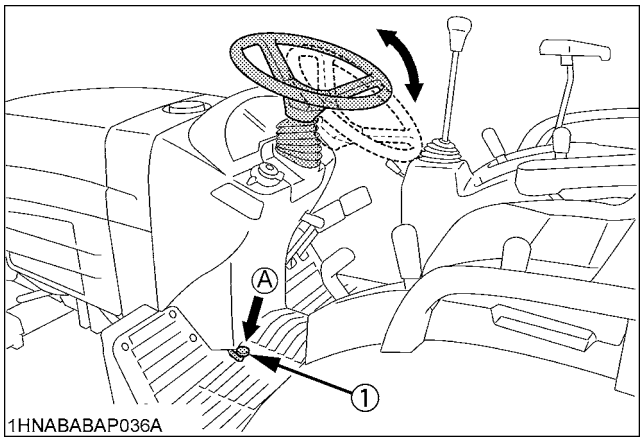

(1) Steering wheel tilt pedal *(A) "PRESS DOWN"*

2. Selecting light switch positions.

■Head Light / Turn Signal / Hazard Light Switch

◆ **Head Light Switch**

(A) .....Head light OFF.

(B) .....Head light ON.

(C) ...Head light, Work light ON.

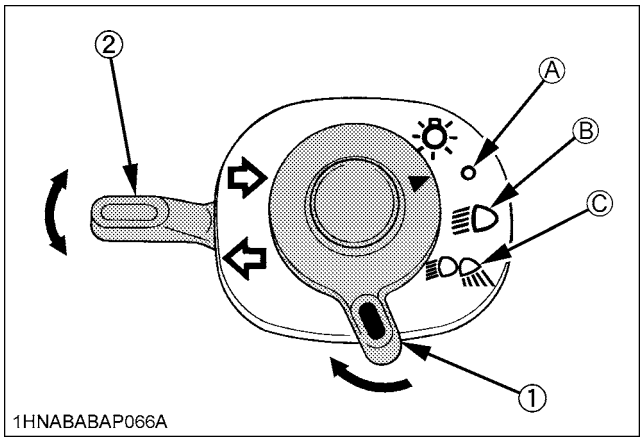

(1) Head light switch
(2) Turn signal light switch

◆ **Hazard Light**

1. When hazard light switch is pushed, the hazard lights flash, along with the L/H and R/H indicators on the instrument panel.
2. Push hazard light switch again to turn off the hazard lights.

◆ **Turn Signal with Hazard Light Switch On.**

1. To indicate a right turn with the hazard lights already flashing (hazard switch on), turn the turn signal switch clockwise.
2. To indicate a left turn with the hazard lights already flashing, turn the turn signal switch counterclockwise.
3. When the left or right turn signal is activated in combination with the hazard lights, the indicated turning light will flash and the other will stay on.

◆ **Turn Signal with Hazard Light Switch Off**

1. To indicate a right turn without hazard lights (hazard switch off), turn the turn signal switch clockwise.
2. To indicate a left turn without hazard lights, turn the turn signal switch counterclockwise.
3. When the left or right turn signal is activated without the hazard lights, the indicated turning light will flash and the other will stay on.

NOTE :

- The hazard light switch is operative when the key switch is in either the "ON" or "OFF" positions.
- The turn signal light switch is only operative when the key switch is in the "ON" position.
- The indicator in the hazard light switch will light up when the head light switch is turned on.
- Be sure to return the turn signal switch to center position after turning.

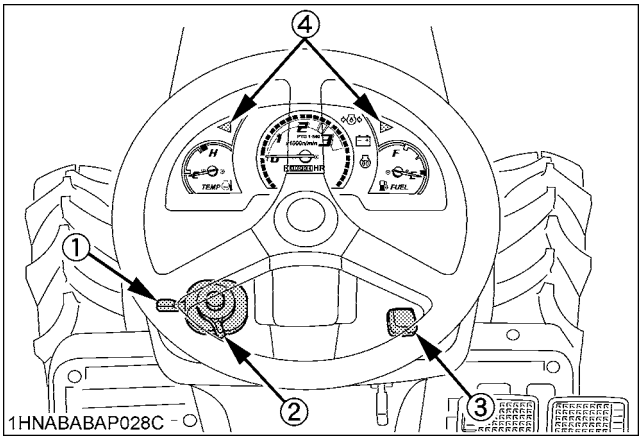

(1) Turn signal light switch
(2) Head light switch
(3) Hazard light switch
(4) Hazard / Turn signal indicator

https://truckmanualshub.com/

■Horn Button (if equipped)

The horn will sound when the key switch is in the "ON" position and the horn button pressed.

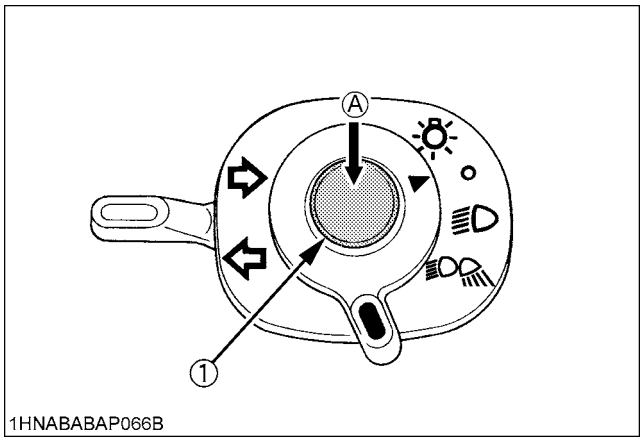

(1) Horn button *(A) "PUSH"*

■Tractor Lights

(1) Head light
(2) Side turn signal / Hazard light
(3) Work light

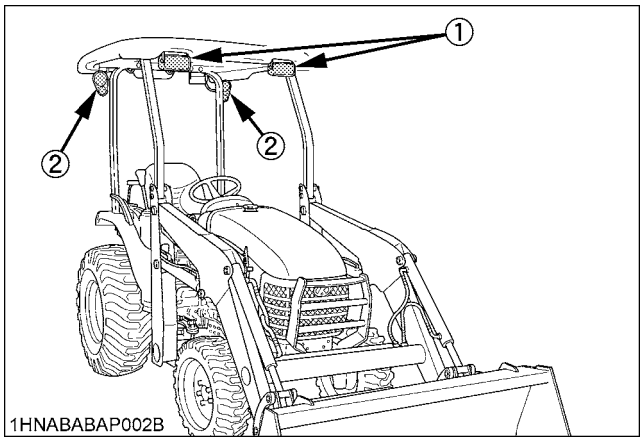

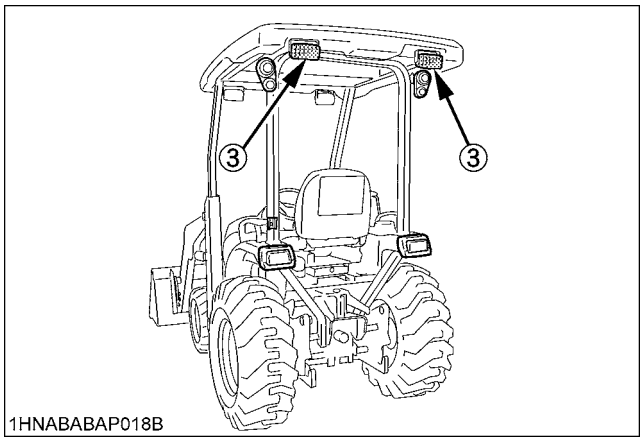

3. Checking the brake pedal.

■Brake Pedals (Right and Left)

WARNING

To avoid personal injury or death:

- **Be sure to interlock the right and left pedals. Applying only one rear wheel brake at high speeds could cause the tractor to swerve or roll-over.**
- **Be sure brake pedals have equal adjustment when using locked together. Incorrect or unequal brake pedal adjustment can cause the tractor to swerve or roll-over.**

WARNING

To avoid personal injury or death:

- **Do not make brake suddenly. An accident may occur as a result of a heavy towed load shifting forward or loss of control.**
- **To avoid skidding and loss of steering control when driving on icy, wet, or loose surfaces, make sure the tractor is correctly ballasted, operated at reduced speed, operated with front wheel drive engaged (if equipped).**
- **The braking characteristics are different between 2 and 4-wheel drive. Be aware of the difference and use carefully.**

1. Before operating the tractor on the road or before applying the parking brake, be sure to interlock the right and left pedals as illustrated below.
2. Use individual brakes to assist in making sharp turns at slow speeds (Field Operation Only). Disengage the brake pedal lock and depress only one brake pedal.
3. Be sure brake pedals have equal adjustment when using locked together.

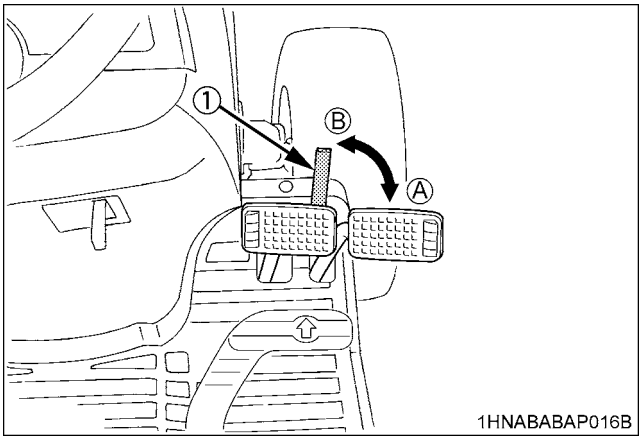

(1) Brake pedal lock *(A) "LOCK"*
(B) "RELEASE"

https://truckmanualshub.com/

4. Raise the implement.
(See "HYDRAULIC UNIT" section)

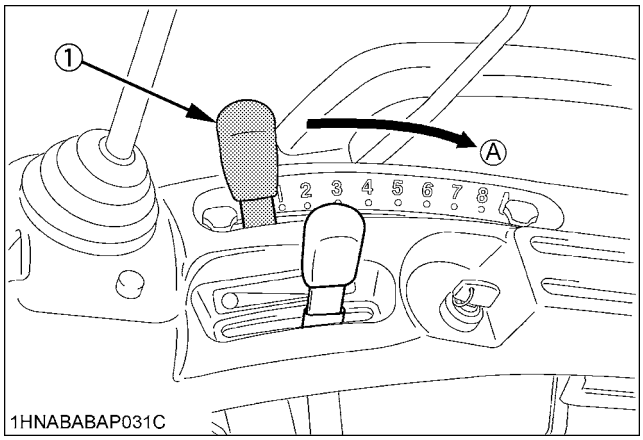

(1) Position control lever *(A) "UP"*

IMPORTANT :
- Do not raise the position control lever when BACKHOE is installed.

5. Selecting the Travel Speed.

■Range Gear Shift Lever (L-M-H)

The range gear shift can only be shifted when tractor is completely stopped.

IMPORTANT :
Do not force the range gear shift lever.
- If it is difficult to shift the range gear shift lever into neutral position;
  (1) Depress the brake pedal firmly for several seconds.
  (2) Without reducing the brake pedal force, shift the range gear shift lever.
- If it is difficult to shift the range gear shift lever into "L", "M" or "H" from neutral position;
  (1) Slightly depress the speed control pedal to rotate the gears inside of transmission.
  (2) Release the speed control pedal to neutral position.
  (3) Shift the range gear shift lever.
- To avoid damage of transmission, stop tractor before shifting between ranges.

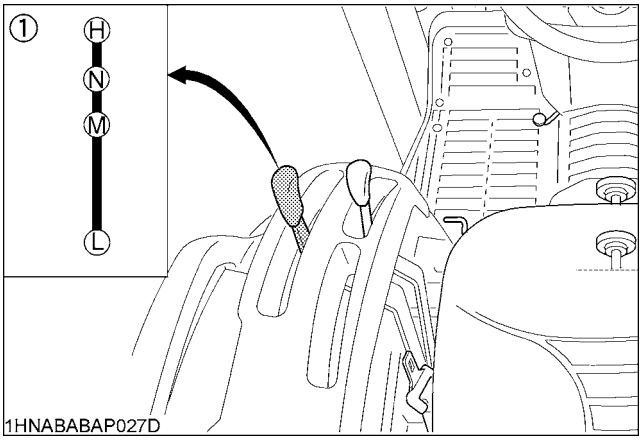

(1) Range gear shift lever (L-M-H)
(H) "HIGH"
(M) "MIDDLE"
(L) "LOW"
(N) "NEUTRAL POSITION"

https://truckmanualshub.com/

■Front Wheel Drive Lever

WARNING

To avoid personal injury or death:

- **Do not engage the front wheel drive when traveling at road speed.**
- **When driving on icy, wet or loose surfaces, make sure the tractor is correctly ballasted to avoid skidding and loss of steering control. Operate at reduced speed and engage front wheel drive.**
- **An accident may occur if the tractor is suddenly braked, such as by heavy towed loads shifting forward or loss of control.**
- **The braking characteristics are different between 2 and 4-wheel drive. Be aware of the difference and use carefully.**

Use the lever to engage the front wheels with the tractor stopped. Shift the lever to "ON" to engage the front wheel drive.

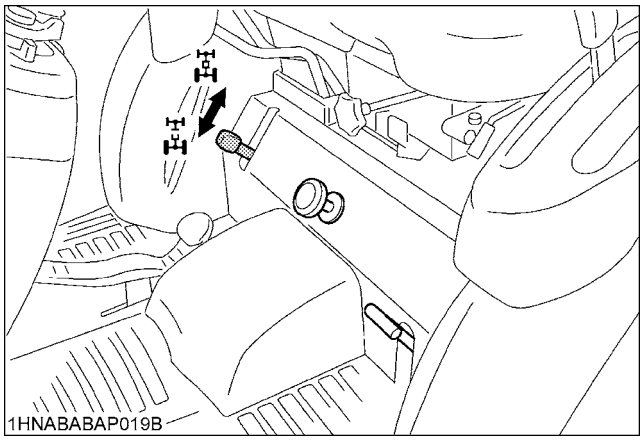

(1) Front wheel drive lever *"ON"* *"OFF"*

IMPORTANT :

- To avoid damage of transmission, when front wheel drive lever is not smoothly shifted, slightly step forward or rearward on speed control pedal.
- Tires will wear quickly if front wheel drive is engaged on paved roads.

◆ **Front wheel drive is effective for the following jobs:**

1. When greater pulling force is needed, such as working in a wet field, when pulling a trailer, or when working with a front-end loader.
2. When working in sandy soil.
3. When working on a hard soil where a rotary tiller might push the tractor forward.
4. Additional braking at reduced speeds.

6. Accelerate the Engine.

■Hand Throttle Lever

Pulling the throttle lever back decreases engine speed, and pushing it forward increases engine speed.

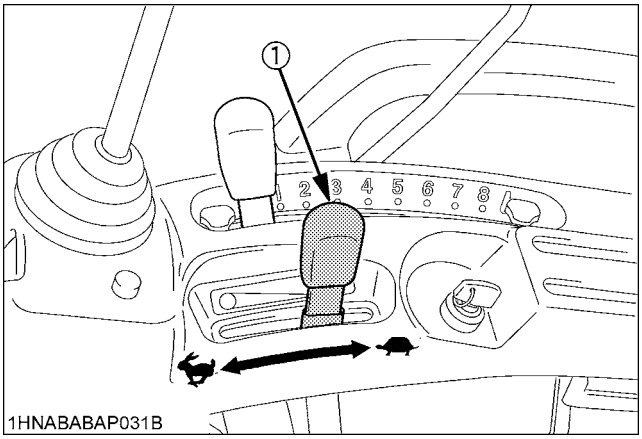

(1) Hand Throttle lever *"INCREASE"* *"DECREASE"*

7. Unlock the Parking Brake.

■Parking Brake Lever

To release the parking brake, depress the brake pedals again.

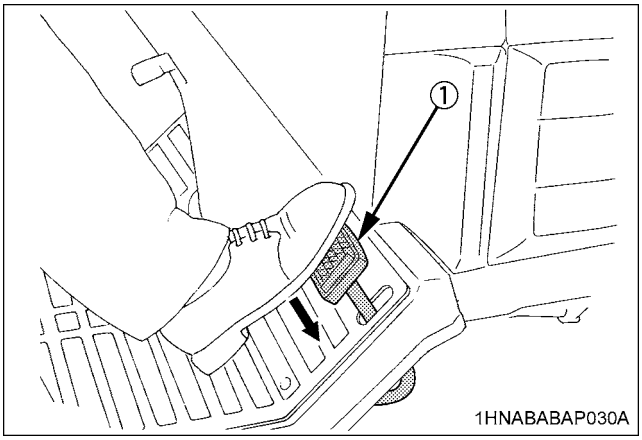

(1) Brake pedals

https://truckmanualshub.com/

8. **Depress the Speed Control Pedal.**

■Speed Control Pedal

WARNING

To avoid personal injury:

- **Do not operate if tractor moves on level ground with foot off of Speed Control Pedal.**
- **Consult your local KUBOTA Dealer.**

Forward Pedal

Depress the speed control pedal with the toe of your right foot to move forward.

Reverse Pedal

Depress the speed control pedal with the heel of your right foot to move backward.

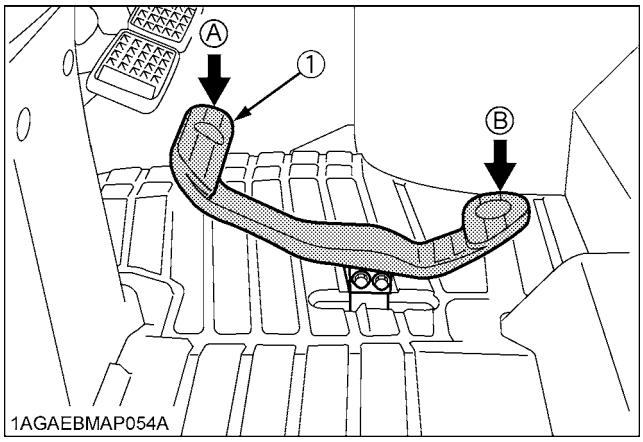

(1) Speed control pedal *(A) "FORWARD"* *(B) "REVERSE"*

IMPORTANT :

- To prevent serious damage to the HST, do not adjust the stopper bolts.

NOTE :

- When you stand up from the seat with the speed control pedal stepped on, the engine will stop regardless of whether the machine is moving or not. This is because the tractor is equipped with Operator Presence Control system (OPC).

STOPPING

■Stopping

1. Slow the engine down.
2. Step on the brake pedal.
3. After the tractor has stopped, disengage the PTO, lower the implement to the ground, shift the transmission to neutral and set the parking brake.

CHECK DURING DRIVING

■Immediately Stop the Engine if:

- The engine suddenly slows down or accelerates,
- Unusual noises suddenly are heard,
- Exhaust fumes suddenly become very dark.

■Easy Checker(TM)

If the indicators in the Easy Checker(TM) come on during operation, immediately stop the engine, and find the cause as shown below.

Never operate the tractor while Easy Checker(TM) lamp is on.

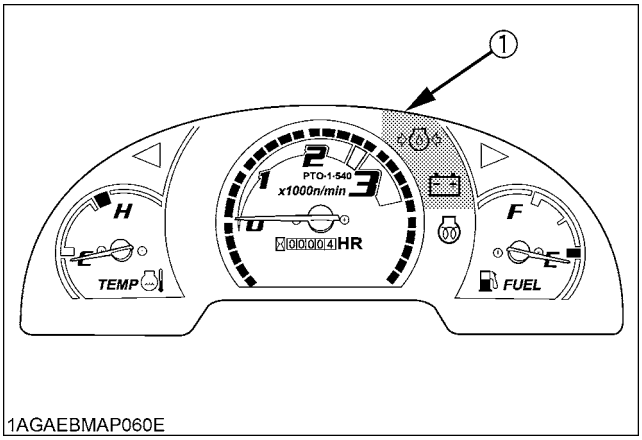

(1) Easy checker(TM)

Engine oil pressure

If the oil pressure in the engine goes below the prescribed level, the indicator in the Easy Checker(TM) will come on.

If this should happen during operation, and it does not go off when the engine is accelerated to more than 1000 rpm, check level of engine oil.

(See "Checking Engine Oil Level" in "DAILY CHECK" in "PERIODIC SERVICE OF THE TRACTOR" section.)

https://truckmanualshub.com/

Electrical charge
If the alternator is not charging the battery, the indicator in the Easy Checker(TM) will come on. If this should happen during operation, check the electrical charging system or consult your local KUBOTA Dealer.

NOTE :
- For checking and servicing of your tractor, consult your local KUBOTA Dealer for instructions.

■Fuel Gauge

When the key switch is on, the fuel gauge indicates the fuel level.
Be careful not to empty the fuel tank. Otherwise air may enter the fuel system.
Should this happen, the system should be bled (See "Bleeding Fuel System" in "PERIODIC SERVICE OF THE TRACTOR" section.)

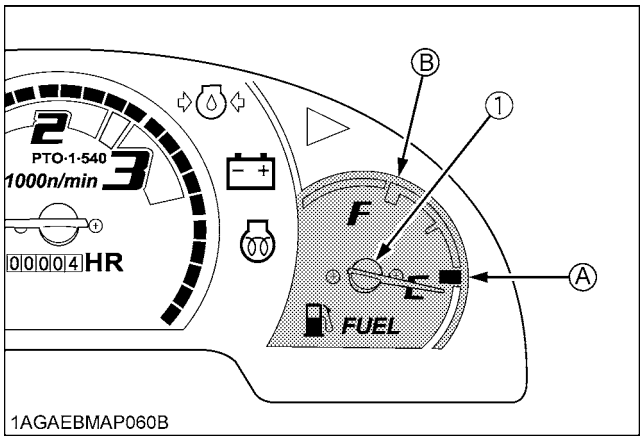

(1) Fuel gauge *(A) "EMPTY"* *(B) "FULL"*

■Coolant Temperature Gauge

CAUTION

To avoid personal injury:
- **Do not remove radiator cap until coolant temperature is well below its boiling point. Then loosen cap slightly to the stop to relieve any pressure before removing cap completely.**

1. With the key switch at "ON", this gauge indicates the temperature of the coolant. "C" for "cold" and "H" for "hot".
2. If the indicator reaches the "H" position (red zone), engine coolant is overheated. Check the tractor by referring to "TROUBLESHOOTING" section.

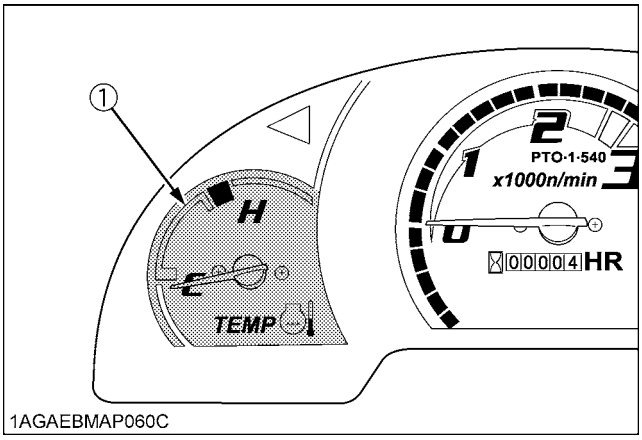

(1) Coolant temperature gauge

■Hourmeter / Tachometer

This meter gives readings for engine speed, PTO shaft speed and the hours the tractor has been operated.
1. The tachometer indicates the engine speed and the 540 PTO shaft speed location on the dial.
2. The hourmeter indicates in 5 digits the hours the tractor has been used; the last digit indicates 1/10 of an hour.

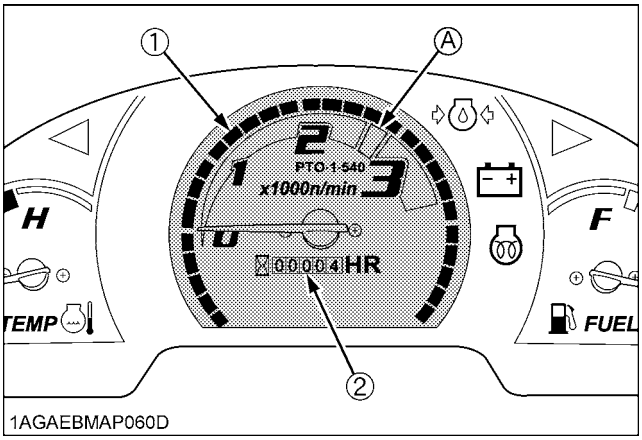

(1) Engine revolution *(A) PTO: 540 rpm*
(2) Hours used

https://truckmanualshub.com/

PARKING

■Parking

CAUTION

To avoid personal injury:

- **Always set the parking brake, stop the engine and remove the key before leaving the tractor seat.**

1. When parking, be sure to set the parking brake.
   To set the parking brake;
   (1) Interlock the brake pedals.
   (2) Depress the brake pedals.
   (3) Latch the brake pedals with the parking brake lever.

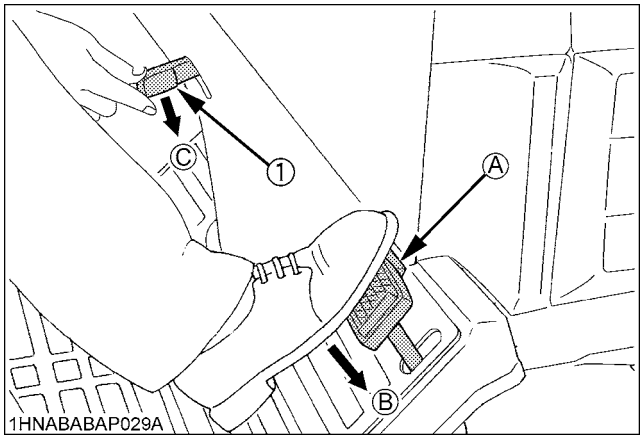

(1) Parking brake lever *(A) Interlock the brake pedals*
(B) "DEPRESS"
(C) "PUSH-DOWN"

2. Before getting off the tractor, disengage the PTO, lower all implements to the ground, place all control levers in their neutral positions, set the parking brake, stop the engine and remove the key.
3. If it is necessary to park on an incline, be sure to chock the wheels to prevent accidental rolling of the machine.

OPERATING TECHNIQUES

■Differential Lock

WARNING

To avoid personal injury or death due to loss of steering control:

- **Do not operate the tractor at high speed with differential lock engaged.**
- **Do not attempt to turn with the differential lock engaged.**
- **Be sure to release the differential lock before making a turn in field conditions.**

If one of the rear wheels should slip, step on the differential lock pedal. Both wheels will turn together, then reduce slippage.
Differential lock is engaged only while the pedal is depressed.

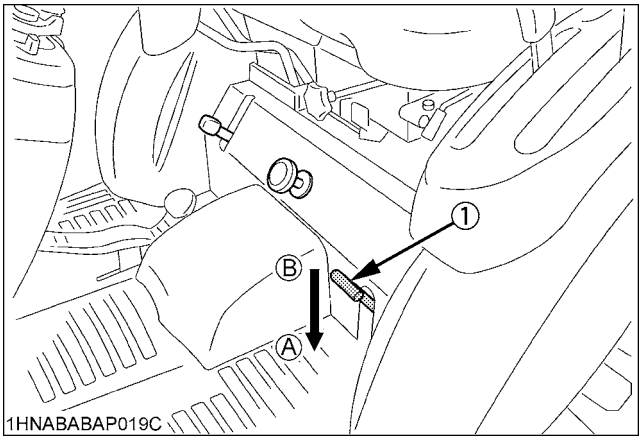

(1) Differential lock pedal *(A) Press to "ENGAGE"*
(B) Release to "DISENGAGE"

IMPORTANT :

- When using the differential lock, always slow the engine down.
- To prevent damage to power train, do not engage differential lock when one wheel is spinning and the other is completely stopped.
- If the differential lock cannot be released, step lightly on the brake pedals alternately.

https://truckmanualshub.com/

■Operating the Tractor on a Road

CAUTION

To avoid personal injury:

- **To help assure straight line stops when driving at transport speeds, interlock the brake pedals together. Uneven braking at road speeds could cause the tractor to roll-over.**
- **When traveling on road with 3-point hitch mounted implement attached, be sure to have sufficient front weight on the tractor to maintain steering ability.**
- **Towed equipment (without brake) must not exceed 1.5 times the tractor weight when traveling on roads or at high speeds.**

Be sure SMV emblem and hazard light are clean and visible. If towed or rear-mounted equipment obstructs these safety devices, install SMV emblem and hazard light on equipment.
Consult your local KUBOTA dealer for further detail.

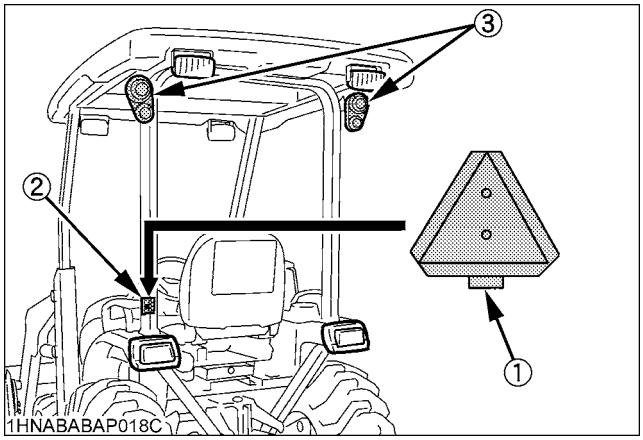

(1) SMV emblem
(2) Bracket
(3) Hazard light

■Operating on Slopes and Rough Terrain

CAUTION

To avoid personal injury:

- **Always back up when going up a steep slope. Driving forward could cause the tractor to tip over backward. Stay off hills and slopes too steep for safe operation.**
- **Avoid changing gears when climbing or descending a slope.**
- **If operating on a slope, never disengage shift levers to neutral. Doing so could cause loss of control.**
- **Do not drive the tractor close to the edges of ditches or banks which may collapse under the weight of the tractor. Especially when the ground is loose or wet.**

1. Slow down for slopes, rough ground, and sharp turns, especially when transporting heavy, rear mounted equipment.
2. Before descending a slope, be sure that the range lever is in the low so that speed can be controlled without using brakes.

■Directions for Use of Power Steering

1. Power steering is activated only while the engine is running. While the engine is stopped, the tractor functions in the same manner as tractors without power steering.
2. When the steering wheel is turned all the way to the stop, the relief valve is activated. Do not hold the steering wheel in this position for a long period of time.
3. Avoid turning the steering wheel while the tractor is stopped, or tires may wear out sooner.
4. The power steering mechanism makes the steering easier. Be careful when driving on a road at high speeds.

https://truckmanualshub.com/

REVERSING THE SEAT

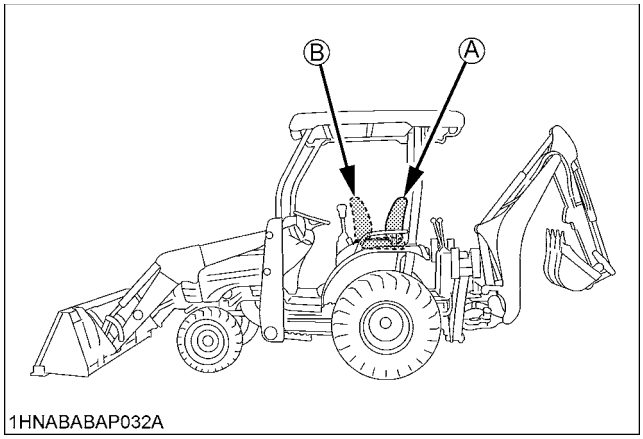

(A) "TRACTOR DRIVING POSITION"
(B) "BACKHOE POSITION"

The seat is reversible for backhoe operation. Follow the procedure below to turn the seat around.

1. Slide the seat to the rearmost position.
2. Shift the range gear shift lever out of the "L" position.
3. Unlock the seat lock lever.

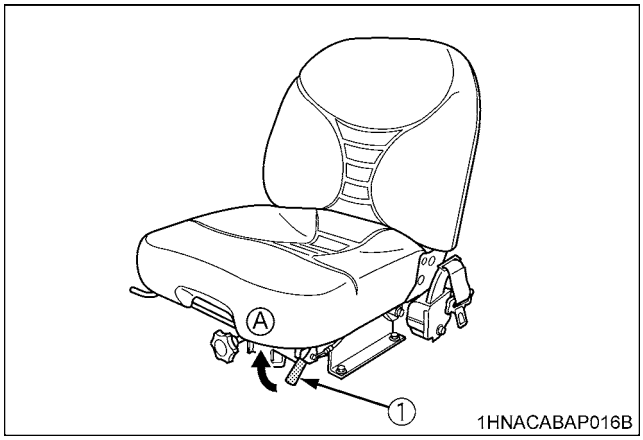

(1) Seat lock lever *(A) "UNLOCK"*

4. Turn the seat to counterclockwise for backhoe operation.
   The seat is automatically locked at the backhoe position.

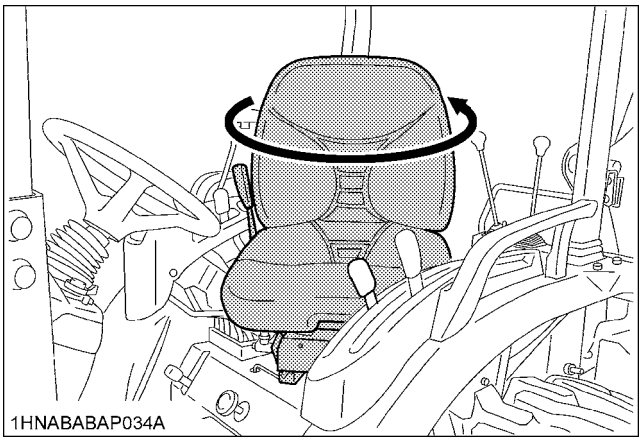

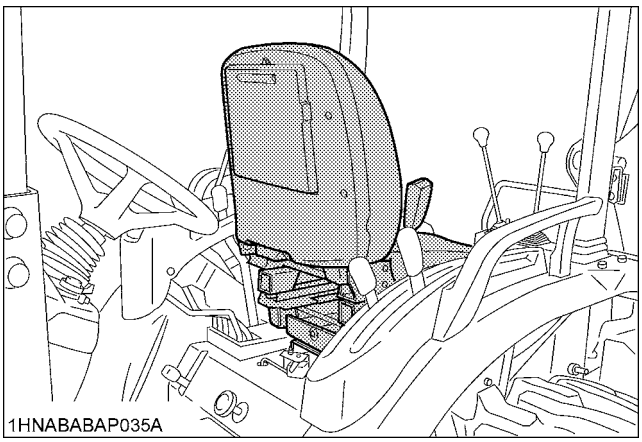

5. For tractor driving position, unlock the seat lock lever and turn the seat clockwise.

IMPORTANT :

- See "Operator's Seat" in "STARTING" when using seat in driving position.
- To prevent damage to the lock lever or to release the seat lock properly, do not attempt to pull up the lock lever with extreme force while sitting on the seat. First lift yourself from the seat, and then pull up the lock lever.

https://truckmanualshub.com/

OPERATING THE LOADER

CONTROL LEVER

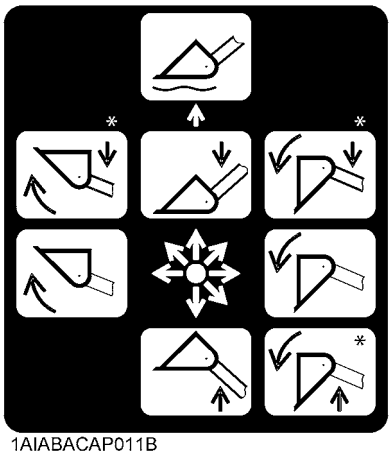

1AIABACAP011B

NOTE :
- When the lever is at each corner position marked by asterisk (*), boom and bucket cylinders work at the same time. However, the blank position (Raise & Roll back) is not recommended for scooping because of insufficient lift force.

To begin a test operation, slightly move the control lever from the "N" position. Slowly raise the loader boom just enough for the bucket to clear the ground when fully dumped. Slowly work through the dump and roll back cycles.

IMPORTANT :
- If the boom or bucket does not work in the directions indicated on the label, lower the bucket to the ground, stop the engine, and relieve all hydraulic pressure. Recheck and correct all hydraulic connections.

OPERATING THE LOADER

The loader should be operated with the tractor engine speed depending on the application and the operator's level of experience. Excessive speeds are dangerous, and may cause bucket spillage and unnecessary strain on the tractor and loader.

When operating in temperatures below -1 ℃ (30 ℉), run the tractor engine below 1200 rpm until the oil temperature exceeds -1 ℃ (30 ℉).

The following text and illustrations offer suggested loader and tractor operating techniques.

WARNING

To reduce the possibility of roll over:
- **It is not recommended that the loader be attached when operating another implement on a hillside.**

IMPORTANT :
- When operating the loader in rough terrain, remove the mower to avoid damage to the mower.

FILLING THE BUCKET

Approach and enter the pile with a level bucket.

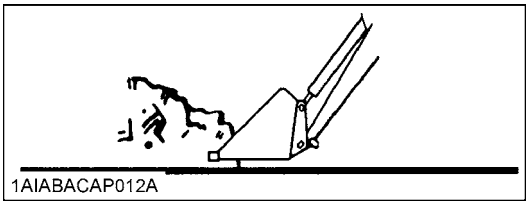
1AIABACAP012A

Ease control lever toward you and then left to rollback and lift the bucket.

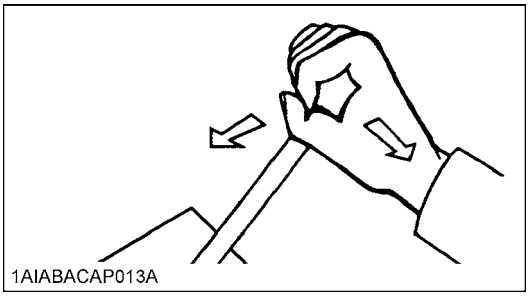
1AIABACAP013A

The rollback and lifting of the bucket will increase efficiency because a level bucket throughout the lifting cycle resists bucket lift and increases breakaway effort.

https://truckmanualshub.com/

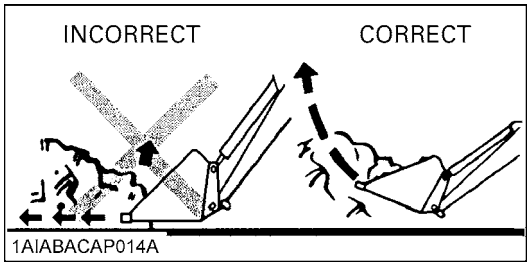

NOTE :
- Do not be concerned if the bucket is not completely filled during each pass. Maximum productivity is determined by the amount of material loaded in a given period of time. Time is lost if 2 or more attempts are made to fill the bucket on each pass.

LIFTING THE LOAD

When lifting the load, keep the bucket positioned to avoid spillage.

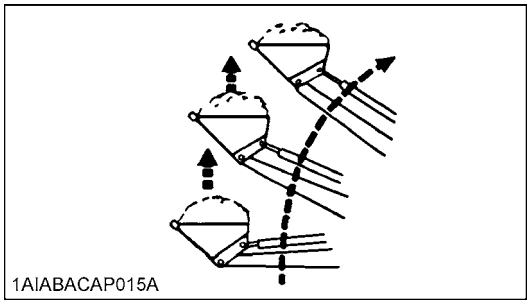

WARNING

To avoid serious personal injury:
- **Do not attempt to lift bucket loads in excess of the loader capacity.**
- **Before raising the bucket to full height, make sure the tractor is on level ground. If not, it may tip over, even if the tractor is not moving.**

CARRYING THE LOAD

Position the bucket just below the level of the tractor hood for maximum stability and visibility, whether the bucket is loaded or empty.

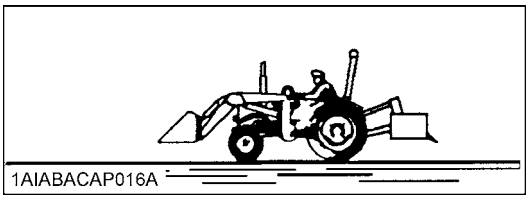

Use extreme care when operating the loader on a slope. Keep the bucket as low as possible. This keeps the bucket and tractor center of gravity low and will provide maximum tractor stability.

WARNING

To avoid serious personal injury:
- **Be extra careful when working on inclines.**
- **When operating on a slope, always operate up and down the slope, never across the slope.**

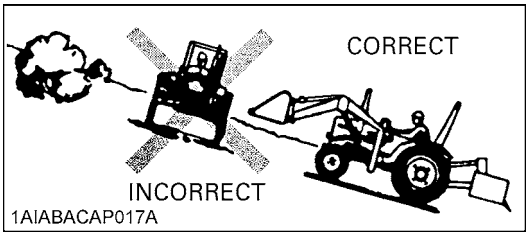

When transporting a load, keep the bucket as low as possible to avoid tipping, in case a wheel drops in a rut.

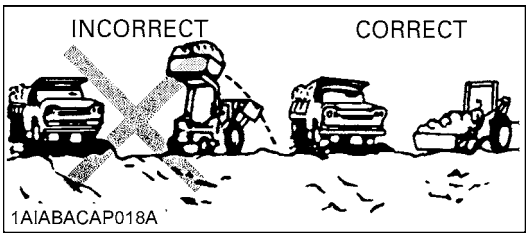

https://truckmanualshub.com/

DUMPING THE BUCKET

Lift the bucket just high enough to clear the side of the vehicle. Move the tractor in as close to the side of the vehicle as possible, then dump the bucket.

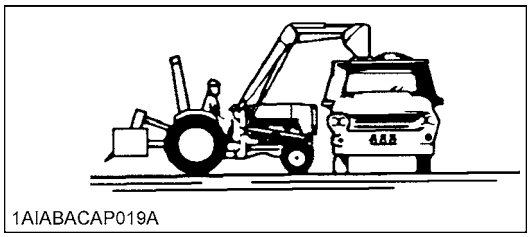

LOWERING THE BUCKET

After the bucket is dumped, back away from the vehicle while lowering and rolling back the bucket.

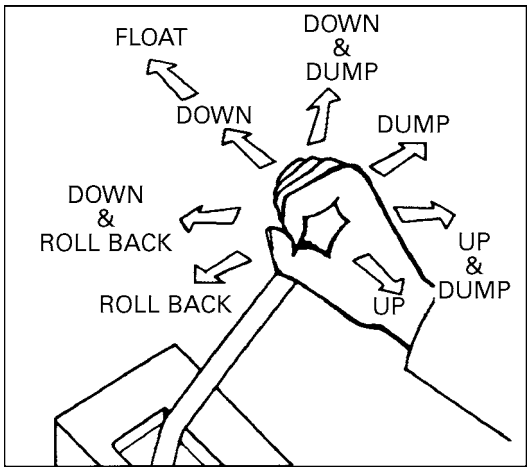

OPERATING WITH FLOAT CONTROL

During operation on hard surfaces, keep the bucket level and put the lift control in the float position to permit the bucket to float on the working surface.

If hydraulic down pressure is exerted on the bucket it will wear faster than normal.

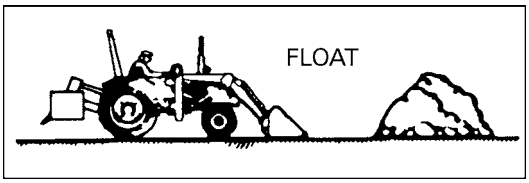

The float position will also avoid mixing of surface material with stockpile material. The float position will reduce the chance of surface gouging while removing snow or other material, or when working with a blade.

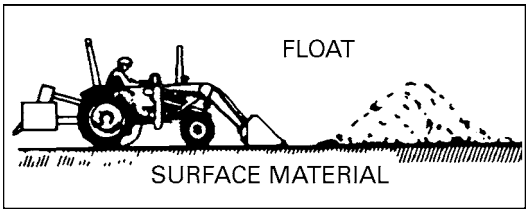

LOADING FROM A BANK

Choose a forward gear that provides a safe ground speed and power for loading.

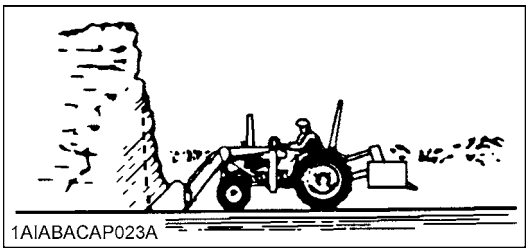

WARNING

To avoid serious personal injury:

- **Be extra careful when working on inclines.**
- **When operating on a slope, always operate up and down the slope, never across the slope.**

NOTE :

- Loader lift and break-away capacity diminish as loading height is increased.

Side cutting is a good technique for cutting down a big pile. Wheel width should not exceed the bucket width for this procedure.

https://truckmanualshub.com/

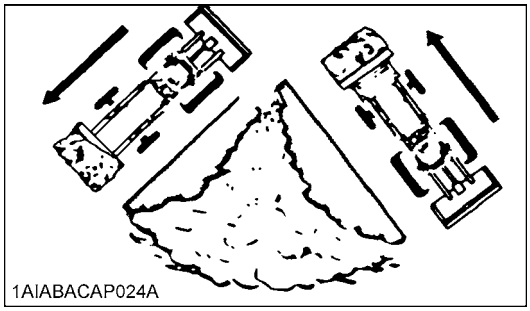
1AIABACAP024A

If the pile sides are too high and liable to cause cave-in, use the loader to break down the sides until a slot can be cut over the top.

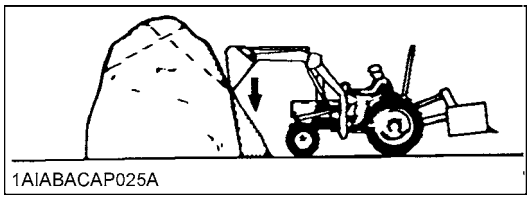
1AIABACAP025A

Another method for large dirt piles is to build a ramp to approach the pile.

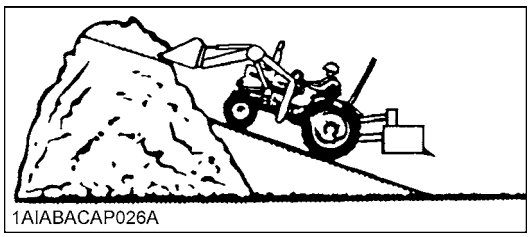
1AIABACAP026A

It is important to keep the bucket level when approaching a bank or pile. This will help avoid gouging the work area.

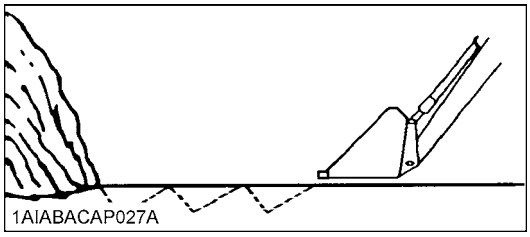
1AIABACAP027A

PEELING AND SCRAPING

Use a slight bucket down angle, travel forward, and hold the lift control forward to start the cut. Make a short cut and break-out cleanly.

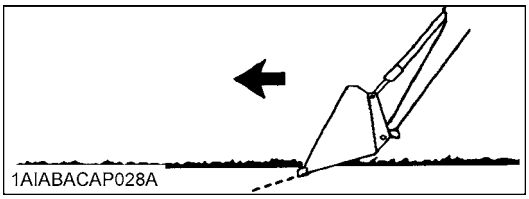
1AIABACAP028A

With the bucket level, start a cut at the notch approximately 2 in. deep. Hold the depth by feathering the bucket control to adjust the cutting edge up or down. When the front tires enter the notch, adjust the boom cylinder to maintain proper depth.

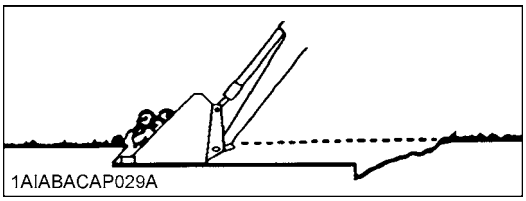
1AIABACAP029A

Make additional passes until the desired depth is reached. During each pass, use only the bucket control while at working depth. This will allow you to concentrate on controlling the bucket angle to maintain a precise cut.

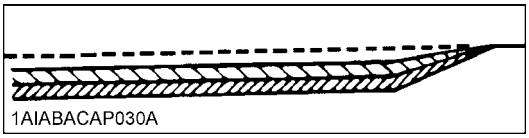
1AIABACAP030A

https://truckmanualshub.com/

LOADING LOW TRUCKS OR SPREADERS FROM A PILE

For faster loading, minimize the angle of turn and length of run between pile and spreader.

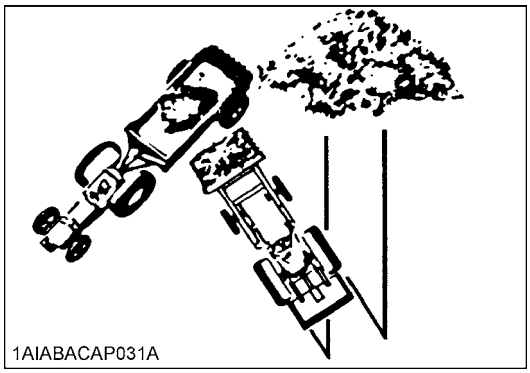

Backgrade occasionally with a loaded bucket to keep the work surface free of ruts and holes. Also, hold the lift control forward so the full weight of the bucket is scraping the ground. Use the heel of the bucket

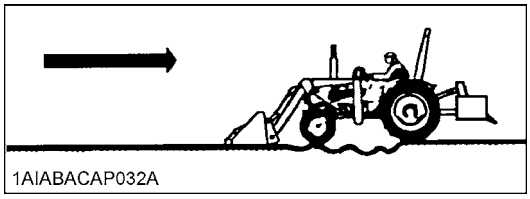

BACKFILLING

Approach the pile with the bucket flat.

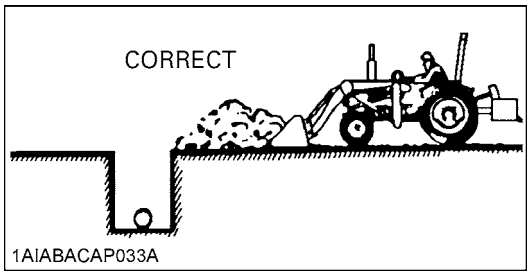

Poor operating methods will move less dirt and make it more difficult to hold a level grade.

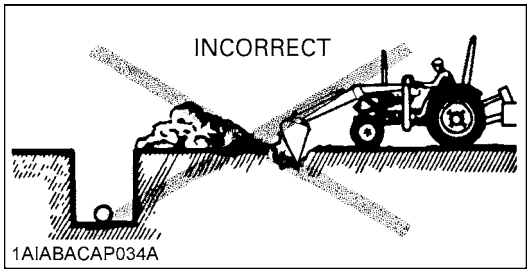

IMPORTANT :

- Do not use the bucket in the dumped position for bulldozing. As shown above, this method will impose severe shock loads on the dump-linkage, the bucket cylinders, and the tractor.

Leave dirt in the bucket because dumping on each pass wastes time.

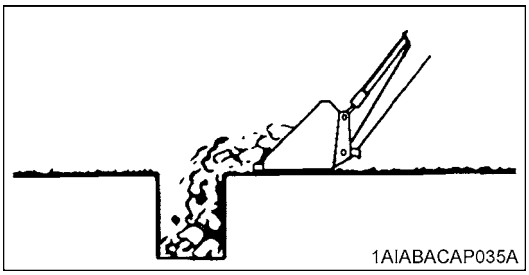

Operate at right angles to the ditch. Taking as big a bite as the tractor can handle.

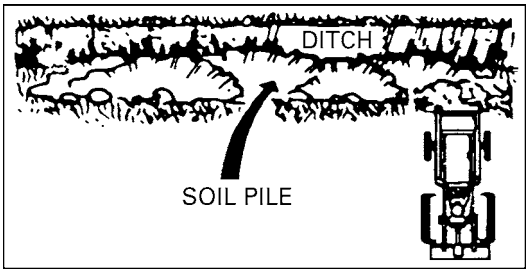

Leave dirt which drifts over the side of the bucket for final cleanup.

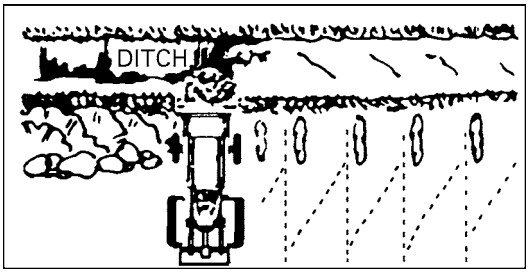

Pile dirt on the high side for easier backfilling on a slope.

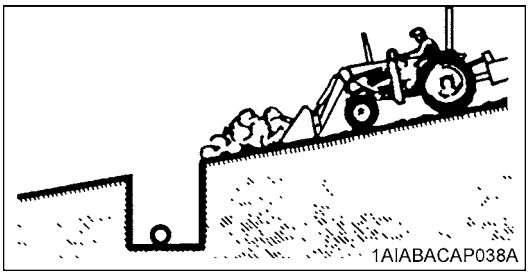

https://truckmanualshub.com/

HANDLING LARGE HEAVY OBJECTS

DANGER

To avoid serious personal injury or death:

- **Handling large, heavy objects can be dangerous due to :**
  (A)Danger of rolling the tractor over.
  (B)Danger of upending the tractor.
  (C)Danger of the object rolling or sliding down the loader boom onto the operator.
- **If you must perform the above work, protect yourself by :**
  (A)Not lifting the load higher than necessary to clear the ground when moving.
  (B)Adding rear ballast to the tractor to compensate for the load.
  (C)Not lifting large objects with equipment that does not have an anti-rollback device.
  (D)Moving slowly and carefully.
  (E)Avoiding rough terrain.
  (F)Keeping transport distance as short as possible and carry the load as low as possible during transport.

VALVE LOCK

WARNING

To avoid injury from crushing:

- **Do not utilize the valve lock for machine maintenance or repair.**
- **The valve lock is to prevent accidental actuation when implement is not in use or during transport.**

The control valve is equipped with a valve lock feature. The control valve is locked in the neutral position.
The lock is not intended and will not prevent a leak down of the implement during the period of storage.

■Standard valve

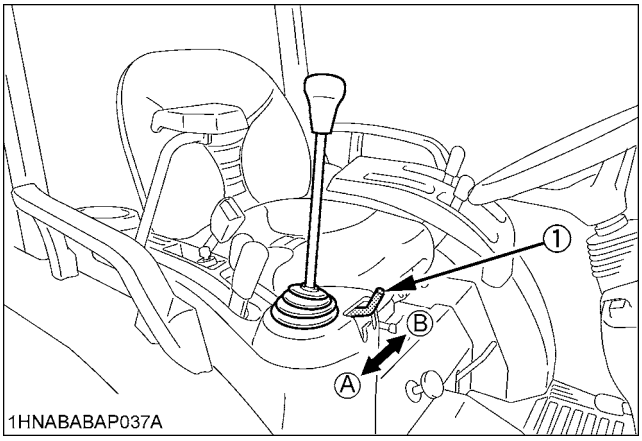

(1) Lock lever
(A) "LOCK"
(B) "UNLOCK"

BUCKET LEVEL INDICATOR

Depending on the front attachment, loosen the indicator rod lock bolt and readjust the indicator rod length.

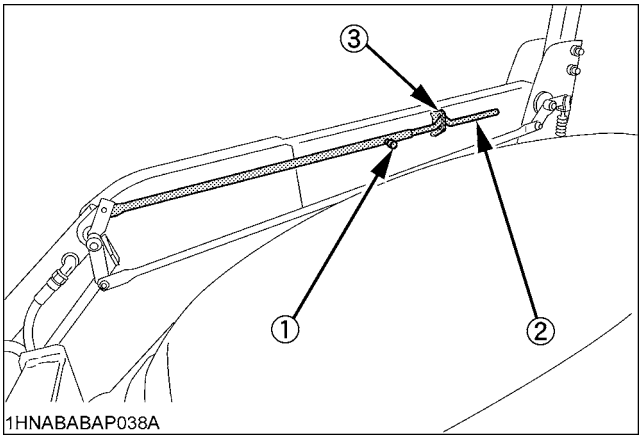

(1) Bolt
(2) Indicator rod
(3) Guide, Indicator rod

https://truckmanualshub.com/

ATTACHING ATTACHMENTS

This quick attach coupler is designed to be used with Kubota attachments. Non-Kubota attachments, if used, must comply with ISO 24410, first edition 2005-04-15. This quick attach coupler allows the operator to change easily without the use of tools.

DANGER

To avoid serious personal injury or death:

- **Use of a non-Kubota attachment that does not comply with ISO24410 or the improper positioning of handle(s) or non-protrusion of pin(s) may result in detachment of the attachment or deformation, causing loss of performance, personal injury or death.**

NOTE :

- Attachments should be located on a flat, firm surface when attaching and detaching them from the quick attach coupler.

1. To mount an attachment, pull the handles of the quick attach coupler latching pins to the unlatched position. The quick attach coupler handles must be all the way up to ensure that the latching pins are fully retracted.
2. Position the tractor squarely in front of the attachment and tilt the quick attach coupler forward with the bucket cylinders.

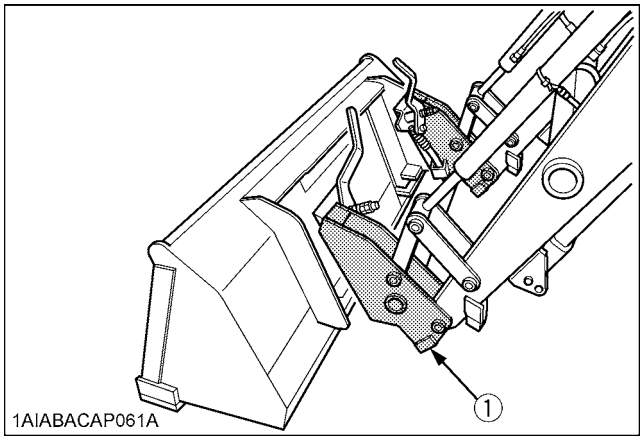

(1) Quick attach coupler

3. Ease the quick attach coupler mounting plate into the saddle of the attachment.
4. Roll the quick attach coupler back using the bucket cylinders and raise the boom slightly. The back of the attachment should rest against the front of the quick attach coupler mounting plate and the weight of the attachment should be supported by the loader.

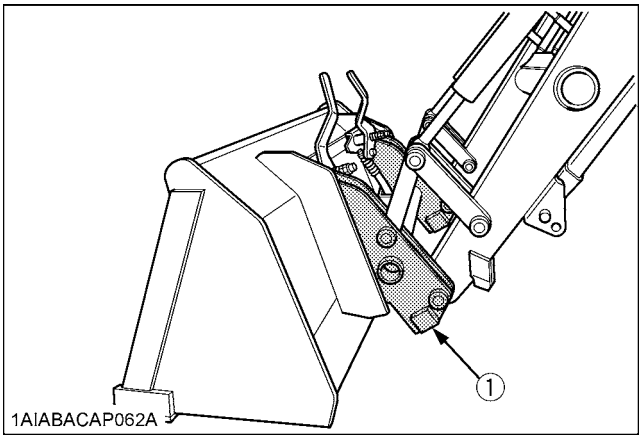

(1) Quick attach coupler

WARNING

To avoid serious injury or machine damage:

- **Raise the boom only enough to latch the attachment.**
  The attachment could swing off the quick attach coupler.

5. When the attachment is properly seated in the saddle and against the front of the quick attach coupler mounting plate, turn off the engine and set the parking brake. Push the quick attach coupler handles to the fully latched position. Verify both latching pins are completely engaged in the base of the attachment.

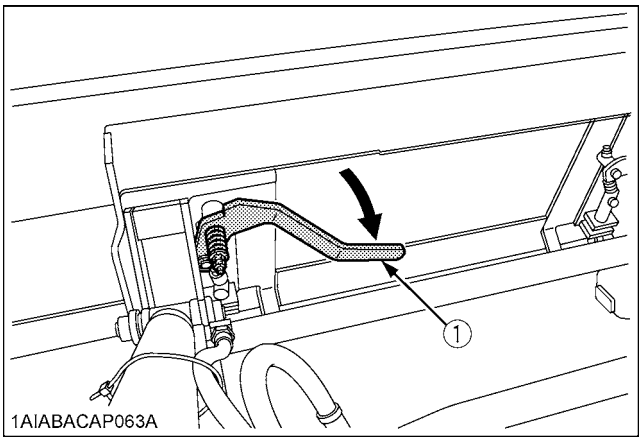

(1) Quick attach coupler handle

https://truckmanualshub.com/

DANGER

To avoid serious personal injury or death:

- **The following engagement points are critical.**
  1) **The lock pins of the quick attach coupler have to protrude into and through the pin slots of the attachment on both sides. It is critical that the pins are in good condition and without visible signs of wear or damage and that the operator align the loader quick attach coupler with the attachment to allow the pins to go through the pin slots.**
  2) **Both handles have to be pushed down until the handles contact the ear plates near the points where the pin bolt goes through the handle (A).**
  3) **Do not operate the tractor or attachment unless all of the above conditions are met.**

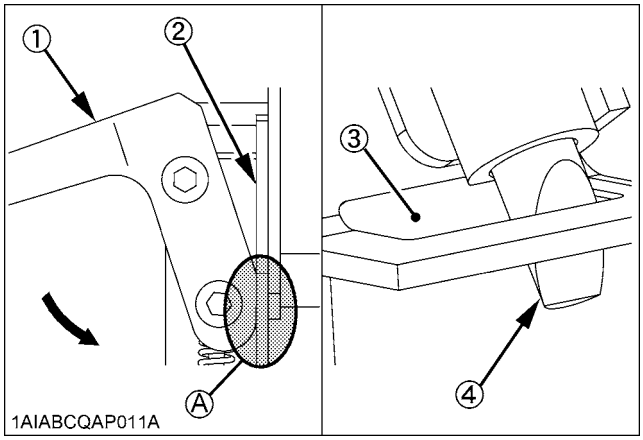

(1) Handle
(2) Ear plate
(3) Pin slot
(4) Lock pin
(A) The handle contacts the ear plate at the points.

6. Visually verify when pushing the quick attach coupler handles into locked position that the latch pins rotate completely and are located underneath the stop of the quick attach coupler.

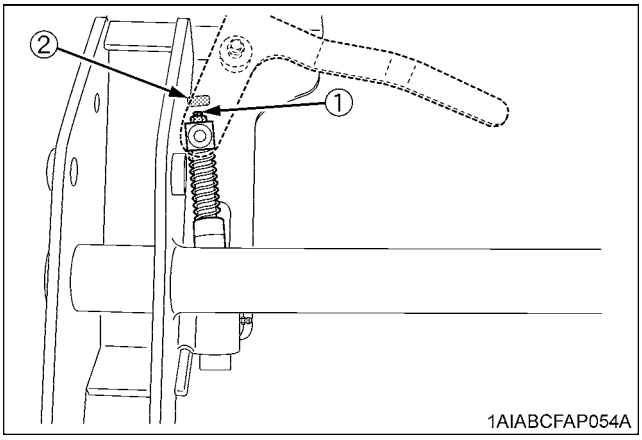

(1) Latch pins
(2) Quick attach coupler stopper

7. When attaching different attachments visually inspect for broken or damaged pins. If broken or damaged pins are found, replace before using. Use of broken pins may result in attachment detachment or deformation, causing loss of performance, personal injury or death.
8. You are now ready to use the attached attachment. All compatible attachments attach and detach using the same method.

WARNING

To avoid serious injury or machine damage:

- **Never operate or transport attachments which are not attached completely.**
- **Always replace damaged hardware immediately.**

DETACHING ATTACHMENTS

1. Detaching attachments is done in the reverse of attaching attachments. The procedure is below.
2. Lower the attachment to ground level with the attachment slightly in the rolled back position. Stop the engine and set the parking brake.
3. Pull the quick attach coupler handles to the unlatched position to release the latching pins.
4. While sitting in the tractor operator's seat, start the engine and slowly move the loader control lever to the "DUMP" position until the attachment is pushed away slightly from the quick attach coupler.
5. Lower the loader boom so that the quick attach coupler mounting plate clears the attachment saddle.
6. Back away from the attachment slowly.
7. If an attachment is not going to be attached to the quick attach coupler immediately, push the handles of the quick attach coupler to the locked position to prevent damage to the handle assembly.

https://truckmanualshub.com/

PTO

PTO OPERATION

WARNING

To avoid personal injury or death:

- **Disengage PTO, stop engine, and allow all rotating components to come to a complete stop before connecting, disconnecting, adjusting, or cleaning any PTO driven equipment.**

■PTO Clutch Lever

1. The PTO clutch lever engages or disengages the PTO clutch which gives the PTO independent control.
2. Shift the lever to "ON" to engage the PTO clutch. Shift the lever to "OFF" to disengage the PTO clutch.

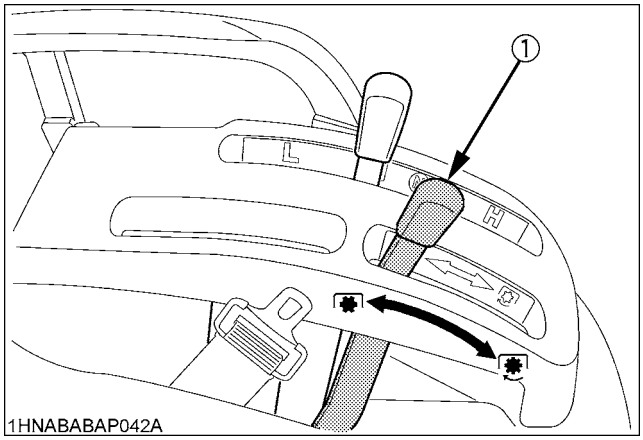

(1) PTO clutch lever

"ON" "ENGAGE"
"OFF" "DISENGAGE"

IMPORTANT :

- To avoid shock loads to the PTO, reduce engine throttle from full to half speed by pushing up on engine throttle when engaging the PTO, then re-engage the engine to full.
- To avoid damage to PTO clutch and implement, shift the PTO clutch lever slowly, when engaging the PTO clutch. Do not keep the PTO clutch lever half way.

NOTE :

- Tractor engine will not start if the PTO clutch lever is in the engaged "ON" position.
- When you stand up from the seat with the PTO clutch lever at "ON" position, the engine will stop regardless of the position of the PTO select lever.
  This is because the tractor is equipped with Operator Presence Control system (OPC).

■Stationary PTO

To park the tractor and use the PTO system (for chipper or pump, for example), start the PTO system in the following steps.

1. Apply the parking brakes and place blocks at the tires.
2. Make sure the main gear shift levers are in "NEUTRAL", and start the engine.
3. Set the PTO clutch lever to engage "ON".
4. Set the engine speed to provide recommended rear PTO speed.
5. Slide the seat to the rearmost position.
6. Shift the range gear shift lever out of the "L" position.
7. Unlock the seat lock lever.
8. Turn the seat counterclockwise. (for backhoe operation)
9. Dismount the seat.

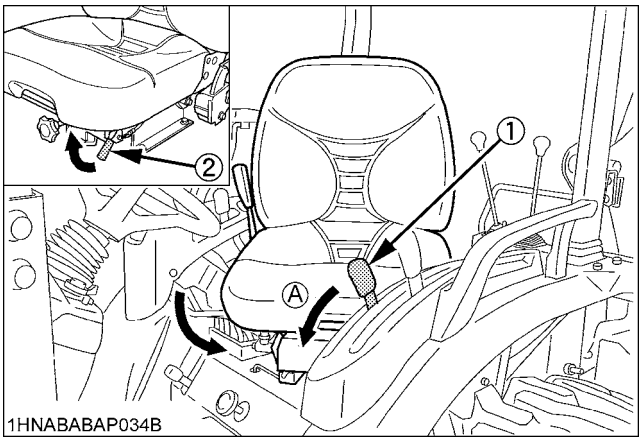

(1) PTO clutch lever
(2) Seat lock lever
(A) "ON"

NOTE :

- If the PTO system is engaged and you stand up from the seat before you turn the seat counterclockwise, the engine stops automatically after standing up.

https://truckmanualshub.com/

■PTO shaft Cover and Shaft Cap

Keep the PTO shaft cover in place at all times. Replace the PTO shaft cap when the PTO is not in use. Before connecting or disconnecting a drive shaft to PTO shaft, be sure engine is "OFF" and raise up the PTO shaft cover. Afterward be sure to return the PTO shaft cover to the "NORMAL POSITION".

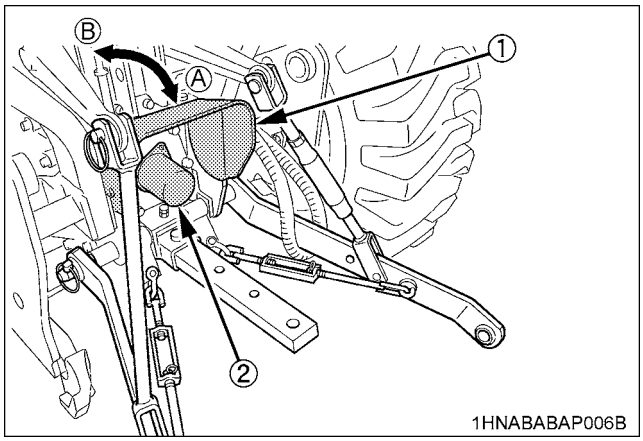

(1) PTO shaft cover
(2) PTO shaft cap
(A) "NORMAL POSITION"
(B) "RAISED POSITION"

https://truckmanualshub.com/

3-POINT HITCH & DRAWBAR

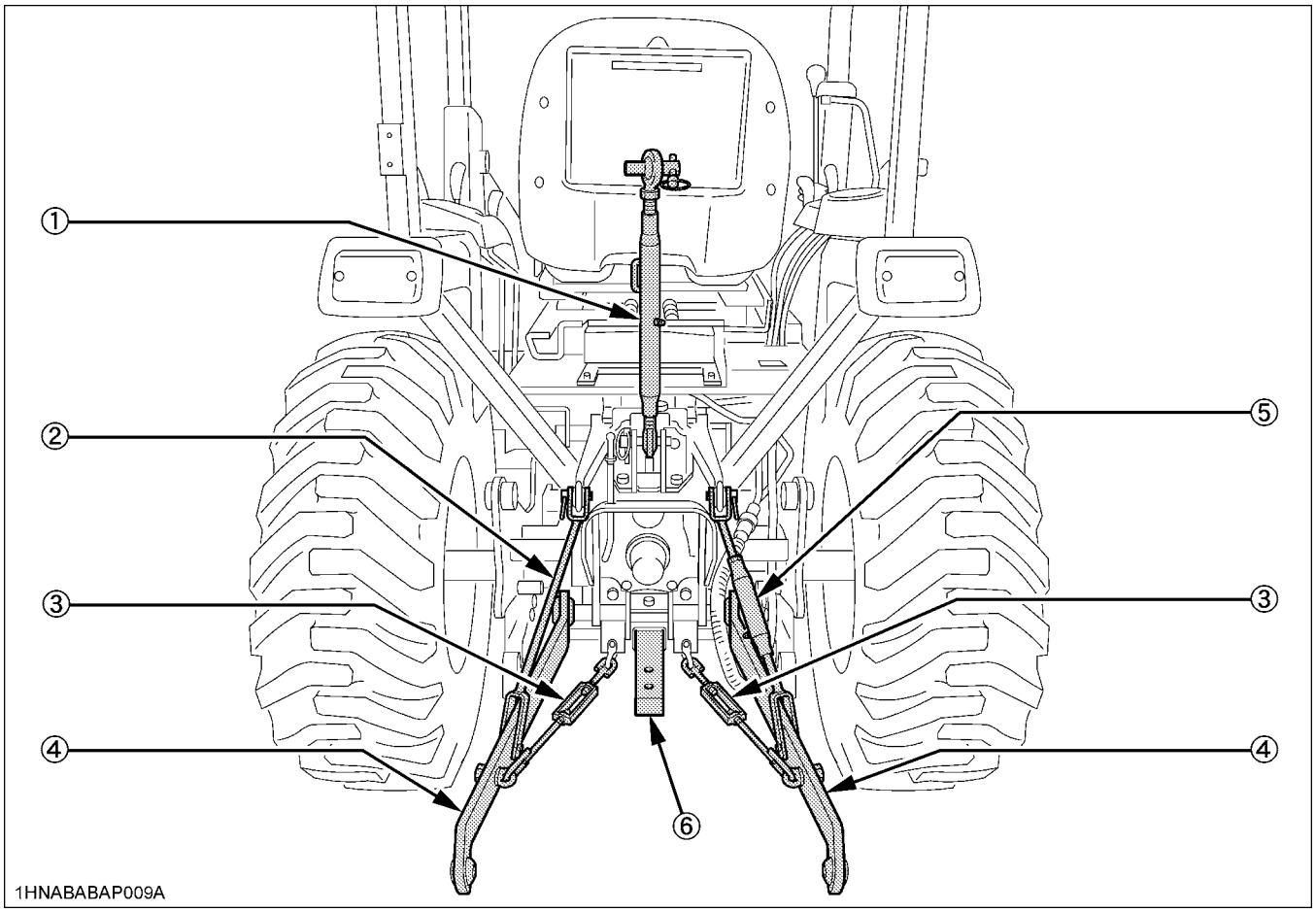

(1) Top link
(2) Lifting rod (Left)
(3) Check chains
(4) Lower link
(5) Lifting rod (Right)
(6) Drawbar

NOTE :
- The 3-point hitch (1 to 5) and drawbar (6) are option.

https://truckmanualshub.com/

3-POINT HITCH (OPTION)

1. Make preparations for attaching implement.

■Installing the Lower Link

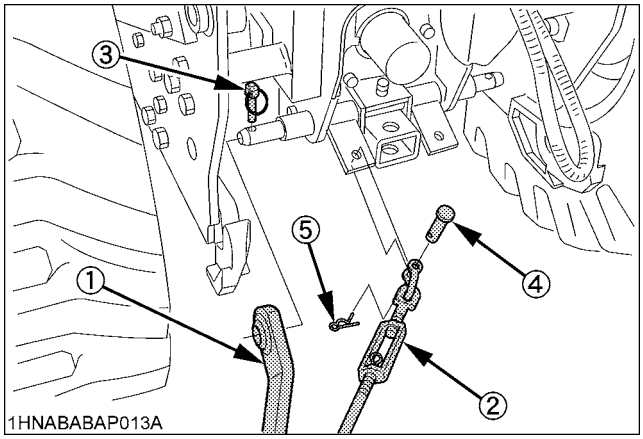

(1) Lower link
(2) Check chains
(3) Lynch pin
(4) Clevis pin
(5) Snap pin

■Selecting the Holes of Lifting Rods and Lower Links

There are 2 holes in the lower links. For most operations the lifting rods should be attached to the (A) holes.

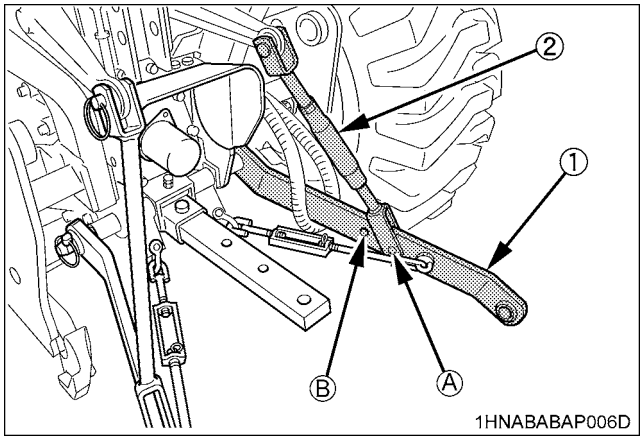

(1) Lower links *Holes: (A),(B)*
(2) Lifting rods

NOTE :
- The lifting rods may be attached to (B) hole for higher lifting height. (with reduced lifting force)
- Attach the lower links as shown above.

■Selecting the Top Link Mounting Holes

Select the proper set of holes by referring to the "Hydraulic Control Unit Use Reference Chart" in "HYDRAULIC UNIT" section.

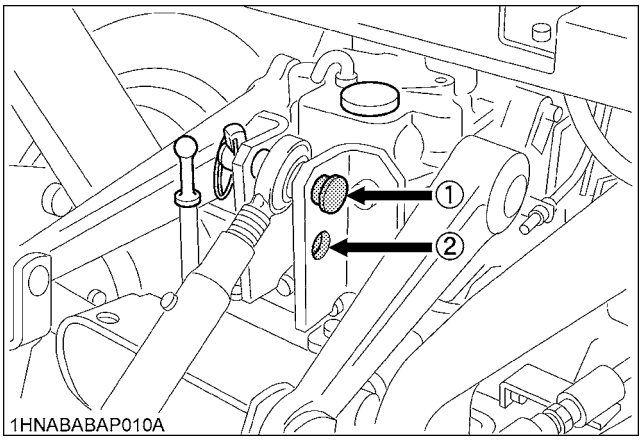

(1) Standard position
(2) Except standard position
(When standard position can not be used)

■Drawbar (option)

Remove the drawbar if close mounted implement is being attached.

https://truckmanualshub.com/

2. Attaching and detaching implements

CAUTION

To avoid personal injury:

- **Be sure to stop the engine and remove the key.**
- **Do not stand between tractor and implement unless parking brake is applied.**
- **Before attaching or detaching implement, locate the tractor and implement on a firm, flat and level surface.**
- **Whenever an implement or other attachment is connected to the tractor 3-point hitch, check full range of operation for interference, binding or PTO driveline separation.**

■Lifting Rod (Right)

Level a 3-point mounted implement from side to side by turning the adjusting turnbuckle to shorten or lengthen the adjustable lifting rod with the implement on the ground.
After adjustment, tighten the lock nut securely.

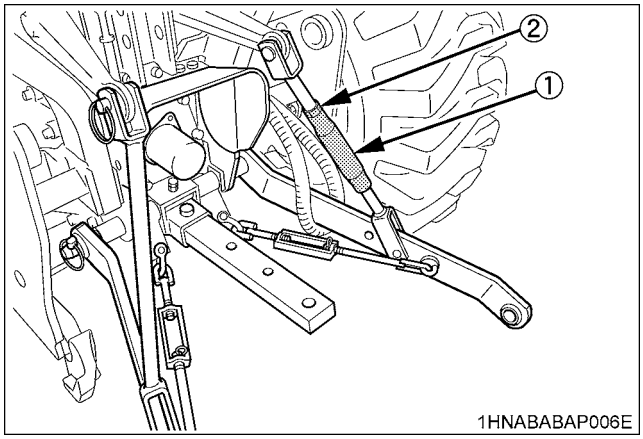

(1) Adjusting turnbuckle
(2) Lock nut

■Top Link

1. Adjust the angle of the implement to the desired position by shortening or lengthening the top link.
2. The proper length of the top link varies according to the type of implement being used.

■Check Chains

Remove the snap pin and adjust the turnbuckle to control horizontal sway of the implement.
After adjustment, re-set snap pin.

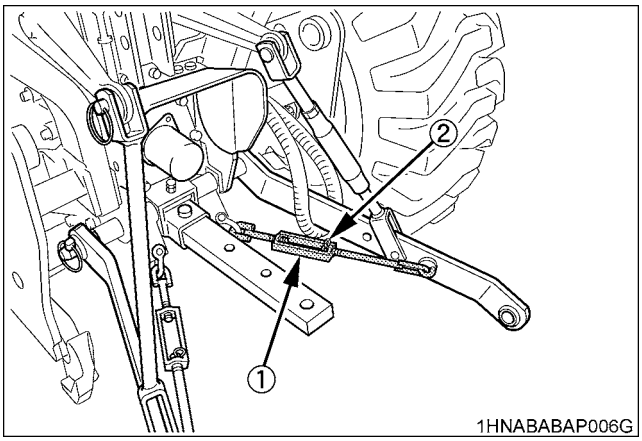

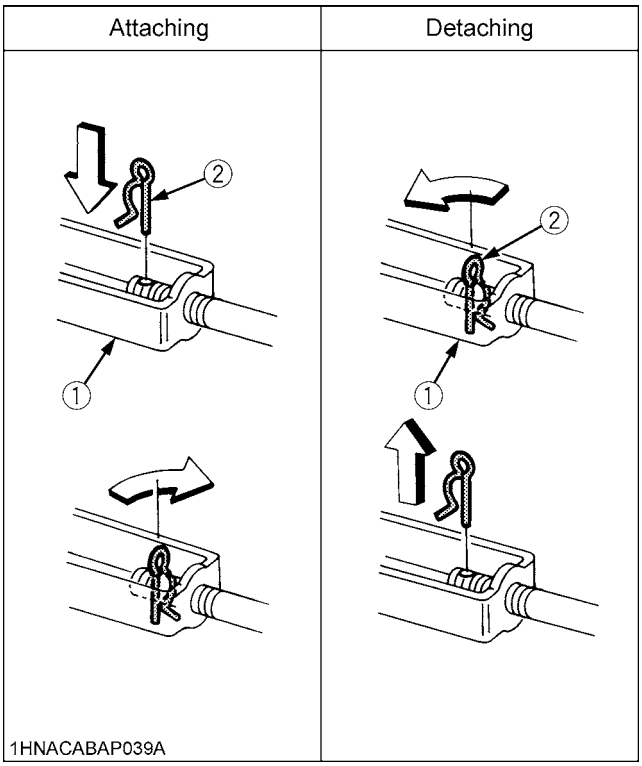

(1) Turnbuckle
(2) Snap pin

https://truckmanualshub.com/

DRAWBAR (OPTION)

WARNING

To avoid personal injury or death:

- **Never pull from the top link, the rear axle or any point above the drawbar. Doing so could cause the tractor to tip over rearward causing personal injury or death.**

■Adjusting Drawbar Length

When towing an implement, use of (B) hole in drawbar is recommended.

The acceptable drawbar load is provided in the "IMPLEMENT LIMITATIONS" section.

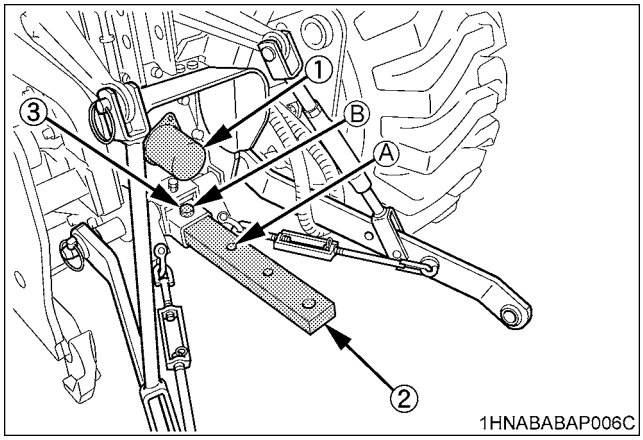

(1) Rear-PTO shaft
(2) Drawbar
(3) Drawbar pin

Holes: (A), (B)

STORING THE 3-POINT HITCH

When installing the backhoe, remove the 3-point hitch and store it in the location indicated below.

◆ **Right Side**

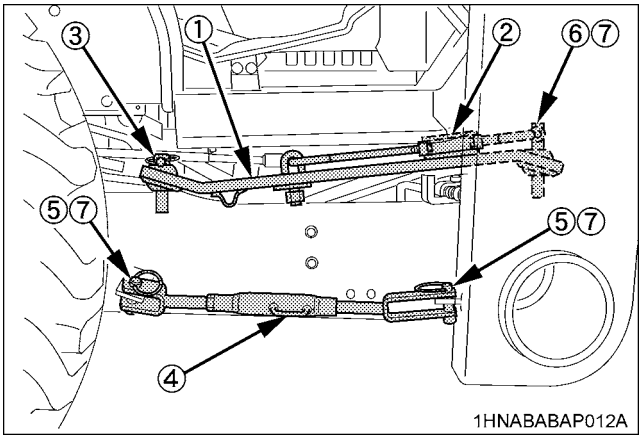

(1) Lower link
(2) Check chain
(3) Lynch pin
(4) Lifting rod (right)
(5) Snap ring
(6) Snap pin
(7) Clevis pin

◆ **Left Side**

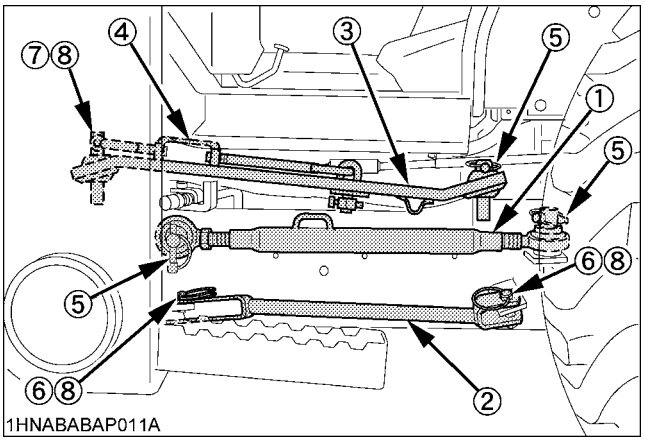

(1) Top link
(2) Lifting rod (left)
(3) Lower link
(4) Check chain
(5) Lynch pin
(6) Snap ring
(7) Snap pin
(8) Clevis pin

https://truckmanualshub.com/

◆ Top Link Pin

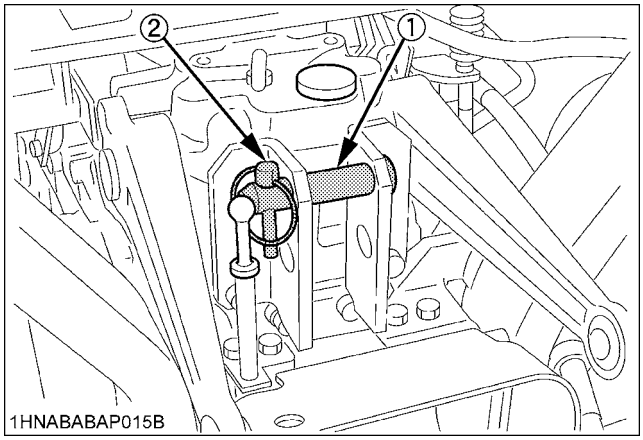

(1) Top link pin
(2) Lynch pin

◆ Lower Link Pin

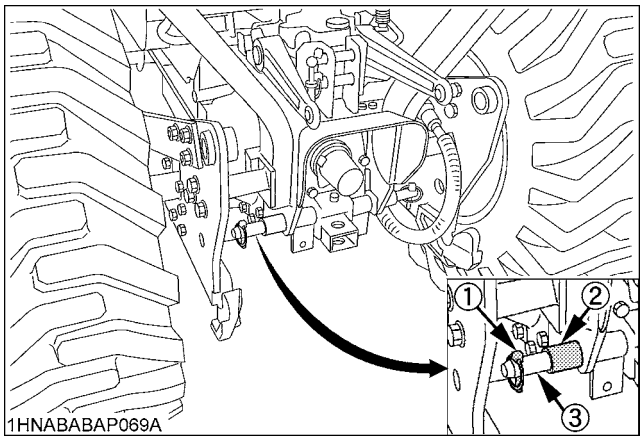

(1) Lynch pin
(2) Collar
(3) Lower link pin

https://truckmanualshub.com/

HYDRAULIC UNIT

3-POINT HITCH CONTROL SYSTEM

■Position Control

This will control the working depth of 3-point hitch mounted implement regardless of the amount of pull required.

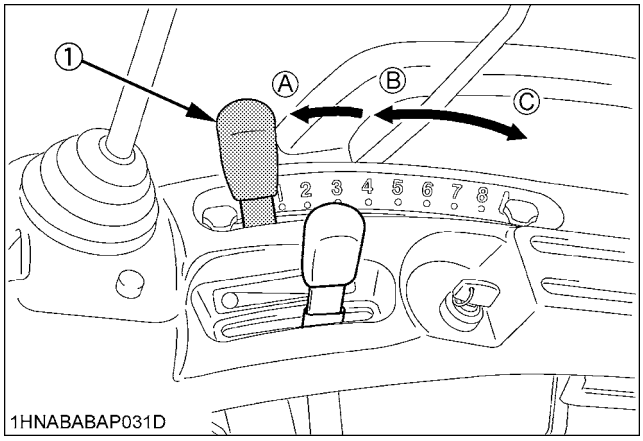

(1) Position control lever
(A) "FLOAT"
(B) "DOWN"
(C) "UP"

IMPORTANT :

- If the 3-point hitch can not be raised by setting the hydraulic control lever to the UP position after long term storage or when changing the transmission oil, turn steering wheel to the right and left several times to bleed air from the system.
- Do not operate until the engine is warmed up. If operation is attempted when the engine is still cold, the hydraulic system may be damaged.
- If noises are heard when implement is lifting after the hydraulic control lever has been activated, the hydraulic mechanism is not adjusted properly. Unless corrected, the unit will be damaged. Contact your KUBOTA Dealer for adjustment.

■3-point Hitch Lowering Speed

CAUTION

To avoid personal injury:

- **Fast lowering speed may cause damage or injury. Lowering speed of implement should be adjusted to 2 or more seconds.**

The lowering speed of the 3-point hitch can be controlled by adjusting the 3-point hitch lowering speed knob.

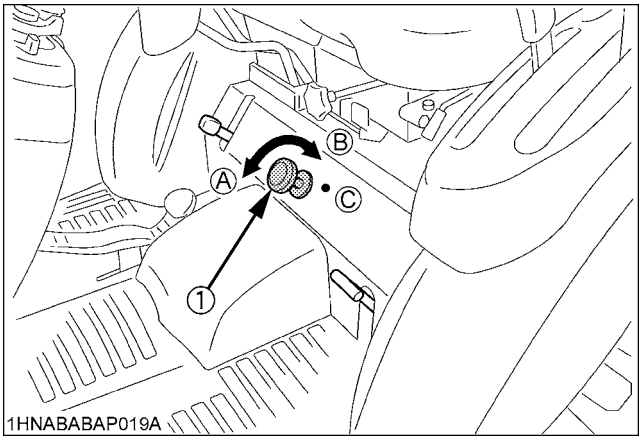

(1) 3-Point hitch lowering speed knob
(A) "FAST"
(B) "SLOW"
(C) "LOCK"

https://truckmanualshub.com/

REAR REMOTE HYDRAULIC CONTROL SYSTEM (if equipped)

IMPORTANT :
- This system can not be used with BT820 backhoe. (See "OPERATION" in "PRE-OPERATING INSTRUCTIONS" section of BT820 operator's manual.)

■Remote Control Valve Coupler Connecting and Disconnecting

CAUTION

To avoid personal injury:
- **Stop the engine and relieve pressure before connecting or disconnecting lines.**
- **Do not use your hand to check for leaks.**

◆ **Connecting**
1. Clean both couplers.
2. Remove dust plugs.
3. Insert the implement coupler to the tractor hydraulic coupler.
4. Pull the implement coupler slightly to make sure couplers are firmly connected.

◆ **Disconnecting**
1. Lower the implement first to the ground to release hydraulic pressure in the hoses.
2. Clean the couplers.
3. Relieve pressure by moving hydraulic control levers with engine shut off. Pull the hose straight from the hydraulic coupler to release it.
4. Clean oil and dust from the coupler, then replace the dust plugs.

NOTE :
- Your local KUBOTA Dealer can supply parts to adapt couplers to hydraulic hoses.

■Remote Control Valve Lever

Move the lever up or down and hold. This will raise or lower the implement. Lever will return to neutral when released.

IMPORTANT :
- Do not hold the lever in the "pull" or "push" position once the remote cylinder has reached the end of the stroke, as this will cause oil to flow through the relief valve. Forcing oil through the relief valve for extended periods will overheat the oil.
- When using the tractor hydraulic system to power front loader, do not operate boom and bucket cylinders simultaneously.

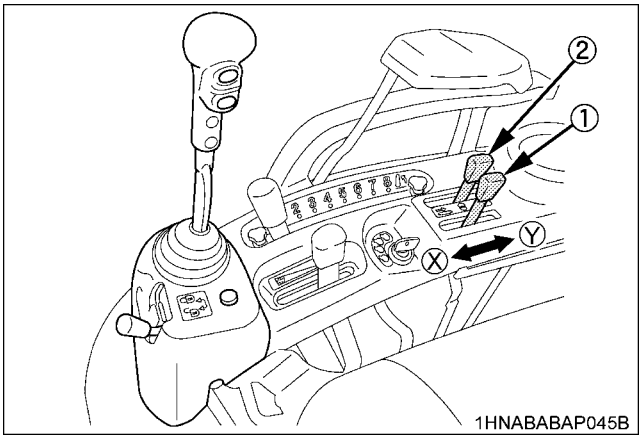

(1)(2) Remote control valve lever
(X) "PUSH"
(Y) "PULL"

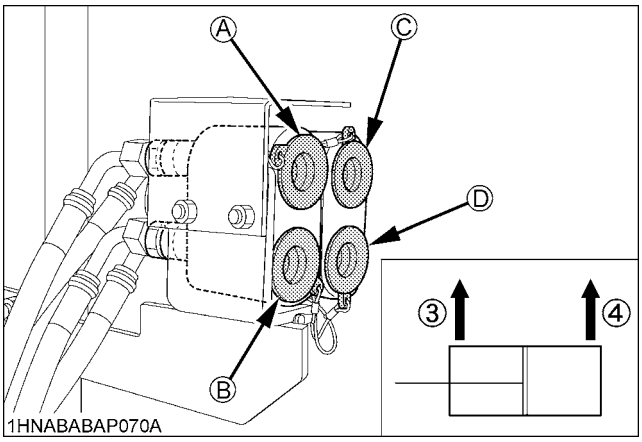

(3) Connect to port (A), (C)
(4) Connect to port (B), (D)

Pressure →
Returning ←

Lever (1)		Push		Pull	
Port	(A)	In	←	Out	→
	(B)	Out	→	In	←
Lever (2)		Push		Pull	
Port	(C)	In	←	Out	→
	(D)	Out	→	In	←

■Remote Control Valve

There is 1 type of remote valve available for this model.
- Double acting valve

https://truckmanualshub.com/

FRONT REMOTE HYDRAULIC CONTROL SYSTEM (if equipped)

This system can be used for a front mounted hydraulic implement, as it provides hydraulic oil to the front outlet directly.

■Install the Coupler

1. Remove the cap from the front hydraulic outlet.
2. Install the hydraulic quick coupler as required.

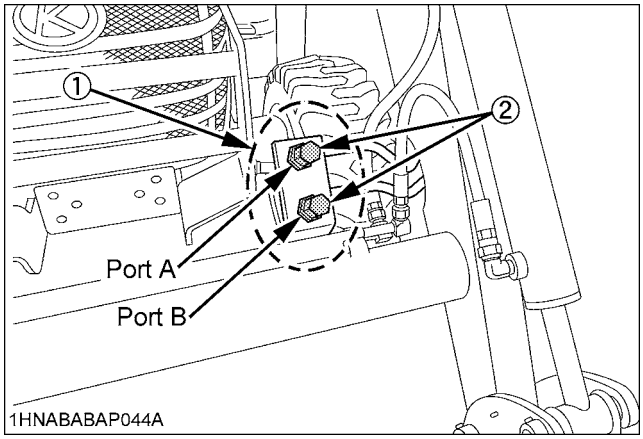

(1) Front hydraulic outlet
(2) Hydraulic quick coupler

■Control Switch

1. Front hydraulic valve main switch
   Push the front hydraulic valve main switch (1) to engage the front hydraulic valve.
   A light on the switch will illuminate to indicate that the front hydraulic valve is on, and to enable the activation switch (2).
2. Activation switch
   (1) When pressing the "A" button, hydraulic oil will come out of Port A and return through Port B as long as the switch is pressed.
   (2) When pressing the "B" button hydraulic oil will come out of Port B and return through Port A as long as the switch is pressed.
3. Push the front hydraulic valve main switch again to disengage the front hydraulic valve, and the light of the front hydraulic valve main switch will turn off.

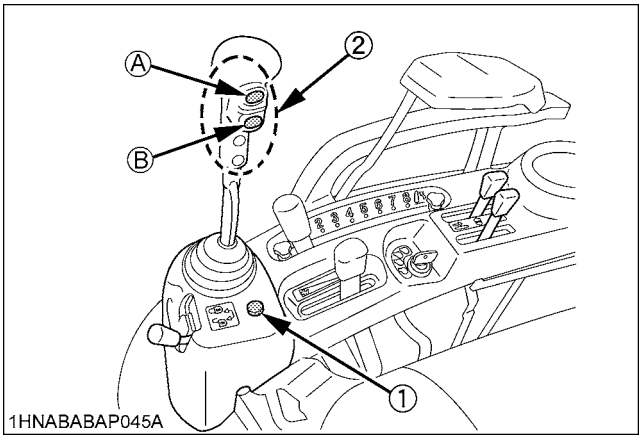

(1) Front hydraulic valve main switch
(2) Activation switch

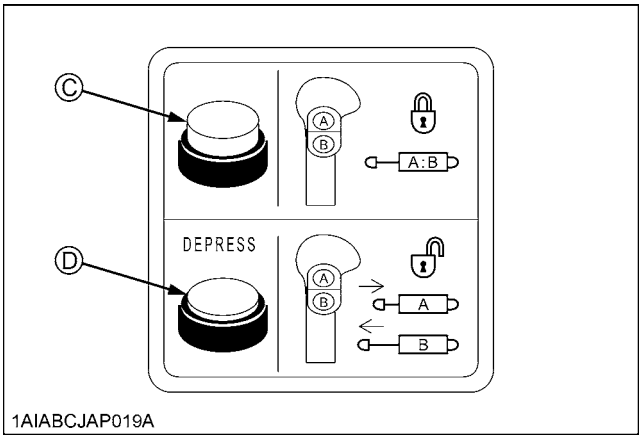

(C) Front hydraulic valve main switch "OFF"
(D) Front hydraulic valve main switch "ON"

CAUTION

To avoid personal injury:

- **Valve lock does not lock out switch operated third-function hydraulics, which are active when the key switch and the front hydraulic valve main switch are ON.**

https://truckmanualshub.com/

■Remote Control Coupler Connecting and Disconnecting

CAUTION

To avoid personal injury:

- **Stop the engine and relieve pressure before connecting or disconnecting lines.**
- **Do not use your hand to check for leaks.**

◆ Relieve Hydraulic Pressure

1. Move the key switch to the "RUN" position.

NOTE :

- Don't start the engine.

2. Push the front hydraulic valve main switch "ON".
3. Press the activation switch A and B several times.
4. Push the front hydraulic valve main switch "OFF".
5. Turn the key switch to the "OFF" position.

◆ **Connecting**

1. Clean both couplers.
2. Remove dust plugs.
3. Insert the implement coupler to the tractor hydraulic coupler.
4. Pull the implement coupler slightly to make sure couplers are firmly connected.

◆ **Disconnecting**

1. Lower the implement first to the ground to release hydraulic pressure in the hoses.
2. Clean the couplers.
3. Relieve hydraulic pressure.
   Pull the hose straight from the hydraulic coupler to release it.
4. Clean oil and dust from the coupler, and then replace the dust plugs.

NOTE :

- Your local KUBOTA Dealer can supply parts to adapt couplers to hydraulic hoses.

https://truckmanualshub.com/

■Hydraulic Control Unit Use Reference Chart

In order to handle the hydraulics properly, the operator must be familiar with the following. Though this information may not be applicable to all types of implements and soil conditions, it is useful for general conditions.

Implement	1AGAIAZAP122A Soil condition	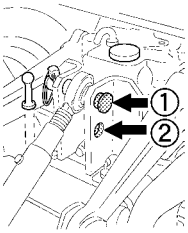 1HNABABAP010C Top link mounting holes	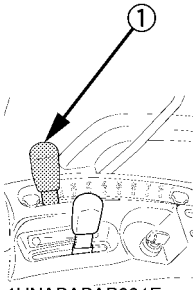 1HNABABAP031E (1) Position control lever	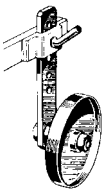 1AGAIAZAP070A Gauge wheel	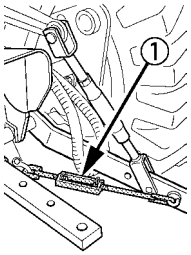 1HNABABAP006F (1) Check chains	Remarks
Moldboard plow	Light soil Medium soil Heavy soil	(1) is standard. (2) is used only when there is some obstacle that prevents you from using the standard.	Position control	YES/NO	Loose	Adjust the check chains so that the implement can move 5 to 6 cm (2.0 to 2.4 in.) laterally. Check chains should be tight enough to prevent excessive implement movement when implement is in raised position.
Disc plow	---					
Harrower (spike, springtooth, disc type)	---					
Sub-soiler						
Weeder, ridger	---			YES	Tighten	For implements with gauge wheels, lower the position control lever all the way.
Earthmover, digger, scraper, manure fork, rear carrier				YES/NO		
Mower (mid-and rear-mount type), hayrake, tedder...						

https://truckmanualshub.com/

TIRES, WHEELS AND BALLAST

TIRES

WARNING

To avoid personal injury or death:

- **Do not attempt to mount a tire on a rim. This should be done by a qualified person with the proper equipment.**
- **Always maintain the correct tire pressure. Do not inflate tires above the recommended pressure shown in the operator's manual.**

IMPORTANT :

- Do not use tires other than those approved by KUBOTA.

■Inflation Pressure

Though the tire pressure is factory-set to the prescribed level, it naturally drops slowly in the course of time. Thus, check it everyday and inflate as necessary.

	Tire sizes	Inflation Pressure
Rear	12.4-16 Ind, 4PR	138 kPa (1.4 kgf/cm^2, 20 psi)
	13.6-16, 4PR	100 kPa (1.0 kgf/cm^2, 14 psi)
	12.4-16, 4PR	110 kPa (1.1 kgf/cm^2, 16 psi)
Front	23 x 8.50-14 Ind, 4PR	241 kPa (2.5 kgf/cm^2, 35 psi)
	24 x 8.50-14, 4PR	150 kPa (1.5 kgf/cm^2, 22 psi)

NOTE :

- Maintain the maximum recommended pressure in the front tires, when using a front loader or when equipped with a full load of front weights.

■Dual Tires

Dual tires are not approved.

WHEEL ADJUSTMENT

CAUTION

To avoid personal injury:

- **When working on slopes or when working with trailer, set the wheel tread as wide as practical for maximum stability.**
- **Support tractor securely on stands before removing a wheel.**
- **Do not work under any hydraulically supported devices. They can settle, suddenly leak down, or be accidentally lowered. If necessary to work under tractor or any machine elements for servicing or adjustment, securely support them with stands or suitable blocking beforehand.**
- **Never operate tractor with a loose rim, wheel, or axle.**

■Front Wheels

Front tread width can not be adjusted.

IMPORTANT :

- Do not turn front discs to obtain wider tread.
  In setting up the front wheels, make sure that the inflation valve stem of the tires face outward.

■Rear Wheels

Rear tread width can not be adjusted.

https://truckmanualshub.com/

■Treads

Front	23x8.50-14 Ind.	24x8.50-14 Turf	-----
	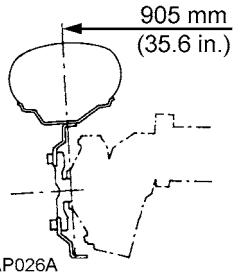 1AGAEBMAP026A	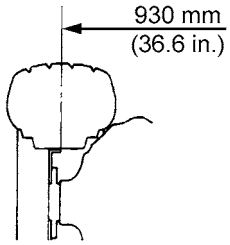 1AGAEBMAP025A	-----
Rear	12.4-16 Ind.	13.6-16 Turf	12.4-16 Farm
	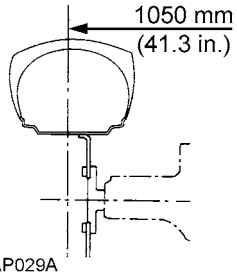 1AGAEBMAP029A	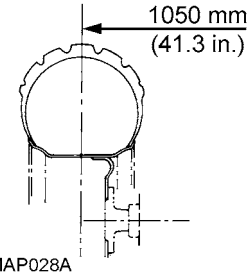 1AGAEBMAP028A	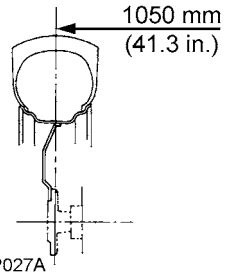 1AGAEBMAP027A

https://truckmanualshub.com/

BALLAST

WARNING

To avoid personal injury or death:

- **Additional ballast will be needed for transporting heavy implements. When the implement is raised, drive slowly over rough ground, regardless of how much ballast is used.**
- **Do not fill the front wheels with liquid to maintain steering control.**

■Front Ballast

Heavy pulling and heavy rear mounted implements tend to lift front wheels. Therefore do not remove the loader from the tractor at all times to maintain steering control and prevent tip over.

■Rear Ballast

Add weight to rear wheels if needed to improve traction or for stability. The amount of rear ballast should be matched to job and the ballast should be removed when it is not needed.

The weight should be added to the tractor in the form of liquid ballast.

- When the BT820 backhoe is installed to the tractor, rear ballast should be removed.

◆ Liquid Ballast in Rear Tires

Water and calcium chloride solution provides a safe economical ballast. Used properly, it will not damage tires, tubes or rims. The addition of calcium chloride is recommended to prevent the water from freezing. Use of this method of weighting the wheels has the full approval of the tire companies. See your tire dealer for this service.

Liquid weight per tire (75 Percent filled)

Tire sizes	12.4 - 16
Slush free at -10 ℃ (14 ℉) Solid at -30 ℃ (-22 ℉) [Approx. 1 kg (2 lbs.) $CaCl_2$ per 4 L (1 gal) of water]	85 kg (187 lbs.)
Slush free at -24 ℃ (-11 ℉) Solid at -47 ℃ (-52 ℉) [Approx. 1.5 kg (3.5 lbs.) $CaCl_2$ per 4 L (1 gal) of water]	89 kg (196 lbs.)
Slush free at -47 ℃ (-52 ℉) Solid at -52 ℃ (-62 ℉) [Approx. 2.25 kg (5 lbs.) $CaCl_2$ per 4 L (1 gal) of water]	94 kg (207 lbs.)

IMPORTANT :

- Do not fill tires with water or solution more than 75% of full capacity (to the valve stem level).

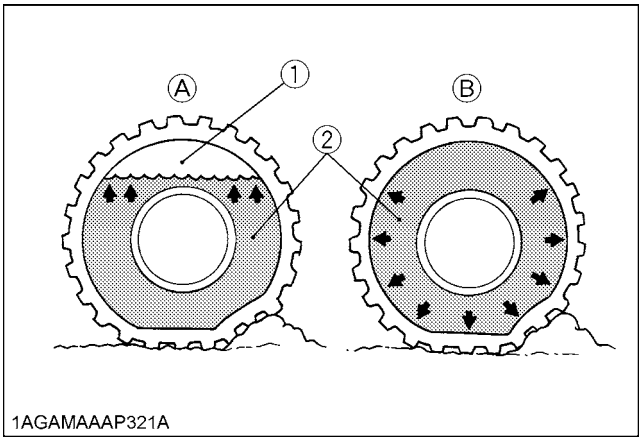

(1) Air *(A) Correct-75% Air compresses like a cushion*
(2) Water *(B) Incorrect-100% Full Water can not be compressed*

https://truckmanualshub.com/

MAINTENANCE OF THE TRACTOR

SERVICE INTERVALS

No.	Items		Indication on hour meter														Since then	Ref page		
			50	100	150	200	250	300	350	400	450	500	550	600	650	700				
1	Greasing	-	○	○	○	○	○	○	○	○	○	○	○	○	○	○	every 50 Hr	60		
2	Engine start system	Check	○	○	○	○	○	○	○	○	○	○	○	○	○	○	every 50 Hr	61		
3	Wheel bolt torque	Check	○	○	○	○	○	○	○	○	○	○	○	○	○	○	every 50 Hr	62		
4	Main frame bolt torque	Check	○	○	○	○	○	○	○	○	○	○	○	○	○	○	every 50 Hr	62		
5	Air cleaner element [Double element type] Primary element	Clean		○		○		○		○		○		○		○	every 100 Hr	63	*1	@
		Replace															every 1 year	72	*2	
	Air cleaner element [Double element type] Secondary element	Replace															every 1 year	72		
6	Fuel filter element	Clean		○		○		○		○		○		○		○	every 100 Hr	63		@
		Replace								○							every 400 Hr	71		
7	Fan belt	Adjust		○		○		○		○		○		○		○	every 100 Hr	64		
8	Fuel line	Check		○		○		○		○		○		○		○	every 100 Hr	64		@
		Replace															every 2 year	74	*3	
9	Brake	Adjust		○		○		○		○		○		○		○	every 100 Hr	65		
10	Battery condition	Check		○		○		○		○		○		○		○	every 100 Hr	65	*5	
11	Spark arrester	Clean		○		○		○		○		○		○		○	every 100 Hr	66		
12	Engine oil	Change	◎			○				○				○			every 200 Hr	67		
13	Engine oil filter	Replace	◎			○				○				○			every 200 Hr	67		
14	HST oil filter	Replace	◎			○				○				○			every 200 Hr	68		
15	Radiator hose and clamp	Check				○				○				○			every 200 Hr	68		
		Replace															every 2 year	74		
16	Intake air line	Check				○				○				○			every 200 Hr	68		@
		Replace															every 2 year	74	*3	

https://truckmanualshub.com/

No.	Items		Indication on hour meter														Since then	Ref page		
			50	100	150	200	250	300	350	400	450	500	550	600	650	700				
17	Toe-in	Adjust				○				○				○			every 200 Hr	69		
18	Power steering oil line	Check				○				○				○			every 200 Hr	69		
		Replace															every 2 year	74		
19	Transmission fluid	Change								○							every 400 Hr	70		
20	Hydraulic oil filter	Replace								○							every 400 Hr	70		
21	Front axle case oil	Change								○							every 400 Hr	71		
22	Front axle pivot	Adjust								○							every 400 Hr	72		
23	Engine valve clearance	Adjust															every 800 Hr	72	*4	
24	Fuel injection nozzle Injection pressure	Check															every 1500 Hr	72	*4	@
25	Injection pump	Check															every 3000 Hr	72	*4	@
26	Cooling system	Flush															every 2 year	72		
27	Coolant	Change															every 2 year	72		
28	Fuel system	Bleed															Service as required	74		
29	Clutch housing water	Drain																74		
30	Fuse	Replace																75		
31	Light bulb	Replace																75		

IMPORTANT :

- The jobs indicated by ◎ must be done after the first 50 hours of operation.
  *1 Air cleaner should be cleaned more often in severe dusty conditions.
  *2 Every year or every 6 times of cleaning.
  *3 Replace only if necessary.
  *4 Consult your local KUBOTA Dealer for this service.
  *5 When the battery is used for less than 100 hours per year, check the fluid level annually.
- The items listed above (@ marked) are registered as emission related critical parts by KUBOTA in the U.S.EPA nonroad emission regulation. As the engine owner, you are responsible for the performance of the required maintenance on the engine according to the above instruction.
  Please see the Warranty Statement in detail.

https://truckmanualshub.com/

LUBRICANTS, FUEL AND COOLANT

No.	Locations	Capacities	Lubricants	
		B26TL		
1	Fuel	31 L (8.1 U.S.gals.)	No. 2-D diesel fuel No. 1-D diesel fuel if temperature is below -10 ℃(14℉)	
2	Coolant (with recovery tank)	4.5 L (4.7 U.S.qts.)	Fresh clean soft water with anti-freeze	
3	Engine crankcase	3.0 L (3.2 U.S.qts.)	● Engine oil : API Service Classification CF or better	
			Above 25℃(77℉)	SAE30, SAE10W-30 or 15W-40
			-10 to 25℃ (14 to 77℉)	SAE20, SAE10W-30 or 15W-40
			Below -10℃(14℉)	SAE10W-30
4	Transmission case (with oil tank)	26 L (6.9 U.S.gals.)	● KUBOTA SUPER UDT-2 fluid	
5	Front axle case	4.7 L (5.0 U.S.qts.)	● KUBOTA SUPER UDT-2 fluid or SAE80 - SAE90 gear oil	
6	Greasing	No. of greasing points	Capacity	Type of grease
	● Top link	1	Until grease overflows.	Multipurpose Grease NLGI-2 OR NLGI-1 (GC-LB)
	● Lift rod [RH]	1		
	● Speed control pedal	1		
	● Battery terminals	2	moderate amount	
	● Suspension adjuster	---		
	● Lock plate	---		
	● Spring hook	---		
	● Reversible seat	---		

NOTE :

The product name of KUBOTA genuine UDT fluid may be different from that in the Operator's Manual depending on countries or territories. Consult your local KUBOTA Dealer for further details.

https://truckmanualshub.com/

For North American market

NOTE :

◆ **Engine Oil:**

- Oil used in the engine should have an American Petroleum Institute (API) service classification and Proper SAE Engine Oil according to the ambient temperatures as shown above:

- Refer to the following table for the suitable API classification engine oil according to the engine type (with internal EGR, external EGR or non-EGR) and the fuel.

Fuel used	Engine oil classification (API classification)	
	Oil class of engines except external EGR	Oil class of engines with external EGR
Ultra Low Sulfur Fuel [<0.0015% (15 ppm)]	**CF, CF-4, CG-4, CH-4** or **CI-4**	**CF** or **CI-4** (Class CF-4, CG-4 and CH-4 engine oils cannot be used on EGR type engines)

EGR: Exhaust Gas Re-circulation

- The CJ-4 engine oil is intended for DPF (Diesel Particulate Filter) type engines, and cannot be used on this tractor.

	except external EGR	with external EGR
Model	B26TL	---

◆ **Fuel:**

- Cetane number of 45 is minimum. Cetane number greater than 50 is preferred, especially for temperatures below -20℃ (-4℉) or elevations above 1500 m (5000 ft).
- Diesel fuels specified to EN 590 or ASTM D975 are recommended.
- No.2-D is a distillate fuel of lower volatility for engines in industrial and heavy mobile service. (SAE J313 JUN87)

◆ **Transmission Oil:**

*KUBOTA Super UDT-2: For an enhanced ownership experience, we highly recommend Super UDT-2 to be used instead of standard hydraulic/transmission fluid.
Super UDT-2 is a proprietary KUBOTA formulation that delivers superior performance and protection in all operating conditions.
Regular UDT is also permitted for use in this machine.

- Indicated capacities of water and oil are manufacturer's estimate.

https://truckmanualshub.com/

For other than North American market

NOTE :

◆ **Engine Oil:**

- Oil used in the engine should have an American Petroleum Institute (API) service classification and Proper SAE Engine Oil according to the ambient temperatures as shown above:
- With the emission control now in effect, the CF-4 and CG-4 lubricating oils have been developed for use of a low-sulfur fuel on on-road vehicle engines. When an off-road vehicle engine runs on a high-sulfur fuel, it is advisable to employ the "CF or better" lubricating oil with a high Total Base Number (TBN of 10 minimum).

- Refer to the following table for the suitable API classification engine oil according to the engine type (with internal EGR, external EGR or non-EGR) and the fuel (low-sulfur or high-sulfur fuel).

Fuel used	Engine oil classification (API classification)	
	Oil class of engines except external EGR	Oil class of engines with external EGR
High Sulfur Fuel [≧ 0.05% (500 ppm)]	**CF** (If the "CF-4, CG-4, CH-4 or CI-4" lubricating oil is used with a high-sulfur fuel, change the lubricating oil at shorter intervals. (approximately half))	---
Low Sulfur Fuel [<0.05% (500 ppm)] or Ultra Low Sulfur Fuel [<0.0015% (15 ppm)]	**CF, CF-4, CG-4, CH-4** or **CI-4**	**CF** or **CI-4** (Class CF-4, CG-4 and CH-4 engine oils cannot be used on EGR type engines)

EGR: Exhaust Gas Re-circulation

- The CJ-4 engine oil is intended for DPF (Diesel Particulate Filter) type engines, and cannot be used on this tractor.

	except external EGR	with external EGR
Model	B26TL	---

◆ **Fuel:**

- Cetane number of 45 is minimum. Cetane number greater than 50 is preferred, especially for temperatures below -20℃ or elevations above 1500 m.
- If diesel fuel with sulfur content greater than 0.5% (5000 ppm) sulfur content is used, reduce the service interval for engine oil and filter by 50%.
- NEVER use diesel fuel with sulfur content greater than 0.05% (500 ppm) for EXTERNAL EGR type engine.
- DO NOT use diesel fuel with sulfur content greater than 1.0% (10000 ppm).
- Diesel fuels specified to EN 590 or ASTM D975 are recommended.
- No.2-D is a distillate fuel of lower volatility for engines in industrial and heavy mobile service. (SAE J313 JUN87)

◆ **Transmission Oil:**

*KUBOTA Super UDT-2: For an enhanced ownership experience, we highly recommend Super UDT-2 to be used instead of standard hydraulic/transmission fluid.
Super UDT-2 is a proprietary KUBOTA formulation that deliveries superior performance and protection in all operating conditions.
Regular UDT is also permitted for use in this machine.

- Indicated capacities of water and oil are manufacturer's estimate.

https://truckmanualshub.com/

PERIODIC SERVICE OF THE TRACTOR

WARNING

To avoid personal injury or death:

- **Do not work under any hydraulically supported devices. They can settle, suddenly leak down, or be accidentally lowered. If necessary to work under tractor or any machine elements for servicing or adjustment, securely support them with stands or suitable blocking beforehand.**

HOW TO OPEN THE HOOD

WARNING

To avoid personal injury or death from contact with moving parts:

- **Never open the hood while the engine is running.**
- **Do not touch muffler or exhaust pipes while they are hot. Severe burns could result.**
- **Support hood with other hand while unlocking support link.**

■Hood

To open the hood, pull the lever to release the latch and open the hood.

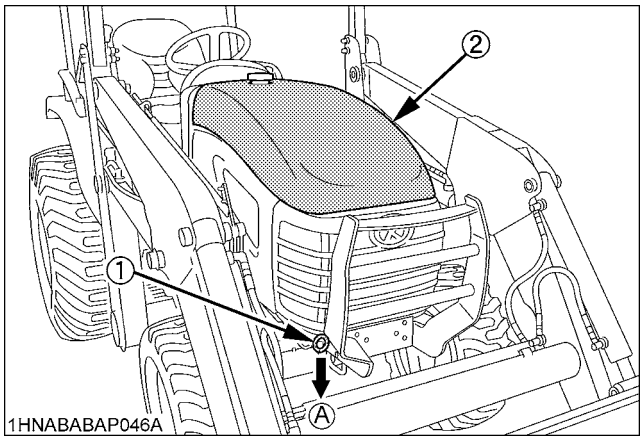

(1) Lever *(A) "OPEN"*
(2) Hood

NOTE :

- To close the hood, hold the hood and release the support link.

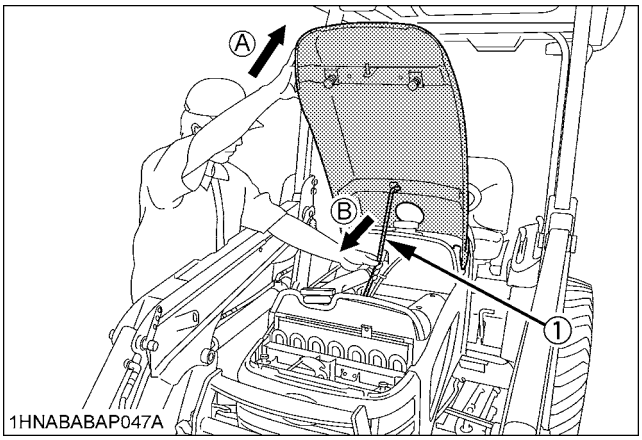

(1) Support link *(A) "HOLD"*
(B) "PULL"

■Side Cover

To remove the side cover, turn the lock screw counterclockwise by 90°, and then raise and take away the side cover.

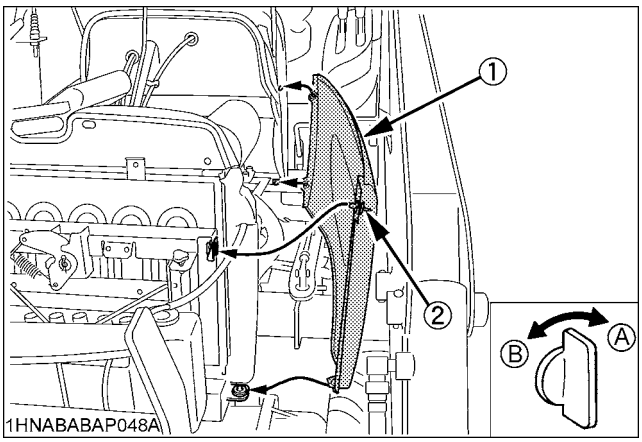

(1) Side cover *(A) "LOCK POSITION"*
(2) Lock screw *(B) "UNLOCK POSITION"*

https://truckmanualshub.com/

■Front Cover

1. Loose the knob bolts at both sides completely and detach the front cover.

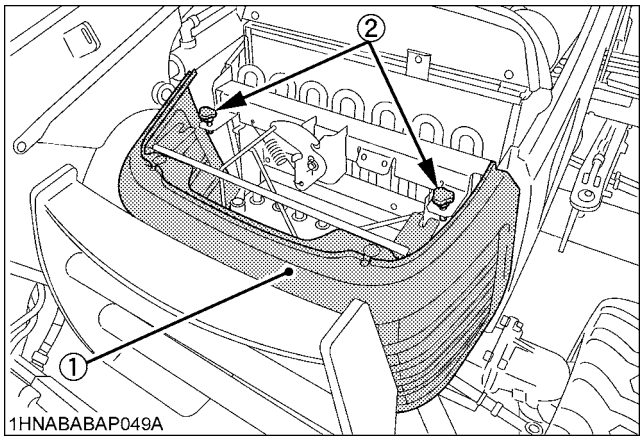

(1) Front cover
(2) Knob bolt

DAILY CHECK

For your own safety and maximum service life of the machine, make a thorough daily inspection before operating the machine to start the engine.

CAUTION

To avoid personal injury:

- **Be sure to check and service the tractor on a flat place with the engine shut off and the parking brake "ON".**

■Walk Around Inspection

Look around and under the tractor for such items as loose bolts, trash build-up, oil or coolant leaks, broken or worn parts.

■Checking and Refueling

WARNING

To avoid personal injury or death:

- **Do not smoke while refueling.**
- **Be sure to stop the engine before refueling.**

1. Turn the key switch to "ON", check the amount of fuel by fuel gauge.
2. Fill fuel tank when fuel gauge shows 1/4 or less fuel in tank.
3. Use grade No.2-Diesel fuel at temperatures above -10℃(14℉).
   Use grade No.1-Diesel fuel at temperatures below -10℃(14℉).

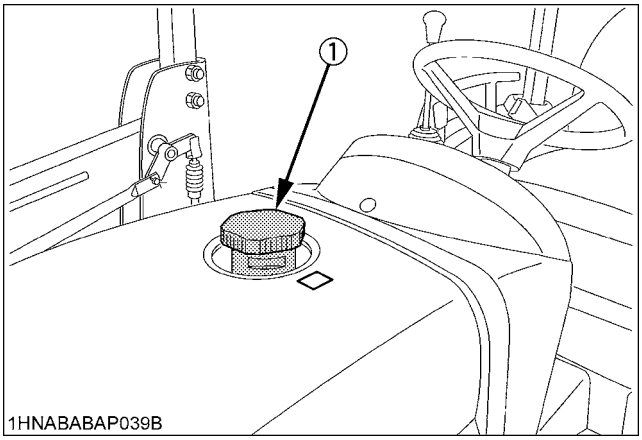

(1) Fuel tank cap

Fuel tank capacity	31 L (8.1 U.S.gals.)

IMPORTANT :

- Do not permit dirt or trash to get into the fuel system.
- Be careful not to let the fuel tank become empty, otherwise air will enter the fuel system, necessitating bleeding before next engine start.
- Be careful not to spill during refueling. If should spill, wipe it off at once, or it may cause a fire.
- To prevent condensation (water) accumulation in the fuel tank, fill the tank before parking overnight.

https://truckmanualshub.com/

■Checking Engine Oil Level

WARNING

To avoid personal injury or death:

- **Be sure to stop the engine before checking the oil level.**

1. Park the machine on a flat surface.
2. Check engine oil before starting the engine or 5 minutes or more after the engine has stopped.
3. To check the oil level, draw out the dipstick, wipe it clean, replace it, and draw it out again. Check to see that the oil level lies between the two notches.
   If the level is too low, add new oil to the prescribed level at the oil inlet.
   (See "LUBRICANTS" in "MAINTENANCE OF THE TRACTOR" section.)

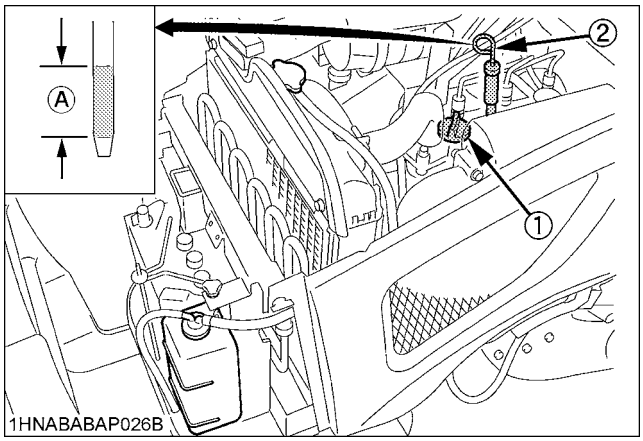

(1) Oil inlet (A) Oil level is acceptable within this range.
(2) Dipstick

IMPORTANT :

- When using an oil of different maker or viscosity from the previous one, remove all of the old oil.
  Never mix two different types of oil.
- If oil level is low, do not run engine.

■Checking Transmission Fluid Level

1. Park the machine on a flat surface, lower the implement and shut off engine.
2. To check the oil level, draw out the dipstick, wipe it clean, replace it, and draw it out again. Check to see that the oil level lies between the two notches.
   If the level is too low, add new oil to the prescribed level at the oil inlet.
   (See "LUBRICANTS" in "MAINTENANCE OF THE TRACTOR" section.)

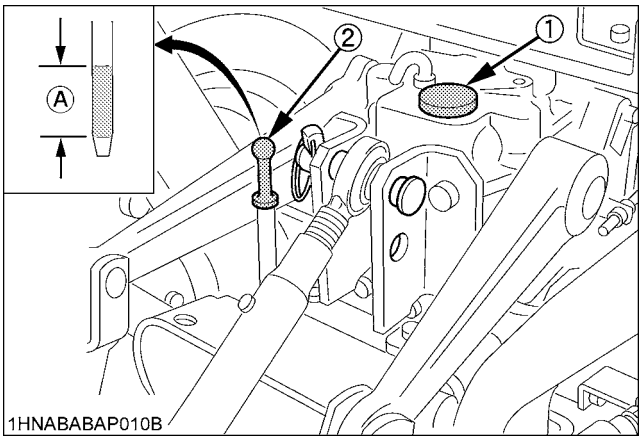

(1) Oil inlet (A) Oil level is acceptable within this range.
(2) Dipstick

IMPORTANT :

- If oil level is low, do not run the engine.
- When using BT820 Backhoe and checking oil level, locate the tractor/loader/backhoe on a flat surface and set the loader/backhoe as illustrated below.

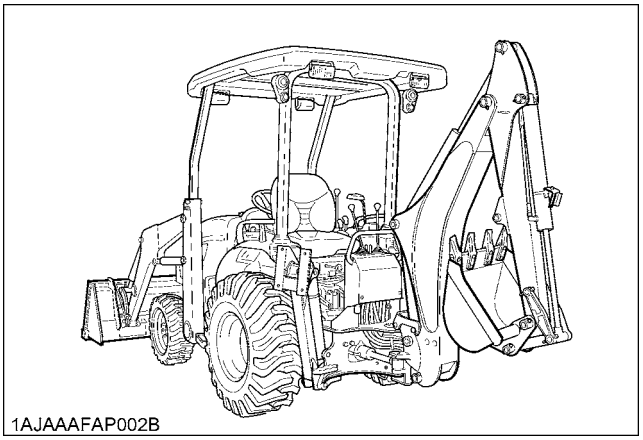

https://truckmanualshub.com/

■Checking Coolant Level

WARNING

To avoid personal injury or death:

- **Do not remove radiator cap while coolant is hot. When cool, slowly rotate cap to the first stop and allow sufficient time for excess pressure to escape before removing the cap completely.**

1. Check to see that the coolant level is between the "FULL" and "LOW" marks of recovery tank.
2. When the coolant level drops due to evaporation, add soft water only up to the full level.
   In case of leakage, add anti-freeze and soft water in the specified mixing ratio up to the full level.
   (See "Flush Cooling System and Changing Coolant" in "EVERY 2 YEARS" in "PERIODIC SERVICE OF THE TRACTOR" section.)

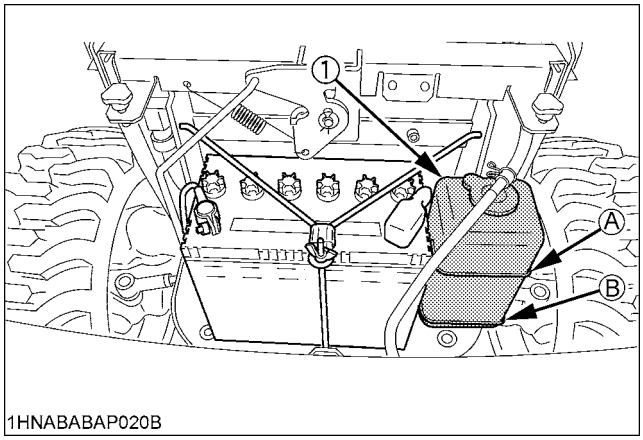

(1) Recovery tank *(A) "FULL"* *(B) "LOW"*

IMPORTANT :

- If the radiator cap has to be removed, follow the caution above and securely retighten the cap.
- Use clean, fresh soft water and anti-freeze to fill the recovery tank.
- If water should leak, consult your local KUBOTA Dealer.

■Cleaning Grill, Radiator Screen and Oil Cooler

WARNING

To avoid personal injury or death:

- **Be sure to stop the engine before removing the screen.**

1. Check front grill and side screens to be sure they are clean of debris.
2. Detach the screen and remove all foreign materials.

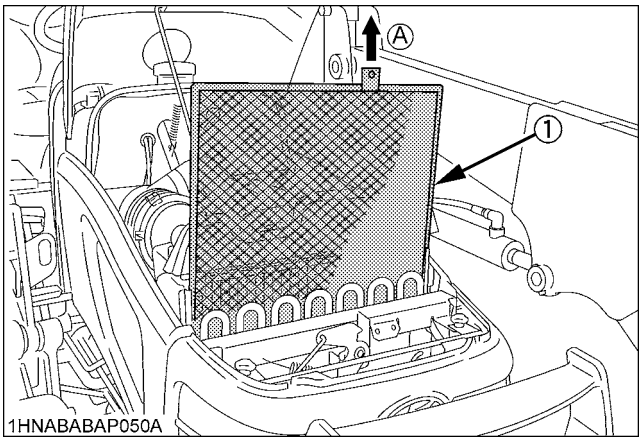

(1) Radiator screen *(A) "DETACH"*

IMPORTANT :

- Grill and screen must be clean from debris to prevent engine from overheating and to allow good air intake for the air cleaner.

■Checking Brake Pedals

1. Inspect the brake pedals for free travel, and smooth operation.
2. Adjust if incorrect measurement is found:
   (See "Adjusting Brake Pedal" in "EVERY 100 HOURS" in "PERIODIC SERVICE OF THE TRACTOR" section.)

■Checking Gauges, Meter and Easy Checker(TM)

1. Inspect the instrument panel for broken gauge(s), meter(s) and Easy Checker(TM) lamps.
2. Replace if broken.

■Checking Head Light, Hazard Light etc.

1. Inspect the lights for broken bulbs and lenses,
2. Replace if broken.

https://truckmanualshub.com/

■Checking Seat Belt, ROPS and FOPS

1. Always check condition of seat belt, ROPS and FOPS attaching hardware before operating tractor.
2. Replace if damaged.

■Checking and Cleaning of Electrical Wiring and Battery Cables

CAUTION

To avoid personal injury:

- **A loosened terminal or connector, or damaged wire may affect the performance of electrical components or cause short circuits. Leakage of electricity could result in a fire hazard, a dead battery or damage to electrical components.**
- **Replace damaged wires or connections promptly.**
- **If a fuse blows soon after replacement, DO NOT USE A LARGER THAN RECOMMENDED FUSE OR BYPASS THE FUSE SYSTEM.**
- **Many wiring connections are protected by waterproof plugs, plug and unplug these connections carefully and make sure they are sealed correctly after assembly.**
- **Accumulation of dust, chaff or spilled fuel deposits around the battery, electrical wiring, engine or exhaust system are a fire hazard. CLEAN THESE AREAS BEFORE STARTING WORK. To avoid premature electrical malfunctions DO NOT APPLY high pressure water directly to battery, wiring, connectors, electrical components or instrument panel.**

Inspect the following Regularly:

1. Check wiring for chafed or cracked insulation.
2. Check wiring harness clamps. Replace if necessary.
3. Check connectors and terminals for looseness, contamination or overheated (discolored) connections.
4. Check instrument panel for correct operation of switches and gauges.

Consult your Kubota Dealer regarding maintenance, diagnosis and repair.

■Checking Movable Parts

If any of the movable parts, such as levers and pedals, is not smoothly moved because of rust or sticky material, do not attempt to force it into motion.

In the above case, remove the rust or the sticky material, and apply oil or grease on the relevant spot.

Otherwise, the machine may get damaged.

EVERY 50 HOURS

■Lubricating Grease Fittings

Apply a small amount of multipurpose grease to the following points every 50 hours:

If you operated the machine in extremely wet and muddy conditions, lubricate grease fittings more often.

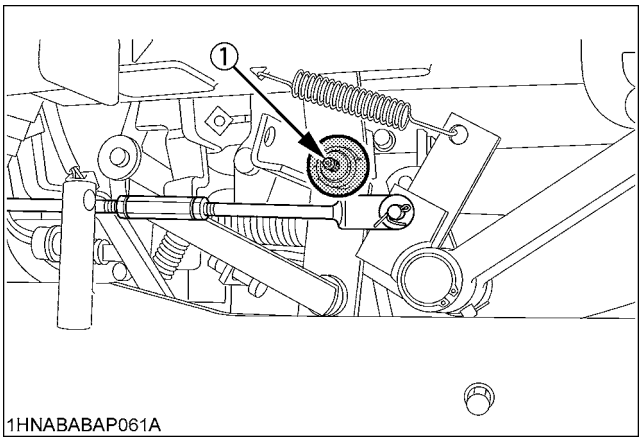

(1) Grease fitting (Speed control pedal)

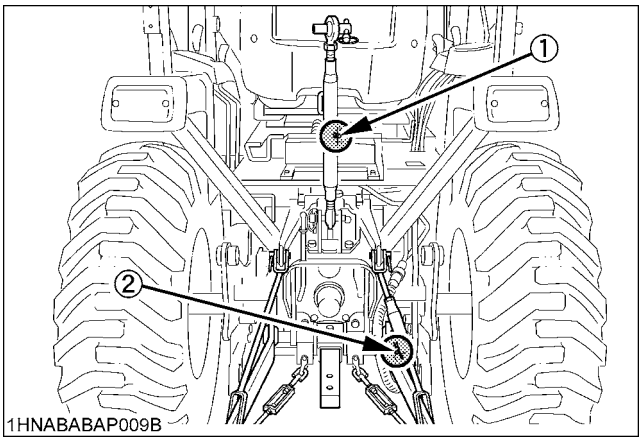

(1) Grease fitting (Top link)
(2) Grease fitting (Lifting rod) [RH]

https://truckmanualshub.com/

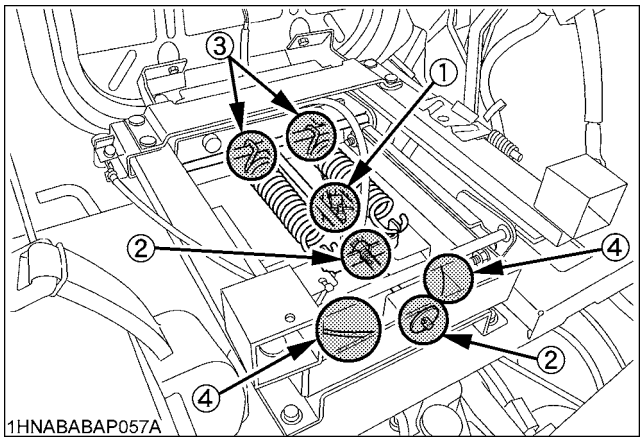

(1) Lock plate
(2) Suspension adjuster
(3) Spring hook
(4) Reversible seat

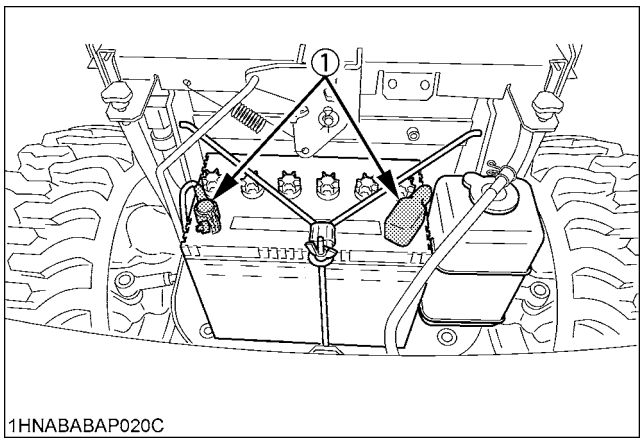

(1) Battery terminals

■Checking Engine Start System

WARNING

To avoid personal injury or death:

- **Do not allow anyone near the tractor while testing.**
- **If the tractor does not pass the test, do not operate the tractor.**

◆ **Preparation before testing.**

1. Sit on operator's seat.
2. Set the parking brake and stop the engine.
3. Shift the range gear shift lever to "NEUTRAL" position.
4. Place the speed control pedal in "NEUTRAL" position.
5. Shift the PTO clutch lever to "OFF" position.

◆ **Test : Switch for the speed control pedal.**

1. Depress the speed control pedal.
2. Turn the key to "START" position.
3. The engine must not crank.
4. If it cranks, consult your local KUBOTA Dealer for this service.

◆ **Test : Switch for the PTO clutch lever.**

1. Place the speed control pedal in "NEUTRAL" position.
2. Shift the PTO clutch lever to "ON" position.
3. Turn the key to "START" position.
4. The engine must not crank.
5. If it cranks, consult your local KUBOTA Dealer for this service.

◆ **Test : Switches for the operator's seat and the PTO clutch lever.**

1. Sit on the operator's seat.
2. Start the engine.
3. Engage the PTO clutch lever.
4. Stand up. (Do not get off the machine.)
5. The engine must shut off after approximately 1 second.
6. If it does not stop, consult your local KUBOTA Dealer for this service.

https://truckmanualshub.com/

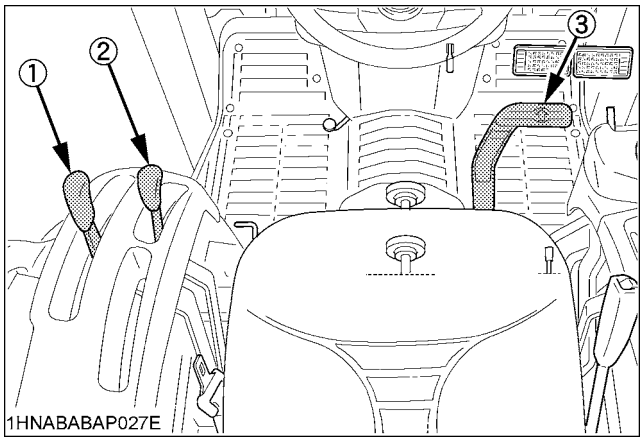

(1) Range gear shift lever (L-M-H)
(2) PTO clutch lever
(3) Speed control pedal

■Checking Wheel Bolt Torque

WARNING

To avoid personal injury or death:

- **Never operate tractor with a loose rim, wheel, or axle.**
- **Any time bolts and nuts are loosened, retighten to specified torque.**
- **Check all bolts and nuts frequently and keep them tight.**

Check wheel bolts and nuts regularly especially when new. If they are loose, tighten them as follows.

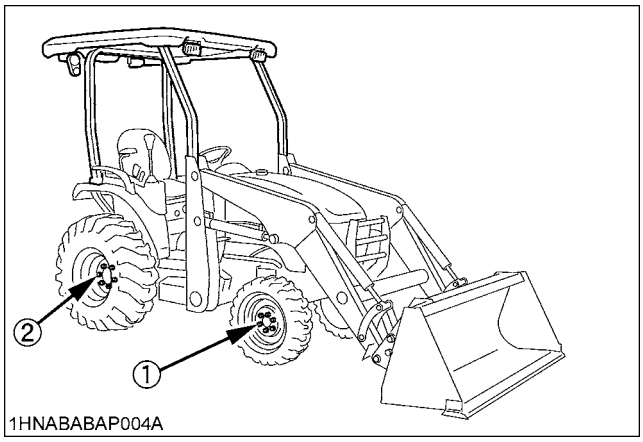

(1) Nut: 77 to 90 N-m (7.9 to 9.2 kgf-m, 57 to 67 ft-lbs.)
(2) Bolt: 196 to 225 N-m (20 to 23 kgf-m, 145 to 166 ft-lbs.)
Nut: 167 to 191 N-m (17 to 19.5 kgf-m, 123 to 141 ft-lbs.)

■Checking Main Frame Bolt Torque

CAUTION

To avoid personal injury:

- **Never operate front loader and backhoe with a loose main frame.**
- **Any time bolts and nuts are loosened, retighten to specified torque.**
- **Check all bolts and nuts frequently and keep them tight.**

Check main frame bolts and nuts regularly especially when new. If they are loose, tighten them as follows.

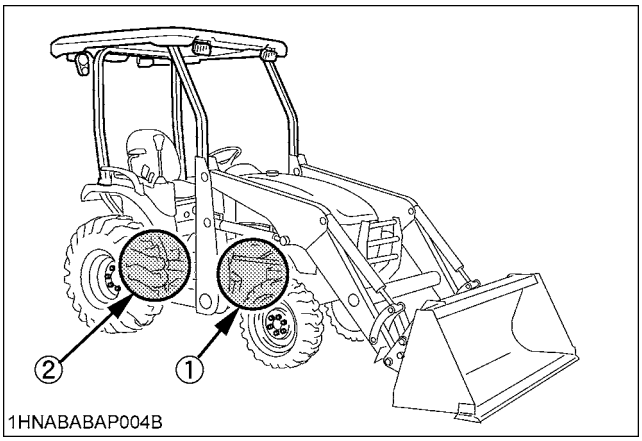

(1) Front side
M14 bolt : 170 to 200 N-m (17 to 20 kgf-m, 125 to 145 ft-lbs.)
(2) Rear side
M16 bolt : 200 to 225 N-m (20 to 23 kgf-m, 145 to 166 ft-lbs.)
M16 nut : 200 to 225 N-m (20 to 23 kgf-m, 145 to 166 ft-lbs.)
M12 bolt : 105 to 120 N-m (11 to 12 kgf-m, 78 to 88 ft-lbs.)

https://truckmanualshub.com/

EVERY 100 HOURS

■Cleaning Air Cleaner Primary Element

1. Open the hood and remove the air cleaner cover and the primary element.
2. Clean the primary element:
   (1) When dry dust adheres to the element, blow compressed air from the inside, turning the element. Pressure of compressed air must be under 205 kPa (2.1 kgf/cm², 30 psi).
   (2) When carbon or oil adheres to the element, soak the element in detergent for 15 minutes then wash it several times in water, rinse with clean water and dry it naturally. After element is fully dried, inspect inside of the element with a light and check if it is damaged or not.
3. Replace air cleaner primary element:
   Once yearly or after every sixth cleaning, whichever comes first.

NOTE :
- Check to see if the evacuator valve is blocked with dust.

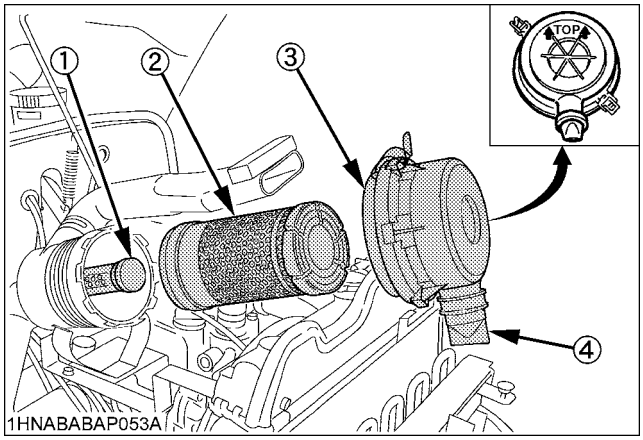

(1) Secondary (safety) element
(2) Primary element
(3) Cover
(4) Evacuator valve

IMPORTANT :
- The air cleaner uses a dry element, never apply oil.
- Do not run the engine with filter element removed.
- Be sure to refit the cover with the arrow ⬆ (on the rear of cover) upright. If the cover is improperly fitted, evacuator valve will not function and dust will adhere to the element.
- Do not touch the secondary element except in cases where replacing is required.
  (See "Replacing Air Cleaner Primary Element and Secondary Element" in "EVERY 1 YEAR" in "PERIODIC SERVICE OF THE TRACTOR" section.)

◆ **Evacuator Valve**

Open the evacuator valve once a week under ordinary conditions - or daily when used in a dusty place - to get rid of large particles of dust and dirt.

■Cleaning Fuel Filter

This job should not be done in the field, but in a clean place.

1. Loosen and remove the filter bowl, and rinse the inside with kerosene.
2. Take out the element and dip it in the kerosene to rinse.
3. After cleaning, reassemble the fuel filter, keeping out dust and dirt.
4. Bleed the fuel system.
   (See "SERVICE AS REQUIRED" in "PERIODIC SERVICE OF THE TRACTOR" section.)

IMPORTANT :
- When the fuel filter bowl has been removed, fuel stops flowing from the fuel tank. If the fuel tank is almost full, however, the fuel will flow back from the fuel return pipe to the fuel filter. Before checking, make sure the fuel tank is less than half-full.

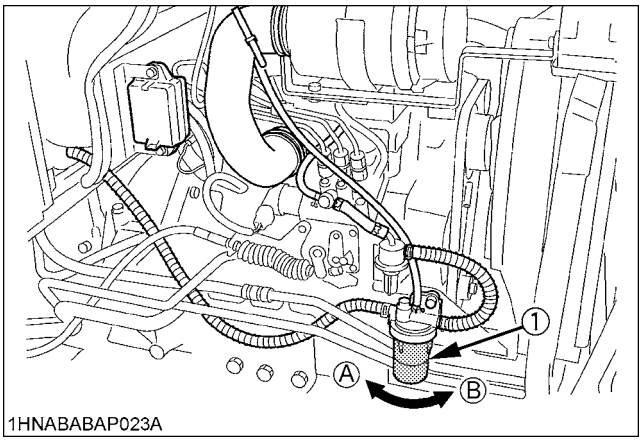

(1) Fuel filter bowl
(A) "LOOSEN"
(B) "TIGHTEN"

https://truckmanualshub.com/

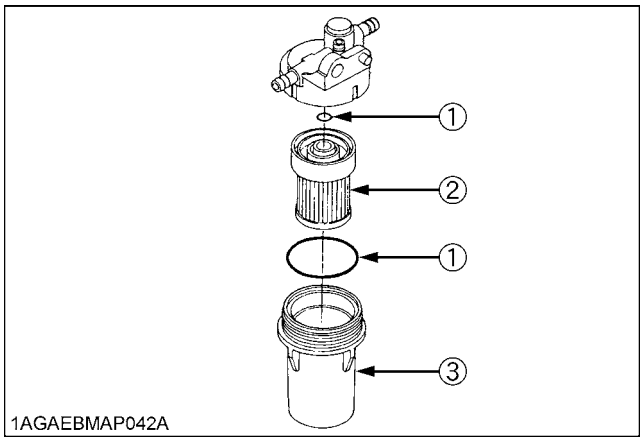

(1) O ring
(2) Filter element
(3) Filter bowl

IMPORTANT :
- If dust, dirt or water enters the fuel system, the fuel pump and injection nozzles are subject to premature wear. To prevent this, be sure to clean the fuel filter bowl and element periodically.

■Adjusting Fan Belt Tension

WARNING

To avoid personal injury or death:
- **Be sure to stop the engine before checking belt tension.**

Proper fen belt tension	A deflection of between 7 to 9 mm (0.28 to 0.34 in.) when the belt is pressed in the middle of the span.

1. Stop the engine and remove the key.
2. Apply moderate thumb pressure to belt between pulleys.
3. If tension is incorrect, loosen the alternator mounting bolts and, using a lever placed between the alternator and the engine block, pull the alternator out until the deflection of the belt falls within acceptable limits.
4. Replace fan belt if it is damaged.

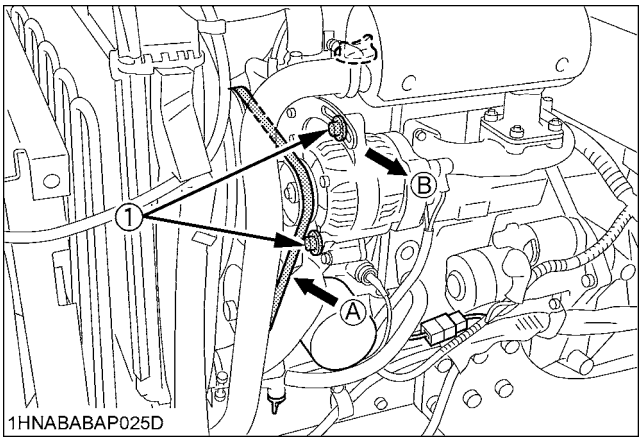

(1) Bolt
(A) Check the belt tension
(B) To tighten

■Checking Fuel Line

1. Check to see that all lines and hose clamps are tight and not damaged.
2. If hoses and clamps are found worn or damaged, replace or repair them at once.

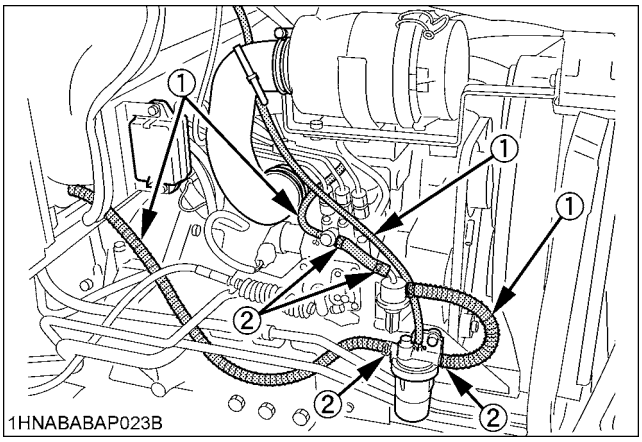

(1) Fuel lines
(2) Clamp bands

NOTE :
- If the fuel line is removed, be sure to properly bleed the fuel system.
  (See "Bleeding Fuel System" in "SERVICE AS REQUIRED" in "PERIODIC SERVICE OF THE TRACTOR" section.)

https://truckmanualshub.com/

■Adjusting Brake Pedal

WARNING

To avoid personal injury or death:

- **Stop the engine and chock the wheels before checking brake pedal.**

Proper brake pedal free travel	30 to 40 mm (1.18 to 1.57 in.) on the pedal
	Keep the free travel in the right and left brake pedals equal.

1. Release the parking brake.
2. Slightly depress the brake pedals and measure free travel at the top of pedal stroke.
3. If adjustment is needed, loosen the lock nut and turn the turnbuckle to adjust the rod length within acceptable limits.
4. Retighten the lock nut.

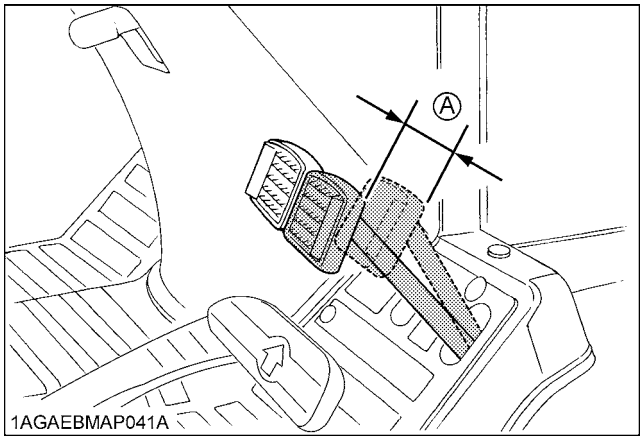

(A) Free travel

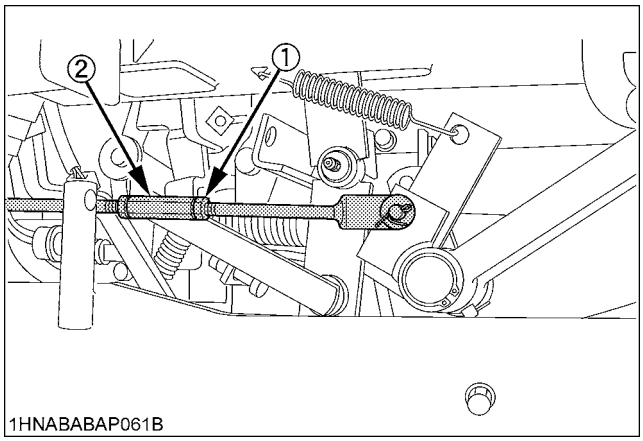

(1) Lock nut
(2) Turnbuckle

■Checking Battery Condition

DANGER

To avoid the possibility of battery explosion:
For the refillable type battery, follow the instructions below.

- **Do not use or charge the refillable type battery if the fluid level is below the LOWER (lower limit level) mark. Otherwise, the battery component parts may prematurely deteriorate, which may shorten the battery's service life or cause an explosion. Check the fluid level regularly and add distilled water as required so that the fluid level is between the UPPER and LOWER levels.**

WARNING

To avoid personal injury or death:

- **Never remove the vent caps while the engine is running.**
- **Keep electrolyte away from eyes, hands and clothes. If you are spattered with it, wash it away completely with water immediately and get medical attention.**
- **Wear eye protection and rubber gloves when working around the battery.**

Mishandling the battery shortens the service life and adds to maintenance costs.

The original battery is maintenance free, but needs some servicing.
If the battery is weak, the engine will be difficult to start and the lights will be dim. It is important to check the battery periodically.

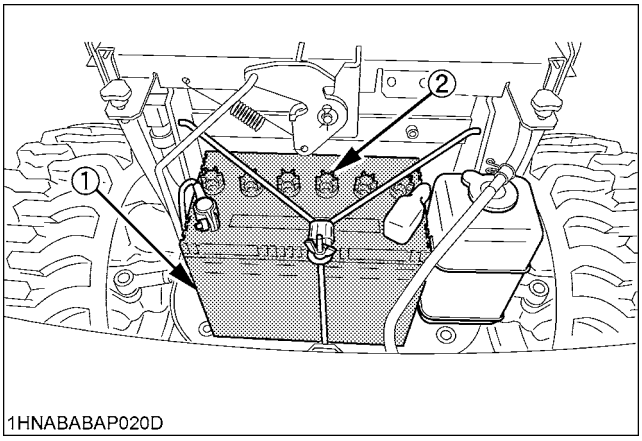

(1) Battery
(2) Vent cap

https://truckmanualshub.com/

◆ **Battery Charging**

CAUTION

To avoid personal injury:

- **When the battery is being activated, hydrogen and oxygen gases in the battery are extremely explosive. Keep open sparks and flames away from the battery at all times, especially when charging the battery.**
- **When charging the battery, ensure the vent caps are securely in place. (if equipped)**
- **When disconnecting the cable from the battery, start with the negative terminal first.**
- **When connecting the cable to the battery, start with the positive terminal first.**
- **Never check battery charge by placing a metal object across the posts.**
  Use a voltmeter or hydrometer.
  (For accessible maintainable type batteries with removable vent caps.)

1. Make sure each electrolyte level is to the bottom of vent wells, if necessary add distilled water in a well-ventilated area.

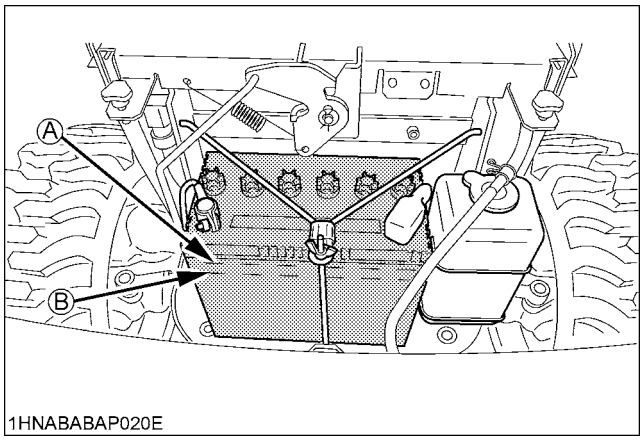

(A) Upper level
(B) Lower level

2. The water in the electrolyte evaporates during recharging. Liquid shortage damages the battery. Excessive liquid spills over and damages the tractor body.
3. To slow charge the battery, connect the battery positive terminal to the charger positive terminal and the negative to the negative, then recharge in the normal manner.
4. A boost charge is only for emergencies. It will partially charge the battery at a high rate and in a short time.
   When using a boost-charged battery, it is necessary to recharge the battery as early as possible.
   Failure to do this will shorten the battery's service life.
5. When the specific gravity of electrolyte is between 1.27 and 1.29, the charging is completed.
6. When exchanging an old battery for a new one, use battery of equal specification shown in **TABLE 1.**

[TABLE 1]

Battery Type	Volts (V)	Capacity at 5H.R	Reserve at (min)	Cold Cranking Amps	Normal Charging Rate(A)
55B24L (S)-MF	12	36	79	433	4.5

◆ **Direction for Storage**

1. When storing the tractor for a long period, remove the battery from tractor, adjust the electrolyte to the proper level and store in a dry place out of direct sunlight.
2. The battery self-discharges while it is stored.
   Recharge it once every 3 months in hot seasons and once every 6 months in cold seasons.

■Cleaning Spark Arrester

CAUTION

To avoid personal injury:

- **After operating the engine, do not touch the muffler, exhaust pipe, or spark arrester until they have had sufficient time to cool.**

This screen type spark arrester was examined, tested, and qualified in accordance with the USDA Forest Service Standard 5100-1c, "Spark Arresters for Internal Combustion Engines" for the B26.

◆ **Maintenance**

The screen type spark arrester should be removed, cleaned, and inspected after every 100 hours of use.

1. The spark arrester is located inside the end of the exhaust pipe, and is fastened with one screw.
2. Unfasten the screw and remove the spark arrester.
3. Shake loosened particles out of the screen assembly and lightly clean the screen with a wire brush. Soak in solvent and again clean with wire brush if necessary.
4. If any breaks in the screen or weldments are discovered, the assembly must be replaced.
5. Return the spark arrester to the exhaust outlet, align the screw holes and refasten the screw.

IMPORTANT :

- USDA approval requires clearance between spark arrester sleeve and exhaust pipe to be no larger than 0.584 mm (0.023 in.).

◆ **Installation**

1. Insert provided spark arrester and align its screw mount hole with a pre-drilled hole (O.D. 1/8") in the muffler tail pipe. If there is no mounting hole, drill a 1/8" hole 0.6" from the end of muffler tail pipe.
2. Fasten the spark arrester with provided tapping screw (N°8 - 1/4" Long) firmly.
3. Check if the fit is correct by wiggling the spark arrester.

https://truckmanualshub.com/

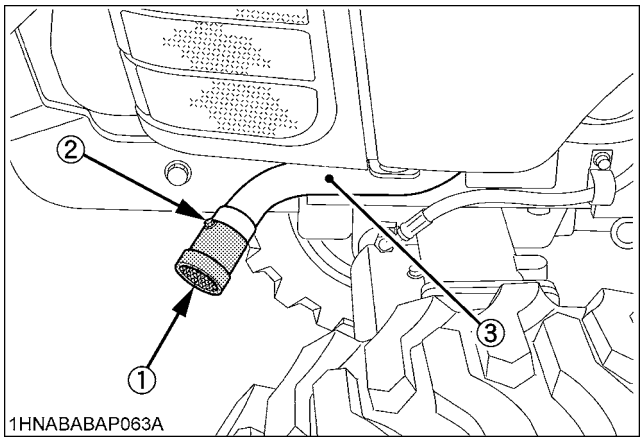

(1) Spark arrester
(2) Tapping screw
(3) Muffler

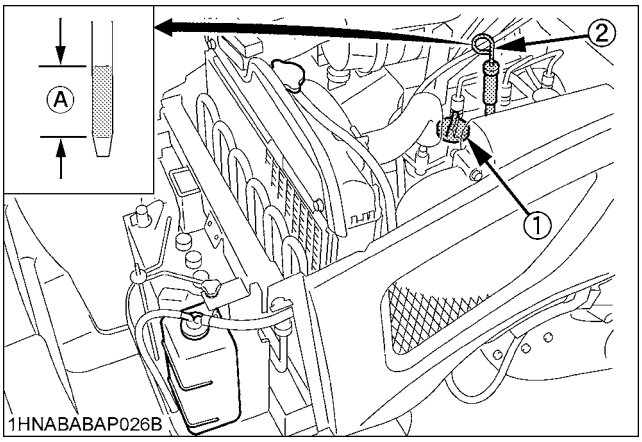

(1) Oil inlet *(A) Oil level is acceptable within this range*
(2) Dipstick

EVERY 200 HOURS

■Changing Engine Oil

WARNING

To avoid personal injury or death:
- **Be sure to stop the engine before changing the oil.**
- **Allow engine to cool down sufficiently, oil can be hot and can burn.**

1. To drain the used oil, remove the drain plug at the bottom of the engine and drain the oil completely into the oil pan.
   All the used oil can be drained out easily when the engine is still warm.
2. After draining reinstall the drain plug.
3. Fill with the new oil up to the upper notch on the dipstick.
   (See "LUBRICANTS" in "MAINTENANCE" section)

Oil capacity with filter	3.0 L (3.2 U.S.qts.)

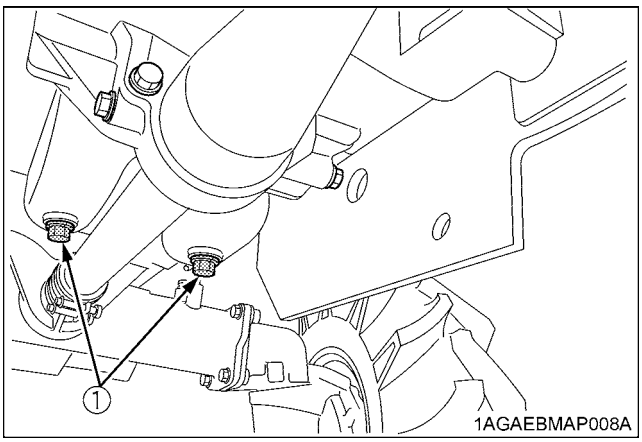

(1) Drain plug (both sides)

■Replacing Engine Oil Filter

WARNING

To avoid personal injury or death:
- **Be sure to stop the engine before changing the oil filter cartridge.**
- **Allow engine to cool down sufficiently, oil can be hot and can burn.**

1. Remove the oil filter.
2. Put a film of clean engine oil on the rubber seal of the new filter.
3. Tighten the filter quickly until it contacts the mounting surface.
   Tighten filter by hand an additional 1/2 turn only.
4. After the new filter has been replaced, the engine oil normally decreases a little. Make sure that the engine oil does not leak through the seal and be sure to check the oil level on the dipstick. Then, replenish the engine oil up to the prescribed level.

https://truckmanualshub.com/

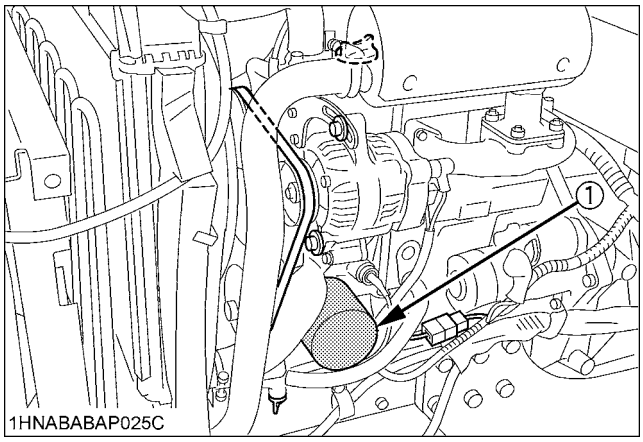

(1) Engine oil filter

IMPORTANT :
- To prevent serious damage to the engine, use only a KUBOTA genuine filter.

■Replacing HST Oil Filter

Replace the HST oil filter.
(See "Changing Transmission Fluid / Replacing Hydraulic Oil Filter" in "EVERY 400 HOURS" in "PERIODIC SERVICE OF THE TRACTOR" section.)

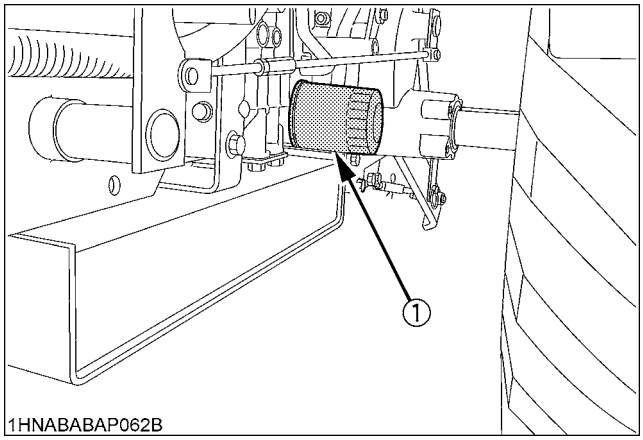

(1) HST oil filter

■Checking Radiator Hose and Clamp

Check to see if radiator hoses are properly fixed every 200 hours of operation or 6 months, whichever comes first.
1. If hose clamps are loose or water leaks, tighten bands securely.
2. Replace hoses and tighten hose clamps securely, if radiator hoses are swollen, hardened or cracked.

Replace hoses and hose clamps every 2 years or earlier if checked and found that hoses are swollen, hardened or cracked.

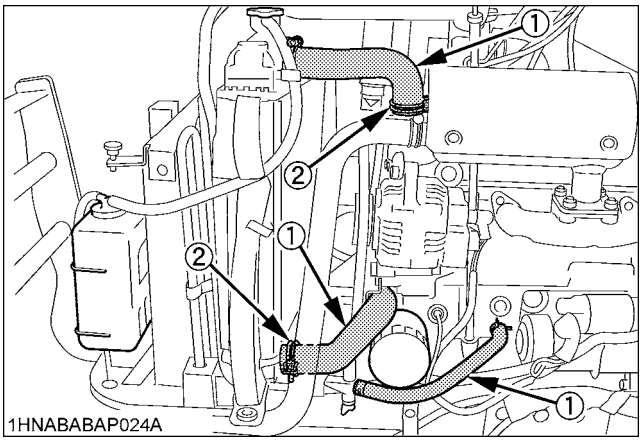

(1) Radiator hoses
(2) Clamp bands

◆ **Precaution at Overheating**

Take the following actions in the event the coolant temperature is nearly or more than the boiling point, what is called "Overheating"
1. Park the tractor in a safe place and keep the engine unloaded idling.
2. Don't stop the engine suddenly, but stop it after about 5 minutes of unloaded idling.
3. Keep yourself well away from the machine for further 10 minutes or while the steam blows out.
4. Check that there are no dangers such as burns. Get rid of the causes of overheating according to the manual, see "TROUBLESHOOTING" section, and then, start again the engine.

■Checking Intake Air Line

1. Check to see that hoses and hose clamps are tight and not damaged.
2. If hoses and clamps are found worn or damaged, replace or repair them at once.

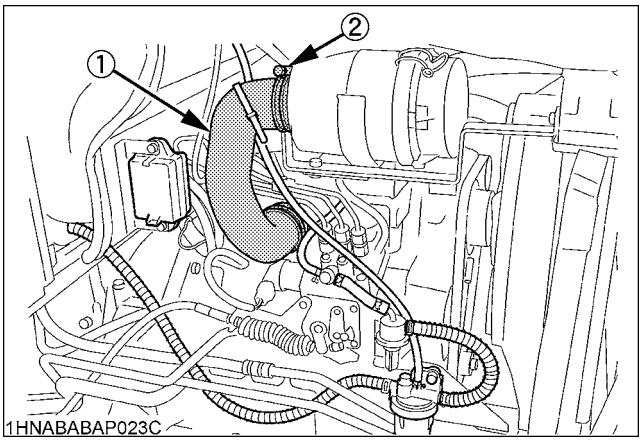

(1) Hose
(2) Hose clamps

https://truckmanualshub.com/

■Adjusting Toe-in

1. Park tractor on a flat place.
2. Turn steering wheel so front wheels are in the straight ahead position.
3. Lower the implement, lock the park brake and stop the engine.
4. Measure distance between tire beads at front of tire, hub height.
5. Measure distance between tire beads at rear of tire, hub height.
6. Front distance should be 0 to 10 mm (0 to 0.39 in.) less than rear distance. If not, adjust tie rod length.

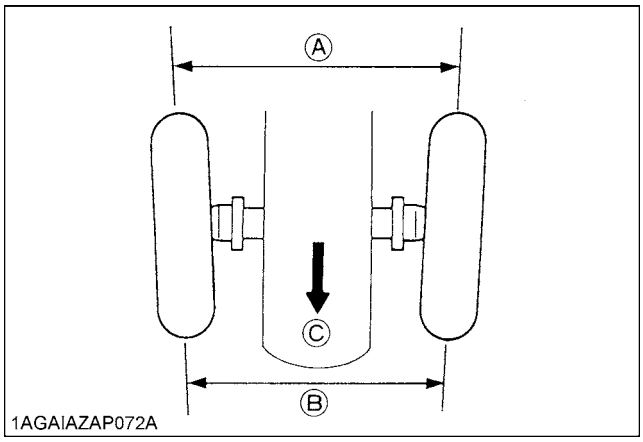

(A) Wheel - to - wheel distance at rear
(B) Wheel - to - wheel distance at front
(C) "FRONT"

◆ Adjusting procedures

1. Loosen the tie-rod nut.
2. Turn the tie-rod joint to adjust the rod length until the proper toe-in measurement is obtained.
3. Retighten the tie-rod nut.

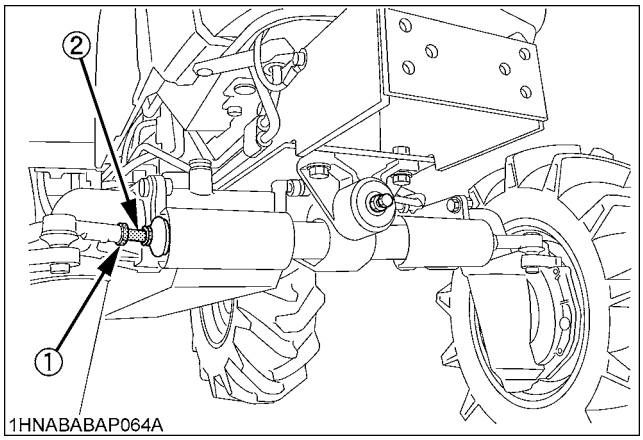

(1) Tie-rod nut
(2) Tie-rod joint

■Checking Power Steering Line

1. Check to see that all lines and hose clamps are tight and not damaged.
2. If hoses and clamps are found worn or damaged, replace or repair them at once.

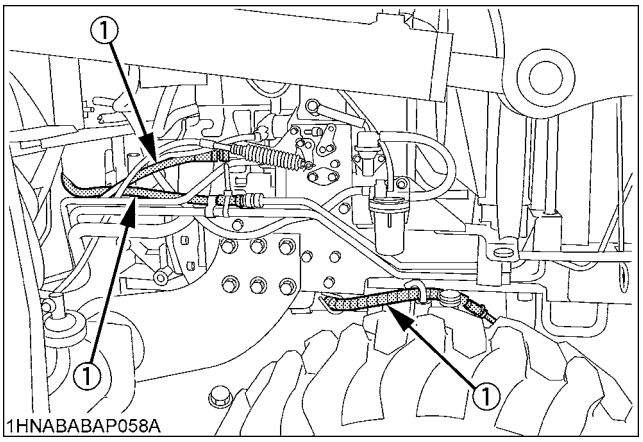

(1) Power steering hoses

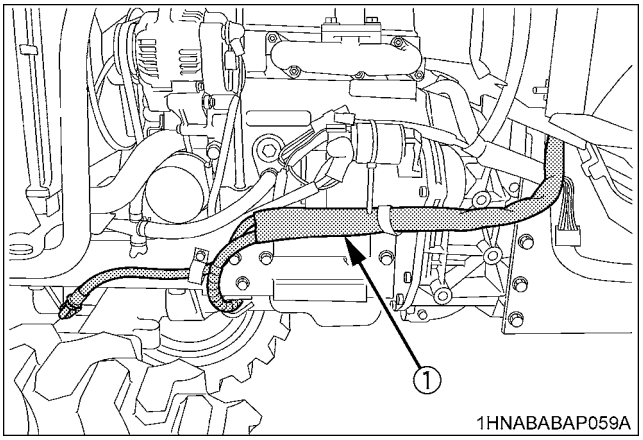

(1) Power steering hoses

https://truckmanualshub.com/

EVERY 400 HOURS

■Changing Transmission Fluid / Replacing Hydraulic Oil Filter

CAUTION

To avoid personal injury:

- **Allow engine to cool down sufficiently, oil can be hot and can burn.**

1. To drain the used oil, remove the drain plug at the bottom of the transmission case and drain the oil completely into the oil pan.
2. After draining reinstall the drain plug.

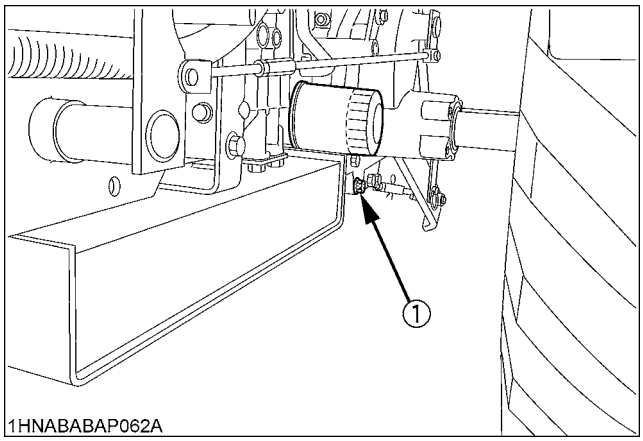

(1) Drain plug (Both sides)

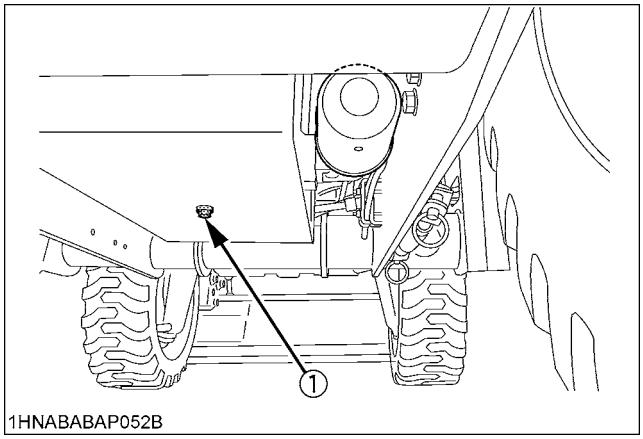

(1) Drain plug

3. Remove the oil filter.

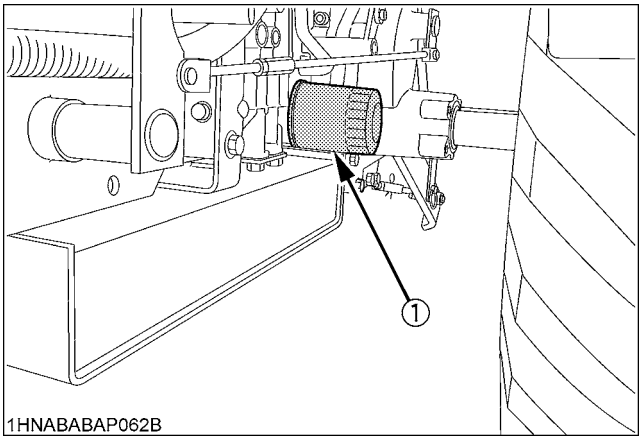

(1) HST oil filter

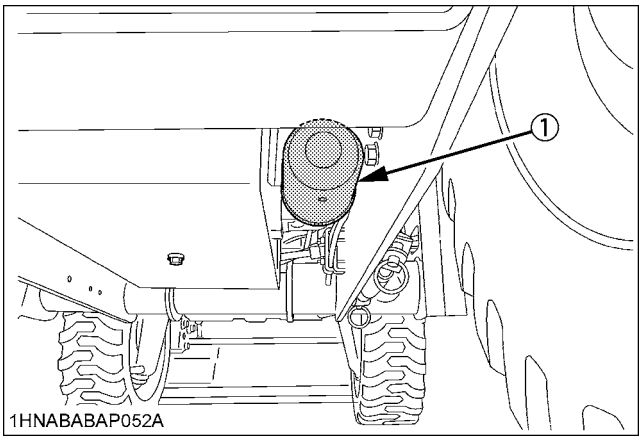

(1) Hydraulic oil filter

4. Put a film of clean transmission oil on rubber seal of new filter.
5. Tighten the filter quickly until it contacts the mounting surface.
   Tighten filter by hand an additional 1/2 turn only.

https://truckmanualshub.com/

6. Fill with new KUBOTA SUPER UDT fluid up to the upper notch on the dipstick.
   (See "LUBRICANTS" in "MAINTENANCE OF THE TRACTOR" section and "DAILY CHECK" in "PERIODIC SERVICE OF THE TRACTOR" section.)

Oil capacity	26 L (6.9 U.S.gals.)

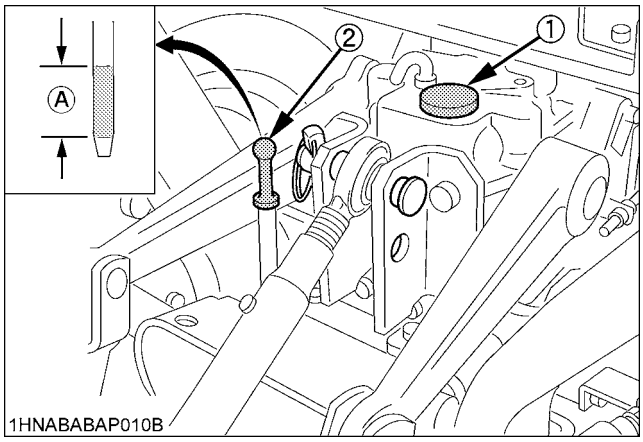

(1) Oil inlet *(A) Oil level is acceptable within this range*
(2) Dipstick

7. After running the engine for a few minutes, stop it and check the oil level again; add oil to prescribed level.
8. After the new filter has been replaced, the transmission fluid level will decrease a little. Make sure that the transmission fluid does not leak through the seal, and check the fluid level.
   Top off if necessary.
9. Properly dispose of used oil.

IMPORTANT :
- To prevent serious damage to the hydraulic system, use only a KUBOTA genuine filter.
- If the 3-point hitch can not be raised by setting the hydraulic control lever to the UP position after long term storage or when changing the transmission oil, turn steering wheel to the right and left several times to bleed air from the system.
- Do not operate the tractor immediately after changing the transmission fluid.
  Run the engine at medium speed for a few minutes to prevent damage to the transmission.

■Replacing Fuel Filter Element

(See "Cleaning fuel filter" in "EVERY 100 HOURS" in "PERIODIC SERVICE OF THE TRACTOR" section.)

■Changing Front Axle Case Oil

1. Park the tractor on a firm, flat and level surface.
2. To drain the used oil, remove the right and left drain plugs and filling plug at the front axle case and drain the oil completely into the oil pan.
3. After draining, reinstall the drain plugs.
4. Fill with new oil up to the upper notch on the dipstick.
   (See "LUBRICANTS" in "MAINTENANCE OF THE TRACTOR" section.)

IMPORTANT :
- After ten minutes, check the oil level again; add oil to prescribed level.

5. After filling, reinstall the filling plug.
6. Properly dispose of used oil.

Oil capacity	4.7 L (5.0 U.S.qts.)

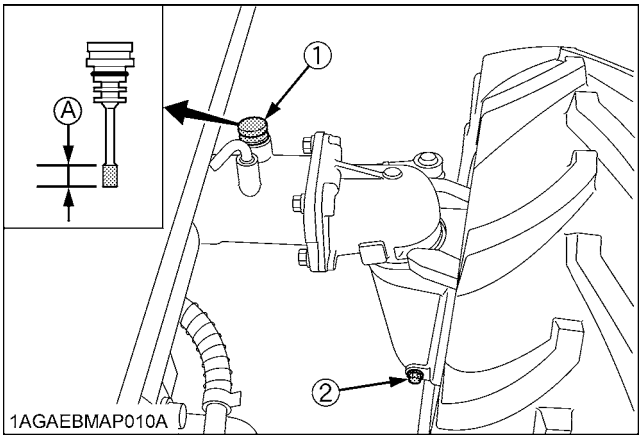

(1) Filling plug with dipstick *(A) Oil level is acceptable within this range*
(2) Drain plug

https://truckmanualshub.com/

■Adjusting Front Axle Pivot [4WD]

If the front axle pivot pin adjustment is not correct, front wheel vibration can occur causing vibration in the steering wheel.

◆ **Adjusting procedure**

Loosen the lock nut, and tighten the adjusting screw so that the oscillating load is 50 to 100 N (5.1 to 10.2 kgf, 11.2 to 22.5 lbf). (If the adjusting screw is tightened, loosened and retightened, apply liquid gasket to its tip.) Retighten the lock nut.

Consult your local KUBOTA Dealer for further details.

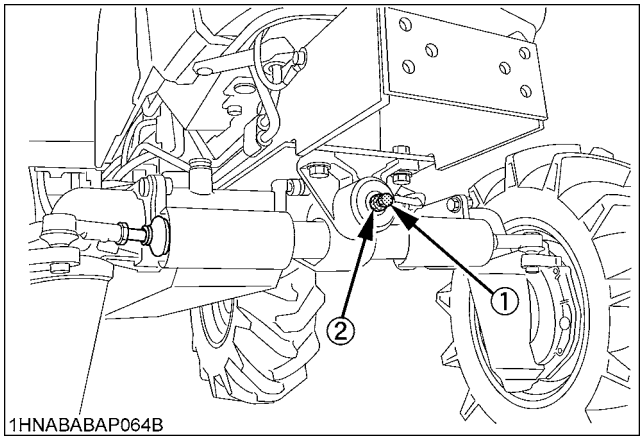

(1) Adjusting screw
(2) Lock nut

EVERY 800 HOURS

■Adjusting Engine Valve Clearance

Consult your local KUBOTA Dealer for this service.

EVERY 1500 HOURS

■Checking Fuel Injection Nozzle Injection Pressure

Consult your local KUBOTA Dealer for this service.

EVERY 3000 HOURS

■Checking Injection Pump

Consult your local KUBOTA Dealer for this service.

EVERY 1 YEAR

■Replacing Air Cleaner Primary Element and Secondary Element

(See "Cleaning Air Cleaner Primary Element" in "EVERY 100 HOURS" section.)

EVERY 2 YEARS

■Flush Cooling System and Changing Coolant

WARNING

To avoid personal injury or death:

- **Do not remove radiator cap while coolant is hot. When cool, slowly rotate cap to the first stop and allow sufficient time for excess pressure to escape before removing the cap completely.**

1. Stop the engine, remove the key and let it cool down.
2. To drain the coolant, open the radiator drain cock, and remove radiator cap. The radiator cap must be removed to completely drain the coolant.
3. After all coolant is drained, close the drain cock.
4. Fill with clean soft water and cooling system cleaner.
5. Follow directions of the cleaner instruction.
6. After flushing, fill with clean soft water and anti-freeze until the coolant level is just below the radiator cap. Install the radiator cap securely.
7. Fill with coolant up to the "FULL" mark of recovery tank.
8. Start and operate the engine for few minutes.
9. Stop the engine, remove the key and let cool.
10. Check coolant level of recovery tank and add coolant if necessary.
11. Properly dispose of used coolant.

Coolant capacity	4.5 L (4.7 U.S.qts)

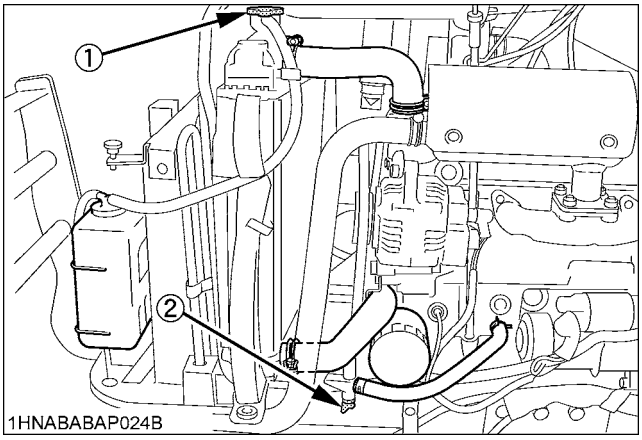

(1) Radiator cap
(2) Drain cock

https://truckmanualshub.com/

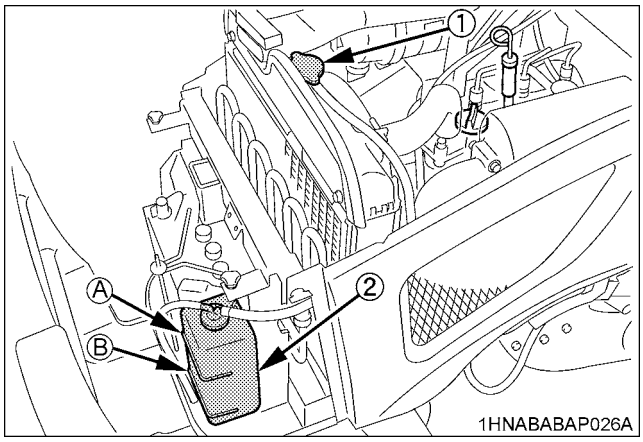

(1) Radiator cap *(A) "FULL"*
(2) Recovery tank *(B) "LOW"*

IMPORTANT :
- Do not start engine without coolant.
- Use clean, fresh soft water and anti-freeze to fill the radiator and recovery tank.
- When mixing the anti-freeze with water, the anti-freeze mixing ratio is 50%.
- Securely tighten radiator cap. If the cap is loose or improperly fitted, water may leak out and the engine could overheat.

■Anti-Freeze

WARNING

To avoid personal injury or death:
- **When using antifreeze, put on some protection such as rubber gloves (Antifreeze contains poison.).**
- **If it is swallowed, seek immediate medical help. Do NOT make a person throw up unless told to do so by poison control or a health care professional. Use standard first aid and CPR for signs of shock or cardiac arrest. Call your local Poison Control Center or your local emergency number for further assistance.**
- **When antifreeze comes in contact with the skin or clothing, wash it off immediately.**
- **Do not mix different types of Antifreeze. The mixture can produce chemical reaction causing harmful substances.**
- **Antifreeze is extremely flammable and explosive under certain conditions. Keep fire and children away from antifreeze.**
- **When draining fluids from the engine, place some container underneath the engine body.**
- **Do not pour waste onto the ground, down a drain, or into any water source.**
- **Also, observe the relevant environmental protection regulations when disposing of antifreeze.**

Always use a 50/50 mix of long-life coolant and clean soft water in KUBOTA engines.
Consult your local KUBOTA Dealer concerning coolant for extreme conditions.

1. Long-life coolant (hereafter LLC) comes in several types. Use ethylene glycol (EG) type for this engine.
2. Before employing LLC-mixed cooling water, fill the radiator with fresh water and empty it again.
   Repeat this procedure 2 or 3 times to clean up the inside.
3. Mixing the LLC
   Premix 50% LLC with 50% clean soft water. When mixing, stir it up well, and then fill into the radiator.
4. The procedure for the mixing of water and antifreeze differs according to the make of the antifreeze and the ambient temperature. Refer to SAE J1034 standard, more specifically also to SAE J814c.

Vol % Anti-freeze	Freezing Point		Boiling Point*	
	℃	℉	℃	℉
50	-37	-34	108	226

∗ At 1.013 x 10^5Pa (760mmHg) pressure (atmospheric). A higher boiling point is obtained by using a radiator pressure cap which permits the development of pressure within the cooling system.

https://truckmanualshub.com/

5. Adding the LLC
   (1) Add only water if the mixture reduces in amount by evaporation.
   (2) If there is a mixture leak, add the LLC of the same manufacturer and type in the same mixture percentage.
      ∗ Never add any long-life coolant of different manufacturer. (Different brands may have different additive components, and the engine may fail to perform as specified.)
6. When the LLC is mixed, do not employ any radiator cleaning agent. The LLC contains anticorrosive agent. If mixed with the cleaning agent, sludge may build up, adversely affecting the engine parts.
7. Kubota's genuine long-life coolant has a service life of 2 years. Be sure to change the coolant every 2 years.

NOTE :
- The above data represent industry standards that necessitate a minimum glycol content in the concentrated antifreeze.

■Replacing Radiator Hose (Water pipes)

Replace the hoses and clamps.
(See "Checking Radiator Hose and Clamp" in "EVERY 200 HOURS" in "PERIODIC SERVICE OF THE TRACTOR" section.)

■Replacing Power Steering Hose

Consult your local KUBOTA Dealer for this service.

■Replacing Fuel Hose

Consult your local KUBOTA Dealer for this service.

■Replacing Intake Air Line

Consult your local KUBOTA Dealer for this service.

SERVICE AS REQUIRED

■Bleeding Fuel System

Air must be removed:
1. When the fuel filter or lines are removed.
2. When the tank is completely empty.
3. After the tractor has not been used for a long period of time.

◆ **Bleeding procedure is as follows:**
1. Fill the fuel tank with fuel.
2. Start the engine and run for about 30 seconds, and then stop the engine.

■Draining Clutch Housing Water

The tractor is equipped with a drain plug under the clutch housing.
After operating in rain, snow or tractor has been washed, water may get into the clutch housing.
Remove the drain plug and drain the water, then install the plug again.

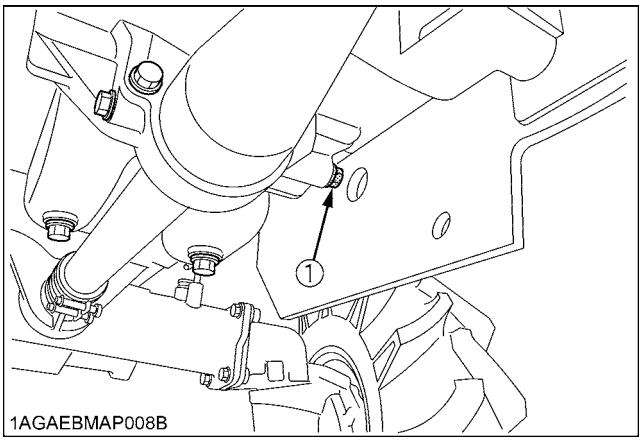

(1) Water drain plug

https://truckmanualshub.com/

■Replacing Fuse

The tractor electrical system is protected from potential damage by fuses.
A blown fuse indicates that there is an overload or short somewhere in the electrical system.
If any of the fuses should blow, replace with a new one of the same capacity.

IMPORTANT :

- Before replacing a blown fuse, determine why the fuse blew and make any necessary repairs. Failure to follow this procedure may result in serious damage to the tractor electrical system. Refer to the "TROUBLESHOOTING" section of this manual or your local KUBOTA Dealer for specific information dealing with electrical problems.

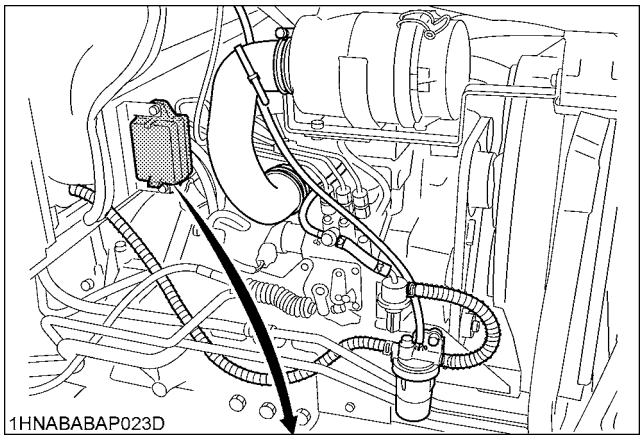

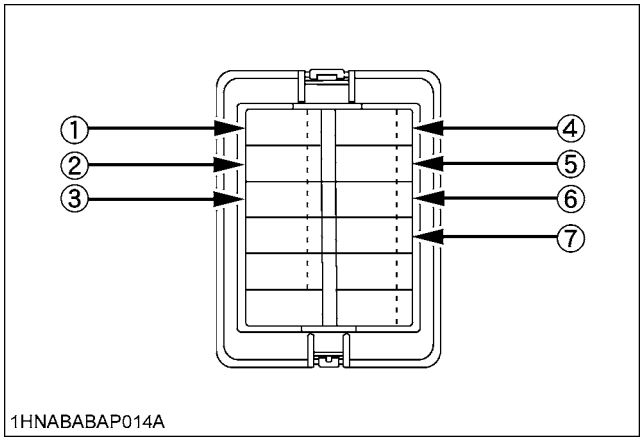

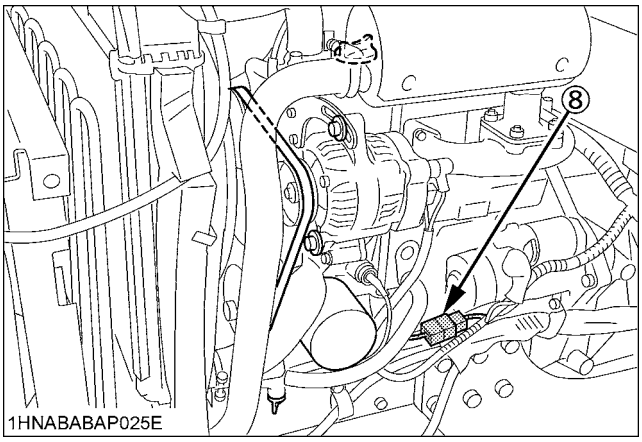

◆ **Protected circuit**

FUSE No.	CAPACITY (A)	Protected circuit
(1)	5	OPC
(2)	10	Head light instrument cluster
(3)	20	Auxiliary
(4)	20	Flasher / Hazard
(5)	30	Key stop
(6)	25	Front work light
(7)	25	Rear work light
(8)	Slow blow fuse	Check circuit against wrong battery connection

■Replacing Light Bulb

1. Head lights.
   Take the bulb out of the light body and replace with a new one.
2. Other lights
   Detach the lens and replace the bulb.

Light	Capacity
Head lights / Work light	35W
Tail light	8W
Turn signal / Hazard light	23W
Instrument panel light	1.7W
Hazard light switch indicator	0.6W
Work light (if equipped)	55W

https://truckmanualshub.com/

MAINTENANCE OF THE LOADER

WARNING

To avoid serious personal injury:

- **Escaping hydraulic fluid under pressure can have sufficient force to penetrate skin, causing serious personal injury. Before disconnecting lines, be sure to relieve all pressure.**
  Before applying pressure to system, be sure all connections are tight and that lines, tubes, and hoses are not damaged. Fluid escaping from a very small hole can be almost invisible. Use a piece of cardboard or wood, rather than your hands, to search for suspected leaks.

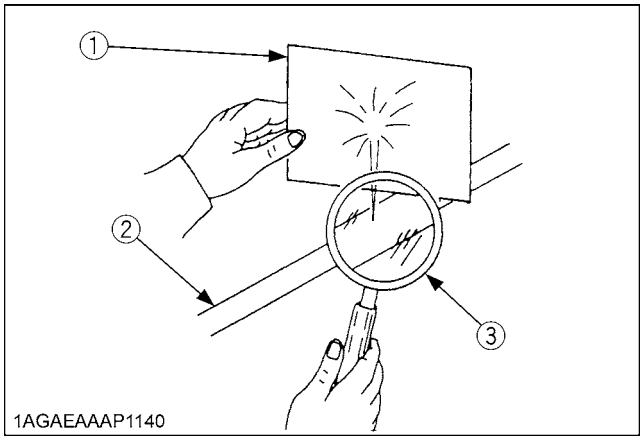

(1) Cardboard
(2) Hydraulic line
(3) Magnifying glass

If injured by escaping fluid, see a doctor at once. Serious infection or allergic reaction will develop if proper medical treatment is not administered immediately.

- **When removing the engine side covers, be careful not to touch hot loader cylinders.**
  Allow all surfaces to cool before performing maintenance.

CAUTION

To avoid personal injury:

- **Be sure to check and service the tractor on a flat place with the bucket on the ground, engine shut off, the key removed and the parking brake on.**

DAILY CHECKS

1. Daily before operation, check the tractor hydraulic fluid level. If low, add as described in "PERIODIC SERVICE OF THE TRACTOR" section. Also change the filter element and the hydraulic fluid as recommended in "MAINTENANCE OF THE TRACTOR" section.
2. Check all hardware daily before operation.
   Tighten hardware to torque values as specified in the "Tightening Torque Chart".
3. With the engine off and the bucket on the ground, inspect all hoses for cuts or wear. Check for signs of leaks and make sure all fittings are tight.

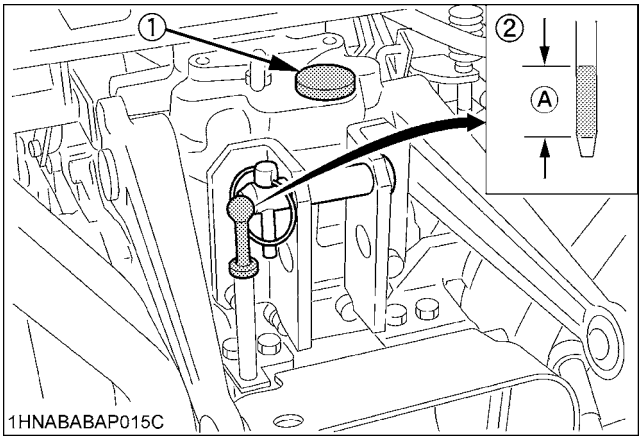

(1) Oil inlet
(2) Dipstick
(A) Oil level is acceptable within this range.

LUBRICATION

1. Lubricate all grease fittings every 10 hours of operation. Also, lubricate joints of control lever linkage every 10 hours. High quality grease designating "extreme pressure" and containing Molybdenum disulfide is recommended. This grease may specify "Moly EP" on its label.

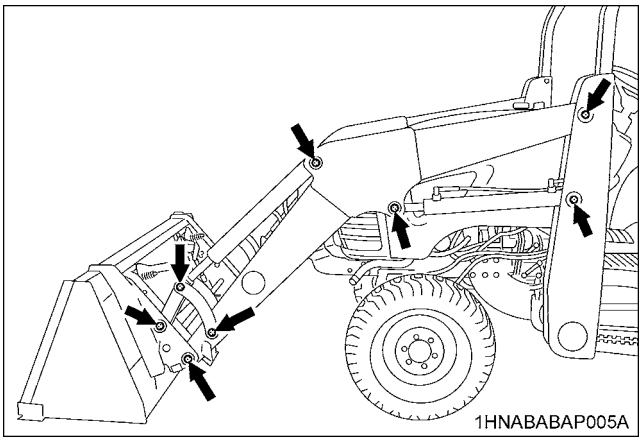

https://truckmanualshub.com/

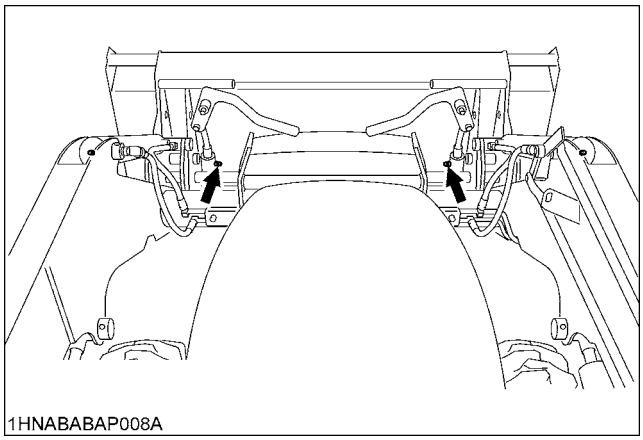

ADJUSTMENT OF SPILL GUARD LINK

CAUTION

To avoid personal injury:

- **Keep your hand away from links or boom when operating the loader.**

1. Remove the cotter pin.
2. Remove the rod from the link.
3. Unfasten the lock nut and adjust the length of connecting rod by turning rod.

Condition of the bucket at full height	Adjustment
Bucket rolled back too far	Shorten connecting rod
Bucket dumped too far	Lengthen connecting rod

4. Tighten the lock nut and set the rod to the link with the cotter pin.
5. Start engine and set the bucket fully rolled back at the ground.
6. Lift the boom to maximum height and check the rollback angle.
7. If the side edge is not the same as following illustration, repeat the steps 1 to 6 above.

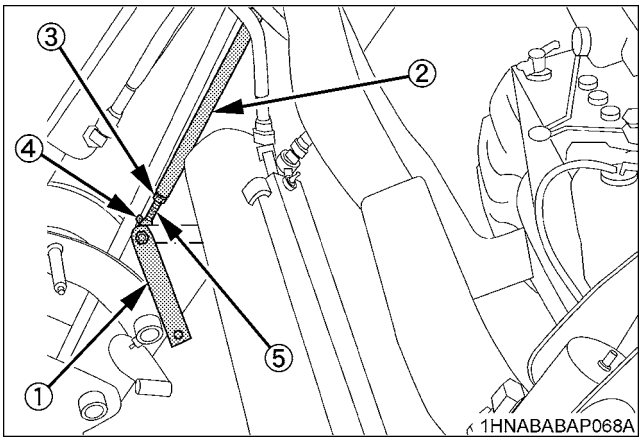

(1) Link
(2) Connecting rod
(3) Lock nut
(4) Cotter pin
(5) Rod

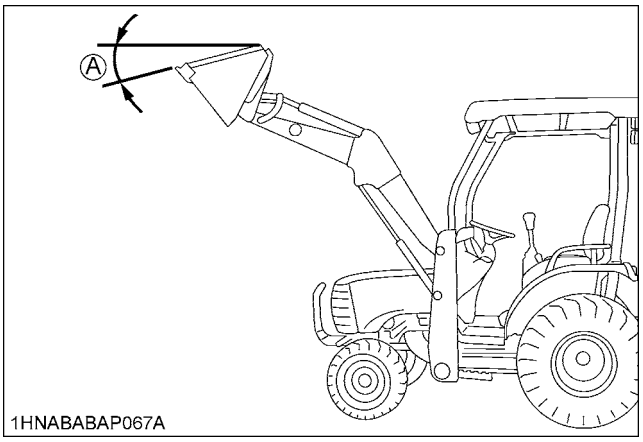

(A) 5° to 10°

TIRE INFLATION

Insure that the tractor tires are properly inflated.
Refer to the tractor operator's manual for optional tires.

■Inflation pressure

	Tire sizes	Inflation Pressure
Rear	12.4-16 Ind, 4PR	138 kPa (1.4 kgf-cm^2, 20 psi)
	13.6-16, 4PR	100 kPa (1.0 kgf-cm^2, 14 psi)
	12.4-16, 4PR	110 kPa (1.1 kgf-cm^2, 16 psi)
Front	23 x 8.50-14 Ind, 4PR	241 kPa (2.5 kgf-cm^2, 35 psi)
	24 x 8.50-14, 4PR	150 kPa (1.5 kgf-cm^2, 22 psi)

https://truckmanualshub.com/

GENERAL TORQUE SPECIFICATION

American standard screws, bolts and nuts with UNC or UNF threads				Metric cap screws 8.8		
SAE grade No.		SAE GR.5	SAE GR.8	property class		8.8 Approx. SAE GR 5
1/4	(N-m) (kgf-m) (ft-lbs)	11.7 to 15.8 1.19 to 1.61 8.6 to 11.6	16.3 to 19.8 1.66 to 2.02 12.0 to 14.6	M6	(N-m) (kgf-m) (ft-lbs)	9.8 to 11.2 1.0 to 1.1 7.2 to 8.3
5/16	(N-m) (kgf-m) (ft-lbs)	23.1 to 27.8 2.35 to 2.83 17.0 to 20.5	32.5 to 39.3 3.31 to 4.01 24.0 to 29.0	M8	(N-m) (kgf-m) (ft-lbs)	23.6 to 27.4 2.4 to 2.8 17.4 to 20.2
3/8	(N-m) (kgf-m) (ft-lbs)	47.5 to 57.0 4.84 to 5.81 35.0 to 42.0	61.0 to 73.2 6.22 to 7.46 45.0 to 54.0	M10	(N-m) (kgf-m) (ft-lbs)	48.1 to 55.8 4.9 to 5.7 35.5 to 41.2
1/2	(N-m) (kgf-m) (ft-lbs)	108.5 to 130.2 11.06 to 13.28 80.0 to 96.0	149.2 to 179.0 15.21 to 18.25 110.0 to 132.0	M12	(N-m) (kgf-m) (ft-lbs)	77.5 to 90.1 7.9 to 9.2 57.2 to 66.5
9/16	(N-m) (kgf-m) (ft-lbs)	149.2 to 179.0 15.21 to 18.25 110.0 to 132.0	217.0 to 260.4 22.13 to 26.55 160.0 to 192.0	M14	(N-m) (kgf-m) (ft-lbs)	124 to 147 12.6 to 15.0 91.5 to 108.4
5/8	(N-m) (kgf-m) (ft-lbs)	203.4 to 244.1 20.74 to 24.89 150.0 to 180.0	298.3 to 358.0 30.42 to 36.51 220.0 to 264.0	M16	(N-m) (kgf-m) (ft-lbs)	196 to 225 20.0 to 23.0 145 to 166

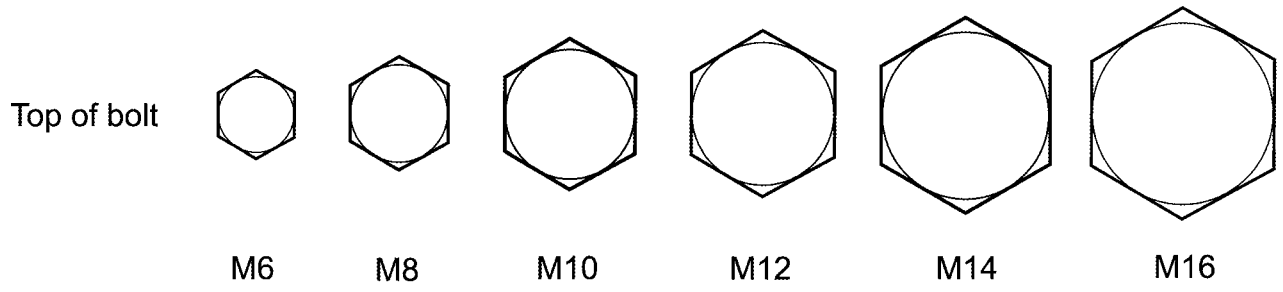

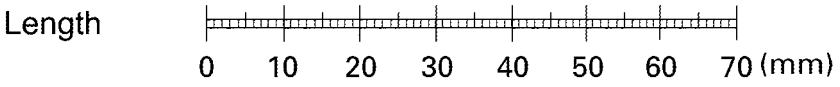

https://truckmanualshub.com/

STORAGE OF THE TRACTOR

WARNING

To avoid personal injury or death:

- **Do not clean the machine while the engine is running.**
- **To avoid the danger of exhaust fume poisoning, do not operate the engine in a closed building without proper ventilation.**
- **When storing, remove the key from the key switch to avoid unauthorized persons from operating the tractor and getting injured.**

TRACTOR STORAGE

If you intend to store your tractor for an extended period of time, follow the procedures outlined below. These procedures will insure that the tractor is ready to operate with minimum preparation when it is removed from storage.

1. Check the bolts and nuts for looseness, and tighten if necessary.
2. Apply grease to tractor areas where bare metal will rust also to pivot areas.
3. Detach the weights from the tractor body.
4. Inflate the tires to a pressure a little higher than usual.
5. Change the engine oil and run the engine to circulate oil throughout the engine block and internal moving parts for about 5 minutes.
6. With all implements lowered to the ground, coat any exposed hydraulic cylinder piston rods with grease.
7. Remove the battery from the tractor. Store the battery following the battery storage procedures.
   (See "Checking Battery Condition" in "EVERY 100 HOURS" in "PERIODIC SERVICE OF THE TRACTOR" section.)
8. Keep the tractor in a dry place where the tractor is sheltered from the elements. Cover the tractor.
9. Store the tractor indoors in a dry area that is protected from sunlight and excessive heat. If the tractor must be stored outdoors, cover it with a waterproof tarpaulin.
   Jack the tractor up and place blocks under the front and rear axles so that all 4 tires are off the ground. Keep the tires out of direct sunlight and extreme heat.

IMPORTANT :

- When washing the tractor, be sure to stop the engine. Allow sufficient time for the engine to cool before washing.
- Cover the tractor after the muffler and the engine have cooled down.

REMOVING THE TRACTOR FROM STORAGE

1. Check the tire air pressure and inflate the tires if they are low.
2. Jack the tractor up and remove the support blocks from under the front and rear axles.
3. Install the battery. Before installing the battery, be sure it is fully charged.
4. Check the fan belt tension.
5. Check all fluid levels (engine oil, transmission/ hydraulic oil, engine coolant and any attached implements).
6. Start the engine. Observe all gauges. If all gauges are functioning properly and reading normal, move the tractor outside. Once outside, park the tractor and let the engine idle for at least 5 minutes. Shut the engine off and walk around tractor and make a visual inspection looking for evidence of oil or water leaks.
7. With the engine fully warmed up, release the parking brake and test the brakes for proper adjustment as you move forward. Adjust the brakes as necessary.

https://truckmanualshub.com/

TROUBLESHOOTING

ENGINE TROUBLESHOOTING

If something is wrong with the engine, refer to the table below for the cause and its corrective measure.

Trouble		Cause	Countermeasure
Engine is difficult to start or won't start.		● No fuel flow.	● Check the fuel tank and the fuel filter. Replace filter if necessary.
		● Air or water is in the fuel system.	● Check to see if the fuel line coupler bolt and nut are tight. ● Bleed the fuel system (See "Bleeding Fuel System" in "SERVICE AS REQUIRED" in "PERIODIC SERVICE OF THE TRACTOR" section.)
		● In winter, oil viscosity increases, and engine revolution is slow.	● Use oils of different viscosities, depending on ambient temperatures. ● Use engine block heater (Optional)
		● Battery becomes weak and the engine does not turn over quick enough.	● Clean battery cables & terminals. ● Charge the battery. ● In cold weather, always remove the battery from the engine, charge and store it indoors. Install it on the tractor only when the tractor is going to be used.
Insufficient engine power.		● Insufficient or dirty fuel. ● The air cleaner is clogged.	● Check the fuel system. ● Clean or replace the element.
Engine stops suddenly.		● Insufficient fuel.	● Refuel. ● Bleed the fuel system if necessary.
Exhaust fumes are colored.	Black	● Fuel quality is poor. ● Too much oil. ● The air cleaner is clogged.	● Change the fuel and fuel filter. ● Check the proper amount of oil. ● Clean or replace the element.
	Blue white	● The inside of exhaust muffler is dumped with fuel. ● Injection nozzle trouble. ● Fuel quality is poor.	● Heat the muffler by applying load to the engine. ● Check the injection nozzle. ● Change the fuel and fuel filter.
Engine overheats		● Engine overloaded	● Shift to lower gear or reduce load.
		● Low coolant level	● Fill cooling system to the correct level; check radiator and hoses for loose connections or leaks.
		● Loose or defective fan belt	● Adjust or replace fan belt.
		● Dirty radiator core or grille screens	● Remove all trash.
		● Coolant flow route corroded	● Flush cooling system.

If you have any questions, consult your local KUBOTA Dealer.

https://truckmanualshub.com/

OPTIONS

Consult your local KUBOTA Dealer for further details.

- Engine Block Heater
  For extremely cold weather starting
- Work Light (Front and Rear)
  High visibility for night work
- Back Buzzer
- Tool Box
- Horn
- Double Acting Remote Hydraulic Control Valve
- 3-point Hitch
- Drawbar
- Top & tilt kit (For scraper)

https://truckmanualshub.com/

APPENDICES

INDEX

3-point Hitch Lowering Speed 43
Air Cleaner Primary Element.....63
Air Cleaner Primary Element and Secondary Element 72
Anti-Freeze.....73
Battery Condition.....65
Block Heater (Option).....15
Brake Pedal.....65
Brake Pedals 59
Brake Pedals (Right and Left) 20
Check Chains 40
Control Switch 45
Coolant Level 59
Coolant Temperature Gauge.....24
Differential Lock.....25
Directions for Use of Power Steering 26
Do not Operate the Tractor at Full Speed for the First 50 Hours 17
Draining Clutch Housing Water 74
Drawbar (option).....39
Drawbar Length.....41
Dual Tires 48
Easy Checker(TM) 23
Electrical Wiring and Battery Cables 60
Engine Oil.....67
Engine Oil Filter.....67
Engine Oil Level 58
Engine Start System.....61
Engine Valve Clearance.....72
Fan Belt Tension 64
Flush Cooling System and Coolant.....72
Front Axle Case Oil 71
Front Axle Pivot [4WD] 72
Front Ballast 50
Front Cover 57
Front Wheel Drive Lever 22
Front Wheels 48
Fuel Filter 63
Fuel Filter Element 71
Fuel Gauge.....24
Fuel Hose 74
Fuel Injection Nozzle Injection Pressure 72
Fuel Line.....64
Fuel System 74
Fuse..... 75
Gauges, Meter and Easy Checker(TM)..... 59
Glove Box 18
Grill, Radiator Screen and Oil Cooler 59
Hand Throttle Lever..... 22
Head Light / Turn Signal / Hazard Light Switch19
Head Light, Hazard Light etc. 59
Hood 56
Horn Button (if equipped) 20
Hourmeter / Tachometer 24
HST Oil Filter 68
Hydraulic Control Unit Use Reference Chart... 47
Immediately Stop the Engine if:..... 23
Inflation Pressure..... 48
Inflation pressure 77
Injection Pump 72
Install the Coupler..... 45
Installing the Lower Link 39
Intake Air Line..... 68
Intake Air Line..... 74
Lifting Rod (Right)..... 40
Light Bulb..... 75
Liquid Ballast in Rear Tires..... 12
Lubricating Grease Fittings..... 60
Lubricating Oil for New Tractors 17
Main Frame Bolt Torque..... 62
Movable Parts..... 60
Operating on Slopes and Rough Terrain..... 26
Operating the Tractor on a Road..... 26
Operator's Seat..... 18
Parking 25
Parking Brake Lever 22
Position Control 43
Power Steering Hose..... 74
Power Steering Line 69
PTO Clutch Lever 36
PTO shaft Cover and Shaft Cap..... 37
Radiator Hose (Water pipes) 74
Radiator Hose and Clamp 68
Range Gear Shift Lever (L-M-H) 21
Rear Ballast 50
Rear Wheels..... 48
Refueling 57
Remote Control Coupler Connecting and Disconnecting 46

https://truckmanualshub.com/

Remote Control Valve 44
Remote Control Valve Coupler Connecting and Disconnecting 44
Remote Control Valve Lever 44
Seat Belt.....18
Seat Belt, ROPS and FOPS.....60
Selecting the Holes of Lifting Rods and Lower Links 39
Selecting the Top Link Mounting Holes.....39
Side Cover.....56
Spark Arrester 66
Speed Control Pedal 23
Standard valve 33
Stationary PTO.....36
Stopping 23
Tilt Steering Adjustment 19
Toe-in 69
Top Link.....40
Tractor Lights 20
Transmission Fluid / Hydraulic Oil Filter.....70
Transmission Fluid Level.....58
Treads 49
Walk Around Inspection 57
Warm-up Transmission Oil at Low Temperature Range 16
Wheel Bolt Torque.....62