https://truckmanualshub.com/

snorkel

S2755BE
S2255BE
S2755RT
S2255RT

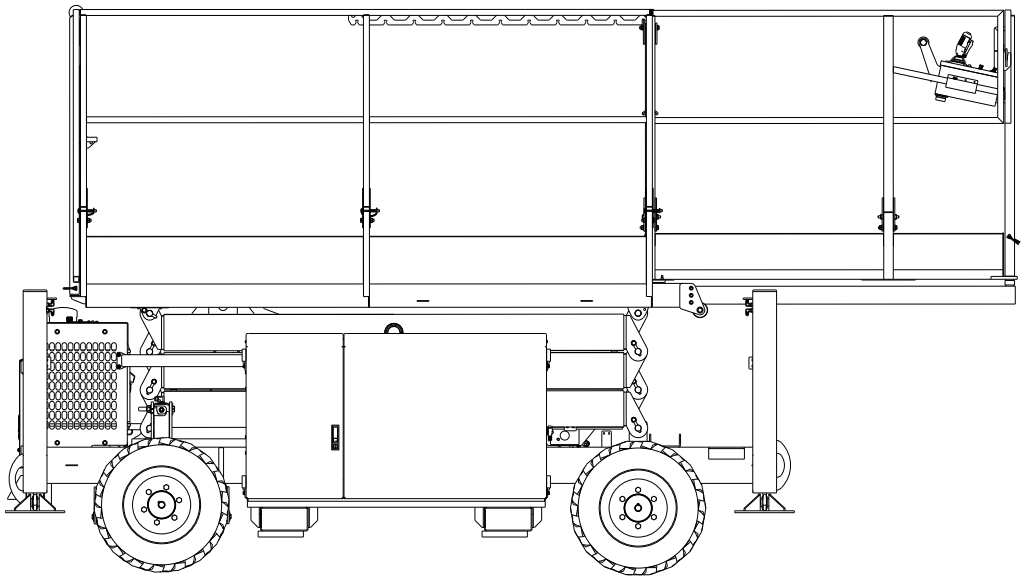

Diesel
Bi-Energy 24V DC

REPAIR PARTS
MANUAL

Part Number 13715-2
November 2012 (Rev C)
Version III

Serial Number S2755RT-07-000001 and after

https://truckmanualshub.com/

https://truckmanualshub.com/

Table of Contents

General Specifications

General Specifications S2255RT 3
General Specifications S2755RT 4
Engine Data. 5
Engine Oil Charts 5
Classification. 6
AS1418.1 Group Classification. 6
Commissioning Information 6

Maintenance Information

About this Manual: 7
Manual Organization. 7
General Specifications. 7
Maintenance 7
Auto level system. 7
Repair parts and drawings. 7
Hydraulics 7
Electrical 7
Options. 7
Parts index - Page locator 7
Maintenance and Schematics. 7
Maintenance information 7
Maintenance schedules 8
Daily Maintenance 9
Pre-operational inspection. 9
90 Day or 150 Hour Maintenance
(Trained Service Technician) 10
Yearly or 500 Hour Maintenance
(Trained Service Technician) 10
Lubricants 11
Pressure gun application. 11
Lubrication 11
King pins (Item 1). 11
Tie rods (Item 2) 11
Steer cylinder end (Item 3) 11
Wheel bearings
Drive wheels (Item 4) 11
Engines (Item 5) 12
Hydraulic oil reservoir (Item 6) 12
Return filter (Item 7). 12
Door hinges and latches (Item 8) 12
Slide pads (Item 9). 12
Scissor arm bearings (Item 10) 12
Batteries (Item 11) 12
Preventive inspection maintenance
90 day or 150 hour checklist 14
Torque chart 16
Servicing STC Fittings 17
Disconnection 17
Inspection. 17
Installation and connection 17
Seal replacement instructions 18
To order service or repair parts 19
ANSI and OSHA compliance. 19
Manuals 19
Product Warranty 19

Auto Level System

Auto Level System Troubleshooting. 21
Test procedures. 21
Using the EZcal 21
EZcal auto level calibration procedure 22

Section 1. - Repair Parts

Cabinet assembly 1-2
Cabinet assembly drawing 1-3
Steer axle assembly drawing 1-4
Steer axle assembly 1-5
Articulating axle assembly. 1-6
Articulating axle assembly drawing. 1-7
Control cabinet assembly drawing 1-8
Control cabinet assembly 1-9
Fuel cabinet assembly. 1-10
Fuel cabinet assembly drawing. 1-11
Engine assembly drawing, Kubota D902 1-12
Engine assembly, Kubota D902 1-13
Cable operated emergency bleed down 1-14
Cable operated bleed down drawing. 1-15
Scissor stack S2255RT 1-16
Scissor atack drawing, SR2255 1-17
Scissor stack drawing, SR2755. 1-18
Scissor stack S2755RT 1-19
Stabiliser assembly 1-20
Stabiliser assembly drawing 1-21
Platform assembly drawing 1-22
Platform assembly 1-23
Engine cabinet assembly. 1-24
Engine cabinet assembly drawing. 1-25
Fuel tank assembly, diesel fuel 1-26

https://truckmanualshub.com/

Table of Contents

Upper control box mounting assembly 1-27
Placards and decals installation 1-28
Placards and decals drawing 1-29

Section 2. - Hydraulics

Hose part numbers and colour codes 2-3
Hydraulic assembly 2-4
Hydraulic schematic drawing. 2-5
Manifold assembly 2-8
Manifold assembly 2-9
Manifold assembly, 4WD. 2-10
Manifold assembly, stabilisers. 2-11
Hydraulic oil tank assembly 2-12
Hydraulic oil tank assembly drawing 2-13
Steer axle cylinder 2-14
Axle cylinder. 2-15
Main lift cylinder assembly 2-16
Stabiliser Cylinder 2-17

Section 3. - Electrical

Looms 3-2
Electrical schematic drawing, auto level 3-3
Colour coded wiring circuit auto level 3-4
Ground control box assembly drawing 3-6
Ground control box assembly 3-7
Ground box 3-8
Ground box drawing - sheet 1 3-9
Ground box drawing - sheet 2 3-10
Platform control box assembly 3-12
Platform Control Box Assembly drawing
Sheet 1 3-13
Platform Control Box Assembly drawing
Sheet 2 3-14

Section 4. - Options

AC outlet at platform, 230 volt 4-2
AC outlet at platform 230V drawing. 4-3
Flashing light installation 4-4

Section 4 - 24VDC Option

24VDC Option 4-5
Colour coded wiring schematic,
24VDC option 4-7
Control & hydraulic cabinet assembly - 24VDC . . . 4-8
Control & hydraulic cabinet assembly
drawing 24VDC option 4-9
Battery box assembly drawing, 24VDC option . . . 4-10
Battery box assembly - 24VDC option 4-11
Battery box mounting - 24VDC option. 4-12
Emergency bleed down mounting, 24VDC 4-13
Relay box assembly, 24VDC option 4-14
Relay box assembly drawing, 24VDC option 4-15
Unloader valve 24VDC option 4-16

https://truckmanualshub.com/

General Specifications S2255RT

SPECIFICATIONS		S2255RT	
Nominal working height	Wheels	8.1m	26' 7"
	Stabilisers	8.5m	27' 11 "
Platform floor height	Wheels	6.1m	20'
	Stabilisers	6.5m	21' 4"
Roll out deck size		1200mm	47”
Drive speed	Below 2.4m	0 to 5.2kph	0 to 3.3mph
	Above 2.4m	0 to 0.64kph	0 to 0.4mph
Safe working load (Roll out deck NOT extended)	Main deck	420kg	925lbs
Safe working load (Roll out deck extended)	Main deck	300kg	661lbs
	Roll out deck	120kg	265lbs
Platform size		2.73 x 1.4m	8' 11" x 4' 7"
Stowed height	Hand rails up	2.35m	7' 8"
	Hand rails folded down	1.55m	5' 1"
Overall length		3.3m	11’ 0”
Overall width		1.45m	4' 9"
Gradeability		35%	
Lift time		24 - 29 seconds	
Lower time		40 - 42 seconds	
Turning radius	Inner	2.5m	8.2'
	Outer	4.75m	15.6'
Maximum wind speed	12.5m/s	45km/h	28mph
Insulation rating		Nil	
Tyres	Poly filled loader lug	23" x 8.9" x 12"	
Overall weight		2360kg	5202lbs
Ground clearance	Minimum	170mm	7”
	Mid cabinet	260mm	10.2"
Maximum sound level at platform		86db	
Maximum outrigger load		1420kg	3130lbs
Maximum wheel load		1420kg	3130lbs
Maximum chassis inclination		2/4 degrees	
Maximum manual force		400N	

https://truckmanualshub.com/

General Specifications S2755RT

SPECIFICATIONS		S2755RT	
Nominal working height	Wheels	9.9m	32' 6"
	Stabilisers	10.4m	34' 1"
Platform floor height	Wheels	7.9m	25' 11"
	Stabilisers	8.4m	27' 7"
Roll out deck size		1200mm	47”
Drive speed	Below 2.4m	0 to 7kph	0 to 4.3mph
	Above 2.4m	0 to 0.8kph	0 to 0.5mph
Safe working load (Roll out deck NOT extended)	Main deck	340kg	750lbs
Safe working load (Roll out deck extended)	Main deck	220kg	485lbs
	Roll out deck	120kg	264lbs
Platform size		2.73 x 1.4m	8' 11" x 4' 7"
Stowed height	Hand rails up	2.5m	8' 3"
	Hand rails folded down	1.75m	5' 8"
Overall length		3.3m	11’ 0”
Overall width		1.45m	4' 9"
Gradeability		35%	
Lift time		seconds	
Lower time		seconds	
Turning radius	Inner	2.5m	8.2'
	Outer	4.75m	15.6'
Power source		Diesel engine	
Maximum wind speed	12.5m/s	45km/h	28mph
Insulation rating		Nil	
Tyres	Poly filled loader lug	23" x 8.9" x 12"	
Overall weight		2520kg	5555.5lbs
Ground clearance	Minimum	170mm	7”
	Mid cabinet	260mm	10.2"
Maximum sound level at platform		86db	
Maximum outrigger load		1470kg	3240lbs
Maximum wheel load		1470kg	3240lbs
Maximum chassis inclination		2/4 degrees	
Maximum manual force		200N Outdoors, 400N Indoors	

https://truckmanualshub.com/

■ Engine Data

Model	KUBOTA (diesel)
Model	D902
Fuel	Diesel
Fuel Grade	ASTM Grade 2-D S5000 Tier 4 Compliance: Low Sulpher ASTM Grade 2-D S500 centane no. >44 (For operating temperature below 32°F (0°C) use "winterised" no. 2-D
Coolant	50% water + 50% ethylene glycol
Maximum Temperature	110°C
Oil capacity	3.7 L
Oil Grade	API: Quality better than CD
Oil Weight	See chart below

■ Engine Oil Charts

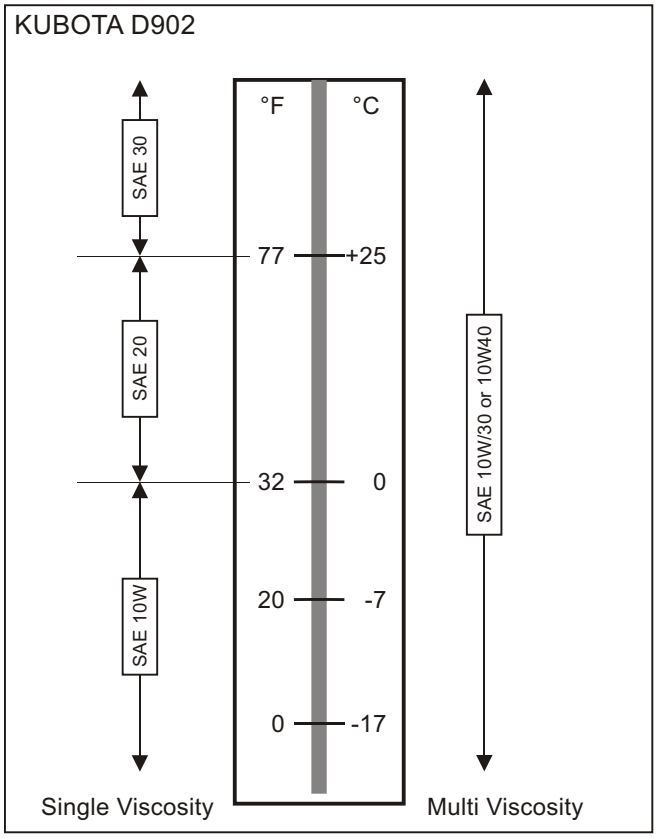

https://truckmanualshub.com/

■ Classification

Group A Type 3

■ AS1418.1 Group Classification

C3

■ Commissioning Information

Commissioning of the machine consists of performing the Pre Delivery and Inspection Report (PDIR) satisfactorily.

This PDIR is performed by Snorkel or it's agent before the machine is delivered.

A completed PDIR can be obtained, by request, from the sales agent.

https://truckmanualshub.com/

■ About this Manual:

This Maintenance and Repair Parts manual covers current production machines only.

While Snorkel has attempted in every way to confirm that all information in this manual is correct, improvements are being constantly made to the machine that may not be reflected in this manual.

NOTE:

It is recommended that you record the serial and model number of your machine (see page 19 of this chapter). This information is found on the serial number placard.

■ Manual Organization

The Repair Parts Manual consists of six sections with an individual table of contents preceding sections 1 through 4.

Subassemblies and detailed parts are identified by index numbers on the drawings that correspond to the item numbers on the parts listing. When requesting any part, always specify complete part number, description, model and serial number of your unit.

The following is a general description of each section and its contents.

❑ General Specifications

The section immediately preceding, contains information relating to the general specifications of the S2255RT & S2755RT.

❑ Maintenance

The pages immediately following, contain information as to the maintenance schedules - lubricants and procedures for proper lubrication of the unit.

❑ Auto level system

The last section in the Maintenance chapter gives guidelines for trouble shooting and calibration of the auto level system

❑ Repair parts and drawings

Repair Parts (Section 1), contains parts listings and drawings for general mechanical repair parts of all major installations and subassemblies of the unit.

❑ Hydraulics

(Section 2), contains parts listings and drawings of hydraulic components installations including hydraulic schematics and individual components such as cylinders, controls valves and solenoid operated valves.

❑ Electrical

Electrical (Section 3), contains listings and drawings of electrical components installations including wiring schematics.

❑ Options

Options (Section 4), contains parts listings and drawings of optional installations.

❑ Parts index - Page locator

The parts index - page locator, identifies the component by name and directs you to the section and page number where you may find information for that part such as its part order number, etc.

■ Maintenance and Schematics

❑ Maintenance information

The parts drawings located in the repair parts sections, are designed for use as a guide for proper disassembly of the machine and components as well as for parts replacement. Always refer to the hydraulic system installation drawings and the electrical wiring diagram before removing or disassembling associated parts.

⚠CAUTION

Do not attempt to disconnect or remove any hydraulic line before reading and understanding all text concerning the system hydraulics. In most cases, disassembly of the machine will be obvious from the drawing.

⚠CAUTION

DO NOT modify this ariel platform without prior written consent of Snorkel Engineering Department.

Modification may void the warranty, adversely affect stability, or affect the operational characteristics of the ariel platform.

When disassembling or reassembling components, complete the procedural steps in sequence. Always check your work to assure that nothing has been overlooked.

https://truckmanualshub.com/

The following list is a gentle reminder when disassembling or assembling the machine.

- ✓ Always be conscious of weight.
- ✓ Never attempt to lift heavy objects without the aid of a mechanical device.
- ✓ Do not allow heavy objects to rest in an unstable condition.
- ✓ Always make sure work platform is in stowed position - blocked or the weight removed by a suitable lifting device before disconnecting the hydraulic hose from the motor/pump unit to the lift cylinder.
- ✓ When raising a portion of the machine, be sure that adequate blocking is properly positioned - Do not depend on lifting device to hold and secure weight.
- ✓ If a part resists removal, check to see if all fasteners, electrical wiring, hydraulic lines, etc., have been removed or that other parts are not interfering.

Parts should be thoroughly inspected before restoring to service at the time of reassembly. Burrs, nicks or scratches may be removed from machined surfaces by honing or polishing with #600 crocus cloth, followed by a thorough cleaning in an approved cleaning solvent, and blown dry with compressed air. Do not alter the contour of any part. If this operation does not restore the part to a serviceable condition, replace the part.

Replace all O-rings, seals, and gaskets at reassembly. Use new roll pins or cotter pins. Dip all packing rings and seals in hydraulic oil before reassembling in cylinder and manifold installations. Replace any part having imperfect threads. In general, units that have been disassembled can be reassembled by reversing the order of disassembly.

Remember that the service life of a machine can be increased by keeping dirt and foreign materials out of the vital components. Precautions have been taken to safeguard against this; shields, covers, seals and filters are provided to keep air and oil supplies clean; however, these items must be maintained on a scheduled basis in order to function properly.

At any time air or oil lines are disconnected, clean surrounding areas as well as the opening and fittings themselves. As soon as a line or component is disconnected, cap or cover all openings to prevent the entry of dirt or foreign materials.

New parts should remain in their container until they are ready to be used.

Clearly mark or tag hydraulic lines and electrical wiring connections when disconnecting or removing them from unit. This will assure that they are correctly reinstalled.

Proper assembly is critical to the successful rebuilding of any unit. Carefully inspect any parts which are to be reused. If in doubt, replace.

"SAFETY FIRST" is a good slogan.

Replace any guards and protective devices that have been removed to carry out maintenance and repair work.

■ Maintenance schedules

Snorkel has established a Preventive Maintenance Schedule that includes:

- ✓ Daily Maintenance (Operator's Inspection)
- ✓ 90 Day or 150 Hour (frequent) Maintenance
- ✓ Yearly or 500 Hour (annual) Maintenance,

These schedules should ensure the detection of any defective, damaged or improperly secured parts and provide information regarding lubrication and other minor maintenance items.

The Maintenance Schedule following, outlines the requirements of these maintenance checks for each time interval. The Operator's Pre-operational inspection must be performed by a trained operator. All other maintenance and inspections must be performed by a trained service technician only.

Note that the 90 Day or 150 hour (frequent) and yearly or 500 hour (annual) Maintenance, require use of the Preventive Inspection Maintenance Checklist to pinpoint all inspection items. Retain a copy of these forms for your records.

They also require that all placards and decals on the unit are to be inspected.

All placards and decals must be in place and legible. Use the placards installation drawing and parts listing in the repair parts section 1 of this manual to check these placards and decals.

Snorkel recommends that you make additional copies of the Preventive Inspection Maintenance Checklist forms for your use in performing these

⚠ DANGER

Failure to perform the Preventive Maintenance at the intervals outlined in the Maintenance Schedule may result in a unit being operated with a defect that could result in INJURY or DEATH of the unit operator. DO NOT allow a unit to be operated that has been found to be defective.

Repair all defects before returning the unit to service

https://truckmanualshub.com/

■ Daily Maintenance

❑ Pre-operational inspection

(Set the KEY SWITCH to off before starting this inspection).

COMPONENTS	SERVICE REQUIRED
Rough terrain scissor interlock tests	Perform tests to ensure the system is functioning
Fuel level	Visually inspect
Fuel filter (diesel engines only)	Visually inspect (condition)
Fuel leaks	Visually inspect (hoses, connections, etc)
Engine oil	Check oil level (between dipstick lines)
Engine coolant	Check fluid level and radiator hoses
Radiator cap	Visually inspect (installation)
Air Filter	Check condition (gauge)
Platform entrance gate	Visually inspect (installation, operation)
Wiring harness and connectors	Visually inspect (installation, condition)
Battery terminals	Visually inspect (installation)
Battery fluid level	Visually inspect (covers plates)
Hydraulic oil reservoir cap	Visually inspect (installation)
Hydraulic oil level	Check fluid level (at line on side of tank)
Hydraulic oil leaks	Visually inspect (hoses, tubes)
Tires and wheels	Visually inspect (condition)
Bolts and fasteners	Visually inspect (looseness)
Structural damage & welds	Visually inspect (weld cracks, dents)
Platform guardrails	Visually inspect (condition)
Lanyard anchor points (option)	Visually inspect (condition)
Bubble level indicator	Visually inspect (condition)
Guides, rollers and slides	Visually inspect (condition)
Non slip tread grip	Visually inspect (condition)
Wrist support	Visually inspect (condition)
Operator manual	Visually inspect (that the manual is in the holder)
Placards, decals and operators manual	Visually inspect (installation and condition)
START THE ENGINE FROM THE BASE CONTROL PANEL TO CHECK THE FOLLOWING	
Charging system	Check condition (gauge)
Ground controls	Actuate and visually inspect for proper operation
Emergency lowering (from the ground)	Check operation (causes correct motion)
Platform controls	Actuate and visually inspect for proper operation
Flashing light	Check operation
Emergency lowering (from the platform)	Check operation (causes correct motion)
Safety prop	Check operation
Parking brakes	Check operation
Optional items	Check operation

https://truckmanualshub.com/

■ 90 Day or 150 Hour Maintenance (Trained Service Technician)

COMPONENTS	SERVICE REQUIRED	RECOMMENDED LUBRICANT OR FURTHER INSTRUCTIONS
Daily maintenance	Perform maintenance as per schedule	
Preventive inspection maintenance checklist	Perform inspection, complete form	Retain copy of checklist
Placards & decals inspection	Inspect using drawing and parts listing in section 1 (repair parts)	Replace any missing or unreadable decals/placards
Door hinges and latches	Lubricate	SAE 10W oil or spray lube
Tie rods	Check pin keeper and condition	**DO NOT** lubricate
Steer cylinder ends	Check pin keeper and condition	**DO NOT** lubricate
Batteries	Check specific gravity	1.260/1.275 at 80° F.
Platform lift capacity	Check if platform can lift maximum load	
Platform lift/lower speeds	Check smooth operation and speeds	
Hydraulic return filter	Check condition	Replace if dirty
Engine RPM	Check for proper RPM	Low = 1750rpm High = 3000rpm
Engine oil and oil filter	Replace per engine manufacturer's interval	See engine manufacturer's owners manual
Engine fuel filter	Check condition	Replace every 6 months or if dirty
Slide pads	Check condition	DO NOT lubricate
Scissor arm bearings	Check condition	DO NOT lubricate

■ Yearly or 500 Hour Maintenance (Trained Service Technician)

COMPONENTS	SERVICE REQUIRED	RECOMMENDED LUBRICANT OR FURTHER INSTRUCTIONS
90 day or 150 hour maintenance	Perform maintenance per schedule	
Hydraulic oil reservoir	Clean and replace fluid	Shell Tellus 32 or similar
Hydraulic return filter	Replace	After 1st. 50 hours, thereafter at recommended interval
Hydraulic pressures	Check pressures	
Platform controller	Check operation	
Base controls	Check operation	

https://truckmanualshub.com/

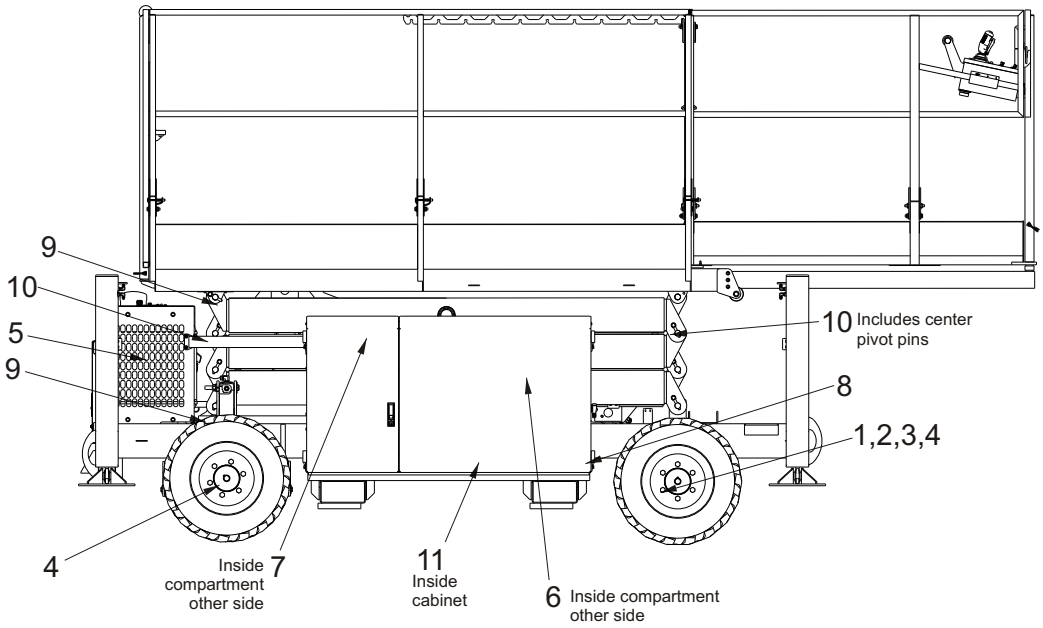

The drawing locates the lubrication points of the machine

■ Lubricants

Specific lubricants as recommended by Snorkel, should be used in maintaining your unit. If in doubt regarding the use of lubricants other than those listed, contact Snorkel.

❑ Pressure gun application

Service all fittings as indicated in the Maintenance Schedule and lubrication drawing. Wipe away all excess lubricant from exposed surfaces. Over lubrication can collect dirt and foreign matter which acts as an abrasive. Lubrication of accessory equipment should be in accordance with the manufacturer's recommendations.

NOTE

Any time the work platform is elevated to perform maintenance work, properly position the safety bar as outlined on the safety prop decal.

⚠DANGER

DO NOT reach through scissors mechanism unless the safety prop is properly positioned.

INJURY or DEATH could occur if the platform is not supported by the safety prop and should suddenly drop onto personnel performing maintenance work under the raised platform.

❑ Lubrication

Refer to the above lubrication drawing for location of the following item numbers.

❑ King pins (Item 1)

King pin bearings are self lubricating. Check for signs of damage and excessive wear as outlined in the maintenance schedule.
DO NOT lubricate

❑ Tie rods (Item 2)

Tie rod bearings are self lubricating. Check for damage and excessive wear as outlined in the maintenance schedule.
DO NOT lubricate

❑ Steer cylinder end (Item 3)

Steer cylinder ends are self lubricating. Check for damage and excessive wear as outlined in the maintenance schedule.
DO NOT lubricate

❑ Wheel bearings Drive wheels (Item 4)

Wheel bearings used on drive wheels are sealed bearings and do not require lubrication.

https://truckmanualshub.com/

❑ Engines (Item 5)

Other than daily Operator's maintenance outlined in the Daily Inspection and Maintenance schedule, all other engine maintenance information is found in the manufacturer's instruction manual.

Refer to the engine manufacturer's instruction manual or consult your local engine service representative if engine adjustments or repairs are needed.

⚠CAUTION

The engine MUST be operated in accordance with manufacturer's instructions and serviced at recommended intervals.

Failure to do so could result in the loss of your engine warranty and repair of any failure resulting from improper maintenance could be at your own expense.

❑ Hydraulic oil reservoir (Item 6)

The fluid level should be kept level with the indicator line on the side of the reservoir and should be checked with all cylinders fully retracted and the platform in the stowed position.

The interior of the reservoir should be wiped out and cleaned each time the hydraulic oil is changed. The reservoir filler/breather cap should be removed and the cap breather cleaned yearly with Kerosene, Fuel Oil or other solvent.

It is absolutely necessary that only new, clean hydraulic oil is added.

⚠CAUTION

If it becomes necessary to add or use an oil other than the recommended fluid, it is important that it be compatible and equivalent to the factory fill. Local oil suppliers can generally furnish this information.

If questions still remain, contact Snorkel for further information.

❑ Return filter (Item 7)

On scissorlift models, the hydraulic oil return filter is mounted in the left hand tray assembly close to the hydraulic oil reservoir.

The filter element is a throw-away type filter and should be changed after the initial break-in period (approximately 50 hours operation time).

The filter condition should be checked at the 90 day or 150 hour Preventive Inspection Maintenance interval or more frequently under extreme working conditions.

When changing the filter element, the oil inside of the filter element, should be examined for deposits of metal cuttings, which if present, could indicate excessive wear in some of the system components.

❑ Door hinges and latches (Item 8)

Door hinges and latches may be lubricated as required with spray lubrication or SAE 10W oil.

After lubricating, remove any excess oil or over-spray so it will not collect dirt and debris.

❑ Slide pads (Item 9)

Check slide pads for excessive wear and replace as required.

Slide pads **DO NOT** require lubrication.

❑ Scissor arm bearings (Item 10)

Scissor arm bearings are self lubricating. Check bearings for signs of damage and excessive wear as outlined in the maintenance schedule.
DO NOT lubricate scissor arm bearings.

■ Batteries (Item 11)

The battery will have longer life if the water level is maintained and it is kept charged. The unit will have better starting characteristics with a fully charged battery.

In cold weather the battery should be maintained at full charge to keep from freezing. An extremely low or dead battery can freeze in cold weather. Make sure connections are clean and tight.

Check specific gravity of the battery per maintenance schedule.

Make sure charging equipment is operating properly.

⚠DANGER

Lead-acid batteries contain sulfuric acid which will damage eyes or skin on contact. When working around batteries, ALWAYS wear a face shield to avoid acid in eyes.

If acid contacts eyes, flush immediately with clear water and get medical attention.

Wear rubber gloves and protective clothing to keep acid off skin, if acid contacts skin, wash off immediately with clear water.

https://truckmanualshub.com/

⚠ DANGER

Lead-acid batteries produce flammable and explosive gases. NEVER allow smoking, flames or sparks around batteries.

https://truckmanualshub.com/

Preventive inspection maintenance 90 day or 150 hour checklist

OK	OK - No Service Required
✔	Corrective Action Required
X	Corrected, (Record description of corrective action).

Serial Number _____

Inspection Procedures Codes
(1) Weld cracks, dents and/or rust
(2) Installation
(3) Leaks
(4) Operation
(5) Condition
(6) Tightness
(7) Residue buildup
(8) See placards and decals inspection chart

CHECK	OK	✓	X
BASEFRAME			
Structural (1)			
Steering cylinders (2,3,4,6)			
Steering cylinder fasteners and linkage (2,4)			
Tires and wheels (5)			
Articulating axles, if so equipped (2,4,5)			
Tray side covers (2,5,6)			
Torque drive wheel lug nuts 90 - 100 ft. lbs. (2,6)			
Torque steer wheel lug nuts 90 - 100 ft. lbs. (2,6)			
Right drive motor(s) (3,6)			
Left drive motor(s) (3,6)			
Drive cut-out			
Back-up horn (4)			
Guides, rollers and slides (2,4,5)			
Parking brake(s) (3,4)			
Free wheeling valve (3,4)			
Emergency lowering valve (3,4)			
Lowering alarm (4)			
Battery disconnect switch (4)			
Lubrication points			
Cords and wire assemblies (2,5,6)			
Hydraulic tubes and hoses (3,5)			
Decals and placards (2,8)			
OUTRIGGERS AND CONTROLS			
Right front outrigger (2,3,4)			
Left front outrigger (2,3,4)			
Right rear outrigger (2,3,4)			
Left rear outrigger (2,3,4)			
Platform elevated, outrigger controls DO NOT WORK (4)			
Outriggers lowered, platform elevated DRIVE WILL NOT WORK (4)			
SCISSOR ARM ASSEMBLY			
Structural (1)			
Scissor arm pivot pins (2,5)			
Lift cylinders and valves (2,3,4)			
Safety bar (2,4,5)			
Hydraulic tubes and hoses (3,5)			
Wires and electrical cables (2,5)			
Decals and placards (2,8)			

CHECK	OK	✓	X
BASE CONTROL STATION			
Key switch, main power ON - OFF (4)			
Selector switch base/platform controls - BASE CONTROLS SELECTED PLATFORM CONTROLS DO NOT WORK (4)			
Selector switch base/platform controls - PLATFORM CONTROLS SELECTED BASE CONTROLS DO NOT WORK (4)			
Toggle switch, platform UP - DOWN (4)			
Key start switch (4)			
Toggle switch, glow plug, timing light diesel units only (4)			
Fuel select switch GAS - LP FUEL (4)			
Emergency stop switch (4)			
Hour meter (4)			
Circuit breaker reset (4)			
Lowering alarm (4)			
Engine kill alarm (4)			
Low oil pressure alarm (4)			
High temperature alarm (4)			
Lift enable light (4)			
PLATFORM			
Structural (1)			
Guardrails properly installed and fastened (2,5)			
Platform entrance chain or gate (2,5)			
Wires and electrical cables (2,5)			
Decals and placards (2,8)			
Correct operators manual in document holder			
Roll out platform deck extension (2,4,5,8)			
PLATFORM CONTROLS			
Drive speed - platform elevated SLOW DRIVE SPEED ONLY (4)			
Drive speed - platform lowered DRIVES FAST or SLOW (4)			
Joystick control - DRIVE/STEER and PROPORTIONAL LIFT (4)			
Toggle type selector switch - HIGH SPEED/HIGH TORQUE (4)			
Toggle type selector switch - LIFT/DRIVE (4)			
Low engine oil light (4)			
Engine start/kill switch (4)			
Lift enable light (4)			
Raised platform drive enable light, (4)			
Emergency stop button (4)			
Joystick interlock switch (4)			
Interlocks (4)			

https://truckmanualshub.com/

CHECK	OK	✓	X
ENGINE			
Air filter (5)			
Belts and hoses (5)			
Hydraulic pump (4)			
Engine oil (5)			
Engine START - STOP (4)			
Electric throttle (4)			
Engine coolant level (5)			
Fuel system (3)			
Fuel tank (3,5)			
ELECTRICAL			
Batteries (2,4)			
Battery terminals (5,6,7)			
Battery electrolyte level (5)			
Battery specific gravity reading (5)			
Wires and cables (2,5,6)			
Battery disconnect switch (4)			
Level sensor (2,4,5)			
Motion warning alarm (2,4)			

CHECK	OK	✓	X
HYDRAULIC RESERVOIR & RETURN FILTER			
Translucent hydraulic oil reservoir (3,5)			
Filler/breather cap (6)			
Hydraulic fluid level (2,5)			
Return filter (2,5,6)			
Return filter element (5)			
OPTIONAL EQUIPMENT			
AC 110/220 volt outlet on platform (2,4)			
Flashing light (2,4)			

Corrective Action Required

Note: If correction action is required on any item, attach sheet indicating problem and action taken.

All items have been properly checked and tested and found to be operating satisfactory or necessary corrective action has been completed.

Inspected By: _____ Date _____

https://truckmanualshub.com/

■ Torque chart

NOM SIZE X PITCH	TENSILE STRESS AREA A_s (mm^2)	PROPERTY CLASS 8.8			PROPERTY CLASS 10.9		
		CLAMP LOAD W (N)	TORQUE (N.m)		CLAMP LOAD W (N)	TORQUE (N.m)	
			DRY k=0.20	LUBED k=0.15		DRY k=0.20	LUBED k=0.15
M3 x 0.5	5.03	2 200	1.32	0.99	2 990	1.79	1.34
M3.5 x 0.6	6.78	2 960	2.07	1.55	4 030	2.82	2.11
M4 x 0.7	8.78	3 830	3.07	2.30	5 220	4.17	3.13
M5 x 0.8	14.2	6 200	6.20	4.65	8 430	8.43	6.33
M6 x 1	20.1	8 770	10.5	7.90	11 950	14.3	10.8
M8 x 1.25	36.6	15 975	25.6	19.2	21 750	34.8	26.1
M8 x 1	39.2	17 100	27.4	20.5	23 275	37.3	27.9
M10 x 1.5	58.0	25 325	51	38.0	34 450	69	52
M10 x 1.25	61.2	26 725	53	40.1	36 350	73	55
M12 x 1.75	84.3	36 800	88	66	50 075	120	90
M12 x 1.25	92.1	40 200	96	72	54 700	130	98
M14 x 2	115	50 200	140	105	68 300	190	145
M14 x 1.5	125	54 550	155	115	74 250	210	155
M16 x 2	157	68 525	220	165	93 250	300	225
M16 x 1.5	167	72 900	235	175	99 200	320	240
M20 x 2.5	245	106 950	430	320	145 550	580	435
M20 x 1.5	272	118 750	475	355	161 550	650	485
M24 x 3	353	154 100	740	555	209 700	1 010	755
M24 x 2	384	167 600	805	605	228 100	1 100	820
M27 x 3	459	200 350	1 080	810	272 650	1 470	1 100
M27 x 2	496	216 500	1 170	875	294 600	1 590	1 150
M30 x 3.5	561	244 900	1 470	1 100	333 250	2 000	1 500
M30 x 3	580	253 150	1 520	1 140	344 500	2 070	1 550
M30 x 2	621	271 050	1 630	1 220	368 850	2 210	1 660
M33 x 3.5	694	302 950	2 000	1 500	412 250	2 720	2 040
M33 x 2	761	332 200	2 200	1 640	452 050	2 980	2 240
M36 x 4	817	356 600	2 570	1 930	485 300	3 490	2 620
M36 x 3	865	377 600	2 720	2 040	513 800	3 700	2 780
M39 x 4	976	426 000	3 320	2 490	579 750	4 520	3 390
M39 x 3	1 028	448 700	3 500	2 630	610 650	4 760	3 570
M42 x 4.5	1 121	489 300	4 110	3 080	665 850	5 590	4 200
M42 x 3	1 206	526 400	4 420	3 320	716 350	6 020	4 510
M45 x 4.5	1 306	570 050	5 130	3 850	775 750	6 980	5 240
M45 x 3	1 398	610 250	5 490	4 120	830 400	7 470	5 610
M48 x 5	1 473	642 950	6 170	4 630	874 950	8 400	6 300
M48 x 3	1 604	700 150	6 720	5 040	952 800	9 150	6 860

Grade marking

https://truckmanualshub.com/

■ Servicing STC Fittings

⚠IMPORTANT

These units use Aeroquip STC hydraulic fittings. Please read the following service information before undertaking any disassembly or service work on these fittings.

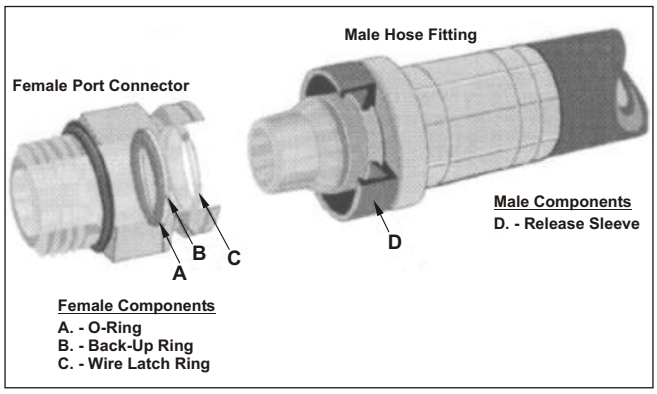

Figure 1. - STC Components

NOTE:

An STC release tool kit is available from Snorkel, Part Number 12791K

❑ Disconnection

⚠DANGER

Remove pressure from the system before attempting to disconnect these fittings in order to avoid forceful ejection of the fitting, which could result in personal injury.

1. Some fluid may still be in the system. Minimise fluid loss by draining the fluid from the system components prior to disconnection.
2. Prior to disconnection, clean the area around the fitting with a clean cloth, or, using an airgun blow dirt and debris from the release sleeve area.
3. To help avoid release sleeve tearing create a release tool insertion gap by moving the sleeve in the release direction. (see Figure 2). This can be done either by hand or by using a single prong of the release tool.
4. Insert the release tool behind the release sleeve **D** (see Figure 1) and pull the hose assembly out from the mating STC connector (leaving the release tool inserted will aid disassembly). **Do not pry on the fitting with the release tool.** (See Figure 2).
5. If a release tool is not available, a thin blade screwdriver may be used (larger fitting sizes may require two screwdrivers). Follow step 4 above.
   Use with care - a screwdriver could damage the release sleeve.

❑ Inspection

1. STC Fittings are designed to be connected and disconnected repeatedly without replacing the O-Ring and Back-Up-Ring, unless leakage or damage is observed.
2. Inspect mating STC fittings to ensure they are in good condition, clean and free of contaminants, nicks, scratches, flatspots etc.
3. Check the Wire Latch Ring **C** (see Figures 1 and 3) to ensure that it is in the proper position in the female STC connector prior to installation or reconnection.
4. Check the O-Ring **A** to ensure it is not cut or otherwise damaged prior to installation or reconnection.
5. Check the Back-Up-Ring **B** to ensure it is not damaged. Verify that it is at the front of the O-Ring groove prior to reconnecting the fitting.

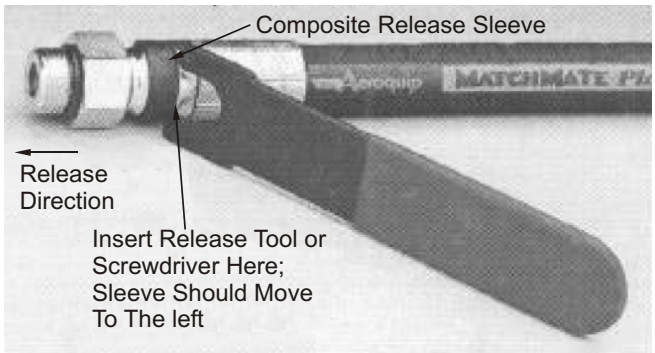

Figure 2. - STC Assembly

⚠CAUTION

If leakage is observed, and the fittings are in otherwise good condition, a seal replacement kit must be installed or the fitting must be replaced!
If seals are not replaced, a decrease in system performance or damage to the system components may result.

❑ Installation and connection

1. Install the STC port connector into the mating port carefully. Follow recommended installation procedures for the applicable port fittings.

https://truckmanualshub.com/

2. Align the STC fitting on the hose assembly with the STC connector, and push the hose fitting into the mating STC connector until you feel a definite snap and a solid stop.

⚠CAUTION

Pull back on the hose assembly to verify that a proper connection has been made. An improper connection may result in a sudden assembly failure with a potential for personal injury.

❑ Seal replacement instructions

1. Inspect the O-Ring **A** in Female STC connectors.
2. Carefully remove the O-Ring **A** and Back-Up Ring **B** with an O-Ring pick without damaging the interior surfaces of the fitting.
3. Inspect the interior surfaces and groves of the fitting and ensure they are free of foreign material, nicks, scratches, or dents.

⚠IMPORTANT

Any damaged O-Ring must be replaced with a new O-Ring and Back-Up Ring using only genuine Aeroquip parts.
Any damaged fitting must be replaced with a new part to avoid leakage.

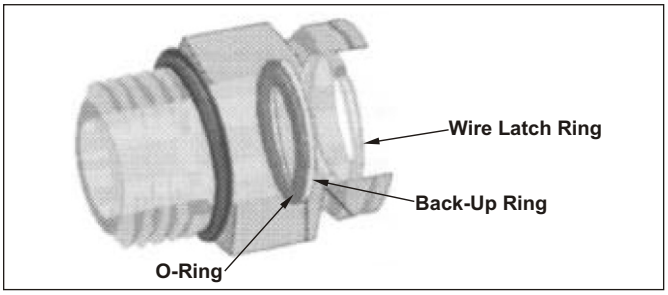

Figure 3. - Female Port Connector

4. If undamaged, clean the fitting and install Back-Up Ring **B** at the front of the O-Ring groove.
5. Install the new O-Ring **A** in the groove behind the Back-Up Ring **B** and inspect to ensure O-Ring and Back-Up Ring are secure in the groove.
   Lubricate the O-Ring with a lubricant which is compatible with the system fluid.

⚠IMPORTANT

Inspect to verify proper location of O-Ring in the connector (See Figure 3). Leakage could occur if installed incorrectly.

6. If the Wire Latch Ring **C** is damaged, carefully remove the Latch Ring without damaging the interior surfaces of the connector.
7. Carefully insert the new Wire latch Ring in the Latch Ring groove. The Latch Ring should be able to rotate in the groove.
8. Inspect and reinstall the connector. Follow the installation / connection steps for reinstallation.

https://truckmanualshub.com/

■ To order service or repair parts

When placing an order for service or repair parts, please have the following information available for your machine.

- ✓ Machine model number
- ✓ Machine serial number
- ✓ Snorkel part number
- ✓ Description of part
- ✓ Quantity of parts required
- ✓ Your purchase order number
- ✓ Address for order to “Ship To”
- ✓ Your desired shipment method

All correspondence relative to this unit, such as field reports, discrepancy reports, requests for service information, etc., should be directed to:

Snorkel New Zealand
36 Bruce Road
P.O. Box 1041
Levin 5500
New Zealand

Phone: +64 06 368-9168
Fax: +64 06 368-9164

Attention: Parts Department

❑ ANSI and OSHA compliance

All owners and users of the aerial platform must read, understand, and comply with all applicable regulations. Ultimate compliance to OSHA regulations is the responsibility of the user and their employer.

ANSI publications clearly identify the responsibilities of all personnel who may be involved with the aerial platform. A reprint of the “Manual of Responsibilities for Dealers, Owners, Users, Operators, Lessors and Lessees of ANSI/SIA A92.5-1992 Boom-Supported Elevating Work Platforms” is available from Snorkel dealers or from the factory upon request.

Copies are also available from:

Scaffold Industry Association
20335 Ventura Blvd. Suite 310
Woodland Hills, CA 91364-2471 USA

❑ Manuals

Manuals are available from Snorkel to support any of the machines that we produce.

The specific manuals for S2255RT - S2755RT are as follows:

- ✓ Operator’s Manual
  Snorkel part number - 13715-1
- ✓ Repair Parts Manual
  Snorkel part number - 13715-2

■ Product Warranty

For full terms of your warranty policy refer to the rear of this manual after the Index section, or check with your Snorkel distributor, or check the Snorkel website.

Record machine information here:

Model number*

_____

Serial number*

_____

Date of purchase

_____

Purchased from

_____

Snorkel dealer or distributor

_____

* This information is found on the serial number placard attached to your machine.

https://truckmanualshub.com/

https://truckmanualshub.com/

■ Auto Level System Troubleshooting

If the auto level system fails to level the machine there could be electrical or hydraulic problems.
If the lift enable light comes on but the machine is not level or the auto level board has been removed or replaced the unit will need to be re-calibrated.
An EZcal is required to do this.

❑ Test procedures

1. Remove the stabiliser cylinder covers.
2. Verify that the micro switches are working by operating them by hand. An EZcal can be plugged into the auto level board to verify the signals are reaching the board.
3. Verify that electrical signals are being sent from the auto level board to the stabiliser valves when auto level is selected.
   There should be approximately 12 volts across each leg coil and the stabiliser divert valve when auto level is selected.
4. Verify the hydraulic system by manually powering the stabiliser divert valve at each leg coil individually with the engine running. Each leg should move both up and down.

❑ Using the EZcal

1. Plug EZcal into the P1 port of the auto level board (see Figure 1.), and turn on the ignition of the machine.

Figure 1.

NOTE:

*The EZcal is a menu driven measuring and calibration device. Use the **four arrow keys** to scroll through menus and levels within menus, the **enter key** to enter/confirm data, and the **escape key** to cancel an operation or return to a previous menu level.*

⚠DANGER

Incorrect use of the EZcal could lead to safety issues and result in damage to the machine.

Ensure that you carefully follow the procedures set out below.

2. The display screen will show the following information (See Figure 2.).

```
GP122 MENU:
HELP:PRESS ENTER
```

Figure 2.

3. Use the [RIGHT ARROW] to scroll through to [DIAGNOSTICS] then press [ENTER].
4. Use the [RIGHT ARROW] to scroll to [SWITCHES] and press [ENTER].

NOTE:

*The designations LR, RR, RF, and LF used subsequently refer to leg positions **with respect to the auto level board** not the position on the machine (see Figure 3.).*

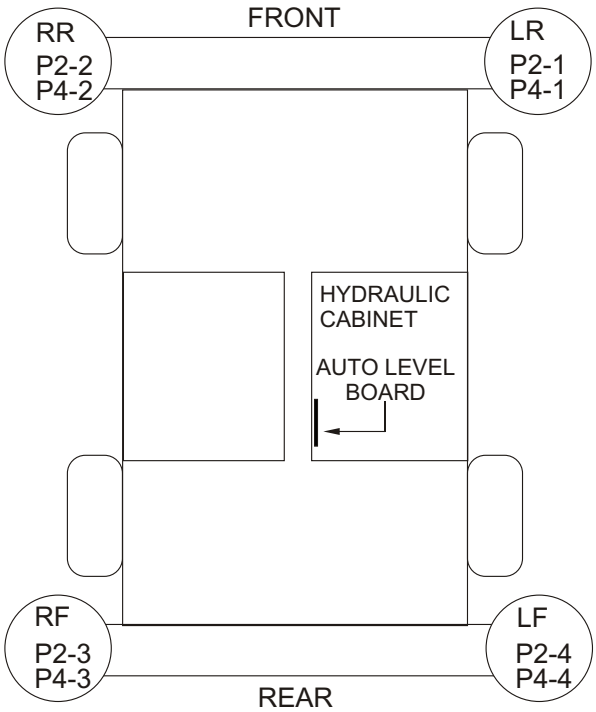

Figure 3.

https://truckmanualshub.com/

5. **LR / P2-1** will appear in the display:
   High will be displayed when the *left rear* outrigger is in contact with the ground and **Low** will be displayed when it is not.
   Verify this by operating the micro switch.
   The value should change from Low to High
6. Use the [RIGHT ARROW] to select **RR** / **P2-2**:
   High will be displayed when the *right rear* outrigger is in contact with the ground and **Low** will be displayed when it is not.
   Verify this by operating the micro switch.
   The value should change from Low to High
7. Use the [RIGHT ARROW] to select **RF** / **P2-3**:
   High will be displayed when the *right front* outrigger is in contact with the ground and **Low** will be displayed when it is not.
   Verify this by operating the micro switch.
   The value should change from Low to High
8. Use the [RIGHT ARROW] to select **LF** / **P2-4**:
   High will be displayed when the *left front* outrigger is in contact with the ground and **Low** will be displayed when it is not.
   Verify this by operating the micro switch.
   The value should change from Low to High
9. Use the [RIGHT ARROW] to select **Extend** / **P2-5**:
   High will be displayed when the *auto level switch* is activated and **Low** will be displayed when it is not.
10. Use the [RIGHT ARROW] to select **Retract** / **P2-6**:
    High will be displayed when the *auto stow switch* is activated and **Low** will be displayed when it is not.

NOTE:

If none of the above indicates a problem contact Snorkel or your local service agent.

❑ **EZcal auto level calibration procedure**

⚠DANGER

Under no circumstances change any other parameter of the auto level board (other than those specified here) without permission from Snorkel International.

Death or personal injury and serious damage to the machine can result from altering parameters beyond those specified.

1. Manually level the machine on its stabilisers.
2. Plug the EZcal into the auto level board (see Figure 1)
3. Turn on the machines ignition.
   The display screen will show:

```
GP122 MENU:
HELP:PRESS ENTER
```

4. Press the [RIGHT ARROW] twice to scroll to the Access Level 3 screen.
   The display will show:

```
GP122 MENU:
ACCESS LEVEL 3
```

5. Press [ENTER]
   The display screen will show:

```
ACCESS LEVEL:
CODE 0000
```

6. Use the [UP & DOWN ARROWS] to change the numbers and the [LEFT & RIGHT ARROWS] to change the cursor position.
   Change the code '0000' to the correct code to reach access level 1.
   Press [ENTER]
   The display screen will show:

```
GP122 MENU:
ACCESS LEVEL 1
```

7. Press [RIGHT ARROW] twice to select machine setup
   The display screen will show:

```
GP122 MENU:
MACHINE SETUP
```

8. Press [ENTER]
   The display screen will show:

https://truckmanualshub.com/


```
MACHINE SETUP:
CHANGE DEFAULTS
```

9. Press [ENTER]
   The display screen will show:

```
DEFAULTS:
1=SR2255
```

10. Only one machine type at a time will show on the screen.
    Use the [UP & DOWN ARROWS] to select the correct machine type (the full list is shown below).

    0=MHP
    1=SR2770
    2=SR3370
    3=SR3370eu
    4=SR2255
    5=SR2755

⚠DANGER

Death or personal injury and serious damage to the machine can result from selecting the incorrect machine type.

ENSURE that the machine type you selected at the above step is the one you are carrying out the auto level calibration on.

11. Press [ESC]
    The display screen will show:

```
MACHINE SETUP:
CHANGE DEFAULTS
```

12. Press the [RIGHT ARROW] to select the calibrate level function.
    The display screen will show:

```
MACHINE SETUP:
CALIBRATE LEVEL
```

13. Press [ENTER].
    The display screen will show:

```
CALIBRATE LEVEL:
YES:ENTER.NO:ESC
```

14. Press [ESC] to abort the calibration or [ENTER] to proceed with the calibration process.
    If [ENTER] is selected the display screen should show:

```
CALIBRATE LEVEL:
TILT 0.0'.0.0'
```

15. Values should now read approximately 0.0, 0.0. If they do not repeat from step 9.
16. Switch the ignition off and on again.
17. Check that the machine now levels correctly.

https://truckmanualshub.com/

https://truckmanualshub.com/

Section 1. - Repair Parts

Cabinet assembly 1-2
Cabinet assembly drawing 1-3
Steer axle assembly drawing 1-4
Steer axle assembly 1-5
Articulating axle assembly 1-6
Articulating axle assembly drawing 1-7
Control cabinet assembly drawing 1-8
Control cabinet assembly 1-9
Fuel cabinet assembly 1-10
Fuel cabinet assembly drawing 1-11
Engine assembly drawing, Kubota D902 1-12
Engine assembly, Kubota D902 1-13
Cable operated emergency bleed down 1-14
Cable operated bleed down drawing 1-15
Scissor stack S2255RT 1-16
Scissor atack drawing, SR2255 1-17
Scissor stack drawing, SR2755 1-18
Scissor stack S2755RT 1-19
Stabiliser assembly 1-20
Stabiliser assembly drawing 1-21
Platform assembly drawing 1-22
Platform assembly 1-23
Engine cabinet assembly 1-24
Engine cabinet assembly drawing 1-25
Fuel tank assembly, diesel fuel 1-26
Upper control box mounting assembly 1-27
Placards and decals installation 1-28
Placards and decals drawing 1-29

Cabinet assembly

https://truckmanualshub.com/

Item	Part No	Qty	Description
1.	3603-10	16	Washer, flat, M10 x 24 ZP
2.	3610-10025	8	Bolt, M10 x 25, C8.8, ZP
3.	3611-10	8	Nut, nylock, M10
4.	12857-1	1	Cabinet, control
5.	12856-1	1	Cabinet, fuel
6.	12855	1	Chassis assembly

https://truckmanualshub.com/

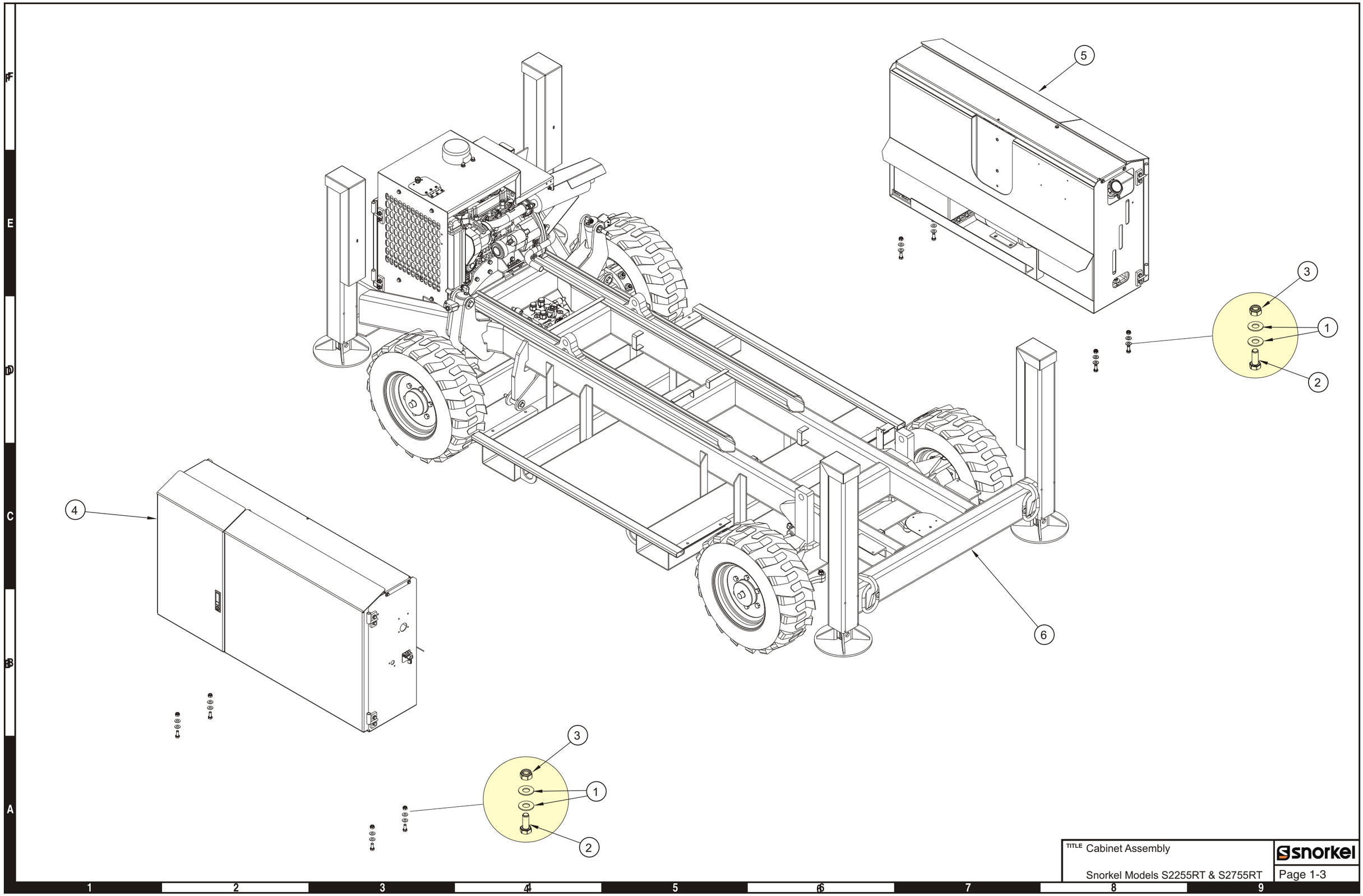

TITLE Cabinet Assembly

Snorkel Models S2255RT & S2755RT

snorkel

https://truckmanualshub.com/

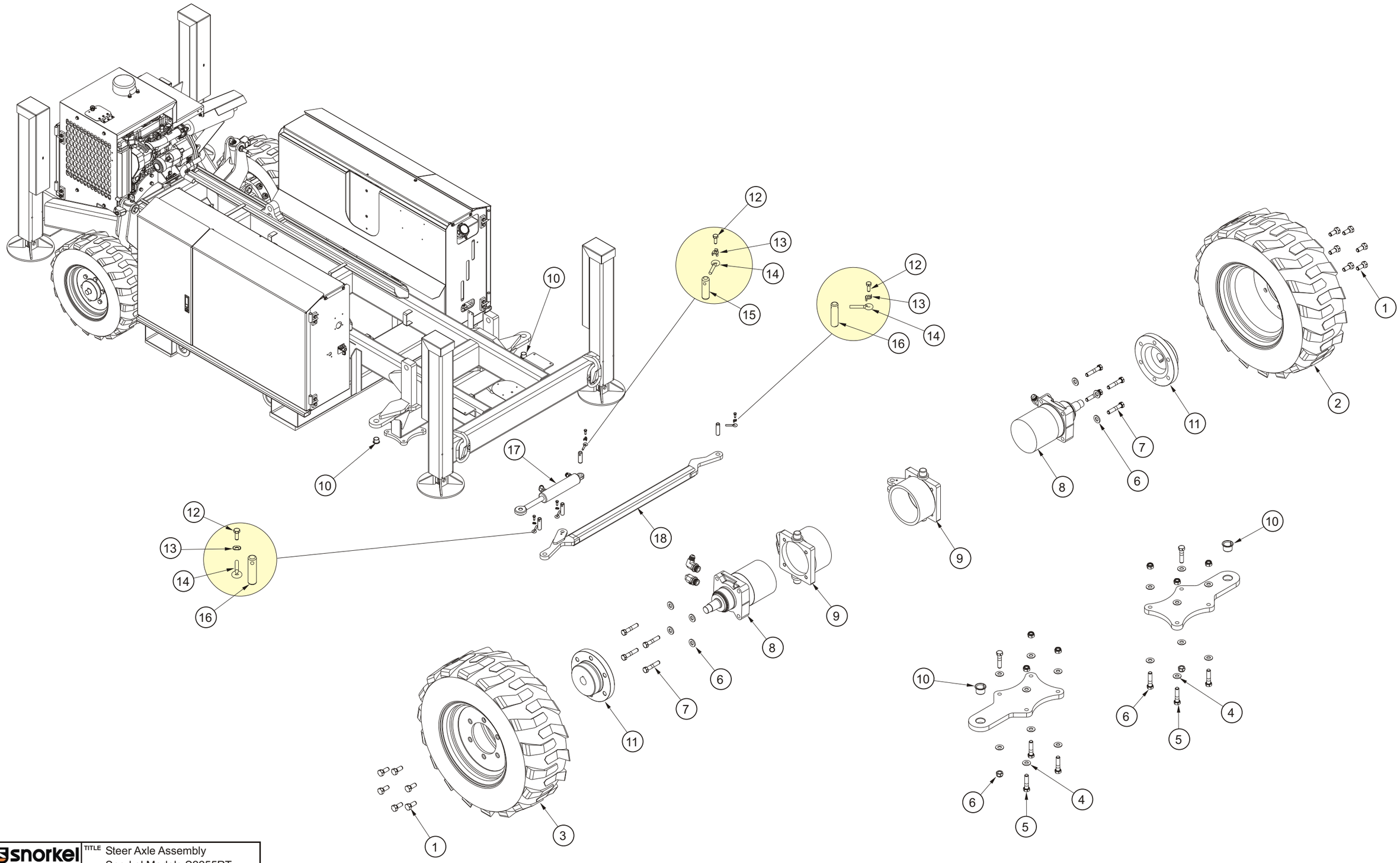

snorkel

TITLE Steer Axle Assembly
Snorkel Models S2255RT
& S2755RT

https://truckmanualshub.com/

Item	Part No.	Qty	Description
1.	98300-9	24	Countersunk wheel bolt
2.	12286-3L	1	Wheel, left hand, foam filled
3.	12286-3R	1	Wheel, right hand, foam filled
4.	3603-12	16	Washer, flat, M12 x 24 ZP
5.	3610-12050	8	Bolt, M12 x 50, C8.8, ZP
6.	3611-12	8	Nut, nylock, M12
7.	3616-12060	16	Bolt, M12 x 60, C10.9, black
8.	11601	2	Wheel motor
9.	11590	2	Swivel housing, kingpin
10.	3626-1	4	Flanged bush
11.	11629	2	Wheel hub
12.	3610-06016	4	Bolt, M6 x 16, C8.8, ZP
13.	11492-1	4	Washer, tab, M6
14.	8628	4	Pin keeper
15.	9311	1	Pin, steer cylinder
16.	9319	3	Pin, tie rod arm
17.	11699	1	Steer cylinder
18.	12303	1	Steering rod

Articulating axle assembly

https://truckmanualshub.com/

Item	Part No.	Qty	Description
1.	11642A	2	Axle cylinder assembly
2.	12286-3R	1	Wheel, right hand, foam filled
3.	11629	2	Wheel hub
4.	3616-12060	8	Bolt, M12 x 60, C10.9, black
5.	3603-12HD	8	Washer, flat, M12HD, galvanised
6.	11600	2	Wheel motor
7.	7031-003	2	Adaptor, elbow 90°, 7/16" JICM -> 7/16" UNO
8.	7025-010	4	Adaptor, straight, 9/16" JICM -> 7/8" UNO
9.	12296	2	Swing arm weld
10.	3616-12100	4	Bolt, M12 x 100, C10.9, ZP
11.	3608-12C	4	Conelock nut, M12
12.	3616-16140	4	Bolt, (Modified), M16 x 140, C10.9
13.	98300-9	12	Wheel stud
14.	3603-16HD	8	Washer, flat, M16, galvanised
15.	3608-16C	4	Conelock nut, M16
16.	3611-06	16	Nut, nylock, M6
17.	3603-06	8	Washer, flat, M6 x 16 ZP
18.	11794	2	Mounting bracket, magnetic switch
19.	560278	2	Proximity switch
20.	3610-06020	8	Bolt, M6 x 20, C8.8 ZP
21.	12286-3L	1	Wheel, left hand, foam filled

https://truckmanualshub.com/

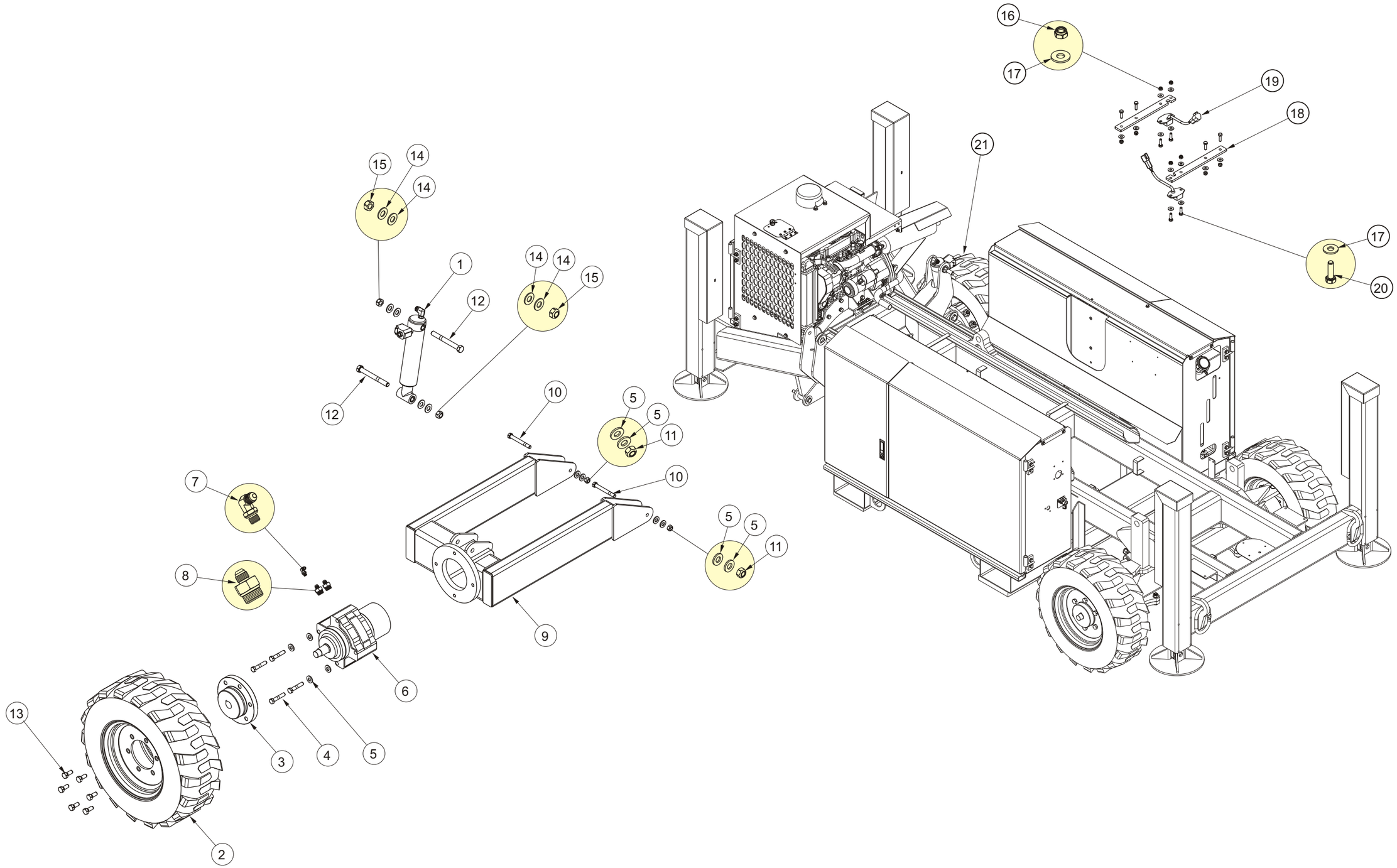

TITLE Articulating Axle Assembly

Snorkel Models S2255RT & S2755RT

snorkel

https://truckmanualshub.com/

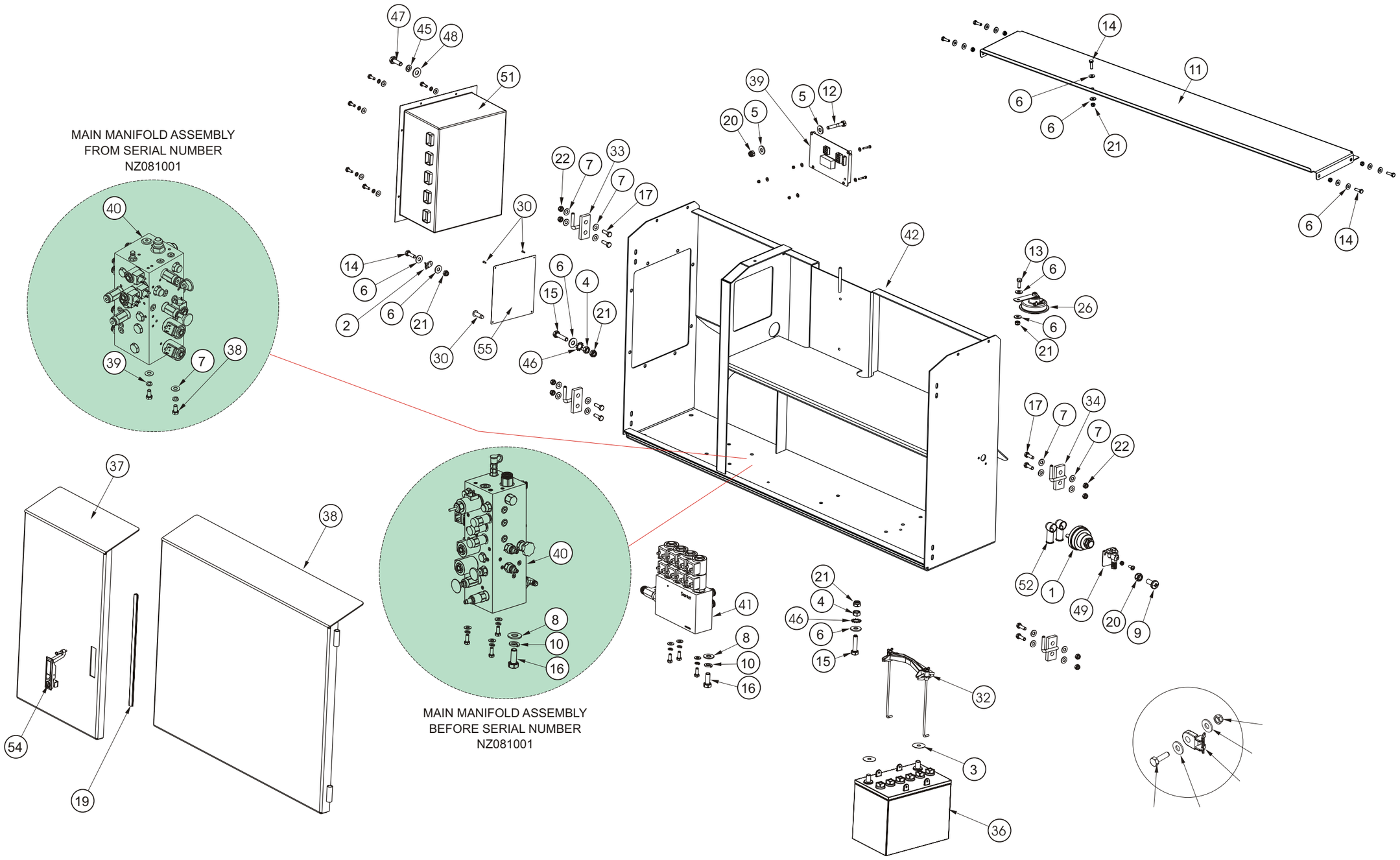

snorkel

TITLE Control Cabinet Assembly,

Snorkel Models S2255RT & S2755RT

https://truckmanualshub.com/

Item	Part No.	Qty	Description
1.	302-0049	1	Switch, battery disconnect
2.	2022-005	1	Cable tie bracket
3.	2069	1	Anti-corrosive pads
4.	3602-06	2	Nut, hex, M6 plated
5.	3603-05	8	Washer, flat, M5 x 12.5 ZP
6.	3603-06	21	Washer, flat, M6 x 16 ZP
7.	3603-08	24	Washer, flat, M8 x 19 ZP
8.	3603-10	3	Washer, flat, M10 x 24 ZP
9.	3604-05012	2	Screw, pan head, M10
10.	3605-10	8	Washer, spring, M10
11.	12313-10	1	Top panel side cabinet
12.	3610-05025	4	Bolt, M5 x 25, C4.6, ZP
13.	3610-06016	6	Bolt, M6 x 16, C8.8, ZP
14.	3610-06020	3	Bolt, M6 x 20, C8.8, ZP
15.	3610-06025	2	Bolt, M6 x 25, C8.8, ZP
16.	3610-10020	8	Bolt, M10 x 20, C8.8, ZP
17.	3610-08025	8	Bolt, M8 x 25, C8.8, ZP
19.	PCA015	1	Rubber channel section
20.	3611-05	6	Nut, nylock, M5
21.	3611-06	12	Nut, nylock, M6
22.	3611-08	8	Nut, nylock, M8
26.	4381	1	Horn
30.	8974	4	Screw, hammer drive
32.	10268-1	1	Battery bracket
33.	11470	2	Left hand hinge
34.	11470-1	2	Right hand hinge
36.	11596	1	Battery, 12v
37.	11679	1	Left hand door weld, small
38.	11680	1	Right hand door weld, large
39.	12546	1	Auto level board
40.	12567	1	Manifold, main
41.	12568	1	Manifold, stabiliser
42.	12716	1	Control cabinet weld
45.	60005-007	10	Washer, spring, 1/4"HD, plated
46.	12783-06	2	Lock washer
47.	60015-012	10	Bolt, 1/4" UNC x 5/8" G5
48.	60030-006	10	Washer
49.	300840	1	Lock out lever assembly
51.	560222	1	Control box, ground
52.	3040269	2	Boot, cable entry
54.	8342416	1	Latch, adjustable trigger
55.	0070901E	1	Name plate

Fuel cabinet assembly

https://truckmanualshub.com/

Item	Part No	Qty	Description
1.	2022-002	1	Clamp
2.	3603-06	26	Washer, flat, M6 x 16 ZP
3.	3603-08	18	Washer, flat, M8 x 19 ZP
4.	3603-10	3	Washer, flat, M10 x 24 ZP
5.	3606-06020	2	Screw, countersunk socket head, M6 x 20, stainless steel
7.	3610-06020	9	Bolt, M6 x 20, C8.8, ZP
8.	3610-08030	8	Bolt, M8 x 30, C8.8, ZP
9.	3610-10050	2	Bolt, M10 x 50, C8.8, ZP
10.	3610-10065	1	Bolt, M10 x 65, C8.8, ZP
11.	3611-06	11	Nut, nylock, M6
12.	3611-08	8	Nut, nylock, M8
13.	3611-10	7	Nut, nylock, M10
14.	3618-26	1	Hose clamp
15.	3618-32	1	Hose clamp
16.	11470	2	Left hand hinge
17.	11470-1	2	Right hand hinge
18.	13106-1A	1	Fuel tank assembly
19.	11649	1	Return oil filter assembly
20.	11679	1	Left hand door weld, small
21.	11680	1	Right hand door weld, large
22.	12313-10	1	Top Panel side cabinet
23.	12314-3	1	Pad, hydraulic tank
24.	12314-4	1	Spacer, hydraulic tank mount
26.	12329	1	Bracket, return line filter
27.	12856-1	1	Side cabinet weld, hydraulic
28.	PCA015	1	Rubber channel section
29.	60005-007	2	Washer, spring, 1/4"HD, plated
30.	60015-006	2	Bolt, 3/4" x 1/4" UNC, plated
31.	60030-006	2	Flat sash, 1/4", ZP
32.	5560179	7	Flat washer, special
33.	8342416	1	Latch, adjustable trigger
34.	12318A	1	Hydraulic tank

https://truckmanualshub.com/

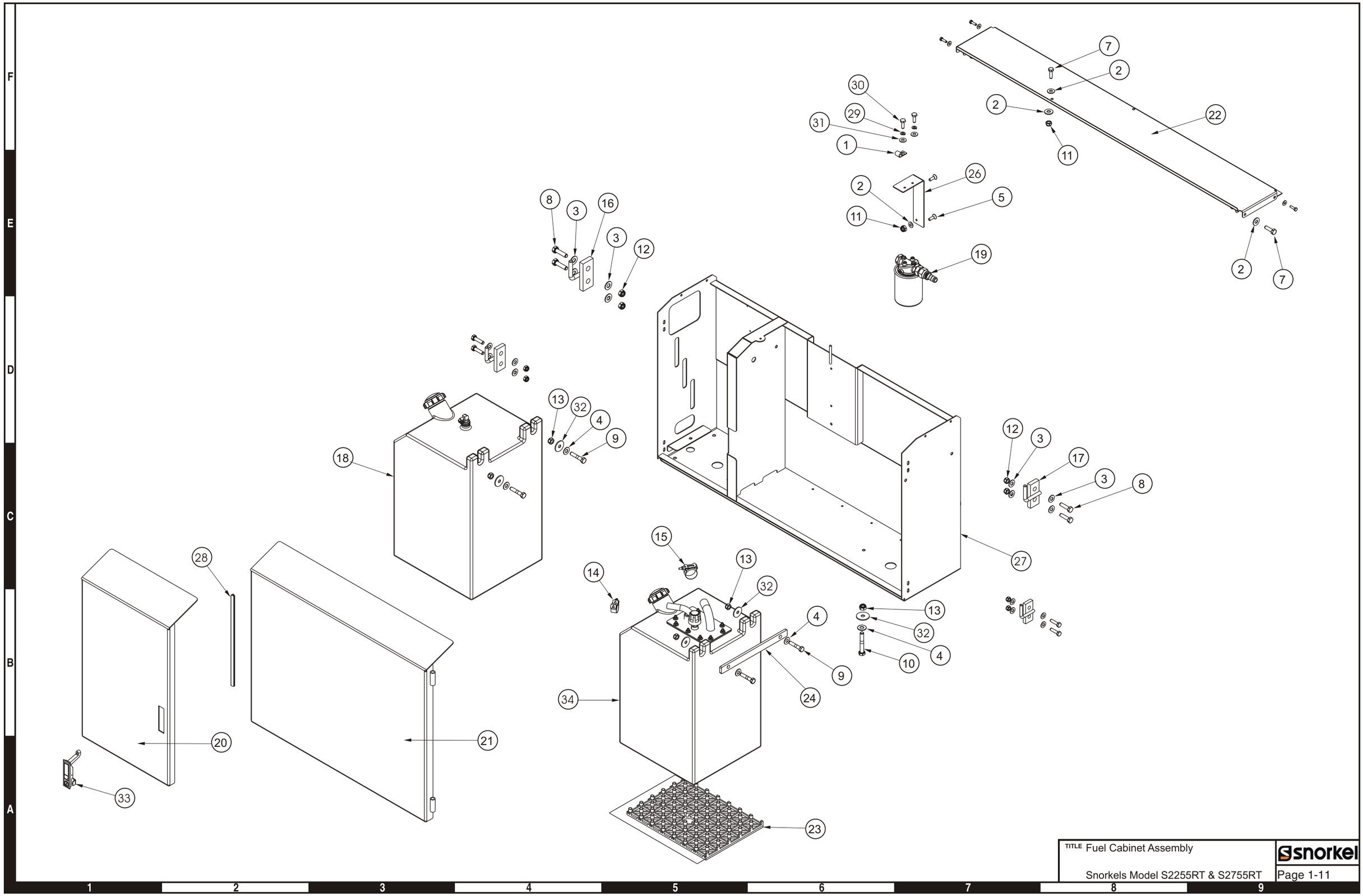

TITLE Fuel Cabinet Assembly

Snorkels Model S2255RT & S2755RT

snorkel

https://truckmanualshub.com/

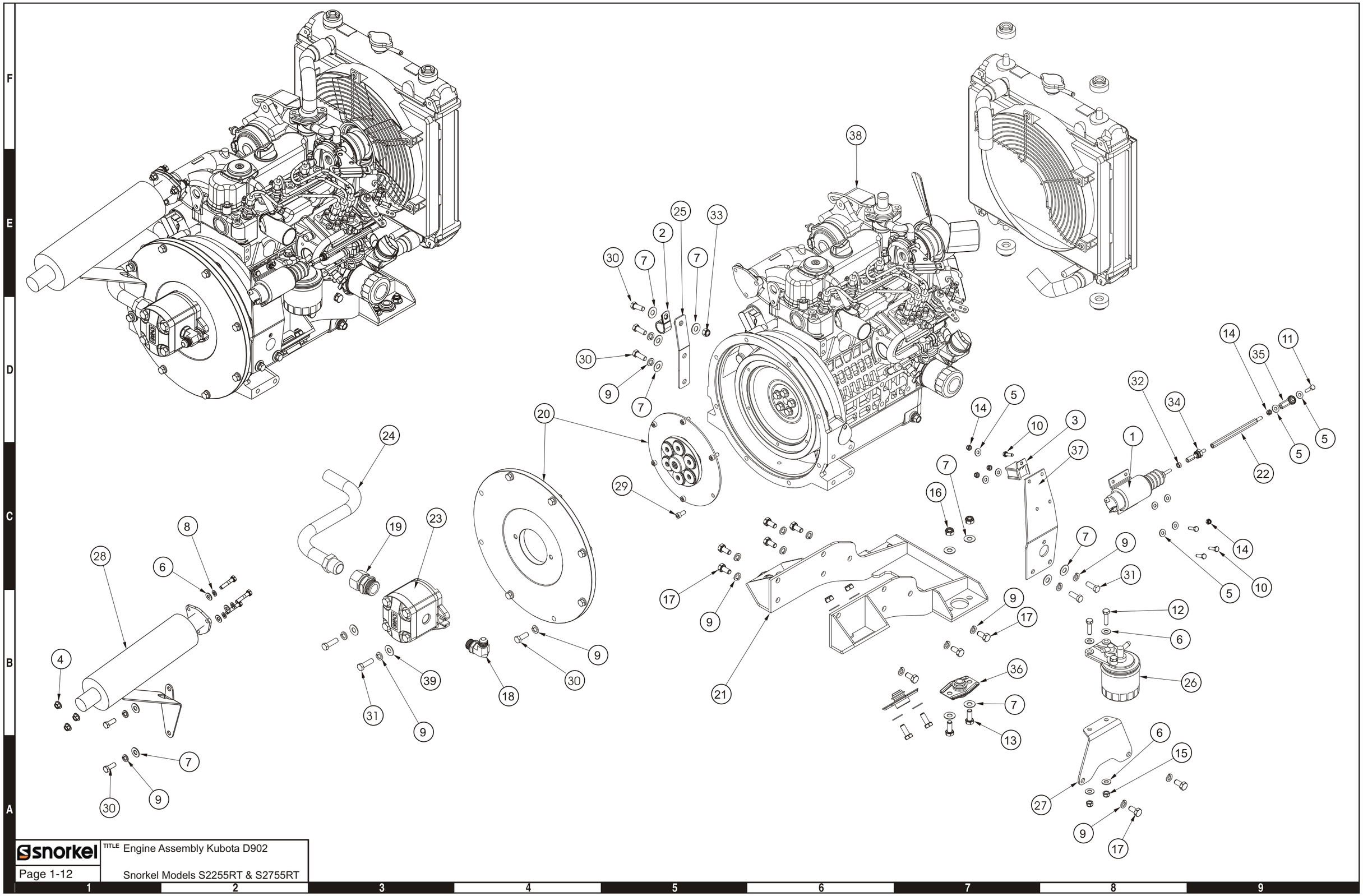

snorkel	TITLE Engine Assembly Kubota D902	
Page 1-12	Snorkel Models S2255RT & S2755RT	

https://truckmanualshub.com/

Item	Part No	Qty	Description
1.	304-0174	1	Solenoid, 12V
2.	2022-005	1	Clamp cushion 1"
3.	2065-002	1	Plug in relay base
4.	3602-08	3	Nut, hex, M8, plated
5.	3603-06	9	Washer, flat, M6 x 16, ZP
6.	3603-08	7	Washer, flat, M8 x 19, ZP
7.	3603-10	24	Washer, flat, M10 x 24, ZP
8.	3605-08	3	Washer, spring, M8
9.	3605-10	25	Washer, spring, M10
10.	3610-06020	4	Bolt, M6 x 20, C8.8, ZP
11.	3610-06025	1	Bolt, M6 x 25, C8.8, ZP
12.	3610-08030	2	Bolt, M8 x 30, C8.8, ZP
13.	3610-10025	8	Bolt, M10 x 25, C8.8, ZP
14.	3611-06	5	Nut, nyloc, M6
15.	3611-08	2	Nut, nyloc, M8
16.	3611-10	8	Nut, nyloc, M10
17.	3617-10020	10	Bolt, M10 x 20, fine thread
18.	7031-004	1	Adaptor, 3/4" JICM -> 7/8" UNO, elbow 90º
19.	7098-7	1	Adaptor, 1 & 5/16" JICF -> 1 & 1/16" UNO, straight
20.	12956	1	Coupling, SAE 'A' 9 spline -> SAC #5 bellhousing + 6/12 flywheel
21.	12961	1	Engine cradle weld
22.	13023	1	Throttle lever, D902
23.	13049	1	Pump, SAE-A, 9 spline
24.	13074	1	Pipe, pump suction
25.	13074-5	1	Support, for suction pump
26.	13086-01	1	Fuel filter, Kubota 15224 - 43013, supplied with engine
27.	13095	1	Fuel filter bracket, Kubota D902
28.	13097	1	Exhaust weldment D902, S2255RT
29.	13104-0510	6	Capscrew 5/16" UNC - 5/8"
30.	60017-007	13	Bolt, 3/8" UNC x 1"
31.	60017-010	2	Bolt, 3/8" UNC x 11/4"
32.	60021-008	1	Nut, 1/4" NF
33.	60042-051N	1	Nut, nyloc, UNC 3/8"
34.	2650001	1	Swivel, inline
35.	2690004	1	Rod end
36.	7630208	4	Engine mount
37.	13022	1	Throttle solenoid bracket, D902
38.	13086	1	Engine, Kubota D902
39.	3603-10H	2	Washer, flat, M10, hardened

https://truckmanualshub.com/

Cable operated emergency bleed down

Item	Part No	Qty	Description
1.	12748	1	Bleed down handle and cable to lift cylinder
2.	12748	1	Bleed down cable
3.	3603-06	4	Washer, plain, M6 x 16
4.	3605-06	2	Washer, spring, M6
5.	3610-06012	2	Bolt, M6 x 12, C8.8, ZP
6.	12648	1	Valve lever
7.	3611-06	1	Nut, nyloc, M6
8.	3641-06	1	Washer, nylon, M6
9.	12647-1	1	Cylinder lever pivot
10.	3610-06075	1	Bolt, M6 x 75, C8.8, ZP
11.	12746A	1	SR lift cylinder
12.	3603-06	2	Washer, plain, M6 x 16, ZP
13.	3605-06	2	Washer, spring, M6
14.	3610-06020	2	Bolt, M6 x 20, C8.8, ZP
15.	12818	1	Bleed down cover

https://truckmanualshub.com/

Cable operated bleed down drawing

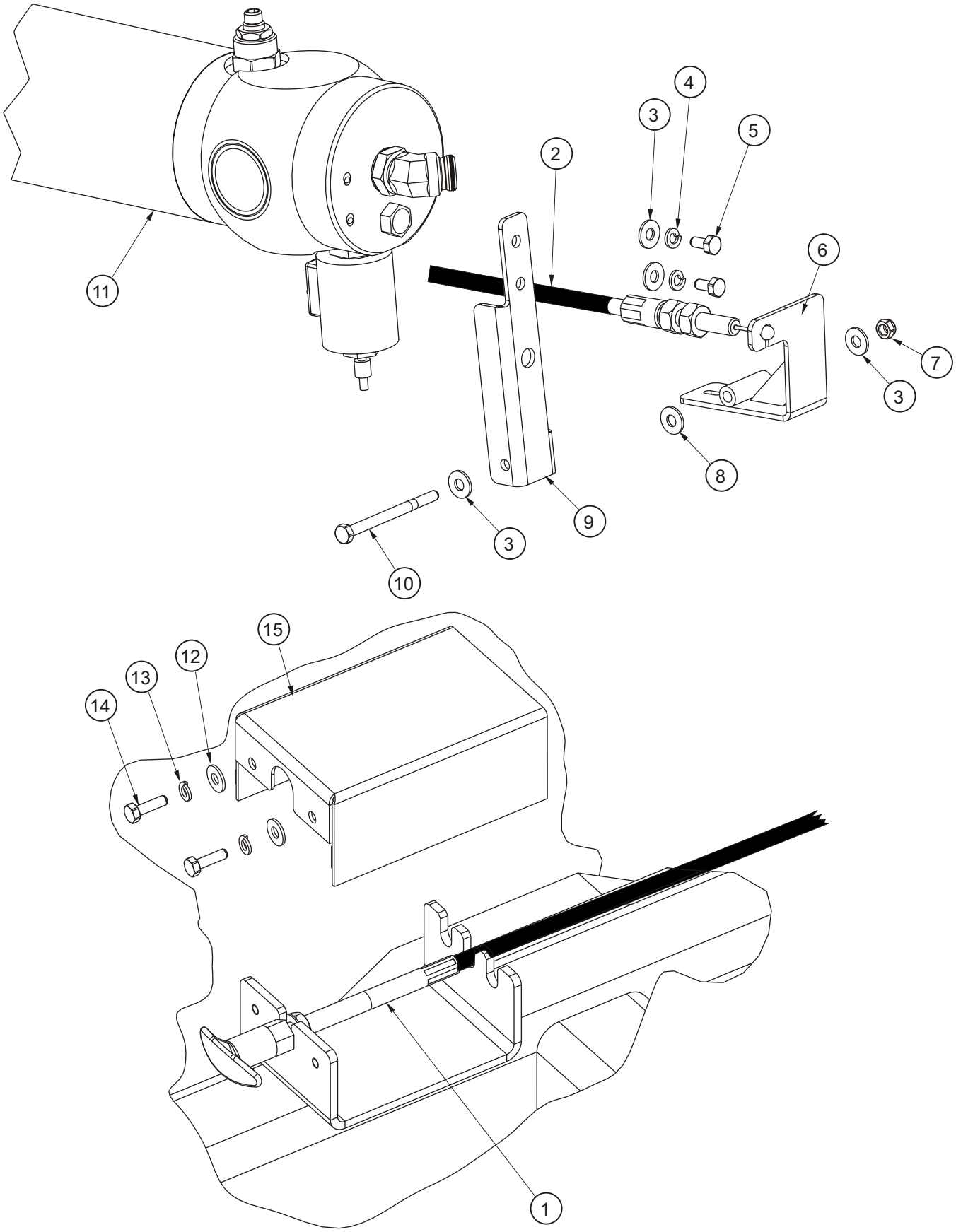

https://truckmanualshub.com/

Item	Part No	Qty	Description
1.	12746A	1	Cylinder assembly
2.	9292	2	Pin, 38.1 x 200mm, 10mm keeper
3.	3610-10020	2	Bolt, M10 x 20, C8.8 ZP
4.	11492-3	10	Locktab, M10
5.	8626	10	Pin keeper, 10mm, plated
6.	3610-10120	1	Bolt, M10 x 120, C8.8 ZP
7.	3603-10	4	Washer, flat, M10 x 24 ZP
8.	3611-10	1	Nylock nut, M10
9.	11380	1	Safety prop weld
10.	3606-06025	2	Cap screw, countersunk socket, M6 x 25, stainless steel
11.	11143-2	1	Wear pad
12.	3603-06	2	Washer, flat, M6 x 16 ZP
13.	3611-06	2	Nylock nut, M6
14.	3629-5062L	12	Washer, scissor pivot (Washer 51 ID x 65 OD)
15.	11804	6	Scissor pivot pin
16.	3619-5	12	Circlip, external, 50mm nominal diameter
17.	8699	8	Pin, arm/arm
18.	3610-10025	8	Bolt, M10 x 25, C8.8
19.	12529	3	Arm, outer, mid right hand weld
20.	12912	1	Arm, inner upper weld
21.	12530	2	Arm, outer, nidleft hand weld
22.	12906	1	Arm, inner, mid weld
24.	12933	1	Arm, inner, lower weld
25.	12713	1	Arm, outer, lower right weld
26.	3624-2	36	Bush
27.	3624-3	24	Bush

https://truckmanualshub.com/

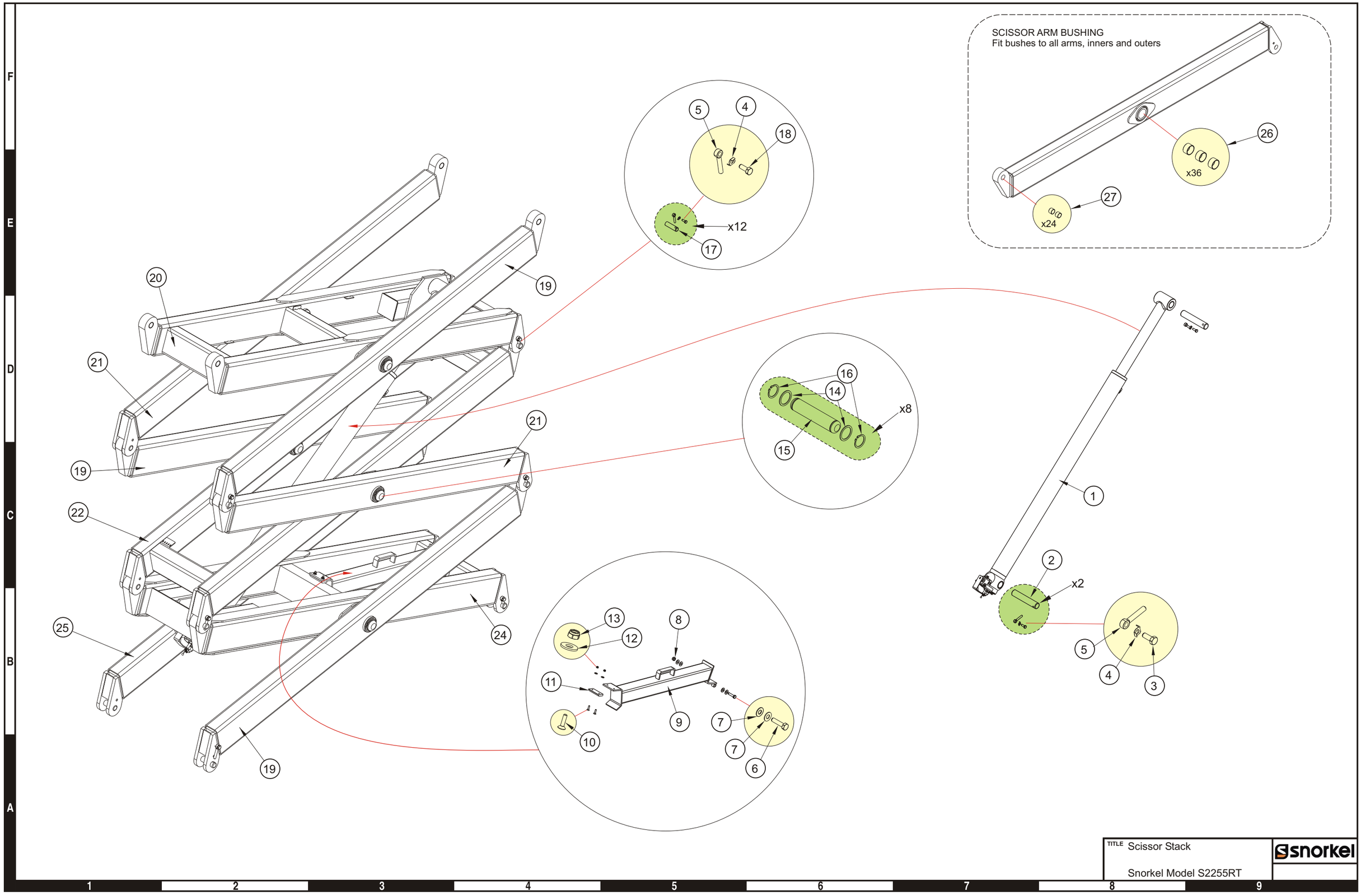

https://truckmanualshub.com/

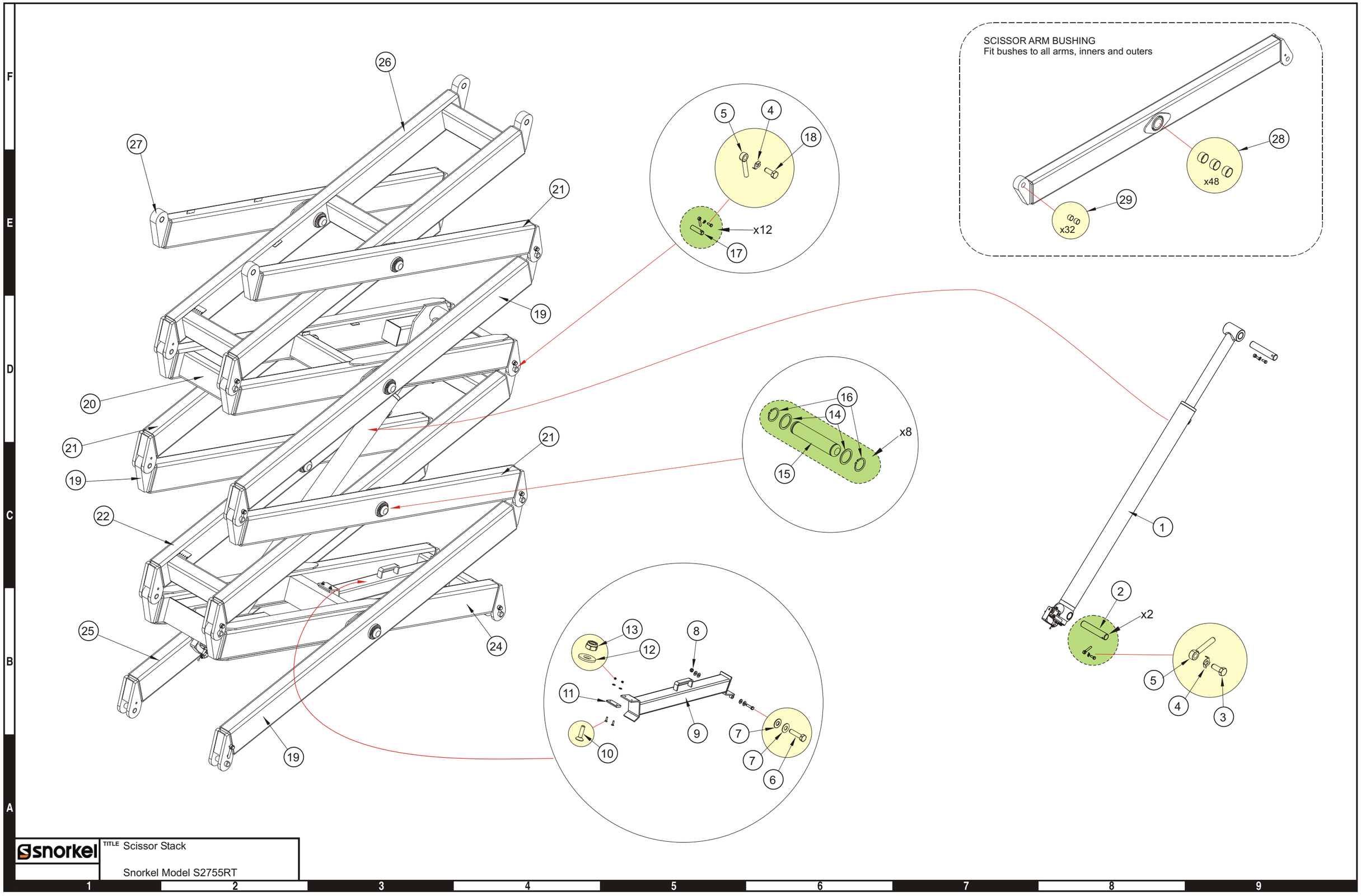

snorkel

TITLE Scissor Stack

Snorkel Model S2755RT

https://truckmanualshub.com/

Item	Part No	Qty	Description
1.	12746A	1	Cylinder assembly
2.	9292	2	Pin, 38.1 x 200mm, 10mm keeper
3.	3610-10020	2	Bolt, M10 x 20, C8.8 ZP
4.	11492-3	14	Locktab, M10
5.	8626	14	Pin keeper, 10mm, plated
6.	3610-10120	1	Bolt, M10 x 120, C8.8 ZP
7.	3603-10	4	Washer, flat, M10 x 24 ZP
8.	3611-10	1	Nylock nut, M10
9.	11380	1	Safety prop weld
10.	3606-06025	2	Cap screw, countersunk socket, M6 x 25, stainless steel
11.	11143-2	1	Wear pad
12.	3603-06	2	Washer, flat, M6 x 16 ZP
13.	3611-06	2	Nylock nut, M6
14.	3629-5062L	16	Washer, scissor pivot (Washer 51 ID x 65 OD)
15.	11804	8	Scissor pivot pin
16.	3619-5	16	Circlip, external, 50mm nominal diameter
17.	8699	12	Pin, arm/arm
18.	3610-10025	12	Bolt, M10 x 25, C8.8
19.	12529	3	Arm, outer, mid right hand weld
20.	9332	1	Arm, inner upper weld
21.	12530	3	Arm, outer, mid left hand weld
22.	12906	1	Arm, inner, mid weld
24.	12933	1	Arm, inner, lower weld
25.	12713	1	Arm, outer, lower right weld
26.	9331	1	Arm, inner, upper fourth stage
27.	9502	1	Arm, outer, upper weldment
28.	3624-2	48	Bush
29.	3624-3	32	Bush

Stabiliser assembly

Item	Part No	Qty	Description
Note: All parts are "Per Stabiliser Housing", (4 housings per machine)			
1.	3610-10030	2	Bolt, M10 x 30, C8.8
2.	9911	1	Plug, RHS, 100 x 100
3.	3603-06	8	Washer, flat
4.	12036-5	2	Sliding spacer
5.	3604-03016	4	Screw, pan head M3 x 16
6.	11492-4	1	Locktab, dual, 10mm
7.	3610-06110	5	Bolt, M6 x 110, C4.6
8.	12036-7	2	Microswitch
9.	12036-8	1	Microswitch mount plate, dual
10.	3611-03	4	Nut, nylock, M3
11.	3611-06	5	Nut, nylock, M6
12.	7025-015	2	Adpater, JICM straight, 7/16" -> UNO straight, 7/16"
13.	3633-3	2	Roll pin, 1 & 1/4" x 1/4", plated
14.	12036	1	Cylinder
15.	11305	1	Stabiliser foot weldment
16.	11366-1	2	Stabiliser bush
17.	11366-2	1	Plastic tube, 82mm long
18.	11369	1	Pin, 7/8" x 76mm
19.	3602-06	1	Nut, M6, plated
20.	60030-198	1	Washer, fender, 1/4"
21.	11367-2	1	Pilot check valve
22.	12036-6	1	Spring
23.	3626-8	2	Bush
24.	3605-06	1	Washer, spring, M6
25.	7804-002	2	Restrictor, 0.8 x M5

https://truckmanualshub.com/

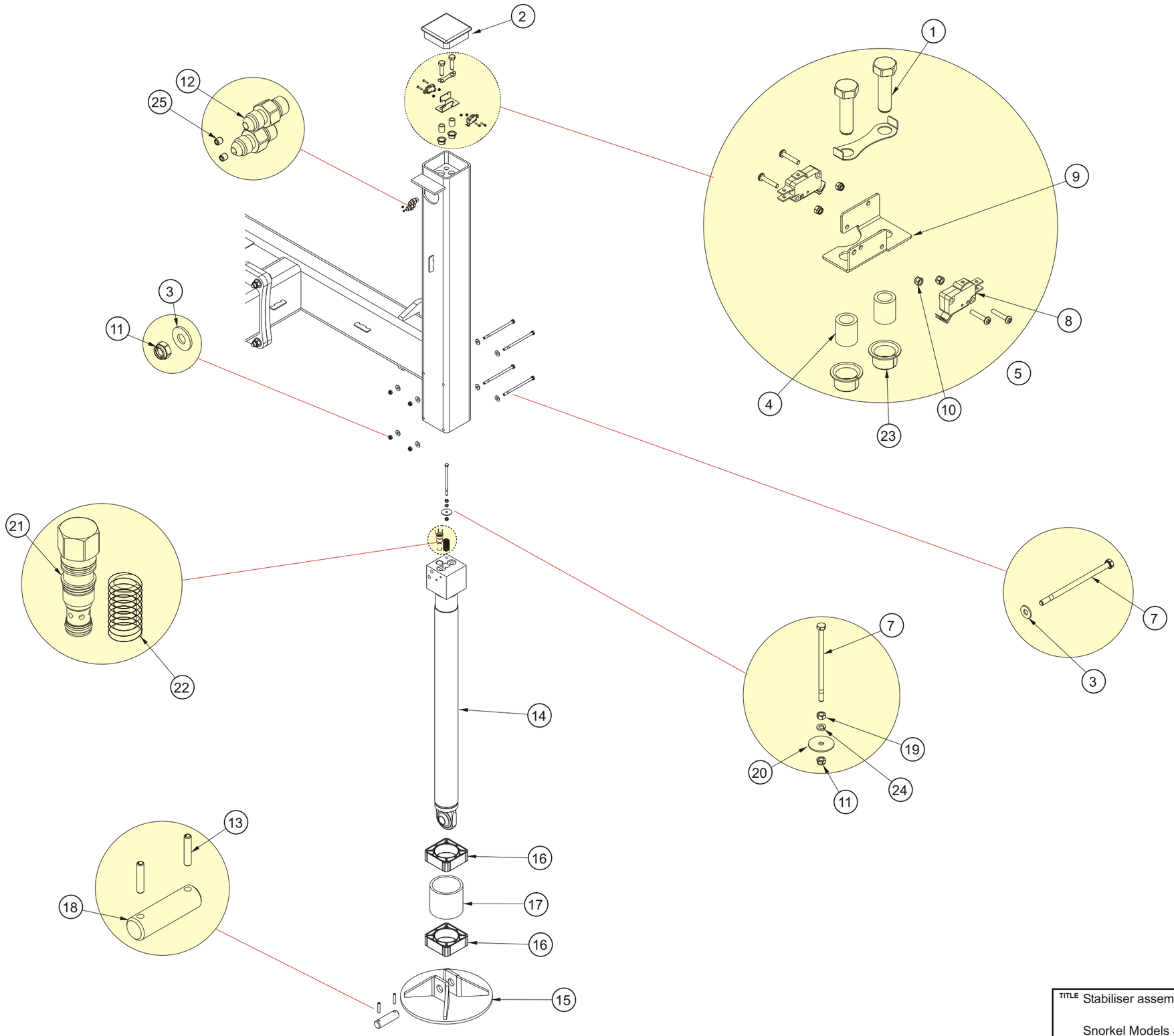

TITLE Stabiliser assembly

Snorkel Models S2255RT & S2755RT

snorkel

https://truckmanualshub.com/

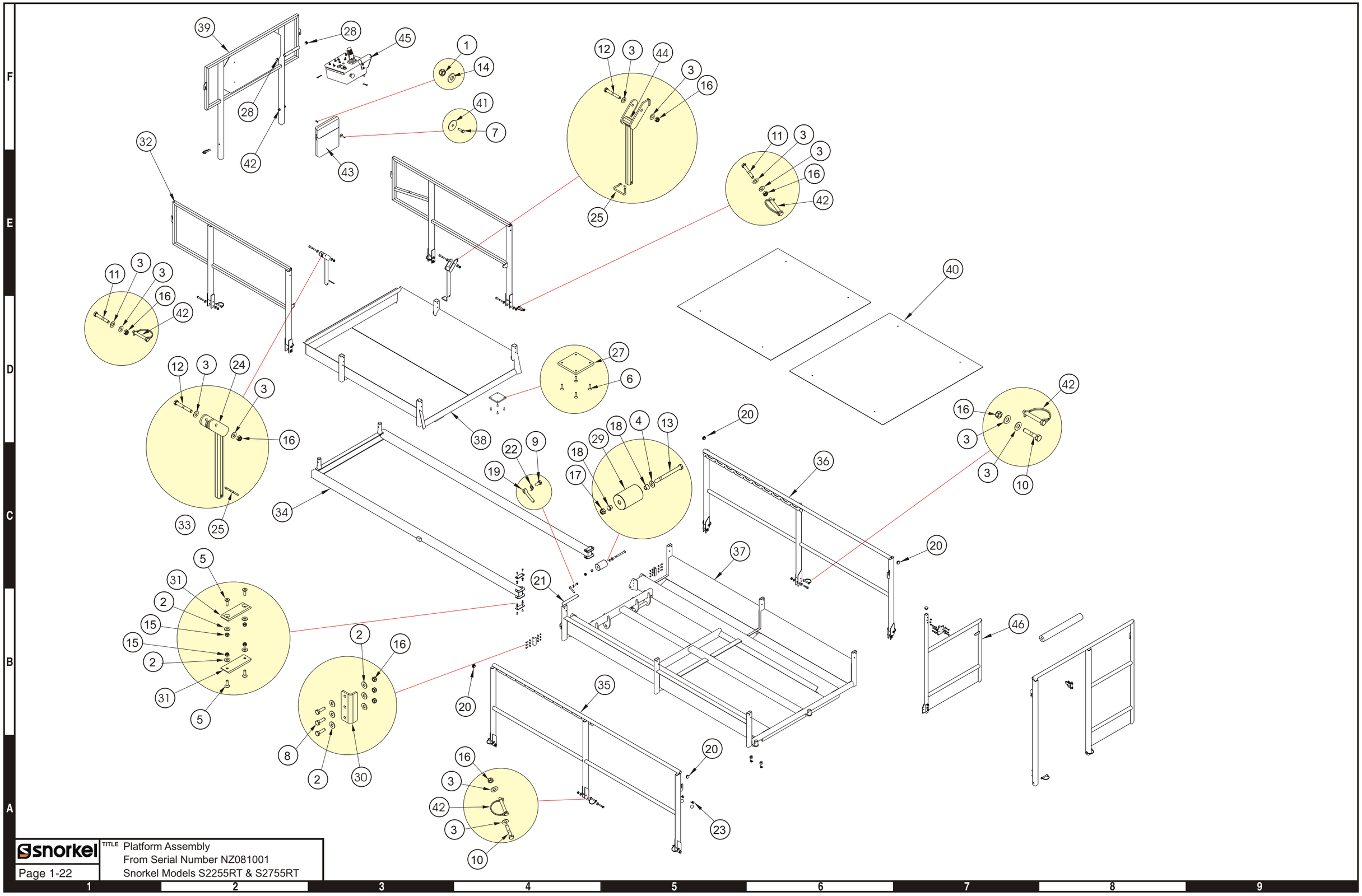

snorkel	TITLE Platform Assembly From Serial Number NZ081001 Snorkel Models S2255RT & S2755RT
Page 1-22	

https://truckmanualshub.com/

Item	Part No	Qty	Description
1.	3603-05	2	Washer, plain
2.	3603-06	20	Washer, plain
3.	3603-10	24	Washer, plain
4.	3603-12	4	Washer, plain
5.	3606-06020	8	Screw, countersunk, socket head
6.	3606-06025	8	Screw, countersunk, socket head
7.	3610-05016	2	Bolt, M5 x 16
8.	3610-06020	6	Bolt, M6 x 20
9.	3610-10020	4	Bolt, M10 x 20
10.	3610-10050	6	Bolt, M10 x 50
11.	3610-10070	4	Bolt, M10 x 70
12.	3610-10075	2	Bolt, M10 x 75
13.	3610-12130	2	Bolt, M12 x 130
14.	3611-05	2	Nut, nyloc, M5
15.	3611-06	14	Nut, nyloc, M6
16.	3611-10	12	Nut, nyloc, M10
17.	3611-12	2	Nut, nyloc, M12
18.	3626-2	4	Flanged permaglide bush
19.	8626	4	Pin keeper
20.	8926-1	4	Plug, RHS, 25mm
21.	9792	4	Pin
22.	11492-3	4	Washer, tab
23.	11658-20	8	Wear plug
24.	11695	1	Handrail latch, left
25.	11695-3	2	Latch holding ring
26.	12589	1	Slider bar weld
27.	12709-10	2	Rollout deck slide pad
28.	12750	2	Plug, round, 25mm
29.	13122-11	2	External roller
30.	13122-12	2	Stop, rollout
31.	13122-14	4	Wear pad, internal
32.	13124	1	Handrail, left front
33.	13125	1	Handrail, right
34.	13128	1	Rollout frame weld
35.	13130	1	Left hand rail
36.	13131	1	Right hand rail
37.	13152	1	Platform weld Sxx55RT
38.	13153	1	Rollout deck weld Sxx55RT
39.	13154	1	Handrail, front
40.	13155	2	Platform floor
41.	60030-198	2	Washer, fender, 1/4"
42.	302544	14	Pin and lock
43.	562386	1	Literature compartment
44.	11695R	1	Handrail latch, right
45.	12700A	1	Upper control box assembly
46.	13156	1	Rear handrail and gate assembly

Engine cabinet assembly

https://truckmanualshub.com/

Item	Part No	Qty	Description
1.	3603-06	4	Plain washer
2.	3603-08	10	Plain washer
3.	3604-05012	6	Pan head screw
4.	3605-08	2	Spring washer
5.	3610-06020	2	Bolt
6.	3610-08030	4	Bolt
7.	3610-08050	2	Bolt
8.	3611-05	6	Nyloc nut
9.	3611-06	2	Nyloc nut
10.	3611-08	4	Nyloc nut
11.	3628-06	3	Nutsert, M6
12.	11470-1	2	Right hand hinge, upper
13.	13028	1	Engine cabinet weld
14.	13028-10P	1	Radiator flap
15.	13032	1	Door weld
16.	13086-03	1	Radiator overflow bottle
17.	13086-04	1	Air cleaner
18.	13086-05	1	Air cleaner bracket
19.	13098-1	2	Air filter support
20.	13101	1	Butt hinge
21.	13102	1	Latch, spring
22.	13103	1	Overflow tank mount
23.	60027-014	2	Rivet
24.	8342416	1	Latch, adjustable trigger
25.	PCA015	1	Rubber channel section

https://truckmanualshub.com/

Engine cabinet assembly drawing

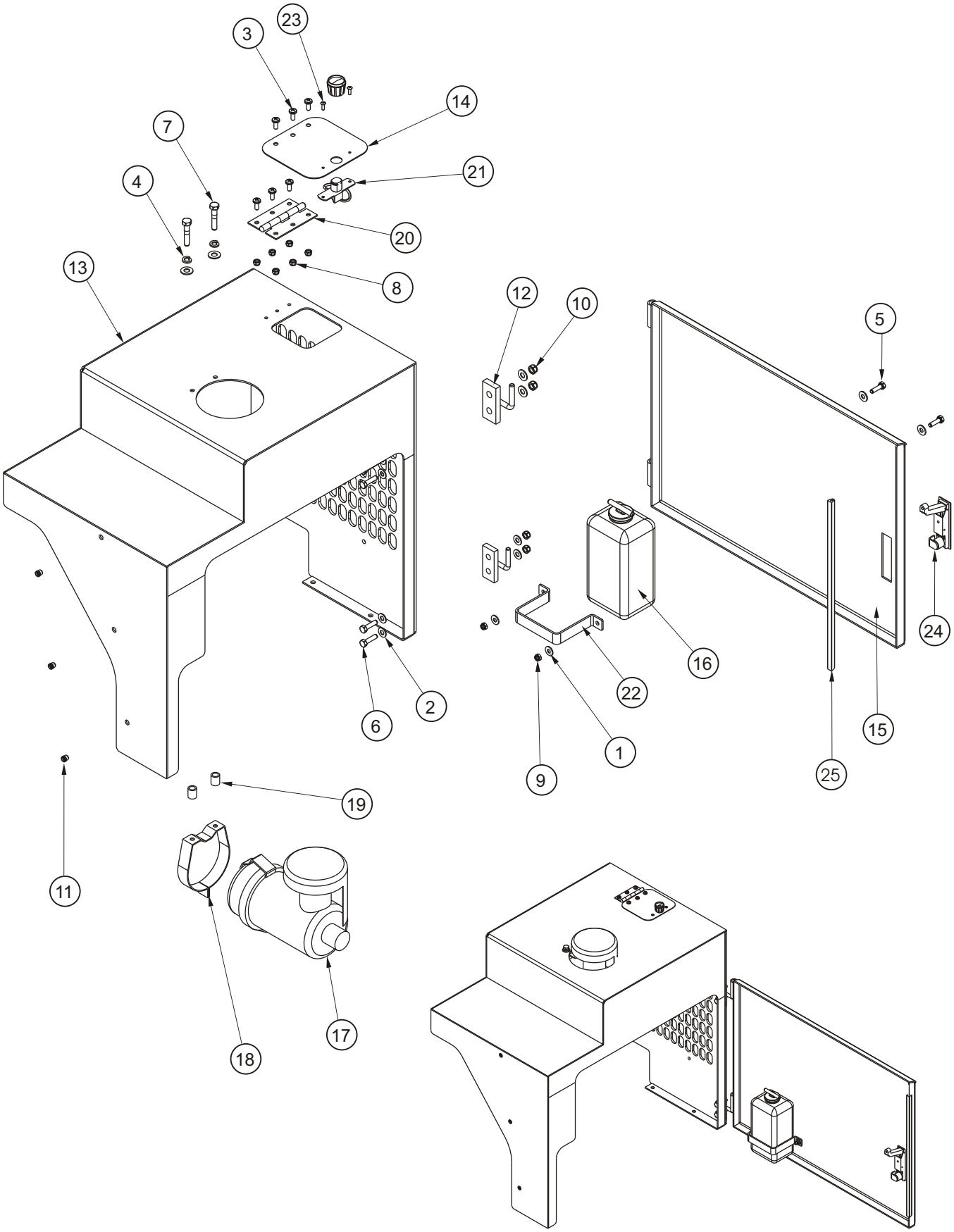

Fuel tank assembly, diesel fuel

https://truckmanualshub.com/

Item	Part No	Qty	Description
1.	3618-11	3	Hose clamp, 11 - 25mm ZP
2.	11955-1	1	Locking tab, securable cap
3.	11955-2	1	Neck clamp, securable cap
4.	13106-1	1	Fuel tank, Sxx55RT
5.	13108-04	1	Plug, 1/4" NPTM
6.	13109	1	Fuel return weld
7.	60027-013	1	Rivet, 1/4" x 5/32"
8.	605256	1	Cap, vented
9.	967309	1	Male elbow, 5/16" x 1/4", BSPT

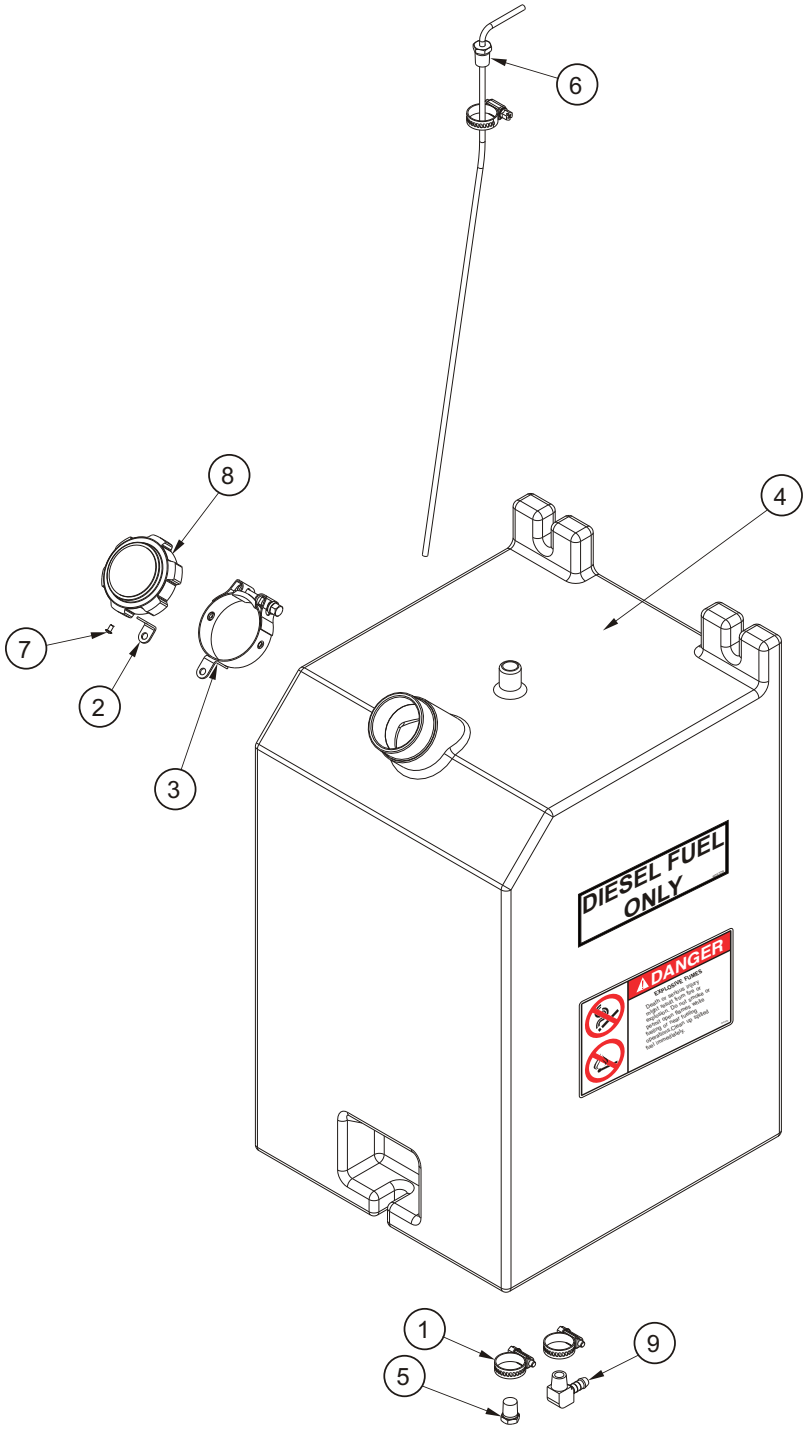

https://truckmanualshub.com/

Upper control box mounting assembly

Item	Part No.	Qty	Description
1.	3603-06	4	Washer, plain, M6 x 16, ZP
2.	3605-06	2	Washer, spring, M6
3.	3610-06012	2	Bolt, metric, M6 x 12, C8.8, ZP
4.	3610-06020	2	Bolt, metric, M6 x 20, C8.8, ZP
5.	3611-06	2	Nut, nyloc, M6
6.	11690-16	2	Security pin
7.	12749	1	Wrist support
8.	12750-25	1	Plug, round
9.	12751	1	Hand grip, foam
10.	12756	1	Star washer with end cap
11.	72404	2	Grip clip
12.	12891	1	Control box

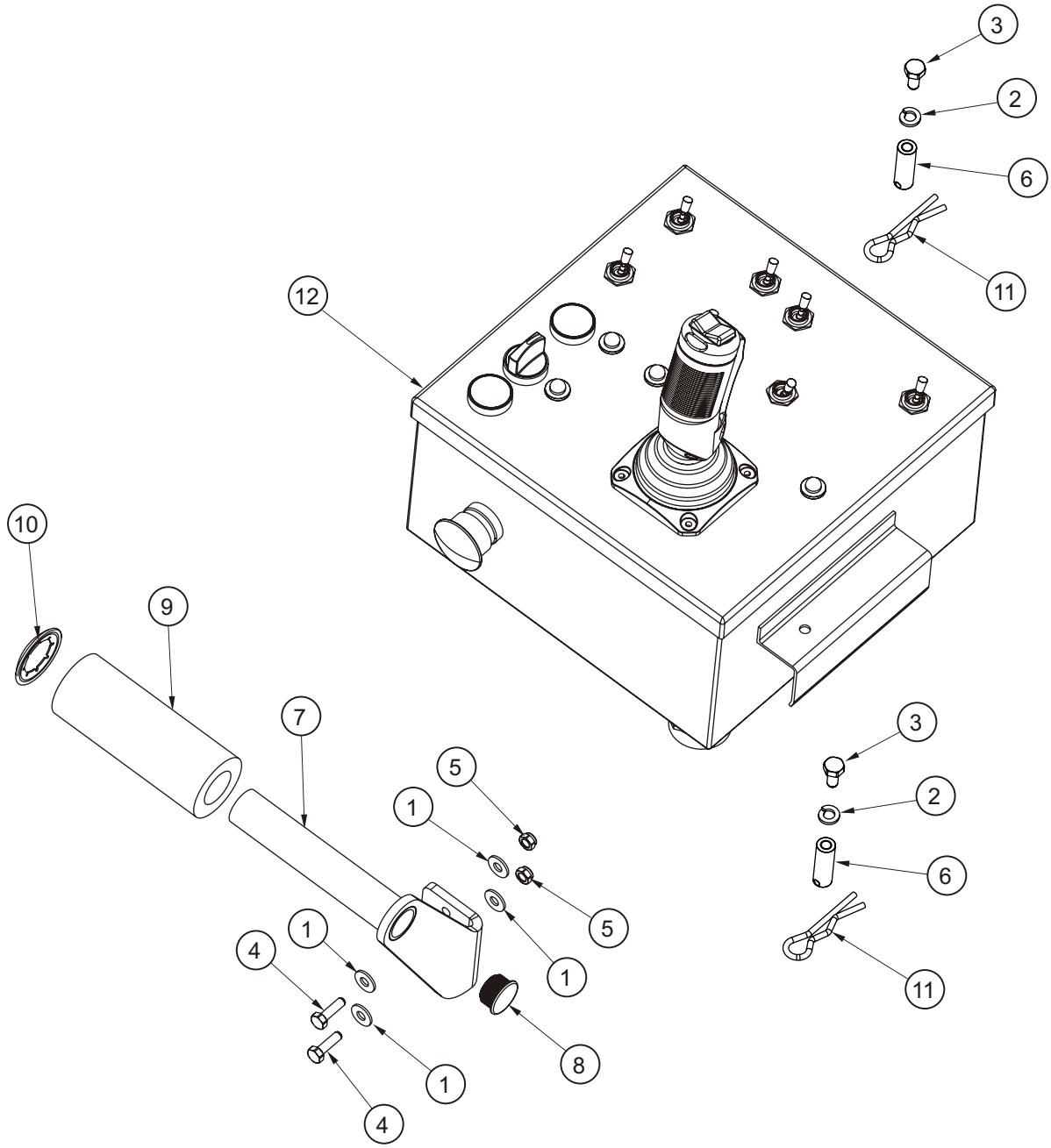

https://truckmanualshub.com/

Item	Part No	Qty	Description
1.	1843	1	Decal, warning New Zealand only
	9428	1	Decal, electrical hazard Australia only
3.	96924-9	4m	Decal, warning stripes yellow/black
4.		1	Decal, serial number
6.	13471-11	2	Decal, S2255RT
	13471-12	2	Decal, S2755RT
7.	12699-1	1	Decal, rated load S2255RT
	12699-2	1	Decal, rated load S2755RT
8.	0073298	1	Decal, foam tyres
9.	451986	2	Decal, interlocks
10.	476706	2	Decal, explosive fumes, (outside cabinet door & fuel tank)
11.	12574	1	Decal, danger with alarm
13.	560240	1	Decal, lower control box
14.	12689	1	Decal, upper control box
15.	560272	1	Decal, emergency stop upper box
16.	605726	1	Decal, diesel fuel, (on fuel tank)
17.	12753	1	Decal, emergency bleed down
18.	12814	1	Decal, hydraulic fluid, (on hydraulic oil tank)
19.	58365-6	1	Decal, safety prop
20.	9223-3	4	Decal, chevron
21.	300699	1	Decal, operators check list
22.	0323897	1	Decal, must not operate
23.	621486	4	Decal, forklift
24.	302950	1	Decal, hydraulic oil level
25.	300700	1	Decal, shearing hazard
26.	13601-1	1	Decal, emergency operation, lowering and pushing, (inside of door)
27.	0083427	4	Decal, lifting/tie down
28.	12815-1	1	Decal, hydraulic circuit SR, (inside cabinet door)
29.	12815-2	1	Decal, electrical circuit SR, (inside cabinet door)
30.	562426	1	Decal, operators manual enclosed
31.	13089-2	1	Decal, 24V DC (when option fitted)
32.	13089-1	1	Decal, Diesel (when option fitted)

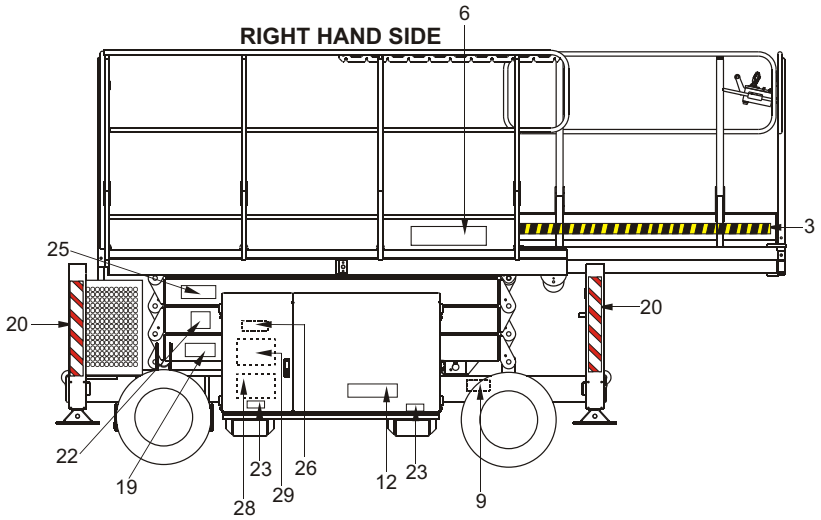
RIGHT HAND SIDE
6
3
25
20
20
22
19
28
23
29
26
12
23
9

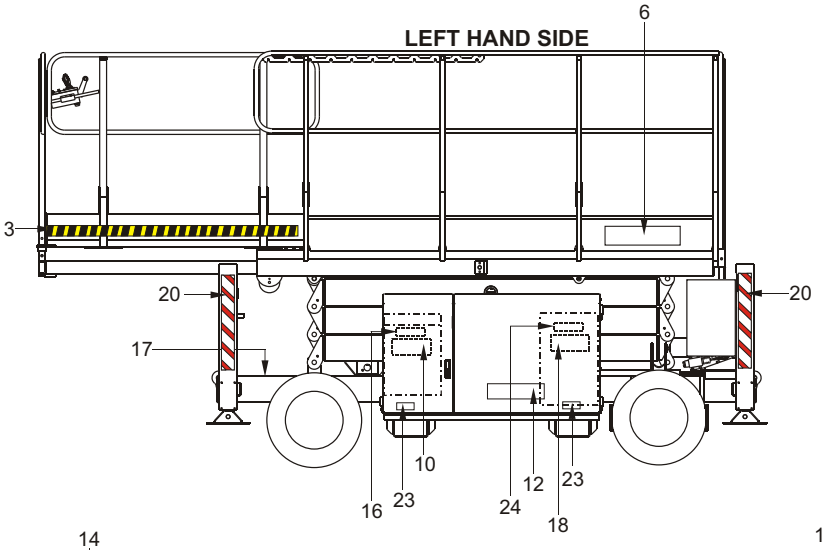
LEFT HAND SIDE
6
3
20
20
17
16
23
10
24
12
18
23

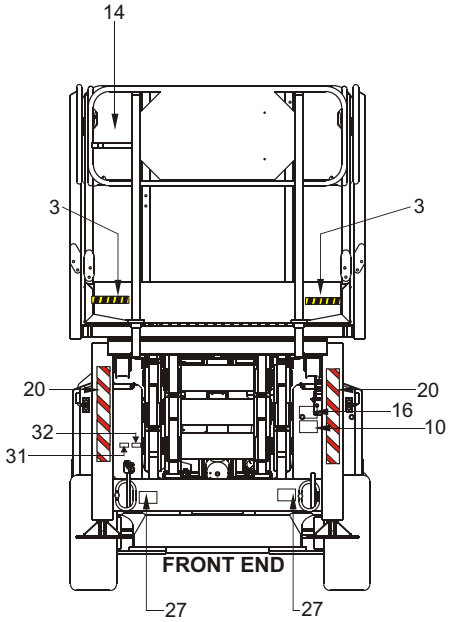
14
3
3
20
20
16
10
32
31
FRONT END
27
27

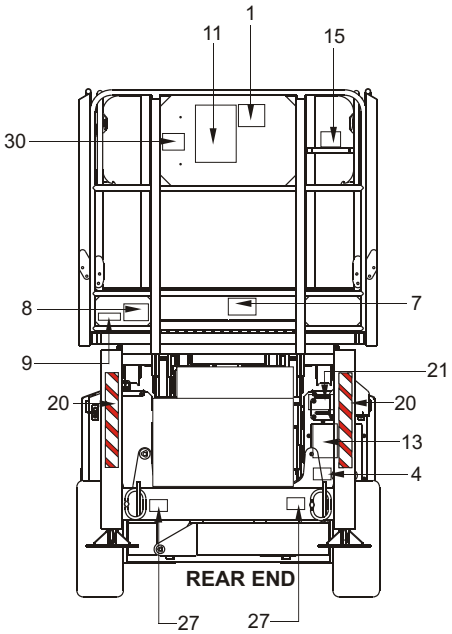
1
11
15
30
8
7
9
21
20
20
13
4
REAR END
27
27

https://truckmanualshub.com/

https://truckmanualshub.com/

Section 2. - Hydraulics

Hose part numbers and colour codes 2-3
Hydraulic assembly 2-4
Hydraulic schematic drawing. 2-5
Manifold assembly 2-8
Manifold assembly 2-9
Manifold assembly, 4WD. 2-10
Manifold assembly, stabilisers. 2-11
Hydraulic oil tank assembly 2-12
Hydraulic oil tank assembly drawing 2-13
Steer axle cylinder 2-14
Axle cylinder. 2-15
Main lift cylinder assembly 2-16
Stabiliser Cylinder 2-17

https://truckmanualshub.com/

https://truckmanualshub.com/

READING HOSE TAGS

Hose tags are read from the fitting side of the hose in towards the hose.

As such colour 1 is the closest to the fitting, colour 2 the next colour then 3, 4 etc…

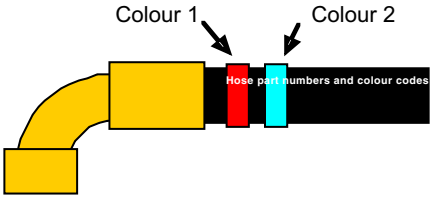

Snorkel Part Number	Colour ID		Hose Use
	Colour 1	Colour 2	
12812-44	Red	Yellow	Stab RR Extend: Stab Manifold RRE → Stab Cyl RR Extend
12812-45	Red	Green	Stab RR Retract: Stab Manifold RRR → Stab Cyl RR Retract
12812-46	Orange	Yellow	Stab LR Extend: Stab Manifold LRE → Stab Cyl LR Extend
12812-47	Orange	Green	Stab LR Retract: Stab Manifold LRR → Stab Cyl LR Retract
12812-48	Yellow	Yellow	Stab LF Extend: Stab Manifold LFE → Stab Cyl LF Extend
12812-49	Yellow	Green	Stab LF Retract: Stab Manifold LFR → Stab Cyl LF Retract
12812-50	Green	Yellow	Stab RF Extend: Stab Manifold RFE → Stab Cyl RF Extend
12812-51	Green	Green	Stab RF Retract: Stab Manifold RFR → Stab Cyl RF Retract
12812-43	Blue	Yellow	Steer Right: Main Manifold SR → Steer Cyl Extend
12812-9	Blue	Green	Steer Left: Main Manifold SL → Steer Cyl Retract
12812-10	Red	---	Drive Forward: Main Manifold DF → 4WD Manifold DF
12812-11	Blue	---	Drive Reverse: Main Manifold DR → 4WD Manifold DR
12812-52	Red	Red	Motor RR CW (Fwd): 4WD Manifold MRRF → Motor RR Port B
12812-53	Red	Blue	Motor RR CCW (Rev): 4WD Manifold MRRR → Motor RR Port A
12812-54	Red	---	Motor RR Brake: Main Manifold BR → RR Motor Brake
12812-55	Orange	Red	Motor LR CW (Rev): 4WD Manifold MLRR → Motor LR Port B
12812-56	Orange	Blue	Motor LR CCW (Fwd): 4WD Manifold MLRF → Motor LR Port A
12812-57	Orange	---	Motor LR Brake: Main Manifold BL → LR Motor Brake
12812-58	Yellow	Red	Motor LF CW (Rev): 4WD Manifold MLFR → Motor LF Port B
12812-59	Yellow	Blue	Motor LF CCW (Fwd): 4WD Manifold MLFF → Motor LF Port A
12812-60	Green	Red	Motor RF CW (Fwd): 4WD Manifold MRFF → Motor RF Port B
12812-61	Green	Blue	Motor RF CCW (Rev): 4WD Manifold MRFR → Motor RF Port A
12812-62	Green	---	Lock Left Axle: Main Manifold AXL → LH Axle Cyl
12812-63	Black	---	Lock Right Axle: Main Manifold AXR → RH Axle Cyl
12812-28	Red	Orange	4WD Manifold Pilot: Main Manifold Pilot → 4WD Manifold Pilot
12812-29	Red	Black	4WD Manifold Return: Main Manifold DP → 4WD Manifold DP
12812-64	---	---	Main Manifold Return: Main Manifold Tank → Oil Filter
12812-65	---	---	Filter Return: Oil Filter → Hydraulic Oil Tank
12812-66	---	---	Stab Manifold Pressure: Main Manifold STP → Stab Manifold P
12812-67	---	---	Stab Manifold Return: Main Manifold STR → Stab Manifold R
12812-68	Orange	---	Pump Pressure: Main Manifold Pump → Pump Pressure Port
12812-69	---	---	Suction Line: Pump Suction Port → Hydraulic Oil Tank
12812-70	Black	Yellow	Raise Stack: Main Manifold LCP → Lift Cyl Extend
12812-71	Black	White	Lift Cyl Drain: Main Manifold LCR → Lift Cyl Drain

https://truckmanualshub.com/

Item	Part No	Qty	Description
0.	12568A	1	Stabiliser valve block assembly
1.	12568-1	4	Stabiliser directional valve

Item	Part No	Qty	Description
0.	13161A Rev B	1	Main manifold valve block assembly
1.	12567-1	1	Stabiliser enable valve
2.	12567-2	1	Stabiliser check valve
3.	12567-3	1	Steering flow control
4.	12567-4	1	Steering directional valve
5.	13161-5	1	Steering relief shuttle
6.	12567-6	1	Steering pilot check
7.	12567-2	1	Steering relief check
8.	12567-8	1	Steering relief valve
9.	12567-9	1	Proportional valve
10.	12567-8	1	Lift relief
11.	12567-11	1	Lift valve
12.	13161-18	1	Drive valve, forward
13.	13161-17	1	Drive counterbalance valve, reverse
15.	12567-15	1	Free wheel valve
17.	13161-17	1	Drive counterbalance valve, forward
18.	13161-18	1	Drive valve, reverse
19.	12567-19	1	Hand pump
20.	12567-20	1	Brake reset valve
21.	12567-21	1	Brake pilot check
22.	12567-22	1	Brake shuttle
23.	12567-23	1	Axle pressure reducing valve
24.	12567-24	1	Brake flow control valve
25.	12567-11	1	Brake selector valve
26.	12567-2	1	Compensator check
27.	12567-8	1	Main relief
28.	13161-28	1	Compensator

Item	Part No	Qty	Description
0.	13162A	1	4 wheel drive manifold block assembly, V2
1.	12569-1	1	Selector valve series parallel
2.	12569-2	2	Pilot operated selector valves, N.O.
3.	12569-3	2	Flow divider combiner
4.	12569-4	2	Drive motor relief valves
5.	12569-5	2	Pilot operated selector valve, N.C.

https://truckmanualshub.com/

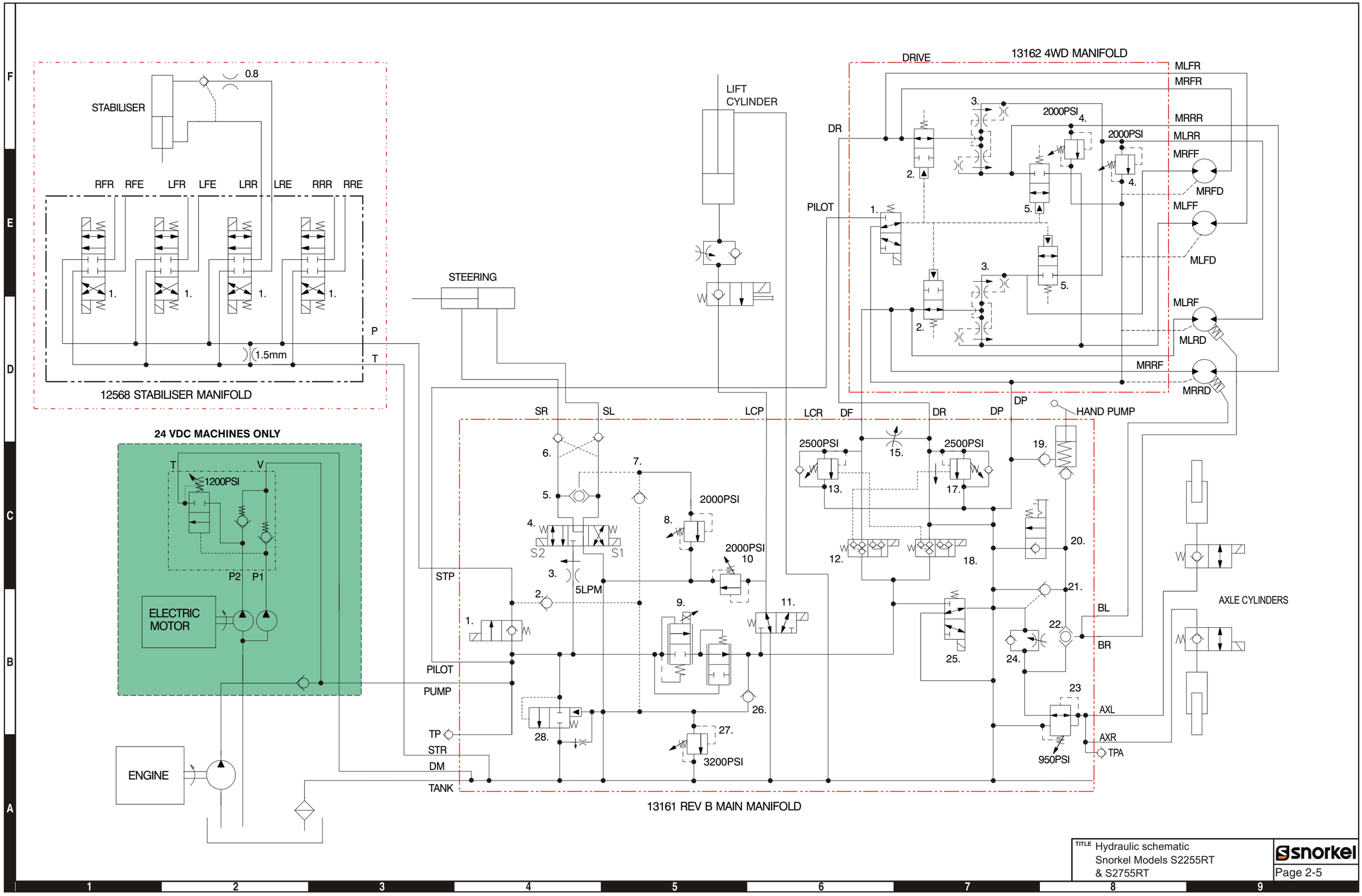

TITLE Hydraulic schematic
Snorkel Models S2255RT
& S2755RT

snorkel

https://truckmanualshub.com/

https://truckmanualshub.com/

Manifold assembly

https://truckmanualshub.com/

Item	Part No	Qty	Description
0.	13161A Rev B	1	Main manifold valve block assembly
1.	12567-1	1	Stabiliser enable valve
2.	12567-2	1	Stabiliser check valve
3.	12567-3	1	Steering flow control
4.	12567-4	1	Steering directional valve
5.	13161-5	1	Steering relief shuttle
6.	12567-6	1	Steering pilot check
7.	12567-2	1	Steering relief check
8.	12567-8	1	Steering relief valve
9.	12567-9	1	Proportional valve
10.	12567-8	1	Lift relief
11.	12567-11	1	Lift valve
12.	13161-18	1	Drive valve, forward
13.	13161-17	1	Drive counterbalance valve, reverse
15.	12567-15	1	Free wheel valve
17.	13161-17	1	Drive counterbalance valve, forward
18.	13161-18	1	Drive valve, reverse
19.	12567-19	1	Hand pump
20.	12567-20	1	Brake reset valve
21.	12567-21	1	Brake pilot check
22.	12567-22	1	Brake shuttle
23.	12567-23	1	Axle pressure reducing valve
24.	12567-24	1	Brake flow control valve
25.	12567-11	1	Brake selector valve
26.	12567-2	1	Compensator check
27.	12567-8	1	Main relief
28.	13161-28	1	Compensator
30.	10992-2	1	Test point, 9/16" UNO - Main pressure
31.	12770-330606	7	Adapter, straight, 9/16" UNO -> 3/8" STCF
32.	12770-330806	2	Adapter, straight, 3/4" UNO -> 3/8" STCF
33.	12770-330808	5	Adapter, straight, 3/4" UNO -> 1/2" STCF
37.	7025-001	1	Adapter, straight, 9/16" UNO -> 9/16" JICM
38.	7035-001	1	Plug, 9/16" UNO
39.	7025-008	1	Adapter, straight, 11/16" JICM -> 11/16" UNO
40.	12567-30	1	Coil, 12V
45.	13161-45	2	Coil, 12V
46.	13161-46	5	Coil, 12V
47.	10992-2	1	Test point, axle pressure

https://truckmanualshub.com/

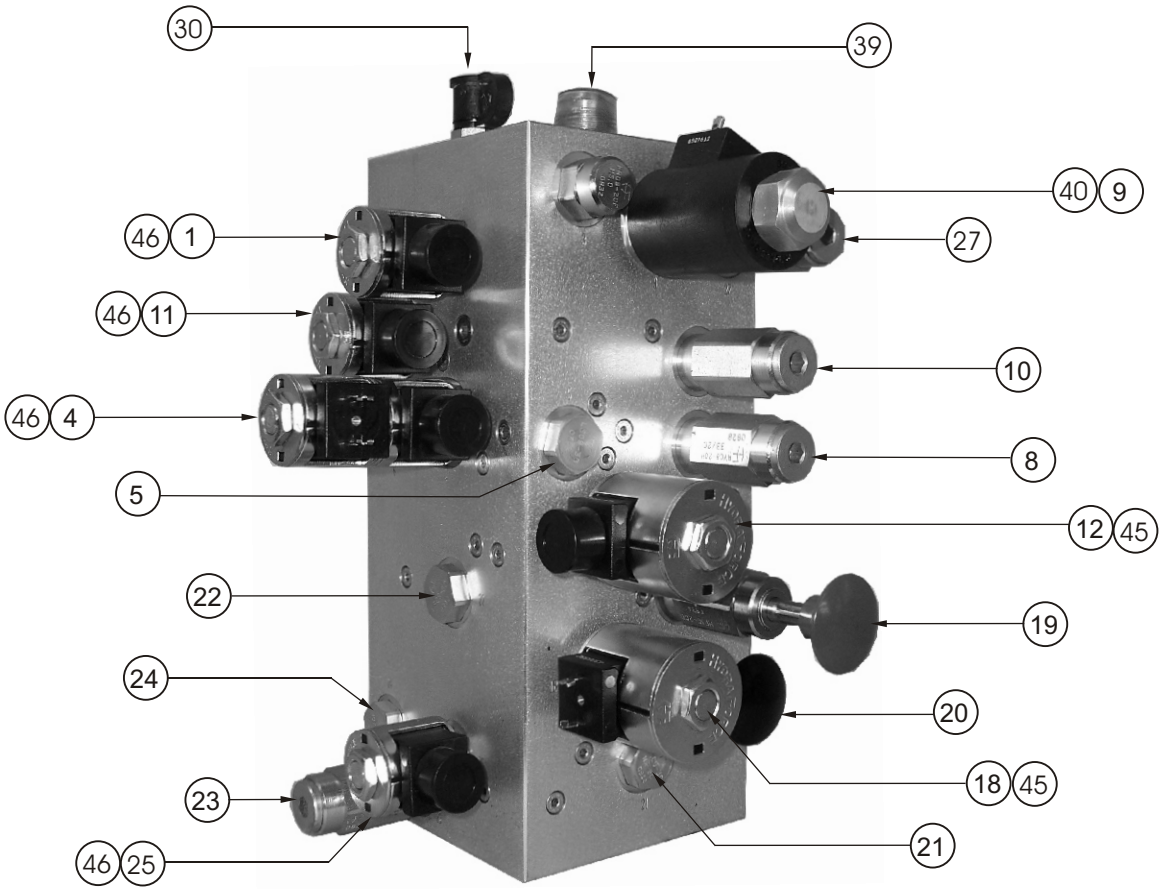

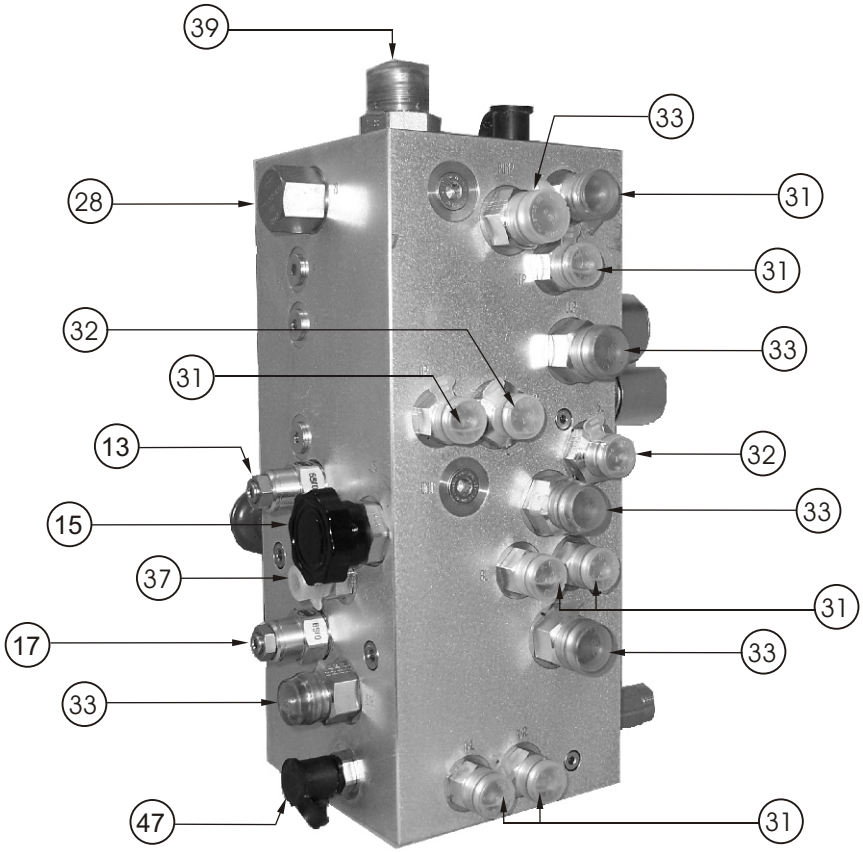

Manifold assembly, 4WD

https://truckmanualshub.com/

Item	Part No	Qty	Description
0.	13162A	1	4 wheel drive manifold block assembly, V2
1.	12770-350606	5	Adapter, 90° elbow, 9/16" UNO -> 3/8" STCF
2.	12770-330806	8	Adapter, straight, 3/4" UNO -> 3/8" STCF
3.	12770-330606	1	Adapter, straight, 9/16" UNO -> 3/8" STCF
4.	12770-330808	2	Adapter, straight, 3/4" UNO -> 1/2" STCF
5.	12569-2	2	Pilot cartridge, NO
6.	12569-3	2	Flow divider, combiner
7.	12569-5	2	Pilot valve, NC
8.	12569-6	2	Drive motor relief valve
9.	12567-11	1	Selector valve series, parallel
10.	12835-2	1	Coil, 12V

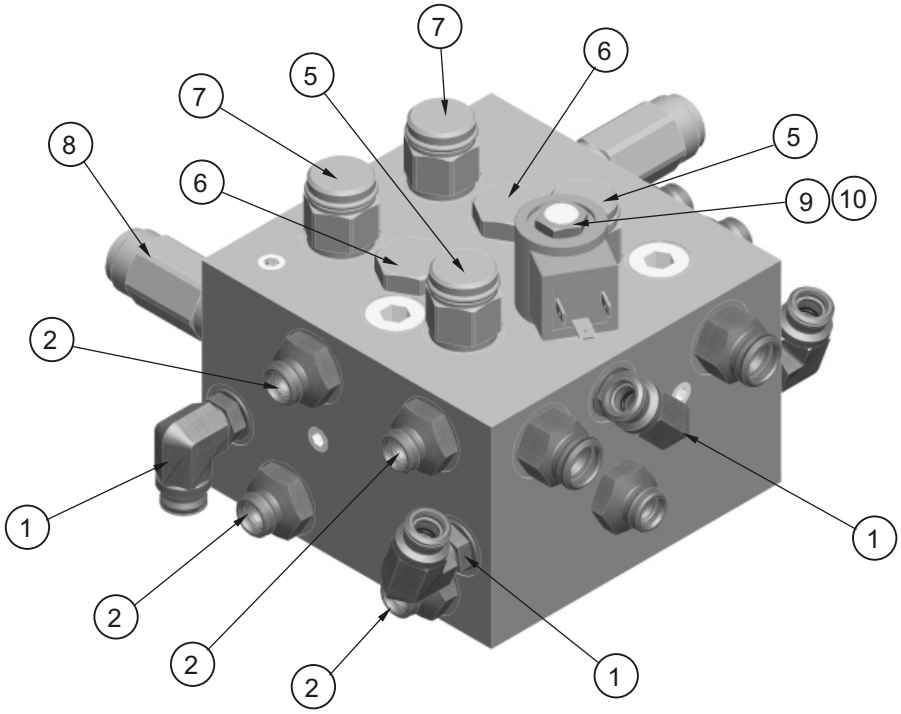

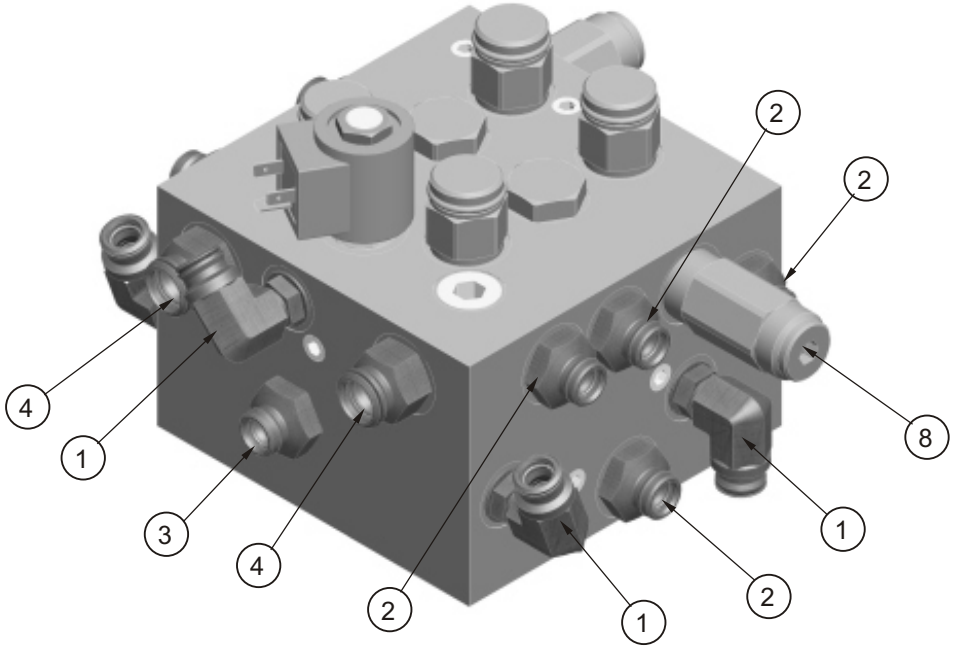

Manifold assembly, stabilisers

Item	Part No	Qty	Description
0.	12568A	1	Stabiliser valve block assembly
1.	12568-1	4	Stabiliser directional valve
2.	12770-330606	9	Adapter, straight, 9/16" UNO -> 3/8" STCF
3.	12770-330808	1	Adapter, straight, 3/4" UNO -> 1/2" STCF

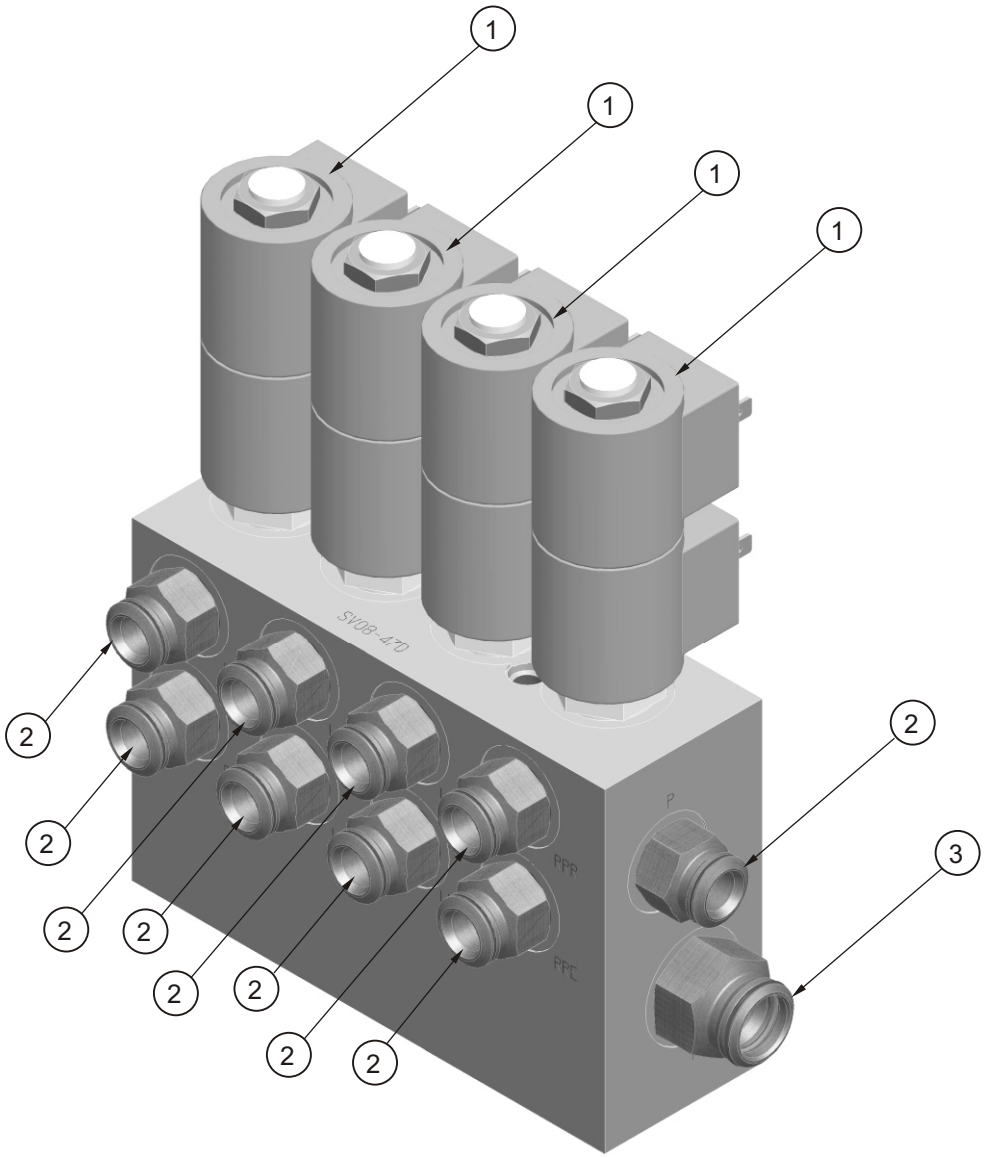

Hydraulic oil tank assembly

https://truckmanualshub.com/

Item	Part No	Qty	Description
1.	3603-06	10	Plain washer
2.	3611-06	10	Metric nyloc nut
3.	3618-11	1	Hose clamp 11 - 25mm ZP
4.	3618-26	1	Hose clamp 26 - 28mm ZP (Pass.)
5.	7060-001	1	BSPTM x BSPTF reducer bush
6.	11430-1	1	Base plate weld
7.	11430-5	1	Gasket
8.	11487	1	Filter breather
9.	11558-8	1	Tank inner hose
10.	12318-2	1	Top plate, hydraulic oil tank
11.	452756	1	Plug, magnetic 3/8 NPT
12.	561706	1	Tank, 13 gallon
13.	605246	1	Strainer, hydraulic tank filler
14.	605256	1	Cap, vented
15.	451776	1	Decal, hydraulic fluid
16.	302950	1	Decal, hydraulic fluid, max/min level

https://truckmanualshub.com/

Hydraulic oil tank assembly drawing

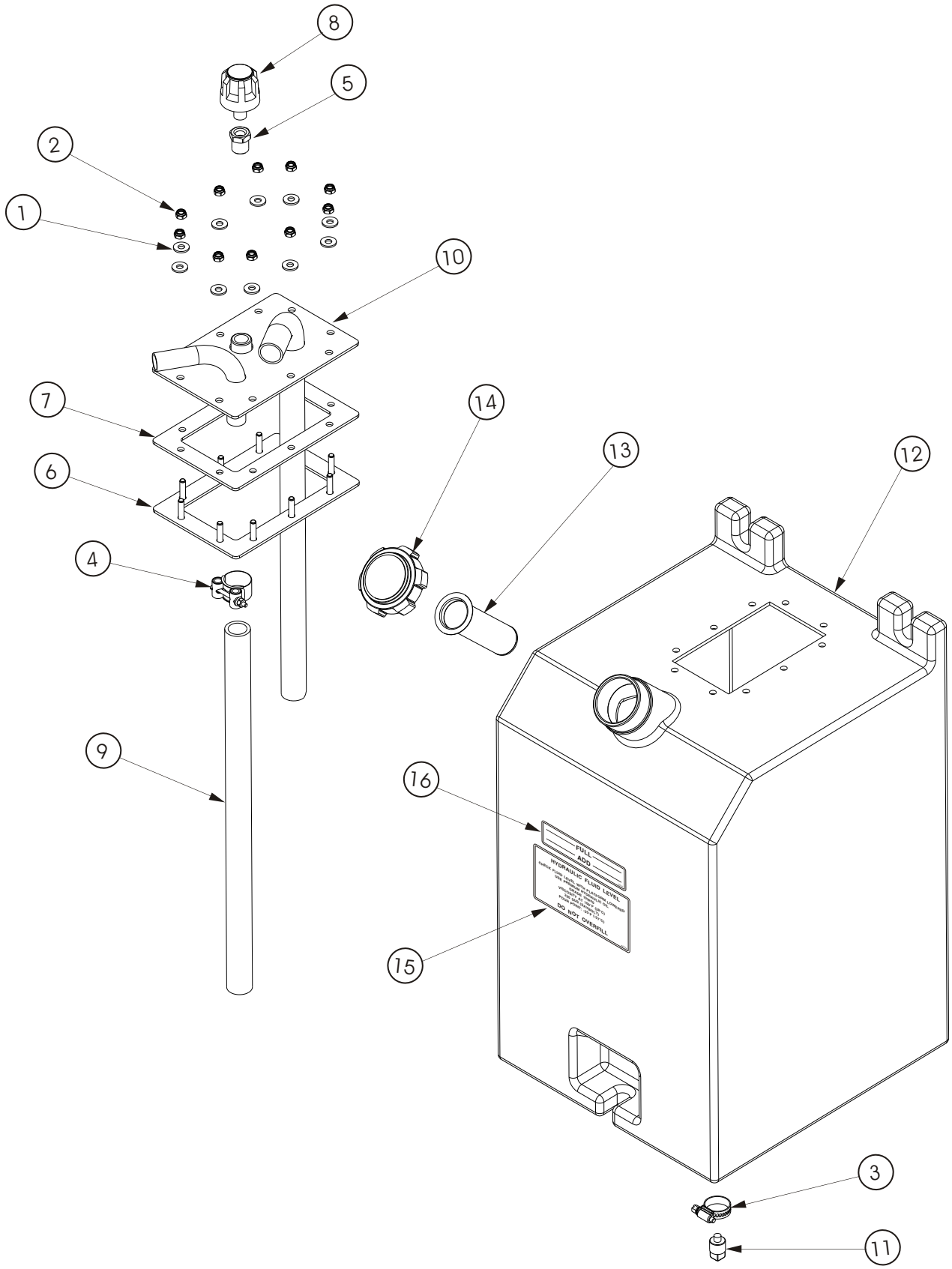

Steer axle cylinder

Item	Part No.	Qty	Description
1.	3624-27	1	Permaglide bush
2.	12770-340406	1	Adapter, male SAE to female STC
3.	11699	1	Steer cylinder
4.	12770-330406	1	Adapter, male SAE to female STC, straight
	11699K	1	Seal kit for (Victor)
	11699K-PB	1	Seal Kit for (PB Machine Tech)
	11699K-UH	1	Seal Kit for (United Hydraulics)

NOTE: Cylinders and Seal Kits

Snorkel has 3 potential manufacturers for it's cylinders, Victor, PB Machine Tech, and United Hydraulics. Each of the manufacturers have different seal kits. You will need to identify which cylinder has been used with your machine and ensure that you order the correct seal kit for your cylinder.

Cylinders can be identified by manufacturers marking. If you are unsure please contact your service provider or the factory.

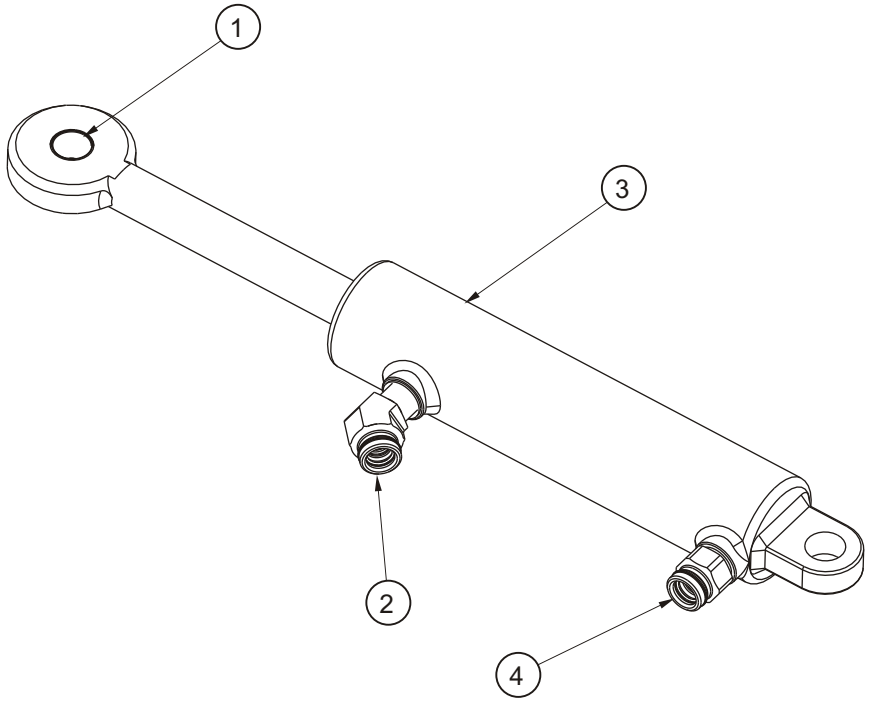

https://truckmanualshub.com/

Item	Part No.	Qty	Description
1.	3626-3	4	Flanged permaglide bush
2.	11368-2	1	Solenoid valve and coil (Prior to Serial Number NZ070116)
	12835-1	1	Cartridge (from Serial Number NZ070116)
3.	12835-2	1	Coil (from Serial Number NZ070116)
4.	11642	1	Axle cylinder
5.	12770-350606	1	Adapter, Male SAE to female STC, 90° adjustable
	11642K	1	Seal kit for (Victor)
	11642K-PB	1	Seal kit for (PB Machine Tech)
	11642K-UH	1	Seal kit for (United Hydraulics)

NOTE: Cylinders and Seal Kits

Snorkel has 3 potential manufacturers for it's cylinders, Victor, PB Machine Tech, and United Hydraulics. Each of the manufacturers have different seal kits. You will need to identify which cylinder has been used with your machine and ensure that you order the correct seal kit for your cylinder.

Cylinders can be identified by manufacturers marking. If you are unsure please contact your service provider or the factory.

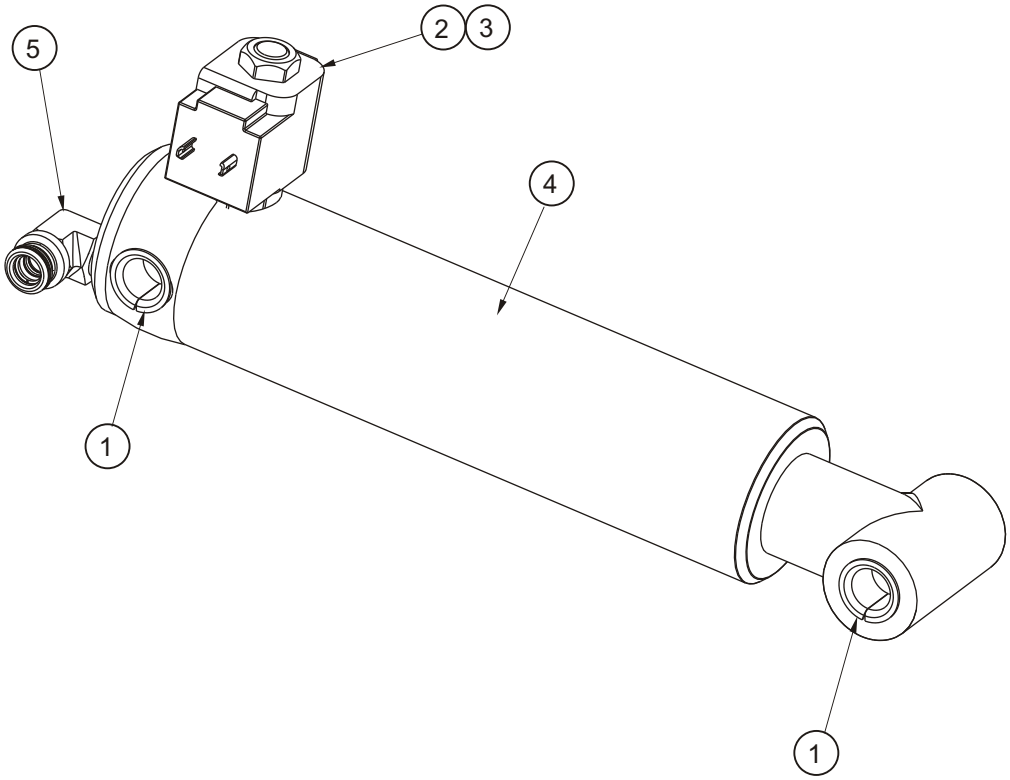

Main lift cylinder assembly

https://truckmanualshub.com/

Item	Part No	Qty	Description
1.	3603-06	2	Washer, plain, M6 x 16, ZP
2.	3605-06	2	Washer, spring, M6
3.	3610-06012	2	Bolt, M16 x 12, C8.8, ZP
4.	7031-001	1	Adaptor, elbow 90° 9/16 JICM -> 9/16 UNO
5.	7035-001	1	Plug
6.	12770-340808	1	Adaptor, elbow 45° 1/12 UNO -> 1/2 STC F
7.	11687	1	SR lift cylinder
8.	56112-6	6	Bushing
9.	6010833	1	Valve, cartridge, adjustable
10.	6018024	1	Solenoid valve, 2 way, normally closed
11.		1	Cylinder bleed down bracket assembly
12.	12677	1	Coil
	11687K	1	Seal kit for (Victor)
	11687K-PB	1	Seal kit for (PB Machine Tech)
	11687K-UH	1	Seal kit for (United Hydraulics)

NOTE: Cylinders and Seal Kits

Snorkel has 3 potential manufacturers for it's cylinders, Victor, PB Machine Tech, and United Hydraulics. Each of the manufacturers have different seal kits. You will need to identify which cylinder has been used with your machine and ensure that you order the correct seal kit for your cylinder.

Cylinders can be identified by manufacturers marking. If you are unsure please contact your service provider or the factory.

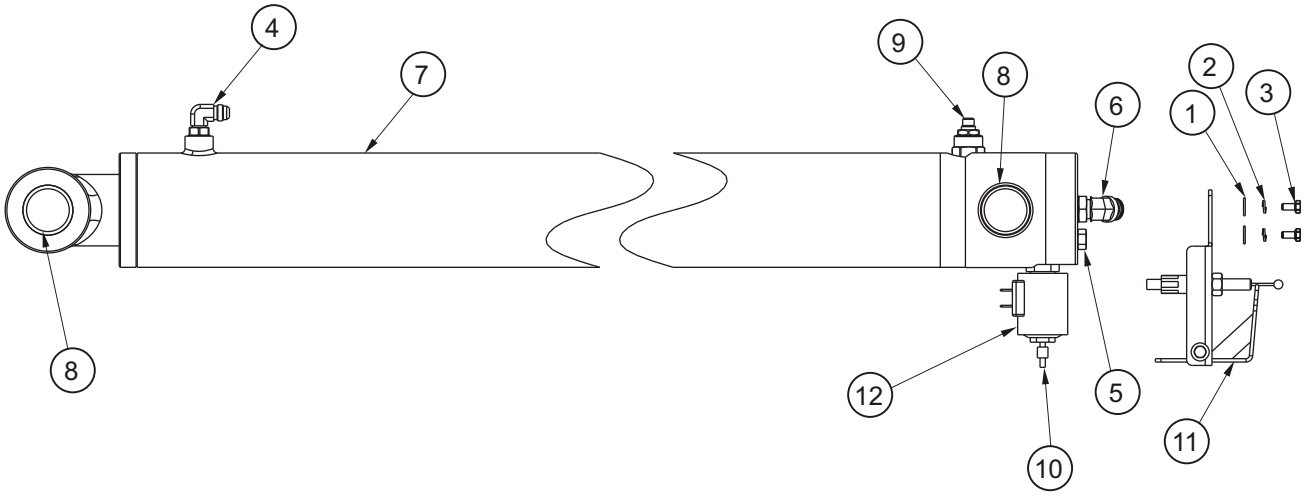

https://truckmanualshub.com/

Item	Part No	Qty	Description
1.	3602-06	1	Nut, M6, plated
2.	3604-03016	2	Screw, pan head M3 x 16
3.	3610-06110	1	Bolt, M6 x 110, C4.6
4.	3610-10035	2	Bolt
5.	3611-03	2	Nut, nylock, M3
6.	3611-06	1	Nut, nylock, M6
7.	6999-005	2	Hydraulic fitting
8.	7025-015	2	Adapter, JCIM straight, 7/16" -> UNO straight, 7/16"
9.	11367-2	1	Pilot check valve
10.	11492-4	1	Locktab, dual, 10mm
11.	12036-5	2	Sliding spacer
12.	12036-6	1	Compression spring
13.	12036-7	2	Microswitch
14.	12036-8	1	Microswitch mount plate, dual
15.	12036	1	Stabiliser cylinder (see NOTE below)
16.	60030-198	1	Washer, fender, 1/4"
	12036K	1	Seal kit for (Victor)
	12036K-PB	1	Seal kit for (PB Machine Tech)
	12036K-UH	1	(Seal kit for (United Hydraulics)

NOTE: Cylinders and Seal Kits

Snorkel has 3 potential manufacturers for it's cylinders, Victor, PB Machine Tech, and United Hydraulics. Each of the manufacturers have different seal kits. You will need to identify which cylinder has been used with your machine and ensure that you order the correct seal kit for your cylinder.

Cylinders can be identified by manufacturers marking. If you are unsure please contact your service provider or the factory.

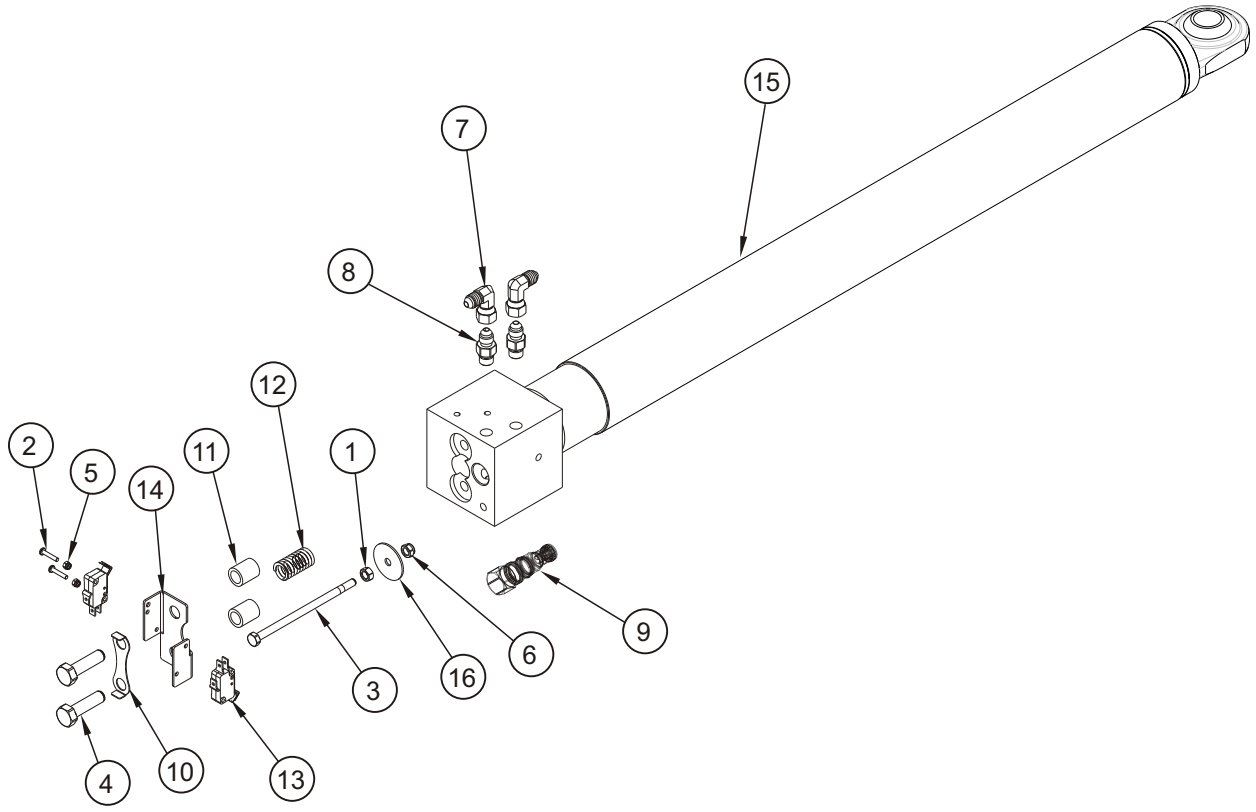

https://truckmanualshub.com/

https://truckmanualshub.com/

Section 3. - Electrical

Looms 3-2
Electrical schematic drawing, auto level 3-3
Colour coded wiring circuit auto level 3-4
Ground control box assembly drawing 3-6
Ground control box assembly 3-7
Ground box 3-8
Ground box drawing - sheet 1 3-9
Ground box drawing - sheet 2 3-10
Platform control box assembly 3-12
Platform Control Box Assembly drawing
Sheet 1 3-13
Platform Control Box Assembly drawing
Sheet 2 3-14

https://truckmanualshub.com/

Item	Part No.	Qty	Description
1.			

https://truckmanualshub.com/

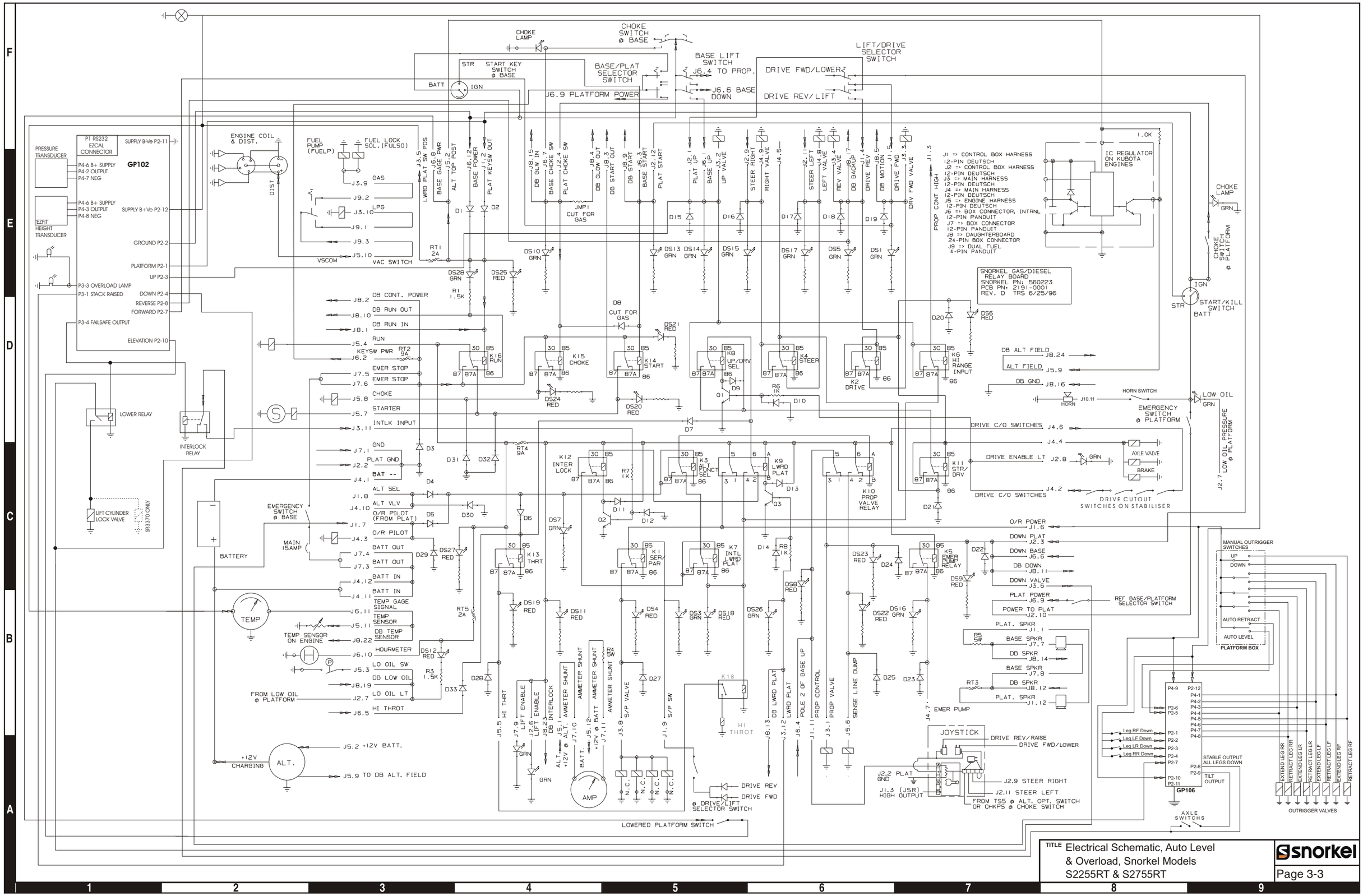

TITLE Electrical Schematic, Auto Level & Overload, Snorkel Models S2255RT & S2755RT

snorkel

https://truckmanualshub.com/

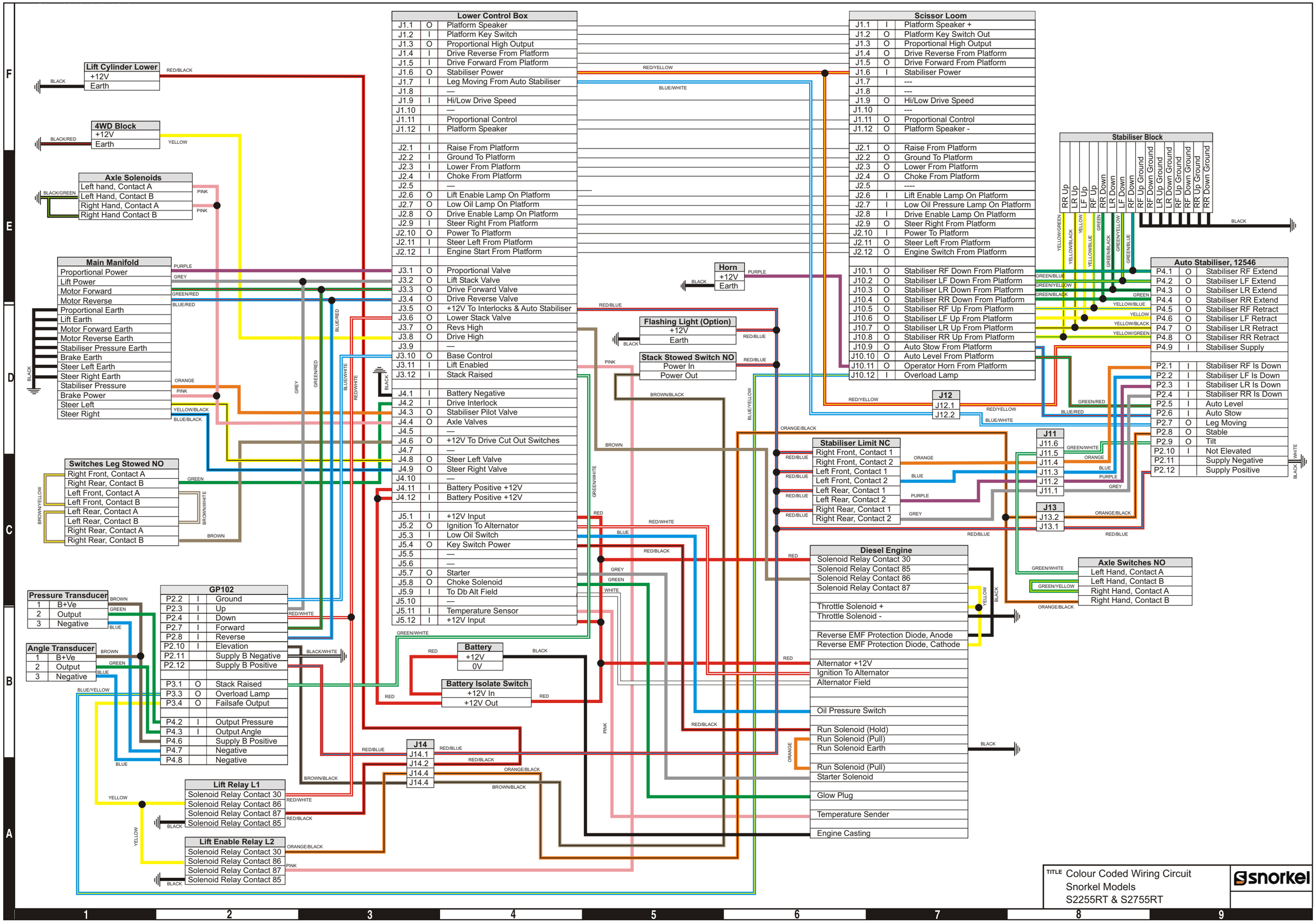

https://truckmanualshub.com/

https://truckmanualshub.com/

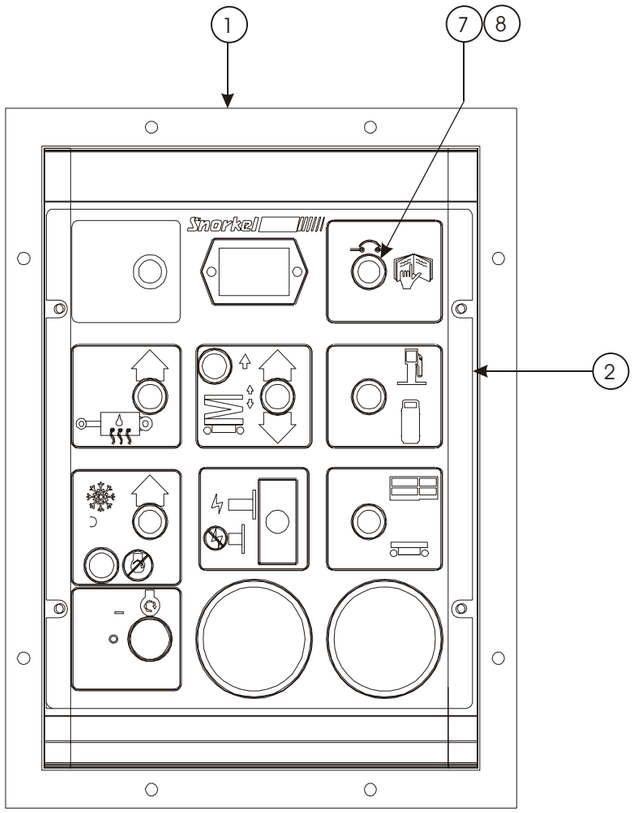

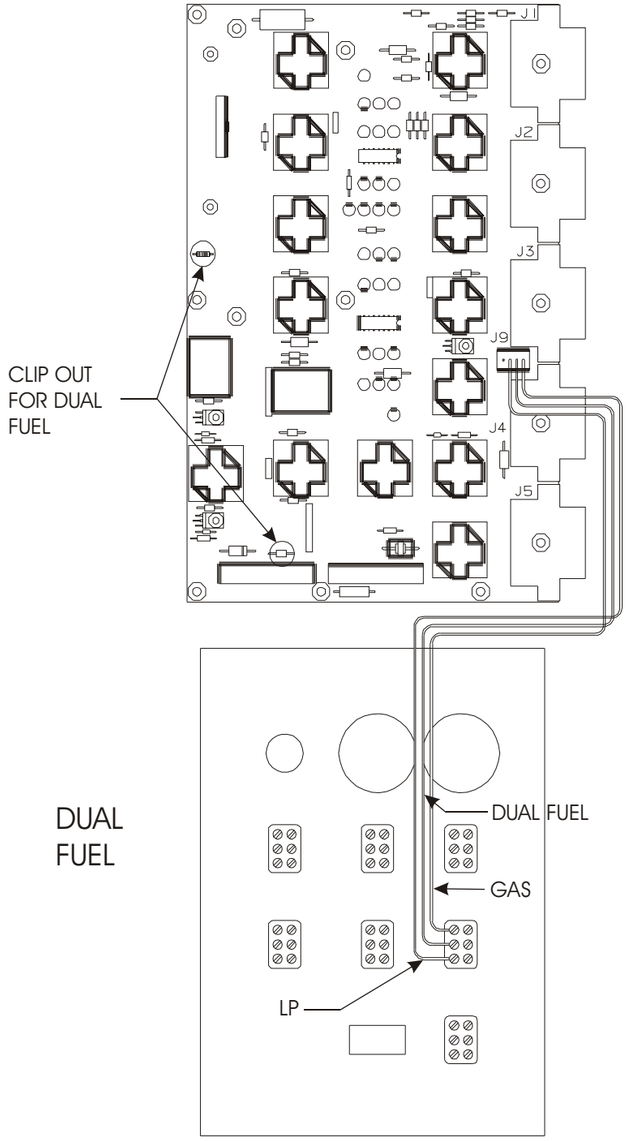

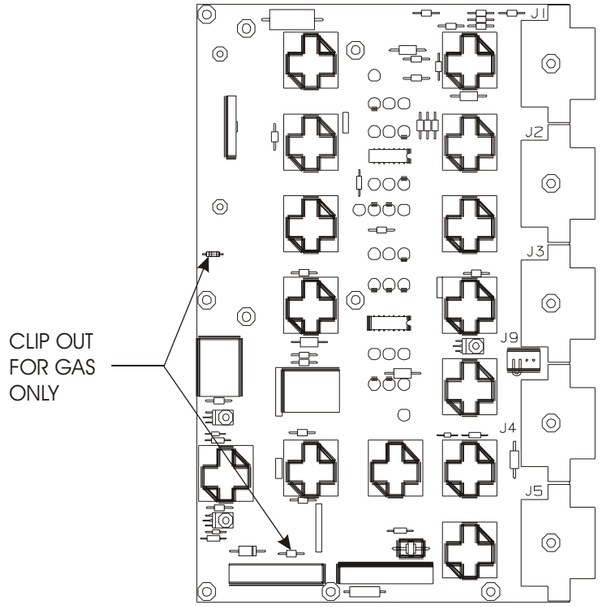

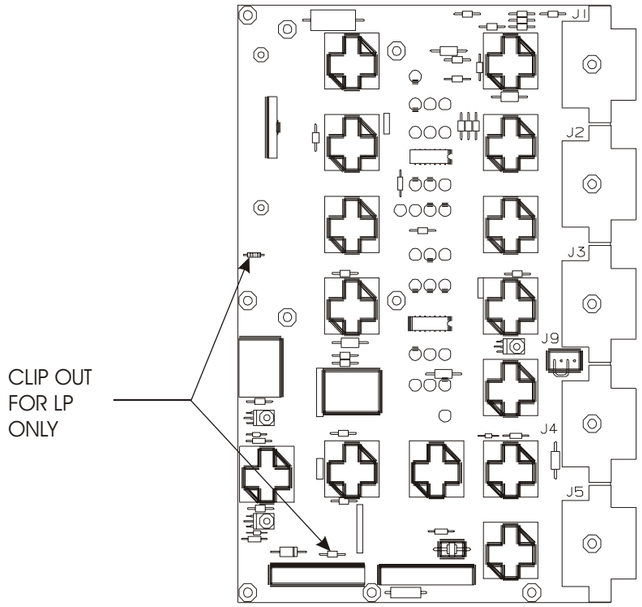

snorkel

TITLE Ground control box assembly
Snorkel Models S2255RT
& S2755RT

https://truckmanualshub.com/

Ground control box assembly

Item	Part No	Qty	Description
			Ground control box assembly, Kubota diesel units
1.	560222	1	Ground box (see page 3 - 8)
2.	560240	1	Decal, ground control
7.	3040068	1	Circuit breaker 20 amp
8.	3044167	1	Terminal #10 spade 16/14 wire

https://truckmanualshub.com/

Ground box

Item	Part No	Qty	Description
0.	560222	1	Ground box, complete
1.	560229	1	Ground electrical box
2.	560224	1	Alarm board/daughter board
3.	560223	1	Relay board/mother board
4.	3020013	1	Switch, toggle
	446836	1	Switch, push/pull emergency stop, CE only
	446826	1	Contact block, CE only
5.	302-0015	1	Switch, toggle, SPST, (MON/OFF)
6.	302-0016	Ref	Switch, toggle, SPDT, (M/OFF/M)
7.	302-0018	1	Switch, toggle, DPDT, (M/OFF/M)
8.	302-0097	1	Switch, toggle, DPDT, (ON/ON)
	3020167	1	Key switch, CE only
	3049906	1	Mounting base, CE only
9.	562236	1	Switch guard, not required for CE
10.	455186	1	Hour meter
11.	562326	14	Relay, 12 volt DC - 20/30 amp
12.	560390	2	Relay, 12 volt DC - 10 amp
13.	563686	1	Circuit breaker, 15 amp capacity thermal
14.	3020087	1	Key switch
	10113	1	Start switch, CE only
	9776	1	Mounting base, CE only
	10114	1	Contact, CE only
15.	560394	1	Temperature gauge
16.	560396	1	Ammeter
17.	560397	1	Internal wire harness
18.	302832	1	Speaker
19.	302882	1	Drain plug
20.	560377	1	Lamp, green bezel 12 volt
21.	3040068	Ref	Circuit breaker, 20 amp capacity thermal
22.	560240	Ref	Decal, ground control
23.	560398	1	Gasket
24.	560389	1	Door restraint cable
25.	0070967	1	Corrosion inhibitor
26.	560395	1	Temperature sensor
27.	302856	2	Bracket for daughter board
28.	302855	2	Stand-off for daughter board

https://truckmanualshub.com/

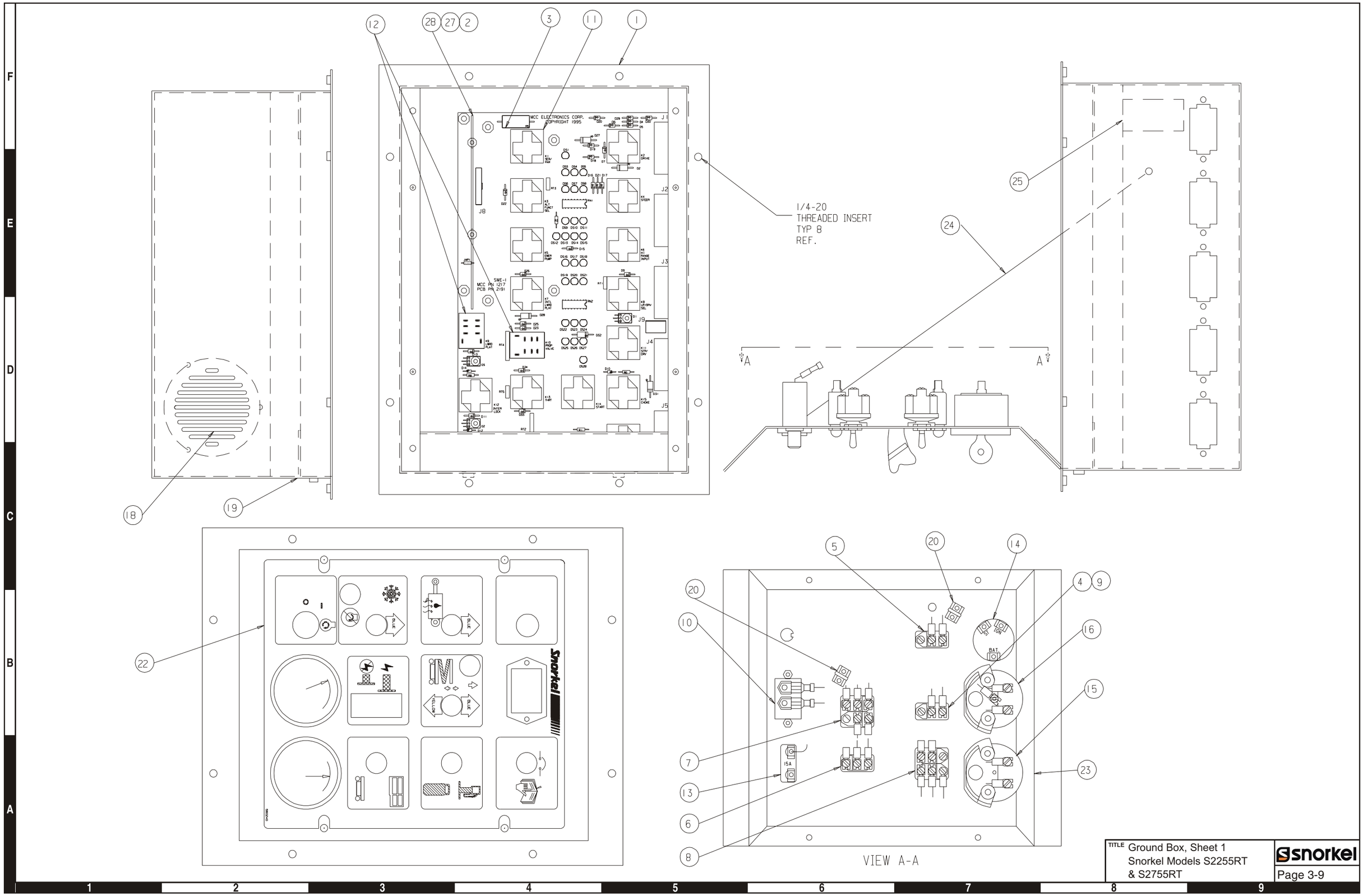

TITLE Ground Box, Sheet 1
Snorkel Models S2255RT
& S2755RT

snorkel

https://truckmanualshub.com/

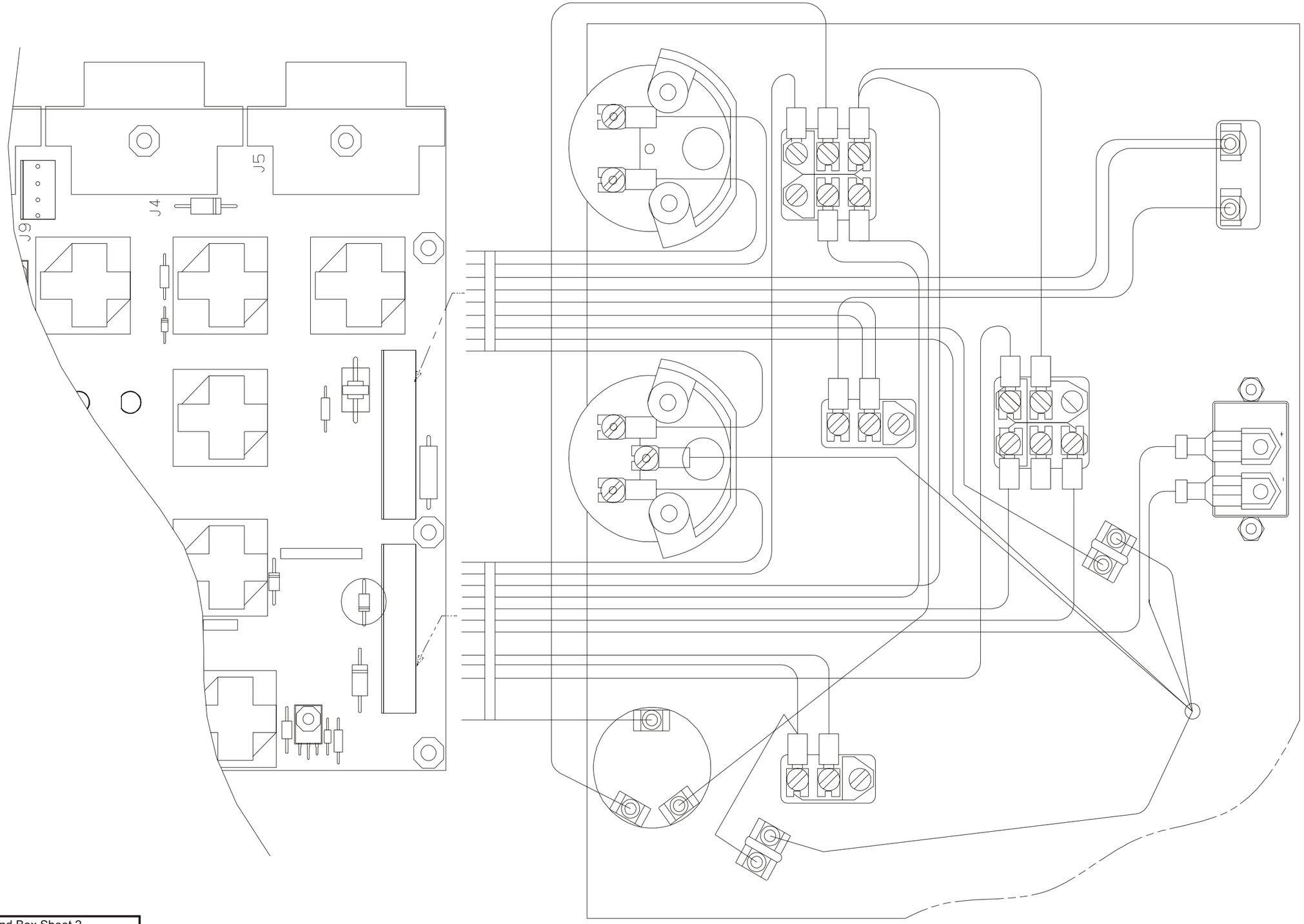

snorkel

TITLE Ground Box Sheet 2
Snorkel Models S2255RT
& S2755RT

https://truckmanualshub.com/

Platform control box assembly

https://truckmanualshub.com/

Item	Part No	Qty	Description
0.	12891A	1	Platform control box assembly
1.	560228	1	Platform control box
2.	560332	1	Switch, push button
3.	560757	1	Joystick controller
4.	560376	1	Internal wire harness
5.	446836	1	Switch, push/pull emergency stop
6.	0070967	1	Corrosion inhibitor
7.	3020097	1	Switch, toggle
8.	560377	4	Led lamp, green 12 volt
9.	560375	1	Gasket
10.	3049847	1	Electrical connector
11.	3020016	1	Switch, auto level (not installed on machines without stabilisers)
12.	560332	1	Switch, operator horn
13.	560379	1	Switch, start/kill
14.	560241	1	Placard, platform control box
15.	3040099	1	Electrical connector lock washer
16.	3040098	1	Electrical connector lock nut
17.	560272	1	Placard, emergency stop
18.	3020016	4	Switch, outriggers (not installed on machines without stabilisers)
19.	446826	1	Contact block, emergency stop
20.	560378	1	Diode wire assembly
21.	563736	1	Switch, toggle

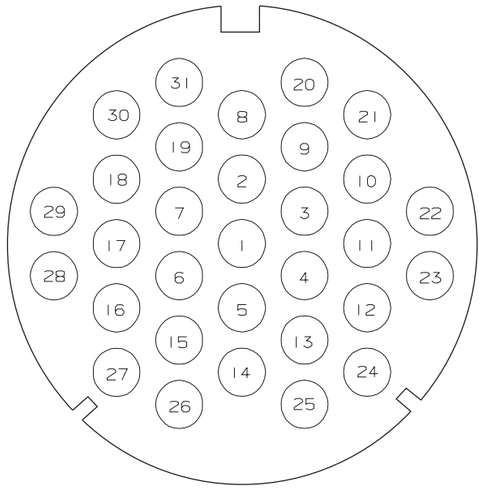

SECTION B-B

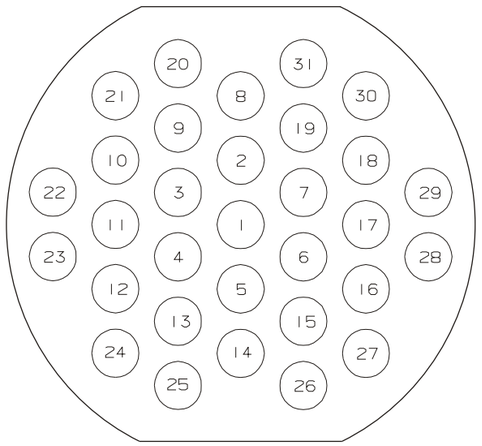

SECTION A-A

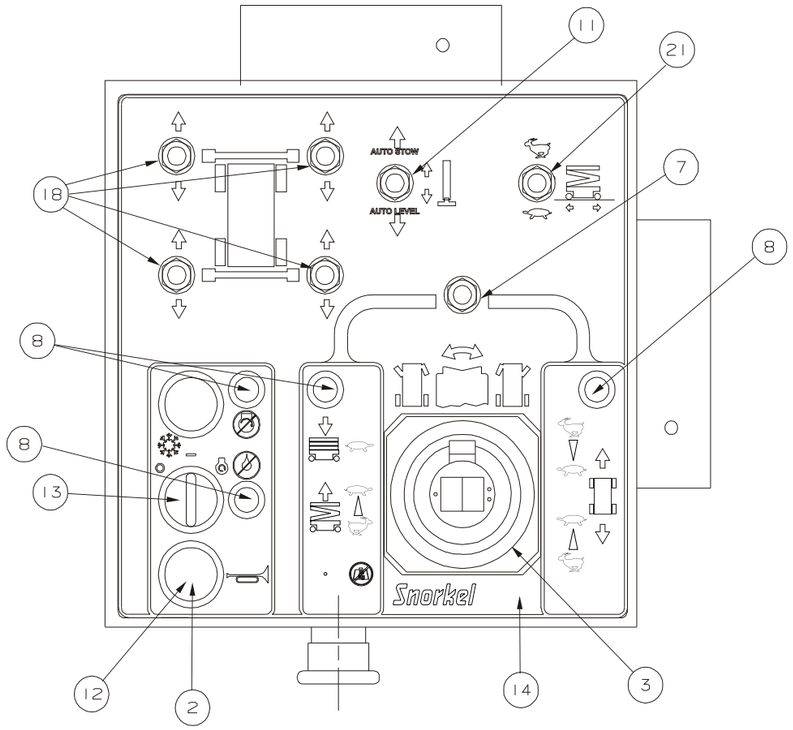

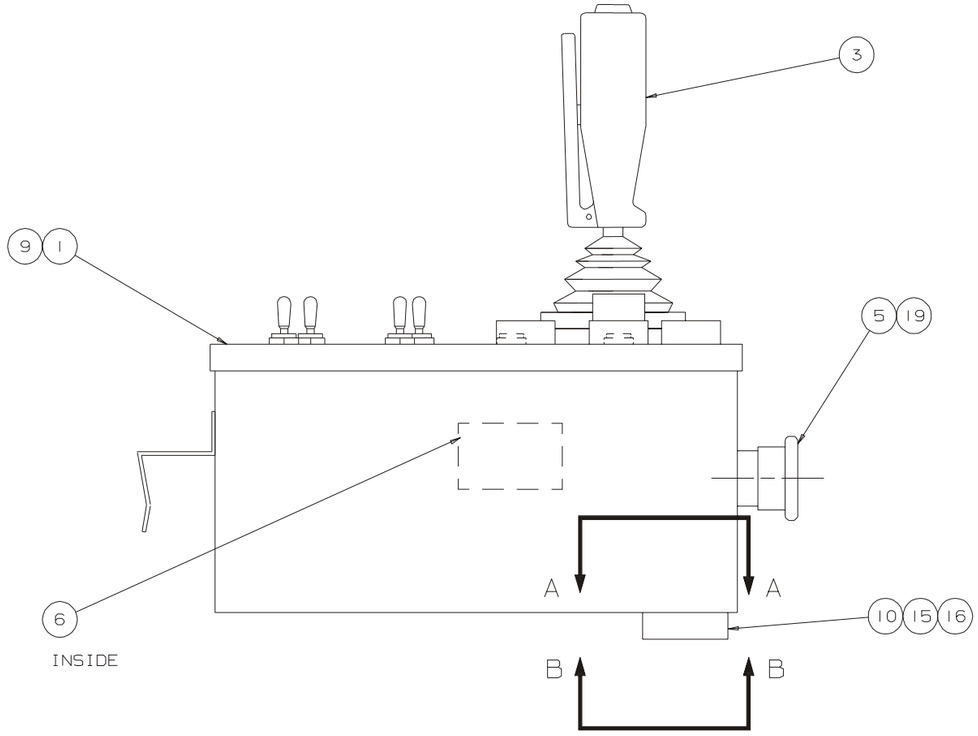

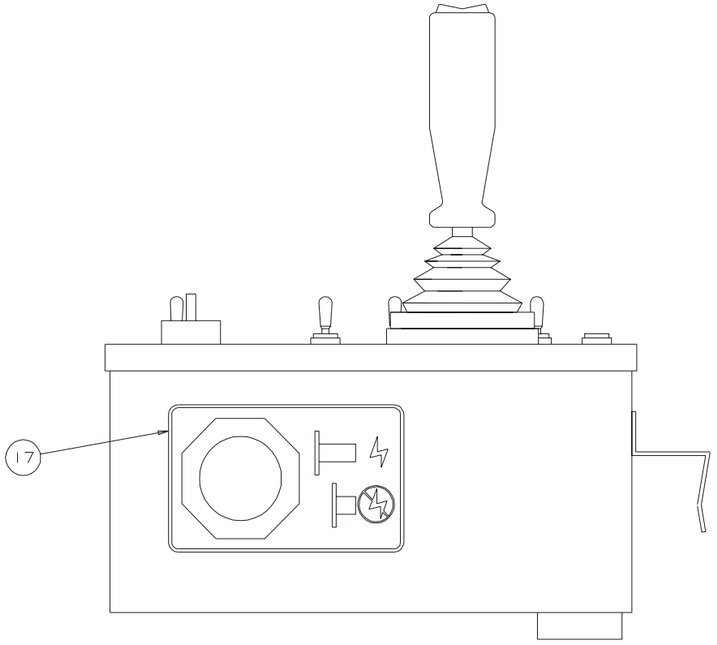

TITLE Platform Control Box Assembly
Sheet 1, Snorkel Models
S2255RT & S2755RT

snorkel

https://truckmanualshub.com/

PIN #	LOWER BASE END OF CONTROL CABLE	
JS 1	J2.3	LOWER FROM PLATFORM
JS 2	J2.2	PLATFORM GROUND WIRE
JS 3	J2.1	RAISE FROM PLATFORM
JS 4	J2.4	CHOKE/GLOW PLUG SWITCH AT PLATFORM
JS 5	J10.11	OPERATOR HORN
JS 6	J2.6	LIFT ENABLE LAMP
JS 7	J2.7	PLATFORM LOW OIL PRESSURE LAMP
JS 8	J2.8	PLATFORM DRIVE ENABLE LAMP
JS 9	J2.9	STEER RIGHT
JS 10	J2.10	POWER TO PLATFORM (14 GA)
JS 11	J2.11	STEER LEFT
JS 12	J2.12	START SWITCH FROM PLATFORM
JS 13	J1.1	PLATFORM SPEAKER
JS 14	J1.2	PLATFORM KEY SWITCH OUT
* JS 15	J1.3	PROPORTIONAL HIGH OUTPUT
JS 16	J1.4	DRIVE REVERSE
JS 17	J1.5	DRIVE FORWARD
‡ JS 18	J1.6	OUTRIGGER SUPPLY
JS 18	J12.1	OUTRIGGER SUPPLY
JS 19	J10.9	AUTO STOW
JS 20	J10.10	AUTO LEVEL
JS 21	J1.9	HI/LOW DRIVE SWITCH
JS 22	J1.11	PROPORTIONAL CONTROL
JS 23	J1.12	PLATFORM SPEAKER
JS 24	J10.1	OUTRIGGER RF DOWN
JS 25	J10.2	OUTRIGGER LF DOWN
JS 26	J10.3	OUTRIGGER LR DOWN
JS 27	J10.4	OUTRIGGER RR DOWN
JS 28	J10.5	OUTRIGGER RF UP
JS 29	J10.6	OUTRIGGER LF UP
JS 30	J10.7	OUTRIGGER LR UP
JS 31	J10.8	OUTRIGGER RR UP

* NOTE: INPUT FROM JSR (JS 15) ONLY
IF LOWER PLATFORM SWITCH IS MADE!

‡ NOTE: JS 18 T'S IN CONTROL CABLE TO J1.6 AND J12.1

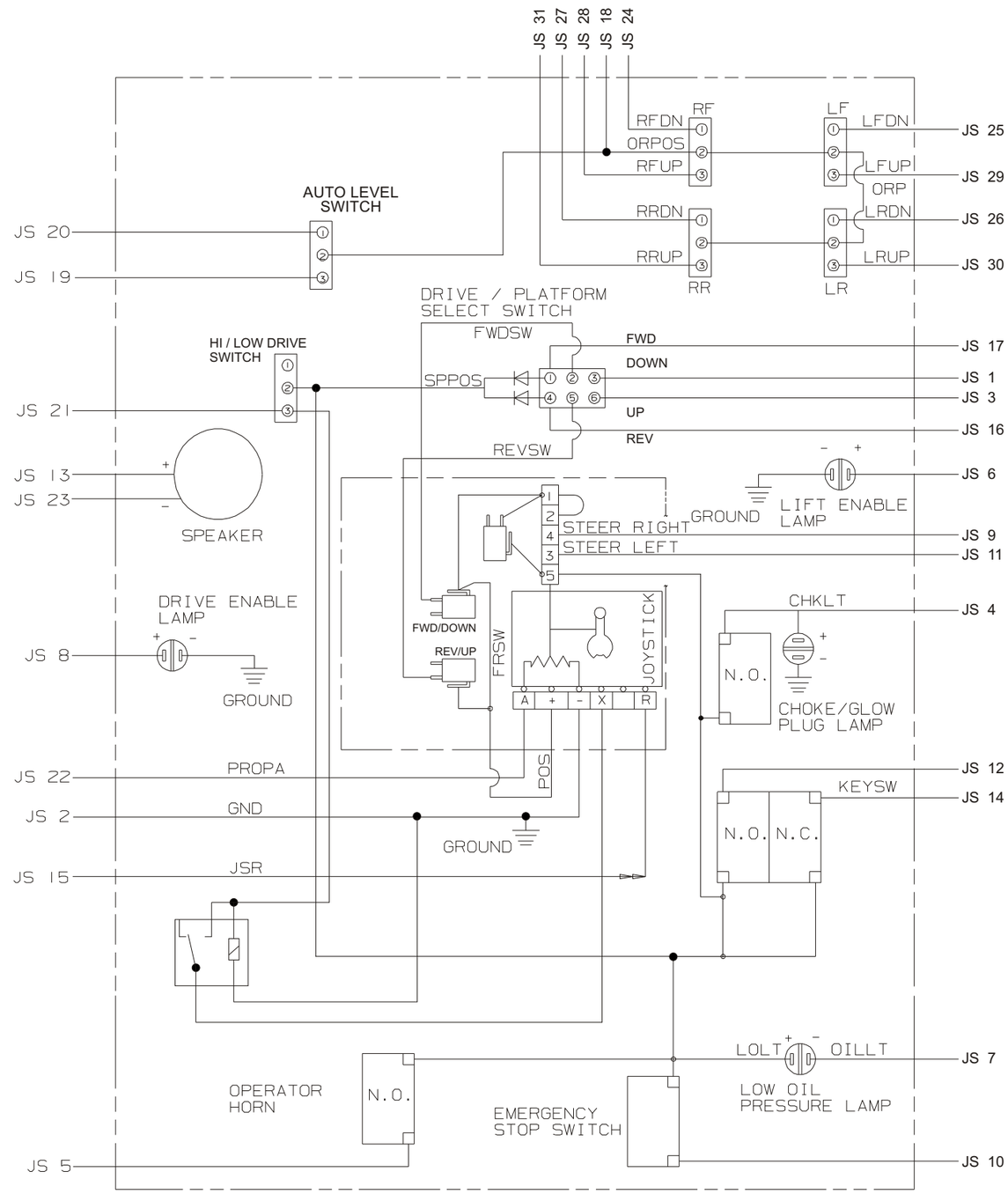

https://truckmanualshub.com/

Section 4. - Options

AC outlet at platform, 230 volt 4-2
AC outlet at platform 230V drawing. 4-3
Flashing light installation 4-4
24VDC Option 4-5
Colour coded wiring schematic,
24VDC option 4-7
Control & hydraulic cabinet assembly - 24VDC . . . 4-8
Control & hydraulic cabinet assembly
drawing 24VDC option 4-9
Battery box assembly drawing, 24VDC option . . . 4-10
Battery box assembly - 24VDC option 4-11
Battery box mounting - 24VDC option. 4-12
Emergency bleed down mounting, 24VDC 4-13
Relay box assembly, 24VDC option 4-14
Relay box assembly drawing, 24VDC option 4-15
Unloader valve 24VDC option 4-16

AC outlet at platform, 230 volt

https://truckmanualshub.com/

Item	Part No	Qty	Description
1.	10967-3	2	PDL enclosure
2.	10967-1	1	Residual current device (with appliance inlet pins)
3.	1814	2	M20 nylon cable gland
4.	10967-2	1	Appliance inlet
5.	2500-014	1	Switch outlet
6.	1812	1	3 core x 1.5 tpe flex cable

https://truckmanualshub.com/

AC outlet at platform 230V drawing

RIGHT-HAND SIDE

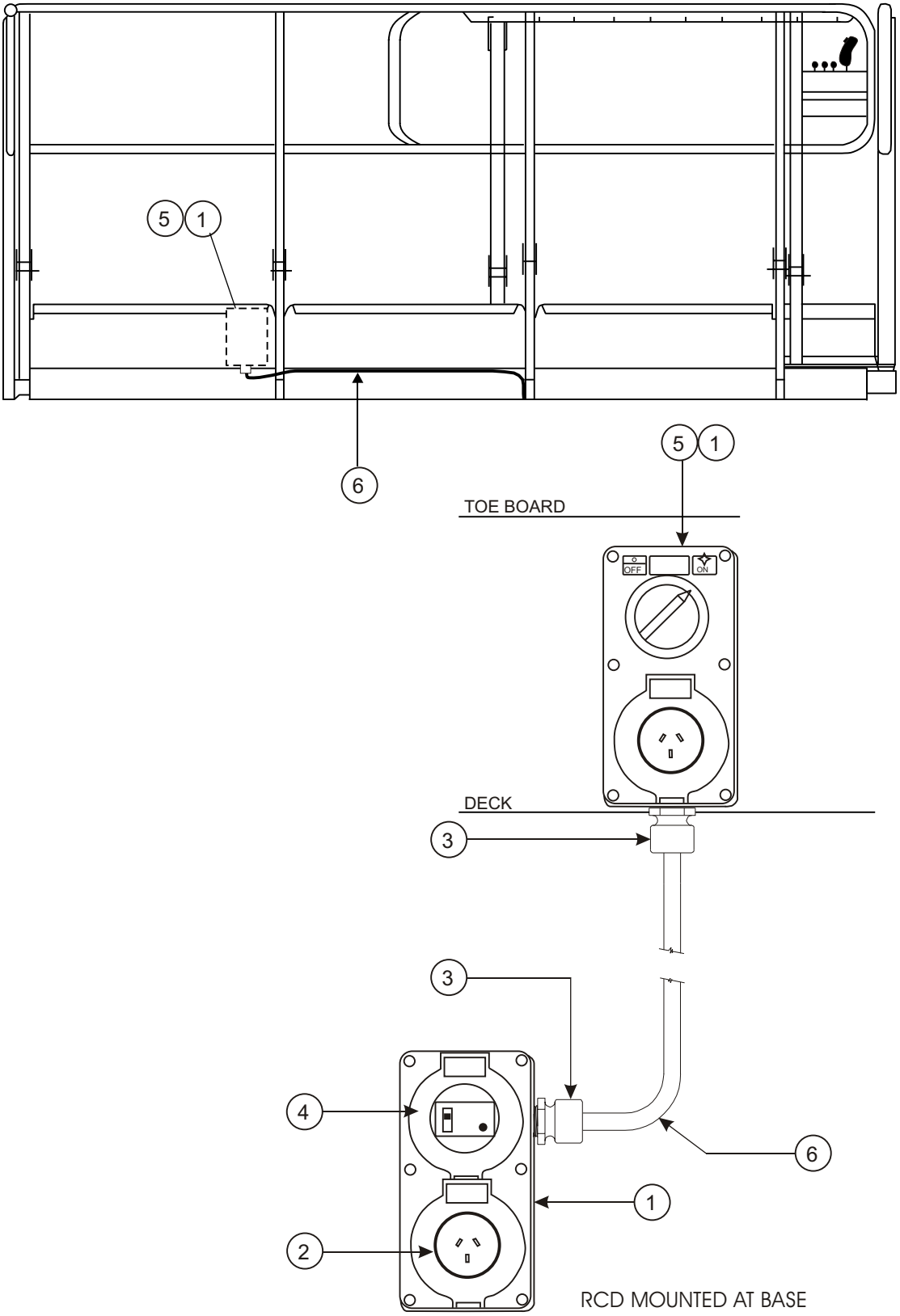

Flashing light installation

https://truckmanualshub.com/

Item	Part No	Qty	Description
1.	1866-003	1	Flashing light
2.	1866-004	1	Guard, flashing light
3.	3603-05	6	Washer, plain, M5 x 12.5, ZP
4.	3604-05020	3	Screw, pan head, M5 x 20, ZP
5.	3611-05	3	Nut, nyloc, M5
6.	304-0341	2	Terminal pin, male (not shown)

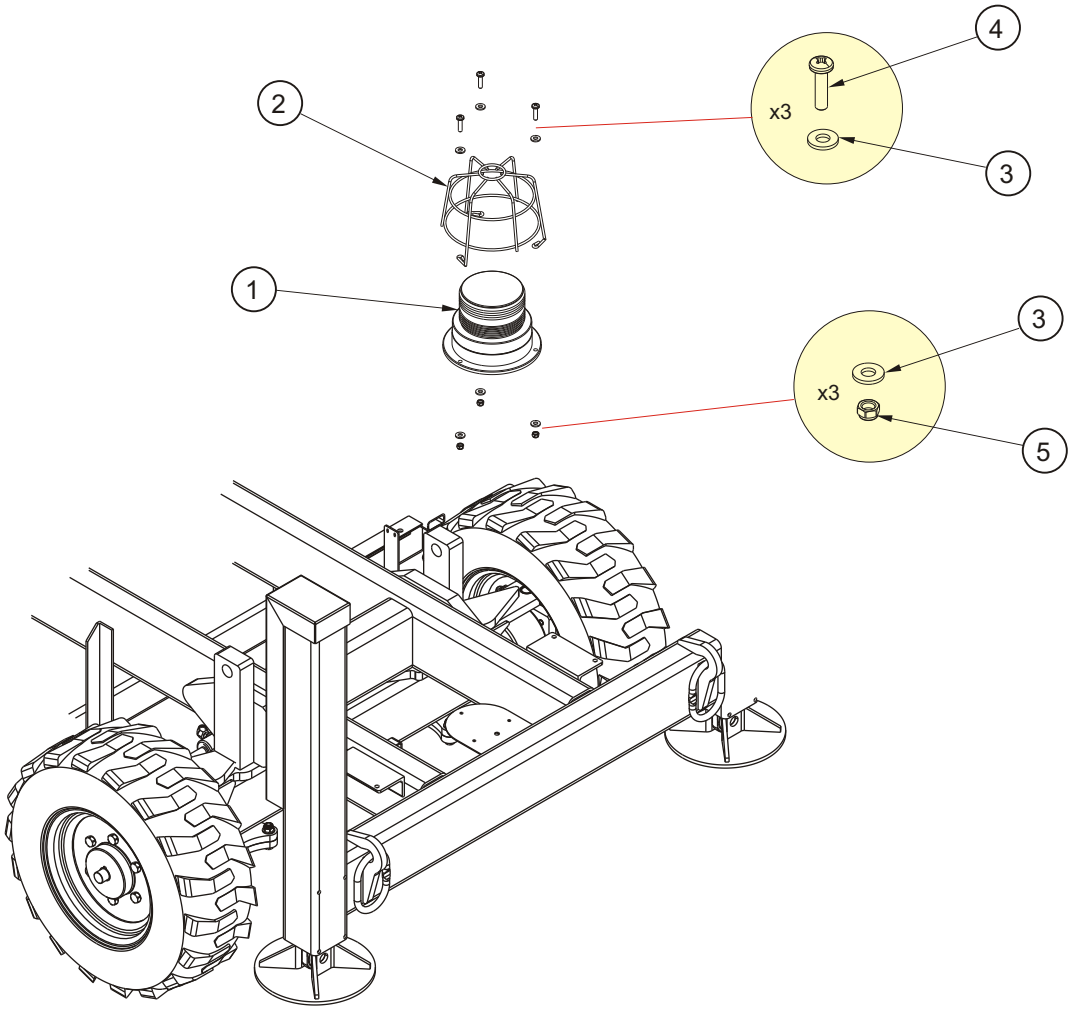

https://truckmanualshub.com/

https://truckmanualshub.com/

https://truckmanualshub.com/

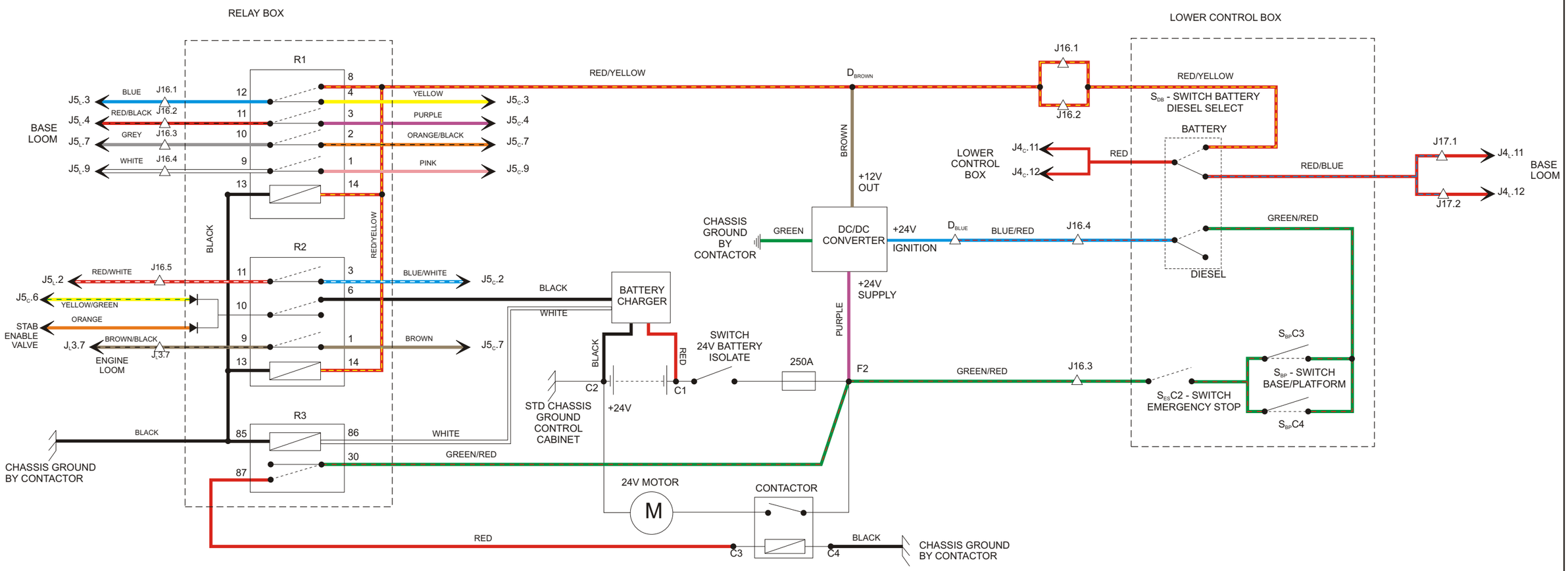

D_{BROWN} = CRIMP TERMINAL ON DC/DC CONVERTER BROWN WIRE
D_{BLUE} = CRIMP TERMINAL ON DC/DC CONVERTER BLUE WIRE
F2 = FUSE POWER OUT TERMINAL
C1 = BATTERY +24V TERMINAL
C2 = BATTERY 0V
C3 = CONTACTOR COIL POSITIVE
C4 = CONTACTOR COIL GROUND

TITLE Colour Coded Wiring Schematic
24V DC Option
Snorkel Models S2255RT & S2755RT VIII

snorkel

https://truckmanualshub.com/

Control & hydraulic cabinet assembly - 24VDC

Item	Part No	Qty	Description
1.	302-0049	1	Switch, battery disconnect
2.	3603-06	19	Washer, plain, M6 x 16
3.	3603-08	16	Washer, plain, M8 x 19
4.	3603-05	2	Washer, plain, M5
5.	3604-05012	2	Screw, panhead, M5 x 12
6.	3605-06	3	Washer, spring, M6
7.	3606-05025	2	Screw, sockethead, countersunk, M5 x 25
8.	3610-06016	6	Bolt, M6 x 16, C8.8 ZP
9.	3610-06020	5	Bolt, M6 x 20, C8.8 ZP
10.	3610-08020	4	Bolt, M8 x 20, C8.8 ZP
11.	3610-08065	4	Bolt, M8 x 65
12.	3611-05	4	Nut, nylock, M5
13.	3611-08	2	Nut, nylock, M6
14.	3611-08	8	Nut, nylock, M8
16.	7025-003	2	Adapter, straight, 3/4" JICM -> UNO, 3/4"
17.	7025-019	1	Adapter, straight, 1 and 1/16" JICM -> UNO, 7/8"
18.	12707	1	Converter, 24VDC -> 12VDC
19.	13229	1	Relay box assembly
20.	44607-6	1	Fuse, 250A
21.	60005-009	2	Washer, spring, 3/8", HD, plated
22.	60017-028	2	Bolt, UNC, 1" x 3/8"
23.	60030-049	2	Washer, plain, 3/8"
24.	300840	1	Lock out lever assembly
25.	446086	1	Fuse block
26.	305009	1	Battery charger
27.	3087787	1	Contactor, 24V, sealed
28.	3087790	1	Motor, 24V, DC
29.	6029637	1	Pump
30	12932-2	4	Spacer
31	7065-011	1	Hose tail, 1 -> 1 & 1/16" JICF, 90° elbow

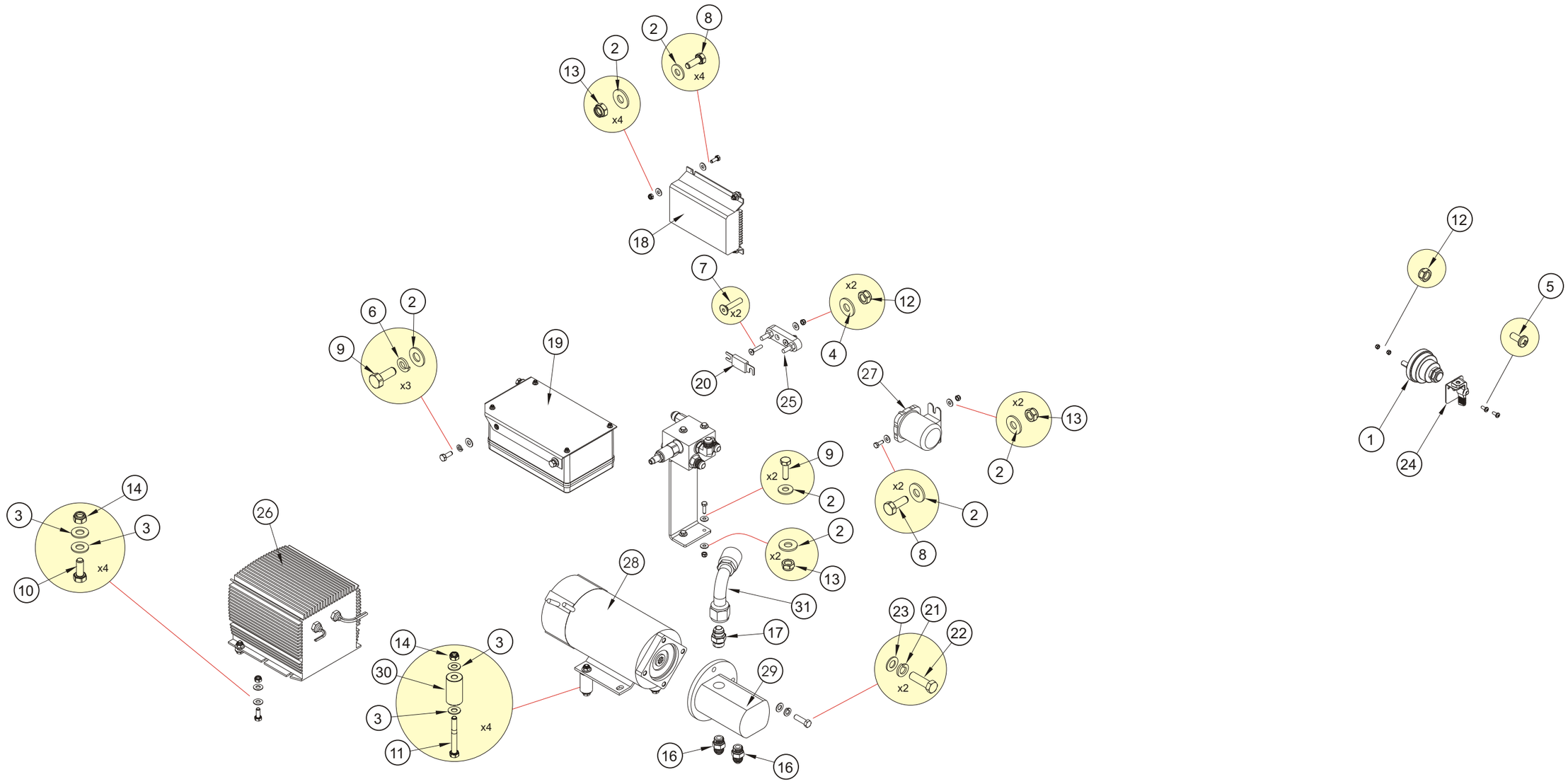

TITLE Control and Hydraulic Cabinet
Assembly, 24V DC Option
Snorkel Models S2255RT & S2755RT VIII

snorkel

https://truckmanualshub.com/

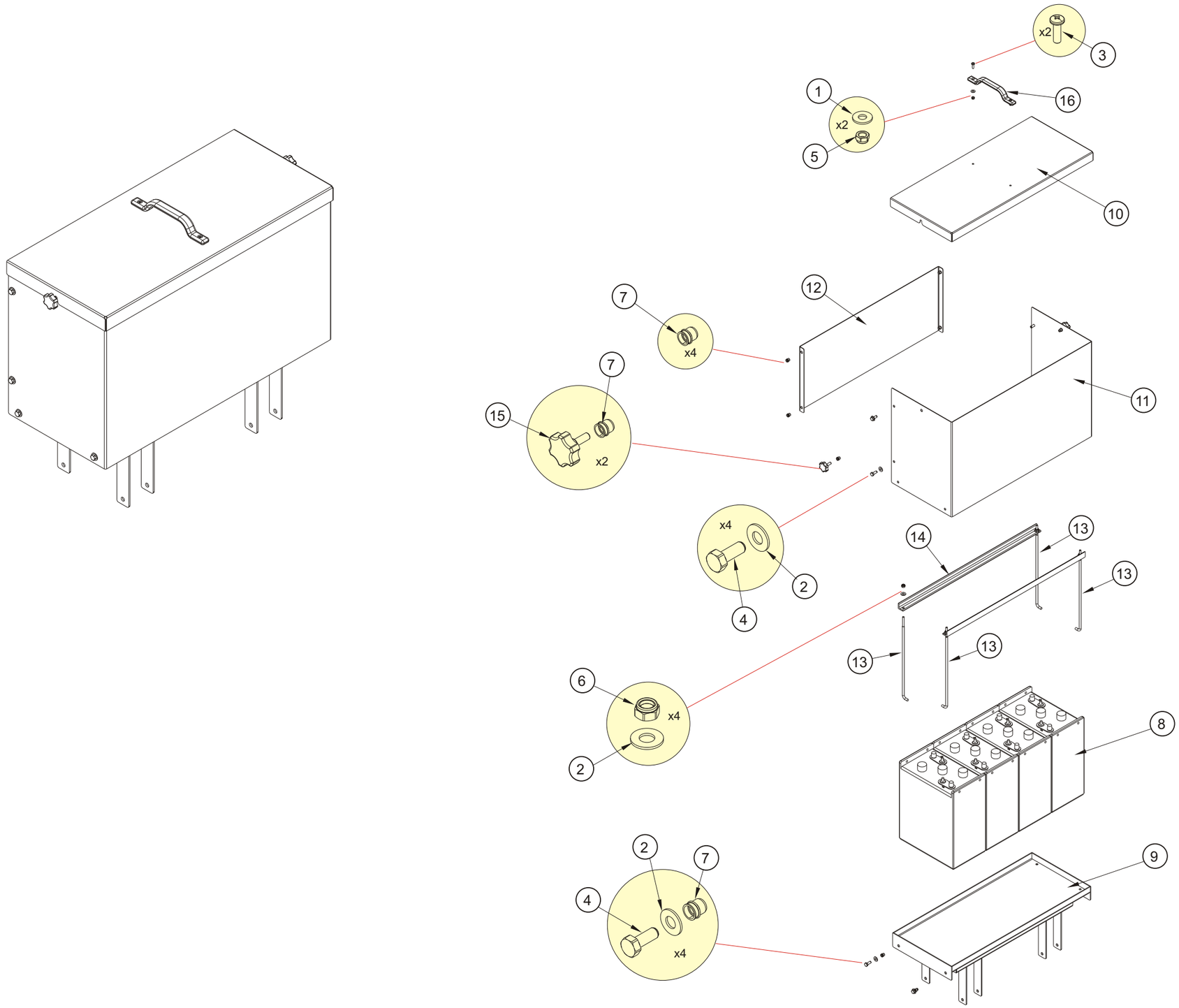

snorkel

Page 4-10

TITLE Battery Box Assembly
24VDC
Snorkel Models S2255RT, S2755RT VIII

https://truckmanualshub.com/

Battery box assembly - 24VDC option

Item	Part No	Qty	Description
1.	3603-06	2	Washer, plain, M6 x 16
2.	3603-08	12	Washer, plain, M8 x 19
3.	3604-06020	2	Screw, M6 x 20
4.	3610-08020	8	Bolt, M8 x 20, C8.8 ZP
5.	3611-06	2	Nut, nylock, M6
6.	3611-08	4	Nut, nylock, M8
7.	3628-08	10	Nutsert, M8
8.	13100	4	Battery, Trojan J305P
9.	13230-10	1	Battery tray, Sxx70RT
10.	13230-20	1	Battery box lid
11.	13230-30	1	Wrap panel, battery box
12.	13230-40	1	Panel, battery box rear
13.	13230-50	4	Battery J bolt
14.	13230-51	2	Battery hold down angle
15.	057727-000	2	Knob, M8
16.	500052-000	1	Handle

https://truckmanualshub.com/

Battery box mounting - 24VDC option

Item	Part No	Qty	Description
1.	3610-10100	4	Bolt, M10 x 100, C8.8
2.	3603-10	8	Washer, plain, M10
3.	13233-60	4	Crush spacer
4.	3611-10	4	Nut, nylock, M10

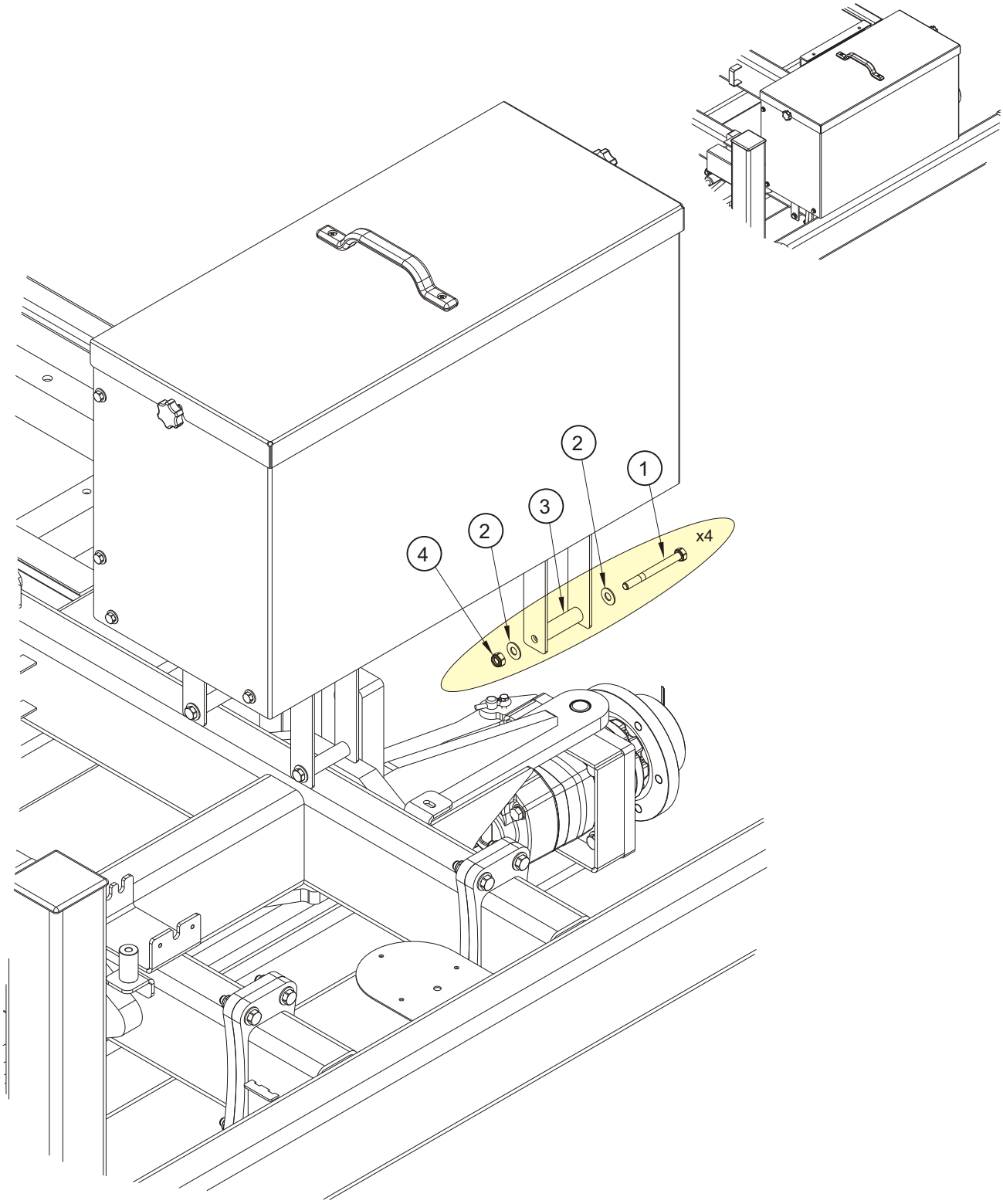

https://truckmanualshub.com/

Emergency bleed down mounting, 24VDC

Item	Part No	Qty	Description
1.	12818	1	Bleed down cover *
2.	3610-08065	2	Bolt, M16 x 65, C8.8
3.	3603-08	4	Washer, plain, M8
4.	13233	1	Bleed down bracket, bolt on
5.	13233-1	1	Bleed down bracket clamp
6.	3611-08	2	Nut, nylock, M8
7.	3610-06016	2	Bolt, M6 x 16, C8.8 *
8.	3603-06	2	Washer, plain, M6 *
9.	3605-06	2	Washer, spring, M *6
10.	12753	1	Decal, bleed down *

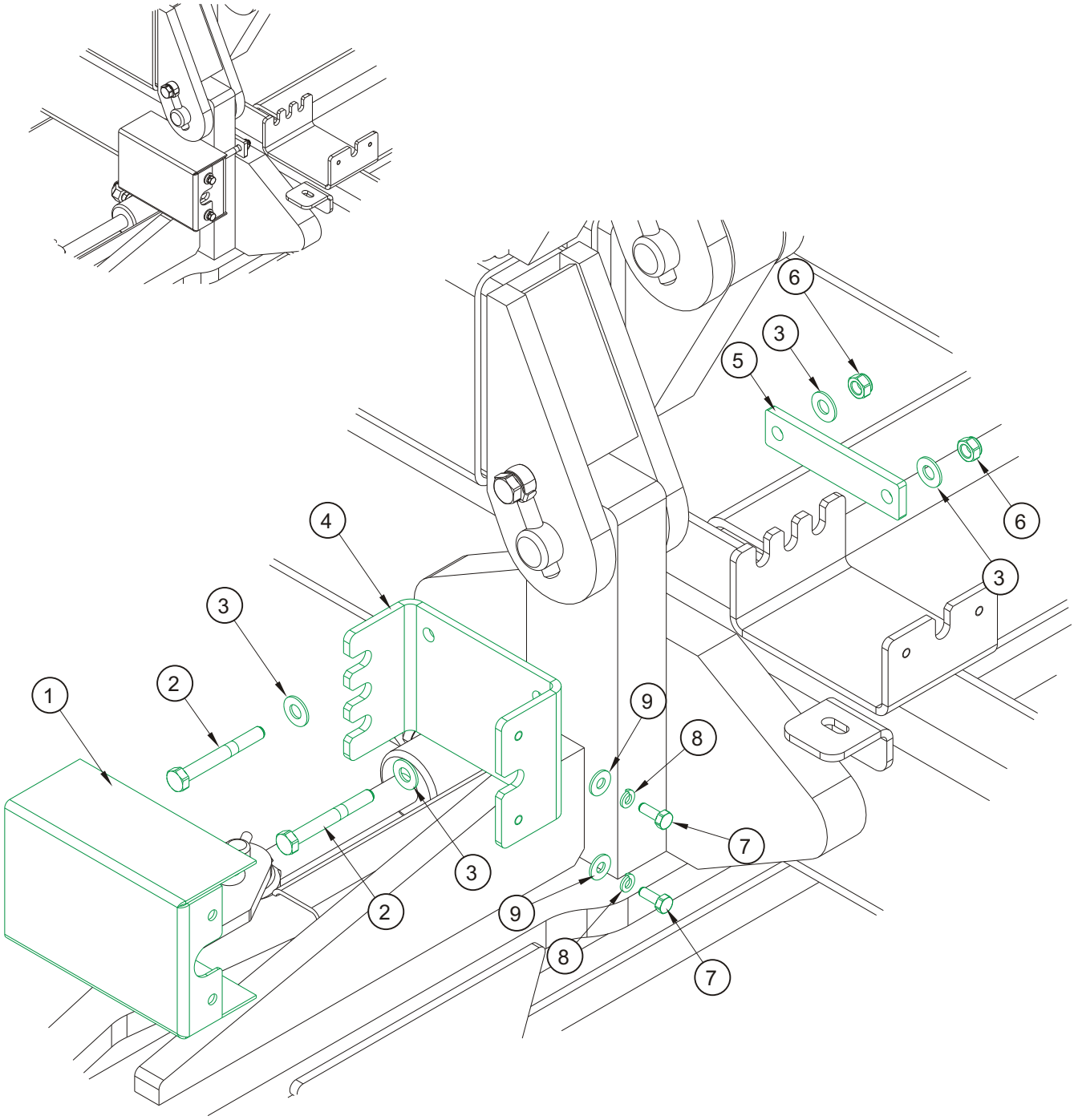

https://truckmanualshub.com/

Relay box assembly, 24VDC option

Item	Part No	Qty	Description
1.	1650-010	1	Relay, 12V
2.	1815	2	Compression gland, 25mm
3.	3603-04	14	Washer, plain, M4 x 11, ZP
4.	3604-04020	9	Screw, panhead, M4 x 20, ZP
5.	3611-04	9	Nut, nylock, M4
6.	3628-06	3	Nutsert, M6
7.	11054	2	Relay
8.	11055	2	Relay base
10.	12031-4	1	Mounting bracket
11.	13229-1	1	Enclosure, drilled for 13229
12.	13229-2	1	Gear plate, drilled for 13229

https://truckmanualshub.com/

Relay box assembly drawing, 24VDC option

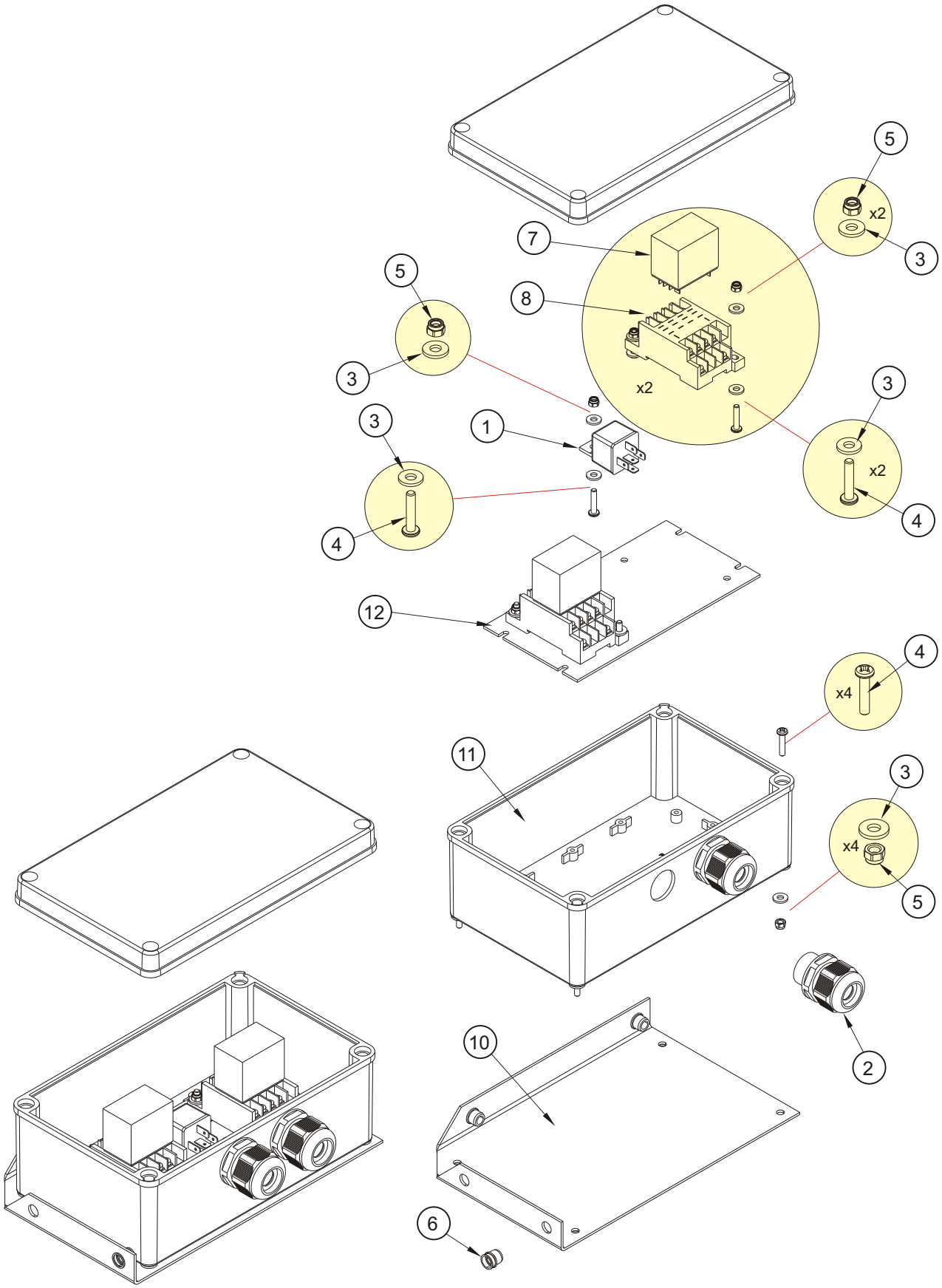

Unloader valve 24VDC option

https://truckmanualshub.com/

Item	Part No	Qty	Description
1.	13231	1	Unloader valve bracket
2.	12910	1	Unloader valve
3.	7025-003	2	Adapter, 3/4" UNO -> 3/4" JICM
4.	7031-005	2	Adapter, 90º 3/4" UNO -> 3/4" JICM
5.	9501-1	1	Tee, 2 x 3/4" JICF, 1x 3/4" JICM run
6.	7013-002	2	Adapter, 1/2" BSPPM -> 3/4" JICM
7.	3028	1	Check valve, 1/2" BSPPF
8.	3610-06075	2	Bolt, M6 x 75, C8.8
9.	3603-06	4	Washer, plain, M6
10.	3611-06	2	Nut, nylock, M6

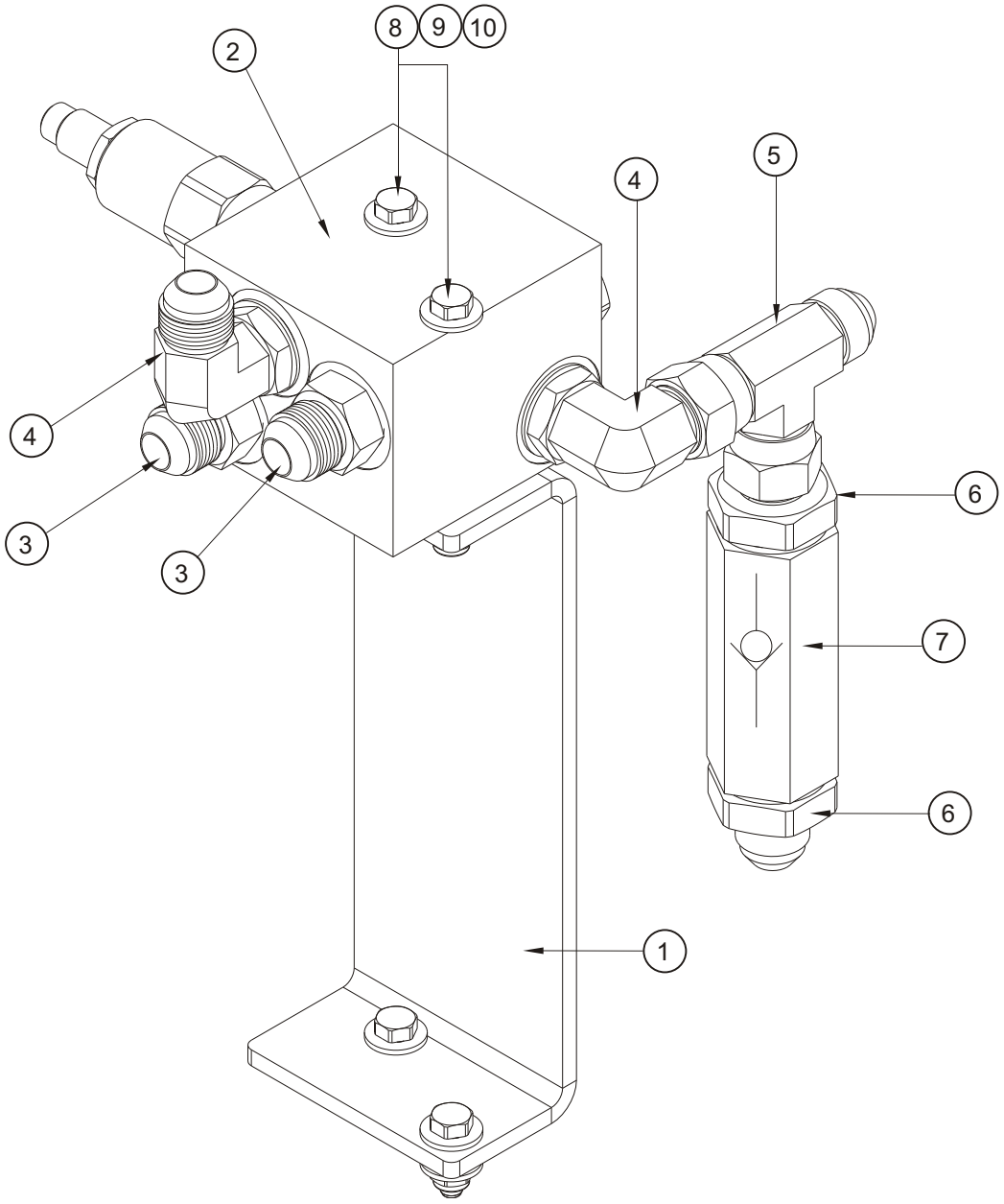

https://truckmanualshub.com/

!

230 Volt AC outlet at platform, 4-2

A

AC outlet at platform, 230 volt AC, 4-2

D

Decal and placards installation, 1-28

G

Gradeability, 2-3, 2-4
Ground clearance, 2-3, 2-4
Ground control box assembly, 3-7

I

Insulation rating, 2-3, 2-4

J

Joystick controller, 3-12

K

Key switch, 3-8

L

Lift time, 2-3, 2-4

M

Maintenance, 0-7
Maintenance schedules, 0-8
Manual organisation
  See Maintenance information - page 3
Manual Organization, 0-7
Maximum rated axle capacity, 2-3, 2-4

N

Nominal working height, 2-3, 2-4

O

Overall height, 2-3, 2-4
Overall length (with stabilizers), 2-3, 2-4
Overall weight, 2-3, 2-4

P

Placards and decals installation, 1-28
Platform control box assembly, 3-12
Platform size, 2-3, 2-4

S

Safe working load (main deck), 2-3, 2-4
Safe working load (roll out deck), 2-3, 2-4
Speed (maximum drive), 2-3, 2-4

T

Temperature sensor, 3-8
Travelling height, 2-3, 2-4
Turning radius (inner), 2-3, 2-4
Turning radius (outer), 2-3, 2-4

W

Weight, 2-3, 2-4
Working height, 2-3, 2-4

https://truckmanualshub.com/

https://truckmanualshub.com/

Product Warranty

1) Snorkel warrants each new machine manufactured and sold by it to be free from defects in material and workmanship for a period of one (1) year from date of delivery to a Customer. The warranty will apply subject to the machine being operated in accordance with the rules, precautions, instructions and maintenance requirements outlined in the Snorkel Operator and Parts/Service manual.

2) Snorkel further warrants the structural components, specifically the mainframe chassis, turntable, booms and/or scissor arms of each new machine manufactured by it to be free from defects in material and workmanship for an additional period of four (4) years. Any such part or parts which, upon examination by the Snorkel Warranty department, are found to be defective will be replaced or repaired by Snorkel through its local Authorised Dealer. The structural warranty specifically excludes adverse affects on the machine structure arising from damage, abuse or misuse of the equipment.

3) Machines may be held in an authorised Distributor stock for a maximum of six (6) months from the date of shipment from Snorkel, before the warranty period is automatically initiated.

4) It is the responsibility of the Distributor to complete and return a Pre delivery /Warranty registration, before the act of rental / loan / demonstration of the machine or delivery to an end user.

5) The Customer and Dealer shall not be entitled to the benefits of this warranty and Snorkel shall have no obligations here under unless the “Pre-Delivery and Inspection Report” has been properly completed and returned to the Snorkel Warranty department within ten (10) days after delivery of the Snorkel product to the Customer or Dealer’s demonstration / rental fleet. Snorkel must be notified, in writing, within ten (10) days, of any machine sold to a Customer from a Dealer’s rental fleet during the warranty period.

6) Any part or parts which upon examination by the Snorkel Product Support Department are found to be defective within the specified warranty period, will be replaced or repaired at the sole discretion of Snorkel, through its local Authorised Distributor, at no charge.
Any parts replaced under warranty must be original Snorkel parts obtained through an authorised Snorkel Distributor unless expressly agreed otherwise in writing and in advance by Snorkel’s warranty department.

7**)** All parts being claimed under warranty must be held available for return and inspection upon request for a period of 90 days from date of claim submission, it is necessary that all parts are individually tagged or marked with their part number and the warranty claim number. After 90 days all parts replaced under warranty which have not been returned to Snorkel should be destroyed. Failure to produce parts requested by the Warranty Administrator for inspection within a period of 14 days will result in the claim being automatically rejected in full. Materials returned for warranty inspection must have the following procedure :

- Carefully packaged to prevent additional damage during shipping
- Drained of all contents and all open ports capped or plugged
- Shipped in a container tagged or marked with the RMA number
- Shipped PREPAID. Any item(s) returned for warranty by any other means maybe refused and returned, unless prior approval is agreed with Snorkel.

© Snorkel 2010

https://truckmanualshub.com/

Product Warranty

8**)** At the direction of the Snorkel Warranty department, any component part (s) of Snorkel products to be replaced or repaired under this warranty programme must be returned freight prepaid for inspection.
An RMA (Returns material authorisation) must be requested from Snorkel Warranty department, a copy to be placed with the returning component part(s)

9) All warranty replacement part will be shipped freight prepaid (standard charge) from the Snorkel Parts Service Department or from the Vendor to Dealer or Customer.

10) All warranty claims are subject to approval by Snorkel Service department. Snorkel reserves the right to limit or adjust claims with regard to defective parts, labour or travel time based on usual and customary guidelines.

REPLACEMENT PARTS WARRANTY

Any part replaced under this limited warranty is not subject to further warranty cover beyond the normal warranty period of the machine upon which the part was installed.

Any replacement parts sold (not delivered under a warranty claim) will be subject to a warranty period of (6) six months from the date of invoice.

Parts held by a Distributor are covered under warranty for a period of (12) twelve months from the date of invoice, provided that those parts have been subject to appropriate storage to prevent damage and deterioration.

CLAIM PROCEDURE

The Snorkel Warranty department must be notified within (48) forty-eight hours of any possible warranty situation during the applicable warranty period. Personnel performing major warranty repair or parts replacement must obtain specific approval by the Snorkel Warranty department prior to performing the warranty repair or replacement.
When a Distributor / Customer perceive a warranty issue to exist the following steps must be adhered to:

All warranty claims must be submitted within 30 days of the date of the machine repair

All correspondence in respect of the claim to be on an official Snorkel warranty claim form as supplied by Snorkel's warranty department

Allocate a warranty claim number to the repair

Place a purchase order for genuine Snorkel replacement parts

Snorkel to dispatch parts via the requested method (in line with the required response time)

Confirmation that a qualified technician is available to replace the part and that this person has been accepted by Snorkel to carry out such work under the warranty of the machine. Failure to do this may nullify the warranty.

FREIGHT DAMAGE

If a machine is received in a damaged condition, then the damage must be noted on the bill of lading and /or delivery documents and if possible photographs taken, prior to signing acceptance of the consignment.
The freight company must be contacted by the Distributor and a damage claim registered immediately.

© Snorkel 2010

https://truckmanualshub.com/

Product Warranty

THIS WARRANTY EXCLUDES AND SNORKEL DOES NOT WARRANT:

1. Engines, motors, tyres and batteries are manufactured by suppliers to Snorkel, who furnish their own warranty. Snorkel will, however, to the extent permitted; pass through any such warranty protection to the Distributor / Customer.
2. Any Snorkel product which has been modified or altered outside Snorkel factory without Snorkel written approval, if such modification or alteration, in the sole judgment of Snorkel Engineering and/or Service Departments, adversely affects the stability, reliability or service life of the Snorkel product or any component thereof.
3. Any Snorkel product which has been subject to misuse and abuse, improper maintenance or accident. "Misuse" includes but is not limited to operation beyond the factory-rated load capacity and speeds. "Improper maintenance" includes but is not limited to failure to follow the recommendations contained in the Snorkel Operation, Maintenance, and repair Parts Manuals.
4. Normal wear of any Snorkel component part(s). Normal wear of component parts may vary with the type, application or type of environment in which the machine may be used; such as, but not limited to sandblasting applications
5. Routine maintenance, routine maintenance items and minor adjustments are not covered by this warranty, including but not limited to hydraulic fluid, filters and lubrication, paint and decals.
6. Any Snorkel product that has come into direct contact with any chemical or abrasive material.
7. Incidental or consequential expenses, losses, or damages related to any part or equipment failure, including but not limited to freight cost to transport the machine to a repair facility, downtime of the machine, lost time for workers, lost orders, lost rental revenue, lost profits, expenses or increased cost. This warranty is expressly in lieu of all other warranties, representations or liabilities of Snorkel, either expressed or implied, unless otherwise amended in writing by Snorkel
8. Snorkel Warranty policy does not cover any duties, taxes, environmental fees including without limitation, disposal or handling of tyres, batteries and petrochemical items.
9. Item specifically excluded are, fuel injectors, motor brushes, glow plugs, contactor tips and springs, oil filters, lamp bulbs, lamp lenses, o rings, coolants, lubricants and cleaning material.
10. Failure of replacement parts due to fault misdiagnosis or incorrect fitting by the Distributor / Customer

SNORKEL MAKES NO WARRANTIES WHICH EXTEND BEYOND THE DESCRIPTION OF THIS LIMITED WARRANTY SNORKEL MAKES NO IMPLIED WARRANTY OF MERCHANTABILITY OR FITNESS FOR A PARTICULAR PURPOSE AND DISCLAIMS ALL LIABILITY FOR INCIDENTAL OR CONSEQUENTIAL DAMAGES, INCLUDING BUT NOT LIMITED TO INJURY TO PERSONS OR PROPERTY.

The Customer shall make all warranty claims through its local Authorised Dealer and should contact the Dealer from whom the Snorkel product was purchased for warranty service. Or, if unable to contact the Dealer, contact the Snorkel Service Department for further assistance

© Snorkel 2010

https://truckmanualshub.com/

Product Warranty

APPEAL

The buyer may appeal in writing against a rejected or adjusted claim to Snorkel warranty department within a period of 21 days of receiving the rejection or adjustment notice. The appeal should be grounded on express reasons and supported by relevant evidence. Appeals received outside of this time limit will not be considered.

WARRANTY SCHEDULE

Limited Warranty Periods

Item	Warranty Period
New machine materials and workmanship	I year parts replacement
Structural components (Chassis, Turntable, Booms, Scissors)	5 years parts replacement or repair
Parts held in a Distributor's stock	12 months from date of invoice
Parts sold (non warranty)	6 months from date of invoice
Batteries	6 months from warranty registration date
Other specifically excluded parts: Fuel injectors Motor brushes Glow plugs Contactor tips and springs Oils Filters Lamp bulbs Lamp lenses 'O' rings Coolants Lubricants Cleaning materials	Not covered by Warranty

© Snorkel 2010

https://truckmanualshub.com/

https://truckmanualshub.com/

Local Distributor / Lokaler Vertiebshändler / Distributeur local
El Distribuidor local / Il Distributore locale

EUROPE, MIDDLE EAST AFRICA & ASIA

PHONE: +44 (0) 845 1550 O57
FAX: +44 (0) 845 1557 756

NORTH & SOUTH AMERICA

PHONE: +1 785 989 3000
TOLL FREE: +1 800 255 0317
FAX: +1 785 989 3070

AUSTRALIA

PHONE: +64 2 9725 4000
FAX: +64 2 9609 3057

NEW ZEALAND

PHONE: +64 6 3689 168
FAX: +64 6 3689 164

snorkel
www.snorkellifts.com