https://truckmanualshub.com/

MONTINI Revolution

THE NEW 80V FORKLIFT TRUCKS

LOAD CAPACITIES FROM 2500 KG TO 5000 KG

MR 2.5 MR 3.0 MR 3.5 MR 4.0 MR 4.5 MR 5.0

https://truckmanualshub.com/

SAFE, COMFORTABLE, MANOEUVRABLE FOR GREAT PERFORMANCE

The new electric 4-wheel forklift trucks, 80V, with load capacities from 2000 kg to 5000 kg **in the "MR MONTINI Revolution" series**, represent a range of 13 models ideal for indoor and outdoor use in all sectors.
Compact and manoeuvrable, they give the operator maximum reliability, safety and freedom of ergonomic movement in any working situation.

MONTINI SUPER STEERING

Rear axle steering up to 101 degrees, as standard, **to guarantee operational agility in the tightest and most limited manoeuvring spaces**.

MR 2.5

(80V - 4 wheels - 2500 kg nominal capacity at load centre 500 mm)
Length (l2): 2302 mm
Width (b1): 1180 mm
Turning radius (Wa): 1852mm

MR 3.0

(80V - 4 wheels - 3000 kg nominal capacity at load centre 500 mm)
Length (l2): 2478 mm
Width (b1): 1180 mm
Turning radius (Wa): 1996 mm

MR 3.5

(80V - 4 wheels - 3500 kg nominal capacity at load centre 500 mm)
Length (l2): 2483 mm
Width (b1): 1205 mm
Turning radius (Wa): 1996 mm

MR 4.0

(80V - 4 wheels - 4000 kg nominal capacity at load centre 500 mm)
Length (l2): 2798 mm
Width (b1): 1290 mm
Turning radius (Wa): 2296 mm

MR 4.5

(80V - 4 wheels - 4500 kg nominal capacity at load centre 500 mm)
Length (l2): 2798 mm
Width (b1): 1290 mm
Turning radius (Wa): 2296 mm

MR 5.0

(80V - 4 wheels - 4999 kg nominal capacity at load centre 500 mm)
Length (l2): 2798 mm
Width (b1): 1290 mm
Turning radius (Wa): 2296 mm

https://truckmanualshub.com/

GREAT AUTONOMY, FOR EXCEPTIONAL WORKING HOURS

Good acceleration and excellent speed make these vehicles the ideal machines for handling large quantities of product. Designed to guarantee a **high level of autonomy**, these forklifts can easily perform two work shifts without needing to recharge the batteries.

The forklifts in the “MR” series with load capacities from 2500 kg to 4500 kg, can be equipped with **high Amp/h capacity batteries**, so as to:

- meet **any kind of work requirement** (wide range of “MONTINI” brand batteries: batteries for demanding applications; low water consumption; for very heavy, intensive and long-life applications, in particular for forklifts fitted with auxiliary equipment);
- guarantee **unbeatable work autonomy**, without having to recharge the battery;
- **work better, work more**, while safeguarding health and the environment.

MR 2.5 GA
80V - maximum battery 860Ah

MR 3.0-3.5
80V - maximum battery 860Ah

MR 4.0-4.5
80V - maximum battery 1032Ah

MONTINI batteries offer a wide **choice of optional set-ups**:

- centralised water top-up system with tank for filling up the battery cells;
- electrolyte level indicator on battery plug or on battery cell;
- electrolyte level indication on the display;
- air circulation system in the cells and specific plug;
- special battery boxes with integrated handles for easy removal.

https://truckmanualshub.com/

EXCEPTIONAL LIFTING UNIT

GREAT STRENGTH, OPTIMUM VISIBILITY AND LOAD CAPACITY

The **lifting units**, with 3 and 4 ton “C” profiles, **designed and manufactured by MONTINI, are ground on the sliding guides of the bearings and on the angular guide shoes**, to ensure maximum smoothness, greater stability and safety during high lifts.

- **Wide range of masts**, available in Duplex (DX) and Triplex (TX) versions, with total visibility (T.V.) and with total free lift (T.F.L.), **to meet the most varied working requirements and to offer a safe, strong and quick load capacity.**

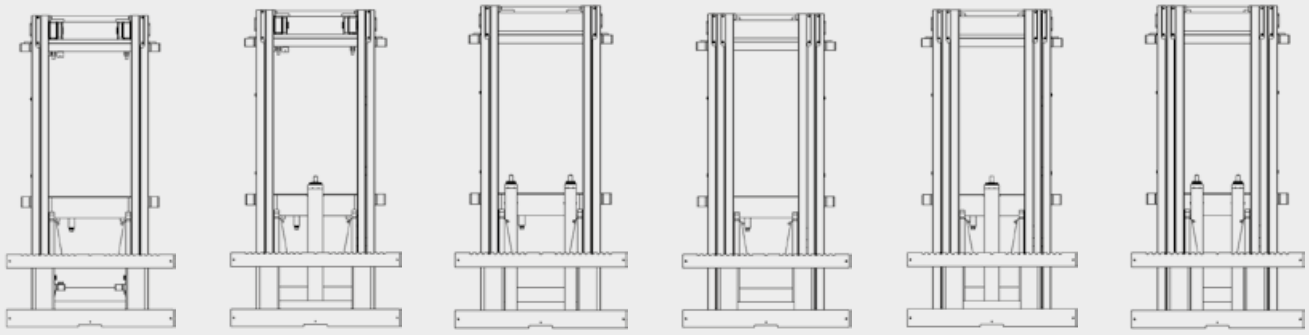

DX T.V. | DX T.F.L. (1 cylinder) | DX T.F.L. (2 cylinders) | TX T.V. | TX T.F.L. (1 cylinder) | TX T.F.L. (2 cylinders)

- **Optimum visibility** in all working conditions.
- **Sideshift integrated in the fork carriage**, very compact and with excellent visibility.
- **Sideshift with grease nipples** for easier guide shoes lubrication.
- **Hydraulic fork positioner integrated in the forklift truck** (optional), **to enable a precise and synchronized movement of the forks, without reducing the load capacity**.
- **Customized lifting unit solutions**.

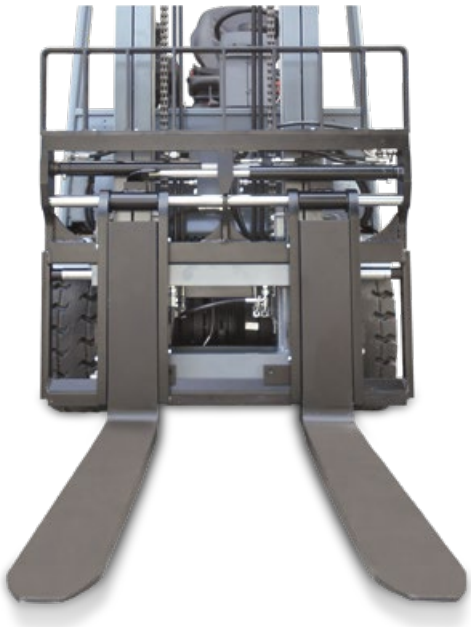

https://truckmanualshub.com/

NEW-CONCEPT DESIGN TECHNOLOGY AND ERGONOMICS FOR SUPER EFFICIENT RESULTS

The new 80V electric trucks in the “MR” range, are the model of choice for the indoor handling of materials and logistics. Designed to improve warehouse efficiency, they are **the perfect vehicles for handling products**, even those that are particularly bulky (crates and pallets), **thanks to their great ability to manoeuvre where space is limited.**

Usable with lead-acid batteries, **they make it possible to improve work**, performing two shifts without having to recharge or change the battery, **and to achieve long-term cost savings**.

They meet customer’s needs; **they are quick, nippy, versatile and offer maximum performance with minimum consumption**.

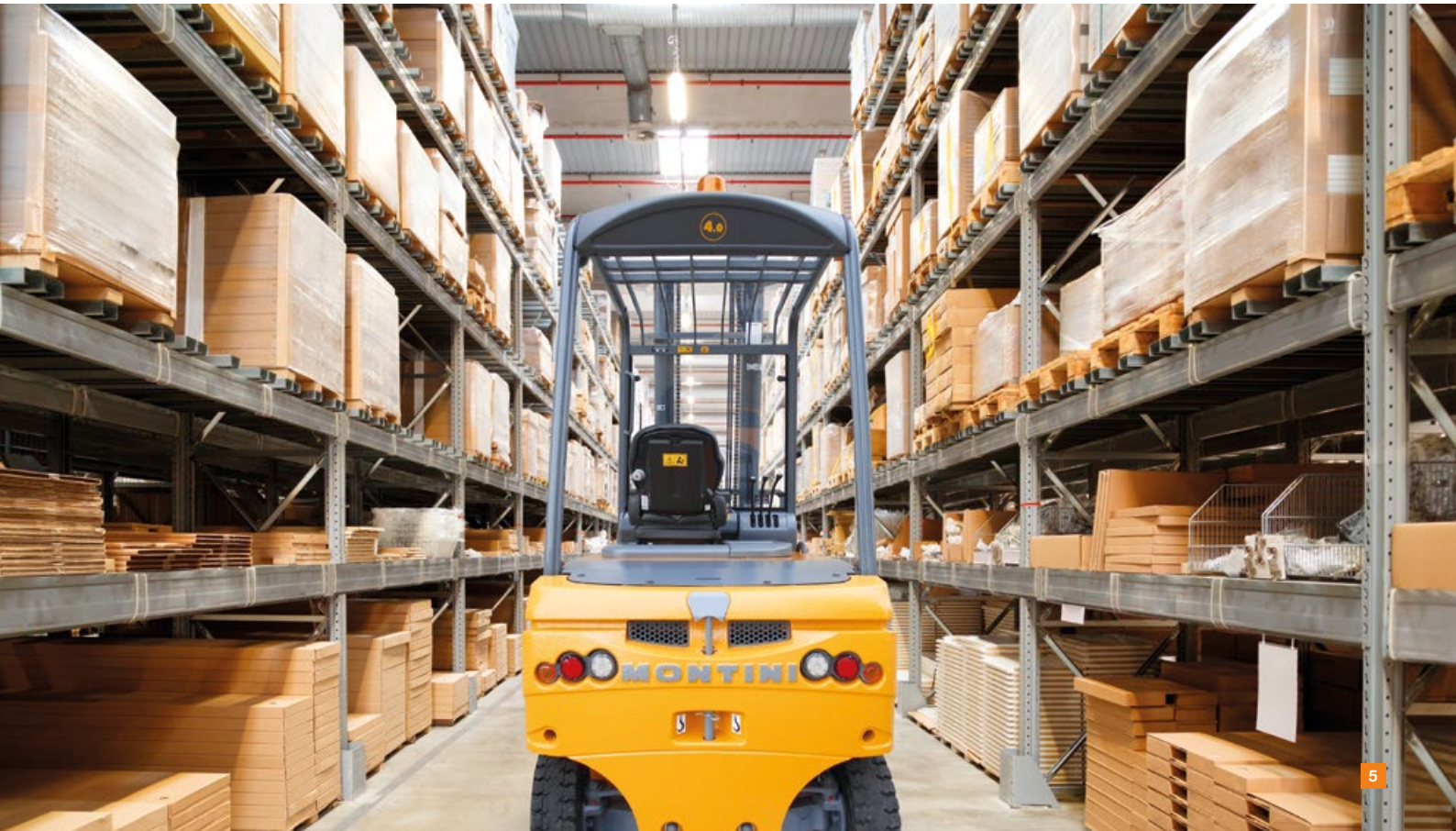

https://truckmanualshub.com/

CSM - COMFORT SECURITY MONTINI

THE ONLY FORKLIFT TRUCK IN THE WORLD WITH SHOCK ABSORBERS

MONTINI, always attentive to national and international safety regulations, **is the only manufacturer in the world to have designed and patented a suspension system for forklift trucks**: the patented suspension system named **CSM (Comfort Security Montini)** is designed to increase lateral stability and comfort as well as to significantly reduce impact and vibrations transmitted to the operator and the forklift. The 80V "MR" forklift trucks are also available in the CSM version, i.e. fitted with **nitrogen hydropneumatic suspension on the rear steering axle**.

SUSPENSION FOR 4-WHEEL FORKLIFT TRUCKS

PATENT NO. 01321227

- More safety.
- More stability.
- More comfort.
- No tensions and shocks.
- No vibration.
- No effort.
- Better work.
- Safer driving.
- More stable load.
- Less occupational diseases.

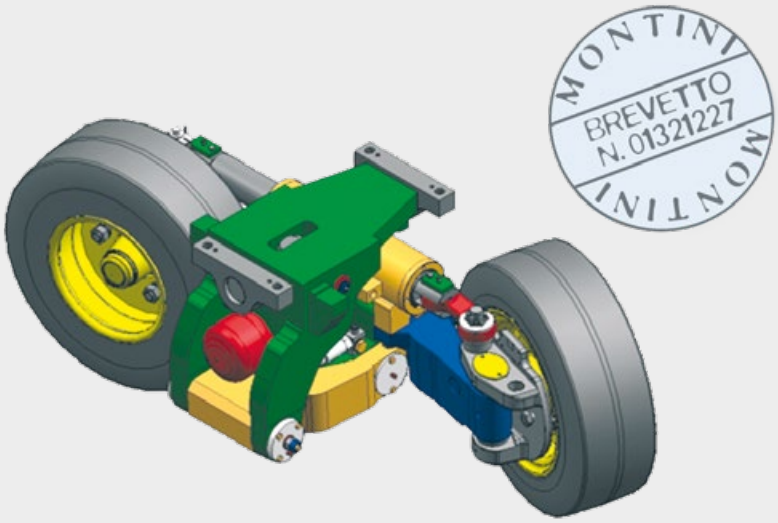

https://truckmanualshub.com/

MORE ERGONOMIC JOYSTICK, MORE PRODUCTIVE WORK

- **Intuitive and ergonomic joystick** (optional) **with proportional control valve with 3 or 4 hydraulic functions**.
- As standard, all lifting unit functions are inhibited when the operator is not in the correct driving position.
- Higher lowering speed of the lifting unit, both laden and unladen.
- Maximum productivity thanks to the **use of two simultaneous operating functions of the lifting unit**.

Tilt 1

Forward 2

Reverse 3

Horn 4

4th function 5
for the installation of auxiliary equipment

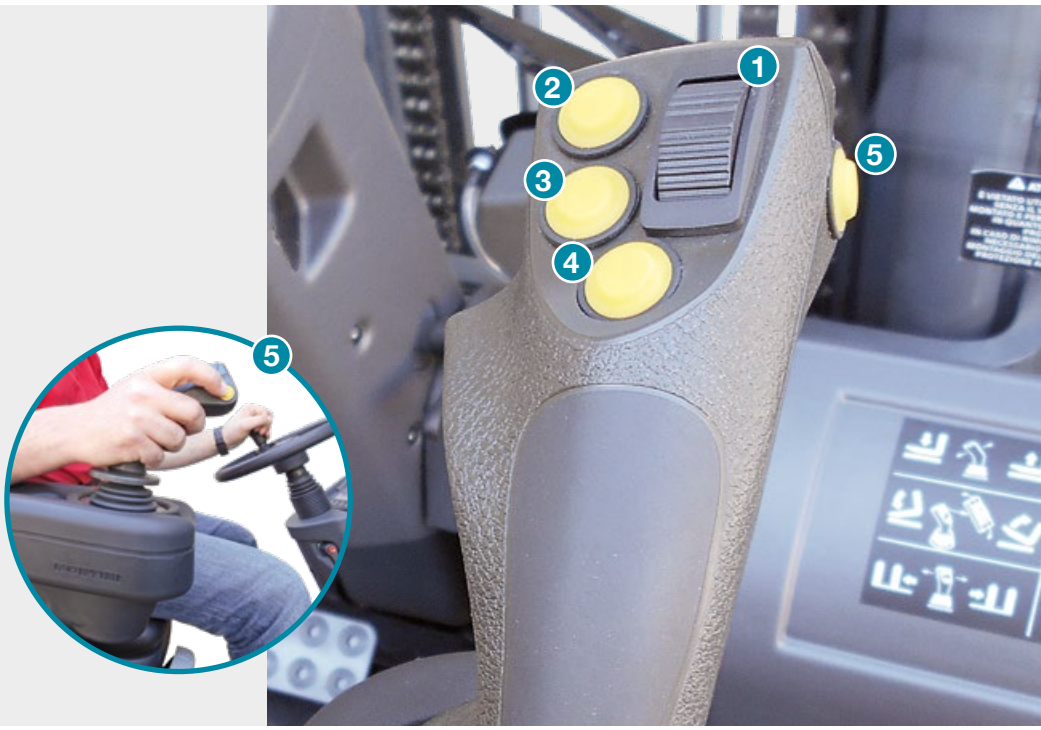

PEDAL BOARDS

Standard large and spacious pedal board with forward/backward double pedal and central brake.

Optional pedal board with single pedal and central brake (with forward/backward selection using a lever on the steering wheel or joystick).

https://truckmanualshub.com/

ELECTRONIC TECHNOLOGY

The **innovative electronic technology**, developed in German research laboratories, **with alternating current inverters and Can Bus communication**, guarantees high efficiency and low energy consumption; it comes with a new diagnosis system for keeping everything under control and reducing any machine downtime.

The large colour display, with multifunction buttons, **ensure accessibility and control of the forklift's basic functions**.

1 Parking Brake

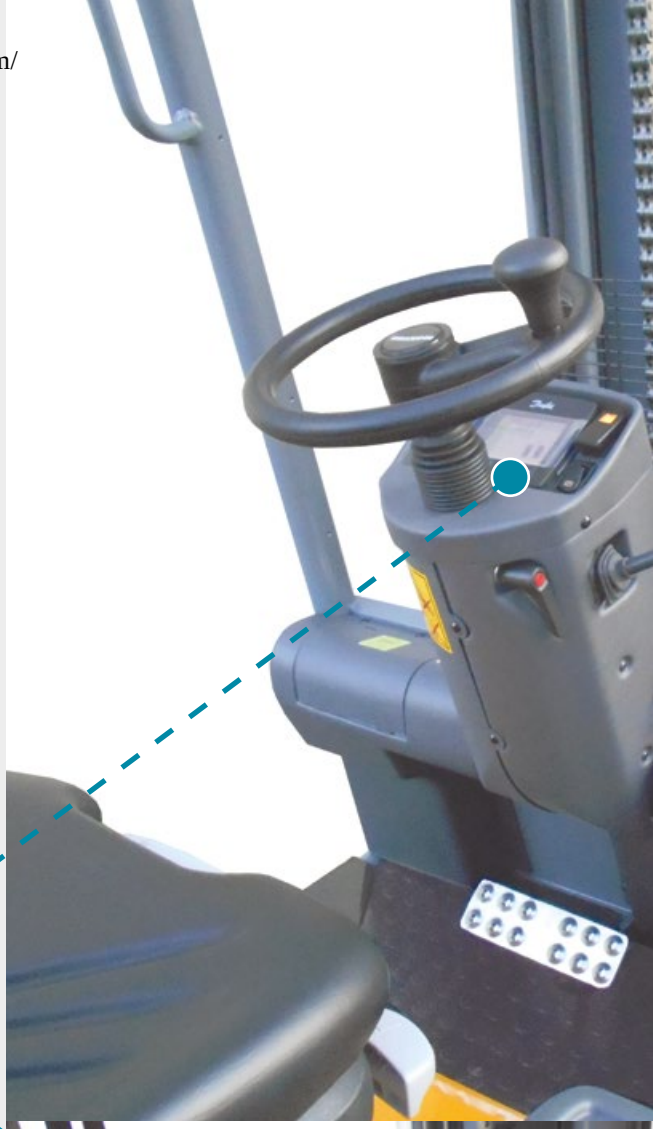

The functions are defined by icons displayed on the relative bar, for example:

- handbrake locked;
- seat belt not fastened;
- seat switch open;
- rear wheel not straight;
- brake fluid level too low;
- maintenance hour meter expired;
- activates "tortoise speed";
- deactivates "tortoise speed".

Access password personalised for the operator.

https://truckmanualshub.com/

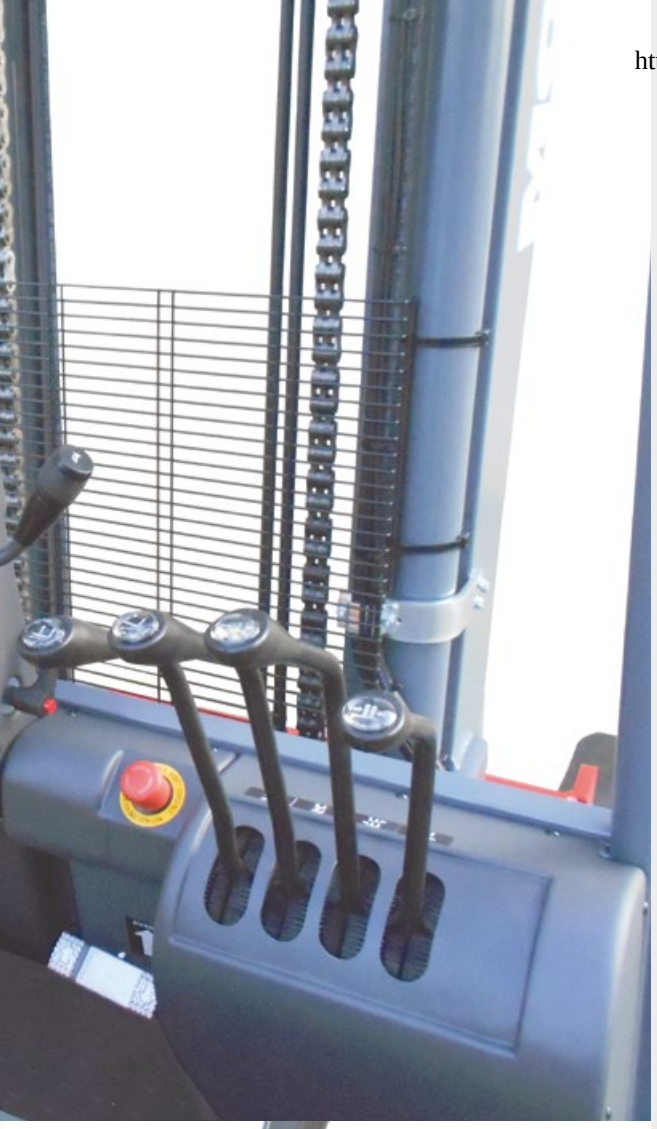

SERVICES AND SAFETY

Possibility to equip the forklifts with **GPRS system** (General Packet Radio System), mobile phone technology, installed on the battery of the forklift, **to check**:

- **correct battery use and management** (to check regular charge and discharge of the battery, correct operation of the battery charger during charging and the electrolyte level inside the battery cells);
- **the registration of possible forklift collisions**.

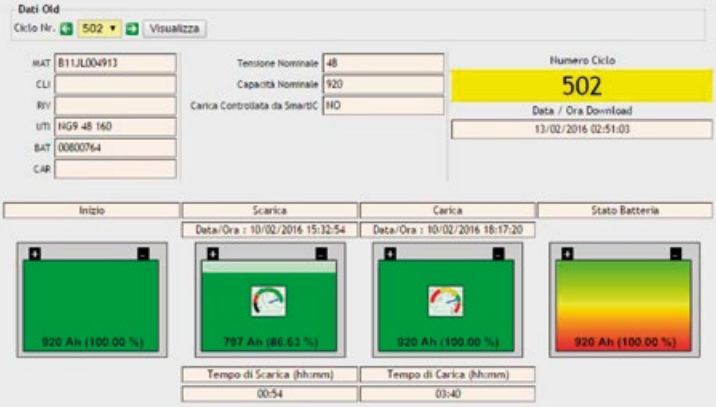

Possibility to equip forklifts with the **innovative "Remote Control" system for rapidly detecting any electric faults** through remote data transmission, **to localize the forklift, activate the anti-theft device and block the forklift functions**.

https://truckmanualshub.com/

EQUIPMENT VARIATIONS

OVERHEAD GUARD

Overhead guard designed to be equipped easily with cab at any time, without having to modify or replace the original structure.

It can be cabbed:

- with full panelling, fitted with front and rear windows with wipers and side doors;
- with front and rear windows only (openable), fitted with wipers, and PVC side doors;
- with or without heating system.

HEATED WINDOWS

As an optional, cabs can be with **innovative heated (or thermal) windows**.

The heated window is made from “coated” glass, with anti-fogging as its main feature.

Coated glass is made by depositing metal oxides with good electric conductivity and optical transparency on the surface.

Electricity is passed through the coating and guarantees total resistance to fogging while at the same time creating the ideal temperature inside the cab for the operator.

HEATER

Heating system: **fast and direct heating** with air vents **inside the cab**.

The heater ensures a cab temperature which is always comfortable.

https://truckmanualshub.com/

PRECISION AND PERFORMANCE THANKS TO OPTIONAL HYDRAULIC CONTROLS

The 80V “MR” forklift trucks can also be fitted (as an optional) with hydraulic controls with **Fingertips** (mini levers) or with **Pilot levers** (mini joysticks), easy to access and use since they are installed on an adjustable ergonomic armrest with direction control, for finding the most comfortable driving positions.

Simply operate the **Fingertip controls** gently and this will allow you to combine up to 5 functions, for quick, precise, safe driving and operation.

The **controls with Pilot levers** allow you to have up to 5 functions to manoeuvre the MR forklift safely and reliably.

SEATS

“Grammer Primo M” seat kit complete with armrests and headrest, in fabric (optional).

New design concept applied to the seat.
“Grammer Primo L” seat (optional).
Seat kit with armrests and headrest, in PVC or fabric, also with heating.

1. Headrest
2. Heating system
3. Tilting left armrest
4. Tilting right armrest
5. Fabric cover
6. Pneumatic suspension

https://truckmanualshub.com/

MONTINI FORK POSITIONER WITH FREE MOVEMENT OF EACH FORK

The MR forklifts can be equipped with the optional **MONTINI fork positioner with independent forks**, also known as a fork positioner with free movement of each fork.

This attachment is very useful and beneficial for the operator in that, when loading and handling Euro-pallets (800 x 1200 mm) with pick-up from the 800-mm side, to load inside a lorry, **it allows him to position the pallet close to the edge of the vehicle**, without having to manoeuvre the forklift and with no risk of hitting and damaging the side of the lorry.

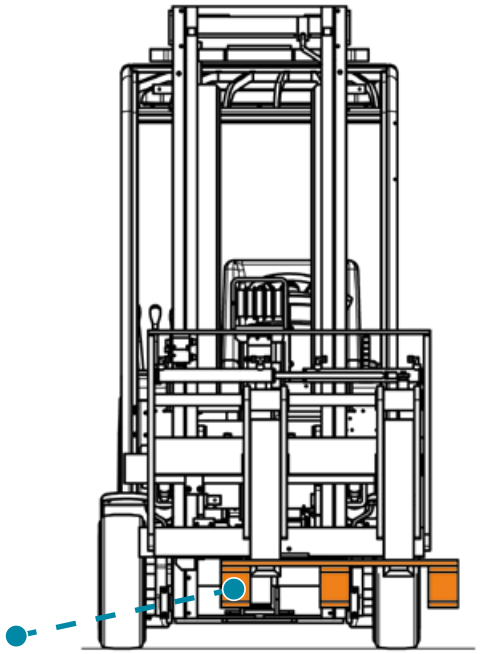

LIGHTING EQUIPMENT AND SIGNALLING DEVICES

MR forklift trucks can be fitted with a **wide range of optional lighting accessories, signalling devices and mirrors**, to meet the requirements of different applications:

- adjustable LED working lights, installed on the mast or on the overhead guard, also available with suitable protection;
- blue LED device to signal the forklift's presence (blue spotlight);
- strobe or rotating flashing light, also available with suitable protection;
- rearview mirror, also available in panoramic version.

https://truckmanualshub.com/

TECHNICAL FEATURES

MR 2.5 - MR 2.5 GA

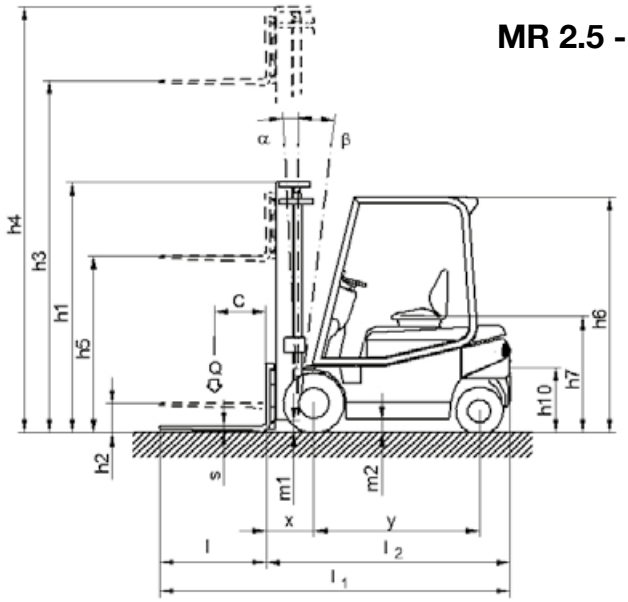

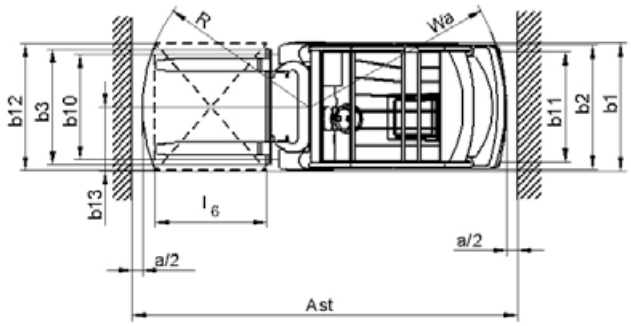

MR 3.0 - MR 3.5

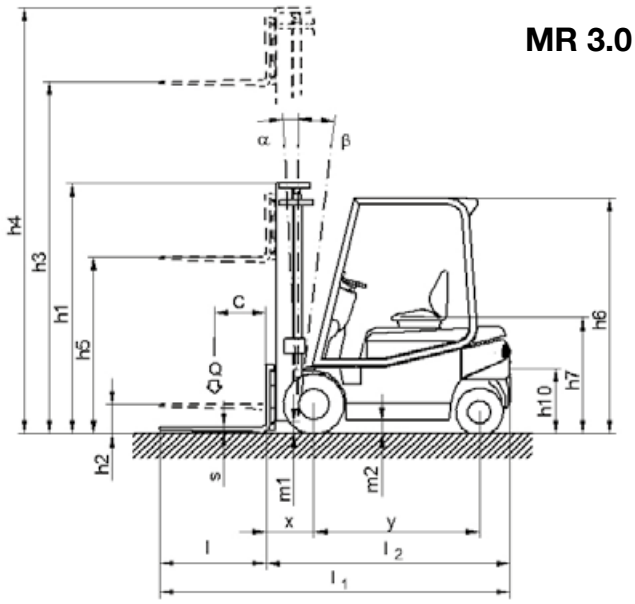

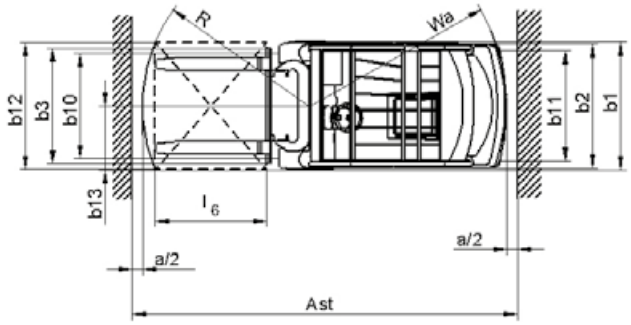

MR 4.0 - MR 4.5 - MR 5.0

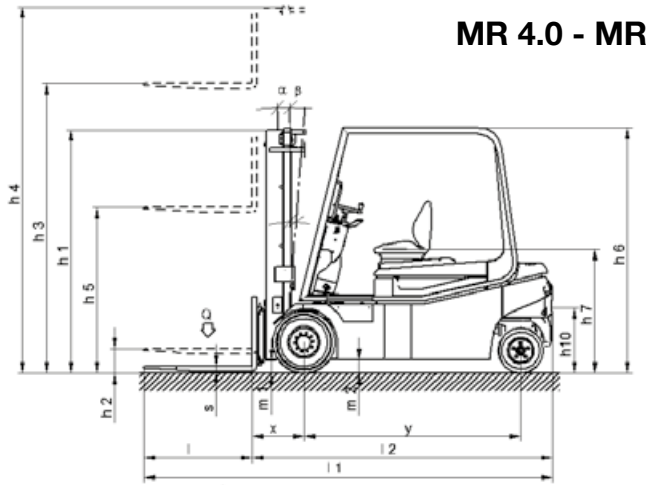

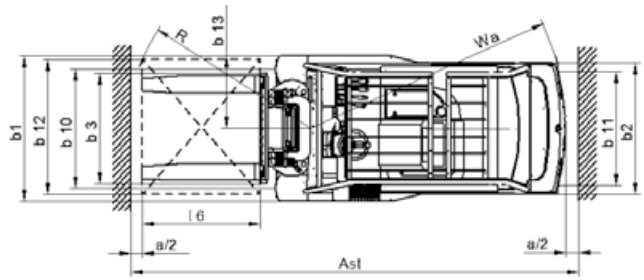

https://truckmanualshub.com/

Characteristics	1.1	Manufacturer		MONTINI		MONTINI
	1.2	Model		MR 2.5	MR 2.5 CSM	MR 2.5 GA
	1.3	Drive: electric, diesel, petrol, L.P. gas, electric mains		electric		electric
	1.4	Operation: manual, pedestrian, stand-on, seated, order picker		seated		seated
	1.5	Capacity/Load	Q (t)	2,5		2,5
	1.6	Load centre	c (mm)	500		500
	1.8	Load distance	x (mm)	450		450
	1.9	Wheelbase	y (mm)	1561		1705
Weights	2.1	Weight	Kg	4885	4940	4950
	2.2	Axle loading, laden, front/rear	Kg	6485/900	6485/955	6290/1160
	2.3	Axle loading, unladen, front/rear	Kg	2465/2420	2465/2475	2400/2550
Equipment	3.1	Tyres: superelastic (SE), cushion (C), pneumatic (PN)		SE/C/PN		SE/C/PN
	3.2	Tyre size, front		23x9-10 **1.**		23x9-10 **1.**
	3.3	Tyre size, rear		180/60-10 **2.**		180/60-10 **2.**
	3.5	Wheels, number front/rear (x=driven wheel)		2x/2		2x/2
	3.6	Tread width, front	b10 (mm)	985 **3.**		985 **3.**
	3.7	Tread width, rear	b11 (mm)	992 **4.**		992 **4.**
Basic dimensions	4.1	Max. tilt of mast/fork carriage, forward/backward (α-β)	Degrees	3,5°/6,5°		3,5°/6,5°
	4.2	Lowered mast height	h1 (mm)	2307		2307
	4.3	Free lift	h2 (mm)	-		-
	4.4	Lift height	h3 (mm)	3405		3405
	4.5	Extended mast height	h4 (mm)	4012		4012
	4.7	Overhead guard height	h6 (mm)	2227		2227
	4.8	Seat height	h7 (mm)	1110		1110
	4.12	Tow coupling height	h10 (mm)	576		576
	4.19	Total length	ℓ1 (mm)	3302		3446
	4.20	Length to face of forks	ℓ2 (mm)	2302		2446
	4.21	Overall width	b1/b2 (mm)	1180/1170 **5.**		1180/1170 **5.**
	4.22	Forks dimensions	s/e/ℓ (mm)	40/130/1000		40/130/1000
	4.23	Fork carriage ISO 2330, class/type A, B		ISO 2A		ISO 2A
	4.24	Min. fork carriage width	b3 (mm)	980		980
	4.31	Ground clearance, under mast, laden	m1 (mm)	95		95
	4.32	Ground clearance, centre of wheelbase, laden	m2 (mm)	120		120
	4.33	Aisle width with pallet 1000x1200 (l6xb12), pick-up side 1200	Ast (mm)	3502 **6.**		3646 **6.**
	4.34	Aisle width with pallet 800x1200 (b12xl6), pick-up side 800	Ast (mm)	3702 **6.**		3846 **6.**
	4.35	Turning radius	Wa (mm)	1852		1996
	4.36	Distance from turning centre and truck centre axis	b13 (mm)	0		0
Performance data	5.1	Travel speed, laden/unladen	Km/h	16		16
	5.2	Lift speed, laden/unladen	m/s	0,39/0,46		0,39/0,46
	5.3	Lowering speed, laden/unladen	m/s	0,52/0,50		0,52/0,50
	5.5	Drawbar pull, laden/unladen	daN	7210/7570		6970/7535
	5.6	Max. drawbar pull, laden/unladen	daN	10750/11620		10580/11700
	5.7	Gradeability, laden/unladen	%	10/16		9,5/15,5
	5.8	Max. gradeability, laden/unladen	%	15/25		14,5/24,5
	5.9	Acceleration time, laden/unladen	s	5		5
	5.10	Service brake		hydraulic/electric		hydraulic/electric
Electric motor	6.1	Drive motor, output S2 60 min.	Kw	2x8		2x8
	6.2	Lift motor, output at S3 15%	Kw	20		20
	6.3	Battery according to DIN 43531/35/36 A, B, C		DIN 43536 A		DIN 43536 A
	6.4	Rated voltage/capacity 5h	V/Ah	80/560-688		80/700-860
	6.5	Battery weight, min./max.	Kg	1550/1710		1853/2047
	6.6	Energy consumption according to VDI cycle	KWh/h	-		-
Misc.	8.1	Type of electronic control		inverter		inverter
	8.2	Working pressure for auxiliary equipment	bar	150		150
	8.3	Oil volume for auxiliary equipment	l/min	-		-
	8.4	Sound pressure level at operator's ear	db (A)	< 75 db (A)		< 75 db (A)
	8.5	Tow coupling, model/type		-		-

1. Optional cushion tyres 559x203-406,4 for MR 2.5-2.5 GA-3.0; 559x229-406,4 for MR 3.5; 559x305-406,4 for MR 4.0-4.5-5.0
2. Optional cushion tyres 457x152-308
3. With cushion tyres 977 for MR 2.5-2.5 GA-3.0; 951 for MR 3.5; 985 for MR 4.0-4.5-5.0
4. With cushion tyres 988 for MR 2.5-3.0-3.5; 996 for MR 2.5 GA; 1018 for MR 4.0-4.5-5.0

https://truckmanualshub.com/

MONTINI	MONTINI		MONTINI		MONTINI		MONTINI		MONTINI
MR 2.5 GA CSM	MR 3.0	MR 3.0 CSM	MR 3.5	MR 3.5 CSM	MR 4.0	MR 4.0 CSM	MR 4.5	MR 4.5 CSM	MR 5.0
electric	electric		electric		electric		electric		electric
seated	seated		seated		seated		seated		seated
2,5	3		3,5		4		4,5		4,999
500	500		500		500		500		500
450	482		487		503		503		503
1705	1705		1705		2000		2000		2000
5005	5130	5185	5560	5615	6555	6610	6555	6610	6915
6290/1215	7340/820	7340/875	8135/925	8135/980	9206/1349	9206/1404	9957/1098	9957/1153	10833/1072
2400/2605	2610/2550	2610/2605	2610/2950	2610/3005	3200/3355	3200/3410	3200/3355	3200/3410	3340/3575
SE/C/PN	SE/C/PN		SE/C/PN		SE/C/PN		SE/C/PN		SE/C/PN
23x9-10 **1.**	23x9-10 **1.**		23x10-12 **1.**		315/45-12 **1.**		315/45-12 **1.**		315/45-12 **1.**
180/60-10 **2.**	180/60-10 **2.**		180/60-10 **2.**		180/60-10 **2.**		180/60-10 **2.**		180/60-10 **2.**
2x/2	2x/2		2x/2		2x/2		2x/2		2x/2
985 **3.**	985 **3.**		965 **3.**		1005 **3.**		1005 **3.**		1005 **3.**
992 **4.**	992 **4.**		992 **4.**		1010 **4.**		1010 **4.**		1010 **4.**
3,5°/6,5°	3°/7°		3°/7°		4°/8°		4°/8°		4°/8°
2307	2350		2350		2368		2368		2368
-	-		-		-		-		-
3405	3405		3405		3300		3300		3300
4012	4025		4025		4010		4010		4010
2227	2227		2227		2310		2310		2310
1110	1110		1110		1240		1240		1240
576	576		576		576		576		576
3446	3478		3483		3798		3798		3798
2446	2478		2483		2798		2798		2798
1180/1170 **5.**	1180/1170 **5.**		1205/1170 **5.**		1290/1170 **5.**		1290/1170 **5.**		1290/1170 **5.**
40/130/1000	45/130/1000		50/150/1000		50/150/1000		50/150/1000		50/150/1000
ISO 2A	ISO 3A		ISO 3A		ISO 3A		ISO 3A		ISO 3A
980	980		980		1150		1150		1150
95	95		95		95		95		95
120	120		120		120		120		120
3646 **6.**	3678 **6.**		3683 **6.**		3999 **6.**		3999 **6.**		3999 **6.**
3846 **6.**	3878 **6.**		3883 **6.**		4199 **6.**		4199 **6.**		4199 **6.**
1996	1996		1996		2296		2296		2296
0	0		0		0		0		0
16	16		16		16/17		16/17		16/17
0,39/0,46	0,32/0,42		0,30/0,42		0,35/0,45		0,35/0,45		0,35/0,45
0,52/0,50	0,47/0,30		0,48/0,30		0,48/0,30		0,48/0,30		0,48/0,30
6970/7535	7300/7720		7200/7750		-		-		-
10580/11700	11300/12150		11630/12530		19000/19300		19000/19300		19000/19300
9,5/15,5	9/15		8/14		-		-		-
14,5/24,5	14/24		13/23		15/28		15/28		15/28
5	4,5		5		4,9/4,5		4,9/4,5		4,9/4,5
hydraulic/electric	hydraulic/electric		hydraulic/electric		hydraulic/electric		hydraulic/electric		hydraulic/electric
2x8	2x8		2x8		2x8,5 **7.**		2x8,5 **7.**		2x8,5 **7.**
20	22		25		21 **7.**		21 **7.**		21 **7.**
DIN 43536 A	DIN 43536 A		DIN 43536 A		DIN 43536 A		DIN 43536 A		-
80/700-860	80/625-860		80/625-860		80/750-1032		80/750-1032		80/840
1853/2047	1853/2047		1853/2047		2180/2410		2180/2410		2180/2300
-	-		-		-		-		-
inverter	inverter		inverter		inverter		inverter		inverter
150	150		150		200		200		200
-	-		-		-		-		-
< 75 db (A)	< 75 db (A)		< 75 db (A)		< 75 db (A)		< 75 db (A)		< 75 db (A)
-	-		-		-		-		-

5. With cushion tyres 1180/1170 for MR 2.5-2.5 GA-3.0-3.5; 1290/1170 for MR 4.0-4.5-5.0
6. Ast = Wa + x + l6 + a (a = 200 mm)
7. With additional ventilation
All MONTINI products comply with Machinery Directive 2006/42/EC and Directives 2006/95/EC and 2004/108/EC.

https://truckmanualshub.com/

MONTINI Revolution

Depliant MR 2.5-5.0 (80V) - 10-2018 - Cod. 5014120.EN - Graphic Design: 3pix
The data provided herein is purely indicative and is not binding, the manufacturer therefore reserves the right to make changes as and when deemed appropriate.

MONTINI di Garotti Francesco & C. s.n.c.

HEAD OFFICE

IT - 48033 Cotignola RA
Via G. Bentini, 7/9
Tel. +39 0545 991001
Fax +39 0545 42150

SALES MANAGEMENT

IT - 48033 Cotignola RA
Corso Sforza, 32
Tel. +39 0545 991051
Fax +39 0545 42127

SPARE PARTS WAREHOUSE

IT - 48022 Lugo RA
Via A. da Barbiano, 8
Tel. +39 0545 991081
Fax +39 0545 902988

www.montini.biz
info@montini.biz