https://truckmanualshub.com/ 1

800-428-5655

www.landoll.com/mhp

STANDARD FEATURES

- Four-Wheel Configuration Independently Driven Front Wheels, Rear Wheel Steering
- High Visibility Mast, 2, 3 or 4-Stage
- 36 Volt Electrical System
- Adjustable Driver's Seat
- Safety Seat Switch
- Seat Belts
- Automatically Actuated Parking Brake
- Curtis AC Controls
- Hour Meter
- Hydrostatic Power Steering
- UL "EX" Labeling and Listing
- Designed for ANSI-UL 583, TYPE EX (Class 1, Division 1, Group D and Class 2, Division 1, Group G)
- Emergency Power Disconnect Switch
- Type N-150, 3 Contact Charging Receptacle, Type EX
- AC Traction and Hydraulic Motors
- Static Ground Steer Tires
- Cushion Rubber Drive Tires
- Brass Clad Forks and Load Backrest
- Overhead Guard
- Fire Extinguisher
- Electric Horn
- Recessed Rear Tow Pin

OPTIONAL FEATURES

The following optional features are the most frequently ordered options that may be "factory installed" to the Models FL40AC-EX and / or FL60AC-EX Fork Lift Trucks.

- Strobe Warning Light
- Hydraulic Attachments
- EX Rated 36 Volt, 765 ACH Battery
- Electric Backup Alarm
- Battery Compartment Rollers
- Side Shifter, 4" (10cm) Either Side of Center
- Folding Forks

FL40AC-EX
FL60AC-EX

UL Explosion-Proof EX Certified

4,000 LB (1,814KG) and 6,000 LB (2,722KG) Capacity

LANDOLL®

Material Handling Products

https://truckmanualshub.com/ 2

DREXEL FL40AC-EX & FL60AC-EX

UL Explosion Proof | EX Certified

TECHNICAL DATA

MODEL			FL40	FL60
Capacity		lbs/kg	4,000 / 1,814	6,000 / 2,722
Truck Weight		lbs/kg	7,700 / 3,493	8,950 / 4,060
Travel Speed		mph/kph	4 / 6	4 / 6
Lift Speed *- Loaded*		fpm/mpm	34 / 10	25 / 8
- Empty		fpm/mpm	53 / 15	53 / 15
Lower Speed *- Loaded*		fpm/mpm	56 / 17	56 / 17
- Empty		fpm/mpm	52 / 16	52 / 16
Mast Tilt *(Fwd / Back)*		deg	3 / 4	3 / 4
Lost Load Center	E	in/cm	19 / 49	19 / 49
Wheelbase	F	in/cm	56 / 142	56 / 142
Rear Overhang	G	in/cm	18 / 45	18 / 45
Overall Length to Fork Face	H	in/cm	93 / 236	93 / 236
Underclearance	I	in/cm	5 / 13	5 / 13
Seat Clearance	J	in/cm	36 / 91	36 / 91
Overhead Guard Height	K	in/cm	83 / 210	84 / 213
Overall Width	L	in/cm	46 / 116	46 / 116
Fork Carriage Width	M	in/cm	41/ 104	41 / 104
Overall Length Loaded	N	in/cm	141 / 358	141/ 358
Battery Height	O	in/cm	48 / 121	48 / 121
Rear Grade Clearance	P	deg	20°	20°
Center Grade Clearance	Q	deg	10°	10°
Overhead Guard Width	R	in/cm	43 / 109	43 / 109
Load Backrest Height	S	in/cm	48 / 122	48 / 122
Turning Radius	T	in/cm	85 / 216	88 / 223
Fork Size (Standard)		in	2x4x42	2x4x42
CLASS II- 40, CLASS III- 60		cm	5x11x107	5x11x107
Gradeability *Loaded*		%	15%	15%
Drive Tires,		in	18x8x12.1	18x8x12.1
Cushioned Rubber		cm	46x20x31	46x20x31
Steer Tires,		in	16.2x6x11.2	16.2x6x11.2
Static Grounding		cm	41x15x29	41x15x29

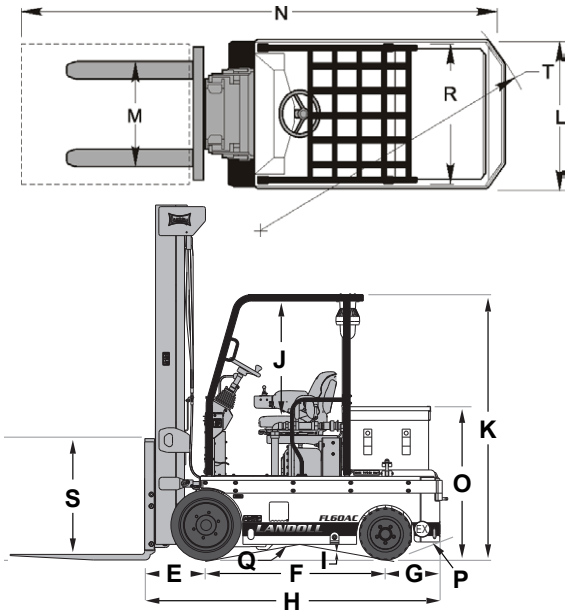

RECOMMENDED BATTERY

BATTERY DESIGNATION: 18-85-19 EX WITH ANDERSON TYPE N-150, 3 CONTACT CHARGING RECEPTACLE TYPE EX
36 Volt
765 Amp Hours
Nominal Size 37.125" x 26.5" x 25.25" (94 x 67 x 64cm)
Battery Compartment Size: 37.625" x 27.375" (96 x 70cm)
Battery Weight Min. 2,475 lbs. (1,123kg) - Max. 2,575 lbs. (1,168kg)
Dealer will select battery size based on the application. Usage hours will vary with load weight, number of lift cycles, lift height, attachment use and travel distance. (Battery must comply with Landoll "EX" Battery Specification - Drawing number: B-58911.)

Landoll continuously improves products. We reserve the right to make any changes in illustrations, specifications, equipment, and prices without prior notice and without changes on previous models.

MAST DIMENSIONS

FL40AC-EX - 4,000 LBS. (1,818KG) CAPACITY 168" (4.26M)							
LIFT HEIGHT		LOWERED HEIGHT		FREE LIFT*		CAPACITY	
Inches	Meters	Inches	Meters	Inches	Meters	Lbs.	KG
Two Stage Mast - Full Free Lift							
113	2.87	78	1.98	53	1.35	4,000	1,818
129	3.28	86	2.18	62	1.57	4,000	1,818
Three Stage Mast							
152	3.86	73	1.85	49	1.24	4,000	1,818
170	7.32	79	2.01	55	1.40	3,950	1,795
188	4.78	85	2.16	61	1.55	3,750	1,705
198	5.03	89	2.26	65	1.65	3,350	1,523
216	5.49	97	2.46	73	1.85	3,000	1,364
242	6.15	109	2.77	85	2.16	2,450	1,114
FL40AC-EX - 3,500 LBS. (1,590KG) CAPACITY 168" (4.26M)							
Four State Mast - Full Free Lift							
240	6.10	85	2.16	59	1.50	2,000	909
250	6.35	89	2.26	63	1.60	1,750	795

FL60AC-EX - 6,000 LBS. (2,727KG) CAPACITY 168" (4.26M)							
LIFT HEIGHT		LOWERED HEIGHT		FREE LIFT*		CAPACITY	
Inches	Meters	Inches	Meters	Inches	Meters	Lbs.	KG
Two Stage Mast - Full Free Lift							
114	2.90	79	2.01	53	1.35	6,000	2,727
130	3.30	87	2.21	61	1.55	6,000	2,727
Three Stage Mast							
153	3.89	75	1.91	50	1.26	6,000	2,727
171	4.34	81	2.06	56	1.41	5,900	2,682
189	4.80	89	2.26	62	1.56	5,250	2,386
198	5.03	91	2.31	64	1.63	4,850	2,205
217	5.51	99	2.51	74	1.87	4,250	1,932
242	6.15	109	2.77	85	2.16	3,400	1,545
FL60AC-EX - 5,500 LBS. (2,500KG) CAPACITY 168" (4.26M)							
Four Stage Mast - Full Free Lift							
240	6.10	89	2.26	65	1.65	3,000	1,364
250	6.35	93	2.36	69	1.75	2,650	1,205

www.landoll.com/mhp | 1900 North Street | Marysville, KS 66508 | (800) 428-5655

Intertek
YOUR INDUSTRY CONNECTION MHEDA
MATERIAL HANDLING INDUSTRY OF AMERICA Member Company
Member IWLA The Resource for Warehouse Logistics
IARW International Association of Refrigerated Warehouses