250 X3 MATERIAL HANDLER SPECIFICATIONS

SAE Net Horsepower: 177 HP (132 kW)
Operating Weight: 73,000 lbs. (33 100 kg)
Swing Torque: 55,300 lbf-ft (74.9 kNm)

Engine

Isuzu AL-4HK1X Tier 4A turbocharged diesel engine with electronic control (ECM) and high pressure common-rail fuel injection, 4-cylinder, Water-cooled, Cooled Exhaust Gas Recirculation (CEGR), Intercooler, Variable-Geometry Turbocharger (VGT), Diesel Particulate Diffuser (DPD) with Diesel Oxidation Catalyst (DOC) and Diesel Particulate Filter (DPF) for "passive regeneration" of exhaust emissions, Electronic fuel pump and priming, Fuel cooler, Auto-idle start, Auto warm-up, EPF engine protection, Dual-stage fuel filtration, In-cab fuel filter restriction indicator, Remote oil filter, Green plug oil drain, Double element air filter.

SAE Net Horsepower ... 177 hp (132 kW) @ 2,000 rpm
Displacement ..... 317 cu in (5.2 L)
Maximum Torque ... 458 lbf-ft (621 Nm) @ 1800 rpm
Starter..... 24V-5.0kW
Alternator..... 50 amp
Battery ..... (2) 12-volt 92 amp hours

Cab and Controls

FOPS-certified cab with climate control A/C and heat with defroster, Control panel with LED Hi-Definition color monitor, Rearview camera display, Fuel-efficiency gauge, DPF regeneration gauge, Low-effort joysticks pre-wired for auxiliary hydraulics, Safety glass windows, Sunroof with sunshade, Shockless cab suspension with four fluid mountings, KAB® reclining suspension seat, Sliding 4-position tilting control consoles, AM/FM sound system with MP3 auxiliary input jack, Digital clock, Dome light, Seat belt, Coat hook, Cup holder, Storage compartments, Floor mat, Footrests, Ashtray, 24-volt cigarette lighter, 12-volt outlet, Travel alarm, Handrails, Mirrors, Side-entry cab filter, Spare parts kit.

Three selectable working modes, Anti-theft password protection system, On-board self-diagnostic system with memory and service interval reminders, Auto-idling system, One-touch decelerator, Auto-idle engine shutdown, Auto-power boost, Neutral safety start, Gate-lock safety shutoff.

A/C Rating ..... 20,080 BTU/h
Heater Rating ..... 21,030 BTU/h
Sound Level - Cab Interior..... 70.0 dB(A)
Sound Level - Exterior ..... 100.0 dB(A)

Link-Belt
EXCAVATORS • FORESTRY
DEMOLITION • MATERIAL HANDLING

Hydraulic System

Open-center system, Two variable-displacement axial-piston pumps and one gear pump for pilot controls, auxiliary piston pump for cab riser, rotate and generator, Main control valve with one 4-spool section and one 5-spool section with auxiliary spool: stackable, Auxiliary Control System, Oil cooler, Auto-power boost, Boom and arm holding valves, 6 micron return filter, Firewall.

Hydraulic Pumps

Pump Output ..... 2 x 61.8 gpm (234 L/min)
Pilot Pump Maximum Flow... 5.3 gpm (20 L/min)
Auxiliary Pump Maximum Flow . 18.0 gpm (68 L/min)

Relief Valve Settings

Boom/Arm/Bucket ..... 4,970 psi (34.3 MPa)
in Power Boost ..... 5,330 psi (36.8 MPa)
Swing Circuit ..... 4,190 psi (28.9 MPa)
Travel Circuit ..... 4,970 psi (34.3 MPa)

Hydraulic Cylinders

number of cylinders - bore x rod x stroke
Boom ..... 2 - 5.5″ x 3.7″ x 44.3″ (140 mm x 95 mm x 1,126 mm)
Arm ..... 2 - 4.9″ x 3.7″ x 50.4″ (125 mm x 95 mm x 1,280 mm)
Bucket (linkage-style) ..... 4.7″ x 3.3″ x 39.8″ (120 mm x 85 mm x 1,010 mm)

Swing

Planetary reduction powered by axial-piston motor, Internal ring gear with grease cavity for swing pinion, Swing bearing is single-row, shear type ball bearing, Mechanical disc swing brake, Auto-power swing.

Swing Speed ..... 10.6 rpm
Tail Swing ..... 9′ 8″ (2.95 m)
Swing Torque..... 55,300 lbf-ft (74.9 kNm)

Undercarriage

X Pattern carbody with 15′ 3″ (4.65 m) LC long undercarriage by 8′ 6″ (2.59 m) track gauge, Sealed and strutted track chain with track guide, Sealed rollers and idlers, Two-speed independent hydrostatic travel with compact planetary final drive, Disc type brakes, Adjustable track tension, Carbody belly pan.

Carrier Rollers ..... 2 per Side
Track Rollers ..... 9 per Side
Track Link Pitch ..... 7.48″ (190 mm)
Shoes ..... 51 per Side
Shoe Width ..... 23.6″ (600 mm)
Ground Pressure
Linkage-style attachment .. 9.57 psi (0.066 MPa)
Droop nose attachment..... 8.85 psi (0.061 MPa)

Travel System

Two-speed independent hydrostatic travel with compact axial-piston motors, Hydraulic motor powered output shaft coupled to a planetary reduction drive and track sprocket, All hydraulic components mounted within the width of side frame, Automatic downshift for high torque to overcome obstacles, Spring-applied hydraulic release parking brake built into each motor, Travel motors equipped with counterbalance valve to prevent over-speeding down an incline, Single-pedal straight line travel.

Travel Speeds ..... 2.2 - 3.4 mph (3.5 - 5.5 km/h)
Drawbar Pull ..... 45,560 lbf (216 kN)
Gradeability ..... 70% (35°)

Attachment

Linkage-Style

Boom ..... 23′ 3″ (7.10 m)
Arm ..... 16′ 5″ (5.00 m)
Reach ..... 38′ 0″ (11.58 m)

Droop Nose

Boom ..... 24′ 3″ (7.40 m)
Arm ..... 19′ 0″ (5.80 m)
Reach ..... 42′ 5″ (12.92 m)

Lubricant and Coolant Capacity

Fuel Tank ..... 108.0 Gallons (410.0 Liters)
Hydraulic System ..... 66.0 Gallons (250.0 Liters)
Hydraulic Tank ..... 39.0 Gallons (147.0 Liters)
Final Drive (per side) ..... 1.3 Gallons (5.0 Liters)
Swing Drive ..... 2.6 Gallons (9.7 Liters)
Engine Oil ..... 7.8 Gallons (29.6 Liters)
Coolant System ..... 8.0 Gallons (30.2 Liters)

Operating Weight

Working weight with 23.6″ (600 mm) shoes, 23′ 3″ (7.10 m) boom, linkage-style attachment, 4,938 lb. (2 240 kg) magnet, 18,298 lb. (8 300 kg) counterweight ..... 73,000 lbs. (33 100 kg)

Working weight with 23.6″ (600 mm) shoes, 24′ 3″ (7.40 m) boom, droop nose attachment, 18,298 lb. (8 300 kg) counterweight ..... 68,200 lbs. (30 900 kg)

250X3 Specifications

Working Range

Linkage Style Attachment

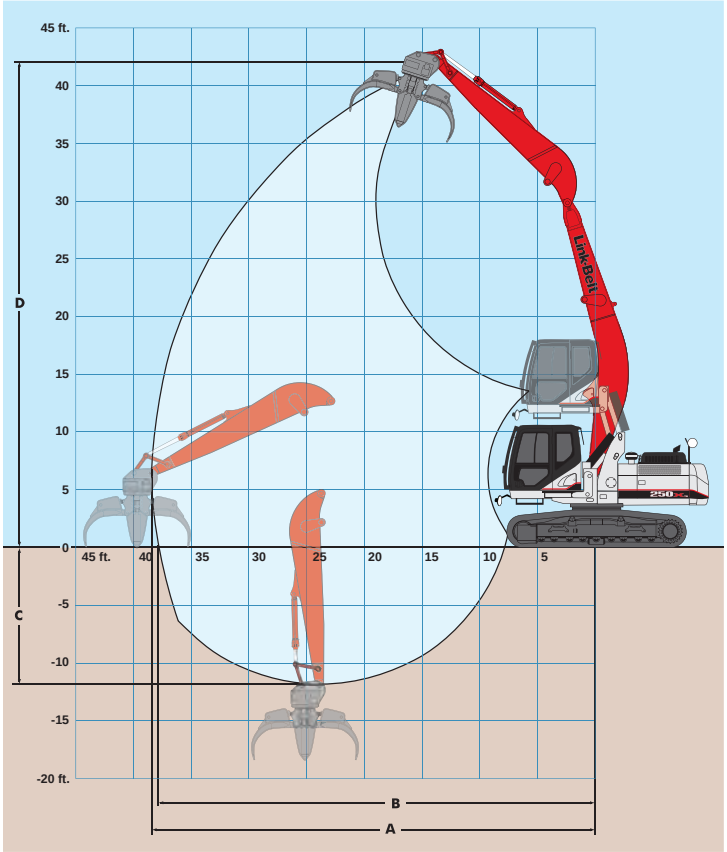

Droop Nose Attachment

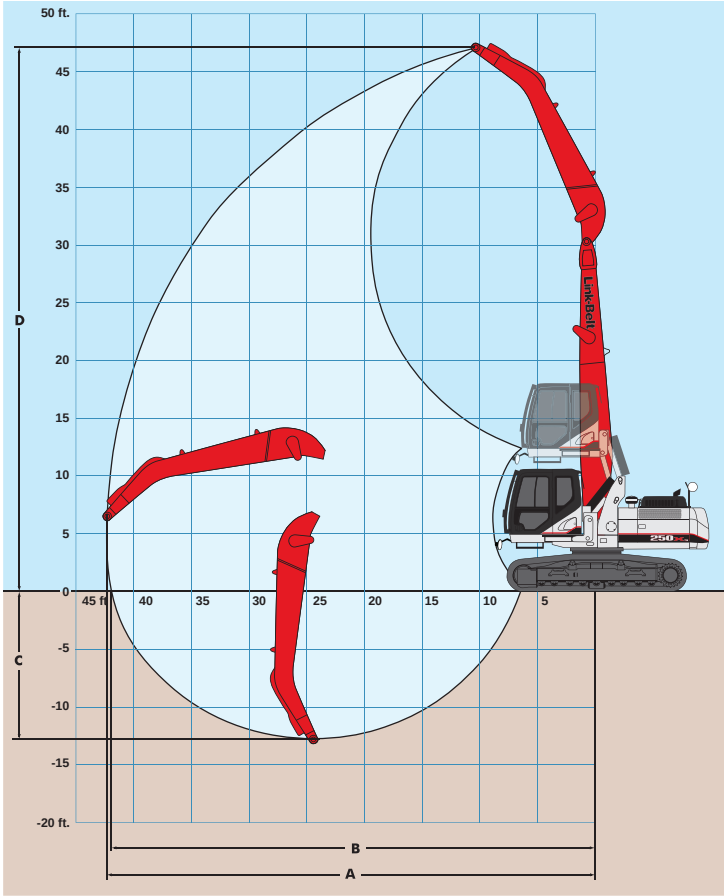

Machine Equipped with 23´ 3˝ (7.10 m) Boom	Arm 16´ 5˝ (5.00 m)
A. Maximum reach	38´ 0˝ (11.58 m)
B. Maximum reach @ GPR	37´ 5˝ (11.41 m)
C. Maximum depth	11´ 10˝ (3.61 m)
D. Maximum height	41´ 7˝ (12.68 m)

Machine Equipped with 24´ 3˝ (7.40 m) Boom	Arm 19´ 0˝ (5.80 m)
A. Maximum reach	42´ 5˝ (12.92 m)
B. Maximum reach @ GPR	41´ 11˝ (12.77 m)
C. Maximum depth	12´ 9˝ (3.89 m)
D. Maximum height	47´ 4˝ (14.42 m)

Travel Dimensions - Linkage Style Attachment

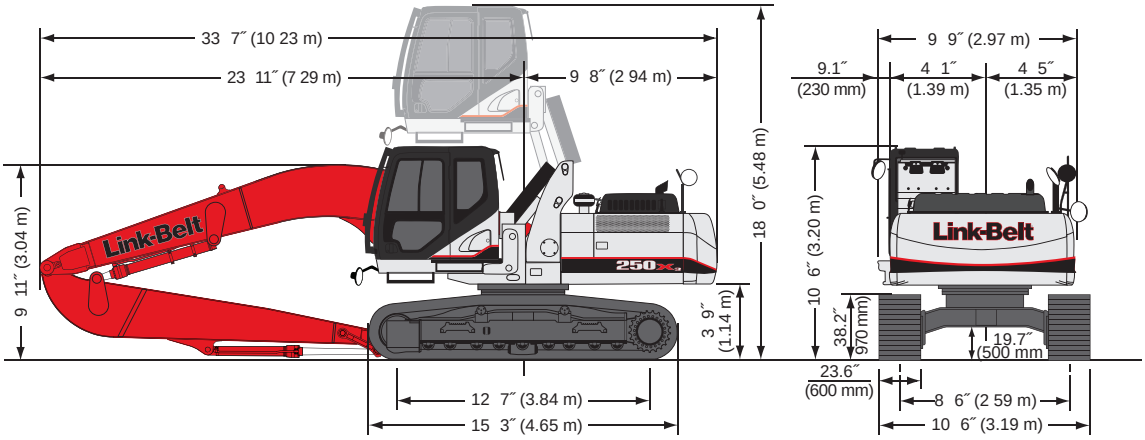

Specifications 250X3

Lifting Capacities - ISO Ratings - Linkage Style Attachment

Radius of Load - 16´ 5˝ (5.00 m) Arm with 23´ 3˝ (7.10 m) Boom with Power-Boost Applied															
End / Side		10´ 0˝ (3.05 m)		15´ 0˝ (4.57 m)		20´ 0˝ (6.10 m)		25´ 0˝ (7.62 m)		30´ 0˝ (9.14 m)		35´ 0˝ (10.67 m)		Cap at Max. Reach	
		End	Side	End	Side	End	Side	End	Side	End	Side	End	Side	End	Side
+35´ 0˝ (10.5 m)	lbs					16,100*	16,100*							11,588*	11,588*
	kg					7 303*	7 303*							5 256	5 256
+30´ 0˝ (9.0 m)	lbs					15,450*	15,450*	14,400*	14,400					10,670*	10,670*
	kg					7 008*	7 008*	6 532*	6 532					4 840	4 840
+25´ 0˝ (7.5 m)	lbs					15,750*	15,750*	14,450*	14,450	13,500*	10,850			10,206*	9,090
	kg					7 144*	7 144*	6 554*	6 554	6 123*	4 921			4 629	4 123
+20´ 0˝ (6.0 m)	lbs					16,900*	16,900*	15,050*	14,400	13,750*	10,700	11,350	8,200	10,205*	7,996
	kg					7 666*	7 666*	6 827*	6 532	6 237*	4 853	5 148	3 719	4 629	3 627
+15´ 0˝ (4.5 m)	lbs			23,100*	23,100*	18,800*	18,800	16,100*	13,900	14,250*	10,400	11,600	8,050	10,222	7,297
	kg			10 478*	10 478*	8 528*	8 528	7 303*	6 305	6 464*	4 717	5 262	3 651	4 637	3 310
+10´ 0˝ (3.0 m)	lbs	42,700*	42,700*	27,700*	27,700	21,100*	18,400	17,350*	13,200	14,450	10,050	11,350	7,850	10,036	6,894
	kg	19 368*	19 368*	12 247*	12 247*	9 571*	8 346	7 870*	5 987	6 554	4 559	5 148	3 561	4 552	3 127
+5´ 0˝ (1.5 m)	lbs	9,800*	9,800*	31,600*	25,800	23,150*	17,150	18,350	12,550	14,000	9,650	11,150	7,650	9,827	6,712
	kg	4 445*	4 445*	14 334*	11 703	10 501*	7 779	8 323	5 693	6 350	4 377	5 058	3 470	4 457	3 045
Ground Line	lbs	9,700*	9,700*	25,550*	24,250	24,350	16,250	17,750	11,950	13,650	9,300	10,950	7,450	9,934	6,758
	kg	4 400*	4 400*	11 589*	11 000	11 045	7 371	8 051	5 420	6 192	4 218	4 967	3 379	4 506	3 065
-5´ 0˝ (1.5 m)	lbs			22,600*	22,600	24,050	15,700	17,350	11,600	13,400	9,050	10,800	7,350	10,316	7,001
	kg			10 251*	10 251	10 909	7 121	7 870	5 262	6 078	4 105	4 899	3 334	4 679	3 176
-10´ 0˝ (3.0 m)	lbs					22,900	15,500	17,150	11,450	13,300	8,950			12,629	8,529
	kg					10 387	7 031	7 779	5 194	6 033	4 060			5 728	3 869

Lifting Capacities - ISO Ratings - Droop Nose Attachment

Radius of Load - 19´ 0˝ (5.80 m) Arm with 24´ 3˝ (7.40 m) Boom with Power-Boost Applied																	
End / Side		10´ 0˝ (3.05 m)		15´ 0˝ (4.57 m)		20´ 0˝ (6.10 m)		25´ 0˝ (7.62 m)		30´ 0˝ (9.14 m)		35´ 0˝ (10.67 m)		40´ 0˝ (12.19 m)		Cap at Max. Reach	
		End	Side	End	Side	End	Side	End	Side	End	Side	End	Side	End	Side	End	Side
+45´ 0˝ (13.5 m)	lbs			16,300*	16,300*											13,724	13,724
	kg			7 394*	7 394*											6 225	6 225
+40´ 0˝ (12.0 m)	lbs					16,600*	16,600*	11,650*	11,650*							10,582	10,935
	kg					7 530*	7 530*	5 284*	5 284*							4 800	4 960
+35´ 0˝ (10.5 m)	lbs					15,400*	15,400*	14,300*	14,300*	11,400*	11,000					9,292	9,292
	kg					6 985*	6 985*	6 486*	6 486*	5 171*	4 990					4 215	4 215
+30´ 0˝ (9.0 m)	lbs					15,050*	15,050*	13,950*	13,950*	13,100*	11,200	8,900*	8,450			8,607	8,433
	kg					6 827*	6 827*	6 328*	6 328*	5 942*	5 080	4 037*	3 833			3 904	3 825
+25´ 0˝ (7.5 m)	lbs					15,450*	15,450*	14,150*	14,150*	13,100*	11,150	12,100	8,550			8,232	7,277
	kg					7 008*	7 008*	6 418*	6 418*	5 942*	5 058	5 488	3 878			3 734	3 301
+20´ 0˝ (6.0 m)	lbs					16,650*	16,650*	14,850*	14,600	13,500*	10,900	11,950	8,450	8,400*	6,600	8,053	6,574
	kg					7 552*	7 552*	6 736*	6 622	6 123*	4 944	5 420	3 833	3 810*	2 994	3 653	2 982
+15´ 0˝ (4.5 m)	lbs			22,450*	22,450*	18,500*	18,500*	15,900*	14,000	14,050*	10,550	11,750	8,250	9,450	6,550	8,029	6,124
	kg			10 183*	10 183*	8 391*	8 391*	7 212*	6 350	6 373*	4 785	5 330	3 742	4 286	2 971	3 642	2 778
+10´ 0˝ (3.0 m)	lbs	40,150*	40,150*	26,950*	26,950*	20,750*	18,500	17,150*	13,300	14,500	10,100	11,500	7,950	9,350	6,400	8,139	5,862
	kg	18 212*	18 212*	12 224*	12 224*	9 412*	8 391	7 779*	6 033	6 577	4 581	5 216	3 606	4 241	2 903	3 692	2 659
+5´ 0˝ (1.5 m)	lbs	8,900*	8,900*	31,000*	25,900	22,850*	17,200	18,300*	12,550	14,050	9,650	11,200	7,700	9,200	6,300	8,391	5,750
	kg	4 037*	4 037*	14 061*	11 748	10 365*	7 802	8 301*	5 693	6 373	4 377	5 080	3 493	4 173	2 858	3 806	2 608
Ground Line	lbs	7,300*	7,300*	22,500*	22,500*	24,150*	16,150	17,700	11,950	13,650	9,300	10,950	7,450	9,050	6,150	8,499	5,781
	kg	3 311*	3 311*	10 206*	10 206*	10 954*	7 326	8 029	5 420	6 192	4 218	4 967	3 379	4 105	2 790	3 855	2 622
-5´ 0˝ (1.5 m)	lbs	9,100*	9,100*	18,700*	18,700*	23,850	15,550	17,250	11,500	13,350	9,000	10,800	7,300			9,030	6,133
	kg	4 128*	4 128*	8 482*	8 482*	10 818	7 053	7 824	5 216	6 055	4 082	4 899	3 311			4 096	2 782
-10´ 0˝ (3.0 m)	lbs			19,250*	19,250*	23,050*	15,250	17,000	11,300	13,200	8,850					10,935	7,399
	kg			8 732*	8 732*	10 455*	6 917	7 711	5 126	5 987	4 014					4 960	3 356

Travel Dimensions - Droop Nose Attachment

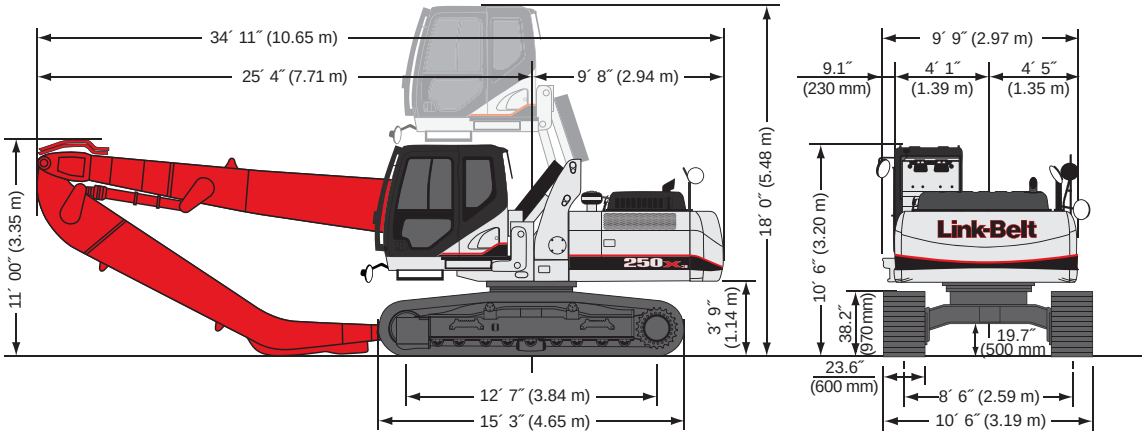

250X3 Specifications

Standard and Optional Equipment

CAB

12V Power Outlet	✓
24V Lighter	✓
AM/FM Sound System	✓
Anti-Interference Device	✓
Anti-Theft Device	✓
Ashtray	✓
Auxiliary Switches on Control Lever	✓
Cab Exterior Light Harness	✓
Cab Filter - External	✓
Cab Handrails	✓
Cab Interior Light	✓
Cab Lights	●
Cab Iso-Mounts	✓
Clear Roof Window	✓
Climate Control A/C and Heater	✓
Console Tilt	✓
Cup Holder	✓
Defroster	✓
Digital Clock	✓
ECO Gauge	✓
Emergency Exit and Hammer	✓
Face Vent	✓
Floor Mat	✓
FOPS Head Guard (Level 2)	●
Front Guard (mesh)	●
Front Guard (OPG 1)	✓
Front Guard (OPG 2)	●
Front Window One-Touch Lock	✓
Gate Lock Hydraulic Activation	✓
Horn	✓
Hot & Cool Box	✓
Hour Meter - Digital	✓
KAB 815 Suspension Seat	✓
KAB 855 Air-Suspension	●
LED Color Monitor	✓
Magazine Rack	✓
Maintenance Interval Reminders	✓
MP3 Auxiliary Input Jack	✓
On-Board Diagnostic System	✓
One-Piece Right Window	✓
Radio Mute Switch	✓
Rain Deflector	●
Rear View Camera	✓
Rear View Mirrors	✓
Roof Sun Shade	✓
Safety Glass Windows	✓
Seat Recline	✓
Selectable Monitor Languages	✓
Side View Camera	●
Small Storage	✓
Sun Visor	●
Travel Alarm with Cancel Switch	✓
Trip Meter - Digital	✓
Vandal Cover (front window)	●
Wiper & Washer	✓
Wiper Switch on RH Joystick	✓

ENGINE

Air Filter - Double Element	✓
Air Filter Restriction Indicator	✓
Air Pre-Cleaner	●
Auto Warm-Up System	✓
Auto-Idle	✓
Auto-Idle Engine Shutdown	✓
CEGR - Cooled Exhaust Gas Recirculation	✓
Cooling Fan	✓
Diesel Oxidation Catalyst (DOC)	✓
Diesel Particulate Filter (DPF)	✓
Drain for Fuel Tank	✓
Dual Remote Fuel Filters with Water Separation	✓
EGR Coolers	✓
Emergency Engine Stop	✓
Engine Idle System	✓
Remote Engine Oil Drain	✓
Engine Protection Feature	✓
External Fuel Gauge	✓
Fan Housing	✓
Fuel Filter Restriction Indicator	✓
Fuel Management System	✓
Fuel Shut-Off Valve	✓
Fuel Usage Monitor	✓
Glow Plug Pre-Heat	✓
Idle-Start	✓
Intercooler	✓
Neutral Start	✓
One-Touch Idle	✓
Passive Emissions-Regeneration	✓
Radiator / Oil Cooler Protective Screen	✓
Regeneration Gauge on Monitor	✓
Remote Oil Filter	✓
VGT Turbocharger	✓

HYDRAULICS

Arm Regeneration	✓
Arm Speed Assistance - 2 Pump Flow	✓
Attachment Cushion Valve	✓
Auto Swing Priority	✓
Auxiliary Flow Control	✓
Auxiliary Tool Settings - Memory	✓
Auxiliary Valve	✓
Boom Regeneration	✓
Boom Speed Assistance - 2 Pump Flow	✓
Bucket Curl Assist	✓
Sure Grip Control Levers	✓
Fire Wall	✓
Free Swing	●
Holding Valve - Arm	✓
Holding Valve - Boom	✓
Hose Burst Check Valve	✓
Hydraulic Filter Restriction Indicator	✓
Long Life Hydraulic Oil - 5,000 Hour	✓
Neutral Pump De-stroke	✓
Oil Cooler	✓
Power Boost	✓
Pressure Reading on Monitor	✓
Pump Stand-By Pressure	✓
Single Pedal Travel	✓
Straight Travel Circuit	✓

AUXILIARY HYDRAULIC OPTIONS

Single-Acting Aux. w/ Switch Activation	●
Single-Acting Aux. w/ Pedal Activation	●
Multi-Function Aux. w/ Switch Activation	●

UNDERCARRIAGE

600 mm shoes (23.6 in) flat shoe	✓
600 mm shoes (23.6 in) 3-Bar Steel	●
700 mm shoes (27.5 in) 3-Bar Steel	●
800 mm shoes (31.5 in) 3-Bar Steel	●
Steps	✓
Carbody Belly Pan (swivel guard)	✓
Center Track Guide (single)	✓
Track Guide (triple)	●
Long Undercarriage	✓
Sealed Link Chain	✓
Strutted Track Chain	✓
X-Pattern Carbody	✓

UPPERSTRUCTURE

Belly Pans	✓
Center Cover (Over Main CV)	✓
Fuel Tank Belly Pan	✓
Hand Rail - RH Access	✓
Lifting Eyes for Counterweight	✓
Lockable Fuel Cap and Service Doors	✓
Rubber Bumper Guards	●
Tool Box - Lockable	✓
Turntable Tub	✓
Work Lights - Boom and Tool Box	✓

ATTACHMENT

16′ 5″ (5.00 m) Arm	●
23′ 3″ (7.10 m) Main Boom Section	●
Attachment Reinforcement Plate (boom)	●
Auxiliary Pipe Brackets	✓
Boom Work Light	✓
Bucket Anti-Clatter Device	✓
Chrome pins	✓
Easy Maintenance System	✓
HD Bucket Link	●
Quick Couplers	●
Remote Lube Bank	✓
Teardrop pin retention keepers	✓
Thumbs	●
15 kW Genset Baldor/Hubbell Baldor/Ohio	●
13.6 kW Genset SHI Solid State	●
61 Amp magnet 54-in. (1 370 mm) dia.	●

PARTS KIT

Bucket Anti-Clatter Device	✓
Engine Manual	✓
Engine Oil Filter	✓
Filter Wrench	✓
Fuel Filters	✓
Grease Gun	✓
Green Plug Drain Hose for Engine Oil Drain	✓
Hydraulic Return Filter	✓
Ignition Keys	✓
Pilot Circuit Hydraulic Filter	✓
Rearview Mirrors	✓
Work Light for Boom	✓

Equipment Key
Standard ✓ Optional ●

Notes: Excavator lifting capacities

1. Lifting capacities shown should not be exceeded. Weight of all lifting accessories must be deducted from the above lifting capacities.
2. Lifting capacities are based on machine standing on firm, uniform supporting surface. User must make allowances for job conditions such as soft or uneven ground.
3. Lifting capacities shown do not exceed 75% of minimum tipping loads or 87% of hydraulic capacities. Capacities marked with an asterisk (*) are limited by hydraulic capacities.
4. Least stable position is over the side.
5. Operator should be fully acquainted with the Operator's Manual & Operating Safety Booklet, furnished by LBX before operating the machine.
6. Capacities apply only to the machine as originally manufactured and normally equipped by LBX Company, LLC.
7. Lift capacity ratings are based on ISO 10567, "Earthmoving Machinery - Hydraulic Excavators - Lift Capacity."

Litho in USA 3/14 #LBX2244

LBX® and Link-Belt® are registered trademarks. Copyright 2014. All rights reserved. We are constantly improving our products and therefore reserve the right to change designs and specifications.

LBX "Different by Design"