https://truckmanualshub.com/

Tata
LP / LPT 613 EURO-II

Operator's Service Book

(The contents given in this book are not binding; are subject to change without notice and are for illustration purposes only)

Edition : XLI/NE/J-2007/001-500

TATA MOTORS LIMITED
International Business (CVBU)
Mumbai, INDIA

https://truckmanualshub.com/

Dear Customer,

We are pleased to hand over your Tata LP/LPT 613 EURO-II Vehicle, manufactured by Tata Motors where QUALITY is the watchword and major attention is paid even to minor details at all stages of manufacture of your vehicle.

PLEASE DO READ THIS BOOK. It helps you to know your vehicle better, to ensure your vehicle is ready for operation at all times and to obtain better performance at optimum operating costs.

All lubricating and maintenance tasks are to be carried out at the specified service intervals.

Some of the items / accessories / features shown / given in this book may not be fitted on your vehicle, but they are applicable for other versions of vehicles.

For any further assistance, please contact the nearest Tata Diesel Vehicle Dealer or Our Office at following address.

Tata Motors Limited
International Business CVBU (Customer Support)
Shah House, Shivsagar estate,
Worli, Mumbai - 400 018,
India.
Ph No. : (009122) 6757 7239 / 7200
Fax No. : (009122) 6757 7275
E - Mail : telcoexp@tatamotors.com

We wish you good luck and prosperity.

https://truckmanualshub.com/

CONTENTS

1. General

1.1 About Tata LP/LPT 613 EURO-II 3

1.2 Environment protection 5

1.3 Important tips for driver 7

1.4 Tips for maintenance 10

1.5 Body building 11

1.6 Additional fitments 20

1.7 Additional provisions (electrical) 30

2. Vehicle Handling

2.1 Vehicle identification 37

2.2 Location of aggregate numbers 41

2.3 Instrument panel 43

2.4 Switches, gauges & indicators 44

2.5 Driving controls 55

2.6 Turbocharger 57

2.7 Charge air cooler 58

2.8 Clutch booster 59

2.9 Cab tilting 60

2.10 Heating 65

2.11 Driver seat & seat belt 66

https://truckmanualshub.com/

3. Driving

3.1 Starting the engine 71
3.2 Driving 72
3.3 Stopping the engine 75
3.4 Special operating conditions 76
3.5 Fuel economy 78
3.6 Do it yourself 79

4. Maintenance procedure

4.1 Air intake system 83
4.2 Fuel system 85
4.3 Lubrication system 87
4.4 Cooling system. 89
4.5 Clutch 92
4.6 Gearbox 94
4.7 Propeller shaft 95
4.8 Front axle & rear axle 96
4.9 Power steering 97
4.10 Brake system 101
4.11 Springs 114
4.12 Centre flap 115
4.13 Tilt cab 116
4.14 Wheels and tyres 117
4.15 Electricals 121
4.16 Preservative treatment 128
4.17 Care and cleaning 131

https://truckmanualshub.com/

5. Technical information

5.1 Technical specifications 135

5.2 Aggregate filling capacities 140

5.3 Lubrication points 141

5.4 Tightening torques 143

6. Fuel, lubricants and coolants

6.1 Fuel 149

6.2 Lubricants 150

6.3 Coolant 152

7. Service recommendations

7.1 Special instructions 155

7.2 PDI 156

7.3 Service schedule 159

7.4 Record of services performed 168

7.5 Record of repairs performed 170

https://truckmanualshub.com/

1. GENERAL

1.1 About Tata LP/LPT 613 EURO-II 3
1.2 Environment protection 5
1.3 Important tips for driver 7
1.4 Tips for maintenance 10
1.5 Body building 11
1.6 Additional fitments 20
1.7 Additional provisions (electrical) 30

https://truckmanualshub.com/

TATA LP/LPT 613 EURO-II full forward control chassis in truck & bus versions are available with following options :

- 3.8 meter wheel base for truck & bus.
- Tilt cabin chassis with / with out load body for trucks.
- Cowl chassis with windshield glass / cowl chassis with front end structure only for bus.
- LHD versions.
- Engines conforming to Euro II norms with matching power train.
- Various colour combinations for cabin/ load body in truck version.
- With / with out power take off and provision for power take off in truck.
- Fuel tank capacity 120 litres.
- Diagonal ply / radial ply tyres for both truck & bus versions.

Optional fitments include

- Engine cold start device
- Cab heating
- Driver seat belt warning device
- Front fog lamps
- Rear under run protection device/ side under run protection device for trucks.

These incorporate well proven features of **TATA vehicles** to give **economic life cycle cost, high reliability** and **ease of maintenance.**

Short wheel base and narrow width gives them high maneuverability, ideal for all applications.

TATA 697 TCIC direct injection engines are fitted with dry type cylinder liners for long life and easy overhaul.

Vehicles meeting Euro II norms are fitted with rotary type fuel injection pump, turbocharger, air after cooler, high capacity dry type air filter, etc.

A radiator auxiliary tank is provided for convenient coolant filling.

Good visibility, hydraulic power steering, 5 speed synchromesh gear box with remote shift arrangement, hydraulically actuated clutch, self cancellation turn signals lever, tinted wind shield glass, etc. enhance driving comfort.

S Cam full air brake system with air dryer, nylon brake pipes and load conscious relief valve in rear brake circuit makes driving more safe. Service brakes are supplemented by engine exhaust brake, coupled with service brake operation. This enhances life of brake linings, brake drums & tyres.

Provision for ABS brakes.

An exhaust brake isolator switch has been provided on instrument panel. Exhaust brake can be made inoperative whenever required by means of this switch.

https://truckmanualshub.com/

Steering is provided with **steering lock cum ignition switch** as a safety and security of the vehicle. Engine is started and stopped by means of this switch. Battery cut off switch in bus version provides additional safety for electrical system.

Wide centre flap at front enables easy access to points of daily maintenance.

Tilt cabin with torsion bar assistance on truck version enable effortless operation of cabin tilting / lowering. It also provides ample space to reach engine / power train for inspection / maintenance.

Exhaust system with bigger silencer considerably reduces noise level. Different versions of exhaust piping lay out are available to meet country specific regulations.

Proper and **timely maintenance** and **servicing** as recommended in this book will ensure trouble-free operation over long life.

https://truckmanualshub.com/

Environmental protection

TATA MOTORS is committed to produce vehicles using environmentally sustainable technologies. A number of features have been incorporated in **Tata vehicles** which have been designed to ensure environmental compatibility throughout their life cycle. We would like to inform you that your vehicle meets appropriate environmental norms and this is being regularly validated at all stages of manufacturing .

As a user, you too can protect environment by operating your vehicle in a proactive manner. A lot depends on your driving style and the way you maintain your vehicle. We are giving below a few tips for your guidance.

Driving

- Avoid frequent and violent acceleration.
- Do not carry any unnecessary weight as it overloads the engine.
- Avoid using devices requiring high power consumption during slow traffic conditions.
- Monitor fuel consumption regularly and if it shows a rising trend, get it attended at Tata authorised workshop.
- Switch off engine during long stops at traffic jams or signals. If situation demands that engine be kept running, avoid frequent revving up of engine. Also avoid frequent stopping and restarting, if uncalled for.
- It is not necessary to rev up the engine before turning it off as it unnecessarily burns fuel.
- Shift to higher gears as soon as possible. Use each gear upto 2/3rd of its maximum engine speed. A chart indicating gear shifting speed is given in the manual.

Maintenance of the vehicle

- Ensure that recommended maintenance is carried out regularly at Tata authorised workshops.
- As soon as you see any leakages of oil, fuel, air or coolant get it attended immediately.
- Use only recommended grades of lubricants and clean/ uncontaminated fuels.
- Get your vehicle checked for emission periodically by Tata authorised workshop.
- Ensure that fuel filter, air filter, oil filter, breathers are periodically checked and if required, replace the same by only genuine parts.
- Do not pour used oils or coolants into sewage drains, garden soil or open streams. Dispose used filters and batteries in compliance with current legislation.

https://truckmanualshub.com/

- Do not allow unauthorised agencies to tamper engine settings or to carry modifications on the vehicle.
- Never allow the vehicle to run out of fuel, which results in misfiring of engine.
- Parts like brake liners, clutch disc may contain asbestos. Use vacuum cleaner for cleaning these parts. Do not use compressed air for cleaning these parts which may spread dust in atmosphere.

While carrying out servicing or repairs pay keen attention to following parts which can affect exhaust emissions.

1. Fuel injection pump, injectors/ nozzles.
2. Air intake and Exhaust system especially for leakages.
3. Cylinder head for valve leakage.
4. All filters such as air, oil and fuel filters.
5. Turbo charger (Euro II)
6. Air after cooler (Euro II)

This book contains further information on driving precautions and maintenance care leading to environment protection. Please familiarise yourself with these aspects before driving.

https://truckmanualshub.com/

1. Use only recommended oils and lubricants.
2. Always use recommended antifreeze agents in cooling system to avoid deterioration of engine components due to corrosion. After filling coolant, fit auxiliary tank cap firmly, to keep cooling system pressurised.
3. Maintain correct tyre pressure to ensure better tyre life.
4. Always fit genuine radiator cap for pressurised cooling system.
5. New tyres do not give maximum grip straight away and should therefore be run-in at moderate speeds for first 100 km. This will help to make tyres last longer.
6. New brake linings must always be run-in, they do not have optimum friction properties during first 200 kms.
7. Avoid mixing of different grade of lubricants or clutch fluids during top up.
8. Run the engine in low idling speed for atleast three minutes after starting and before shutting off. (Applicable for turbocharged engine)
9. Always start moving the vehicle in first gear.
10. Operate engine in correct temperature range i.e. between 60°C & 100°C.
11. Engine oil / coolant levels have to be checked daily. Drain water from fuel water separator daily.
12. In case of air lock in fuel system, bleeding should be done on high pressure side of fuel filters, drain manifold and high pressure lines. Ensure that lift pump operation is satisfactory and proper fuel delivery takes place while bleeding out air.
13. Avoid cranking of engine for more than 30 seconds. A gap of 2 minutes should be left between successive attempts.
14. Check battery every week and top up electrolyte, if necessary. Keep battery terminals clean and cable joints tight. Apply vaseline/ petroleum jelly on terminals.
15. Watch service indicator of dry type air filter (Euro II). Indication of same is given on instrument cluster. If it blinks continuously then clean the air filter housing and replace primary cartridge.
16. Observe correct polarity while connecting alternator terminals and battery cables.
17. For operating vehicles in extremely cold climates and high altitudes contact Tata authorised workshop to seek advice.
18. Do not use kerosene as fuel. It reduces engine and fuel pump life.

https://truckmanualshub.com/

19. Do not use clutch pedal as a foot rest when driving. This will cause premature clutch lining wear.
20. Do not coast vehicle i.e. drive with engine switched off. This is dangerous and affects life of gear box.
21. Do not fit bigger size tyres. Do not over or under inflate tyres. This reduces tyre life.
22. Do not top up coolant in auxiliary tank by pouring cold coolant in hot engine. Cylinder head may crack.
23. Do not overfill engine oil in sump. This may cause engine smoking and high engine oil consumption.
24. Do not engage ignition key in starting position, after the engine has fired. Release it immediately. If not, starter pinion and / or flywheel ring gear will be damaged.
25. Do not run alternator with out battery or disconnect any lead of alternator while engine is running.
26. Do not keep accelerator at full throttle during engine cranking. After starting, run engine at idle speed till such time oil pressure builds up.
27. Do not clean exposed painted surface or windscreen with petroleum products i.e. diesel, kerosine & petrol, etc.
28. When air / fuel / oil filter cartridges are replaced, destroy old cartridges to prevent their reuse.
29. Ensure that air intake hoses are free from punctures, cuts and damages.
30. Always fasten seat belt while driving. Same is applicable for co-passenger, wherever seat belt is provided.
31. Do not use mobile phone while driving.
32. Do not adjust seat belt while driving.
33. For first 2000 kms, restrict speed limit to 60 kmph in top gear with 1500 kg pay load.
34. Avoid panic braking.
35. Drive on lower gears on steep down gradient, thus avoiding excessive braking & brake over heating.
36. Primary lock lever on drive away chassis is secured with bolt and nut as safety precaution. Replace this with a pad lock. This will enable cab tilting only after unlocking pad lock. Fitment of pad lock will avoid unauthorised tilting of cabin.
37. Ensure gear shifting lever in 2nd gear position before tilting/ lowering cab.
38. Disconnect alternator terminals before carrying out any welding work on chassis/body.

https://truckmanualshub.com/

39. Engagement / disengagement of power take off (optional fitment on trucks) needs to be done only when gear lever is in neutral position & engine running at idling speed.
40. Engine exhaust brake isolator switch has to be kept ON always, unless & until exhaust brake isolation is required.
41. Radial tyres are to be balanced whenever they are removed from wheel rims. Balancing weights should not exceed maximum permissible limits.

https://truckmanualshub.com/

1. Use only recommended filters for air intake, engine oil and fuel system. Replace them at recommended intervals.
2. Before building the body, study recommended body building practices.
3. Disconnect alternator terminals, while carrying out electrical welding.
4. Never use water alone in the coolant system. Always use mixture of 50% clean water and 50% antifreeze agent for topping up and for change. Always carry a five litres can of properly mixed coolant for topping up enroute, if necessary.
5. Get the cause of low engine oil pressure investigated at Tata authorised workshop.
6. Any change in clutch pedal free play is to be immediately investigated.
7. Get your vehicle serviced at Tata authorised workshop at recommended intervals.
8. Use only recommended grades of oils for all aggregates.
9. All services / repairs to be carried out at Tata authorised workshops only.
10. Do not reinforce chassis frame, springs or axles for carrying higher payload. It will result in premature failure of aggregates and deprive you of warranty benefits.
11. Dust accumulated in radiator fins should be cleaned by blowing compressed air at low pressure from inner side of radiator. Please do not clean with pressurized water jet as it will deform radiator fins.

Helping you to obtain efficient trouble-free service from your TATA DIESEL VEHICLE is our business.

https://truckmanualshub.com/

Body building guidelines

It is important to ensure that the body is fitted to chassis in such a way that the load imposed is transmitted correctly. At the same time the rigidly mounted body must flex with the frame. Care should be taken to ensure that body and chassis are compatible. An example of bad selection would be the construction in which a short body is made on a long wheel base. In this case, it becomes necessary to shorten chassis rear overhang to accommodate body. As a result centre of gravity moves forward and a greater load than that desirable is imposed on front axle.

It is also essential that careful consideration be given to movement or modification of electrical wiring, electrical equipments, brake connections, brake piping, extension of chassis rear over hang, relocation of chassis components to ensure good performance in operation.

Post to waist rail joints

Gusset plates are welded to U-channel / Z-channel waist rail.

The welding of the gusset to the waist rail should be intermittent.

Wheel arch dimensions

To accommodate wheels, side frame is formed to a suitable shape called wheel arch.

To prevent tyre fouling with body on bad roads, recommended dimensions of wheel arch should be maintained.

Position of roof luggage carrier (for LP model)

Roof luggage carrier should be placed to get the centre of gravity ahead of rear axle centre line (min . 500 mm). Height of roof luggage carrier should be minimum in order to reduce wind resistance.

Outrigger for door post

When a door has to be located at a place where cross bearers cannot be mounted due to positioning of chassis aggregates at that location, outrigger assembly should be made for door post.

https://truckmanualshub.com/

Notes

1. Keep body weight minimum by selecting proper materials and designs. This will save fuel and increase tyre life.
2. Use curved window glass, avoid sharp corners and protruding out destination boards to reduce wind resistance.
3. Select body dimensions, seating space and gangway width to comply with current government regulations.
4. Ensure ease of removal and assembly of various aggregates like gearbox, suspension, battery, spare wheel etc. Provide flaps/cut outs for servicing.
5. De-rust, phosphate and apply primer to the body skeleton before fixing panels.
6. Use zinc plated hardware of standard quality for various body joints.
7. Protect instrument panel, steering wheel, driver's /co-driver's seats, clutch fluid containers, hoses etc. from damage while carrying out structural work.
8. Do not drill or weld chassis frame or remove any rivet. Do not use chassis or leaf spring as electrical earthing point during welding.
9. Do not clamp bus body cross bearers to chassis cross members.
10. No body mountings should foul with any chassis aggregate or frame cross member.
11. Avoid practice of cutting chassis cross member for mounting of 'U' bolts.
12. Do not extend chassis rear overhang.
13. Avoid eccentric mounting of cross bearers.
14. Do not use balata packing more than 6 mm thick for cross bearer mounting. This will result in premature perishing and damage to chassis long member. In case thicker packing is required, use steel plates to compensate alongwith 6 mm balata packing.
15. Avoid 'U' bolts touching chassis long members. This should be done by using aluminium alloy packing between 'U' bolt bottom radius and long member bottom flange.
16. As far as possible, avoid post location over wheel arch.
17. No modification to front face of cowl should be attempted which would restrict air flow to the radiator and air cleaner. Reducing the height/width of centre flap or closing louvers provided on cowl front face are to be avoided.

https://truckmanualshub.com/

18. No restriction should be placed beneath the remote mounted air filter. Provide sufficient clearance for fitment and removal of air cleaner.

19. Air intake hoses are not to be disturbed during body building. However, if hoses are removed for any reason, cover turbocharger / air after cooler and intake manifold openings with suitable plastic caps to avoid dust foreign particles entry, till such time hoses are connected back. Clamps should be properly tightened during this operation.

20. Do not reroute air intake, coolant and fuel lines.

21. Do not keep auxiliary tank cap open so as to avoid contamination of coolant with dust and foreign material.

22. Disconnect battery and alternator connections before starting any electrical welding on chassis/body.

23. Protect radiator / air after cooler from weld spatters and external mechanical hitting, which might damage the core of radiator / air after cooler.

24. Protect auxiliary tank from weld spatters and mechanical damage. Use proper cover to protect radiator and auxiliary tank during welding in their vicinity.

25. Do not use suspension spring pack for earthing or to check continuity while carrying out arc welding. Welding spatters will lead to breakage of spring leaves.

26. Additional air connections for accessories like air horn, etc. to be taken only from port 24 (auxiliary port) of system protection valve. Such connections should not be taken from either service brake circuits or parking brake circuit.

27. Provide suitable hinged flaps on the body skirt to facilitate draining of air tanks and to drain water from fuel water separator.

28. Do not allow body builder to drill holes on chassis frame or extend rear overhang.

29. Do not flash alternator leads to check for current flow.

30. Do not mask head lamp lens with black paint. If done, this will reduce head lamp light intensity.

https://truckmanualshub.com/

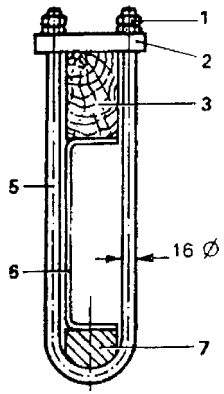

Section - AA

'U' Bolt fastening with wooden runner

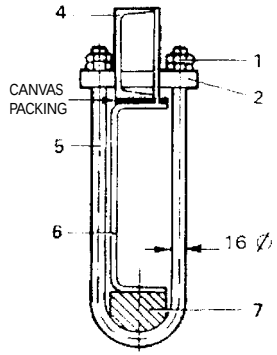

Section - AA

'U' Bolt fastening with steel runner

1. Hex. nuts M 16 x 1.5, -8.8 quality
2. Plate washer
3. Wooden runner
4. Steel runner
5. 'U' bolt 16 Ø
6. Chassis long member
7. Aluminium alloy packing

Body building

Load body should be mounted with the help of 'U' bolts and must not be fixed on to the chassis with the help of bolts and nuts by drilling holes in chassis frame. This weakens the chassis frame which is liable to crack.

Do not reinforce, weld or drill holes in the chassis frame. Use six 'U' bolts to fasten the runners on either side of chassis long member. Tighten 'U' bolts nuts (M 16 x 1.5, - 8.8 quality) to 22 mkg. torque.

A typical method in which the body should be mounted on chassis is shown in figure.

https://truckmanualshub.com/

Polyamide (PA) nylon tubing for air brake

Your vehicle is fitted with latest generation polyamide (PA) nylon tubing for air brake.

PA material is preferred for this application for :

- Excellent chemical resistance (against fuel, battery acid, hydraulic oils etc.)
- Dimensional stability and impact resistance (against gravel throw from tyres).
- Suitable working temperature is - 40ºC to 100ºC constant working and upto 130ºC peaks.
- PA is 7 to 8 times lighter than metal.
- Eliminates rusting problem, gives much lower leakage.
- Rust particles are not generated (like in metal tubes) and thus protects valves etc.

Preventive maintenance for PA nylon tubing

- Check whether all clamps are in place and suitably tightened.
- Check whether spiral cover is in place.
- Check that all end fittings are properly assembled.
- Check that PA tubes follow routing as per original vehicle.
- Check that PA tubes is not rubbing against any other object on the vehicle such as frame, bracket or connectors.
- In case of repair, use only plastic coated clamps for clamping of PA tubes.
- Ensure that PA tube is **not** touching :

  (a) Hot objects such as exhaust pipe

  (b) Sharp objects such as brackets or sheet metal parts.

  (c) Moving objects such as propeller shaft.

https://truckmanualshub.com/

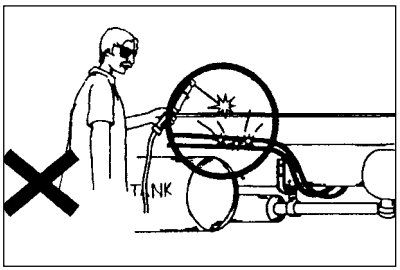

Unprotected areas while welding may damage PA tube

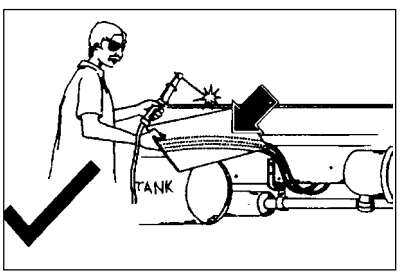

Cover PA tube before welding

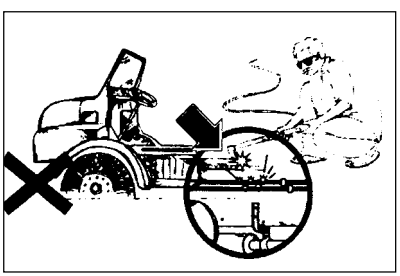

Unprotected areas while gas cutting may damage PA tube

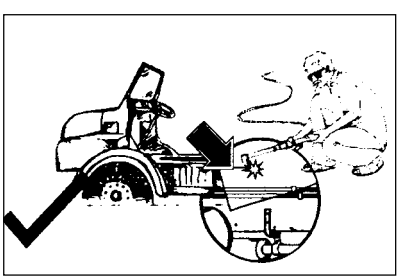

Cover PA tube before gas cutting

Guidelines and precautions for nylon (PA) tubing.

Welding and gas cutting

Cover PA tube with suitable object such as metal sheet at the time of welding and gas cutting. This will avoid welding spatter and molten metal from falling on the PA tubes and creating a hole in the PA tube.

https://truckmanualshub.com/

Hot objects

Take care that PA tubes do not touch hot objects such as exhaust pipe. This will avoid burning or melting of PA tube.

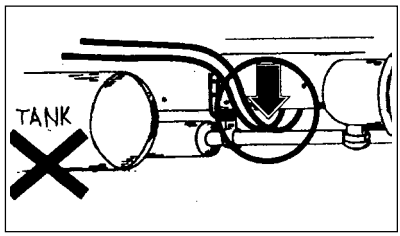

Avoid PA tube to touch exhaust pipe

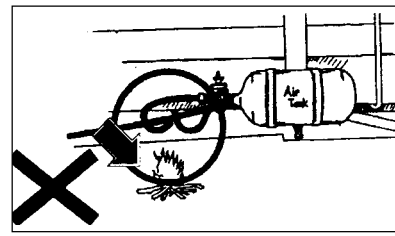

Do not light fire near PA tube

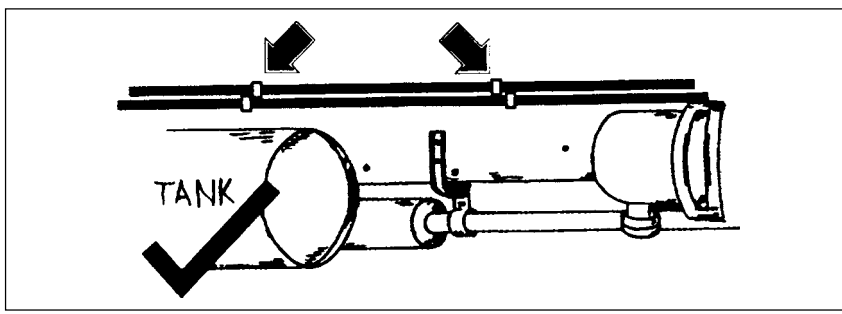

Clamp PA tubes properly to avoid coming in contact with hot objects

Sharp objects

Take care that PA tubes do not come in contact with sharp objects. This will avoid cutting of PA tubes.

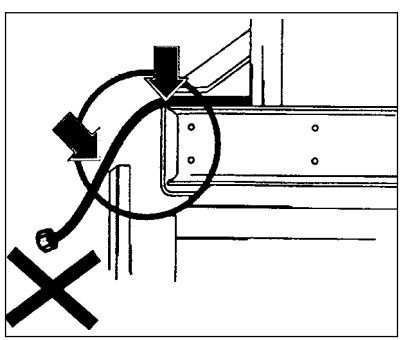

PA tubes should not touch sharp objects

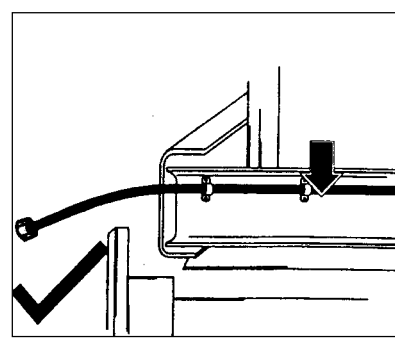

Follow original routing of PA tubes

https://truckmanualshub.com/

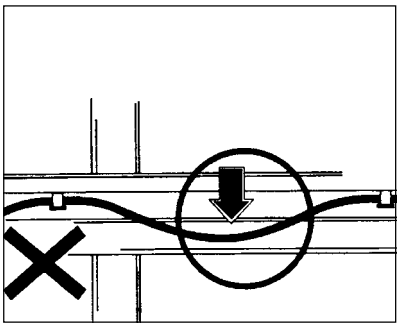

Avoid loose fitting of PA tube

Loose fitments

Do not allow loose fitting of PA tube.

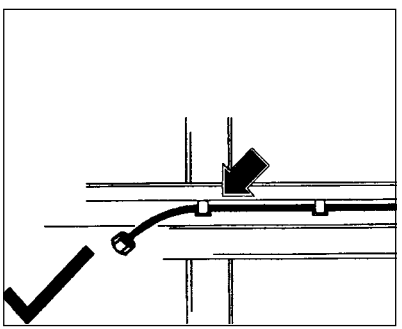

Ensure proper clamping of PA tubes

Misuse

Do not step or hang on connected PA tube. Doing so, will lead to damage of PA tube at the clamps or near end fitting, resulting in leakage.

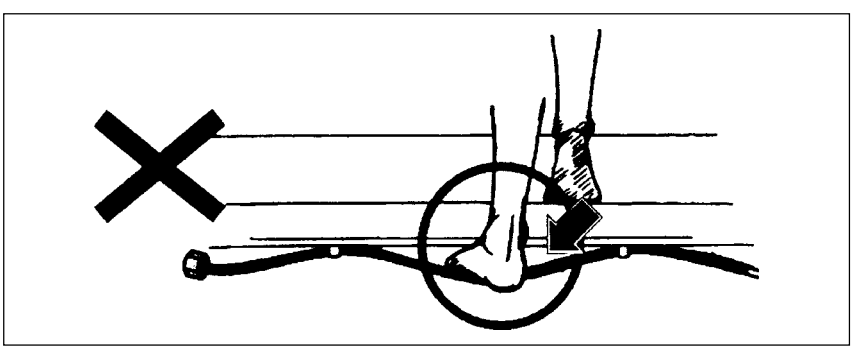

Do not step on or hang on to PA tube

https://truckmanualshub.com/

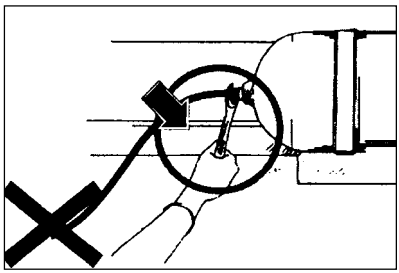

Do not tighten nut without holding PA tube

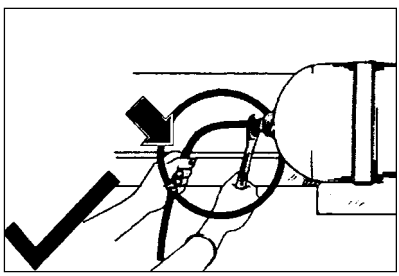

Hold PA tube before tightening nut

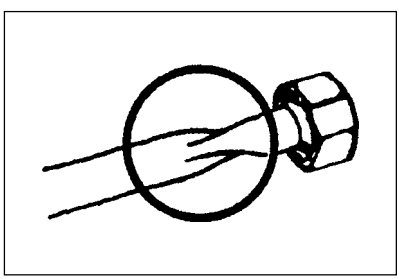

Twisted tube

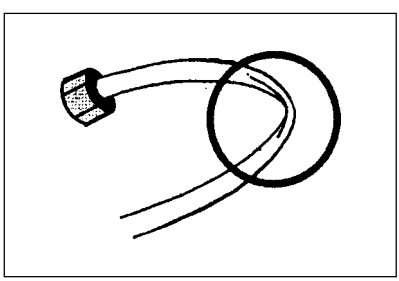

Kinked tube

Tube Fitment

In case refitting of PA tube is required

- Follow original routing of PA tube.
- Take care that PA tubes are not forcibly bent or fitted.
- Use plastic coated clamps.
- Use both hands while fitting PA tube. This will avoid twisting and kinking of PA tube.

https://truckmanualshub.com/

A) Rear under run protection device (RUPD)

This device is factory fitted on truck version.

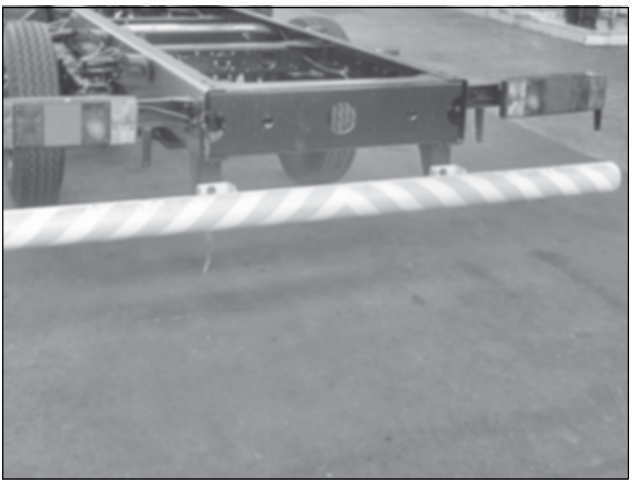

Rear under run protection device fitted on vehicle (LPT)

B) Side under run protection device (SUPD)

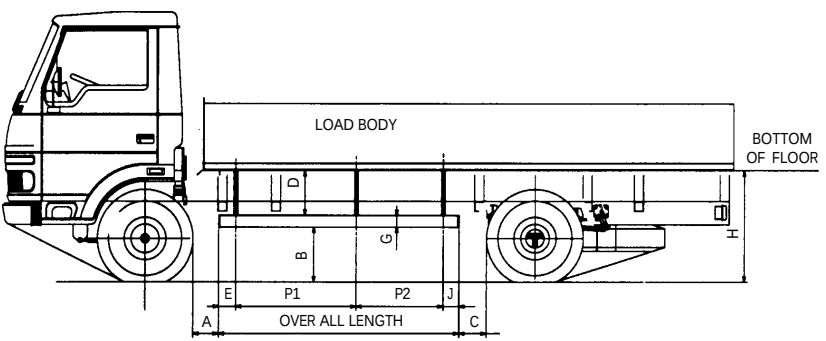

Fitment of SUPD on LPT version

Note *: While the SUPD is fitted as OE on vehicles with OE load body, customers have to ensure fitment of SUPD when they do body building. Please refer fitment details of SUPD.*

https://truckmanualshub.com/

NOTE :

1. For all other technical requirements of side protection device ref. IS:14682:1999.

2. Pitch **'P1','P2',** ……..should not be more than 1650 mm.

3. Dimn **'H'** is as measured on the load bodies manufactured by other than Tata Motors supplied load body.

4. As per the regulations, following Dimensions need to be maintained within the specified values.

   4.1 Dimension '**A'** should be less than or equal to 300 mm measured from front tyre rear face (for LPT vehicles) or less than or equal to 100 mm. measured from rear wall of cab in case of SFC vehicles.

   4.2 Dimension **'B'** should be less than or equal to 550 mm measured from ground.

   4.3 Dimension '**C'** should be less than or equal to 300 mm measured from front face of rear tyre.

   4.4 Dimension **'G**' should be greater than or equal to 100 mm.

   4.5 Dimension **'D'** should be less than or equal to 350 mm measured from lower most face of floor structure.

   4.6 Dimension '**E'** and **'J'** should be less than or equal to 120 mm.

5. Painting or powder coating to be done for rust prevention.

6. All the members as shown in drg. are with minimum cross sections and thickness required.

7. Item no. 8 to be added at the both ends to cover item no. 7, to be welded to both side guard panels.

8. # This dimensions (460 mm of item no. 1) to be changed to meet regulations given in sl. no. 4.2 (dimension `B') and 4.5 (dimension `D').

9. Long side guards can be provided with two pieces with overlapping and with suitable backing plate or longitudinal gap of maximum 25 mm is allowed.

https://truckmanualshub.com/

SUPD Proposal 1

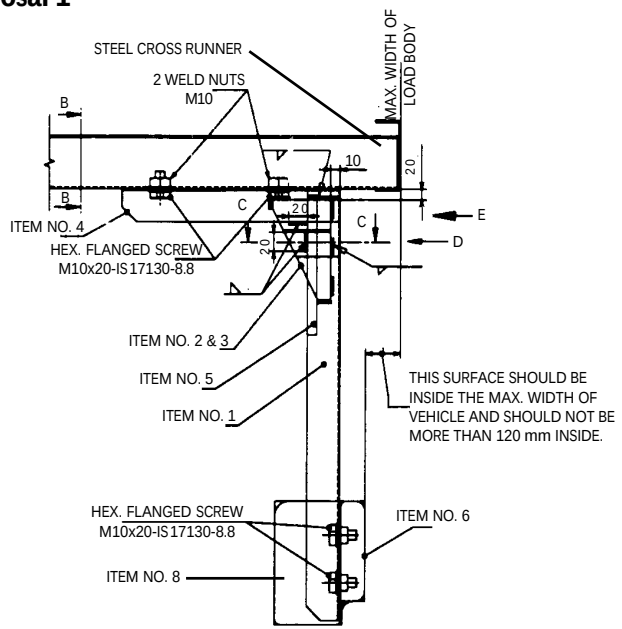

ASSY. SUPPORT SIDE GUARD

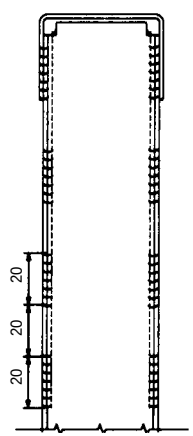

VIEW FROM - D
(ITEM NO. 2 AND 3 NOT SHOWN)

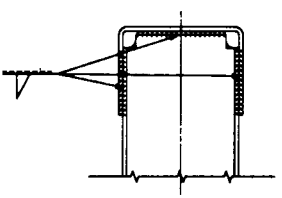

VIEW FROM - E

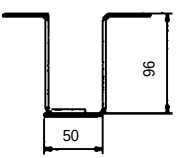

SECTION - BB

MATERIAL - SHT. 4 THK.
DD 1079 SS: 4013A

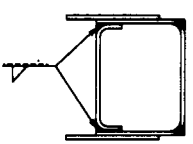

SECTION - CC

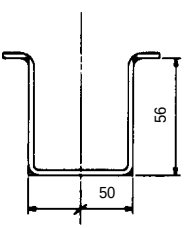

ALTERNATE FOR SECTION - BB

MATERIAL - SHT. 2.5 THK.
DD 1079 SS: 4013A

Note *: Please refer page numbers 23 to 24 for details of item no. 1 to item no. 9 & for alternate proposals.*

https://truckmanualshub.com/

ITEM NO. 1

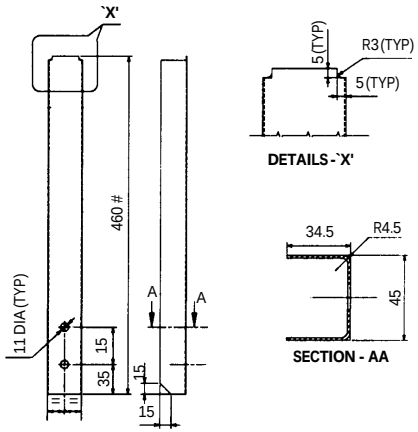

MATERIAL - SHT 1.6 THK. D513 SS: 4010

ITEM NO. 2 AND 3 (RH & LH)

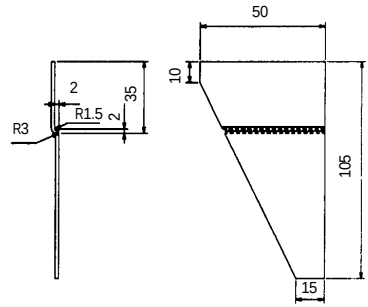

MATERIAL - SHT 1.6 THK. D513 SS: 4010

ITEM NO. 4

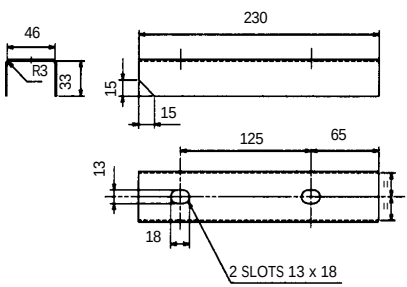

MATERIAL - SHT 1.6 THK. D513 SS: 4010

ITEM NO. 5

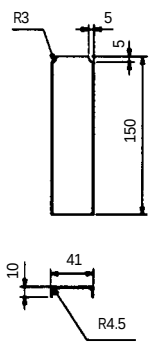

MATERIAL - SHT 1.6 THK. D513 SS: 4010

https://truckmanualshub.com/

ITEM NO. 6

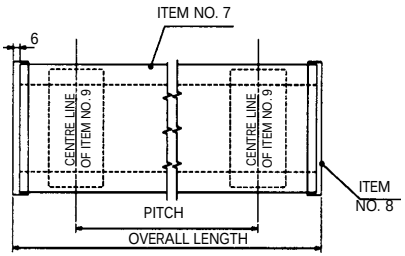

ITEM NO. 7

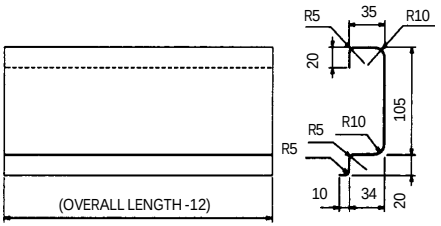

MATERIAL - SHT. 1 THK. D513 SS:4010

ITEM NO. 8

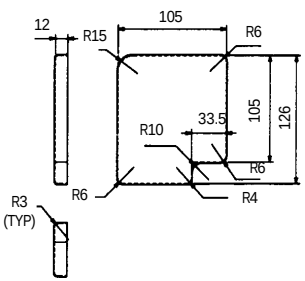

MATERIAL - SHT. 1 THK. D513 SS:4010

ITEM NO. 9

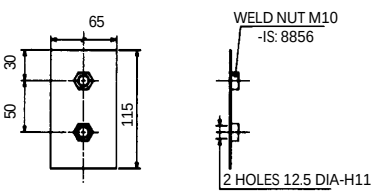

MATERIAL - SHT. 2 THK. DD 1079 SS:4013A

https://truckmanualshub.com/

SUPD ALTERNATE PROPOSAL - 2 :
a) with mounting to wooden runner
b) Two alternate sections for panel (item no. 3)

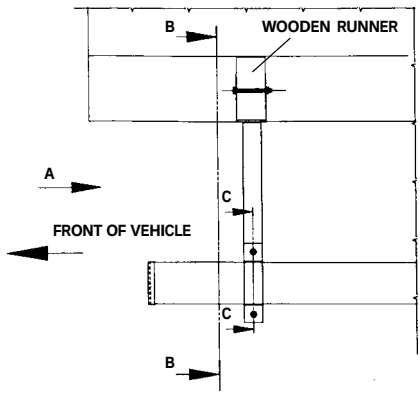

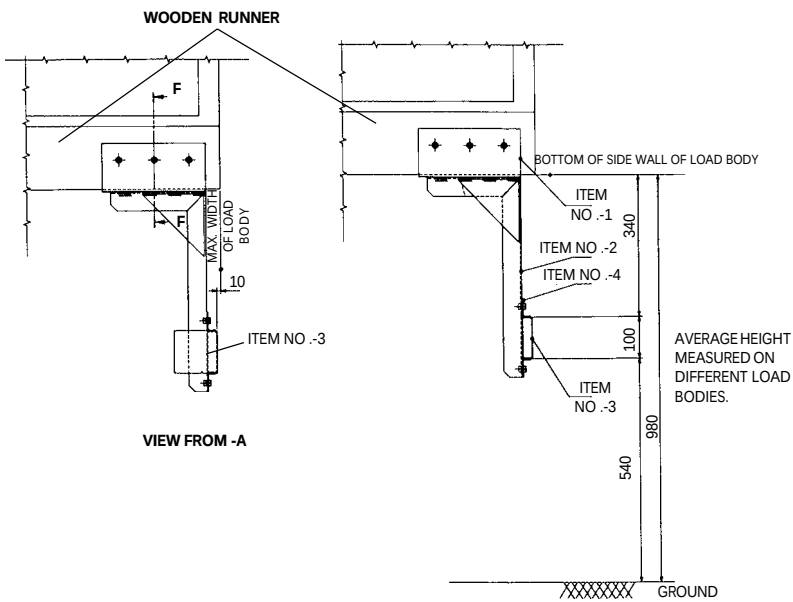

Note : *Refer page number 26 for section CC and section FF. Details of item no. 1 to item no. 4 are given on page number 26 and 27.*

https://truckmanualshub.com/

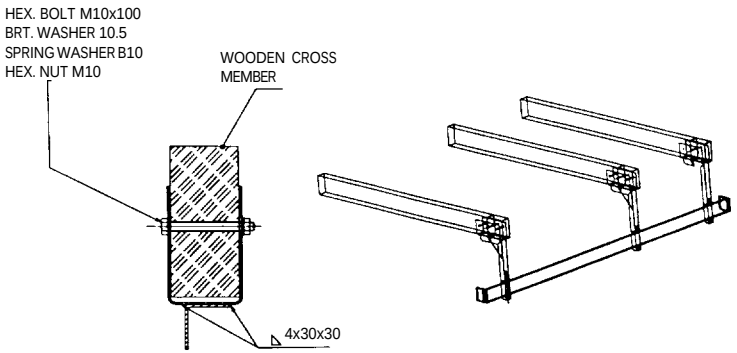

SECTION - FF

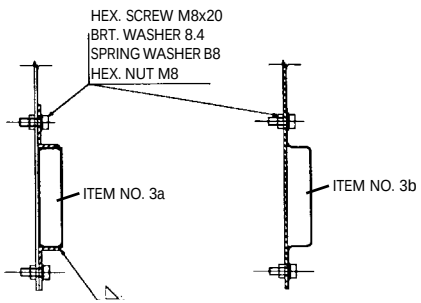

SECTION - CC
PROPOSAL - A

SECTION - CC
PROPOSAL - B

Note - Refer item no. 3a, 3b, 4 and 5.

ITEM NO. 1

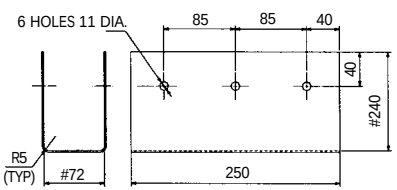

MATERIAL - SHEET 2 THK. DD 1079 SS:4013A
DIMN. TO SUIT WOODEN CROSS MEMBER
(REF- CROSS SECTION -FF)

ITEM NO. 2

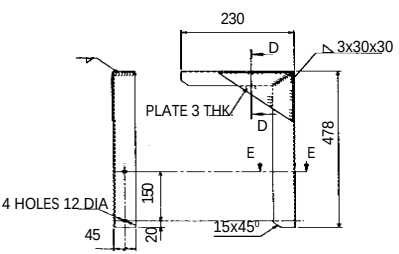

MATERIAL - ANGLES 45x45x3 THK. Fe 410W A IS : 2062

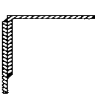

SECTION - DD

SECTION - EE

https://truckmanualshub.com/

ITEM NO. 3a - PROPOSAL - A

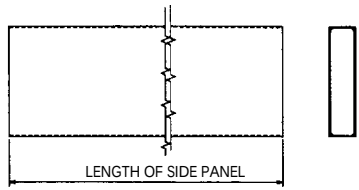

MATERIAL - RECTANGULAR TUBE 100x25x1.5 THK (MINIMUM) HF YST 210 IS : 4923

ITEM NO. 3b - PROPOSAL - B

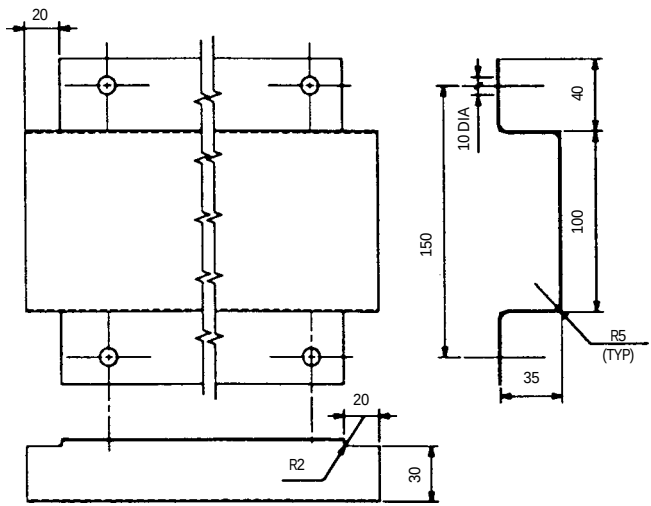

MATERIAL - SHEET 1 THK. D 513 SS : 4010

ITEM NO. - 4

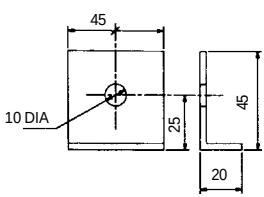

MATERIAL - SHEET 3THK. Fe410 -1079 SS : 4013A

ITEM NO. - 5

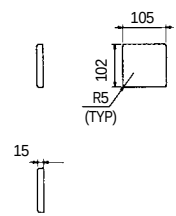

MATERIAL - SHEET 1 THK. D 513 SS : 4010

https://truckmanualshub.com/

C) Rear view mirror - LP / LPT versions

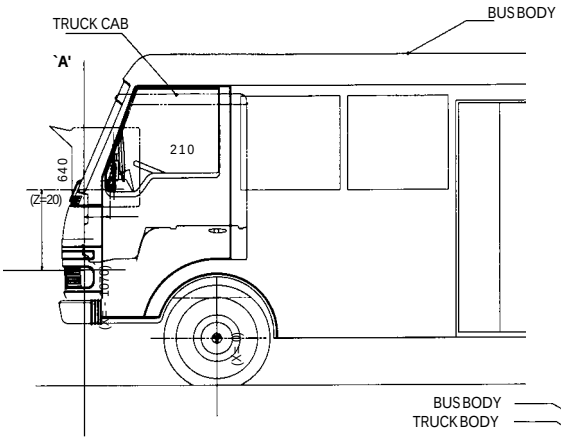

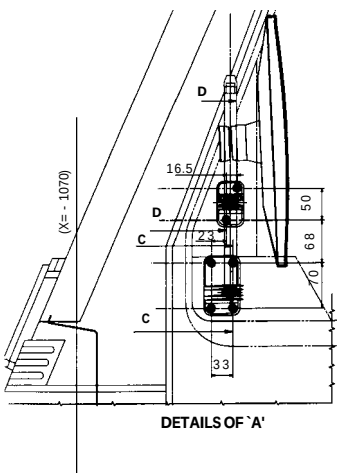

DETAILS OF `A'

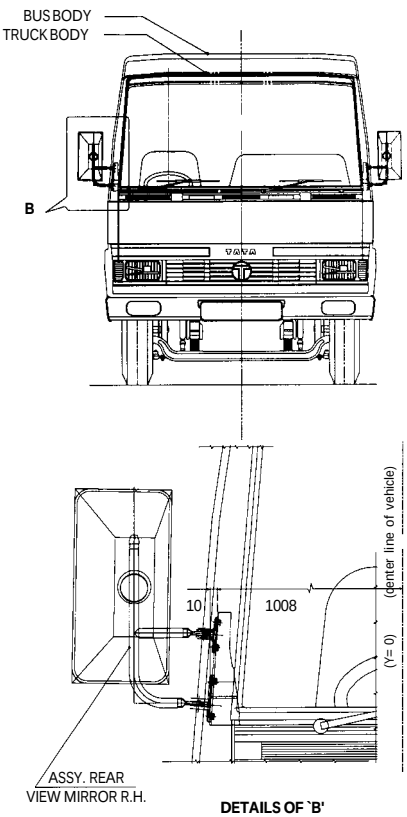

DETAILS OF `B'

Note : *Rear view mirror will be supplied as a kit with cowl and faceless chassis and should be fitted during body building. Factory built cab and bus will be fitted with rear view mirror. Please refer section -CC and section - DD on page 29.*

https://truckmanualshub.com/

Rear view mirror - LP / LPT versions

Mirror for custom built cab

For LCVs there will be two plain mirrors one each at driver side and co-driver side.

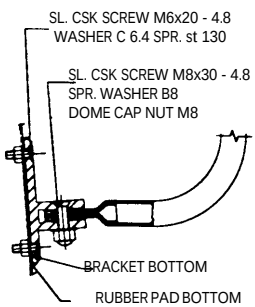

SECTION - CC

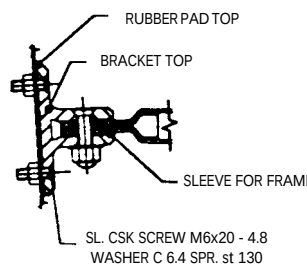

SECTION - DD

https://truckmanualshub.com/

D) WIPING SYSTEM

GUIDELINES FOR FITMENT OF WIPER SYSTEM BY BODY BUILDERS

1. Wiper system components (wiper motor, wheel box, wiper arm and blade, linkages) are supplied along with the drive away chassis and these are recommended for use on the built up vehicle. However, the windscreen and the mounting of the wheel boxes should be appropriately decided to match wiper system regulation as stipulated in AISO 11-2001 for A, B, C wiping zone area requirements.

2. Wiper motor to be mounted preferably near the centre of the panel below the wind screen with suitable mounting bracket.

4. Wheel boxes to be fitted with suitable mounting arrangement on both sides, in such a way that the wiping pattern obtained meets the regulatory requirements of AISO11-2001.

5. The path of link rod movement, during wiping system operation, should be free from any obstacles to ensure free movement.

6. Wiper arm and blade assembly should be properly tightened on the wheel box to ensure proper pressing of rubber edge of blade against the wind screen.

7. Wiper system should be balanced and it is to be ensured that there is no possibility of entangling / locking of linkages or fouling of wiper blade with rubber beading.

https://truckmanualshub.com/

LIGHTING AND SIGNALLING

Guidelines for fitment of end outline marker lamp, side marker lamp, side retro-reflector, side indicator, front fog lamps and rear fog lamp, head lamps, tail lamp assembly and side retro-reflector during body building (refer figure)

For factory built load body all the above fitments come as OE, except fog lamps**.**

Front and rear fog lamps are optional and only provision is given.

1. End outline marker lamps: A, B, C, D, E and F in the sketch are typical six locations of End outline marker lamps. Normally four lamps are fitted, two for the front (white light) and two for the rear (red light). The rear lamps can be fitted at locations suitably to be visible from the rear of the vehicle. Visibility for both front and rear lamps is defined as horizontal spread about the lamp axis of minimum +/- 80 deg and the vertical spread of minimum 5 deg above and minimum 21 deg below the axis of the lamp. They are normally mounted near the top of the vehicle; the height should be such that it is minimum 200 mm above the parking lamp. From the sides of the vehicle, the lamps should be fitted at a distance less than 400 mm. Refer figure. The wattage of the lamps should be 5 watts.

2. Side (turn) indicator lamps : G and H are the typical locations of side indicator (turn indicator) lamps. The height restrictions of the lamp are given in the figure. The wattage of the lamp should be normally 10 watts.

3. Side marker lamps & Side retro-reflectors: I,J,K,L,M and N are the typical locations of side marker lamps and side retro reflectors. These are to be fitted on all vehicles of overall length more than 6 meters. The distance restrictions are given in the figure. The side marker lamp and side retro reflector may be separately fitted or can both be included in a single package. The wattage of side marker lamp should be 5 watts. The distance restrictions are given in the figure. Refer figure for circuit diagram.

4. Front fog lamps: P and Q are the typical locations of the front fog lamps. The distance restriction from the sides of the vehicle and the height are given in the figure for Front and Rear fog lamps. The wattage of the lamps should be 55 watts each. Refer figure for circuit diagram.

5. Rear fog lamp: R is a typical location of the rear fog lamp. The distance restrictions from the longitudinal centre line of the vehicle and from the side of the vehicle are given in the figure for Front and Rear fog lamps. The rear fog lamp is to be fitted on the driver's side of the vehicle typically as shown in the figure. The wattage of the lamp should be 21 watts. Refer circuit schematic.

6. Head lamps: The head lamps are supplied along with the vehicles from the factory. The distance restrictions for mounting of the lamps during body building are given in the figure .

7. Tail lamps: The tail lamp assemblies are fitted as part of factory supplies on our vehicles. The assembly consists of rear position lamp, stop lamp, rear retro-reflector, reversing lamp and turn indicator. The distance restrictions for mounting the lamp assembly are given in the figure .

https://truckmanualshub.com/

GUIDE LINES TO BODY BUILDERS FOR FITMENT OF END OUTLINE MARKER LAMPS SIDE MARKER LAMPS / SIDE RETRO REFLECTORS, SIDE INDICATOR LAMPS, FRONT & REAR FOG LAMPS, HEAD LAMPS & TAIL LAMP ASSEMBLIES ON MCVs/HCVs/LCVs

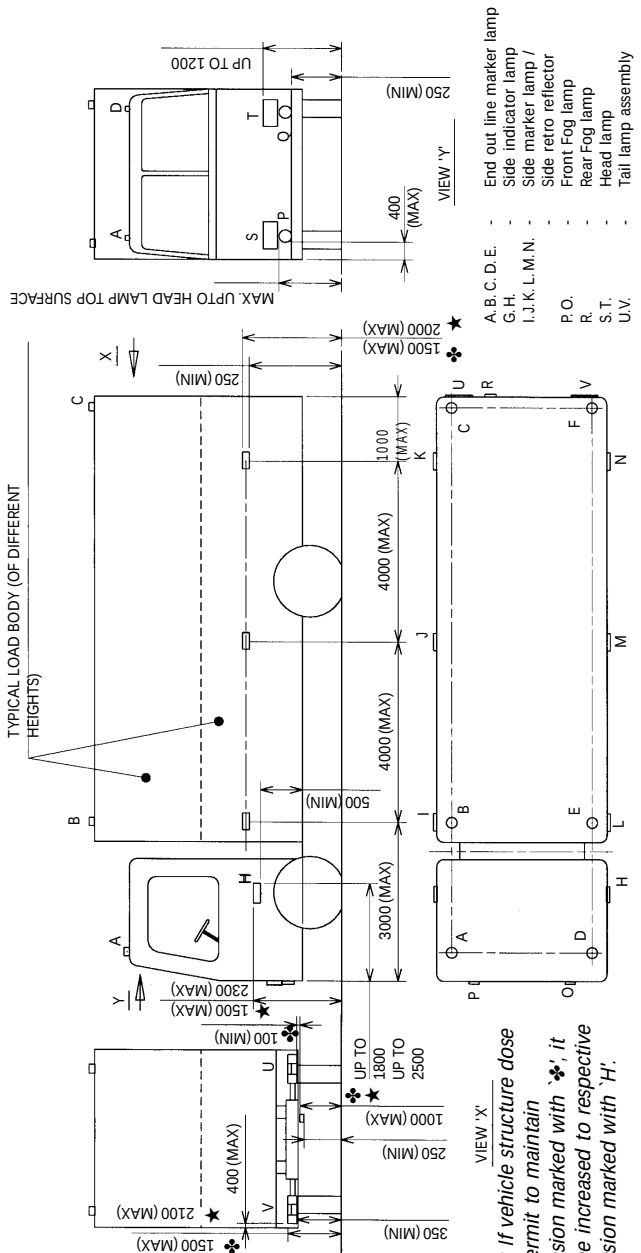

***Note** : If vehicle structure dose not permit to maintain dimension marked with '✤', it may be increased to respective dimension marked with 'H'.*

1) *This is a typical truck with load body. The fitment requirement for the various lamps are applicable for bus body applications also.*
2) *Refer attached notes.*

https://truckmanualshub.com/

CONNECTION SCHEMATIC FOR SIDE MARKER LAMPS / END OUTLINE MARKER LAMPS - REAR

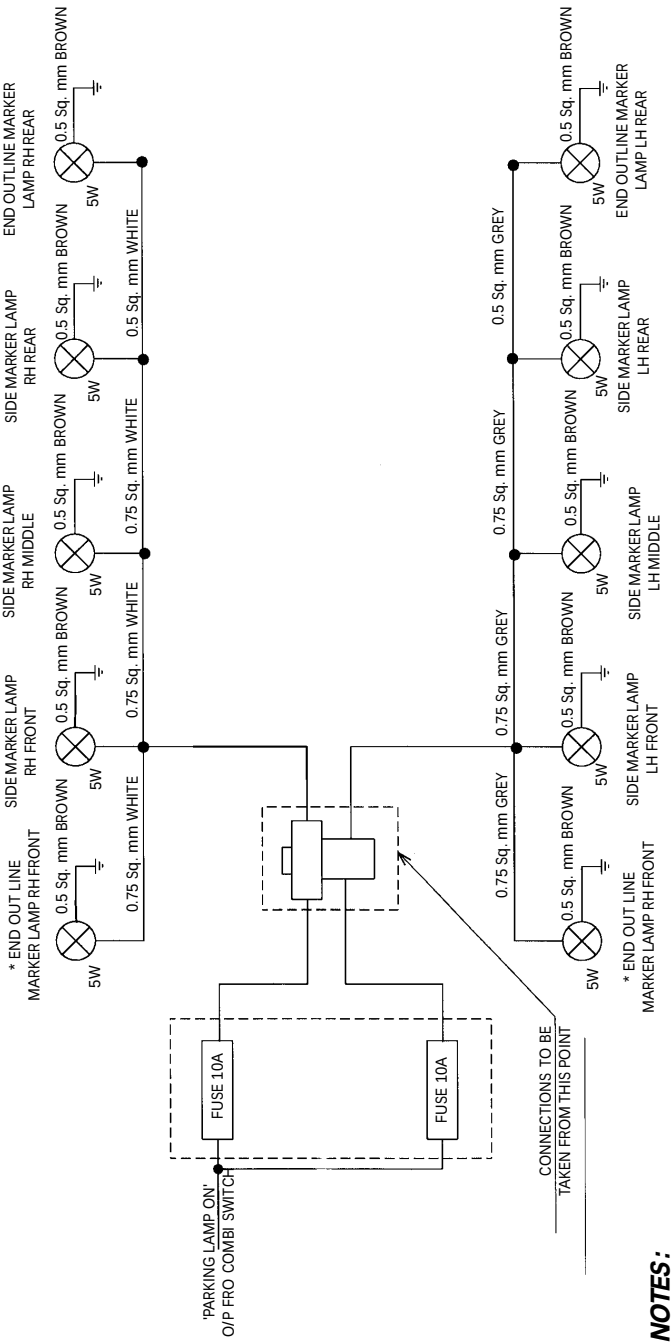

NOTES:

1) *This is a schematic and is to be used as guide line for connecting side marker lamps / end out line marker lamps-rear during body building.*
2) *All earthing connections should be on frame or body at suitable locations.*

https://truckmanualshub.com/

2. Know Your Vehicle

2.1 Vehicle identification 37

2.2 Location of aggregate numbers 41

2.3 Instrument panel 43

2.4 Switches, gauges & indicators 44

2.5 Driving controls 55

2.6 Turbocharger 57

2.7 Charge air cooler 58

2.8 Clutch booster 59

2.9 Cab tilting 60

2.10 Heating 65

2.11 Driver seat & seat belt 66

https://truckmanualshub.com/

LPT 613 - Full forward control truck with tilt cab (RHS view)

LPT 613 - Full forward control truck with tilt cab (LHS view)

https://truckmanualshub.com/

CHASSIS TYPE DESIGNATION

Description	Wheel base	Chassis type	Sales designation
LPT VERSIONS			
FULL FORWARD CONTROL CHASSIS WITH CAB AND WITHOUT LOAD BODY, TRUCK VERSION WITH 697TCIC BHARAT STAGE-II ENGINE, WITH FULL AIR S'CAM BRAKE WITH HEATING AND DEMISTING, 3800mm W.B.	3800mm	381 325	LPT 613/38
FULL FORWARD CONTROL CHASSIS WITH CAB AND WITHOUT LOAD BODY, TRUCK VERSION WITH 697TCIC EURO-II / BHARAT STAGE-II ENGINE, WITH FULL AIR S'CAM BRAKE, 3800mm W.B.	3800mm	381 327	LPT 613/38
LP VERSIONS			
FULL FORWARD CONTROL CHASSIS WITHOUT FACE BUS VERSION WITH 697TCIC EURO-II / BHARAT STAGE-II ENGINE WITH FULL AIR S'CAM BRAKE 3800mm W.B.	3800mm	381 224	LP 613/38
FULL FORWARD CONTROL CHASSIS WITH COWL BUS VERSION WITH 697TCIC EURO-II / BHARAT STAGE-II ENGINE WITH FULL AIR S'CAM BRAKE WITH HEATING AND DEMISTING , 3800mm W.B.	3800mm	381 225	LP 613/38

https://truckmanualshub.com/

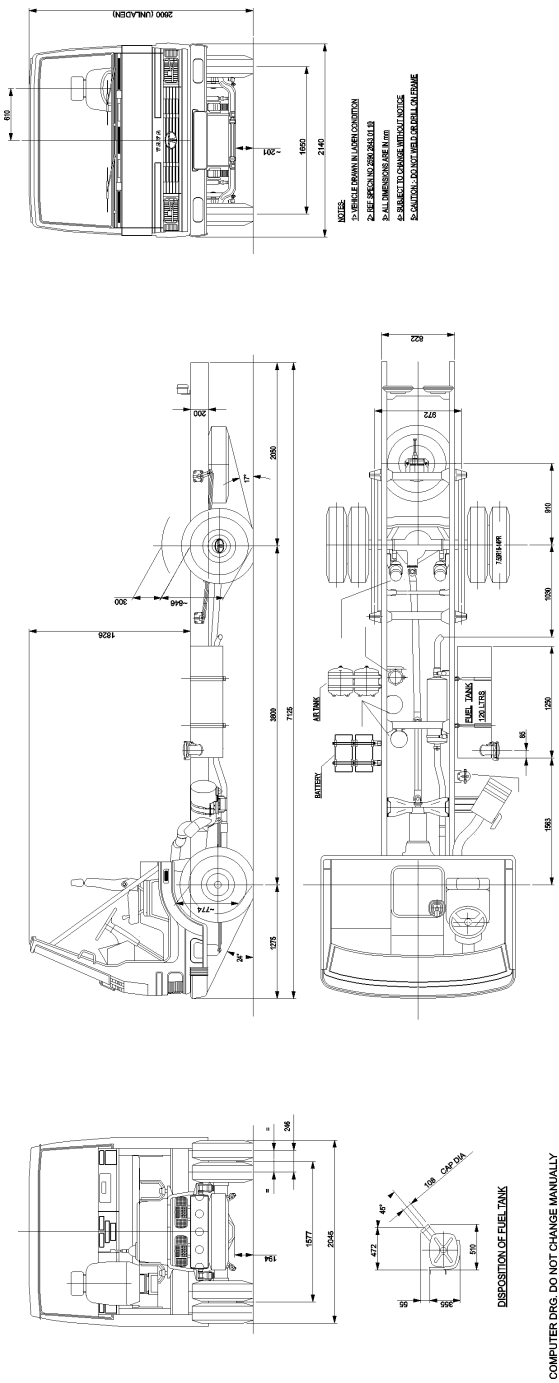

LP 613 CHASSIS WITH COWL 38 WB EURO- II (LHD)

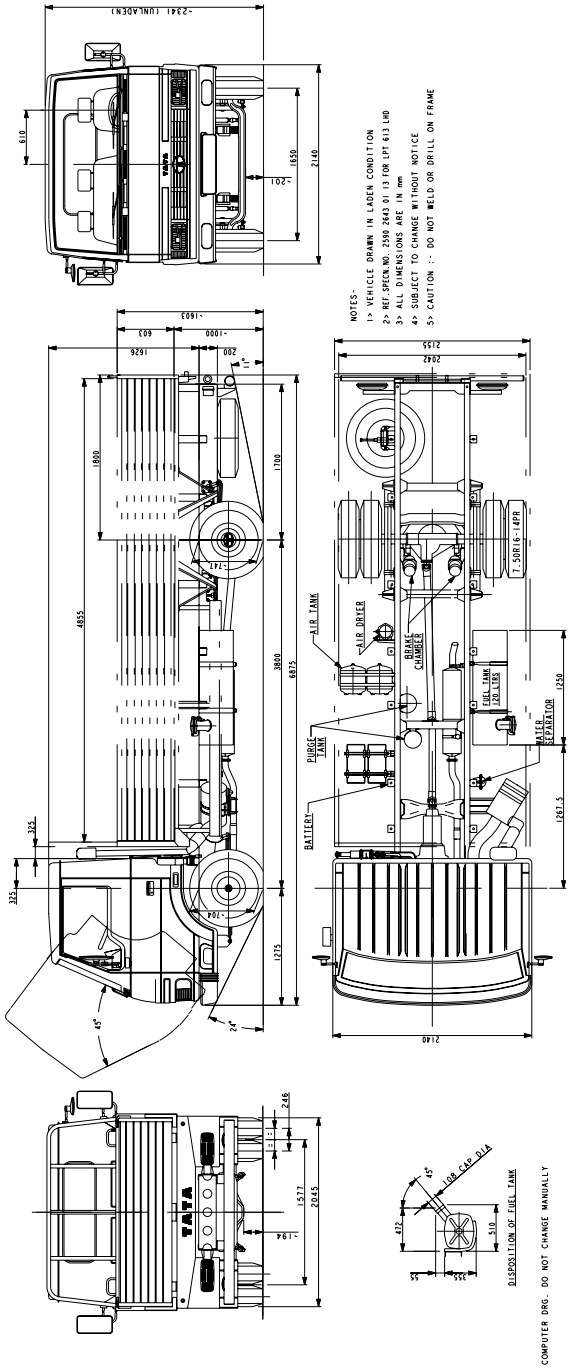

LPT 613 CHASSIS WITH CAB AND LOAD BODY 38 WB EURO- II (LHD)

https://truckmanualshub.com/

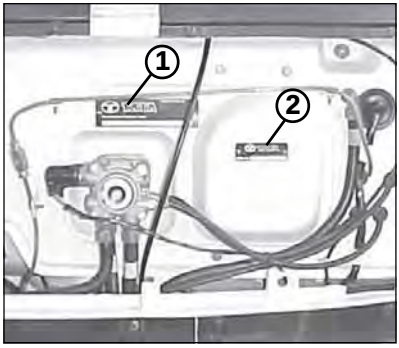

1. *Chassis number plate*
2. *Cab /Cowl number plate*

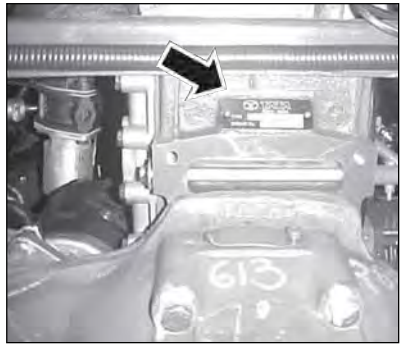

Engine number plate location

Engine number plate

Cab / Cowl number plate

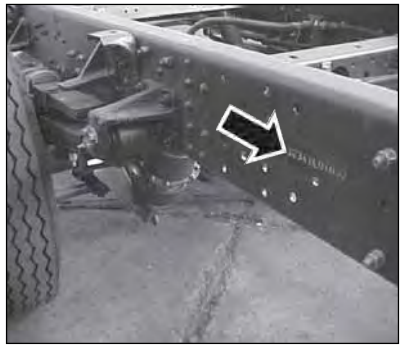

Chassis number - LHD

Chassis number plate

https://truckmanualshub.com/

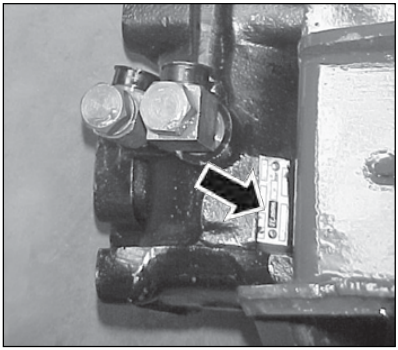

Power steering gearbox number plate

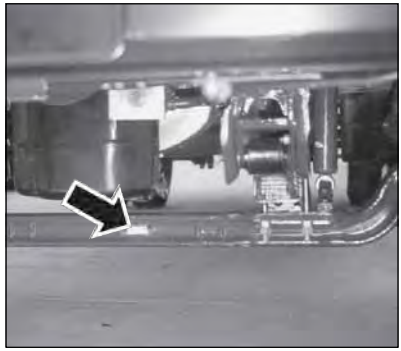

Front axle number plate

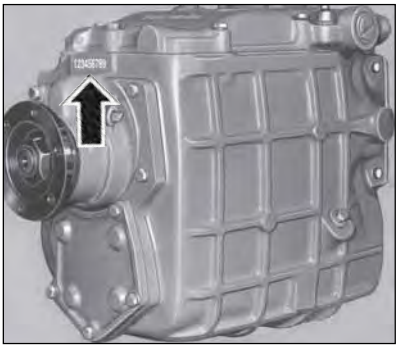

Gearbox number

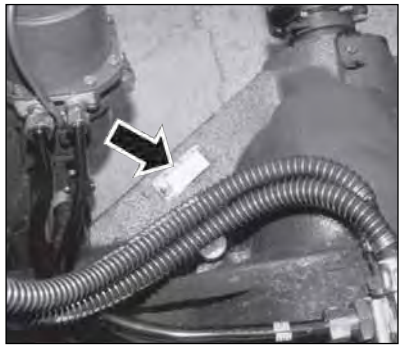

Rear axle number plate

https://truckmanualshub.com/

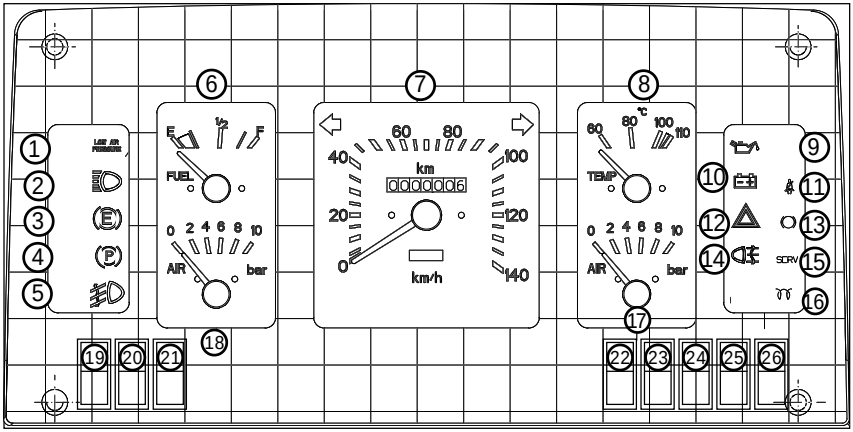

Instrument panel

1. *Low air pressure indicator*
2. *High beam indicator*
3. *Exhaust brake indicator*
4. *Parking brake indicator*
5. *Front fog lamp indicator*
6. *Fuel gauge*
7. *Speedometer with odometer*
8. *Coolant temperature gauge*
9. *Low oil pressure indicator*
10. *Battery charging indicator*
11. *Seat belt indicator*
12. *Hazard warning indicator*
13. *ABS indicator (If fitted)*
14. *Rear fog lamp indicator*
15. *Air filter service indicator*
16. *Glow plug indicator*
17. *Air pressure gauge (II)*
18. *Air pressure gauge (I)*
19. *Exhaust brake isolator switch*
20. *Front fog lamp switch*
21. *Blank*
22. *ABS switch (If fitted)*
23. *Head lamp leveling knob*
24. *Blank*
25. *Rear fog lamp switch*
26. *Engine compartment lamp switch*

https://truckmanualshub.com/

Fuel gauge

Coolant temperature gauge

Speedometer

Air pressure gauge

Fuel gauge

Fuel gauge indicates the level of fuel in tank. It is electrically operated. Fuel level is indicated on gauge through a sensing unit mounted on fuel tank.

Coolant temperature gauge

Temperature gauge indicates coolant temperature. It senses coolant temperature through a transducer mounted on upper cooling line. When gauge needle touches red band on dial it indicates engine over heating.

If overheating is observed & coolant level in auxiliary tank found to be low, stop engine and allow it to cool down. Top up coolant water mixture in 1:1 ratio through auxiliary tank filler neck.

Cylinder head may crack, if coolant mixture is topped up when engine is hot.

Speedometer

It indicates vehicle speed in kmph and also the distance covered by vehicle in km. This is driven by a flexible shaft connected to the output shaft of gear box. High beam indicator is also provided on speedometer dial.

Air pressure gauges

Two air pressure gauges have been provided, one each for front and rear brake circuits. Vehicle should not be driven till a minimum air pressure of 5.6 bar is reached in both air tanks. Regulated cut out air pressure is 7.4 ± 0.2 bar and cut in pressure is 6.2 bar min.

https://truckmanualshub.com/

SERV indicator

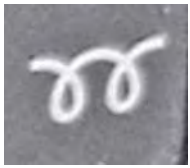

GLOW indicator

Front fog lamp indicator

Low air pressure indicator

Rear fog lamp indicator

SERV indicator

When it glows, it indicates that the Air cleaner filter is choked. Filter needs to be cleaned/ replaced. When the ignition key is in ON position, before starting the engine this indicator should glow

GLOW indicator

This indicator is used to indicate the functioning of Flame start system. When the ignition key is in ON position, before starting the engine, if the engine coolant temperature is less than 20°C, wait to crank till the indicator glow continuously and proceed to crank the engine once the indicator start blinking. If the engine coolant temperature is more than 20°C, the indicator blinks continuously i.e. ready to start.

Front fog lamp indicator

This indicator will glow only when Front fog lamp is switched on.

Low air pressure indicator (Red)

Two low pressure (LP) switches one each for front & rear brake circuits are connected at dual brake valve. When pressure in any one or both the circuits is less than specified value, these switches activate low air pressure indicator.

Rear fog lamp indicator

This indicator will glow when rear fog lamp is switched ON.

https://truckmanualshub.com/

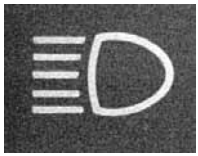

High beam indicator

High beam indicator

When it glows, it indicates that the head lights high beams are on. It is provided in speedometer dial.

Parking brake indicator

Parking brake indicator

This indicator comes ON when parking brake is applied and goes OFF when it is released. It will also glow when air pressure in parking brake circuit is less than 4.6 bar.

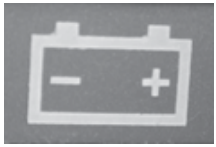

Battery charging indicator

Battery charging indicator

When it glows, it indicates that battery is not getting charged, i.e. during idling or when alternator is defective with normal engine running. When ignition key is in ON position, before starting the engine this indicator should glow.

Low oil pressure indicator

Low oil pressure indicator

This indicator glows when ignition key is in ON position before starting engine. It should go off after starting the engine, when oil pressure builds up.

If indicator continues to glow even after the engine has started, stop the engine, trace out the fault in lubrication system / electrical connections and rectify.

Side indicators

Side indicators

Side indicator with arrow pointing towards left will glow, when combi lever is moved for LH indication. Similarly side indicator with arrow pointing towards right will glow, when combi lever is moved for RH indication.

https://truckmanualshub.com/

Exhaust brake indicator

Hazard warning indicator

Glow plug indicator

ABS indicator

Exhaust brake indicator

This indicator comes ON when exhaust brake is in operation

Hazard warning indicator

It comes 'ON' when hazard warning lights are switched 'ON' to warn the other road users about the hazardous condition of vehicle.

Glow plug indicator (Amber)

It glows when the ignition key is turned to position 'ON' and after a few seconds it goes 'OFF' indicating that engine can be started.

If glow plug indicator light does not go off automatically, get it checked.

ABS Indicators (if fitted)

ABS indicator light on instrument cluster illuminates approx. for 5 sec. when the ignition key is turned to 'ON' position. This is normal and indicates the system is performing a self check. If the light does not illuminate when ignition is 'ON' or remains illuminated after initial self check and while driving or flashes, fault may exist in the ABS system.

In this case also the normal braking system is still effective and can able to provide normal stopping ability.

In this condition it is recommended to taking your vehicle to the nearest Dealer / service outlet and get your vehicle attended as soon as possible if the warning light stays on.

https://truckmanualshub.com/

Seat belt indicator

Seat belt indicator

It comes 'ON' when seat belt is not fasten or belt tongue is not locked in to buckle.

Exhaust brake isolator switch

Exhaust brake isolator switch

Exhaust brake can be made inoperative, by exhaust brake isolator switch, whenever required.

Engine compartment switch

Engine compartment switch

Provided to switch ON the bulb located in engine compartment for inspection purpose.

Front fog lamp switch

Front fog lamp switch:

This switch is provided to switch on Front fog lamps. Front fog lamps are operative only when the park lamps are switched ON.

Head lamp leveling knob

Head lamp levelling switch

A motorized head lamp levelling arrangement with the setting knob is provided near the instrument panel.

This switch has 4 positions viz. 0, 1, 2 and 3. Appropriate levelling position can be set depending on the load.

https://truckmanualshub.com/

Rear fog lamp switch

Rear fog lamp switch:

This switch is provided to switch on Rear fog lamps. Rear fog lamps are operative only when the park lamps along with Head lamps (Hi beam/ Low beam) or Front fog lamps are switched ON.

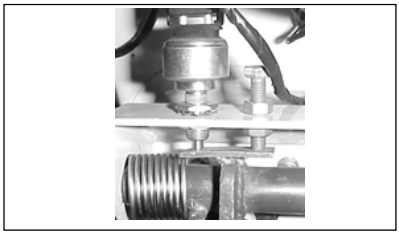

Mechanical stop light switch

Mechanical stop light switch

A mechanical stop light switch is mounted above brake control lever. Whenever brake pedal is depressed for applying brakes, stop light switch comes into operation and lights at rear tail lamp glow. This also activates engine exhaust brake solenoid valve for exhaust brake application.

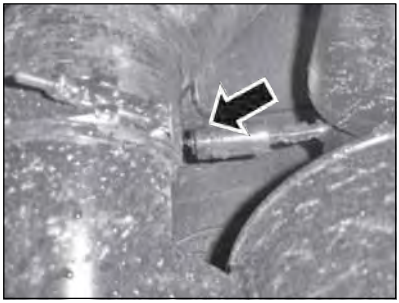

Electric service indicator switch

Electric service indicator switch

This switch is provided on air cleaner. Switch contact takes place only when the filter get chocked.

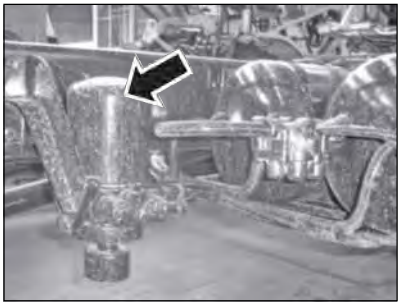

Air dryer heater

Air dryer heater

This heater is a part of air dryer assy. This heater is provided to heat the moisture if any in the air brake lines. This heater gets switched ON at 7^0 C of air temperature and OFF at 29^0 C automatically.

https://truckmanualshub.com/

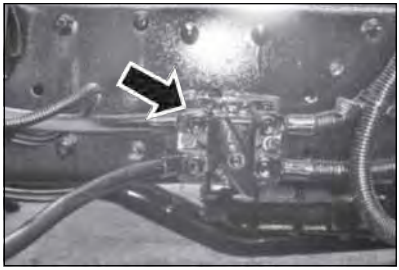

Battery isolator switch

Battery cut off switch

Bus chassis is provided with battery cut off switch to isolate battery from electrical system when required.

Battery is connected to starter motor and other circuits through isolator switch. This is to be switched off while carrying out any electrical work on the vehicle and also when vehicle is parked for long duration.

Steering lock cum ignition switch-key positions

STEERING LOCK CUM IGNITION SWITCH

Position of key		**Steering**	**Electricals**
Clockwise direction			
'LOCK'	without key	Locked	All OFF
'LOCK'	with key	Locked	All OFF
'ACC'	with key	Unlocked	ACC ON
'ON'	with key	Unlocked	ACC + IG ON
'START'	with key	Unlocked	IG + ST ON
Anti-clockwise direction			
'ON'	with key	Unlocked	ACC + IG ON
'ACC'	with key	Unlocked	ACC ON
'LOCK'	with key	Unlocked	All off
'LOCK'	without key	Locked	All off

(ACC = Accessories)
(IG = Ignition)
(ST = Start)

https://truckmanualshub.com/

Steering lock cum ignition switch with key (LHD)

Steering lock cum ignition switch

It is located on right hand side of steering column. It has following positions.

'LOCK' Position

Key can be inserted or removed in this position only. Steering wheel gets locked, only when key is removed.

'ACC' Position

Steering gets unlocked in this position. Only accessories are ON.

'ON' Position

By turning the key to position ON, low oil pressure lamp, battery charging indicator lamp, parking brake indicator lamp (if applied), fuel gauge and temperature gauge are switched on. Other electrical systems are ready for operation. If none of the above warning indicators /gauges are working the chances are that the fuse for engine and gauges is blown off in which case engine will not start.

'START' Position

Turn the key further clockwise to start position to operate starter motor. This is a spring return position.

As soon as the engine starts, release ignition key so that the key can come back to ON position and starter motor disengages.

https://truckmanualshub.com/

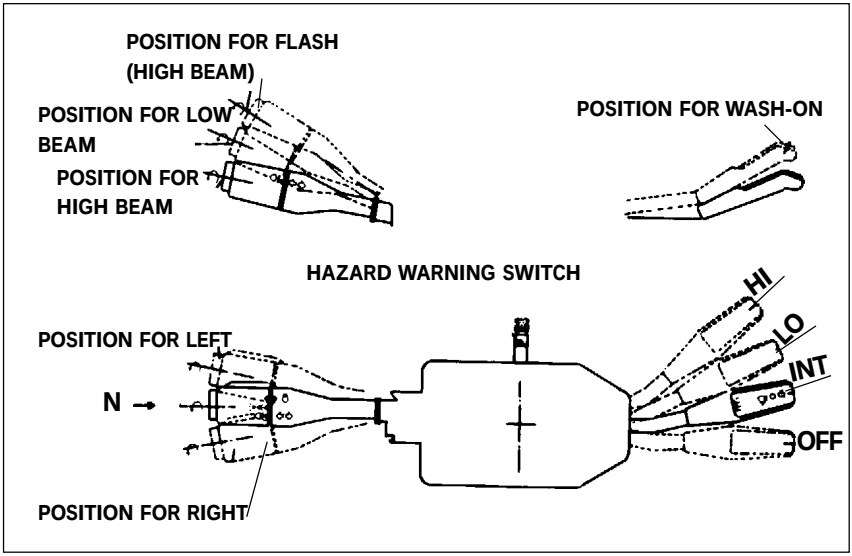

Combination switch

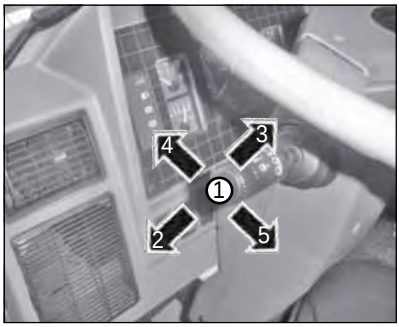

Combination switch (LHD)

Combination switch

Combi switch is mounted on steering column. It has 2 levers.

One lever is for operating turn signals, head lamps, parking lamps and number plate lamps. This lever is mounted on RH side on RHD vehicles and LH side on LHD vehicles.

Head lights

Position 1 - Low beam

Position 2 - High beam

Position 3 - High beam (flash)

Turn signals

Position 4 - Turn signal right

Position 5 - Turn signal left

Self cancellation turn signal arrangement is provided. When turn signal option is used, this lever will return to neutral position on its own when steering wheel is brought back to straight ahead position.

https://truckmanualshub.com/

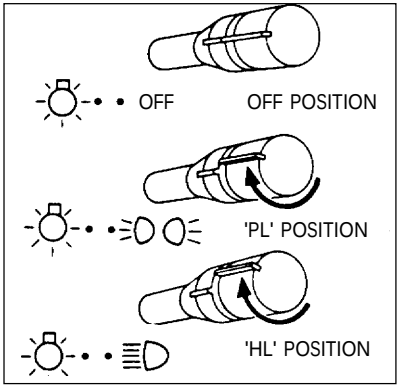

Light switch

Note :

High beam flash (No. 3 position)

High beam will be 'ON' as long as lever is held in position '3' irrespective of the knob position. This is spring loaded position and can be used in day time for giving signal to on coming traffic.

Lights

Lights are operated by turning the knob of this lever as indicated below

First notch (PL position)

Parking lights, instrument panel lights, number plate lights, control backlights and top marker lights are switched 'ON'.

Second notch (HL position)

In addition to parking, instrument panel, control backlights, number plate lights and top marker lights, headlights are also switched ON.

OFF-position

All lights are switched off in this position.

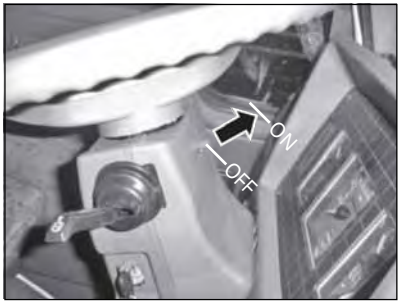

Hazard warning switch

Hazard warning switch

Combi switch assembly also has a switch for operating hazard warning device.

To switch ON hazard warning, pull the knob located behind steering wheel. All turn signals lights will flash simultaneously to warn other road users about the hazardous condition of vehicle.

Push back this knob to original position when hazard warning requirement is over.

https://truckmanualshub.com/

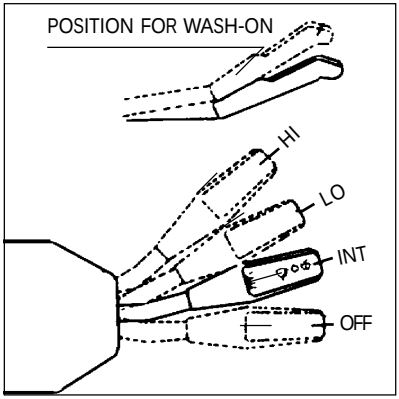

Wiper motor operating lever (LHD)

Windshield wiper and washer

The lever on other side is for operating windshield wiper and washer. This lever is located on LH side on RHD vehicle and RH side in LHD vehicle.

Position

'OFF'	-	Wiper motor switched 'OFF'
'INT'	-	Wiper sweeps intermittently
'LO'	-	Low speed of wiper motor
'HI'	-	High speed of wiper motor

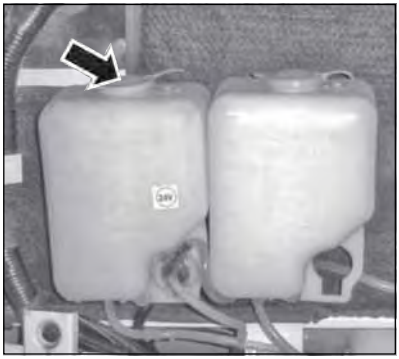
Windshield washer water reservoir

To operate windshield washer, lift the lever. Windshield washer will remain in operation as long as the lever is held in this position.

When wind shield washer is actuated, wipers are also switched on. Wind shield washer water reservoir is accessible after opening centre flap. Top up reservoir with clean water regularly. **Do not use soap solution.** In cold climates, Use methanol and water in the ratio 50:50 to avoid water freezing. Please refer chapter no. 6.3 for details of recommended antifrost and ratio for varying ambient temperatures.

Do not operate windshield washer more than ten seconds at a time.

Use methanol and water in the ratio 50:50 to avoid water freezing.

https://truckmanualshub.com/

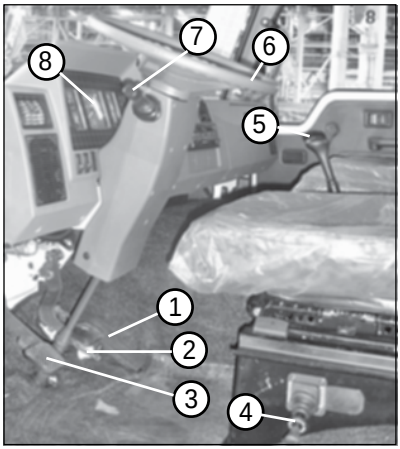

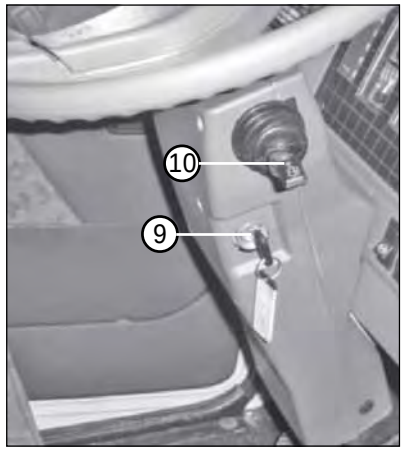

Driving controls LHD

1. *Accelerator pedal*
2. *Brake pedal*
3. *Clutch pedal*
4. *Parking brake*
5. *Gear shift lever*
6. *Steering wheel*
7. *Combiswitch lever (Lights)*
8. *Instrument panel*
9. *Steering lock cum ignition switch*
10. *Combiswitch lever (Wiper/ washer)*

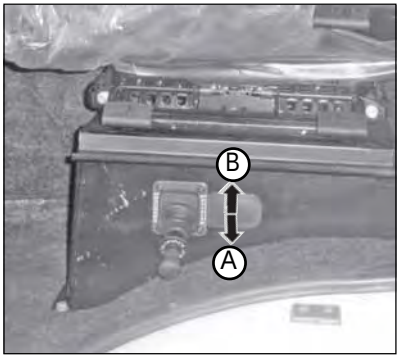

Hand brake valve

Hand brake (parking brake)

Hand brake is integral with spring brake actuator on rear axle. Spring brake chamber piston ram acts directly on push rod assembly of brake chamber.

A.	*Brake applied*
B.	*Brake released*
A to B	*Gradual application.*

https://truckmanualshub.com/

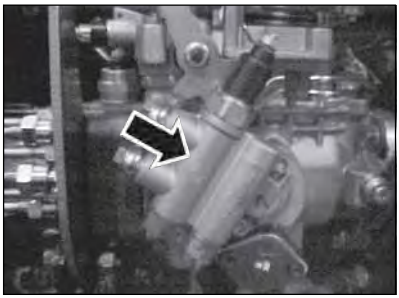

KSB unit

KSB unit (for Euro II vehicles)

KSB unit is a cold start throttle advance mechanism. It is an integral part of fuel injection pump.

KSB unit

- Provides necessary advance in lower throttle operation during cold condition.
- Allows a normal dynamic timing during regular operation.
- Reduces white smoke, misfiring in cold start and part throttle operation.

During normal running of engine, 24 V supply continues to KSB unit through thermo switch.

Pull to open the bonnet - LHD

Opening/closing of front centre flap

For opening centre flap, a lever as shown has been provided. For LHD vehicles it is located on LH side above clutch pedal. To open centre flap, pull this lever and lift centre flap.

A stay rod has been provided to keep centre flap open position. To close centre flap, remove stay rod. Slowly drop centre flap and press it down to make sure that it is locked.

Turbocharger (Euro II)

Lubrication of the turbocharger

Rotor assembly of turbocharger is supported by two floating lead bronze sleeve bearings in the bearing housing. These bearings are lubricated with finest filtered and cooled oil from lubrication system. There is a heat shield arrangement provided between turbine housing and bearing housing to avoid heating of the bearings.

Advantages of turbocharger

Turbocharged engine has following advantages over naturally aspirated engine of same size and weight.

1. Increased power is obtained with the same engine dimensions thereby increasing the power to weight ratio. Thus, the engine is lighter and payload value of the vehicle is improved.
2. A turbocharged engine has a lower specific fuel consumption, so the vehicle consumes less fuel.
3. Turbocharger reduces black smoke in the exhaust.
4. Loss of engine power at higher altitudes is much less making it ideal under all operating conditions. Especially in hilly areas, payload capacity is further improved by this aspect.
5. Turbocharger acts as an additional silencer on exhaust side, thus reducing engine noise.

Maintenance of turbocharger

No adjustments or repairs are to be carried out on the turbocharger. In case of doubtful performance from the engine because of malfunctioning of turbocharger, take your vehicle to Tata authorised workshop.

Following precautionary measures should be taken to obtain trouble free performance.

1. During regular engine inspection, look carefully for any oil leakage at the oil inlet banjo connection on bearing housing. Do not run engine unless leakage at this point is rectified.
2. Do not stop the engine suddenly as it may damage rotor bearings. Allow engine to idle for atleast 3 minutes before switching it off. Similarly, do not increase engine speed suddenly.

   Run the engine at low idle speed for atleast 3 minutes after starting to build up oil pressure before increasing engine speed.
3. Since the speed of rotor assembly is tremendously high, (nearly 1,00,000 rpm) it requires finest filtered oil. Therefore, ensure cleanliness of engine oil by adhering to regular schedules of engine oil and oil filter cartridge change intervals.
4. As the unfiltered dust particles entering compressor housing may prove dangerous, make sure that there is no leakage in air intake system and that air filter elements are in good condition and sealings are perfect.
5. Insist on use of only recommended grade of engine oil, genuine engine oil filter and air filter cartridges.

https://truckmanualshub.com/

Charge air cooler (Euro II)

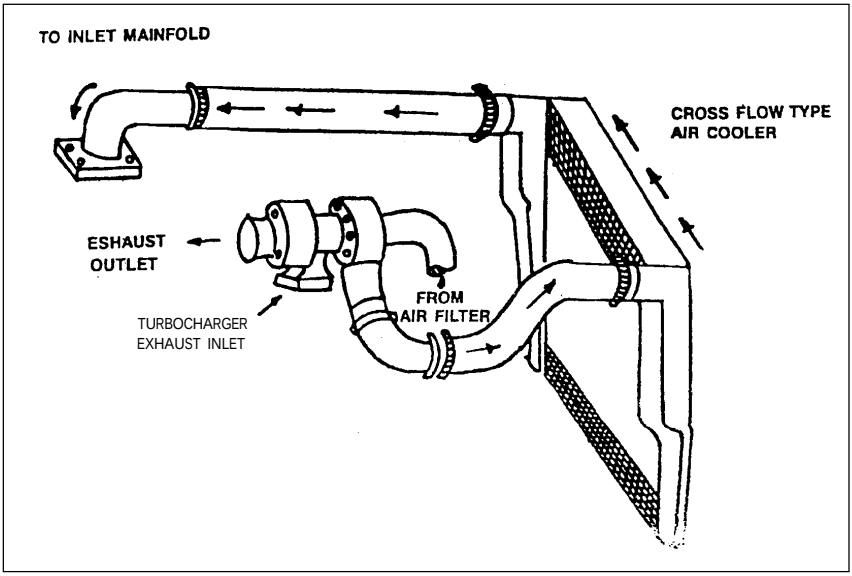

Charge air cooler

Advantages of charge air cooler

Hot air coming out of turbo charger flows through charge air cooler and gets cooled before entering intake manifold, thus increasing density of intake air for better combustion.

Charge air cooler is mounted in front of radiator.

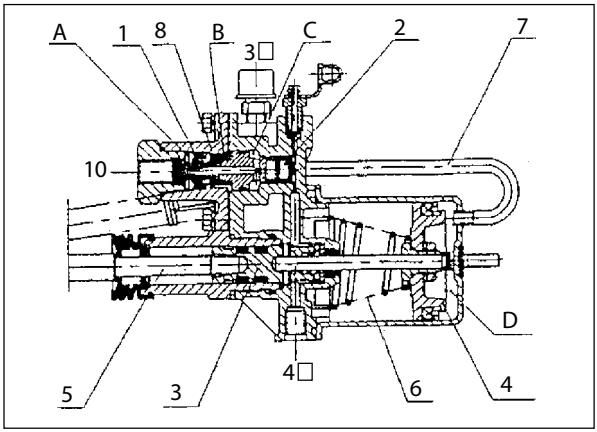

Port 1. Inlet port (for compressed air)
Port 3. Vent (for compressed air) Port 4. Control port (for clutch fluid)
2. Piston
3. Piston
4. Piston
5. Push rod
6. Return spring
7. Wind pipe
8. Return spring
A.
B. Cavity
C.
D. Cavity

Clutch Booster

Hydraulic clutch actuation system with pneumatically operated clutch booster has been provided to reduce clutch pedal effort.In this system, clutch booster replaces the function of clutch slave cylinder.

Compressed air connection to operate clutch booster has been tapped from port No. 24 of system protection valve.

Output rod of clutch booster is connected to clutch release fork.

When there is no force on clutch pedal, push rod (5), pistons (3 & 4) are in stand still position due to the force exerted by return springs (6 & 8).

When pedal is pressed to disengage clutch, clutch fluid under pressure enters throught port no. 4 and acts on piston (3). due to this piston (3) moves leftwards.

At the same time fluid under pressure acts on controlling piston (2) due to which piston (2) moves leftwards to close air outlet and to open air inlet (1) compressed air flows into air cylinder via wind pipe (7).

Piston (4) moves leftwards and exert force on piston (3) which in turn pushes output rod to actuate push rod (5). The force on piston (4 & 3) is proportional to the pressure exerted by clutch fluid on piston (2).

When pedal is released to engage clutch, clutch fluid pressure drops to zero. By the action of return spring (8) and air pressure at cavity B, piston (2) moves rightwards to close air inlet and to open air outlet. Compressed air in cavity D is exhausted to atmosphere. Return springs (6 & 8) bring back pistons (2 & 4) to stand still position and hence push rod (5) retracts to its original position.

Technical Data

Operating pressure : Clutch fluid 4 Mpa, compressed air 0.8 Mpa

Max. pressure : Clutch fluid 12 Mpa, compressed air 1 Mpa

Operating Temp. range -40°C to +80°C.

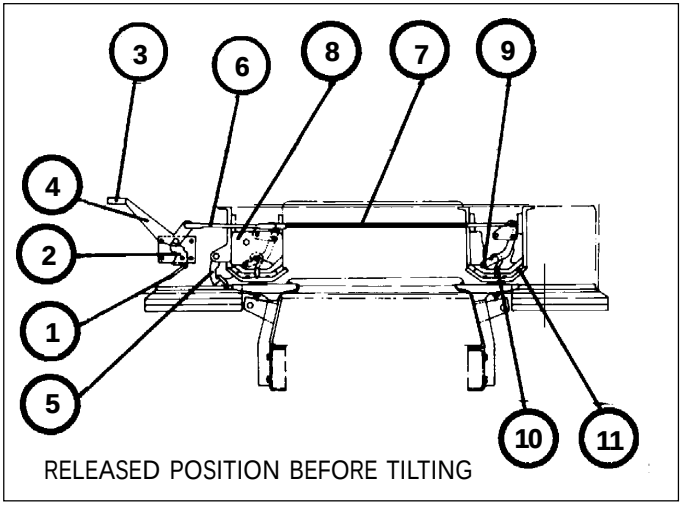

Cab tilting and locking lever arrangement

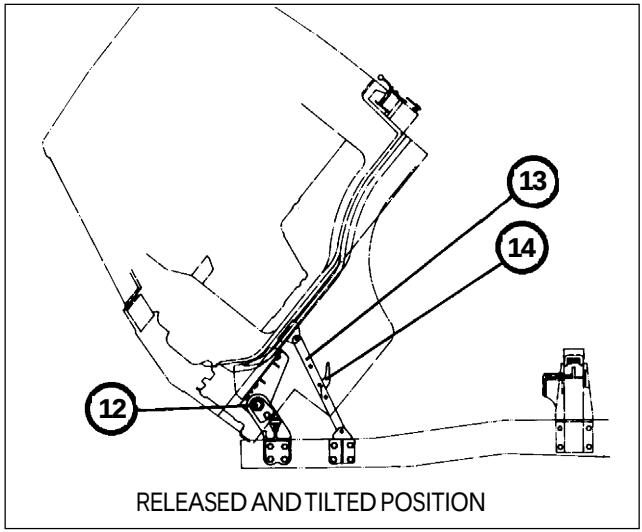

1. *Cam lever handle*
2. *Cam lever*
3. *Primary locking lever handle*
4. *Primary locking lever*
5. *Secondary locking lever*
6. *Connecting link - LH*
7. *Connecting link - RH*
8. *Cab mounting mechanism*
9. *Mounting pin*
10. *Mounting hook*
11. *Rubber pad*
12. *Torsion bar*
13. *Cab stay*
14. *Releasing lever*

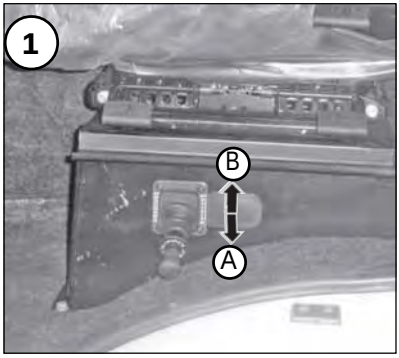

Hand brake valve

Cab Tilting

Truck version of 613 vehicle is provided with tilt cab. For tilting the cab proceed as follows :

To raise the cab

1. Park vehicle on level ground in straight ahead condition and apply parking brake.

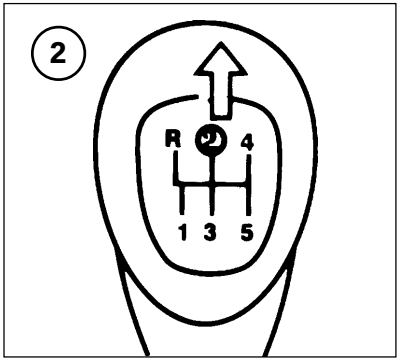

2(A) Put the gear shifting lever in second gear. (sketch position No. (2))

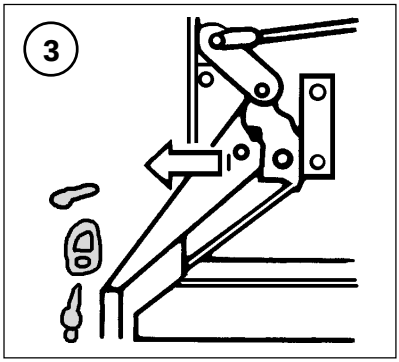

Note : *Remove or secure all loose items in the vehicles. Close all the doors.*

2(B) Remove padlock or bolt and nut from primary locking lever. (sketch position No. (3))

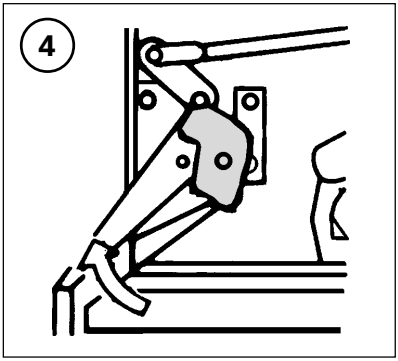

3. Hold primary locking lever ad pull cam lever handle to release primary locking lever from locked condition. (sketch position No. (4))

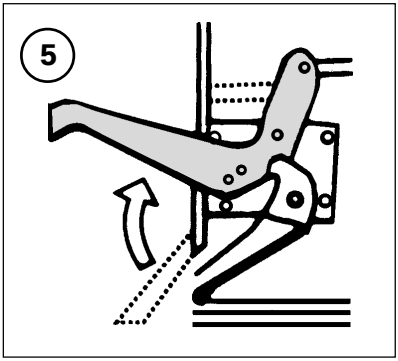

4. Raise primary locking lever handle to horizontal positions. Mounting pins of cab mounting mechanism get released from mounting hooks. (sketch position No. (5))

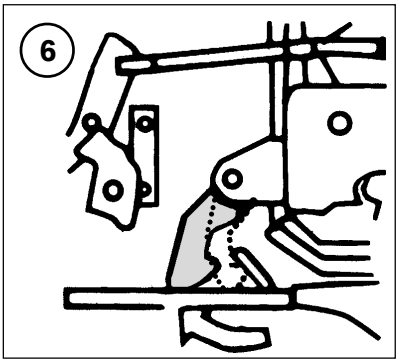

5. Pull secondary locking lever to release it from locking condition and hold. Slightly raise cab to clear secondary locking lever from it's hook. (sketch position No. (6))
6. Raise cab to maximum position. At this position cab stay locks automatically. Cab is retained safely in max. titled condition by the stay.Torsion bar assists in easy tilting of cab.

https://truckmanualshub.com/

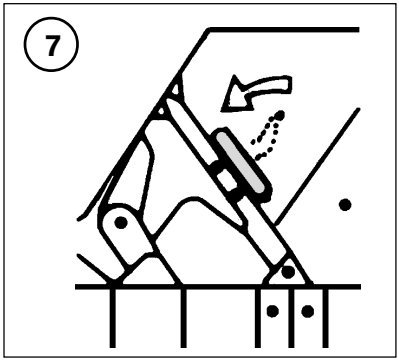

To lower the cab

1. Holding cab, press cab stay releasing lever and slightly lower cab. Linkage gets released from straight position. (sketch position No. (7))

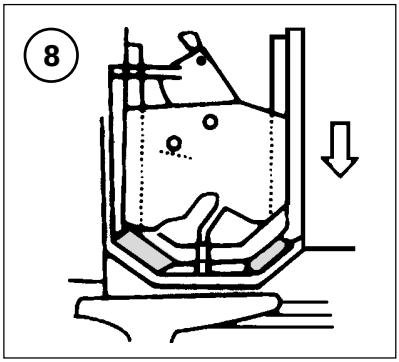

2. Lower cab till cab gets seated on rubber pads. Secondary locks lever gets automatically locked in its hook. (sketch position No. (8))

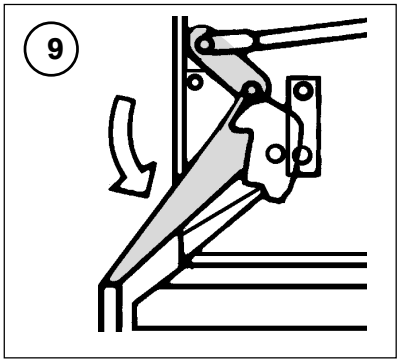

3. Push down primary locking lever till it locks on the cam lever. (sketch position No. (9))

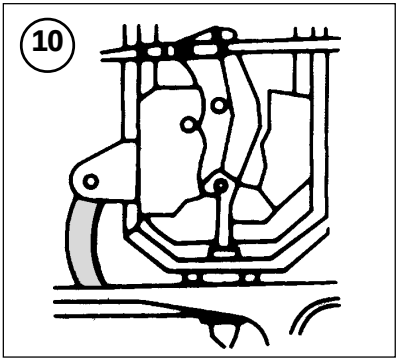

4. After locking, make sure that the cab is fully secured with the mounting hooks. (sketch position No. (10))

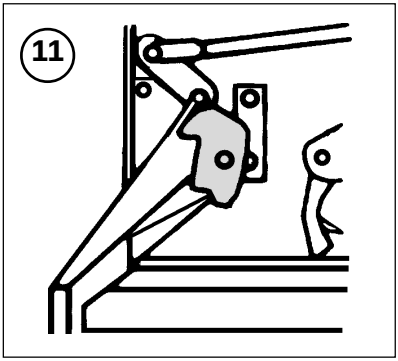

5. Fit back padlock or bolt and nut on primary locking lever. (sketch position No. (11) & (12))

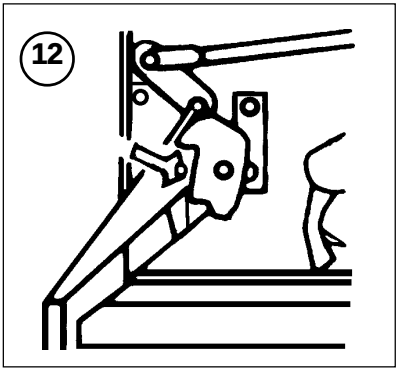

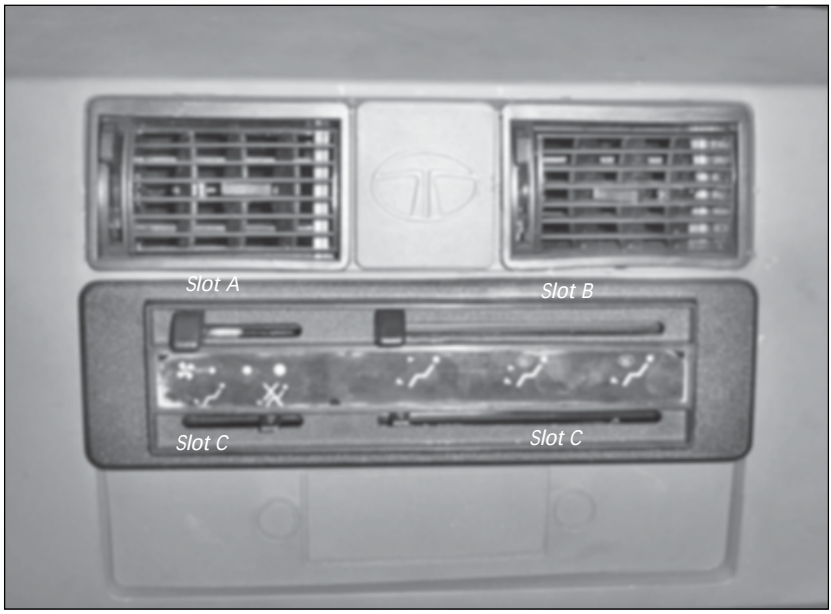

Heating control

Heating control (Optional)

Heating system is provided for comfortable driving. Heating system can be operated as per need.

The cab heat can be regulated by controlling air flow rate of the blower.

Three knobs A, B, C as given below are used to operate the system.

Slot - 'A' Blower Regulator

- Blower off
- Blower slow speed
- Blower medium speed
- Blower high speed

Note : *Though slot B is shown for air at leg, slot 'C' to decide leg will be open or close.*

Slot - 'B' Air Distribution Control

- Air directed towards chest and legs
- Air directed towards legs, chest and windscreen
- Air directed towards legs and windscreen

Demist : Switch-off heater. Direct air flow towards windscreen for a required period.

Defrost : Switch-on heater. Direct air flow towards windscreen for a required period.

Slot - 'C' - Closing and opening of leg vent

- Leg vent closed
- Leg vent open

https://truckmanualshub.com/

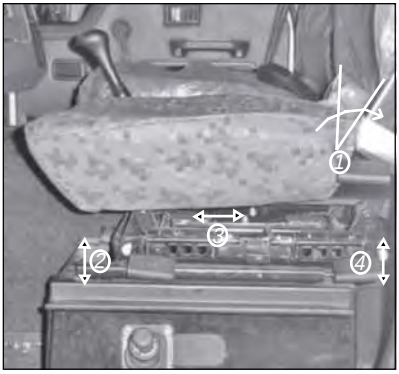

Driver seat adjustment

Driver seat adjustment

Lever 1 : Lever for adjusting back rest.

Lever 2 : Lever for adjusting seat height at rear.

Lever 3 : Lever for horizontal movement of seat.

Lever 4 : Lever for adjusting seat height at front.

***Note** : Please ensure that the seat is locked after making necessary adjustments.*

**** Precautions**

Cab heating system - operates using engine hot coolant. Hence, if engine coolant temperature overshoots specified limit, shut off the engine and rectify the fault.

** Do not leave the vehicle keeping heater and engine in running mode as it may cause extensive heating inside the cab. There is no thermostatic control in the cab heating system to shut-off engine, blower and heater.

Maintenance

1. Check hoses joints for leakage. Tighten, if necessary.
2. Check hoses for cracks. Replace, if required. If there is a loss of coolant, replenish coolant mixture in auxiliary tank.
3. If blower is not working, check fuse, if blown, replace.

https://truckmanualshub.com/

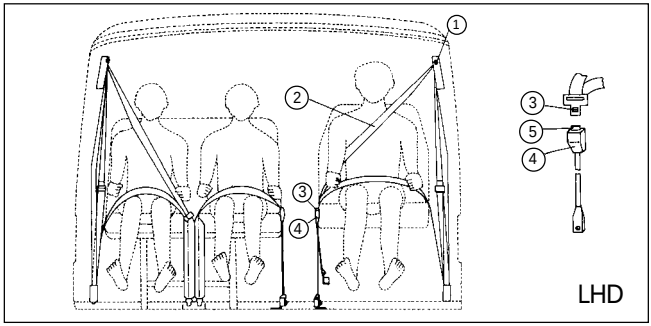

Seat belt arrangement

1. Anchor 2. Webbing 3. Tongue 4. Buckle 5. Release button

Seat belt

On truck versions three point belt for driver/co-driver and lap belt for passenger sitting in middle provided.

On bus versions, three point belt for driver seat is provided.

Fastening the belt

Insert belt tongue into buckle. A positive locking 'click' indicates correct assembly.

Releasing the belt

Press the release button. The tongue will be ejected clear of the locking mechanism within the buckle.

Belt adjustment

When the vehicle is at rest, adjust length of the belt to suit convenience and observe that the belt is locked.

Lap belt (middle passenger)

Adjust length of belt in the tongue to suit convenience. Insert belt tongue in buckle. A positive click indicates correct assembly. To release, press the release button. The tongue will be ejected from the buckle.

Precautions :

- The belt is designed for use of only one person.
- It is not intended for children below 10 years.
- Avoid twisting the strap.
- Webbing must not be allowed to chafe against sharp edges.
- Do not make any alterations.
- Belts that have been cut, frayed, damaged or have been stressed through impact, should be replaced.
- After vehicle collision if any, belt anchorage points should be checked.
- An occasional wipe with warm soapy water will maintain the webbing in a clean condition. Do not bleach or dye.
- Periodic inspection of the seat belts will ensure safe and reliable service.
- Before moving the vehicle ensure that belt is properly locked and beeper is off. (where fitted).

https://truckmanualshub.com/

3. Driving

3.1 Starting the engine, ... 71
3.2 Driving 72
3.3 Stopping the engine 75
3.4 Special operating conditions 76
3.5 Fuel economy 78
3.6 Do it yourself 79

https://truckmanualshub.com/

Steering lock cum ignition key

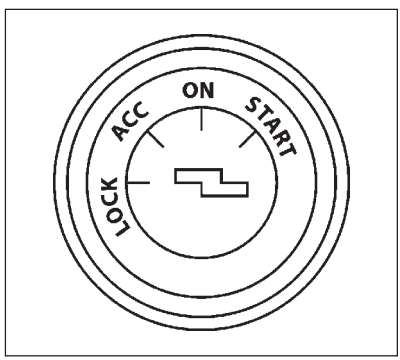

Steering lock cum ignition switch-key positions

1. Ensure that parking brake is applied.
2. Move gear shift lever to neutral position.
3. Insert ignition key in steering lock cum ignition switch. Steering wheel will be in locked condition. Turn the key to "ACC" position. Steering wheel gets unlocked, and accessories will be ON.
4. Turn the key further to ON position. Lamp of battery charging indicator, low oil pressure will come on.
5. Do not press the accelerator pedal. Turn the key further clockwise to "START" position (spring loaded) to operate starter motor. As soon as engine starts, release ignition key so that key can come back to ON position and starter motor disengages.
6. If engine misfires and stops, wait for 2 minutes before operating starter motor once again. This practice should be strictly adhered to, otherwise it will damage starter motor.
7. Once engine starts, lamps of battery charging indicator and low oil pressure should go off.
8. Allow engine to warm up - until cooling system temperature reaches at least 40° C.
9. Release parking brake.
10. Now the vehicle is ready to move.

https://truckmanualshub.com/

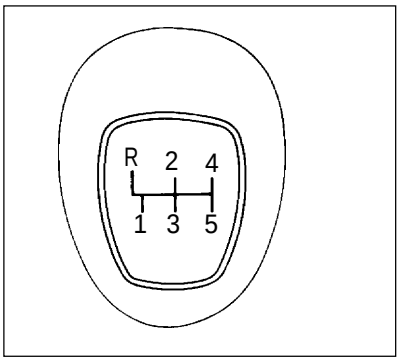

Gear lever knob

Driving, Gear shifting, Breaking

DRIVE SAFELY AND JUDICIOUSLY Remember SAFETY FIRST.

Do not keep driving till you are overcome by fatigue. The reflexes of a tired driver are not as they should be.

1. Before you drive, ensure that vehicle is in a road-worthy condition. Especially check steering system, tyres, brakes, clutch etc.
2. Release parking brake.
3. Depress clutch pedal fully before shifting gears. For smooth starting of vehicle without jerks, synchronise release of clutch pedal with pressing of accelerator pedal.
4. Gear Shifting

   Vehicle should be started in first gear only.

   Engaging position for various gears are shown on gear knob. Change gears at appropriate speed and do not lug the engine by too early high gear changes at low speed.

   Reverse gear should only be engaged when vehicle has been brought to a complete stop.

   Approximate speeds for gear change.

Gear	Speed in kmph	
	Standard Gearbox	Optional Gearbox
1st to 2nd	12	12
2nd to 3rd	23	23
3rd to 4th	37	40
4th to 5th	62	67

5. While driving, left foot must not rest on clutch pedal. This causes abnormal wear of clutch linings due to clutch slippage.
6. Slowing down the vehicle should be achieved by changing down to lower gears.
7. Maintain a steady speed, avoid quick acceleration and sudden braking. High speed driving saves you a little time but increases fuel and oil consumption. It also causes faster tyre wear.

https://truckmanualshub.com/

We, therefore, recommended to drive in fifth gear at a steady speed of about 70 kmph. Optimum fuel consumption is achieved at this speed

CAUTION DURING RUNNING IN PERIOD

During first 2,000 km. observe following speed and load limits.

Speed

Not more than 70 kmph in top gear and correspondingly lesser in lower gears.

Load

Gross vehicle weight should not exceed 2/3 of max. recommended gross vehicle weight.

Brakes

Avoid panic braking during first 500 kms. Drive in lower gears when negotiating steep down gradient, thus avoiding excessive braking and brake drum over heating.

8. **Application of brakes**

   Brake application should be gradual to avoid fast wear of brake linings, brake drums and tyres. Brake should not be applied too violently on a slippery road, since the vehicle may then start skidding.

   When driving down a long steep gradient, reduce vehicle speed by shifting to lower gear. Engine will provide a braking effect. Do not ride brakes. This will lead to over heating of brake drums and linings resulting in low brake efficiency.

9. **Parking the vehicle**

   Apply parking brake. Keep engine in low idling speed at least for three minutes (Turbo charged engine). Switch off engine. Remove key from steering lock cum ignition switch. While parking on slopes, place wheel chokes to prevent vehicle rolling. Engage forward gear if it is likely to roll in the reverse direction or vice versa.

https://truckmanualshub.com/

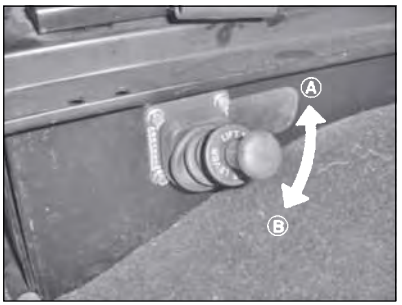

Hand brake valve

A. Brake released

B. Brake applied

A to B Gradual application

Hand brake system

Hand brake is integral with spring brake actuator on rear axle. Spring brake chamber piston ram acts directly on push rod assembly of brake chamber.

Engine exhaust brake

Exhaust brake operation is coupled with service brake. Whenever brake pedal is depressed for applying brakes, exhaust brake also gets applied and indicator lamp (E) comes ON instrument panel.

Stop light switch provides signals both for rear tail lamps as well as for exhaust brake solenoid valve.

Solenoid valve opens, allowing compressed air to flow to exhaust brake air cylinder, thus operating exhaust brake butterfly valve.

Since exhaust opening is restricted, road wheels will drive engine, which will act as a compressor (resistor), thus retarding vehicle speed.

Use of engine exhaust brake results in increased life of brake linings, brake drums & tyres.

Isolator switch (Exhaust brake)

In certain situations like starting of vehicle on an upgradient, simultaneous acceleration and partial braking of vehicle are required. Isolator switch can be used to cut off air supply to exhaust brake air cylinder, by putting it in off (disengaged) position. Isolator switch should be put ON (engaged), as soon as isolation requirement is over.

https://truckmanualshub.com/

Operating instructions

1. Ensure air pressure in the system is above 5 bar.
2. Change to lower gear appropriate to road conditions. Exhaust brake is very effective below 40 kmph speed.
3. Do not depress clutch as this would render exhaust brake ineffective.
4. Press brake pedal fully when vehicle is to be brought to a stop.

Lubricating exhaust brake linkages

1. Every 9,000 km. a few drops of oil should be applied to ball pins of outer linkages and friction surface.
2. Butterfly valve shaft, which is made of heat resistant material, **should not be lubricated,** since the lube oil would cause seizing of the butterfly valve in its housing.

Stopping the engine

After parking the vehicle in safe place.

1. Release accelerator pedal.
2. Move gear shift lever to neutral position.
3. Apply parking brake.
4. Turn ignition key to ACC position. A timer will switch on fuel stop solenoid for about 5 seconds which operates fuel shut off valve and fuel supply is cut off. Engine will stop. This shut off timer is aborted in case you turn ignition key again to ON position within 5 seconds.
5. Turn the key to "lock" position.
6. Take out key from steering lock cum ignition switch. Slightly turn steering wheel clockwise or anti clockwise (max. 180°), till click sound is heard, to make sure that steering wheel is locked.

https://truckmanualshub.com/

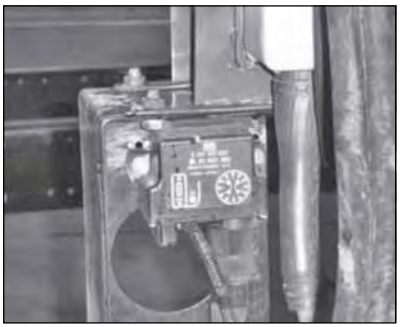

BERU heater controller

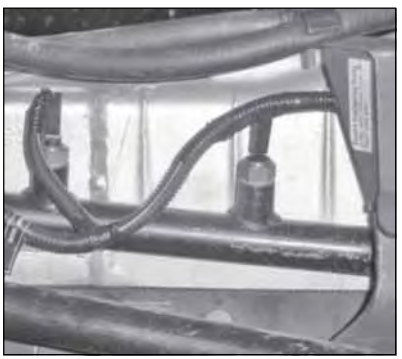

Temperature transducer

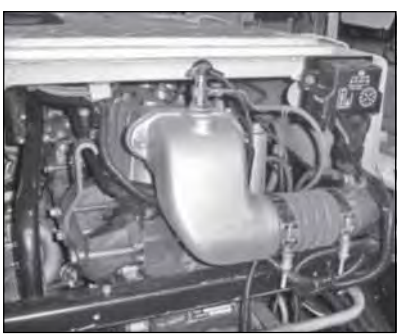

Flame glow plug

Flame start system (BERU):

Flame start system is provided for convenient starting at cold conditions by heating the intake air by means of burning the diesel in air intake manifold.

- Pre-glow time of just 20~45 seconds
- Trouble-free starting even at low temperatures
- Post glow (after starting the engine) time of up to 3 minutes

The flame start control unit controls the supply of current to the indicator light, flame glow plugs and solenoid valve. It evaluates the signals from starter motor in Ignition ON position via Temperature transducer (BERU) in alternator running condition.

The pre-glow phase commences when the ignition is switched on at temperature below the system stop temperature.

The indicator light comes on steady and power is fed to flame glow plug.

Once the pre – glow time has passed the indicator lights starts to flash. This indicates to the operator that the engine can be started. Power continues to be supplied to the flame glow plugs. If the engine is not started during this period, the flame start control unit switches off the flame glow plugs and the indicator light.

If the vehicle is started during ready to start period, then the flame start control unit activates the solenoid valve. The fuel then flows through the open solenoid valve, across the

https://truckmanualshub.com/

hot heater rod of the flame glow plug, evaporates and ignites.

The post heating operation begins once the start procedure has ended. The duration is determined by the engine temperature (coolant water) when the post heating commences. Power continues to be supplied to the flame glow plugs, the solenoid valve remain open and indicator light goes off.

If the start procedure is unsuccessful, then the solenoid valve and flame glow plugs are shut off, the ignition must be switched off before attempting to restart. Where temperature exceeds the system stop temperature, the indicator light immediately starts flashing to indicate start ready, after the ignition has been switched on.

No power is supplied to the flame glow plug and the solenoid valve.

https://truckmanualshub.com/

Fuel Economy

a. Drive smoothly, accelerate gradually, avoid harsh acceleration.

b. Best fuel consumption is obtained at low engine speeds in the highest possible gear without labouring the engine.

c. Driving with accelerator pedal fully depressed means using excessive fuel.

d. Do not allow the engine to labour by too early high gear changes. Change to lower gear when engine no longer runs smoothly.

e. Switch 'OFF' engine when stopping for long duration of time.

f. **Do not ride clutch. Do not use clutch pedal as foot rest.**

g. Do not allow leakage or spillage of diesel.

h. Always drive in correct gears.

i. Do not over load the vehicle.

j. Maintain correct tyre pressure.

k. Always keep vehicle and engine in good condition.

Operation in hilly terrains

In hilly terrain and where the atmosphere is very humid, following precautions should be taken.

Ensure that steering linkages and brakes are in order and proper gears are used during climbing and descending. Make maximum use of exhaust brake while descending. With a little pressing of brake pedal, exhaust brake first comes into action. This will relieve driver of fatigue and will increase the life of tyres, brake linings and brake drums.

Note :

Diesel and clutch fluid, both being hygroscopic, absorb moisture from atmosphere.

- **Drain air tanks every day to remove water.**
- **Drain water from fuel water separator.**
- Vehicle should be greased every day to prevent formation of rust on the exposed moving surfaces. Servicing and maintenance should be done as specified.
- Use same gear selection while ascending and descending the same slope.

Caution : *Operating engine beyond high idle speed can cause severe engine damage. When descending a steep gradient, use a combination of transmission gears and exhaust brake or service brake to control vehicle and engine speed.*

- Use lower gears and brake cautiously on wet and slippery roads.

https://truckmanualshub.com/

4. Maintenance Procedure

4.1 Air intake system 83

4.2 Fuel system 85

4.3 Lubrication system 87

4.4 Cooling system. 89

4.5 Clutch 92

4.6 Gearbox 94

4.7 Propeller shaft 95

4.8 Front axle & rear axle 96

4.9 Power steering 97

4.10 Brake system 101

4.11 Springs 114

4.12 Centre flap 115

4.13 Tilt cab 116

4.14 Wheels and tyres 117

4.15 Electricals 121

4.16 Preservative treatment 128

4.17 Care and cleaning 131

https://truckmanualshub.com/

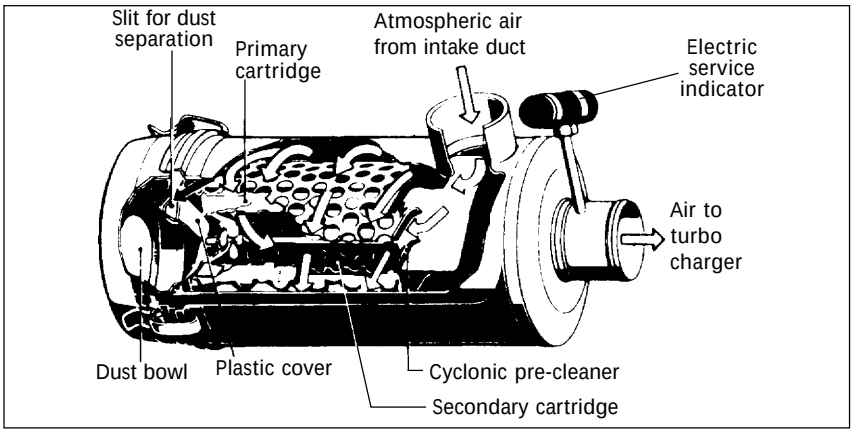

Schematic details of dry type air filter

Maintenance of dry type air filter
(Vehicle with Euro II engine)

Dry type air filter with an inbuilt cyclonic vane type pre-cleaner is fitted. For vehicles operating under normal conditions evacuator valve (of air filter) is required to be checked once every 2,000 km. This should be done more often, if vehicle operates in dusty conditions, viz. off highway operation, mining areas, construction sites, etc.

While reassembling, care must be taken to ensure that evacuator valve is assembled in the bottom most position and slit opening is pointing towards ground.

When service indicator glows, on instrument panel. Clean air filter housing and primary cartridge.

Replacement of air filter primary cartridge

a) Remove cover of air filter.

b) Remove primary cartridge (element).

c) Clean air filter housing, air ducts.

d) Replace old primary cartridge by new one.

e) Fit the cover. On starting the engine, if service indicator on the instrument cluster continues to blink take your vehicle to nearest Tata authorised workshop.

f) Do not clean secondary cartridge. Replace it after three changes of primary cartridge or after 2 years, whichever is earlier.

https://truckmanualshub.com/

Charge air cooler

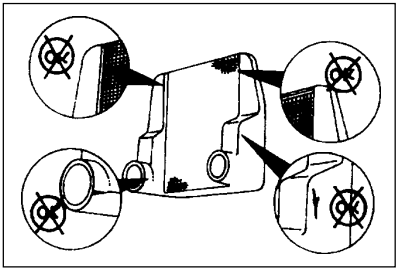

Charge air cooler

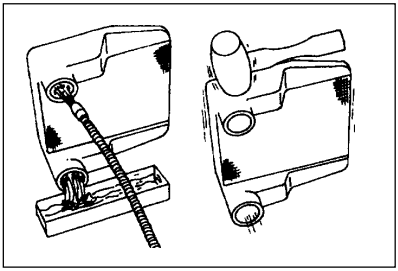

Cleaning with solvent

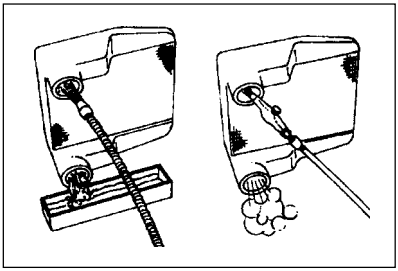

Cleaning with hot water/compress air

Charge air cooler (CAC) (with Euro II engine)

Inspection

If engine experiences a turbocharger failure or any other occasion where oil or debris has entered into CAC, the CAC must be cleaned.

Remove CAC from vehicle.

Visually inspect CAC for cracks, holes and damage.

Inspect tubes, fins and welds for tear, breakage or other damage.

Cleaning

Flush CAC internally first with trichloro ethane (solvent) in the opposite direction of normal air flow. Shake the CAC and lightly tap on the end tanks with a rubber mallet to dislodge trapped debris.

Caution : *Do not use caustic cleaners to clean CAC. Damage to CAC will result.*

After the CAC has been thoroughly cleaned of all oil and debris with solvent, wash CAC internally with industrial soap solution to remove remaining solvent. Rinse thoroughly with clean water.

Blow compressed air into the CAC in the opposite direction of normal air flow until the CAC is dry internally.

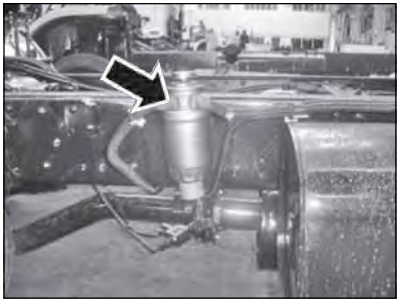

Fuel water separator cum primer

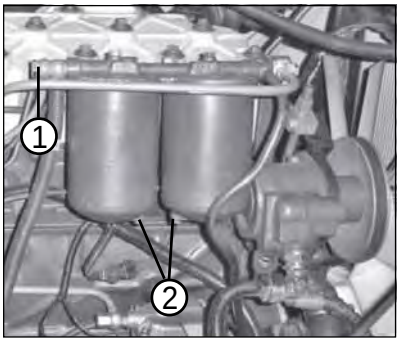

1. *Bleeding screw on banjo bolt*
2. *Drain plugs*

Fuel water separator cum primer:-

It is fitted in between fuel tank and FIP.

It separates water particles in fuel.

Fuel passes over funnel like cone in water separator and water being heavier than fuel, so water gets collected at the bottom of the bowl.

To remove water from the bowl loose the primer then loose the drain plug ,

Water starts dropping from drain plug.

Once water is completely drained from the water separator. Tighten the drain plug and primer.

It is recommended that water in the separator be drained at least once a week.

Fuel filter change

1. Remove filter bowls by removing two bolts given on filter cover.
2. Clean the bowls.
3. Fit new elements in bowls
   a) Felt type element in primary filter bowl.
   b) Coil type micro element in secondary filter bowl.
4. Replace O - rings on filter cover.
5. Assemble primary & secondary filter bowls to the cover.Tighten bolts to 2 mkg torque.
6. Fill diesel in filter bowls by operating feed pump primer.
7. Bleed fuel system and start engine.

If performance of engine is affected due to presence of air in fuel system (commonly known as air lock), it can be rectified by bleeding fuel system.

Fuel system bleeding

1. Ensure no leakage in fuel line.
2. Bleeding air in fuel line upto filter
   - Loosen outlet banjo of fuel filter.
   - Prime the circuit by using hand primer.
   - Tighten banjo after completely bleeding air.
3. Bleeding air after FIP
   - Loosen overflow banjo on FIP. This ensures FIP is filled with fuel.
   - Prime the circuit by using hand primer.
   - Tighten overflow banjo after completely bleeding air.
4. Crank engine for few seconds. If engine still does not start proceed to next step.
5. Remove cylinder head cover & loosen high pressure line cap nuts of all cylinders.
6. Crank engine till fuel coming out of high pressure lines is free from air. Tighten high pressure line cap nuts.
7. Start the engine.

https://truckmanualshub.com/

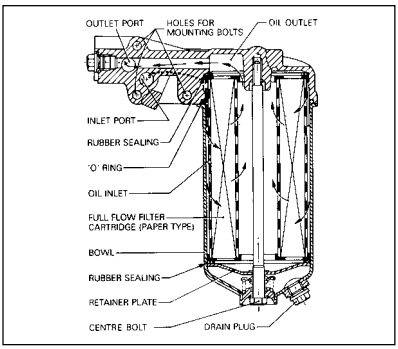

Full flow engine oil filter assembly

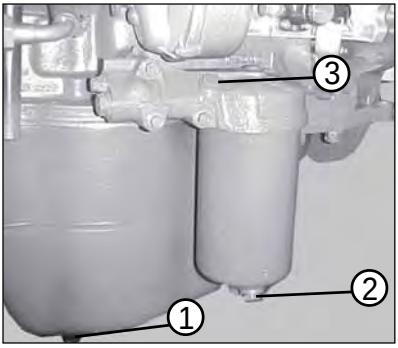

1. *Drain plug engine oil sump*
2. *Drain plug oil filter*
3. *Filler plug oil filter*

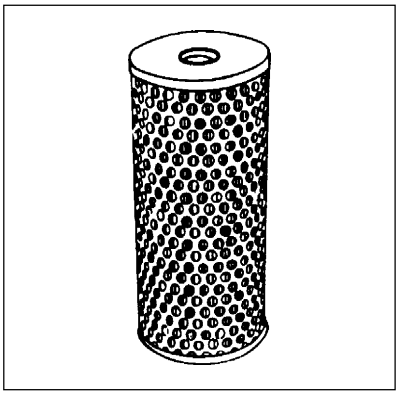

Oil filter cartridge

Changing engine oil / oil filter

Engine oil should be drained while it is still hot.

a. Unscrew sump drain plug and allow oil to drain out for 20 minutes.

b. Unscrew drain plug of oil filter, drain out oil and refit drain plug.

c. Unscrew centre bolt and remove oil filter bowl, clean centre bolt.

d. Clean the bowl thoroughly and replace with a new genuine filter cartridge.

e. Remove old 'O' ring in cover and install a new O' ring.

f. During reassembly, first fill filter bowl with 1 litre of engine oil and thereafter reassemble filter bowl on top cover. Pour another 1.5 litres of engine oil through the filler plug opening in the cover & then tighten filler plug with a new sealing washer.

   This is done to ensure that oil immediately flows to bearings and attains correct pressure, when engine is started. If this instruction is ignored, bearings may get damaged.

   Oil filter must be kept clean to protect engine components from rapid wear due to abrasion.

g. Oil filter centre bolt should be tightened to 4 mkg torque.

https://truckmanualshub.com/

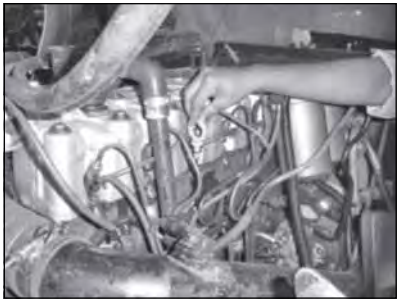

Engine oil dip stick

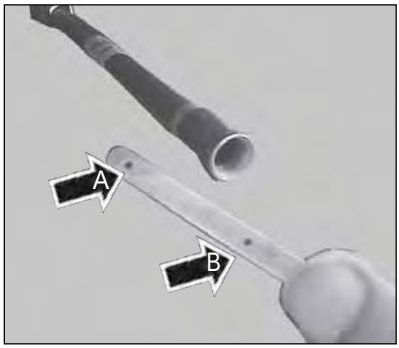

Engine oil dipstick

A. Minimum level

B. Maximum level

h. Clean the drain plug of oil sump and refit with a new sealing washer, if necessary. Tighten drain plug to 4 to 6 mkg torque.

i. Fill in recommended quantity of engine oil in sump.

j. Start engine and allow it to run for a few minutes and stop the engine.

k. After 20 minutes, check level of oil on dipstick. It should be at upper mark. If not, top-up. When checking oil level, vehicle should be parked on level ground.

CAUTION

Make sure that only genuine oil filter cartridge is used.

i. Do not use filter with inferior filtering material which cannot properly filter the engine oil.

ii. Do not use filter with improper dimensions which cannot prevent filtered oil getting mixed with unfiltered oil.

Since it is extremely difficult to distinguish between genuine and non-genuine filter cartridges, obtain these only from Tata authorised workshop.

Discard used oil filter cartridge.

Filter cartridge should not be cleaned or reused.

Change Engine Oil after every 18000 kms or earlier depending on the type of operation.

Use only recommended engine oil conforming to SAE 0W-40 APICH4 & MB228.3 specifications.

https://truckmanualshub.com/

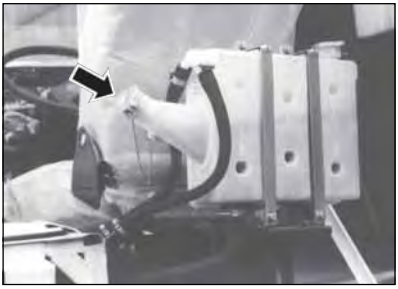

Radiator auxiliary tank filler neck (LP)

Radiator auxiliary tank filler neck (LPT)

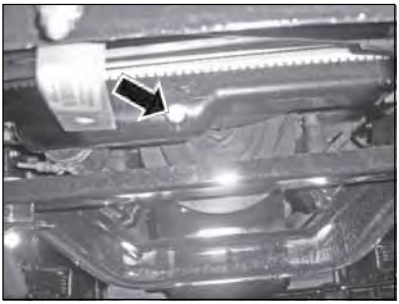

Radiator drain plug

Cooling system

A transparent radiator auxiliary tank is fitted between cabin rear wall and load body on LPT 613 vehicles. On LP 613 this is fitted behind driver seat. Maximum & minimum levels indicated on the body. It is fitted with two identical caps with pressure cum vacuum relief valve having 0.5 bar pressure setting. Always top up coolant only through filler neck. Top cap should not be disturbed.

Procedure for filling when the system is empty.

1. Ensure no water in vent pipes, drain vent pipes while draining/ refilling.
2. Fill coolant mixture through auxiliary tank filler neck.
3. Run engine for a few minutes and top up coolant mixture, if required.

Add recommended coolant to water in ratio 1:1. If coolant starts boiling, it may be on account of :

i. Less coolant or dirt/scale having accumulated inside coolant passages, especially in radiator core.

ii. Choking of radiator air passages due to foreign material or damaged radiator fins.

iii. Loss of coolant by evaporation and leakage through defective auxiliary tank caps.

iv. Loose water pump drive belt.

v. Coolant leakage.

 https://truckmanualshub.com/

Always use genuine auxiliary tank cap. A proper cap firmly fitted maintains pressure in the cooling system and makes engine more efficient by permitting a slightly higher operating temperature. Vacuum created in the system is relieved by a valve provided in the cap. Descale and clean cooling system regularly.

Cleaning of cooling system.

This should be done at every 80,000 km or every two years whichever is earlier.

While cleaning, the system is to be totally drained out. Coolant from vent pipes is to be drained out by disconnecting these pipes from auxiliary tank end side.

Fill the system with industrial soap solution through filler cap in auxiliary tank.

Wait for 2 to 3 minutes to allow air to be vented and add solution to bring the level to the top.

Do not install filler cap.

Operate engine for 5 mins. with the flushing solution temperature above 80^0 C. at maximum engine speed.

Stop engine and drain soap solution.

Fill system with clean water. Be sure to vent the engine for complete filling.

Do not install filler cap.

Again operate the engine for 5 mins. with water temperature above 80^0 C at maximum engine speed.

Stop engine and drain water.

If water drained is still dirty, system must be flushed again until water drained out is clean.

Use a mixture of 50% water and 50% ethylene glycol non-amino base antifreeze to fill cooling system.

Fill the system slowly to prevent air locks. During filling air must be vented from the engine and radiator.

Wait for 2 to 3 minutes to allow the air to be vented and then add mixture to bring coolant level to the top.

Install filler cap. Operate engine until it reaches a temperature of 80^0 C, and check for coolant leaks.

Wait until the coolant temperature reaches below 50^0 C. Check coolant level again to make sure the system is full of coolant.

https://truckmanualshub.com/

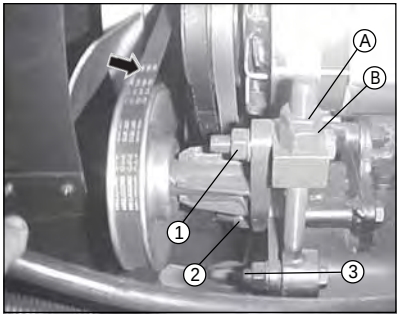

Fan belt tension adjustment

1,2. Idler pulley flange nuts

3. Tensioner rod mounting nut

A. Check nut

B . Adjusting nut

Fan belt tension adjustment

1. Loosen idler pulley flange nuts 1, 2 and the tensioner rod mounting nut 3 as shown in the picture, to release the fan idler pulley arrangement.
2. Loosen the check nut A and rotate adjusting nut B to get the desired tension of fan belt. Slackness should be approx. 20 mm at the centre of fan belt drive, when checked by thumb push.
3. Tighten check nut A without disturbing the position of adjusting nut B..
4. Without disturbing the arrangement, retighten nuts 1, 2 & 3 as explained above.
5. Recheck belt tension and confirm.

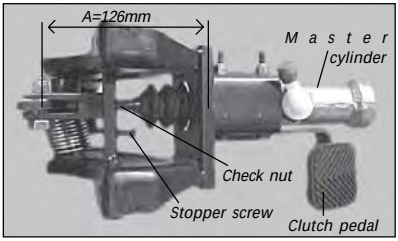

Clutch pedal height

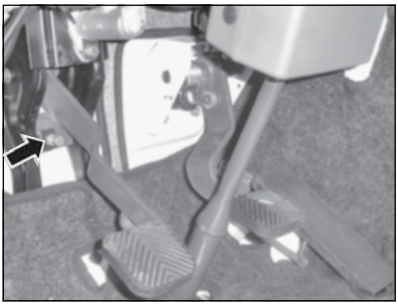

Clutch pedal stopper screw

Clutch pedal adjustment

Hydraulically operated clutch has been fitted on this vehicle.

Clutch pedal height adjustment is required only in case of component repairs/overhaul etc. Adjustment is not required during normal maintenance.

1. Loosen check nut on clutch master cylinder push rod.
2. Adjust the distance of 126 mm between master cylinder flange face and the fork hole centre as shown in the figure.
3. Tighten push rod check nuts of master cylinder without disturbing adjusted length.
4. Adjust clutch pedal free play with the help of stopper screw as shown in figure. Free play at clutch pedal should be between 15 - 20 mm.
5. Operate clutch pedal a few times to ensure desired clutch pedal free play.
6. Apply synthetic grease at all rotary joints.

Clutch pedal height adjustment & free play adjustment is needed to be done at Tata authorised workshop only.

Filling clutch fluid

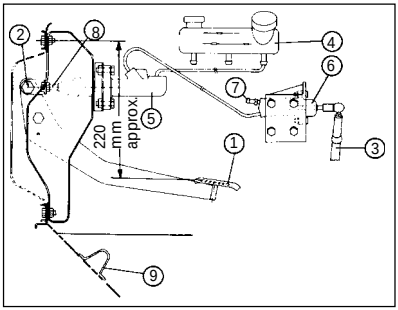

Schematic layout of clutch actuation mechanism

1. *Clutch Pedal*
2. *Adjusting pin*
3. *Clutch release fork*
4. *Clutch fluid container*
5. *Clutch master cylinder*
6. *Clutch slave cylinder*
7. *Bleeding nipple*
8. *Master cylinder push rod*
9. *Clutch pedal stop*

Clutch fluid filling and bleeding

Procedure for bleeding the system given below :

i. Remove filler cap and fill the clutch fluid container with fresh brake fluid.

ii. Remove dust cap from slave cylinder bleed screw and clean it thoroughly. Attach bleed tube to the bleed screw and place other end of the tube in a clean glass jar containing sufficient brake fluid to submerge the end of tube.

iii. Pump clutch pedal twice/thrice slowly throughout its stroke and by holding the pedal pressed, loosen bleed screw and watch air bubbles in glass jar.

iv. Retighten bleed screw and repeat the same operation until air bubbles cease to appear allowing only fluid to flow.

v. Replace dust cap on bleed screw without fail.

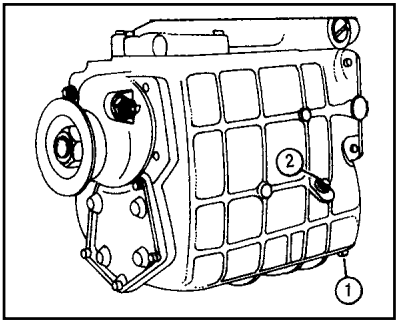

Gear box (GBS - 40)

1. *Oil drain plug*
2. *Oil level plug*

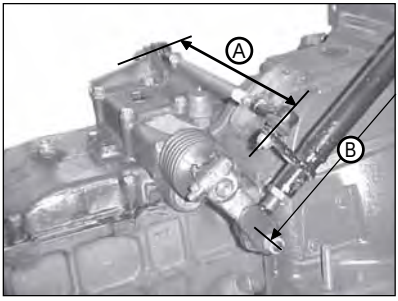

Remote gear shifting arrangement

Gear box oil checking

Check level of gear box oil. Top up if necessary.

Gear box oil change

Drain while hot.
Fill the gear box with new oil.

Capacity : 5.2 Litres
: 5.8 Litres

Recommended oil

Grade SYN gear EP 75 W 90 GL 4 Gulf grade.

Dimension A

Link rod adjustment

Either increasing or decreasing the length or link rod assembly can adjust dimension A. Loosen lock nuts on both sides of connecting tube & adjust the length by turning connecting tube with the help of DE spanner clockwise / anti clockwise. When desired dimension is achieved, tighten lock nuts on both sides & re-check dimension A. The adjustment needs to be carried out in installed condition of link rod.

Dimension B

Turning tube adjustment

This adjustment is to be carried out after disconnecting ball joint from gearshift lever. Loosen the lock nut from connecting flange & rotate ball joint clockwise /anti clockwise to obtain desired dimension. Tighten the lock nut. Assemble ball joint nut. Re-check dimension of turning tube assembly (Dimension B).

Link measurement (in mm)

Drive	A	B
RHD	330 ± 1.5	1000 ± 2
LHD	350 ± 1.5	986 ± 2

https://truckmanualshub.com/

Propeller shaft centre beaming

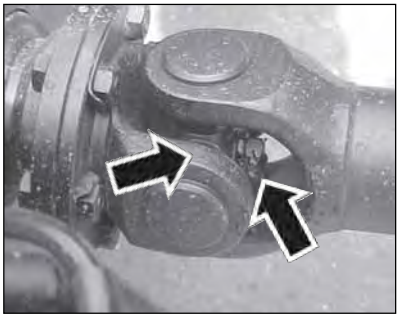

U Joint yoke

Propeller shaft

Propeller shaft, U-joint cross bearing and sliding yoke should be regularly greased. Failure to do so may result in rapid wear and tear of the bearings and centre bearing mountings. Periodically check and if necessary, tighten mountings of centre bearing bracket to 8 mkg torque.

When disconnecting propeller shaft, care must be taken to ensure that arrow marks on rear propeller shaft and sliding yoke are aligned during reassembly. Tighten coupling flange bolts to 7 mkg torque. When fitting propeller shafts ensure all 'U'-joint yokes are in one plane. In case of undue vibrations noticed on propeller shafts, take necessary corrective action.

https://truckmanualshub.com/

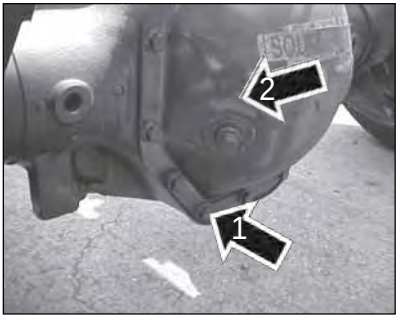

Rear axle

1. *Oil drain plug*
2. *Oil level plug*

Rear axle oil level checking

Check level of rear axle oil. Top up if necessary.

Rear axle oil change

Drain while hot

Fill the rear axle with new oil.

Capacity : 2.75 litres

Recommended oil

Grade APIGL 5 SAE 85W-140 with 7% Anglamol-6043 by weight.

Change rear axle oil first at 9000 km, then at 36,000 km and thereafter at every 36,000 km.

Check front & rear hub play at every 9000 kms & adjust, if necessary.

Hub grease for front & rear hubs to be changed at every 36000 kms.

Hub greasing and adjustment

Remove front and rear wheel hubs. Dismantle and clean bearing and other components. Re-pack with bearing grease.

Front hub	:	250 gm/ hub
Rear hub	:	450 gm / hub

Grade - Multi purpose grease No. 2

Adjust hub bearing play.

Front hub	:	0.01 / 0.06 mm
Rear hub	:	0.04 / 0.1 mm

Tubular spacer with shims provided in between bearings for front and rear hubs to control hub play.

This operation is needed to be carried out at Tata authorised workshops only.

Front hub

Remove front hub cap, fill with ¾th full wheel bearing grease and refit at every 9000 kms.

https://truckmanualshub.com/

Power steering tank

OIL FILLING AND BLEEDING

Filling oil in steering tank

Steering gear and pump are filled through filler neck on oil tank. For initial filling and for oil changes it will be of advantage to remove the tank cover and to add hydraulic oil upto edge of tank. Engine can then be cranked with starter motor for a while (not more than 10 seconds at a stretch) to fill entire hydraulic system with oil. Since oil level in tank will drop rapidly, keep adding oil to avoid pump sucking air.

Bleeding the steering system

When steering gear is filled to the extent that short cranking of engine will not cause oil level to drop below top mark on oil dipstick, engine can be started.

Jack up front axle, start engine, run at idle speed for some time, thus allowing air to escape from the system. Oil level must be watched during this process. Oil must be topped up immediately if the level drops.

Then turn steering wheel several times from lock to lock so that air escapes from the system. Keep watching oil level. Add oil immediately when oil level drops.

Keep adding oil till the level remains at upper mark on dipstick and air bubbles are no longer visible in oil tank when steering wheel is turned.

If above instructions are observed, oil level in tank should not raise by more than approx. 1-2 cm when engine is shut off.

Shut off engine and lower front axle.

Oil level check-up when engine stopped

Add enough oil in tank until oil level is approx. 1-2 cm above upper mark. Start engine and run it at idling speed. Check oil level in dipstick. Oil level should be between minimum and maximum levels.

https://truckmanualshub.com/

Power steering tank

A. Bottom level

B. Top level

Oil level check-up with the engine running

With engine running, oil level will drop slightly, since oil requires a pressure of appox. 2-4 bar to overcome flow resistance when flowing through the system. Add enough oil to keep oil at upper mark. Stop engine. Oil level should not raise more than 1-2 cm. A higher oil level indicates that there is air in the system.

Filter change

a. Unscrew closing plug from cover of oil tank and remove tank cover.

b. Pull out used filter cartridge. When pulling out, keep bore of filter cartridge closed so that no dirty oil could flow back into tank.

c. Lubricate filter carrier and insert new filter cartridge with metal collar in upward direction.

d. Crank engine for a short period with starter motor, so that oil level will drop. Then bleed the system.

Replace oil/oil filter at every 80,000 kms. Bleed the system and check performance with test equipment.

https://truckmanualshub.com/

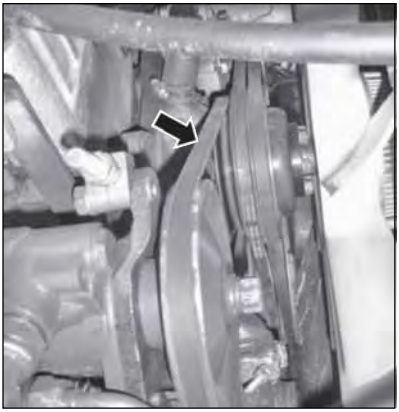

Checking power steering pump belt tension

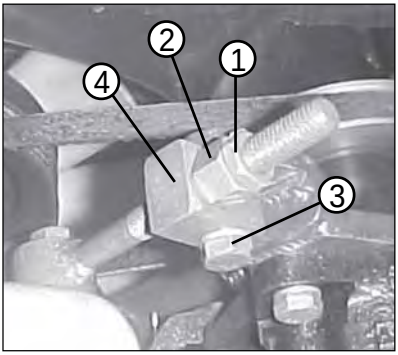

1. *Lock nut*
2. *Adjusting nut*
3. *Clamping bolt*
4. *Clamping piece*

Power steering pump belt tension adjustment

Checking and adjustment of steering pump belt tension.

a. Loosen bolt holding upper mounting of steering pump to the clamping piece.

b. Loosen steering pump pivot pin nut.

c. Loosen the locknut & adjust belt tension by rotating the adjusting nut.

d. Check belt tension. Belt tension is correct, if it can be depressed by 20 mm with thumb pressure applied in the middle of its length.

e. Tighten clamping piece bolt, lock nut and pivot pin nut for locking the pump in position.

Power steering linkages

In case of excessive free play, check steering linkages for looseness and get the defect rectified immediately. Periodical inspection of steering linkages is essential for driving safety.

 https://truckmanualshub.com/

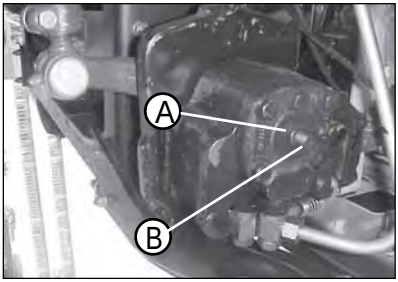

Sector shaft play adjustment

A. Sealing nut

B. Adjuster screw

Sector shaft play adjustment

If play is noticed on drop arm or input shaft of steering gear box, it is to be adjusted as given below :

- Bring steering wheel to SAP (Straight Ahead Position).
- Sealing nut is to be loosened in anticlockwise direction by holding adjuster screw in place with a screw driver.
- Rotate adjuster screw with screwdriver in anticlockwise and check for play on drop arm. Play will increase.
- Again rotate adjuster screw in clockwise direction till the play disappears on drop arm, holding the sealing nut in place.
- Turn adjuster screw clockwise another half turn. Hold it in place with a screw driver and lock sealing nut.

Torque for sealing nut is 70 Nm.

This adjustment is usually required after a coverage of 100,000 kms.

https://truckmanualshub.com/

S Cam full air brakes

S cam brakes are fully air operated brakes. Brake actuators at front and rear axles are externally mounted outside the foundation brake assemblies.

Air is fed to brake actuators through dual brake valve (Operated by brake pedal), proportional to braking requirements.

Push-rods of brake actuators act on slack adjusters, which convert linear motion into circular motion of cam shaft. S-shaped cam portion of shaft expands brake shoes against drums, thus applying brakes.

S cam is of equal displacement design, resulting in equal wear of leading and trailing shoes.

Brake system provides safe and reliable braking. Brake circuit consisting of various pneumatic components is shown in schematic layout.

Service brakes consist of two separate circuits. One for front wheels and the other for rear wheels.

In the unlikely event of failure of any one circuit, other circuit remains still operative and guarantees a certain degree of braking for the vehicle.

One of the auxiliary outlet of system protection valve is connected through a graduated hand brake valve to spring brake chamber portion, integral with rear brake actuator.

During normal running, inside springs are kept in compressed condition by air pressure, thus releasing parking brake. For parking / emergency braking, hand brake valve is operated for depleting air to atmosphere, thus applying parking brakes.

Second auxiliary outlet of system protection valve is connected to exhaust brake air cylinder through exhaust brake solenoid valve which is coupled with service brake pedal operation through stop light switch.

Exhaust brake isolator switch is provided on instrument panel which can be used to cut off exhaust brake, isolating exhaust brake whenever required e.g. while starting the vehicle on steep up gradient.

An air dryer cum unloader valve is fitted between air compressor and system protection valve alongwith purge tank. Air dryer ensures clean and dry air in the brake system, resulting in enhanced life of brake valves.

Note :

Do not attempt to clean air dryer desiccant cartridge and filter.

Replace desiccant cartridge and filter after every 2 years.

To conduct brake system routine service check - I prescribed at every 18,000 km and routine checks - II prescribes at every 36,000 km contact nearest Tata authorised workshop.

Procedure for these checks explained in pages 110-112.

https://truckmanualshub.com/

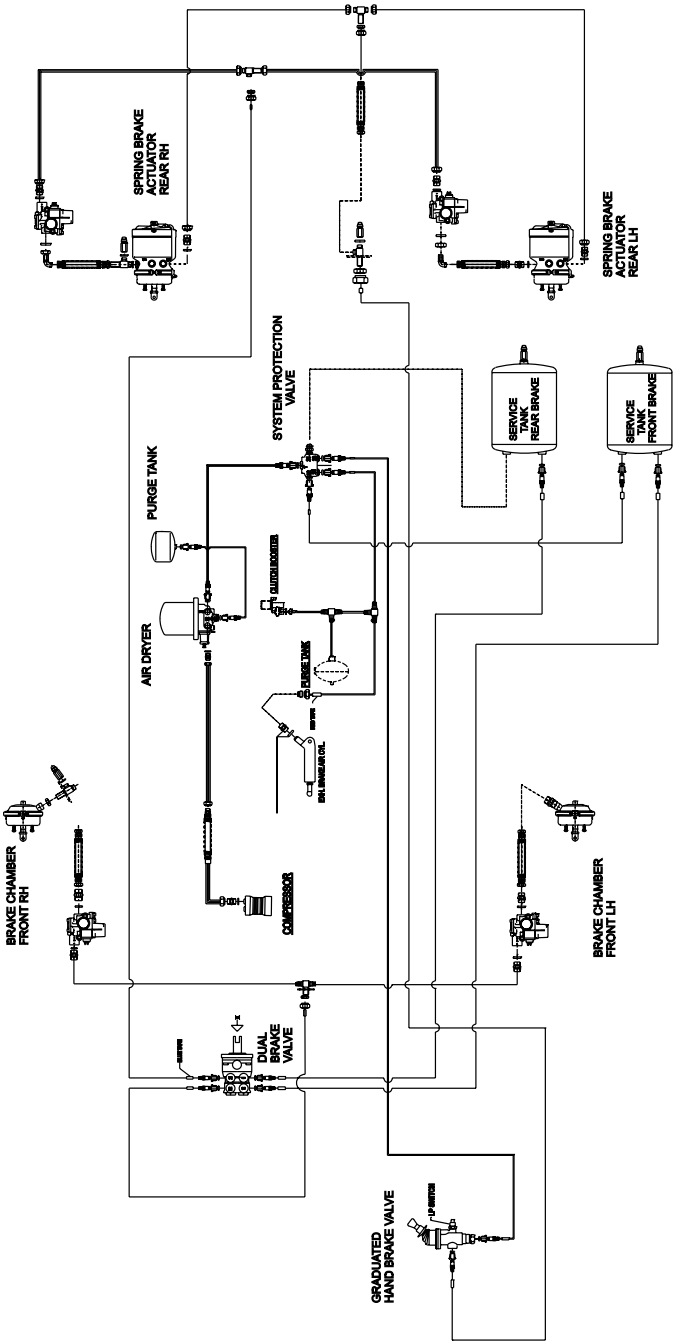

AIR BRAKE SYSTEM WITH ABS (IF FITTED)

https://truckmanualshub.com/

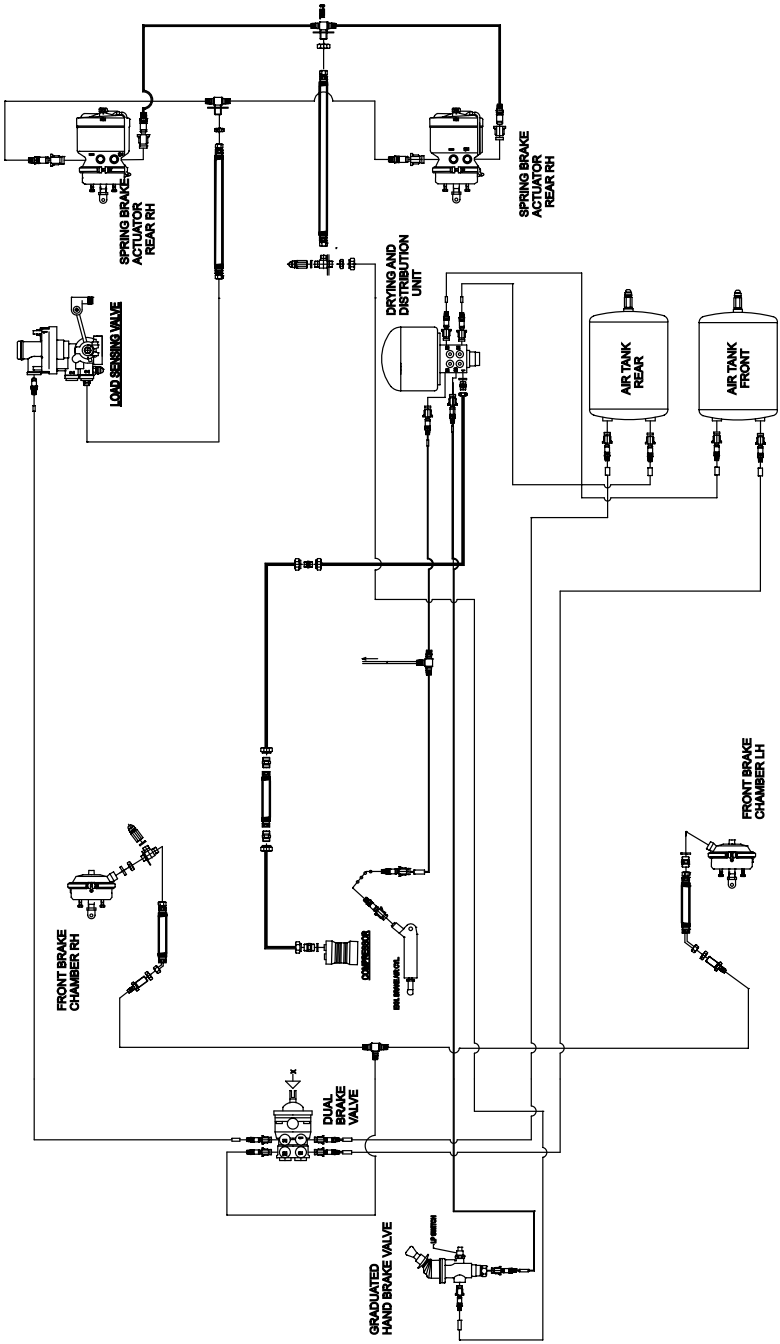

SCHEMATIC LAYOUT OF DUAL CIRCUIT FULL AIR S-CAM BRAKES WITH LCRV

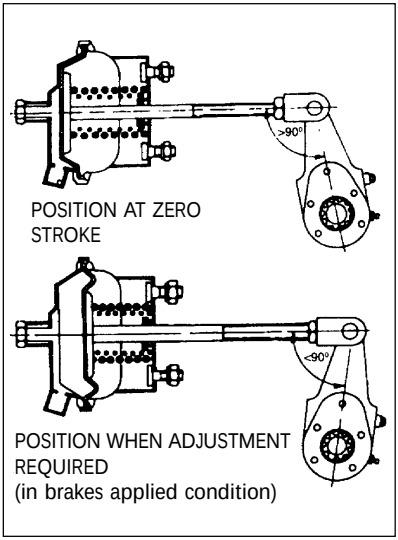

Position of slack adjuster

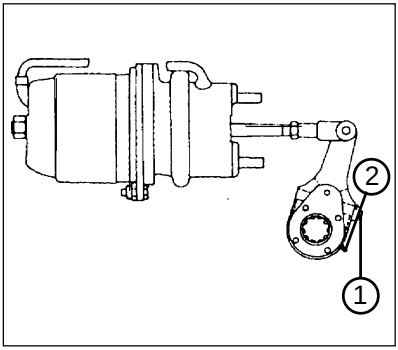

1. *Adjuster screw*
2. *Locking sleeve*

Adjustment of service brakes/ slack adjusters

In order to ensure efficient operation, 4 wheel brakes must be set during every lining change or whenever brake drum open for maintenance.

All normal setting should be made only by means of adjuster screw to slack adjuster. Brake adjustment is to be done when drums are cold and not when they are hot. Improper brake adjustments can cause brake grabbing, more air consumption or low brake efficiency.

Procedure

1. Jack the wheels. Release hand brake if it is in ON condition.
2. Position a box spanner or a ring spanner (12 mm A/F) over the adjuster hexagon. By depressing the locking sleeve, turn adjuster screw clockwise until shoe begins to bind drum. Then turn adjuster screw anticlockwise 270O

Note

It is possible to check clearance between the drum and lining by using a feeler gauge through inspection hole after removing rubber grommet.

https://truckmanualshub.com/

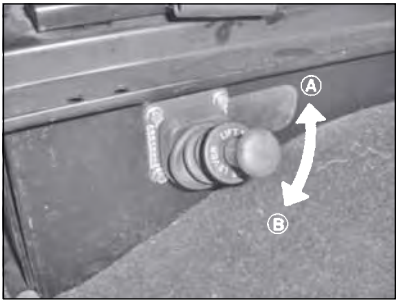

Hand brake valve

A. Brake released

B. Brake applied

A to B Gradual application

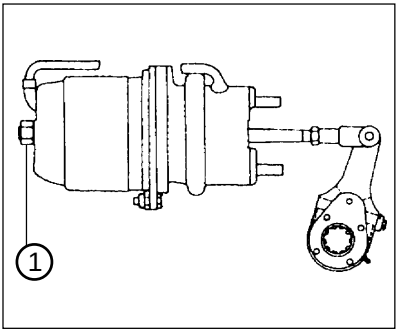

Spring brake actuator

Mechanical wind off screw for hand brake

Hand brake (parking brake)

Hand brake is integral with spring brake actuator on rear axle. Spring brake chamber piston ram acts directly on push rod assembly of brake chamber.

Parking brake adjustment

No separate adjustment is required. Service brake adjustment holds good for hand brake also.

Releasing automatically applied parking brake

If there is air leakage in parking brake circuit, parking brake gets applied automatically. Air leakage in any other circuit (front, rear and exhaust brake) does not effect parking brake due to the action of system protection valve. A mechanical 'wind off' screw (M16 x 1.5) is provided at the top of spring brake actuator to release automatically applied parking brake due to any reason.

To release, rotate wind off screw up with a spanner against the tension of spring (inside spring brake chamber) till brakes are completely released.

Wind off screw has to be turned back to original position, soon after mechanical wind off requirement is over and before vehicle is put on road again.

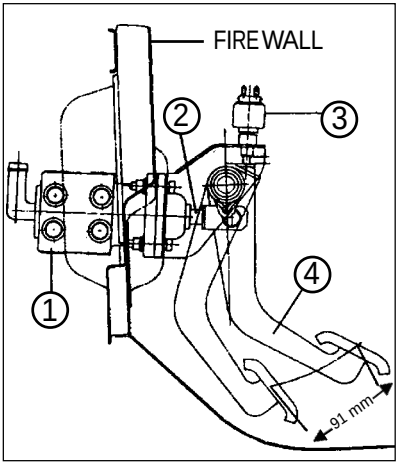

1. *Dual brake valve*
2. *Push rod*
3. *Stop light switch*
4. *Brake pedal*
5. *Pedal stopper screw (Adjacent to stop light switch)*

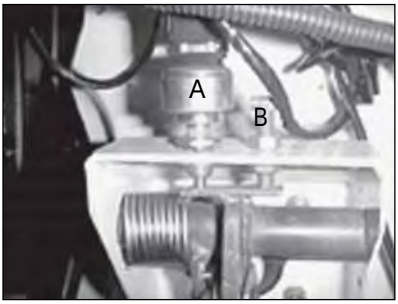

A. *Stop light switch*
B. *Pedal stopper screw*

Adjustment of brake pedal free play

Adjust brake pedal free play as below :

1. Ensure brakes are in released condition.
2. Loosen check nut on pedal stopper screw located near stop light switch. Adjust stopper screw such that brake pedal free play travel is between 3 to 6 mm.
3. Tighten check nut of stopper screw without disturbing stopper screw.
4. Operate brake pedal a few times to ensure desired brake pedal free play.
5. Adjust stop light switch.

Adjustment of stop light switch

1. Ensure that brakes are in released condition.
2. Install stop light switch so that the plunger is pressed by about 3 mm when assembled.
3. Operate brakes a few times, to make sure that stop light indication comes properly.

Adjustment of exhaust brake

There is no separate exhaust brake adjustment. Stop light switch serves the function of providing signals both for rear tail brake lamps as well as for exhaust brake solenoid valve.

Precautions

Check for proper functioning of exhaust brake at PDI and after every 10,000 Km. With brake pedal fully released, there should be no exhaust brake application. If it is on, readjust stop light switch suitably. Exhaust brake application can be made out from the distinct change in engine noise.

https://truckmanualshub.com/

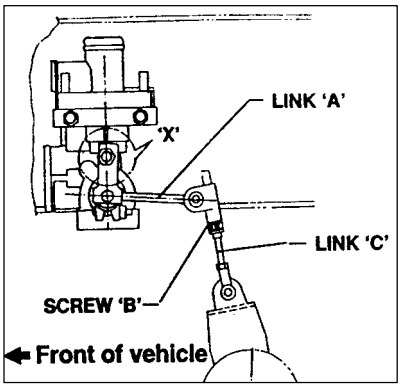

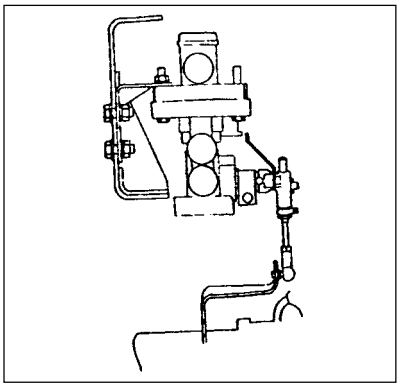

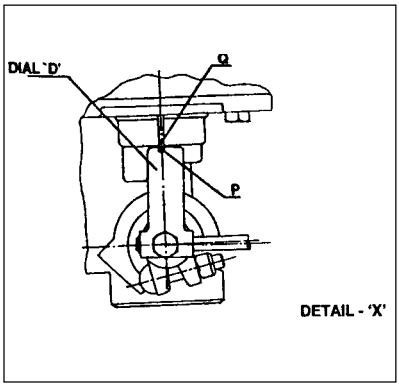

Load conscious pressure reducing valve (If ABS is not fitted)

This valve is located in rear brake circuit and regulates supply of pressurised air to rear brake chambers depending on the load on rear axle.

This enables rear brake actuation proportional to the load on rear axle and avoids wheel locking in partially loaded conditions.

The valve is mounted on the RH side of the frame and connected to rear axle with help of linkages.

Distance between axle and Chassis top varies with the load on vehicle. This variation is sensed by the valve through the linkage connected to the axle and input air pressure to brake actuator is modulated.

Adjustment

In unladen vehicle (with or without load body) Loosen screw 'B'. Rotate link 'A' by sliding rubber connector over link 'C' such that Point 'P' on dial 'D' coincides with point 'Q'. Tighten the screw 'B'.

Adjustment of LCRV should be done as per valve setting data given on the sticker, located near windshield washer water reservoir.

 https://truckmanualshub.com/

Anti Lock Brake System (ABS) (if fitted)

ABS combined with the traditional hydraulic brake system prevents the wheel from locking while braking by making use of most of road to tyre grip. It also ensures better control and stability of vehicle while braking.

How ABS works

ABS essentially consists of an Electronic Control Unit (ECU) which reads signals from the sensors fitted to each wheel and identifies the one which is likely to lock. (Wheels will tend to lock when the speed of rotation of any one wheel becomes too low in relation to the vehicle speed.) It tells an Electronic Control Unit (ECU) to reduce, maintain or increase the pressure on the modulator valve in order to prevent the wheel from locking. The ABS comes into play when the vehicle is braked heavily during emergency or road surface is wet or slippery.

The driver feels modulation of air pressure (some sound from modulator valve)

This is absolutely Normal. This should not be interpreted as a fault in the brakes. On the contrary it's the indication that the ABS is working. This is an intentional warning to the driver that a wheel or wheels are tending to lock due to the limit of tyre to road adhesion. The ABS is addition to the basic brake system. It is activated automatically every time the engine is started. If there is a malfunction the system turns off automatically indicated by a '(ABS)' warning indicator on the dash board, still the ordinary brake system continues to work.

ABS Activation

ABS activation varies with various road surfaces i.e. the amount of traction your tyre have on a particular surface. On dry surface you will need more pedal effort to activate ABS. However you may feel ABS activates immediately if you try to stop on snow, ice or slippery surface.

ABS Indicators

The ABS is self check. If any thing goes wrong the ABS warning indicator comes on the instrument panel. When you switch on the Ignition the ABS light turns ON but should go out after about 5 seconds. If the light fails to go or the lighting up of the warning light when the engine is running or the light comes at any other time, it indicates there is a fault in the ABS only. In this case also the normal braking system is still effective and is able to provide normal stopping ability.

In this condition it is recommended to take your vehicle to the nearest authorized Dealer / service outlet and get your vehicle attended as soon as possible if the warning light stays on.

https://truckmanualshub.com/

Safety tips while driving with ABS

1) During a hard braking or when the road grip is poor, you will feel an audible noise in the system. This is absolutely Normal and it's the indication that your ABS is rapidly modulator air pressure. Do not release the brake pedal, this defeats the purpose of ABS. Keep firm steady pressure on the brake pedal so as not to interrupt the braking action as long as you steer away from the hazard.

2) ABS prevents the wheel from locking but it does not increase actual tyre to road grip. Hence even if your vehicle is fitted with ABS, maintain a safe following distance.

3) ABS does not reduce either time or stopping distance, It only helps steering control during braking. You should always keep a safe distance from other vehicles.

4) ABS will not prevent skidding of a vehicle that results from changing direction abruptly such as trying to take a corner too fast or making a sudden lane change.

5) ABS cannot prevent a loss of stability due to severe or sharp steering wheel movement. Always steer moderately while braking hard.

6) ABS requires a little longer stopping distance than a vehicle with conventional brake system on a loose or uneven surface, such as gravel or snow. Slow down and allow a safe following distance.

7) ABS serves to increase your control over the vehicle not to enable you to go faster.

 https://truckmanualshub.com/

Brake system routine checks

1. Routine checks - I

a. It is very essential that brake system is kept trim at all times and periodic checks are conducted so that vehicles with brake system defects are not run on road. The following procedure is recommended for a general check once in 20,000 km. and after each brake overhaul. For maintenance data, refer to specifications.

b. Place chocks on both front and rear wheels.

c. Remove drain plugs and exhaust all air tanks. Drain water and assemble back drain plugs. Deplete air in spring brakes by applying, releasing hand brake valve. Keep hand brake in 'OFF' position.

d. Turn vehicle ignition to 'ON'. The low air pressure and hand brake indicators should glow immediately. The pressure gauges should read zero. If not, rectify.

e. Run the engine at full speed to charge the system. The air pressure in one of the service tanks (the circuit having slightly lesser opening pressure in the system protection valve) will rise at first to a certain limit. Then other circuit will follow and both will rise together.

f. The low air pressure indicator should be off at the specified value (5.4 ± 0.5 bar). If not, rectify.

g. Continue to charge the system till 'cut-out' pressure (7.4 ± 0.2 bar). The unloader valve should cut out (identified by a hissing noise).

h. Stop engine. The time taken from zero to cut out pressure should not exceed specified pump up time. If it takes more, check for leakages in brake system and rectify. Also open compressor head, check for defects and rectify.

i. After pressure in the system stabilises, the drop in air pressure (due to leakage if any) with brakes 'OFF' should not exceed specified value. Otherwise, rectify.

j. Apply service brakes and hold. The pressure in both circuits will drop by a small amount and stabilises. The drop in air pressure (due to leakage, if any) with brakes 'ON' should be within limits.

k. Make a few brake applications to bring down air pressure. When 'cut in' pressure is reached, the compressor charges the system again till 'Cutout' pressure is reached. Put off the engine.

https://truckmanualshub.com/

l. Jack up the rear axle. Rotate wheels manually. Apply hand brake. It will not be possible to rotate wheels. Hand brake indicator appears on panel. Release hand brake. Wheels will be free to rotate again. There will be a small pressure drop in both the reservoirs. Now hand brake warning signals should be off.

m. Lower down rear axle.

n. Apply service brakes and check that rear tail lamp glow.

o. Put exhaust brake piano switch in 'ON' position. Start the engine and apply brake pedal. Exhaust brake indication appears on the panel along with distinct change in engine noise which indicates the application of exhaust brake.

p. Take road test for :

   i. Efficient braking

   ii. Absence of grabbing/pulling to one side

   iii. Absence of brake squealing and rectify defects if any.

   iv. Check that hand brake and exhaust brake are also functioning properly.

2. Routine checks - II

In addition to routine checks - 1, the following checks of different brake valves keep the system healthy. It is recommended once in 40,000 km. and after each brake overhaul.

2.1 System protection valve (SPV)

A. Opening pressures

a. Fail one service circuit say rear circuit (port 21) by opening any pipe joints.

b. Drain the healthy reservoir (front) below 4 bar and charge air at max. engine speed.

c. Note max. pressure in the gauge of healthy circuit. This is the opening pressure of SPV port 21, connected to failed rear circuit.

d. Repeat a, b and c for other circuit (port 22).

e. With all circuits healthy, build up air pressure till cut out. Open connector at SPV port 23 to atmosphere. Pressure in the service tanks will fall to around 4 bar. Run engine at max. speed and note the stabilized gauge pressure (either front or rear gauge). This is the opening pressure of SPV port 23.

f. Repeat (e) for SPV port 24.

B. Closing pressures

a. With full pressure in the air tanks, slowly leak out any circuit, say rear (port 21) to zero. The pressure in the other circuit (port 22) falls to a certain value and stabilizes. This is the closing pressure of SPV port 22.

b. Repeat (a) for closing pressure of port 21.

 https://truckmanualshub.com/

c. For checking closing pressure of port 23, 24 pressure gauges should be connected in their circuits. Leak out air in either front (22) or rear tanks (21). Note down closing pressure of SPV port 23 and 24 after pressure gets stabilized.

d. Note down closing pressures of SPV port 21/22 with air leaked out to zero in hand brake circuit (port 23).These closing pressures will be different from those at (a) and (b).

e. Repeat (d) with air leaked out to zero in exhaust brake circuit (24).

2.2 Dual brake valve (DBV)

a. With full pressure in air tanks, check for leakage from exhaust port of DBV with :

   i. Brakes in released condition.

   ii. Partial braking and

   iii. Full braking

b. Open the outlet pipes 21 and 22 and check for leakage in brake OFF condition.

c. Open inlet pipes one by one say 11 and check for leakages between primary and secondary chambers in brakes OFF and ON conditions. Repeat with pipe 12 disconnected.

2.3 Brake chambers

a. With brakes applied at full pressure, check for leakages in front and rear brake chambers.

b. Open service brake pipe 11 of spring brake actuator and check for leakages from spring brake chamber into service brake chamber and from non-pressure plate side of spring brake chamber.

c. Check that 'mechanical wind off' is functional in spring brake actuator.

d. Check for any hole elongation and wear on push rod fork and pin.

2.4 Slack adjusters

a. Check that slack adjusters are functional and adjustment is possible without sticking.

b. Check for any hole elongation and wear in bushes.

2.5 Graduated hand brake valve

a. Check leakage from exhaust port in brake ON and OFF condition.

b. Check lever for proper locking, in brakes ON and OFF condition.

https://truckmanualshub.com/

FRIENDLY SERVICE TIPS

1. Braking performance will drop down after brake chamber push rod travel of 45 mm in brakes applied condition. (Angle between push rod and centre line of slack adjuster will be less than 90°.) Please do adjust service brakes before 45 mm travel.
2. When drums are removed for servicing, do not apply grease between contact surfaces of S cam profile and rollers. They should be left dry for proper rolling action. But only roller ends which sit into shoe web are to be greased lightly.
3. When using repair size brake drums and linings ensure that drum diameters and brake lining sizes are same on the opposite side of the same axle.
4. Do not attempt to clean air dryer (cartridge & filter). Replace the old ones with new cartridge and filter every two years.
5. Brake drum diameters are recommended upto repair size II of 329 mm. Drums should not be used beyond 330 mm dia. as there will be no service braking or parking brake left, due to cam roll over. Before that, drums should be discarded.
6. Any extra air connection to auxiliaries like air horn should be taken from exhaust brake circuit only and not from parking brake circuit or service brake circuits.
7. Graduated hand brake valve can be used along with exhaust brake isolator switch for simultaneous acceleration and partial braking of vehicle in certain situations like start moving the vehicle on steep upgradient.
8. For brake system service checks at every 20,000 & 40,000 km. contact Tata authorised workshop.
9. Please take care of nylon tubes, see that they,
   a. Do not come in contact with hot objects.
   b. Do not rub against sharp edges.
   c. Do not have kinks, folds or twist.
   d. Are not exposed to welding spatters etc.
10. Always use genuine nylon tubes, for safety reasons.

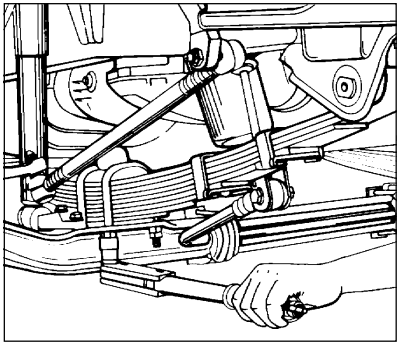

Tightening spring 'U' bolt at front axle

Springs

U-bolt nuts and check nuts of front/ rear springs should be regularly tightened with a torque wrench or with a socket wrench and a handle of atleast 60 cm length. Specified torques are given below :

'U' bolt nuts	:	21 mkg
'U' bolt check nuts	:	21 mkg

Dismantle front / rear spring packs at every 72000 kms. Clean, apply graphite grease & reassemble. Check eye bushes & replace, if necessary.

Anti roll bars (bus chassis)

Check anti roll bar mountings at every 9000 kms & tighten, if necessary. Check condition of bushes and replace, if necessary.

Wheel alignment

Check toe-in at every 36000 kms & adjust, if necessary. Specified toe-in 0 to 3 mm.

Shock absorbers

Check condition of shock absorbers / shock absorber bushes at every 9000 km & replace, if necessary.

https://truckmanualshub.com/

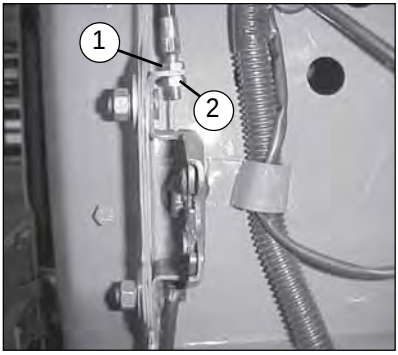

Outer cable first part

1. *Adjustment nut*
2. *Lock nut*

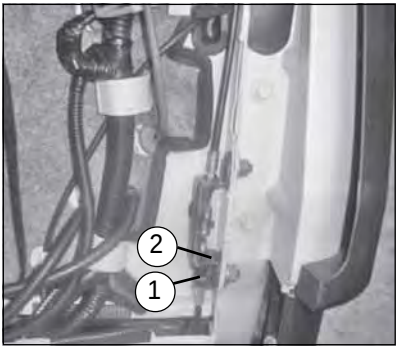

Outer cable second part

1. *Adjustment nut*
2. *Lock nut*

Cable adjustment on centre flap locking mechanism.

- Centre flap is locked by two piece toggle locks fixed on front end of fire wall on LH & RH sides.
- Centre flap gets locked when it is lowered and pressed gently against fire wall.
- Flap gets unlocked when release lever (located above accelerator pedal) is pulled back.
- Cable outer is of two part and inner is single piece with two locking sieves.
- In order achieve proper locking and unlocking, it is necessary to fix the outer cable with out slackness.
- Cable outer first part is between release lever and toggle lock RHS.
- To adjust slackness on first part of cable, loosen lock nut “2” and tighten adjustment nut “1” till the desired stiffness is achieved.
- Tighten lock nut “2” firmly.
- Cable outer second part is between the toggle lock RHS & LHS.
- To adjust slackness on second part of cable, loosen lock nut “2” and tighten adjusting nut “1” till desired stiffness is achieved.
- Tighten lock nut “2” firmly.

https://truckmanualshub.com/

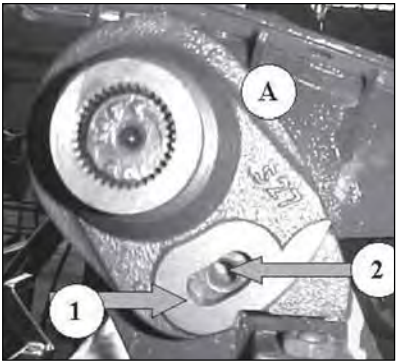

Removal of adjusting block
1. *Oblong hole*
2. *Locking bolt hole*

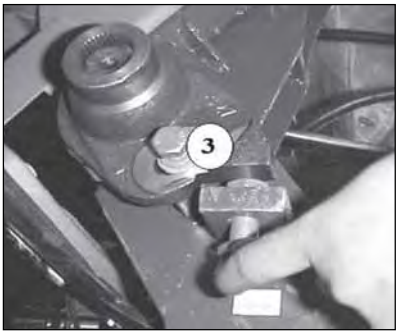

3. *Locking bolt*

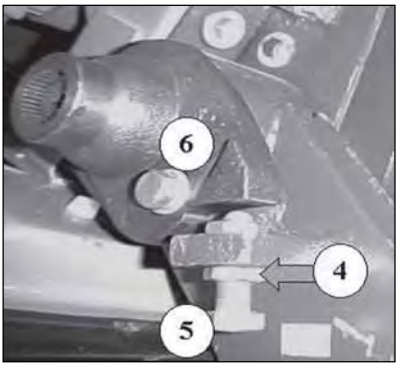

4. *Lock nut*
5. *Adjustment screw*
6. *Lock bolt of adjusting block*

Tilt cab torsion bar adjustment

- In cab tilting system a, torsion bar is incorporated to reduce the effort while tilting out cab. Also to offer resistance while lowering the cab to avoid sudden falling of cabin.
- Torsion bar should be fitted/ removed/adjusted only with the cabin in fully tilt out position.
- Torsion bar needs to adjusted, in order to achieve the desirable effort while tilting out and resistance while lowering.

Adjustment procedure follows.

- Place adjusting block “A” on the LHS end spline of torsion bar so as to align the midway of oblong hole “1” with locking bolt hole “2”
- Tighten lock bolt “3” to hand tight.
- Loosen the lock nut. “4” on adjusting screw and tighten screw “5” in order to achieve 3mm gap between adjusting screw and block.
- Tighten lock nut “4” firmly.
- Tighten lock bolt “6” of adjusting block to 7 mkg.

https://truckmanualshub.com/

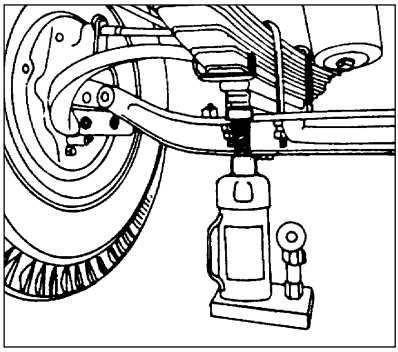

Jack location at front

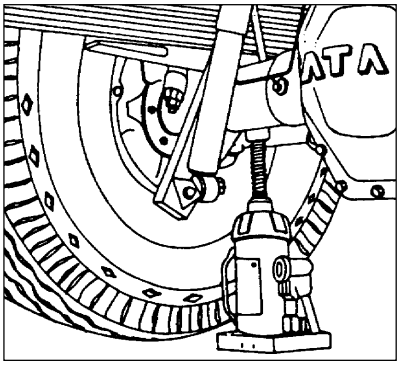

Jack location at rear

Wheel changes

When changing wheels observe specified tyre load capabilities and pressures.

Secure the vehicle to prevent rolling by using suitable wheel chokes.

The **jack** should be applied at front axle towards front, below spring pack (i.e. below 8th leaf).

Never put the jack below the differential housing.

Specified tightening torque for wheel nuts is 35-40 mkg.

Wheels and tyres

Tyres are to be examined periodically for damage, foreign objects and wear.

You should look for :

- Bumps or bulges in treads or sides of tyre. Replace tyre if you find either of these conditions.
- Cuts, splits or cracks in the side of the tyre. Replace tyre if you see the fabric or chord.
- Excessive tread wear.

Tyres can give satisfactory service only if the load carried by each tyre and pressure is within specified limit. For this reason maximum recommended GVW must never be exceeded as otherwise life of tyres will be adversely affected.

Under inflation and over inflation are both injurious to life of tyres. Therefore, correct tyre pressure must be maintained at all times. It is possible that after initial inflation of tyres in cold condition, there is a rise in pressure after vehicle has travelled some distance and tyres get hot. Tyre pressure should not be corrected under these conditions because if tyre pressure is corrected at this stage, it will result in under inflation when it cools down.

It is good practice to have best tyres on front axle for operational safety of the vehicle. However, it is essential to match size of the tyres so that all tyres on the same axle have more or less same degree of wear. Fitting tyres of size other than specified will have a number of adverse effects and therefore should be avoided.

https://truckmanualshub.com/

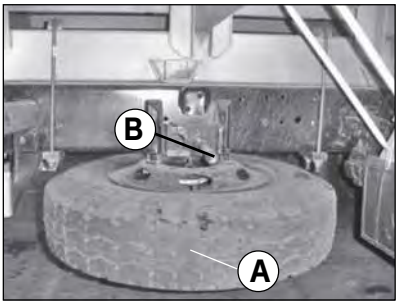

A -Winch spindle
B -Spare wheel

Spare wheel mounting nuts

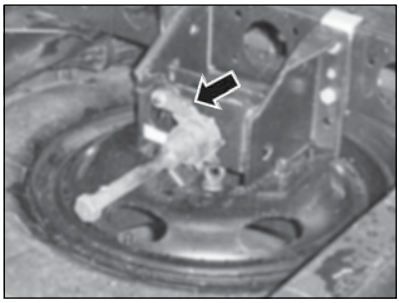

Ratchet-pawl

Operating the winch type spare wheel carrier

Loosen mounting nuts (2 Nos.) holding spare wheel to winch with wheel wrench.

Lift ratchet-pawl and rotate winch spindle in counter clockwise direction with wheel nut spanner and lower the saddle with spare wheel.

Remove spare wheel from saddle.

After repairing spare wheel, secure it on the saddle.

Rotate winch spindle in clockwise direction using wheel wrench. Align saddle studs with mounting hole on winch.

Tighten mounting nuts (2 Nos.) with wheel nut spanner.

Wheel Balancing

Wheels of your vehicle are balanced for better ride comfort and longer tyre life. Balancing needs to be done whenever tyre is removed from rim.

1. Permissible imbalance for tyre with rim = 500 gm-cm max.
2. Total balance weight should be within 240 gms on each side.
3. Relocate the tyre if the weight required to balance is more than 240 gm.
4. Do not use more than one balance weight on one side.
5. Tube valve should be positioned centrally with respect to wheel rim valve cut-out.

While fitting wheels on the vehicle make sure that wheel bolts are free from dust, scratches, dirt; dents, etc.

Do not oil wheel bolts and nuts.

https://truckmanualshub.com/

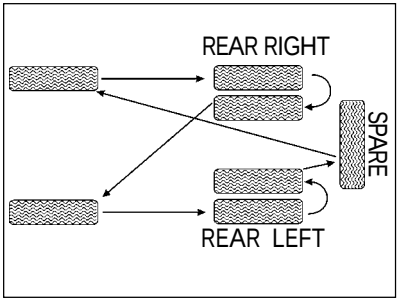

Tyre rotation (all tyres rib type)

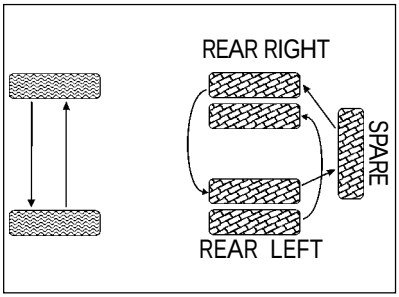

Tyre rotation (Front tyres rib type, rear & spare tyres lug type)

Type pressure

LP/ LPT 613

	At rated GVW	Unladen LPT	Unladen LP
Front	90 psi	50 psi	35 psi
	(6.3 bar)	(3.5 bar)	(2.4 bar)
Rear	90 psi	35 psi	35 psi
	(6.3 bar)	(2.4 bar)	(2.4 bar)

Tyre rotation

Tyre rotation is recommended for achieving identical wear on each tyre. It is also advisable to change rotating direction to relieve tyres of continual one way running. Regular rotation of tyres will also prevent abnormal wear. Sketches indicate suggested sequence of tyre rotation.

Rotate tyre every 9,000 km or earlier depending on operation.

https://truckmanualshub.com/

Removing rubber cap from tyre inflating valve

Connecting hose to tyre inflating valve

Connecting hose to tyre tube nozzle

Inflating tyres with air from air dryer

Outlet pipe from air compressor is connected to air dryer with in built tyre inflator cum unloader valve.

Air from tyre inflator can be used to inflate tyres during emergency.

For inflating tyres, unscrew wing nut or remove rubber cap (whichever is provided) from tyre inflating valve and start the engine. After the condensed water and oil that may be present in the system have been completely expelled, connect hose to the tyre inflating valve and nipple of the hose to the tyre tube nozzle. Run the engine at fast idling speed.

Disconnect hose and check tyre pressure.

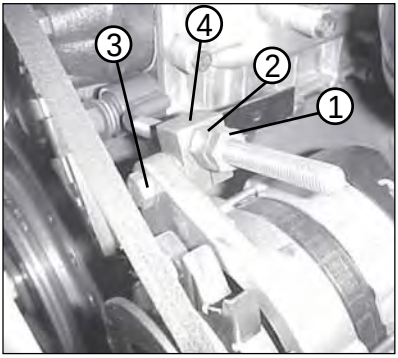

1. *Lock nut*
2. *Adjusting nut*
3. *Clamping bolt*
4. *Clamping piece*

Alternator belt tension adjustment

Belt tension should regularly be checked and if necessary adjusted. If belt tension is correct, it can be depressed by 20 mm with thumb pressure applied on the middle of its length.

If belt is loose (slack), i.e. it gets depressed by more than 20 mm, adjust belt tension as per following procedure :

a. Loosen bottom mounting bolt of alternator.

b. Loosen bolt holding upper mounting of alternator to the clamping piece.

c. Loosen lock nut.

d. Adjust belt tension by turning adjusting nut and by moving alternator away from engine.

e. Tighten lock nut and the bolt holding clamping piece to alternator.

f. Tighten bottom mounting bolt.

g. Recheck belt tension.

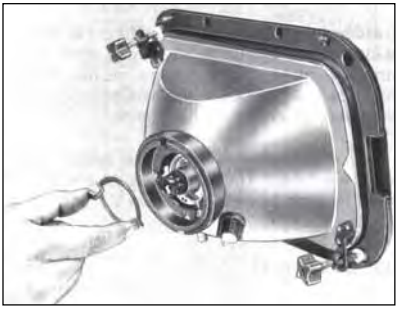

Removal of locking ring

Bulb replacement and alignment of head lamps

Head lamp system provides two types of light beams; a main beam to give maximum light well ahead of the vehicle, and a dipped beam which is shorter and lower so that it will not dazzle on on-coming drivers, and can be used in low visibility area.

Separate filaments in a single bulb provide main and dipped beams.

Head lamp also has a parking lamp.

Bulb replacement

Remove head lamps outer ring. Unscrew the screw and swivel the head lamp assembly sideways on the hinges. Remove rubber cap from rear of head lamp. Push out cable socket from bulb. Replace with new bulb taking care for proper fitment and lock the bulb with lock ring. Refit cable socket with bulb on the head lamp and press it in position.

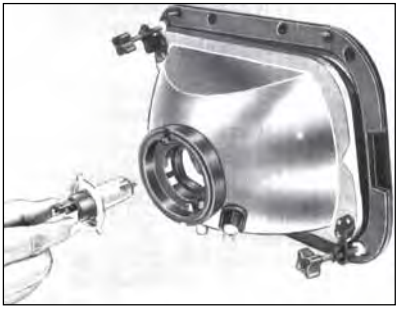

Replacing head lamp bulb

Note :

Do not clean the reflector as it will cause damage to mirror finished surface. Do not replace bulb with dirty or oily hands since oil will evaporate due to the bulb heat and stain the reflector. After replacing bulb check head lamp alignment.

Halogen bulb is used for head lamps. Do not touch glass shell. It may result in personal injury or damage to bulb

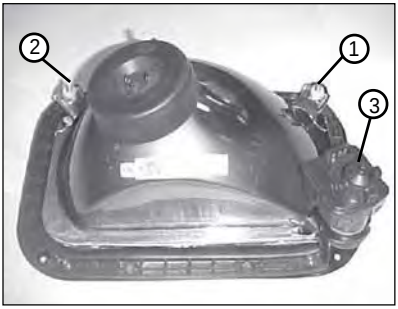

Motorised head lamp

1. *Vertical adjustment screw*
2. *Horizontal adjustment screw*
3. *Fine adjustment setting screw*

Head lamp alignment

The head lights must be properly aligned in order to obtain maximum road safety as regards proper road illumination and to reduce the glare on the oncoming traffic.

It is recommended to check the alignment of head lights periodically and whenever bulbs are replaced, by means of screen as shown in figure.

The head lamp alignment in this type, asymmetrical dipped beams, is done only by adjusting the dipped beams unlike other head lamps where main beams are adjusted.

e) Head Lamp Focusing

Park unloaded vehicle with no sag in suspension springs and all tyres equally inflated, 10 m away from the screen with it's center in line with the central vertical line on the screen at right angles to longitudinal axis of the vehicle.

- Keep the leveling switch at '0' position.
- On the marked up screen, the area above the horizontal and inclined lines (shaded) is called

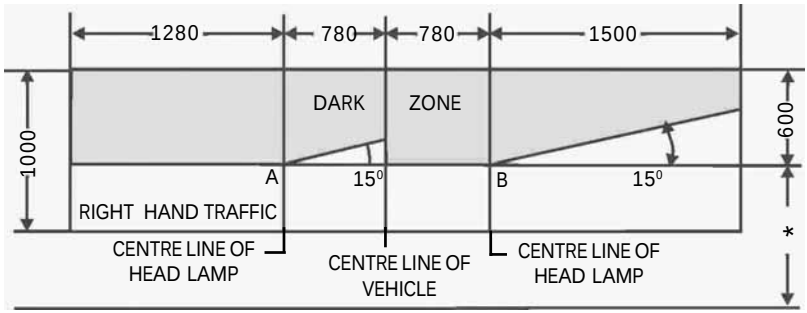

** = 825 mm with unladen vehicle.*

Screen for adjusting head lamps focusing - LHD Vehicles

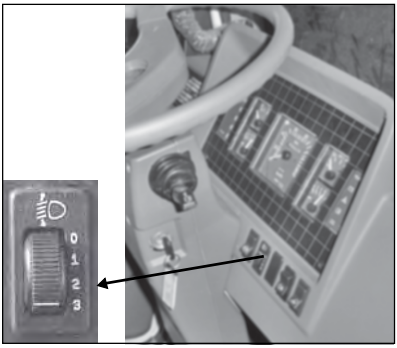

Head lamp levelling switch

The Dark Zone', and the area below it is called 'The Illuminated Zone'.

- Each lamp can be aligned individually by masking the other lamp. The head lamp is first adjusted for the proper height of the dipped beam by adjusting the screw at it's bottom below motor. The light from dipped beam should fall below the horizontal and inclined lines. No light should fall above these lines i.e., in 'the dark zone'.

Caution : Setting screw on motor should be used for fine adjustment only, otherwise motorised adjusting mechanism will be damaged

- Lateral adjustment can be done by adjusting screw at the other end of bottom so that contour of the dipped beam coincides with the contour formed by horizontal & inclined lines below 'The Dark Zone'.
- When properly aligned the most brightly illuminated area will be below the intersection (point A) of two lines.
- The second head lamp can be adjusted in a similar manner without disturbing the position of the vehicle and the screen.
- Operate the leveling switch to '1', '2' & '3' positions & ensure symmetrical movement of cut-off beams vertically.

Focusing should be done, preferably in the dark.

Each lamp is aligned individually by masking the other lamp. Head lamp is first adjusted for proper height of dipped beam by adjusting screw at top. Light from dipped beam should fall below horizontal and inclined lines. No light should fall above these lines. i.e., in "The Dark Zone". Thereafter lateral adjustment is done by adjusting screw at bottom so that contour of dipped beam coincides with the contour formed by horizontal and inclined lines below "Dark Zone". When properly aligned, most brightly illuminated area will be just below the intersection A) of two lines.

Head lamp on other side is adjusted in a similar manner without disturbing the position of vehicle and screen. Now switch "ON" main beam lights. They will be symmetrical above points of intersection (point A & B) of vertical lines and horizontal line. It is possible that main beams may not be exactly symmetrical but for this reason head lamps should not be realigned.

PREFERABLY, ALIGNMENT SHOULD BE DONE IN THE DARK

Caution :

No masking of head lamps with black paint is required. If done this will reduce head lamp intensity.

Bulb specifications

Description	Location	Type	Specification		Qty.
Headlights	Headlamp Instrument panel	H4 P43 *	24 V 24 V	60/55 W 2 W	2 1
Turn indicator lights	Front Tail lamp Instrument panel Side indicator lamp	RL RL * *	24 V 24 V 24 V 12 V	21 W 21 W 2 W 21 W	2 2 2 2
Brake lights	Tail lamp	RL	24 V	21 W	2
Parking lights	Head lamp Tail lamp Number plate	HL G G	24 V 24 V 24 V	4 W 10 W 10 W	2 2 2
Reverse indicator lights	Tail lamp	RL	24 V	21 W	2
Battery charging indicator light	Instrument panel	*	24 V	2 W	1
Low oil Pressure indicator light	Instrument panel	*	24 V	2 W	1
Parking brake indicator light	Instrument panel	*	24 V	2 W	1
Gauge illumination light	Instrument panel	*	24 V	2 W	7
Driver compartment	light Cab roof		24 V	10 W	1
Engine compartment light	Engine compartment	RL	24 V	21 W	1

* = These bulbs are capless.

FUSE BOX & RELAY COVER

H/L LEVELLING MOTOR RLY (YELLOW)	HORN RLY (YELLOW)	HEAD LAMP H/B RLY (YELLOW)	REAR FOG LAMP (YELLOW)	ECU RELAY (BLUE)	FRONT FOG LAMP RELAY (YELLOW)
ABS RELAY (GREEN)	ACC RLY (YELLOW)	HEAD LAMP L/B RLY (YELLOW)	STOP LIGHT RELAY (BLACK)	12V HOLD RLY (BLACK)	ECU RELAY-II (YELLOW)

DIANOSTIC CONNECTOR

AIR DRYER HEATER 10A	ACC 20A	HEAD LAMP RELAY COIL 5A	PARK RH 5A	FRONT FOG LAMP 10A	AIR DRYER HEATER RELAY (YELLOW)
DC-DC CONVERTER 15A	WARNING LAMP ABS 5A	RADIO 5A	PARK LH 5A		WATER SEPERATOR RELAY (YELLOW)
ENGINE STOP 5A	IGN-SUPPLY ABS 5A	HORN ROOF, ENG. LAMP 10A	GAUGES 5A	TURN 5A	
ADD SUPPLY BATTERY 5A	ECU-ABS 15A	REV-STOP 5A	WIPER 5A	VEH. SPEED SENSOR 5A	STARTER RELAY
ADD SUPPLY IGNITION 5A	WATER SEPERATOR 10A	HEAD LAMP H/B RH 5A	HEAD LAMP L/B LH 5A	FIP TIMER DC-DC 10A	
POWER SOCKET 5A	H/L LEV. RLY/FEED PUMP 5A	HEAD LAMP H/B RH 5A	HEAD LAMP L/H RH 5A	ECU 15A	

ADDITIONAL SUPPLY-I BATTERY (5A MAX)

ADDITION SUPPLY-II IGNITION (5A MAX)

FLASHER

WIPER CONTROLLER

Fuse and relay box cover

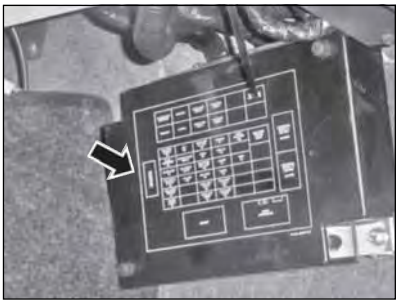

Location of fuse and relay box

Fuses

In order to protect cable harness and other equipments from damage in case of short circuit and overloads, glass cartridge fuses as per IS 2577 or SAEJ 554b are provided in fuse box .

In case of a fault in electrical system check respective fuse. Particulars of consumers served by each fuse are printed on fuse box cover.

Spare fuse cartridges are provided inside fuse box.

Always use fuses of correct rating. Do not use a wire in place of fuse.

WIRING DIAGRAMS ARE GIVEN FROM PAGE NO.173 TO188

https://truckmanualshub.com/

Vehicle storage

Following protective treatment would be required for the vehicle in case body building is deferred or vehicle would be put in operation after considerable storage or body building time would be fairly long.

Vehicle should be thoroughly washed and lubricated. Check all painted parts for damage and touch up, if necessary. Apply chromium protective paste on chromium plated parts. Grease springs and spring suspensions with anti-corrosive grease.

If vehicle is to be laid up for more than 6 months, drain off transmission and rear axle oils when hot, after vehicle has been driven for some time and replace by anti corrosive oil.

Batteries should be serviced at regular intervals to keep them in good condition. Batteries should be stored in a cool and dry room. Check battery condition every fortnight. If necessary, recharge.

Vehicle should be jacked up to relieve the tyres of load. Tyres including spare-wheel should have a pressure of approximately 0.5 to 1 kg / cm^2. Check tyre pressure from time to time.

The paint needs no special maintenance if the vehicle has been thoroughly cleaned before laying it up.

Caution : *Grease nipples must be carefully cleaned prior to greasing and the same applies to grease cups/ screw plugs before they are unscrewed.*

Engine storage (Short term)

Note : *This procedure describes the method of preparing an engine for short term. (1 to 6 months) storage.*

Run engine at high idle until coolant temperature reaches 70^0 C. Stop the engine.

Remove fuel tube to fuel filter and injector return tube.

Note *:Fuel system preservative oil must meet Federal specification VV-L-800C.*

Fill two containers, one with diesel and the other with preservative oil. Put both fuel tubes into the container of diesel.

Start the engine. When it is operating smoothly, put fuel supply tube into the container of preservative oil. Remove injector return tube from diesel container. When preservative oil flows from the tube, stop the engine.

Install fuel supply tube to fuel filter, and put a cap at the end on all other fuel tubes.

Drain oil from sump and oil filter. Drain diesel from fuel filters. Install drain plug in sump. Install filter bowls. Tighten according to specifications.

Note : *Do not drain coolant from cooling system.*

https://truckmanualshub.com/

Inspect the engine closely, and cover all openings with tape to prevent dirt and moisture from entering. Install a warning tag which alerts others of **no oil** in the engine and that it **must not be started.**

Store the engine /vehicle in a dry area of even temperature.

Rotate crankshaft two or three revolutions every 3 to 4 weeks using engine barring tool.

Preparing the engine after short term storage.

Remove tapes from all openings, and remove warning tag. Refill oil filter with clean W-40 oil, and fill oil pan to high-mark on dipstick. Prime lubrication system.

Use starter to crank engine for a **maximum of 30 seconds with 2 minute intervals** until oil pressure builds up.

Use clean diesel to flush preservative oil from fuel system, and fill fuel filters again. Prime and vent the fuel system.

Engine storage (Long term)

This procedure describes the method of preparing an engine for long term (6 to 24 months) storage.

Note : *If the engine has been stored for 24 months, cooling system must be flushed with a solvent. Repeat the flushing procedure a second time.*

Run engine at high idle until coolant temperature reaches 70°C.

Stop the engine.

Drain oil from sump. Install drain plug and fill sump to high level mark on dipstick with preservative oil.

Note : *Lubricating system preservative oil must meet Military Specification MIL-L-21260 Type PE 30-I SAE 30.*

Disconnect fuel supply tube at fuel filter and keep injector return tube at a convenient place.

Note : *Fuel system preservative oil must meet Federal Specification VV-L-800C.*

Fill two containers, one with diesel and the other with preservative oil. Put both fuel tubes into the container of diesel.

Start the engine. When it is operating smoothly, put fuel supply tube into the container of preservative oil.

Remove injector return tube from diesel container. When preservative oil flows from the tube, stop the engine.

Connect fuel supply tube to fuel filter, and put a cap at ends of all other fuel tubes.

Drain and flush the cooling system, using a water-soluble rust inhibitor.

Spray preservative oil into intake and the exhaust ports of cylinder head and exhaust manifold.

Install exhaust manifold.

Remove rocker housing covers, and spray rocker levers, valve springs, valve stems, valve guides, and push rods with preservative oil. Install rocker housing covers.

https://truckmanualshub.com/

Spray preservative oil into intake port of air compressor and on all exposed metal surfaces that are not painted.

Note : *Use a preservative compound that meets Military Specification MIL-C-16137.C type P- 2 Grade 1 or 2.*

Cover all openings with heavy paper and tape to prevent entrance of dirt and moisture.

Put a warning tag on the engine which contains following information :

Date the engine was prepared for storage.

Crankshaft must not be rotated.

Coolant has been drained.

Engine must not be operated.

Store the engine / vehicle in a dry area of even temperature.

Preparing the engine after Long term storage

Remove paper and tape from all openings. Remove warning tag.

Flush fuel system with clean diesel to remove preservative oil.

Rotate the water pump to make sure it hasn't rusted in place.

Rotate crankshaft two complete revolutions to make sure the piston rings are free and no foreign objects are in the engine.

Remove intake manifold cover and visually inspect the lower valve stem area for presence of rust. An accumulation of rust requires disassembly and rebuild of cylinder head.

Install drive belt.

Remove plug from main oil rifle drilling and flush preservative oil from the engine by pumping 4 litres of light mineral oil into oil rifle. Rotate crankshaft three or four revolutions as the engine is flushed. Install the plug.

Remove the oil drain plug and allow preservative oil to drain.

Remove oil filter. Install a new filter.

Pressure fill the engine with 15W40 oil through the 1.8 inch pipe tap on the side of oil filter housing directly below turbocharger oil supply connection. Use 2.07 bar to pressure fill the system with a minimum of 3.6 litres.

Fill oil in sump upto maximum level on dipstick.

Fill cooling system with a mixture of 50% water and 50% ethylene-glycol antifreeze. Adjust valve clearance.

Tighten all cap-screws, plugs and fittings as necessary.

Caution : *Make sure that the engine does not start when you crank engine.*

Use starter to crank the engine for a **maximum of 30 seconds, with two minute intervals, till such time oil pressure builds up.**

https://truckmanualshub.com/

Protection against corrosion

Dampness, humid atmosphere, high temperature, unattended chipped off paint surface, accumulated chemicals wet dust and road salt remains are the prime cause for corrosion. Follow precaution given below :

- Park vehicle in well ventilated and dry place preferably under shade.
- Wash and wax the vehicle regularly.
- Clean dirt or chemicals on vehicle, when noticed.
- Paint touch up due to chipping off scratch on paint surface.
- Washing under chassis frequently if vehicle is being driven on salted road (cold weather)
- Ensure fitment of mud flaps.

Corrosion prevention for load bodies

- To protect paint damage and deformation of sheet metal, use wooden raft or rubber sheet on top of floor panes and side panels of load body.
- Wash load body frequently. For vehicles operating near coastal areas, underside of load body and wheel arches should be washed at least once a month. High pressure water is effective for such washing. Wash load body in shade when body is not hot to touch.
- To protect box sections from corrosion - apply “DINTROL - 3850” rust preventive compound in the box section of all sides, panels, floor, tail gate and bottom cross member through drain holes provided for the purpose.
- Be careful when transporting chemical, cleansers, fertilizers, etc. If a spill or leak is noticed, care must be taken to immediately clean area. For such applications use additional coat of paints epoxy/chlorinated base anti-corrosive paint.
- Check the condition of load body’s paint periodically for any chips or breakage creepage of rust from paint damaged area. Give immediate attention for both primer and finish paint touch-up work.

Under Body Maintenance

Corrosive materials on roads accumulate on under body of a vehicle. If allowed to remain, these materials can cause deterioration of under body components such as fuel lines, chassis frame, floor panels, exhaust system etc. Atleast once every year, preferably after a winter's exposure, flush the under body with plain water. Complete under body needs to be thoroughly washed prior to each maintenance inspection.

https://truckmanualshub.com/

5. Technical Information

5.1 Technical specifications 135
5.2 Aggregate filling capacities 140
5.3 Lubrication points 141
5.4 Tightening torques 143

https://truckmanualshub.com/

ENGINE

Model	:	TATA 697 TC/IC EURO-II
Type	:	Water cooled direct injection Diesel Engine with Inter-cooler
No. of Cylinders	:	6 inline
Bore / Stroke	:	97 mm x 128 mm
Capacity	:	5675 cc
Max. Engine Output	:	95 kw @ 2400 rpm as per 80/1269/EEC as amended by 89/491/EEC(TUV)
Max. Torque	:	416 Nm @ 1400-1700 rpm as per 80/1269/ EEC as amended by 89/491/EEC(TUV)
Compression Ratio	:	17.5 : 1
Firing Order	:	1-5-3-6-2-4
Air Filter	:	Dry type , remote mounted
Oil Filter	:	Full flow paper type
Fuel Filter	:	Two stage pre and fine filtration
Fuel Injection Pump	:	Rotary type
Timing	:	With automatic advance built-in FIP
Governor	:	Centrifugal type variable speed
Capacity of Cooling System	:	20 litres
Crankcase Oil Capacity	:	Max. 14 litres Min. 12 litres
Weight of Engine	:	450 kg (Dry)
Radiator Frontal Area	:	2860 sq cm

CLUTCH

	:	Single plate dry friction type
Outside diameter of clutch lining	:	310 mm
Friction Area	:	1030 sq cm (approximately)

GEAR BOX

Model	:	GBS 40 synchromesh
No. of gears	:	5 Forward 1 Reverse

https://truckmanualshub.com/

Gear Ratios	:	1st-6.34 2nd-3.37 3rd-2.11 4th-1.28 5th-1.00 Rev-5.85 With PTO Provision & PTO Fitment optional. for LPT
REAR AXLE		
	:	Single reduction, hypoid gear, fully floating axle shafts.
Ratio	:	3.111 : 1 (28/9)
FRONT AXLE		
	:	Heavy duty Forged I beam reverse Elliot type
STEERING		
Steering Gear Box	:	Power assisted hydraulic steering.
BRAKES		
Service Brakes	:	Dual circuit full air S-Cam brake, ABS system with valve silencer and suitable for -40 deg. ambient (for LPT).
	:	Dual circuit full air S-Cam brake (Fitment of ABS - Optional) (For LP)
Brake Drum Diameter	:	325 mm
Lining Area	:	Front - 1236 sq cm Rear - 1236 sq cm Total - 2472 sq cm
Parking Brake	:	Spring actuated parking brake acting on rear wheels
Engine Exhaust Brake	:	Coupled with service brake (For LP)
FRAME		
	:	Ladder type frame with rivetted/bolted cross members Side members are of channel section Depth : 200 mm (max) Width : 60 mm with rear under-run protection
SUSPENSION		
Type	:	Semi elliptical leaf spring at front and rear with auxiliary springs at rear only.

https://truckmanualshub.com/

		LP	LPT
Spring Span	:	Front - 1450 mm Rear - 1620 mm	Front - 1150 mm Rear - 1220 mm
Leaf Width	:	Front - 70 mm Rear - 70 mm	Front - 70 mm Rear - 70 mm
Shock Absorber	:	Hydraulic double acting telescopic type at front and rear	
Antiroll Bar	:	At front & rear	

WHEELS AND TYRES

Tyres	:	7.50x16-16PR Diagonal ply (For LP) 7.50R16-14PR Radial ply (optional) (For LP) 7.50R16-14PR Radial ply (For LPT)
Wheel Rims	:	6.00 G x 16 SDC
No. of Wheels	:	Front - 2 Rear - 4 Spare - 1

FUEL TANK

Capacity	:	120 litres

CAB

	:	All steel full-forward control cowl. Heating & Demisting optional. (For LP)
	:	All steel full-forward control driver's cab with tilting arrangement & with torsion bar assistance. Heating & demisting (optional). (LPT)

ELECTRICAL SYSTEMS (For LP)

		OPTION-I	OPTION-II
System Voltage	:	12 Volts	24 Volts
Alternator Capacity	:	65 Amps	75 Amps
Battery	:	12V,180 Ah	2x12V,120Ah
Wind Screen Wiper	:	17 W - 2 speed and intermittent wipe	
Wind Screen Washer	:	Electrically operated	

ELECTRICAL SYSTEMS (For LPT)

System Voltage	:	24 Volts
Alternator Capacity	:	75 Amps

https://truckmanualshub.com/

Battery	:	2X12V,180 Ah	
Wind Screen Wiper	:	17 W - 2 speed and intermittent wipe	
Wind Screen Washer	:	Electrically operated, 5 litres bottle size	

PERFORMANCE

Max. Geared Speed in Top Gear (With Std. Rear Axle)	:	112 kmph	
Max. Climbing Ability in 1st Gear (With std. Gear Box and Rear Axle)	:	31 %	
WHEEL BASE (mm)	:	3400	3800
Minimum Turning Clearance Circle Dia. in m as per IS: 9435		14	15.4
Minimum Turning Circle Dia in m as per IS:9435	:	12.3	13.5

MAIN CHASSIS DIMENSIONS AS PER IS 9435 (mm)

		LP		LPT
Wheel Base	:	3400	3800	3800
Track Front	:	1650	1650	1650
Track Rear	:	1577	1577	1577
Overall Length	:	6425	7125	6860
Max. Width	:	2140	2140	2125
Overall Height (Unladen)	:	2550	2550	2341
Front Overhang	:	1275	1275	1275
Loading platform area (sq m)	:	-	-	10.3

WEIGHTS (kg)

WHEEL BASE (mm)	:	3400	3800
Bare chassis kerb weight with Cowl (With spare wheel and tools) as per IS 9211	:	2750	2775

https://truckmanualshub.com/

Complete chassis kerb weight with cab without loadbody (With spare wheel and tools) as per IS 9211	:		3070
Complete chassis kerb weight with cab and load body (With spare wheels and tools) as per IS 9211	:		3570
Max.Permissible FAW	:	2800	2800
Max.Permissible RAW	:	4700	4700
Max.Permissible GVW	:	7500	7500

SPECIAL FEATURES (For LP)

: Complete Vehicle & its aggregates meet the latest EEC/ECE/GOST norms. Relevant items are suitable for cold country application.

SPECIAL FEATURES (For LPT)

: Complete Vehicle & its aggregates meet the latest EEC/ECE/GOST norms. Relevant items are suitable for cold country application.

Provision for Engine block heater fitment. Vehicle meets all Russian homologation norms as on April 2006.

Provision of flame glow plug to assist cold start at -22 deg. centigrades.

Fog lamps.

Battery cut-off switch.

https://truckmanualshub.com/

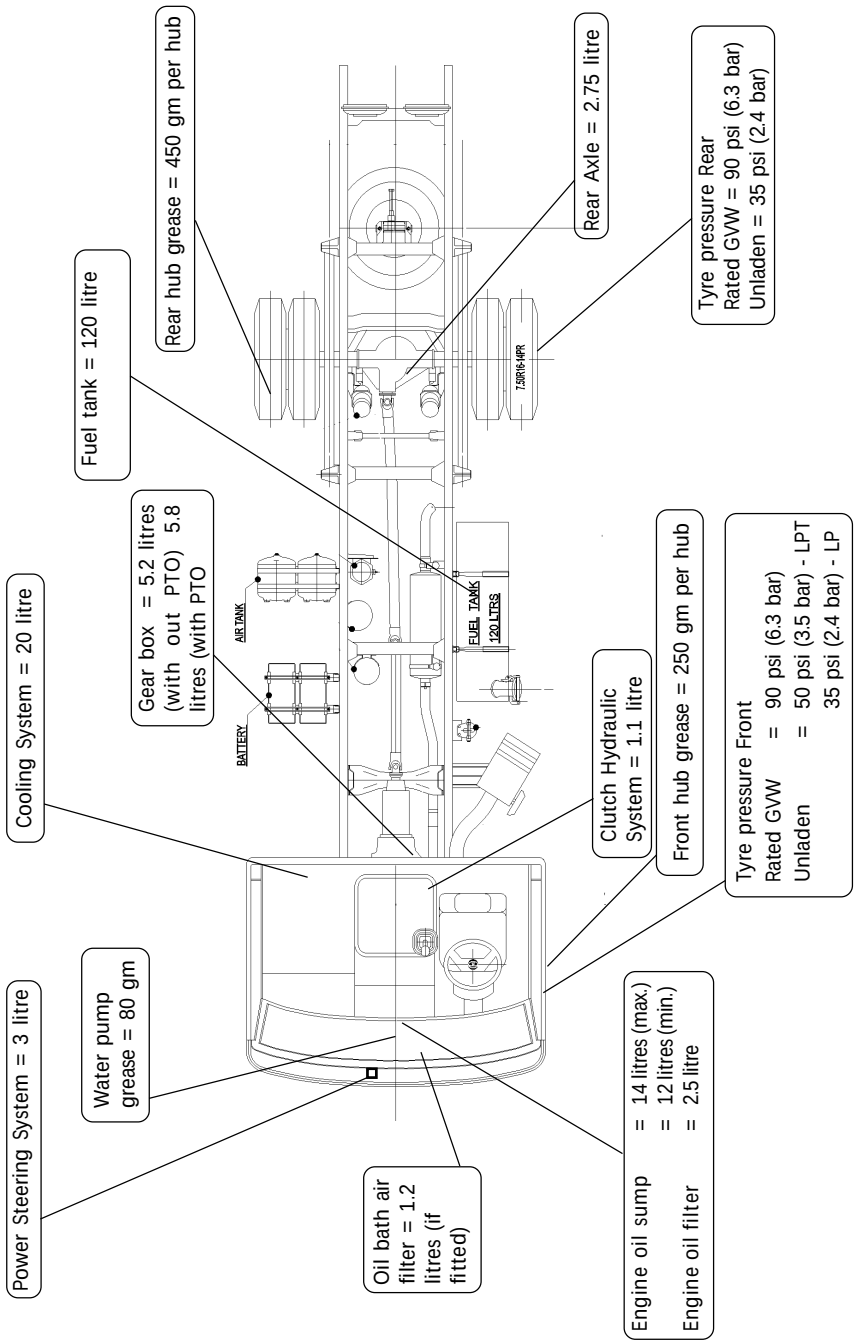

https://truckmanualshub.com/

Lubrication points

The lubrication points illustrated below and respective points are described in tabular form:

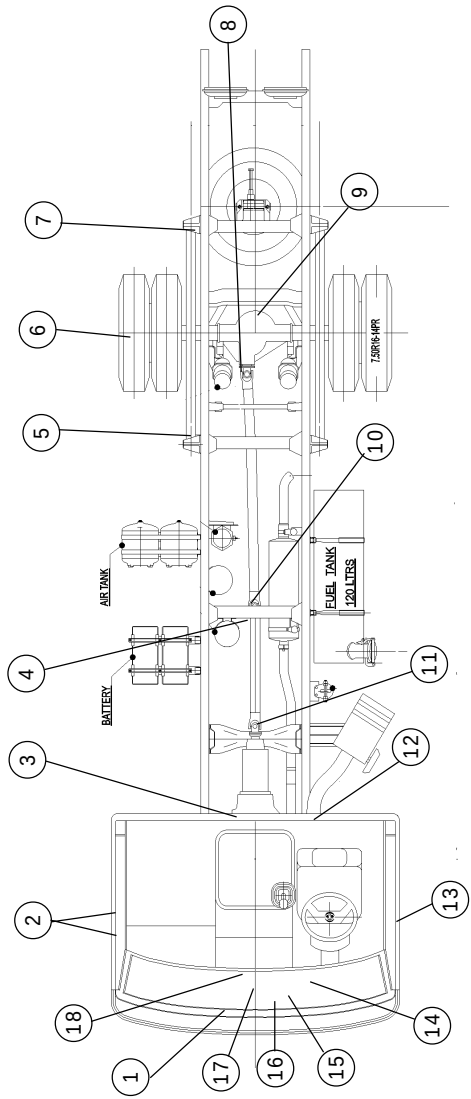

Caution :

Grease nipples must be carefully cleaned prior to greasing and the same applies to grease cups/screw plugs before they are unscrewed.

For greasing, use only high pressure grease guns.

https://truckmanualshub.com/

Sr. No.	Description	No. of Points
1.	Power Steering fluid container	Oil level
2.	a. Drag link	2 grease nipples
	b. King pin	4 grease nipples
	c. Tie rod ball joints	2 grease nipples
3.	Gear box	Oil level
4.	Propeller shaft centre bearing	1 Grease nipple
5.	a. Rear spring suspension front	2 grease nipples
	b. Rear helper spring front (Truck)	2 Apply grease
6.	Rear wheel hub	Pack grease
7.	a. Rear spring suspension rear	4 grease nipples
	b. Rear helper spring bracket rear (Truck)	2 Apply grease
8.	Rear propeller shaft	2 grease nipples
9.	Rear axle	Oil level
10.	Rear propeller shaft front end	1 grease nipple
11.	Propeller shaft front	1 grease nipple
12.	Front spring suspension rear nipples	4 grease
13.	Front hub	Pack grease
14.	Front spring suspension front nipples	2 grease
15.	Engine oil level dipstick	Oil level
16.	Engine oil filling	Oil level
17.	Water pump bearing	Pack grease
18.	Manual steering gear box (if fitted)	Oil level

Also lubricate the following points not shown in the chart:

a.	Clutch release bearing sleeve felt pad	Oiling
b.	Clutch release fork support bearing and ball pin end	Apply grease
c.	Gear box linkages (except ball joints which are packed with grease for life)	Pack grease
d.	Accelerator linkages; pivot pins of clutch and brake pedals; ball pin of exhaust brake linkage	Oiling
e.	Door latches, centre flap locking lever on front panel	Apply grease
f.	Wiper motor linkages; pinion bushing of starter motor	Oiling
g.	Clutch actuation linkage, fuel injection pump linkages as well as other joints of cab and body.	Oiling

https://truckmanualshub.com/

1.	Main bearing cap bolts * = Further tightening by 90^0 to 100^0		5 *
2.	Con. rod bolts - M 14x1.25 * = Further tightening by 90^0 to 100^0		5 *
3.	Cylinder head bolts	1st stage	6
		2nd stage	9
		3rd stage	12
4.	Screw plug in cylinder head - M 30x1.5		10 to 20
5.	Nozzle in nozzle holder		6
6.	Cap nuts on high pressure lines		2 to 2.5
7.	Rocker arm support bolts		11
8.	Cylinder head cover bolts		2.5
9.	Screw plug in crankcase - M18		8
10.	Push rod chamber cover bolts - M8		0.6
11.	Oil cooler bolts on crankcase - M8		3.5
12.	Timing gear housing on crankcase - M10		4.5
13.	Timing gear nut (Injection pump) - M14		8
14.	Timing gear housing cover - M6		0.8
15.	Bolt for timer on camshaft		30
16.	Vibration damper lock bolt - M24x1.5		50 to 55
17.	Flywheel mounting bolts - M12		10
18.	Flywheel housing on crankcase- M12		9
19.	Oil pump to crankcase - M8		3
20.	Oil pump pressure relief valve		1.5 to 2.5
21.	Oil sump screw - M 6		0.8
22.	Oil sump screw- M 8		0.9
23.	Oil sump drain plug		4 to 6
24.	Fan on water pump hub - M8		3.5
25.	Exhaust manifold bolts / nuts		3.5
26.	Starter motor on flywheel housing (M10)		5
27.	Clamping bolt for alternator - M10		4
28.	Nut on alternator pulley - M14x1.5		3.5 to 4.5

https://truckmanualshub.com/

29. Fuel filter bowl mounting bolts		2
30. Banjo bolt on leak off line		0.5 to 0.7
31. Centre bolt of oil filter housing		4
32. Oil filter cover on crankcase - M10		6
33. Oil pump cover on oil pump - M8		3
34. Suction pipe on oil pump cover - M8		3
TRANSMISSION		
35. Transmission main shaft		30 to 36 mkg
36. Nut holding tail pinion coupling flange		30 to 36 mkg
37. Crown wheel mounting bolts		12 mkg
38. Differential side bearing cap bolt		16 mkg
39. For mounting differential case to cover		16 to 18 mkg
40. Bolts holding clutch assembly to flywheel		3 mkg
41. Clutch housing mounting bolts		9 mkg
42. Propeller shaft coupling flange bolts		8 mkg
43. Nut holding coupling flange		30 to 36 mkg
44. Nut holding rear axle carrier assembly on beam		9 mkg
HYDRAULIC POWER STEERING AND CHASSIS		
45. Steering intermediate cover screw M10		3 mkg
46. Steering intermediate cover screw M 12 x 1.5		5.6 mkg
47. Steering intermediate cover screw M 14 x 1.5		9.2 mkg
48. Sealing nut		4 3 mkg
49. Oil drain plug		2.1 mkg
50. Counter nut		1.7 mkg
51. Ball joint at frame, pitman arm and drag link		14 to 18 mkg
52. Pitman arm to cross shaft		40 to 45 mkg
53. Shock absorber mounting bolts		10 mkg
54. 'U' bolt nuts	Front axle	21 mkg
	Rear axle	21 mkg
55. 'U' bolt check nuts	Front axle	21 mkg
	Rear axle	21 mkg
56. Wheel nuts		35 to 40 mkg

https://truckmanualshub.com/

57. Bolts holding steering mounting bracket to long member	10 mkg
58. Bolts holding steering gearbox to mounting bracket	10 mkg
59. Nut holding Pitman arm to sector shaft	45 to 50 mkg
60. Rear spring helper brackets (Truck)	12 mkg
61. Rear spring hanger mounting bolts	12 mkg
62. Brake mounting bolts (M16 x 1.5)	
Front (with castle nut and split pin)	18 mkg. M16, 9.5 mkg. M12
Rear (Rear with collar hex nut)	12.5 mkg.
63. Air brake chamber/spring brake actuator mounting bolts (M16 x 1.5)	5 - 6 mkg. *
* Precaution : Do not overtighten as it is likely to cause damage to brake chambers	
64. Spring brake actuator mounting bracket to rear axle	4.6 mkg.
65. Cam shaft bearing block to rear axle (M10)	4.6 mkg.
66. Brake chamber mounting bracket to front torque plate	8 mkg.

Note : *When choosing torque wrench, remember that is should not be subject to torque exceeding three-fourth of its capacity. Before tightening, clean the threads and apply a little oil.*

https://truckmanualshub.com/

6. Fuel, Lubricants and Coolant

6.1 Fuel 149

6.2 Lubricants 150

6.3 Coolant 152

https://truckmanualshub.com/

Fuel

High speed diesel conforming to IS 1460 or DIN 51601 or equivalent is recommended to be used as fuel.

At very low temperature fluidity of diesel may become insufficient due to paraffin separation. It is therefore necessary to mix supplementary fuel with summer or winter grade diesel.

Ambient temperature upto Deg. C	Percentage	
	Summer grade diesel	Supplementary fuel
Above 0	100	0
0 to -10	70	30
-10 to -15	50	50

Ambient temperature upto Deg. C	Percentage	
	Winter grade diesel	Supplementary fuel
0 to -15	100	-
-15 to -20	70	30
-20 and below	50	50

Care should be taken that diesel and supplementary fuel are thoroughly mixed before filling.

Warning : *Do not mix gasoline or alcohol with diesel. This mixture can cause explosion.*

Caution : *Due to the precise tolerance of diesel injection systems, it is extremely important that the fuel be kept clean and free of dirt or water. Dirt or water in the system can cause severe damage to both injection pump and injection nozzles.*

Use low sulphur content fuel having a cloud point that is at least 10 degrees below the lowest expected fuel temperature. Cloud point is the temperature at which wax crystals begin to form in diesel.

Viscosity of the fuel ***must*** *be kept above 1.0 centistoke to provide adequate fuel system lubrication at 40° C.*

https://truckmanualshub.com/

Coolant/Antifreeze

Antifreeze **must** be used in any climate for both freeze and boiling point protection.

It broadens operating temperature range by lowering coolant freezing point and by raising its boiling point. Do **not** use more than 50 percent antifreeze in the mixture unless additional freeze protection is required. **Never** use more than 68 percent antifreeze under any condition.

Use soft water in coolant mixture, Contaminants in hard water neutralise the corrosion inhibitor components. Water **must not** exceed 300 ppm hardness or contain more than 100 ppm of either chloride or sulphate.

Specifications - Use low silicate antifreeze which meets ASTM 4985 test (GM6038M spec.) criteria or class II JIS K 2234 specification.

Use a 50 percent concentration level upto an ambient temperature -37°C for non-amino base coolant.

For ambient temperature further low follow the guidelines below. Antifreeze at 68 percent concentration provides maximum freeze protection and **must** never be exceeded under any conditions.

Ethylene Glycol
(Non-Amino base)

50% = -37° C

60% = -54° C

68% = -71° C

Concentration Testing - Antifreeze concentration must be checked using a refractometer (such as Fleetguard Part No. CC2800)

Windscreen Washer Antifrost

Make	:	Antifrost - K
Concentration	:	1:5 for 0° C
		1:1 for -10° C
		2:1 for -16° C
		1:0 for -37° C

https://truckmanualshub.com/

Lubricating oil recommendations/ specifications

Oil performance recommendations

Use of quality engine oil combined with appropriate oil drain and filter change intervals are critical factors in maintaining engine performance and durability.

Use of a high quality SAE 0 W40 heavy duty engine oil which meets API CH4 and MB228.3 specifications is recommended.

Oil viscosity recommendations

Use of multi-viscosity lubricating oil has been found to reduce oil consumption and improve engine cranking in cold temperatures while maintaining lubrication at high operating temperatures.

While 0 W-40 oil is recommended for most climates, refer to the accompanying table for oil viscosity recommendations for extreme climates.

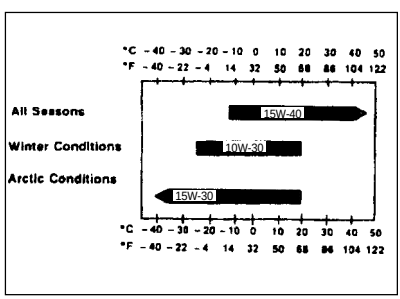

Ambient temperature & oil viscosity

Note : *Limited use of low viscosity oils, may be used for easier starting and providing sufficient oil flow at ambient temperatures below -5° C. However, continuous use of low viscosity oils can decrease engine life due to wear.*

Gear box oil

Use multi-grade oil conforming toSYN Gear EP 75 W-90 GL4 Gluf grade specifications.

Change oil first at 9000 km, then at 36,000 km and thereafter at every 36,000 km.

Rear axle oil

Use Multi-grade oil conforming to SAE 85W-140 grade with 7% Anglamol-A 6043 by weight and API GL5 specifications.

Change oil first at 9000 km, then at 36,000 km and thereafter at every 36,000 km.

Lubrication for clutch disc splines

At the time of replacement or remounting of clutch disc, smear clutch disc splines with high temp Synthetic grease 365 TS 25205 P1 for free movement of clutch disc on drive shaft.

https://truckmanualshub.com/

Power steering oil: Use Automatic transmission fluid conforming to ATF Type A suffix A or Dextron II D.

Clutch fluid: Use clutch fluid conforming to SAE J 1703F DOT 3 plus or DOT 4 specifications.

Grease: Use Synthetic grease 365 TS 25205 P1.

Lubricant specifications chart

Lubricant	Specification
Engine oil	SAE 0 W-40 API CH4 and MB 228.3 specifications.
Rear axle oil	SAE 85W-140 grade with 7% Anglamol-A 6043 by weight and API GL5 specifications
Gear box oil	SYN Gear EP 75 W-90 GL4 Gluf grade specifications.
Power steering oil	Automatic transmission fluid ATF Type A Suffix A or Dextron II D
Brake/clutch fluid	SAE J 1703F DOT 3 plus or DOT 4
Coolant	Non - Amino Base class II JIS K 2234 specification
Chassis/wheel bearing grease	Li base grease NLGI 2 (Consistency No. 3)
Clutch Clutch release bearing Sleeve, Clutch disc splines,	Synthetic grease 365 TS 25205 P1
Brake pneumatic equipment	Synthetic grease 365 TS 25205 P1
Windshield washer water	Methanol and water 50:50

https://truckmanualshub.com/

7. Service Recommendations

7.1 Special instructions 155

7.2 PDI 156

7.3 Service schedule 159

7.4 Record of services performed 168

7.5 Record of repairs performed 170

https://truckmanualshub.com/

Regular maintenance

Maintenance schedules given in this book are meant for vehicles operating under normal conditions. In case operating conditions are severe, certain operations may have to be carried out more frequently and certain other operations may have to be introduced based on your own experience.

In case the engine has to operate even when vehicle is stationery, 18,000 km interval for regular engine oil and oil filter cartridge change should be carried out in terms of operational hours or litres of fuel consumed. For example in case where vehicle is used as a stationery power source, engine oil and oil filter cartridge should be changed after every 250 operational hours or after every 3,200 litres of fuel consumed.

PDI - Service to be performed once only i.e., at the time of delivery of vehicle.

Every 1,000 km.

Type 2	Service at 9,000 - 9,500 km repeating at every 18,000 km.
Type 3	Service at 18,000 - 18,500 km repeating at every 36,000 km.
Type 4	Service at 36,000 - 36,500 km repeating at every 72,000 km.
Type 5	Service at 72,000 - 72,500 km repeating at every 72,000 km.

All periodical services to be carried out at Tata authorised workshops.

Daily maintenance & maintenance scheduled at every 1000 kms to be carried out by driver.

https://truckmanualshub.com/

1. Tata Diesel Vehicles have been built to give you thousands and thousands of miles of economical and trouble free performance. This is, however, possible only if vehicle is systematically maintained and operated strictly according to the instructions contained in this book.

2. During body building, special care should be exercised to ensure that chassis is not affected in any manner. Body should be mounted on chassis, through 'U' bolts without drilling holes on chassis frame. Particular attention should be paid to see that no unauthorised modifications and / or repair work are done on chassis or any parts thereof, as otherwise, it would not only affect performance but also vehicle would loose its eligibility for our warranty.

   Before commissioning the vehicle after body building, it should be produced for inspection at Tata authorised workshop to ascertain that operational efficiency of the vehicle has not been impaired during body building. Any damage the vehicle might have sustained during body building or arising out of bad storage or lack of proper care or inadequate maintenance, will be rectified by the inspecting workshop.

3. Tata authorised workshops are equipped with special tools and are manned by technical personnel trained by us. Our authorised workshops are, therefore in a position to render you any expert advice and service, your vehicle may need. Please give them an opportunity to serve you, so that you may obtain economical and trouble free performance from your vehicle.

4. For any technical advice concerning your vehicle please contact nearest Tata authorised workshop.

https://truckmanualshub.com/

PDI SERVICE

Following jobs are to be performed at PDI.

1. Wash & clean the vehicle thoroughly.

2. Road test the vehicle. Check for proper functioning of engine, clutch, transmission aggregates, steering, brakes etc.

   Check vehicle behaviour : pulling to LH/RH, wobbling, self centering, acceleration etc.

3. Static test : Start engine & check for : Idling rpm & maximum rpm (look for any abnormal noise), service brake air pressure, water temperature, operation of exhaust brake system etc.

4. Check engine oil level. Level is acceptable if found between mid and max mark.

5. Check for any leakages of engine oil.

6. Check hoses, clamps & pipes at all locations in air intake system.

7. Check hoses, clamps & pipes at all locations in cooling system.

8. Check for leakages of gear box oil.

9. Check for proper fitment of gear shift lever rubber boots.

10. Check level of clutch fluid. Acceptable if found between mid and max.

11. Check clutch / brake pedal free play.

12. Check for leakages in clutch actuation circuit

13. Check for fitment of split pins at drag link ball joints, tie rod ball joints, Stub axles.

14. Check for fitment of grease nipples at all locations.

15. Check for leakages of rear axle Oil.

16. Check tightness of centre bearing bracket mounting bolts.

17. Check for any air leakages in brake circuit.

18. Check fitment of split pins at the mounting bolts of torque plates, brake chambers, push rods etc.

19. Check for steering wheel free play (axial and radial).

    check leakages of power steering oil.

20. Check for fitment of split pin at steering shaft.

21. Check for any leakages in the fuel system.

https://truckmanualshub.com/

22. Check coolant level in transparent auxiliary tank. Level is acceptable if it is found between mid and max.

23. Check for any leakages of coolant.

24. Check functioning of all bulbs.

25. Check for proper functioning of blinkers, horn, head lamp, parking light, reverse light, wiper system, washer system etc.

26. Check tightness of electrical connection at battery, starter motor, alternator & starter relay.

27. Check all fuses .

28. Check all the earth points for looseness.

29. Check for functioning of all gauges / meters / warning lamps.

30. Check connectors in all the circuits.

31. Check for proper opening and closing of doors .

32. Check functioning of door locks, latches and windows.

33. Check for any complaints on the cab fittings, instrument panel, glove box etc.

34. Check and tighten hand loose fasteners

35. Check for any breakages, bends, failure of any component / assembly / unit.

36. Any fouling between two components which may lead to leakages or other complaints. Fouling of fuel lines, brake pipes, clutch pipes, air intake pipe, power steering hydraulic pipe, clutch / brake linkages, accelerator rod etc.

37. Lubricate with oil can linkages and all other points as recommended.

38. Grease with grease gun all the points as recommended.

39. Check for proper functioning of cab tilt mechanism.

40. Check for proper functioning of front/rear fog lamps, Cab heating mechanism etc. (optional fitments).

https://truckmanualshub.com/

D : Daily service to be performed by the driver/operator

O : Service to be performed at every 1000 kms by the driver/operator

W : Service to be performed weekly or at every 2000 kms. whichever is earlier by driver / operator

SR. NO.	OPERATION	FREQUENCY IN KM	DAILY	Every 1,000 km	9,000-9,500 km	18,000-18,500 km	27,000-27,500 km	36,000-36,500 km	45,000-45,500 km	54,000-54,500 km	63,000-63,500 km	72,000-72,500 km
1.	Wash vehicle.	9,000			●	●	●	●	●	●	●	●
	ENGINE											
1.	Check oil level in the sump and top up, if necessary. Check oil leaks and rectify, if any.	DAILY	D		●	●	●	●	●	●	●	●
2.	Check coolant level in auxiliary tank and top up, if necessary. Check coolant leakages and rectify, if any.	DAILY	D		●	●	●	●	●	●	●	●
3.	Drain water trapped in fuel water separator.	DAILY		O	●	●	●	●	●	●	●	●
4.	Check thermostat for proper functioning and replace if necessary.	18000				●		●		●		●
5.	Lubricate with oil can : Controls to fuel injection pump and exhaust brake linkage ball joints. Pinion bush of the starter motor.	9000		O	●	●	●	●	●	●	●	●
6.	Change oil in sump. Drain off while hot. Clean magnetic drain plug.	18000				●		●		●		●
7.	Clean engine oil filter housing and cover. Replace oil filter cartridge and 'O' ring.	18000				●		●		●		●
8.	Clean oil bath air filter (Euro I) and fill to correct level with recommended engine oil. Check condition of sealing rings, replace if necessary.	9000			●	●	●	●	●	●	●	●
9.	Remove drain plugs of fuel filters. Drain off sediments. Bleed the fuel system.	9000			●	●	●	●	●	●	●	●

https://truckmanualshub.com/

SR. NO.	OPERATION	FREQUENCY IN KM	DAILY	Every 1,000 km	9,000-9,500 km	18,000-18,500 km	27,000-27,500 km	36,000-36,500 km	45,000-45,500 km	54,000-54,500 km	63,000-63,500 km	72,000-72,500 km
10.	Clean prefilter at feed pump and bleed the fuel system.	9000			●	●	●	●	●	●	●	●
11.	Check valve clearance (warm-up engine) and adjust, if necessary.	18000				●		●		●		●
12.	Check and if necessary, tighten the following :- (a) Injector pressure lines, (b) Leak off fuel line banjo bolts, (c) Heat exchanger bolts, (d) Oil sump screws, (e) Oil pressure pipe union at heat exchanger, (f) Exhaust manifold mounting bolts, (g) Turbocharger mounting fasteners, (h) Flywheel housing mounting bolts, (i) Clutch housing mounting bolts, (j) Air cleaner mounting bolts, (k) Delivery valve holders, (l) Leak off lines (m) Engine mounting bolts, (n) Water pump, (o) Coolant temperature transducer, (p) Air filter mounting (q) Exhaust manifold and muffler assembly.	9000			●	●	●	●	●	●	●	●
13.	Check alternator / fan belt condition and tension. If necessary replace belt & adjust.	9000			●	●	●	●	●	●	●	●
14.	Check and if necessary, tighten the following :- (a) Push rod chamber cover, (b) Timing gear cover, (c) Cylinder head cover, (d) Radiator mounting (e) Radiator hose connections, (f) Fuel tank brackets, (g) Fuel filter bracket, (h) Fuel filter mounting bolts, (i) Air ducting hose connections, (j) Engine mounting bolts.	18000				●		●		●		●
15.	Check air cleaner service indicator on instrument cluster (Euro II). If it blinks continuously , clean air filter housing and replace primary cartridge.	DAILY	D	●	●	●	●	●	●	●	●	●
16.	Change air filter secondary cartridge.	After every 3 replacements of primary cartridge										
17.	Check fuel level in fuel tank and secure fuel tank cap.	DAILY	D		●	●	●	●	●	●	●	●
18.	Remove primary fuel filter bowl, clean and replace element. Bleed the system.	18000				●		●		●		●
19.	Remove secondary fuel filter bowl, clean and replace element. Bleed the system.	36000						●				●

https://truckmanualshub.com/

SR. NO.	OPERATION	FREQUENCY IN KM	DAILY	Every 1,000 km	9,000-9,500 km	18,000-18,500 km	27,000-27,500 km	36,000-36,500 km	45,000-45,500 km	54,000-54,500 km	63,000-63,500 km	72,000-72,500 km
20.	Remove strainer in fuel tank, clean and refit. Bleed the system.	36000						●				●
21.	Remove engine breather cap, clean in kerosene. Blow air from outlet pipe. Replace gasket, if necessary. Check and replace rubber hose, if necessary.	9000			●	●	●	●	●	●	●	●
22.	Remove injection nozzles. Test pressure and spray characteristics on nozzle testing equipment. Do not disassemble nozzle, if found correct.	36000						●				●
23.	Drain cooling system - reverse flush. Refill system with fresh coolant. Add recommended quantity of anti freeze agent in specified ratio.	320000 kms or 2 years whichever is earlier.										
24.	Replace radiator rubber hoses.	72000										●
25.	Remove and clean exhaust outlet elbow, exhaust butterfly valve, shaft and refit. (Do not lubricate).	72000										●
26.	Check engine for trouble-free operation (colour of exhaust gases and nozzle operation).	18000				●		●		●		●
27.	Check end play of turbo charger shaft & radial clearance between turbine wheel & housing (Euro II).	72000										●
	CLUTCH											
1.	Check level of clutch fluid in plastic containers. Top up if necessary.	9,000		O	●	●	●	●	●	●	●	●
2.	Check clutch pedal free play and adjust if necessary. (For highway operation vehicles, this check to be done more often).	9,000		O	●	●	●	●	●	●	●	●
3.	Remove grease cup for lubricating clutch release bearing. Replace 3/4 full with grease and tighten by a few turns.	9,000			●	●	●	●	●	●	●	●
4.	Lubricate with oil can-clutch pedal pivot pins.	9,000		O	●	●	●	●	●	●	●	●
5.	Tighten if necessary. Mounting of clutch master cylinder and slave cylinder.	9,000			●	●	●	●	●	●	●	●

https://truckmanualshub.com/

SR. NO.	OPERATION	FREQUENCY IN KM	DAILY	Every 1,000 km	9,000-9,500 km	18,000-18,500 km	27,000-27,500 km	36,000-36,500 km	45,000-45,500 km	54,000-54,500 km	63,000-63,500 km	72,000-72,500 km
6.	Remove clutch release fork support bearing. Apply light coat of recommended grease and refit.	18,000				●		●		●		●
7.	Dismantle clean, inspect, replace kits and re-assemble clutch master cylinder and slave cylinder and bleed the system.	72,000										●
	GEAR BOX											
1.	Check oil level in gear box, top up if necessary.	9,000		O	●	●	●	●	●	●	●	●
2.	Change oil in gear box (also at first 9,000 km).	36,000			●			●				●
3.	Clean breather on gear box.	72,000										●
4.	Check & tighten if necessary. Gear box mounting screw.	18,000				●		●		●		●
	SUSPENSION											
1.	Grease with grease gum : ii. King pins (4). Tie rod ball joints (2), Drag link ball joints (2). iii. Front spring pins (6). iv. Rear spring pins (6).	9,000		O	●	●	●	●	●	●	●	●
2.	Check condition of shock absorber bushes, replace if necessary.	9,000			●	●	●	●	●	●	●	●
3.	Check wheel alignment and adjust if necessary.	36,000						●				●
4.	Check shock absorber, replace, if defective.	18,000				●		●		●		●
5.	Dismantle front and rear springs. Clean and apply graphite grease. Check and if necessary replace eye bushes.	72,000										●

https://truckmanualshub.com/

SR. NO.	OPERATION	FREQUENCY IN KM	DAILY	Every 1,000 km	9,000-9,500 km	18,000-18,500 km	27,000-27,500 km	36,000-36,500 km	45,000-45,500 km	54,000-54,500 km	63,000-63,500 km	72,000-72,500 km
6.	Check and tighten if necessary : Anti roll bar mountings. Nuts of spring pins, 'U' bolts of front and rear springs.	9,000		O	●	●	●	●	●	●	●	●
	FRONT AXLE											
1.	Change grease in front hub. Adjust bearing play. Replace damaged/worn parts.	36,000						●				●
2.	Check front hub bearing play and adjust if necessary.	9,000			●	●	●	●	●	●	●	●
	REAR AXLE											
1.	Check oil level in rear axle, top up if necessary.	9,000		O	●	●	●	●	●	●	●	●
2.	Change oil in rear axle. (Also at first 9000 km)	36,000			●			●				●
3.	Change grease in rear hub . Adjust bearing play. Replace damaged/worn parts.	36,000						●				●
4.	Check rear hub bearing play and adjust if necessary.	9,000			●	●	●	●	●	●	●	●
	WHEELS & TYRES											
1.	Check tyre pressure	DAILY	D		●	●	●	●	●	●	●	●
2.	Check wheel mounting nuts and tighten if necessary.	9,000		O	●	●	●	●	●	●	●	●
3.	Check and tighten spare wheel carrier mountings.	9,000			●	●	●	●	●	●	●	●
4.	Tyre rotation.	9000			●	●	●	●	●	●	●	●
	PROPELLER SHAFT											
1.	Grease with grease gun : Propeller shaft 'U' joints (3), Propeller shaft sliding yoke (1). Propeller shaft centre bearing (1).	9,000		O	●	●	●	●	●	●	●	●
2.	Check & tighten the propeller shaft centre bearing bracket mounting bolts, coupling flange bolts.	9,000			●	●	●	●	●	●	●	●

https://truckmanualshub.com/

SR. NO.	OPERATION	FREQUENCY IN KM	DAILY	Every 1,000 km	9,000-9,500 km	18,000-18,500 km	27,000-27,500 km	36,000-36,500 km	45,000-45,500 km	54,000-54,500 km	63,000-63,500 km	72,000-72,500 km
	BRAKES - 'S' CAM FULL AIR BRAKES											
1.	Check brakes.	DAILY	D	O	●	●	●	●	●	●	●	●
2.	Check air dryer functioning by ensuring that no oil droplets or condensed water is thrown from exhaust port of the air dryer. If there is condensed water/oil in the exhaust, replace the air dryer - desiccant cartridge and filter.	Weekly / 2,000 km			●	●	●	●	●	●	●	●
3.	Grease with grease gun : Slack adjusters & cam shaft bushes.	Weekly / 2,000 km			●	●	●	●	●	●	●	●
4.	Lubricate with oil can : Brake chamber fork and pin, linkages of foot brake, ball joints of exhaust brake linkages.	Weekly / 2,000 km			●	●	●	●	●	●	●	●
5.	Check brake system for leaks and rectify if necessary.	Weekly / 2,000 km			●	●	●	●	●	●	●	●
6.	Check brake lining wear, clearance with drum and travel of brake chamber's push rod. Adjust service brakes if necessary. (for long route application)	9,000			●	●	●	●	●	●	●	●
7.	Check brake lining wear, clearance with drum and travel of brake chamber's push rod. Adjust service brakes if necessary. (for city/hilly/cross country applications)	4,500			●	●	●	●	●	●	●	●
8.	Check for proper functioning of engine exhaust brake and slackness in linkages.	9,000			●	●	●	●	●	●	●	●
9.	Check brake torque plate mounting bolts and tighten if necessary.	9,000 (also at every lining change)			●	●	●	●	●	●	●	●
10.	Check hoses / nylon pipes for damages and replace if necessary.	18,000				●		●		●		●
11.	Check condition of gaiter in different brake valves, exhaust flap in dual brake valve, nylon breather tube and clips of spring brake actuator	18,000				●		●		●		●

https://truckmanualshub.com/

SR. NO.	OPERATION	FREQUENCY IN KM	DAILY	Every 1,000 km	9,000-9,500 km	18,000-18,500 km	27,000-27,500 km	36,000-36,500 km	45,000-45,500 km	54,000-54,500 km	63,000-63,500 km	72,000-72,500 km
12.	Check mounting bolts of brake chambers, different valve mountings, air tank mountings, air line clamps and tighten if necessary.	18,000				●		●		●		●
13.	Carry out brake system routine checks I	18,000				●		●		●		●
14.	Remove drum brakes. Inspect brake linings, brake drums etc. Rectify defects if any.	36,000						●				●
15.	Carry out brake system routine checks II	36,000						●				●
16.	Replace brake lining	–	When worn upto indicator slot or 1 mm over the rivets									
17.	Grease fulcrum pin bushes and camshaft bushes & roller ends.	–	At the time of replacing linings									
18.	Dismantle pneumatic aggregates of brake system. Clean, inspect and replace parts if necessary. Apply grease to components while reassembling.	72,000										●
19.	Complete overhauling of foundation brake		Every second brake shoe relining or as required									
20.	Air dryer - replace desiccant cartridge and filter		Every two years									
	STEERING											
1.	Check oil level in power steering hydraulic tank and top up, if necessary. Check hydraulic piping connections for leakages and rectify, if any.	9,000			●	●	●	●	●	●	●	●
2.	Check power steering pump belt condition and tension. Adjust, if necessary.	9,000			●	●	●	●	●	●	●	●
3.	Drain off hydraulic oil of power steering. Replace filter cartridge & fill in fresh oil. Bleed the system.	72,000										●
4.	Check and tighten if necessary : 'U' joints on steering spindle. Steering gear box and its mounting bracket bolts joints of pitman arm, drag link and tie rod	9,000			●	●	●	●	●	●	●	●

https://truckmanualshub.com/

SR. NO.	OPERATION	FREQUENCY IN KM	DAILY	Every 1,000 km	9,000-9,500 km	18,000-18,500 km	27,000-27,500 km	36,000-36,500 km	45,000-45,500 km	54,000-54,500 km	63,000-63,500 km	72,000-72,500 km
	ELECTRICALS											
1.	Check & tighten if necessary : Mounting bolts of alternator, starter motor and wiper motor. Battery mounting bolts. All electrical wire connections. Head lamp mounting screws.	9,000			●	●	●	●	●	●	●	●
2.	Check battery cells with cell tester and specific gravity of electrolyte with hydrometer. Service battery if necessary.	36,000						●				●
3.	Check head lamp focus. Adjust if necessary.	9,000			●	●	●	●	●	●	●	●
4.	Check electrical gadgets for proper functioning. Rectify if necessary	DAILY	D		●	●	●	●	●	●	●	●
5.	Check electrolyte level in battery and add distilled water if necessary.	9,000		O	●	●	●	●	●	●	●	●
6.	Check battery mountings, clean battery posts and terminals, tighten terminals and smear vaseline/petroleum jelly.	9,000		O	●	●	●	●	●	●	●	●
7.	Lubricate with oil can : Pinion bushing of starter motor and wiper and motor linkages.	18,000				●		●		●		●
8.	Check alternator carbon brushes and replace if necessary.	36,000						●				●

https://truckmanualshub.com/

SR. NO.	OPERATION	FREQUENCY IN KM	DAILY	Every 1,000 km	9,000-9,500 km	18,000-18,500 km	27,000-27,500 km	36,000-36,500 km	45,000-45,500 km	54,000-54,500 km	63,000-63,500 km	72,000-72,500 km
	BODY AND MISC											
1.	Lubricate with oil can : Accelerator linkages, door hinges, door latches Bonnet hinges, bonnet stay rod, bonnet opening cable and locking lever and load body hinges.	9,000		O	●	●	●	●	●	●	●	●
2.	Apply grease to door lock inner racket and pawl	36,000						●				●
3.	Check doors for proper opening & closing. If required adjust striker assembly.	9,000			●	●	●	●	●	●	●	●
4.	Check & tighten if necessary : Mounting of driver's cab, load body to frame and driver's/co-driver's seats	9,000			●	●	●	●	●	●	●	●
	HEATING / DEMISTING SYSTEM (wherever fitted)											
1.	Check hose joints of heating system for leakage. Tighten if necessary	9,000			●	●	●	●	●	●	●	●
2.	Check hoses of heating system for cracks. Replace if required	9,000			●	●	●	●	●	●	●	●
3.	Check blower for proper functioning. Check fuse. Replace if found blown.	9,000			●	●	●	●	●	●	●	●
	RUBBER / NYLON HOSES & FLEXIBLE PIPES											
4.	Check hoses & pipes of air / fuel / coolant / brake / clutch / windscreen washing systems for cracks / aging / deterioration. Replace, if necessary	9,000			●	●	●	●	●	●	●	●

https://truckmanualshub.com/

7.4 Record of services performed - Service Recommendations

Recommended Service		Date	Odometer reading Kms.	Repair Order No.	Servicing Dealer's Signature & Stamp
At km	Type				
	PDI				
9,000	2				
18,000	3				
27,000	2				
36,000	4				
45,000	2				
54,000	3				
63,000	2				
72,000	5				
81,000	2				
90,000	3				
99,000	2				
1,08,000	4				
1,17,000	2				
1,26,000	3				
1,35,000	2				
1,44,000	5				
1,53,000	2				
1,62,000	3				
1,71,000	2				

https://truckmanualshub.com/

Recommended Service		Date	Odometer reading Kms.	Repair Order No.	Servicing Dealer's Signature & Stamp
At km	Type				
1,80,000	4				
1,89,000	2				
1,98,000	3				
2,07,000	2				
2,16,000	5				
2,25,000	2				
2,34,000	3				
2,43,000	2				
2,52,000	4				
2,61,000	2				
2,70,000	3				
2,79,000	2				
2,88,000	5				
2,97,000	2				
3,06,000	3				
3,15,000	2				
3,24,000	4				
3,33,000	2				
3,42,000	3				

https://truckmanualshub.com/

Date	Odometer reading km	Repair Order No.	Particulars of Repair	Servicing Dealer's Signature & Stamp

https://truckmanualshub.com/

Date	Odometer reading km	Repair Order No.	Particulars of Repair	Servicing Dealer's Signature & Stamp

https://truckmanualshub.com/

Date	Odometer reading km	Repair Order No.	Particulars of Repair	Servicing Dealer's Signature & Stamp

https://truckmanualshub.com/

INDEX AND SYMBOLS

INDEX

SL. NOS.	WIRING DIAGRAMS
1	INDEX AND SYMBOLS
2, 3	FUSES & LOAD DISTRIBUTION DIAGRAM
4	MAXI FUSE & LAYOUT OF FUSES & RELAYS (TOP VIEW)
5	STARTING, CHARGING AND ENGINE STOP SOLENOID FOR BS-I & BS-II VEHICLE.
6	STARTING, CHARGING AND ENGINE MANAGEMENT SYSTEM FOR BS-III (VP-37)
7	HEAD LAMP AND PARKING LAMPS
8	BLINKER, TAIL, STOP, REVERSE, ROOF, ENGINE LAMPS AND EXHAUST BRAKE SOLENOID
9	INSTRUMENT CLUSTER
10	2-SPEED WIPER, WASHER & INTERMITTANT, RADIO, DIGITAL CLOCK AND BLOWER, HORN
11	ADDI. SUPPLY-IGNI., ADDI. SUPPLY-BATT., SEAT BELT SW. CAB TILT SW., POWER SOCKET, ENGINE LAMP, PTO SWITCH, H/L LEVELLING WATER SEPERATOR, AIR DRYERHEATER.
12	REAR FOG LAMP, FRONT FOG LAMP & SERVICE INDICATOR
13	KNORR BREMSE ABS ECU CONNECTION DETAILS
14	ENGINE MONITORING SYSTEM (EMOS)
15	COLD START SYSTEM
16	CONNECTOR DETAILS

COLOUR CODE

CODE	CABLE COLOUR
B	BLACK
Br	BROWN
G	GREEN
Gy	GREY
L	BLUE
O	ORANGE
P	PINK
R	RED
W	WHITE
Y	YELLOW
V	VOILET
Lg	LIGHT GREEN
Sb	SKY BLUE

1] CABLE IDENTIFICATION-1.00 R-Y:1.00 INDICATES CONDUCTOR CROSS SECTION AREA IN mm^2 AND'R-Y' INDICATES RED BASE COLOUR WITH YELLOW COLOUR STRIPE.
2] CONNECTORS' VIEW WHERE SHOWN IS FROM CABLE ENTRY SIDE

SYMBOLS

SYMBOL	DESCRIPTION
	GROUND OR EARTH
	DIODE
	SINGLE WAY SWITCH
	TWO WAY SWITCH
OFF FAST SLOW	2-SPEED BLOWER SW.
	FUSE
	RESISTOR
	VARIABLE RESISTOR
	THERMISTER
	PRESS TO ON PRESS TO OFF SW

SYMBOL	DESCRIPTION
	CIGARETTE LIGHTER
	HEATER DEFROSTER
	MAGNETIC CLUTCH
	CABLE JOINT
	CROSSOVER WITH JOINT
	CROSSOVER WITHOUT JOINT
	LAMP/BULB
M	MOTOR
M	FRONT WIPER MOTOR
M	W/S. WASHER MOTOR
3 G	ALTERNATOR
M	BLOWER MOTOR

SYMBOL	DESCRIPTION
	BATTERY
t°	DUAL TEMP. SENSOR
88:88	DIGITAL CLOCK
	HORN
STEERING LOCK CUM IGN SWITCH 0 1 2 3 0-LOCK 1-ACC. 2-IGN. 3 START	
1,6 4,9 3,8 5,10 2,7	RELAY
6 1 9 2 5 4 7 3 8 VIEW FROM CABLE ENTRY	ELECTRONIC CONTROLLER /RELAY BASE
85 30 86 87	STARTER/AUXI RELAY

SYMBOL	DESCRIPTION
	SOLENOID VALVE
1 2 5 6 4 3	ELECTRONIC CONTROLLER
	CONNECTOR
	FAN
85 30 86 87 87	RELAY BOSCH 4-PL
M	STARTER MOTOR W/ENGAGEMENT SOLENOID
3 2 1 M	HEAD LAMP LEVELLING MOTOR

WIRING DIAGRAM
LP/LPT 613 EURO-II
Drg./Part No. 2641 5400 00 11
Sheet No. 1 of 16

https://truckmanualshub.com/

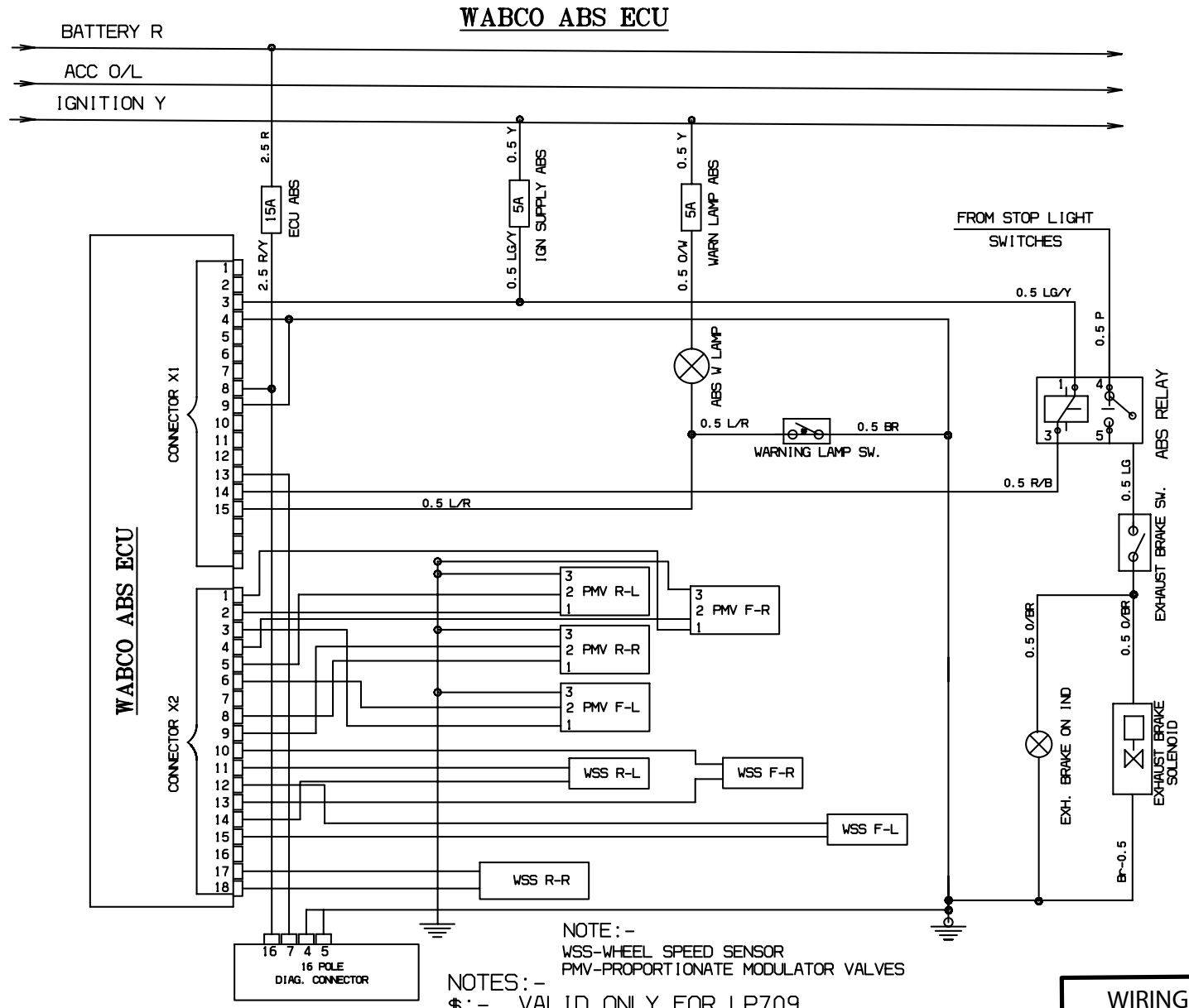

NOTE:-
WSS-WHEEL SPEED SENSOR
PMV-PROPORTIONATE MODULATOR VALVES

NOTES:-
$:- VALID ONLY FOR LP709
##:- VALID FOR ONLY BS-III VEH.
%%:- VALID FOR ONLY SFC 407/709 EMOS VEH.
* :- VALID FOR ABS APPLICATION
** :- VALID FOR A/C CIRCUIT.

WIRING DIAGRAM
LP/LPT 613 EURO-II
Drg./Part No. 2641 5400 00 11
Sheet No. 2 of 16

https://truckmanualshub.com/

FUSES & LOAD DISRTIBUTION DIAGRAM

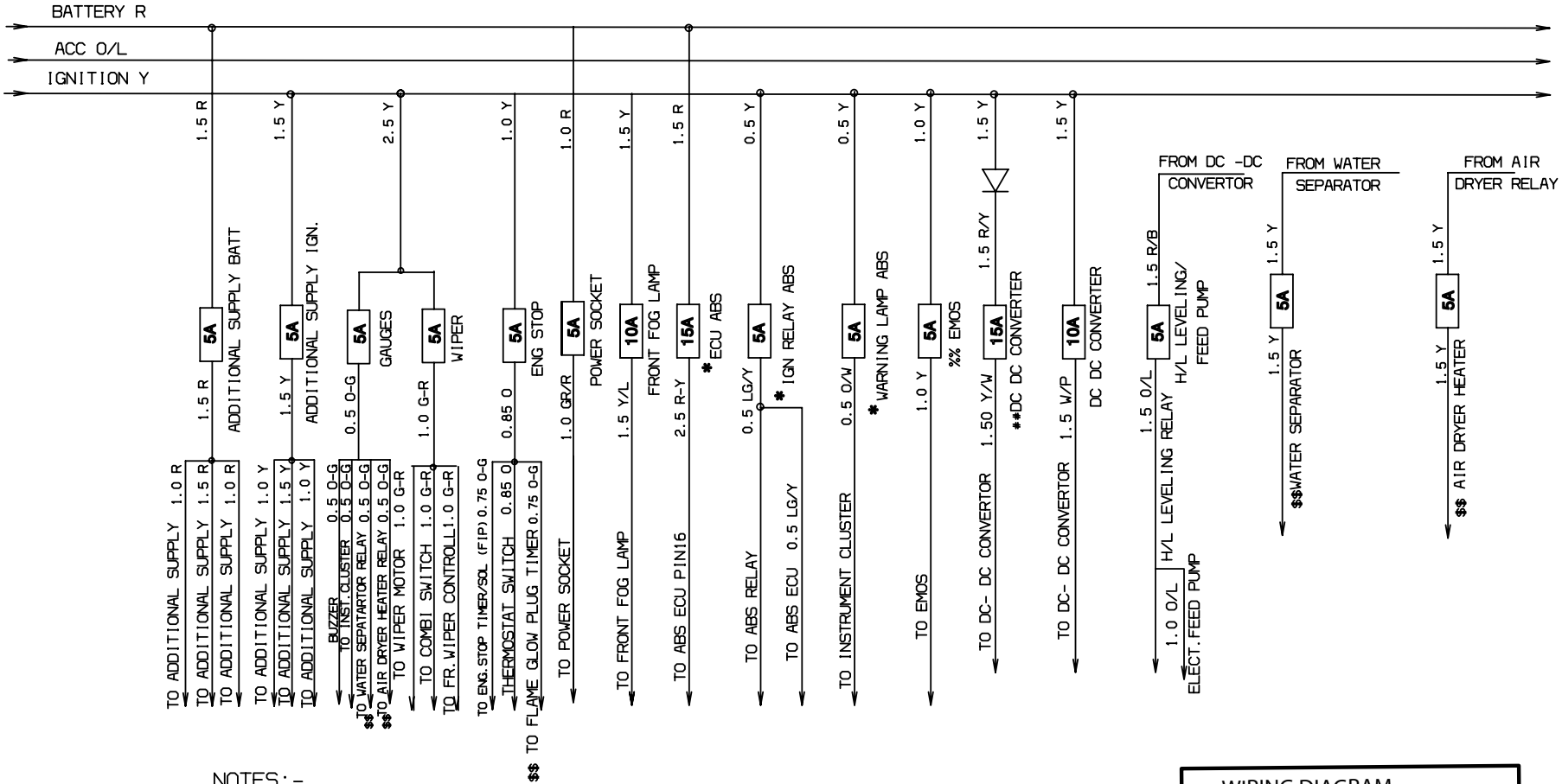

NOTES:-
##:- VALID FOR ONLY BS-III VEH.
%%:- VALID FOR ONLY EMOS VEH.
* :- VALID FOR ABS APPLICATION
$$:- FOR COLD APPLICATION ONLY

WIRING DIAGRAM
LP/LPT 613 EURO-II
Drg./Part No. 2641 5400 00 11
Sheet No. 3 of 16

https://truckmanualshub.com/

MAXI FUSE & LAYOUT OF FUSES & RELAYS (TOP VIEW)

MAXI FUSE

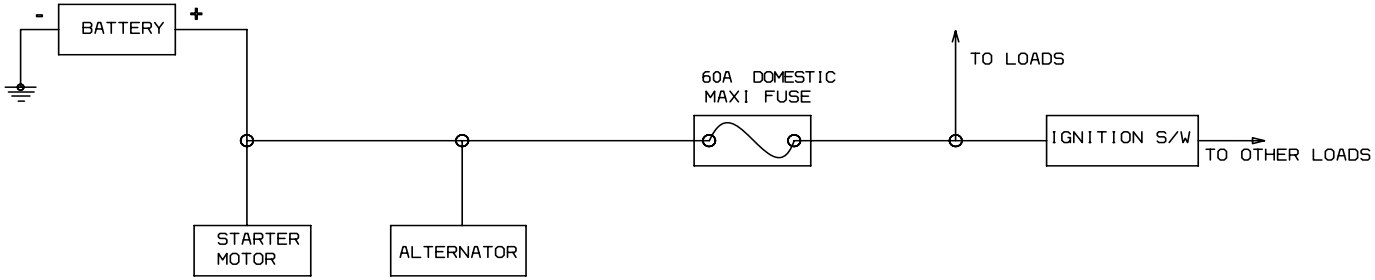

LAYOUT OF FUSES & RELAYS (TOP VIEW)

RELAY BASE-I	RELAY BASE-II	RELAY BASE-III	RELAY BASE-IV	RELAY BASE-V	RELAY BASE-VI
H/L LEVELLING RELAY-II (YELLOW)	HORN RELAY (YELLOW)	HEAD LAMP RELAY H/B (YELLOW)	REAR FOG LAMP (YELLOW)	ECU RELAY-I ## (BLUE)	FRONT FOG LAMP RELAY (YELLOW)
ABS RELAY * (GREEN)	ACC RELAY (YELLOW)	H/L RELAY L/B RLY (YELLOW)	STOP LIGHT RELAY ## (BLACK)	12 V HOLD RELAY ## (BLACK)	ECU RELAY-II (YELLOW) ##

FUSE BASE-I			FUSE BASE-II			FUSE BASE-III			FUSE BASE-IV			FUSE BASE-V		
12	$$ AIR DRYER HEATER 10A	6	12	ACC RELAY 20A	6	12	H/L RELAY COIL 5A	6	12	PARK RH 5A	6	12	FRONT FOG LAMP 15A	6
11	DC-DC CONVERTOR 15A ##	5	11	WARNING LAMP ABS * 5A	5	11	RADIO 5A	5	11	PARK LH 5A	5	11		5
10	ENG. STOP 5A	4	10	IGN SUPPLY ABS * 5A	4	10	HORN, ROOF, ENG. LAMP 10A	4	10	GAUGES 5A	4	10	TURN 5A	4
9	ADDI. SUPPLY BATT. 5A	3	9	ECU ABS * 15A	3	9	REV. STOP 5A	3	9	WIPER 5A	3	9	**VEH. SPEED CHECK ENG 5A	3
8	ADDI. SUPPLY IGN. 5A	2	8	$$ WATER SEPARATOR 10A	2	8	HEAD LAMP H/B LH 5A	2	8	HEAD LAMP L/B LH 5A	2	8	**FIP TIMER 10A	2
7	POWER SOCKET 5A	1	7	H/ L LEVELLING RELAY/FEED PUMP 5A	1	7	HEAD LAMP H/B RH 5A	1	7	HEAD LAMP L/B RH 5A	1	7	**ECU 15A	1

RELAY BASE-VI
%%EMOS RELAY-I/ $$ AIR DRYER HEATER RELAY (YELLOW)
%%EMOS RELAY-II/ $$ WATER SEPERATOR RELAY (YELLOW)
%% EMOS RELAY-III/ (YELLOW) STARTER RELAY

RELAY BASE-VIII

ADDITIONAL SUPPLY (BATTERY) 5A MAX
ADDITIONAL SUPPLY (IGN) 5A MAX

FLASHER

FRONT WIPER CONTROLLER

NOTES:-
$$:- FOR COLD APPLICATION ONLY
##:- VALID FOR ONLY BS-III VEH.
%%:- VALID FOR ONLY EMOS VEH.
* :- VALID FOR ABS APPLICATION

WIRING DIAGRAM
LP/LPT 613 EURO-II
Drg./Part No. 2641 5400 00 11
Sheet No. 4 of 16

https://truckmanualshub.com/

STARTING,CHARGING AND ENGINE STOP SOLENOID FOR BS-I & BS-II VEHICLE

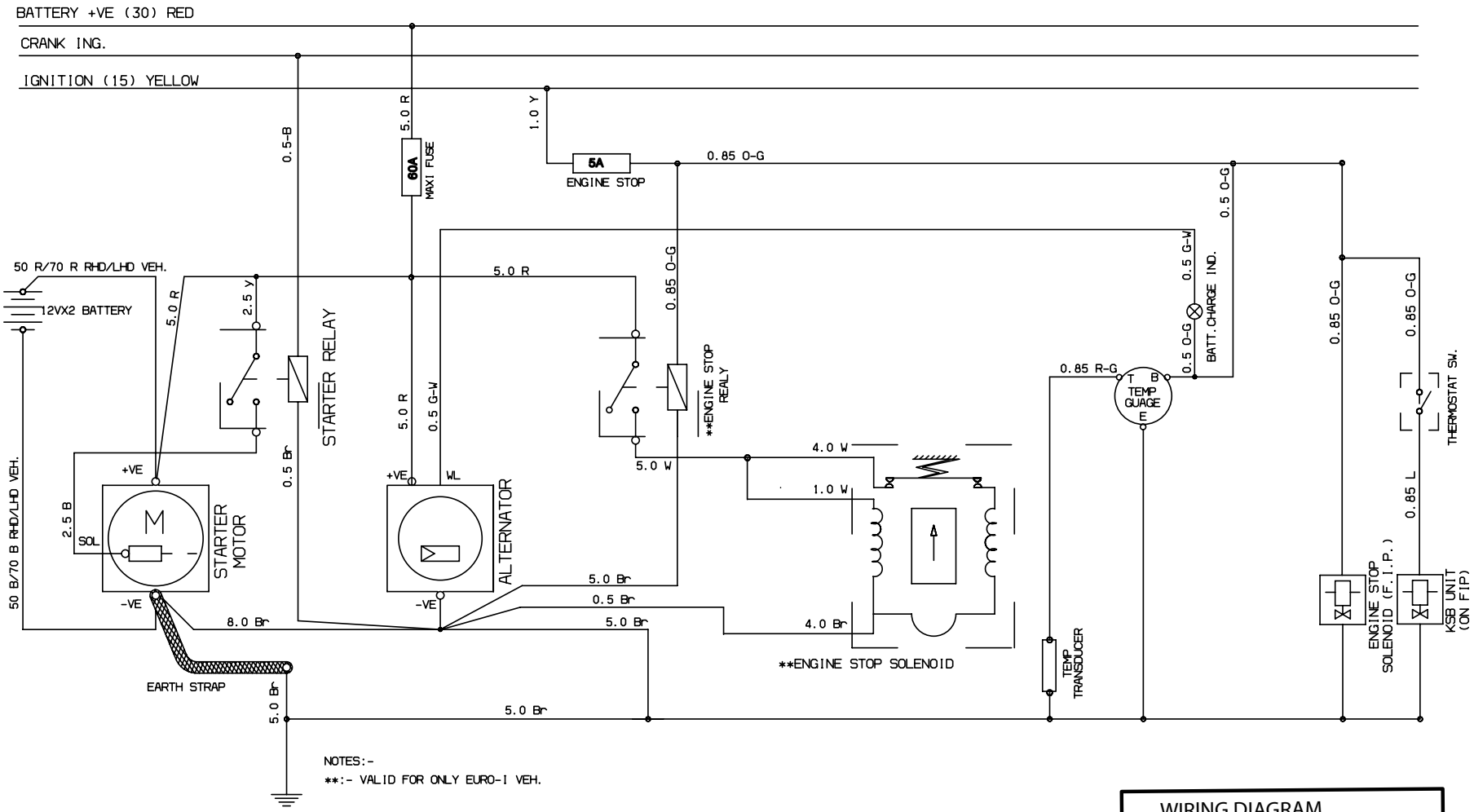

WIRING DIAGRAM
LP/LPT 613 EURO-II
Drg./Part No. 2641 5400 00 11
Sheet No. 5 of 16

https://truckmanualshub.com/

STARTING,CHARGING AND ENGINE MANAGEMENT SYSTEM FOR BS-III (VP-37)

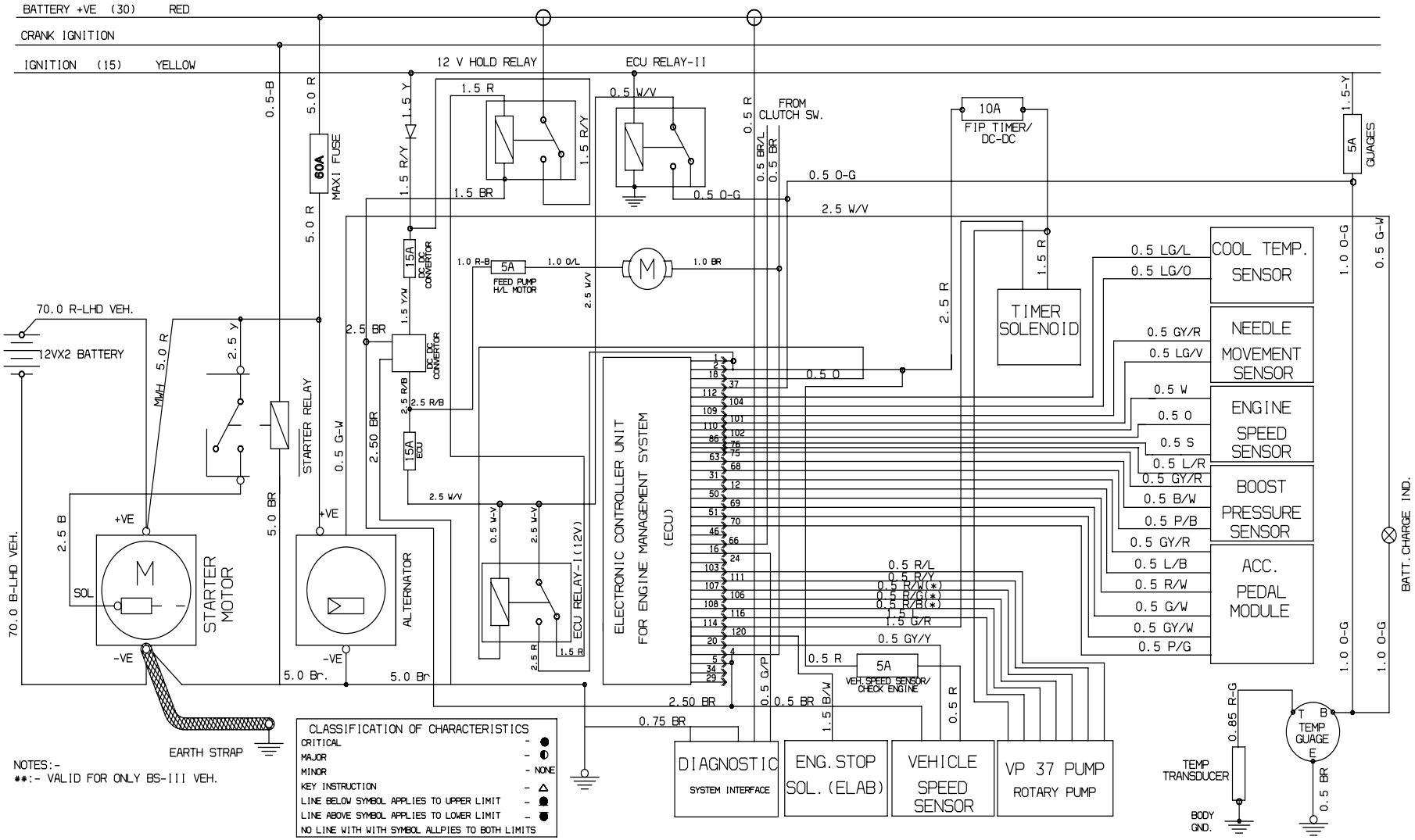

WIRING DIAGRAM
LP/LPT 613 EURO-II
Drg./Part No. 2641 5400 00 11
Sheet No. 6 of 16

https://truckmanualshub.com/

HEAD LAMP AND PARKING LAMPS

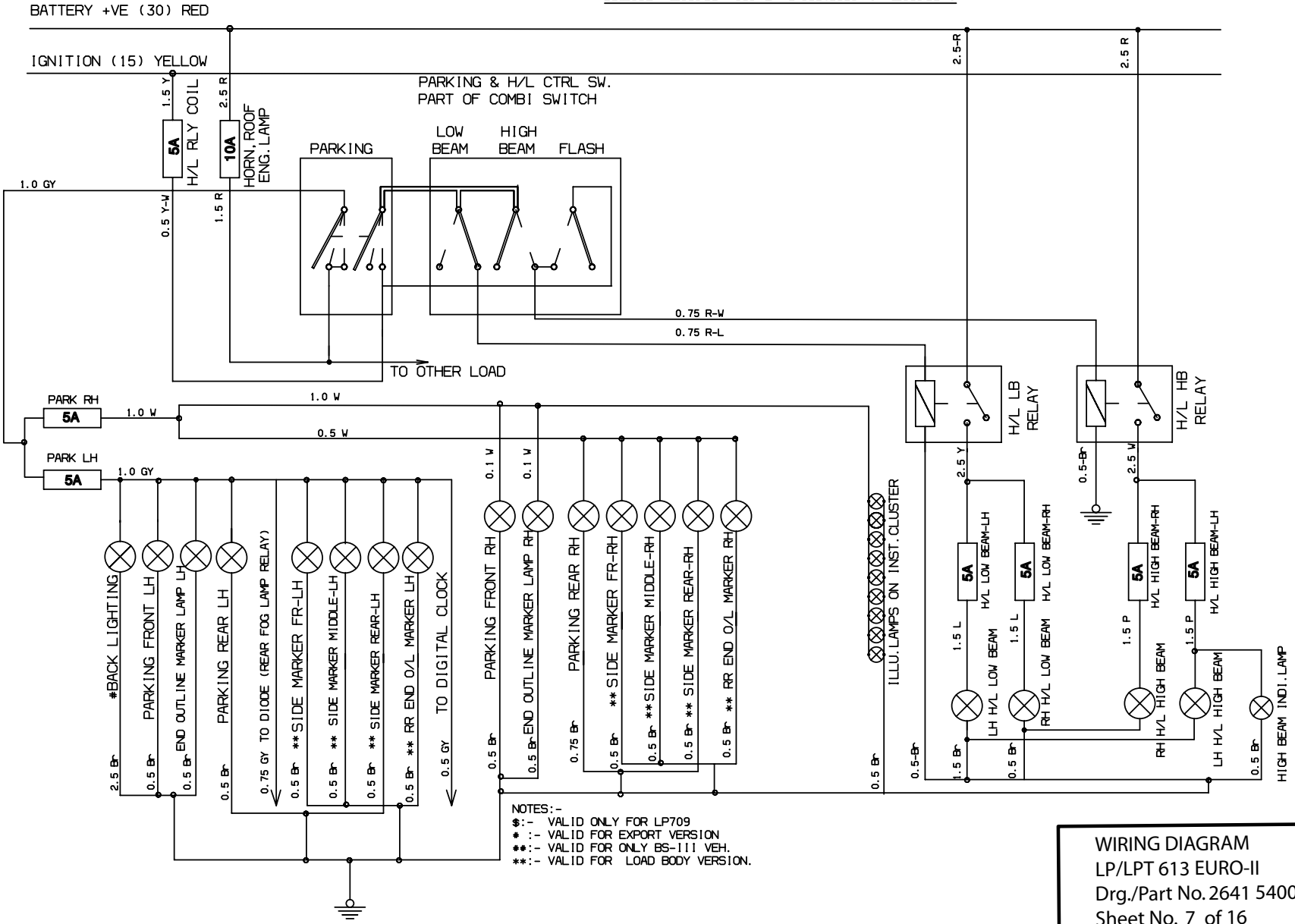

WIRING DIAGRAM
LP/LPT 613 EURO-II
Drg./Part No. 2641 5400 00 11
Sheet No. 7 of 16

https://truckmanualshub.com/

BLINKER,TAIL,STOP,REVERSE,ROOF,ENGINE LAMPS AND EXHAUST BRAKE SOLENOID

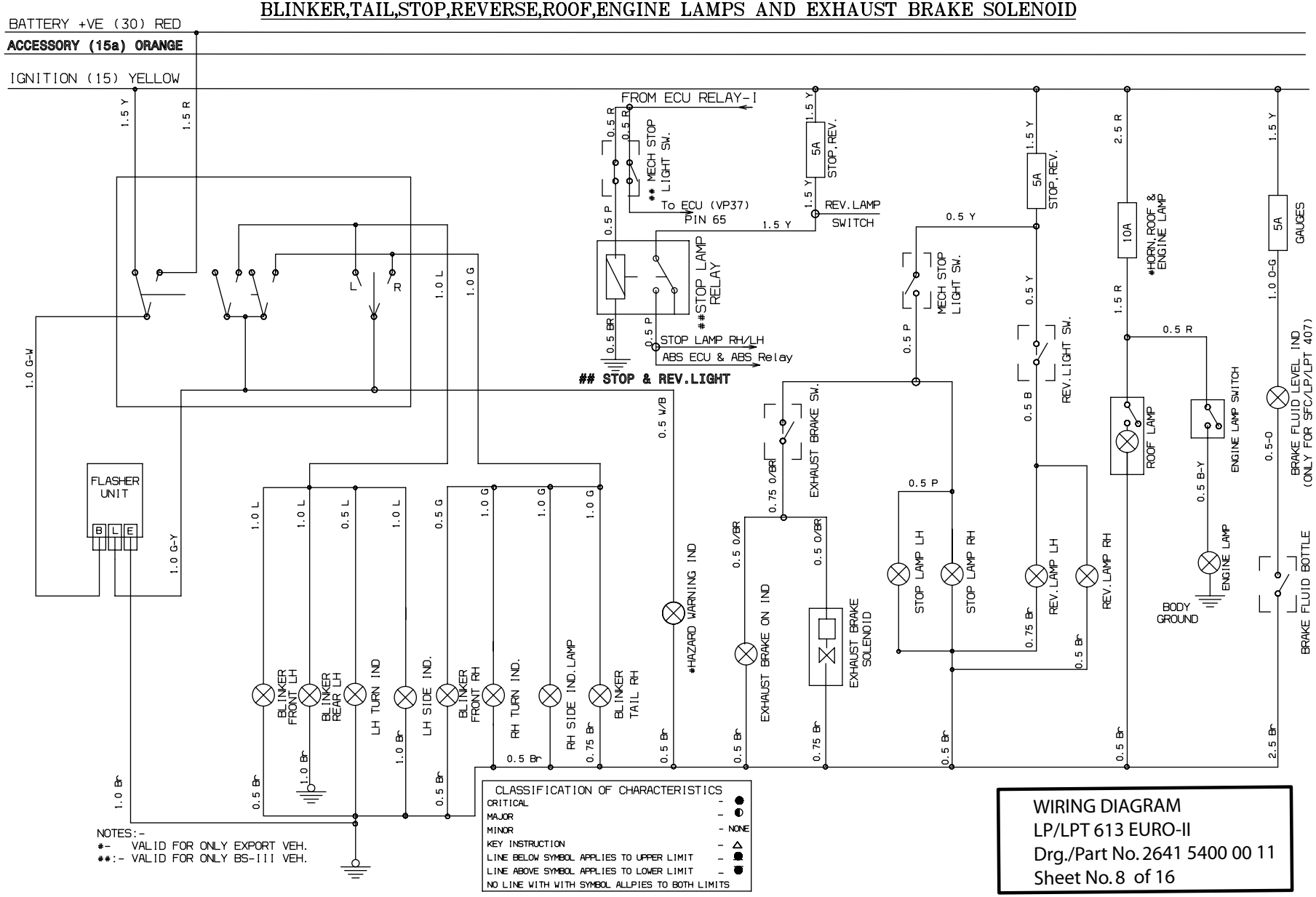

https://truckmanualshub.com/

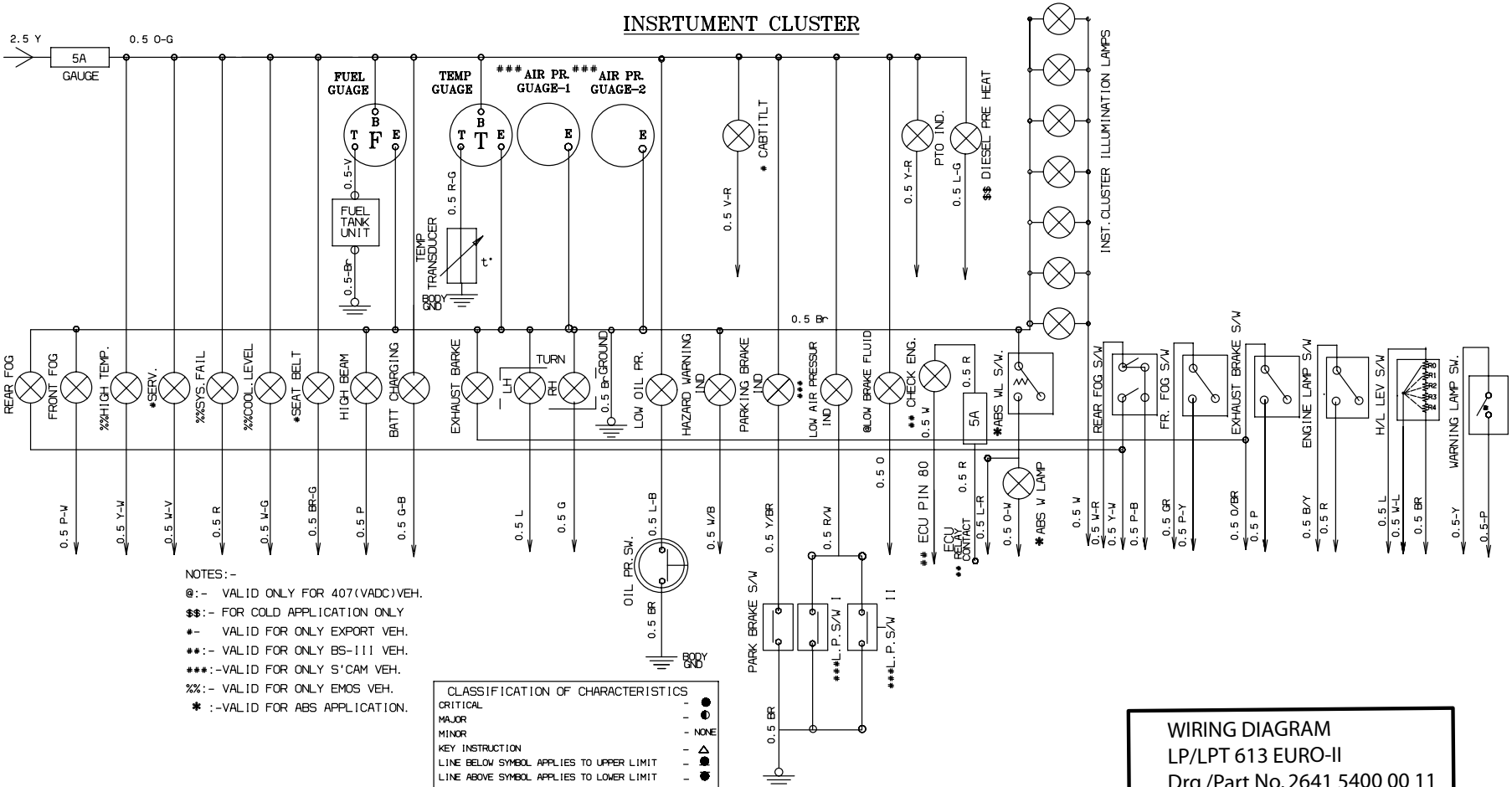

https://truckmanualshub.com/

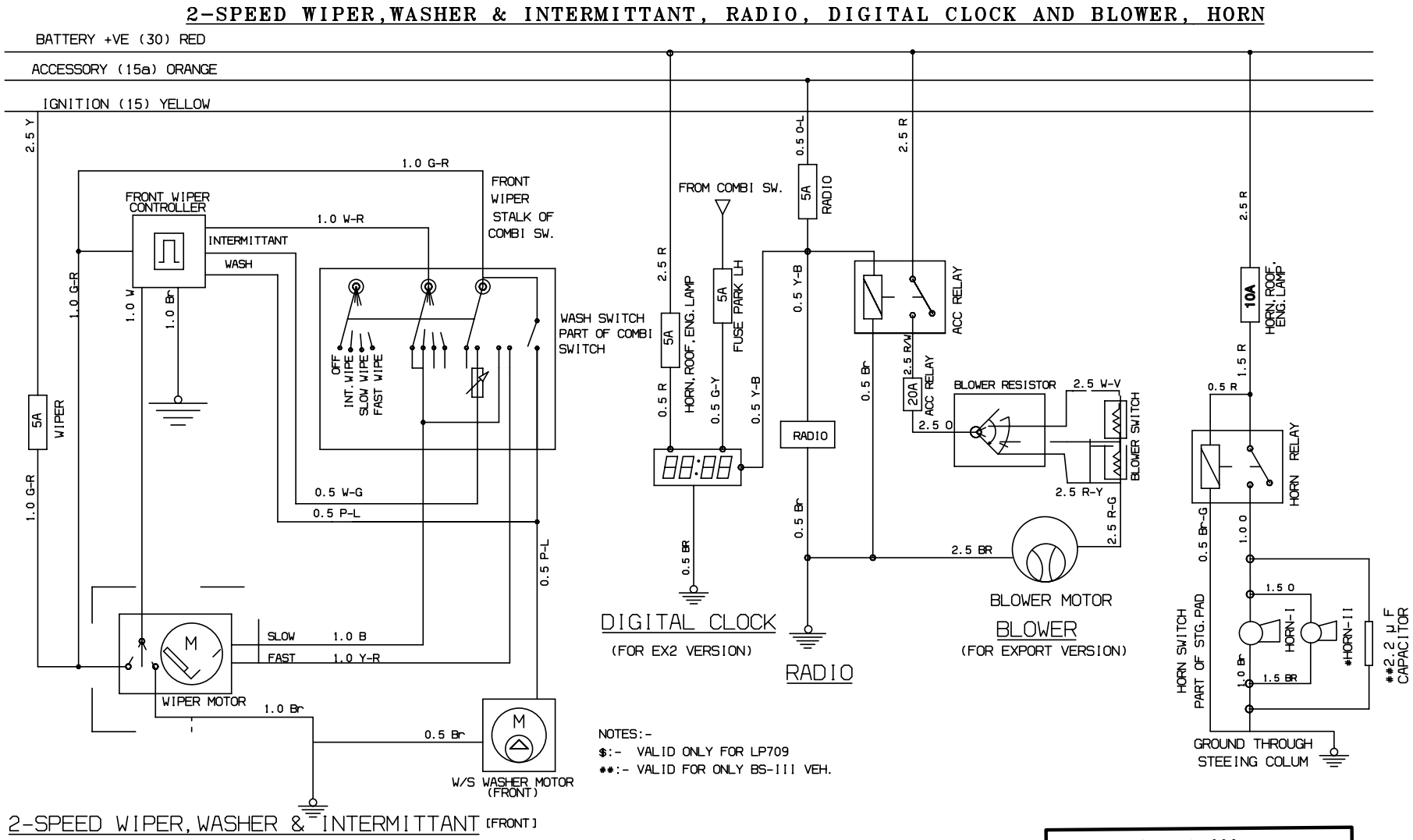

WIRING DIAGRAM
LP/LPT 613 EURO-II
Drg./Part No. 2641 5400 00 11
Sheet No. 10 of 16

https://truckmanualshub.com/

ADDI. SUPPLY-IGNI.,ADDI. SUPPLY-BATT.,SEAT BELT SW.CAB TILT SW.,POWER SOCKET,ENGINE LAMP, PTO SWITCH,HEAD LAMP LEVELLING,WATER SEPERATOR,AIR DRYER HEATER.

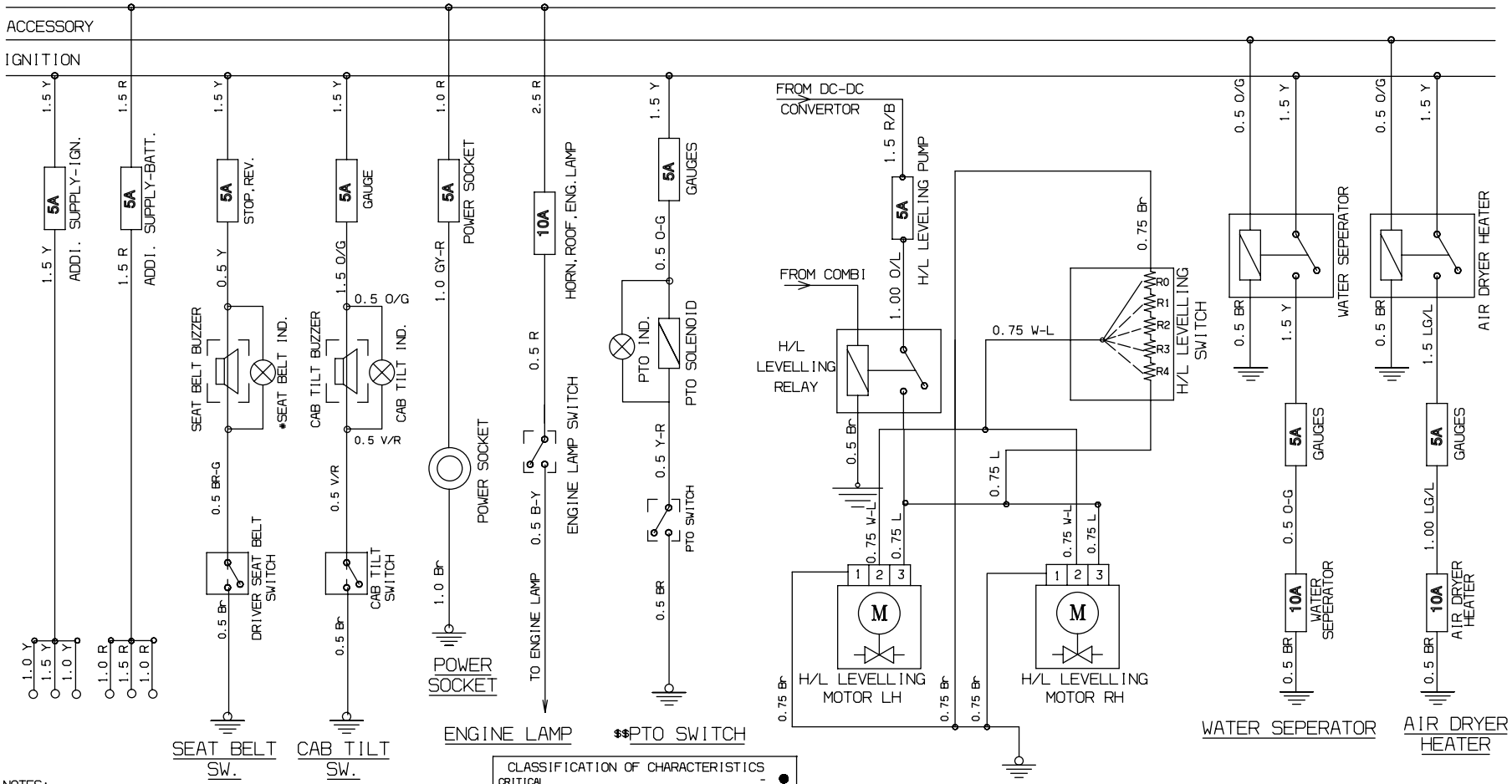

NOTES:-
**:- VALID ONLY FOR BS-III VEH.
*:- VALID ONLY FOR EXPORT

CLASSIFICATION OF CHARACTERISTICS	
CRITICAL	- ●
MAJOR	- ◐
MINOR	- NONE
KEY INSTRUCTION	- △
LINE BELOW SYMBOL APPLIES TO UPPER LIMIT	- ●
LINE ABOVE SYMBOL APPLIES TO LOWER LIMIT	- ●
NO LINE WITH WITH SYMBOL ALLPIES TO BOTH LIMITS	

WIRING DIAGRAM
LP/LPT 613 EURO-II
Drg./Part No. 2641 5400 00 11
Sheet No. 11 of 16

https://truckmanualshub.com/

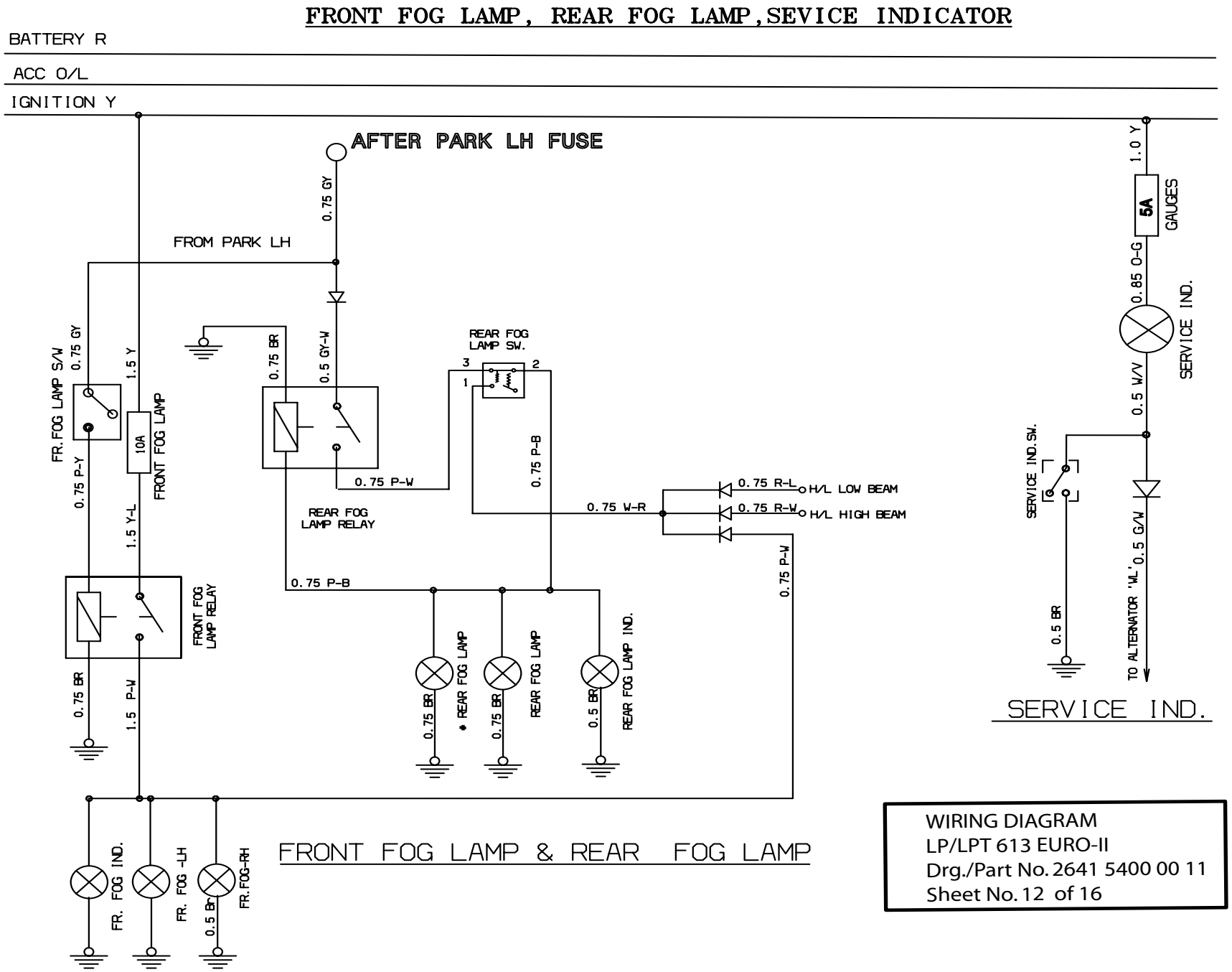

https://truckmanualshub.com/

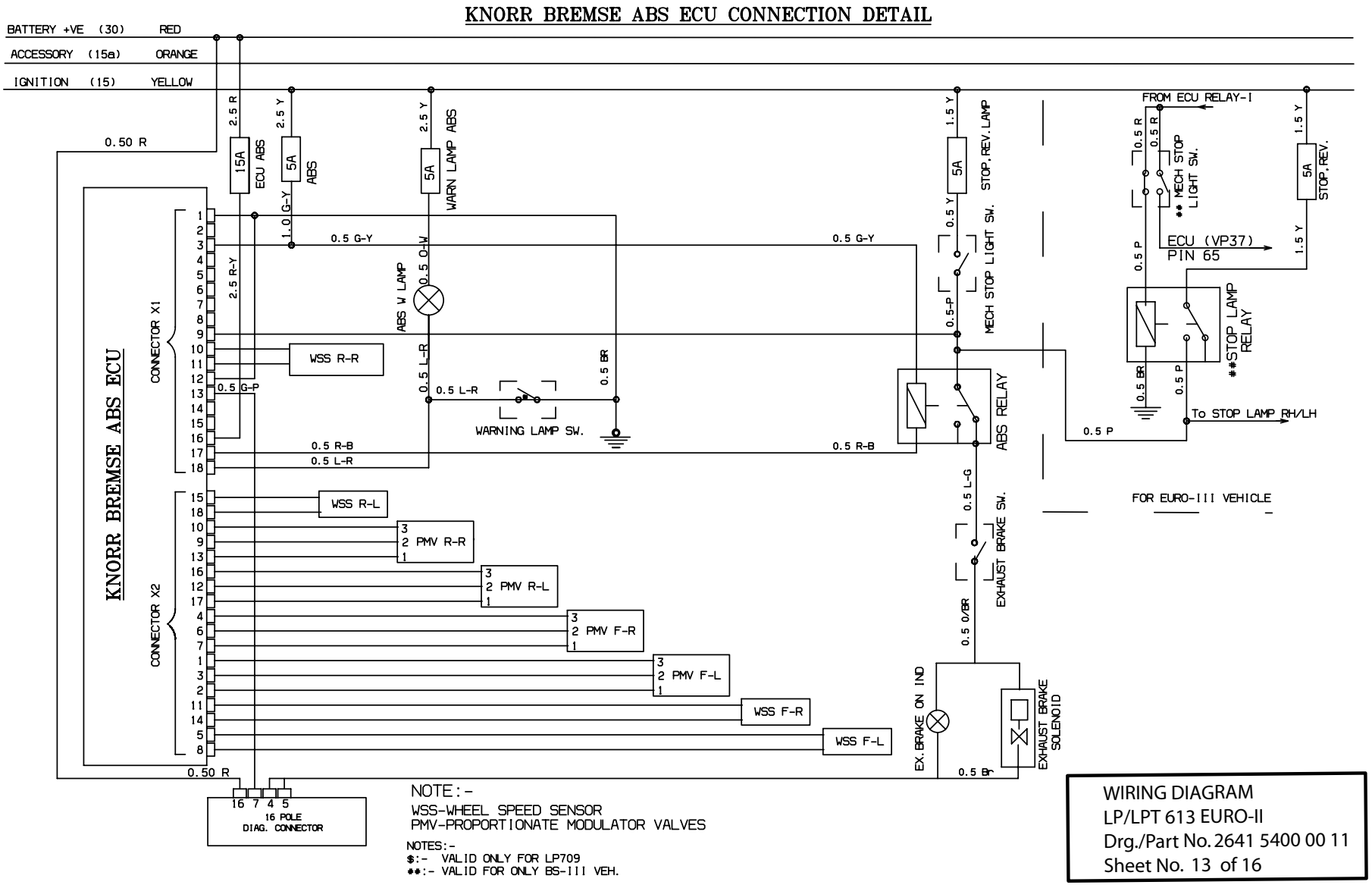

https://truckmanualshub.com/

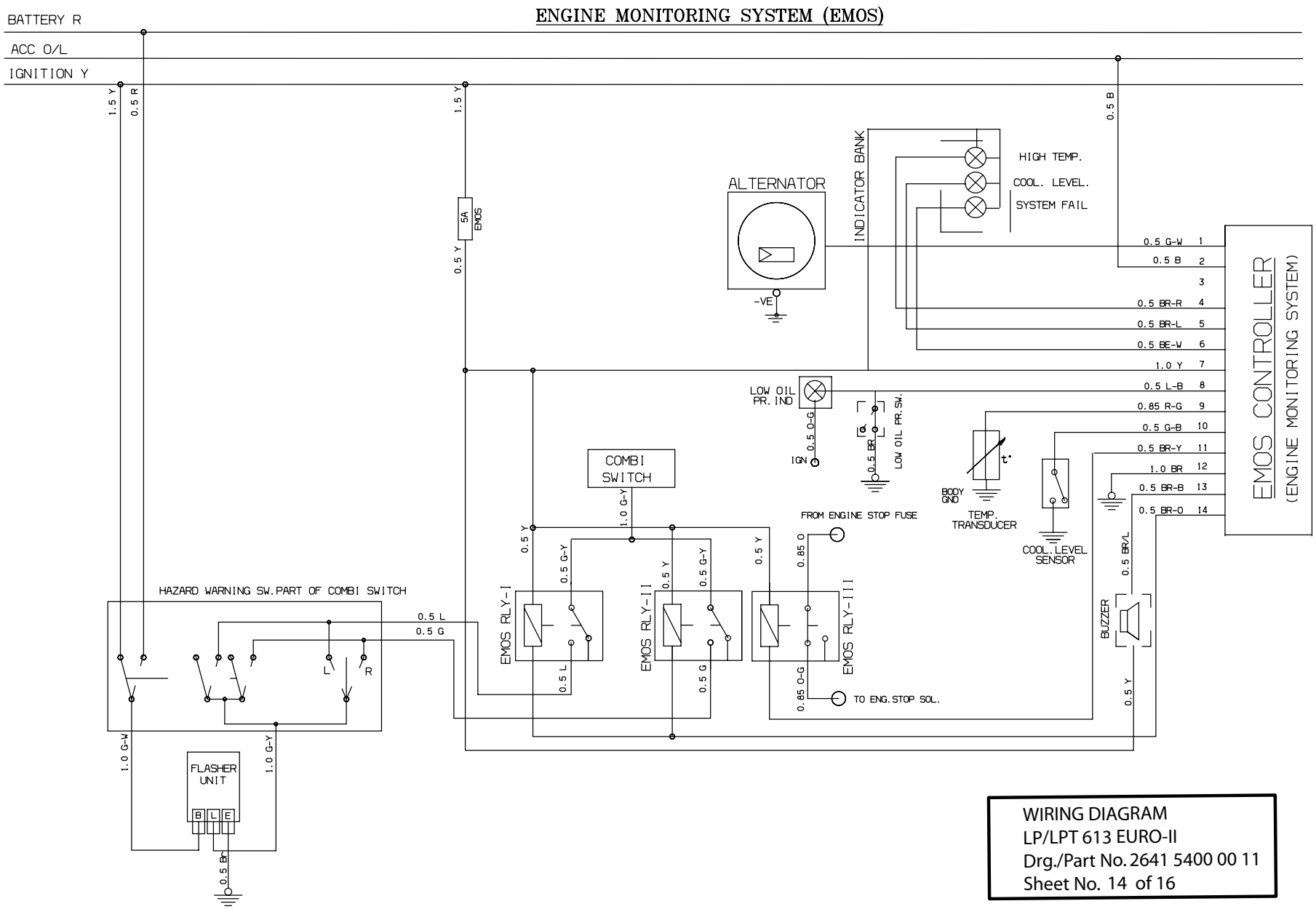

WIRING DIAGRAM
LP/LPT 613 EURO-II
Drg./Part No. 2641 5400 00 11
Sheet No. 14 of 16

https://truckmanualshub.com/

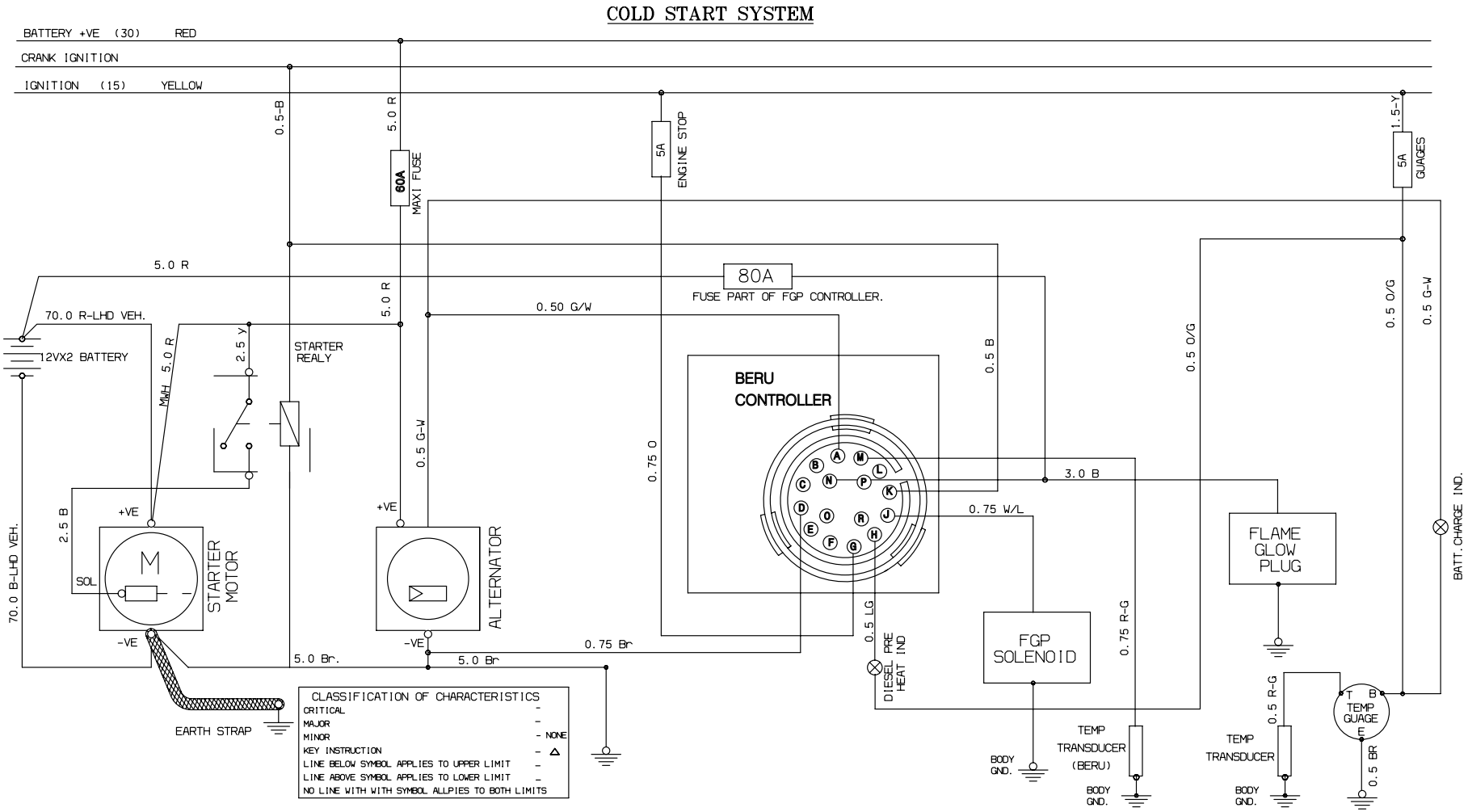

WIRING DIAGRAM
LP/LPT 613 EURO-II
Drg./Part No. 2641 5400 00 11
Sheet No. 15 of 16

https://truckmanualshub.com/

CONNECTOR DETAILS

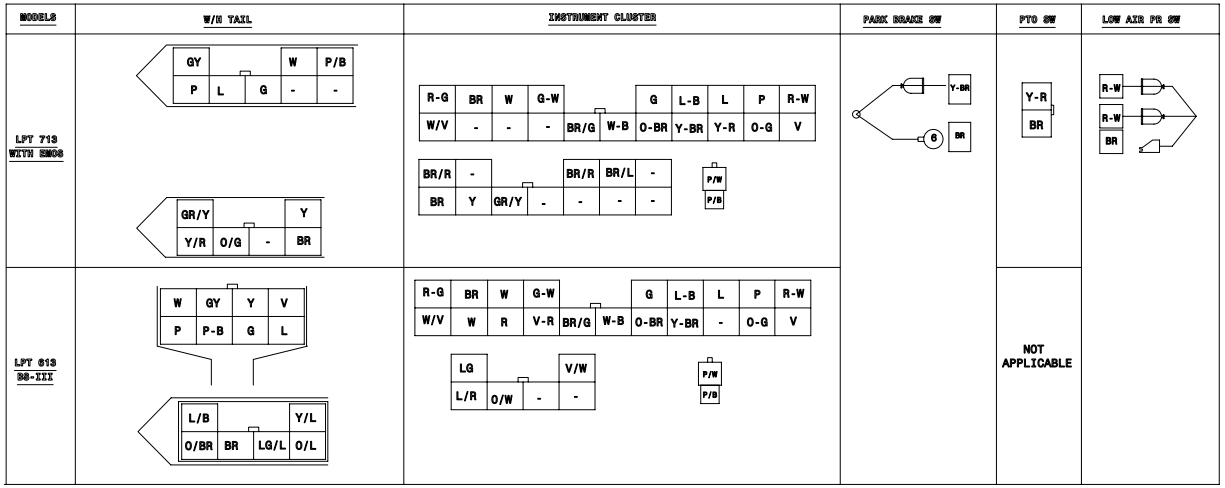

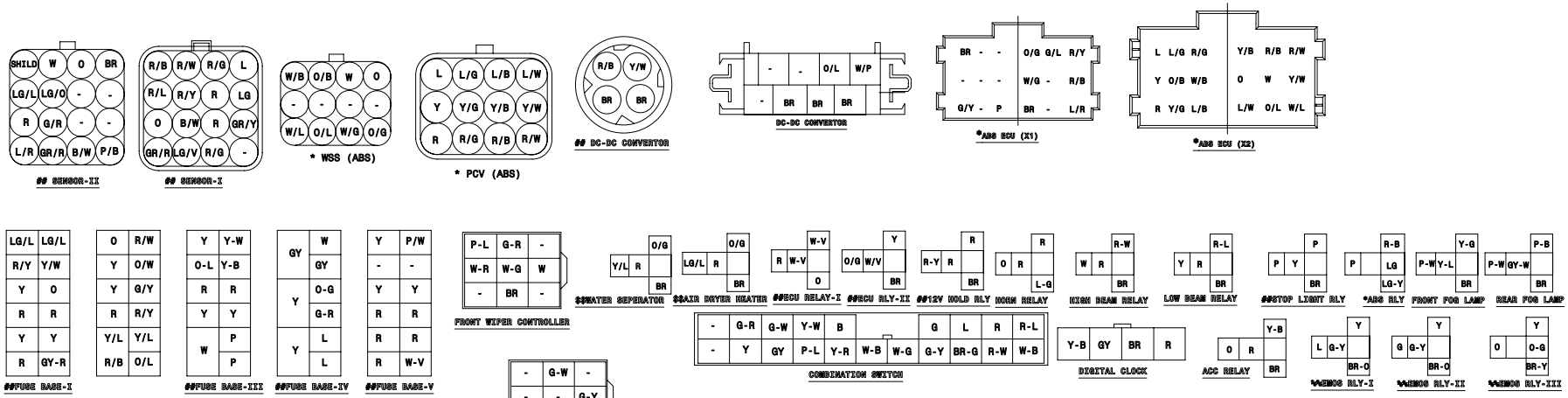

NOTES:- *ABS

$$:- FOR COLD APPLICATION ONLY

##:- VALID FOR ONLY BS-III VEH.

%%:- VALID FOR ONLY EMOS VEH.

*:- VALID FOR ABS APPLICATION.

ALL CONNECTOR VIEWS FROM MAIN W/H SIDE

COLOUR CODE OF CABLES	
V	VOILET
LG	LIGHT GREEN
Y	YELLOW
W	WHITE
R	RED
P	PINK
SB	SKY BLUE
O	ORANGE
L	BLUE
GY	GRAY
G	GREEN
BR	BROWN
B	BLACK

CLASSIFICATION OF CHARACTERISTICS

CRITICAL	- ●
MAJOR	- ◐
MINOR	- NONE
KEY INSTRUCTION	- △
LINE BELOW SYMBOL APPLIES TO UPPER LIMIT	- ●
LINE ABOVE SYMBOL APPLIES TO LOWER LIMIT	- ●
NO LINE WITH WITH SYMBOL ALLPIES TO BOTH LIMITS	

WIRING DIAGRAM
LP/LPT 613 EURO-II
Drg./Part No. 2641 5400 00 11
Sheet No. 16 of 16