Operation & Maintenance Manual

VEAM440100

WA380-6H

WHEEL LOADER

SERIAL NUMBERS H60051 and up

WARNING

Unsafe use of this machine may cause serious injury or death. Operators and maintenance personnel must read this manual before operating or maintaining this machine. This manual should be kept near the machine for reference and periodically reviewed by all personnel who will come into contact with it.

NOTICE

Komatsu has had the operating and maintenance instructions translated into all the languages of the member states in the European Union. Should you wish to have a version of the operating instructions in another language, please don't hesitate to ask at your local dealer's.

© 2006 Komatsu Hanomag GmbH
All Rights Reserved
Printed in Europe 07-2006

KOMATSU

1. Foreword

1.1 Foreword

This manual provides rules and guidelines which will help you use this machine safely and effectively. The precautions in this manual must be followed at all times when performing operation and maintenance. Most accidents are caused by the failure to follow fundamental safety rules for the operation and maintenance of machines. Accidents can be prevented by knowing beforehand conditions that may cause a hazard when performing operation and maintenance.

WARNING

- Operators and maintenance personnel must always do as follows before beginning operation or maintenance.
- Always be sure to read and understand this manual thoroughly before performing operation and maintenance.
- Read the safety messages given in this manual and the safety labels affixed to the machine thoroughly and be sure that you understand them fully.
- Keep this manual at the storage location for the Operation and Maintenance Manual given below, and have all personnel read it periodically.
- If this manual has been lost or has become dirty and cannot be read, request a replacement manual immediately from KOMATSU or your KOMATSU distributor.
- If you sell the machine, be sure to give this manual to the new owners together with the machine.
- KOMATSU delivers machines that comply with all applicable regulations and standards of the country to which it has been shipped. If this machine has been purchased in another country or purchased from someone in another country, it may lack certain safety devices and specifications that are necessary for use in your country. If there is any question about whether your product complies with the applicable standards and regulations of your country, consult KOMATSU or your KOMATSU distributor before operating the machine.

Storage location for the Operation and Maintenance Manual:
Pocket (1) at rear of operator's seat

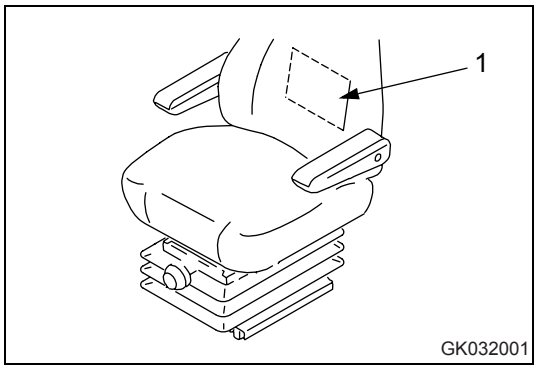

1.1.1 EU Directives

Machines supplied by us fulfil the Directive for Machinery 89/392/EEC and all supplements. If the machine is being used in another country, it is possible that certain safety regulations and specifications may not be fulfilled for use in that country. For example, priority vehicle warning lamps may be used in some countries, but are forbidden in others.

Please contact our dealer before using the machine if you have any questions regarding the fulfilment of standards and regulations in a specific country.

Notes on subsequent installation of electrical and electronic equipment and components

Electrical and electronic equipment and/or components which have been installed subsequently, emit electromagnetic radiation which can influence the function of the electronic components and sections of the machine. This can have an influence on the safety of the machine and endanger persons. For this reason, please ensure that the following safety instructions are observed.

If you are installing electrical or electronic equipment and/or components in the machine and connect them to the vehicle electrical system, you must check at own responsibility that the installations do not cause any disturbance to the vehicle's electronic system or other components. Above all, you must ensure that any subsequently installed electrical and electronic components comply with the EMV Directive 89/336/EEC in its current edition and bear the CE mark.

The following requirements also have to be met for subsequent installation of mobile communication systems (e.g. radio, telephone):

- Only equipment approved by national legislation (e.g. BZT approval for Germany) may be used
- The unit must be fixed in position
- Portable or mobile units may only be used inside the vehicles if they are connected to a fixed outside antenna
- The transmitter unit must be spatially separated from the vehicle's electronic system
- Make sure when installing the antenna that this is installed correctly with good earth connection between antenna and vehicle mass

Also observe KOMATSU and manufacturer's installation instructions for wiring, installation and maximum permitted power consumption.

1.2 Safety information

To enable you to use this machine safely, safety precautions and labels are given in this manual and affixed to the machine to give explanations of situations involving potential hazards and of the methods of avoiding such situations.

1.2.1 Signal words

The following signal words are used to inform you that there is a potential hazardous situation that may lead to personal injury or damage.

In this manual and on machine labels, the following signal words are used to express the potential level of hazard.

DANGER

Indicates an imminently hazardous situation which, if not avoided, will result in death or serious injury.

WARNING

Indicates a potentially hazardous situation which, if not avoided, could result in death or serious injury.

CAUTION

Indicates a potentially hazardous situation which, if not avoided, may result in minor or moderate injury. This word is used also to alert against unsafe practices that may cause property damage.

Example of safety message using signal word

WARNING

When standing up from the operator's seat, always place the work equipment lock lever in the LOCK position.
If you accidentally touch the control levers when they are not locked, this may cause a serious injury or death.

Other signal words

In addition to the above, the following signal words are used to indicate precautions that should be followed to protect the machine or to give information that is useful to know.

NOTE

This word is used for precautions that must be taken to avoid actions which could shorten the life of the machine.

REMARK

This word is used for information that is useful to know.

1.2.2 Safety labels

Safety labels are affixed to the machine to inform the operator or maintenance worker on the spot when carrying out operation or maintenance of the machine that may involve hazard.

For details of safety labels, see "Safety labels (2-2)".

Safety labels using pictogram

Safety pictograms use a picture to express a level of hazardous condition equivalent to the signal word. These safety pictograms use pictures in order to let the operator or maintenance worker understand the level and type of hazardous condition at all times. Safety pictograms show the type of hazardous condition at the top or left side, and the method of avoiding the hazardous condition at the bottom or right side. In addition, the type of hazardous condition is displayed inside a triangle and the method of avoiding the hazardous condition is shown inside a circle.

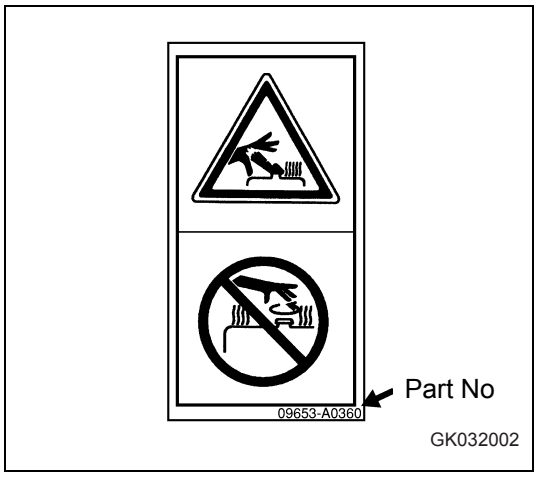

KOMATSU cannot predict every circumstance that might involve a potential hazard in operation and maintenance. Therefore, the safety messages in this manual and on the machine may not include all possible safety precautions.
If any procedures or actions not specifically recommended or allowed in this manual are used, it is your responsibility to take the necessary steps to ensure safety.
In no event should you engage in prohibited uses or actions described in this manual.

The explanations, values, and illustrations in this manual were prepared based on the latest information available at that time. Continuing improvements in the design of this machine can lead to changes in detail which may not be reflected in this manual. Consult KOMATSU or your KOMATSU distributor for the latest available information of your machine or for questions regarding information in this manual.

1.3 Introduction

This loader is a machine with independent transmission, moving on chains or wheels. Driving in forward direction, the loader can load or dig material using its attachments intended for loading operations (i.e. bucket).

This KOMATSU machine is designed to be used mainly for the following work:

- Digging work
- Smoothing
- Pushing work
- Loading work

For details of the operating procedure, see "Work possible using wheel loader (3-122)".

1.3.1 Intended use

If you use the machine for any other purpose than specified above, we will not accept any responsibility for safety. All considerations concerning safety will then be up to the owner or the operating and maintenance personnel. In any case, neither you nor any other person are/is authorised to perform work and functions explicitly prohibited in these operating instructions.

The transport of persons in the work equipment is strictly forbidden!

For details of the operating procedure, see "Work possible using wheel loader (3-122)".

1.3.2 Directions of machine

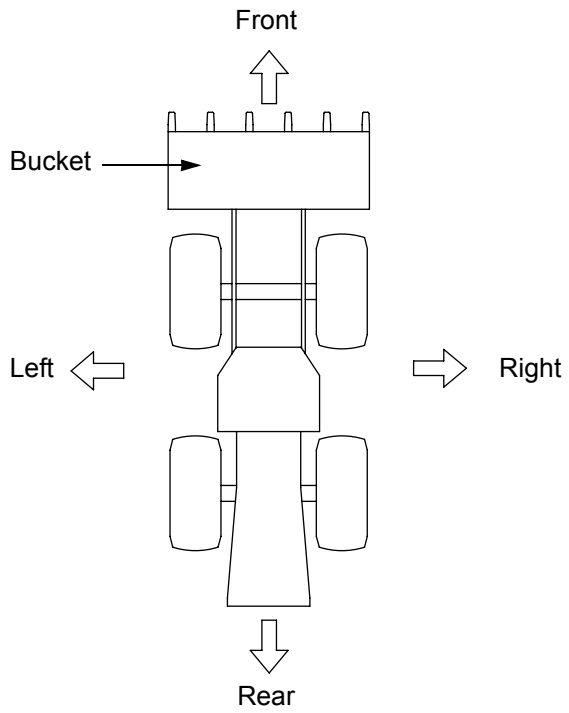

GK032003

In this manual, the directions of the machine (front, rear, left, right) are determined according to the view from the operator's seat in the direction of travel (front) of the machine.

1.3.3 Visibility from operator's seat

The visibility standards (ISO 5006) for this machine require a view shown in the diagram on the right side.

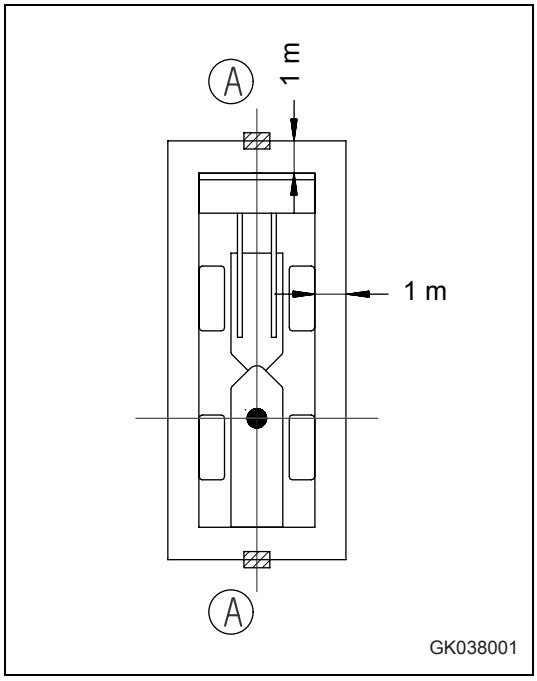

Visibility in immediate area

The visibility of this machine in the area 1 m from the outside surface of the machine at a height of 1.5 m is shown in the diagram on the right side. The hatched area (A) shows the area where the view is blocked by part of the machine when mirrors or other aids to visibility are installed as standard. Please be fully aware that there are places that cannot be seen when operating the machine.

12-M Radius visibility

The visibility at a radius of 12 m from the machine is as shown in the diagram below. The hatched areas (B) show the areas where the view is blocked when mirrors or other aids to visibility are installed as standard. Please be fully aware that there are places that cannot be seen when operating the machine.

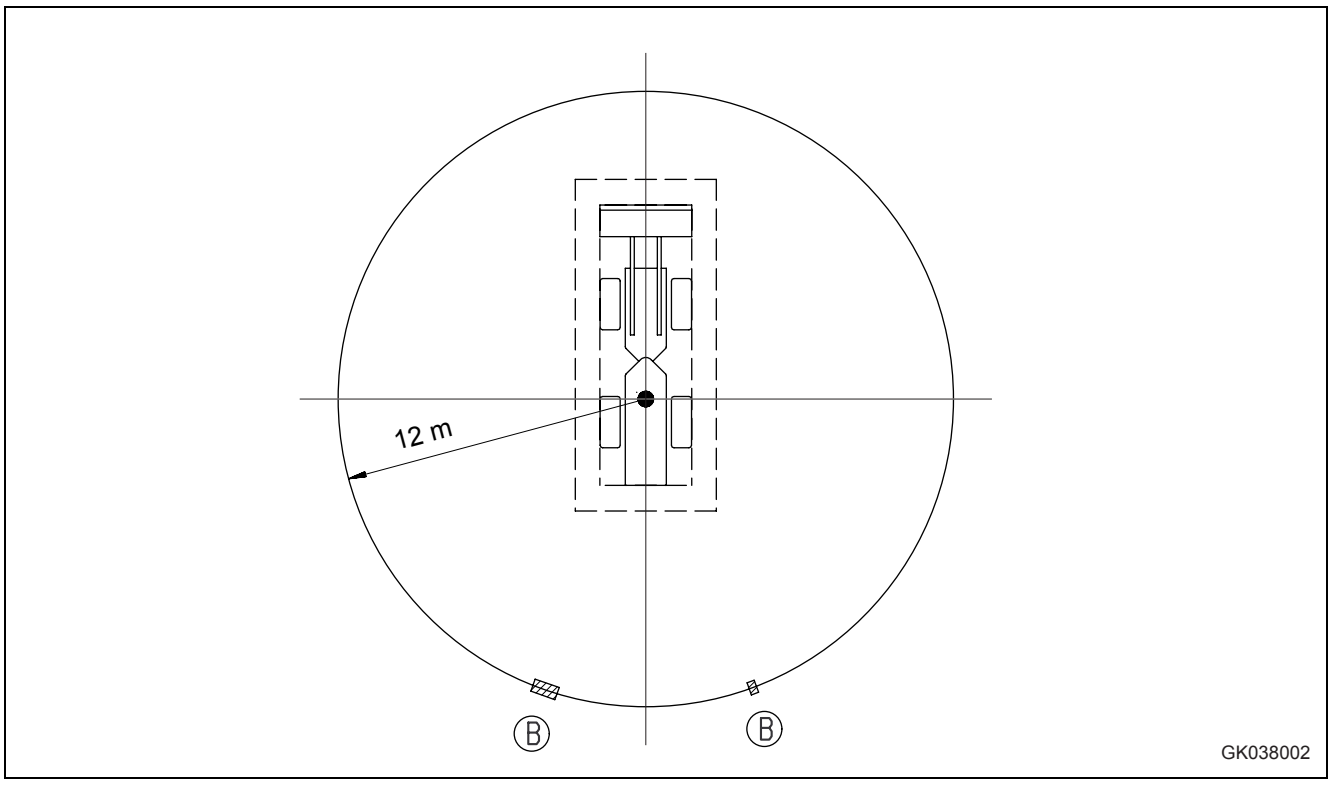

1.4 Necessary information

When requesting service or ordering replacement parts, please inform your KOMATSU distributor of the following items.

1.4.1 Product Identification Number (PIN)/Machine serial no. plate and position

On the center right of the front frame.

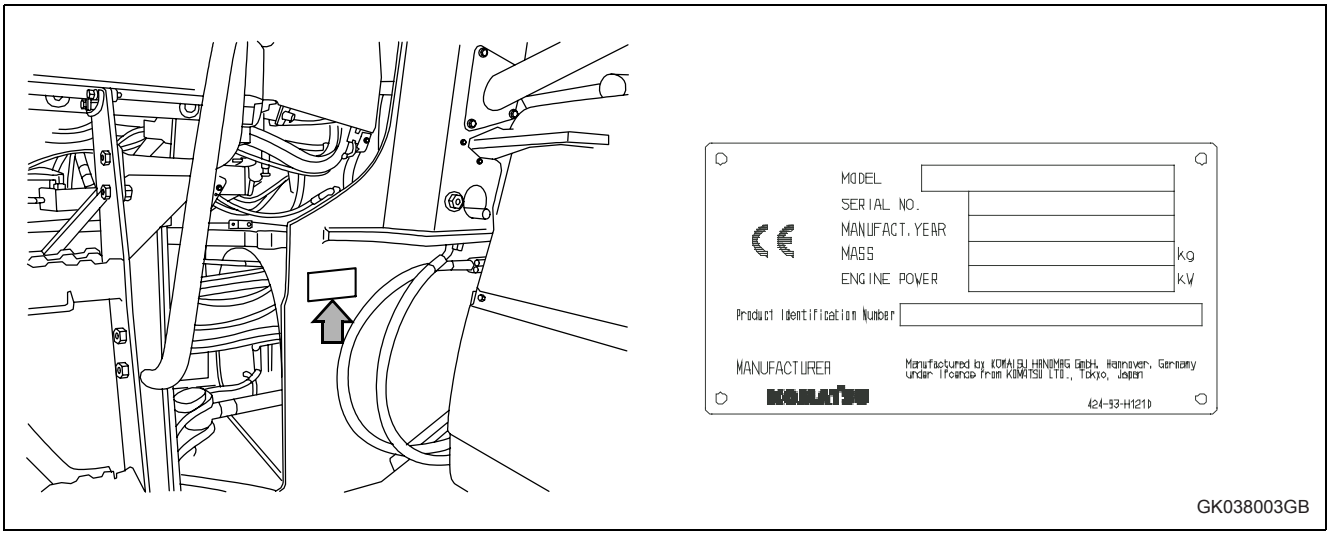

1.4.2 Engine serial no. plate and position

It is at the top at the rear of the engine on the right side of the machine.

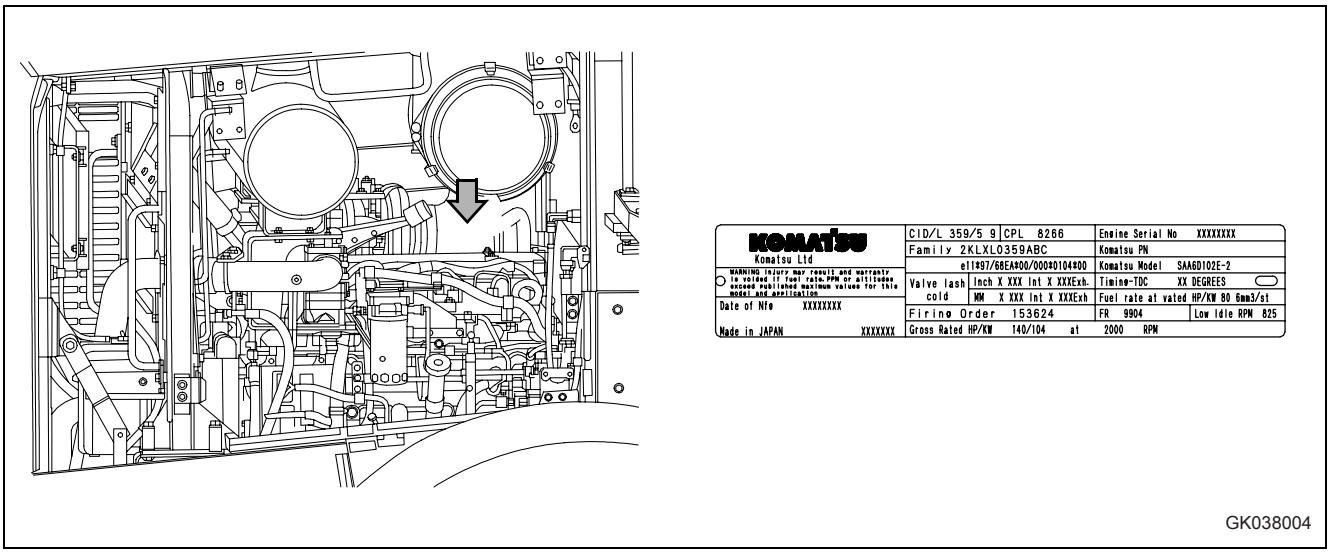

EPA: Environmental Protection Agency, U.S.A.

1.4.3 ROPS/FOPS-Cab serial no. plate

This plate is located on the right inside cab on the rear beam.

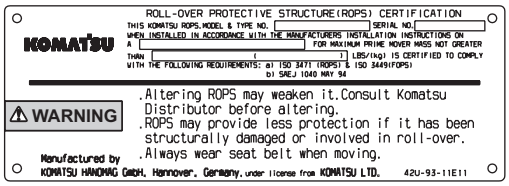

GK032006

1.4.4 Axle serial no. plate

This plate is located on the right of front axle and on the left of rear axle.

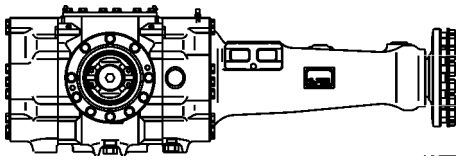

GK032007

1.4.5 Transmission serial no. plate

This plate is located in travel direction front, above the transmission output.

GK032008

1.4.6 Seat operator serial no. plate

This plate is located in front of seat, covered by the bellows.

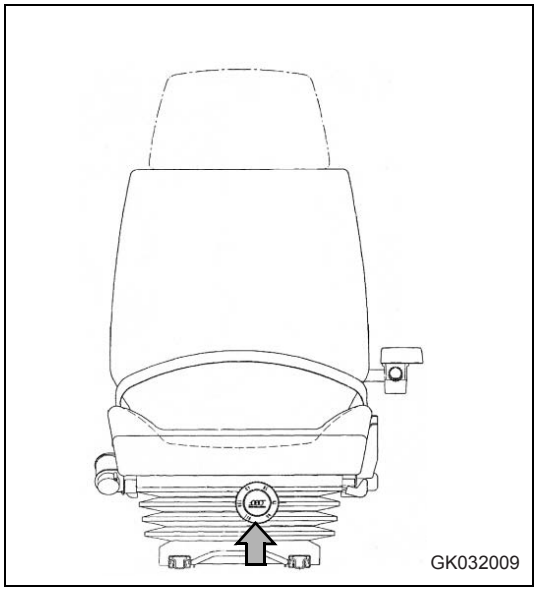

1.4.7 Position of service meter

The service meter is displayed on the character display at the bottom center of the machine monitor.

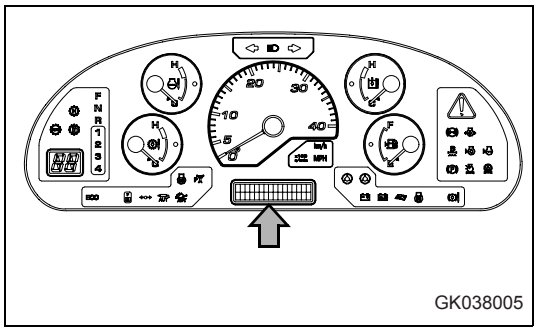

1.4.8 Table to enter serial no. and distributor

Machine serial No.	
Engine serial No.	
Product identification number (PIN)	
Distributor name Address	
Service Personnel Phone/Fax	

1.5 Contents

1. Foreword 1-1

1.1 Foreword 1-2
1.1.1 EU Directives 1-3

1.2 Safety information 1-4
1.2.1 **Signal words** **1-4**
1.2.2 **Safety labels** **1-6**

1.3 Introduction 1-7
1.3.1 Intended use. 1-7
1.3.2 Directions of machine. 1-8
1.3.3 Visibility from operator's seat 1-9

1.4 Necessary information 1-10
1.4.1 Product Identification Number (PIN)/Machine serial no. plate and position 1-10
1.4.2 Engine serial no. plate and position 1-10
1.4.3 ROPS/FOPS-Cab serial no. plate 1-11
1.4.4 Axle serial no. plate 1-11
1.4.5 Transmission serial no. plate 1-11
1.4.6 Seat operator serial no. plate 1-12
1.4.7 Position of service meter 1-12
1.4.8 Table to enter serial no. and distributor 1-12

1.5 Contents 1-13

1.6 Dimensions, weights and operating data 1-21
1.6.1 WA380-6: Dimensions, weights and operating data 1-21

1.7 CE-Conforming equipment 1-22
1.7.1 CE-Conforming equipment. 1-22
1.7.2 Manufacturer-supplied CE-Conforming equipment, according to document 419-93-H1250 1-23

2. Safety 2-1

2.1 Safety labels 2-2
2.1.1 Location of safety labels. 2-2
2.1.2 Presentation of safety labels 2-3

2.2 General precautions 2-6

2.3 Precautions for operation 2-18
2.3.1 Starting engine 2-18
2.3.2 Operation 2-20
2.3.3 Transportation 2-28
2.3.4 Battery 2-30
2.3.5 Towing 2-32

2.4 Precautions for maintenance 2-33

2.5 Precautions with tires 2-43

3. Operation 3-1

3.1 General view 3-2
3.1.1 General view of machine 3-2
3.1.2 General view of controls and gauges 3-3

3.2 Explanation of components 3-7
3.2.1 Machine monitor 3-7
Types of warning 3-8
Central warning lamp 3-9
Character display portion 3-10
Emergency stop item 3-16
Caution items 3-19
Inspection and maintenance item 3-22
Pilot display portion 3-26
Meter display portion 3-32
Other functions of machine monitor 3-35
3.2.2 Switches 3-40
3.2.3 Control levers, pedals 3-57
3.2.4 Steering tilt lock lever 3-64
3.2.5 Cap with lock 3-65
3.2.6 Safety bar 3-66
3.2.7 Towing pin 3-67
3.2.8 Grease pump 3-67
3.2.9 Cab door 3-68
3.2.10 Cab door open lock 3-68
3.2.11 Cab window open lock 3-69
Cab left window open lock reset knob 3-69
Cab right window open lock reset knob 3-69
Reset right window open lock for escape 3-70
3.2.12 Backup alarm 3-70
3.2.13 Fuse 3-71
Fuse capacity and name of circuit 3-71
3.2.14 Slow blow fuse 3-72
3.2.15 Power outlet 3-73
3.2.16 Air conditioner 3-74
General locations and function of control panel 3-74
Method of operation 3-77
Precautions when using 3-79
Precautions for inspection and maintenance 3-79
Cool box 3-80
3.2.17 Handling cab wiper 3-80
Preventing damage to wiper arm bracket 3-80

3.3 Operation 3-81
3.3.1 Check before starting engine, adjust 3-81
Walk-around check 3-81
Check before starting 3-84
Adjustment 3-92
Safety belt 3-93

Adjust lever stand . . . 3-94
Operations and checks before starting engine . . . 3-96
3.3.2 Starting engine . . . 3-98
Normal starting . . . 3-98
Starting in cold weather . . . 3-100
Automatic warming-up operation . . . 3-101
3.3.3 Operations and checks after starting engine . . . 3-102
Breaking-in the machine . . . 3-102
Normal operation . . . 3-103
3.3.4 Stopping engine . . . 3-105
3.3.5 Check after stopping engine . . . 3-105
3.3.6 Moving the machine (directional, speed), stopping the machine . . . 3-106
Preparations for moving the machine . . . 3-106
Changing gear speed . . . 3-109
Changing direction . . . 3-110
Using switch to change between forward and reverse . . . 3-112
Stopping the machine . . . 3-114
Transmission cut-off function . . . 3-115
3.3.7 Turning . . . 3-117
Emergency steering . . . 3-118
3.3.8 Operation of work equipment . . . 3-120
Lift arm operation . . . 3-121
Bucket operation . . . 3-121
3.3.9 Work possible using wheel loader . . . 3-122
Digging operations . . . 3-122
Leveling operation . . . 3-126
Pushing operation . . . 3-126
Load and carry operations . . . 3-127
Loading operations . . . 3-127
3.3.10 Precautions for operation . . . 3-129
Permissible water depth . . . 3-129
If wheel brake does not work . . . 3-129
Precautions when driving up or down slopes . . . 3-129
3.3.11 Adjusting work equipment posture . . . 3-131
Adjusting boom kickout . . . 3-132
Adjusting bucket positioner . . . 3-132
Bucket level indicator . . . 3-133
3.3.12 Parking machine . . . 3-133
3.3.13 Checks after completion of operation . . . 3-135
Before stopping engine . . . 3-135
After stopping engine . . . 3-135
3.3.14 Locking . . . 3-136
3.3.15 Handling the tires . . . 3-137
Precautions when handling tires . . . 3-137
Tire pressure . . . 3-137
Precautions for using load and carry method . . . 3-138

3.4 Transportation 3-139
3.4.1 Transportation procedure 3-139
3.4.2 Loading, unloading work with trailers 3-139
Loading 3-140
Securing machine 3-140
Unloading 3-142
3.4.3 Lifting machine 3-143
Location of lifting position mark 3-144
Weight table. 3-144
Lifting procedure 3-145

3.5 Cold weather operation 3-146
3.5.1 Precautions for low temperature 3-146
Fuel and lubricants 3-146
Coolant 3-146
Battery 3-147
3.5.2 Precautions after completion of work 3-148
3.5.3 After cold weather 3-148
3.5.4 Warming-up operation for steering hydraulic circuit in cold weather 3-149

3.6 Long-term storage 3-150
3.6.1 Before storage 3-150
3.6.2 During storage 3-150
3.6.3 After storage 3-151

3.7 Troubleshooting 3-152
3.7.1 When machine runs out of fuel 3-152
3.7.2 Towing the machine 3-152
When engine can be used. 3-154
When engine cannot be used 3-154
Releasing parking brake 3-155
Emergency travel operation. 3-157
3.7.3 If battery is discharged 3-158
Removal and installation of battery 3-159
Precautions for charging battery 3-160
Starting engine with booster cable 3-161
3.7.4 Other trouble 3-163
Electrical system 3-163
Chassis 3-164
Engine 3-166

4. Maintenance 4-1

4.1 Guides to maintenance 4-2

4.2 Outlines of service 4-6
4.2.1 Handling oil, fuel, coolant, grease and carrying out KOWA (KOMATSU Oil Wear Analysis) 4-7
Oil 4-7
Fuel 4-8
Coolant and water for dilution 4-9
Grease. 4-10

Carrying out KOWA (KOMATSU Oil Wear Analysis) 4-10
Storing oil and fuel 4-12
Filters 4-12
4.2.2 Outline of electric system 4-13

4.3 Wear parts 4-14
4.3.1 Wear parts list 4-14

4.4 Fuel, coolant and lubricants 4-16
4.4.1 Lubrication chart. 4-18
4.4.2 Use of fuel, coolant and lubricants according to ambient temperature 4-19
4.4.3 Recommended brands, recommended quality for products other than KOMATSU genuine oil 4-22

4.5 Standard tightening torques for bolts and nuts 4-23
4.5.1 Torque list. 4-23

4.6 Periodic replacement of safety critical parts 4-25

4.7 Maintenance schedule chart 4-27
4.7.1 Maintenance schedule chart 4-27

4.8 Replace injector assembly 4-30

4.9 Service procedure 4-31
4.9.1 Initial 50 hours service (only after the first 50 hours) 4-31
Check for loose wheel hub bolts, tighten 4-31
4.9.2 Initial 250 hours service (only after the first 250 hours) 4-31
Replace transmission oil filter cartridge 4-31
Replace hydraulic tank filter element 4-31
4.9.3 Initial 1000 hours service (only after the first 1000 hours) 4-31
Check engine valve clearance, adjust 4-31
4.9.4 When required 4-32
Clean, replace air cleaner element. 4-32
Clean inside of cooling system. 4-35
Check transmission oil level, add oil 4-39
Check axle oil level, add oil 4-40
Clean axle case breather 4-41
Clean air conditioner condenser. 4-42
Check window washing fluid level, add fluid 4-42
Clean radiator fins and cooler fins 4-43
Check electrical intake air heater 4-46
Turn, replace bolt on cutting edge 4-47
Replace bucket teeth 4-48
Check air conditioner 4-50
Replace slow blow fuse 4-51
Checking function of accumulator 4-52
Selection and inspection of tires. 4-53

4.9.5 Check before starting 4-55
Check before starting 4-55
4.9.6 Every 50 hours service 4-55
Drain water, sediment from fuel tank 4-55
4.9.7 Every 100 hours service 4-56
Lubricate rear axle pivot pin 4-56
Check oil level in hydraulic tank, add oil 4-56
Clean element in air conditioner fresh air filter 4-57
4.9.8 Every 250 hours service 4-58
Check battery electrolyte level 4-58
Check parking brake 4-61
Check air conditioner compressor belt tension, adjust 4-61
Check for loose wheel hub bolts, tighten 4-62
Clean element in air conditioner recirculation filter 4-63
Checking function of accumulator 4-64
Lubricating 4-65
4.9.9 Every 500 hours service 4-66
Change oil in engine oil pan, replace engine oil filter cartridge 4-66
Replace fuel pre-filter cartridge 4-68
4.9.10 Every 1000 hours service 4-71
Replace fuel filter cartridge 4-71
Change oil in transmission case and transmission oil filter cartridge, clean strainer 4-73
Clean transmission case breather 4-74
Lubricating 4-74
Check tightening parts of turbocharger 4-75
Check alternator driving belt tension and replacement 4-75
Replace corrosion resistor cartridge 4-75
4.9.11 Every 2000 hours service 4-76
Change oil in hydraulic tank, replace hydraulic filter element 4-76
Replace hydraulic tank breather element 4-79
Change axle oil 4-80
Replace element in air conditioner recirculation air filter, fresh air filter 4-81
Check brake disc wear 4-81
Checking function of accumulator 4-83
Check alternator, starting motor 4-84
Check engine valve clearance, adjust 4-84
Check vibration damper 4-84
4.9.12 Every 4000 hours service 4-85
Lubricating 4-85
Check water pump 4-86
Check air conditioner compressor, adjust 4-86
Checking for looseness of high-pressure clamp, hardening of rubber 4-87
Checking for missing fuel spray prevention cap, hardening of rubber 4-88
4.9.13 Every 8000 hours service 4-89
Replace high-pressure piping clamp 4-89
Replace injector nozzle tip 4-89

5. Technical Data 5-1

5.1 Technical data 5-2

5.2 Noise emission levels 5-4

5.3 Vibration level 5-5

5.4 Limit values for slopes 5-7

6. Attachments, Options 6-1

6.1 Selecting bucket and tires 6-2

6.2 Handling torque converter lock-up 6-3
6.2.1 General locations 6-4
6.2.2 Method of operation 6-6
6.2.3 Warning/limit functions for travel speed 6-7
Travel speed warning function 6-7
Travel speed limit function 6-7

6.3 Handling machines equipped with KOMTRAX 6-8
6.3.1 Basic precautions 6-9

6.4 Joystick steering system 6-10
6.4.1 Components 6-10
6.4.2 Structure and function 6-13
Operation using joystick lever and operation using steering wheel 6-14
Getting in or out 6-15
Adjustment of joystick console 6-16
6.4.3 Operation method of joystick steering system 6-17

6.5 Multi-function lever (with/without auxiliary control lever) 6-20
6.5.1 Explanation of components 6-20
6.5.2 Operation 6-25
Using switch to change between forward and reverse 6-25

6.6 3-lever control 6-27
6.6.1 Explanation of components 6-27

6.7 Hydraulic quick coupler 6-30
6.7.1 Installing the attachment 6-30
6.7.2 Removal and installation of the attachment 6-33
6.7.3 Precautions for use 6-33
6.7.4 Precautions when removing the attachment 6-33

6.8 Central lubrication system 6-34
6.8.1 Operating the central lubrication system 6-34
6.8.2 Display and control unit 6-34
LED-display 6-35
Pushbuttons 6-35
6.8.3 Changing the lubrication interval times 6-36

7. Index 7-1

7.1 Index 7-2

8. Notes 8-1

1.6 Dimensions, weights and operating data

1.6.1 WA380-6: Dimensions, weights and operating data

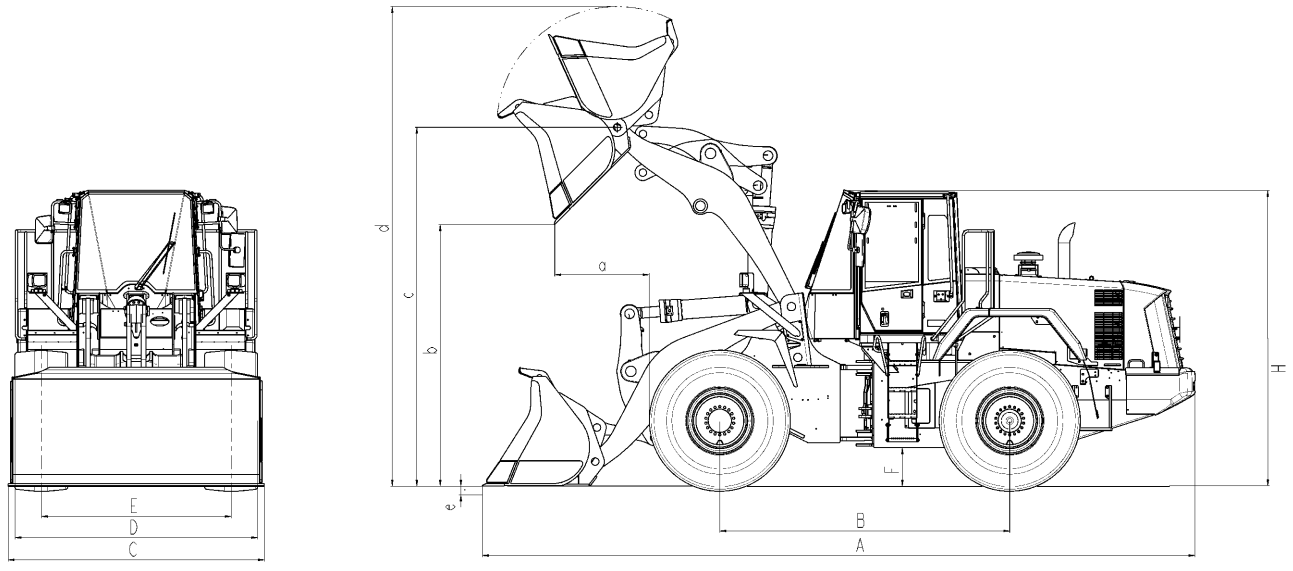

Measurements, operating data				
	Bucket capacity to ISO 7546	m³	3.1	without teeth and without BOC
	Material density	t/m³	1.8	
	Bucket weight without teeth	kg	1,420	
	Static tipping load, straight	kg	14,000	
	Static tipping load, 40° angle	kg	12,100	
	Breakout force, hydraulic	kN	172.5	
	Lifting capacity, hydraulic, on ground	kN	177.1	
	Operating weight *)	kg	17,500	
a	Reach at 45° discharge	mm	1,076	
b	Dumping height at 45° discharge	mm	2,976	
c	Lift height, hinge pin	mm	4,082	
d	Height to upper edge of bucket	mm	5,456	
e	Digging depth	mm	99	
A	Overall length, bucket on ground	mm	8,111	
B	Wheel base	mm	3,300	
C	Bucket width	mm	2,916	
D	Width over tyres	mm	2,762	These values refer to machines with 23.5-25
E	Gauge	mm	2,160	
F	Ground clearance	mm	436	*) Machine without additional counterweight
H	Overall height	mm	3,361	

1.7 CE-Conforming equipment

1.7.1 CE-Conforming equipment

CE-Conforming equipment						
	1	2	3	4	5	–
	Type	Part No.	Volume m³	Load Capacity kg	Hydraulic pressure bar	Weight kg
Bucket	WA380-6H	423-75-H2D90	3.0	5,400		1,678
		423-75-H2E00	3.0	5,400		1,738
		423-75-H2D30	3.1	5,580		1,538
		423-75-H2D40	3.1	5,580		1,598
		423-75-H2D00	3.1	5,580		1,421
		423-75-H2600	3.1	5,580		1,277
		423-75-H2610	3.1	5,580		1,360
		423-75-H2620	3.1	5,580		1,471
		423-75-H2D10	3.1	5,580		1,481
		423-71-H2801	3.1	5,580		
		423-75-H2E10	3.2	5,760		1,898
		423-75-H2D50	3.25	5,850		1,723
		423-75-H2D20	3.25	5,850		1,641
		423-75-H2D70	3.45	6,210		1,749
		423-75-H2D60	3.45	6,210		1,688
		423-71-H2900	3.5	6,300		
		423-75-H2D80	3.6	6,480		1,909
		423-70-H2060	4.5			
Fork	WA380-6H	423-71-H2780				

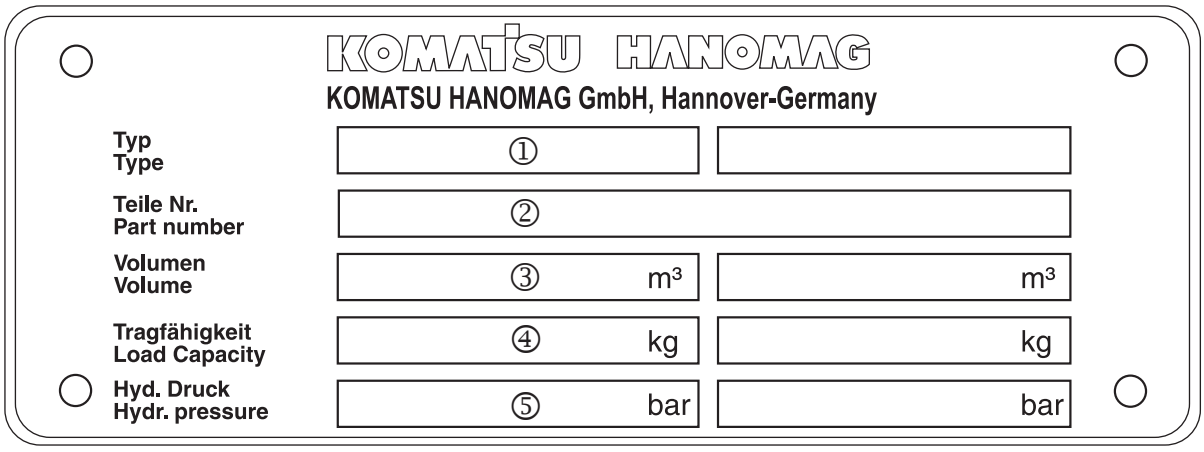

GK032012

1.7.2 Manufacturer-supplied CE-Conforming equipment, according to document 419-93-H1250

The responsibility for observing valid regulations in the case of wheel loaders with "interchangeable equipment" (e.g. bucket or fork-lift) which was not supplied from works lies with the customer which was subsequently fitted to the machine.

The directives for CE conformity and road-traffic registration are deemed to have been fulfilled when the manufacturer of the equipment confirms fulfilment of the form 419-93-H1250 alongside.

The certification must be sent to the customer and the wheel loader manufacturer. The CE conformity declaration for a specific wheel loader is only legally valid once this has taken place.

The dimensions X1, X2, Y1 and Y2 must be provided by the customer for approval for use on public roads. (valid in Germany)

The dimension Sh (smallest tyre radius) must be added to the dimension D2.

The figure G (in kg) represents the maximum load (equipment and operating load) which may act upon this point.

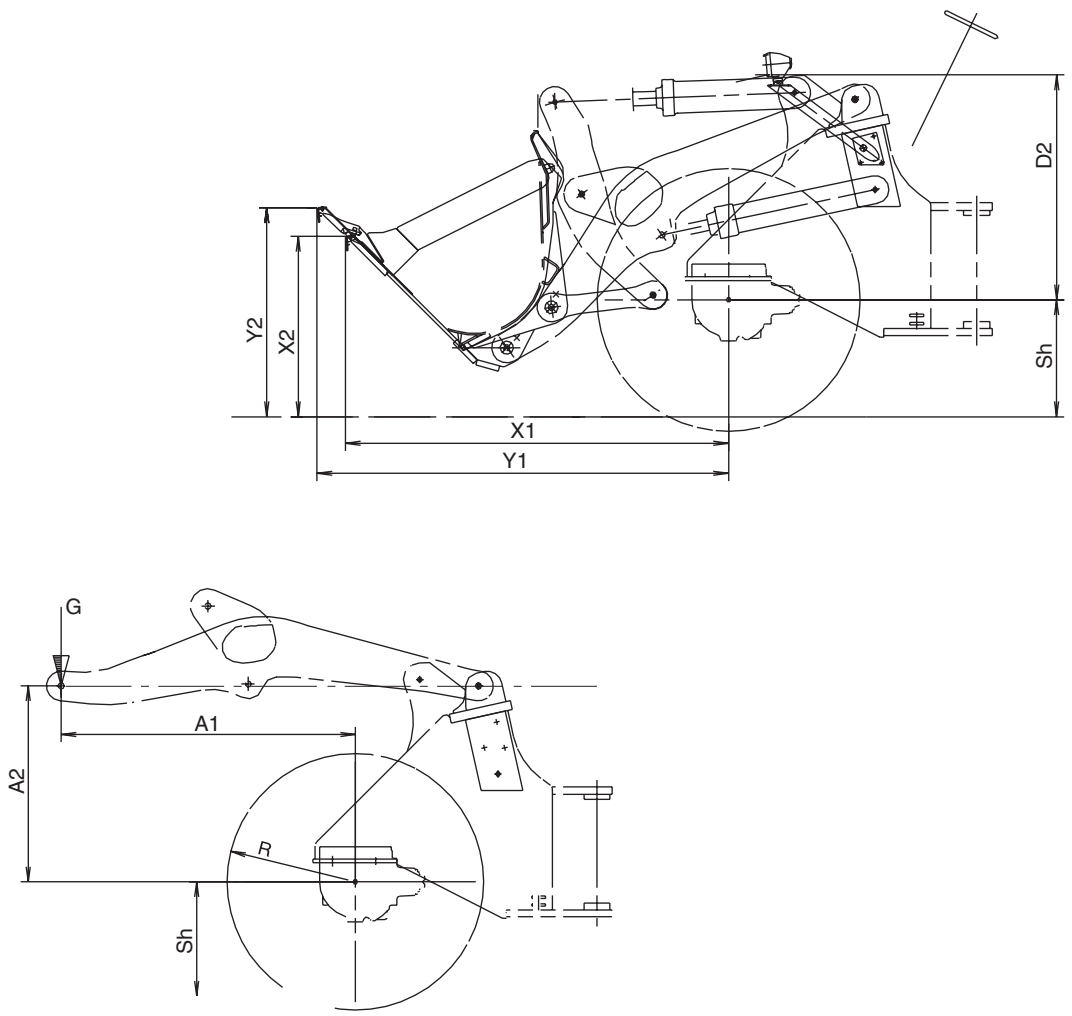

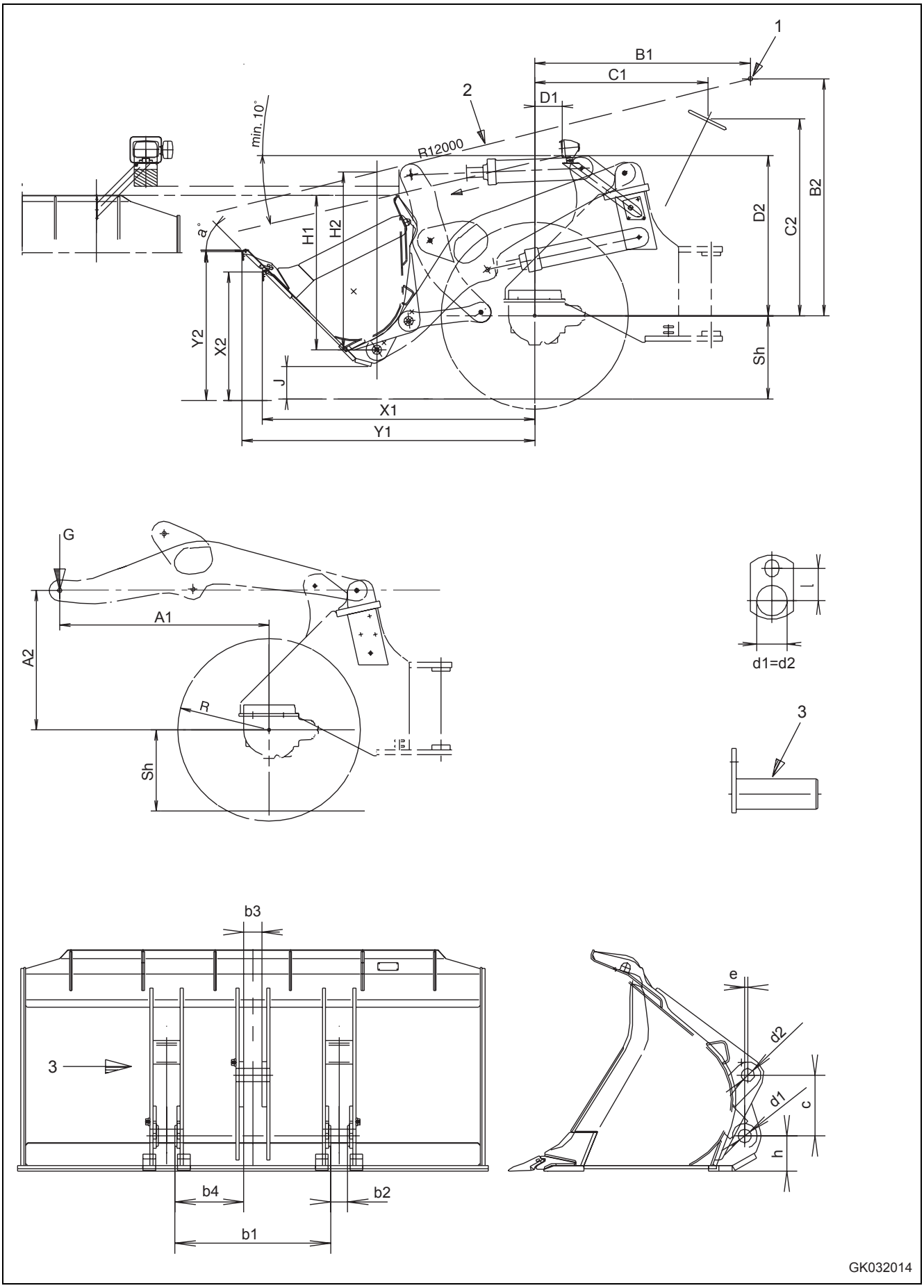
1
B1
C1
D1
2
min. 10°
R12000
B2
D2
C2
H1
H2
a°
Y2
X2
J
X1
Y1
Sh
G
A1
A2
R
Sh
l
d1=d2
3
b3
3
b4
b2
b1
e
d2
d1
c
h
GK032014

Manufacturer- supplied CE-Conforming equipment, according to document 419-93-H1250

A1	Distance: bucket pivoting point - front axle, horizontal
A2	Distance: bucket pivoting point - front axle, vertical
Sh	Distance: road level - front axle
B1	Distance: driver's eye (1) - front axle, horizontal
B2	Distance: driver's eye (1) - front axle, vertical
C1	Distance: centre steering wheel - centre front axle, horizontal
C2	Distance: center steering wheel - centre front axle, vertical
D1	Distance: headlight - centre front axle, horizontal
D2	Distance: headlight - centre front axle, vertical
G	Weight of equipment and working load
H1	Distance: bucket pivoting point - bucket upper edge, vertical (carrying position)
H2	Distance: bucket pivoting point - vision line, vertical (carrying position)
J	Distance: road level - bucket bottom edge (carrying position)
X1	Distance: cutter protection - front axle, horizontal
X2	Distance: cutter protection - road level, vertical
Y1	Distance: teeth protection - front axle, horizontal
Y2	Distance: teeth protection - road level, vertical
b1	Bucket connection dimension, boom width inside
b2	Bucket connection dimension, boom arm
b3	Bucket connection dimension, tilt rod
b4	Bucket connection dimension, temporary size
c	Bucket connection dimension between d1 and d2, vertical
d1	Bucket connection dimension, bolt (3) for boom
d2	Bucket connection dimension, bolt (3) for tilt rod
e	Bucket connection dimension d1 - d2, horizontally displaced
h	Distance: bucket bottom edge - boom bolt hole
l	Distance: centre of bolt - centre of fastening screw

WA380-6H	419-93-H1250
A1	2,030
A2	1,304
Sh	745
B1	1,870
B2	2.178
C1	1,616
C2	1,777
D1	226
D2	1,525
G	7,061
H1	1,367
H2	1,644
J	270
X1	2,641
X2	1,124
Y1	2,812
Y2	1,272
b1	992
b2	108
b3	116
b4	438
c	387
d1	85
d2	85
e	20
h	280
l	90
1	Driver’s eye
2	Vision line
3	Bolts
Tyres	23.5 R25
Bucket	423-75-H2010

2. Safety

WARNING

Please read and make sure that you fully understand the precautions described in this manual and the safety labels on the machine. When operating or servicing the machine, always follow these precautions strictly.

2.1 Safety labels

The following safety labels are used on this machine. Be sure that you fully understand the correct position and content of these safety labels.

To ensure that the content of these safety labels can be read properly, be sure that they are in the correct place and always keep them clean. When cleaning them, use soap and water. Do not use organic solvents or gasoline. These may cause the safety labels to peel off.

If the safety labels are damaged or lost, or cannot be read, replace them with new parts. For details of the part numbers, see this manual or check on the actual part, and order the new part from your KOMATSU distributor.

There are also other labels in addition to the safety labels. Handle these labels in the same way.

2.1.1 Location of safety labels

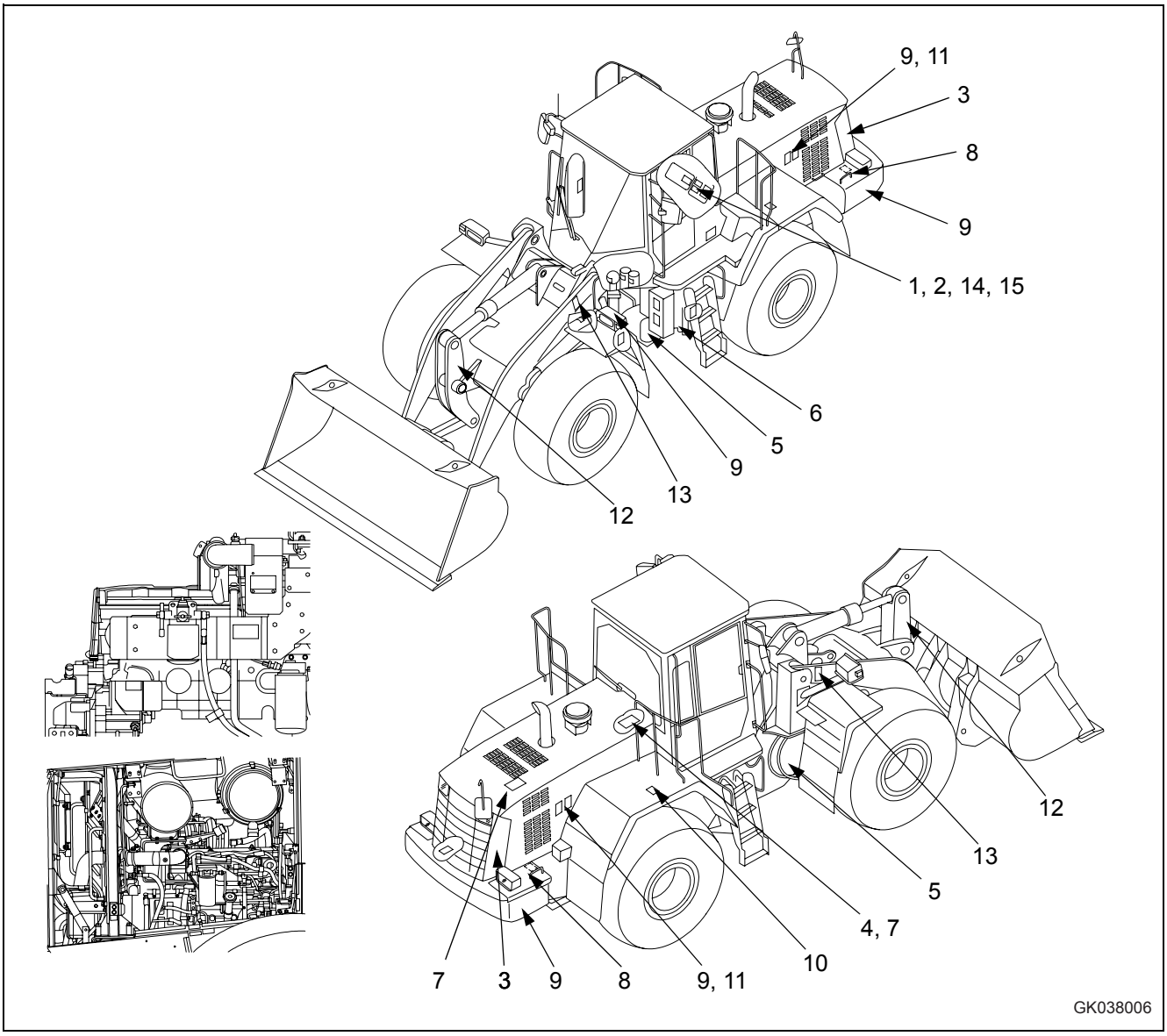

2.1.2 Presentation of safety labels

1 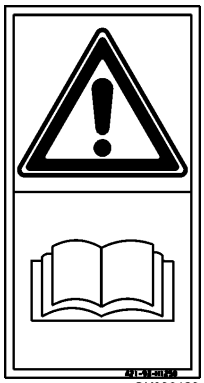 GK038129	2 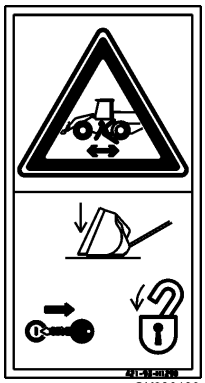 GK038130	3 GK032018	4 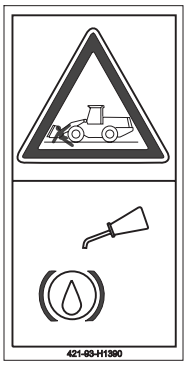 GK032019	5 GK032020
6 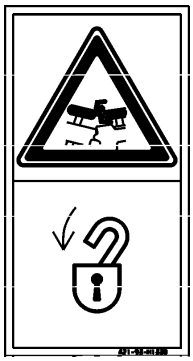 GK032021	7 GK032022	8 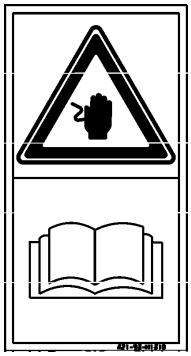 GK032023	9 GK032024	10 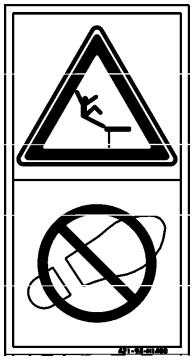 GK032025
11 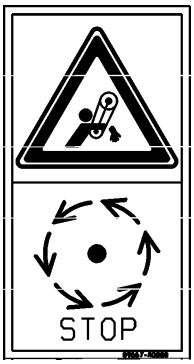 GK032026	12 GK03202	13 GK032028	14 GK032030	15 GK050310

1 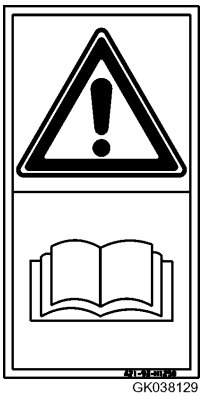 GK038129	2 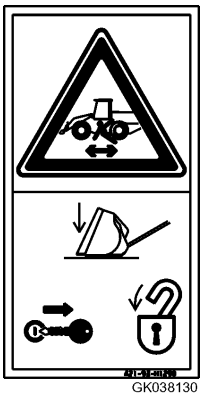 GK038130	3 GK032018	4 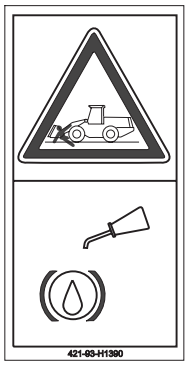 GK032019	5 GK032020
6 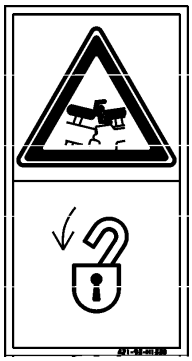 GK032021	7 GK032022	8 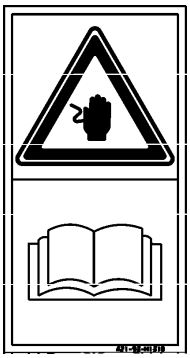 GK032023	9 GK032024	10 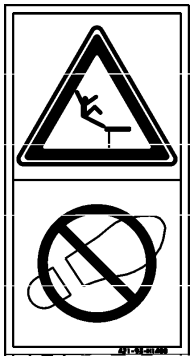 GK032025
11 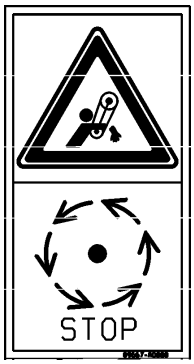 GK032026	12 GK03202	13 GK032028	14 GK032030	15 GK050310

1	Precautions before starting operation, inspection and maintenance (421-93-H1250) WARNING! Read the Operator's Manual before startung operation, inspection, maintenance or transportation.
2	Precautions before leaving the machine (421-93-H1290) Sign indicates a hazard of unexpected moving of stopped machine. Lower working device to ground, move work equipment lock lever to lock position and take engine key with you before leaving machine.
3	Precautions when traveling in reverse (421-93-H1360) Sign indicates to prevere severe injury or death. Honk to alert people nearby. Be sure no one is on or near machine. Use spotter if view is obstructed.
4	Use KOMATSU oil only (421-93-H1390)
5	Do not enter (421-93-H1320) Sign indicates a crush hazard between the articulating parts of the vehicle. Keep away from the vehicle when it is move.
6	Precautions for safety bar (421-93-H1330) Sign indicates a crush hazard between the articulating parts of vehicle. Lock vehicle with lock bar to avoid movement during maintenance, inspection and transportation.
7	Precautions when coolant is at high temperature (421-93-H1280) Sign indicates a burn hazard from spurting hot water if radiator is uncapped while hot. Allow coolant to cool before removing cap.
8	Precautions when handling battery cable (421-93-H1310) Sign indicates an electric hazard from handling the cable. Read manual for safe and proper handling.
9	High pressure warning (421-93-H1300) There is a hazard of explosion injury. Do not disassembly the accumulator, make holes in it, weld it cut it, hit it, roll it or bring it near flame.
10	Do not climb on fender (421-93-H1400) Sign indicates a hazard of falling. Do not stand on this place here.
11	Do not open when engine is running (09667-A0880) Sign indicates a hazard of rotating parts, such as belt. Turn off engine before inspection and maintenance.
12	"Do not come under machine" sign (421-93-H1370) Sign indicates a hazard of being run over by moving vehicle. Keep a safe distance from vehicle when it is moving.
13	"Do not go under work equipment" sign (421-93-H1380) Sign indicate a crush hazard from falling off of working device. Keep away when the working device is raised.
14	Safety measures before starting work (421-93-H1340)
15	Keep a safe distance from electric power lines (09801-C0481) Sign indicates an electrocution hazard if machine is brought too near electric power lines.

2.2 General precautions

Safety rules

- Only trained and authorized personnel can operate and maintain the machine.
- Follow all safety rules, precautions and instructions when operating or performing maintenance on the machine.
- If you are under the influence of alcohol or medication, your ability to safely operate or repair your machine may be severly impaired putting yourself and everyone else on your jobsite in danger.
- When working with another operator or with a person on worksite traffic duty, be sure that all personnel understand all hand signals that are to be used.

If abnormalities are found

If you find any abnormality in the machine during operation or maintenance (noise, vibration, smell, incorrect gauges, smoke, oil leakage, etc., or any abnormal display on the warning devices or monitor), report to the person in charge and have the necessary action taken. Do not operate the machine until the abnormality has been corrected.

Clothing and personal protective items

- Do not wear loose clothing and accessories. There is a hazard that they may catch on control levers or other protruding parts.
- If you have long hair and it hangs out from your hard hat, there is a hazard that it may get caught up in the machine, so tie your hair up and be careful not to let it get caught.
- Always wear a hard hat and safety shoes. If the nature of the work requires it, wear safety glasses, mask, gloves, ear plugs, and safety belt when operating or maintaining the machine.
- Check that all protective equipment functions properly before using it.

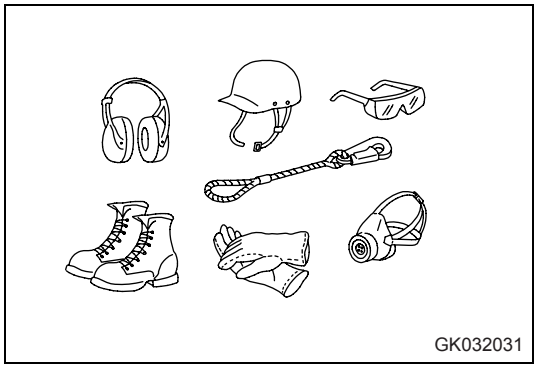

Fire extinguisher and first aid kit

Always follow the precautions below to prepare for action if any injury or fire should occur.

- The fire extinguisher can be fastened to the inside cabin wall on the left.
- If, in the course of certain operations, there is danger of fire, fire extinguishers must be at hand. Familiarise with the use of the fire extinguishers.
- Inform yourself on measures to be taken in the event of a fire.
- The first-aid kit can be positioned on the right of the cabin's interior.
- Make sure that you know all telephone numbers of the persons that you need to contact in an emergency.

Fastening points

Safety features

- Be sure that all guards and covers are in their proper position. Have guards and covers repaired immediately if they are damaged.
- Understand the method of use of safety features and use them properly.
- Never remove any safety features. Always keep them in good operating condition.

Keep machine clean

- If water gets into the electrical system, there is a hazard that it will cause malfunctions or misoperation. Do not use water or steam to wash the electrical system (sensors, connectors).
- If inspection and maintenance is carried out when the machine is still dirty with mud or oil, there is a hazard that you will slip and fall, or that dirt or mud will get into your eyes. Always keep the machine clean.

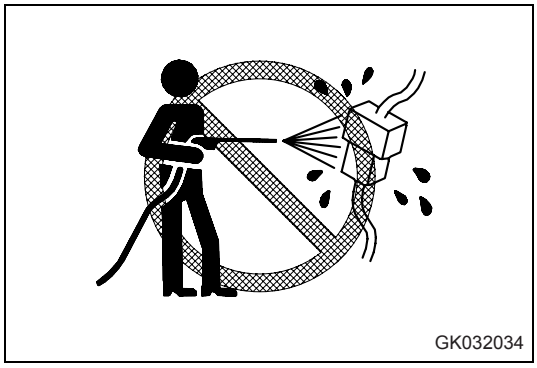

Inside operator's compartment

- When entering the operator's compartment, always remove all mud and oil from the soles of your shoes.

  If you operate the pedal with mud or oil affixed to your shoes, your foot may slip and this may cause a serious accident.

- Do not leave parts or tools lying around the operator's compartment.

- Do not stick suction pads to the window glass. Suction pads act as a lens and may cause fire.

- Do not use cellular telephones inside the operator's compartment when driving or operating the machine.

- Never bring any dangerous objects such as flammable or explosive items into the operator's compartment.

Always apply lock when leaving operator's seat

- When standing up from the operator's seat to adjust the operator's seat, or when leaving the machine, always lower the work equipment to the ground, set work equipment lock lever (1) to the LOCK position, then turn parking brake switch (2) ON, and stop the engine.

  If the control lever is touched by accident, there is danger that the machine may suddenly move and cause serious personal injury.

- When leaving the machine, lock all parts, and always takes the key with you and leave it in the specified place.

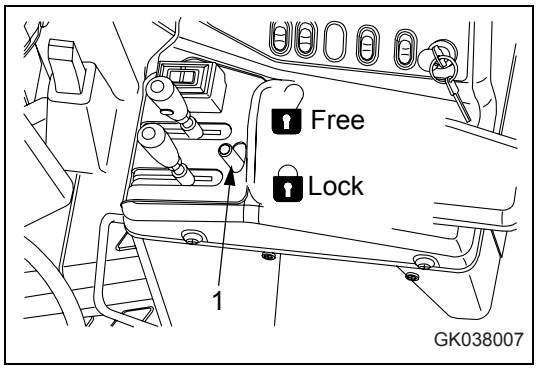

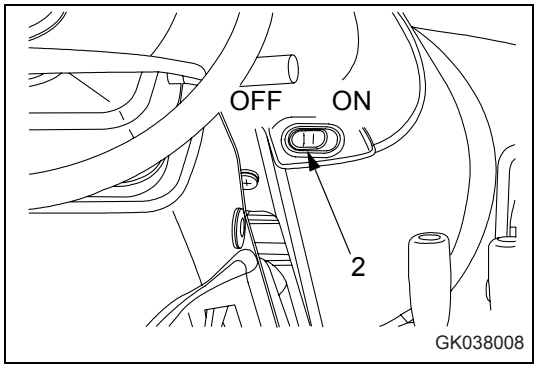

Handrails and steps

To prevent personal injury caused by slipping or falling off the machine, always do as follows.

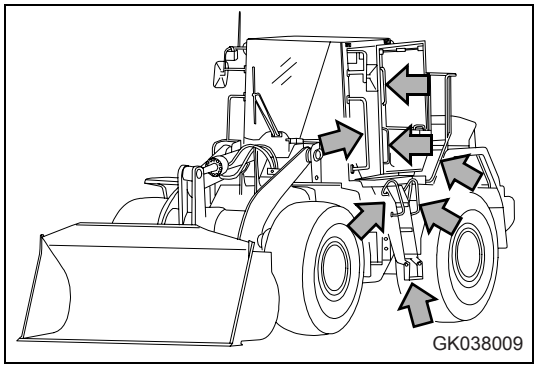

- Use the handrails and steps marked by arrows in the diagram on the right when getting on or off the machine.
- To ensure safety, always face the machine and maintain three-point contact (both feet and one hand, or both hands and one foot) with the handrails and steps to ensure that you support yourself.
- When entering the cab, stand on the top step before opening the door.
- Do not grip the control levers, or work equipment lock lever when getting on or off the machine.
- Never climb on the engine hood or covers where there are no non-slip pads.
- Never move from the step at the rear of the machine or the step at the side of the cab to stand on top of the tire.
- Before getting on or off the machine, check the handrails and steps, and if there is any oil, grease, or mud on them, wipe it off immediately. In addition, repair any damage and tighten any loose bolts.
- Do not get on or off the machine while holding tools in your hand.

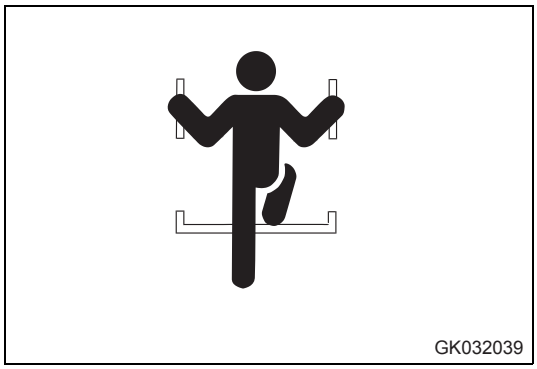

Mounting and dismounting

- Never jump on or off the machine. Never get on or off a moving machine.
- If the machine starts to move when there is no operator on the machine, do not jump on to the machine and try to stop it.

No people on attachments

Never let anyone ride on the work equipment, or other attachments. There is a hazard of falling and suffering serious injury.

Do not get caught in articulated portion

- If the clearance at the articulating portion changes, it will lead to serious personal injury.

  Do not allow anyone to come inside the articulation range.

- Never enter or put your hand, arm, or any part of your body in the movable portion between the work equipment and machine or between the cylinder and the work equipment. If someone operates the control levers by mistake, the gap between the work equipment and machine and between the cylinder and work equipment will change, and you, your hand, or arm will be caught and you may suffer serious injury.

  If you have to go into a movable portion, always take action to secure the work equipment and ensure that it cannot move.

GK032041

Prevention of burns

Hot coolant

- To prevent burns from hot water or steam spurting out when checking or draining the coolant, wait for the water to cool to a temperature where it is possible to touch the radiator cap by hand before starting the operation. Even when the coolant has cooled down, loosen the cap slowly to relieve the pressure inside the radiator before removing the cap.

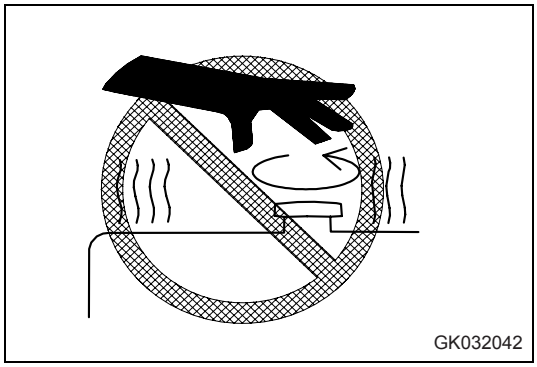
GK032042

Hot oil

- To prevent burns when checking or draining the oil, wait for the oil to cool to a temperature where it is possible to touch the plug by hand before starting the operation. Even when the oil has cooled down, loosen the plug slowly to relieve the internal pressure before removing the plug.

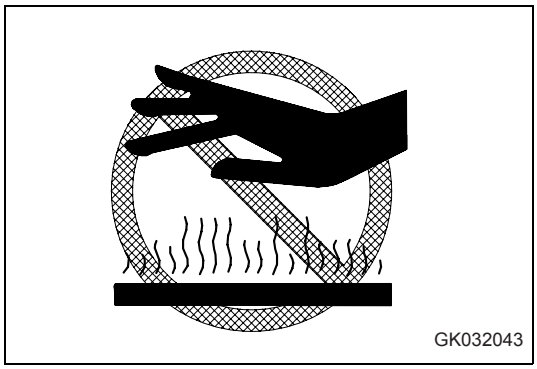
GK032043

Fire prevention

- Fire caused by fuel or oil

  Fuel, oil, antifreeze, and window washer liquid are particularly flammable and can be hazardous. To prevent fire, always observe the following:

  - Do not smoke or use any flame near fuel or oil.
  - Stop the engine before refueling.
  - Do not leave the machine while adding fuel or oil.
  - Tighten all fuel and oil caps securely.
  - Do not spill fuel on overheated surfaces or on parts of the electrical system.
  - Use well-ventilated areas for adding or storing oil and fuel.
  - Keep oil and fuel in the determined place and do not allow unauthorized persons to enter.
  - After adding fuel or oil, wipe up any spilled fuel or oil.
  - When carrying out grinding or welding work on the chassis, move any flammable materials to a safe place before starting.
  - When washing parts with oil, use a non-flammable oil. Diesel oil and gasoline may catch fire, so do not use them.
  - Put greasy rags and other flammable materials into a safe container to maintain safety at the work place.
  - Do not weld or use a cutting torch to cut any pipes or tubes that contain flammable liquids.

- Fire caused by accumulation of flammable material.

  Remove any dry leaves, chips, pieces of paper, dust, or any other flammable materials accumulated or affixed around the engine, exhaust manifold, muffler, or battery, or inside the undercovers.

GK032044

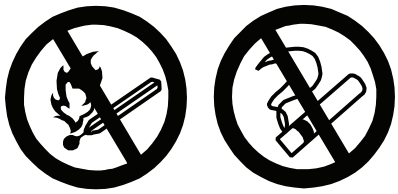

GK032045

- Fire coming from electric wiring

  Short circuits in the electrical system can cause fire.

  - Always keep electric wiring connections clean and securely tightened.
  - Check the wiring every day for looseness or damage. Tighten any loose connectors or wiring clamps. Repair or replace any damaged wiring.

- Fire coming from hydraulic line

  Check that all the hose and tube clamps, guards, and cushions are securely fixed in position.

  If they are loose, they may vibrate during operation and rub against other parts. This may lead to damage to the hoses, and cause high-pressure oil to spurt out, leading to fire damage or serious injury.

- Explosion caused by lighting equipment

  - When checking fuel, oil, battery electrolyte, window washer fluid, or coolant, always use lighting with anti-explosion specifications. If such lighting equipment is not used, there is danger of explosion that may cause serious injury.
  - When taking the electrical power for the lighting from the machine itself, follow the instructions in this manual.

Action if fire occurs

If a fire occurs, escape from the machine as follows.

- Turn the start switch OFF to stop the engine.
- Use the handrails and steps to get off the machine.

Window washer liquid

Use an ethyl alcohol base washer liquid.

Methyl alcohol base washer liquid may irritate your eyes, so do not use it.

ROPS (Roll Over Protective Structure)

- The roll-over protection system (ROPS) protects the operator and absorbs load and impact energy, if the machine should roll over.
- The ROPS is a fixed component of the cab. The machine must not be operated without this roll-over protection system.
- The ROPS meets the regulations of all member states of the EU. If, however, the ROPS is modified, damaged, or repaired without permission, its stability is impaired. In this case, the ROPS must be replaced, since its correct function can no longer be guaranteed.
- The ROPS can only provide maximum protection, if the driver wears the safety belt correctly. For this reason, the safety belt is to be worn when the machine is in operation.

Attachment for protection against falling objects (FOPS)

When you work on a site where there is danger of falling rocks or other objects, the machines must be equipped with a FOPS. If the FOPS is modified without permission or damaged, its stability is impaired. In this case, the FOPS must be replaced, since its correct function can no longer be guaranteed.

Precautions for attachments, options

- When installing optional parts or attachments, there may be problems with safety or legal restrictions. Therefore contact your KOMATSU distributor for advice.
- Any injuries, accidents, or product failures resulting from the use of unauthorized attachments or parts will not be the responsibility of KOMATSU.
- When installing and using optional attachments, read the instruction manual for the attachment, and the general information related to attachments in this manual.

Unauthorized modification

If this machine is modified without permission from KOMATSU, there is danger that problems may occur with safety and that this may lead to serious personal injury. Modifications may have an adverse effect on items such as machine strength and visibility.

Before making a modification, consult your KOMATSU distributor.

KOMATSU will not be responsible for any injuries, accidents, product failures or other property damages resulting from modifications made without authorization from KOMATSU.

Safety at worksite

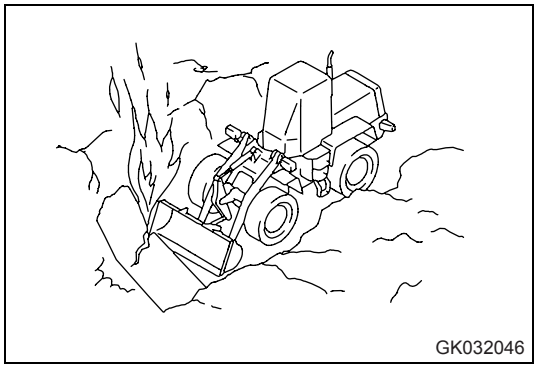

- Before starting operations, thoroughly check the work area for dangerous working conditions.
- Inspect the surface of the soil in the working area and determine the optimum and safest procedure.
- When carrying out operations near combustible materials such as thatched roofs, dry leaves or dry grass, there is a hazard of fire, so be careful when operating.
- Determine the required safety measures against dangers on public roads in co-operation with the owners, users, and responsible authorities.
- On sites where there are underground water pipes, gas pipes, or conduits for high voltage cables, contact the responsible supply company to determine the lines' positions. Ensure that these facilities will not be damaged.
- When working with water or crossing sand banks, first check the subsoil and depth and flow rate of the water. Ensure that the permitted water depth will not be exceeded.
- Take action to prevent unauthorized people from approaching the jobsite.

Working on loose ground

- Avoid travelling or operating your machine too close to the edge of cliffs, overhangs and deep ditches. The ground may be week in such areas. If the ground should collapse under the weight of vibration of the machine, there is a hazard that the machine may fall or tip over. Remember that the soil after heavy rain or blasting or after earthquakes is weak in these areas.
- When working on embankments or near excavated ditches, there is a hazard that the weight or vibration of the machine will cause the soil of collapse. Before starting operations, take steps to ensure that the ground is safe and to prevent the machine from rolling over or falling.

Do not go close to high-voltage cables

Do not travel or operate the machine near electric cables. There is a hazard of electric shock, which may cause serious injury or property damage. On jobsites where the machine may go close to electric cables, always do as follows.

- Before starting work near electric cables, inform the local power company of the work to be performed, and ask them to take the necessary action.

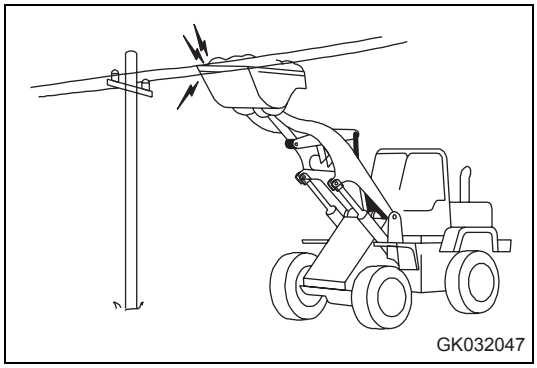

- Even going close to high-voltage cables can cause electric shock, which may cause serious burns or even death. Always maintain a safe distance (see the table on the right) between the machine and the electric cable. Check with the local power company about safe operating procedure before starting operations.

Nominal Voltage		Safety Distance
	up to 1000 V	1 m
over 1 kV	up to 110 kV	3 m
over 110 kV	up to 220 kV	4 m
over 220 kV	up to 380 kV	5 m
with unknown nominal voltage		5 m

- To prepare for any possible emergencies, wear rubber shoes and gloves. Lay a rubber sheet on top of the seat, and be careful not to touch the chassis with any exposed part of your body.
- Use a signalman to give warning if the machine approaches too close to the electric cables.
- When carrying out operations near high voltage cables, do not let anyone come close to the machine.
- If the machine should come too close or touch the electric cable, to prevent electric shock, the operator should not leave the operator's compartment until it has been confirmed that the electricity has been shut off.

  Also, do not let anyone come close to the machine.

Ensure good visibility

This machine is equipped with mirrors to improve the visibility, but even with mirrors, there are places, which cannot be seen from the operator's seat, so always be careful when operating.

When operating or traveling in places with poor visibility, if it is impossible to confirm the condition of the job side or obstacle is in the area around the machine, there is danger that the machine may suffer damage or the operator may suffer serious personal injury. When operating or traveling in places with poor visibility, always observe the following items strictly.

- If the visibility cannot be sufficiently assured, position a flagman if necessary. The operator should pay careful attention to the signs and follow the instructions of the signalman.
- Only one signalman should give signals.
- When working in dark places, turn on the working lamp and front lamps installed to the machine, and set up additional lighting in the work area if necessary.
- Stop operations if the visibility is poor, such as in mist, snow, rain, or dust.
- Check the mirrors on the machine before starting operations every day. Clean off any dirt and adjust the view to ensure good visibility.

Precautions related to ventilation exhaust gas

Engine exhaust gas includes substances that may harm your health or even kill. Always select a place with good ventilation when starting the engine or operating the machine.

If it is necessary to start the engine or run the machine inside a building or underground, where the ventilation is poor, take steps to remove the exhaust gas and bring in ample fresh air.

Checking signalman's signals and signs

- Set up signs to inform of road shoulders and soft ground. If the visibility is not good, position a signalman if necessary. Operators should pay careful attention to the signs and follow the instructions from the signalman.
- Only one signalman should give signals.
- Make sure that all workers understand the meaning of all signals and signs before starting work.

Emergency exit from operator's cab

Machines equipped with a cab have doors on the left and right sides. If the door on the one side does not open, escape from the door on the other side.

Be careful about asbestos dust

Asbestos dust in the air can cause lung cancer if it is inhaled. There is danger of inhaling asbestos when working on jobsites handling demolition work or work handling industrial waste. Always observe the following.

GK032048

- Spray water to keep down the dust when cleaning. Do not use compressed air for cleaning.
- If there is danger that there may be asbestos dust in the air, always operate the machine from an upwind position. All workers should use an approved respirator.
- Do not allow other persons to approach during the operation.
- Always observe the rules and regulations for the work site and environmental standards.

This machine does not use asbestos, but there is a danger that imitation parts may contain asbestos, so always use genuine KOMATSU parts.

2.3 Precautions for operation

2.3.1 Starting engine

If there is a warning tag hanging from the work equipment control lever, do not start the engine or touch the levers.

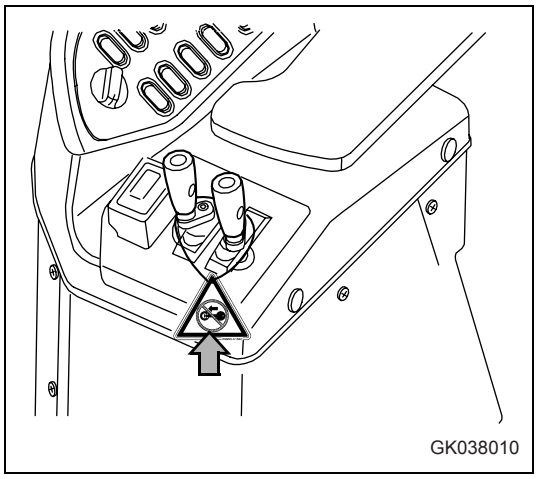
GK038010

GK050012

Checks before starting engine

Carry out the following checks before starting the engine at the beginning of the day's work.

- Remove all dirt from the surface of the window glass to ensure a good view.
- Remove all dirt from the surface of the lens of the front lamps, working lamps, and rear combination lamp, and check that they light up correctly.
- Check the coolant level, fuel level, and oil level in engine oil pan, check for clogging of the air cleaner, and check for damage to the electric wiring.
- Check that there is no mud or dust accumulated around the movable parts of the accelerator pedal or brake pedal, and check that the pedals work properly.
- Adjust the operator's seat to a position where it is easy to carry out operations, and check that there is no damage or wear to the seat belt or mounting clamps.
- Check the operation of the instruments and gauges, check the angle of the mirror, and check that the control levers are all at the neutral position.
- Before starting the engine, make sure that the work equipment lock lever is in the LOCK position.
- Adjust the mirrors so that the rear of the machine can be seen clearly from the operator's seat. See "Adjusting mirrors (3-95)".
- Check that there are no persons or obstacles above, below, or in the area around the machine.

Precautions when starting

- Start and operate the machine only while seated. Never try to start the engine by hot-wiring the ignition. This can cause fire, grave injuries or death.
- Do not attempt to start the engine by short-circuiting the engine starting circuit. Such an act may cause a serious bodily injury or fire.
- When starting the engine, sound the horn as a warning.
- Do not allow anyone apart from the operator to ride on the machine.
- For machines equipped with a back-up alarm, check that the alarm works properly.

Precautions in cold areas

- Carry out the warming-up operation thoroughly. If the machine is not thoroughly warmed up before the control levers are operated, the reaction of the machine will be slow, and this may lead to unexpected accidents.
- If the battery electrolyte is frozen, do not charge the battery or start the engine with a different power source. There is a hazard that this will ignite the battery and cause the battery to explode.

  Before charging or starting the engine with a different power source, melt the battery electrolyte and check that there is no leakage of electrolyte before starting.

2.3.2 Operation

Checks before operation

When carrying out the checks, move the machine to a wide area where there are no obstructions, and operate slowly. Do not allow anyone near the machine.

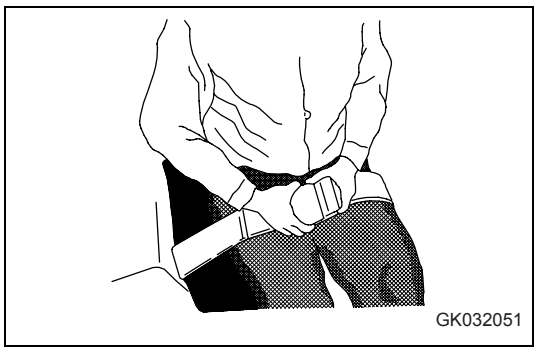

- Always fasten your seat belt.
- Check the operation of travel, steering and brake systems, and work equipment control system.
- Check for any abnormality in the sound of the machine, vibration, heat, smell, or gauges; check also that there is no leakage of oil or fuel.
- If any abnormality is found, carry out repairs immediately.
- Before driving the machine or starting operations, check that safety bar (1) is securely fixed at the FREE position.

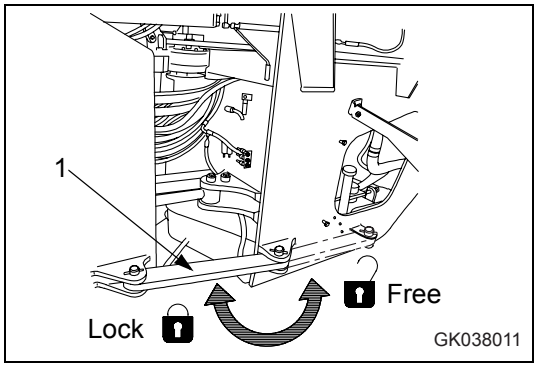

Precautions when traveling in forward or reverse

- Before travelling, check again that there is no one in the surrounding area, and that there are no obstacles.
- Before travelling, sound the horn to warn people in the area.
- Always operate the machine only when seated.
- Do not allow anyone apart from the operator to ride on the machine.
- Check that the back-up alarm (alarm buzzer when machine travels in reverse) works properly.
- Always lock the door and windows of the operator's compartment in position (open or closed).

  On jobsites where there is a hazard of flying objects or of objects entering the operator's compartment, check that the door and windows are securely closed.
- If there is an area to the rear of the machine which cannot be seen, position a signal person. Take special care not to hit other machines or people when turning or swinging the machine.

  Always be sure to carry out the above precautions even when the machine is equipped with mirrors.

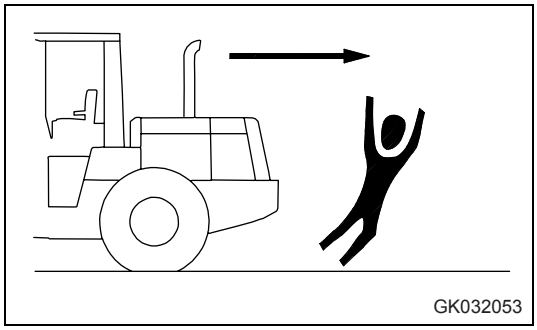

Precautions when traveling

- Never turn the key in the starting switch to the OFF position. It is dangerous if the engine stops when the machine is traveling, because the steering becomes heavy. If the engine stops, depress the brake pedal immediately to stop the machine.
- When traveling on level ground, keep the work equipment at height of 270 mm (10 to 11 in) from the ground.

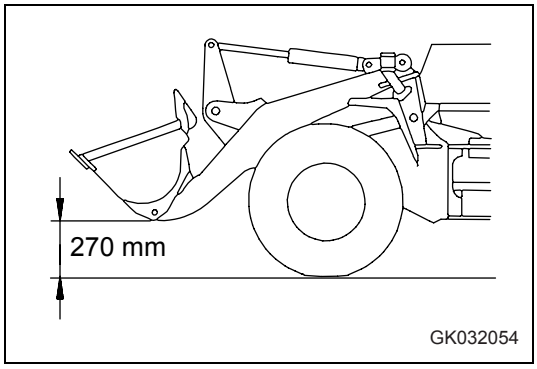

- When traveling, do not operate the work equipment control levers. If the work equipment control levers have to be operated, stop the machine first, then operate the levers.
- When traveling on rough ground, travel at low speed and do not operate the steering suddenly. There is danger that the machine may turn over. The work equipment may hit the ground surface and cause the machine to lose its balance, or may damage the machine or structures in the area.
- Avoid traveling over obstacles when possible. If the machine has to travel over an obstacle, keep the work equipment close to the ground and travel at low speed. Never travel over obstacles which make the machine tilt strongly to one side.
- When traveling or carrying out operations, always keep a safe distance from people, structures, or other machines to avoid coming into contact with them.
- When passing over bridges or structures, check first that the structure is strong enough to support the weight of the machine.
- When operating in tunnels, under bridges, under electric wires, or other places where the height is limited, operate slowly and be extremely careful not to let the work equipment hit anything.
- Always obey the traffic regulations when traveling on public roads. This machine travels at a lower speed than normal automobiles, so keep to the side of the road and be careful to leave the center of the road free for other vehicles.
- If you drive the machine at high speed continuously for a long time, the tires will overheat and the internal pressure will become abnormally high. This may cause the tires to burst. If a tire bursts, it produces an extremely large destructive force, and this may cause serious injury or accident.
- If you are going to travel continuously, please consult your KOMATSU distributor.

Traveling on slopes

To prevent the machine from tipping over or slipping to the side, always do as follows.

- When traveling on slopes, keep the bucket at height “A“ of approximately 200 to 300 mm (8 to 12 in) above the ground. In case of emergency, quickly lower the bucket to the ground to help the machine to stop.

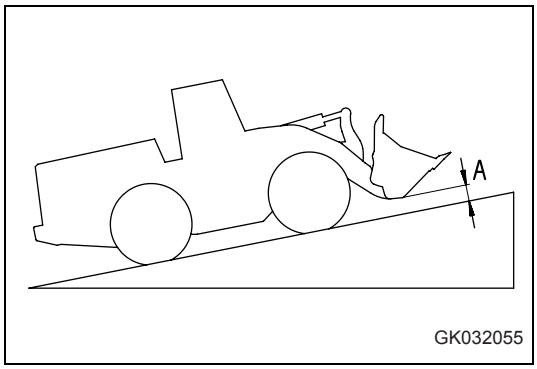

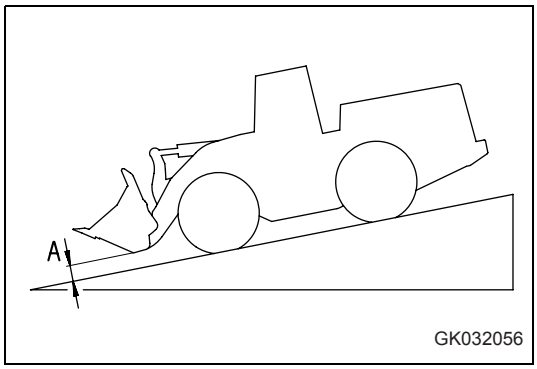

- Always travel straight up or down a slope. Traveling at an angle or across the slope is extremely dangerous.
- Do not turn on slopes or travel across slopes. Always go down to a flat place to change the position of the machine, then travel on to the slope again.
- Travel on grass, fallen leaves, or wet steel plates with low speed. Even with slight slopes there is a hazard that the machine may slip.
- If the engine stops, depress the brake pedal immediately, lower the bucket to the ground, and apply the parking brake to stop the machine.
- When traveling downhill, never shift gear or place the transmission at neutral. It is dangerous not to use the braking force of the engine. Always place the transmission in a low gear before starting to travel downhill.
- When traveling downhill, travel slowly. If necessary, use the braking force of the engine together with the brake pedal to control the travel speed.
- When traveling up or down hills with a loaded bucket, always travel with the bucket facing uphill. If the machine travels with the bucket facing downhill, there is danger that the machine may tip over.

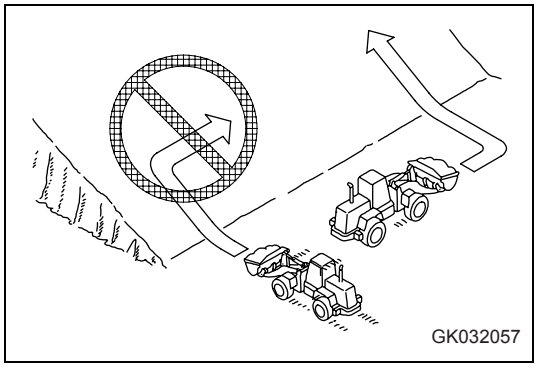

Prohibited operations

- It is dangerous to excavate the bottom of a rock face. Never do this.
- When digging, never thrust the bucket into a load at an angle. This will bring an excessive load to bear on the machine and will reduce the service life of the machine.
- It is dangerous to apply drive force when excavating a rock face. In addition, an excessive load will be brought to bear on the machine and this will cause damage to the machine.
- Never carry out digging operations on a downhill slope. An excessive load will be brought to bear on the machine and this will cause damage to the machine.
- It is dangerous to use the bucket or lift arm for crane operations, so do not carry out such operations.
- Do not pass the bucket over the head of other workers or over the operator's seat of dump trucks or other hauling equipment. The load may spill or the bucket may hit the dump truck and cause serious injury or property damage.

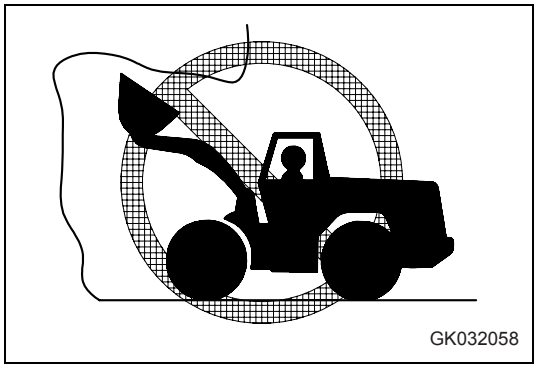

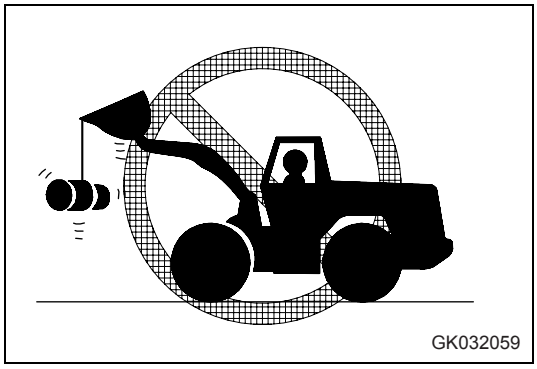

Emergency lowering system

When the engine is not running, you can lower the work unit by means of the lift arm control lever.

1. Turn the key in ignition switch (1) to ON.
2. Then slowly press the lift arm control lever (2) forward to the "LOWER" position.

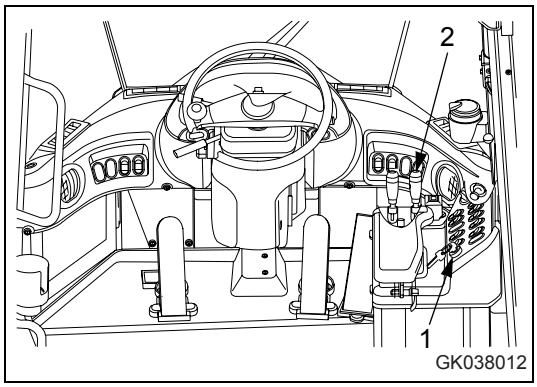

Precautions when operating

- When using the machine, to prevent the machine from overturning due to overloading and to avoid damage to the work equipment, do not exceed the maximum permitted load or performance of the machine.
- If the engine cannot be started again after it has stopped, immediately operate the work equipment control levers to lower the work equipment to the ground. (After the engine stops, the accumulator allows the work equipment to be operated for a limited time.)
- Be careful not to approach too close to the edge of cliffs. When making embankments or landfills, or when dropping soil over a cliff, dump one pile, then use the next pile of soil to push the first pile.
- The load suddenly becomes lighter when the soil is pushed over a cliff or when the machine reaches the top of a slope. When this happens, there is danger that the travel speed will suddenly increase, so be sure to reduce the speed.
- When the bucket is fully loaded, never start, turn, or stop the machine suddenly. There is danger of the machine turning over.

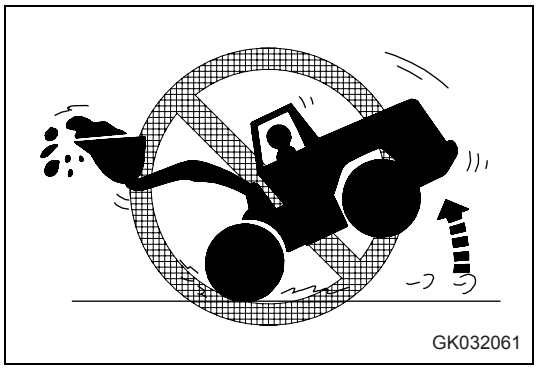
GK032061

- When handling unstable loads, such as round or cylindrical objects, or piled sheets, if the work equipment is raised high, there is danger that the load may fall on top of the operator' compartment and cause serious injury or damage.
- When handling unstable loads, be careful not to raise the work equipment too high or tip the bucket back too much.
- If the work equipment is suddenly lowered or suddenly stopped, the reaction may cause the machine to tip over. Particularly when carrying a load, be sure to operate the work equipment carefully.

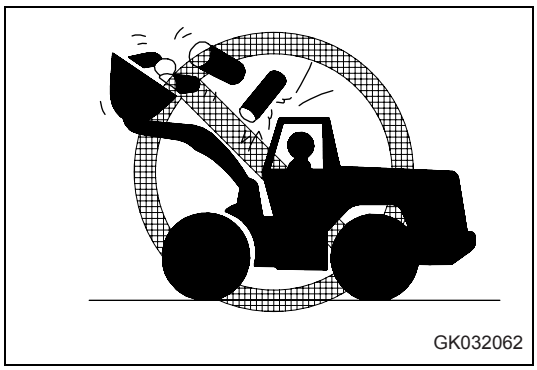
GK032062

- When operating in tunnels, under bridges, under electric wires, or other places where the height is limited, be extremely careful not to let the work equipment hit anything.
- To prevent accidents caused by hitting other objects, always operate the machine at a speed which is safe for operation, particular in confined spaces, indoors, and in places where there are other machines.

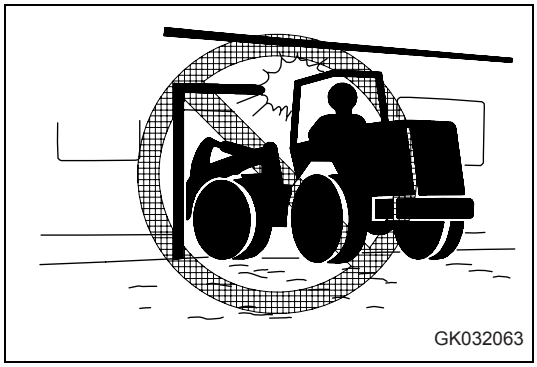

Methods of using brake

- When the machine is traveling, do not rest your foot on the brake pedal. If you travel with your foot resting on the pedal, the brake will always be applied, and this will cause the brakes to overheat and fail.
- Do not depress the brake pedal repeatedly if not necessary.
- When traveling downhill, use the braking force of the engine. If necessary, use the brake pedal at the same time.

Operate carefully on snow

- Snow-covered or frozen surfaces are slippery, so be extremely careful when travelling or operating the machine and do not operate the levers suddenly. Even a slight slope may cause the machine to slip, so be particularly careful when working on slopes.
- With frozen ground surfaces, the ground becomes soft when the temperatures rises and this may cause the machine to tip over.
- If the machine enters deep snow, there is a hazard that it may tip over or become buried in the snow. Be careful not to leave the road shoulder or to get trapped in a snow drift.
- When clearing snow, the road shoulder and and objects placed beside the road are buried in the snow and cannot be seen. There is a hazard of the machine tipping over or hitting covered objects, so always carry out operations carefully.
- When travelling on snow-covered roads, always fit tire chains.
- When travelling on snow covered slopes, never apply the foot brake suddenly. Reduce the speed and use the engine as a brake while applying the foot brake intermittenly (depress the brake intermittenly several times). If nessecary, lower the bucket to the ground to stop the machine.

Parking machine

- Park the machine on firm, level ground.
- Select a place where there is no hazard of falling rocks or landslides, or of flooding if the land is low.
- Lower the work equipment completely to the ground.

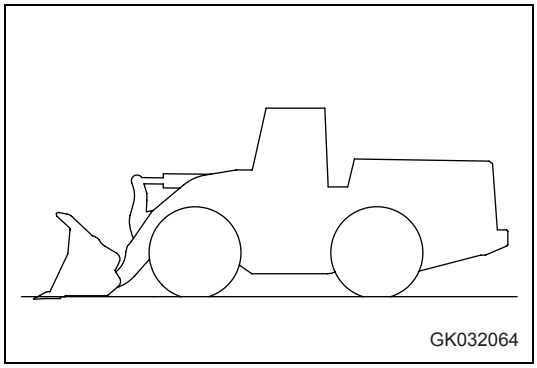

- When leaving the machine, set work equipment lock lever (1) to the LOCK position and parking brake switch (2) to the ON position, then stop the engine.
- Lock all points that can be locked and store the key in a safe place.
- When parking the machine on public roads, ensure that it does not obstruct traffic. Put up signal lamps and required warning signs to ensure that passing traffic can clearly see the machine.
- Adhere to all regulations on parking vehicles and securing building sites

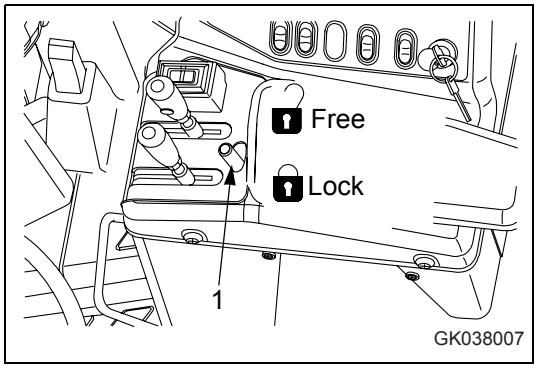

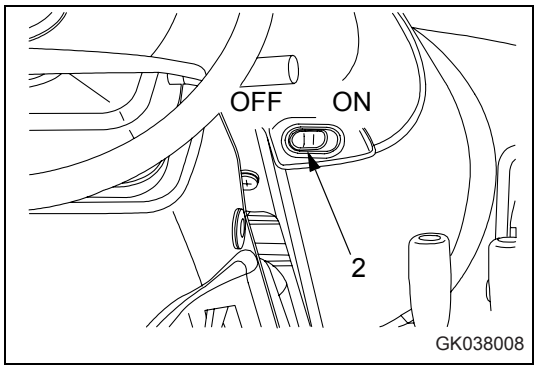

- If it is necessary to park the machine on a slope, set blocks under the wheels to prevent the machine from moving.

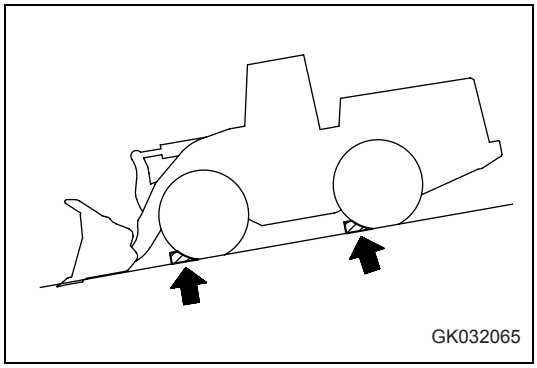

2.3.3 Transportation

The machine can be divided into parts for transportation, so when transportating the machine, please contact your KOMATSU distributor to have the work carried out.

Loading and unloading

- When loading or unloading the machine, mistaken operation may bring the hazard of the machine tipping over or falling, so particular care is necessary. Always do as follows.
- Perform loading and unloading on firm, level ground only. Maintain a safe distance from the edge of the road or cliff.
- Always use ramps of adequate strength. Be sure that the ramps are wide, long, and thick enough to provide a safe loading slope. Take suitable steps to prevent the ramps from moving out of position or coming off.
- Be sure the ramp surface is clean and free of grease, oil, ice and loose materials. Remove dirt from machine-tracks. On a rainy day, in particular, be extremely careful since the ramp surface is slippery.
- Run the engine at low idling and operate sololy at low speed.
- Never correct your steering on the ramps. If necessary, drive off the ramps, correct the direction, then enter the ramps again.
- When loading or unloading to an embankment or platform, make sure that it has suitable width, strength, and grade.
- For machines equipped with a cab, always lock the door after boarding the machine. If this is not done, the door may suddenly open during transportation.

  Refer to "Transportation procedure (3-140)".

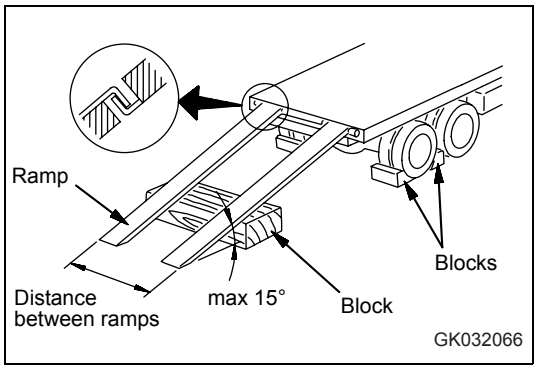

Shipping

- When shipping the machine on a trailer, do as follows.
- The weight, transportation height, and overall length of the machine differ according to the work equipment, so be sure to confirm the dimensions.
- When passing over bridges or structures on private land, check first that the structure is strong enough to support the weight of the machine. When traveling on public roads, check first with the relevant authorities and follow their instructions.
- Lock the frame with the safety bar to prevent the machine from articulating.
- Fit chains to the front frame and the rear frame to hold the machine securely in position.
- For details of the shipping procedure, see "Transportation procedure (3-140)".

2.3.4 Battery

Battery hazard prevention

Battery electrolyte contains sulphuric acid, and batteries generate flammable hydrogen gas, which may explode. Mistaken handling can lead to serious injury or fire. For this reason, always observe the following precautions.

- Do not use or charge the battery if the battery electrolyte level is below the LOWER LEVEL line. This may cause an explosion. Always check the battery electrolyte level periodically and add distilled water to bring the electrolyte level to the UPPER LEVEL line.
- When working with batteries, always wear safety glasses and rubber gloves.
- Never smoke or use any flame near the battery.
- If you spill acid on your clothes or skin, immediately flush the area with large amount of water.
- If acid gets into your eyes, flush them immediately with large amount of water and seek medical attention.
- Before working with batteries, turn the starting switch to the OFF position.

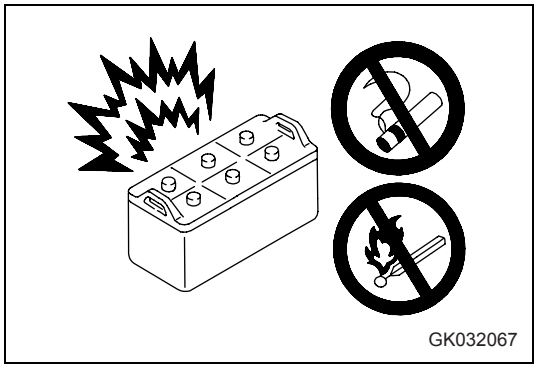
GK032067

As there is a hazard that sparks will be generated, always do as follows.

- Do not let tools or other metal objects make any contact between the battery terminals. Do not leave tools or other metal objects lying around near the battery.
- Always disconnect the negative (-) terminal (ground side) first when removing the battery; when installing the battery, connect the positive (+) terminal first, and connect the ground last.
- Attach the battery terminal securely.
- Flammable hydrogen gas is generated when the battery is charged, so remove the battery from the chassis, take it to a well-ventilated place, and remove the battery caps before charging it.
- Tighten the battery caps securely.
- Install the battery securely to the determined place.

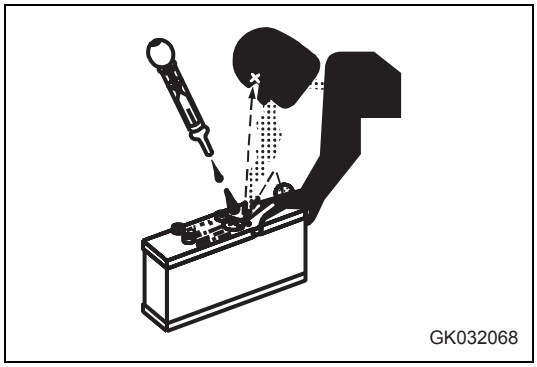
GK032068

Starting with booster cables

If any mistake is made in the method of connecting the booster cables, it may cause the battery to explode, so always do as follows.

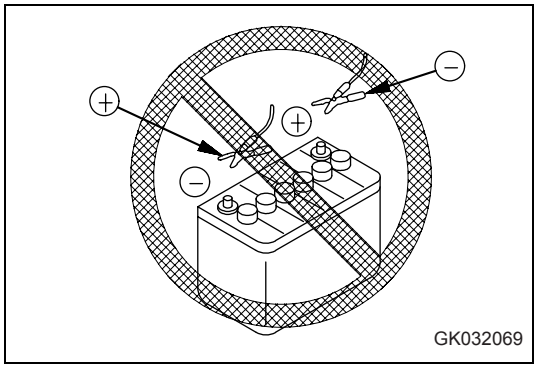

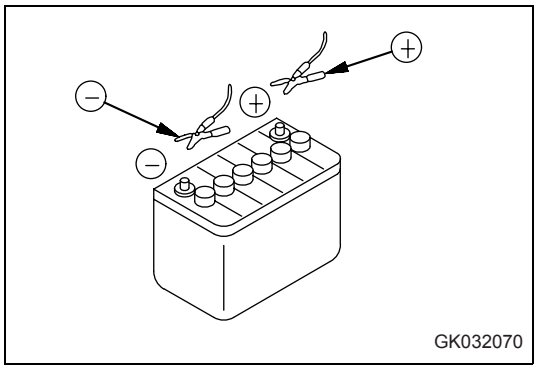

- When starting with a booster cable, carry out the starting operation with two workers (one worker sitting in the operator's seat and the other working with the battery).
- When starting from another machine, do not allow the two machines to touch.
- When connecting the booster cables, turn the starting switch OFF for both the normal machine and problem machine. There is a hazard that the machine will move when the power is connected.
- Be sure to connect the positive (+) cable first when installing the booster cables. Disconnect the negative (-) cable (ground side) first when removing them.
- When removing the booster cables, be careful not to let the booster cable clips touch each other or to let the clips touch the machine.
- Always wear safety goggles and rubber gloves when starting the engine with booster cables.
- When connecting a normal machine to a problem machine with booster cables, always use a normal machine with the same battery voltage as the problem machine.
- For details of the starting procedure when using booster cables, see "Starting engine with booster cable (3-162)".

2.3.5 Towing

When towing

Serious injury or death could result if a disabled machine is towed incorrectly or if there is a mistake in the selection or inspection of the wire rope.

For towing, see "Towing the machine (3-153)".

- Always be sure to check carefully that the capacity of the wire rope used for towing is ample for the weight of the towed machine.
- Never use a wire rope which has cut strands (A), reduced diameter (B), or kinks (C). There is danger that the rope may break during the towing operation.
- Always wear leather gloves when handling wire rope.
- Never tow a machine on a slope.
- During the towing operation, never stand between the towing machine and the machine being towed.
- Move the machine slowly and be sure not to apply any sudden load on the wire rope.
- Connect a wire rope to the part indicated with the arrow in the diagram at right.

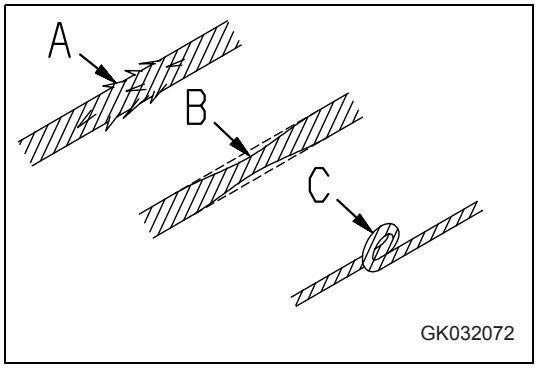

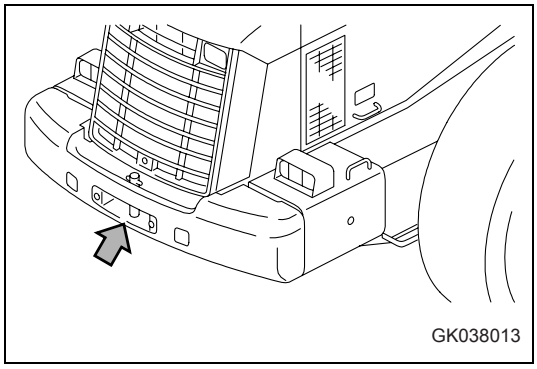

2.4 Precautions for maintenance

Warning tag

- Always attach the “DO NOT OPERATE“ warning tag to the work equipment control lever in the operator's cab to alert others that you are performing service or maintenance on the machine. Attach additional warning tags around the machine if necessary.

  Keep this warning tag in the tool box while it is not used. If there is not the tool box, keep the tag in the operation manual pocket.

- If others start the engine, or touch or operate the work equipment control lever while you are performing service or maintenance, you could suffer serious injury or property damage.

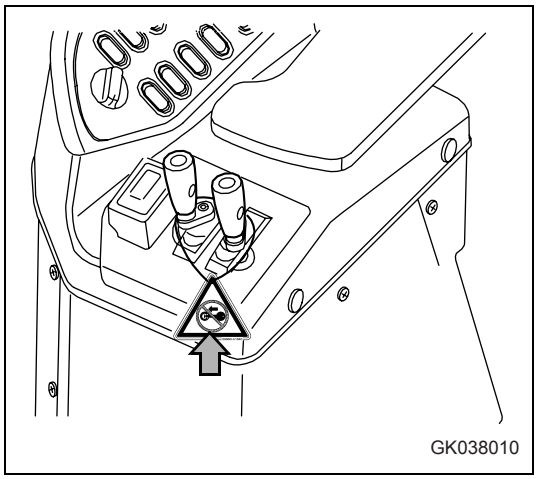

Keep work place clean and tidy

Do not leave hammers or other tools lying around in the work place. Wipe up all grease, oil, or other substances that will cause you to slip. Always keep the work place clean the tidy to enable you to carry out operations safely. If the work place is not kept claen and tidy, there is the danger that you will trip, slip, or fall over and injure yourself.

Appoint leader when working with others

When repairing the machine or when removing and installing the work equipment, appoint a leader and follow his instructions during the operation.

When working with others, misunderstandings between workers can lead to serious accidents.

Maintenance with engine running

- Stop the machine on firm, level ground.
- Select a place where there is no hazard of falling rocks or landslides, or of flooding if the land is low.
- Lower the work equipment completely to the ground and stop the engine.

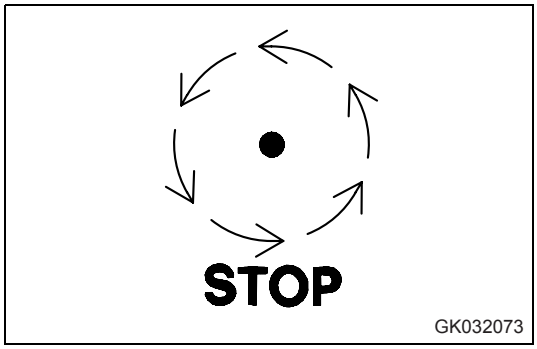

- After stopping the engine, turn the starting switch to the ON position, operate work equipment control lever (1) fully in the RAISE and LOWER directions 2 - 3 times to release the remaining pressure in the hydraulic circuit, then set work equipment lock lever (2) to the LOCK position.

  After releasing the remaining pressure in the hydraulic circuit, turn the starting switch to the OFF position.

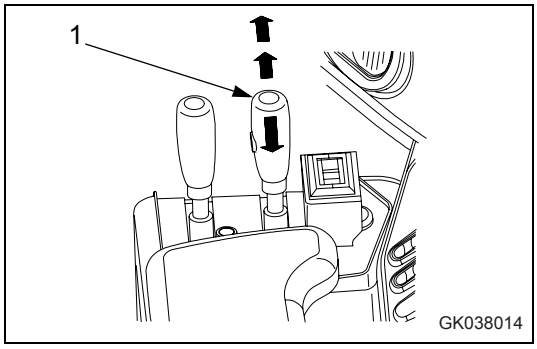

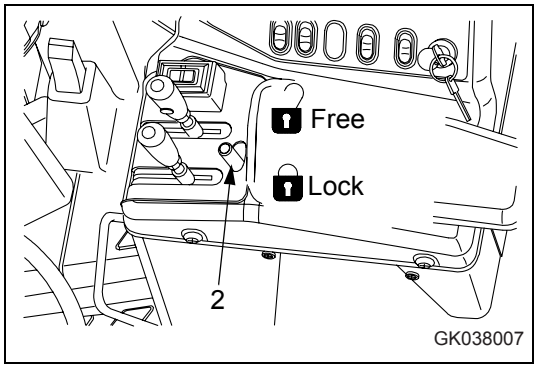

- Set parking brake switch (3) to the ON position, then put blocks under the front and the rear of the tires.

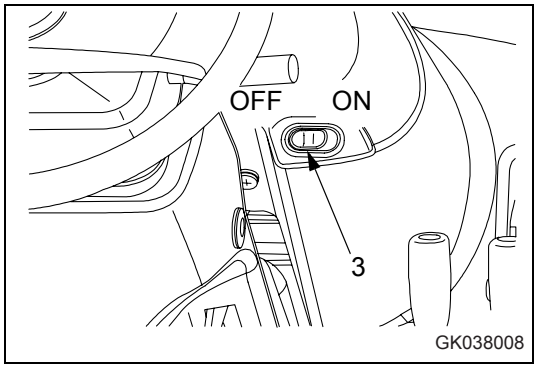

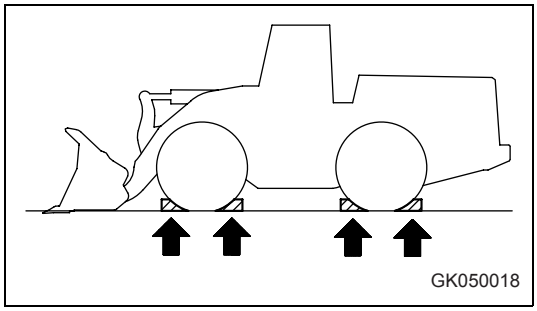

- Lock the front and rear frames with safety bar (4).

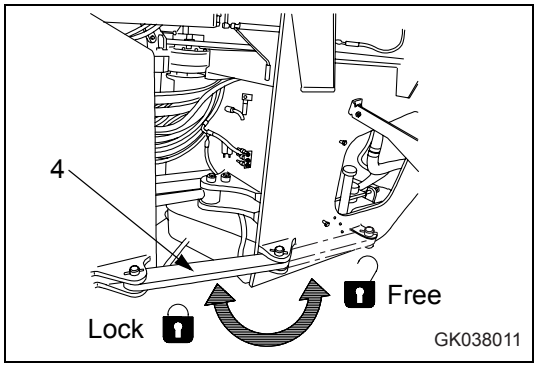

Two workers for maintenance when engine is running

To prevent injury, do not carry out maintenance with the engine running. If maintenance must be carried out with the engine running, carry out the operation with at least two workers and do as follows.

- One worker must always sit in the operator's seat and be ready to stop the engine at any time. All workers must maintain contact with the other workers.
- When carrying out operations near the fan, fan belt, or other rotating parts, there is a hazard of being caught in the parts, so be careful not to come close.
- Never drop or insert tools or other objects into the fan or fan belt. Parts may break or be sent flying.

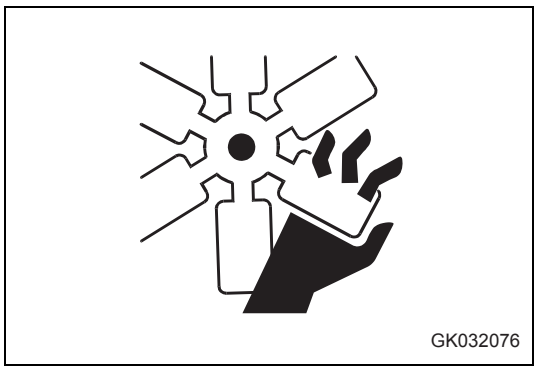

- Set work equipment lock lever (1) to the LOCK position to prevent the work equipment from moving. Then set parking brake switch (2) to the ON position to prevent the machine from moving.
- Do not touch any control levers. If any control lever must be operated, give a signal to the other workers to warn them to move to a safe place.

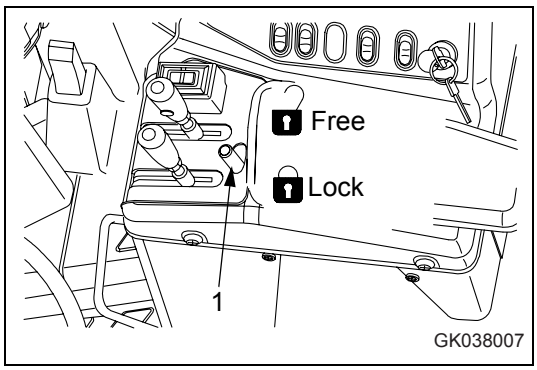

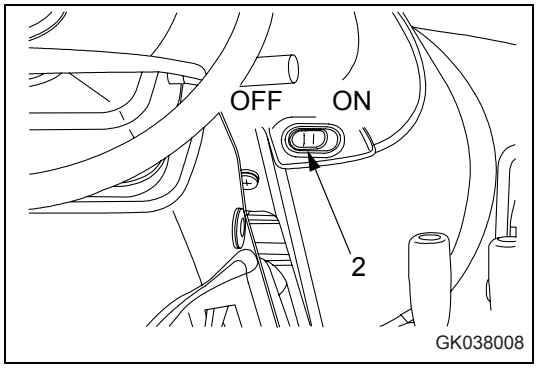

Inspection and maintenance after turning E.C.S.S. switch off

For machines equipped with a E.C.S.S. lower the bucket to the ground, turn the E.C.S.S. switch OFF, and stop the engine before starting inspection or maintenance. NEVER turn the switch ON during inspection or maintenance.

Proper tools

Use only tools suited to the task and be sure to use the tools correctly. Using damaged, low quality, faulty, makeshift tools or improper use of the tools could cause serious personal injury.

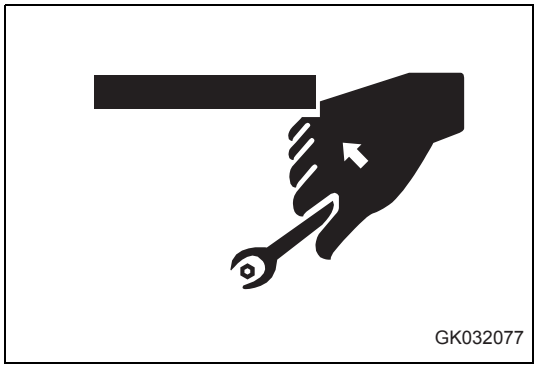

Accumulator

WARNING

Danger of injury! Pressure accumulator is filled with highly pressurised nitrogen. Do not open or damage the pressure accumulator.

The accumulator is charged with high-pressure nitrogen gas. When handling the accumulator, careless procedure may cause an explosion which could lead to serious injury or property damage. For this reason, always observe the following precautions.

- Do not disassemble the accumulator.
- Do not bring it near flame or dispose of it in fire.
- Do not make holes in it, weld it, or use a cutting torch.
- Do not hit or roll the accumulator, or subject it to any impact.
- When disposing of the accumulator, the gas must be released. Please contact your KOMATSU distributor to have this work performed.

Personnel

Only authorized personnel can service and repair the machine. Do not allow unauthorized personnel into the area. If necessary, employ an observer.

Attachments

- Appoint a leader before starting removal or installation operations for attachments.
- Place attachments that have been removed from the machine in a stable condition so that they do not fall. And take steps to prevent unauthorized persons from entering the storage area.

GK032079

Working under the raised boom

WARNING

Danger of injury! The raised boom may suddenly fall! For safety reasons, a raised boom must be secured against dropping before you pass or stand under it.

- The boom must be secured against moving if any work is to be carried out under it when it is in a raised position. For this purpose you should use a supporting prop (1) which is to be positioned below the boom.
- Park the machine on level, solid ground.
- Apply the parking brake.
- Place wheel chocks in front of the wheels to prevent the machine from inadvertently rolling away.
- Lift the arm far enough to allow the supporting prop to be placed beneath the boom.
- Switch off the engine.
- With the engine switched off, lower the boom slowly until it rests on the supporting prop.
- Set the control lever to "NEUTRAL" and secure it with the work equipment lock lever (2) (locked).

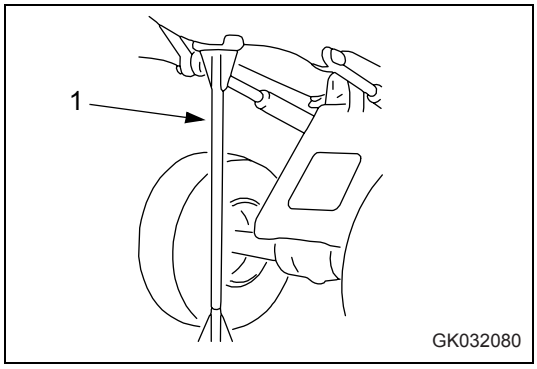

GK032080

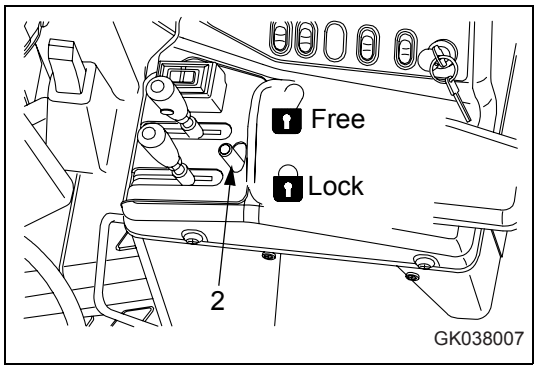

GK038007

Precautions when using hammer

When using a hammer, pins may fly out or metal particles may be scattered. This may lead to serious injury. Always do as follows.

- If hard metal parts such as pins, bucket teeth, cutting edges, or bearings are hit with a hammer, there is a hazard that pieces might be scattered and cause injury. Always wear safety goggles and gloves.
- When hitting pins or bucket teeth, there is a hazard that broken pieces might be sent flying and injure people in the surrounding area. Always check that there is no one in the surrounding area.
- There is a hazard that the pin hit with strong force may fly out and injure people in the surrounding area.

Repair welding

Welding operations must always be carried out by a qualified welder and in a place equipped with proper equipment. There is a hazard of gas, fire, or electrocution when carrying out welding, so never allow any unqualified personnel to carry out welding.

Removing battery terminal

When repairing the electrical system or when carrying out electrical welding, remove the negative (-) terminal of the battery to prevent the flow of current.

Precautions with high-pressure oil

The hydraulic system is always under internal pressure. In addition, the fuel piping is also under internal pressure when the engine is running and immediately after the engine is stopped. When carrying out inspection or replacement of the piping or hoses, check that the internal pressure in the circuit has been released. If this is not done, it may lead to serious personal injury. Always do as follows.

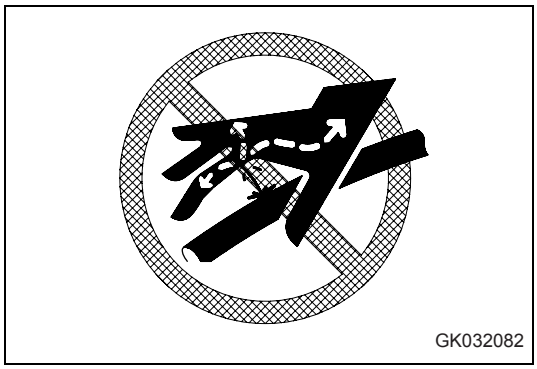

- When carrying out inspection and maintenance of the pressure, release the pressure before starting. For details, see "Maintenance with engine running (2-34)". Do not carry out inspection or replacement work with the circuit under pressure.
- If there is any leakage from the piping or hoses, the surrounding area will be wet, so check for cracks in the piping and hoses and for swelling in the hoses.

  When carry out inspection, wear safety glasses and leather gloves.
- There is a hazard that high-pressure oil leaking from small holes may penetrate your skin or cause blindness if it contacts your eyes directly. If you are hit by a jet of high-pressure oil and suffer injury to your skin or eyes, wash the place with clean water, and consult a doctor immediately for medical attention.
- The pressure in the E.C.S.S. circuit is stored by an accumulator. Do not remove the E.C.S.S. piping or components.
  If it is necessary to remove them, please ask your KOMATSU distributor to carry out the removal operation.

Precautions for high-pressure fuel

High pressure is generated inside the engine fuel piping when the engine is running. When carrying out inspection or maintenance of the fuel piping system, wait for at least 30 seconds after stopping the engine to let the internal pressure go down before starting inspection or maintenance.

Handling high-pressure hoses

- If oil or fuel leaks from high-pressure hoses, there is danger that it may cause fire or defective operation, which may lead to serious injury or fire. If there are any loose hoses or piping, or any leakage of oil or fuel from the hose or piping mount, stop operation and tighten to the specified torque.
- If any damaged hoses are found, stop operations immediately and contact your KOMATSU distributor.
- Replace all hoses every 2 years at the latest. The shelf life of the hose should not exceed 2 years.
- Hoses must be replaced as soon as the following damage is noticeable:
  - damage to the outer layer through to the intermediate layer,
  - brittleness in the outer layer,
  - distortions in pressurised or unpressurised state not conforming with the original shape of the installed hose,
  - leakages,
  - damage to the hose fittings or to the connection between fittings and hose,
  - storage damage.
- When replacing the hoses, always replace the O-rings, gaskets, and other such parts at the same time.
- See "Periodic replacement of safety critical parts (4-25)".

Precautions for high voltage

When the engine is running or immediately after it has stopped, high voltage is generated at the injector terminal and inside the engine controller, so there is danger of electrocution. Never touch the injector terminal or the inside of the engine controller. If it is necessary to touch the injector terminal or the inside of the engine controller, please contact your KOMATSU distributor.

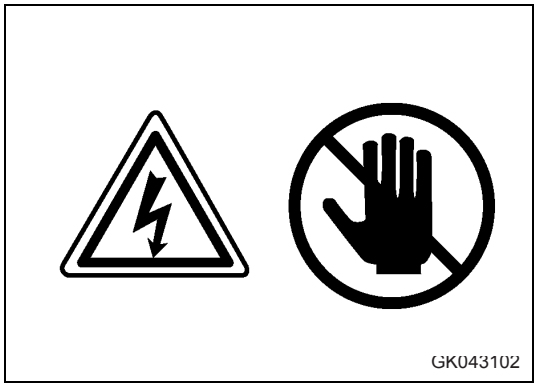

Waste materials

To prevent pollution, pay careful attention to the method of disposing of waste materials.

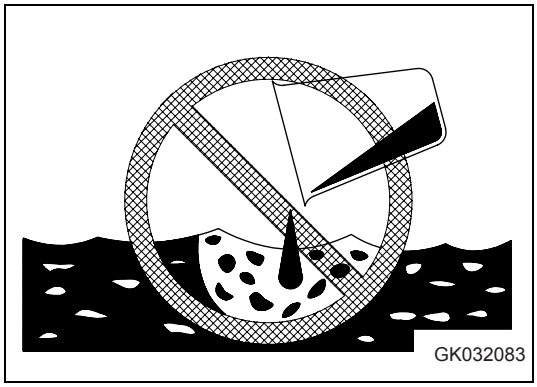

- Always put oil drained from your machine in containers. Never drain oil directly onto the ground or dump into the sewage system, rivers, the sea, or lakes.
- Obey appropriate laws and regulations when disposing of harmful objects such as oil, fuel, coolant, solvent, filters, and batteries.

Maintenance of air conditioner

- If air conditioner refrigerant gets into your eyes, it may cause blindness; if it touches your skin, it may cause frostbite.
- Never touch refrigerant.

Compressed air

- When carrying out cleaning with compressed air, there is a hazard of serious injury caused by flying particles.
- When using compressed air to clean elements or the radiator, always wear safety goggles, dust mask, gloves, and other protective equipment.

Periodic replacement of safety critical parts

- In order for the machine to be operated safely for a long time, it is necessary to add oil and to carry out service and maintenance at periodic intervals. In order to further increase safety, components with a strong relationship to safety, such as hoses and seat belts, must be replaced at periodic intervals.

  Replacement of safety critical parts: See "Periodic replacement of safety critical parts (4-25)".

- The material of these components naturally changes over time, and repeated use causes deterioration, wear, and fatigue. As a result, there is a hazard that these components may fail and cause serious injury or death. It is difficult to judge the remaining life of these components from external inspection or the feeling when operating, so always replace them at the specified interval.

- Replace or repair safety-critical parts if any defect is found, even when they have not reached the time specified interval.

- Replace all hoses every 2 years at the latest. The shelf life of the hose should not exceed 2 years.

2.5 Precautions with tires

Handling tires

See also "Handling the tires (3-137)".

If tires or rims are handled mistakenly, there is danger that the tire may explode or be damaged, or that the rim may fly off and cause serious injury or death.

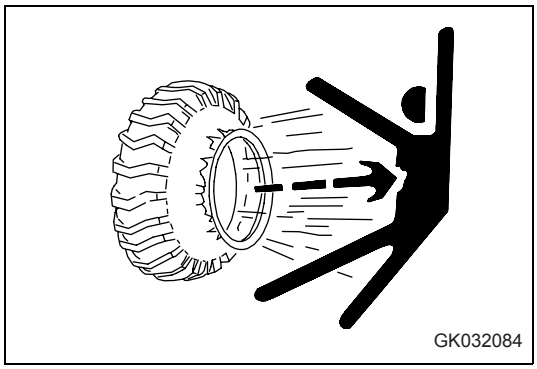
GK032084

To maintain safety, always do as follows.

- Maintenance, disassembly, repair, and assembly of the tires and rims requires special equipment and special technology, so always ask your KOMATSU distributor to carry out these operations.
- Inflate tyres up to the defined pressure. If the tyre pressure is too low, the tyres may heat up and burst. If the tyre pressure is too high, there is also danger that the tyre may burst.
- If a tyre heats up considerably, inflammable gases are produced. A burning tyre may burst very easily, thus spreading fire over a large area.
- Check the tyre pressure when the tyres are still cold. Do not let off pressure, when the pressure in a warm tyre has increased.
- Do not light a fire and do not carry out welding near the tyre.
- Keep the working area free of pointed or sharp objects that may damage the tyre.
- Avoid any overload.
- The values for tyre pressure and permitted speed given in this manual correspond to the manufacturers' values. See also "Handling the tires (3-137)".
- For details, please refer to your KOMATSU distributor or the tyre manufacturer.

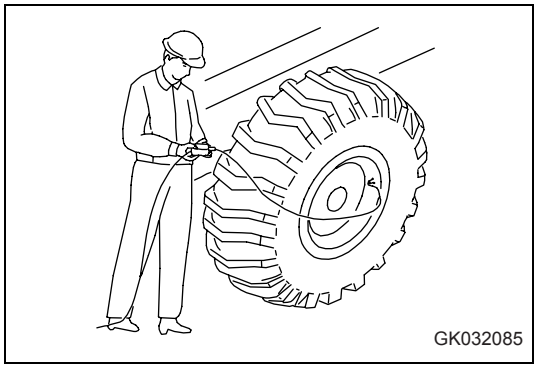
GK032085

Precautions when storing tires

Tires for construction equipment are extremely heavy, so they may cause serious personal injury.

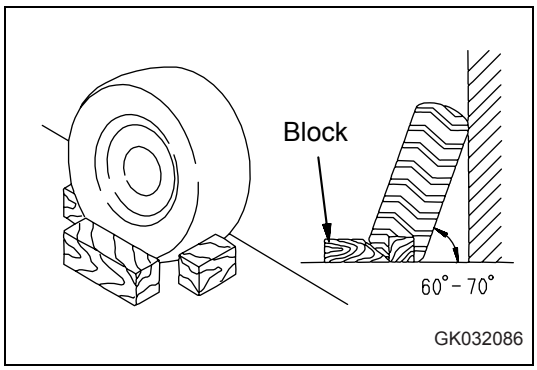

GK032086

- Basically, tyres must be stored in a protected room that cannot be accessed by unauthorised persons.
- Place the tyres on an even surface and incline them 60° to 70° against a solid stopper. Secure the tyres with wheel chocks so that they cannot roll away, tip over, or slip.
- If, however, a tyre tips over despite this safety measure, do not try to stop it, but get out of the way as quickly as possible, since tyres for construction machines are very heavy and may cause serious injuries.

3. Operation

WARNING

Please read and make sure that you understand the SAFETY section before reading this section.

3.1 General view

3.1.1 General view of machine

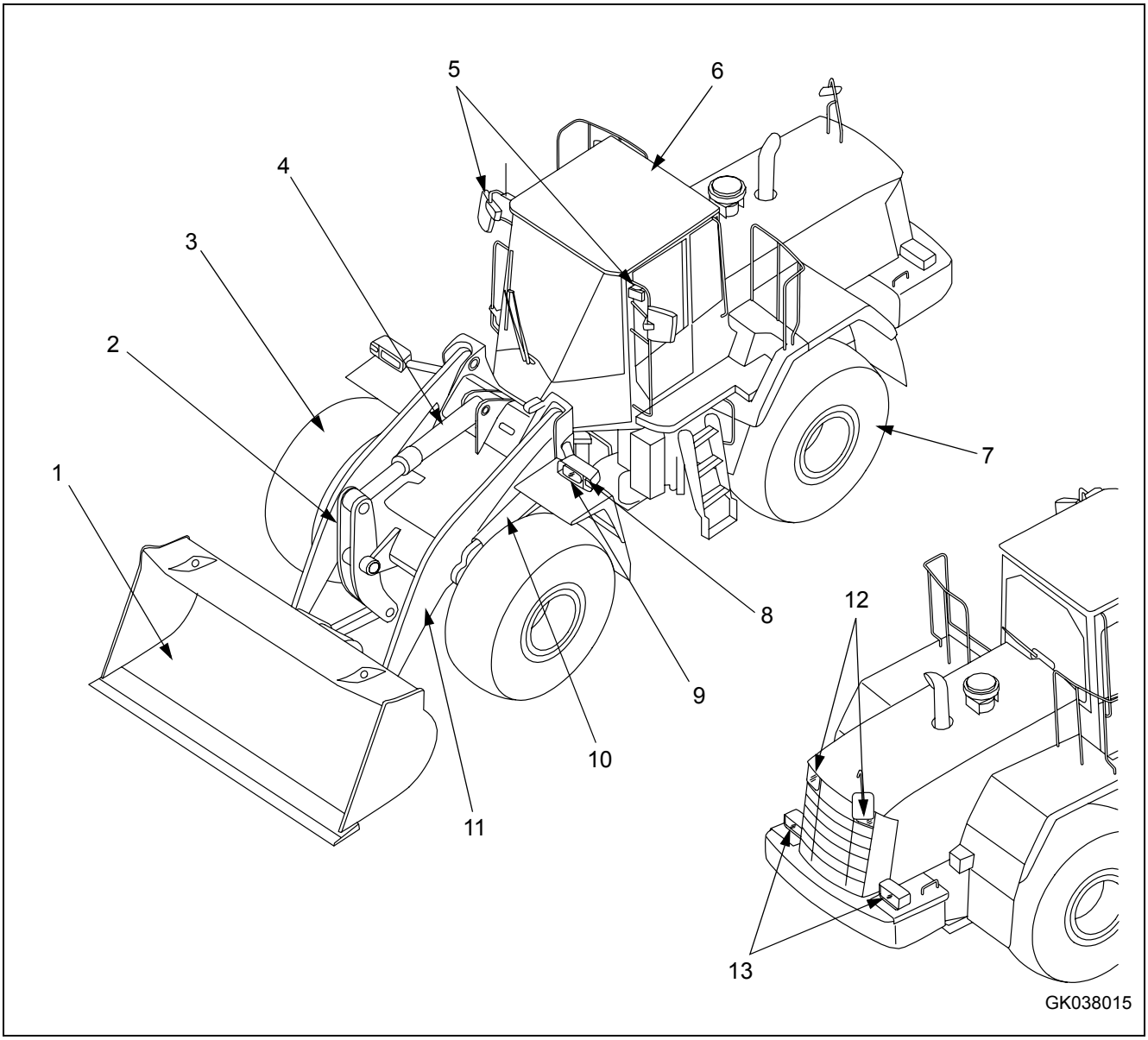

(1) Bucket	(8) Turn signal lamp
(2) Tilt lever	(9) Head lamp
(3) Front wheel	(10) Lift cylinder
(4) Bucket cylinder	(11) Lift arm
(5) Front working lamp	(12) Rear working lamp
(6) ROPS cab	(13) Rear combination lamp
(7) Rear wheel	

3.1.2 General view of controls and gauges

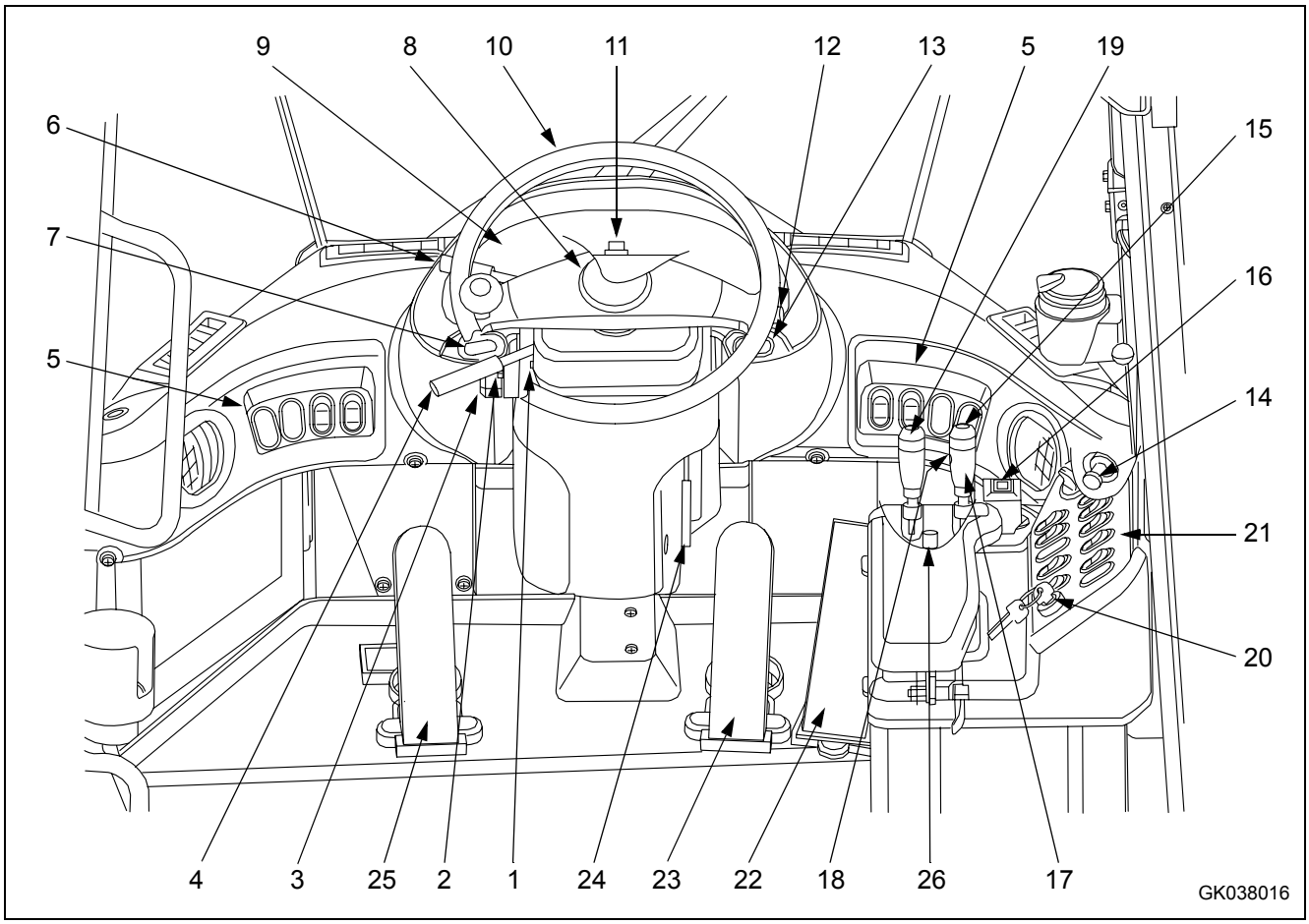

(1) Gearshift lever stopper	(13) Parking brake switch
(2) Rear wiper switch	(14) Cigarette lighter
(3) Front wiper switch	(15) Kickdown switch
(4) Gearshift lever	(16) Directional selector switch
(5) Front switch panel	(17) Lift arm control lever
(6) Directional lever	(18) Hold switch
(7) E.C.S.S. switch (*)	(19) Bucket control lever
(8) Horn button	(20) Starting switch
(9) Monitor	(21) Right switch panel
(10) Steering wheel	(22) Accelelator pedal
(11) Hazard lamp switch	(23) Right brake pedal
(12) Lamp switch	(24) Steering tilt lock lever
(12) Turn signal lever	(25) Left brake pedal
(12) Dimmer switch	(26) Work equipment lock lever

(*) E.C.S.S.: Electrically Controlled Suspension System

Front switch panel

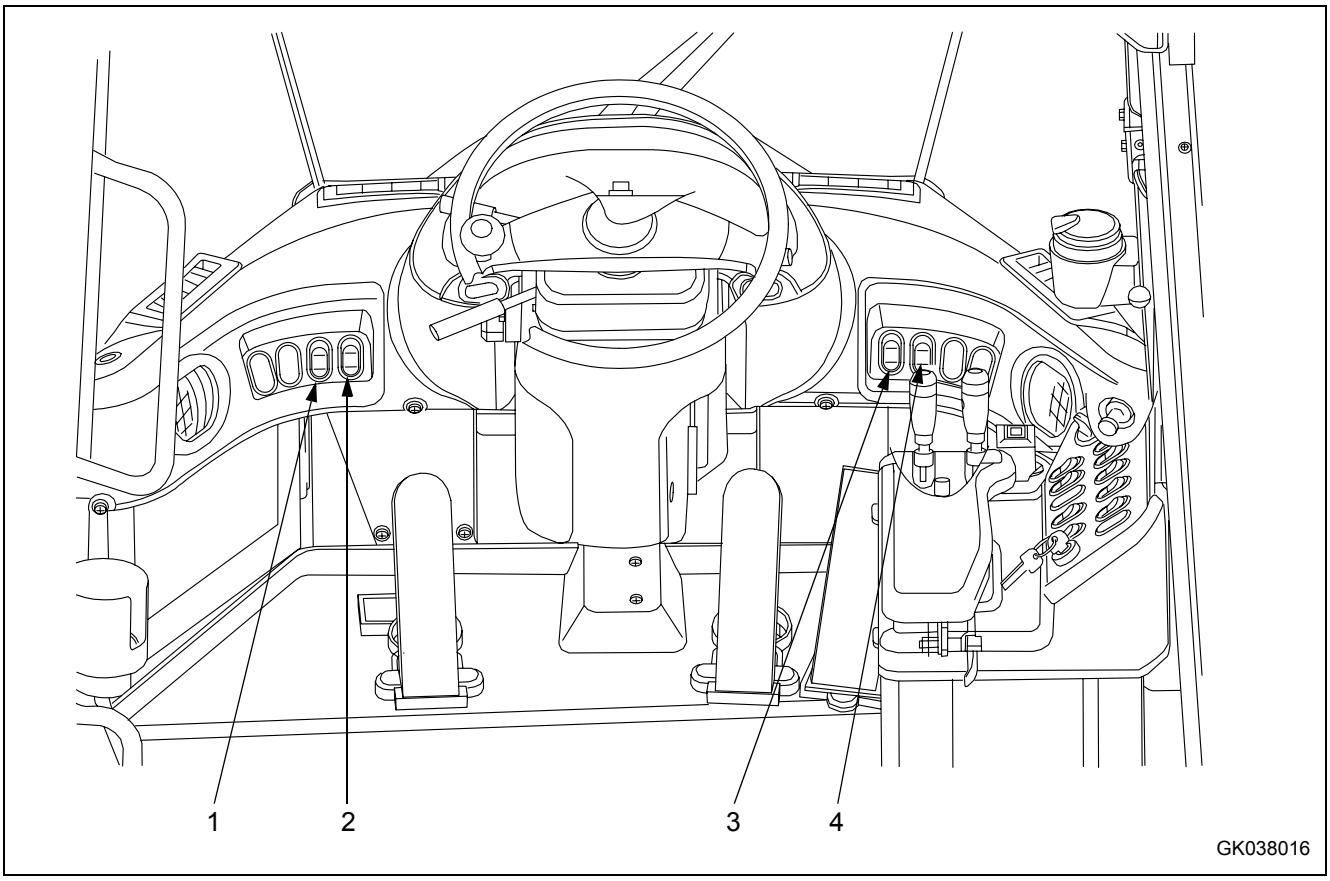

(1) Monitor panel mode selector switch 1
(2) Monitor panel mode selector switch 2
(3) Front working lamp switch
(4) Rear working lamp switch

Right switch panel

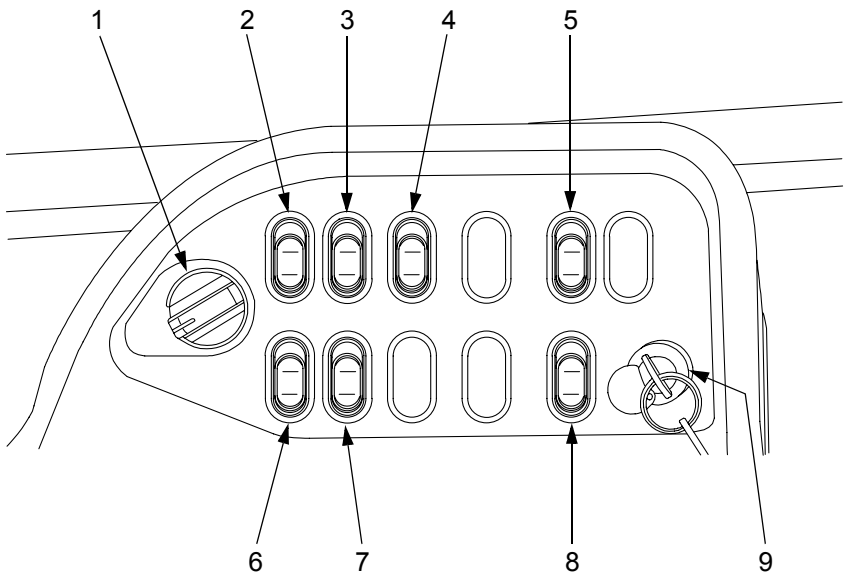

(1) Transmission shift mode selector switch
(2) Transmission cut-off switch
(3) Transmission cut-off set switch
(4) Directional selector switch actuation switch
(5) Emergency steering switch (Option)
(6) Engine power mode selector switch
(7) Torque converter lock-up switch (Option)
(8) Cooling fan reverse rotation switch
(9) Starting switch

Machine monitor

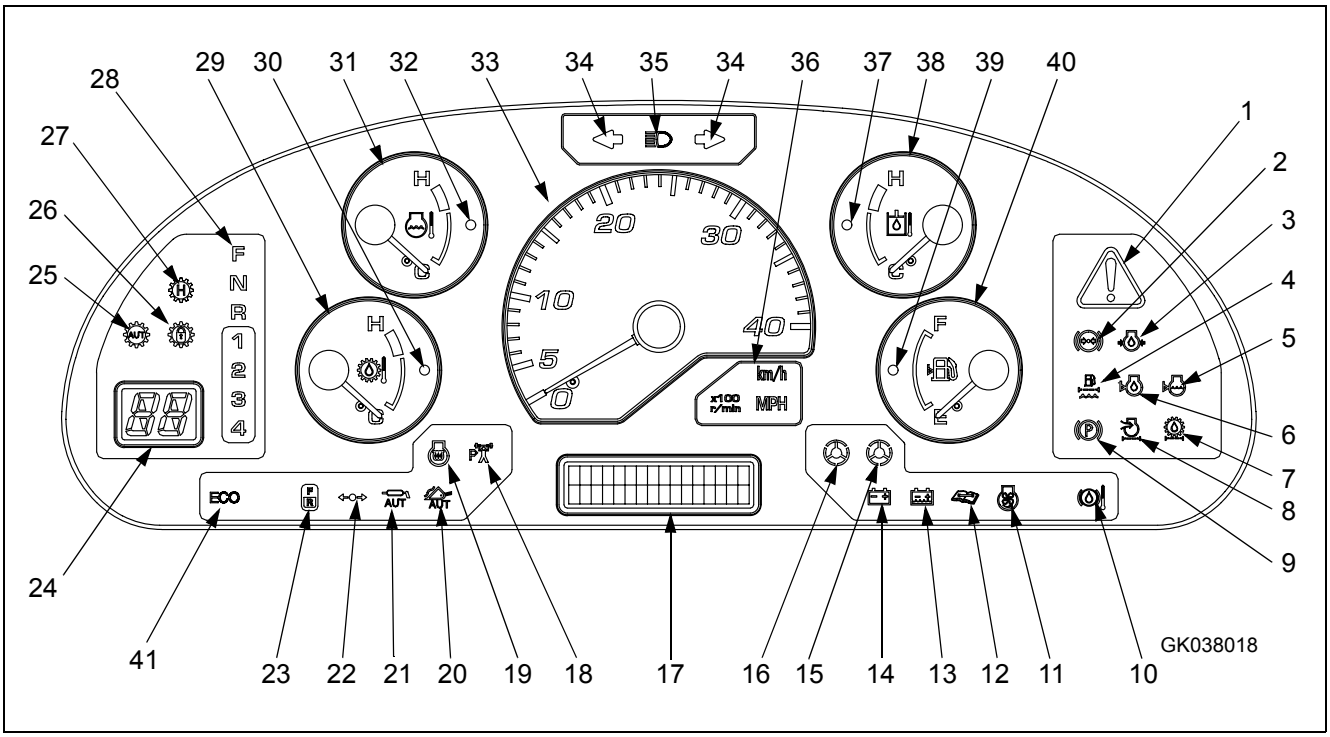

(1) Central warning lamp	(22) Joystick pilot lamp (Option)
(2) Brake oil pressure caution lamp	(23) Directional selector pilot lamp
(3) Engine oil pressure caution lamp	(24) Shift indicator
(4) Fuel filter water detection caution lamp	(25) Autoshift pilot lamp
(5) Radiator coolant level caution lamp	(26) Lock-up pilot lamp (Option)
(6) Engine oil level caution lamp	(27) Shift hold pilot lamp
(7) Transmission oil filter clogging caution lamp	(28) Shift lever position pilot lamp
(8) Air cleaner clogging caution lamp (*)	(29) Torque converter oil temperature gauge
(9) Parking brake pilot lamp	(30) Torque converter oil temperature caution lamp
(10) Axle oil temperature caution lamp	(31) Engine coolant temperature gauge
(11) Cooling fan reverse rotation pilot lamp	(32) Engine coolant temperature caution lamp
(12) Maintenance caution lamp	(33) Speedometer
(13) Battery fluid level caution lamp (Option)	(34) Turn signal pilot lamp
(14) Battery charge circuit caution lamp	(35) Head lamp high beam pilot lamp
(15) Steering oil pressure caution lamp	(36) Meter display pilot lamp
(16) Emergency steering pilot lamp	(37) Hydraulic oil temperature caution lamp
(17) Character diaplay	(38) Hydraulic oil temperature gauge
(18) Output mode pilot lamp (power mode)	(39) Fuel level caution lamp
(19) Preheating pilot lamp	(40) Fuel gauge
(20) Semi auto digging pilot lamp (Option)	(41) Economy operation display lamp
(21) Auto-greasing pilot lamp (Option)	

(*) Machines eqipped with KOMTRAX

3.2 Explanation of components

The following is an explanation of the devices needed for operating the machine.

To carry out suitable operations correctly and safely, it is important to understand fully the methods of operating the equipment and the meanings of the displays.

3.2.1 Machine monitor

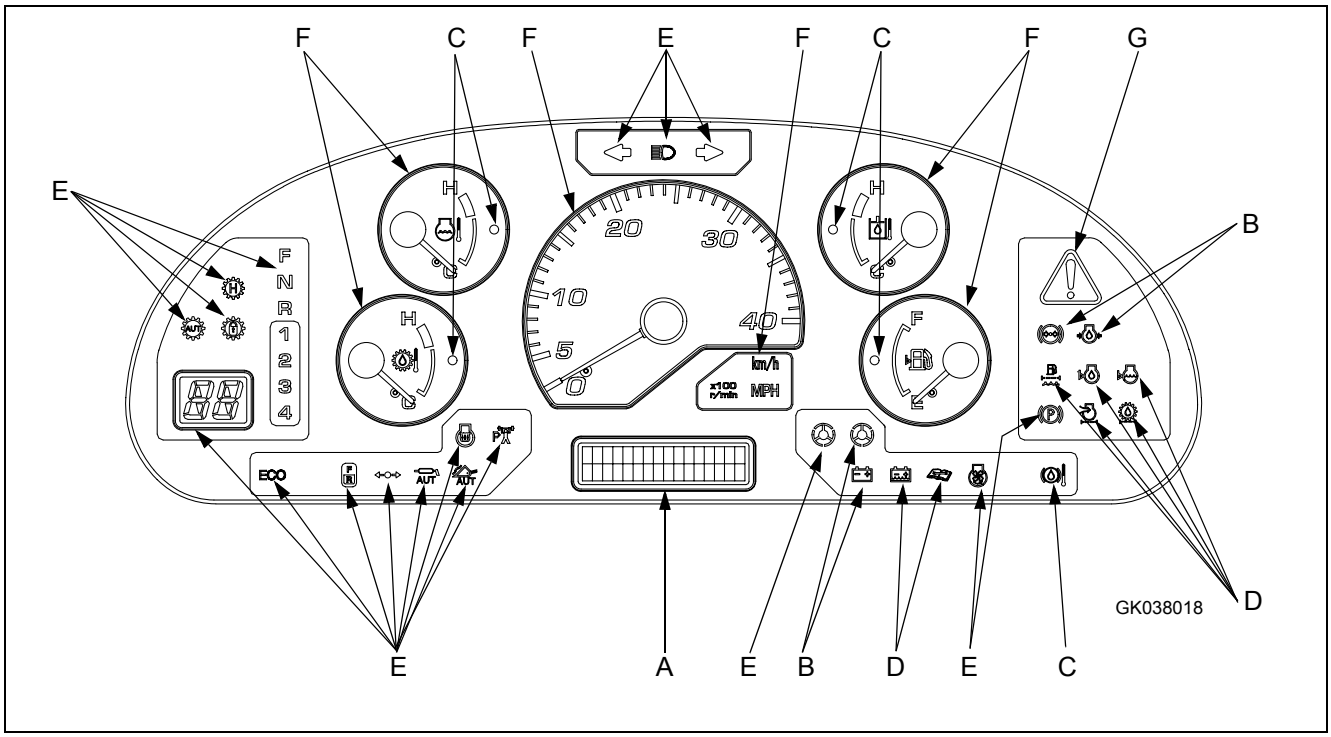

A: Character display	E: Pilot display
B: Emergency stop items	F: Meter display
C: Caution items	G: Central warning lamp
D: Inspection and maintenance items	

NOTE

When turning the starting switch to the ON position before starting the engine, the central warning lamp, caution lamps, and pilot lamps light up for 2 seconds to check the system.
After the alarm buzzer sounds for 2 seconds, it goes off if the condition is normal.
The shift indicator display shows “88“ for 2 seconds.
The indicator gauges and meters are actuated after the above system check is completed.
The character display shows “KOMATSU“ for 3 seconds.
If the lamps do not light up, there is probably a failure or disconnection, so contact your KOMATSU distributor for inspection.

Types of warning

If an abnormality occurs on the machine, or if any switch or lever is operated accidently, the monitor display and buzzer give a warning to inform the operator.

Following are the types of warning depending on the level of danger.

REMARK

For details of action codes “E03“ to “E00“, see "Action code display (3-11)".

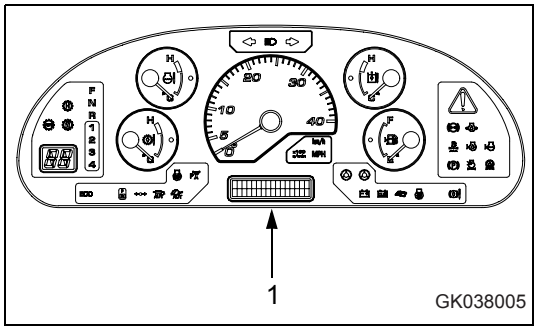

Emergency stop

This warning is given if there is a serious failure that affects the normal operation of the machine or if the setting is incorrect.

The central warning lamp on the monitor and the caution lamp for the location of the abnormality light up, and at the same time, the alarm buzzer sounds and action code “E03“ is displayed on character display (1).

REMARK

The alarm buzzer sounds in a 1.6 second cycle. (0.8 sec. “ON“ -> 0.8 sec. “OFF“) (The same cycle for ON, OFF)

Caution

This warning is given if the cooling water or lubricating oil overheat.

The central warning lamp on the monitor and the individual caution lamps light up, and at the same time, the alarm buzzer sounds and action code “E02“ is displayed on character display (1).

REMARK

The alarm buzzer sounds in a 1.6 second cycle. (0.8 sec. “ON“ -> 0.8 sec. “OFF“) (The same cycle for ON, OFF)

Mistaken operation

This warning is given if any switch or lever is operated mistakenly.

The central warning lamp on the monitor lights up and the alarm buzzer sounds at the same time.

In addition, in the following case, action code “E00“ is displayed on character display (1).

- When the machine has exceeded the travel speed limit.
- When the work equipment lock lever is at the LOCK position and the EPC control lever is at any position other than neutral. (Machines equipped with EPC)

REMARK

The alarm buzzer sounds in a 0.25 second cycle. (0.2 sec. “ON“ -> 0.05 sec. “OFF“) (The ON and OFF cycles have a different length)

Inspection and maintenance

This warning is given if it is necessary to carry out inspection and maintenance of wear parts, or if it is necessary to check the oil or cooling water level.

The individual caution lamp on the monitor lights up, and at the same time, action code “E01“ is displayed on character display (1).

In the case of this warning, the central warning lamp does not light up and the alarm buzzer does not sound.

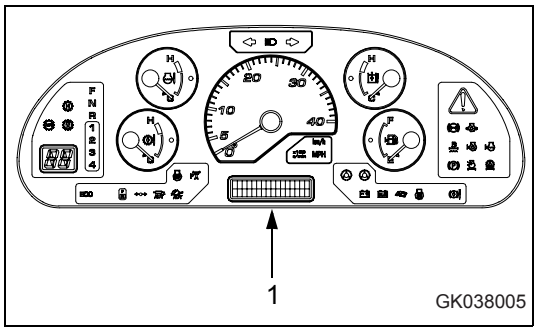

Central warning lamp

This display portion (1) lights up if any emergency stop item, caution item, or mistaken operation of any switch or lever occurs. At the same time, the alarm buzzer sounds.

Check the content of the display and carry out the specified action for the item.

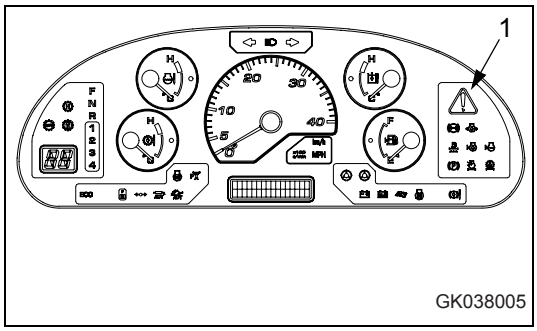

Character display portion

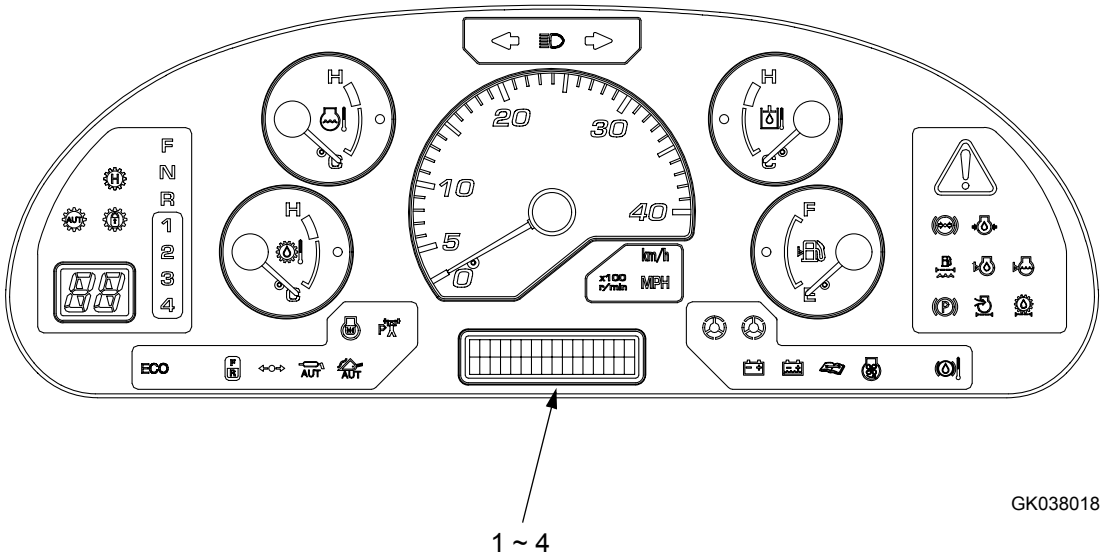

(1) Service meter	
(2) Action code display	
(3) Failure code display	
(4) Filter, oil replacement time display	

Normally, the service meter is displayed on the character display.

If the machine has failed, or if there has been excessive load on the machine, or if it is necessary to carry out inspection and maintenance, an action code is displayed to recommend suitable action.

When the time for replacing the filter or changing the oil is reached, after completion of the system check with the starting switch at the ON position, the maintenance monitor caution lamps flash or light up, and at the same time, the filter or oil to be replaced is displayed.

NOTE

Information regarding the failure of the machine or maintenance is displayed on the character display when the starting switch is at the ON position, check the display to confirm that there is no abnormality before starting to travel.

1. Service meter

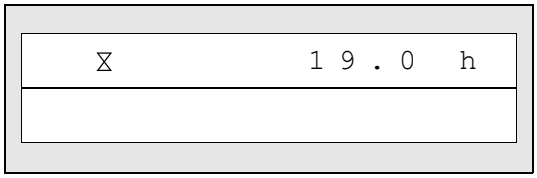

This meter (1) shows the total time that the machine has been operating.

While the engine is running, the service meter advances even if the machine is not moving.

The meter advances by 1 for every hour of operation, regardless of the engine speed.

Even if the starting switch is at the OFF position, the service meter will display as long as the top part (◇) of monitor panel mode selector switch 1 is being pressed.

NOTE

When the starting switch is at the OFF position, if the service meter is displayed even though the top (◇) of monitor panel mode selector switch 1 is not being pressed, there is probably a failure in the machine, so please contact your KOMATSU distributor for inspection.

2. Action code display

WARNING

If action code E03 is displayed, stop the machine immediately and check the failure code. For details, see "Failure code display (3-13)".
Inform your KOMATSU distributor of the failure code and ask for repairs.

If there is a failure on the machine, or it is necessary to change the method of operation, or if inspection or maintenance must be carried out, action code E00, E01, E02, or E03 is displayed on the character display in display portion.
If different failures occur at the same time, the action code for the more serious problem is displayed.

The level of seriousness is as follows, starting with the most serious: E03, E02, E01, E00.
In the case of action codes E00, E02, and E03, the alarm buzzer sounds intermittently and the central warning lamp lights up.

f action codes E00, E01, E02, or E03 are displayed on the character display, stop operations, check the content of the display, and take the following action.

E03: When this code is displayed, stop the machine immediately, check the failure code, and contact your KOMATSU distributor for repairs.

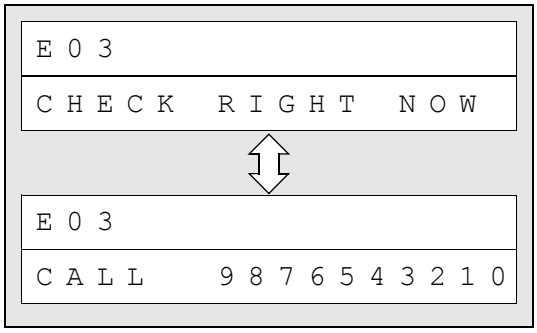

REMARK

“E03“ is displayed on the top line of the character display and “CHECK RIGHT NOW“ and “CALL“ are displayed in turn on the bottom line for 3 seconds each.
The telephone number is displayed to the right of “CALL“. If no telephone number has been set, the display is blank. For details of the method of inputting the telephone number, see Section “"Input method for telephone number (3-37)"“.

E02: If overrun related information is displayed, reduce the engine speed and the speed of the machine while continuing operations.

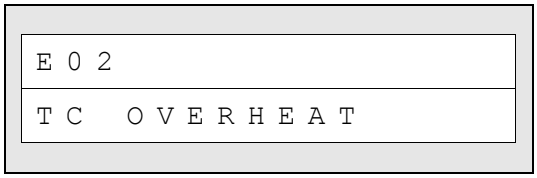

If the overheat related display is given, stop the machine and run the engine under no load at a mid-range speed.

If an action code is still displayed after doing this, check the failure code and contact your KOMATSU distributor for repairs.

REMARK

The top line of the character display displays “E02“ and the bottom line displays the condition of the machine related to overheating.

E01: When a failure occurs in the mechanical system, such as a drop in the level of the engine cooling water, the maintenance location is displayed. If the maintenance caution lamp lights up at the same time, carry out inspection and maintenance of the item indicated after completion of the day's work or when changing shifts. If “MAINTENANCE“ is displayed together with E01, check the failure code and ask for repairs to be carried out.

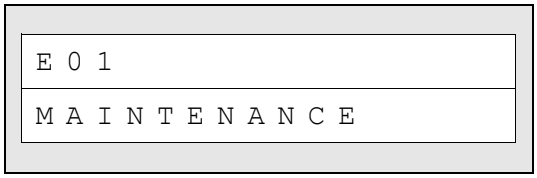

REMARK

“E01“ is displayed on the top line of the character display, and “MAINTENANCE“ or the part of the machine requiring inspection, filling of fluid, or replacement is displayed on the bottom line.

E00: If an overrun related item is displayed, continue operations at reduced engine speed and travel speed.

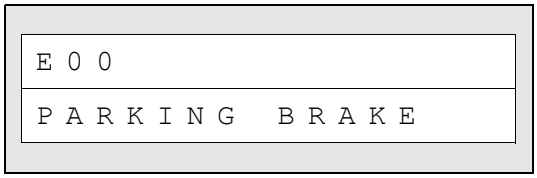

If an item related to the work equipment control lever is displayed, return the lever to the HOLD position. (Machines equipped with EPC)

3. Failure code display

If an action code is displayed on the character display, check the failure code according to the failure code display method given below.

When contacting your KOMATSU distributor to request repairs, please inform your distributor of the failure code.

Method of displaying failure code

1. If an action code is displayed on the character display of display portion, press the top (>) of monitor panel mode selector switch 2 (A).

   The action code will change to the failure code.

   - The failure code is displayed with the first 6 digits on the left side of the character display.
   - The code displayed after the space on the right side of the failure code indicates the controller that detected the failure code.
   - The component that has caused the problem is shown at the bottom of the character display.

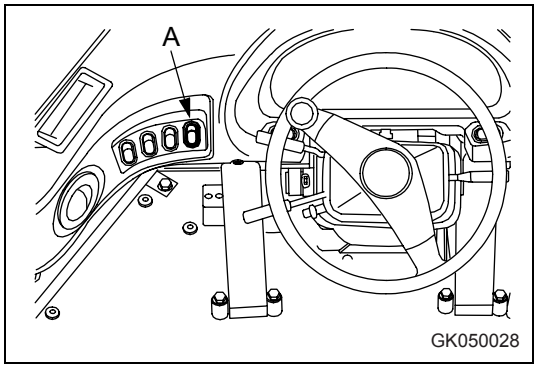

D D T L K A T M
T R A N S M I S S I O N

Right code	Controller detecting failure code
MON	Machine monitor
TM	Transmission controller
WRK	Work equipment controller (Option)

2. Press the top (>) of monitor panel mode selector switch 2 (A) again.

   If the condition is normal, the service meter is displayed for several seconds, then the display returns to the action code.

   If more than one failure has occurred at the same time, the next failure code is displayed.

4. Filter, oil replacement time display

```
13:TM  FILT
     10h    :      5
```

After completion of the system check and when the starting switch is in the ON position, if any filter or oil item is approaching the replacement time, this display shows the item for approx. 30 seconds. When this happens, the maintenance caution lamp also flashes or lights up.

After replacing the filter or changing the oil, reset the time for replacement. For details, see "Reset method for filter, oil replacement time (3-35)".

REMARK

The ID number and name of the item needing replacement is displayed on the top line of the character display. The bottom line shows the time remaining to replacement and the total number of times that the item has been replaced.
If the replacement time has already passed, a minus (-) sign appears before the time.
After the display has been given for 30 seconds, it does not appear again until the starting switch is turned to the ON position.
The message in the illustration above is not shown on the character display if an action code is being displayed.
If there are two or more items to be displayed, they are displayed repeatedly in turn. If there are more than 10 items, all the items are displayed once each, then the display returns to the normal display.
The filter or oil replacement time is displayed when the remaining time reaches 30 hours. When the replacement interval has passed, the remaining time up to 30 hours is marked with a - mark. Note that when more than 30 hours have passed after the replacement interval, the item is not displayed again.
The maintenance caution lamp flashes as the replacement time approaches, and after the replacement time has passed, it lights up.

Items for display of filter, oil replacement time

Item	Replacement interval (H)	Character display	ID number
Engine oil	500	ENG OIL	01
Engine oil filter	500	ENG FILT	02
Fuel pre-filter	500	FUEL P FILT	41
Fuel filter	1000	FUEL FILT	03
Corrosion resistor	1000	CORR RES	06
Transmission oil	1000	TM OIL	12
Transmission oil filter	1000	TM FILT	13
Hydraulic filter	2000	HYD FILT	04
Hydraulic tank breather element	2000	HYD BREATH	05
Hydraulic oil	2000	HYD OIL	10
Axle oil	2000	AXLE OIL	15

REMARK

See the section below for details of the procedure for replacing the filter and oil.

- *Engine oil*
  "Change oil in engine oil pan, replace engine oil filter cartridge (4-66)"
- *Engine oil filter*
  "Change oil in engine oil pan, replace engine oil filter cartridge (4-66)"
- *Fuel pre-filter cartridge*
  "Replace fuel pre-filter cartridge (4-68)"
- *Fuel filter*
  "Replace fuel filter cartridge (4-71)"
- *Corrosion resistor*
  "Replace corrosion resistor cartridge (4-75)"
- *Transmission oil*
  "Change oil in transmission case and transmission oil filter cartridge, clean strainer (4-73)"
- *Transmission oil filter*
  "Change oil in transmission case and transmission oil filter cartridge, clean strainer (4-73)"
- *Hydraulic filter*
  "Change oil in hydraulic tank, replace hydraulic filter element (4-76)"
- *Hydraulic tank breather element*
  "Replace hydraulic tank breather element (4-79)"
- *Hydraulic oil*
  "Change oil in hydraulic tank, replace hydraulic filter element (4-76)"
- *Axle oil*
  "Change axle oil (4-80)"

Emergency stop item

CAUTION

If these lamps light up and the buzzer sounds, stop operations immediately and carry out inspection and maintenance of the applicable location.

If any abnormality is found in the emergency stop items, the alarm buzzer will sound intermittently, and the lamp for the location of the abnormality and the central warning lamp will light up.

At the same time, the top line of the character display displays “E03“ and the bottom line displays “CHECK RIGHT NOW“ and “CALL“ alternately for 3 seconds each, so stop the machine immediately in a safe place, stop the engine, and carry out inspection.

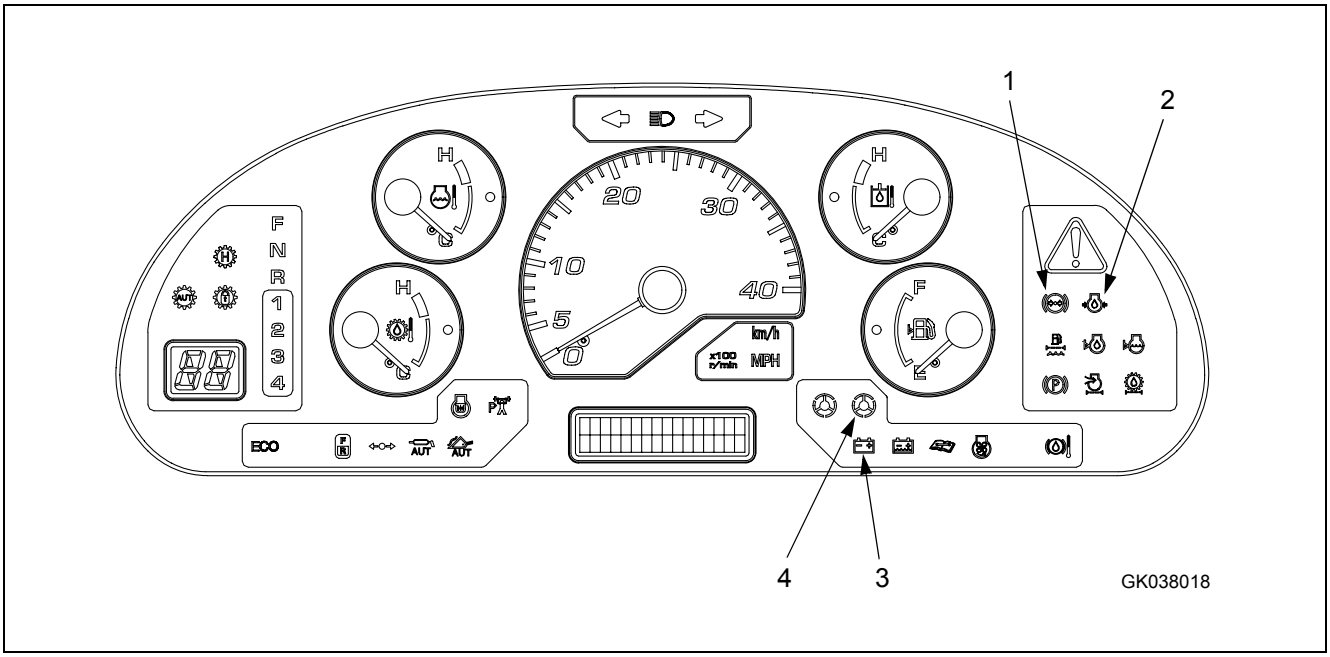

(1) Brake oil pressure caution lamp
(2) Engine oil pressure caution lamp
(3) Battery charge circuit caution lamp
(4) Steering oil pressure caution lamp

1. Brake oil pressure caution lamp

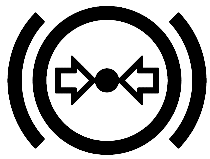

GK032093

This lamp (1) lights up when the brake oil pressure goes below the specified value.

During checks before starting (when the starting switch is turned to the ON position but the engine is not started), the brake circuit is not actuated while the engine is stopped, so the brake oil pressure caution lamp and central warning lamp do not light up and the alarm buzzer does not sound.

During operation (engine running)

If the brake oil pressure goes down during operation, the brake oil pressure caution lamp and central warning lamp light up and the alarm buzzer sounds intermittently.

At the same time, the top line of the character display displays “E03“ and the bottom line displays “CHECK RIGHT NOW“ and “CALL“ alternately for 3 seconds each, so stop the machine immediately in a safe place, stop the engine, and carry out inspection.

If the brake oil pressure caution lamp lights up, the footbrake may not work, so keep the parking brake applied to prevent the machine from moving.

In addition, when the accumulator is being charged immediately after starting the engine, the brake oil pressure caution lamp will light up, but the central warning lamp remains OFF and the alarm buzzer does not sound.

Keep the parking brake applied to prevent the machine from moving until the brake pressure becomes normal and the brake oil pressure caution lamp goes out.

2. Engine oil pressure caution lamp

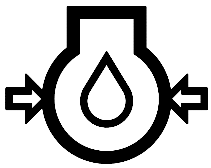

GK032094

This lamp (2) lights up to warn the operator that the engine lubricating oil pressure has dropped.

During checks before starting (starting switch at the ON position, engine stopped) the lamps are lighted up, and when the engine is started, the lamps go out.

During operation (engine running)

If the engine lubricating oil pressure goes down during operation, the engine lubricating oil pressure caution lamp and central warning lamp light up and the alarm buzzer sounds intermittently.

At the same time, the top line of the character display displays “E03“ and the bottom line displays “CHECK RIGHT NOW“ and “CALL“ alternately for 3 seconds each, so stop the machine immediately in a safe place, stop the engine, and carry out inspection.

3. Battery charge circuit caution lamp

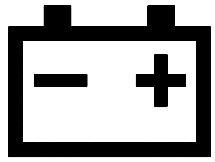

GK032095

This lamp (3) lights up when the engine is running to warn the operator that an abnormality has occurrred in the charging circuit.

During checks before starting (starting switch at the ON position, engine stopped) the lamps are lighted up, and when the engine is started, the lamps go out.

During operation (engine running)

If an abnormality occurrs in the charging circuit during operation, the battery charge circuit caution lamp and central warning lamp light up and the alarm buzzer sounds intermittently.

At the same time, the top line of the character display displays “E03“ and the bottom line displays “CHECK RIGHT NOW“ and “CALL“ alternately for 3 seconds each, so stop the machine immediately in a safe place, stop the engine, and carry out inspection.

4. Steering oil pressure caution lamp

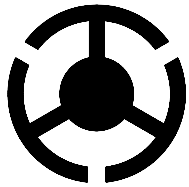

GK032096

(Red)

This lamp (4) lights up to warn the operator that the steering oil pressure has dropped.

During checks before starting (starting switch at the ON position, engine stopped) the lamps are lighted up, and when the engine is started, the lamps go out.

During operation (engine running)

If the steering oil pressure goes down during operation, the steering oil pressure caution lamp and central warning lamp light up and the alarm buzzer sounds intermittently.

At the same time, the top line of the character display displays “E03“ and the bottom line displays “CHECK RIGHT NOW“ and “CALL“ alternately for 3 seconds each, so stop the machine immediately in a safe place, stop the engine, and carry out inspection.

Caution items

CAUTION

If these lamps light up, stop operations quickly and carry out the following action.

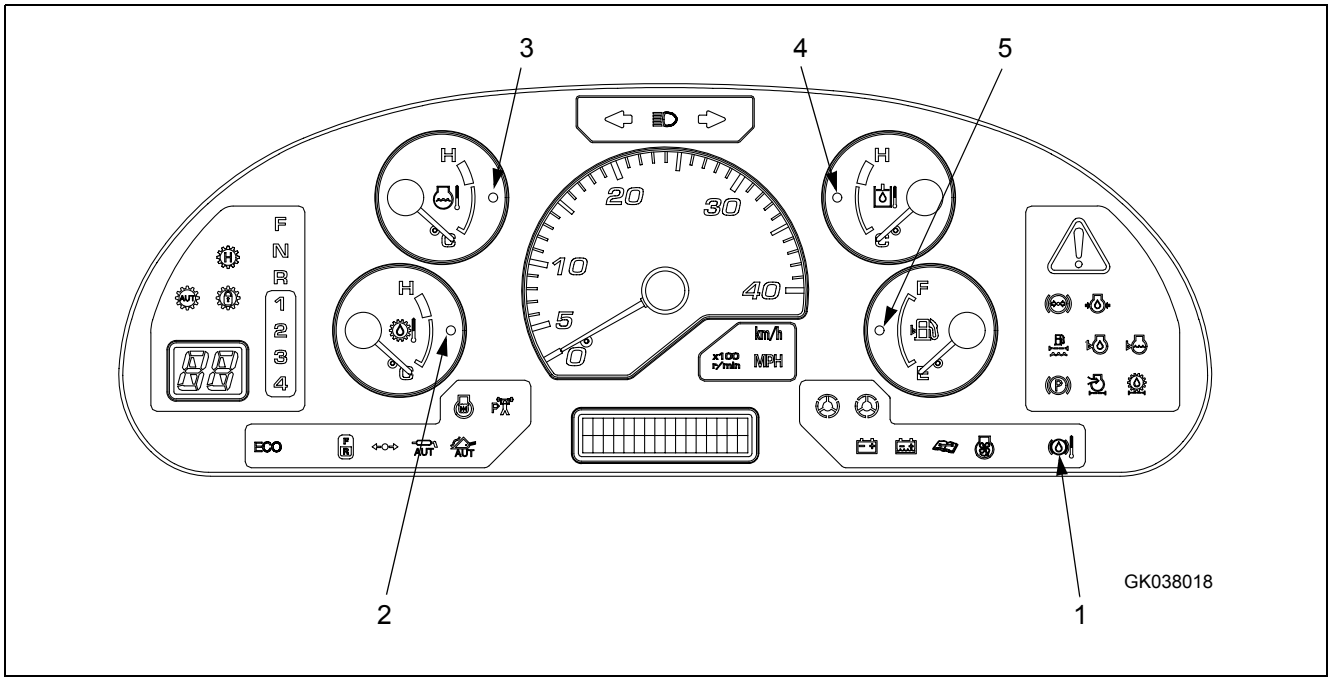

(1) Axle oil temperature caution lamp	
(2) Torque converter oil temperature caution lamp	
(3) Engine coolant temperature caution lamp	
(4) Hydraulic oil temperature caution lamp	
(5) Fuel level caution lamp	

1. Axle oil temperature caution lamp

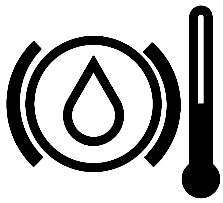

GK032097

This lamp (1) lights up to warn the operator that the axle oil temperature has risen.

During checks before starting (when the starting switch is turned to the ON position but the engine is not started), this monitor does not light up.

During operation (engine running)

In continuous heavy-duty operations or when traveling long distances downhill where the brake is used frequently, the axle oil temperature becomes high, so the axle oil temperature caution lamp and central warning lamp light up and the alarm buzzer sounds intermittently.

At the same time, the top line of the character display displays “E02“ and the bottom line displays “BRAKE OVERHEAT“, so take the following action.

1. Release the accelerator pedal and move the speed range selector switch down one range to reduce the travel speed.
2. Avoid using the brake.
   - Do not keep the brake pedal depressed continuously; use the brake only intermittently.
   - When using the left brake pedal, turn the transmission cut-off switch ON to carry out operations.

If use of the brake is reduced for a short time in the way recommended above, the axle oil temperature will go down and the caution lamp will go out.

2. Torque converter oil temperature caution lamp

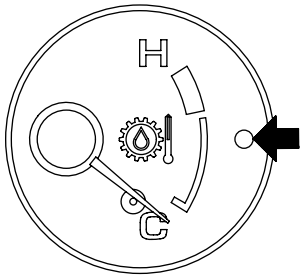

GK032099

This lamp (2) lights up to warn the operator that the torque converter oil temperature has risen.

During checks before starting (when the starting switch is turned to the ON position but the engine is not started), this monitor does not light up.

During operation (engine running)

If the torque converter oil temperature rises, the torque converter oil temperature caution lamp only will light up.

If the oil temperature rises further, the central warning lamp will light up and the alarm buzzer will sound intermittently.

At the same time, “E02“ is displayed on the top line of the character display and “TC OVERHEAT“ is displayed on the bottom line. Stop the machine and run the engine under no load at a mid-range speed until the lamp goes out.

3. Engine coolant temperature caution lamp

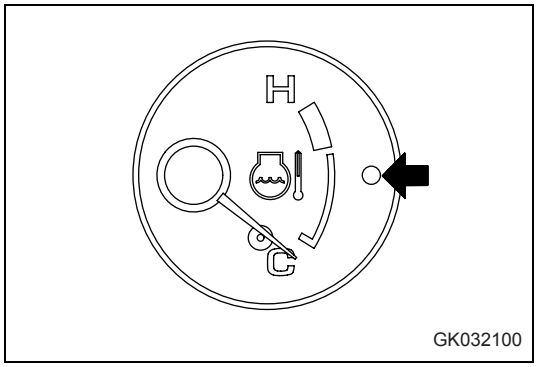

This lamp (3) lights up to warn the operator that the engine coolant water temperature has risen.

During checks before starting (when the starting switch is turned to the ON position but the engine is not started), this monitor does not light up.

During operation (engine running)

If the engine coolant temperature rises, only the engine coolant water temperature caution lamp will light up.

If the coolant temperature rises further, the central warning lamp will light up and the alarm buzzer will sound intermittently.

At the same time as the central warning lamp lights up, the top line of the character display displays “E02“ and the bottom line displays “BRAKE OVERHEAT“, so stop the machine and run the engine under no load at a mid-range speed until the lamp goes out.

4. Hydraulic oil temperature caution lamp

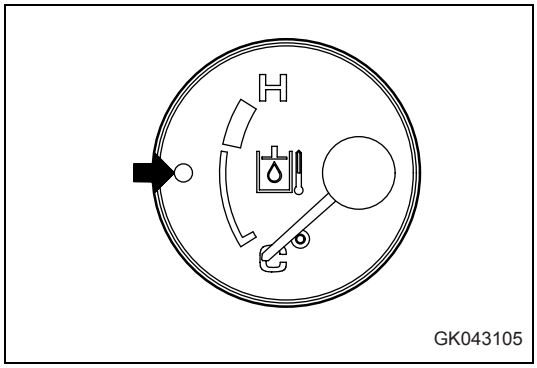

This lamp (4) lights up to warn the operator that the hydraulic oil temperature has risen.

During checks before starting (when the starting switch is turned to the ON position but the engine is not started), this monitor does not light up.

During operation (engine running)

If the hydraulic oil temperature rises, the hydraulic oil temperature caution lamp, the central warning lamp will light up, and the alarm buzzer will sound intermittently.

At the same time, “E02“ is displayed on the top line of the character display and “HYD OVERHEAT“ is displayed on the bottom line. Stop the machine and run the engine under no load at a mid-range speed until the lamp goes out.

5. Fuel level caution lamp

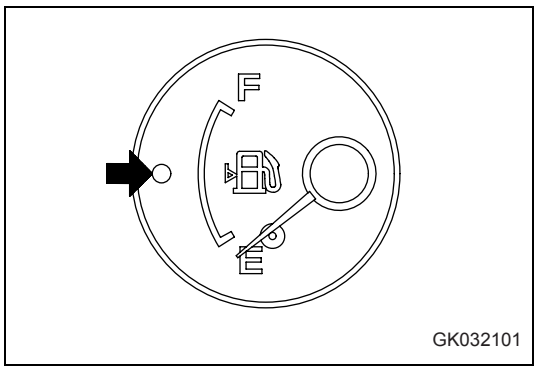

This lamp (5) lights up if the amount of fuel remaining in the fuel tank goes below 27 liters (7.13 US gal).

If it lights up, check and add fuel as soon as possible.

For details, see "Check fuel level, add fuel (3-90)".

REMARK

Even if the caution lamp lights up, action code “E02“ is not displayed on the character display.

Inspection and maintenance item

CAUTION

If these lamps light up, stop operations quickly and carry out the following action.

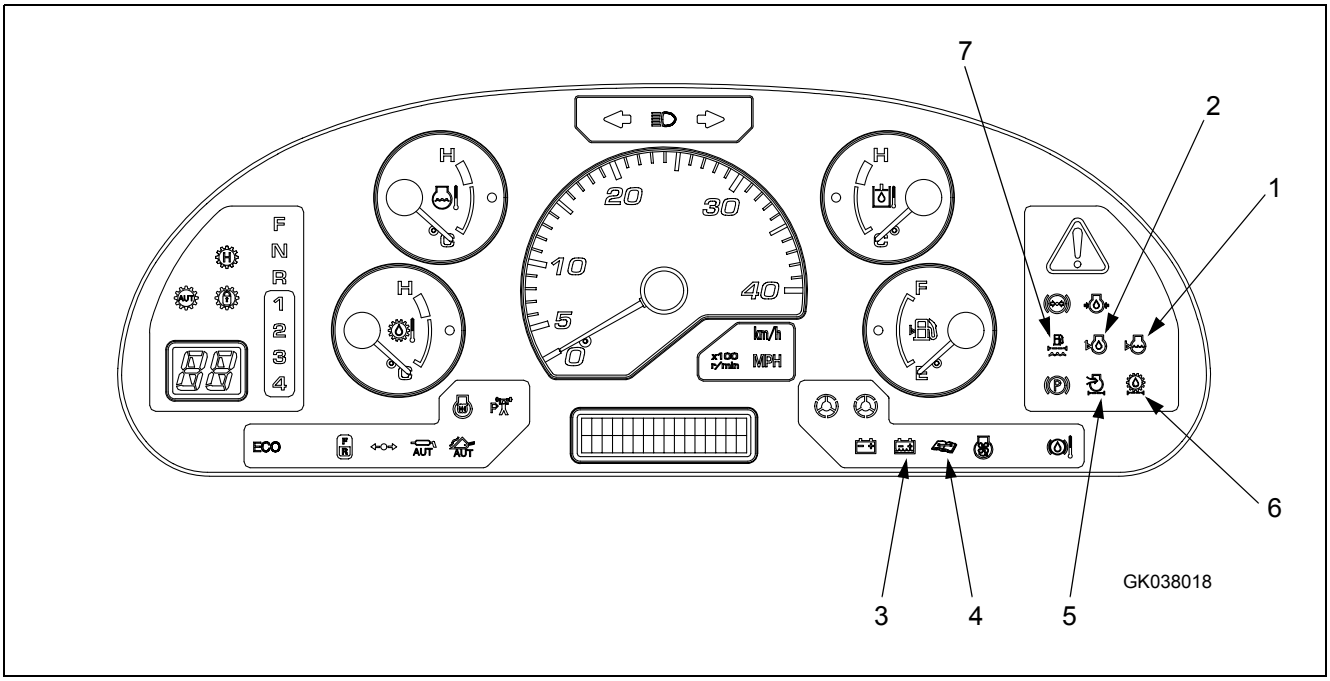

(1) Radiator coolant level caution lamp
(2) Engine oil level caution lamp
(3) Battery electrolyte level caution lamp (Option)
(4) Maintenance caution lamp
(5) Air cleaner clogging caution lamp (*)
(6) Transmission oil filter clogging caution lamp
(7) Fuel filter water detection caution lamp

(*) Machines eqipped with KOMTRAX

1. Radiator coolant level caution lamp

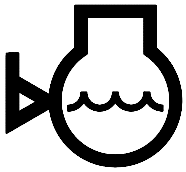

GK032102

This lamp (1) lights up to warn the operator that the coolant level in the radiator has gone down.

During checks before starting (when the starting switch is turned to the ON position but the engine is not started), this monitor lights up if the coolant level in the radiator is low.

At the same time, the top line of the character display displays “E01“ and the bottom line displays “COOLANT LOW“, so check the water level in the radiator, and add water.

During operation (engine running)

If the coolant level in the radiator becomes too low, the radiator coolant level caution lamp will light up.

At the same time, the top line of the character display displays “E01“ and the bottom line displays “COOLANT LOW“, so stop the engine, check the water level in the radiator, and add water.

2. Engine oil level caution lamp

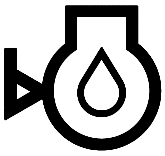

GK043106

This lamp (2) lights up to warn the operator that the oil level in the engine oil pan has gone down.

During checks before starting (when the starting switch is turned to the ON position but the engine is not started), this monitor lights up if the oil level in the engine oil pan is low.

At the same time, the top line of the character display displays “E01“ and the bottom line displays “COOLANT LOW“, so do not start the engine. Check the oil level in the engine oil pan and add oil.

REMARK

During checks before starting, if the engine is started with the engine oil level caution lamp lighted up, the lamp will stay lighted up.
Stop the engine, check the oil level in the engine oil pan, and add oil.

3. Battery electrolyte level caution lamp

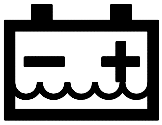

GK043107

(Option)

This lamp (3) lights up to warn the operator that the battery electrolyte level has gone down.

During checks before starting (when the starting switch is turned to the ON position but the engine is not started), this monitor lights up if the battery electrolyte level is low.

At the same time, “E01“ is displayed on the top line of the character display and “BATTERY LEV LOW“ is displayed on the bottom line, so check the electrolyte level and add distilled water.

During operation (engine running)

If the battery electrolyte level becomes too low, the battery electrolyte level caution lamp will light up.

At the same time, “E01“ is displayed on the top line of the character display and “BATTERY LEV LOW“ is displayed on the bottom line, so check the electrolyte level and add distilled water.

4. Maintenance caution lamp

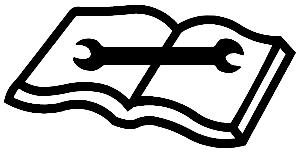

GK032104

CAUTION

If the caution lamp lights up, repair the problem as soon as possible. If this is left as it is, it will lead to failure.

When the time for filter and oil change is reached, this lamp (4) flashes or lights up for approx. 30 seconds after completion of the system check when the starting switch is at the ON position.

REMARK

The maintenance caution lamp flashes when there is less than 30 hours to the replacement time, and after the replacement time has passed, it stay on.

For details of the items covered by filter and oil replacement, see "Filter, oil replacement time display (3-14)".

After replacing the filter or changing the oil, reset time for the replacement. For details, see "Reset method for filter, oil replacement time (3-35)".

5. Air cleaner clogging caution lamp

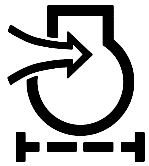

GK043108

(Machines eqipped with KOMTRAX)

This lamp (5) lights up if the air cleaner element becomes clogged when the engine is running.

During checks before starting (when the starting switch is turned to the ON position but the engine is not started), this monitor does not light up.

During operation (engine running)

The lamp lights up if the air cleaner element becomes clogged.

At the same time, the top line of the character display displays “E01“ and the bottom line displays “AIR FILTER“, so stop the engine and clean or replace the element.

REMARK

It is possible to check the condition of clogging of the air cleaner with the dust indicator installed at the side of the air cleaner.

6. Transmission oil filter clogging caution lamp

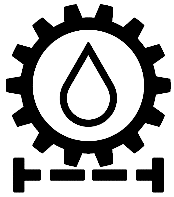

GK032105

This lamp (6) is not used.

7. Fuel filter water detection caution lamp

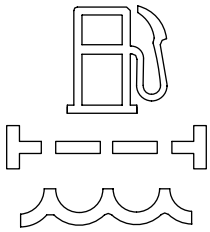

GK050032

This lamp (7) lights up if water accumulates in the water separator installed to the fuel pre-filter.

If it lights up, check the pre-filter.

For details, see "Replace fuel pre-filter cartridge (4-68)".

Pilot display portion

When the starting switch is ON, the pilot display lights up when the display items are functioning.

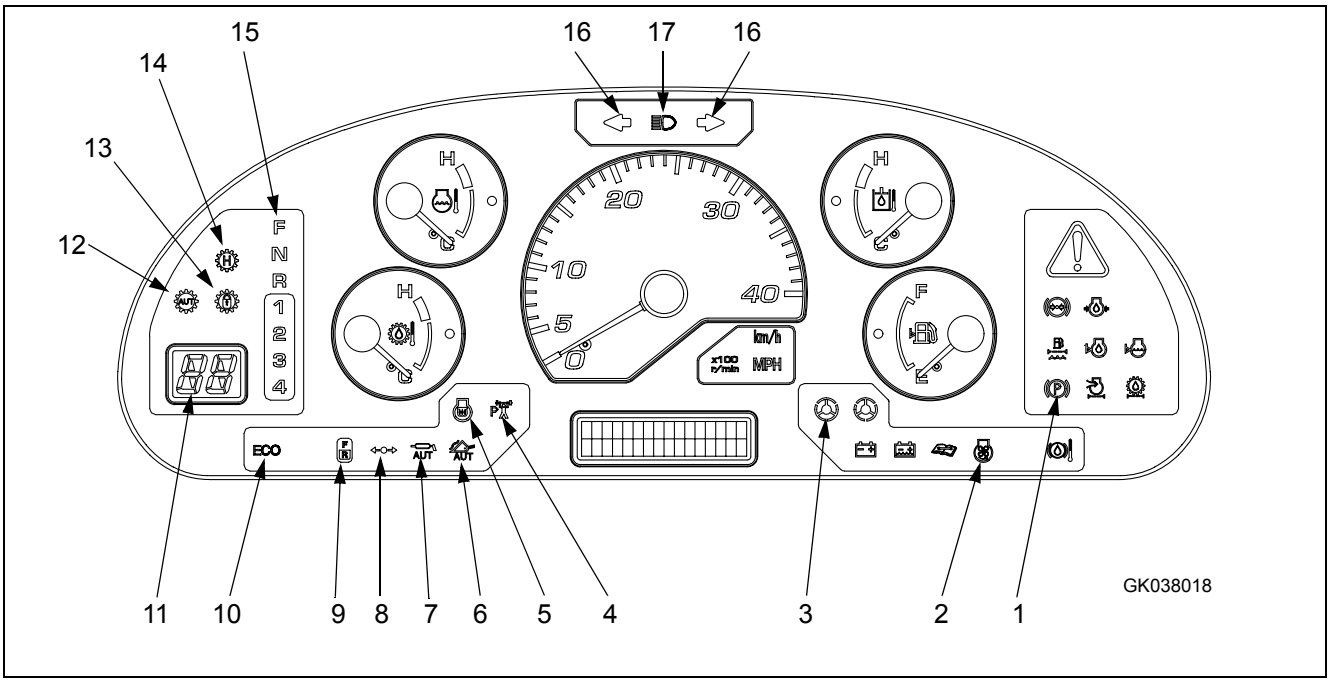

(1) Parking brake pilot lamp
(2) Cooling fan reverse rotation pilot lamp
(3) Emergency steering pilot lamp
(4) Output mode pilot lamp (power mode)
(5) Preheating pilot lamp
(6) Semi auto digging pilot lamp (Option)
(7) Auto-greasing pilot lamp (Option)
(8) Joystick pilot lamp (Option)
(9) Directional selector pilot lamp
(10) Economy operation display lamp
(11) Shift indicator
(12) Auto-shift pilot lamp
(13) Torque converter lockup pilot lamp (Option)
(14) Shift hold pilot lamp
(15) Shift lever position pilot lamp
(16) Turn signal pilot lamp
(17) Head lamp high beam pilot lamp

1. Parking brake pilot lamp

This lamp (1) lights up when the parking brake is applied.

When the parking brake switch is turned ON, the parking brake pilot lamp lights up.

GK032107

2. Cooling fan reverse rotation pilot lamp

This lamp (2) lights up when the direction of rotation of the cooling fan is reversed.

When the cooling fan reverse rotation switch is turned ON and the fan rotates in reverse, the cooling fan reverse rotation pilot lamp lights up.

At the same time, “COOLING FAN REVERSE“ is displayed on the character display.

For details, see "Cooling fan reverse rotation switch (3-54)".

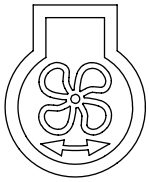

GK043111

REMARK

When the engine is running, even if the cooling fan reverse switch is operated, the fan does not rotate in reverse.
In this case, the position of the switch and the actual direction of rotation of the fan are different, so the cooling fan reverse rotation pilot lamp flashes.
Return the switch to its original position or stop the engine and operate the switch.

3. Emergency steering pilot lamp

(Green)

This lamp (3) lights up during travel operations if the steering pressure drops and the emergency steering pump is actuated.

If the engine stops when the machine is traveling or an abnormality occurs in the steering oil pressure circuit, and the machine is traveling at a speed of more than 2 km/h (1.2 MPH), the emergency steering is automatically actuated and the lamp lights up.

If the lamp lights up, move the machine immediately to a safe place, stop the engine, and check the condition.

In addition, the lamp flashes if the emergency steering is actuated continuously for one minute.

At the same time, “E02 EMR S/T OVERRUN“ is displayed on the character display, so move the machine immediately to a safe place, stop the engine, and check the condition.

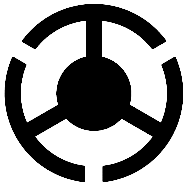

GK032096

There is an emergency steering self-check function.

For details, see "Emergency steering (3-118)".

4. Output mode pilot lamp (power mode)

This lamp (4) lights up when the power mode is selected.

When the engine power mode selector switch is used to select power mode, the pilot lamp lights up.

For details, see "Power mode selector switch (3-42)".

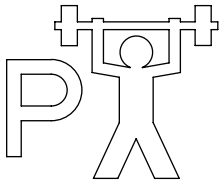

GK043112

5. Preheating pilot lamp

This lamp (5) lights up when the engine preheating electric heater is actuated.

In cold weather, when the starting switch is turned to the ON position, this lamp lights up, and when the preheating is completed, it goes out.

The preheating time differs according to the engine water temperature.

For details, see "Starting engine (3-98)".

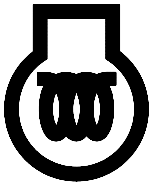

GK032108

6. Semi auto digging pilot lamp

(Option)

This lamp (6) is not used.

GK050040

7. Auto-greasing pilot lamp

(Option)

This lamp (7) is not used.

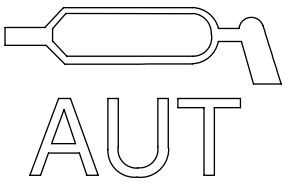

GK050033

8. Joystick pilot lamp

(Option)

This lamp (8) is not used.

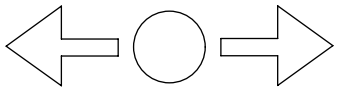

GK050034

9. Directional selector pilot lamp

This lamp (9) lights up when the directional selector switch actuation switch on the right switch panel is turned ON.

It shows that it is possible to switch the direction of travel between FORWARD and REVERSE with the directional switch at the side of the lift arm control lever.

For details, see "Changing direction (3-110)".

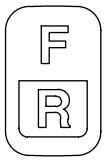

GK043114

10. Economy operation display lamp

This lamp (10) lights up to show that the economy mode is being used (economy operation).

It does not light up when the setting is power mode.

This lamp is interconnected with the accelerator pedal and lights up or goes out according to the operation of the accelerator pedal, so use it as a guideline for economy operation.

GK050039

11. Shift indicator

This indicator (11) indicates the transmission gear range (actual travel speed range).

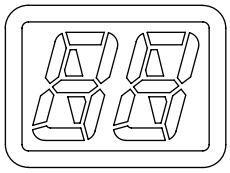

GK043113

12. Auto-shift pilot lamp

This lamp (12) lights up when the auto-shift function is selected.

When the transmission auto shift/manual shift selector switch is set to auto shift, the pilot lamp lights up.

Use the transmission shift mode selector switch to select the shift mode.

With the auto shift, select “H“ or “L“ to give different shift points.

For details, see "Transmission shift mode selector switch (3-43)".

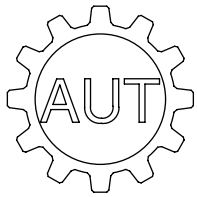

GK043115

13. Torque converter lockup pilot lamp

(Option)

This lamp (13) lights up when the torque converter lock-up is engaged and the transmission actually enters direct drive.

For details, see "Handling torque converter lock-up (6-3)"

GK050035

14. Shift hold pilot lamp

This lamp (14) lights up when the shift hold is actuated.

When the hold switch is pressed, the pilot lamp lights up. When the switch is pressed again, the pilot lamp goes out.

For details, see "Hold switch (3-50)".

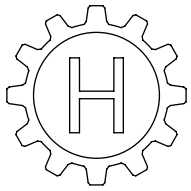

GK043116

15. Shift lever position pilot lamp

This lamp (15) displays the transmission position of the gearshift lever.

When auto shift has been selected, it shows the maximum speed range selected by the automatic transmission. The maximum speed range can be selected by the shift-up switch and shift-down switch.

GK043117

16. Turn signal pilot lamp

When the turn signal lamp flashes, this lamp (16) also flashes.

REMARK

If there is a disconnection in the turn signal lamp, the flashing interval becomes shorter.

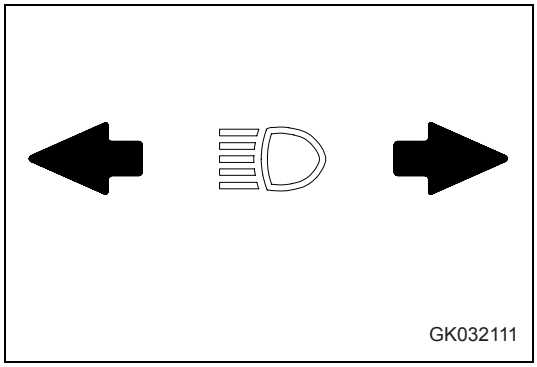

17. Head lamp high beam pilot lamp

This lamp (17) lights up when the head lamp is at high beam.

When the dimmer switch is used to set the head lamp to high beam, the pilot lamp lights up.

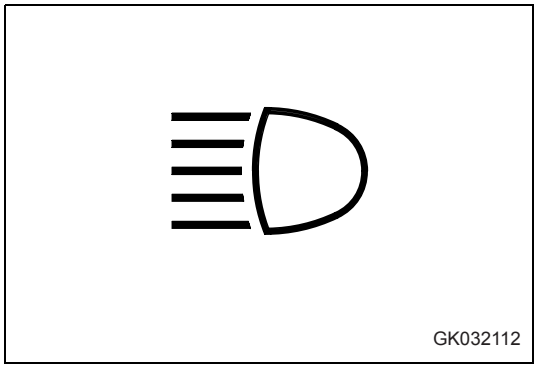

Meter display portion

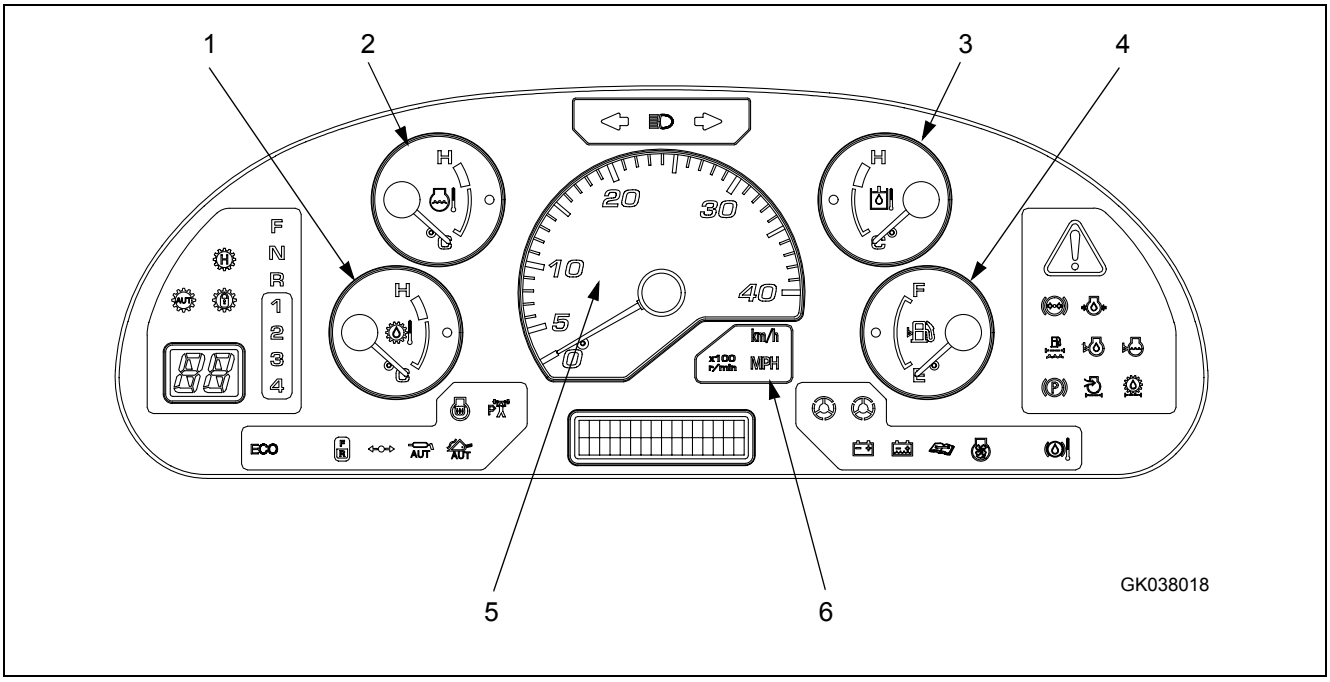

(1) Torque converter oil temperature gauge
(2) Engine cooling water temperature gauge
(3) Hydraulic temperature gauge
(4) Fuel gauge
(5) Speedometer
(6) Meter display pilot lamp

1. Torque converter oil temperature gauge

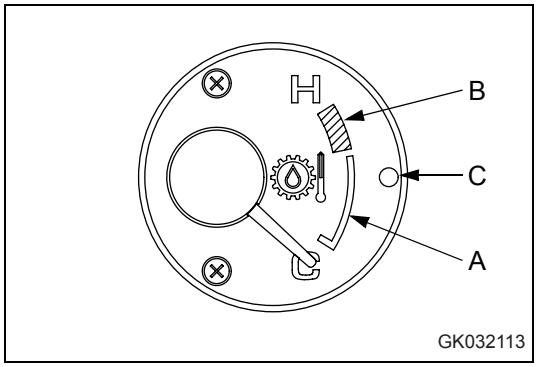

This meter (1) indicates the torque converter oil temperature.

During normal operations, the indicator should be in the white range (A).

If it enters red range (B) during operations, caution lamp (C) inside the torque converter oil temperature gauge will light up. At the same time, the central warning lamp lights up and the alarm buzzer sounds intermittently.

In addition, “E02“ is displayed on the top line of the character display and “TC OVERHEAT“ is displayed on the bottom line.

Run the engine at a midrange speed under no load and wait for the indicator to return to the white range (A).

2. Engine cooling water temperature gauge

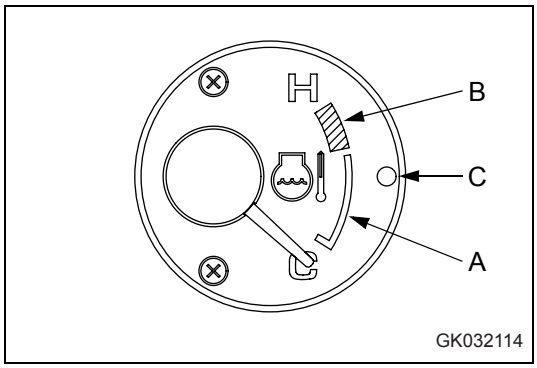

This meter (2) indicates the engine coolant temperature.

During normal operations, the indicator should be in the white range (A).

If the indicator enters red range (B) during operations, caution lamp (C) inside the engine coolant temperature gauge lights up. At the same time, the central warning lamp lights up and the alarm buzzer sounds. In addition, the top line of the character display displays “E02“ and the bottom line displays “ENGINE OVERHEAT“.

Run the engine at a midrange speed under no load and wait for the indicator to return to the white range (A).

3. Hydraulic temperature gauge

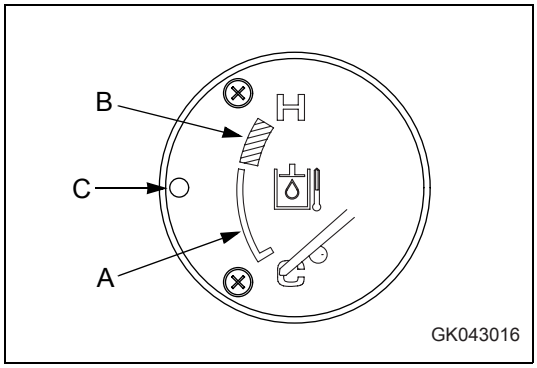

This meter (3) indicates the hydraulic oil temperature.

It should be in white range (A) during operations.

If it enters red range (B) during operations, caution lamp (C) inside the hydraulic oil temperature gauge will light up. At the same time, the central warning lamp lights up and the alarm buzzer sounds intermittently.

In addition, “E02“ is displayed on the top line of the character display and “HYD OVERHEAT“ is displayed on the bottom line.

Run the engine under no load at a mid-range speed and wait until the indicator goes down to white range (A).

4. Fuel gauge

This meter (4) indicates the amount of fuel remaining in the fuel tank.

If the indicator is at the F position, it indicates that the tank is full.

If the indicator is at the E position, it indicates that there is little fuel remaining. When the amount of remaining fuel goes below 27 liters (7.13 US gal), caution lamp (A) inside the fuel gauge lights up.

If it lights up, check the fuel level and add fuel.

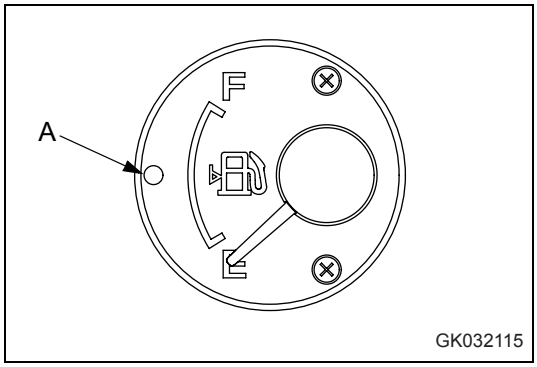

5. Speedometer

This meter (5) indicates the travel speed of the machine.

The display unit is indicated on meter display pilot lamp (6).
It is also possible to display the engine speed by switching meter (5).

If you wish to switch between the speedometer and tachometer, please contact your KOMATSU distributor to have it switched.

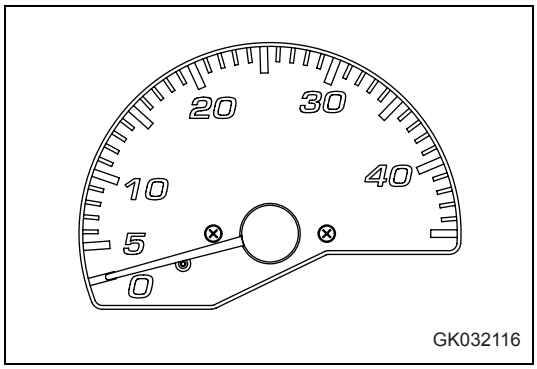

6. Meter display pilot lamp

This lamp (6) displays the unit for the travel speed or engine tachometer.

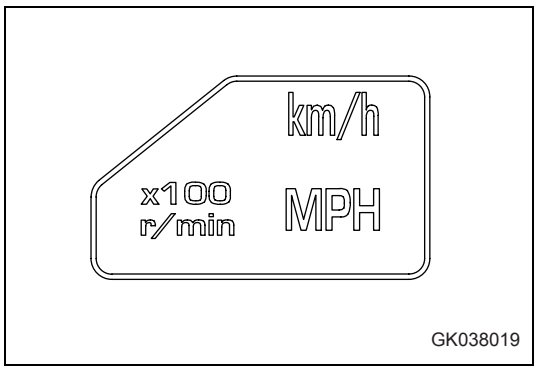

Other functions of machine monitor

The machine monitor also has the following functions.

Odometer, filter/oil replacement time reset, telephone number input, language selection, monitor brightness adjustment.

Method of displaying odometer

Use this when checking the total distance that the machine has traveled.

1. Check that the character display is showing the service meter or the action code. If it is giving any other display, turn the starting switch OFF, then turn the starting switch to the ON position and wait for the above display to be given.

```
O D O                    < >
   1 2 3 4 . 5   k m      ■
```

2. Press the (◇) of monitor panel mode selector switch 1. It displays the odometer.
3. When completing the operation, press (■) of monitor panel mode selector switch 1 or turn the starting switch OFF.

Reset method for filter, oil replacement time

The filter and oil replacement time is displayed on the character display, so if the filter and oil have been replaced, reset the filter and oil change time.

1. Press the (◇) of monitor panel mode selector switch 1, and display the odometer.

```
O D O                    < >
   1 2 3 4 . 5   k m      ■
```

2. Press (>) or (<) of monitor panel mode selector switch 2 and display “MAINTENANCE MONITOR“.

```
M A I N T E N A N C E    < >
M O N I T O R            ◇■
```

3. Press the (◇) of monitor mode selector switch 1. The screen switches to the display shown on the right.

   The bottom line shows two items: the replacement time on the left and the total number of times the item has been replaced on the right.

```
0 3 : F U E L   F I L T  < >
  1 0 0 0 h :    9 9     ◇■
```

4. Press the (>) or (<) of monitor panel mode selector switch 2 to display the item (filter or oil) which has reached the replacement time.

5. Press the (◇) portion of the character display mode selector switch. The screen switches to the display shown on the right.

   “RESET“ and “ITEM TO RESET“ are displayed on the top line in turn.

```
RESET
YES  <>  NO  ■ENTER
```

6. When resetting the replacement time, press (>) or (<) of monitor panel mode selector switch 2, align the cursor with “YES“, then press (■) of machine monitor mode selector switch 1. It will reset and return to the previous screen.
   To abort, align the cursor with “NO“, then press (■) of monitor panel mode selector switch 1.

```
RESET
YES  <>  NO  ■ENTER
```

7. When resetting the replacement time for another item, carry out the procedure from Step 4. After completing, press (■) of monitor panel mode selector switch 1 twice or turn the starting switch OFF.

Input method for telephone number

It is possible to display the telephone number on the right side of “CALL“ displayed on the character display when action code “E03“ is generated.

1. Press the (◇) of monitor panel mode selector switch 1, and display the odometer.

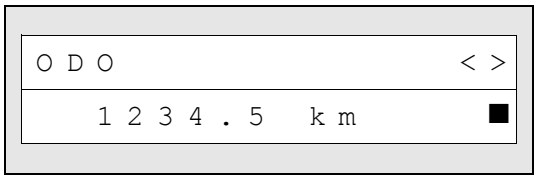

2. Press (>) or (<) of monitor panel mode selector switch 2 and display “TEL“.

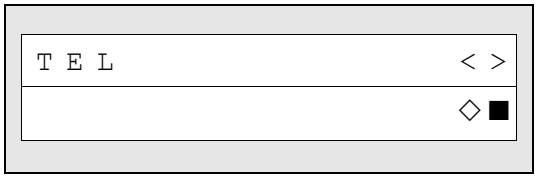

3. Press (◇) of monitor panel mode selector switch 1.
   It will change to the display in the diagram on the right.

   Once the telephone number is input, the input number will be displayed next time.

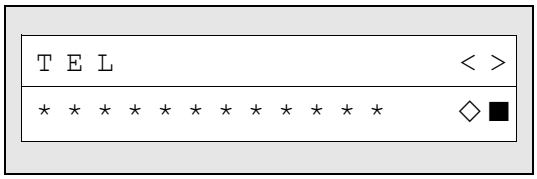

4. Up to 12 digits can be displayed for the telephone number. Input from the first digits.
   The cursor is displayed at the input position. Press (>) or (<) of monitor panel mode selector switch 2 and display “0 to 9“.
   To leave a blank, select “*“.
   When the input value is decided, press (◇) of monitor panel mode selector switch 1. The cursor will move to the next position.

5. Repeat the procedure in Step 4 until the last digit. At the last digit, press (◇) of monitor panel mode selector switch 1 to return to the previous screen.
   If there is a mistake in the input or the input is to be stopped, press (■) of monitor panel mode selector switch 1 to return to the previous screen.

6. When completing the operation, press (■) of monitor panel mode selector switch 1 twice or turn the starting switch OFF.

Method for selecting language

Use this when switching the language displayed on the character display.

The following explanation is for when English is set as the language for the character display.

1. Press the (◇) of monitor panel mode selector switch 1, and display the odometer.

```
O D O                    < >
   1 2 3 4 . 5   k m      ■
```

2. Press (>) or (<) of monitor panel mode selector switch 2 and display “LANGUAGE“.

```
L A N G U A G E          < >
                         ◇■
```

3. Press the (◇) of monitor mode panel selector switch 1. The presently selected language is displayed.
4. Press (>) or (<) of monitor panel mode selector switch 2 and select the language.

```
E N G L I S H            < >
                         ◇■
```

NOTE

The available languages are English, Japanese, German, French, Italian, Spanish, and Swedish.

5. After selecting the language, press the (◇) of monitor panel mode selector switch 1.

   To confirm, set the cursor at “YES“, then press the (■) of machine monitor mode selector switch 1. The language will be selected and the screen will return to the previous screen.

   To abort, set the cursor at “NO“, then press the (■) of machine monitor mode selector switch 1.

```
E N G L I S H
Y E S   < >   N O   ■E N T E R
```

6. When completing the operation, press (■) of monitor panel mode selector switch 1 twice or turn the starting switch OFF.

Method of adjusting monitor brightness

Do as follows to adjust the brightness of the monitor.

1. Press the (◇) of monitor panel mode selector switch 1, and display the odometer.

```
ODO                    <>
   1234.5  km          ■
```

2. Press (>) or (<) of monitor panel mode selector switch 2 and display “BRIGHTNESS“.

```
BRIGHTNESS             <>
ADJUST                 ◇■
```

3. Press the (◇) of monitor panel mode selector switch 1. “MONITOR PANEL“ will be displayed on the bottom line and it will be possible to adjust the brightness of the monitor.

```
BRIGHTNESS             <>
MONITOR  PANEL         ◇■
```

The brightness can be adjusted for the overall monitor or for the liquid crystal display only.
To adjust only the brightness of the liquid crystal display, press the (>) or (<) of monitor panel mode selector switch 2 to switch the display to “LCD PANEL“.

```
BRIGHTNESS             <>
LCD  PANEL             ◇■
```

4. Press the (◇) of monitor panel mode selector switch 1.
The screen will change to the display shown on the right and it will be possible to adjust the brightness.

```
ADJUST                 <>
L     ■      H   ■ENTER
```

5. Press the (>) or (<) of monitor panel mode selector switch 2 to select a level between L and H (available range: 7 stages).

6. After selecting the brightness, press the (■) of monitor panel mode selector switch 1.
The brightness will be selected and the screen will return to the previous screen.

7. When completing the operation, press (■) of monitor panel mode selector switch 1 twice or turn the starting switch OFF.

3.2.2 Switches

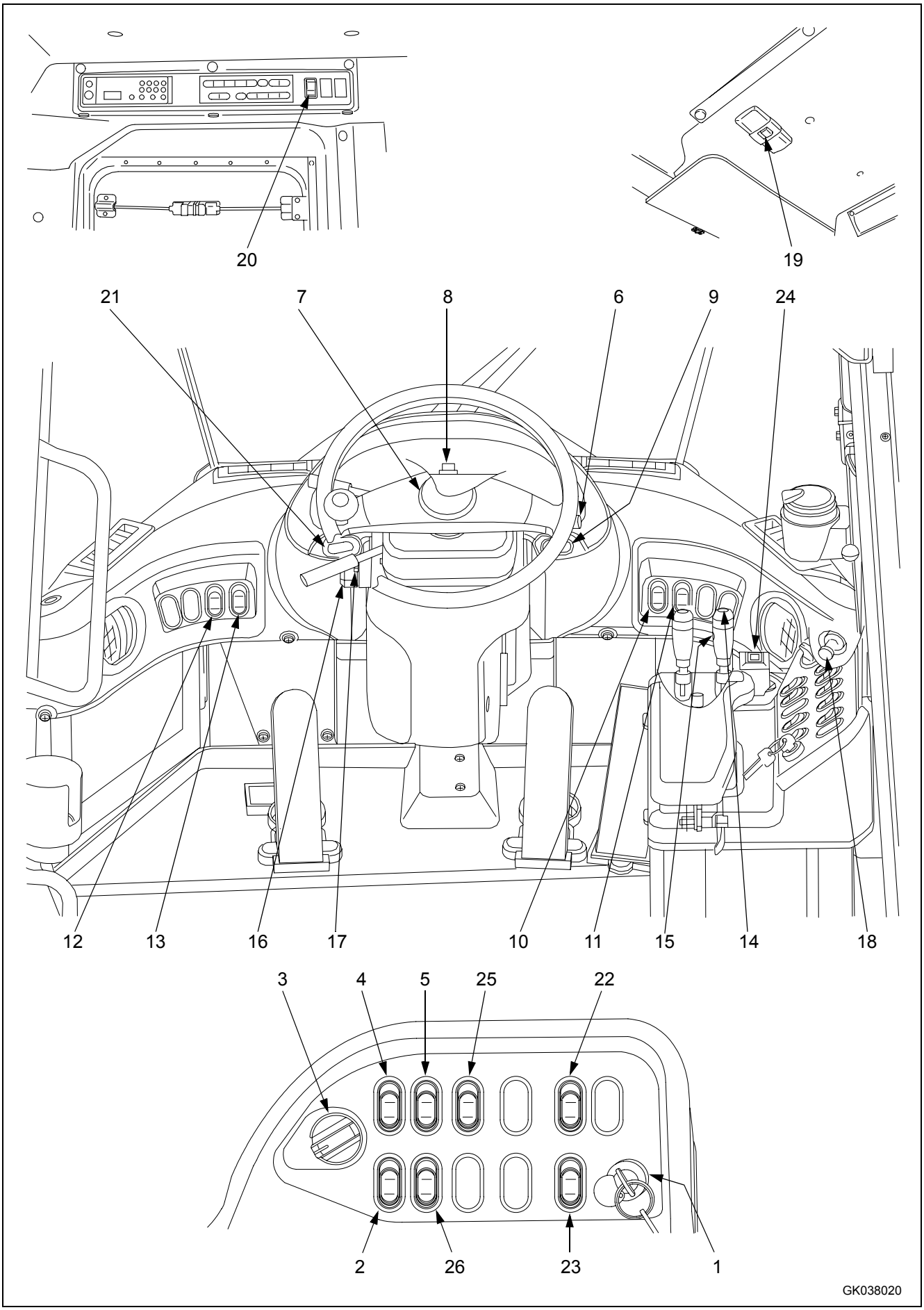

(1) Starting switch
(2) Power mode selector switch
(3) Transmission shift mode selector switch
(4) Transmission cut-off switch
(5) Transmission cut-off set switch
(6) Lamp switch
(6) Turn signal lever
(6) Dimmer switch
(7) Horn button
(8) Hazard lamp switch
(9) Parking brake switch
(10) Front working lamp switch
(11) Rear working lamp switch
(12) Monitor panel mode selector switch 1
(13) Monitor panel mode selector switch 2
(14) Kickdown switch
(15) Hold switch
(16) Front wiper switch
(17) Rear wiper switch
(18) Cigarette lighter
(19) Room lamp switch
(20) Rear heated wire glass switch
(21) E.C.S.S. switch (*) (Option)
(22) Emergency steering switch (Option)
(23) Cooling fan reverse rotation switch
(24) Directional selector switch
(25) Directional selector actuation switch
(26) Torque converter ock up switch (Option)

(*) E.C.S.S.: Electrically Controlled Suspension System

1. Starting switch

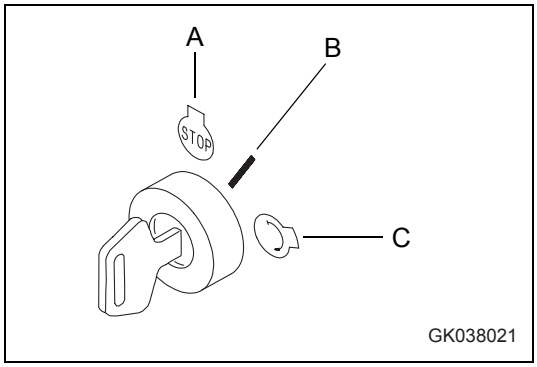

This switch (1) is used to start or stop the engine.

(A): OFF position
It is possible to insert and remove the starting switch key, all the electric system switches are turned off, and the engine stops. In addition, the parking brake is automatically applied.

(B): ON position
In this position, electric current flows in the charging and lamp circuits.
Keep the starting switch key at the ON position while the engine is running.

If the engine water temperature is below 7°C (44.6°F) when the engine is started, the preheating pilot lamp will light up automatically and preheating will start.
The preheating time differs according to the water temperature when the engine is started.
If the preheating pilot lamp lights up, wait for it to go out, then turn the key to the START position.

(C): START position
This is the position to start the engine. Hold the key at this position while cranking the engine. Release the key immediately after the engine has been started. The key will return to ON position (B) when released

2. Power mode selector switch

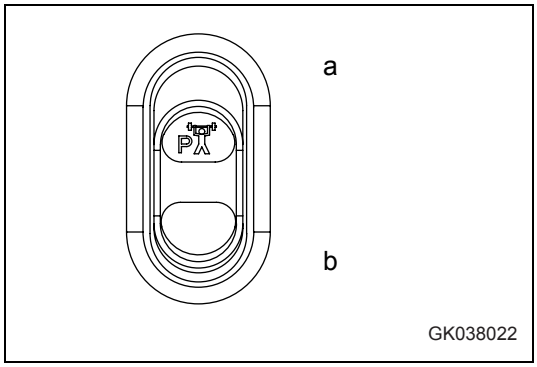

This switch (2) can be used to switch the engine output to match the purpose of the operation.

When the POWER mode is selected, the output mode pilot lamp (POWER mode) on the machine monitor lights up.

Position (a):
Economy mode (engine output low); operations with emphasis on fuel economy, such as operations on level ground where a maximum output is not needed

Position (b):
Power mode (engine output high); operations with emphasis on productivity

REMARK

To carry out operations with effective fuel consumption, normally set to the Economy mode.
The maximum engine speed is set lower than in the Power mode, but except for hard operations such as heavy-duty digging of rock, it can display ample power and can also display good fuel consumption. Furthermore, by pressing the accelerator pedal lightly, it is possible to reduce the fuel consumption.
Set to the Power mode when carrying out heavy-duty digging operations of rock or operations where the speed is required, or when traveling at high speed on flat ground or on slopes.

3. Transmission shift mode selector switch

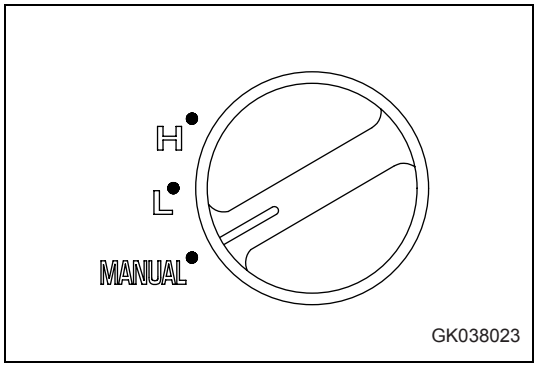

This switch (3) is used to change the shift point when the AUTO SHIFT/MANUAL selector switch has been switched to auto shift.

At each of the L, H positions, the system switches to auto shift and the auto shift pilot lamp on the machine monitor lights up. Normally, set to auto shift.

MANUAL position:
System is set to manual shift and speed range is a position selected by gearshift lever

L position:
Travel speed when shifting up is low (flat ground, normal travel)

H position:
Travel speed when shifting up is high (traveling uphill, traveling at high speed)

If it is set to the L position when the work is mainly operations on flat ground, it is possible to shift up when the engine speed is low. This is effective in reducing fuel consumption.

For details of the manual shift, see "Manual shift (3-58)".

For details of the auto-shift, see "Automatic shift (3-59)".

4. Transmission cut-off switch

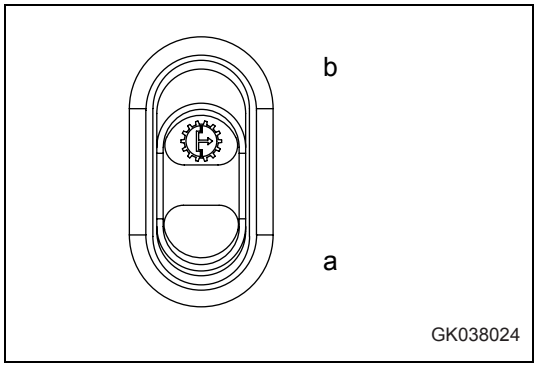

WARNING

When moving the machine off on an uphill slope, set the transmission cut-off switch to the OFF position, depress the accelerator pedal while keeping the left brake pedal depressed, then gradually release the brake pedal and allow the machine to move. In this way the machine can be prevented from traveling backwards.

Press this switch (4) to turn on and off the transmission cut-off system.

When the switch is pressed, the pilot lamp lights up and the system is turned ON. The transmission is shifted to neutral at the adjusted brake pedal depression position.

Normally, keep the switch at the ON position.

For details of the method of adjusting the cut-off position, see "Adjusting transmission cut-off position (3-116)".

Position (a): OFF
The left brake pedal acts in the same way as the normal brake (right brake pedal).

Position (b): ON
The left brake pedal acts in the same way as the normal brake, and at the same time, sets the transmission to neutral.

The brake pedal position where the cut-off system is actuated can be adjusted by using the transmission cut-off set switch on the right switch panel.

5. Transmission cut-off set switch

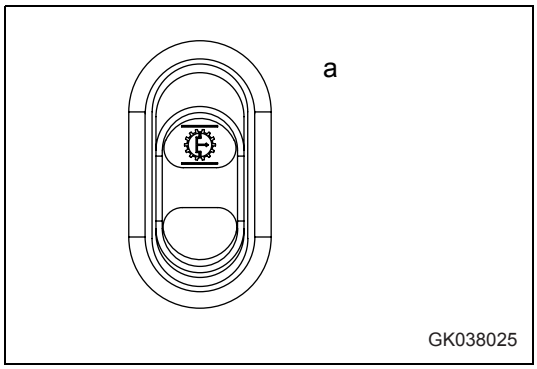

CAUTION

Apply the parking brake before adjusting the transmission cut-off position.

Turn this switch (5) ON to adjust the brake pedal position where the transmission is automatically shifted to Neutral.

Position (a): ON
Cut-off position can be adjusted

When the switch is released, it automatically returns to its original position.

For details of the method of adjusting the cut-off position, see "Adjusting transmission cut-off position (3-116)"

6. Lamp switch

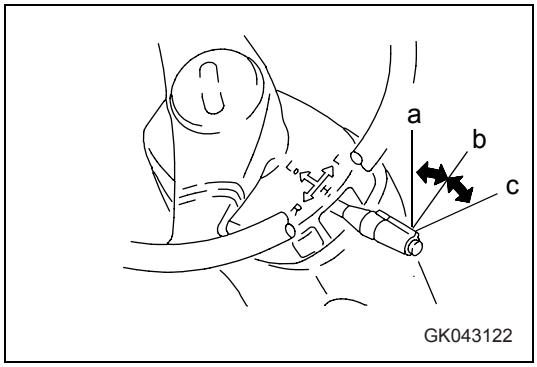

This switch (6) is used to light up the front lamps, side clearance lamps, tail lamps, and instrument panel.

Position (a): OFF

Position (b):
Side clearance lamps, tail lamps, and instrument panel light up

Position (c):
Head lamps light up in addition to lamps at (b) position

REMARK
The lamp switch can be operated regardless of the position of the lever.

6. Turn signal lever

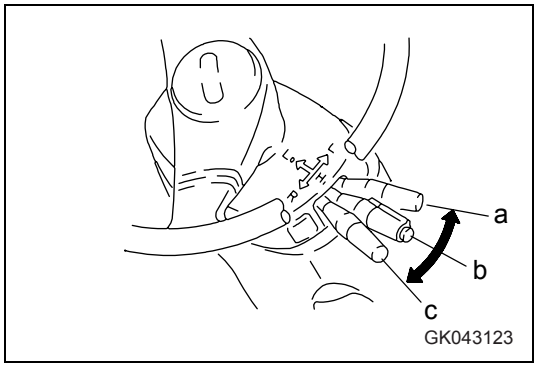

This switch (6) is used to operate the turn signal lamp.

Position (a): LEFT TURN (Push lever FORWARD.)

Position (b): OFF

Position (c): RIGHT TURN (Pull lever BACK.)

REMARK
When the lever is operated, the turn signal pilot lamp also flashes.
When the steering wheel is turned back, the lever automatically returns to its original position. If it does not return, return it manually.

6. Dimmer switch

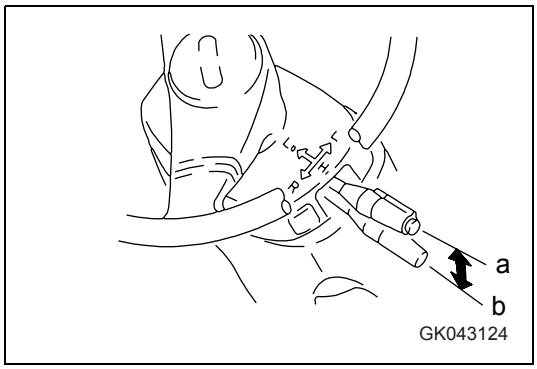

This switch (6) is used to switch the head lamps between high beam and low beam.

When the head lamps are at high beam, the high beam pilot lamp lights up.

Position (a): Low beam

Position (b): High beam

7. Horn button

When the horn button (7) in the center of the steering wheel is pressed, the horn will sound.

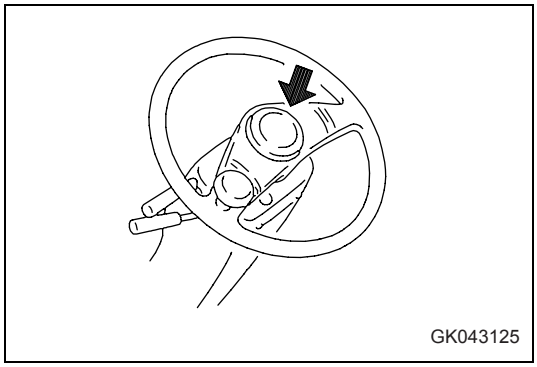

8. Hazard lamp switch

WARNING

Use the hazard lamp only in emergencies. Using the hazard lamp when traveling may cause confusion for other machine operators.

This switch (8) is used in emergencies, such as when the machine breaks down and has to be parked on the road.

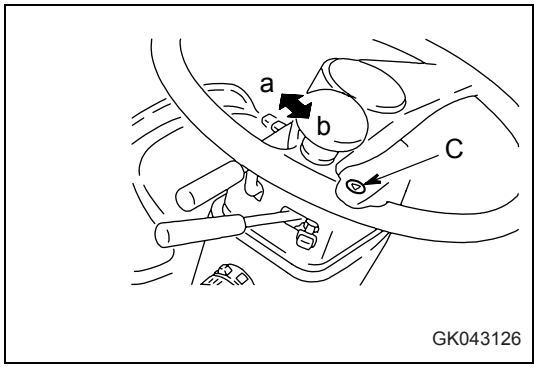

Position (a):
Turn signal lamps, turn signal pilot lamp flash, and pilot lamp (C) lights up at same time.

Position (b):
Lamps are OFF.

9. Parking brake switch

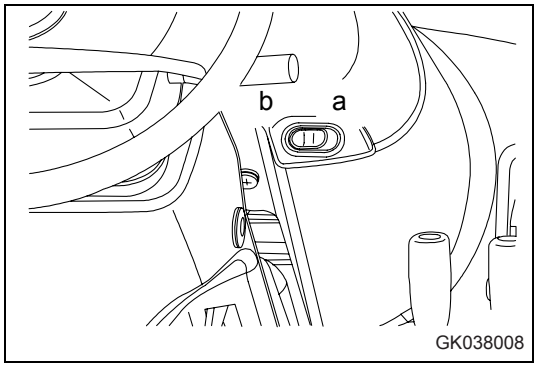

WARNING

Always apply the parking brake when leaving the machine or when parking it.
Even if the parking brake switch is turned ON, there is danger until the parking brake pilot lamp lights up, so keep the brake pedal depressed.

NOTE

- *Never use the parking brake switch to apply the brakes when traveling, except in an emergency. The parking brake may be damaged and this may lead to a serious accident. Apply the parking brake only after the machine has stopped.*
- *If the parking brake has been used as an emergency brake when traveling at high speed, contact your KOMATSU distributor to have the parking brake checked for any abnormality.*

This switch (9) operates the parking brake.

Position (a): ON
The parking brake is applied, and the parking brake pilot lamp lights up.

Position (b): OFF
The parking brake is released.

REMARK

When the parking brake is applied, the machine will not move off even if the directional lever is operated.
If the directional lever is placed at the F or R position with the parking brake still applied, the central warning lamp will light up and the buzzer will sound.
Before starting the engine, turn the parking brake switch ON, then turn it OFF again.

10. Front working lamp switch

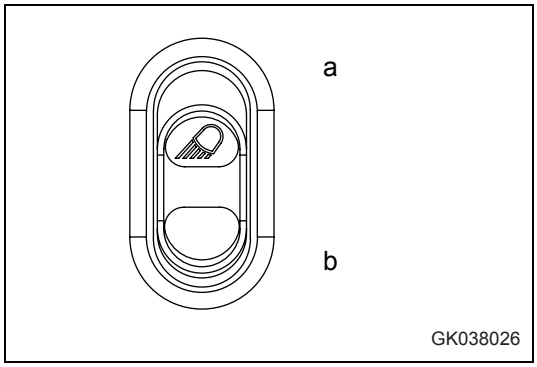

WARNING

Always turn the working lamp off before traveling on public roads.

When turning the front working lamp ON, operate the lamp switch to turn the side clearance lamp ON or the head lamp ON, then operate this switch (10).

Position (a): Working lamp lights up

Position (b): Working lamp goes out

If position (a) is pressed, the pilot lamp will light up and the working lamp circuit will be switched ON.

If the lamp switch is not at the ON position for the side clearance lamp or head lamp, the working lamp will not light up.

11. Rear working lamp switch

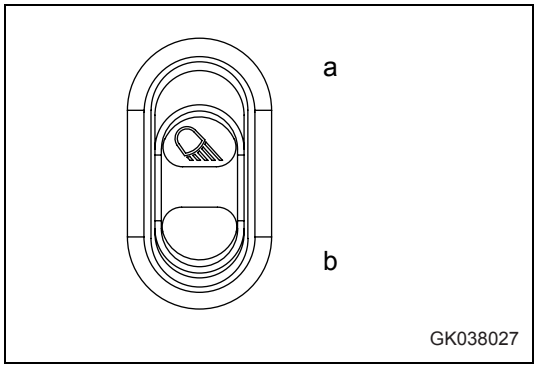

WARNING

Always turn the working lamp off before traveling on public roads.

When turning the rear working lamp ON, operate the lamp switch to turn the side clearance lamp ON or the head lamp ON, then operate this switch (11).

Position (a): Working lamp lights up

Position (b): Working lamp goes out

If position (a) is pressed, the pilot lamp will light up and the working lamp circuit will be switched ON.

If the lamp switch is not at the ON position for the side clearance lamp or head lamp, the working lamp will not light up.

12. Monitor panel mode selector switch 1

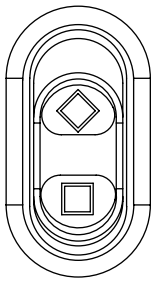
GK038028

This switch (12) is used to switch the function of the character display.

When the switch is released, it automatically returns to its original position.

The basic operation is as follows.

Position (◇):
Press here to select (confirm) each mode or operation

Position (■):
Press here to cancel each mode or operation

13. Monitor panel mode selector switch 2

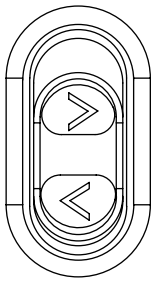
GK038029

This switch (13) is used to switch the function of the character display.
When the switch is released, it automatically returns to its original position.

The basic operation is as follows.

Position (>):
Press here to go on to the next screen, or to move the cursor forward, or to increase the number when entering numerals

Position (<):
Press here to go back to the previous screen, or to move the cursor back, or to reduce the number when entering numerals

14. Kickdown switch

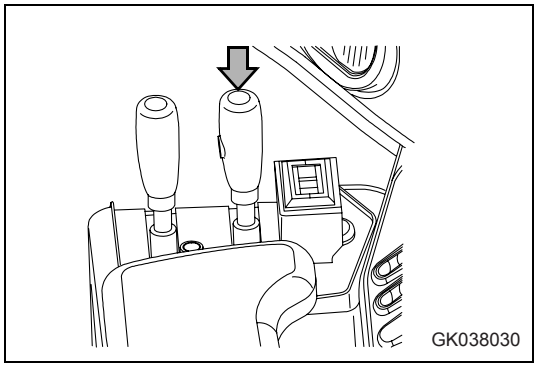

When the gearshift lever is in 2nd, if switch (14) on the head of the lift arm control lever is pressed, the transmission will shift down to 1st.

Use this when you need to increase the drawbar pull in digging operations.

If the transmission is in auto-shift, and the travel speed is below 10.5 km/h (6,5 MPH) in any speed range when traveling in either forward or in reverse, the kick-down switch is actuated and it is possible to shift down to 1st.

This makes it easy to carry out load and carry operations.
Even if the travel speed is more than 10.5 km/h (6,5 MPH), this switch can be used to shift the transmission down. Each time the kick-down switch is pressed, the speed range will shift down one range at a time (F4 -> F3 -> F2).

REMARK

When canceling the kick-down, operate the directional lever. In manual shift, the kick-down can be canceled by operating the gearshift lever to any position other than 2nd. It is also possible to cancel the kick-down by turning the starting switch OFF.
In auto-shift, if the travel speed becomes high after the kick-down, the gear will be shifted up by the auto-shift.
In auto-shift, when traveling at more than 18 km/h (11.2 MPH) in 3rd or at more than 28 km/h (17.4 MPH) in 4th, even if the kick-down switch is pressed, the transmission will not shift down. This is to prevent overrun of the engine.

15. Hold switch

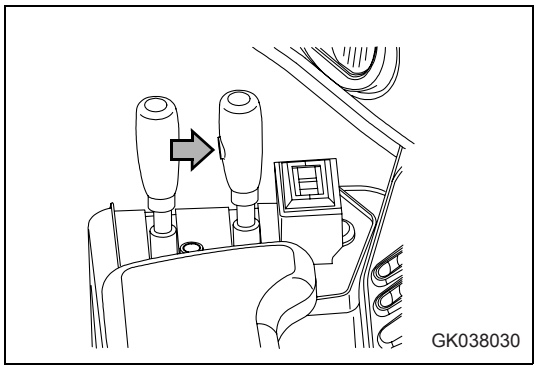

To fix the speed range when traveling in automatic transmission, press switch (15) at the side of the lift arm control lever knob. The transmission will be fixed in the speed range displayed on shift indicator (A) on the machine monitor and shift hold pilot lamp (B) will light up.

When the switch is pressed again, the display goes out.

Use this function to select the desired speed range when traveling up or down hills or when carrying out operations such as grading.

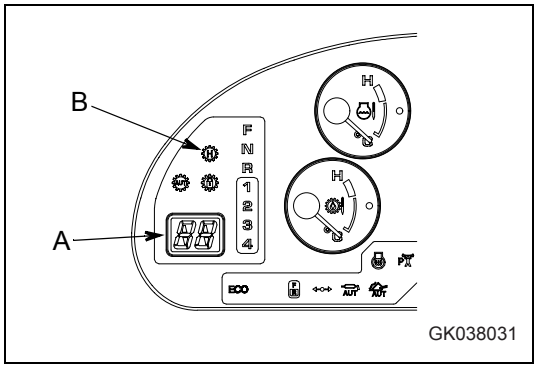

REMARK

When canceling the shift hold, operate the directional lever or gearshift lever or operate the transmission shift mode selector switch to MANUAL. It is also possible to cancel the hold shift by turning the starting switch OFF.

16. Front wiper switch

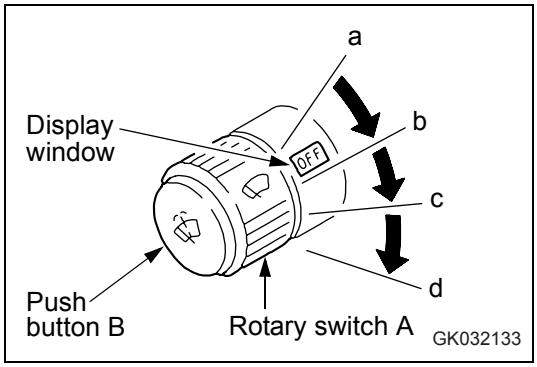

When rotary switch (A) of this switch (16) is turned, the front wiper will move.

If push button (B) is pressed, washer liquid will be sprayed out onto the front glass while the button is being pressed.

It is possible to check the position of the switch in display window (G).

Position (a): (OFF)
Stop

Position (b): (INT)
Intermittent wiper

Position (c):
Low-speed wiper

Position (d):
High-speed wiper

17. Rear wiper switch

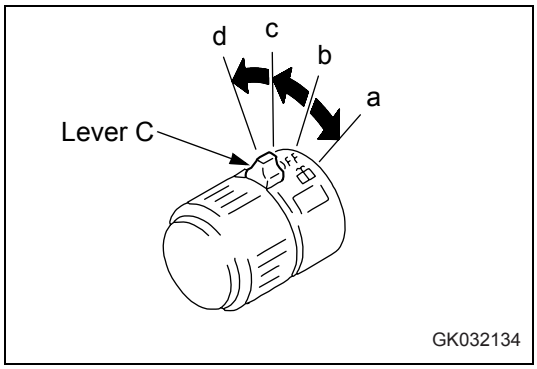

When lever (C) of this switch (17) is turned, the rear wiper will move.

Position (a):
Washer liquid is sprayed out

Position (b): OFF

Position (c):
Wiper is operated

Position (d):
Washer liquid is sprayed out, wiper is operated

18. Cigarette lighter

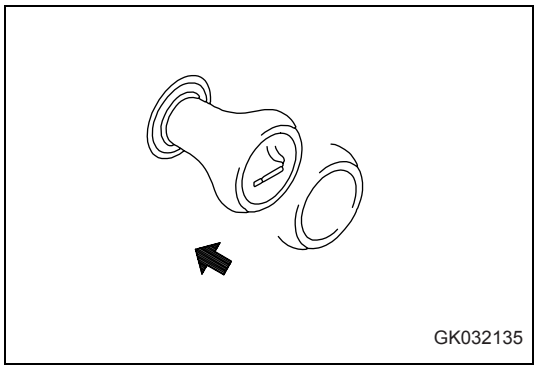

This is used to light cigarettes.

After cigarette lighter (18) is pushed in, it will return to its original position after a few seconds, then you may pull it out and light a cigarette.

19. Room lamp switch

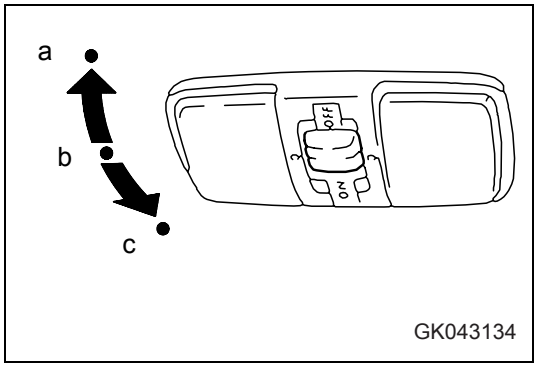

The switch (19) is used to turn the room lamp ON and OFF.

Position (a): OFF

Position (b): Lights up when the cab door opens

Position (c): Lights up

REMARK

The room lamp lights up even when the main switch is OFF, so when leaving the operator's compartment, turn the switch to position (a) (OFF) or (b).
When operating with the cab door fully open, set the switch to position (a) (OFF).

20. Rear heated wire glass switch

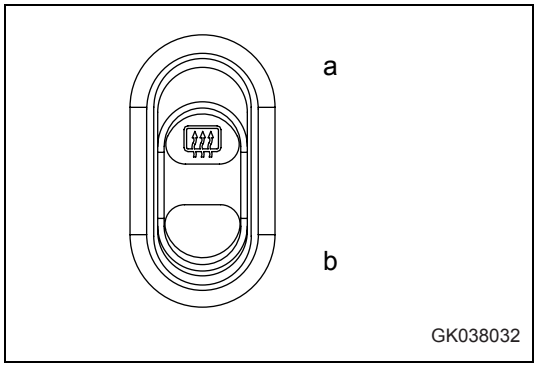

When this switch (20) is pressed, electric current flows through the heated wire glass at the rear and the mist is removed from the glass.

Position (a): ON (removes mist from glass)

Position (b): OFF

21. E.C.S.S. switch (*)

(*) E.C.S.S.: Electrically Controlled Suspension System

WARNING

- If the machine is traveling or the work equipment is raised, the moment the E.C.S.S. switch is turned ON, the work equipment will move.
- If the E.C.S.S. system is switched on, the work equipment may move.
- Never turn the E.C.S.S. switch ON during inspection or maintenance. The work equipment will move and this will create a dangerous situation.

NOTE

- *Always stop the machine and lower the work equipment to the ground before operating the E.C.S.S. switch.*
- *When carrying out inspection and maintenance, first lower the work equipment to the ground, then turn the E.C.S.S. switch OFF before starting the inspection and maintenance operation.*
- When carrying out leveling work, turn the E.C.S.S. switch OFF.

This switch (21) is used to turn the E.C.S.S. ON and OFF.

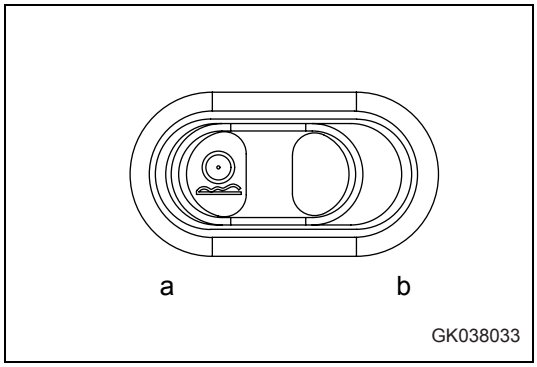

Position (a): ON
The pilot lamp inside the switch lights up and the E.C.S.S. is actuated.

Position (b): OFF
The E.C.S.S. is not actuated.

REMARK

The E.C.S.S. is a device that uses the hydraulic spring effect of an accumulator to absorb the vibration of the chassis during travel and allows the machine to travel smoothly and at high speed.
When traveling in 1st, the E.C.S.S. is not actuated.
When the speed range is 2nd to 4th, and the travel speed becomes more than 5 km/h (3.1 MPH), the E.C.S.S. is automatically actuated; when the travel speed goes below 3 km/h (1.9 MPH), it is automatically disengaged.

22. Emergency steering switch

(Option)

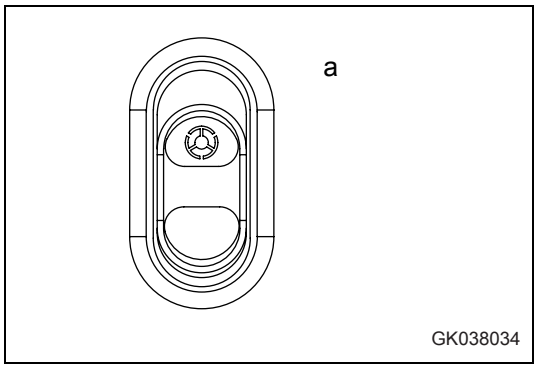

This switch (22) is the manual control switch for the emergency steering.

Even when the engine has stopped, steering operations are made possible by pressing this switch.

Position (a): ON
The pilot lamp inside the switch and the emergency steering pilot lamp on the machine monitor light up and it becomes possible to operate the steering.

When the switch is released, it automatically returns to its original position.

Actuate the emergency steering only in cases of emergency or when checking the function. The time for operating the emergency steering continuously is a maximum of 60 seconds. When using the emergency steering, travel at a speed of less than 5 km/h (3.1 MPH).

For details, see "Emergency steering (3-118)".

23. Cooling fan reverse rotation switch

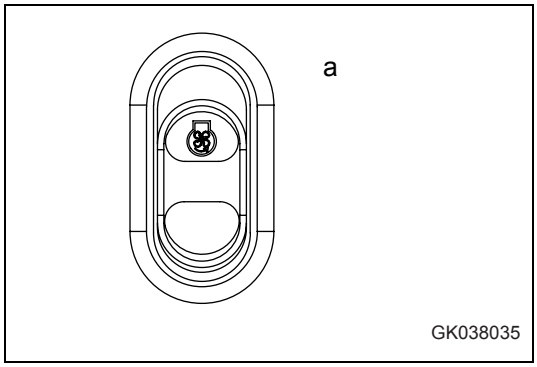

This switch (23) is used to rotate the cooling fan in the reverse direction when cleaning the radiator.

Position (a): Manual reverse rotation switch ON
If the switch is pressed once when the fan is rotating in the normal direction, the rotation of the fan is reversed. If the switch is pressed again the fan returns to normal rotation. When the fan is rotating in reverse, the cooling fan reverse rotation pilot lamp on the machine monitor lights up.

For details, see "Clean radiator fins and cooler fins (4-43)".

Run the engine at idling when operating the switch.

REMARK
When the direction of rotation of the fan switches, the reverse rotation pilot lamp flashes.

23. Cooling fan auto reverse rotation switch

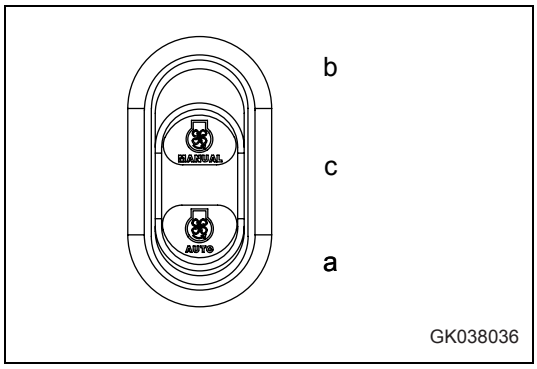

(Option)

This switch (23) is used to rotate the cooling fan in the reverse direction when cleaning the radiator.

Position (a): Auto reverse rotation function ON
The fan automatically rotates in reverse for 2 minutes every 2 hours. The pilot lamp inside the switch and the cooling fan reverse rotation pilot lamp on the machine monitor light up.

Position (b): Manual reverse rotation switch ON
If the switch is pressed once when the fan is rotating in the normal direction, the rotation of the fan is reversed. If the switch is pressed again, the fan returns to normal rotation. When the fan is rotating in reverse, the cooling fan reverse rotation pilot lamp on the machine monitor lights up. After the switch is pressed, the fan continues to rotate in the reverse direction for approx. 10 minutes.

For details of the procedure for cleaning, see "Clean radiator fins and cooler fins (4-43)".

Position (c): Neutral (OFF)
The cooling fan is constantly set to normal rotation.

Run the engine at idling when operating the switch.

REMARK

When the direction of rotation of the fan is switched, the reverse rotation pilot lamp flashes.
When the machine is operating under high load or in low temperatures, the direction of rotation of the fan may not change. This is to protect the machine.
When the engine is stopped, the fan returns to normal rotation.
When the switch is set to position (b) (Manual reverse rotation switch ON), if the switch is released, it returns to position (c) (Neutral). Even if the switch is not kept pressed at position (b), the fan will continue to rotate in reverse direction for a certain period, so there is no need to keep the switch pressed at position (b).

24. Directional selector switch

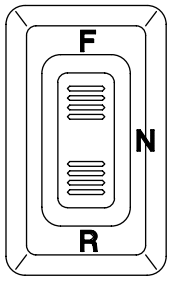

GK043139

This switch (24) is used to switch the direction of travel of the machine between forward and reverse.

F Position: FORWARD

N Position: Neutral

R Position: REVERSE

Before operating this switch, check that the condition is as follows.

- Directional lever is at N
- Directional selector switch actuation switch is at ON

If the condition is not as above, the switch will not work.

For details, see "Changingdirection (3-110)".

25. Directional selector switch actuation switch

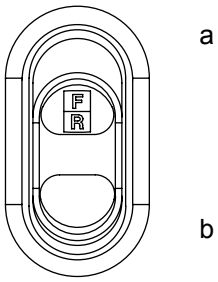

GK038037

When this switch (25) is turned on, the directional selector switch on the side of the lift arm control lever is actuated.

Position (a): ON
The directional selector switch is actuated.
The directional selector pilot lamp on the machine monitor lights up.

Position (b): OFF
The directional selector switch is turned off.

26. Torque converter lock-up switch

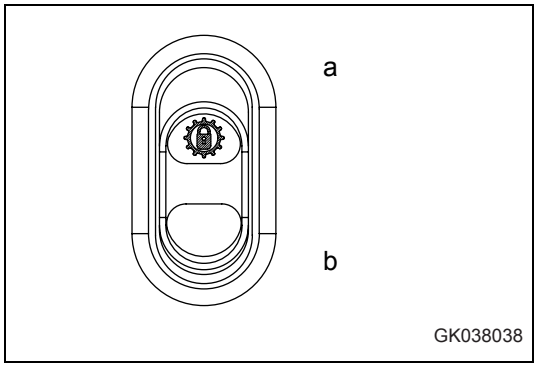

(Option)

This switch (26) is the control switch for the torque converter lock-up function.

Position (a): ON

The pilot lamp inside the switch lights up and the lock-up is actuated according to the travel speed. While the lock-up is engaged, the lock-up pilot lamp on the machine monitor lights up.

Position (b): OFF

The lock-up does not function.

For details, see "Handling torque converter lock-up (6-3)"

3.2.3 Control levers, pedals

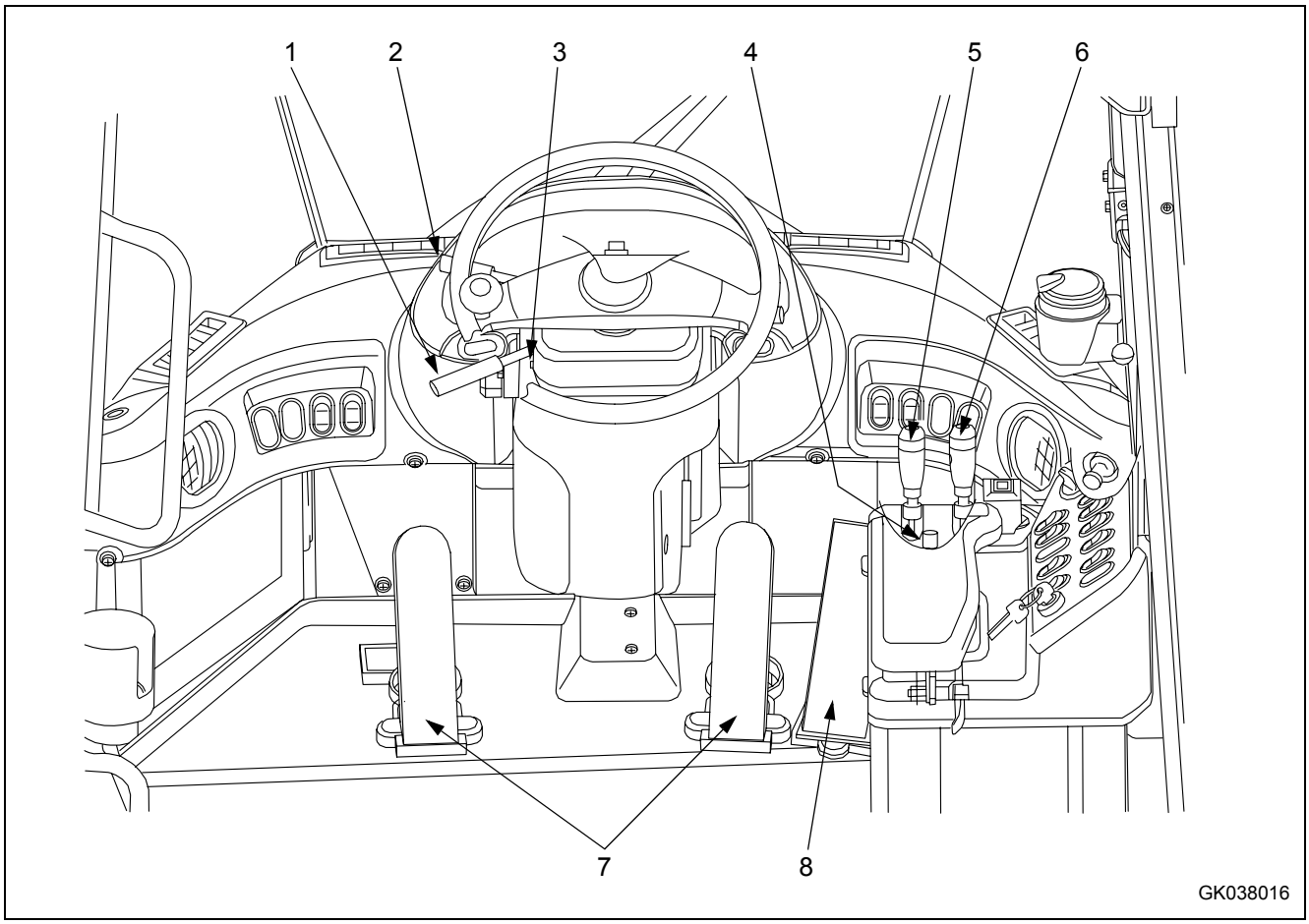

(1) Gearshift lever
(2) Directional lever
(3) Gearshift lever stopper
(4) Work equipment lock lever
(5) Bucket control lever
(6) Lift arm control lever
(7) Brake pedal
(8) Accelerator pedal

1. Gearshift lever

This lever (1) changes the speed range of the transmission.

Manual shift

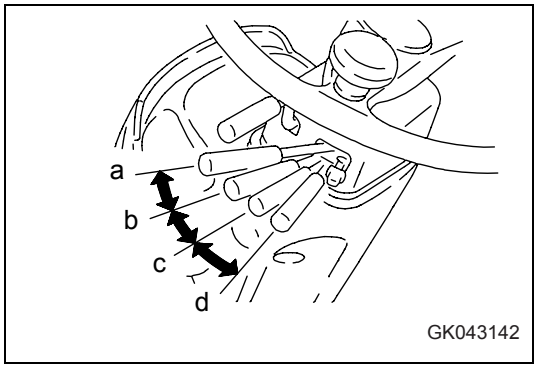

This machine has a 4-FORWARD, 4-REVERSE speed transmission.

Place the gearshift lever in a suitable position to obtain the desired speed range.

- 1st and 2nd speeds are used for working.
- 3rd and 4th speeds are used for traveling.

However, when the gearshift lever stopper is being used, it is impossible to shift to 3rd or 4th. Disengage the gearshift lever stopper before trying to shift gear.

Position (a): 1st

Position (b): 2nd

Position (c): 3rd

Position (d): 4th

REMARK

The length of the lever can be adjusted to 3 stages (positions (A), (B), (C)). To adjust the length, remove the screw (E) at the bottom of the lever knob (D), slide the knob to the desired position, then tighten the screw (E) again.
(The lever is installed to position (B) when it is shipped from the factory.)

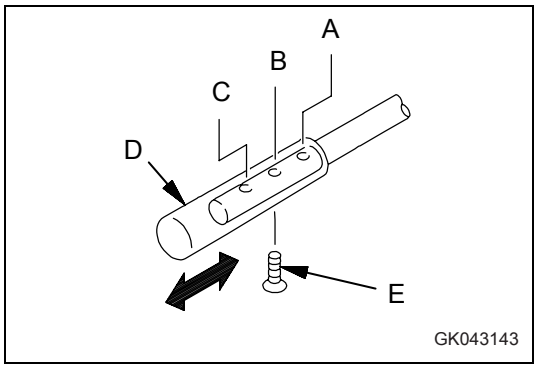

Automatic shift

Automatic gear shifting can be carried out in the 2nd through 4th speed range of the four forward and reverse speeds depending on the travel conditions.

Position (a): 1st

Position (b): 2nd

Position (c): 3rd

Position (d): 4th

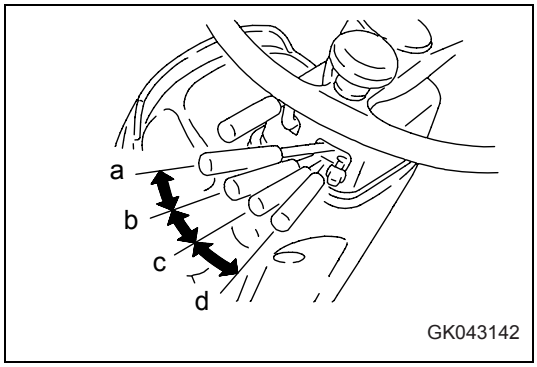

The range of speeds during automatic gear shifting is determined by the position of the gearshift lever as shown in the chart on the right.

Gear shift lever positions	Speed range
2nd	2nd
3rd	2nd <-> 3rd
4th	2nd <-> 3rd <-> 4th

REMARK

The 1st position for the gearshift lever fixes the transmission in 1st. There is no automatic shifting of the transmission.
When shifting down from 2nd to 1st, press the kick-down switch on the lift arm control lever.
If the transmission is in auto-shift and the travel speed is below 10.5 km/h (6.5 MPH) in any speed range when traveling in either forward or in reverse, the kick-down switch is actuated and makes it possible to shift down to 1st.
This makes it easy to carry out load and carry operations.
Even if the travel speed is more than 10.5 km/h (6.5 MPH), this switch can be used to shift the transmission down. Each time the kick-down switch is pressed, the speed range will shift down one range at a time (when in 4th: F4 -> F3 -> F2; when in 3rd: F3 -> F2).
If the torque converter is locked up, the lock-up is cancelled.

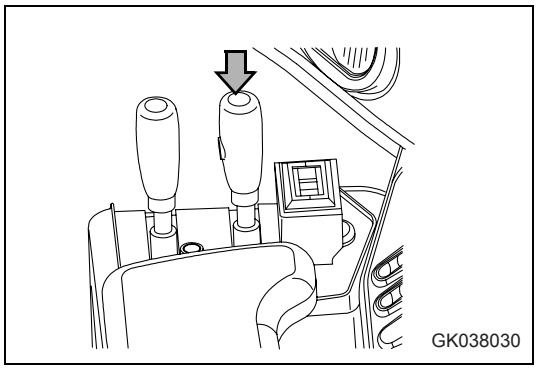

To set to the desired speed range when traveling uphill or downhill, or when carrying out grading, do as follows.

- When fixing the speed range
  Press the HOLD switch on the lift arm control lever.
  The speed range is fixed at the speed range displayed on the transmission indicator on the main monitor.

- When shifting up or down from set speed range
  Shift gear with the gearshift lever.

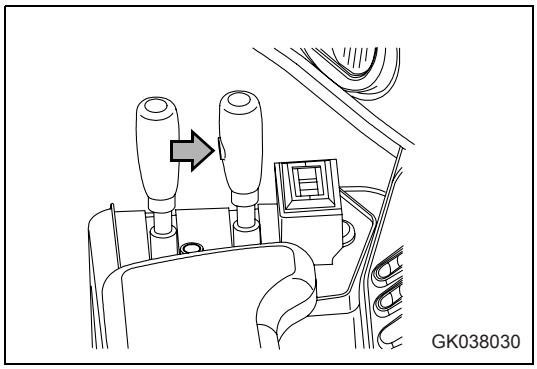

REMARK

When the transmission has been shifted down from 2nd to 1st with the kickdown switch, it will shift up from 1st to 2nd when the travel speed increases.

2. Directional lever

This lever (2) is used to switch the direction of travel of the machine between forward and reverse.

When starting the engine, if the directional lever is not at the N position, the engine will not start.

In this case, the central warning lamp will light up and the buzzer will sound.

Return the gearshift lever to the N position and start the engine.

Position F: FORWARD

Position N: NEUTRAL

Position R: REVERSE

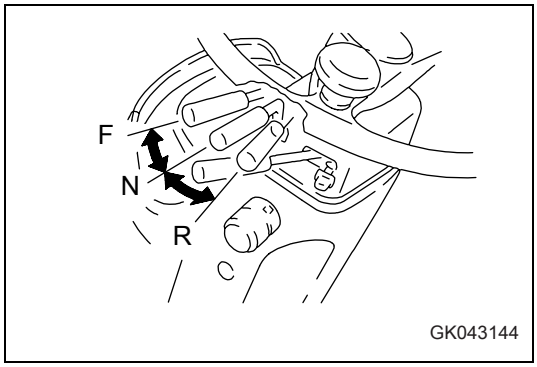

REMARK

The length of the lever can be adjusted to 3 stages (positions (A), (B), (C)). To adjust the length, remove the screw (E) at the bottom of the lever knob (D), slide the knob to the desired position, then tighten the screw (E) again.
(The lever is installed to position (B) when it is shipped from the factory.)

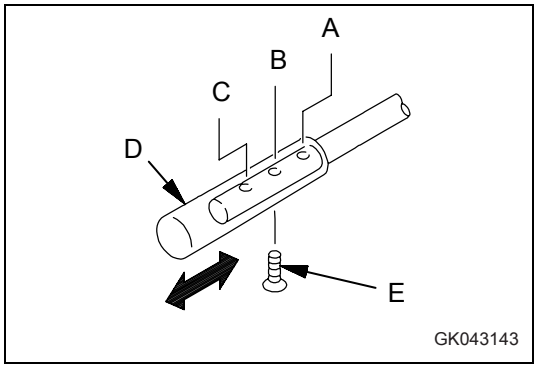

3. Gearshift lever stopper

This stopper (3) prevents the gearshift lever from entering the 3rd or 4th positions when working.

Position (a): Stopper actuated.

Position (b): Stopper released.

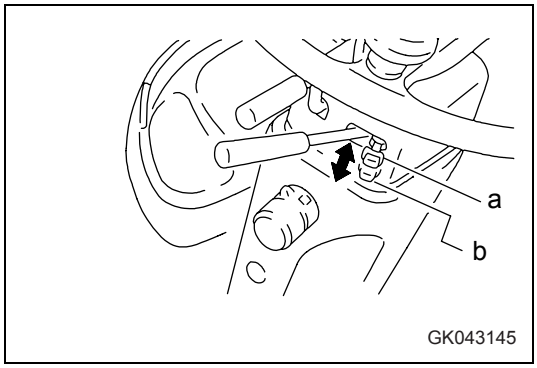

4. Work equipment lock lever

WARNING

- Before leaving the operator's seat, set the work equipment lock lever securely to the LOCK position. If the work equipment lock lever is not at the LOCK position, and work equipment control lever is touched by mistake, it may lead to a serious accident.
- If the work equipment lock lever is not placed securely at the LOCK position, the work equipment control lever may move, and this may lead to a serious accident or personal injury. Check that the lever is in the LOCK position.
- When operating the work equipment lock lever, check that the work equipment control lever is held securely at the HOLD position.
- When operating the work equipment lock lever, be careful not to touch work equipment control lever (A).

This lever (4) is used to lock the work equipment control levers and prevent operation of the work equipment.

Pull the work equipment lock lever towards the center of the machine to set it to LOCK position (L).

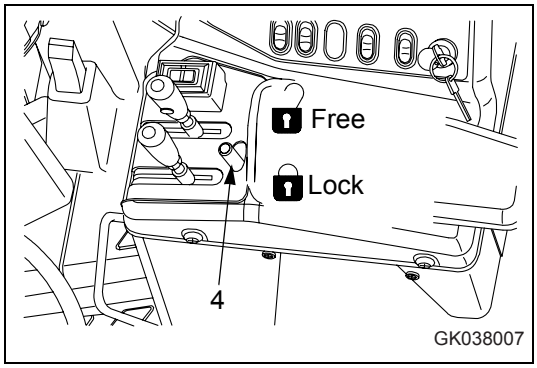

REMARK

If the work equipment lock lever is at the LOCK position, the work equipment will not move even when the work equipment control lever is operated.

5. Bucket control lever

This lever (5) operates the bucket.

Position (a): TILT
When the bucket control lever is pulled further from the TILT position, the lever is stopped in this position until the bucket reaches the preset position of the positioner, and the lever is returned to the HOLD position.

Position (b): HOLD
The bucket is kept in the same position.

Position (c): DUMP

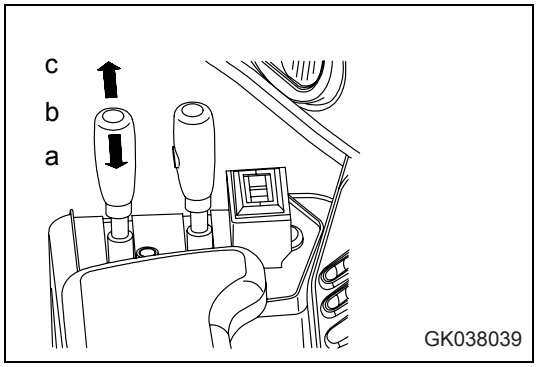

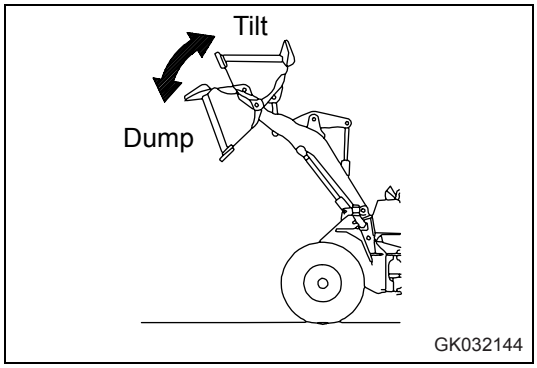

6. Lift arm control lever

This lever (6) is used to operate the lift arm.

NOTE
Do not use the FLOAT position when lowering the bucket. Use the FLOAT position when leveling, see "Leveling operation (3-126)".

Position (a): RAISE
When the lift arm control lever is pulled further from the RAISE position, the lever is stopped in this position until the lift arm reaches the preset position of the kickout, and the lever is returned to the HOLD position.

Position (b): HOLD
The lift arm is kept in the same position.

Position (c): LOWER

Position (d): FLOAT
The lift arm moves freely under external force.

REMARK
If the engine is stopped or the work equipment lock lever is at the LOCK position, the lever does not stop at the detent position.

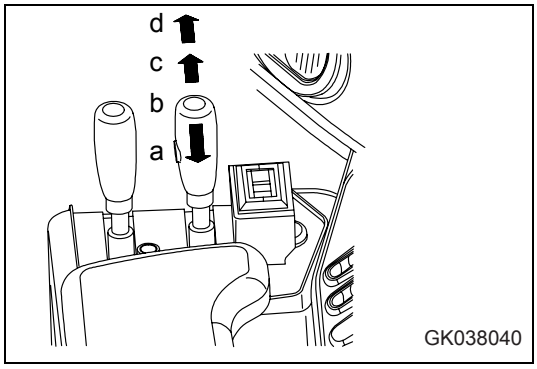

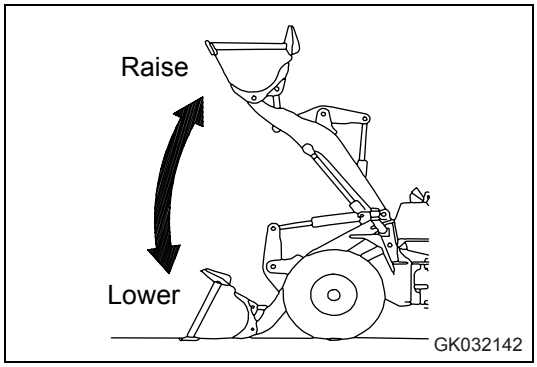

7. Brake pedal

WARNING

- When traveling downhill, always use the right brake pedal, and use the braking force of the engine together with the brake.
- Do not use the brake pedal excessively. If the brake is used too frequently, the brake will overheat. If this happens, the brakes will not work and may lead to a serious accident.
- Do not put your foot on the brake pedal unless necessary.

These pedals (7) operate the brakes.

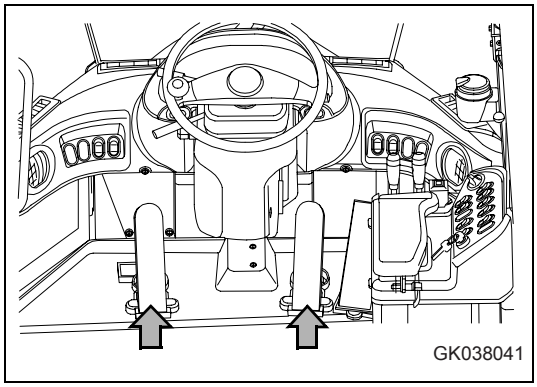

Right brake pedal

The right brake pedal operates the wheel brakes.

Use the right brake pedal for normal braking operations.

Left brake pedal

The left brake pedal operates the wheel brakes.

When the transmission cut-off switch is in the ON position, and if this brake pedal is depressed, wheel brakes are applied and the transmission is set to the neutral position at the same time.

If the transmission cut-off switch is at OFF, the left brake pedal acts in the same way as the right brake pedal.

REMARK

When the accelerator is being used for operating the work equipment, always set the transmission cut-off switch to the ON position and use the left brake pedal to slow or stop the machine.

8. Accelerator pedal

This pedal (8) controls the engine speed and output.

The engine speed can be freely controlled between low idling and full speed.

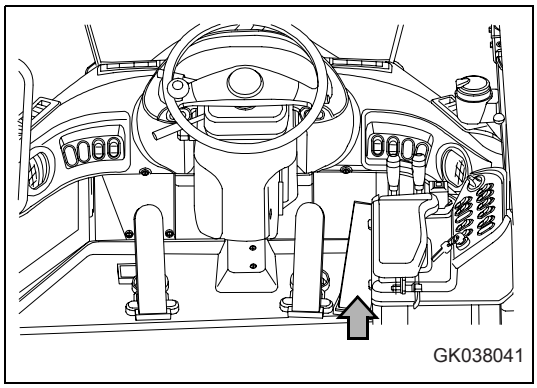

3.2.4 Steering tilt lock lever

WARNING

Stop the machine before adjusting the tilt of the steering wheel. If this operation (adjustment) is carried out while the machine is moving, it may lead to a serious accident or personal injury.

This lever is used to unlock and lock the steering column when adjusting the position of the steering column to the front or rear or up or down.

(F) FREE position:
Steering wheel can be moved to front, rear, up, and down

(L) LOCK position:
Steering wheel is held in position
The adjustment amounts are as follows.

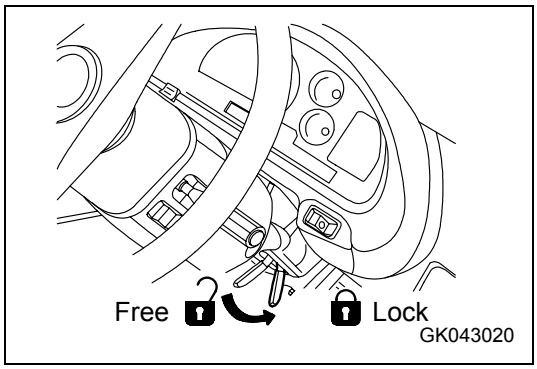

Up-down movement	When at 0 mm (0 in)	When moved up to 40 mm (1.6 in)
Tilt amount	0 - 105 mm (0 - 4.1 in)	0 - 130 mm (0 - 5.1 in)

3.2.5 Cap with lock

Use the starting key to open and close the locks on the caps.

The fuel tank filler port and the hydraulic tank filler port are equipped with locks.

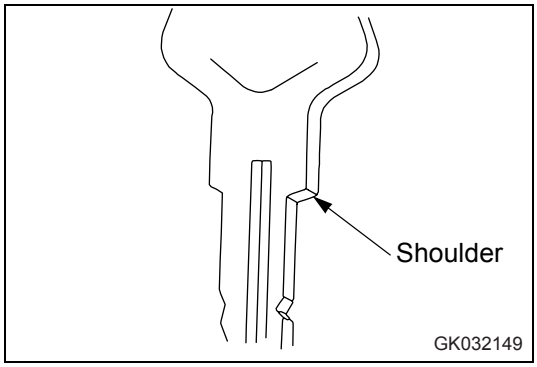

Method of opening and closing cap with lock

(for the fuel tank filler port)

To open the cap

1. Insert the key into the key slot.
2. Turn the key clockwise, align the key slot with the match mark on the cap, then open the cap.

To lock the cap

1. Turn the cap until tight, then insert the key into the key slot.
2. Turn the key counterclockwise and take the key out.

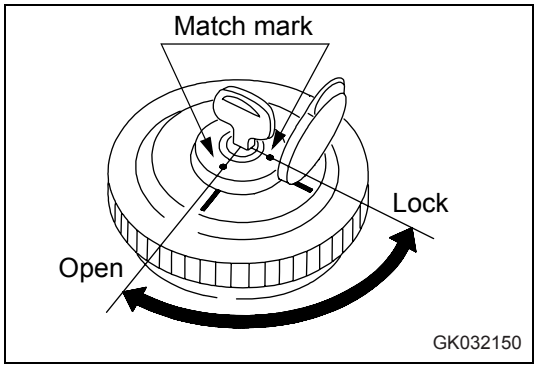

Method of opening and closing cap with lock

(for the hydraulik tank filler port)

To open the cap

1. Insert the key into the key slot.
2. Turn the starting switch key counterclockwise and bring the rotor groove in line with the aligning mark (1) on the cap. Turn the cap slowly until a “clicking“ sound is made. This releases the lock and allows the cap to be opened.

   Position (a): OPEN
   Position (b): LOCK

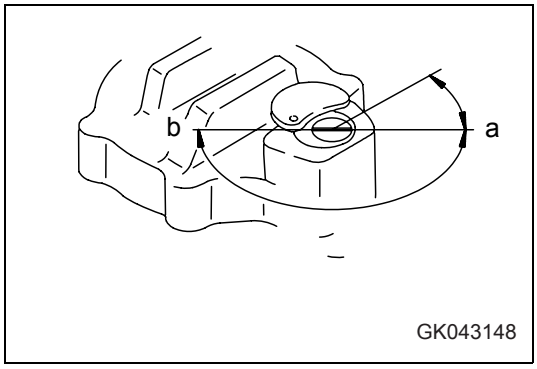

To lock the cap

1. Screw the cap into place.
2. Turn the starting switch key to LOCK position (b), then remove the key.

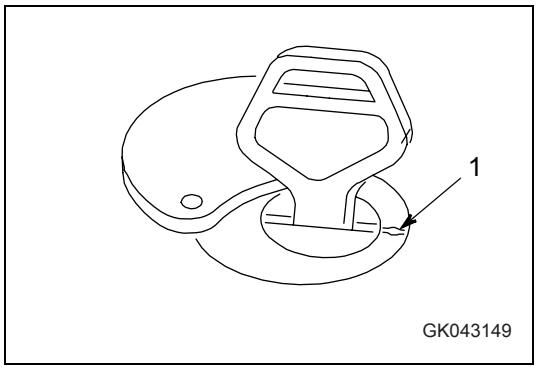

3.2.6 Safety bar

WARNING

- When carrying out maintenance or transporting the machine, always set the safety bar to the LOCK position.
- If the machine is transported or lifted when the safety bar is not locking the frame, the machine may suddenly articulate. If the machine articulates, it may cause serious personal injury to people in the surrounding area.
- Always lock the frame lock bar when transporting or lifting the machine. Always remove the safety bar for travel operations. If it is not removed, the steering wheel cannot be used for steering, and this may lead to serious damage or injury.

The safety bar is a device to lock the front frame and rear frame so that machine does not articulate.

LOCK position:
Always set to this position when transporting or lifting machine.

FREE position:
Always set to this position when machine travels.

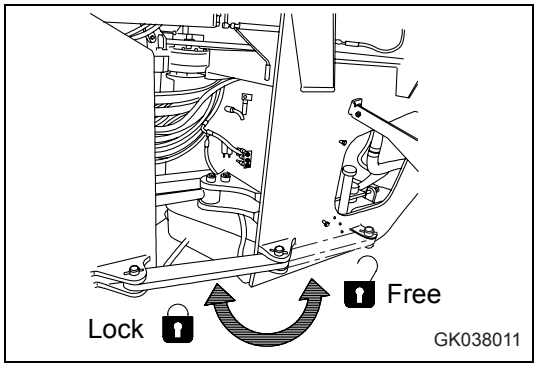

WARNING

Insert the lock pin of the safety bar securely, then fit the linchpin. If it is not inserted fully and a load is applied, there is danger that it might come out and that the safetybar may be deformed.

When locking the safety bar, lock it as follows.

1. Insert safety lock pin (1) securely into hinge (2) at the bottom of the front frame.
2. Always secure it with supplied linchpin (3).

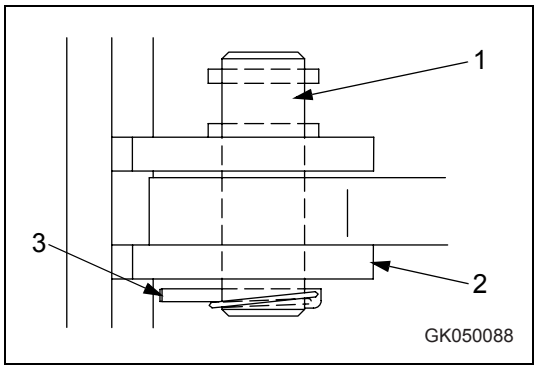

3.2.7 Towing pin

1. Insert towing pin (1) into hole (2) in the counterweight.

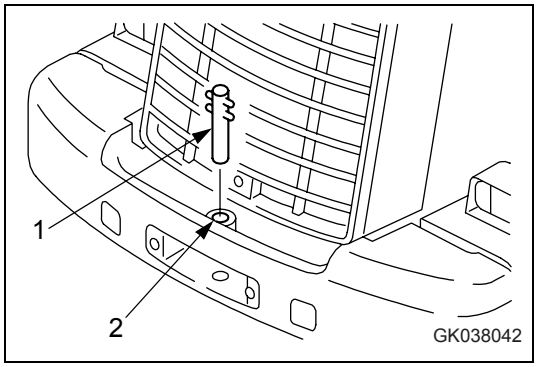

2. Use linch pin (3) to set so that the towing pin does not come out.

   Reverse this operation to remove the pin.

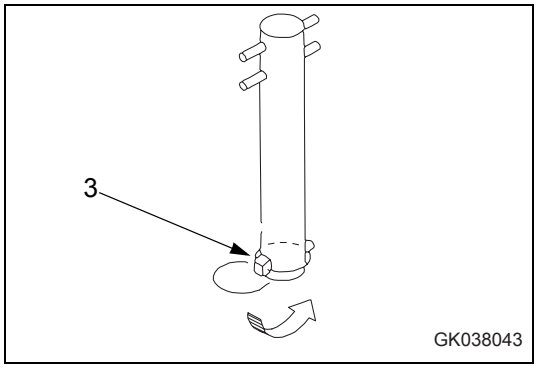

3.2.8 Grease pump

The grease pump is installed in the holder on the left radiator side of the engine bulkhead at the rear of the machine.

After using it, wipe off the grease from its outside and install it in position.

Insert the grease pump in the holder and fix it with the rubber band. Hitch the tail chain of the grease pump to the hook at the bottom of the holder.

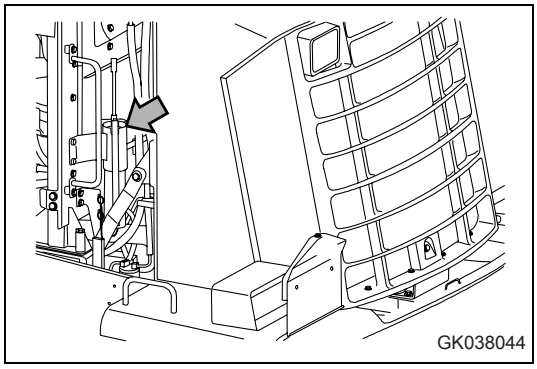

3.2.9 Cab door

CAUTION

- Always check that the cab door is locked, both when it is open and when it is closed.
- Always stop the machine on level ground before opening or closing the door.
- Avoid opening or closing the door on a slope. There is danger that the operating effort may suddenly change.
- When opening or closing the door, always use door handle and knob.
- Be careful not to get your hands caught by the front pillar or center pillar.
- When there is any person inside the cab, always call out a warning before opening or closing the door.

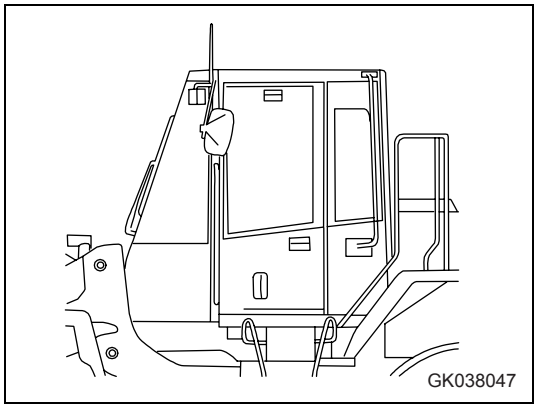

3.2.10 Cab door open lock

When getting in or out of the operator's compartment, or when operating with the door open, use this lock to hold the door in position.

1. Push the door against catch (1) to lock it in position.
2. When attaching the door in position, lock it firmly to the catch.
3. When getting on or off the machine, hold the handrail on the inside.

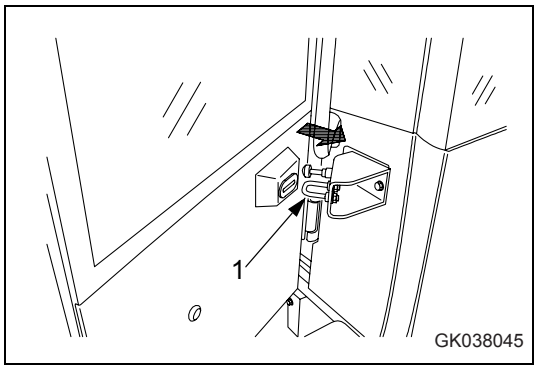

4. When closing the door from the operator's seat, push knob (2) to release the catcher.
5. When closing the door after getting off the machine, pull knob (3) down to release the catcher.

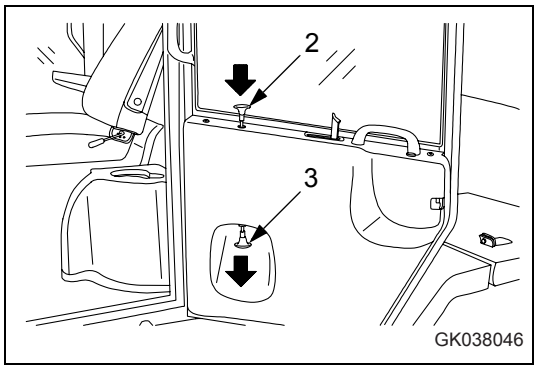

3.2.11 Cab window open lock

Cab left window open lock reset knob

Use this when raising or lowering the glass in the window of the left door.

Grip lock release knob (1), release the lock, then remove the glass down to the lower lock position.

Release lock release knob (1).

When moving the glass down, there are 2 stages for lock position (a).

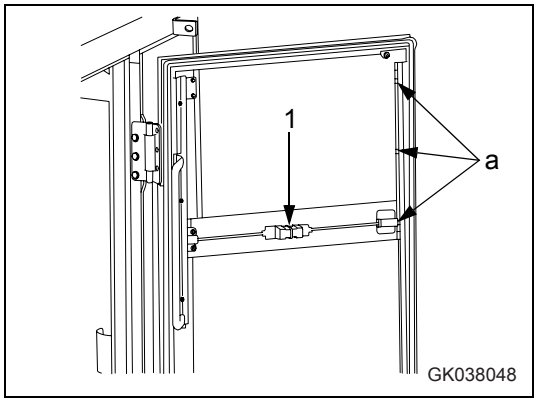

Cab right window open lock reset knob

Use this to keep the right window glass at the open or closed position.

Pull open lock knob (1) towards the inside of the machine to release the lock, push open-lock knob (1) up along the rail to move to the lock position, then release the knob.

There are 2 lock positions: open and closed.

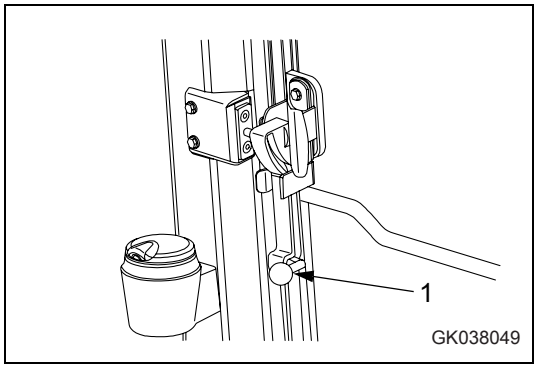

Reset right window open lock for escape

If the door of the cab does not open or it is dangerous to get off the machine from the side where the door is, release the open lock of the right window, open the right window fully, and use the right window as an emergency escape route.

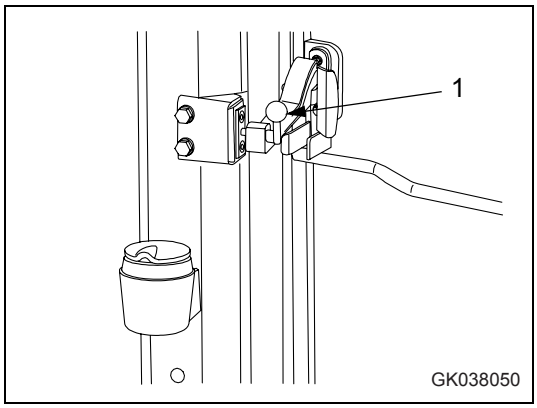

1. Grip open lock knob (1) and pull it towards the rear of the machine.
2. Remove the open lock guide rail from the window pillar guide to free the right window lock.

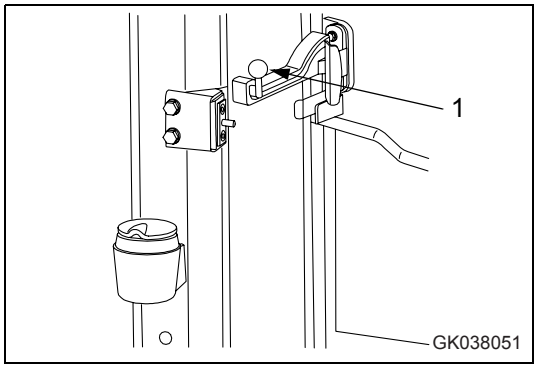

3. Open the right window fully and escape through the window.

   When returning the open lock knob to its original position, pull the window to a position where it is possible to lock it, align the open lock guide rail with the guide, then push in the open lock knob to the front.

   Check that the rail is completely fitted into the guide, then secure at the LOCK position.

CAUTION

- It is dangerous to carry out operations with the emergency escape window lock released. The right window will extend beyond the outermost wheel.
- There is also danger that the window may close suddenly when the brake is applied.
- Always check that the open-lock knob for the right window glass is locked at the open or closed position before driving the machine.

3.2.12 Backup alarm

This sounds an alarm when the directional lever is set to the R position. It is used to warn people behind the machine that the machine will travel in reverse.

3.2.13 Fuse

NOTE

Before replacing a fuse, be sure to turn off the starting switch.

The fuses protect the electrical equipment and wiring from burning out.

If the fuse becomes corroded, or white powder can be seen, or the fuse is loose in the fuse holder, replace the fuse.

Replace the fuse with another of the same capacity.

Inside rear console box
Loosen knob (1) at two places, then remove cover (2). The fuse boxes are A and B.

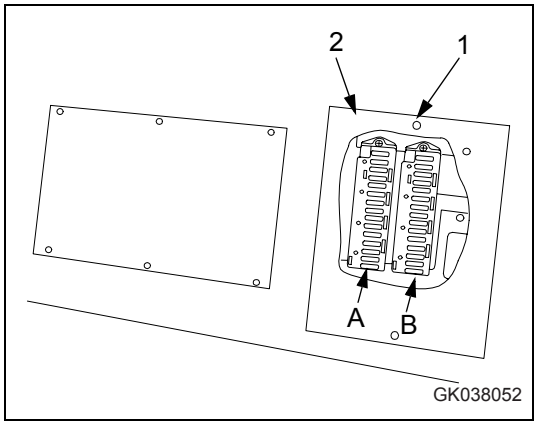

Fuse capacity and name of circuit

Fuse box A

No.	Fuse capacity	Name of circuit
(1)	10A	Left head lamp
(2)	10A	Right head lamp
(3)	10A	Left side clearance lamp
(4)	10A	Right side clearance lamp
(5)	20A	Main lamp circuit
(6)	10A	Machine monitor A Load meter printer (Option)
(7)	5A	Air conditioner B
(8)	20A	Air conditioner A
(9)	20A	Wiper, washer
(10)	20A	Backup lamp,brake lamp
(11)	10A	Work equipment positioner, Work equipment controller A (Option)
(12)	5A	Emergency steering (Option)
(13)	5A	Parking brake
(14)	10A	Transmission control A
(15)	10A	Horn

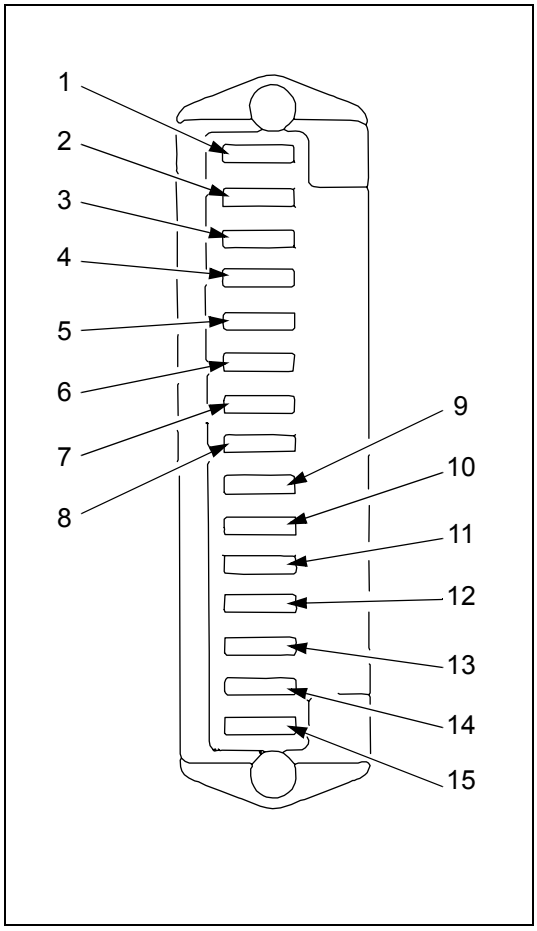

Fuse box B

No.	Fuse capacity	Name of circuit
(1)	5A	Engine control B
(2)	10A	Rear heated wire glass
(3)	10A	KOMTRAX A (Option)
(4)	20A	Yellow rotating lamp (Option)
(5)	10A	Turn signal indicator
(6)	20A	Car radio, cigarette lighter, 12V power source, Air suspension seat (Option)
(7)	10A	Rear working lamp
(8)	10A	Front working lamp
(9)	20A	Spare 1
(10)	30A	Engine control A
(11)	5A	Transmision control B, Work equipment controler B (Option)
(12)	10A	Room lamp
(13)	10A	Machine monitor B, A KOMTRAX B (Option)
(14)	10A	Hazard lamp
(15)	20A	Starting switch

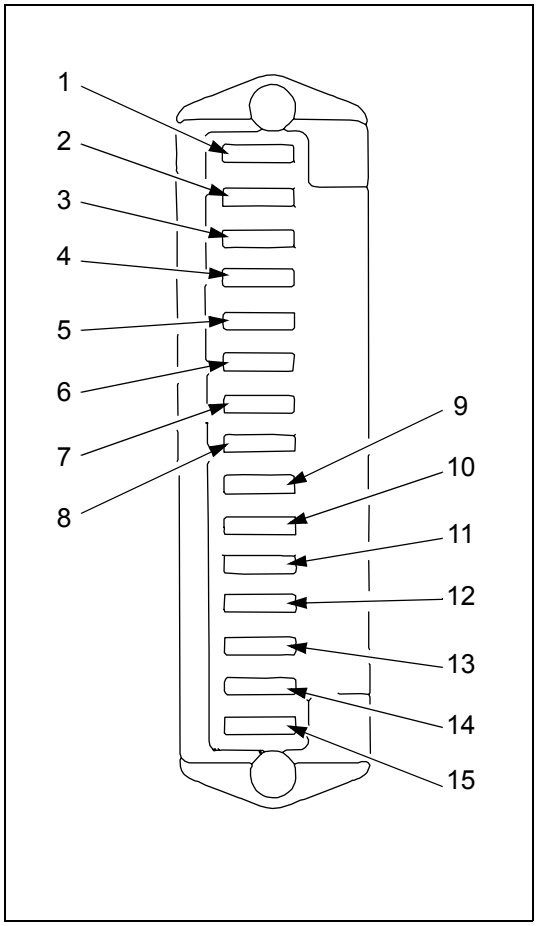

3.2.14 Slow blow fuse

If the power does not come on when the starting switch is turned ON, the slow blow fuse may be blown. Check and replace it.

The slow blow fuse is beside the engine on the left side of the machine.

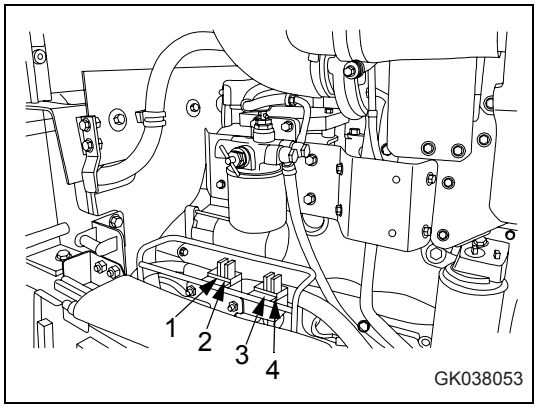

Slow blow fuse

(1)	50A	Permanent power source
(2)	50A	Main power A
(3)	50A	Main power B
(4)	120A	Heater relay (electrical intake air heater)

3.2.15 Power outlet

NOTE

- *There are two power sources: 12V and 24V*
  Check the voltage of the electrical equipment and select the appropriate power source.
  Mistaken use, such as using 24V as the power source for 12V equipment, will cause failure of the equipment.
- *When using the electric power source, do not install any equipment which will exceed the maximum amperage.*

When cigarette lighter (1) is removed, the lighter socket can be used as a 24V power source.

Maximum amperage: 9A (216W)

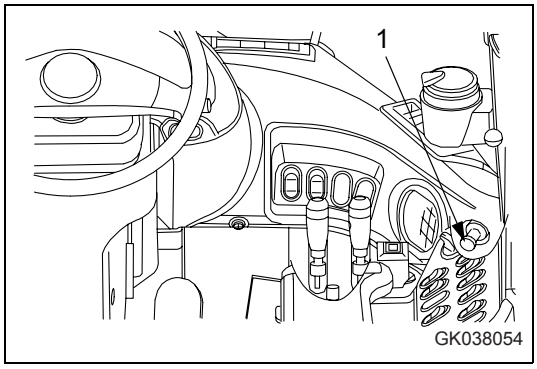

Electric power source (2) can be used as a 12V power source.

(Option)

Maximum amperage: 10A (120W)

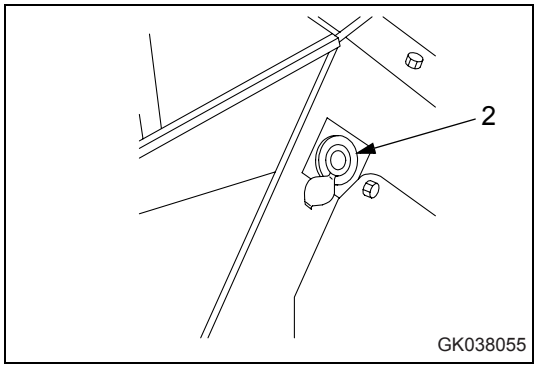

3.2.16 Air conditioner

By taking fresh air into the cab through a filter, it is possible to raise the pressure inside the cab. This makes it possible to provide a pleasant working environment even on dusty jobsites.

General locations and function of control panel

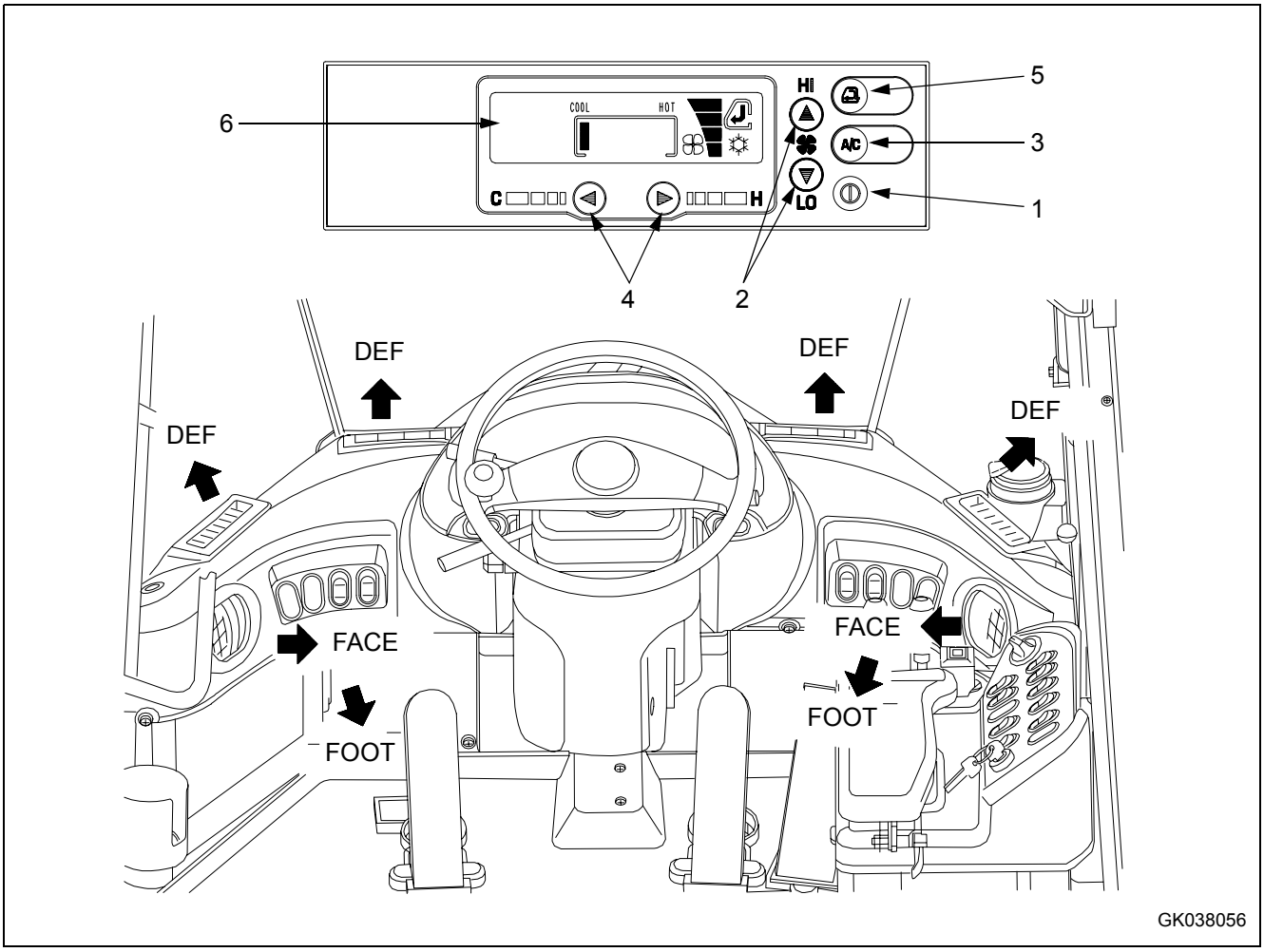

(1) Main power switch
(2) Fan switch
(3) Air conditioner switch
(4) Temperature control switch
(5) FRESH/RECIRC selector switch
(6) Display monitor

1. Main power switch

Use the switch (1) to turn the main power of the air conditioner ON/OFF.

When the switch is pressed, display monitor (A) lights up. The fan begins operation.

When the switch is pressed again, the air conditioner is turned OFF and the display monitor goes out. The fan stops.

(When the switch is turned ON, the setting displayed is the same as when the air conditioner was turned OFF.)

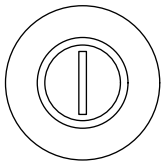

GK038057

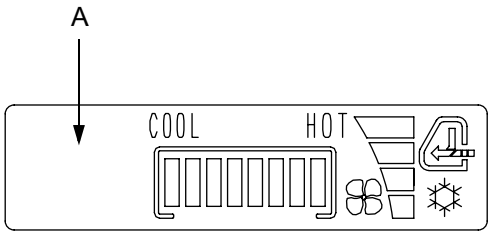

GK038058

2. Fan switch

Use this switch (2) to adjust the air flow from the fan.

The air flow can be adjusted to 4 levels.

When this switch (A) is pressed, the air flow increases; when switch (B) is pressed, the air flow decreases.

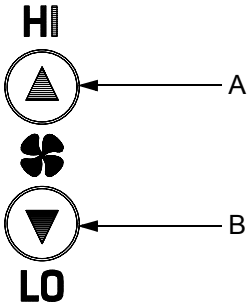

GK038059

The setting for the air flow is displayed on the display monitor.

A: Monitor display

B: Air flow

a: Air flow “Lo“

b: Air flow “M1“

c: Air flow “M2“

d: Air flow “Hi“

A	B
	a
	b
	c
	d

GK038060

3. Air conditioner switch

Use this switch (3) to actuate the cooling, heating, or dehumidifying functions, or to stop the air conditioner.

When the main power switch is ON, if the air conditioner switch is pressed, the air conditioner is turned ON and (A) is displayed on the display monitor.

If the switch is pressed again, the switch is turned OFF and display monitor (A) goes out.

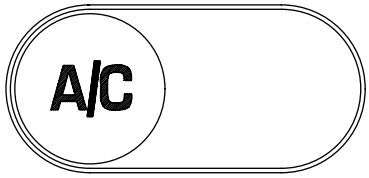

GK038061

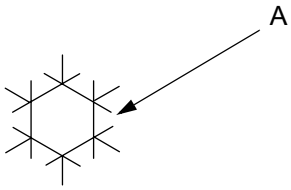

GK038062

4. Temperature control switch

Use this switch (4) to adjust the temperature between low temperature and high temperature.

When switch (A) is pressed, the temperature of the air blowing out becomes higher; when switch (B) is pressed, the temperature of the air blowing out becomes lower.

The setting (C) for the temperature is displayed on the display monitor.

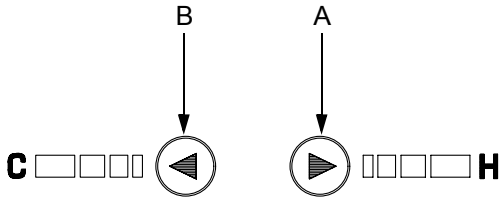

GK038064

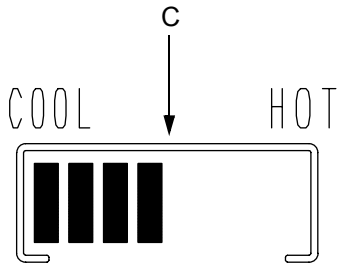

GK038065

5. Fresh/Recirc selector switch

Use this switch (5) to switch between recirculation of the air inside the cab and intake of fresh air from outside.

When this switch is pressed, recirculation of inside air is selected and (A) lights up on the display monitor.

If the switch is pressed again, intake of fresh air is selected and (B) lights up on the display monitor.

It changes in the order RECIRC, FRESH, RECIRC.

RECIRC:
Only the air inside the cab is circulated. Use this position when it is needed to carry out quick heating or cooling of the cab, or when the outside air is dirty (smells or is dusty).

FRESH:
Fresh air is taken in from the outside for normal heating or cooling of the cab. Use this position to make the air inside the cab fresh or to remove the mist from the cab windows.

When the air conditioner takes in fresh air from the outside, the pressure inside the cab rises and this prevents the entry of dirt. The higher the position of the fan switch, the more efficient this becomes.

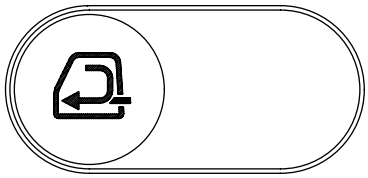

GK038063

Air conditioner monitor display	Condition of vents
	(A) RECIRC
	(B) FRESH

Method of operation

Cooling operation

1. Press main power switch (1) of the air conditioner to turn the power ON.
2. Press fan switch (2) and set the air flow to “Hi“.
3. Press temperature control switch (3) and set the display monitor to COOL (A).
4. Press air conditioner switch (4) to turn the air conditioner switch ON.
5. Press RECIRC/FRESH selector switch (5) to select RECIRC.
6. When the temperature inside the cab goes down, use the temperature control switch and the fan switch to set to the desired temperature.

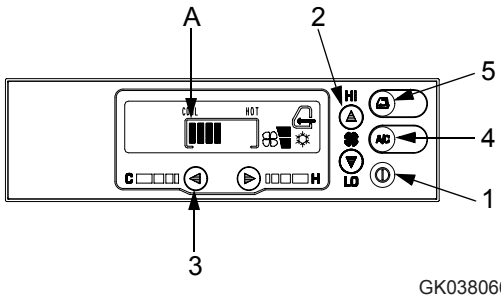

GK038066

REMARK

If the temperature control switch is pressed to set the display monitor to COOL (A) and the air conditioner is run with the air flow at “Lo“ for a long period, there is a slight risk that the evaporator will freeze.
If it freezes and no cold air comes out, turn the air conditioner switch OFF, raise the temperature setting, run the air conditioner with the air flow at “Hi “ for a short time, then turn the air conditioner switch ON again.

Heating operation

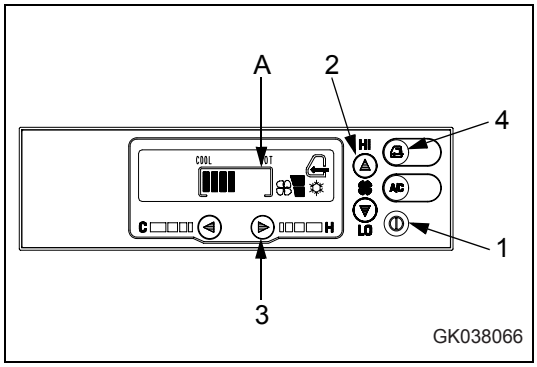

1. Press main power switch (1) of the air conditioner to turn the power ON.
2. Press fan switch (2) and set the air flow to “Hi“.
3. Press temperature control switch (3) and set the display monitor to HOT (A).
4. Press RECIRC/FRESH selector switch (4) to select FRESH.
5. When the temperature inside the cab goes up, use the temperature control switch and the fan switch to set to the desired temperature.

REMARK

Heating is carried out using the engine cooling water, so it can be carried out when the cooling water temperature is high.

Drying-heating and demisting operation

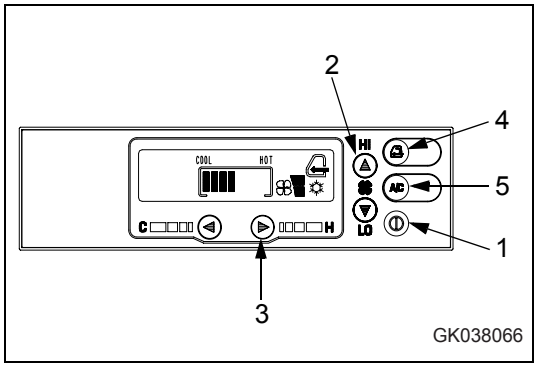

1. Press main power switch (1) of the air conditioner to turn the power ON.
2. Press fan switch (2) and set the air flow to the desired setting.
3. Press temperature control switch (3) and set to the desired temperature.
4. Press RECIRC/FRESH selector switch (4) to select FRESH.
5. Press air conditioner switch (5) to turn the air conditioner ON.

REMARK

When the outside temperature is below 0°C, the air conditioner (compressor) may not operat

Precautions when using

To prevent putting any excessive load on the engine or compressor, turn the air conditioner ON only when the engine is running.

Ventilation

- When turning the cooling on, if the temperature inside the cab is high, open the doors and windows to bring in fresh air before starting the air conditioner.
- If you smoke when using the cooling, your eyes may sting. If this happens, switch temporarily to cooling and ventilation to remove the smoke.
- When using the air conditioner for a long period of time, carry out ventilation process at least once every hour.

Temperature control

For reasons of health, the optimum setting for cooling is considered to be when it feels slightly cool (5 or 6°C (9 or 10.8°F) lower than the ambient temperature) when you enter the cab. Do not make the temperature inside the cab too low or direct the air flow directly onto your skin.

Be extremely careful to select the appropriate temperature.

When cooling is not being used (Off-season)

To prevent leakage of the refrigerant from the air conditioner cooling circuit, operate the air conditioner for several minutes 2 or 3 times a month during the off-season. If the air conditioner is left for a long time when the refrigerant is leaking, it may cause internal rust.

Precautions for inspection and maintenance

When carrying out inspection and maintenance of the air conditioner, follow the table given in "Check air conditioner (4-50)".

To allow the air conditioner to show its full performance and provide a comfortable environment, have inspection and maintenance carried out periodically.

When adding refrigerant or carrying out other maintenance, special tools and instruments are needed, so ask your KOMATSU distributor to carry out inspection and repair.

Cool box

When the cooling is being used, this can be used for keeping drinks and other things cool.

When the heating is being used, it can be used to keep things warm.

When using the box, open the vent grill.

When not using the box, close the grill.

Do not use the cool box for things which smell or leak water or break easily.

Do not use it as a holder for tools or other small objects.

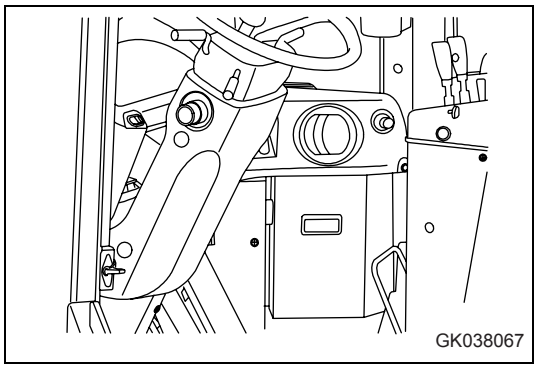

3.2.17 Handling cab wiper

Preventing damage to wiper arm bracket

NOTE

When angling the wiper arm (1) to the front, check that the wiper blade is hanging free.

When angling the wiper arm (1) to the front, such as when wiping the glass clean, if the wiper arm (1) is angled with the wiper blade (2) locked to the arm (the bottom of the blade is caught on the arm), abnormal force is brought to bear on the mounting bracket and the bracket may break.

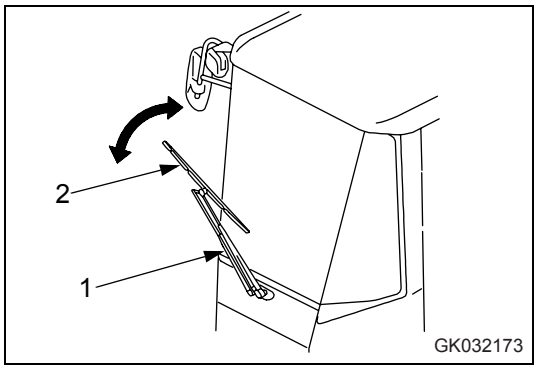

3.3 Operation

3.3.1 Check before starting engine, adjust

Walk-around check

Before starting the engine, walk around the machine and look to the underside of chassis for anything unusual like looseness of the bolts and nuts, leakage of fuel, oil and cooling water. Also check the condition of the work equipment and the hydraulic system.

Check also for loose wiring, play, and collection of dust at places which reach high temperature.

WARNING

- Always hang a warning sign on the work equipment control levers.
- Remove any flammable materials from around the battery or engine muffler, turbocharger, or other high temperature engine parts. Leakage of fuel or oil will cause the machine to catch fire. Check carefully, and be sure to repair any abnormalities, or please contact your KOMATSU distributor.
- Always repair any damage to the handrails and steps, and tighten any loose bolts. Failure to do this may cause workers to fall and suffer serious personal injury.

If the machine is at an angle, reposition it level before checking. Carry out the following inspections and cleanings every day before starting the engine for the day´s work.

1. Check for damage, wear, play in work equipment, cylinders, linkage and hoses.

   Check that there are no cracks, excessive wear, or play in the work equipment, cylinders, linkage or hoses. If any abnormality is found, repair it.

2. Remove dirt and dust from around engine, battery and radiator.

   Check if there is any dirt or dust accumulated around the engine or radiator. Check also if there is any flammable material (dead leaves, twigs, etc.) accumulated around the battery or high temperature engine parts, such as the engine muffler or turbocharger. Remove all such dirt or flammable material.

3. Check for coolant or oil leakage around engine.

   Check that there is no oil leakage from the engine or coolant leakage from the cooling system. If any abnormality is found, repair it.

4. Check for oil leakage from transmission case, axle, hydraulic tank, hoses, joints.

   Check that there is no oil leakage. If any abnormality is found, repair the leakage.

5. Check for oil leakage from brake line.

   Check that there is no oil leakage. If any abnormality is found, repair the leakage.

6. Check for damage or wear to tires and loose mounting bolts.

   Check for cracks or peeling of the tires and for cracks or wear to the wheels (side rim, rim base, lock ring). Tighten any loose wheel nuts. If any abnormality is found, repair or replace the part.

   If any valve caps are missing, install new caps.

7. Check for damage and loose bolts on handrail and steps.

   Repair any damage and tighten any loose bolts.

8. Check for damage to gauges, lamps on instrument panel and loose bolts.

   Check for damage to the panel, gauges and lamps. If any abnormality is found, replace the parts. Clean off any dirt on the surface. Tighten any loose bolts.

NOTE

- *Before starting operations, clean all dirt from the surface of the lamps. If the lamps are used with mud stuck to the surface, the lamp may overheat and suffer damage.*
- *If there is mud on a lamp and the lamp has overheated, cleaning the lamp may cause a sudden change in temperature which will crack the lens. Turn the lamp off and wait for the temperature to go down before cleaning the lamp.*

9. Check for loose air cleaner mounting bolts.

   Check for the loose bolts, and if loose, tighten up.

10. Check for loose battery terminals.

    Tighten any loose terminal.

11. Check for damage to seat belt and mounting clamps.

    Check that there are no loose bolts on the equipment mounting the seat belt to the machine, and tighten if necessary.

    If the belt is damaged or fluff is starting to form, or if there is any damage or deformation of the seat belt holders, replace the seat belt.

12. Clean cab window.

    Clean the cab window to ensure good visibility when operating the machine.

13. Check and cleaning of the rear view mirrors.

    Check the rear view mirrors for breakage, and replace any broken one. Clean the surface of each mirror and adjust the angle so that the rear view can be seen clearly from the operator's platform.

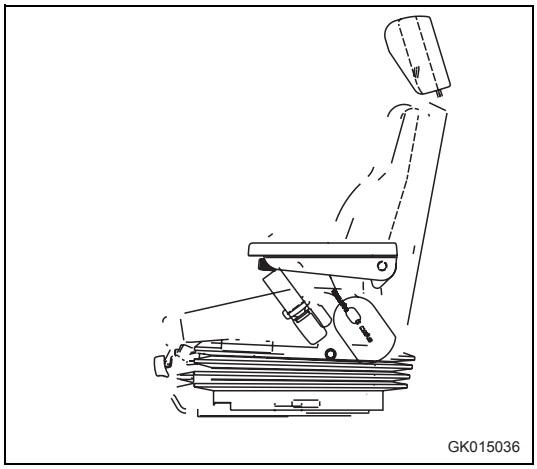

14. Inspect tires.

WARNING

If worn or damaged tires are used, they may burst and cause serious injury or death.
To ensure safety, do not use the following tires.
Wear:
Tires with a tread groove of less than 15% of that of a new tire
Tires with extreme uneven wear or with stepped-type wear
Damage:
Tires with damage which has reached the cords, or with cracks in the rubber
Tires with cut or pulled cords
Tires with peeled (separated) surface
Tires with damaged bead
Leaking or improperly repaired tubeless tires
Deteriorated, deformed or abnormally damaged tires which do not seem usable

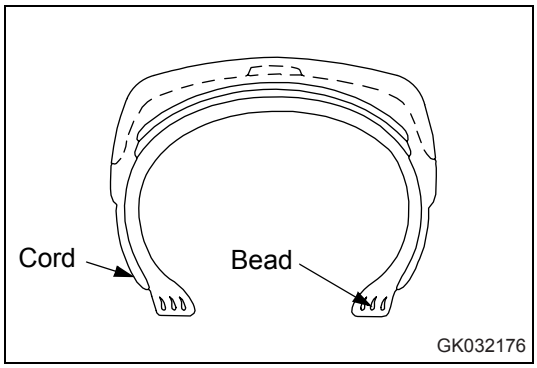

15. Inspect rims.

WARNING

Check the rims (wheels) and rings for deformation, corrosion and cracks.
In particular, check the side rings, lock rings and rim flanges thoroughly.

Check before starting

If the machine is at an angle, reposition it level before checking. Carry out the following inspections and cleanings every day before starting the engine for the day´s work.

Check monitor panel

1. Turn starting switch to the ON position (B).

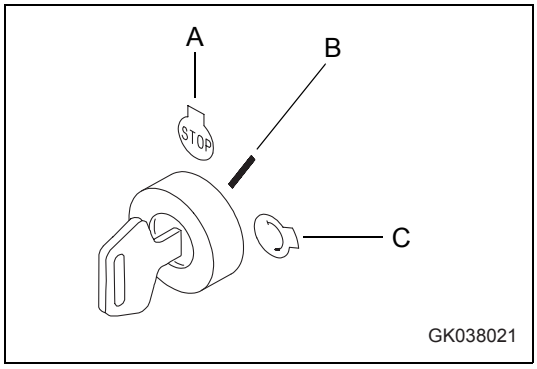

2. Check that all the monitors, gauges, and the central warning lamp light up for approx. 2 seconds and the alarm buzzer sounds for approx. 2 sec.
   If the lamps do not light up, there is probably a failure or disconnection. Contact your KOMATSU distributor for inspection.

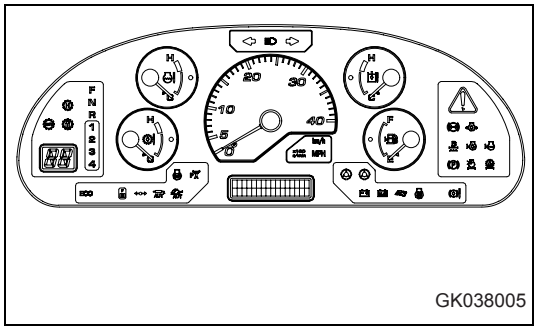

Check coolant level, add coolant

WARNING

- Do not open the radiator cap unless necessary. When checking the coolant, always wait for the engine to cool down and check the sub tank.
- Immediately after the engine is stopped, the coolant is at a high temperature and the radiator is under high internal pressure. If the cap is removed to check the coolant level in this condition, there is a hazard of burns. Wait for the temperature to go down, then turn the cap slowly to release the pressure before removing it.

CAUTION

When adding coolant, use the step and handrail provided, and support your body securely.

1. Open side door of the engine hood on the right side of the machine.
2. Check that the coolant level is between the FULL and LOW range on sub-tank (1). If the coolant level is low, add coolant through the water filler port of sub-tank (1) to the FULL line.
3. After adding coolant, tighten the cap securely.

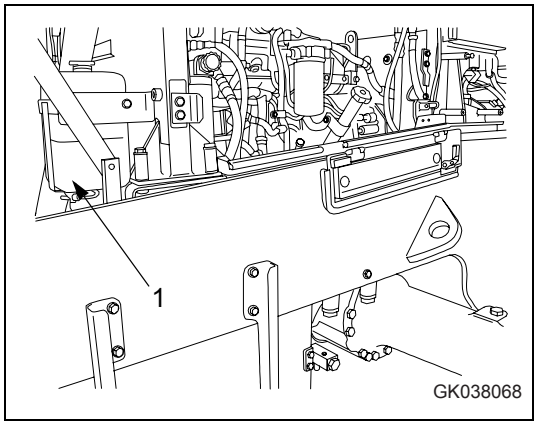

4. If sub tank (1) is empty, check for coolant leakage, then check the coolant level in the radiator. If the coolant level is low, add coolant to the radiator, then add coolant to sub tank (1).

   If the volume of coolant added is more than usual, check for possible leakage.

   Confirm that there is no oil in the coolant.

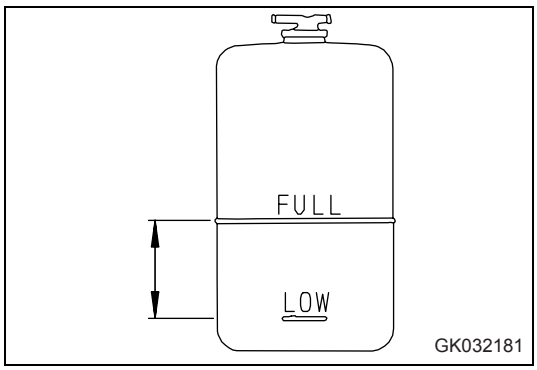

Check oil level in engine oil pan, add oil

WARNING

Engine parts and oil are at high temperature immediately after the engine is stopped, and may cause serious burns. Wait for the temperature to go down before starting the operation.

1. Open the inspection cover of the right side at the rear of the machine.
2. Take out the dipstick (G) and wipe off the oil with cloth.
3. Completely insert dipstick (G) fully in the oil filler pipe, then take it out again.
4. The oil level should be between the H and L marks on dipstick (G).

   If the oil level is below the L mark, add oil through oil filler (F).

   If the oil is above the H line, open drain valve (P), drain the excess engine oil, then check the oil level again.
5. If the oil level is correct, tighten oil filler cap (F) securely and close the inspection window.

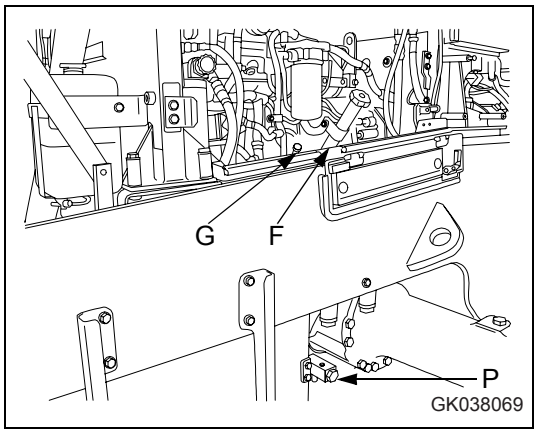

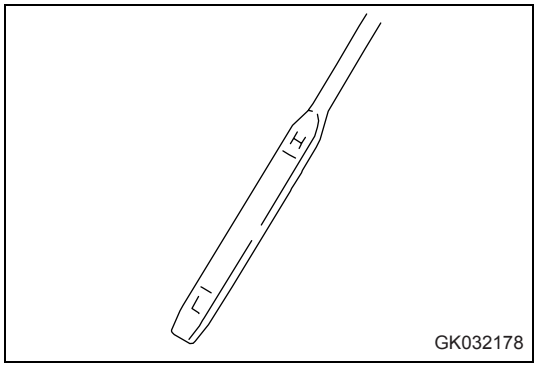

REMARK

When checking the oil level after the engine has been operated, wait for at least 15 minutes after stopping the engine before checking.
If the machine is at an angle, make it horizontal before checking.

Check water separator

WARNING

- Each part of the engine is still highly heated immediately after the engine is stopped. Do not attempt to drain cooling water or remove the filter element cup.
- High pressure is generated inside the engine fuel piping, while the engine is running. Wait for more than 30 seconds after the engine stop for the engine to sufficiently cool down. Then start with draining cooling water or removing the filter element cup.

Do not bring fire close.

Check water separator, drain water and sediment.

1. Open the engine side cover on the right side of the machine.

   The water separator forms one unit with the fuel pre-filter, and is at the bottom.

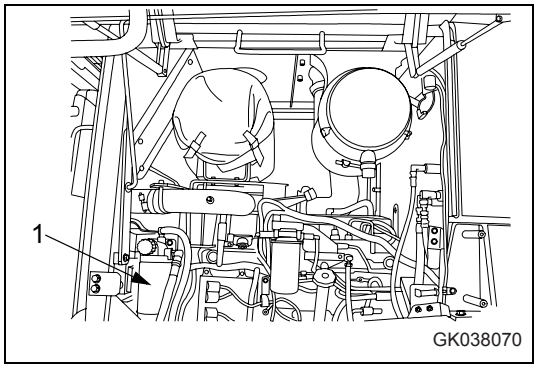

2. It is possible to judge the condition of water and sediment through transparent cap (3). If water or sediment is accumulated, set a container under drain hose (4) to collect the discharged water.
3. Loosen plug (2) and drain the water.
4. Tighten plug (2) as soon as fuel starts to be discharged from drain hose (4).

   (Tightening torque: 0.2 - 0.45 Nm)

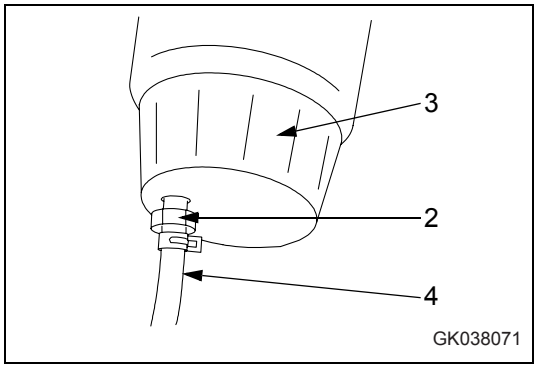

5. On this machine, sensor (5) is installed to detect if water is accumulated at the bottom of the fuel pre-filter.

   If water separator caution lamp (6) on the machine monitor lights up, carry out the above Steps 1 - 4 to drain the water.

If plug (2) is stiff, coat O-ring (5) of plug (2) with grease.

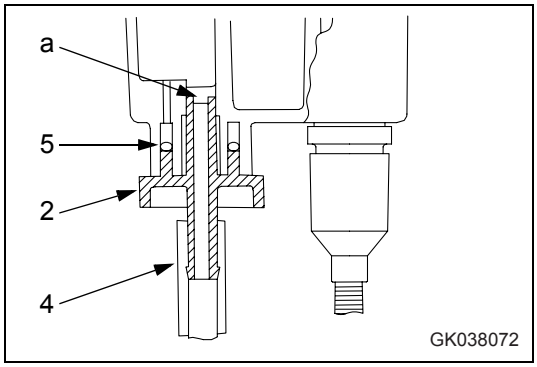

1. Set a fuel container under drain hose (4).
2. Loosen plug (2), then drain all the sediment together with the fuel from drain hose (4).
3. Check that nothing comes out from drain hose (4), then remove plug (2).
4. Coat O-ring portion (5) with a suitable amount of grease. When doing this, be careful not to let the grease get on the drain valve water drain port (a) or the plug thread.
5. Screw in plug (2) by hand until it contacts the bottom.
6. Remove the fuel container.

   If transparent cap (3) is dirty and the contents cannot be easily seen, clean transparent cap (3) when replacing the filter.

   When washing, if plug (2) is removed, coat the O-ring with grease, then tighten by hand until it contacts the bottom.

Check air cleaner element

WARNING

- If inspection, cleaning, or maintenance is carried out with the engine running, dirt will get into the engine and damage it. Always stop the engine before carrying out these operations.
- When using compressed air, there is danger that dirt may be blown around and cause serious injury.
- Always use protective glasses, dust mask, and other protective equipment.

1. Open the engine side cover on the right side of the chassis.
2. If the yellow piston in the display portion of dust indicator (1) installed to the air cleaner enters the red range (7.5 kPa), clean the element.
3. After cleaning, press the button of the dust indicator to reset it.
4. If the yellow piston enters the red range (7.5 kPa) soon after the dust indicator is reset, it is necessary to replace the element.

   For details, see "Replacing element (4-34)".

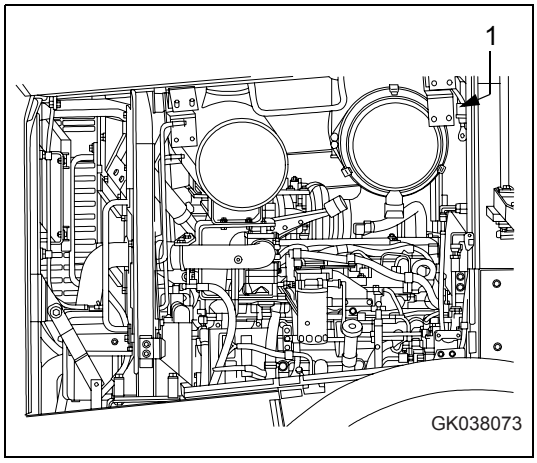

Electric air cleaner clogging sensor

(Machines equipped with KOMTRAX)

If the yellow piston in the display portion of dust indicator (1) enters the red range (7.5 kPa), or air cleaner clogging caution lamp (2) on the machine monitor lights up, clean the air cleaner element.

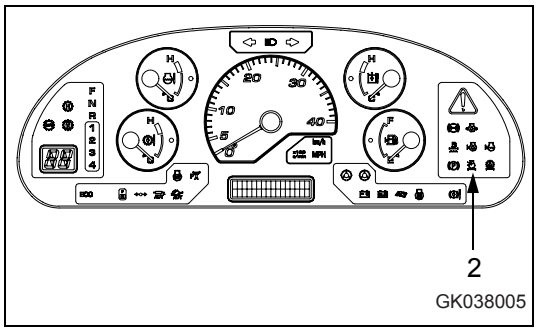

NOTE

- *Do not clean at the element until the air cleaner clogging caution lamp lights up.*
- *If the element is cleaned frequently before the air cleaner becomes clogged, the air cleaner will not be able to provide its expected performance and the cleaning efficiency will become poor.*
- *In addition, dirt stuck to the element will drop inside the inner element more frequently during the cleaning operation.*

Check fuel level, add fuel

WARNING

When adding fuel, never let the fuel overflow. This may cause a fire. If any fuel is spilled, wipe it up completely. Never bring flames near fuel because it is highly flammable and dangerous.

NOTE

If the engine has stopped because it has run out of fuel, it is necessary to bleed all the air from the circuit before starting again.

For details. see "Procedure for bleeding air (4-70)".

Take care not to let the engine stop because of lack of fuel.
If the engine has run out of fuel, the air bleeding operation can be carried out more quickly if the fuel tank is completely filled with fuel.

1. Turn the engine starting switch to the ON position (B) and check the fuel level with fuel level gauge (G).

   After checking, turn the switch back to the OFF position (A).

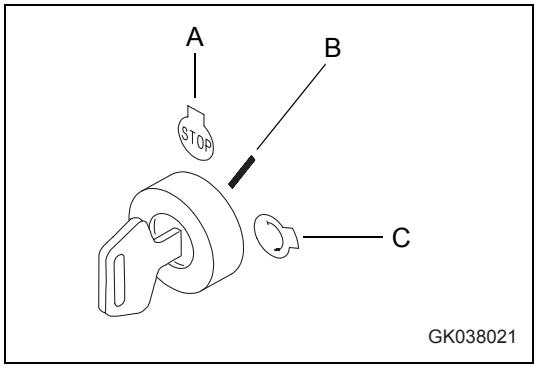

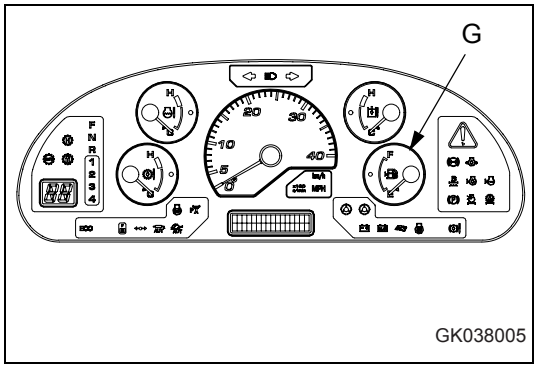

2. After the day's work is finished, open cover (1) and refill fuel through fuel filler port (F) until the fuel tank is full.

   For details of the method for opening and closing the cap, see "Cap with lock (3-65)".

3. After adding fuel, tighten the cap securely.

   Fuel tank capacity: 300 liters

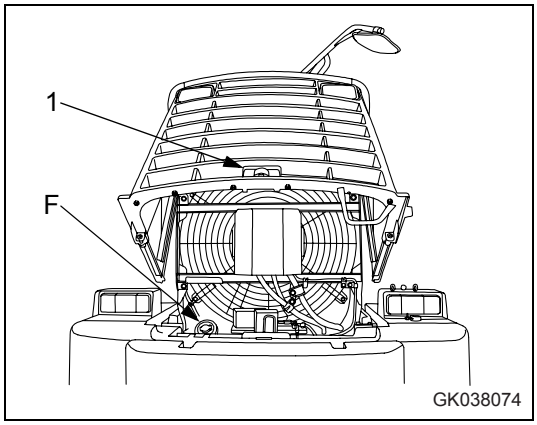

Check electric wiring

CAUTION

If fuses are frequently blown or if there are traces of short-circuiting on the electrical wiring, promptly ask your KOMATSU distributor to locate the cause and make the repair.
Keep the top surface of the battery clean and check the breather hole in the battery cap. If it is clogged with dirt or dust, wash the battery cap to clear the breather hole.

Check for damage and wrong capacity of the fuse and any sign of disconnection or short circuit in the electric wiring. Check also for loose terminals and tighten any loose parts.

Particularly, check the wiring of the “battery“, “starting motor“ and “alternator“ carefully.

When carrying out checks around the battery, always check if there is any accumulation of flammable material around the battery, and remove such flammable material.

Please contact your KOMATSU distributor for investigation and correction.

Check parking brake

Check that the parking brake works properly.

If there is any abnormality in the operation of the parking brake or the brake does not provide the proper braking effect, please contact your KOMATSU distributor for adjustment.

Check brake pedal

Drive the machine forward and check the effect of the brakes.

If there is any abnormality in the actuation of the brakes, please contact your KOMATSU distributor to have the brakes adjusted.

Check inflation pressure of tires

Measure the inflation pressure with a tire pressure gauge while the tires are cool before starting work.

Check for damage or wear to the tires and the rims. Check for loose wheel hub nuts (bolts).

The appropriate inflation pressure differs according to the type of work, see "Handling the tires (3-137)".

Adjustment

Seat adjustment

WARNING

When adjusting the position of the operator's seat, always set the work equipment lock lever to the LOCK position to prevent any accidental contact to the control levers.

- Always adjust the operator's seat before starting each operation or when the operators change shift.
- When adjusting the seat, put your back against the backrest and adjust to a position where the brake pedal can be fully depressed.

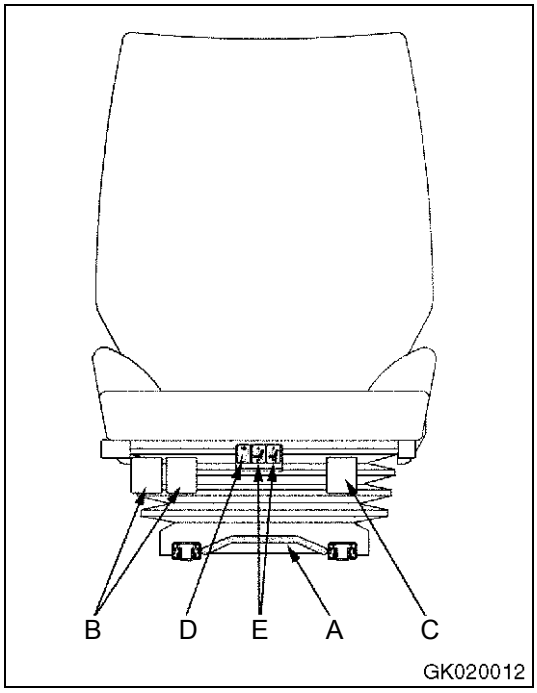

(A) Horizontal adjustment

Lift lever and move seat forwards/backwards.

Release the lever to lock the seat.

(B) Height and Slope adjustment

Pull lever and adjust the seat position in height and slope by loading/unloading the front/rear seat cushion area.

(C) Backrest adjustment

Adjust the position of the backrest by pulling the lever whilst a load is applied to the backrest.

(D) Weight adjustment

Push button to adjust the suspension to the driver's weight in the middle swing position.

Careful! No height adjustment.

(E) Lumbar support

Push buttons to inflate/deflate the air chambers of the integrated pneumatic system.

This allows the operator to match the shape of the backrest individually to the body contours.

Safety belt

WARNING

- Danger of injury! A damaged safety belt, a safety belt that has been stretched in an accident, or a safety belt the belt fixings or fastening screws of which have not been mounted correctly will not protect you sufficiently in case of accident!
- Replace the safety belt, if it is damaged, or if the machine has been involved in an accident. Check that the belt fixings and fastening screws are in perfect condition, before you put on the safety belt.
- If you have not put on the safety belt and are involved in an accident, this may lead to severe injuries!
- Put on the safety belt, before you start work and do not take it off during work. Put on the safety belt in such a way that it is not twisted and fits tightly.

The machine is provided with a lap belt which automatically retracts. When pulled slowly, automatic belts ensure full freedom of action, but block immediately, if you suddenly brake or accelerate, or if you drive downhill or take corners.

Putting on the safety belt

1. Sit down on the driver's seat.
2. Slowly and continuously pull out the belt (1).
3. Insert the lock tongue (2) into the lock socket (3) until the lock engages.
4. Then, pull the belt to check whether or not the lock tongue is fully engaged.

   The belt cannot be pulled out unless it is completely wound up.

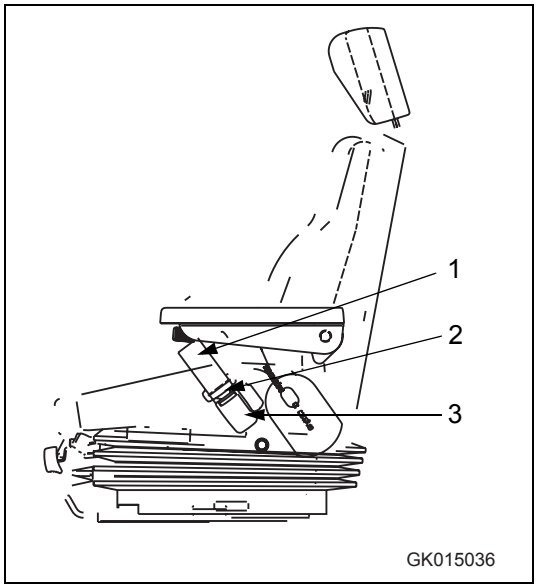

Taking off the safety belt

Press the orange button to release the lock of the safety belt and allow the belt to wind up.

Adjust lever stand

WARNING

- When adjusting the lever stand, check that the work equipment lock lever is securely at the LOCK position.
- If it is not at the LOCK position, and the work equipment control levers are touched by accident when adjusting the lever stand, the work equipment may suddenly move and cause serious personal injury.

Adjust height and angle of wrist rest

The height of wrist rest (1) can be adjusted by loosening lock lever (2).

Amount of adjustment: 30 mm

Angle: 44 degrees

REMARK

Set lock lever (2) to the FREE position. The lock lever is loosened.

Hold the armrest at the desired position and move the lock lever to the LOCK position to secure the armrest in position.

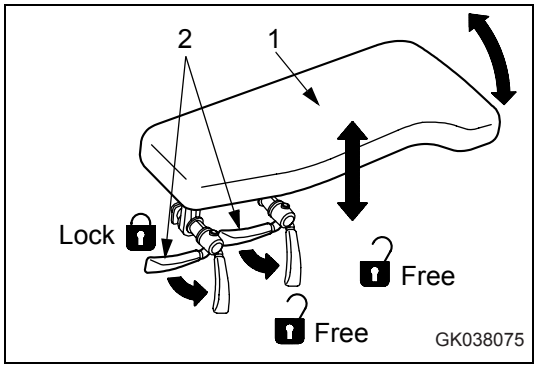

Adjust lever stand forward and backward

Pull lever (1) up with your left hand, grip wrist rest (3) with your right hand and move it to the front or rear, then release lever (1).

Amount of adjustment: 180 mm.

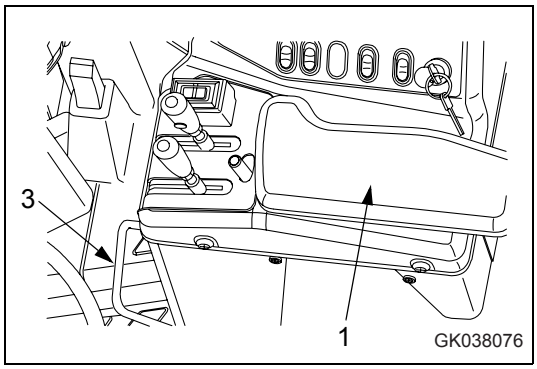

Adjusting mirrors

WARNING

Be sure to adjust the mirrors before starting work. If they are not adjusted properly, you cannot secure the visibility and may be injured or may injure someone seriously.

Mirrors A, B

Loosen bolt (1) of the mirror, then adjust the mirror to a position which gives the best view from the operator's seat of the blind spot at the left and right sides at the rear of the machine.

When installing the mirror, adjust so that it is possible to see any person (or any object of a height of 1 m and diameter of 30 cm) at the rear left or right of the machine.

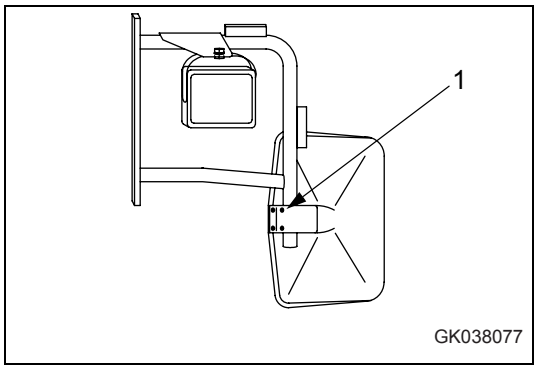

Mirrors C

Adjust so that is possible to see the ground around the machine at a range of 1 m from the operator's seat.

If the movement of the mirror is stiff when adjusting it, loosen bolt (2) of the mirror.

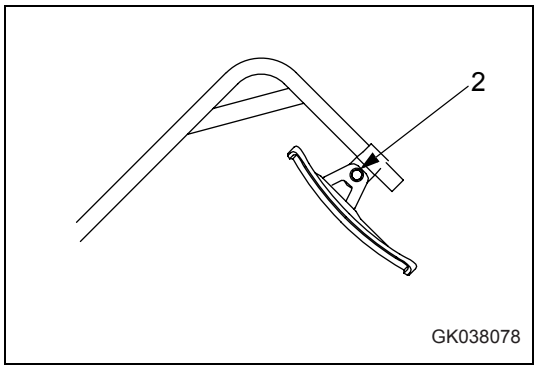

Install the mirrors at the position and dimensions shown in the diagram. The values below are reference values for the range of visibility.

Range of view (left): 2500 mm

Range of view (right): 2500 mm

Mirror A:
Must be possible to see hatched portion (A)

Mirror B:
Must be possible to see hatched portion (B)

Mirror C:
Must be possible to see hatched portion (C)

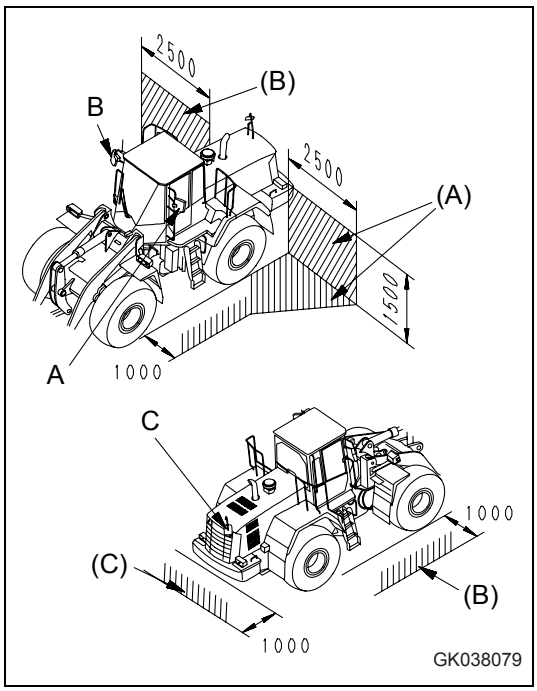

NOTE

- *Tighten the mirror mounting bolts securely that they will not be loosened and the mirrors will not come off.*
- Tightening torque
  Mirrors A, B: 2.0 to 2.5 Nm
  Mirrors C: 8.8 to 9.8 Nm
- *If the tightening torque cannot be controlled, ask your KOMATSU distributor for tightening the bolts.*

Operations and checks before starting engine

WARNING

Before starting the engine, check that the work equipment lock lever (3) is securely at the LOCK position.
If the work equipment control lever is touched by accident when starting the engine, the work equipment may move unexpectedly and cause serious damage or personal injury.

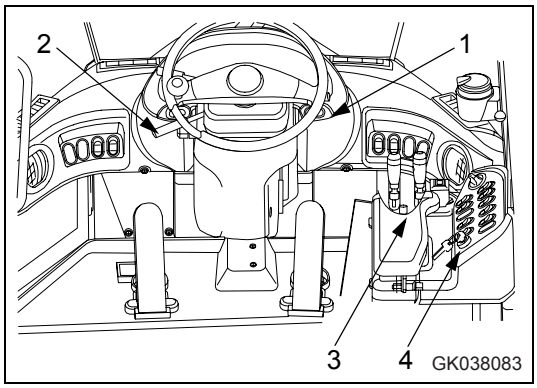

1. Check that parking brake switch (1) is at the ON position (A).

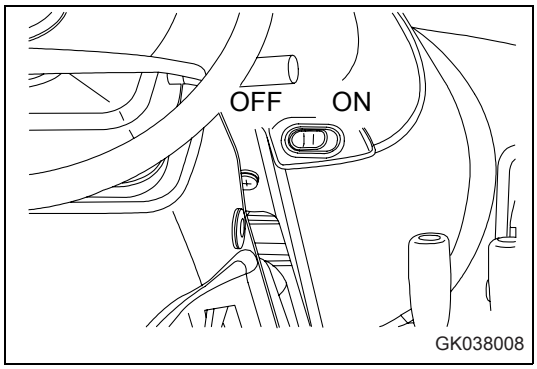

2. Check that directional lever (2) is at the N position.

   If directional lever (2) is not set to the N position, the engine will not start.

REMARK

If the directional lever is not at the N position, the alarm buzzer will emit short sounds.

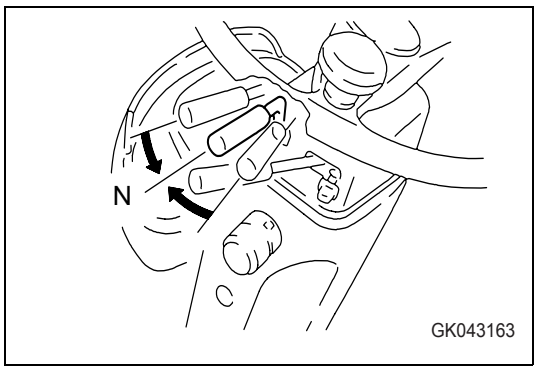

3. Check that the bucket is completely lowered to the ground.

   If it is not completely lowered, lower the bucket to the ground as follows.

   - Check that the work equipment control lever is at the HOLD position, then set the safety lock lever to the FREE position.
   - Operate the work equipment control lever to lower the bucket to the ground.
   - Check that the work equipment control lever is at the HOLD position, then set the safety lock lever to the LOCK position.

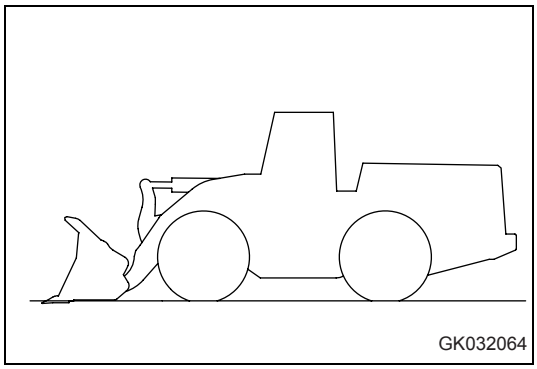

4. Check that safety lock lever (3) is at the LOCK position.

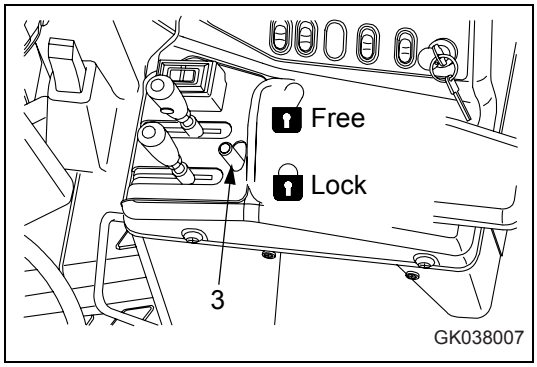

5. Insert the key in starting switch (4), turn the key to the ON position (B), and check that the machine monitor system works.

   When the starting switch is turned to the ON position before starting the engine, monitors, gauges, and central warning lamp light up for approx. 2 seconds, and the alarm buzzer sounds for approx. 2 sec.

   If any monitor does not light up, there is probably a failure or disconnection, so contact your KOMATSU distributor for inspection.

   In addition, after all the monitors, gauges, and central warning lamp light up, a self check is carried out to check that the emergency steering function works properly.

   For details, see "Emergency steering self-check function (3-119)".

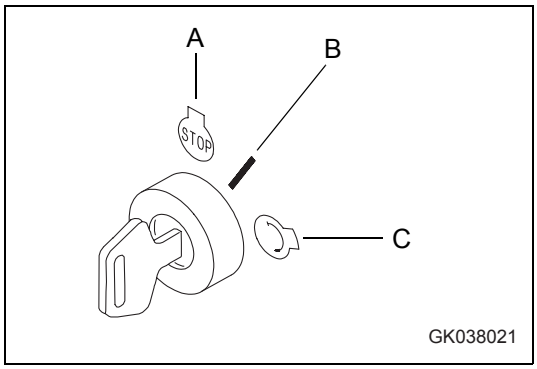

3.3.2 Starting engine

Normal starting

WARNING

- Start the engine only after sitting down in the operator's seat.
- Do not attempt to start the engine by short-circuiting the engine starting circuit. Such an act may cause serious bodily injury or fire.
- Check that there are no persons or obstacles in the surrounding area, then sound the horn and start the engine.
- Exhaust gas is toxic. When starting the engine in confined spaces, be particularly careful to ensure good ventilation.

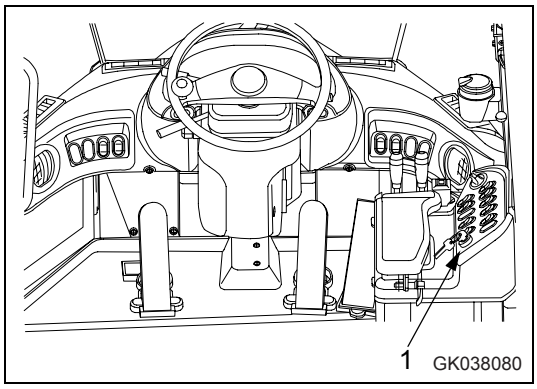

NOTE

- *Do not accelerate the engine suddenly before completing the warming-up operation.*
- *Do not start the engine with the accelerator pedal fully depressed. There is danger that the engine parts may be damaged.*
- *Do not keep the starting motor rotating continuously for more than 20 seconds.*
  If the engine does not start, wait for at least 2 minutes before trying to start the engine again.
  Avoid the sudden acceleration of the engine until it is warmed up.

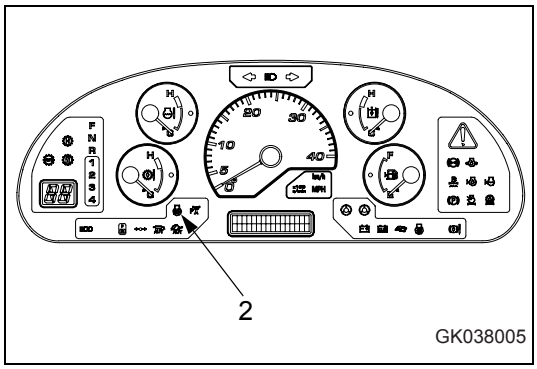

This machine is equipped with an engine automatic preheating device that functions to start the engine preheating automatically.

If the ambient temperature is low, the preheating monitor will light up when the key in starting switch (1) is turned to the ON position to inform the operator that preheating has been started automatically.

1. Turn the key in starting switch (1) to ON position (B).

   If the ambient temperature is low, the preheating pilot lamp (2) lights up and automatic preheating is carried out. Keep the key in starting switch (1) at the ON position until the preheating pilot lamp (2) goes out.

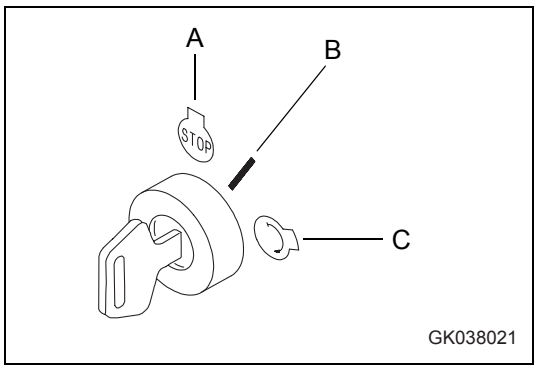

The time that the preheating pilot lamp (2) stays lighted up depends on the ambient temperature as shown in the table on the right.

Ambient temperature	Lighting time
-1°C to -15°C	0 seconds to 30 seconds
-15°C or less	30 seconds

2. If the preheating pilot lamp (2) does not light up, or it lights up and then goes out to inform that the engine preheating has been completed, turn the key in starting switch (1) to the START position (C).

3. The starting motor will continue to turn and the engine will start.

   Keep the key in starting switch (1) at the START position (C) to keep the starting motor running until the engine starts.

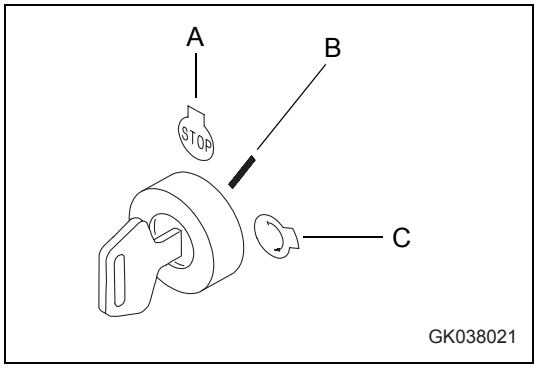

REMARK

In low temperatures, to ensure lubrication of the engine and to improve the durability, no fuel is supplied to the engine for 3 seconds after the key in starting switch (1) is turned to the START position (C), so the engine will not start during this time.
Therefore, keep the key in starting switch (1) at the START position (C) to keep the starting motor running until the engine starts.

4. After the engine starts, release the key in starting switch (1). The key will automatically return to the ON position (B).

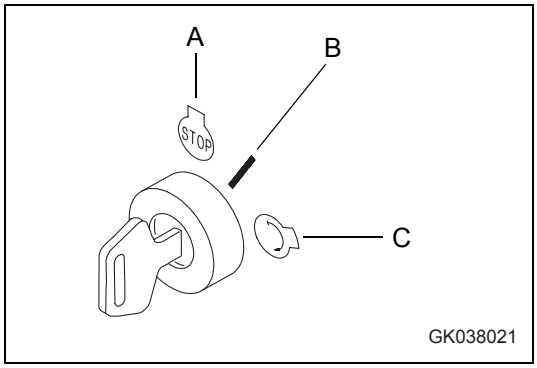

REMARK

Keep the accelerator pedal depressed after the engine starts up, until engine warming-up run is finished. Do not step on the pedal to the full stroke.

Starting in cold weather

WARNING

- Start the engine only after sitting down in the operator's seat.
- Do not attempt to start the engine by short-circuiting the engine starting circuit. Such an act may cause serious bodily injury or fire.
- Check that there are no persons or obstacles in the surrounding area, then sound the horn and start the engine.
- Exhaust gas is toxic. When starting the engine in confined spaces, be particularly careful to ensure good ventilation.

NOTE

- *Do not accelerate the engine suddenly before completing the warming-up operation.*
- *Do not start the engine with the accelerator pedal fully depressed. There is danger that the engine parts may be damaged.*

It takes some time to start up the engine when the machine is left unused for more than half a day in the ambient temperature of approx. -20°C (-4°F). In that case, use the engine starting switch and accelerator pedal in the following manner.

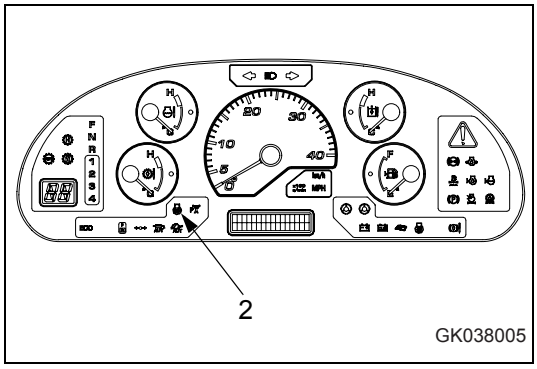

1. Turn the key in starting switch (1) to ON position (B).

   If the ambient temperature is low, the preheating pilot lamp (2) lights up and automatic preheating is carried out. Keep the key in starting switch (1) at the ON position until the preheating pilot lamp (2) goes out.

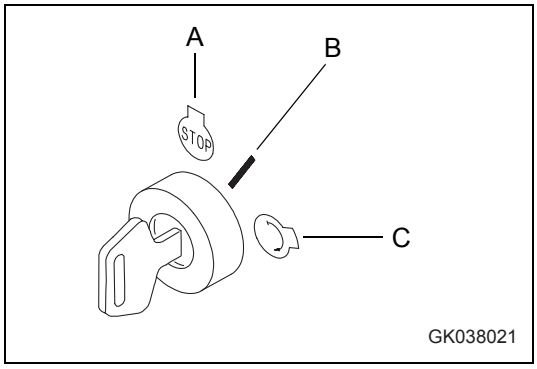

   The time that the preheating pilot lamp (2) stays lighted up depends on the ambient temperature as shown in the table on the right.

Ambient temperature	Lighting time
-1°C to -15°C	0 seconds to 30 seconds
-15°C or less	30 seconds

2. When preheating pilot lamp (2) goes out, turn the key in starting switch (1) to the START position (C).

   Keep the key in starting switch (1) at the START position (C) to keep the starting motor running until the engine starts.

3. The starting motor will continue to turn and the engine will start.

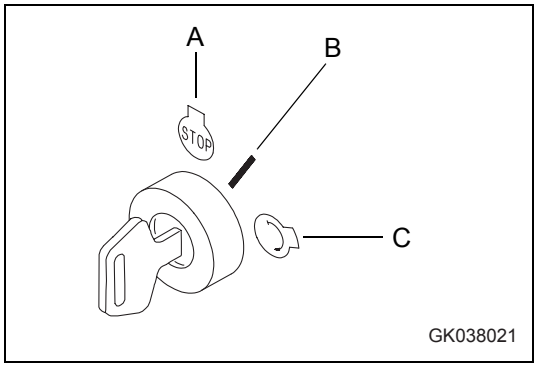

REMARK

In low temperatures, to ensure lubrication of the engine and to improve the durability, no fuel is supplied to the engine for 3 seconds after the key in starting switch (1) is turned to the START position (C), so the engine will not start during this time.
Therefore, keep the key in starting switch (1) at the START position (C) to keep the starting motor running until the engine starts.

4. Method of starting engine in temperatures of approx. -20°C.
   - Keep the engine starting motor running for the max. 20 seconds, holding the key of engine starting switch (1) in the START position (C), until the engine starts up.
   - If the engine fails to start up even after running the engine starting motor for about 20 seconds, stop the engine starting motor once (release the engine starting switch (1) key), and try the same process again after a pause for a minute or so.
   - If the engine still fails to start up after the second attempt, try the same process for the third time after a pause for a minute or so.

5. When the engine has started up and the engine speed rises, release the key of engine starting switch (1).

   The key will automatically return to the ON position (B).

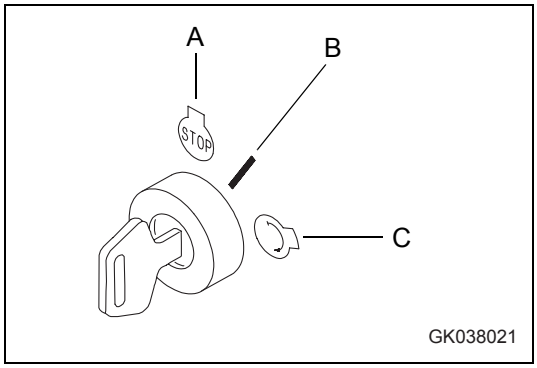

Automatic warming-up operation

When the engine starts, if the water temperature is 30°C or less, the warming-up operation (engine speed: 1000 rpm) is automatically carried out. The warming-up operation is automatically cancelled when the water temperature reaches 50°C or more. (Engine speed: 850 rpm)

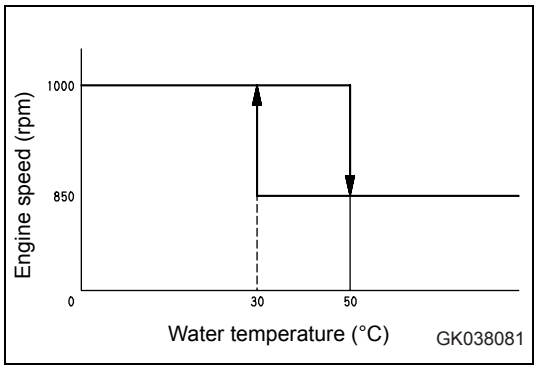

3.3.3 Operations and checks after starting engine

WARNING

- Emergency stop
  If the operation is abnormal or any other trouble occurs, turn the key in the starting switch to the OFF position.
- If the work equipment is operated without warming up the machine sufficiently, the response of the work equipment to the movement of the control lever will be slow, and the work equipment may not move as the operator desires, so always carry out the warming-up operation. Particularly in cold areas, be sure to carry out the warming-up operation fully.

NOTE

When the hydraulic oil temperature is low, do not carry out operations under heavy load or at high speed. There is danger that the pump may be broken.

Breaking-in the machine

CAUTION

Your KOMATSU machine has been thoroughly adjusted and tested before shipment. However, operating the machine under severe conditions at the beginning can adversely affect the performance and shorten the machine life.
Be sure to break-in the machine for the initial 100 hours (as indicated by the service meter).
During breaking-in operations, follow the precautions described in this manual.

- Idle the engine for 5 minutes after starting it up.
- Avoid operation with heavy loads or at high speeds.
- Immediately after starting the engine, avoid sudden starts, sudden acceleration, unnecessary sudden stops, and sudden changes in direction.

Normal operation

After starting the engine, do not immediately start operations. First, carry out the following operations and checks.

NOTE

Do not suddenly accelerate the engine before the warming-up operation is completed.
Do not run the engine at low idling or high idling continuously for more than 20 minutes.
If it is necessary to run the engine at idling, apply a load from time to time or run the engine at a mid-range speed.

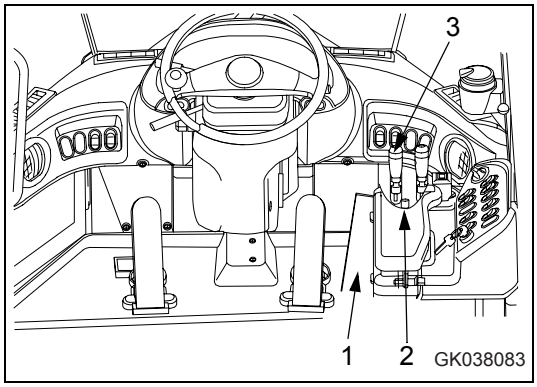

1. Immediately after starting the engine, without depressing the accelerator pedal (1), run the engine at idle for at least 10 seconds during the warm weather and for at least 15 seconds during the cold weather.
2. Depress accelerator pedal (1) lightly and run the engine with no load at midrange speed for about 5 minutes.

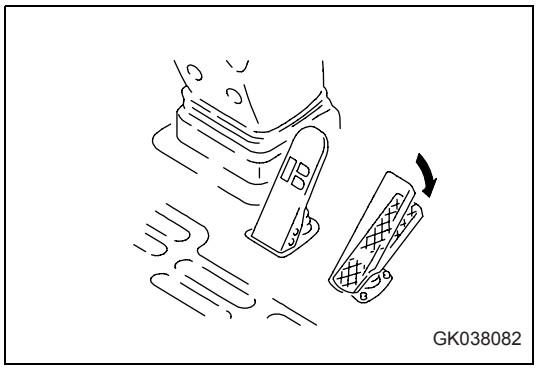

To warm up the hydraulic oil in cold areas, do as follows.

3. After completing the warming-up operation, check that the engine rotation is smooth, then check that the work equipment control lever is at the HOLD position and set safety lock lever (2) to the FREE position.
4. Operate work equiment control lever (3) to TILT position (a) and return it to HOLD position (b) to warm up the hydraulic oil.

   The relief time at the tilt position (a) should be a maximum of 10 seconds.

   With this operation, the oil will reach the relief pressure and this will warm up the hydraulic oil more quickly.
5. Slowly operate the steering wheel to the left and the right about 10 minutes to warm up the hydraulic oil inside the steering valve.

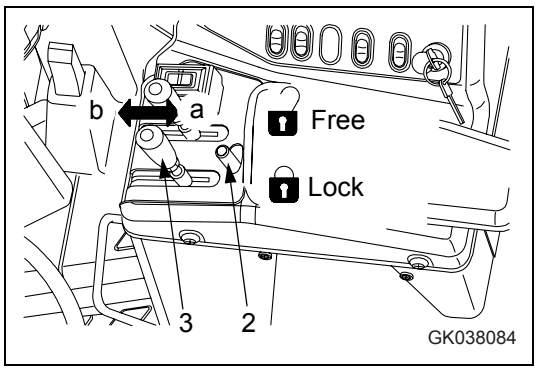

WARNING

If the steering wheel is operated and stopped while the oil temperature is low, there may be a time lag before the machine stops turning.
In this case, use the frame lock bar to ensure safety, and perform the warm-up operation in a wide place.
Do not relieve the hydraulic oil in the circuit continuously for more than 5 seconds.

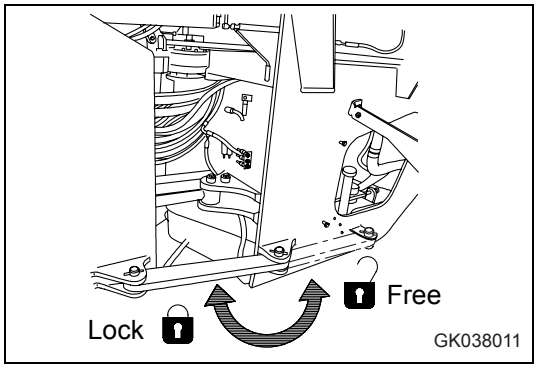

NOTE

Turn the steering wheel a little and stop in that position. Confirm that the machine turns by an angle equivalent to the amount that the steering wheel is turned.

Select the oil from the table of recommended oils below according to the ambient temperature.

If KOMATSU EO10W30-DH is used in the cold season, replace it with KOMATSU EO15W40-DH oil when the cold season finishes.

Reservoir	Fluid Type	Ambient Temperature									
		-22	-4	14	32	50	68	86	104	122	°F
		-30	-20	-10	0	10	20	30	40	50	°C
Hydraulic system	Engine oil										

6. After carrying out the warming-up operation, check that the gauges and pilot lamps are normal.

   If there is any abnormality, carry out maintenance or repair.

   Run the engine under a light load until engine cooling water temperature gauge (2) and torque converter oil temperature gauge (5) are in the green range.

7. Check that there is no abnormal exhaust gas color, noise or vibration. If any abnormality is found, contact your KOMATSU distributor.

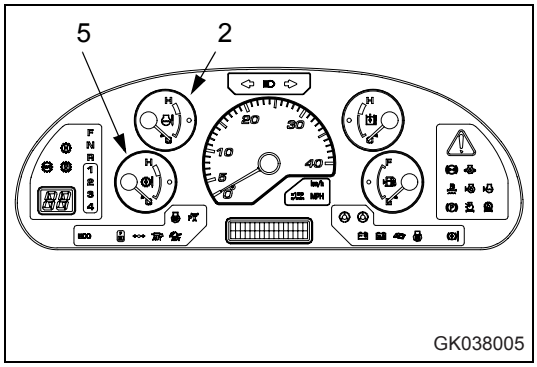

REMARK

The rotating speed of the cooling fan differs according to the following conditions, but this does not indicate any abnormality.
The cooling fan speed increases when the hydraulic oil temperature, engine coolant temperature, or transmission oil temperature are high.
However, when the cooling fan is rotating in reverse, it rotates at a fixed speed proportional to the engine speed, regardless of any oil or coolant temperature.

3.3.4 Stopping engine

NOTE

If the engine is abruptly stopped before it has cooled down, engine life may be greatly shortened. Consequently, do not abruptly stop the engine except for an emergency.
In particular, if the engine has overheated, do not abruptly stop it but run it at medium speed to allow it to cool gradually, then stop it.

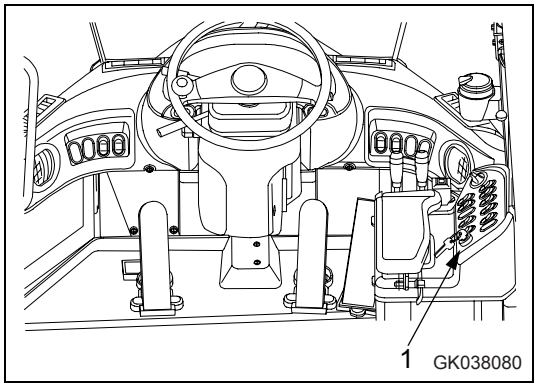

1. Run the engine at low idling for about 5 minutes to cool down gradually.
2. Turn the key of starting switch (1) to the OFF position (A) to stop the engine.
3. Remove the key from starting switch (1).

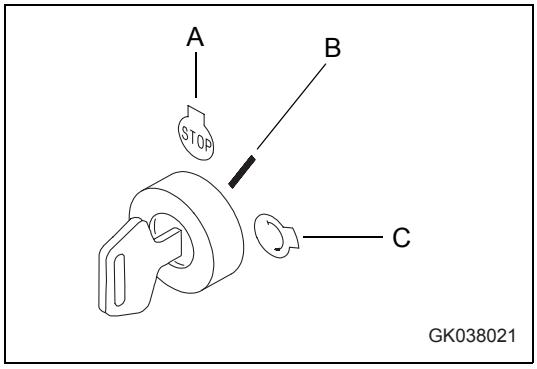

3.3.5 Check after stopping engine

1. Walk around the machine and check the work equipment, bodywork, and undercarriage, and check also for oil and water leakage.
2. Fill the fuel tank.
3. Check the engine compartment for paper and debris. Clean out any paper and debris to avoid a fire hazard.
4. Remove any mud affixed to the undercarriage.

3.3.6 Moving the machine (directional, speed), stopping the machine

WARNING

- Always remove the frame lock bar for travel operations. If it is not removed, the steering wheel cannot be used for steering, and this may lead to serious damage or injury.
- When moving the machine, check that the area around the machine is safe, then sound the horn before starting.
- Do not allow people to get near the machine.
- Clear the machine's travel path of any obstacle.
- Pay particular attention to the blind spot at the rear of the machine when traveling in reverse.
- When starting the machine off up a slope, set the transmission cut-off switch to the OFF position, depress the left brake pedal. Then depress the accelerator pedal and gradually release the brake pedal to start the machine off. This makes it possible to prevent the machine from rolling back.

Preparations for moving the machine

1. Check that warning pilot lamp (1) is not lighted up.

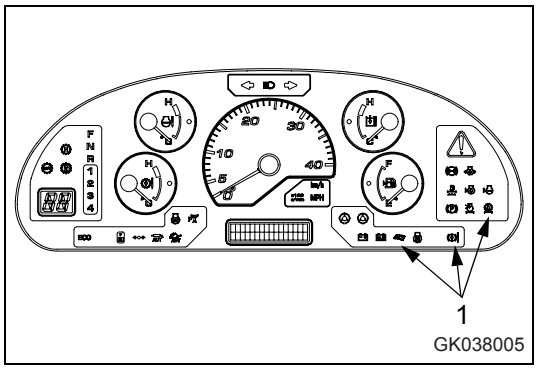

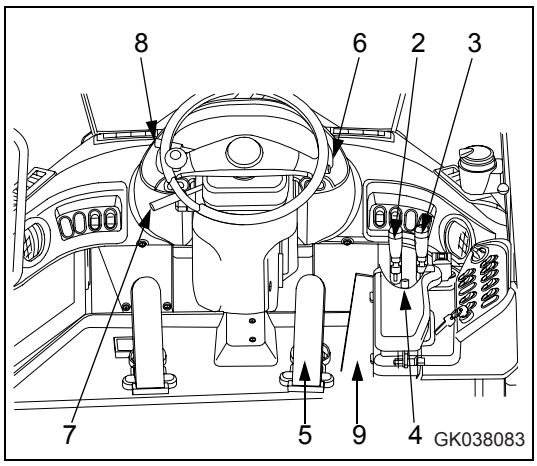

2. Check that the bucket control lever (2) and lift arm control lever (3) is at the HOLD position, then set the work equipment lock lever (4) to the FREE position.

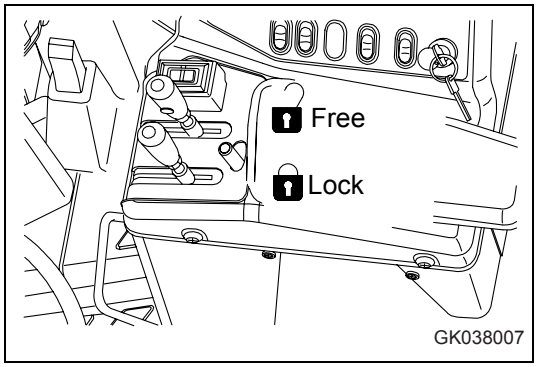

3. Operate lift arm control lever (3) to set the work equipment to the travel posture shown in the diagram on the right.

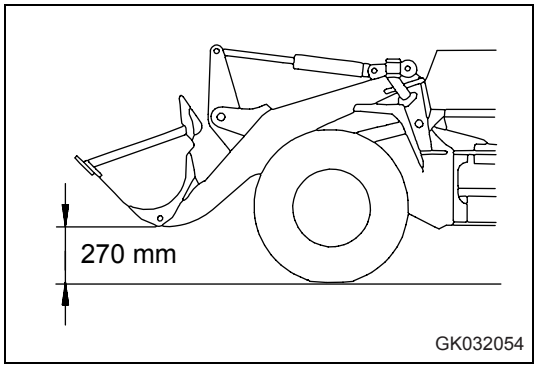

4. Depress right brake pedal (5) and turn parking brake switch (6) to the OFF position (B) to release the parking brake.

   Keep right brake pedal (5) depressed.

REMARK

If the parking brake is still actuated when parking brake switch (6) is at the OFF position (B), turn the parking brake switch ON position (A), then turn it OFF position (B) again.

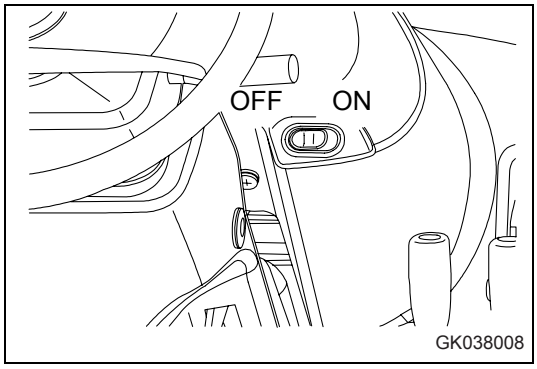

5. Set gearshift lever (7) to the desired position.

   Position (a): 1st

   Position (b): 2nd

   Position (c): 3rd

   Position (d): 4th

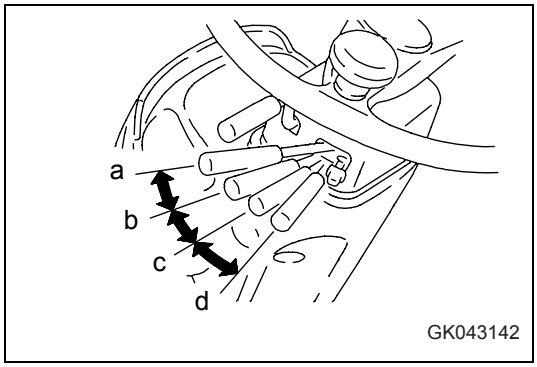

6. Set directional lever (8) to the desired position.

   Position (a): FORWARD

   Position N: NEUTRAL

   Position (b): REVERSE

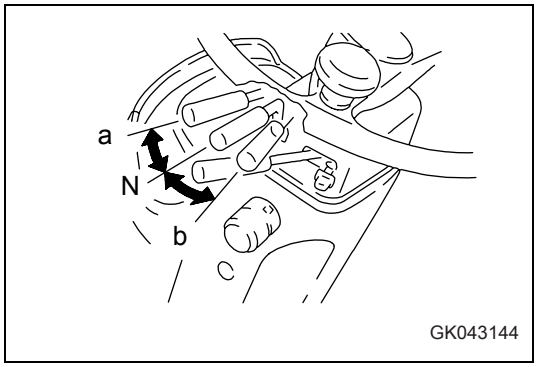

REMARK

Check that the backup alarm sounds when the directional lever is set to REVERSE. If the backup alarm does not sound, please contact your KOMATSU distributor for repairs.

7. Release right brake pedal (5), then depress accelerator pedal (9) to move the machine.

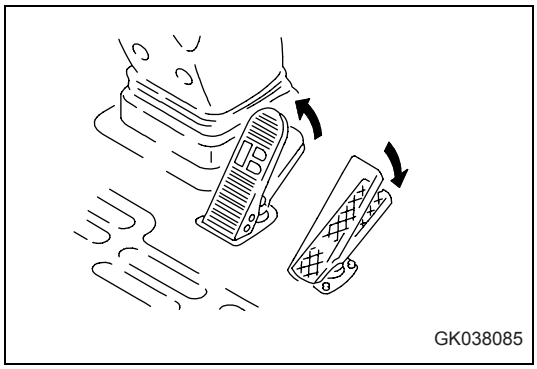

REMARK

When moving the machine off on a hill, turn transmission cut-off switch (10) OFF, depress left brake pedal (11), operate the gear-shift lever to the low speed range, then depress accelerator pedal (9) and gradually release left brake pedal (11) to let the machine move off. This makes it possible to prevent the machine from rolling back.

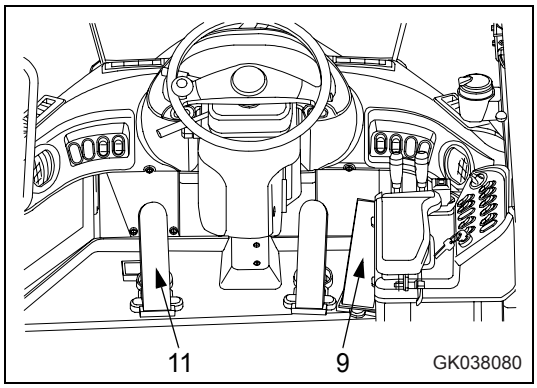

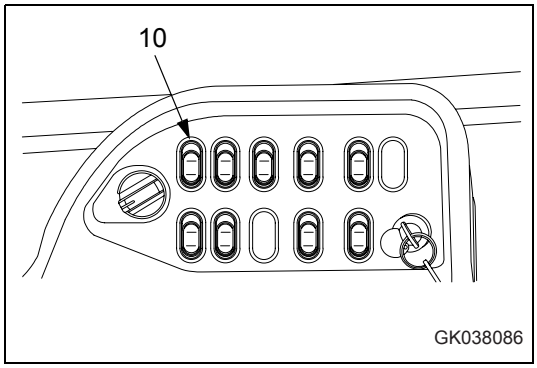

Changing gear speed

WARNING

- When traveling at high speed, do not shift gear suddenly. Use the brake to reduce the travel speed before shifting gear.
- Do not switch between FORWARD and REVERSE when traveling at high speed.
- When switching between FORWARD and REVERSE, depress the brake to reduce the travel speed sufficiently, then change the direction of travel. Max.speed for changing direction: 12 km/h.

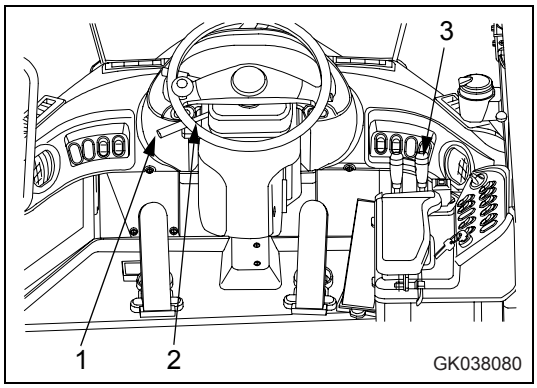

Shift gear as follows.

Move the gearshift lever (1) to the desired position to shift gear. When carrying out digging or loading operations, the operation is carried out in 1st or 2nd, so use the gearshift lever stopper (2).

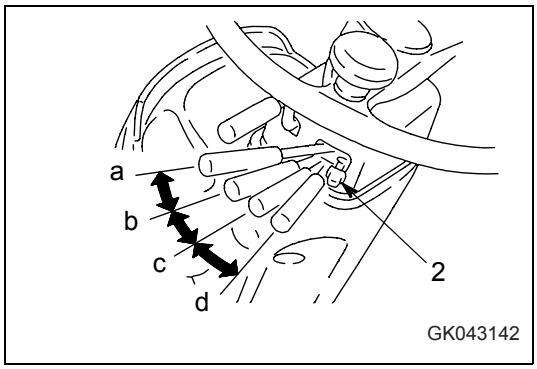

Position (a): 1st

Position (b): 2nd

Position (c): 3rd

Position (d): 4th

For details, see "Preparations for moving the machine (3-106)".

REMARK

If the gearshift lever is operated slowly or is stopped between gear positions, the central warning lamp may light up and the alarm buzzer may sound. In this case, there is no failure, but try to operate the gearshift lever so that the gearshifting is completed within 2 seconds.
This machine is equipped with kickdown switch (3). When traveling in 2nd, if kickdown switch (3) is pressed, the transmission shifts down to 1st.
For operations carried out in 1st and 2nd, such as digging and loading, we recommend the use of the kickdown switch. For details of the method of use, see "Kickdown switch (3-50)".
This machine is equipped with an auto-shift system that automatically shifts the gear. For details of the method of use, see "Transmission shift mode selector switch (3-43)" and "Automatic shift (3-59)".
When the machine is traveling at high speed, if the gear shift lever is shifted down to a lower speed, such as 4th <-> 3rd or 4th <-> 2nd, with the accelerator still depressed, the transmission is not shifted down. This is to prevent the engine from overrunning. In this case, the central warning lamp lights up and the alarm buzzer sounds. At the same time, “E00“ is displayed on the top line of the character display and “OVERRUN PROTECT“ is displayed on the bottom line.
If the alarm buzzer sounds, release the accelerator pedal immediately and depress the brake pedal to reduce speed, then carry out the gearshift operation.

Changing direction

WARNING

- When changing direction between FORWARD and REVERSE, check that the new direction of travel is safe. There is a blind spot behind the machine, so be particularly careful when changing direction to travel in reverse.
- Do not switch between FORWARD and REVERSE when traveling at high speed.
  When switching between FORWARD and REVERSE, depress the brake to reduce the travel speed sufficiently, then change the direction of travel. Max. speed for changing direction: 12 km/h.

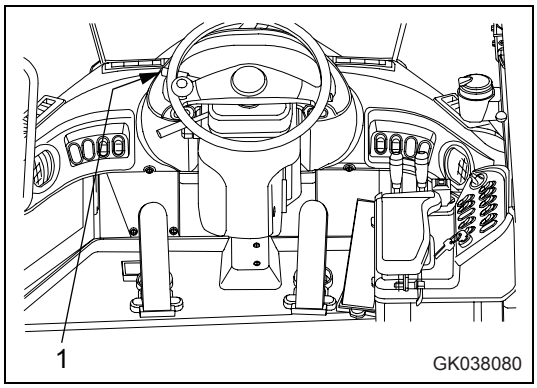

There is no need to stop the machine even when switching between FORWARD and REVERSE.

Place directional lever (1) in the desired position.

Position (a): FORWARD

Position N: NEUTRAL

Position (b): REVERSE

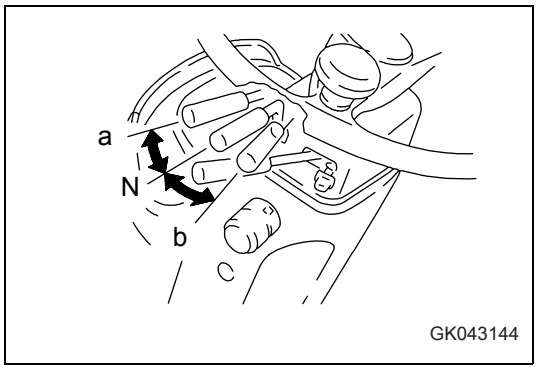

Check that the backup alarm sounds when the directional lever is set to REVERSE. If the backup alarm does not sound, please contact your KOMATSU distributor for repairs.

REMARK

If the directional lever is operated slowly or is stopped midway between the forward and reverse directions, "E01 MAINTENANCE" may be displayed on the character display. In this case, there is no failure, but try to operate the directional lever so that the change in direction is completed within 2 seconds.

If an attempt is made to switch the direction between FORWARD and REVERSE while traveling at high speed (when using 3rd or 4th), if the travel speed and engine speed are in ranges (A) or (B) in the chart, the central warning lamp will light up and the alarm buzzer will sound.

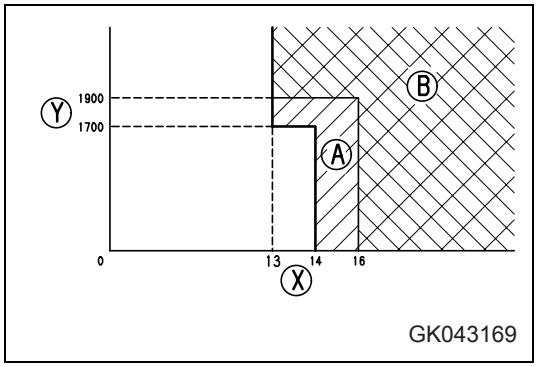

At the same time, "E00" is displayed on the top line of the character display and "OVERRUN PROTECT" is displayed on the bottom line.

If the alarm buzzer sounds, depress the brake pedal immediately to reduce speed, then operate the directional lever to switch between FORWARD and REVERSE.

(X): Travel speed (km/h)

(Y): Engine speed (rpm)

When using auto-shift

If an attempt is made to switch the direction between forward and reverse when the auto-shift is ON, normally, the gearshift range will switch F3 -> R2, F4 -> R2, or R3 -> F2, R4 -> F2 to make it possible to move the machine off quickly.

However, if an attempt is made to shift between forward and reverse when the machine is traveling at high speed, such as shown in ranges (A) or (B) in the chart, the central warning lamp will light up and the buzzer will sound.

At the same time, “E00“ is displayed on the top line of the character display and “OVERRUN PROTECT“ is displayed on the bottom line.

If the alarm buzzer sounds, depress the brake pedal immediately to reduce speed, then operate the directional lever to switch between FORWARD and REVERSE.

In particular, if an attempt is made to switch between forward and reverse in range (B), the speed range will not shifted to 2nd, but will switch F3 -> R3, F4 -> R4, or R3 -> F3, R4 -> F4. As a result, the reduction in speed will be less than in range (A), so care is necessary.

Using switch to change between forward and reverse

WARNING

If the directional switch actuation switch is ON and the directional lever is operated to the FORWARD position (F) or REVERSE position (R), the direction of travel will change to FORWARD or REVERSE, regardless of the position of the directional switch at the side of the control levers on the machine.
Priority is given to the operation of the directional lever, so be careful when operating.
When this is done, the central warning lamp lights up and the alarm buzzer sounds.
Set the directional lever and directional selector switch at the side of the work equipment control lever to the Neutral position (N).

1. Place the directional lever at the N position.

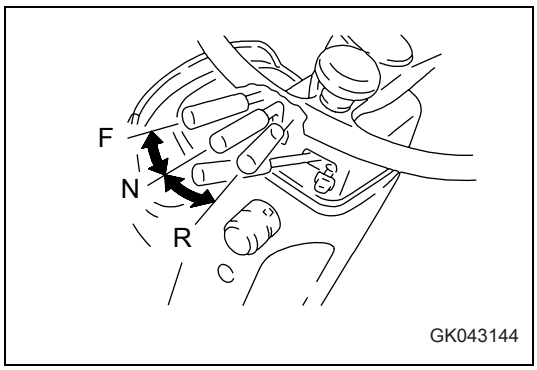

2. Turn on directional selector switch actuation switch on the right side of switching panel that enables directional selection.

   Position (a): ON

   Position (b): OFF

   The two pilot lamps light up, i.e. one is the pilot lamp built in the actuating switch and another is the directional selector pilot lamp on the machine monitor.

   Then the actuating switch enables the forward - reverse shifting to function.

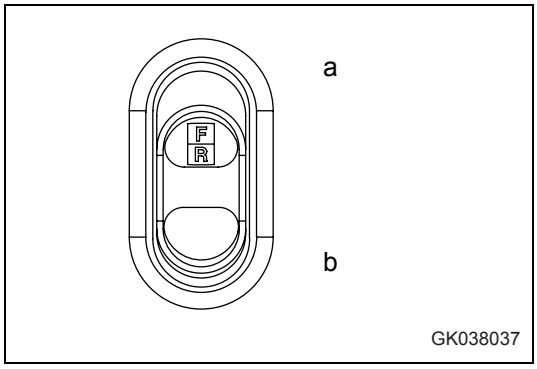

If the switch or the lever is in one of the following conditions, set it to the correct position.

- When directional lever is not at Neutral position (N)

  If the directional lever is not at the Neutral position (N), the pilot lamp flashes, and at the same time, the central warning lamp lights up and the alarm buzzer sounds.

  In this condition, the machine will move forward or in reverse according to the set position of the directional lever.
  Return the directional lever to the Neutral position (N).

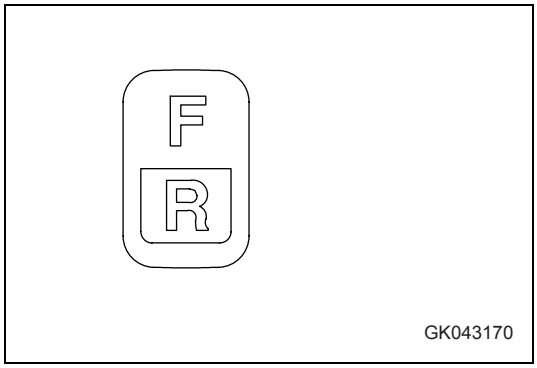

- When directional selector switch is at F or R when engine is started

  If the directional selector switch is at F or R, the central warning lamp lights up and the alarm buzzer sounds.
  In this condition, the engine will not start, so set the directional selector switch to N.

3. Press the directional selector switch on the side of the work equipment control lever to the desired position.

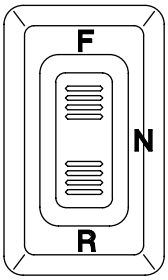

GK043139

Stopping the machine

WARNING

- Avoid stopping suddenly. Give yourself ample room when stopping.
- Even if the parking brake lever is pulled and set to the LOCK position, there is a danger of the machine moving until the parking brake pilot lamp lights up, so keep the brake pedal depressed.

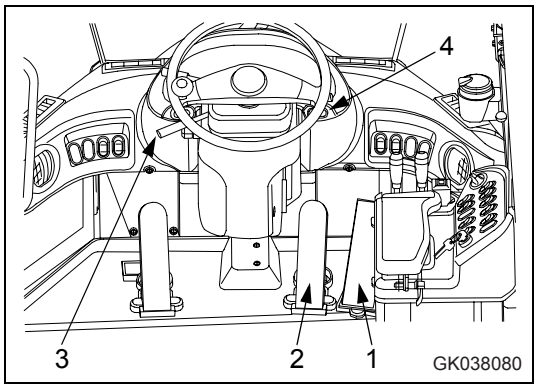

NOTE

Never use the parking brake lever to brake the machine when traveling except in an emergency. Apply the parking brake only after the machine has stopped.

1. Release accelerator pedal (1), then depress brake pedal (2) to stop the machine.

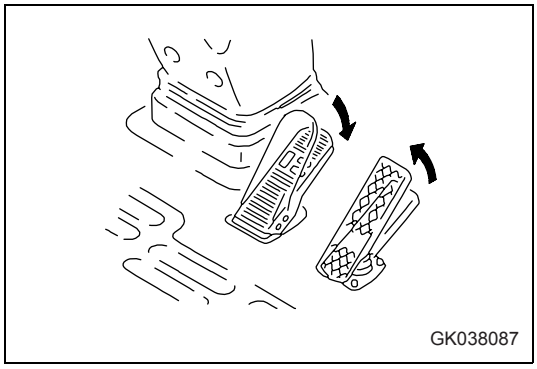

2. Place directional lever (3) in N (neutral) position.

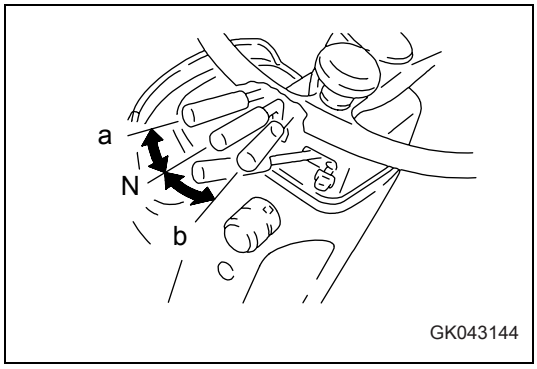

3. Set parking brake switch (4) to the ON position (A) to apply the parking brake.

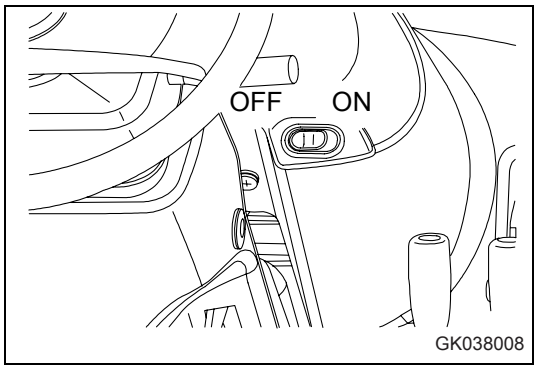

REMARK

When the parking brake is applied, the transmission is automatically returend to neutral.

Transmission cut-off function

When the transmission cut-off switch is turned ON, the pilot lamp lights up and the following transmission cut-off function is actuated.

Position (a): OFF

Position (b): ON

When the left brake pedal is depressed, the brake is actuated, and in addition, the transmission is shifted to neutral at the pre-selected brake pedal depression position.

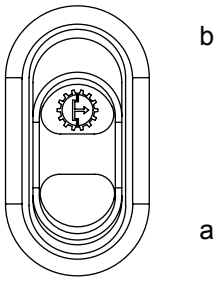

GK038024

The cut-off function is actuated only with the left brake pedal.

When the transmission cut-off switch is at the OFF position, the left brake pedal works in the same way as the right brake pedal.

For details of adjusting the brake pedal depression position, see "Adjusting transmission cut-off position (3-116)"“.

Raise or lower the pre-selected brake pedal depression position to adjust the cut-off to match the type of work shown below.

- When carrying out scooping-up work, lower the brake pedal depression position for the cut-off (transmission shifted to neutral). In this setting, the transmission driving force is cut at a point where there is ample braking force, so this prevents the machine from slipping down.

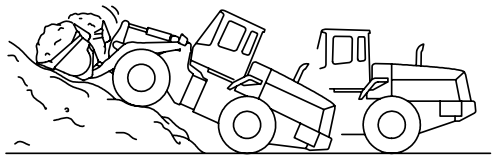
GK043172

- When approaching dump trucks during loading operations, raise the brake pedal depression position for the cut-off (transmission shifted to neutral). In this setting, the fine control of the braking immediately before dumping the load can be carried out with the brake only, so this makes it easy to control and allows the machine to be brought to a soft stop.

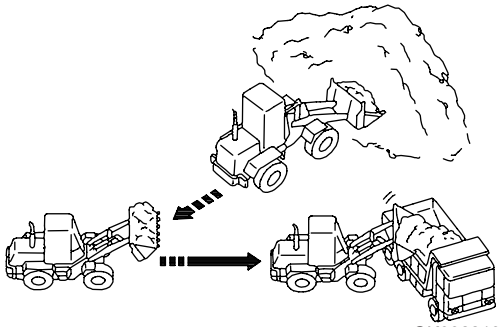
GK032213

Adjusting transmission cut-off position

WARNING

Apply the parking brake before adjusting the transmission cut-off position.

Adjust the depression position of the left brake pedal used to shift the transmission to neutral at the position to match the operation.

1. Start the engine with starting switch (1), then set parking brake switch (2) to the ON position.
2. Set transmission cut-off switch (3) to the ON position.
3. Depress left brake pedal (4) and set it to the desired position to shift the transmission to neutral.

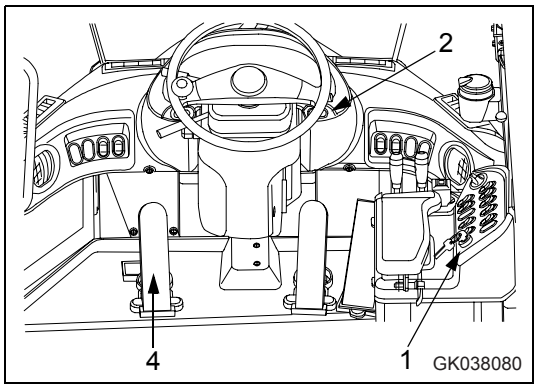

4. Press transmission cut-off set switch (5), then release it. When the switch is released, the buzzer will sound with a repeated short sound, and the cut-off position is set.

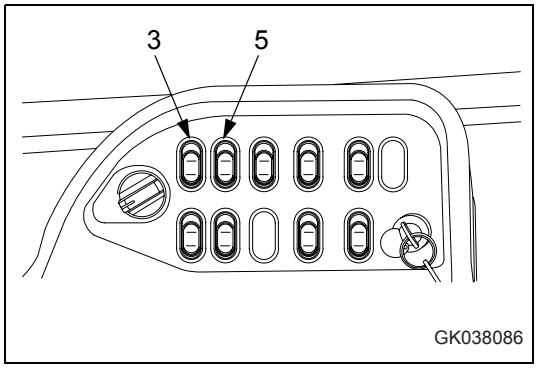

Method of canceling cut-off position

5. After the buzzer sounds in Step 4 of the adjustment procedure, the transmission cut-off switch flashes for 2 seconds. While it is flashing, press transmission cut-off set switch (5) again and release it.
6. The buzzer will sound with a long sound and the adjusted cut-off position is canceled.

Stopping when transmission cut-off is on

When the transmission cut-off switch is at the ON position and the left brake pedal is depressed, the transmission is shifted to neutral at the pre-selected brake pedal depression position.
The transmission is not shifted to neutral when the right brake pedal is operated.

REMARK

When the transmission cut-off switch is OFF, the left brake pedal acts in the same way as the right brake pedal, and the transmission is not shifted to neutral.

3.3.7 Turning

WARNING

- Operating the steering wheel suddenly at high speed or operating the steering wheel on steep slopes is dangerous. Do not operate the steering wheel in such situations.
- If the engine stops when the machine is traveling, the emergency steering is actuated. Note that this system is only for steering in emergencies, so never stop the engine.
- It is particularly dangerous if the engine stops when the machine is traveling on slopes, so never let the engine stop when traveling on slopes.
  If the engine stops, stop the machine immediately at a safe place.

When traveling, use steering wheel (1) to turn the machine.

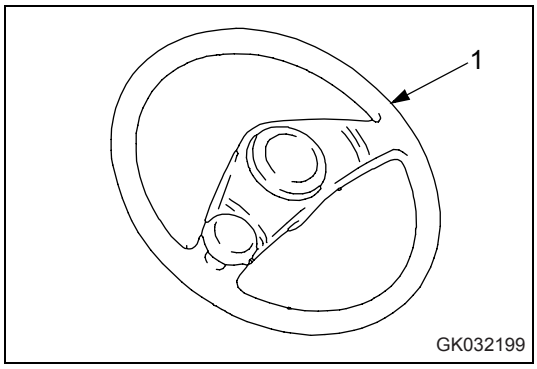

With this machine, the front frame is joined to the rear frame at the center of the machine by the center pin. The front and rear frames bend at this point, and the rear wheels follow in the same track as the front wheels when turning.

Turn the steering wheel lightly to follow the machine as it turns.

NOTE

When the steering wheel is turned fully, if it reaches the end of its stroke, do not try to turn it further.
Check that there is a play of 50 to 100 mm in the steering wheel. Check also that the steering works properly. If any abnormality is found, please contact your KOMATSU distributor for inspection.

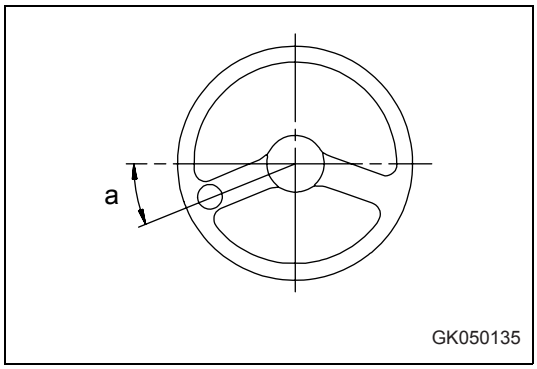

When the emergency steering system detects that the oil pressure in the steering circuit has been restored, the actuation of the emergency steering system is stopped.

Emergency steering

(Option)

CAUTION

- Never actuate the emergency steering except during emergencies or when checking the function.
- The emergency steering can be used continuously for a maximum of 60 seconds. Operating it continuously for more than 60 seconds may damage the system.
- When using the emergency steering, travel at a speed of less than 5 km/h.

During emergencies or when stopping the engine to check the function, press emergency steering switch (1).

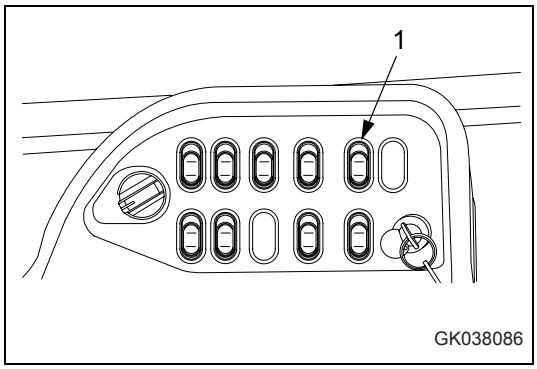

Emergency steering pilot lamp (green) (2) will light up and the steering can be operated.

The emergency steering system is provided to enable the machine to be steered under the following conditions.

- The starting switch is at the ON position.
- The steering oil pressure is low or there is no pressure.

  (When the engine has stopped or there is a failure in the steering oil pressure pump, etc.)

When the starting switch is turned to the ON position, the emergency steering automatically carries out a self check for 3 seconds.

For details, see "Emergency steering self-check function (3-119)".

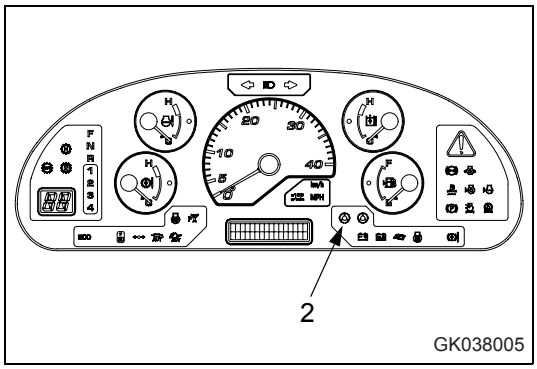

When the emergency steering system detects lack of oil pressure in the steering system, steering oil pressure caution lamp (red) (3) and central warning lamp (4) light up, and the alarm buzzer sounds intermittently.

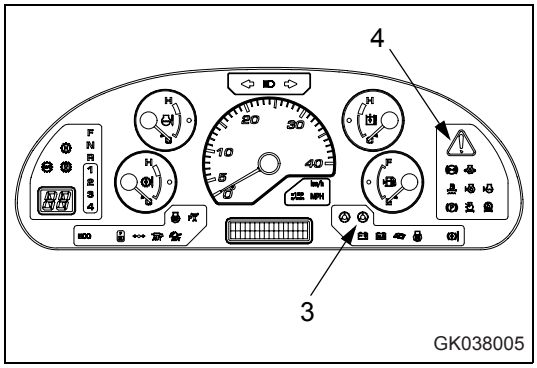

When this happens, if the machine is traveling at a speed of more than 2 km/h, the electric pump motor is automatically actuated and emergency steering pilot lamp (green) (2) lights up.

Steering oil pressure caution lamp (red) (3) lights up to inform the operator that there is a failure in the steering system.

If steering oil pressure caution lamp (red) (3) lights up, move the machine immediately to a safe place and stop it.

Locate the cause and do not operate the machine until it has been repaired.

REMARK

If any function of the oil pressure system is used when the engine is running at low speed, steering oil pressure caution lamp (red) (3) may light up for a moment, but if the lamp goes out again soon, there is no problem.

When the emergency steering system detects that the oil pressure in the steering circuit has been restored, the actuation of the emergency steering system is stopped.

On machines equipped with an emergency steering function, the emergency steering switch is installed at the position shown in the diagram (1).

Emergency steering self-check function

When the starting switch is turned ON, the emergency steering is automatically actuated for approx. 3 seconds to check that the emergency steering is functioning properly.

When this happens, steering oil pressure caution lamp (red) (1) and emergency steering pilot lamp (green) (2) light up.

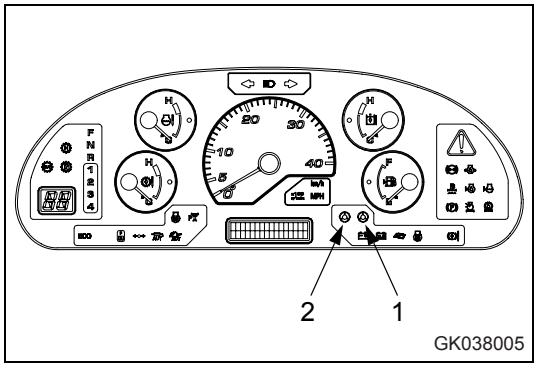

CAUTION

- If the machine is steered during the steering self-check, it may move.
- Do not steer the machine during the steering self-check.

The emergency steering function check is not carried out in the following cases.

- If the starting switch is turned ON, turned OFF again without starting the engine, and is then turned ON again.
- If the starting switch is turned ON again immediately after stopping the engine when the steering oil pressure has not gone down completely.
- When preheating is being carried out.

When preheating is being carried out

When preheating is being carried out, the emergency steering self- check function is not actuated.
To check the emergency steering function, press the emergency steering switch after completing the warming-up operation.

3.3.8 Operation of work equipment

WARNING

- When standing up from the operator's seat, always set the work equipment lock lever securely to the LOCK position. If the work equipment lock lever is not locked, and work equipment control lever (A) is touched by mistake, this may lead to serious personal injury.
- If the work equipment lock lever is not securely at the LOCK position, the work equipment may move and this may lead to serious personal injury. Always check that the condition is as shown in the diagram.
- Never raise the boom with the bucket fully loaded when the machine is articulated. There is danger that the machine may tip over.

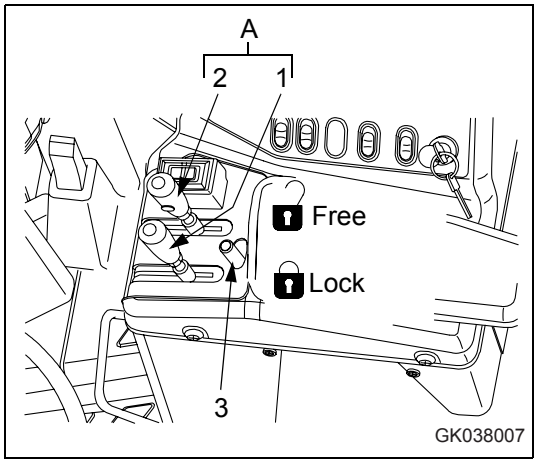

Work equipment lock lever (3) is a lock device for work equipment control lever (A).

REMARK

This lever locks the hydraulic circuit for the work equipment electrically, so if it is in the LOCK position, the work equipment will not move even if work equipment control lever (A) is operated.

Lift arm control lever (1) and bucket control lever (2) can be used to operate the lift arm and bucket as follows.

Lift arm operation

Set the work equipment lock lever to the FREE position before operating the control lever.

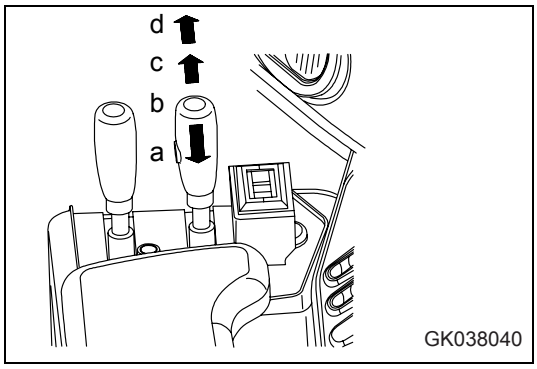

NOTE

Do not use the FLOAT position when lowering the bucket. Use the FLOAT position when leveling, see "Leveling operation (3-126)".

Position (a): RAISE

When the lift arm control lever is pulled further from the RAISE position, the lever is stopped in this position until the lift arm reaches the preset position of the kickout, and the lever is returned to the HOLD position.

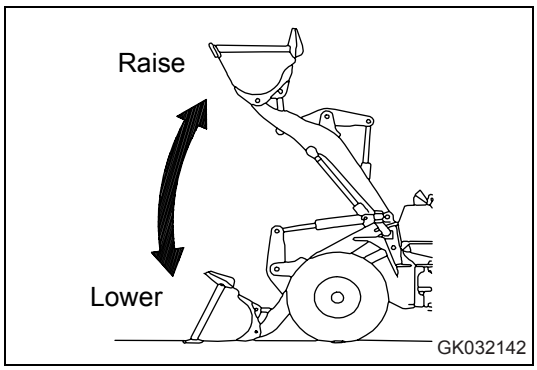

Position (b): HOLD

The lift arm is kept in the same position.

Position (c): LOWER

Position (d): FLOAT

The lift arm moves freely under external force.

Bucket operation

Set the work equipment lock lever to the FREE position before operating the control lever.

Position (a): TILT

When the bucket control lever is pulled further from the TILT position, the lever is stopped in this position until the bucket reaches the preset position of the positioner, and the lever is returned to the HOLD position.

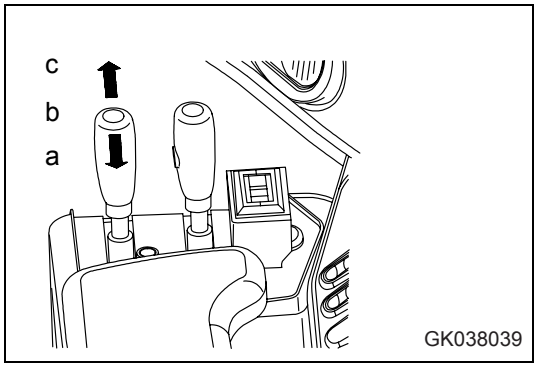

Position (b): HOLD

The bucket is kept in the same position.

Position (c): DUMP

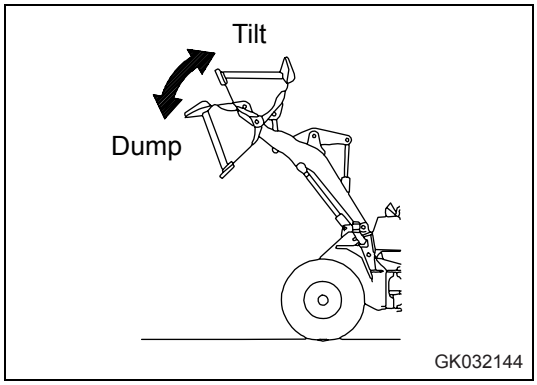

3.3.9 Work possible using wheel loader

In addition to the following, it is possible to further increase the range of applications by using various attachments.

Digging operations

WARNING

- Never carry out digging or scooping operations with the machine articulated. There is danger that the machine may tip over.
- Never raise the boom with the bucket fully loaded when the machine is articulated. There is danger that the machine may tip over.
- When the machine is traveling or the work equipment is raised, the moment that the E.C.S.S. switch is turned ON, the work equipment will move.
- If operations are carried out with the E.C.S.S.switch left at the ON position, the moment that the travel damper is actuated, the work equipment will move.

NOTE

If the tires slip, the tire life will be reduced, so do not allow the tires to slip during operation.

Loading piled soil or blasted rock

When loading piled soil or blasted rock,drive the machine forward as follows to load. To prevent cutting of the tires caused by the tires slipping, be careful of the following points during the operation.

Always keep the operating jobsite flat, and remove any fallen rocks.

When working with stockpiles, operate the machine in 1st or 2nd gear; when loading blasted rock operate the machine in 1st gear.

1. When driving the machine forward and lowering the bucket, stop the bucket at height (A) approx. 30 cm (12 in) from the ground, then lower it slowly.

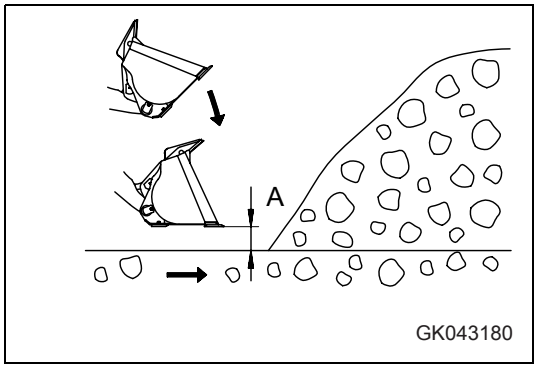

REMARK

If the bucket hits the ground, the front tires will come off the ground, and the tires will slip.

2. Shift down immediately in front of the material to be loaded. When completing the shift down, depress the accelerator pedal at the same time and thrust the bucket into the material.

REMARK

To reduce fuel consumption, depress the accelerator pedal the minimum possible amount. If it is depressed fully, the fuel consumption will increase, but there will be no increase in the amount loaded.

3. When the material is in a stockpile, keep the cutting edge of the bucket horizontal; when loading blasted rock, have the bucket tilting slightly down.

   Be careful not to get blasted rock under the bucket. This will make the front tires come off the ground and slip.

   Try to keep the load in the center of the bucket; if the load is on one side of the bucket, the load will be unbalanced.

- Stock pile

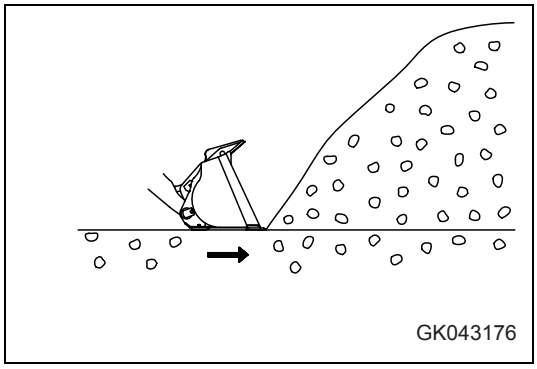

- Blasted rock

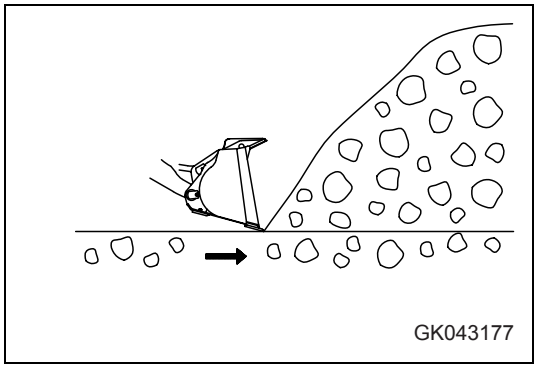

4. At the same time as thrusting the bucket into the material, raise the lift arm to prevent the bucket from going in too far. By raising the lift arm, ample traction will be produced by the front tires.

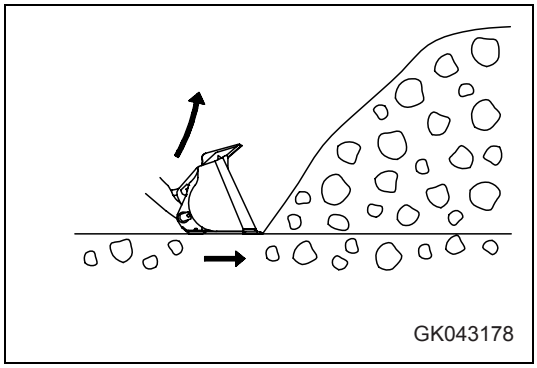

REMARK

If the bucket is thrust too much and the lift arm stops rising or the machine stops moving forward, release the accelerator pedal a little. Proper operation of the accelerator pedal for each type of the soil is effective for saving of fuel and prevention of wear of the tires.

5. Check that there is enough material loaded into the bucket, then operate the bucket control lever to tilt the bucket and load the bucket fully.

REMARK

If the bucket edge is moved up and down while pushing in the bucket and digging, the front tires will come off the ground and this will cause the tires to slip.

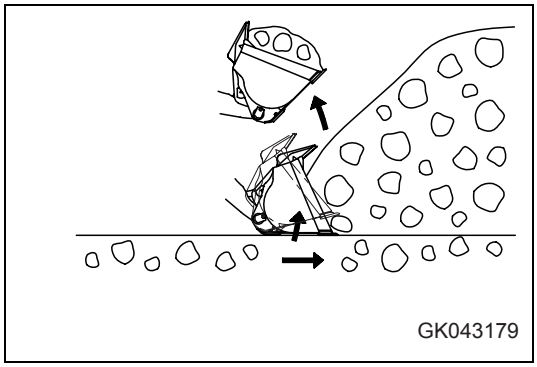

6. If there is too much material loaded in the bucket, dump and tilt the bucket quickly to remove the excessive load. This prevents spillage of the load during hauling.

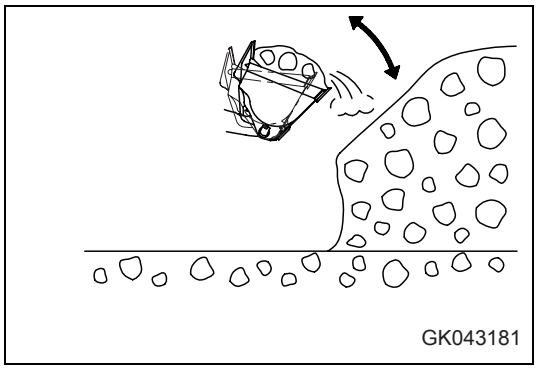

Digging and loading on level ground

When digging and loading on level ground, set the bucket edge facing down slightly as follows and drive the machine forward. Always be careful not to load the bucket on one side and cause an unbalanced load.

This operation should be carried out in 1st gear.

CAUTION

Do not set the bucket facing down more than 20 degrees.

1. Set the edge of the bucket facing slightly down.

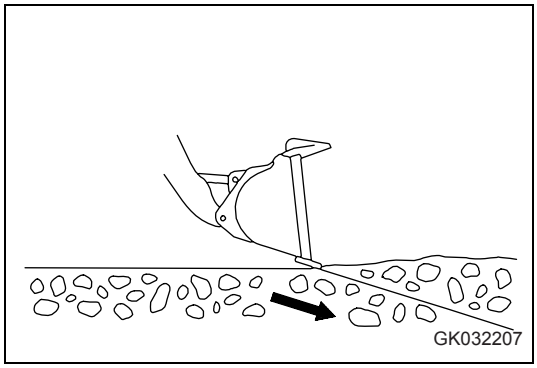

2. Drive the machine forward and operate the work equipment control lever forward to cut a thin layer of the surface each time when excavating the soil.

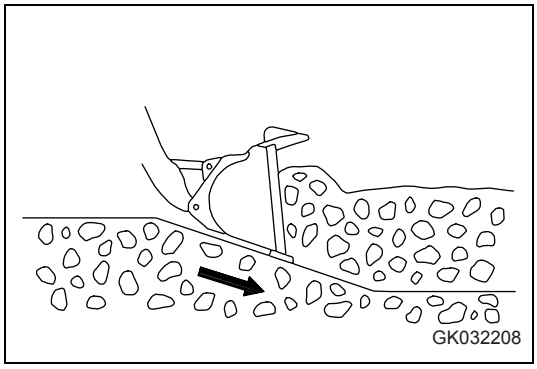

3. Operate the work equipment control lever slightly up and down to reduce the resistance when driving the machine forward.

   When digging with the bucket, avoid imposing the digging force onto only one side of the bucket.

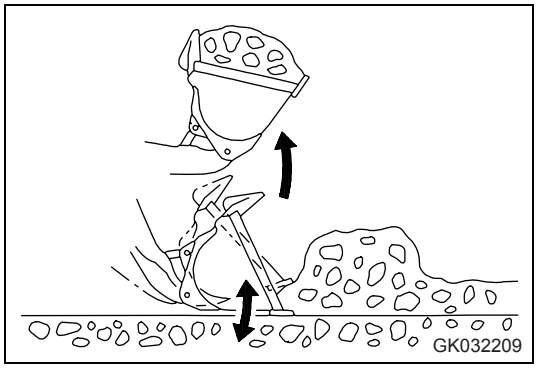

Leveling operation

NOTE

- *Always operate the machine in reverse when carrying out leveling operations.*
  If it is necessary to carry out leveling operations when traveling forward, do not set the bucket dumping angle to more than 20 degrees.
- *Turn the E.C.S.S. switch (option) OFF when carrying out leveling operations.*

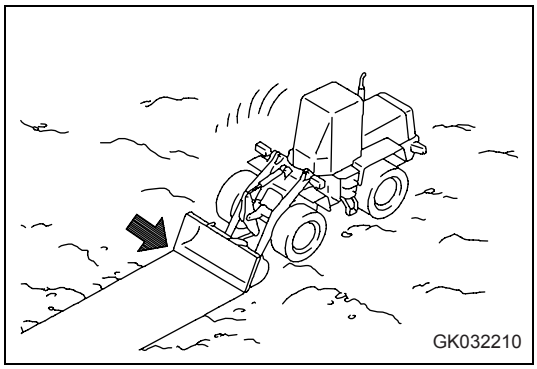

1. Scoop soil into the bucket. Move the machine backward while spreading soil from the bucket little by little.
2. Go over the spread soil with the bucket teeth touching the ground and level the ground by back-dragging.
3. Scoop some more soil into the bucket, put the lift arm control lever in FLOAT position, level the bucket at ground level, and smooth the ground by moving backward.

Pushing operation

CAUTION

Never set the bucket to the DUMP position when carrying out pushing operation.

When carrying out pushing operations, set the bottom of the bucket parallel to the ground surface.

Load and carry operations

WARNING

- When carrying a load, lower the bucket to lower the center of gravity when traveling.
- When the machine is traveling or the work equipment is raised, the moment that the E.C.S.S. switch is turned ON, the work equipment will move.
- If operations are carried out with the E.C.S.S.switch left at the ON position, the moment that the travel damper is actuated, the work equipment will move.

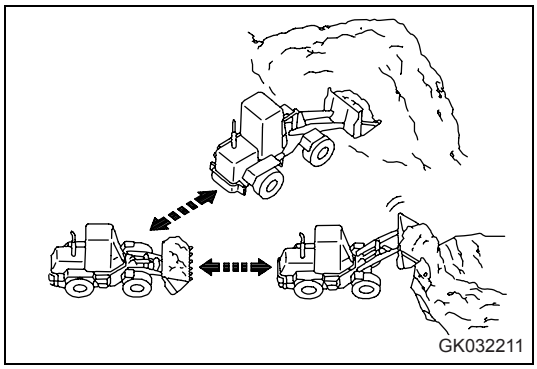

The load and carry method for wheel loaders consists of a cycle of scooping -> hauling -> loading (into a hopper, truck, etc).

Always keep the travel path properly maintained.

When using the load and carry method, see "Precautions for using load and carry method (3-139)".

Loading operations

Select the method of operation which will give the minimum amount of turning and travel in order to provide the most efficient method for the jobsite.

WARNING

- Always keep the jobsite flat, and do not operate the steering wheel suddenly or apply the brakes suddenly when the lift arm is raised with a loaded bucket. This is dangerous.
- Never thrust the bucket in when traveling at high speed (when loading soil or crushed rock). This is dangerous.
- When the machine is traveling or the work equipment is raised, the moment that the E.C.S.S. switch is turned ON, the work equipment will move.
- If operations are carried out with the E.C.S.S. switch left at the ON position, the moment that the travel damper is actuated, the work equipment will move.

NOTE

- *If the tires slip, the tire life will be reduced, so do not allow the tires to slip during operation.*
- *Avoid excessive bucket shaking.*

Cross drive loading

Always set the wheel loader facing at a right angle to the stockpile. After digging in and scooping up the load, drive the machine straight back in reverse, then bring the dump truck in between the stock pile and the wheel loader.

This method requires the least time for loading, and is extremely effective in reducing the cycle time.

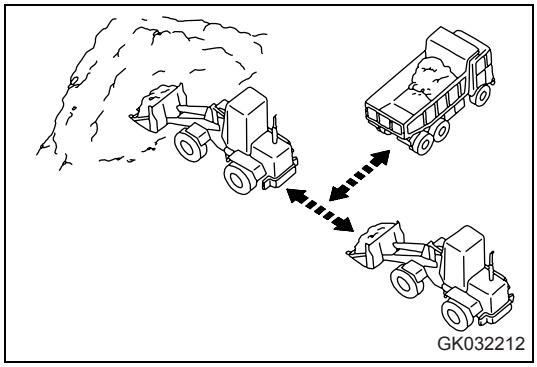

V-shape loading

Position the dump truck so that the direction of approach of the wheel loader is approx. 60 degrees from the direction of approach to the stockpile. After loading the bucket, drive the wheel loader in reverse, then turn it to face the dump truck and travel forward to load the dump truck.

The smaller the turning angle of the wheel loader is, the more efficient the operation becomes.

When loading a full bucket and raising it to the maximum height, first shake the bucket to stabilize the load before raising the bucket. This will prevent the load from spilling to the rear.

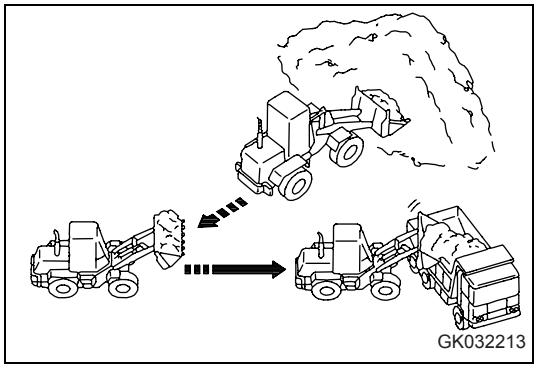

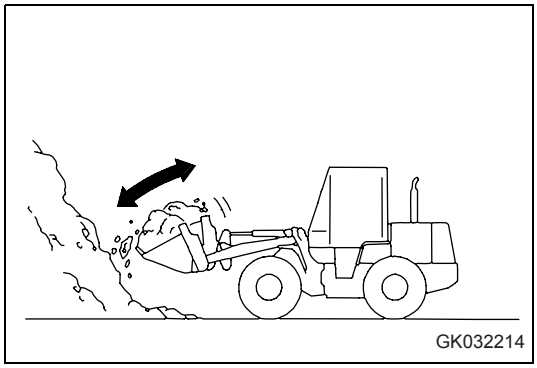

Precautions when piling up loads

When forming products into a pile, be careful not to let the rear counterweight come into contact with the ground.

Do not set the bucket to the DUMP position when piling-up loads.

REMARK

When carrying out scooping-up work, avoid using the transmission cut-off function as far as possible. It will prevent the machine from moving back.
When using the transmission cut-off function, lower the cut-off position so that cut-off function is actuated, when the brake pedal is deeply depressed, while ensuring ample braking force.

3.3.10 Precautions for operation

Permissible water depth

When working in water or on swampy ground, do not let the water come above the bottom of the axle housing.

After finishing the operation, wash and check the lubricating points.

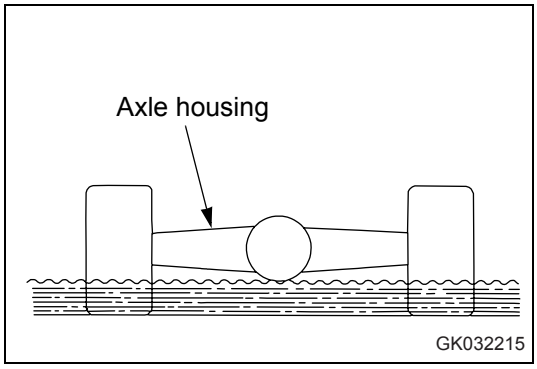

If wheel brake does not work

If the machine is not stopped by depressing the brake pedal, use the parking brake to stop the machine.

NOTE

If the parking brake has been used as an emergency brake, contact your KOMATSU distributor to have the parking brake checked for any abnormality.

Precautions when driving up or down slopes

Lower the center of gravity when turning

When turning on slopes, lower the work equipment to lower the center of gravity before turning. It is dangerous to turn the machine suddenly on slopes.

Breaking on downhill slope

If the foot brake is used frequently when traveling downhill, the brake will overheat and may be damaged. Use the accelerator pedal to make full use of the braking force of the engine when traveling downhill.

Use the right brake pedal for braking.

If the brakes are used excessively, the axle oil temperature caution lamp may light up and the alarm buzzer may sound intermittently. For details of the necessary action to take, see "Axle oil temperature caution lamp (3-20)".

If engine stops

If the engine stops on a slope, apply the parking brake immediately, and lower the work equipment to the ground and stop the machine. Then put the directional lever in neutral position, and start the engine again.

Precautions when driving machine

When the machine travels at high speed for a long distance, the tires become extremely hot. This causes early wear of the tires, so it should be avoided as much as possible. If the machine must be driven for a long distance, take the following precautions.

- Follow the regulations related to this machine, and drive carefully.
- Before driving the machine, carry out the checks before starting.
- The most suitable tire pressure, travel speed, or tire type differ according to the condition of the travel surface. Contact your KOMATSU distributor or tire dealer for information.
- When traveling on a paved road surface using normal tires (23.5-25), the guideline for the appropriate tire inflation pressure and travel speed is as follows.

  Tire inflation pressure: 0.30 MPa
  Travel speed: 14 km/h
- Check the tire pressure before starting, when the tire is cool.
- For longer drives, breaks have to be taken at regular intervals, otherwise the tires will be damaged. Ask your tire dealer for drive and break times for the tire type on your machine.
- During each break, inspect the tires and other parts for damages and check the oil and cooling medium levels.
- Always travel with the bucket empty.
- Never put “calcium chloride“ or “dry ballast“ in the tires when traveling.

Precautions regarding brake function

When traveling long distances continuously downhill, the frequency of using the brake may increase. As a result, depending on the weight of the machine and the grade of the slope, the machine's braking capacity may be exceeded and the brakes may overheat.

The table below shows a guideline of the values for this machine.

Machine weight (t)	Slope grade (%)	Braking capacity limit	
		Average travel speed limit (km/h)	Downhill distance limit (continuous) (km)
17.3 - 19.5 (unloaded)	10	40 (24.9)	1.9
	20	38 (23.6)	0.6
22.5 - 24.5 (loaded)	10	38 (23.6)	1.5
	20	32 (19.9)	0.5

If the braking capacity limit is exceeded, a forced cooling system for the brakes is needed, so please consult your KOMATSU distributor.

3.3.11 Adjusting work equipment posture

WARNING

- Stop the machine on flat ground and put blocks in front and behind the wheels.
- Set the parking brake switch to the ON position (A) to apply the parking brake.
- Secure the front and rear frames with the safety bar.
- Always attach the warning tag to the work equipment control lever.
- Do not go under the work equipment when the arm is raised.

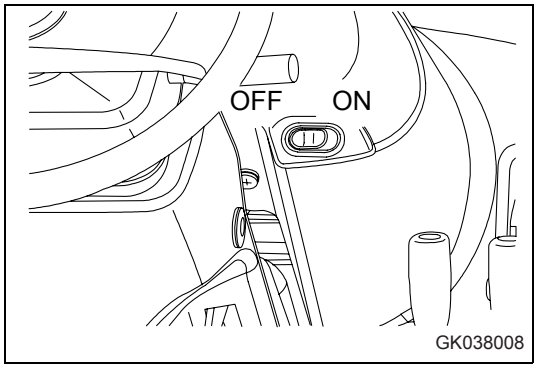

The boom kickout makes it possible to set the bucket so that it automatically stops at the desired lifting height (lift arm higher than horizontal) and the bucket positioner makes it possible to set the bucket so that it automatically stops at the desired digging angle. The setting can be adjusted to match the working conditions.

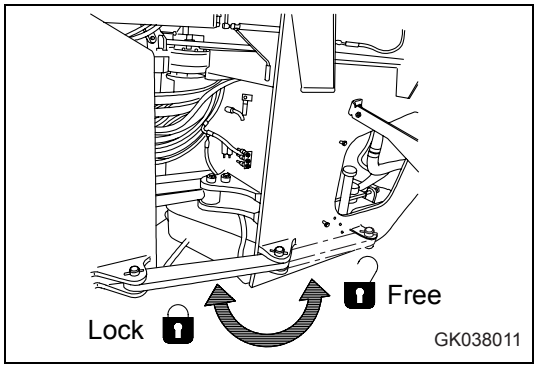

Adjusting boom kickout

1. Raise the bucket to the desired height, set the lift arm control lever at HOLD, then set the safety lever to the LOCK position and stop the engine.

2. Loosen two bolts (1), and adjust plate (2) so that the bottom edge is in line with the center of the sensing surface of proximity switch (3). Then tighten the bolts to hold the plate in position.

3. Loosen two nuts (4) to make a clearance of 3 to 5 mm between plate (2) and the sensing surface of proximity switch (3). Then tighten the nuts to hold in position.

   Tightening torque: 17.2 ± 2.5 Nm

4. After adjusting, start the engine and operate the lift arm control lever. Check that the lever is automatically returned to HOLD when the bucket reaches the desired height.

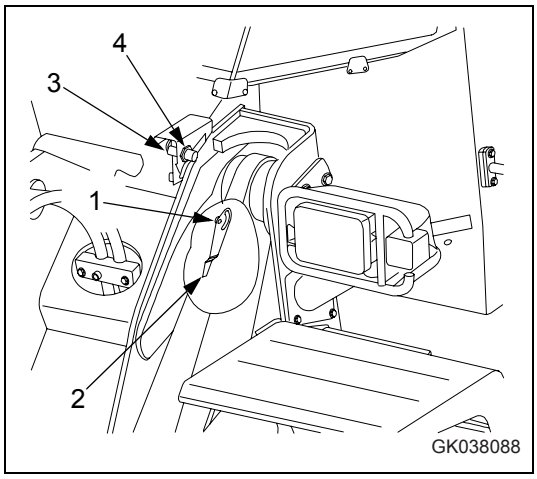

Adjusting bucket positioner

1. Lower the bucket to the ground, set to the desired digging angle, return the bucket control lever at HOLD, then set the safety lever to the LOCK position and stop the engine.

2. Loosen 2 bolts (1), adjust the position of mounting bracket (4) of the proximity switch so that the rear tip of bar (2) is in line with the center of the sensing surface of proximity switch (3), then tighten bolts to hold the bracket in position.

3. Loosen 2 bolts (5), adjust so that the clearance between bar (2) and support (6) is 0.5 to 2 mm, then tighten bolts (5) to hold in position.

4. Loosen 2 nuts (7), adjust so that the clearance between bar (2) and the sensing surface of proximity switch (3) is 3 to 5 mm, then tighten the nuts to hold in position.

   Tightening torque: 17.2 ± 2.5 Nm

5. After adjusting, start the engine and raise the lift arm. Operate the bucket control lever to the DUMP position, then operate it to the TILT BACK position and check that the lever is automatically returned to the HOLD position when the bucket reaches the desired digging angle.

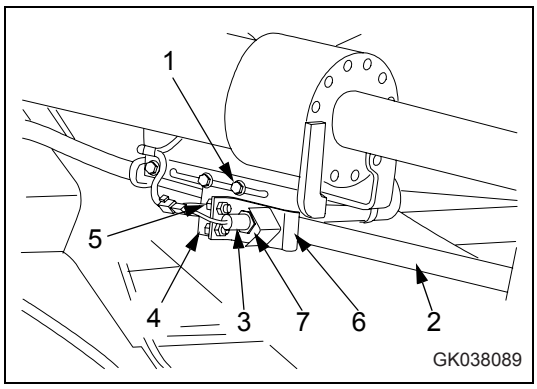

Bucket level indicator

(A) and (B) at the top rear of the bucket are the level indicators, so the bucket angle can be checked during operations.

(A): Parallel with cutting edge

(B): 90 degrees to cutting edge

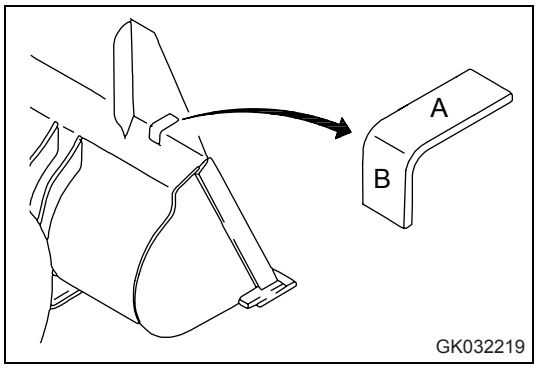

3.3.12 Parking machine

WARNING

- Avoid stopping suddenly. Give yourself ample room when stopping.
- Do not park the machine on slopes.
  If the machine has to be parked on a slope, set it facing directly down the slope, then dig the bucket into the ground and put blocks under the tires to prevent the machine from moving.
- If the control lever is touched by accident, the work equipment or the machine may move suddenly, and this may lead to a serious accident. Before leaving the operator's compartment, always set the safety lock lever securely to the LOCK position.
- Even if the parking brake switch is turned ON, there is a danger of the machine moving until the parking brake pilot lamp lights up, so keep the brake pedal depressed.

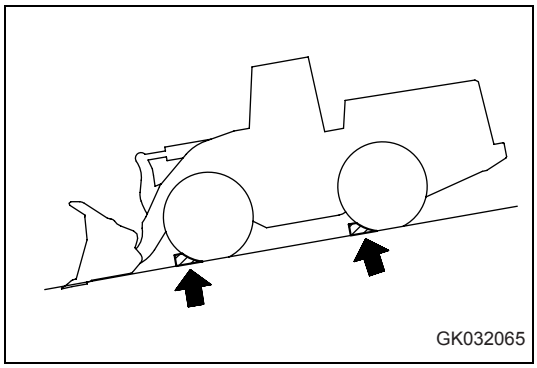

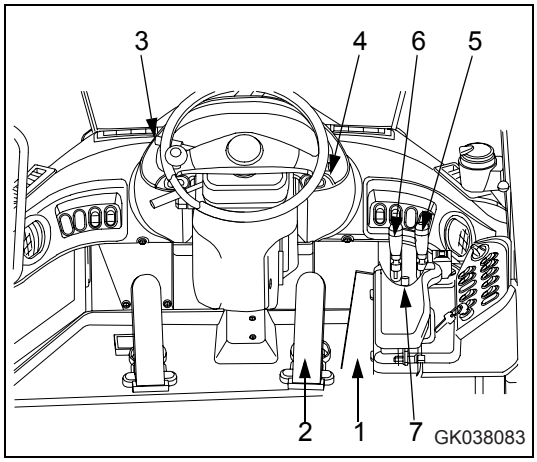

NOTE

Never use the parking brake switch to brake the machine when traveling except in an emergency. Apply the parking brake only after the machine has stopped.

1. Release accelerator pedal (1), then depress brake pedal (2) to stop the machine.

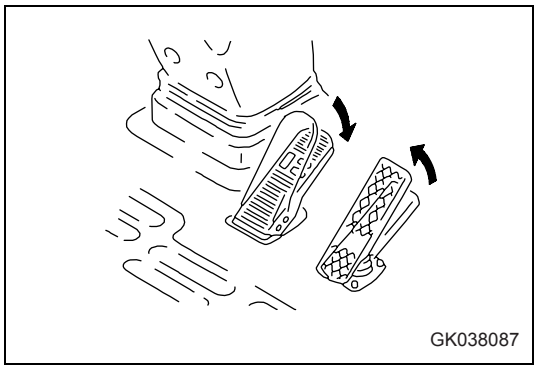

2. Place directional lever (3) in N (neutral) position.

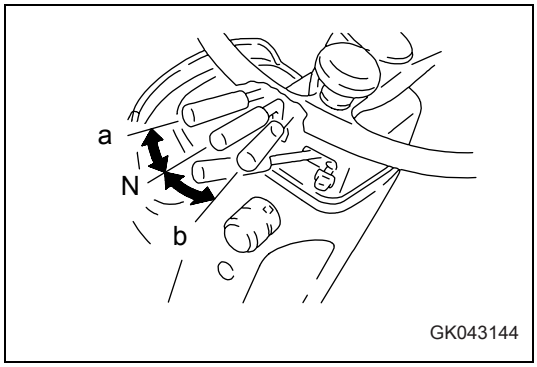

3. Set parking brake switch (4) to the ON position (A) to apply the parking brake.

NOTE

When the parking brake is applied, the transmission is automatically returned to neutral.

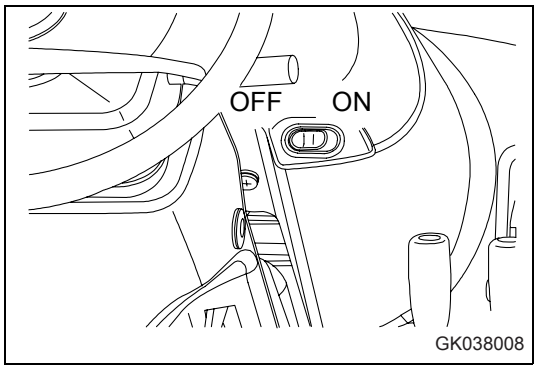

4. Operate lift arm control lever (5) to lower the bucket to the ground.

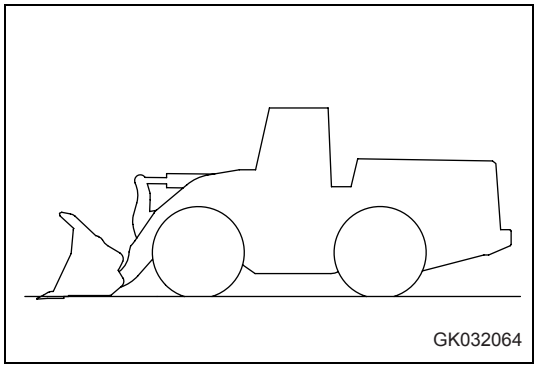

5. Check that the lift arm control lever (5) and bucket control lever (6) is at the HOLD position, then set the work equipment lock lever (7) to the LOCK position.

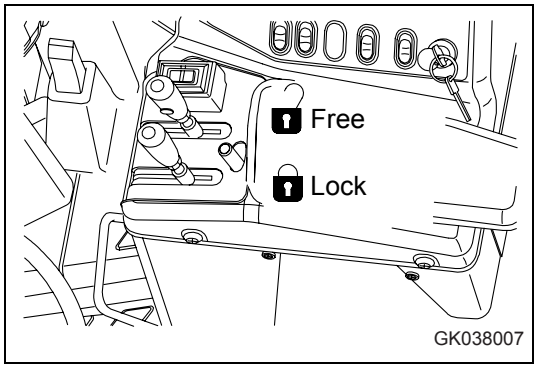

3.3.13 Checks after completion of operation

Before stopping engine

Check the engine water temperature, engine oil pressure, torque converter oil temperature, and fuel level with the machine monitor.

If the engine has overheated, do not stop it suddenly. Run the engine at a midrange speed to allow the engine to cool down before stopping it.

After stopping engine

1. Walk around the machine and check the work equipment, body work, and undercarriage, and check also for oil and water leakage.
2. Fill the fuel tank.
3. Check the engine compartment for paper and debris. Clean out any paper and debris to avoid a fire hazard.
4. Remove any mud affixed to the undercarriage.

3.3.14 Locking

Always lock the following parts.

(1) Fuel tank filler cap

(2) Engine side cover (2 places)

(3) Cab door

(4) Hydraulic tank

(5) Rear grille

(6) Air conditioner fresh air filter

(7) Transmission filler cover

REMARK

The starting switch key is used also for locks (1) to (7).

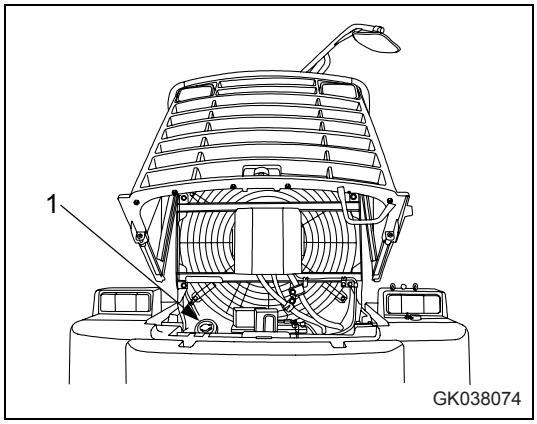

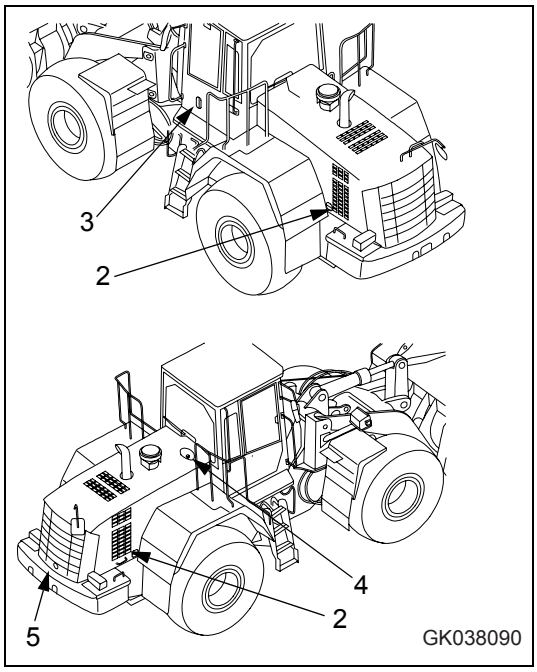

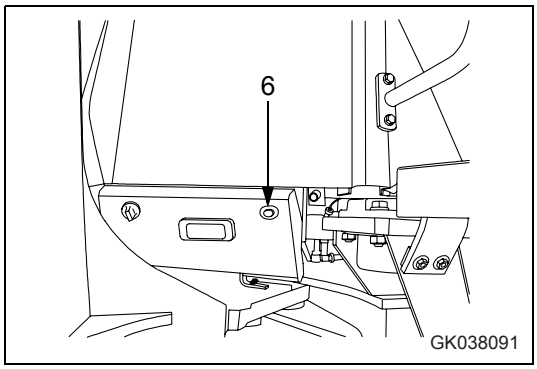

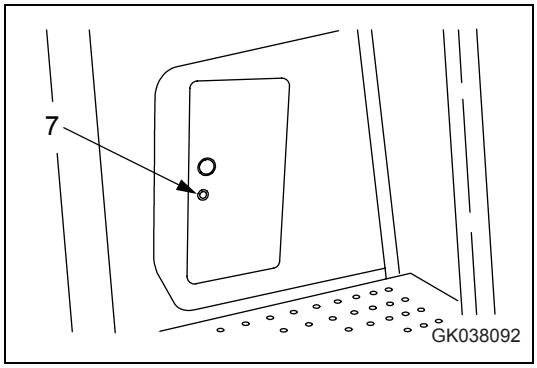

3.3.15 Handling the tires

Precautions when handling tires

CAUTION

- If the following defects are found in tyres, they must be replaced for safety reasons.
- Bead wire is broken or bent, or the tyre is greatly deformed.
- Excessive wear and the carcass ply (excluding breaker) is exposed for more than 1/4 of the circumference.
- Damage to the carcass exceeds 1/3 of the tire width.
- Tyre layers are separated.
- Radial cracks reach the carcass.
- Deformation or damage which makes the tyre unsuitable for use.

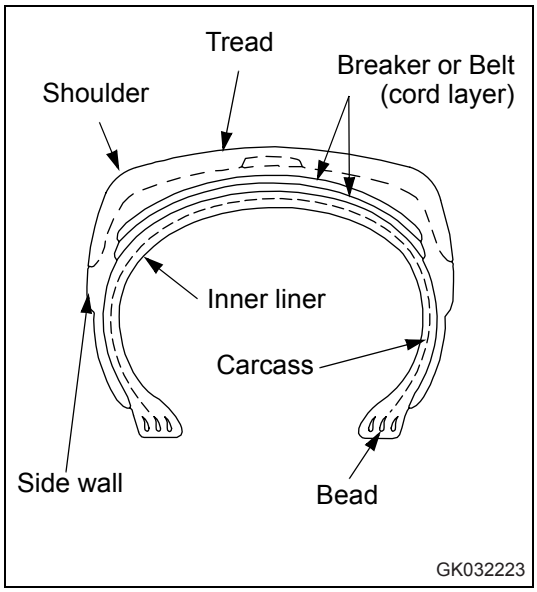

Please contact your KOMATSU distributor when replacing the tires. It is dangerous to jack up the machine without taking due care.

Tire pressure

Measure the tire pressure before starting operations, when the tires are cool.

If the tire inflation pressure is too low, there will be overload; if it is too high, it will cause tire cuts and shock burst. To prevent these problems, adjust the tire inflation pressure according to the table on the next page.

Deflection ratio = H - h / H x 100

As a guideline that can be checked visibly, the deflection ratio of the front tire (deflection/free height) is as follows.

When carrying normal load (lift arm horizontal):
Approx. 15 to 25%

When digging (rear wheels off ground):
Approx. 25 to 35%

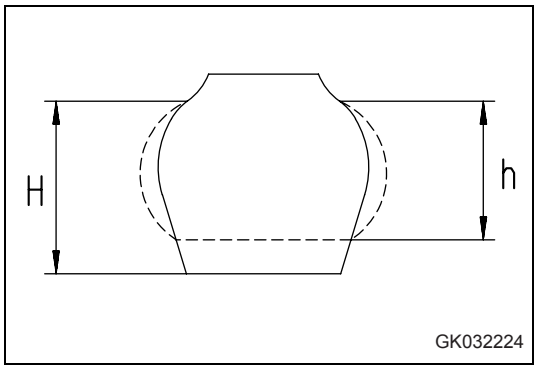

When checking the tire inflation pressure, check also for small scratches or peeling of the tire, for nails or pieces of metal which may cause punctures, and for any abnormal wear.

Clearing fallen stones and rocks from the operating area and maintaining the surface will extend the tire life and give improved economy.

- For operations on normal road surfaces, rock digging operations: High end of range in air pressure chart
- Stockpile operations on soft ground: Average pressure in air pressure chart
- Operations on sand (operations not using much digging force): Low end of range in air pressure chart

If the deflection of the tire is excessive, raise the inflation pressure within the limits given in the table to give a suitable deflection (see deflection ratio).

Manufacturer	Tire size (Pattern)	Inflation pressure			
		Front wheels		Rear wheels	
		bar	psi	bar	psi
MICHELIN	23.5 R25 EM XHA L-3	4	57	3	43
MICHELIN	23.5 R25 EM XTL-A, L-2	4	57	3	43
MICHELIN	23.5 R25 EM XLD D2A, L-5	4	57	3	43
MICHELIN	23.5 R25 EM XLD D1A, L-4	4	57	3	43
MICHELIN	23.5 R25 EM X MINE D2, L-5	4	57	3	43
MICHELIN	650/65 R25 XLD L-3	4	57	3	43
GOOD YEAR	23.5R25 EM RT3B,L-3	4	57	3	43
GOOD YEAR	23.5R25 EM RL-5K, L-5	4	57	3	43
GOOD YEAR	23.5R25 EM RL-2+, L-2	4	57	3	43
GOOD YEAR	23.5R25 EM GP 4B, L-4	4	57	3	43
GOOD YEAR	23.5R25 EM GP 2B, L-2	4	57	3	43
GOOD YEAR	20.5R25 EM GP 2B, L-2	4	57	3	43
GOOD YEAR	650/65R25 EM GP3D L-3	4	57	3	43
BRIDGESTONE	23.5R25 VSDT L-5	4	57	3	43
BRIDGESTONE	23.5R25 VSDL L-5	4	57	3	43
BRIDGESTONE	23.5R25 EM VMT L-3	4	57	3	43
BRIDGESTONE	23.5R25 VLT L-2	4	57	3	43
BRIDGESTONE	23.5R25 VALS L-4	4	57	3	43
BRIDGESTONE	23.5R25 EM VKT L-2	4	57	3	43
BRIDGESTONE	20.5R25 EM VKT L-2	4	57	3	43
BRIDGESTONE	650/65R25 VTS L-3	4	57	3	43

The specified air pressure values might deviate from the standard values under special conditions. If this is the case, please contact an authorised KOMATSU dealer.

Stockpile operations mean the loading of sand and other loose materials.

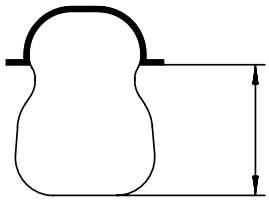

GK043173

Precautions for using load and carry method

When traveling continuously with load and carry operations, choose the correct tires to match the operating conditions, or choose the operating conditions to match the tires. If this is not done, the tires will be damaged, so contact your KOMATSU distributor or tire dealer when selecting tires.

3.4 Transportation

When transporting the machine, observe all related laws and regulations, and be careful to assure safety.

3.4.1 Transportation procedure

As a basic rule, always transport the machine on a trailer.

When selecting the trailer, see the weights and dimensions given in Section "Technical data (5-2)".

Note that the specifications for the weights and dimensions for transportation differ according to the type of tires and type of bucket.

3.4.2 Loading, unloading work with trailers

WARNING

- When loading or unloading the machine, run the engine at low speed, travel at low speed, and operate slowly.
- When loading or unloading the machine, stop the trailer on firm level ground.
  In addition, keep well away from the road shoulder.
- Use ramps of ample width, length, thickness, and strength, and install them securely at an angle of less than 15°.
  When using an embankment, compact the fill soil thoroughly and make sure that the slope face does not collapse.
- Remove the mud stuck to the undercarriage to prevent the machine from slipping to the side on the ramps.
  In addition, remove any water, snow, ice, grease, or oil from the ramps.
- Never change direction on the ramps. There is danger that the machine may tip over.
  If it is necessary to change direction, return to the ground surface or the trailer platform, correct the direction, and start again.
- The position of the center of gravity of the machine will change suddenly at the connection of the ramp and trailer, and there is danger of the machine losing its balance. Always drive slowly over this point.

When loading or unloading, always use ramps or a platform and carry out the operation as follows.

Loading

1. Load and unload on firm level ground only.

   Maintain a safe distance from the edge of a road.

2. Apply the brakes on the trailer securely and insert blocks under the tires to ensure that the trailer does not move.

   Then fix the ramps in line with the centers of the trailer and the machine.

   Be sure that the two sides are at the same height as one another.

   Make the angle of the ramps a maximum of 15º.

   Set the distance between the ramps to match the center of the tires.

   If the ramp sags appreciably, reinforce it with blocks, etc.

3. Determine the direction of the ramp, then slowly load the machine.

4. Load the machine correctly in the specified position on the trailer.

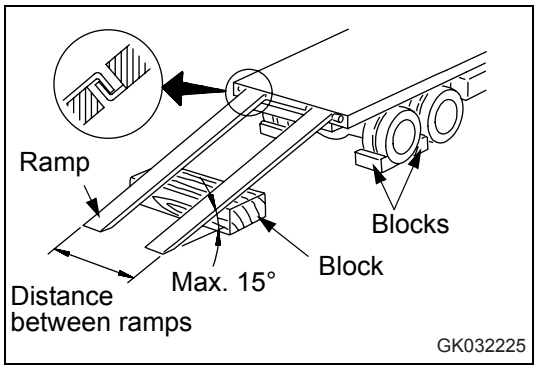

Securing machine

Load the machine on to a trailer as follows.

1. Lower the work equipment slowly.

2. Check that the work equipment control lever is at the HOLD position, then set the safety lock lever to the LOCK position.

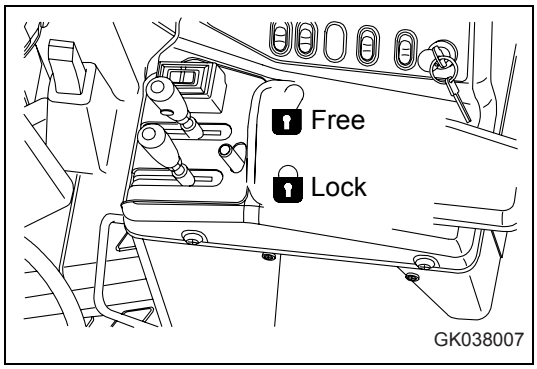

3. Set the parking brake switch to ON position (A) to apply the parking brake securely.

4. Turn the starting switch to the OFF position to stop the engine, and pull out the starting switch key.

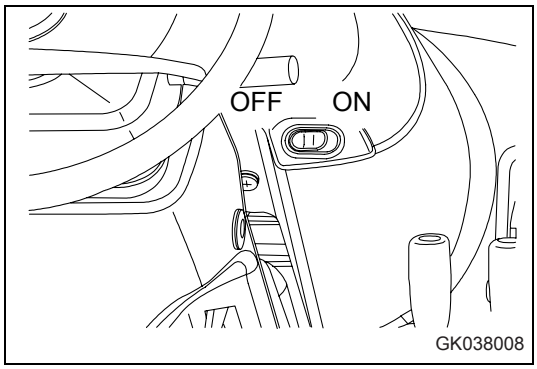

5. Lock front frame and rear frame with safety bar.

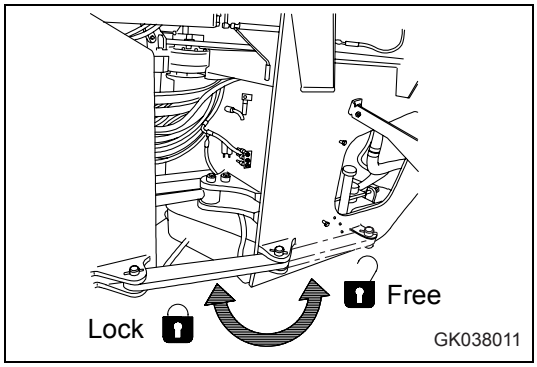

6. Put blocks in front and behind the wheels, and secure the machine with chains or wire rope to prevent the machine from moving during transportation.

   In particular, attach the machine securely to prevent it from slipping sideways.

7. Always retract the car radio antenna fully.

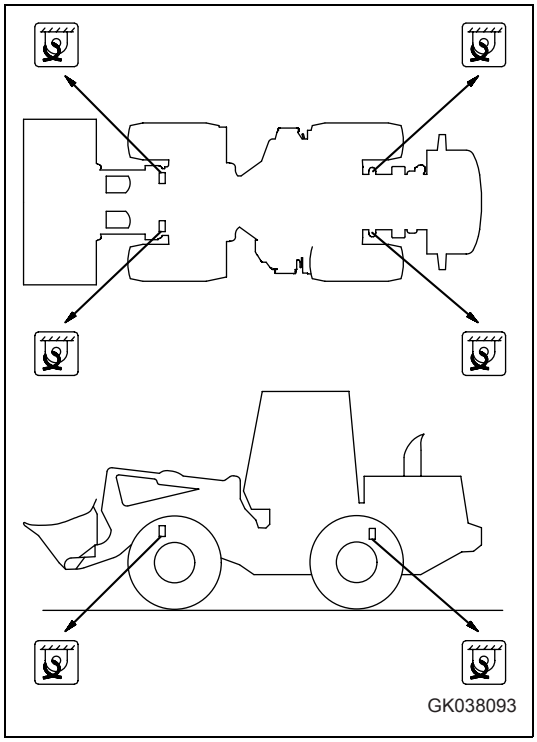

Unloading

1. Load and unload on firm level ground only. Maintain a safe distance from the edge of a road.

2. Apply the brakes on the trailer securely and insert blocks under the tires to ensure that the trailer does not move.

   Then fix the ramps in line with the centers of the trailer and the machine.

   Be sure that the two sides are at the same height as one another.

   Make the angle of the ramps a maximum of 15º.

   Set the distance between the ramps to match the center of the tires.

   If the ramp sags appreciably, reinforce it with blocks, etc.

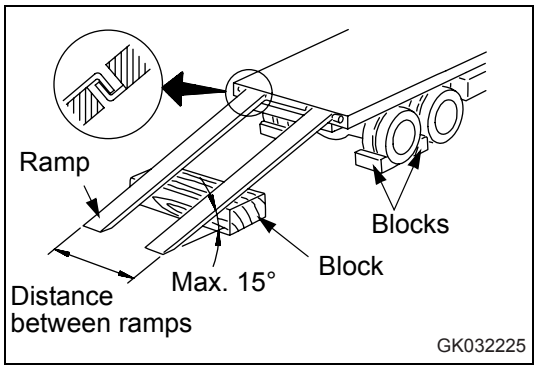

3. Remove the chains and wire ropes fastening the machine.

4. Set the frame lock bar to FREE position (F).

5. Start the engine.

   Warm the engine up fully.

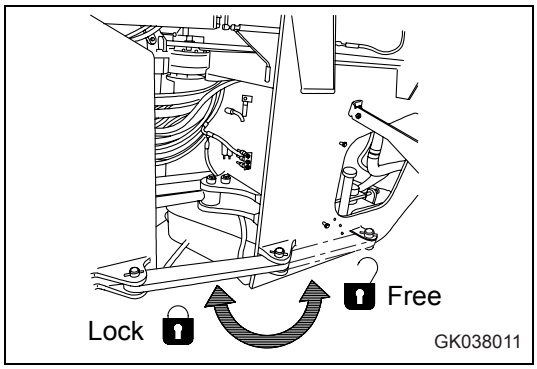

6. Check that the work equipment control lever is at the HOLD position, then set the safety lock lever to the FREE position.

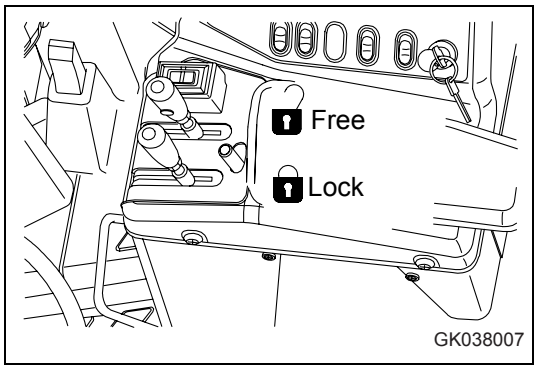

7. Set the parking brake switch to OFF position (B) to cancel the parking brake.

8. Determine the direction of the ramps, then drive the machine slowly down the ramps to unload the machine.

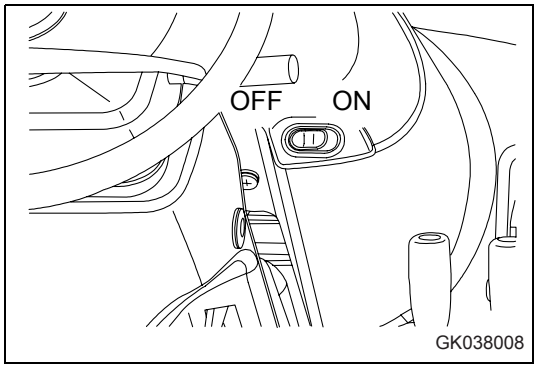

3.4.3 Lifting machine

WARNING

- When lifting the machine, if the wire rope is not fitted correctly the machine may fall and cause serious injury or even death. Raise the machine 100 to 200 mm from the ground, check that the machine is horizontal and that there is no slack in the wire rope, then continue to lift the machine.
- Before lifting the machine, always stop the engine and lock the brakes. Lock front frame and rear frame with safety bar. Lifting operations using a crane must be carried out by a qualified operator.
- Never raise the machine with any worker on it.
- Always make sure that the wire rope used for lifting the machine is of ample strength for the weight of the machine.
- Never try to lift the machine at any position or in any posture other than the posture specified.
- Never go under the machine when it is raised.

CAUTION

When the machine is raised, check that there is no oil leakage from the hydraulic circuits.
When carrying out the lifting operation, please contact your KOMATSU distributor.

NOTE

The lifting procedure applies to machines with standard specifications.
The method of lifting differs according to the attachments and options actually installed. In such cases, please contact your KOMATSU distributor for information.

For details of the weight, see "Weight table (3-145)".

Location of lifting position mark

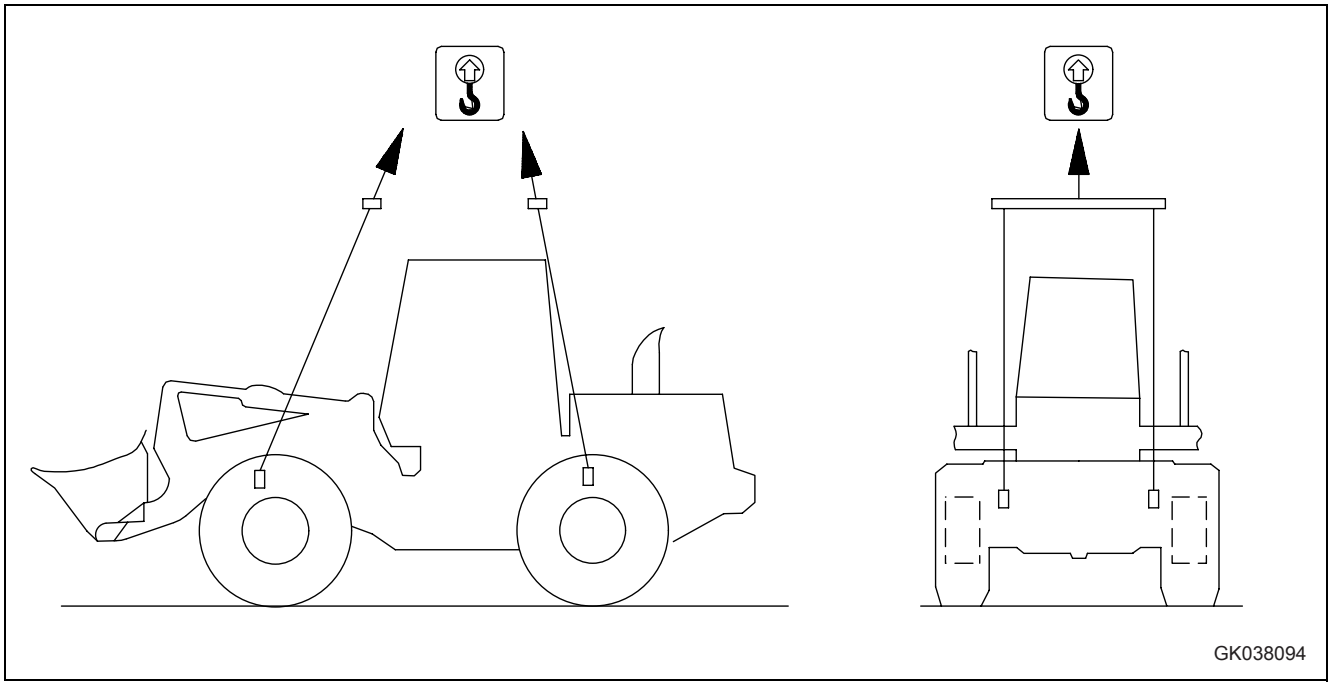

Lifting hooks (A) are located at 4 places on the machine as shown in the diagram on the right.

Use only these 4 places when lifting; do not use any other places. There is a serious danger that the machine will lose its balance.

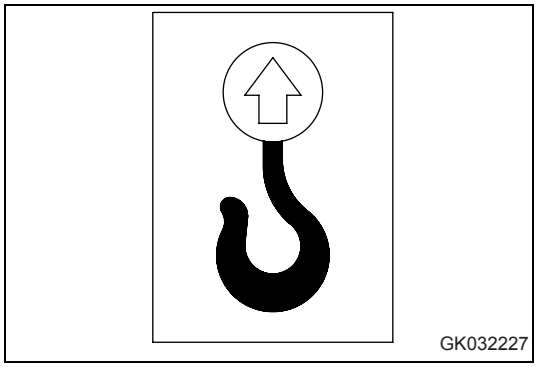

Weight table

	Machine weight	Front wheel load	Rear wheel load	Center of gravity (from front axle)
WA380-6H	14,000	-	-	-

Lifting procedure

CAUTION

When the machine is raised, check that there is no oil leakage from the hydraulic circuits.
When carrying out the lifting operation, please contact your KOMATSU distributor.

Lifting work can be carried out only for machines with lifting marks. Before starting the lifting operation, stop the machine in a horizontal place and do as follows.

1. Start the engine, make sure that the machine is horizontal, then set the work equipment to the travel posture.

   For details, see "Preparations for moving the machine (3-106)".

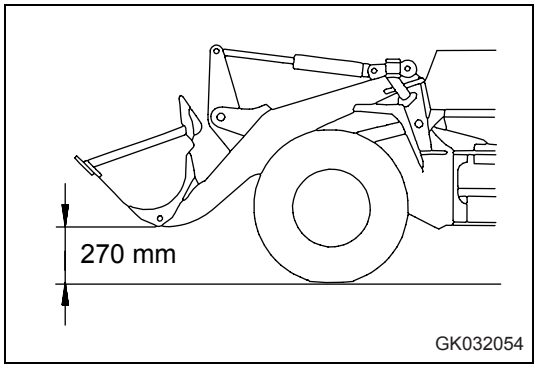

2. Check that the work equipment control lever is at the HOLD position, then set the safety lock lever to the LOCK position.

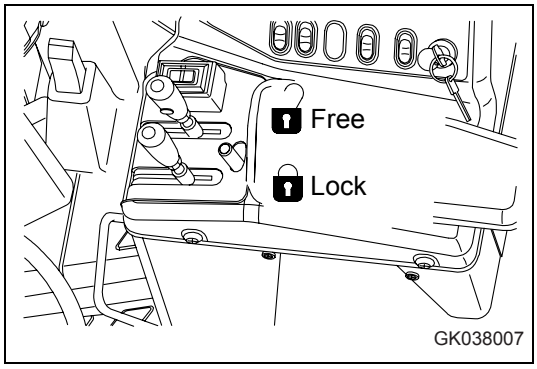

3. Stop the engine, check that the area around the operator's compartment is safe, then lock with the safety bar so that the front frame and rear frame do not articulate.

4. Use wire ropes and slings that match the weight of the machine, and wind the wire rope and fix it to the lifting points as shown in the figure.

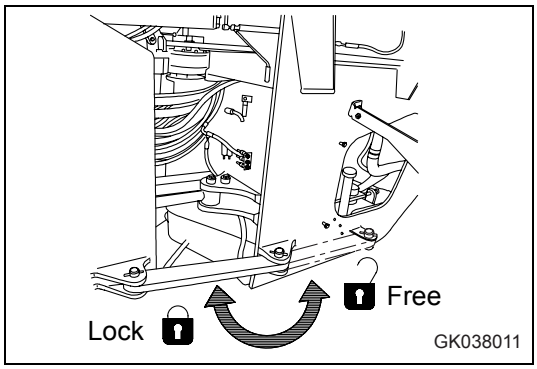

NOTE

- *Use protectors, etc. so that the wire ropes will not be broken at sharp edges or narrow places.*
- *Use spreaders and bars having sufficient width so that they will not touch the machine.*
- *For machines equipped with a rear full fender, remove the rear full fender before carrying out the operation.*

5. After setting the wire ropes, lift up the machine and stop at 100 to 200 mm above the ground, and check that the wire ropes are not slack and the machine is level, then lift up slowly.

3.5 Cold weather operation

3.5.1 Precautions for low temperature

If the temperature becomes low, it becomes difficult to start the engine, and the coolant may freeze, so do as follows.

Fuel and lubricants

Change to fuel and oil with low viscosity for all components. For details of the specified visicosity, see "Fuel, coolant and lubricants (4-16)".

Coolant

WARNING

- Antifreeze is toxic. Be careful not to get it into your eyes or on your skin. If it should get into your eyes or on your skin, wash it off with large amount of fresh water and see a doctor at once.
- When changing the coolant or when handling coolant containing antifreeze that has been drained when repairing the radiator, please contact your KOMATSU distributor. Antifreeze is toxic, so do not let it flow into drainage ditches or spray it on to the ground surface.
- Antifreeze is flammable, so do not bring any flame close. Do not smoke when handling antifreeze.

NOTE

- *Use KOMATSU Supercoolant (AF-NAC) wherever available, or use permanent type antifreeze coolant.*
- *Never use methanol, ethanol or propanol based antifreeze.*
- *Avoid using any leak-preventing agent, regardless if it is sold separately or in antifreeze.*
- *Do not mix one antifreeze with a different brand.*
- *When using KOMATSU Supercoolant (AF-NAC), there is no need to use a corrosion resistor. For details, see "Clean inside of cooling system (4-35)".*

For details of the antifreeze mixture when changing the coolant, see "Clean inside of cooling system (4-35)".

Battery

WARNING

- The battery generates flammable gas, so do not bring fire or sparks near the battery.
- Battery electrolyte is dangerous. If it gets in your eyes or on your skin, wash it off with a large amount of water and consult a doctor.
- Battery electrolyte dissolves paint. If it gets on to the bodywork, wash it off immediately with water.
- If the battery electrolyte is frozen, do not charge the battery or start the engine with a different power source. There is danger that the battery may explode.
- Battery electrolyte is toxic, so do not let it flow into drainage ditches or spray it on to the ground surface.

When the ambient temperature drops, the capacity of the battery will also drop. If the battery charge ratio is low, the battery electrolyte may freeze. Maintain the battery charge as close as possible to 100%, and insulate it against cold temperature so that the machine can be started easily the next morning.

REMARK

Measure the specific gravity and calculate the rate of charge from the following conversion table.

Charging Rate (%)	Temperature (°C)			
	20	0	-10	-20
100	1.28	1.29	1.30	1.31
90	1.26	1.27	1.28	1.29
80	1.24	1.25	1.26	1.27
75	1.23	1.24	1.25	1.26

- As the battery capacity drops markedly in low temperatures, cover the battery or remove it from the machine, keep it in a warm place, and install it again the next morning.
- If the electrolyte level is low, add distilled water in the morning before beginning work. Do not add the water after the day's work so as to prevent fluid in the battery from freezing in the night.

3.5.2 Precautions after completion of work

To prevent mud, water, or the undercarriage from freezing and making it impossible for the machine to move on the following morning, always observe the following precautions.

- Remove all the mud and water from the machine body. In particular, wipe the hydraulic cylinder rod clean to prevent damage to the seal caused by mud or dirt on the rod surface getting inside the seal together with drops of water.
- Park the machine on hard, dry ground.

  If this is impossible, park the machine on wooden boards.

  The boards help protect the wheels from being frozen in soil and the machine can start next morning.
- Open the drain valve and drain any water collected in the fuel system to prevent it from freezing.
- Fill the fuel tank to the full in order to prevent moisture from forming dew in the tank room, as the ambient temperature goes down.

3.5.3 After cold weather

When season changes and the weather becomes warmer, do as follows.

- Replace the fuel and oil for all parts with oil of the viscosity specified.

  For details, see "Fuel, coolant and lubricants (4-16)".
- If for any reason permanent antifreeze cannot be used, and an ethyl glycol base antifreeze (winter, one season type) is used instead, or if no antifreeze is used, drain the cooling system completely, then clean out the inside of the cooling system thoroughly, and fill with fresh coolant.

3.5.4 Warming-up operation for steering hydraulic circuit in cold weather

WARNING

If the steering wheel is operated and stopped while the oil temperature is low, there may be a time lag before the machine stops turning.
In this case, use the safety bar to ensure safety, and perform the warm-up operation in a wide place.
Do not load up the hydraulic oil in the circuit continuously for more than 5 seconds.

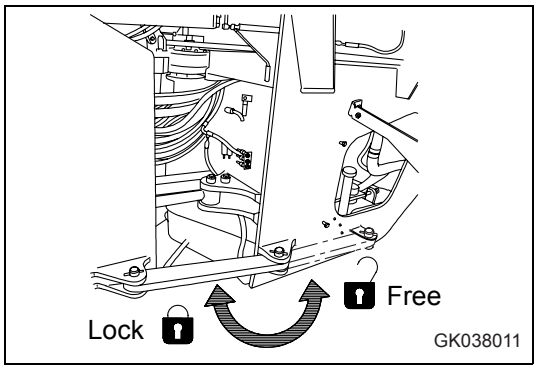

When the temperature is low, do not start the operation of the machine immediately after starting the engine.

Warming up steering hydraulic circuit

Slowly operate the steering wheel to the left and right to warm up the oil in the steering valve. Repeat this operation for about 10 minutes to warm up the oil.

NOTE

Unlock the safety bar. Operate the steering wheel a little and stop in that position. Then, confirm that the machine is steered by an angle equivalent to the turning angle of the steering wheel.

3.6 Long-term storage

3.6.1 Before storage

When putting the machine in storage for a long time, do as follows.

- Clean and wash all parts, then store the machine indoors. If the machine has to be stored outdoors, select level ground and cover the machine with a sheet.
- Fill the fuel tank to prevent moisture from accumulating.
- Completely fill the fuel tank, lubricate and change the oil before storage.
- Apply a thin coat of grease to the metal surface of the hydraulic piston rods.
- Disconnect the negative terminals of the battery and cover it or remove it from the machine and store it separately.
- Make sure that the machine does not move by setting the safety lock lever in the LOCK position.
- To prevent corrosion, be sure to fill the cooling system with Supercoolant (AF-NAC) or permanent type antifreeze (density between 30% and 68%).

3.6.2 During storage

WARNING

If it is unavoidably necessary to carry out the rust-preventive operation while the machine is indoors, open the doors and windows to improve ventilation and prevent gas poisoning.

- During storage, always operate the machine once a month so that a new film of oil will be coated over movable parts and component surfaces. At the same time, also charge the battery.
- When operating the work equipment, wipe off all the grease from the hydraulic cylinder rod.
- If the machine is equipped with an air conditioner, operate it for 3 to 5 minutes once a month to lubricate each portion of its compressor. Be sure to idle the engine at low speed for this purpose. Also, check the quantity of refrigerant twice a year.

3.6.3 After storage

NOTE

If the machine is to be used when the monthly rust prevention operation has not been carried out, please contact your KOMATSU distributor.

When using the machine after long-term storage, do as follows before using it.

- Wipe off the grease from the hydraulic cylinder rods.
- Add oil and grease to all lubrication points.
- When a machine is stored for a long period, moisture in the air will get into the oil. Check the oil for presence of water before and after starting the engine. If there is water in the oil, change the oil.

3.7 Troubleshooting

3.7.1 When machine runs out of fuel

WARNING

When starting the engine again, check carefully that the area around the engine is safe before cranking the engine.

When starting the engine after running out of fuel, fill with fuel and bleed the air from the fuel system before starting.

For details of bleeding the air, see "Procedure for bleeding air (4-70)".

3.7.2 Towing the machine

WARNING

- Serious injury or death could result if there is any mistake in the selection of wire rope or method of towing a disabled machine.
- Check that the wire rope is of ample strength for the weight of the machine being towed.
- Never use a wire rope which has cut strands (A), reduced diameter (B), or kinks (C). There is danger that the rope may break during the towing operation.
- Always wear leather gloves when handling wire rope.
- Never tow a machine on a slope.
- During the towing operation, never stand between the towing machine and the machine being towed.
- Move the machine slowly and be sure not to apply any sudden load on the wire rope.
- If there is a failure in the brake line, the brakes cannot be used, so be extremely careful when towing.

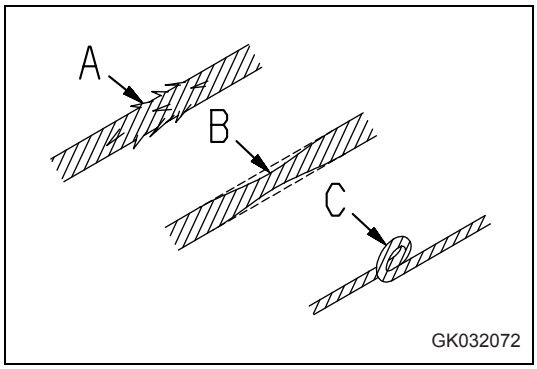

NOTE

- *Towing is for moving the machine to a place where inspection and maintenance can be carried out, and not for moving it long distances.*
  The machine must not be towed for long distances.

- *For details of the procedure for towing a machine when it has broken down, please contact your KOMATSU distributor.*

This machine must not be towed except in emergencies. When towing the machine, take the following precautions.

- Before releasing the brakes, put blocks under the wheels to prevent the machine from moving. If the wheels are not blocked, the machine may suddenly move.

- When towing a machine, tow it at a low speed of less than 2 km/h (1.2 MPH), and for a distance of a few meters to a place where repairs can be carried out. The machine should be towed only in emergencies. If the machine must be moved long distances, use a transporter.

- To protect the operator if the towing rope or bar should break, install a protector plate to the machine being towed.

- If it is impossible to operate the steering and brakes of the machine being towed, do not let anyone ride on the machine.

- Check that the tow rope or bar is of ample strength for the weight of the machine being towed. If the machine being towed must travel through mud or up hills, use a tow rope or bar of a strength of at least 1.5 times the weight of the machine being towed.

- Keep the angle of the tow rope as small as possible. Keep the angle between the center lines of the two machines to within 30 degrees.

- If the machine is moved suddenly, the tow rope or bar will be subjected to an excessive load, and it may break. Start the machine gradually and travel at a constant speed.

- The towing machine should normally be of the same class as the machine being towed. Check that the towing machine has ample braking power, weight, and rimpull to allow it to control both machines on slopes or on the tow road.

- When towing a machine downhill, use a larger machine for towing to provide ample rimpull and braking power, or connect another machine to the rear of the machine being towed. This way it is possible to prevent the machine from losing control and turning over.

- Towing may be carried out under various differing conditions, so it is impossible to determine beforehand the requirements for towing. Towing on flat horizontal roads will require the minimum rimpull, while towing on slopes or on uneven road surfaces will require the maximum rimpull.
- Connect a wire rope to the part indicated with the arrow in the diagram at right.

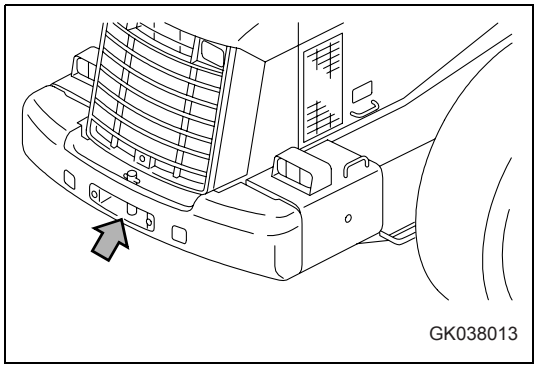

When engine can be used

- If the transmission and steering wheel can be operated, and the engine is running, it is possible to tow the machine out of mud or to move it for a short distance to the edge of the road.
- The operator should sit on the machine being towed and operate the steering in the direction that the machine is towed.

When engine cannot be used

When towing a machine with the engine stopped, use the following procedure.

1. The transfer oil does not lubricate the system, so remove the front and rear drive shafts. If necessary, block the tires to prevent the machine from moving.
2. The steering cannot be operated, so remove the steering cylinder.

   Even if the brakes are in good condition, the brakes can only be used a limited number of times. There is no change in the operating force for the brake pedal, but the braking force is reduced each time the pedal is depressed.
3. Connect the towing equipment securely. When carrying out towing operations, use two machines of at least the same class as the machine being towed. Connect one machine each to the front and rear of the machine being towed, then remove the blocks from the tires and tow the machine.
4. Parking brake

   The parking brake cannont be turned OFF. To release the parking brake, do as follows.

Releasing parking brake

WARNING

- When releasing the parking brake, stop the machine on level ground and check that the surrounding area is safe. If it is necessary to release the brake on a slope in an emergency, block the tires before starting the operation.
- If the parking brake is released, the brake cannot be used, so check the safety carefully when moving the machine.

If the engine will not run for some reason, use the following methods to release the parking brake and tow the machine.

Method of releasing brake by using emergency parking brake cancel switch

CAUTION

When the parking brake switch is at the OFF position and the emergency parking brake release valve is opened, the parking brake is released immediately.
In this condition, even if you feel danger and try to stop the machine, the parking brake will not be applied immediately even if you close the emergency parking brake release valve.

If the pressure in the brake accumulator is high, do as follows.

1. Turn the starting switch to the OFF position (A).

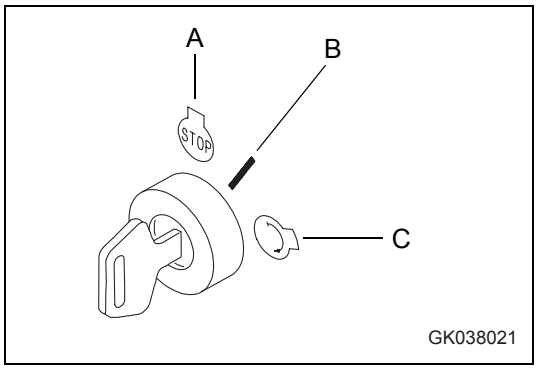

2. Loosen relief valve lock nut (1) by turning it counterclockwise, and turn grip (2) likewise to relieve the valve.

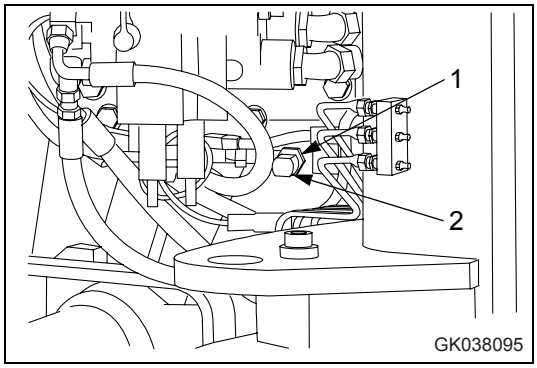

REMARK

The relief valve is located on the left front portion inside the rear frame and secured to the accumulator mounting bracket.

3. Turn starting switch to the ON position (B).

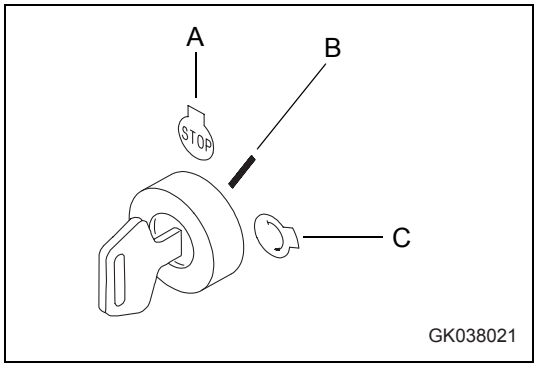

4. Move the parking brake switch to the ON (a) position (actuated), then move it to the OFF (b) position (released).
   The parking brake is released.

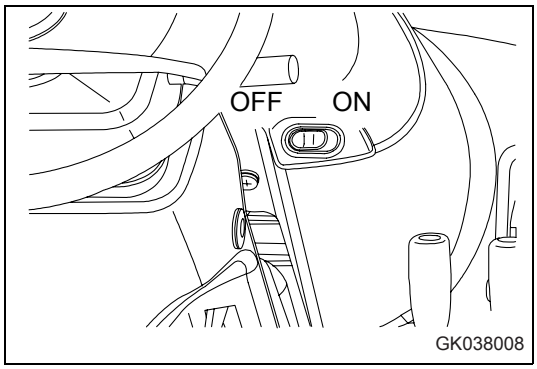

5. To restore the function of the parking brake, turn grip (2) of the release valve clockwise to close the release valve, then turn locknut (1) clockwise to lock it.

   Tightening torque

   Grip (2): 20 ± 5 Nm

   Locknut (1): 20 ± 5 Nm

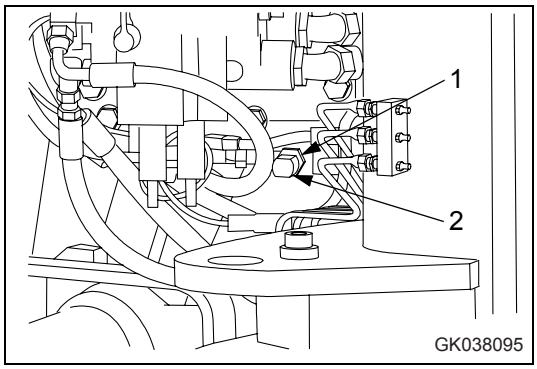

6. Move the parking brake switch to the ON (a) position.

   The parking brake is applied.

   To release the parking brake again, repeat the procedure in Steps 1 to 4.

REMARK

If the brake accumulator pressure is low, the parking brake warning lamp may not go out, or the alarm buzzer may sound continuously. If this happens, release the brake mechanically. For details, see "Method of releasing mechanically (3-158)".

Method of releasing mechanically

If the brake accumulator pressure is low, do as follows.

1. Loosen bolt (2) and adjustment screw (1) at 3 places (A, B, C) at the front of the transmission case.
2. Rotate lock plate (3) to release the lock, then tighten adjustment screw (1) until it stops.
3. If this operation is carried out at the same time at A, B, and C, the parking brake can be released.

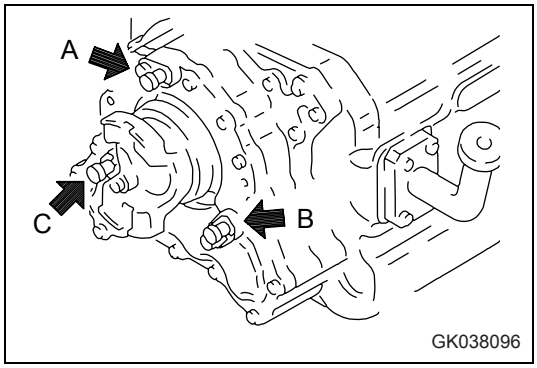

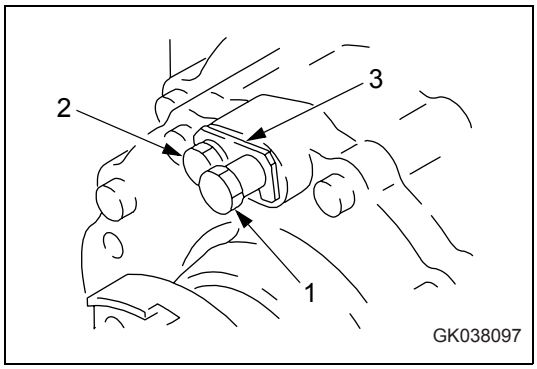

Emergency travel operation

The normal gear shifting operation is carried out by electric signals. If there should be a failure in the electrical system and the machine does not move, please contact your KOMATSU distributor to have the machine moved.

NOTE

Always request your KOMATSU distributor to carry out the emergency travel operation.

3.7.3 If battery is discharged

WARNING

- When checking or handling the battery, stop the engine and turn the starting switch key to the OFF position.
- The battery generates hydrogen gas, so there is a hazard of explosion. Do not bring lighted cigarettes near the battery, or do anything that will cause sparks.
- Battery electrolyte is dilute sulphuric acid, and it will attack your clothes and skin. If it gets on your clothes or on your skin, immediately wash it off with a large amount of water. If it gets in your eyes, wash it out with fresh water and consult a doctor.
- When handling batteries, always wear protective goggles and rubber gloves.
- When removing the battery, first disconnect the cable from the ground (normally the negative (-) terminal). When installing, install the positive (+) terminal first.
  If a tool touches the positive terminal and the chassis, there is danger that it will cause a spark, so be extremely careful.
- If the terminals are loose, there is danger that the defective contact may generate sparks that will cause an explosion.
- When removing or installing the terminals, check which is the positive (+) terminal and which is the negative (-) terminal.

When removing, disconnect the cable from the ground (-) terminal first.

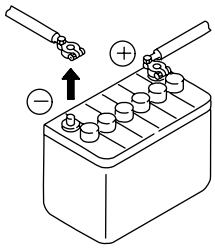

When installing, connect the cable to the positive (+) terminal first.

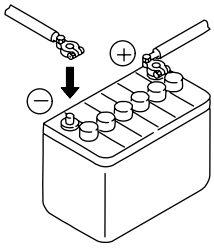

GK032229

Removal and installation of battery

1. Before removing battery, remove the ground cable (normally connected to the negetive (-) terminal). If any tool touches between the positive terminal and the chassis, there is danger of sparks being generated. Loosen the nuts of terminal and remove the wires from the battery.

2. After installing the battery, fix it with the battery fitting securely.

   Tightening torque: 2 to 2.9 Nm

3. When installing the battery, connect the ground cable last.

   Insert the hole of the terminal on the battery and tighten the nut.

REMARK

Tightening torque: 5.9 to 9.8 Nm
The batteries are on both sides at the rear of the machine. The battery used for the ground is on the left side of the machine.

Precautions for charging battery

When charging the battery, if the battery is not handled correctly, there is danger that the battery may explode. Always follow the instructions in "Battery (3-148)" and the instruction manual accompanying the charger, and do as follows.

GK032230

- Do not use or charge the battery if the battery electrolyte level is below the LOWER LEVEL line. This may cause an explosion. Always check the battery electrolyte level periodically and add distilled water to bring the electrolyte level to the UPPER LEVEL line.
- Set the voltage of the charger to match the voltage of the battery to be charged. If the voltage is not selected correctly, the charger may overheat and cause an explosion.
- Connect the positive (+) charger clip of the charger to the positive (+) terminal of the battery, then connect the negative (-) charger clip of the charger to the negative (-) terminal of the battery. Be sure to fix the clips securely.
- Set the charging current to 1/10 of the value of the rated battery capacity; when carrying out rapid charging, set it to less than the rated battery capacity.

  If the charger current is too high, the electrolyte will leak or dry up, and this may cause the battery to catch fire and explode.
- If the battery electrolyte is frozen, do not charge the battery or start the engine with a different power source. There is a hazard that this will ignite the battery electrolyte and cause the battery to explode.

Starting engine with booster cable

When starting the engine with a booster cable, do as follows:

Precautions when connecting and disconnecting booster cable

WARNING

- When connecting the cables, never contact the positive (+) and negative (-) terminals.
- When starting the engine with a booster cable, always wear safety glasses and rubber gloves.
- Be careful not to let the normal machine and problem machine contact each other. This prevents sparks from generating near the battery which could ignite the hydrogen gas given off by the battery.
- Make sure that there is no mistake in the booster cable connections. The final connection is to the engine block of the problem machine, but sparks will be generated when this is done, so connect to a place as far as possible from the battery.
- When disconnecting the booster cable, take care not to bring the clips in contact with each other or with the machine body.

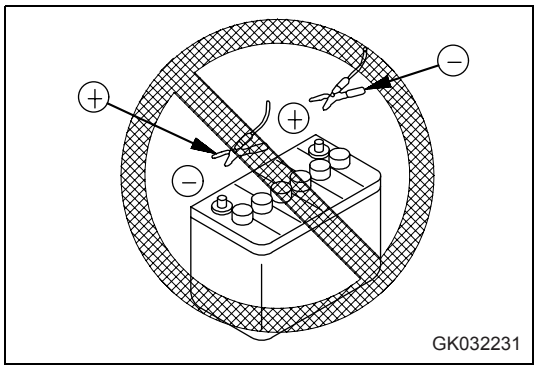

NOTE

- *The size of the booster cable and clip should be suitable for the battery size.*
- *The battery of the normal machine must be the same capacity as that of the engine to be started.*
- *Check the cables and clips for damage or corrosion.*
- *Make sure that the cables and clips are firmly connected.*
- *Check that the safety lock levers and parking brake levers of both machines are in the LOCK position.*
- *Check that each lever is in the NEUTRAL position.*

Connecting the booster cable

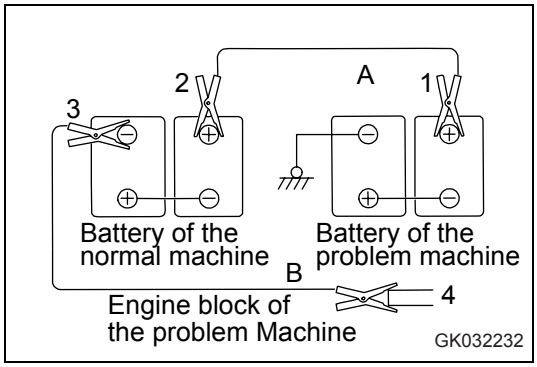

Keep the starting switch of the normal machine and problem machine at the OFF position.

Connect the booster cable as follows, in the order of the numbers marked in the diagram.

1. Connect one clip of booster cable (A) to the positive (+) terminal of the problem machine.
2. Connect the other clip of booster cable (A) to the positive (+) terminal of the normal machine.
3. Connect one clip of booster cable (B) to the negative (-) terminal of the normal machine.
4. Connect the other clip of booster cable (B) to the engine block of the problem machine.

Starting engine

WARNING

Always check that the safety lock lever is set to the LOCK position, regardless of whether the machine is working normally or has failed. Check also that all the control levers are at the HOLD or neutral position.

1. Make sure the clips are firmly connected to the battery terminals.
2. Start the engine of the normal machine and keep it to run at high idling speed.
3. Turn the starting switch of the problem machine to the START position and start the engine.

   If the engine doesn't start at first, wait for at least 2 minutes before trying again.

Disconnecting the booster cable

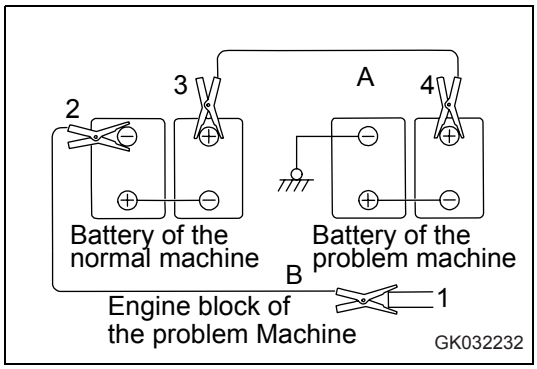

After the engine has started, disconnect the booster cables in the reverse of the order in which they were connected.

1. Remove one clip of booster cable (B) from the engine block of the problem machine.
2. Remove the other clip of booster cable (B) from the negative (-) terminal of the normal machine.
3. Remove one clip of booster cable (A) from the positive (+) terminal of the normal machine.
4. Remove the other clip of booster cable (A) from the positive (+) terminal of the problem machine.

3.7.4 Other trouble

Electrical system

- ( ): Always contact your KOMATSU distributor when dealing with these items.
- In cases of abnormalities or causes which are not listed below, please contact your KOMATSU distributor for repairs.

Problem	Main causes	Remedy
Lamp does not glow brightly even when the engine runs at high speed Lamp flickers while engine is running	● Defective wiring ● Defective adjustment of belt tension	● (Check, repair loose terminals, disconnections) ● Check, Adjust fan belt tension For details, see EVERY 250 HOURS SERVICE
Even when the engine is rotating, the charge caution pilot lamp does not go out	● Defective alternator ● Defective wiring ● Defective adjustment of fan belt tension	● (Replace) ● (Check, repair) ● Check, Adjust fan belt tension For details, see EVERY 250 HOURS SERVICE
Abnormal noise is generated from alternator	● Defective alternator	● (Replace)
Starting motor does not turn when starting switch is turned to START	● Defective wiring ● Insufficient battery charge ● Defective starting motor	● (Check, repair) ● Charge ● (Check, repair)
Pinion of starting motor keeps going in and out	● Insufficient battery charge	● Charge
Starting motor turns engine sluggishly	● Insufficient battery charge ● Defective starting motor	● Charge ● (Replace)
Starting motor disengages before engine starts	● Defective wiring ● Insufficient battery charge	● (Check, repair) ● Charge
Preheating pilot lamp does not light up	● Defective wiring ● Defective heater relay, preheating water temperature sensor ● Defective preheating pilot lamp	● (Check, repair) ● (Replace) ● (Replace)
Even when engine is stopped, charge caution pilot lamp does not light up (starting switch at ON position)	● Defective wiring ● Defective monitor	● (Check, repair) ● (Replace)
Even when engine is stopped, engine oil pressure caution pilot lamp does not light up (starting switch at ON position)	● Defective pilot lamp ● Defective pressure caution lamp ● Defective monitor	● (Replace) ● (Replace) ● (Replace)

Chassis

- ( ): Always contact your KOMATSU distributor when dealing with these items.
- In cases of abnormalities or causes which are not listed below, please contact your KOMATSU distributor for repairs.

Problem	Main causes	Remedy
Transmission		
Engine is running but machine does not move	● Parking brake is applied ● Directional lever is not shifted properly ● Lack of oil in hydraulic tank	● Release parking brake ● Shift lever properly ● Add oil to specified level. See WHEN REQUIRED
Even when engine is run at full throttle, machine only moves slowly and lacks power	● Lack of oil in hydraulic tank ● Screen is colgged	● Add oil to specified level. See WHEN REQUIRED ● Disassemble, clean
Oil overheats	● Too much oil or too little oil ● Machine is not traveling in correct speed range ● Torque converter is stalled for long periods ● Engine is overheating	● Add or drain oil to specified level. See WHEN REQUIRED ● Place in correct speed range ● Reduce stall time ● (Check engine)
Noise generated	● Lack of oil in transmission case	● Add oil to specified level. See WHEN REQUIRED
Axle		
Noise generated	● Lack of oil ● Improper oil used (for machines with limited-slip differential)	● Add oil to specified level. See WHEN REQUIRED ● Change to specified oil
Brake		
Brake is not applied when pedal is depressed	● Disc has reached wear limit ● Defective hydraulic system ● Lack of oil ● Air in brake line	● (Replace disc) ● Add oil to specified level. See EVERY 100 HOURS SERVICE ● Bleed air.
Brake drags or not applied	● Vent hole of brake valve is clogged	● Clean
Brakes squeal	● Disc is worn ● Large amount of water in axle oil ● Deteriorated axle oil due to over-use of brake	● (Replace disc) ● Change axle oil ● Change axle oil
Parking brake		
Poor braking effect	● Linkage is loose ● Disc is worn	● Adjust ● (Replace disc)
Brake drags or remains applied	● Lack of oil in transmission case ● Screen is clogged	● Add oil to specified level. See WHEN REQUIRED ● (Disassemble, clean)

Problem	Main causes	Remedy
Steering		
Steering wheel is heavy	● Defective hydraulic system ● Lack of oil	● Add oil to specified level. See EVERY 100 HOURS SERVICE
There is play in steering wheel	● Steering cylinder pin is loose ● Defective hydraulic system Lack of oil	● Grease bearing. Or replace pin and bushing where there is play ● Add oil to specified level. See EVERY 100 HOURS SERVICE
Hydraulic system		
Bucket lacks lifting power Bucket takes time to go up	● Lack of oil ● Clogged hydraulic filter	● Add oil to specified level. See EVERY 100 HOURS SERVICE ● Replace cartridge. See EVERY 2000 HOURS SERVICE
Excessive bubbles in oil	● Poor quality oil ● Lack of oil ● Air entering oil line	● Replace with good quality oil ● Add oil to specified level. See EVERY 100 HOURS SERVICE ● Bleed air. See EVERY 2000 HOURS SERVICE
Lack of oil pressure	● Lack of oil causes pump to suck in air	● See EVERY 100 HOURS SERVICE for details of adding oil ● See EVERY 2000 HOURS SERVICE for details of bleeding air
Irregular movement of cylinder	● Lack of oil	● Add oil to specified level. See EVERY 100 HOURS SERVICE

Engine

- ( ): Always contact your KOMATSU distributor when dealing with these items.
- In cases of abnormalities or causes which are not listed below, please contact your KOMATSU distributor for repairs.

Problem	Main causes	Remedy
Engine oil pressure caution pilot lamp lights up	● Low engine oil pan oil level (sucking in air) ● Clogged oil filter cartridge ● Defective tightening of oil pipe joint, oil leakage from damaged part ● Defective monitor	● Add oil to specified level. See CHECK BEFORE STARTING ● Replace cartridge. See EVERY 500 HOURS SERVICE ● (Check, repair) ● (Replace)
Steam is emitted from top part of radiator (pressure valve) Water temperature gauge is in red range Coolant temperature monitor lights up	● Low cooling water level, leakage of water ● Defective fan pump motor ● Dirt or scale accumulated in cooling system ● Clogged radiator fin or damaged fin ● Defective thermostat ● Defective thermostat seal ● Loose radiator filler cap (high altitude operation) ● Defective monitor	● Check, add cooling water, repair. See WHEN REQUIRED ● (Check, repair) ● Change cooling water, clean inside of cooling system. See WHEN REQUIRED ● Clean or repair. See WHEN REQUIRED ● (Replace thermostat) ● (Replace thermostat seal) ● Tighten cap or replace packing ● (Replace)
Water temperature gauge is in white range on left	● Defective thermostat ● Defective monitor	● (Replace thermostat) ● (Replace)
Engine does not start when starting motor is turned	● Lack of fuel ● Air in fuel system ● No fuel in fuel filter ● Defective injection pump or nozzle ● Starting motor cranks engine too slowly ● Starting motor does not turn ● Preheating pilot lamp does not light up ● Defective valve clearance (Defective compression)	● Add fuel. See CHECK BEFORE STARTING ● Repair place where air is sucked in ● Fuel filter with fuel. See EVERY 500 HOURS SERVICE ● (Replace pump or nozzle) See ELECTRICAL SYSTEM See ELECTRICAL SYSTEM ● See ELECTRICAL SYSTEM ● See ELECTRICAL SYSTEM ● (Adjust valve clearance)
Exhaust gas is white or blue	● Too much oil in oil pan ● Improper fuel	● Add oil to specified level. See CHECK BEFORE STARTING ● Change to specified fuel

Problem	Main causes	Remedy
Exhaust gas occasionally turns black	● Clogged air cleaner element ● Defective nozzle ● Defective compression ● Defective turbocharger	● Clean or replace. See WHEN REQUIRED ● (Replace nozzle) ● (See defective compression above) ● Clean or replace turbocharger
Combustion noise occasionally makes breathing sound	● Defective nozzle	● (Replace nozzle)
Abnormal noise generated (combustion or mechanical)	● Low grade fuel being used ● Overheating ● Damage inside muffler ● Excessive valve clearance	● Change to specified fuel ● Refer to “Water temperature gauge is in red range“ as above ● (Replace muffler) ● (Adjust valve clearance)

4. Maintenance

WARNING

Please read and make sure that you understand the SAFETY section before reading this section.

4.1 Guides to maintenance

Do not carry out any inspection and maintenance operation that is not found in this manual.

Check service meter:

Check the service meter reading every day to see if the time has come for any necessary maintenance to be carried out.

KOMATSU genuine replacement parts:

Use KOMATSU genuine parts specified in the Parts Book as replacement parts.

KOMATSU genuine oils:

Use KOMATSU genuine oils and grease. Choose oils and grease with proper viscosities specified for ambient temperature.

Always use clean washer fluid:

Use automobile window washer fluid, and be careful not to let any dirt get into it.

Always use clean oil and grease:

Use clean oil and grease. Also, keep the containers of the oil and grease clean. Keep foreign materials away from oil and grease.

Checking for foreign materials in drained oil and on filters:

After oil is changed or filters are replaced, check the old oil and filters for metal particles and foreign materials. If large quantity of metal particles or foreign materials are found, always report to the person in charge, and carry out suitable action.

Fuel strainer:

Do not remove the strainer from the filler port when adding fuel.

Welding instructions:

- Turn off the engine starting switch.
- Do not apply more than 200 V continuously.
- Connect grounding cable within 1 m from the area to be welded. If grounding cable is connected near instruments, connectors, etc., the instruments may malfunction.
- If a seal or bearing happen to come between the welding part and grounding point, change the grounding point to avoid such parts.
- Do not use the area around the work equipment pins or the hydraulic cylinders as the grounding point.
- Remove the negative (-) terminal of the battery to stop the flow of electric current.

Do not drop things inside machine:

- When opening inspection windows or the oil filler port of the tank to carry out inspection, be careful not to drop nuts, bolts, or tools inside the machine.

  If such things are dropped inside the machine, it will cause damage and malfunction of the machine, and will lead to failure. If you drop anything inside the machine, always remove it immediately.
- Do not put unnecessary things in your pockets. Carry only things which are necessary for inspection.

Dusty worksites:

When working at dusty worksites, do as follows:

- Clean the radiator core frequently to avoid clogging.
- Clean and replace the fuel filter frequently.
- Clean electrical components, especially the starting motor and alternator, to avoid accumulation of dust.
- When inspecting or changing the oil, move the machine to a place that is free of dust to prevent dirt from getting into the oil.

Avoid mixing oil:

If a different brand or grade of oil has to be added, drain the old oil and replace all the oil with the new brand or grade of oil. Never mix different brands or grades of oil.

Locking inspection covers:

Lock inspection cover in position securely with the lock bar. If inspection or maintenance is carried out with the inspection cover not locked in position, there is a hazard that it may be suddenly blown shut by the wind and cause injury to the worker.

Bleeding air from hydraulic circuit:

After repairing or replacing the parts of hydraulic circuit, or removing the piping of hydraulic circuit, it is necessary to bleed the air from inside of the circuit.

See "Change oil in hydraulic tank, replace hydraulic filter element (4-76)".

Precautions when installing hydraulic hoses:

- When removing parts at locations where there are O-rings or gasket seals, clean the mounting surface, and replace with new parts.

  When doing this, be careful not to forget to assemble the O-rings and gaskets.

- When installing the hoses, do not twist them or bend them into loops with a small radius.

  This will cause damage to the hose and markedly reduce its service life.

Checks after inspection and maintenance:

If you forget carrying out the checks after inspection and maintenance, unexpected problems may occur, and this may lead to serious injury or property damage. Always do as follows.

- Checks after operation (with engine stopped)
  - Have any inspection and maintenance points been forgotten?
  - Have all inspection and maintenance items been carried out correctly?
  - Have any tools or parts been dropped inside the machine? It is particularly dangerous if parts are dropped inside the machine and get caught in the lever linkage mechanism.
  - Is there any leakage of water or oil? Have all the bolts been tightened?
- Check when the engine is running
  - See "Two workers for maintenance when engine is running (2-35)" in the section on safety for checking when the engine is running. Pay attention to safety.
  - Check if the inspected and maintenance area is operating normally.
  - Increase the engine speed to check for fuel and oil leakage.

4.2 Outlines of service

- Always use KOMATSU genuine parts replacement parts, grease or oil.
- When changing the oil or adding oil, do not mix different types of oil. When changing the type of oil, drain all the old oil and fill completely with the new oil. Always replace the filter at the same time. (There is no problem if the small amount of oil remaining in the piping mixes with the new oil.)
- Unless there is any specific request, the oil, fuel, and coolant used on the machine when it is shipped from the factory are as shown in the table below.

Item	Type
Engine oil pan	Engine oil EO15W40DH (KOMATSU genuine parts)
Transmission case	Power train oil TO30 (KOMATSU genuine parts)
Hydraulic system	Power train oil TO10 (KOMATSU genuine parts)
Axle	Axle oil AXO80 (KOMATSU genuine parts)
Radiator	Supercoolant AF-NAC (Density: 30% or above) (KOMATSU genuine parts)

4.2.1 Handling oil, fuel, coolant, grease and carrying out KOWA (KOMATSU Oil Wear Analysis)

Oil

- Oil is used in the engine and work equipment under extremely severe conditions (high temperature, high pressure), and deteriorates with use.

  Always use oil that matches the grade and temperature for use given in the Operation and Maintenance Manual.

  Even if the oil is not dirty, always change the oil after the specified interval.

- Oil corresponds to blood in the human body, so always be careful when handling it to prevent any impurities (water, metal particles, dirt, etc.) from getting in.

  The majority of problems with machines are caused by the entry of such impurities.

  Take particular care not to let any impurities get in when storing or adding oil.

- Never mix oils of different grades or brands.

- Always add the specified amount of oil.

  Having too much oil or too little oil are both causes of problems.

- If the oil in the work equipment is not clear, there is probably water or air getting into the circuit. In such cases, please contact your KOMATSU distributor.

- When changing the oil, always replace the related filters at the same time.

- We recommend you have an analysis made of the oil periodically to check the condition of the machine. For those who wish to use this service, please contact your KOMATSU distributor.

- When using commercially available oil, it may be necessary to reduce the oil change interval.

  We recommend that you use the KOMATSU oil clinic to carry out a detailed checks of the characteristics of the oil.

Fuel

- The fuel pump is a precision instrument, and if fuel containing water or dirt is used, it cannot work properly.
- Be extremely careful not to let impurities get in when storing or adding fuel.
- Always use the fuel specified in the Operation and Maintenance Manual.

  If the fuel is used at temperatures lower than the specified temperature (particularly at temperatures below -15 °C), the fuel will solidify.

  If the fuel is used at temperatures higher than the specified temperature, the viscosity will drop, and this may result in problems such as a drop in output.
- To prevent the moisture in the air from condensing and forming water inside the fuel tank, always fill the fuel tank after completing the day's work.
- Before starting the engine, or when 10 minutes have passed after adding fuel, drain the sediment and water from the fuel tank.
- If the engine runs out of fuel, or if the filters have been replaced, it is necessary to bleed the air from the circuit.
- If there is any foreign material in the fuel tank, wash the tank and fuel system.

NOTE

Always use diesel fuel. Never use any other fuel.
The engine on this machine uses electronic control and high-pressure fuel injection equipment to enable it to provide good fuel consumption and good exhaust gas characteristics. For this reason, high-precision parts and lubricating ability are demanded. Using low-viscosity fuel with poor lubricating ability will cause a marked reduction in the durability of the engine.

Coolant and water for dilution

- The coolant has the important function of preventing corrosion as well as preventing freezing.

  Even in the areas where freezing is not an issue, the use of antifreeze coolant is essential.

  KOMATSU machines are supplied with KOMATSU Supercoolant (AF-NAC). KOMATSU Supercoolant (AF-NAC) has excellent anticorrosion, antifreeze and cooling properties and can be used continuously for 2 years or 4000 hours.

  KOMATSU Supercoolant (AF-NAC) is strongly recommended wherever available.

- When using KOMATSU Supercoolant (AF-NAC), there is no need to use a corrosion resistor.

  For details, see "Clean inside of cooling system (4-35)".

- When diluting the antifreeze coolant, use distilled water or tap water (soft water).

- Natural water, such as a river water or well water (hard water), contains large amounts of minerals (calcium, magnesium, etc.), and this makes it easier for scale to form inside the engine or radiator. Once scale is deposited inside the engine or radiator, it is extremely difficult to remove. It also causes overheating due to poor heat exchange, so when you dilute the coolant, we recommend that you use water with an overall hardness of less than 100 PPM.

- When using antifreeze, always observe the precautions given in the Operation and Maintenance Manual.

- Antifreeze is flammable, so be extremely careful not to expose it to flame or fire.

- The ratio of Supercoolant (AF-NAC) to water differs according to the ambient temperature.

  For details of the mixing proportions, see "Clean inside of cooling system (4-35)".

  Supercoolant (AF-NAC) may be supplied already mixed. In such cases, never dilute with water.

- If the engine overheats, wait for the engine to cool before adding coolant.

- If the coolant level is low, it will cause overheating and will also cause problems with corrosion from the air in the coolant.

Grease

- Grease is used to prevent twisting and noise at the joints.
- This construction equipment is used under heavy-duty conditions. Always use the recommended grease and follow the change intervals and recommended ambient temperatures given in this Operation and Maintenance Manual.
- The nipples not included in the maintenance section are nipples for overhaul, so they do not need grease.

  When using the machine after it has been in storage for a long time, carry out greasing if there is any stiffness or screeching.
- Always wipe off all of the old grease that is pushed out when greasing.

  Be particularly careful to wipe off the old grease in places where sand or dirt sticking in the grease would cause wear of the rotating parts.

Carrying out KOWA (KOMATSU Oil Wear Analysis)

KOWA is a maintenance service that makes it possible to prevent machine failures and downtime. With KOWA, the oil is periodically sampled and analyzed. This enables early detection of wear of the machine drive parts and other abnormalities.

We strongly recommend you to use this service. The oil analysis is carried out at actual cost, so the cost is low, and the results of the analysis are reported together with recommendations which will reduce repair costs and machine downtime.

Periodic use of KOWA makes the following possible:

- It enables abnormalities to be detected early, leading to reduction of repair costs and machine downtime.
- It enables repair schedules to be planned, leading to improved machine availability.

KOWA analysis items

- Analysis of metal wear particles

  This uses an ICP (Inductively Coupled Plasma) analyzer to measure the density of metal wear particles in the oil.

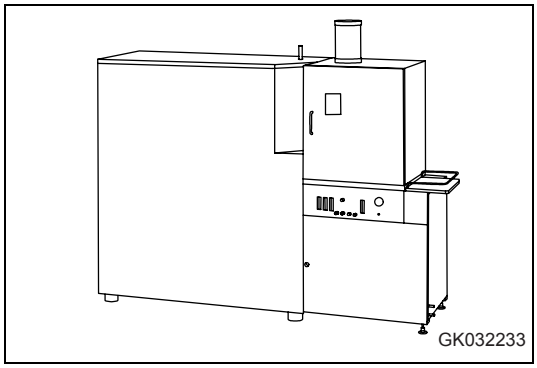

- Measurement of particle quantity

  This uses a particle quantifier index measurement machine to measure the quantity of iron particles of 5 μ or more, enabling early detection of failures.

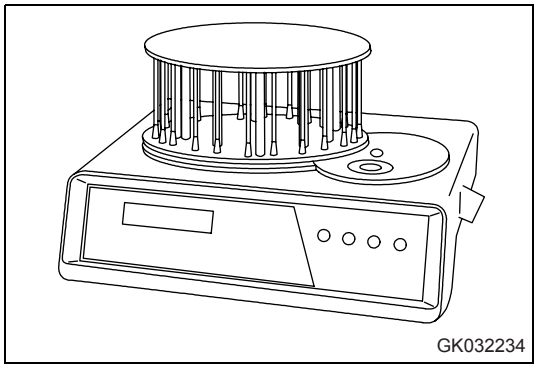

- Others

  Measurements are made of items such as the ratio of water in the oil, density of the antifreeze coolant, ratio of fuel in the oil, and dynamic viscosity, enabling a highly precise diagnosis of the machine's health.

Oil sampling

- Sampling interval

  250 hours: Engine

  500 hours: Other components

- Precautions when sampling
  - Make sure that the oil is well mixed before sampling.
  - Carry out sampling regularly at fixed intervals.
  - Do not carry out sampling on rainy or windy days when water or dust can get into the oil.

For further details of KOWA, please contact your KOMATSU distributor.

Storing oil and fuel

- Keep indoors to prevent any water, dirt, or other impurities from getting in.
- When keeping drum cans for a long period, put the drum on its side so that the filler port of the drum can is at the side to prevent moisture from being sucked in.

  If drum cans have to be stored outside, cover them with a waterproof sheet or take other measures to protect them.
- To prevent any change in quality during long-term storage, be sure to use in the order of first in - first out (use the oldest oil or fuel first).

Filters

- Filters are extremely important safety parts. They prevent impurities in the fuel and air circuits from entering important equipment and causing problems.

  Replace all filters periodically. For details, see the Operation and Maintenance Manual.

  However, when working in severe conditions, replace the filters at shorter intervals according to the oil and fuel (sulfur content) being used.
- Never try to clean the filters (cartridge type) and use them again. Always replace with new filters.
- When replacing oil filters, check if any metal particles are affixed to the old filter. If any metal particles are found, please contact your KOMATSU distributor.
- Do not open packs of spare filters until just before they are to be used.
- Always use KOMATSU genuine filters.

4.2.2 Outline of electric system

- It is extremely dangerous if the electrical equipment becomes wet or the covering of the wiring is damaged. This will cause an electrical short circuit and may lead to malfunction of the machine. Do not wash the inside of the operator's cab with water. When washing the machine, be careful not to let water get into the electrical components.
- Service relating to the electric system is checking fan belt tension, checking damage or wear in the fan belt and checking battery fluid level.
- Never install any electric components other than those specified by KOMATSU.
- External electro-magnetic interference may cause malfunction of the control system controller, so before installing a radio receiver or other wireless equipment, please contact your KOMATSU distributor.
- When working at the seashore, carefully clean the electric system to prevent corrosion.
- The optional power source must never be connected to the fuse, starting switch, or battery relay.

4.3 Wear parts

Replace wear parts such as the filter element or air cleaner element at the time of periodic maintenance or before they reach the wear limit. The wear parts should be replaced correctly in order to ensure more economic use of the machine. When replacing parts, always use KOMATSU genuine parts.

As a result of our continuous efforts to improve product quality, the part number may change, so inform your KOMATSU distributor of the machine serial number and check the latest part number when ordering parts.

4.3.1 Wear parts list

The parts in parentheses are to be replaced at the same time.

*: See Part No. in Parts Book (KOMATSU).

Item		Part No.	Part Name	Q'ty	Replacement frequency
Engine oil filter		*	Cartridge	1	EVERY 500 HOURS
Fuel pre-filter		*	Cartridge	1	EVERY 500 HOURS
Fuel filter		*	Cartridge	1	EVERY 1000 HOURS
Corrosion resistor		*	Cartridge	1	-
Transmission oil filter		*	Cartridge	1	EVERY 1000 HOURS
Transmission strainer		*	Strainer (O-ring)	1 (1)	-
Hydraulic filter		*	Element (O-ring)	1 (1)	EVERY 2000 HOURS
Hydraulic tank breather		*	Element	1	EVERY 2000 HOURS
Hydraulic oil strainer		*	Strainer		-
Air cleaner		*	Element	1	-
Air conditioner filter	Fresh	*	Element	1	EVERY 2000 HOURS
	Recirc	*	Element	1	EVERY 2000 HOURS
PPC accumulator		*	Accumulator (O-ring)	1	EVERY 4000 HOURS

Item		Part No.	Part Name	Q'ty	Replacement frequency
Bolt on cutting edge	Standard type	*	Center edge Side edge (Bolt) (Nut) (Washer)	1 2 (14) (14) (14)	-
	Long life type	*	Center edge Side edge (Bolt) (Nut) (Washer)	2 2 (14) (14) (14)	-
	Segment type		Edge (Bolt) (Nut) (Washer)	7 (14) (14) (14)	-

4.4 Fuel, coolant and lubricants

- KOMATSU genuine oils are adjusted to maintain the reliability and durability of KOMATSU construction equipment and components.
- In order to keep your machine in the best conditioner for long periods of time, it is essential to follow the instructions in this Operation and Maintenance Manual.
- Failure to follow these recommendations may result in shortened life or excess wear of the engine, power train, cooling system, and/or other components.
- Commercially available lubricant additives may be good for the machine, but they may also cause harm. KOMATSU does not recommend any commercially available lubricant additive.
- Use the oil recommended according to the ambient temperature in the chart below.
- Specified capacity means the total amount of oil including the oil in the tank and the piping. Refill capacity means the amount of oil needed to refill the system during inspection and maintenance.
- When starting the engine in temperatures below 0°C, be sure to use the recommended multi-grade oil, even if the ambient temperature may become higher during the course of the day.
- If the machine is operated at a temperature below -20°C, a separate device is needed, so consult your KOMATSU distributor.
- When the fuel sulfur content is less than 0.5%, change the engine oil according to the period inspection table given in this Operation and Maintenance Manual.

  If the fuel sulfur content is more than 0.5%, change the oil according to the following table.

Fuel sulfur content	Engine oil change interval
Less than 0.5	500 hours
0.5 - 1.0	250 hours
1.0 and up	Not recommendable (*)

* If using these fuels, serious troubles may occur because of early deterioration of engine oil or early wear of engine internal parts. If using them by necessity for local situations, be sure to inform customers about the following.

- Be sure to check Total Basic Number (TBN) of oil frequently by TBN handy checker etc., and change oil based on the result.
- Always be aware that oil change interval is extremely shorter than standard.
- Be sure to carry out periodic engine inspection by distributor's expert since change interval of periodic replacement parts and overhaul interval are also shorter.

4.4.1 Lubrication chart

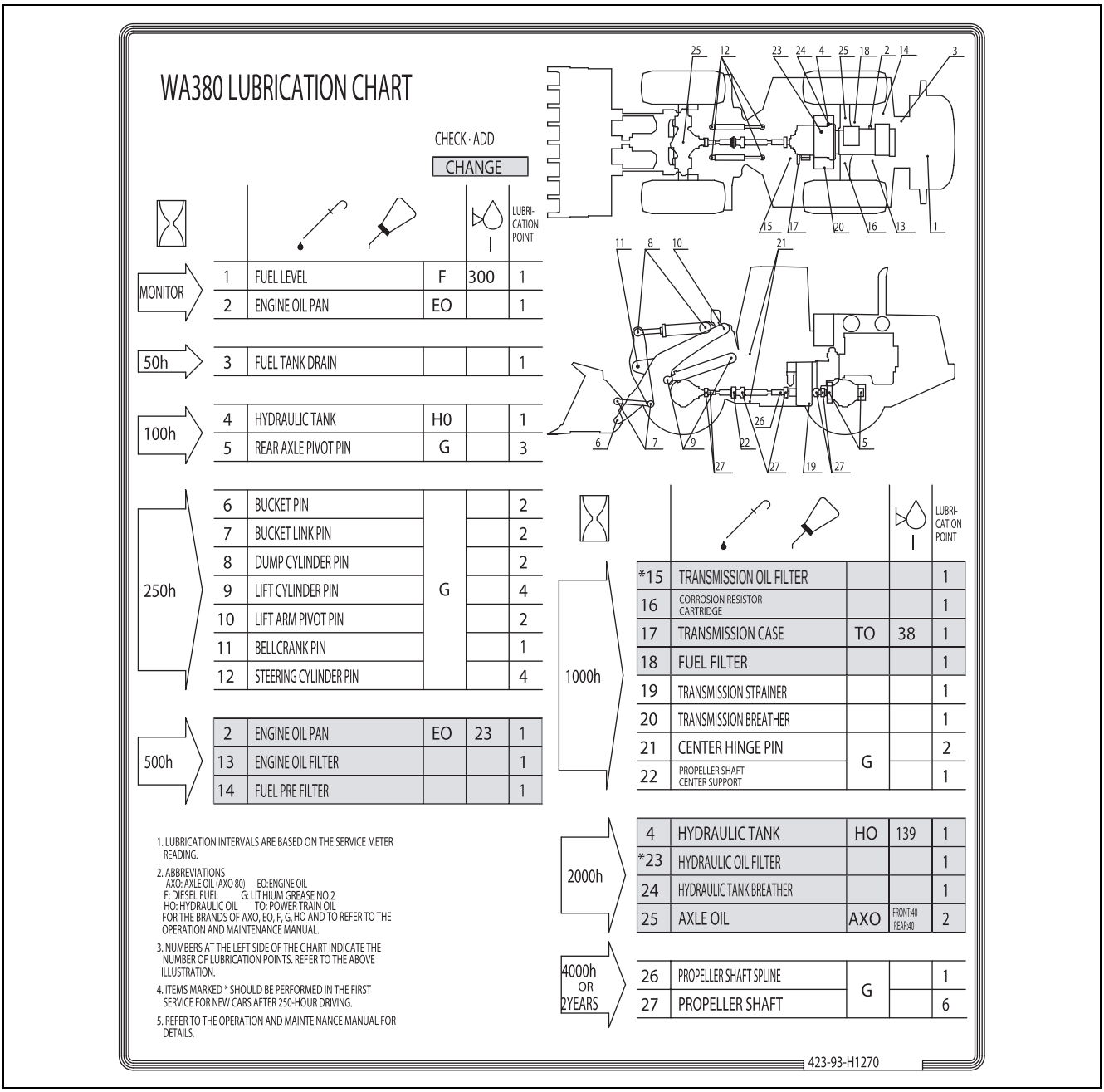

1. Lubrication intervals are based on the service meter reading.
2. Abbreviations:

   EO = Engine Oil, G = Lithium Grease No. 2, F = Diesel Fuel, AXO = Axle Oil, HO = Hydraulic Oil.

3. Numbers at the left side of the chart indicate the number of lubrication points. Refer to the above illustration.
4. Refer to operation and maintenance manual for details.

REMARK

Binding is the maintenance schedule chart in operation and maintenance manual, see "Maintenance schedule chart (4-27)".

4.4.2 Use of fuel, coolant and lubricants according to ambient temperature

Reservoir	Fluid Type	Ambient Temperature -22 -4 14 32 50 68 86 104 122 °F / -30 -20 -10 0 10 20 30 40 50 °C	Recommended KOMATSU Fluids
Engine oil pan	Engine oil		KOMATSU EO10W30-DH
			KOMATSU EO15W40-DH
			KOMATSU EO30-DH
Transmission case	Power train oil (Note 1)		TO10
Hydraulic system	Power train oil		TO10
	Hydraulic oil		HO46-HM
	Engine oil		KOMATSU EO10W30-DH
			KOMATSU EO15W40-DH
Axle	Axle oil (Note 2)		AXO80
	Engine oil	(Note 3)	EO50-CD
Pin/Bushing Grease fitting (Note 4)	Hyper grease (Note 4)		G2-T, G2-TE
	Lithium EP grease		G2-LI
Cooling system	Supercoolant AF-NAC (Note 5)		AF-NAC
Fuel tank	Diesel fuel		ASTM Grade No. 1-D S15 ASTM Grade No. 1-D S500
			ASTM Grade No. 2-D S15 ASTM Grade No. 2-D S500

Capacity		Reservoir: Engine oil pan	Transmission case	Hydraulic system	Front axle	Rear axle	Cooling system	Fuel tank
Specified	Liters	25.5	47	210	40	40	30.5	300
	US gal	6.7	12.4	47.6	10.6	10.6	8.0	79.3
Refill	Liters	23	38	139	40	40	-	-
	US gal	6.0	10.0	36.4	10.6	10.6	-	-

NOTE

Use only diesel fuel.
The engine mounted on this machine employs electronic control and a high-pressure fuel injection device to obtain good fuel consumption and good exhaust gas characteristics. For this reason, it requires high precision for the parts and good lubrication.
If kerosene or other fuel with low lubricating ability is used, there will be a big drop in durability.

Note 1:
Power train of oil has different properties from engine oil. Be sure to use the recommended oil.

Note 2:
Axle oil AXO80 has the function of preventing squealing from the brakes and LSD (Limited Slip Differential).

If only AXO80 is recommended, use KOMATSU genuine AXO80 or equivalent.

Note 3:
When the ambient temperature is higher than 45°C and the machine operation hour is longer than 12 hours/day, then the use of EO50-CD instead of AXO80 is recommended.

Squealing of the brakes may occur with EO50-CD, but there is no problem with the brake performance or durability.

Note 4:
Hypergrease (G2-T, G2-TE) is high-performance grease.

When it is necessary to improve the lubricating ability of the grease in order to prevent squeaking of pins and bushings, the use of G2-T or G2-TE is recommended.

Note 5:
Supercoolant (AF-NAC)

1. The coolant has the important function of preventing corrosion as well as preventing freezing.

   Even in the areas where freezing is not an issue, the use of antifreeze coolant is essential.

   KOMATSU machines are supplied with KOMATSU Supercoolant (AF-NAC). KOMATSU Supercoolant (AF-NAC) has excellent anticorrosion, antifreeze and cooling properties and can be used continuously for 2 years or 4000 hours.

   KOMATSU Supercoolant (AF-NAC) is strongly recommended wherever available.

2. For details of the ratio when diluting super coolant with water, see "Clean inside of cooling system (4-35)".

   Supercoolant AF-NAC may be supplied in premix . In this case, always top off with premix solution (never dilute with water).

   When the machine is shipped from the factory, it may be filled with coolant containing 30% or more Supercoolant (AF-NAC). In this case, no adjustment is needed for temperatures down to -10°C (never dilute with water).

3. To maintain the anticorrosion properties of Supercoolant (AF-NAC), always keep the density of Supercoolant between 30% and 68%.

4.4.3 Recommended brands, recommended quality for products other than KOMATSU genuine oil

When using commercially available oils other than KOMATSU genuine oil, or when checking the latest specifications, refer to the KOMATSU web page or consult your KOMATSU distributor.

4.5 Standard tightening torques for bolts and nuts

4.5.1 Torque list

CAUTION

If nuts, bolts, or other parts are not tightened to the specified torque, it will cause looseness or damage to the tightened parts, and this will cause failure of the machine or problems with operation.
Always pay careful attention when tightening parts.

Unless otherwise specified, tighten the metric nuts and bolts to the torque shown in the table below.

If it is necessary to replace any nut or bolt, always use a KOMATSU genuine part of the same size as the part that was replaced.

Thread diameter of bolt (a) (mm)	Width across flats (b) (mm)	Tightening torque					
		Target value			Service limit		
		Nm	kgfm	lbft	Nm	kgfm	lbft
6	10	13.2	1.35	9.8	11.8-14.7	1.2-1.5	8.7-10.8
8	13	31	3.2	23.1	27-34	2.8-3.5	20.3-25.3
10	17	66	6.7	48.5	59-74	6.0-7.5	43.4-54.2
12	19	113	11.5	83.2	98-123	10.0-12.5	72.3-90.4
14	22	172	17.5	126.6	153-190	15.5-19.5	112.1-141
16	24	260	26.5	191.7	235-285	23.5-29.5	170.0-213.4
18	27	360	37	267.6	320-400	33.0-41.0	238.7-296.6
20	30	510	52.3	378.3	455-565	46.5-58.0	336.3-419.5
22	32	688	70.3	508.5	610-765	62.5-78.0	452.1-564.2
24	36	883	90	651	785-980	80.0-100.0	578.6-723.3
27	41	1295	132.5	958.4	1150-1440	118.0-147.0	853.5-1063.3
30	46	1720	175.0	1265.8	1520-1910	155.0-195.0	1121.1-1410.4
33	50	2210	225.0	1627.4	1960-2450	200.0-250.0	1446.6-1808.3
36	55	2750	280.0	2025.2	2450-3040	250.0-310.0	1808.3-2242.2
39	60	3280	335.0	2423.1	2890-3630	295.0-370.0	2133.7-2676.2

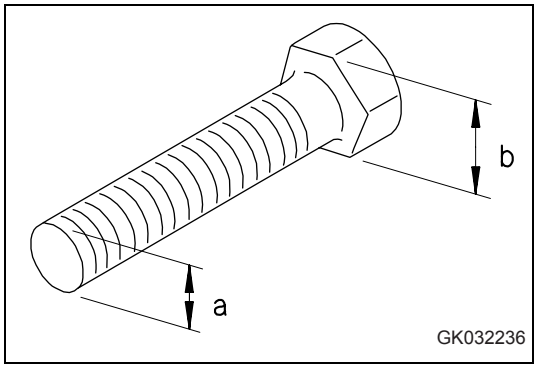

Apply the following table for hydraulic hose.

Nominal - No. of threads (a)	Width across flats (b) (mm)	Tightening torque					
		Target value			Permissible range		
		Nm	kgfm	lbft	Nm	kgfm	lbft
9/16 -18UNF	19	44	4.5	32.5	35 - 63	3.5 - 6.5	25.3 - 47.0
11/16 -16UN	22	74	7.5	54.2	54 - 93	5.5 - 9.5	39.8 - 68.7
13/16 -16UN	27	103	10.5	75.9	84 - 132	8.5 - 13.5	61.5 - 97.6
1 -14UNS	32	157	16.0	115.7	128 - 186	13.0 - 19.0	94.0 - 137.4
13/16 -12UN	36	216	22.0	159.1	177 - 245	18.0 - 25.0	130.2 - 180.8

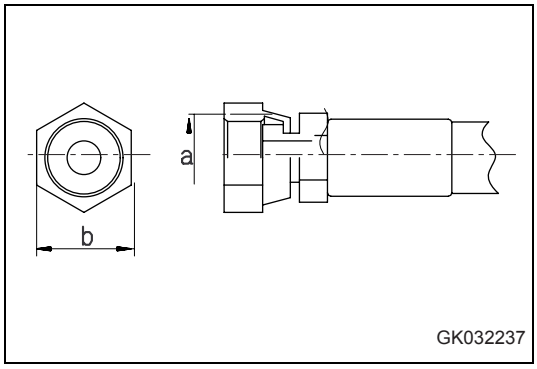

4.6 Periodic replacement of safety critical parts

For using the machine safely for an extended period of time, you must periodically replace the safety critical and fire prevention-related parts listed in the table of important parts.

Material quality of these parts can change as time passes and they are likely to wear out or deteriorate. However, it is difficult to determine the extent of wear or deterioration at the time of periodic maintenance. Hence, it is required to replace them with new ones regardless of their condition after a certain period of usage. This is important to ensure that these parts maintain their full performance at all times.

Furthermore, should anything abnormal be found on any of these parts, replace it with a new one even if the periodic replacement time for the part has not yet arrived.

If any of the hose clamps show deterioration like deformation or cracking, replace the clamps at the same time as the hoses.

Also carry out the following checks with hydraulic hoses which need not be replaced periodically. Tighten a loosened clamp or replace a defective hose, as required.

When replacing the hoses, always replace the O-rings, gaskets, and other such parts at the same time.

Ask your KOMATSU distributor to replace the critical parts.

No.	Safety critical parts for periodic replacement	Q'ty	Replacement interval
1	Fuel hose (fuel tank - fuel pre-filter)	1	Every 2 years or every 4000 hours
2	Fuel hose (fuel pre-filter - supply pump)	1	
3	Fuel return hose(engine - fuel tank)	2	
4	Fuel hose (supply pump - fuel main filter)	1	
5	Fuel return tube (injector, supply pump, fuel return merge tube from common rail)	1	
6	Steering hose (Steering pump - merge block)	1	
7	Steering hose (merge block - sterring valve)	1	
8	Steering hose (sterring valve - steering cylinder)	6	
9	Steering hose (sterring valve - drain merge block)	1	
10	Steering hose (drain merge block - hydraulic tank)	1	
11	Steering hose (hydarulic tank - sterring pump)	1	
12	Steering hose (hydarulic tank - emergency steering pump)	1	
13	Steering hose (accumulator charge valve - orbitrol valve)	2	
14	Steering hose (orbitrol valve - stop valve)	2	
15	Steering hose (stop valve - steering valve)	2	
16	Steering hose (stop valve drain - drain merge block)	2	
17	Steering hose (orbitrol valve drain - drain merge block)	1	
18	Steering hose (accumulator charge valve - drain merge block)	1	
19	Steering hose (orbitrol valve drain - drain merge block)	1	
20	Steering hose (steering valve - drain merge block)	1	
21	Steering hose (drain merge block - hydraulic tank)	1	
22	Steering hose (accumulator charge valve - fan pump)	1	
23	Steering hose (fan pump - steering pump)	1	
24	Steering hose (fan pump - work equipment pump)	1	Every 2 years or every 4000 hours
25	Steering pump LS hose	1	
26	Steering oil pressure check line hose(for emergency steering)	2	
27	Brake hose (pump - accumulator charge valve)	1	
28	Brake hose (accumulator charge valve - brake accumlator)	2	
29	Brake hose (brake accumlator - brake valve)	2	
30	Brake hose (brake valve drain - hydraulic tank)	1	
31	Brake hose (brake valve - front brake)	3	
32	Brake hose (brake valve - rear brake)	2	
33	Brake hose (brake accumulator - reduction valve for emergency parking brake cancel)	1	
34	Brake hose (reduction valve for emergency parking brake cancel - trans-mission valve)	1	
35	Turbocharger lubrication hose	1	
36	Accumulator (For PPC)	1	
37	Engine high-pressure pipe clamp	1set	Every 8000 hours
38	Fuel splash prevention cap	1set	
39	Seat belt	1	Every 3 years

4.7 Maintenance schedule chart

4.7.1 Maintenance schedule chart

Service procedure		see page
4.9.1	**Initial 50 hours service (only after the first 50 hours)**	
	Check for loose wheel hub bolts, tighten	4-31
4.9.2	**Initial 250 hours service (only after the first 250 hours)**	
	Replace transmission oil filter cartridge	4-31
	Replace hydraulic tank filter element	4-31
4.9.3	**Initial 1000 hours service (only after the first 1000 hours)**	
	Check engine valve clearance, adjust	4-31
4.9.4	**When required**	
	Clean, replace air cleaner element	4-32
	Clean inside of cooling system	4-35
	Check transmission oil level, add oil	4-39
	Check axle oil level, add oil	4-40
	Clean axle case breather	4-41
	Clean air conditioner condenser	4-42
	Check window washing fluid level, add fluid	4-42
	Clean radiator fins and cooler fins	4-43
	Check electrical intake air heater	4-46
	Turn, replace bolt on cutting edge	4-47
	Replace bucket teeth	4-48
	Check air conditioner	4-50
		4-51
	Checking function of accumulator	4-52
	Selection and inspection of tires	4-53
4.9.5	**Check before starting**	
	Check before starting	4-55
4.9.6	**Every 50 hours service**	
	Drain water, sediment from fuel tank	4-55
4.9.7	**Every 100 hours service**	
	Lubricate rear axle pivot pin	4-56
	Check oil level in hydraulic tank, add oil	4-56
	Clean element in air conditioner fresh air filter	4-57

Service procedure		see page
4.9.8	**Every 250 hours service**	
	Check battery electrolyte level	4-58
	Check parking brake	4-61
	Check air conditioner compressor belt tension, adjust	4-61
	Check for loose wheel hub bolts, tighten	4-62
	Clean element in air conditioner recirculation filter	4-63
	Checking function of accumulator	4-64
	Lubricating	4-65
4.9.9	**Every 500 hours service**	
	Change oil in engine oil pan, replace engine oil filter cartridge	4-66
	Replace fuel pre-filter cartridge	4-68
4.9.10	**Every 1000 hours service**	
	Replace fuel filter cartridge	4-71
	Change oil in transmission case and transmission oil filter cartridge, clean strainer	4-73
	Clean transmission case breather	4-74
	Lubricating	4-74
	Check tightening parts of turbocharger	4-75
	Check alternator driving belt tension and replacement	4-75
	Replace corrosion resistor cartridge	4-75
4.9.11	**Every 2000 hours service**	
	Change oil in hydraulic tank, replace hydraulic filter element	4-76
	Replace hydraulic tank breather element	4-79
	Change axle oil	4-80
	NOTE: The interval of 2000 hours for changing the axle oil is for standard operations. If the brake is used frequently or the brakes make a sound, change the oil after a shorter interval.	
	Replace element in air conditioner recirculation air filter, fresh air filter	4-81
	Check brake disc wear	4-81
	Checking function of accumulator	4-83
	Check alternator, starting motor	4-84
	Check engine valve clearance, adjust	4-84
	Check vibration damper	4-84

Service procedure		see page
4.9.12	**Every 4000 hours service**	
	Lubricating	4-85
	Check water pump	4-86
	Check air conditioner compressor, adjust	4-86
	Checking for looseness of high-pressure clamp, hardening of rubber	4-87
	Checking for missing fuel spray prevention cap, hardening of rubber	4-88
4.9.13	**Every 8000 hours service**	
	Replace high-pressure piping clamp	4-89
	Replace injector nozzle tip	4-89

4.8 Replace injector assembly

This machine uses an engine that conforms with all exhaust gas regulations.

The exhaust gas regulations differ according to the applicable area. To ensure that the engine conforms with the regulations in the area of use and can fully display its performance, keep to the following periodic maintenance intervals when adjusting the injector.

If the periodic maintenance intervals are not observed correctly, the engine may not be able to display its performance fully, and it may also not conform with the regulations.

NOTE

When transporting a machine from an A regulation area to a B regulation area, always replace all the injector assemblies before transporting the machine to the new area.
Check with your KOMATSU distributor to confirm if your area of operation is an A regulation area or a B regulation area.

- A Regulation area
  EPA regulation areas and areas with the regulations equivalent to EPA regulations.
- B Regulation area
  Areas not applying EPA regulations or areas not applying regulations equivalent to EPA regulations.

EVERY 8000 HOURS SERVICE

Replace injector assembly

Check the exhaust gas color visually. If there is any abnormality in the exhaust gas color, please ask your KOMATSU distributor to carry out inspection or replacement. For details of the procedure if any abnormality is found, see "Engine (3-167)".

4.9 Service procedure

4.9.1 Initial 50 hours service (only after the first 50 hours)

Carry out the following maintenance only after the first 50 hours.

Check for loose wheel hub bolts, tighten

If wheel hub nuts (1) are loose, tire wear will be increased and may cause accidents.

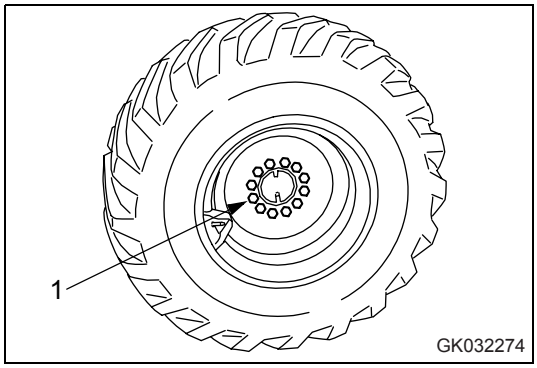

1. Check for loose nuts, and tighten if necessary.

   When checking for loose nuts, always turn the nuts in the direction of tightening to check.

   Tightening torque: 927 ± 103 Nm

2. If any stud bolt is broken, replace all the stud bolts for that wheel.

4.9.2 Initial 250 hours service (only after the first 250 hours)

Carry out the following maintenance only after the first 250 hours.

Replace transmission oil filter cartridge

For details see "Change oil in transmission case and transmission oil filter cartridge, clean strainer (4-73)".

Replace hydraulic tank filter element

For details see "Change oil in hydraulic tank, replace hydraulic filter element (4-76)".

4.9.3 Initial 1000 hours service (only after the first 1000 hours)

Carry out the following maintenance only after the first 1000 hours.

Check engine valve clearance, adjust

For details see "Check alternator, starting motor (4-84)".

4.9.4 When required

Clean, replace air cleaner element

For inspection method, see "Check air cleaner element (3-89)".

When the yellow piston of the dust indicator enters the red range (7.5 kPa) or the air cleaner clogging caution lamp of the machine monitor lights up, clean the air cleaner element.

WARNING

- If inspection, cleaning, or maintenance is carried out with the engine running, dirt will get into the engine and damage it. Always stop the engine before carrying out these operations.
- When using compressed air, there is danger that dirt may be blown around and cause serious injury.
  Always use safety glasses, dust mask, and other protective equipment.

Cleaning outer element

1. Open the engine side cover on the right side of the machine.
2. Remove three clips (2), then remove cover (3).

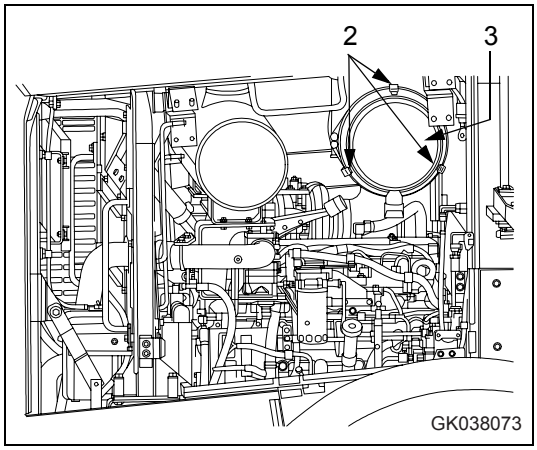

NOTE

Never remove inner element (5). If it is removed, dust will enter and cause engine trouble.

3. Remove outer element (4).

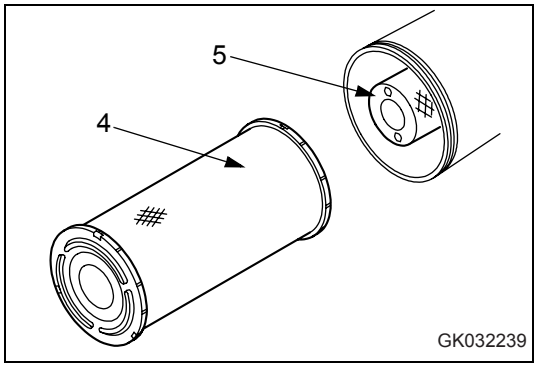

4. Clean the interior of the air cleaner body, cover (3) and evacuator valve (6).

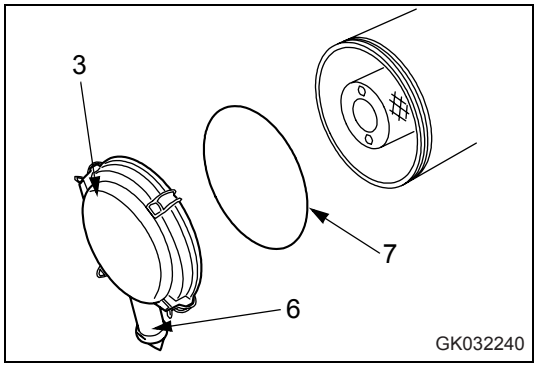

NOTE

The inner element must not be used again even after its cleaning. When replacing the inner element, replace the outer element at the same time.

5. Direct dry compressed air (Max. 0.69 MPa) from the inside of the outer element along its folds. Then direct the compressed air from the outside along the folds, and again from the inside.

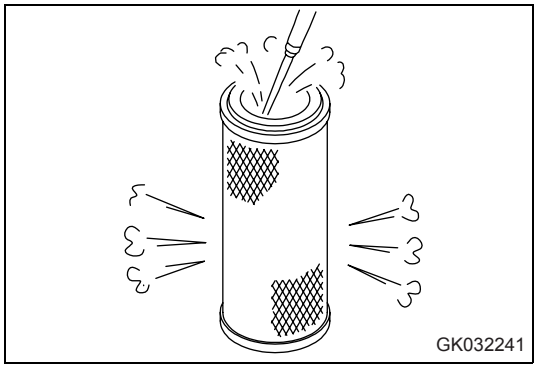

6. If small holes or thinner parts are found on the element when it is checked by shining a light through it after cleaning, replace the element.

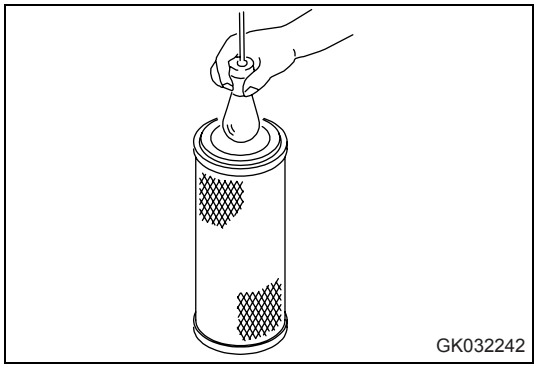

NOTE

When cleaning the element, do not hit or beat it against anything.
Do not use an element whose folds, gasket or seal are damaged.

CAUTION

When installing the cover (3), check O-ring (7) and replace it if there are any scratches or damage.

7. Set the cleaned outer element in position, then secure cover (3) with mounting clips (2).

8. Press the button of dust indicator to return the yellow piston to its original position.

9. Close the engine side cover on the right side of the machine.
After cleaning, if the air cleaner clogging caution lamp lights up immediately or the yellow piston reaches the red line (7.5 kPa), replace the inner and outer elements.

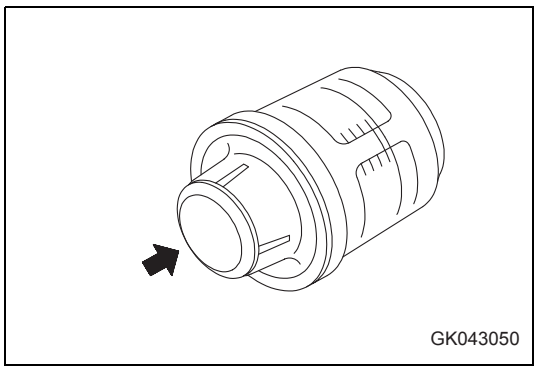

Replacing element

1. Open the engine side cover on the right side of the machine.
2. Remove three clips (2), then remove cover (3).

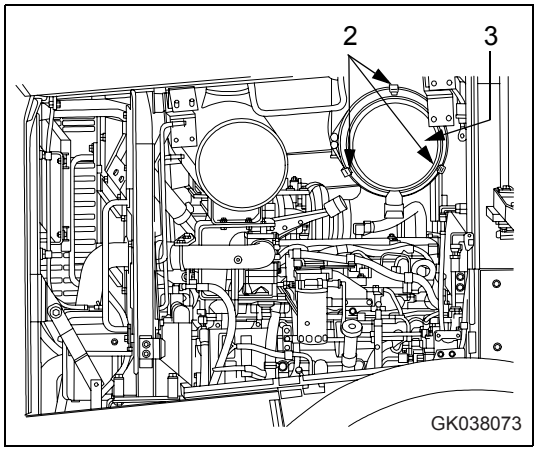

3. Remove outer element (4).

   Do not remove inner element (5) at this time, however.

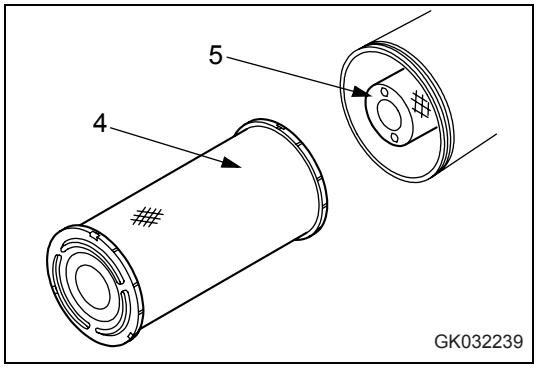

4. Clean the inside of the air cleaner body and dust cup.
5. Remove inner element (5), then install a new inner element immediately.
6. Fit new outer element (4), replace O-ring (7) with a new part, install cover (3), then secure with clips (2).

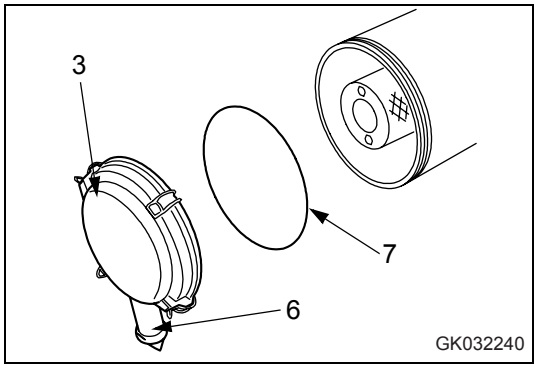

7. Press the button of dust indicator to return the yellow piston to its original position.
8. Close the engine side cover on the right side of the machine.

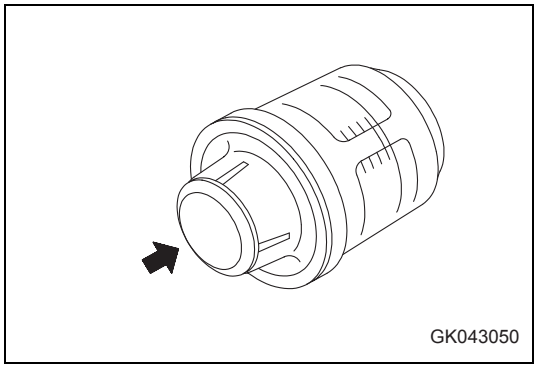

Clean inside of cooling system

WARNING

- Immediately after the engine is stopped, the engine coolant is hot and the pressure inside the radiator is high. Removing the cap and draining the water under this condition could cause burns. Allow the engine to cool down. To loosen and remove the radiator cap, use a suitable climbing aid (for example a ladder) to climb up the back of the machine. Then turn the cap slowly to release the pressure.
- Start the engine and flush the system. When standing up or leaving the operator's seat, set the safety lock lever to the LOCK position.
- For details of starting the engine, see "Check before starting engine, adjust (3-81)" and "Starting engine (3-98)" in the OPERATION section of the Operation and Maintenance Manual.
- When the undercover is removed, there is danger of touching the fan.
  Never go to the rear of the machine when the engine is running.

Clean the inside of the cooling system, change the coolant and replace the corrosion resistor according to the table below.

Kind of coolant	Cleaning inside of cooling system and changing coolant	Adding corrosion resistor
KOMATSU supercoolant (AF-NAC)	Every two years or every 4000 hours whichever comes first	unnecessary
Permanent type antifreeze (All-season type)	Every year (autumn) or every 2000 hours whichever comes first.	Every 1000 hours and when cleaning the inside of the cooling system and when changing coolant.

Permanent type antifreeze shall meet the requirements of ASTM D3306-03.

Stop the machine on level ground when cleaning or changing the coolant.

The coolant has the important function of preventing corrosion as well as preventing freezing.

Even in the areas where freezing is not an issue, the use of antifreeze coolant is essential.

KOMATSU machines are supplied with KOMATSU Supercoolant (AF-NAC). KOMATSU Supercoolant (AF-NAC) has excellent anticorrosion, antifreeze and cooling properties and can be used continuously for 2 years or 4000 hours.
KOMATSU Supercoolant (AF-NAC) is strongly recommended wherever available.

To maintain the anticorrosion properties of Supercoolant (AF-NAC), always keep the density of Supercoolant between 30% and 68%.

When using KOMATSU Supercoolant (AF-NAC), there is no need to use a corrosion resistor.

When no corrosion resistor is used, use the special cover (600-411-9000). Please consult your KOMATSU distributor about the method of installing.

When deciding the ratio of antifreeze to water, check the lowest temperature in the past, and decide from the mixing table given below.

It is actually better to estimate a temperature about 10°C lower when deciding the mixing rate.

The mixing ratio depends on the ambient temperature, but it should always be a minimum of 30% by volume (antifreeze/total amount of coolant x 100).

The freezing temperature of undiluted antifreeze is -15°C. Do not store undiluted antifreeze at a temperature of below -15°C.

Mixing rate of water and antifreeze

Min. atmospheric temperature	**°C**	-10	-15	-20	-25	-30
	°F	14	5	-4	-13	-22
Amount of antifreeze	**Liter**	10.8	12.6	14.4	16.2	18.0
	US gal	2.85	3.33	3.80	4.28	4.76
Amount of water	**Liter**	25.2	23.4	21.6	19.8	18.0
	US gal	6.66	6.18	5.71	5.23	4.75
Ratio	**%**	30	36	41	46	50

WARNING

Antifreeze is flammable, so keep it away from flame.
Antifreeze is toxic. When removing the drain plug, be careful not to get water containing antifreeze on you. If it gets in your eyes, flush your eyes with large amount of fresh water and see a doctor at once.

Use city water for the cooling water.

If river water, well water or other such water supply must be used, contact your KOMATSU distributor.

We recommend use of an antifreeze density gauge to control the mixing proportions.

- Prepare a container whose capacity is larger than the specified coolant volume to catch drained coolant.
- Prepare a water inlet hose.

1. Stop the engine and tighten 2 valves (1) of the corrosion resistor.

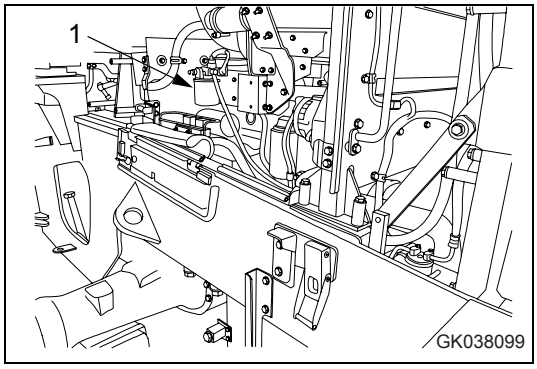

2. Check that the cooling water temperature has gone down enough to make it possible to touch the radiator cap surface by hand, then turn radiator cap (2) slowly until it contacts the stopper to release the pressure.
3. Following this, push radiator cap (2), turn it until it contacts the stopper, then remove it.

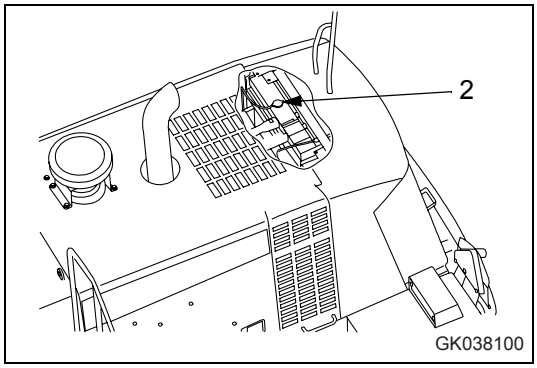

4. Prepare a container to catch the antifreeze mixture, then open drain valve (3) on the left side of the fuel tank and drain the water.
5. After draining the water, close drain valve (3) and fill with city water.
6. When the radiator is full, start the engine, and run it at low idle.

   Keep the engine running at low idle for 10 minutes until the coolant temperature reaches more than 90°C.

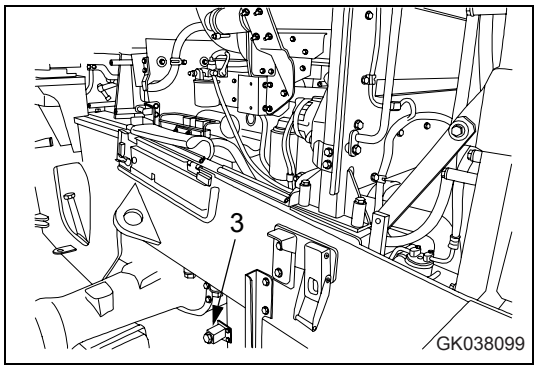

7. Stop the engine, open drain valve (3), drain the water, then tighten them again.
8. After draining the water, clean the cooling system with cleaning agent.

   For the cleaning method, see the instructions for the cleaning agent.

9. Replace the corrosion resistor cartridge (if equipped), then open 2 valves (1).

   For details of the procedure for replacing the corrosion resistor, see "Replace corrosion resistor cartridge (4-75)".

10. Add coolant mixed with antifreeze until it overflows from the water filler.

    Decide the proportions of antifreeze and water according to the table for the mixing rate of water and antifreeze.

11. To remove the air in the cooling system, run the engine for 5 minutes at low idling, and for another 5 minutes at high adling. (When doing this, leave the radiator cap off.)

12. Drain the coolant from sub-tank (4), clean the inside of the sub-tank, then add water until the coolant level is between the FULL and LOW marks.

13. Stop the engine, wait for approx. 3 minutes, then add coolant until the coolant level is near the coolant filler port, and tighten the cap. Check the coolant level and add coolant if necessary..

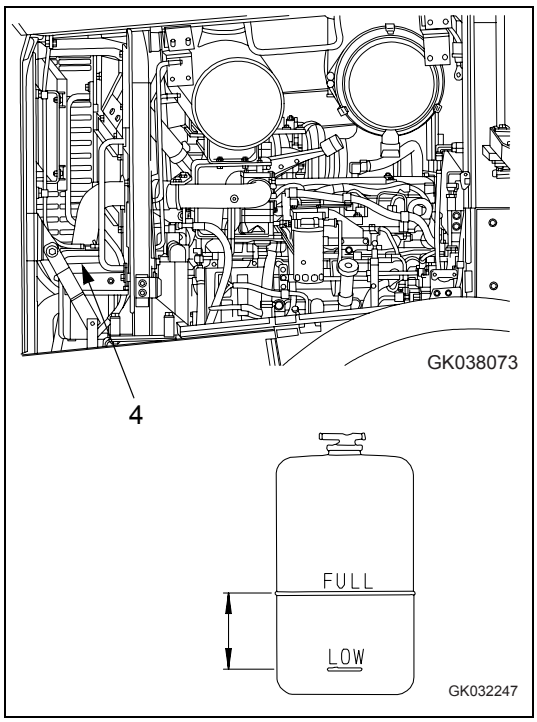

Check transmission oil level, add oil

WARNING

The parts and oil are at high temperature immediately after the engine is stopped, and may cause burns. Wait for the temperature to go down before starting the work.

Carry out this procedure if there is any sign of oil on the transmission case, or if there is oil mixed with the cooling water.

1. Start the engine and run it at low idling for at least 5 minutes.
2. Open the cap of oil filler port (F), remove dipstick (G), and wipe the oil off with a cloth.
3. Insert dipstick (G) fully in the oil filler pipe (F), then take it out again.

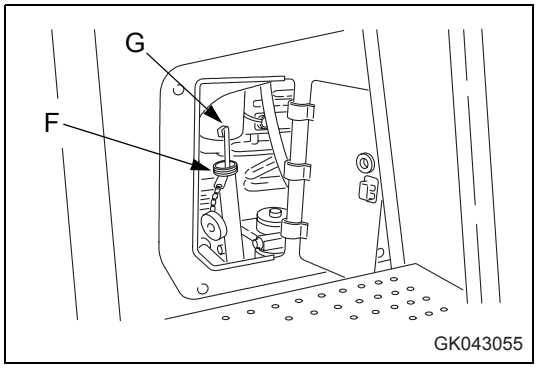

4. The oil level should be between the H and L marks on dipstick (G).

   If the oil level is below the L mark, add oil through oil filler (F).

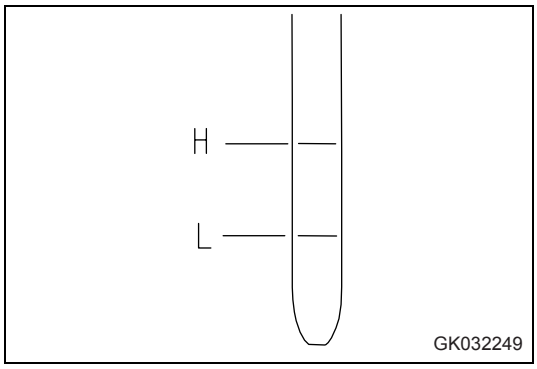

5. If the oil is above the H mark, drain the excess engine oil from drain plug (P), and check the oil level again.
6. If the oil level is correct, insert dipstick (G) in the dipstick guide, then tighten the cap.

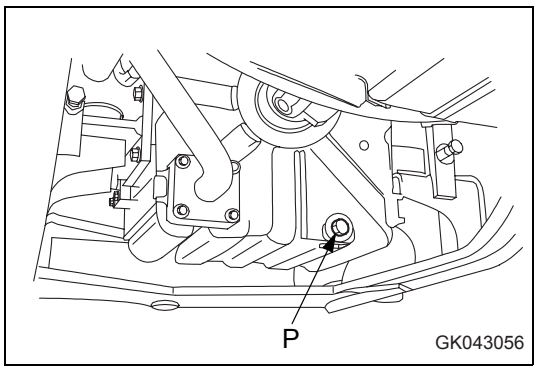

Check axle oil level, add oil

WARNING

- When checking the oil level, apply the parking brake and secure the front and rear frames with the safety bar.
- After stopping the engine, the parts and oil are at a high temperature. Wait for the temperature to go down before starting the operation.

Carry out this procedure if there is any sign of oil on the axle case.

Carry out the inspection with the machine on a horizontal road surface.

(If the road surface is at an angle, the oil level cannot be checked correctly.)

- A: Front
- B: Rear

1. Stop the engine and remove oil level plug (1).

REMARK

Remove the mud and dirt from around plug (1), then remove the plug.

2. Wipe off any oil adhering to the oil level gauge attached to plug (1) with cloth.
3. Set the oil level gauge (G) as shown in the right diagram.

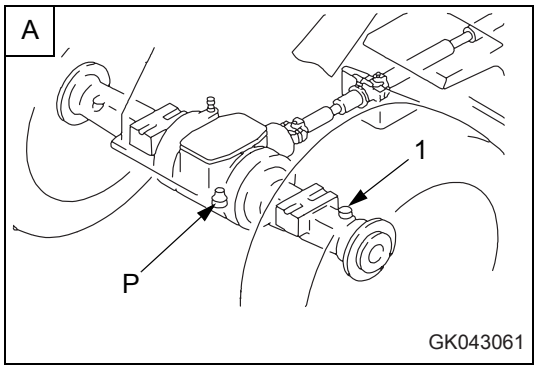

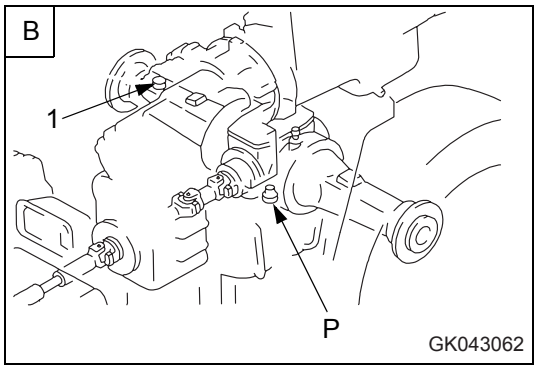

4. The oil level is correct when it is between the two lines provided on the oil level gauge.

   If the oil level does not reach the lower line, add axle oil through filler port (F).

REMARK

For axles with ASD (Limited-Slip Differential), the brand of lubricating oil is different. Use the specified lubricating oil.

5. If the oil level is above the upper line, drain off the excess oil through drain plug (P) and check the oil level again.
6. If the oil level is correct, install plug (1).

   Tightening torque: 127 to 177 Nm

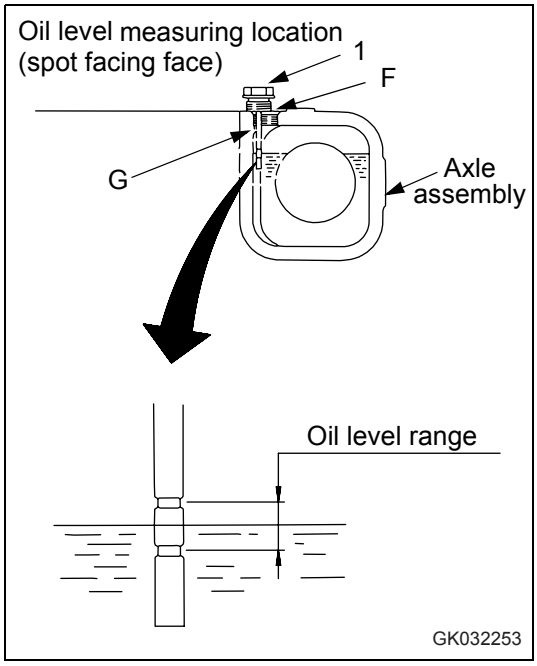

Clean axle case breather

WARNING

When cleaning the axle breather, apply the parking brake and secure the front and rear frames with the safety bar.

- A: Front
- B: Rear

Remove all mud and dirt from around the breather with a brush.

After removing the mud or dirt from around the breather, remove the breather, immerse it in cleaning fluid and clean it.

When cleaning the breather, clean the breathers at two places (front and rear).

After removing the breather, take steps to prevent dirt or dust from entering the mount.

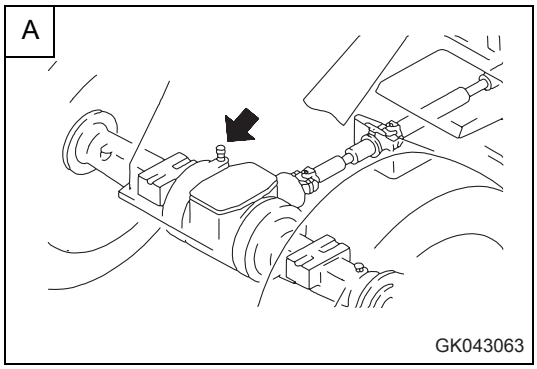

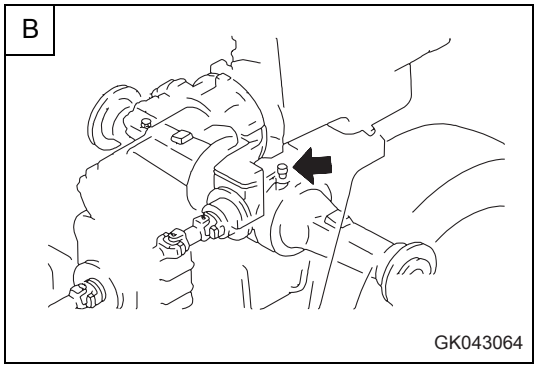

Clean air conditioner condenser

WARNING

- Do not wash the condenser with a steam cleaner. There is danger that the condenser could overheat.
- If high-pressure water hits your body directly or dirt is sent flying, there is danger of personal injury. Always wear protective glasses, dust mask, and other protective equipment.

If there is mud or dust on the air conditioner condenser, clean it with water.

If the water pressure is too high, the fins may get deformed. When washing with a high pressure washing machine, apply the water from a reasonable distance.

Washing method

Open the engine side cover on the left of the machine and wash the top of condenser (1) with water.

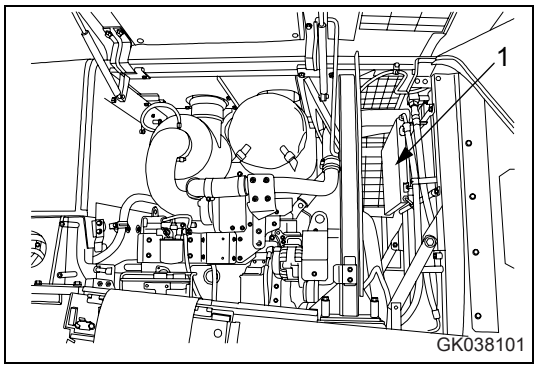

Check window washing fluid level, add fluid

Check the washing fluid levels in washer tank (1). When the fluid has run low, add automotive window washing fluid.

Be careful not to let dust get into the fluid.

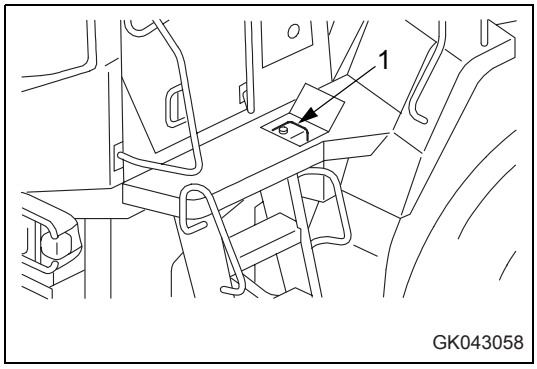

Clean radiator fins and cooler fins

WARNING

- Never open the engine side cover when the engine is running. Stop the engine completely before starting the cleaning operation.
- If compressed air, pressurized water, or steam hits your body directly, or causes dirt to fly, it may lead to personal injury. Always wear safety glasses, dust mask, or other protective equipment.

Clean the radiator if mud or dirt is stuck to it.

Clean fins by rotating cooling fan in reverse

NOTE

When rotating the fan in reverse, be careful of flying dust and take steps to prevent cloth or other objects from getting caught in the fan. Dust may rise, so check that there is no one in the surrounding area when rotating the fan in reverse.

On jobsites where the dust accumulates on to the radiator or cooler, turn cooling fan reverse rotation switch (1) ON to rotate the fan in the reverse direction and blow out the dust stuck to the radiator or cooler. This can be used to extend the cleaning interval.

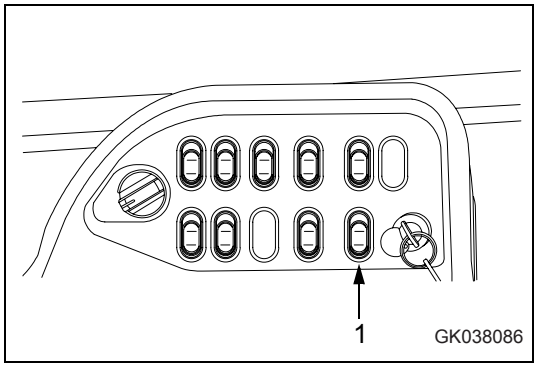

Manual fan reversing method

NOTE

- *Never rotate the fan in reverse by hand when carrying out the operation.*
- *Before operating the fan reverse rotation switch, run the engine at low idling.*

1. Set the directional lever to the Neutral position.
2. Set the parking brake switch to the ON position to apply the parking brake.
3. Run the engine at low idling.
4. Press position (a) (manual reverse rotation ON) of cooling fan reverse rotation switch (1).

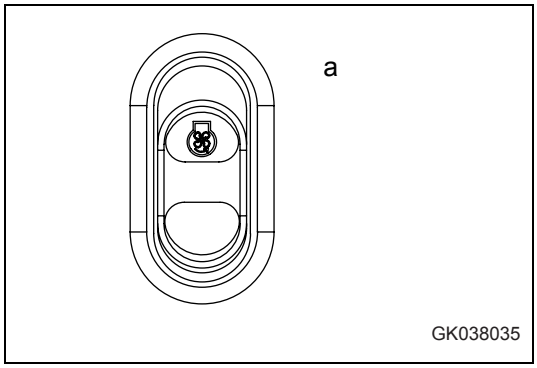

5. After the cooling fan reverse rotation pilot lamp on the machine monitor flashes, check that it lights up. At the same time, “COOLING FAN REVERSE ROTATION“ is displayed on the character display and the fan is set to rotate in reverse.

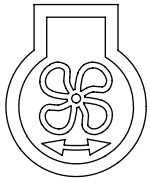
GK043111

6. Run the engine at high idling.

   Select the time for running the engine at high idling as follows according to the condition of clogging.

   - Normal clogging: 1 to 2 minutes
   - Excessive clogging: 2 to 3 minutes

7. When the cleaning is completed, run the engine at low idling.

8. Press position (a) (manual reverse rotation ON) of cooling fan reverse rotation switch (1).

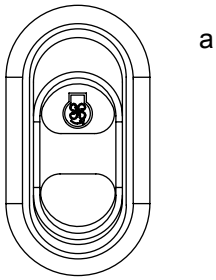

GK038035

9. After the cooling fan reverse rotation pilot lamp on the machine monitor flashes, check that it goes out.

   The fan is set to rotate in the normal direction.

10. Run the engine at low idling for approx. 10 seconds.

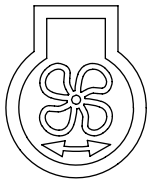
GK043111

Auto reverse function

(Option)

1. Run the engine at low idling.
2. Press position (a) (auto reverse rotation ON) of cooling fan reverse rotation switch (1).
3. Check that pilot lamp inside of the switch and the cooling fan reverse rotation pilot lamp on the machine monitor light up.

   The fan automatically rotates in reverse for 2 minutes every 2 hours.

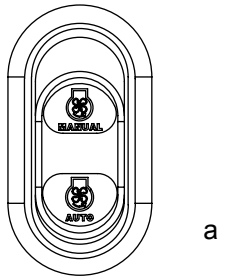

GK038036

REMARK

When the fan direction is switched, the reverse rotation pilot lamp flashes.
When the machine is operating under high load or in low temperatures, the direction of rotation of the fan may not change. This is to protect the machine.
Run the engine at low idling and wait for the oil temperature or water temperature to go down before operating the switch.

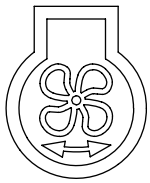
GK043111

Clean fins with compressed air

Insert the jet nozzle through the gap between the radiator, oil cooler, aftercooler (1) and air conditioner condenser (2) to clean the fins.

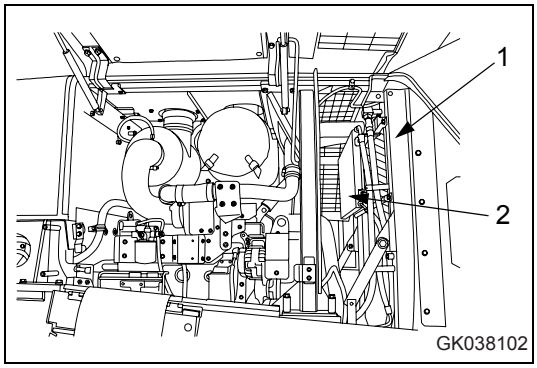

When cleaning the face behind the radiator, or oil cooler, and aftercooler (1), remove bolt (4) and plate (3), then insert the jet nozzle through the opening to clean the fins.

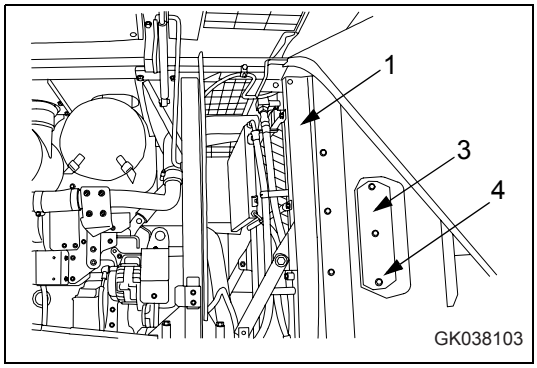

NOTE

If the steam jet nozzle is brought too close to the radiator fins, it may damage the fins, so keep the nozzle a suitable distance away from the fins when cleaning.

Work under the following rough conditions.

- Injection pressure: Max. 9.8 MPa
- Nozzle diameter: Max. 2 mm
- Distance between nozzle and radiator fins: Min. 100 mm

Examine the rubber hoses, and if any hose is cracked or deteriorated, replace it. Check also that there are no loose hose clamps.

Check electrical intake air heater

Before the start of the cold season (once a year), contact your KOMATSU distributor to have the electrical intake air heater checked for dirt or disconnections.

Turn, replace bolt on cutting edge

WARNING

It is extremely dangerous if the work equipment moves when carrying out the turning or replacement operation.
Set the work equipment in a stable position, stop the engine, then set the safety lock lever securely to the LOCK position.

Turn or replace the cutting edge before the wear reaches the edge of the bucket.

1. Raise the bucket to a suitable height, then put blocks (A) under the bucket to prevent the bucket from coming down.

   Raise the bucket so that the bottom surface of the bucket is horizontal.

2. Remove nuts and bolts (1), then remove cutting edge (2).

3. Clean the mounting surface of cutting edge (2).

4. Turn cutting edge (2) and install it to the bucket. When turning the edge, install it to the opposite side (left edge to right side, right edge to left side).

   If both sides of the cutting edge are worn, replace with a new part.

   If the wear extends to the mounting surface, repair the mounting surface before installing the cutting edge.

5. Tighten nuts and bolts (1) uniformly so that there is no gap between the bucket and cutting edge.

   Tightening torque for mounting bolt: 745 ± 108 Nm

6. Tighten the mounting bolts again after operating for several hours.

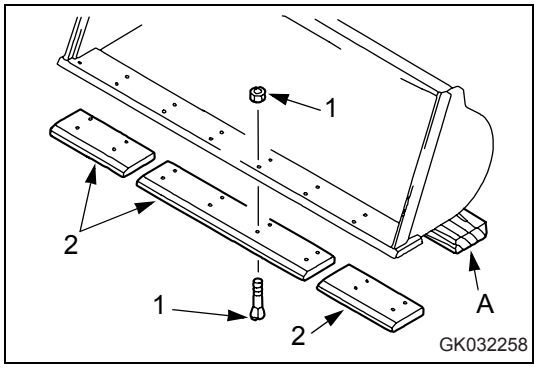

Replace bucket teeth

Bucket with buckdt teeth

(Option)

When the bucket teeth are worn, replace them as follows.

1. Raise the bucket to a suitable height, then put blocks under the bucket to prevent the bucket from coming down.

   Raise the bucket so that the bottom surface of the bucket is horizontal.

2. Remove the bolt and nuts (1) and (2), then remove bucket tooth (3).

3. Clean the installation surface of bucket tooth (3).

4. Install new teeth to the bucket.

   When doing this, insert shims so that there is no clearance between the teeth and the top surface of the bucket.

   Continue to add shims until it becomes impossible to add a 0.5 mm shim.

   If the mounting surface is worn, correct the mounting surface before installing the teeth.

5. To prevent any gap from forming between the teeth and tip of the bucket, tighten bolts and nuts (1) and (2) temporarily, then hit the tip of the teeth with a hammer.

   Tightening torque of mounting bolt (1):
   637 ± 853 Nm

   Tightening torque of mounting bolt (2):
   618 Nm

6. Tighten the mounting bolts again after operating for several hours.

Bucket with tip tooth

(Option)

CAUTION

- If the pin is hit out with strong force, there is danger that the pin may fly out. Check that there is no one in the surrounding area.
- There is danger of pieces flying during the replacement operation, so always wear protective clothing, such as safety glasses and gloves.

Replace the teeth before they wear down as far as the adapter.

1. Raise the bucket to a suitable height, then put blocks under the bucket to prevent the bucket from coming down.

   Raise the bucket so that the bottom surface of the bucket is horizontal.

2. Remove pin (2) installed to the bucket, then remove tooth (1).

   Put a rod (slightly narrower than the pin) in contact with the hatched portion (either left or right) and tap pin (2) out to the opposite side.

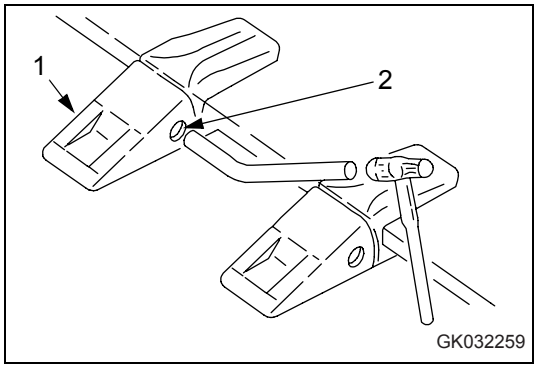

3. Fit new tooth (1) in adapter (3), push in pin (2) partially by hand, then knock it in with a hammer.
4. After operating the machine for a few hours, check that the pin does not come out.

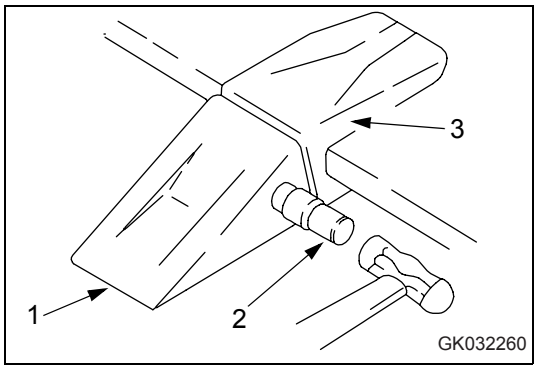

Check air conditioner

Check level of refrigerant (gas)

WARNING

If the refrigerant of the conditioner system gets into your eyes or on your hands, it may cause loss of sight or frostbite. Do not touch the refrigerant. Never loosen any part of the refrigerant circuit. Do not bring any flame close to any point where the refrigerant gas is leaking.

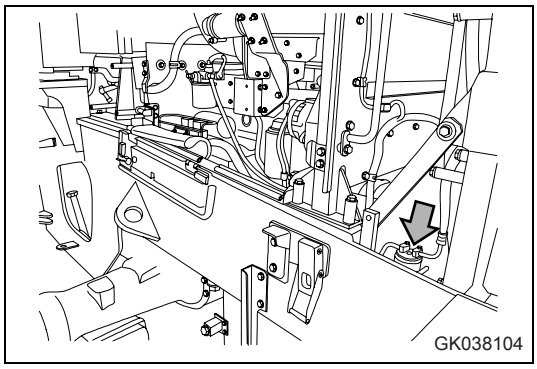

1. Start the engine and set the engine speed to approx. 1500 rpm.
2. Press main power switch (1) of the air conditioner to turn the power ON.
3. Press fan switch (2) and set the air flow to “Hi“.
4. Press temperature control switch (3) and set the display monitor to COOL (A).
5. Open the door and window fully.
6. Press air conditioner switch (4) to turn the air conditioner switch ON.
7. Use sight glass (6) (inspection window) of receiver drier (5) to check the condition of the refrigerant gas (freon 134a) flowing in the refrigerant circuit.

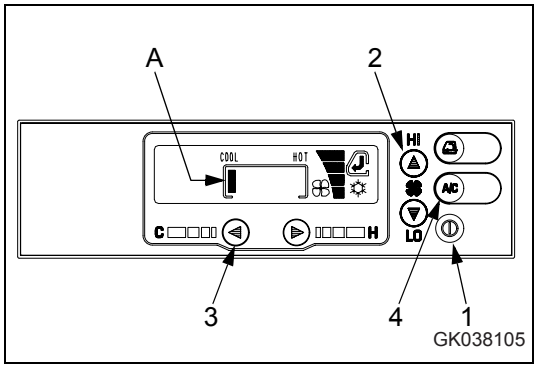

A: Quantity of refrigerant

B: Condition of sight glass

a: Proper:

After air conditioner switch is turned ON, few bubbles are seen and refrigerant becomes milk-white and then becomes pale milk-white.

b: Insufficient refrigerant:

After air conditioner switch is turned ON, bubbles are seen continuously.

X: Condition of refrigerant flow

Y: Condition of sight glass

x: There are bubbles:

Gas and liquid of refrigerant are mixed.

y: There are not bubbles:

All refrigerant is liquefied and transparent.

z: Refrigerant is milk-white:

Oil and refrigerant are separated from each other and their mixture is pale milk-white.

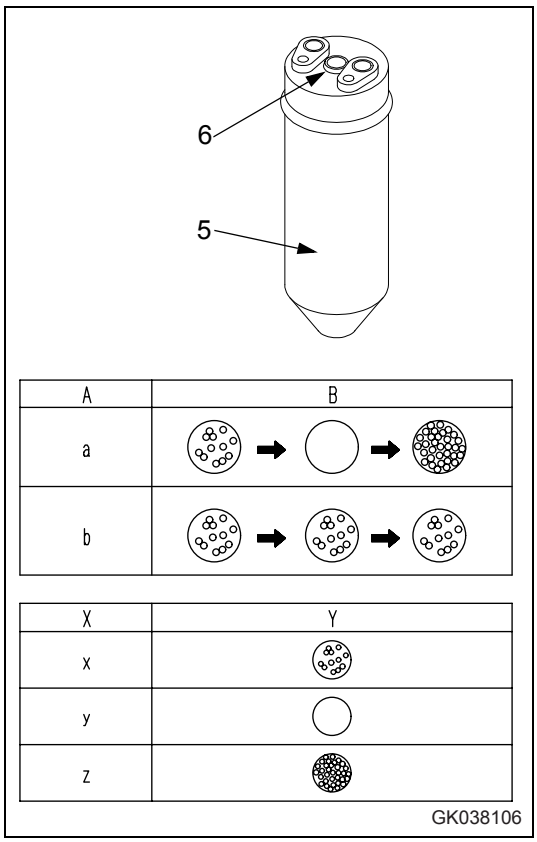

Maintenance and inspection and time to execute them

Inspection location	Item to check for	Maintenance interval		
		Check before operating	6 months	Replacement interval
Filter	Clogging, dirt	Carry out check	-	2 years
Condenser	Clogging, dirt	Carry out check	-	-
Belt	Looseness, damage	Carry out check	-	2 years
Refrigerant gas	Amount	-	Carry out check	-
Piping	Looseness, damage, leakage	-	Carry out check	-
Receiver drier	-	-	-	2 years

Replace slow blow fuse

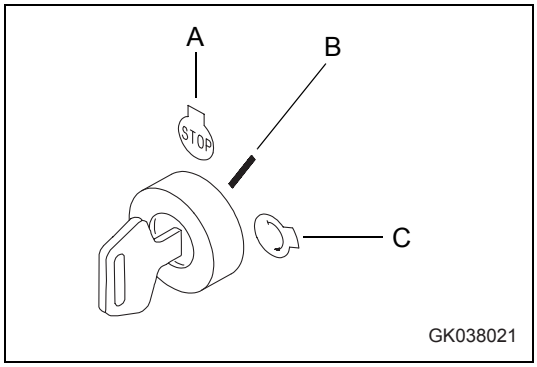

NOTE

- *Always turn the power OFF when replacing the slow blow fuse (turn the starting switch to the OFF position (A)).*
- *Always replace the slow blow fuse with a fuse of the same capacity.*

1. Turn the starting switch to the OFF position (A).
2. Remove the slow blow fuse box from the chassis.
3. Open covers (1), (2), and (3) of the slow blow fuse box.

   Covers (2) and (3) can be removed easily by using protrusion (A) on the body as a fulcrum and levering the catch of the cover with a flat-headed screwdriver to release it.
4. Loosen screws (4) and (5), and remove.

   When screws (4) and (5) are removed, slow blow fuse (6) will also come off together with electric wiring (7) and (8).
5. Using screws (4) and (5), install a new slow blow fuse together with electric wiring 7 and 8 to the slow blow fuse box, then close covers (1), (2), and (3).
6. Install the slow blow fuse box to the chassis.

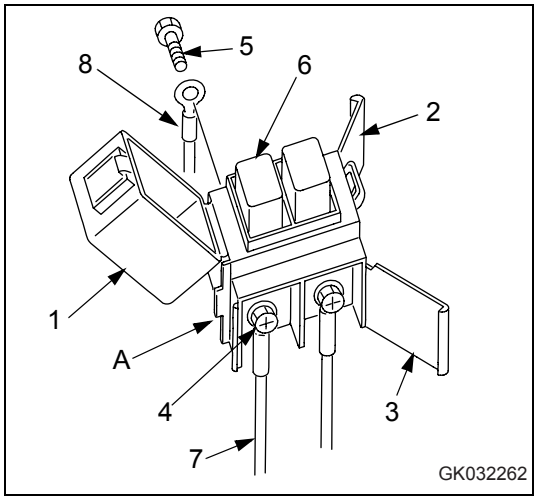

Checking function of accumulator

For details of handling the accumulator, see Section "Accumulator (2-36)".

Accumulator for travel damper

When the travel damper switch is ON, the hydraulic spring effect of the accumulator absorbs the up-and-down motion of the machine during travel and reduces the swaying.

Drive the machine and compare the up-and-down movement of the machine during travel when the travel damper switch is ON and when it is OFF.
If there is no change in the up-and-down movement of the machine, the gas pressure in the accumulator has probably dropped.
Please contact your KOMATSU distributor to have the accumulator inspected.

REMARK
Carry out the inspection with the speed range set to 2 - 4, with the machine traveling at a speed of at least 5 km/h. If the speed range is 1st or the machine is traveling at a speed of less than 5 km/h, the E.C.S.S. will not be actuated even if the E.C.S.S. switch is turned ON.

Accumulator for brake damper

When the brake pedal is depressed, the hydraulic spring effect of the accumulator actuates the brake smoothly.

If any change is felt in the smoothness of the brake operation during daily operations, the gas pressure in the accumulator has probably dropped.
Please contact your KOMATSU distributor to have the accumulator inspected.

REMARK
Even if there is any change in the smoothness, there is no drop in the braking force or brake performance.

Selection and inspection of tires

WARNING

If a tire or a rim is handled wrongly, the tire may burst or may be damaged and the rim may be broken and scattered, and that can cause serious injury or death.
Since maintenance, disassembly, repair and assembly of the tires and rims require special equipment and skill, be sure to ask a tire repair shop to carry out the work.
Do not heat or weld the rim to which the tire is installed. Do not make a fire near the tire.

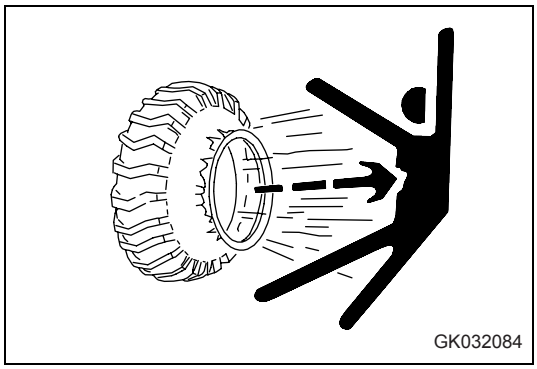

Selection of tires

WARNING

Select the tires according to the conditions of use and the weight of the attachments on the machine. Use only specified tires and inflate them to the specified pressure.

Select the tires according to the conditions of use and the weight of the attachments of the machine. Use the following table.

Since the travel speed indicated on the speedometer varies with the tire size, consult your KOMATSU distributor when using optional tires.

		Tire size	Maximum load [kg]
Standard	Front and Rear	23.5-25	9,095

Check inflation pressure of tires

WARNING

When inflating a tire, check that no one will enter the working area. Use an air chuck which has a clip and which can be fixed to the air valve.
While inflating the tire, check the inflation pressure occasionally so that it will not rise too high.
If the rim is not fitted normally, it may be broken and scattered while the tire is inflated. To ensure safety, place a guard around the tire and do not work in front of the rim but work on the tread side of the tire.
Abnormal drop of inflation pressure and abnormal fitting of the rim indicate trouble in the tire or rim. In this case, be sure to ask a tire repair shop to carry out repairs.
Be sure to observe the specified inflation pressure.
Do not adjust the inflation pressure of the tires just after high-speed travel or heavy-duty work.

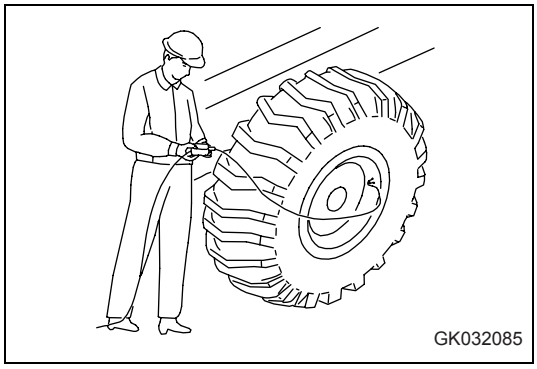

Check

Measure the inflation pressure with a tire pressure gauge while the tires are cool before starting work.

Inflation of tires

Adjust the inflation pressure properly.

When inflating a tire, use an air chuck which can be fixed to the air valve of the tire as shown in the figure. Do not work in front of the rim but work on the tread side of the tire.

The proper inflation pressure is shown below.

	Tire size	Inflation pressure
Standard	23.5-25	Front Tire: 310 kPa Rear Tire: 310 kPa

NOTE
The optimum inflation pressure differs according to the type of work. For details, see "Handling the tires (3-137)".

4.9.5 Check before starting

Check before starting

For the following items, see "Check before starting (3-84)".

- Check monitor panel
- Check coolant level, add coolant
- Check oil level in engine oil pan, add oil
- Check fuel level, add fuel
- Check electric wiring
- Check parking brake
- Check brake pedal
- Check inflation pressure of tires
- Check air cleaner
- Check water separator

4.9.6 Every 50 hours service

Drain water, sediment from fuel tank

Loosen valve (1) on the right side of the tank so that the sediment and water will be drained together with fuel.

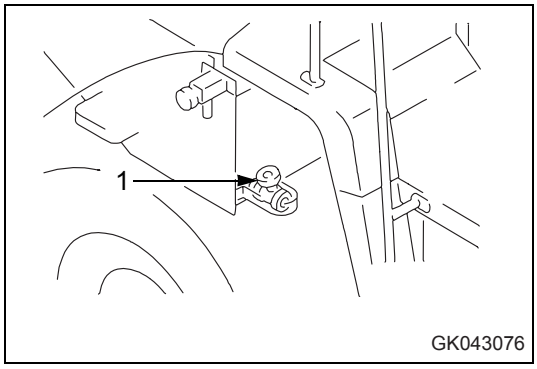

4.9.7 Every 100 hours service

Maintenance for every 50 hours service should be carried out at the same time.

Lubricate rear axle pivot pin

(3 places)

1. Using a grease pump, pump in grease through the grease fittings marked by the arrows.
2. After greasing, wipe off any old grease that was pushed out.

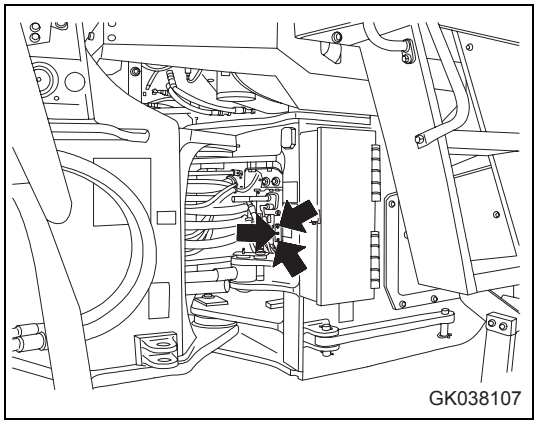

Check oil level in hydraulic tank, add oil

WARNING

- The parts and oil are at high temperature after the engine is stopped, and may cause burns. Wait for the temperature to go down before starting the work.
- When removing the oil filler cap, turn it slowly to release the internal pressure, then remove it.

1. Lower the bucket horizontally to the ground and stop the engine. Wait for 5 minutes, then check sight gauge (G). The oil level should be between the H and L marks.

NOTE

Do not add oil above the H line. This will damage the hydraulic circuit or cause the oil to spurt out. If oil has been added to above the H level, stop the engine and wait for the hydraulic oil to cool down, then drain the excess oil from drain plug.

2. If the oil is below the L level, open the inspection cover above the step and add oil through oil filler port (F).

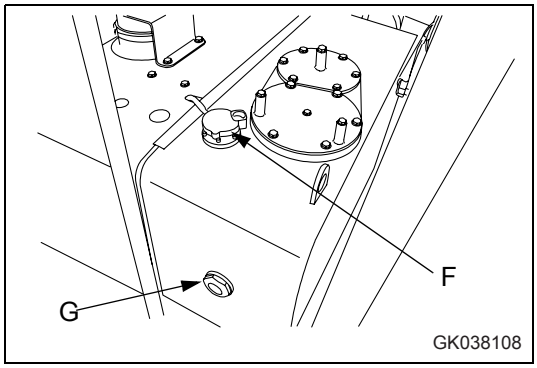

Clean element in air conditioner fresh air filter

WARNING

If compressed air is used, there is danger that dirt may fly and cause personal injury.
Always wear safety glasses, dust mask, and other protective equipment.

If the air conditioner has been used, the air filter should be cleaned.

Stop the air conditioner before cleaning the element.

When replacing the air filter element, set the machine facing directly to the front or articulate it to the right.

1. Insert the starting key into key slot (1), release the lock, loosen knob (2), and open cover (3).

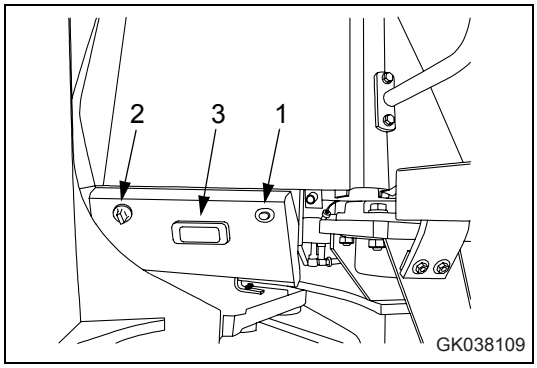

2. Remove element (4) and clean it.
3. Direct dry compressed air (less than 0.69 MPa) to the element from inside along its folds, then direct it from outside along its folds and again from inside.

   If the dirt clogging the filter cannot be removed by blowing it with air, replace the filter with a new part.
4. After cleaning, return filter (4) to its original position and close the cover. Use the starting switch key to lock the cover. Do not forget to remove the starting switch key.

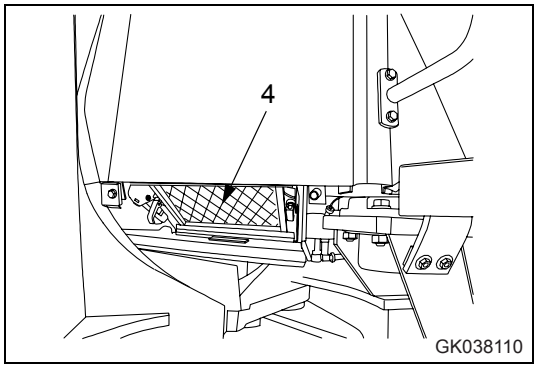

REMARK

If the filter becomes clogged, the air flow will be reduced, and there will be an abnormal noise from the air conditioner unit.

4.9.8 Every 250 hours service

Maintenance for every 50 and 100 hours service should be carried out at the same time.

Check battery electrolyte level

Carry out this check before operating the machine.

WARNING

- Do not use the battery if the battery electrolyte level is below the (MINIMUM) LOWER LEVEL line. This will accelerate deterioration of the inside of the battery and reduce the service life of the battery. In addition, it may also cause an explosion.
- The battery generates flammable gas and there is danger of explosion, so do not bring fire or sparks near the battery.
- Battery electrolyte is dangerous. If it gets in your eyes or on your skin, wash it off with a large amount of water and consult a doctor.
- When adding distilled water to the battery, do not allow the battery electrolyte to go above the (MAXIMUM) UPPER LEVEL line. If the electrolyte level is too high, it may leak and cause damage to the paint surface or corrode other parts.

NOTE

When adding distilled water in cold weather, add it before starting operations in the morning to prevent the electrolyte from freezing.

Inspect the battery electrolyte level at least once a month and follow the basic safety procedures given below.

When checking electrolyte level from side of battery

If it is possible to check the electrolyte level from the side of the battery, check as follows.

1. Open the cover of the battery box.

   There are two battery boxes: One on each side at the rear of the machine.

2. Use a wet cloth to clean the area around the electrolyte level lines and check that the electrolyte level is between the UPPER LEVEL (U.L.) and LOWER LEVEL (L.L.) lines.
   If the battery is wiped with a dry cloth, static electricity may cause a fire or explosion.

   If the battery is wiped with a dry cloth, static electricity may cause a fire or explosion.

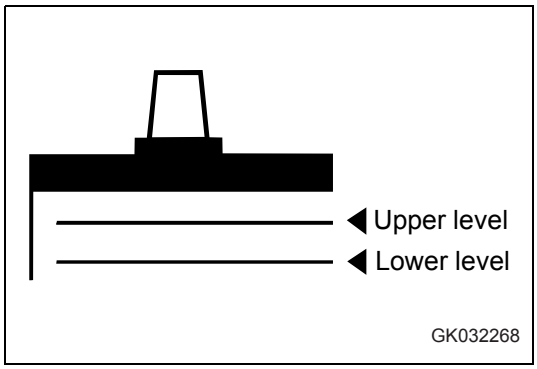

3. If the electrolyte level is below the midway point between the UPPER LEVEL (U.L.) and LOWER LEVEL (L.L.) lines, remove cap (1) and add distilled water to the U.L. line.

4. If distilled water has been added to any cell of cap (1), add distilled water also to the other cells.

5. Clean the vents of the battery caps, then close the caps securely.

   Keep the top of the battery clean and wipe it with a wet cloth.

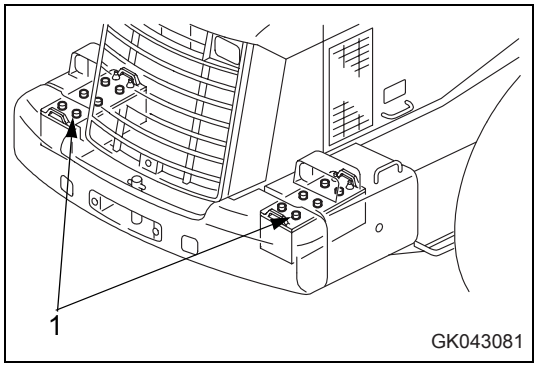

REMARK

If distilled water is added to above the UPPER LEVEL (U.L.) line, use a syringe to lower the level to the UPPER LEVEL (U.L.) line. Neutralize the removed fluid with baking soda (sodium bicarbonate), then flush it away with a large amount of water or consult your KOMATSU distributor or battery maker.

When it is impossible to check electrolyte level from side of battery

If it is impossible to check the electrolyte level from the side of the battery, or there is no display of the UPPER LEVEL line on the side of the battery, check as follows.

1. Open the cover of the battery box.

   There are two battery boxes: One on each side at the rear of the machine.

2. Remove cap (1) at the top of the battery, look through the water filler port, and check the electrolyte surface. If the electrolyte does not reach the sleeve, add distilled water so that the level reaches the bottom of the sleeve (MAXIMUM) (UPPER LEVEL line) without fail.

3. If distilled water has been added to any cell of cap (1), add distilled water also to the other cells.

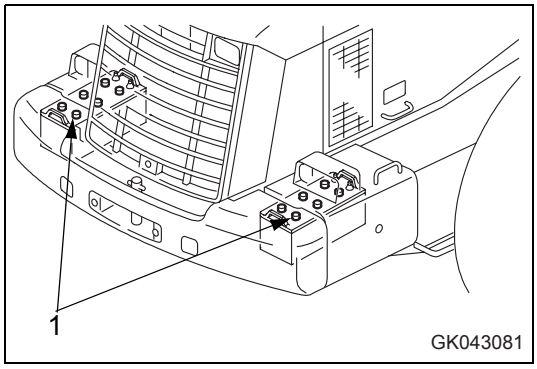

Use the diagram below for reference, and check if the electrolyte reaches the bottom of the sleeve.

A	Correct level The electrolyte level is up to the bottom of the sleeve, so the surface tension causes the surface to rise and the plate appears to be warped.
B	Too low (level) The electrolyte level is not up to the bottom of the sleeve, so the plate appears to be normal.

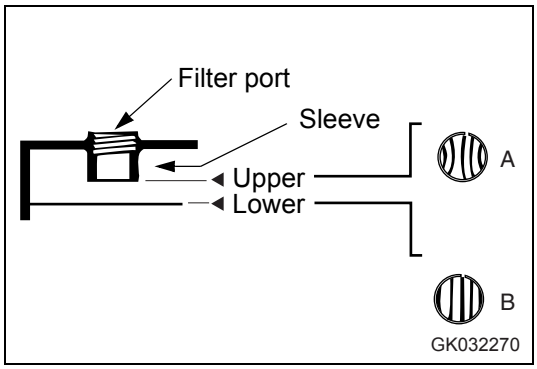

4. After adding distilled water, tighten cap (1) securely.

REMARK

If distilled water is added to above the bottom of the sleeve, use a syringe to lower the level to the bottom of the sleeve. Neutralize the removed fluid with baking soda (sodium bicarbonate), then flush it away with a large amount of water or consult your KOMATSU distributor or battery maker.

When it is possible to use indicator to check electrolyte level

If it is possible to use an indicator to check the electrolyte level, follow the instructions given.

Check parking brake

1. Set the machine on a dry downhill slope, press the parking brake switch to the ON position, and check if the parking brake hold the machine in position.
2. If any problem is found, please contact your KOMATSU distributor.

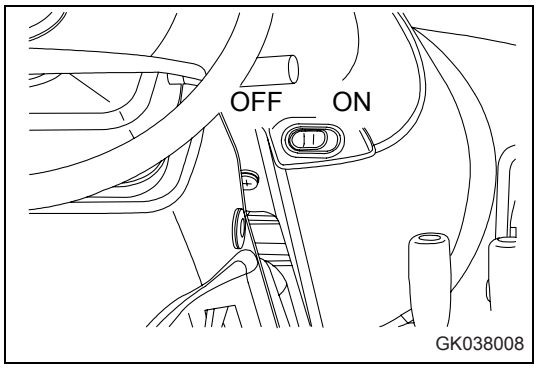

Check air conditioner compressor belt tension, adjust

Checking

The standard deflection between the air conditioner compressor pulley and crank pulley when pressed with a thumb (approx. 98 N) should be approx. 11 to 15 mm.

When a belt tension gauge is used, the standard tension is within a range of 353 to 530 N.

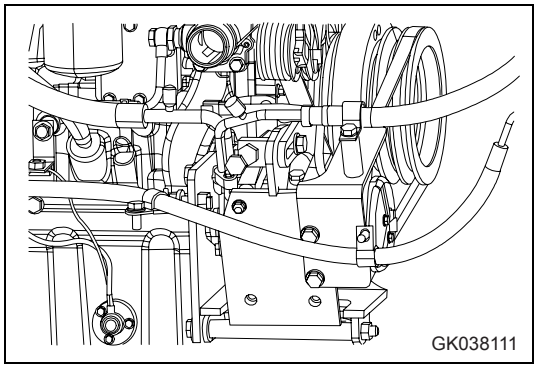

Check when changing the V-belt

The standard deflection between the air conditioner compressor pulley and fan pulley when pressed with a thumb (approx. 98 N) should be approx. 8 to 11.5 mm.

When a belt tension gauge is used, the standard tension is within a range of 533 to 745 N.

REMARK

When the belt has been replaced with a new part, a high tension is necessary, so the initial tension is in the value given above.

Adjusting

1. Loosen bolt (1), then loosen the locknut of bolt (2), tighten bolt (2), and move compressor (3) to adjust.
2. Tighten bolt (1) and the locknut of bolt (2) to hold the compressor (3) in position.

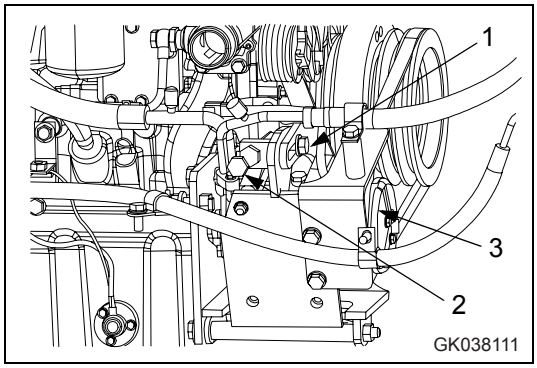

NOTE

- *Check each pulley for damage, wear of the V-groove, and wear of the V-belt. In particular, be sure to check that the V-belt is not touching the bottom of the V-groove.*
- *In case any of the following occurs, ask the KOMATSU distributor in your territory to replace the belts with new ones.*
  The fan belt has elongated, leaving little allowance for adjustment.
  A cut or crack is found on the belt.
  Slipping or creaking sound is heard coming from the belt.
- *When the new V-belt is set, readjust it after one hour of operation.*

Check for loose wheel hub bolts, tighten

If wheel hub nuts (1) are loose, tire wear will be increased and may cause accidents.

1. Check for loose nuts, and tighten if necessary.

   When checking for loose nuts, always turn the nuts in the direction of tightening to check.

   Tightening torque: 825 to 1030 Nm

2. If any stud bolt is broken, replace all the stud bolts for that wheel.

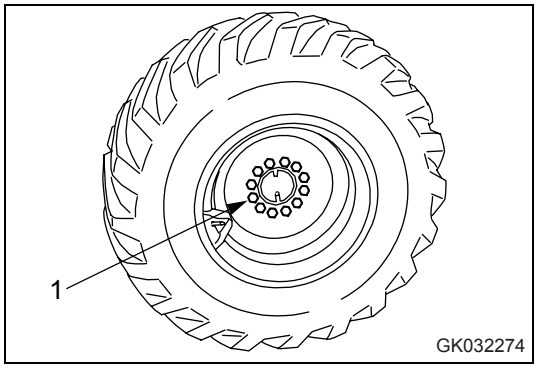

Clean element in air conditioner recirculation filter

1. Loosen knob (1), then remove filter inspection cover (2).

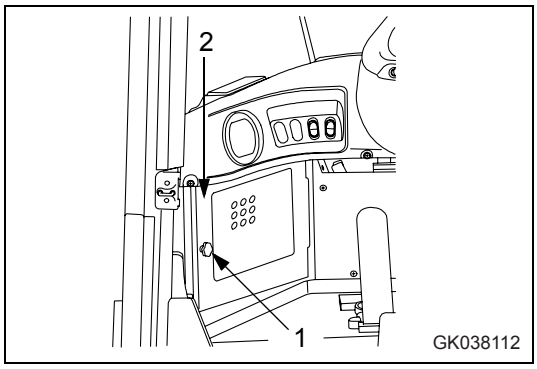

2. Remove filter (3) in the direction shown by the arrow.
3. Clean with compressed air in the same way as for the fresh air filter.

   If the filter is extremely dirty, rinse it in water.

   After rinsing the filter, dry it completely before installing it again.

   If the dirt clogging the filter cannot be removed by blowing it with air, replace the filter with a new part.

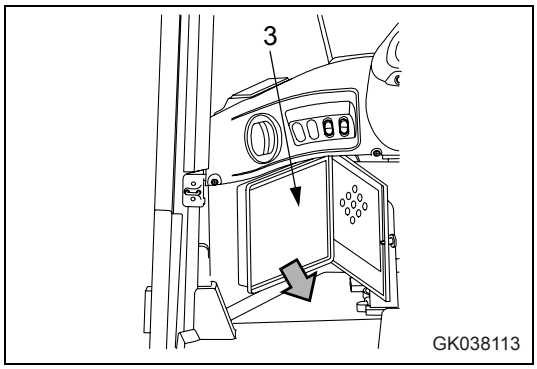

REMARK

If the filter becomes clogged, the air flow will be reduced, and there will be an abnormal noise from the air conditioner unit.

Checking function of accumulator

For details of handling the accumulator, see "Accumulator (2-36)".

Brake accumulator

If the engine stops when the machine is traveling, the oil pressure in the accumulator can be used to apply the brake as an emergency measure.

1. Stop the machine on level ground and lower the work equipment completely to the ground.
2. Apply the parking brake.
3. Start the engine, run it at a mid-range speed for 1 minute, then stop the engine.
4. Turn the starting switch key to the ON position and depress the brake pedal repeatedly.
   - If the brake oil pressure caution lamp does not light up even when the brake is depressed 6 times, the gas pressure in the accumulator is normal.
   - If the brake oil pressure caution lamp lights up when the brake has been depressed 5 or less times, the gas pressure in the accumulator has probably dropped. Please contact your KOMATSU distributor to have the accumulator inspected.

REMARK

Carry out the check within 5 minutes after stopping the engine. If the machine is left with the engine stopped, the accumulator pressure will drop and it will be impossible to check the cause of the problem.

Lubricating

NOTE

On jobsites where there is a lot of heavy-duty work, or on jobsites where operations are carried out continuously for more than eight hours, reduce the greasing interval and carry out greasing more frequently.

1. Put the work equipment horizontally in contact with the ground, then stop the engine.
2. Using a grease pump, pump in grease through the grease fittings marked by the arrows.
3. After greasing, wipe off any old grease that was pushed out.

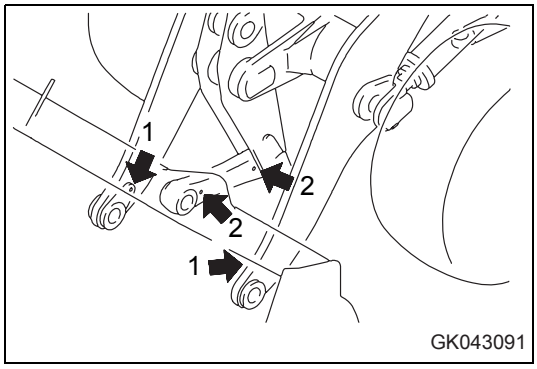

(1) Bucket pin (2 places)

(2) Bucket link pin (2 places)

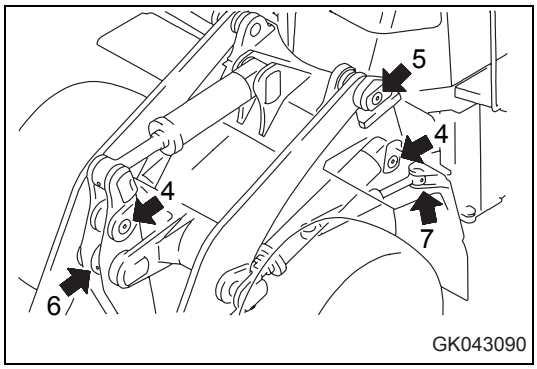

(3) Dump cylinder pin (2 places)

(4) Lift cylinder pin (4 places)

(5) Lift arm pivot pin (2 places)

(6) Tilt lever pin (1 place)

(7) Steering cylinder pin (4 places)

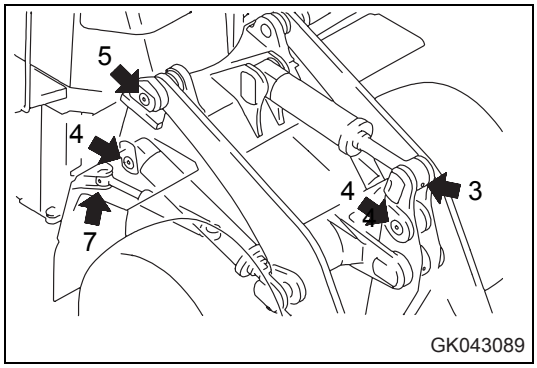

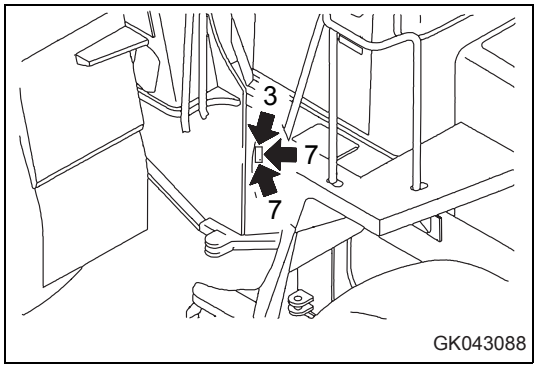

4.9.9 Every 500 hours service

Maintenance for every 50, 100 and 250 hours service should be carried out at the same time.

Change oil in engine oil pan, replace engine oil filter cartridge

WARNING

- The parts and oil are at high temperature after the engine is stopped, and may cause burns. Wait for the temperature to go down before starting the work.
- When removing the oil filler cap, turn it slowly to release the internal pressure, then remove it.

- Refill capacity: 23 liters
- Filter wrench

1. Open the engine side cover on the right side of the chassis.
2. Open oil filler (F).
3. Place a container to catch the oil under drain plug (P).
4. Loosen drain plug (P) and drain the oil. Be careful not to get oil on yourself.
5. Check the drained oil, and if there are excessive metal particles or foreign material, please contact your KOMATSU distributor.
6. Tighten drain plug (P).
7. Open the engine side cover on the left side of the chassis.
8. Using the filter wrench, turn filter cartridge (1) counterclockwise to remove it.

   In particular, if this operation is carried out immediately after stopping the engine, a large amount of oil will come out, so wait for 10 minutes before starting the operation.
9. Clean the filter holder, fill the new filter cartridge with engine oil, then coat the seal and thread of the filter cartridge with engine oil (or coat thinly with grease) and install.
10. When installing the seal, tighten it so its surface comes into contact with the filter holder, then tighten another 3/4 turn.

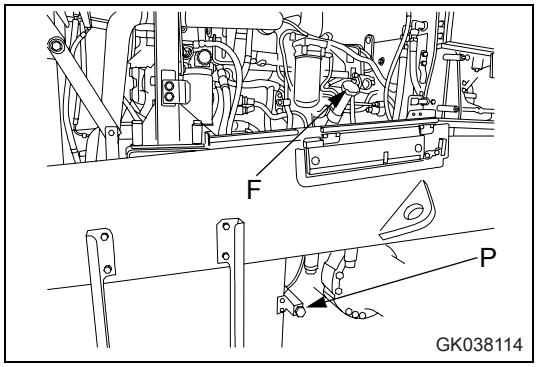

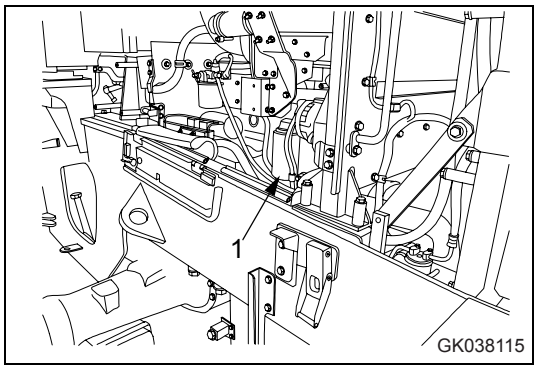

11. After replacing the filter cartridge, add oil through oil filler (F) until the oil level is between the H and L marks on the dipstick (G).

12. Run the engine at idling for short time, then stop the engine, and check that the oil is between the H and L marks on the dipstick. For details, see "Check oil level in engine oil pan, add oil (3-86)".

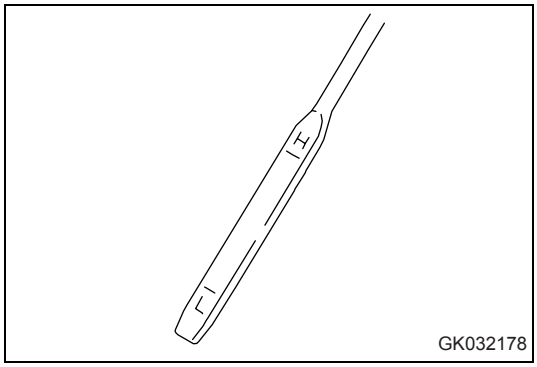

Replace fuel pre-filter cartridge

WARNING

- Engine is at high temperature immediately after the machine has been operated. Wait for engine to cool down before replacing the filter.
- High pressure is generated inside the engine fuel piping system when the engine is running.
  When replacing the filter, wait for at least 30 seconds after stopping the engine to let the internal pressure go down before replacing the filter.
- Do not bring fire or sparks near the fuel.
- Be careful when opening the air bleed plug in the fuel filter head. It is still under pressure, so fuel may spurt out.

NOTE

- *Genuine KOMATSU fuel filter cartridges use a special filter that has highly efficient filtering ability. When replacing the filter cartridge, always use a genuine KOMATSU part.*
- *The common rail fuel injection system used on this machine consists of more precise parts than the conventional injection pump and nozzle.*
  If any part other than a genuine KOMATSU filter cartridge is used, dust or dirt may get in and cause problems with the injection system. Always avoid using substitute parts.
- *When carrying out inspection or maintenance of the fuel system, pay more attention than normal to the entry of dirt. If dirt is stuck to any part, use fuel to wash it off completely.*

- Container to catch the fuel
- Filter wrench

1. Open the engine side cover on the right side of the chassis.
2. The fuel pre-filter forms one unit with the water separator and is at the rear of the engine.
3. Set the container to catch the fuel under the filter cartridge.

4. Using a filter wrench, turn filter cartridge (1) counterclockwise to remove it.

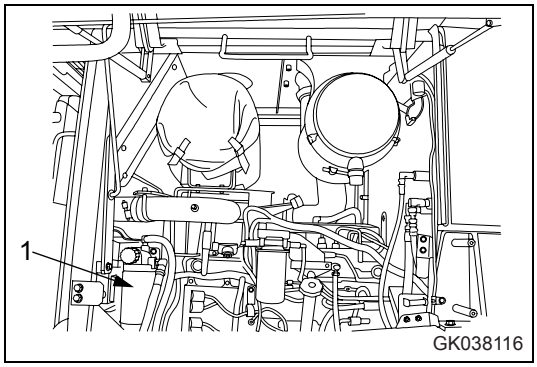

5. Take water separator cup (2) installed to the bottom of the cartridge and turn it to the left to remove it. (This cup is used again. If it is damaged, replace it with a new part.)

6. Install cup (2) to the bottom of the new fuel pre-filter cartridge.

   When doing this, always replace the seal ring with a new part.

   Tightening torque for cup: 10 Nm

   When replacing the seal ring, coat the surface with clean fuel before installing it.

7. Check that drain plug (3) at the bottom of water separator cup (2) is tightened securely.

   Tightening torque: 0.2 - 0.45 Nm

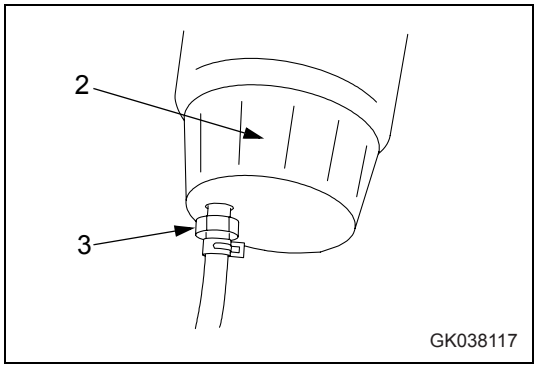

8. Clean the filter holder.

NOTE

When filling the filter cartridge with fuel, carry out the filling operation with cap (A) fitted.
Cap (A) acts to prevent the entry of dirt or dust into the filter cartridge.

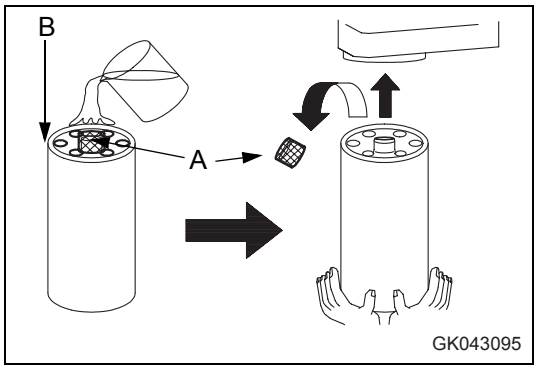

9. Fill the filter cartridge with clean fuel through the 8 small holes (B) in the new filter cartridge.

10. Coat the packing surface of the filter cartridge with oil.

11. Remove filter cartridge cap (A) and install to the filter holder.

12. When installing, tighten until the packing surface contacts the seal surface of the filter holder, then tighten it up 1/2 to 3/4 of a turn.

    If the filter cartridge is tightened too far, the packing will be damaged and this will lead to leakage of fuel. If the filter cartridge is too loose, fuel will also leak from the packing, so always tighten to the correct amount.

    When tightening with a filter wrench, be extremely careful not to dent or damage the filter.

13. When carrying out standard replacement of the fuel filter cartridge (every 1000 hours), replace the cartridge and bleed the air.

    For details, see

14. Start the engine, check that there is no leakage of fuel from the filter seal surface or water separator mounting surface, then run for approx. 10 minutes at low idling

15. After replacing filter cartridge (1), bleed the air from the fuel system.

Procedure for bleeding air

1. Fill the fuel tank with fuel.

2. Open the engine side cover on the right side of the chassis.

3. Loosen and pull out feed pump knob (1) and move it forward and backward.

   The plug on the fuel filter head does not need to be removed.

   Keep moving knob (1) until it becomes heavy.

4. After bleeding air, push in and tighten knob (1).

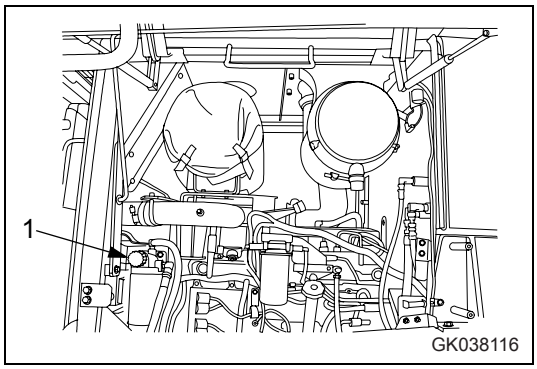

4.9.10 Every 1000 hours service

Maintenance for every 50, 100, 250 and 500 hours service should be carried out at the same time.

Replace fuel filter cartridge

WARNING

- Engine is at high temperature immediately after the machine has been operated. Wait for engine to cool down before replacing the filter.
- High pressure is generated inside the engine fuel piping system when the engine is running.
  When replacing the filter, wait for at least 30 seconds after stopping the engine to let the internal pressure go down before replacing the filter.
- Do not bring fire or sparks near the fuel.

NOTE

- *Genuine KOMATSU fuel filter cartridges use a special filter that has highly efficient filtering ability. When replacing the filter cartridge, always use a genuine KOMATSU part.*
- *The common rail fuel injection system used on this machine consists of more precise parts than the conventional injection pump and nozzle.*
  If any part other than a genuine KOMATSU filter cartridge is used, dust or dirt may get in and cause problems with the injection system. Always avoid using substitute parts.
- *When carrying out inspection or maintenance of the fuel system, pay more attention than normal to the entry of dirt. If dirt is stuck to any part, use fuel to wash it off completely.*

- Container to catch the fuel
- Filter wrench

1. Open the engine side cover on the right side of the chassis.
2. Set the container to catch the fuel under the filter cartridge.
3. Using a filter wrench, turn filter cartridge (1) counterclockwise on remove it.
4. Clean the filter holder.

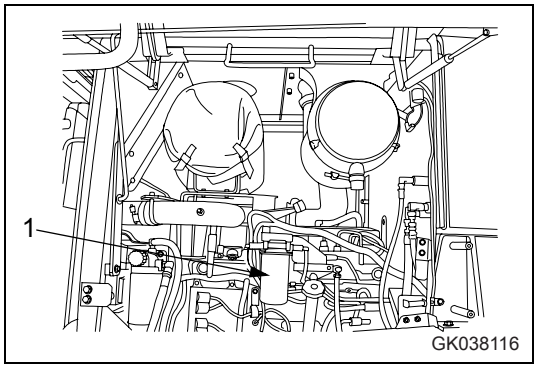

NOTE

- *Do not fill the filter cartridge with fuel.*
- *Cap (A) is installed to prevent dirt from entering the inside of the filter cartridge.*

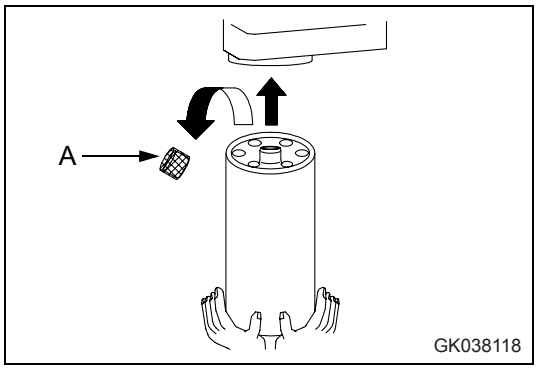

5. Coat the packing surface of the filter cartridge with oil.
6. Remove filter cartridge cap (A) and install to the filter holder.
7. When installing, tighten until the packing surface contacts the seal surface of the filter holder, then tighten it 3/4 of a turn.

   If the filter cartridge is tightened too far, the packing will be damaged and this will lead to leakage of fuel. If the filter cartridge is too loose, fuel will also leak from the packing, so always tighten the correct amount.
8. After completing replacement of fuel filter cartridge (1), bleed the air from the system.
9. After completing the air bleeding, start the engine and check that there is no leakage of fuel from the filter seal surface. If there is any leakage, check the tightening condition of the filter cartridge.

   If there is still fuel leakage, repeat Steps 1 - 3 to remove the filter cartridge, then check the packing surface for damage or embedded dirt.

   If any damage or embedded dirt is found, replace the cartridge with a new part and repeat Steps 4 - 8 to install it

Procedure for bleeding air

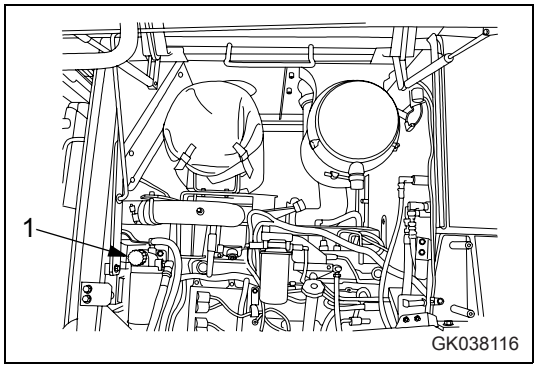

1. Fill the fuel tank with fuel.
2. Open the engine side cover on the right side of the chassis.
3. Loosen and pull out feed pump knob (1) and move it forward and backward.

   The plug on the fuel filter head does not need to be removed.

   Keep moving knob (1) until it becomes heavy.
4. After bleeding air, push in and tighten knob (1).

Change oil in transmission case and transmission oil filter cartridge, clean strainer

WARNING

- The parts and oil are at high temperature after the engine is stopped, and may cause burns. Wait for the temperature to go down before starting the work.
- When removing the oil filler cap, turn it slowly to release the internal pressure, then remove it.

- Refill capacity: 38 liters
- Filter wrench

1. Set a container to catch the oil under drain plug (P), then remove drain plug (P) and drain the oil.

   To prevent the oil from pouring out suddenly, loosen drain plug (P) and remove it gradually.

2. After draining the oil, install drain plug (P).

   Tightening torque: 68.6 ± 9.8 Nm

3. Set a container to catch the oil under the transmission filter.

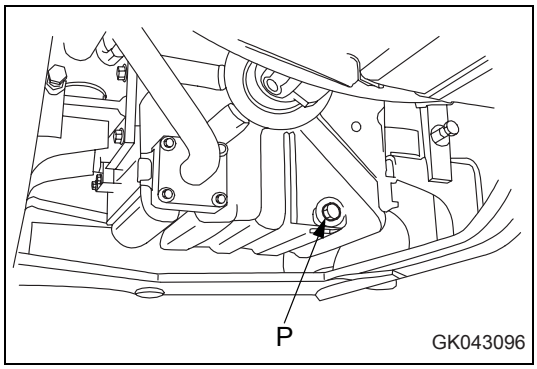

4. Remove drain plug (1) of the transmission filter, drain the oil, then tighten the plug again.
5. Using a filter wrench, turn filter cartridge (2) to the left to remove it.
6. Clean in the filter holder, coat the seal surface and thread of the new filter cartridge with engine oil, then install it.
7. When the seal surface comes into contact with the filter holder, tighten a further 2/5 turns with the filter wrench.

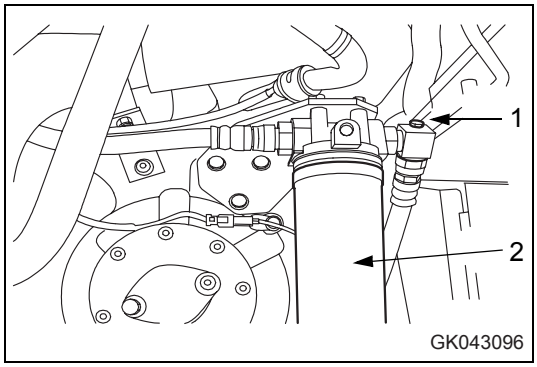

8. Remove 4 bolts (3), move tube (4), then remove strainer (5).
9. Remove any dirt stuck to strainer (5), then wash it in clean diesel fuel or flushing oil. If strainer (5) is damaged, replace it with a new part.
10. Install strainer (5) in the case.

    Replace the O-ring of tube (4) with a new part, then install tube (4).

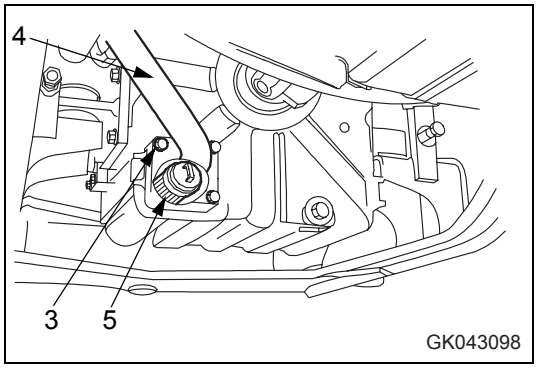

11. Refill the specified quantity of oil through oil filler (F).
12. After filling with oil, check that the oil is at the specified level. For details, see "Check transmission oil level, add oil (4-39)".
13. Check that there is no leakage of oil from the transmission case or oil filter.

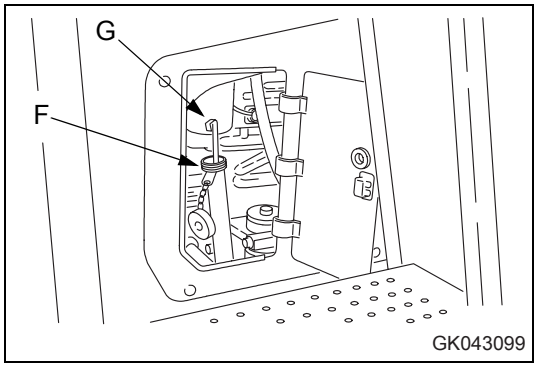

Clean transmission case breather

1. Loosen bolt (1) and remove cover (3).
2. Remove the mud and dirt from around the breather (2), then remove breather (2).

   After removing the breather, take steps to prevent dirt or dust from entering the mount.
3. Soak the breather (2) in washing liquid and wash it.

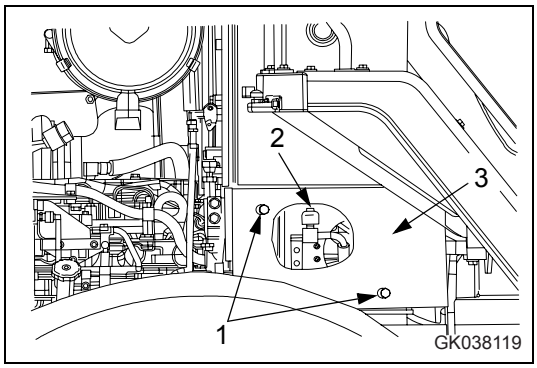

Lubricating

1. Using a grease pump, pump in grease through the grease fittings marked by the arrows.
2. After greasing, wipe off any old grease that was pushed out.
3. Center hinge pin (2 places)

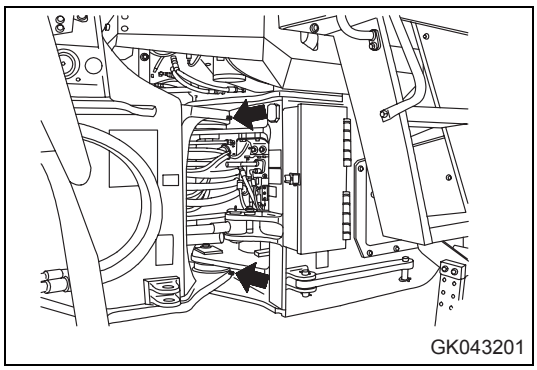

4. Drive shaft center support (1 place)

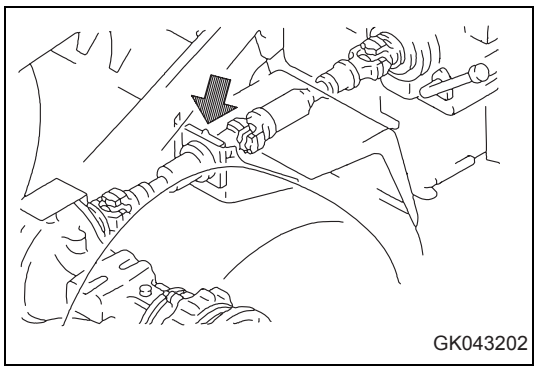

Check tightening parts of turbocharger

Please contact your KOMATSU distributor to have the tightening portions checked.

Check alternator driving belt tension and replacement

Since inspection and replacement of the fan belt require special tools, contact your KOMATSU distributor.

REMARK

The machine is equipped with an auto tensioner, so there is no need to adjust the tension.

If the alternator drive belt is in the following condition, the belt must be replaced. Please ask your KOMATSU distributor to replace the belt.

- When horizontal scratch (1) crosses vertical scratch (2)
- When there are tears (3) in part of the belt

In case (4) where there are horizontal scratches only, there is no need to replace the belt.

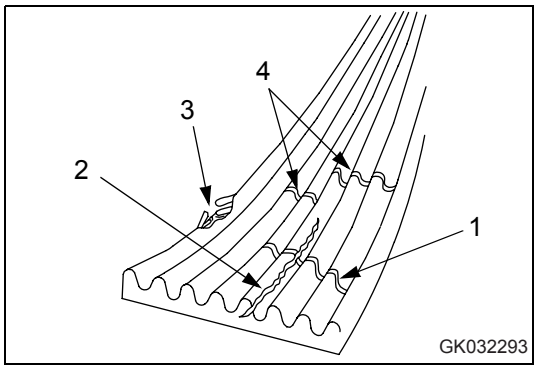

Replace corrosion resistor cartridge

1. Close a valve (1) of the corrosion resistor at two points.
2. Using a filter wrench, turn cartridge (2) to the left to remove it.
3. Apply engine oil to the sealing surface of a new cartridge, then install it to the filter holder.
4. Bring the packing surface into contact with the seal surface of the filter holder, then tighten it further approx. 2/3 turn.
5. Open a valve (1) of the corrosion resistor at two points.

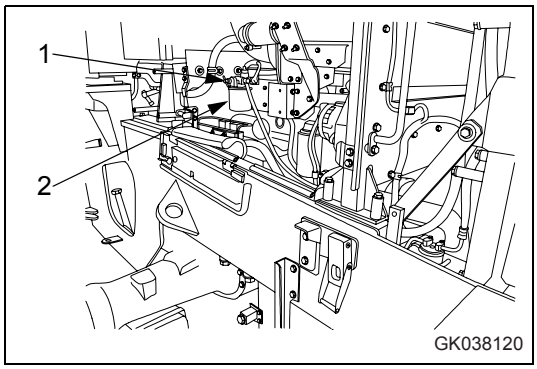

4.9.11 Every 2000 hours service

Maintenance for every 50, 100, 250, 500 and 1000 hours service should be carried out at the same time.

Change oil in hydraulic tank, replace hydraulic filter element

WARNING

- The parts and oil are at high temperature after the engine is stopped, and may cause burns. Wait for the temperature to go down before starting the work.
- When removing the oil filler cap, turn it slowly to release the internal pressure, then remove it.

- Refill capacity: 139 liters

1. Lower the bucket horizontally to the ground and apply the parking brake, then stop the engine.
2. Remove oil filler cap (F).

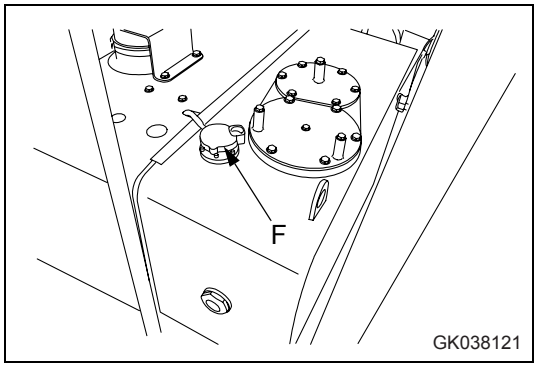

3. Set a container to catch the oil under drain plug (2).
4. Remove drain plug (2).
5. Loosen drain valve (3), then gradually pull it out to drain the oil.
6. After draining the oil, close drain valve (3), install and tighten drain plug (2).

   Tightening torque

   Drain plug (2): 68.6 ± 9.8 Nm

   Drain valve (3): 63.7 ± 14.7 Nm

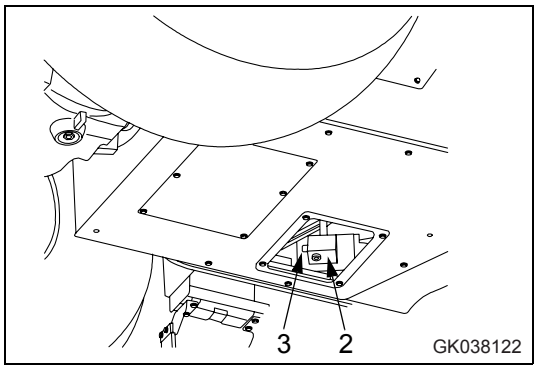

7. Remove mounting bolts (5) of filter cover (4) at the top of the tank, then remove the cover.

   When the cover is removed, the force of spring (6) may make the cover fly off, so keep the cover pushed down when removing the bolts.

8. Remove spring (6) and bypass valve (7), then remove element (8).

9. Check that there is no foreign material inside the tank, then clean it.

10. Install new element (8), then set bypass valve (7), spring (6), and cover (4) to the tank.

    If the O-ring of the cover is damaged or deteriorated, replace it.

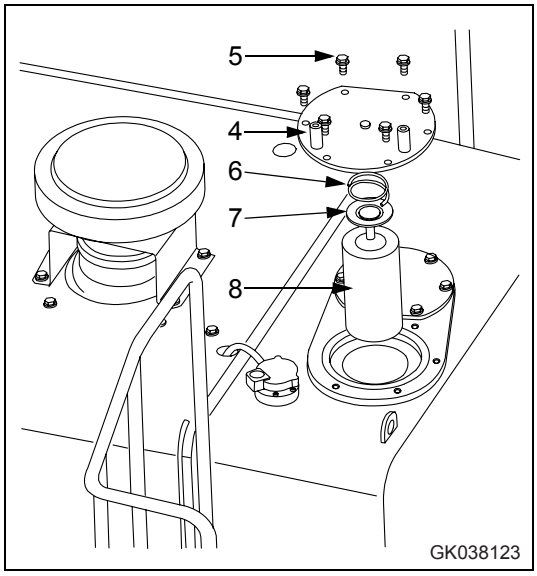

11. Remove 6 bolts (10), then remove cover (9).

12. Pull the top of rod (11) from the top and remove strainer (12).

13. Remove any dirt stuck to strainer (12), then wash it in flushing oil. If strainer (12) is damaged, replace it with a new part.

14. When installing the cover bolts, push down the cover and tighten the bolts evenly.

15. Add engine oil through oil filler port (F) to the specified level, then install cap (F).

16. Check that the hydraulic oil is at the specified level.

    For details, see "Check oil level in hydraulic tank, add oil (4-56)".

17. Run the engine at low idling, and extend and retract the steering, bucket, and lift arm cylinders 4 to 5 times. Be careful not to operate the cylinder to the end of its stroke (stop approx.100 mm before the end of stroke).

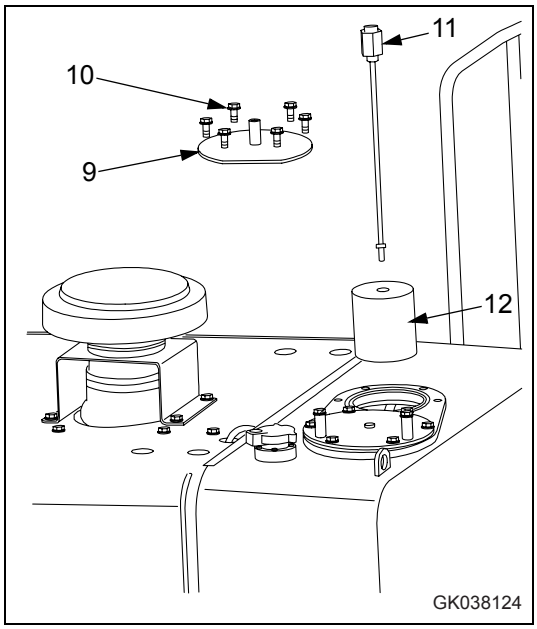

NOTE

If the engine is run immediately at high speed or the cylinder is operated to the end of its stroke, the air inside the cylinder will cause damage to the piston packing.

18. Next, operate the steering, bucket, and lift arm cylinders fully 3 - 4 times, then stop the engine and loosen air bleed plug (13). After bleeding the air from the hydraulic tank, tighten plug (13).

    Run the engine at low idling when bleeding the air.

19. Check the hydraulic oil level and add oil to the specified level.

    For details, see "Check oil level in hydraulic tank, add oil (4-56)".

20. Next, increase the engine speed and repeat the procedure in Step 18 to bleed the air. Continue this operation until no more air comes out from plug (13).

21. After completing the air bleed operation, tighten plug (13).

    Tightening torque: 11.3 ± 1.5 Nm

22. Check the hydraulic oil level and add oil to the specified level.

    For details, see "Check oil level in hydraulic tank, add oil (4-56)".

23. Check that there is no leakage of oil from the filter cover mount.

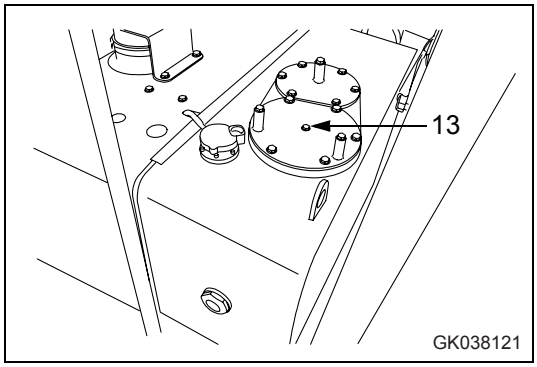

Replace hydraulic tank breather element

WARNING

- The parts and oil are at high temperature after the engine is stopped, and may cause burns. Wait for the temperature to go down before starting the work.
- When removing the oil filler cap, turn it slowly to release the internal pressure, then remove it.

1. Before removing the breather, wipe off all the dirt from around the breather.
2. Remove the cap of oil filler (F).
3. Remove breather (1) built into the cap.
4. Replace the filter element (2) built into the breather with a new part, then install breather (1) to the cap.
5. Tighten the cap of oil filler (F).

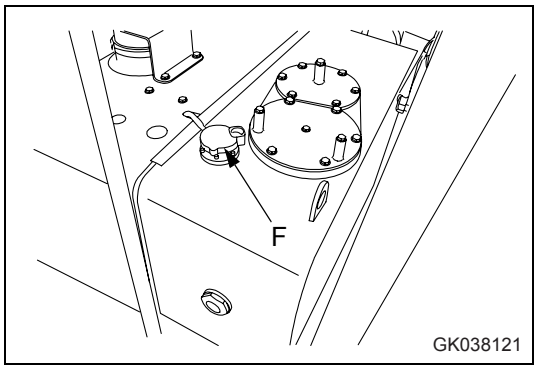

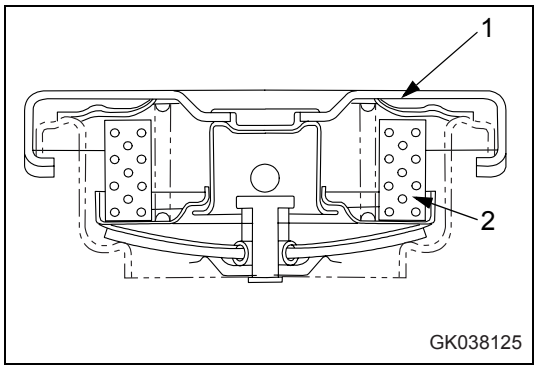

Change axle oil

WARNING

- When changing the oil, apply the parking brake and secure the front and rear frames with the safety bar.
- After the engine is stopped, the parts and oil are at high temperature, and may cause burns. Wait for the temperature to go down before starting the operation.
- When the plug is removed, oil may spurt out, so turn it slowly to release the internal pressure, then remove it carefully.

Refill capacity front: 40 liters

Refill capacity rear: 40 liters

- A: Front
- B: Rear

1. Set a container to catch the oil under drain plug (P).
2. Remove front and rear oil filler plugs (1), then remove drain plug (P) to drain the oil.

REMARK

Remove the mud and dirt from around plug (1), then remove the plug.

3. After draining the oil, clean drain plug (P) and install it again.
4. Add axle oil through plug hole (1) at the refill level.

REMARK

For axles with ASD (Limited-Slip Differential), the brand of lubricating oil is different, so always use the specified lubricating oil.

5. After adding oil, check at level plug (1) that the oil is at the specified level.

   For details, see "Check axle oil level, add oil (4-40)".

REMARK

For operations where the brake is used frequently, change the axle oil at shorter intervals.

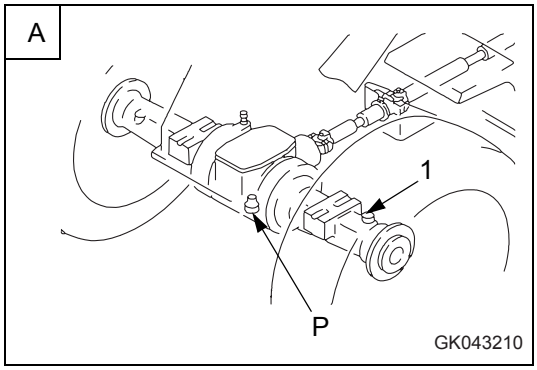

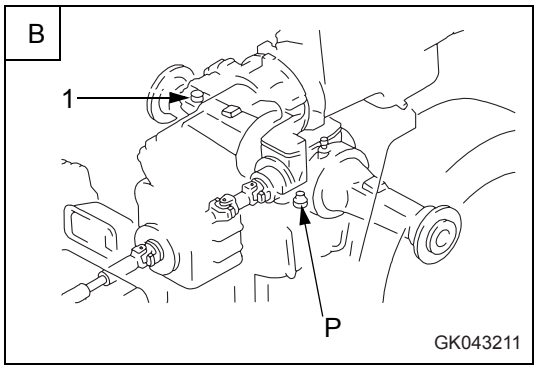

Replace element in air conditioner recirculation air filter, fresh air filter

Remove both the recircuration air filter and fresh air filter in the same way as when cleaning, and replace them with new parts.

For details of cleaning the recircuration air filter, see "Clean element in air conditioner recirculation filter (4-63)".

For details of cleaning the fresh air filter, see "Clean element in air conditioner fresh air filter (4-57)".

Check brake disc wear

WARNING

- When checking the brake disc wear, apply the parking brake and secure the front and rear frames with the safety bar.
- Make sure that the brake oil temperature is less than 60°C before checking the brake wear.
- If the disc is near the wear limit, carry out inspection at shorter intervals, regardless of the specified inspection interval.

When checking the brake disc for wear, there are 4 places (front axle and rear axle, left and right), so use the same procedure to check all 4 places.

1. Remove cap nut (1).

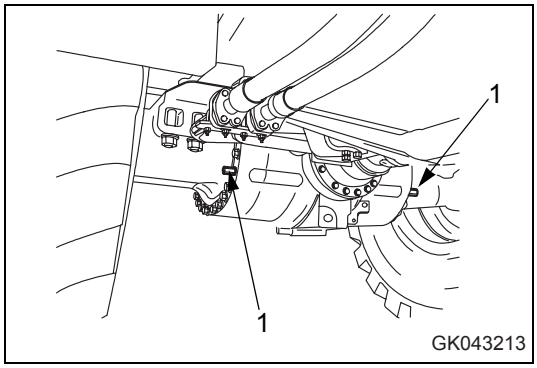

2. Depress the brake pedal and push in rod (2) fully.
3. Amount of wear (A) is the amount that end face (C) of the rod protrudes from end face (D) of the guide. Measure the amount of protrusion.

   Permitted wear limit (B) of the disc is the point where groove (E) of the rod is in line with end face (D) of the guide.

   When this point is reached, please ask your KOMATSU distributor to carry out inspection and replacement of parts.

   If the disc is near the wear limit, carry out inspection at shorter intervals, regardless of the specified inspection interval.

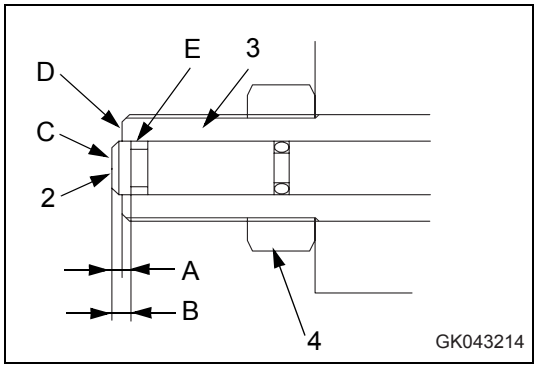

4. Install cap nut (1).

   Tightening torque: 29.4 to 39.2 Nm

REMARK

On new machines, the position of the guide is adjusted so that the end face of rod (2) comes to the end face of guide (3). For this reason, do not loosen locknut (4) except when replacing the disc.
Carry out the operation with two workers: one worker depresses the brake pedal and the other worker pushes in rod (2).

Checking function of accumulator

For details of handling the accumulator, see "Accumulator (2-36)".

PPC accumulator

If the engine stops with the work equipment raised, and it is impossible to start the engine again, it is possible as an emergency measure to actuate the valve with the oil pressure stored in the accumulator and lower the work equipment to the ground.

1. Apply the parking brake.
2. Raise the work equipment to the maximum height, then operate the lift arm control lever to HOLD position (b).
3. Stop the engine.
4. Leave the work equipment lock lever in the FREE position.
5. Check that the area around the machine is safe, then operate the lift arm control lever to FLOAT position (d) and lower the work equipment to a point 1m above the ground.

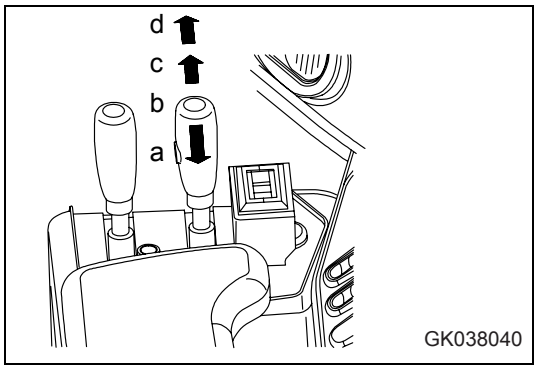

6. When the lift arm comes to the 1 m position, return the lift arm control lever to LOWER position (c), and lower the work equipment slowly to the ground.

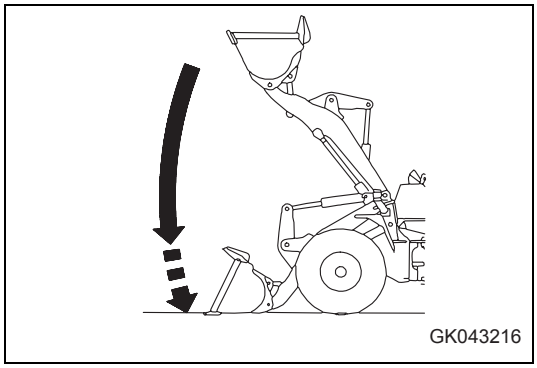

REMARK

Carry out the check within 2 minutes after stopping the engine. If the machine is left with the engine stopped, the accumulator pressure will drop and it will be impossible to check the cause of the problem.

If the work equipment stops while it is moving, the gas pressure in the accumulator has probably dropped.

Please contact your KOMATSU distributor to have the accumulator inspected.

Replace the accumulator every 4000 hours or every 2 years.

Check alternator, starting motor

The brush may be worn or have no grease on the bearing, so contact your KOMATSU distributor for inspection or repair.

If the engine is started frequently, carry out inspection every 1000 hours.

Check engine valve clearance, adjust

As special tool is required for removing and adjusting the parts, request your KOMATSU distributor for service.

Check vibration damper

Check that there are no cracks or peeling in the outside surface of the rubber.

If any cracks or peeling are found, contact your KOMATSU distributor to have the parts replaced.

4.9.12 Every 4000 hours service

Maintenance for every 50, 100, 250, 500, 1000 and 2000 hours service should be carried out at the same time.

Lubricating

Carry out the greasing once every two years, regardless of whether the 4000 hour interval has passed.

1. Using a grease pump, pump in grease through the grease fittings marked by the arrows.
2. After greasing, wipe off any old grease that was pushed out.
3. When lubricating, stop the drive shaft so that the grease fitting of center drive shaft spline (1) will be as shown in the figure and supply grease from under the machine.

   At this time, the grease fitting is at the position indicated by the arrow at the circle below seen from the rear of the machine.

(1) Center drive shaft spline (1 place)

View from rear of machine

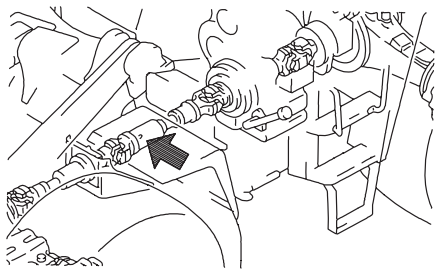

GK043217

(2) Front drive shaft (2 places)

View from rear of machine

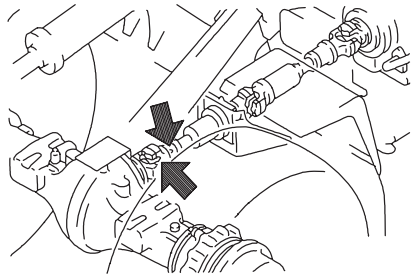

GK043218

(3) Rear drive shaft (2 places)

View from rear of machine

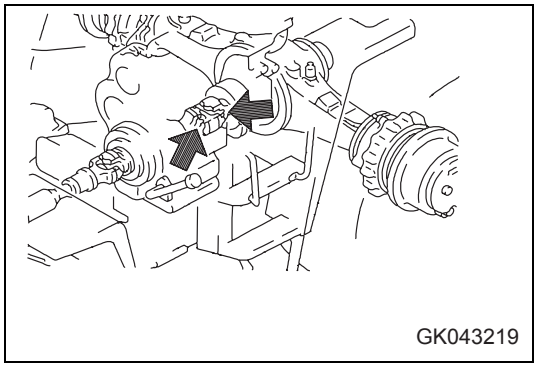

(4) Center drive shaft (2 places)

View from rear of machine

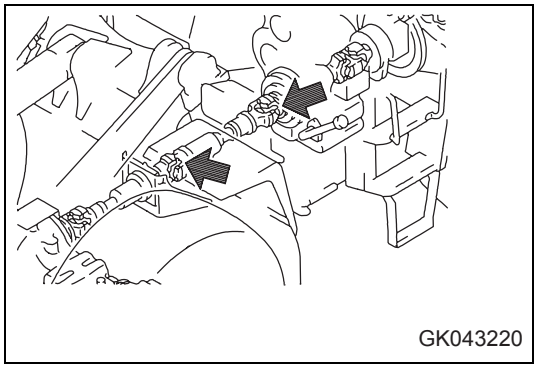

Check water pump

Check that there is no play in the pulley or any grease leakage, water leakage, or clogging of the drain hole. If any abnormality is found, contact your KOMATSU distributor for disassembly and repair or replacement.

Check air conditioner compressor, adjust

As special tool is required for checking and adjusting the parts, request KOMATSU distributor for service.

Checking for looseness of high-pressure clamp, hardening of rubber

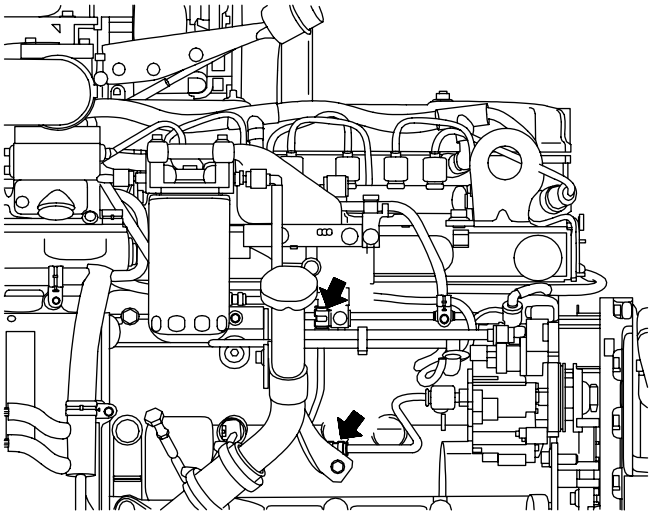

Check visually and touch by hand to check that there is no hardening of the rubber and no loose bolts of the mounting clamps (2 places) for the high-pressure piping between the supply pump and the common rail.

If there are any problems, the parts must be replaced. In this case, please ask your KOMATSU distributor to carry out replacement.

Checking for missing fuel spray prevention cap, hardening of rubber

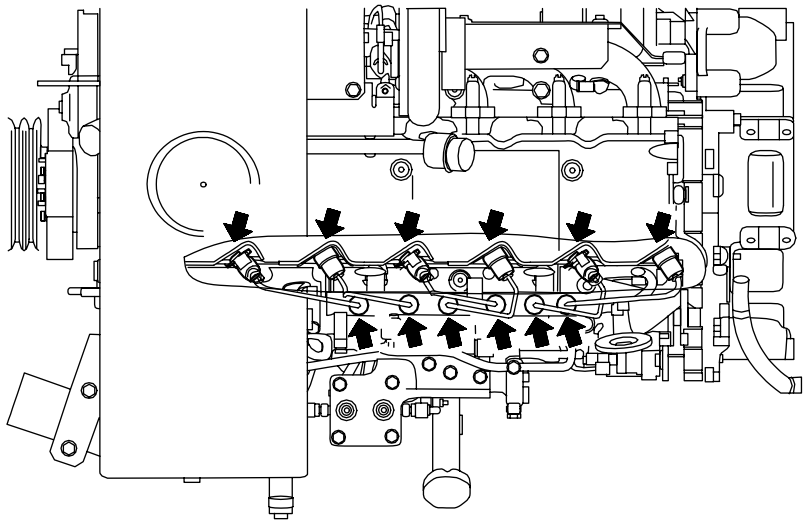

The fuel spray prevention caps (12 places) on the fuel injection piping and both ends of the high-pressure piping act to prevent the fuel from coming into contact with high-temperature parts of the engine and causing a fire if the fuel should leak or spray out. Check visually and touch by hand to check that there are no missing caps, loose bolts or hardening of the rubber.

If there are any problems, the parts must be replaced. In this case, please ask your KOMATSU distributor to carry out replacement.

4.9.13 Every 8000 hours service

Maintenance for every 50, 250, 500, 1000, 2000 and 4000 hours service should be carried out at the same time.

Replace high-pressure piping clamp

Ask your KOMATSU distributor to carry out this work.

Replace injector nozzle tip

For details see "Replace injector assembly (4-30)".

5. Technical Data

5.1 Technical data

	Item			Unit	WA380-6H standard specification machine (when using POWER mode)
	Operating weight (including 1 operator: 80 kg) (with bolt on cutting edge).			kg	17,580
	Normal load			kg	5,280
	Bucket capacity	Heaped		m³	3.3 (2.5)
	Engine model			-	KOMATSU SAA6D107E-1
	Flywheel horsepower			kW (HP)/ rpm	142 (191)/2,100
A	Overall length			mm	8,111
B	Overall height			mm	3,361
C	Max. dimension when shaking bucket			mm	5,456
D	Overall width			mm	2,762
E	Min. ground clearance			mm	455
F	Bucket width			mm	2,916
G	Clearance	Cutting edge [BOC tip]		mm	3,035 [2,950]
H	Reach	Cutting edge [BOC tip]		mm	1,105 [1,150]
I	Dump angle			degrees	49
	Min. turning radius	Cutting edge [BOC tip]		mm	7,190 [7,220]
		Center of outside tire		mm	6.320
	Permissible towing load			kg (N)	165 (16,800)
	Travel speed	Forward	1st	km/h	6.6 (4.1)
			2nd	km/h	11.5 (7.2)
			3rd	km/h	20.2 (12.6)
			4th	km/h	34.0 (21.3)
		Reverse	1st	km/h	7.1 (4.4)
			2nd	km/h	12.3 (7.7)
			3rd	km/h	21.5 (13.4)
			4th	km/h	35.5 (22.2)
	Hydraulic pressure	Lift circuit Tilt circuit Third control circuit		bar	210

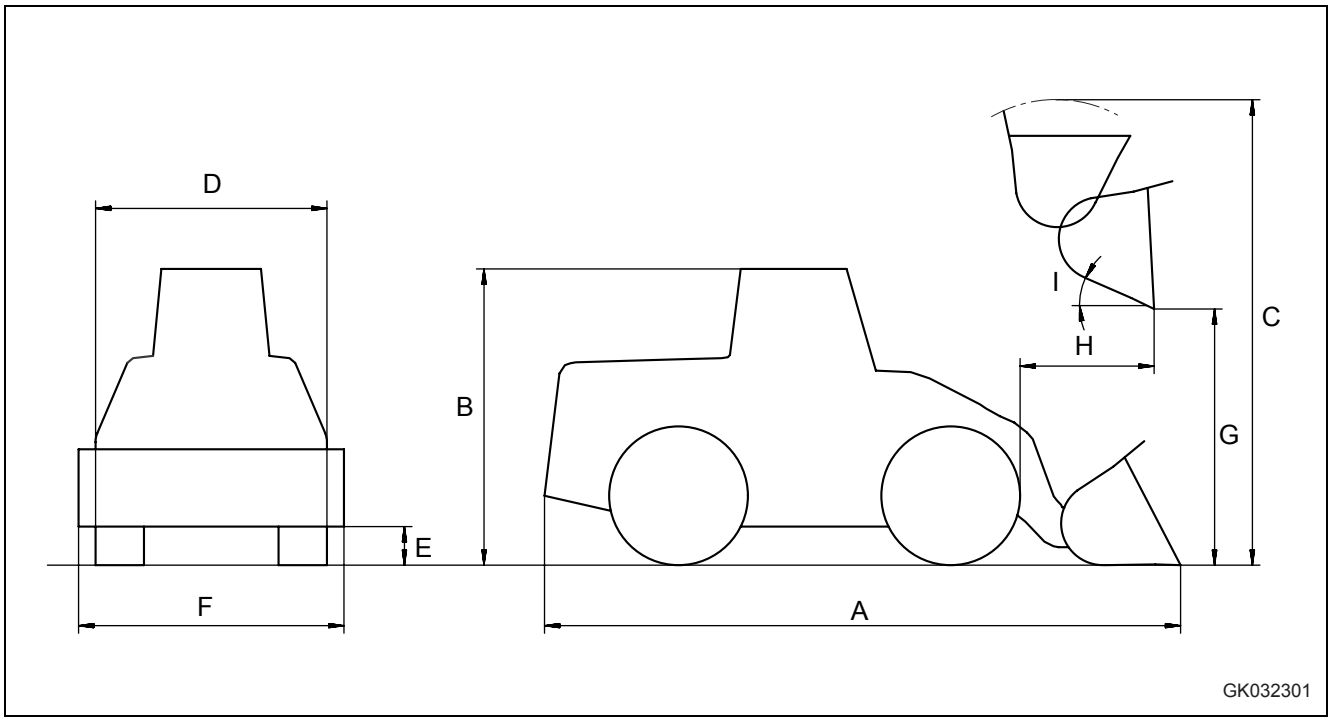
D
B
E
F
A
I
H
C
G
GK032301

5.2 Noise emission levels

Two signs are attached to the machine that state the noise level produced.

- Sound pressure level at the operator's station, measured according to ISO6396 (Dynamic test method, simulated working cycle).

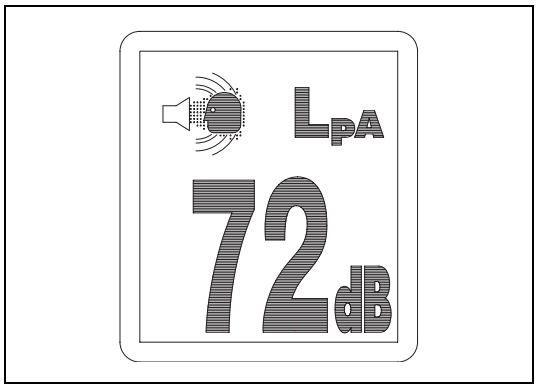

- Sound power level emitted by the machine, measured according to ISO 6395 (Dynamic test method, simulated working cycle). This is the guaranteed value as specified in European directive 2000/14/EC

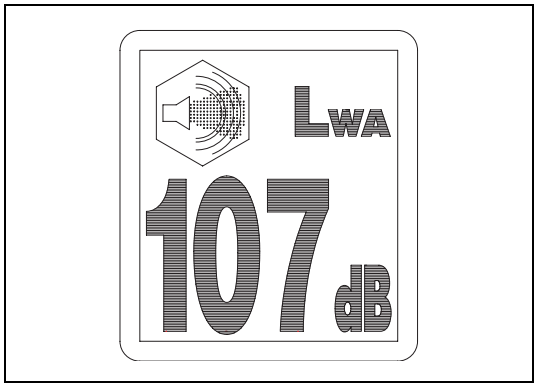

5.3 Vibration level

When used for its intended purpose, levels of vibration for the earthworking machine transmitted from the operator's seat are lower or equal to the test vibrations for the relative machinery class in compliance with ISO 7096.

The actual accelaration value of the upper limbs is less than 2.5 m/s². The actual acceleration value for the body is less than 0.5 m/s².

These values were determined using a representative machine and measured during the typical operating condition indicated below according to the measurement procedures that are defined in the standards ISO 2631/1 and ISO 5349.

Operating condition: V-shape loading

Guide to reduce vibration levels on machine

The following guides can help an operator of this machine to reduce the whole body vibration levels:

1. Use the correct equipment and attachments.
2. Maintain the machine according to this manual
   - Tire pressures (for wheeled machines), tension of crawler (for crawler machines)
   - Brake and steering systems
   - Controls, hydraulic system and linkages
3. Keep the terrain where the machine is working and traveling in good condition
   - Remove any large rocks or obstacles
   - Fill any ditches and holes
   - Site manager should provide machine operators with machine and schedule time to maintain terrain conditions
4. Use a seat that meets ISO 7096 and keep the seat maintained and adjusted
   - Adjust the seat and suspension for the weight and size of the operator
   - Wear seat belt
   - Inspect and maintain the seat suspension and adjustment mechanisms
5. Steer, brake, accelerate, shift gears (for wheeled machines), and move the attachment levers and pedals slowly so that the machine moves smoothly

6. Adjust the machine speed and travel path to minimize the vibration level
   - When pushing with bucket or blade, avoid sudden loading; load gradually
   - Drive around obstacles and rough terrain conditions
   - Slow down when it is necessary to go over rough terrain
   - Make the curve radius of traveling path as large as possible
   - Travel at low speed when traveling around sharp curves
7. Minimize vibrations for long work cycle or long distance traveling
   - Reduce speed to prevent bounce
   - Transport machines long distances between worksites
8. The following guidelines can be effective to minimize risks of low back pain
   - Operate the machine only when you are in good health.
   - Provide breaks to reduce long periods of sitting in the same posture
   - Do not jump down from the cab or machine
   - Do not repeatedly handle and lift loads

5.4 Limit values for slopes

Maximum slope angle for machine operation

If operating the machine on a slope, its angle must not exceed 25° uphill, 35° downhill or 16° sideways. If you angle the machine at more than 35° during operation, the motor, transmission, hydraulic system or axles, will not be supplied with sufficient oil and can be damaged.

A	uphill	25°
B	downhill	35°
C	sideways	16°

Tipping angle, theoretically

The tipping angle is a calculated value. This states the angle at which the machine at rest can stand on a slope without tipping over. You must not work with the machine at these angles as the motor, transmission, hydraulic system or axles, will not be supplied with sufficient oil and can be damaged. The specified angle refers to the transport position. The angle changes if you raise or lower the work unit.

A	uphill with operating load	61.9°
	uphill without operating load	52.4°
B	downhill with operating load	36.0°
	downhill without operating load	54.0°
C	lateral with operating load	40.4°
	lateral without operating load	41.2°

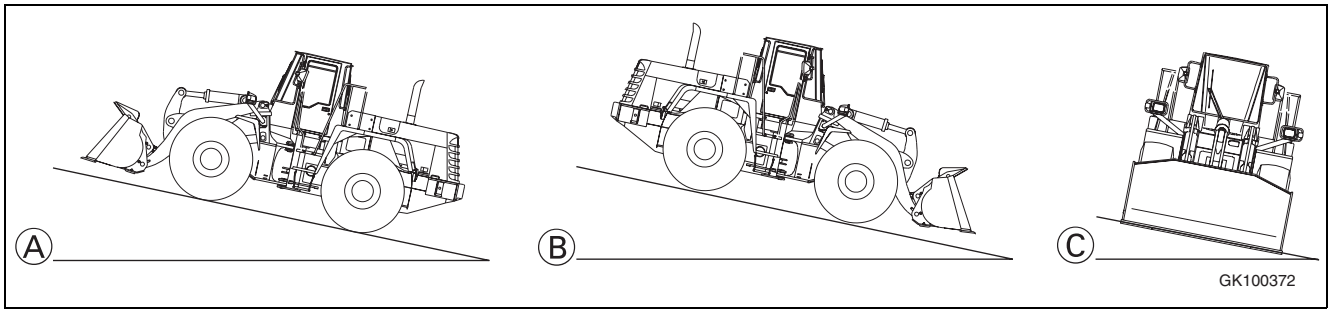

6. Attachments, Options

WARNING

Please read and make sure that you understand the SAFETY section before reading this section.

6.1 Selecting bucket and tires

Select the most suitable bucket and tires for the type of work and the ground conditions on the jobsite.

Type of work	Bucket	Ground conditions	Tire
Loading and carrying products	Stockpile bucket (with bolt-on cutting edge) 3.1 m³ Sockpile bucket (without teeth) 3.1 m³ Light material bucket (with bolt-on cutting edge) 4.5 m³	General ground conditions	23.5-25-16PR (L3 Rock)
		Leveled ground	23.5-25-16PR (L2 Traction)
		Soft ground	23.5-25-16PR (L2 Traction)
Loading products and crushed rock	Excavating bucket (with segment edge) 3.0 m³	General ground conditions	23.5-25-20PR (L3 Rock)
		Soft ground	23.5-25-16PR (L3 Rock)
		Ground with many light rocks	23.5-25-16PR (L3 Rock)
		Soft ground with many light rocks	23.5-25-16PR (L3 Rock)

BOC indicates a bolt-on type cutting edge.

When installing optional tires, please contact your KOMATSU distributor.

6.2 Handling torque converter lock-up

WARNING

When traveling down slopes of a grade of more than 6°, never depress the accelerator pedal fully, regardless of whether the torque converter lock-up switch is ON or OFF. It is extremely dangerous to drive too fast.

The travel speed shown in this section is the value when the tire size is 23.5-20. The travel speed when the tire size is 20.5-20 is shown in { }.

The travel speed is subject to the using condition and road condition.

NOTE

- *To prevent overrunning when traveling at high speed in the following cases, do not shift down gear.*
- *When traveling in F3 at a speed of more than 18 km/h {16 km/h}, do not shift down to F2.*
- *When traveling in F4 at a speed of more than 28 km/h {26 km/h}, do not shift down to F3.*

When the actual speed range is 3rd or 4th in either FORWARD or REVERSE, the torque converter lock-up function is actuated according to the travel speed and sets to direct drive.

To prevent overrun, the lock-up is automatically canceled to prevent the travel speed from going above 40 km/h {36.5 km/h}.

6.2.1 General locations

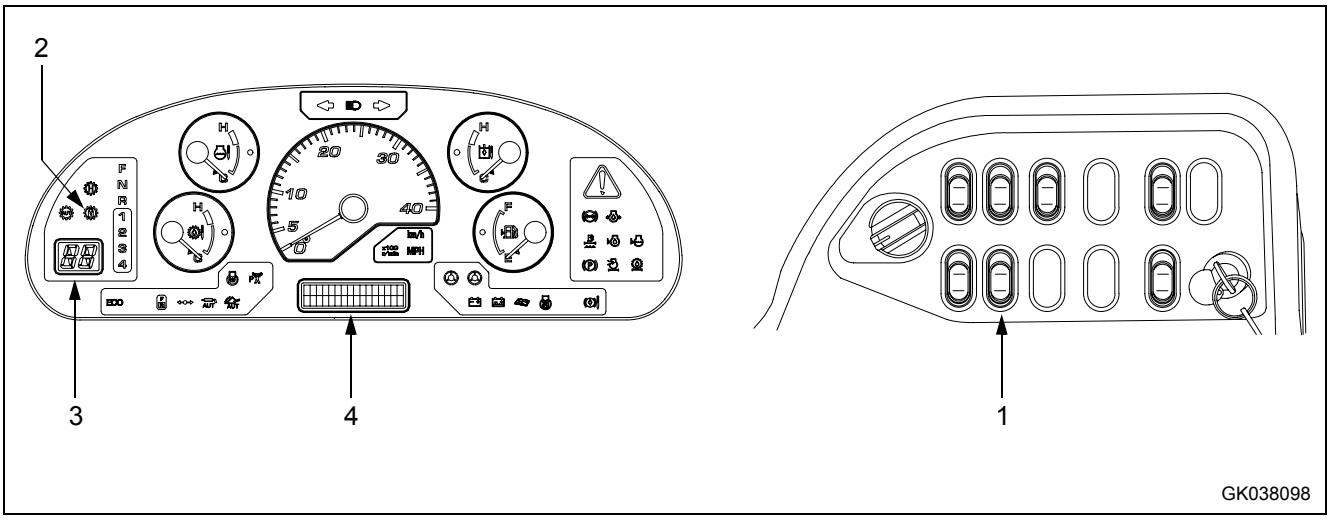

(1) Torque converter lock-up switch
(2) Torque converter lock-up pilot lamp
(3) Shift indicator (displays actual speed range)
(4) Character display

1. Torque converter lock-up switch

This switch (1) is the control switch for the torque converter lock-up function.

Position (a): ON

The pilot lamp inside the switch lights up and the lock-up is actuated according to the travel speed. While the lock-up is engaged, the lock-up pilot lamp on the machine monitor lights up.

Position (b): OFF

The lock-up does not function.

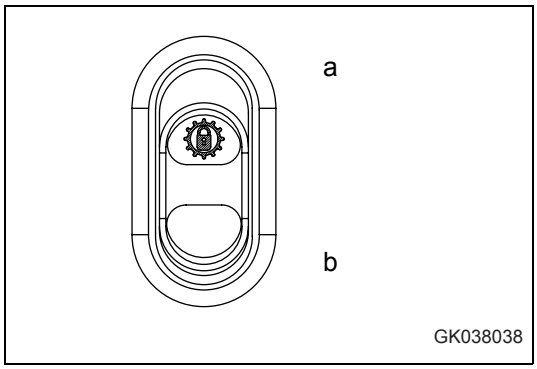

2. Torque converter lock-up pilot lamp

This monitor (2) lights up when the torque converter lock-up is engaged and the transmission actually enters direct drive.

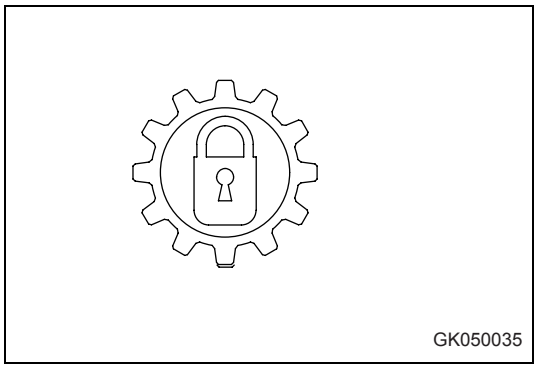

3. Shift indicator

For details, see "Shift indicator (3-29)"

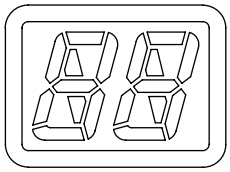

GK043113

4. Character display

For details, see "Character display portion (3-10)"

E 0 0
O V E R R U N P R O T E C T

6.2.2 Method of operation

1. Press the top (a) of the torque converter lock-up switch to turn it ON.

   The pilot lamp inside the switch lights up.

2. When the actual speed range is 3rd or 4th in either FORWARD or REVERSE, the torque converter lock-up function is actuated according to the travel speed and sets to direct drive.

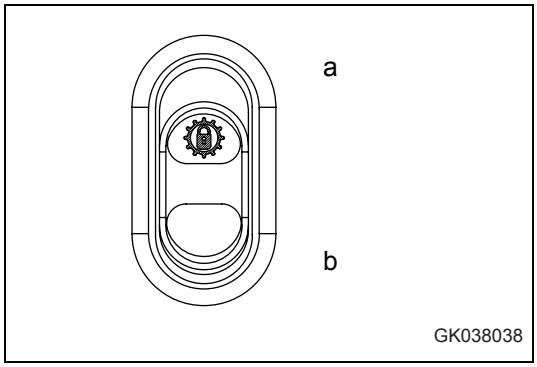

REMARK

When the gearshift lever is at 4th in auto-shift mode, the lock-up is not actuated if the actual speed range is 3rd. The lock-up is actuated only when the actual speed range is 4th.

When the lock-up is actually actuated, the lock-up pilot lamp on the machine monitor lights up.

3. To cancel the lock-up, press the bottom (b) of the torque converter lock-up switch to turn it OFF.

   The lock-up is canceled.

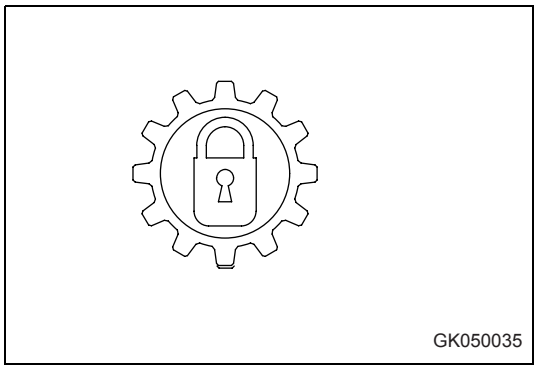

The travel speed for actuation and cancellation of the lock-up is as shown below.

	Lock-up			
Speed range	FORWARD travel speed (km/h)		REVERSE travel speed (km/h)	
	Actuated	Canceled	Actuated	Canceled
3rd	13 to 15 {12 to 14}	13 to 14 {12 to 13}	14 to 16 {13 to 15}	14 to 15 {13 to 14}
4th	22 to 25 {20 to 23}	21 {19}	23 to 27 {21 to 25}	23 {21}

6.2.3 Warning/limit functions for travel speed

Travel speed warning function

(This functions even when the torque converter lock-up switch is OFF.)

When the travel speed goes above 40 km/h {36.5 km/h}, the central warning lamp lights up and the alarm buzzer sounds.

At the same time, “E00 OVERRUN PROTECT“ is displayed on the character display.

If the alarm buzzer sounds, depress the brake immediately to slow the machine down.

When the travel speed goes below 39.5 km/h {36 km/h}, the alarm buzzer stops.

Travel speed limit function

(This functions only when the torque converter lock-up switch is ON.)

To prevent the travel speed from going above 40 km/h {36.5 km/h}, the lock-up is automatically canceled.

The lock-up cancel continues until the travel speed goes below 38 km/h {35 km/h}.

6.3 Handling machines equipped with KOMTRAX

KOMTRAX is a machine management system that uses wireless communications.

A contract with your KOMATSU distributor is necessary before the KOMTRAX system can be used. Any customers desiring to use the KOMTRAX system should consult their KOMATSU distributor.

The KOMTRAX equipment is a wireless device using radio waves, so it is necessary to obtain authorization and conform to the laws of the country or territory where the machine equipped with KOMTRAX is being used. Always contact your KOMATSU distributor before selling or exporting any machine equipped with KOMTRAX.

When selling or exporting the machine or at other times when your KOMATSU distributor considers it necessary, it may be necessary for your KOMATSU distributor to remove the KOMTRAX equipment or to carry out action to stop communications.

If you do not obey the above precautions, neither KOMATSU nor your KOMATSU distributor can take any responsibility for any problem that is caused or for any loss that results.

6.3.1 Basic precautions

WARNING

- Never disassemble, repair, modify, or move the communications terminal, antenna, or cables. This may cause failure or fire on the KOMTRAX equipment or the machine itself. (Your KOMATSU distributor will carry out removal and installation of KOMTRAX.)
- Do not allow cables or cords to become caught; do not damage or pull cables or cords by force. Short circuits or disconnected wires may cause failure or fire on the KOMTRAX equipment or the machine itself.
- For anyone wearing a pacemaker, make sure that the communications antenna is at least 22 cm from the pacemaker. The radio waves may have an adverse effect on the operation of the pacemaker.

NOTE

- *Even when the key in the starting switch of the KOMTRAX system is at the OFF position, a small amount of electric power is consumed. When putting the machine into long-term storage, take the action given in "Long-term storage (3-151)".*
- *Please contact your KOMATSU distributor before installing a top guard or other attachment that covers the cab roof.*
- *Be careful not to get water on the communications terminal or wiring.*

REMARK

The KOMTRAX system uses wireless communications, so it cannot be used inside tunnels, underground, inside buildings, or in mountain areas where radio waves cannot be received. Even when the machine is outside, it cannot be used in areas where the radio signal is weak or in areas outside the wireless communication service area.
There is absolutely no need to inspect or operate the KOMTRAX communications terminal, but if any abnormality is found, please consult your KOMATSU distributor.

6.4 Joystick steering system

To enable you to use the joystick steering safely and efficiently, please read the following before using it.

6.4.1 Components

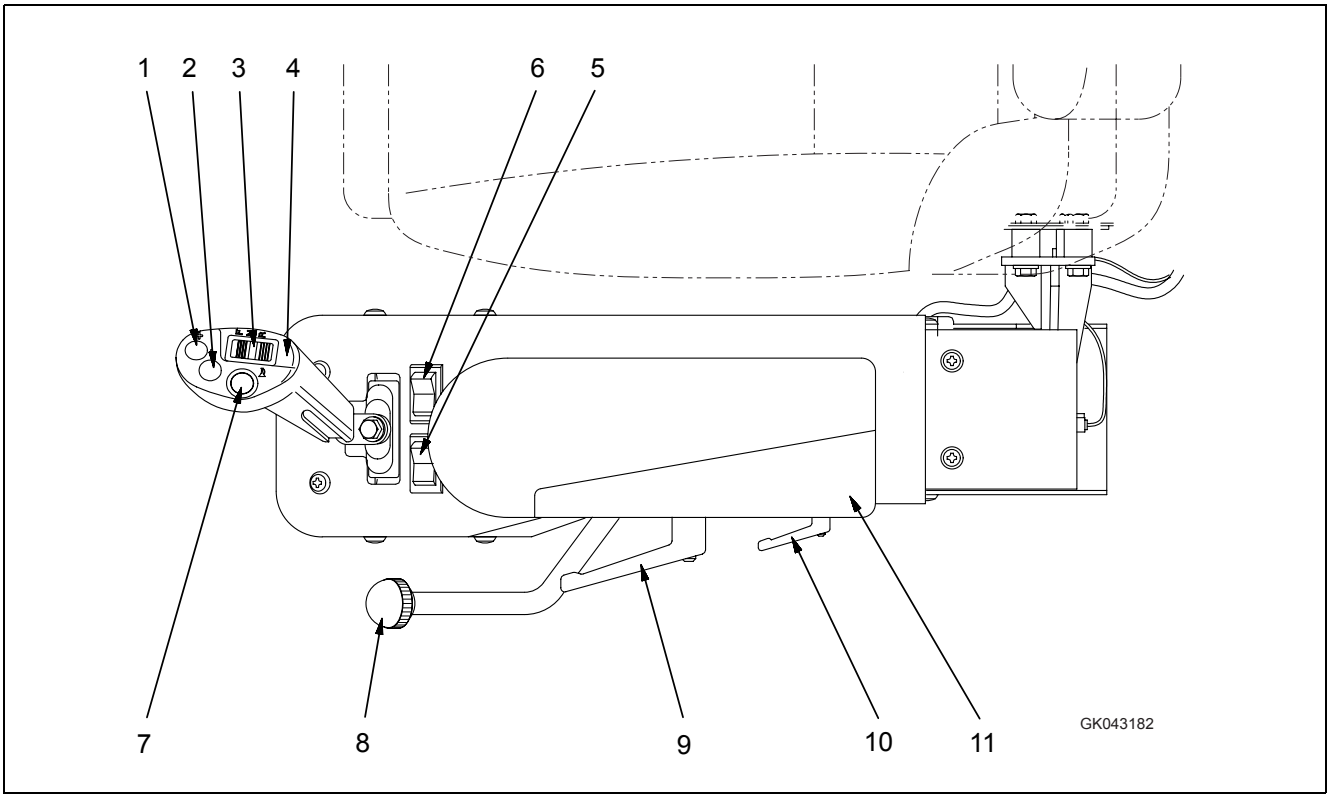

(1) Shift up switch
(2) Shift down switch
(3) FNR switch
(4) Joystick steering lever
(5) Joystick ON/OFF switch
(6) HI/LOW selector switch
(7) Horn switch
(8) Console lock lever
(9) Height adjustment lock lever
(10) Angle, fore/aft adjustment lock lever
(11) Console

1. Shift up, shift down switch

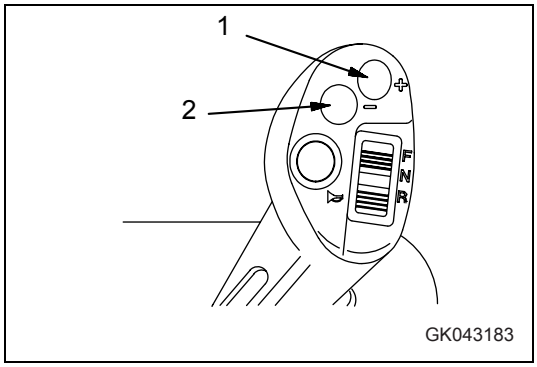

This switches (1) an (2) are used when shifting up or down, regardless of whether the transmission is in the manual shift mode or auto shift mode.

Press (1): Shift up

Press (2): Shift down

2. F-N-R Switch

The F/N/R switch (3) at the top of the joystick steering lever is used to switch the transmission between FORWARD and REVERSE.

(F) position: FORWARD

(N) position: NEUTRAL

(R) position: REVERSE

Use the shift up and shift down switches at the top of the joystick to change the speed range.

3. Joystick steering lever

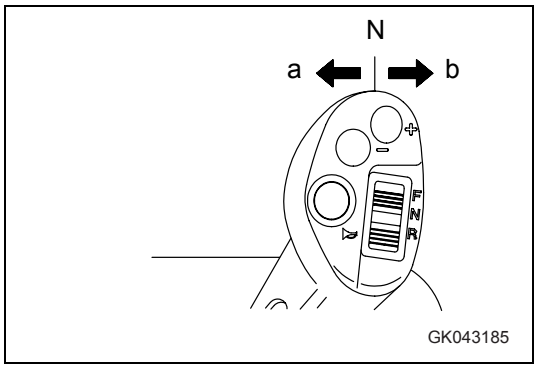

Use this lever (4) to steer the machine to the left or right.

When traveling, operate this lever in the direction to turn the machine.

(a): Left turn

(b): Right turn

(N): Neutral

4. Joystick on/off switch

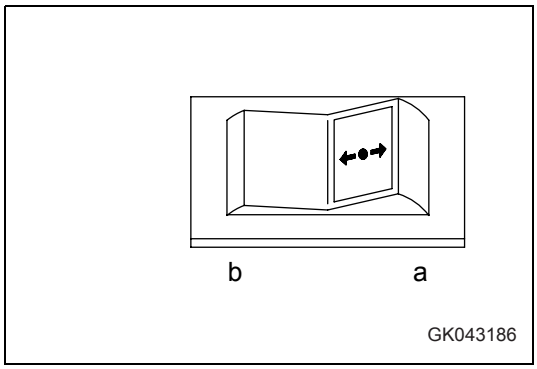

When this switch (5) is turned ON, the joystick steering is switched ON.

Position (a): ON (possible to steer with joystick)

Position (b): OFF (impossible to steer with joystick)

5. HI/LOW Selector switch

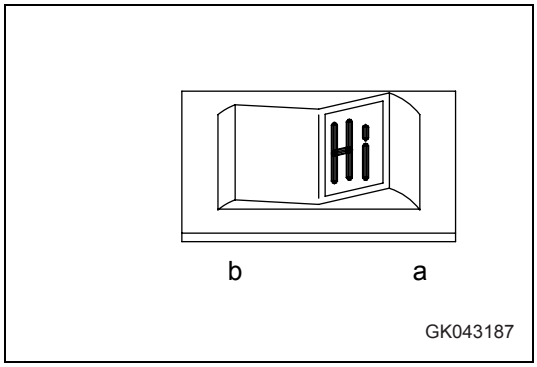

This switch (6) is used to switch the steering speed between HIGH and LOW.

Position (a): HI

The articulating speed of the machine is high in relationship to the operation of the joystick, so this setting is suitable for comparatively fast cycle times.

Position (b): LOW

The articulating speed of the machine is low in relationship to the operation of the joystick, so this setting is suitable for operations loading loose materials and materials that easily spill.

6. Horn switch

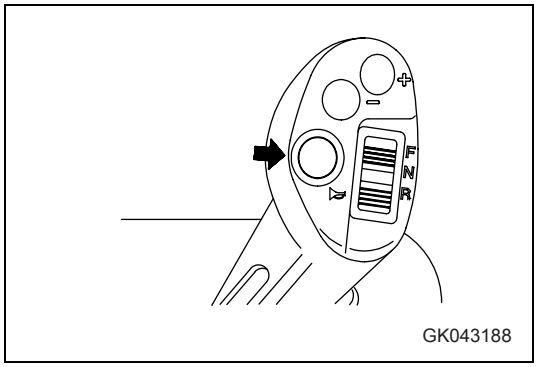

Press this switch (7) at the top of the joystick to sound the horn.

By using this switch, it is possible to sound the horn without taking your hand off the joystick.

7. Console lock lever

For details of this lever (8), see "Adjust lever stand (3-94)".

8. Height adjustment lock lever

For details of this lever (9), see "Adjust lever stand (3-94)".

9. Angle, fore/aft adjustment lock lever

For details of this lever (10), see "Adjust lever stand (3-94)".

6.4.2 Structure and function

The joystick steering system is a system used to steer wheel loaders with a lever instead of a steering wheel.

The joystick enables steering with small, light movements, and helps to reduce operator fatigue.

When joystick ON/OFF switch (1) is turned ON, it becomes possible to operate the steering with the joystick.

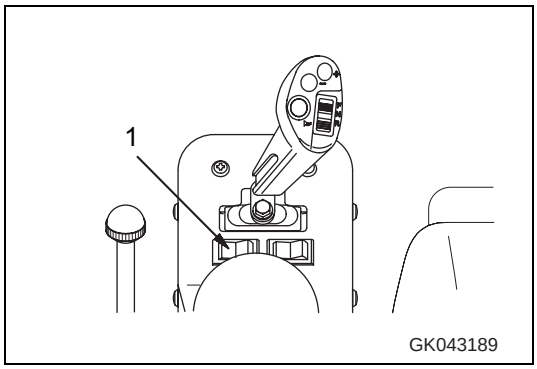

When the joystick steering is in use, the joystick pilot lamp on the machine monitor lights up.

On machines equipped with the joystick steering system, it is possible to use joystick ON/OFF switch (1) to select the steering and transmission operation method as shown in the table below.

In addition, on machines equipped with joystick steering, the transmission auto shift function is also included.

The differences between operation using the joystick and operation using the steering wheel are as follows.

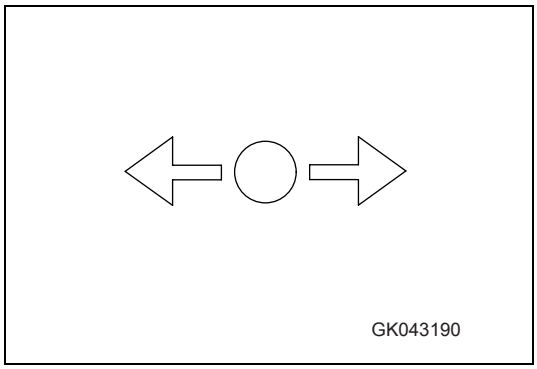

Selection		Operation using joystick		Operation using steering wheel	
Joystick ON/OFF switch		ON		OFF	
Steering		Steering using joystick (steering with steering wheel is also possible)		Steering using steering wheel	
Transmission	F/N/R	Operation using FNR switch at top of joystick		Operation using transmission directional lever	
	Transmission type	Auto		Auto	
	Shift mode selector switch	Manual	Auto (L, M, H)	Manual	Auto (L, M, H)
	Selection of speed range	Speed range selection using shift up, shift down switches at top of joystick*	Automatic gear-shifting according to travel speed	Operation using gearshift lever	Automatic gear-shifting according to travel speed

*: Does not shift up above speed range of gearshift lever.

Operation using joystick lever and operation using steering wheel

CAUTION

- If the directional lever and joystick FNR switch are not at the neutral position, the neutral interlock circuit makes it impossible to switch the transmission directional control (when the joystick ON/OFF switch is ON, it is switched from the directional lever to the joystick FNR switch; when the joystick ON/OFF switch is OFF, it is switched from the joystick FNR switch to the directional lever).
- Do not use the joystick when traveling on public roads.

Select joystick operation or steering wheel operation according to the work.

Steering using joystick

This is suited for continuous loading operations on jobsites with ample space where the loading operation can be carried out with a comparatively relaxed cycle time.

Because operations can be carried out with a small movements and light operating effort, this is also suitable for reducing operator fatigue when operating continuously.

Steering using steering wheel

This provides excellent fine control and ability to travel straight, so it is suitable for travel between jobsites and for load and carry operations. In addition, it is also suitable for short cycle loading operations because the upper part of the operator's body is supported by the steering wheel when frequently switching between FORWARD and REVERSE.

Getting in or out

WARNING

Always spring the joystick console up before getting in or out of the operator's cab.
If the console is sprung up, the safety switch is turned OFF and the joystick is automatically stopped from operating.

The joystick console is a spring-up type to make it easier for the operator to get in and out of the operator's cab.

If the joystick is moved accidentally when the engine is running, the machine may articulate unexpectedly. To prevent this danger, always spring the joystick console up when not using the joystick for operations and when getting in or out of the operator's cab.

1. Set lock lever (1) to the FREE position.
2. Spring console (2) up.

   Turn it at least 90 degrees.

   The safety switch is turned OFF and the joystick cannot be operated.
3. When operating, lower joystick console (2) and push lock lever (1) down to the LOCK position. The safety switch is turned ON and the joystick can be operated.

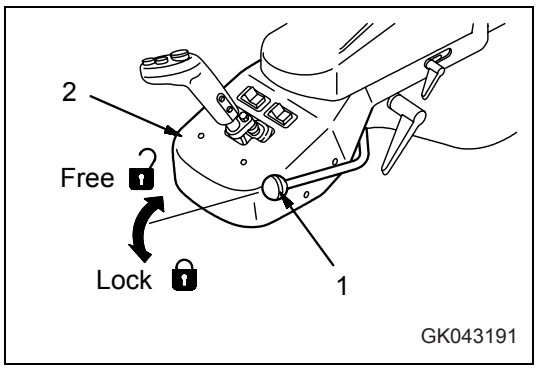

Adjustment of joystick console

WARNING

- Stop the machine on level ground in a safe place when carrying out the adjustment.
- Carry out the adjustment before starting operations or when changing operator shifts.
- Put your back against the backrest of the operator's seat and adjust the seat so that it is possible to depress the brake fully, then adjust the console.

Adjusting height

1. Operate lever (1) in the cancel direction and loosen the lock.
2. Adjust the height of the console and set joystick (2) to the desired position.

   Amount of adjustment: 30 mm
3. After setting, operate lever (1) to the LOCK position to lock the console securely in position.

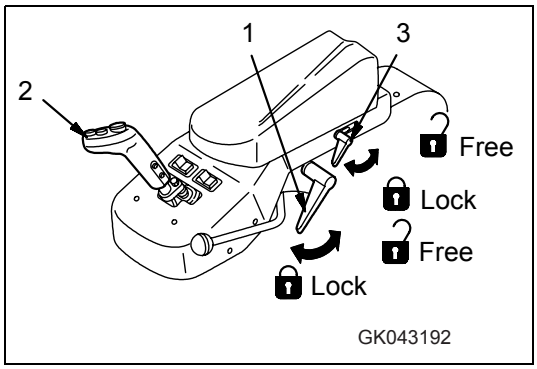

Adjusting angle, fore/aft position

1. Operate lever (3) in the cancel direction and loosen the lock.
2. Adjust the console and set joystick (2) to the desired position.

   Amount of fore/aft adjustment: 45 mm
3. After setting, operate lever (3) to the LOCK position to lock the console securely in position.

6.4.3 Operation method of joystick steering system

WARNING

- It is dangerous to turn the machine suddenly at high speed, or to turn on steep hills. Do not operate the steering in such conditions.
- When turning, the articulation stops at the position where the steering wheel is turned to, but if the joystick is held in the tilted position, the body will articulate fully.
- The feeling when operating the steering with the joystick is different from when operating with the steering wheel, so be extremely careful until you have become used to operating the joystick.

Check the adjustment and operation before starting the engine. For details, see "Check before starting engine, adjust (3-81)".

1. Before starting the engine, check the operation of the joystick lever steering, check that the transmission directional lever is at N, and that the surrounding area is safe.

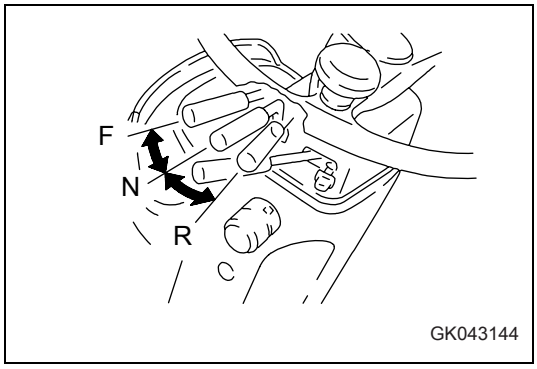

REMARK

Under the following conditions, a warning may be given when the engine is started.

- If the FNR switch on the joystick is at F or R, the joystick pilot lamp flashes, the central warning lamp lights up, and the alarm buzzer sounds.
- At the same time, “E00 J/S SW NEUTRAL“ is displayed on the character display. In this condition, the engine will not start, so set the FNR switch to N.
- If the joystick is not at the N position, the joystick pilot lamp flashes, the central warning lamp lights up, and the alarm buzzer sounds.
- At the same time, “E00 J/S LEVER POSI“ is displayed on the character display. In this condition, the engine will not start, so set the joystick to the N position.

2. Press the (a) part of the joystick ON/OFF switch to turn it ON.

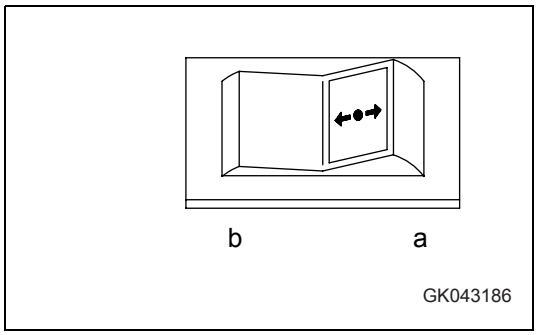

3. Operate the joystick in direction (b) to turn the machine to the right; operate it in direction (a) to turn the machine to the left.

   The greater the angle of operation, the faster the articulating speed becomes.

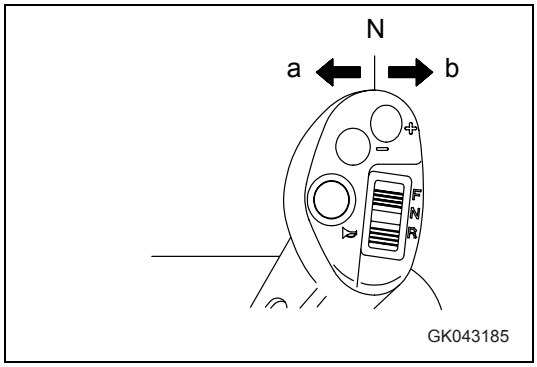

4. It is possible to switch the articulating speed with the HI/LOW selector switch.

   Select the speed to match the operation.

5. When the machine has articulated to the desired angle, return the joystick to the N position.

   The joystick will return automatically to the N position.

6. To return the direction of travel of the machine so that it travels in a straight line, operate the joystick in the opposite direction from the N position (for example, when the machine is articulated to the right, operate the joystick to the left).

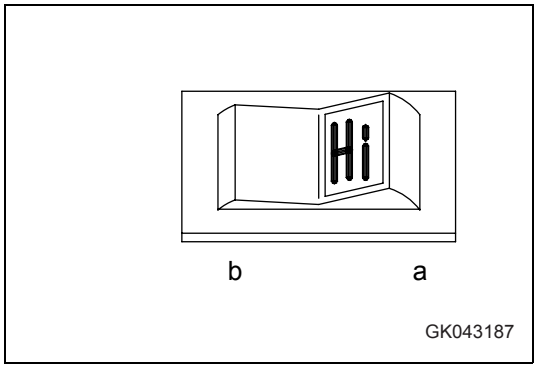

7. Use the FNR switch at the top of the joystick lever to set the transmission to the direction of travel.

   N position: NEUTRAL

   F position: FORWARD

   R position: REVERSE

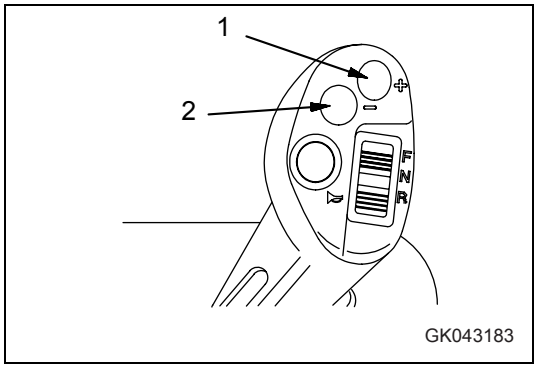

REMARK

If the position of the directional lever and the FNR switch are different, the joystick pilot lamp flashes, the warning lamp lights up, and the alarm buzzer sounds.
At the same time, "E00 SHIFT LEVER NEUTRAL" is displayed on the character display. In this condition, the machine will travel in the direction set by the directional lever, so set the directional lever to N.

8. To change the speed range, use shift up switch (1) or shift down switch (2) on the joystick.

REMARK

The joystick steering is unstable and dangerous to operate at high speeds, so it is set so that the machine cannot travel in 4th. When joystick operation is selected, if the gearshift lever is moved to 4th, or the joystick ON/OFF switch is turned ON when the gearshift lever is at 4th, the central warning lamp lights up and the alarm buzzer sounds.
At the same time, "E00 SHIFT LEVER" is displayed on the character display.
Set the gearshift lever within the range from 1st to 3rd.
In addition, when joystick operation is selected, for machines equipped with a torque converter lock up (option), the system is designed so that the machine does not travel at high speed even if the torque converter lock up switch is turned ON.

9. Press part (b) of the joystick ON/OFF switch to turn it OFF.

The joystick operation is then canceled.

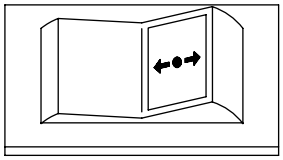

6.5 Multi-function lever (with/without auxiliary control lever)

6.5.1 Explanation of components

NOTE

Detail "A" shows machine equipment: multi-function lever with auxiliary control lever.

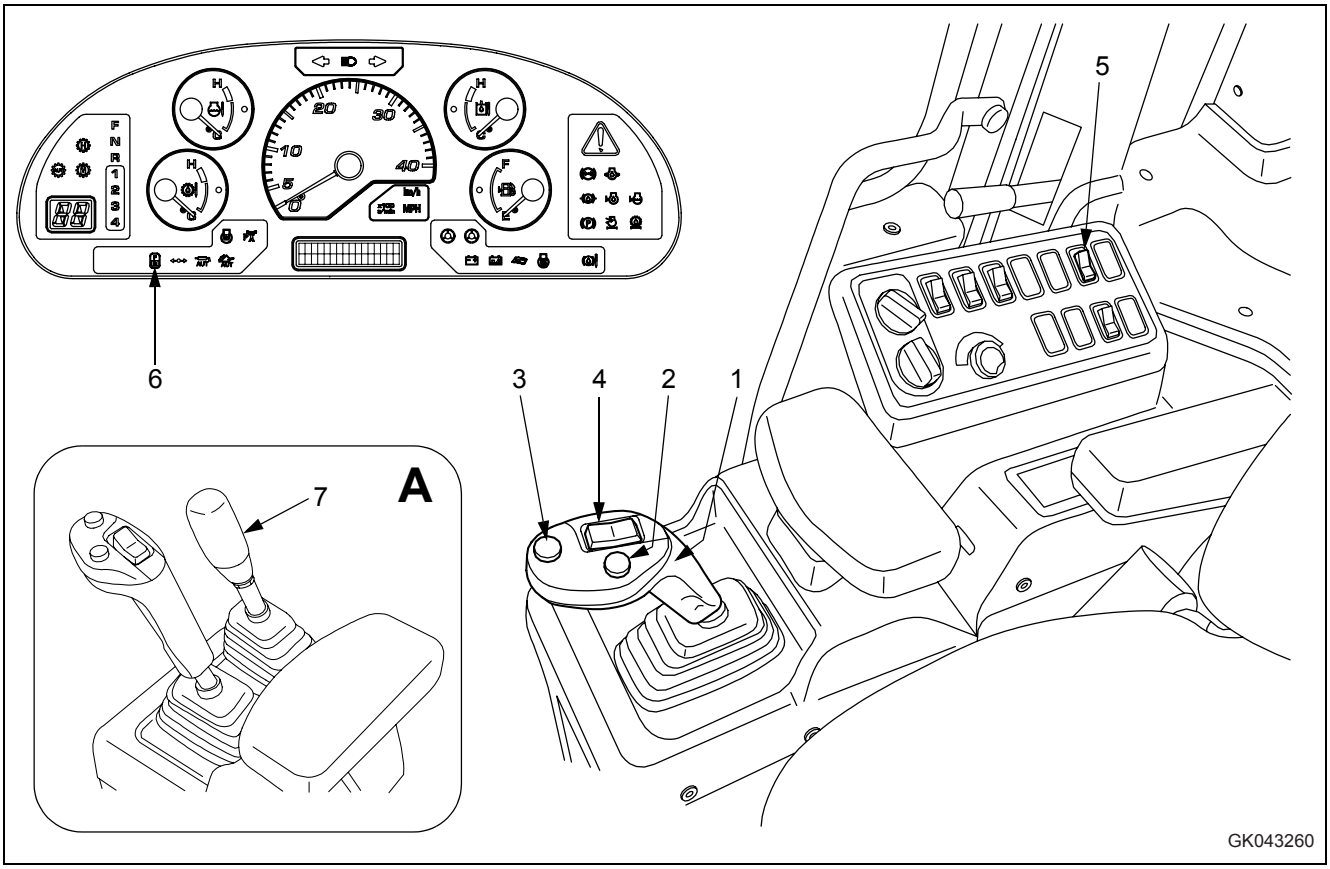

(1) Work equipment lever
(2) Kickdown switch
(3) Hold switch
(7) Auxiliary control lever
(4) FNR switch
(5) Directional selector switch
(6) Directional selector pilot lamp

1. Work equipment lever

Use this lever (1) to operate the lift arm and bucket.

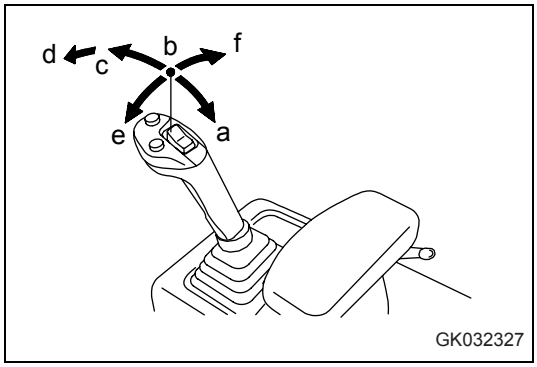

NOTE

Do not use the FLOAT position when lowering the bucket. Use the FLOAT position when leveling, see "Leveling operation (3-126)".

Lift arm operation

Position (a): RAISE

When the work equipment control lever is pulled further from the RAISE position, the lever is stopped in this position until the lift arm reaches the preset position of the kickout, and the lever is returned to the HOLD position.

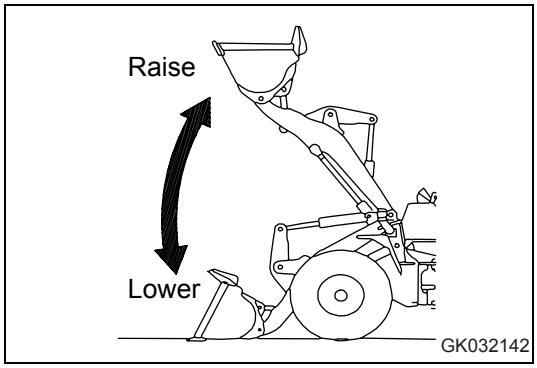

Position (b): HOLD

The lift arm and bucket stop and remain in the same position.

Position (c): LOWER

Position (d): FLOAT

The lift arm moves freely under external force.

Bucket operation

Position (e): TILT

When the work equipment control lever is pulled further from the TILT position, the lever is stopped in this position until the bucket reaches the preset position of the positioner, and the lever is returned to the HOLD position.

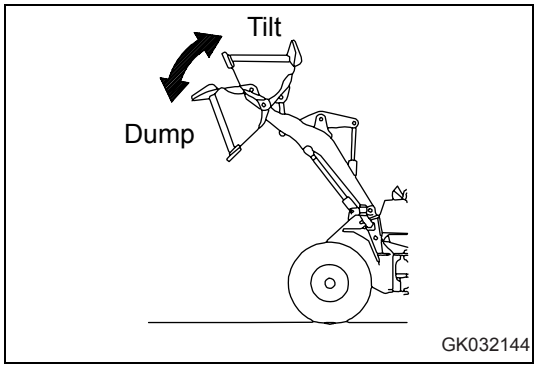

Position (f): DUMP

2. Kickdown switch

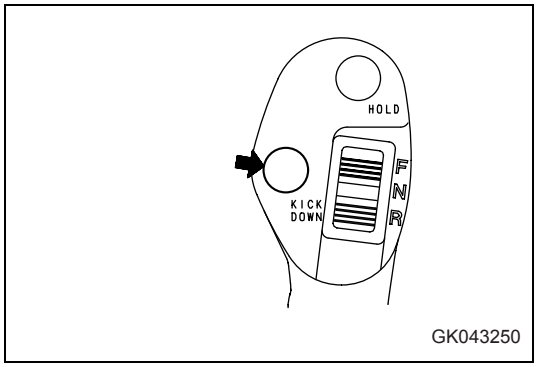

When the gearshift lever is in 2nd, if switch (2) is pressed, the transmission will shift down to 1st.

Use this when you need to increase the drawbar pull in digging operations.

If the transmission is in auto-shift, and the travel speed is below 12.5 km/h in any speed range when traveling in either forward or in reverse, the kick-down switch is actuated and it is possible to shift down to 1st.

This makes it easy to carry out load and carry operations.

Even if the travel speed is more than 12.5 km/h, this switch can be used to shift the transmission down. Each time the kick-down switch is pressed, the speed range will shift down one range at a time (F4 -> F3 -> F2).

When the torque converter is in the lock-up condition (Option), the lock-up is canceled.

REMARK

When canceling the kick-down, operate the directional lever or the FNR switch. In manual shift, it can be canceled by operating the speed lever to any position other than 2nd. It is also possible to cancel the kick-down by turning the starting switch OFF.
In auto-shift, if the travel speed becomes high after the kick-down, the gear will be shifted up by the auto-shift.
In auto-shift, when traveling at more than 25 km/h in 3rd or at more than 35 km/h in 4th, even if the kick-down switch is pressed, the transmission will not shift down. This is to prevent overrun of the engine.

3. Hold switch

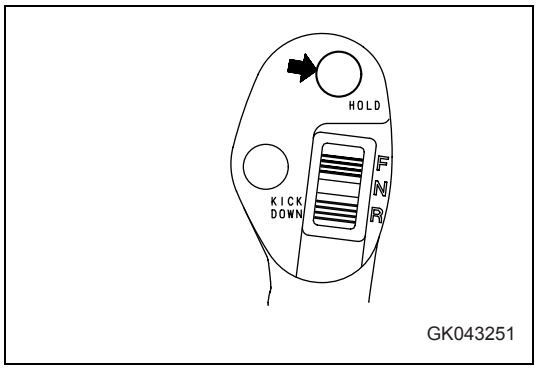

To fix the speed range when traveling in automatic transmission, press this switch (3). The transmission will be fixed in the speed range displayed on shift indicator (A) on the machine monitor and shift hold pilot lamp (B) will light up.

When the switch is pressed again, the display goes out.

Use this function to select the desired speed range when traveling up or down hills or when carrying out operations such as grading.

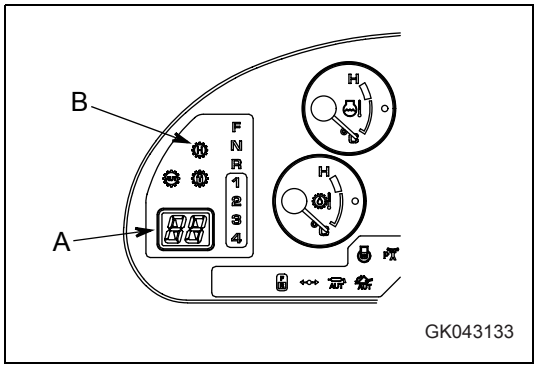

REMARK

When the torque converter is in the lock-up condition (Option), the transmission cannot be fixed.
When canceling the shift hold, operate the directional lever or the FNR switch. It can also be canceled by operating the speed lever and by switching the shift/manual selector switch to MANUAL. Is also possible to cancel the shift hold by turning the starting switch OFF.

4. Directional selector switch

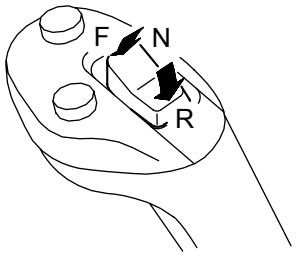

GK032329

This switch (4) is used to switch the direction of travel of the machine between forward and reverse.

F Position: FORWARD

N Position: Neutral

R Position: REVERSE

Before operating this switch, check that the condition is as follows.

- Directional lever is at N
- Directional selector switch actuation switch is at ON

If the condition is not as above, the switch will not work.

5. Directional selector switch actuation switch

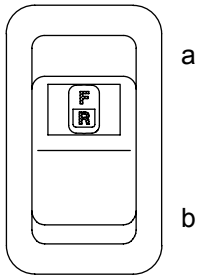

GK043252

When this switch (5) is pressed, the FNR switch on the head of the multi-function lever is activated.

Position (a): ON

The pilot lamp inside the switch and the directional selection pilot lamp on the machine monitor light up, and the FNR switch is activated.

Position (b): OFF

The FNR switch is not activated.

REMARK

Turn this switch ON when the directional lever and directional selector switch are at the neutral position. At any other position, this switch does not work.
Even if the directional selector switch is functioning, when the directional lever is operated, the operation of the directional lever is given priority.

6. Directional selector pilot lamp

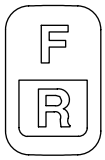

GK043114

This monitor (6) lights up when the directional selector switch actuation switch on the right switch panel is turned ON. It indicates that it is possible to operate the travel direction of the machine with the FNR switch on the head of the multi-function lever.

7. Auxiliary control lever (adjacent to the multi-function lever)

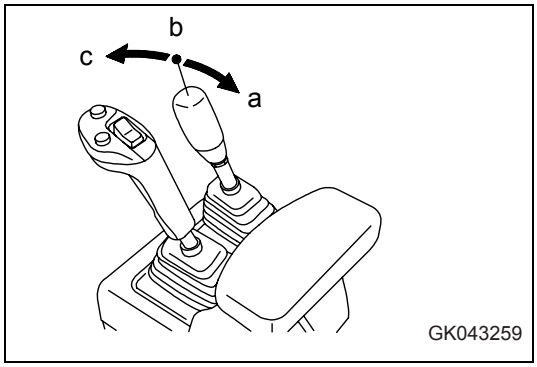

When multi-purpose bucket is used

This lever (7) operates the multi-purpose bucket.

Position (a): CLOSE
Clam closes.

Position (b): HOLD
The clam stops and remains in the same position.

Position (c): OPEN
Clam opens.

When hydraulic quick coupler is used

For details of using hydraulic quick coupler, see "Hydraulic quick coupler (6-30)".

6.5.2 Operation

Using switch to change between forward and reverse

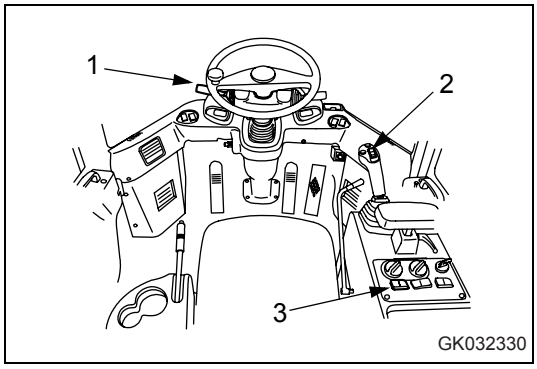

WARNING

- When changing direction between FORWARD and REVERSE, check that the new direction of travel is safe. There is a blind spot behind the machine, so be particularly careful when changing direction to travel in reverse.
- Do not switch between FORWARD and REVERSE when traveling at high speed.
  When switching between FORWARD and REVERSE, depress the brake to reduce the travel speed sufficiently, then change the direction of travel. Max.speed for changing direction: 12 km/h.
- When the directional selector switch actuation switch (3) is at the ON position, if the directional lever (1) is operated to FORWARD or REVERSE, the machine will travel in forward or reverse according to the operation of the directional lever, regardless of the position of the directional selector switch (2).
  Priority is given to the operation of the directional lever, so be careful when operating.

1. Place the directional lever (1) at the N position.

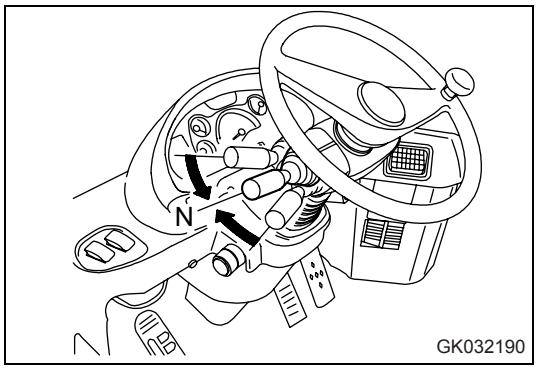

2. Turn on directional selector switch on the right side of switching panel that enables directional selection.

   Position (a): ON

   Position (b): OFF

   The pilot lamp inside the switch and the directional selection pilot lamp on the machine monitor light up, and the FNR switch is activated.

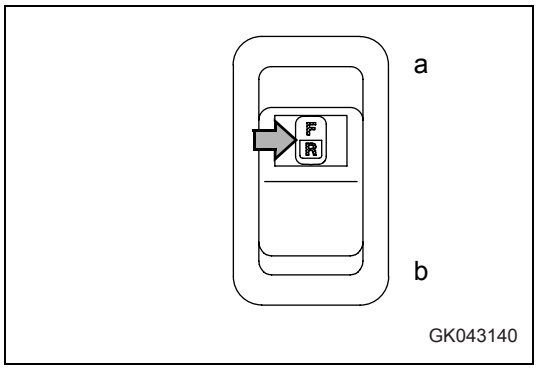

3. Push the FNR switch on the head of the multi-function lever to the desired position.

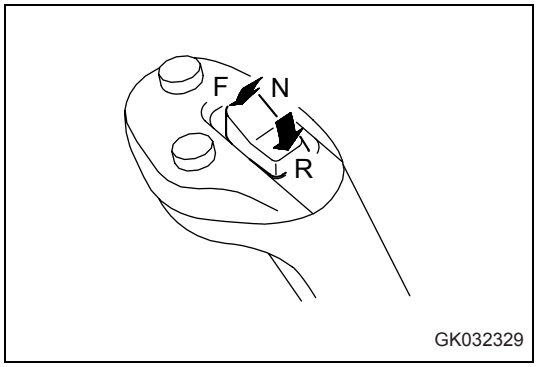

If the directional selector pilot lamp on the machine monitor flashes, the switch or the lever is in one of the following conditions.

- When the directional selector switch actuation switch is at the OFF position, if the FNR switch is operated to F (or R):

  The pilot lamp flashes, and at the same time, the central warning lamp lights up and the alarm buzzer sounds.

  At the same time, “E00 SHIFTLEVER NEUT“ is displayed on the character display.

  Set the FNR switch to the N position.

- When the engine is started, if the directional selector switch is at the ON position and the directional lever is at N, and the FNR switch is operated to F (or R):

  The pilot lamp flashes, and at the same time, the central warning lamp lights up and the alarm buzzer sounds.

- If the directional selector switch is at the ON position and the FNR switch is operated to F (or R):

  The pilot lamp flashes, and at the same time, the central warning lamp lights up and the alarm buzzer sounds.

  At the same time, “E00 SHIFTLEVER NEUT“ is displayed on the character display.

  In this condition, the machine will travel in forward or reverse according to the operation of the directional lever.

  Set the directional lever and the FNR switch on the head of the multi-function lever to the N position.

6.6 3-lever control

6.6.1 Explanation of components

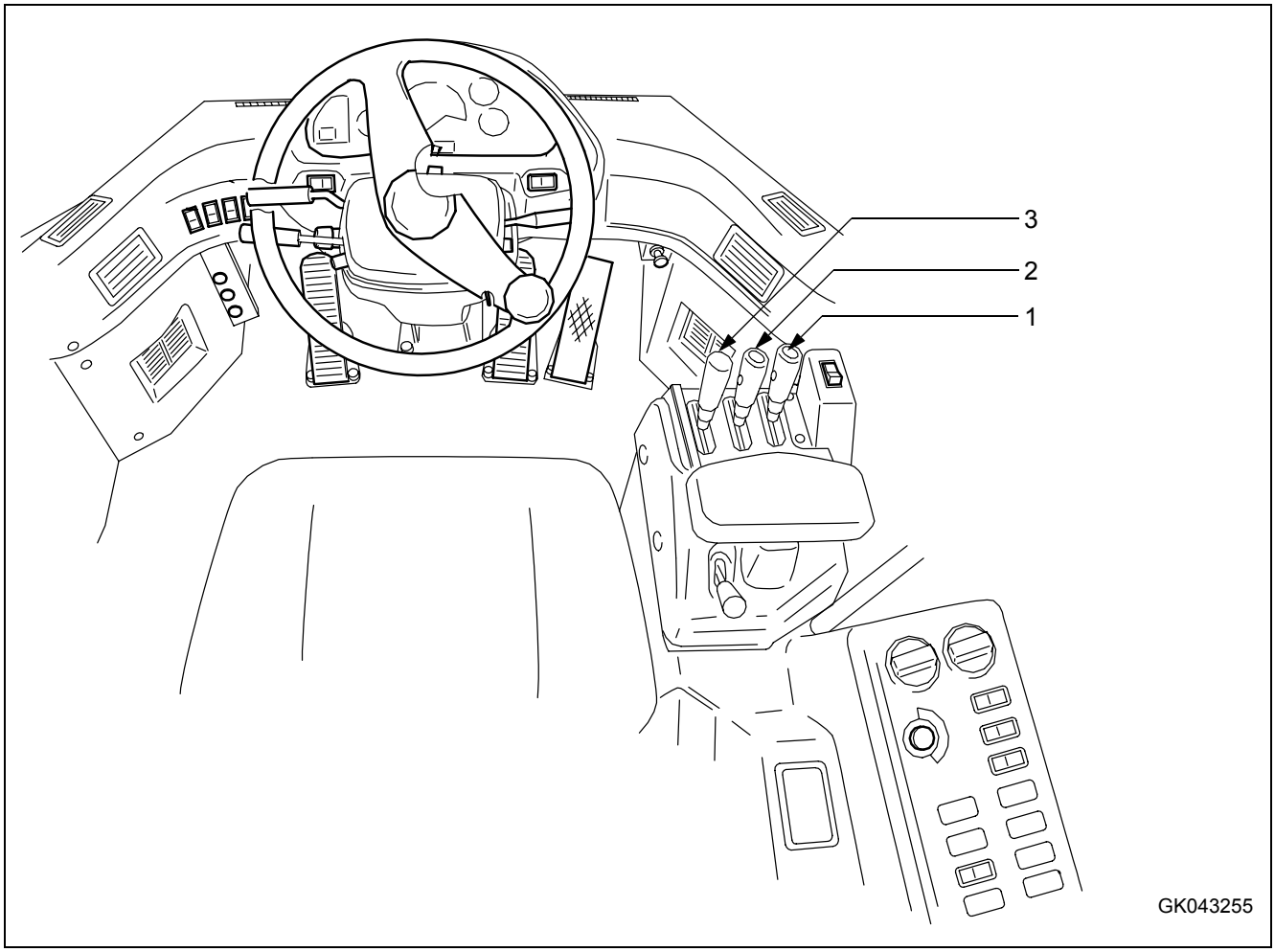

(1) Lift arm control lever
(2) Bucket control lever
(3) Auxiliary control lever

1. Lift arm control lever (3-lever control)

This lever (1) is used to operate the lift arm.

NOTE

Do not use the FLOAT position when lowering the bucket. Use the FLOAT position when leveling, see "Leveling operation (3-126)".

Position (a): RAISE

When the lift arm control lever is pulled further from the RAISE position, the lever is stopped in this position until the lift arm reaches the preset position of the kickout, and the lever is returned to the HOLD position.

Position (b): HOLD

The lift arm is kept in the same position.

Position (c): LOWER

Position (d): FLOAT
The lift arm moves freely under external force.

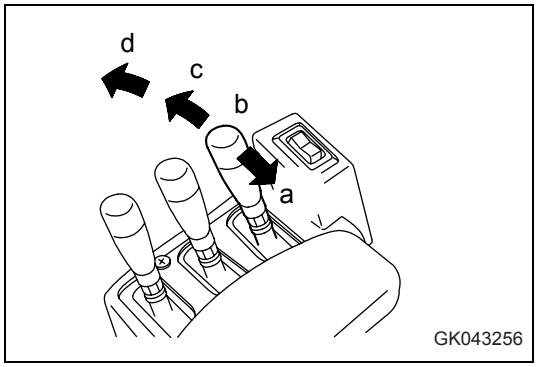

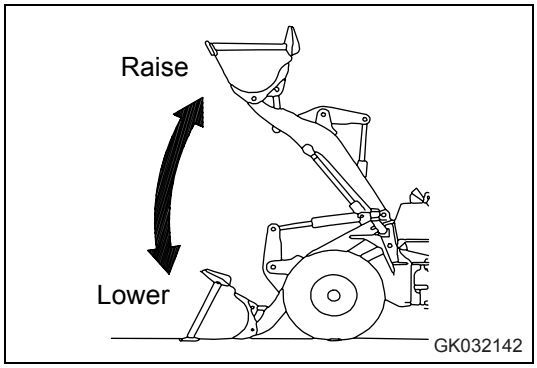

2. Bucket control lever (3-lever control)

This lever (2) operates the bucket.

Position (a): TILT

When the bucket control lever is pulled further from the TILT position, the lever is stopped in this position until the bucket reaches the preset position of the positioner, and the lever is returned to the HOLD position.

Position (b): HOLD

The bucket is kept in the same position.

Position (c): DUMP

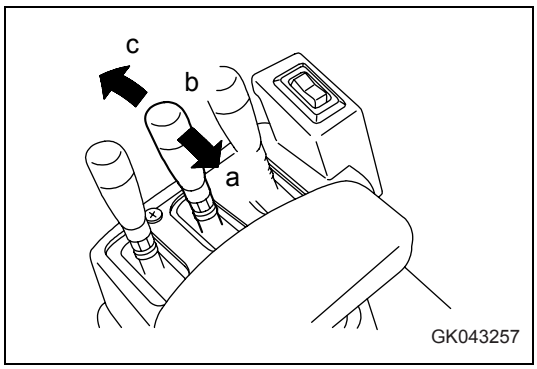

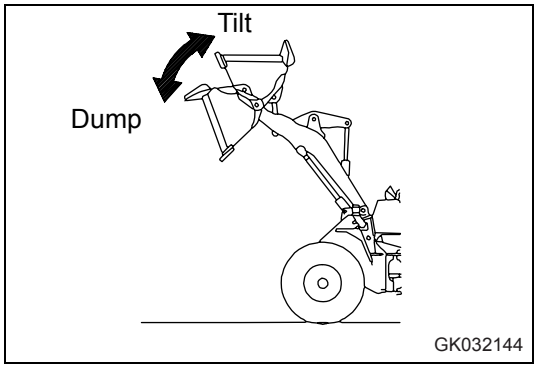

3. Auxiliary control lever (3-lever control)

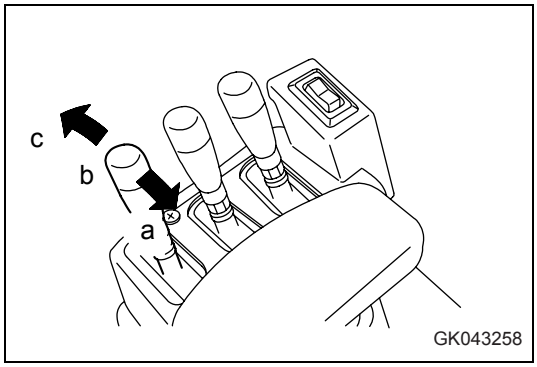

When multi-purpose bucket is used

This lever (3) operates the multi-purpose bucket.

Position (a): CLOSE
Clam closes.

Position (b): HOLD
The clam stops and remains in the same position.

Position (c): OPEN
Clam opens.

When hydraulic quick coupler is used

For details of using hydraulic quick coupler, see "Hydraulic quick coupler (6-30)".

6.7 Hydraulic quick coupler

6.7.1 Installing the attachment

1. Set the selector levers (1) into position “A“.
2. Start the engine.

   For details of starting the engine, see "Operations and checks before starting engine (3-96)" and "Starting engine (3-98)".
3. To remove the lock pins of the hydraulic quick coupler, push the auxiliary control lever (2) forward.

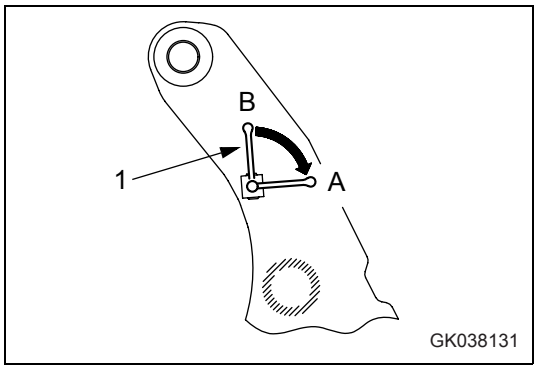

Figure "A" shows machine equipment:
3-lever control.

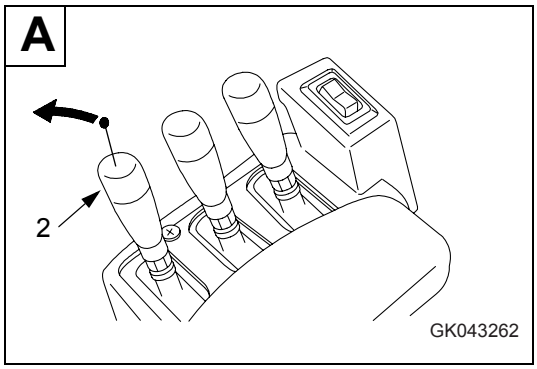

Figure "B" shows machine equipment:
multi-function lever with auxiliary control lever.

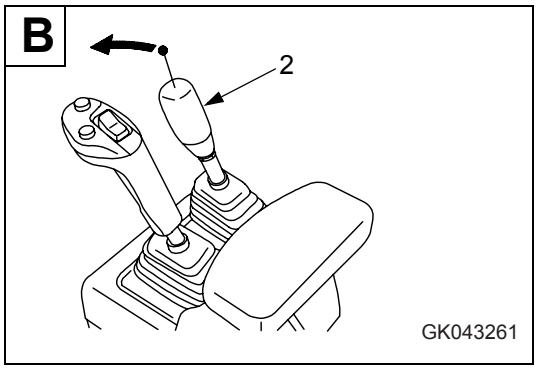

4. Check that the lock pins has been removed.

   The lock pin indicators (3) may not be visible.
5. Check that the selector control levers (1) are in horizontal position.

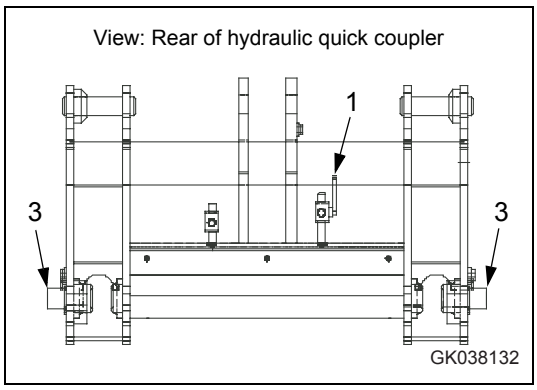

6. Adjust so that height H of the beem hinge pin is approx. 350 mm, then move the machine so that the coupler is parallel with and at the center of the attachment to be installed.

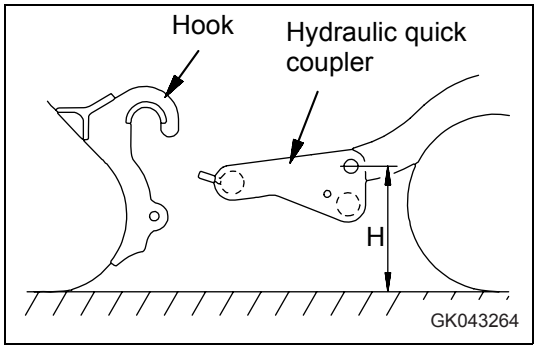

7. Drive the machine slowly forward until the guide plate enters the inside of the hook of the attachment.
8. Tilt the coupler fuily while driving the machine forward.

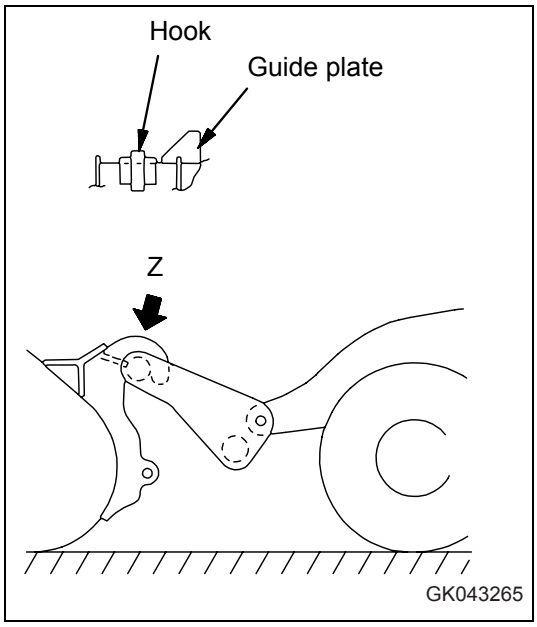

9. Operate the auxiliary control lever (2) for the coupler backwards, to insent lock pins and lock the attachment in position.

   Figure "A" shows machine equipment:
   3-lever control.

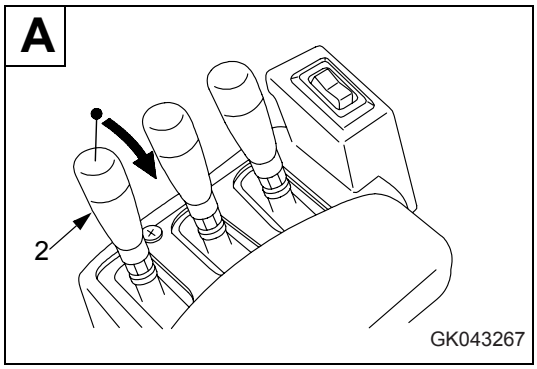

   Figure "B" shows machine equipment:
   Multi-function lever with auxiliary control lever.

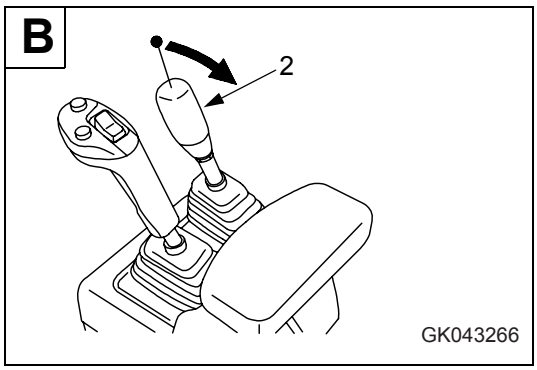

10. Check that the lock pin indicators on left and right side are visuable has been insert.

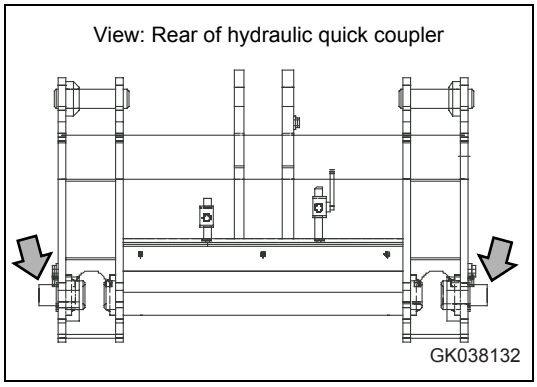

11. Protrusion (X) on left and right side 30mm.

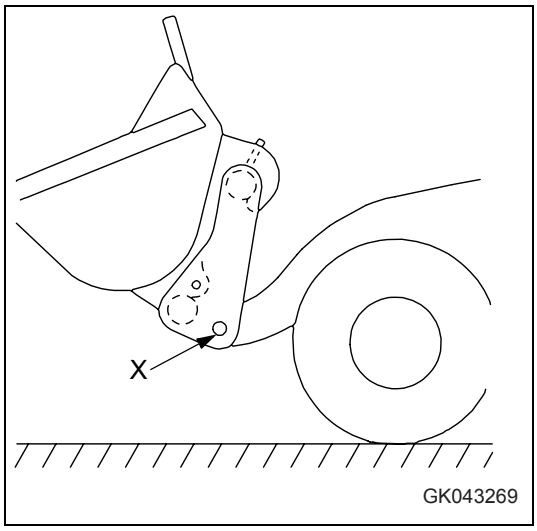

12. After completing the connection of the front attachment set the two control levers up to position “B“.

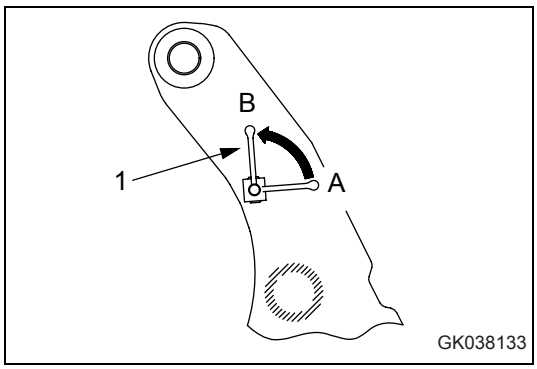

6.7.2 Removal and installation of the attachment

WARNING

The hydraulic system is always under internal pressure. When replacing and installing the coupling, release the pressure inside the circuit. If the circuit is still under the pressure, high-pressure oil will spurt out and lead to serious injury.

1. Lower the work equipment to the ground, stop the engine, then operate the extra control lever fully 4 or 5 times. This will release the pressure inside the hose.
2. Raise sleeve (2) of coupling (1), insert coupling (3), then return sleeve (2) to its original position to complete the connection.
3. Pull the hose to confirm that it is connected securely.

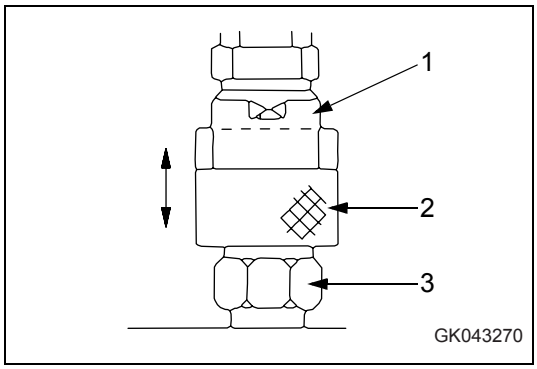

6.7.3 Precautions for use

Check that the lock pin has been inserted securely, then operate the lift arm and bucket control levers.

6.7.4 Precautions when removing the attachment

Before removing the attachment, disconnect the hydraulic coupling.

6.8 Central lubrication system

6.8.1 Operating the central lubrication system

The pump with the grease container is located at the left of the engine bonnet, above the fender.

1. Turn the ignition switch to ON position (B).

   This switches on the grease pump.

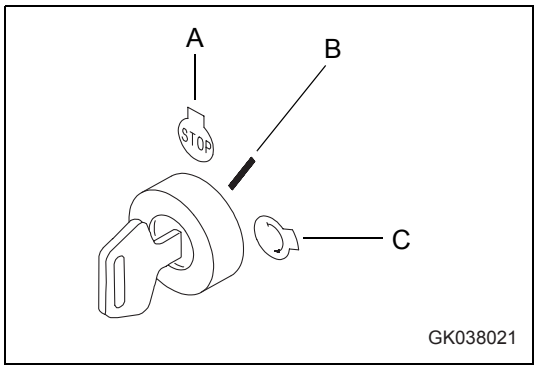

2. Watch the grease container through the rear window.

   If the mixer blades are turning inside the grease container, the lubrication system is OK.

   If the mixer blades are not turning, no automatic lubrication is taking place.

   To eliminate the malfunction, contact your KOMATSU dealer.

6.8.2 Display and control unit

The display and control unit is protected by a transparent plastic cover against splashing water and mechanical damage. For programming, the cover has to be dismounted and, following programming, reattached with a screwdriver.

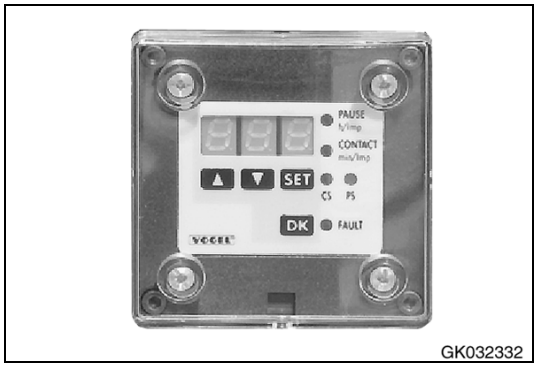

LED-display

1. Seven-segment display: Values and operating state
2. Pause time (PAUSE h/Imp)
3. Pump operation (CONTACT min/Imp)
4. Monitoring of system function by means of an external cycle switch (CS)
5. Monitoring of system function by means of an external pressure switch (PS)
6. Fault message (FAULT)

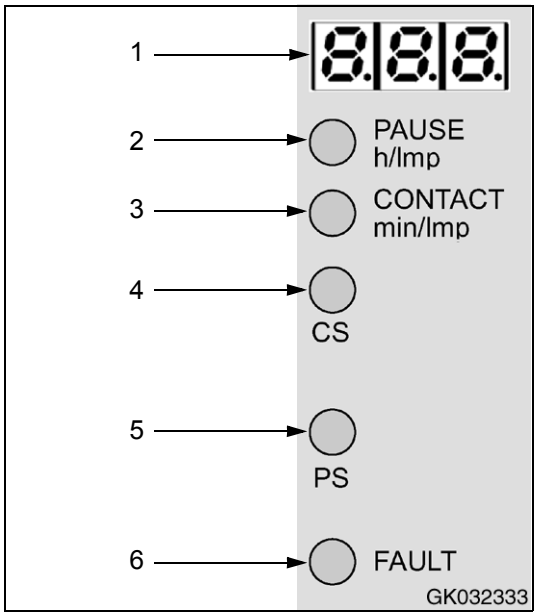

Pushbuttons

1. Turn on display

   Display values and parameters

   Set values and parameters
2. Change between programming and display mode

   Confirm values (SET)
3. Activatev intermediate lubrication

   Clear fault message (DK)

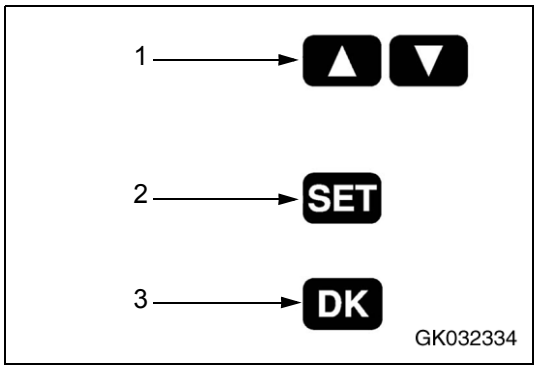

6.8.3 Changing the lubrication interval times

The settings when shipping from factory are as follows:

Greasing interval: after 1 hour

Greasing time: 10 minutes.

Step	Key	Display
1	SET Press for more than 2s	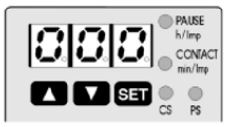 000 in display flashes
2	SET Press briefly (confirm code)	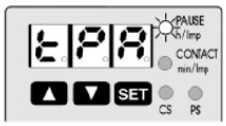 Automatically indicates first parameter **Example:** „Pause in timer operation“ LED „Pause“ flashes
3	SET Press briefly	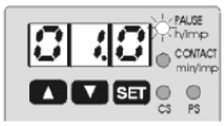 Pause time 1 h
4	▲ ▼	Set new value **Example:** 6.8 h = 6 h 48 min
5	SET Press briefly (confirm new value)	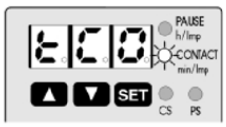 Indicates next parameter „Pump running time in timer mode“ LED „Contact“ flashes
6	SET Press briefly	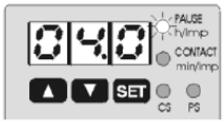 Pump running time 4 min
7	▲ ▼	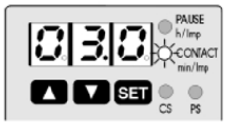 Set new value **Example:** 3 min
8	SET Press briefly	Confirm new value
9	SET Press for more than 2s	Changes are written to the memory, and the LED indicators extinguish.

GK032335_GB

7. Index

7.1 Index

A

Accelerator pedal 3-63
Accumulator, safety for maintenance 2-36
Action codes
  Display 3-11
  E01 3-12
  E02 3-12
  E03 3-12
Adjustments, before starting engine 3-92
Air cleaner 4-32
Air conditioner 3-74, 4-42, 4-50, 4-61
  Cool box 3-80
  Inspection and maintenance 3-79
  Precautions 3-79
Alternator 4-84
Alternator belt 4-75
Automatic shift 3-59
Auxiliary control lever (3-lever control) 6-29
Auxiliary control lever
(adjacent to multi-function lever) 6-24
Axle case breather 4-41
Axle oil 4-40, 4-80

B

Backup alarm 3-70
Battery 2-30, 4-58
  Discharged 3-159
  Precautions for charging 3-161
  Removal, installation 3-160
Bolt on cutting edge 4-47
Boom kickout, adjusting 3-132
Booster cable 3-162
Booster cables, starting 2-31
Brake disc wear 4-81
Brake pedal 3-63
Breaking-in machine 3-102
Bucket control lever 3-62
Bucket control lever (3-lever control) 6-28
Bucket level indicator 3-133
Bucket positioner, adjusting 3-132
Bucket teeth 4-48
Bucket, operation 3-121

C

Cab door open lock 3-68
Cab window open lock 3-69
Cap wiper, handling 3-80
Cap with lock 3-65
Caution lamps, explanation 3-16, 3-19, 3-22
Cautions lamps, overview 3-6
CE-Conforming equipment 1-22
Central lubrication system 6-34
Changing direction 3-110, 3-112
Cigarette lighter 3-51
Control levers, explanation 3-57
Controls, general view 3-3
Cool box 3-80
Cooling fan reverse rotation switch 3-54
Cooling system 4-35
Cover with lock 3-65

D

Digging operations 3-122
Dimensions, machine 1-21
Dimmer switch 3-45
Directional lever 3-60
Directional selector switch 3-55, 6-23
Directional selector switch actuation switch 3-55, 6-23
Directions, machine 1-8
Display
  Action code 3-11
  Failure code 3-13
  Items for display 3-14
  Oil replacement time 3-14
  Service meter 3-11

E

E.C.S.S. switch 3-52
E01 3-12
E02 3-12
E03 3-12
Emergency lowering system 2-24
Emergency steering 3-118
Emergency steering switch 3-53
Engine
  Check after stopping engine 3-105
  Starting 3-98
  Starting in cold weather 3-100
  Starting with booster cable 3-162
  Stopping 3-105
Engine oil 4-66
Engine valves 4-84
EU Directives 1-3

F

Failure code display 3-13
Fire extinguisher 2-7
Fire prevention 2-11
First aid kit 2-7
F-N-R Switch 6-11
FOPS 2-13
Fresh air filter 4-57
Front wiper switch 3-51
Front working lamp switch 3-48
Fuel filter 4-71
Fuel pre-filter 4-68
Fuel tank 4-55
Fuse, explanation 3-71

G

Gauges, explanation 3-32
Gauges, general view 3-3
Gearshift lever 3-58
Gearshift lever stopper 3-60
General view
Controls 3-3
Front switch panel 3-4
Gauges 3-3
Machine 3-2
Machine monitor 3-6
Right switch panel 3-5
Grease pump 3-67

H

HI/LOW Selector switch 6-12
High-pressure clamp 4-87
Hold switch 3-50, 6-22
Horn button 3-46
Horn switch 6-12
Hydraulic oil 4-58, 4-76
Hydraulic quick coupler
Installing attachment 6-30, 6-33
Precautions for use 6-33
Precautions when removing attachment 6-33
Removal attachment 6-33
Hydraulic tank breather 4-79

I

Intended use 1-7

J

Joystick on/off switch 6-11
Joystick steering lever 6-11
Joystick steering system 6-10
Components 6-10
Operation 6-17
Structure and function 6-13

K

Kickdown switch 3-50, 6-22
KOMTRAX 6-8
KOWA (KOMATSU Oil Wear Analysis) 4-7

L

Lamp switch 3-45
Leveling operation 3-126
Lever
Auxiliary control lever (3-lever control) 6-29
Auxiliary control lever
(adjacent to multi-function lever) 6-24
Bucket control lever 3-62
Bucket control lever (3-lever control) 6-28
Directional lever 3-60
Gearshift lever 3-58
Joystick steering lever 6-11
Lift arm control lever 3-62
Lift arm control lever (3-lever control) 6-28
Turn signal lever 3-57
Work equipment lock lever 3-61
Lever stand 3-94
Lift arm control lever 3-62
Lift arm control lever (3-lever control) 6-28
Lift arm, operation 3-121
Lifting, machine 3-144
Load and carry operations 3-127
Loading operations 3-127
Locking machine 3-136
Lubricants, fuels and filling capacities 4-19
Lubrication 4-56, 4-65, 4-75, 4-85
Lubrication chart 4-18

M

Machine
CE-Conforming equipment 1-22
Dimensions 1-21
Directions 1-8
Emergency steering 3-118
Engine serial no. plate 1-10
General view 3-2
Intended use 1-7
Lifting 3-144
Lifting, position marks 3-145
Lifting, weight table 3-145
Locking 3-136
Long-term storage 3-151
Machine serial no. plate 1-10
Moving 3-106
Operating data 1-21
Parking 3-133
Stopping 3-114, 3-115
Technical data 5-2
Towing 3-153
Transportation 3-140
Troubleshooting 3-153
Turning 3-117
Weights 1-21
Machine monitor
Explanation 3-7
General view 3-6
Maintenance
Air cleaner 4-32
Air conditioner 4-42, 4-50, 4-61
Alternator 4-84
Alternator belt 4-75
Axle case breather 4-41
Axle oil 4-40, 4-80
Battery 4-58
Bolt on cutting edge 4-47
Brake disc wear 4-81
Bucket teeth 4-48
Cooling system 4-35
Engine oil 4-66
Engine valves 4-84
Fresh air filter 4-57
Fuel filter 4-71
Fuel pre-filter 4-68
Fuel tank 4-55
Guidelines 4-2

High-pressure clamp 4-87
Hydraulic oil 4-58, 4-76
Hydraulic tank breather 4-79
Lubrication 4-56, 4-65, 4-75, 4-85
Lubrication chart 4-18
Oil level 4-39
Parking brake 4-61
Radiator fins 4-43
Safety critical parts 4-25
Schedule chart 4-27
Slow blow fuse 4-51
Tires 4-53
Transfer case, oil change 4-73
Transmission case breather 4-74
Turbocharger 4-75
Vibration damper 4-84
Water pump 4-86
Wheel hubs 4-31, 4-62
Manual shift 3-58
Monitor
Brightness 3-39
Functions 3-35
Language 3-38
Odometer 3-35
Other functions 3-35
Reset methods 3-35
Telephone number 3-37
Monitor panel mode selector switch 1 3-49
Monitor panel mode selector switch 2 3-49
Monitor system 3-8

N

Noise emission 5-4

O

Oil level 4-39
Operating data, machine 1-21
Operation
Adjustments 3-92
Breaking-in machine 3-102
Bucket 3-121
Changing direction 3-110, 3-112
Check after completion of operation 3-135
Check after starting engine 3-102
Check after stopping engine 3-105
Check before starting engine 3-84
Cold weather 3-147
Emergency steering 3-118
Lift arm 3-121
Moving machine 3-106
Parking machine 3-133
Precautions 2-18, 3-129
Starting engine 3-98
Stopping engine 3-105
Stopping machine 3-114, 3-115
Turning 3-117
Walk around check 3-81
Work equipment 3-120
Operator seat 3-92

P

Parking brake 4-61
Parking brake switch 3-47
Parking machine 3-133
Pedals
Accelerator pedal 3-63
Brake pedal 3-63
Pedals, explanation 3-57
Pilot lamps, explanation 3-26
Pilot lamps, overview 3-6
PIN 1-10
Power mode selector switch 3-42
Power outlet, explanation 3-73
Precautions
General 2-6
Maintenance 2-33
Operation 2-18, 2-25
Tires 2-43
Traveling 2-22
Traveling on slopes 2-23

R

Radiator fins 4-43
Rear heated wire glass switch 3-52
Rear wiper switch 3-51
Rear working lamp switch 3-48
Room lamp switch 3-52
ROPS 2-13

S

Safety
Battery 2-30
Emergency lowering system 2-24
Fire extinguisher 2-7
First aid kit 2-7
FOPS 2-13
General precautions 2-6
Maintenance 2-33
Operation 2-18
Parking machine 2-27
Prohibited operations 2-24
ROPS 2-13
Safety labels 1-6, 2-2
Signal words 1-4
Starting with booster cables 2-31
Tires 2-43
Towing 2-32
Transportation 2-28
Work equipment lock lever 2-8
Safety bar 3-66
Safety belt 3-93
Safety critical parts 4-25
Safety labels 1-6, 2-2
Location 2-2
Presentation 2-3
Seat adjustment 3-92

Serial no. plate
Axle 1-11
Engine 1-10
FOPS 1-11
Machine 1-10
Operator seat 1-12
ROPS 1-11
Transmission 1-11
Service meter 3-11
Explanation 3-11
Position 1-12
Service procedure
After the first 1000 hours 4-31
After the first 250 hours 4-31
After the first 50 hours 4-31
Every 100 hours 4-56
Every 1000 hours 4-71
Every 2000 hours 4-76
Every 250 hours 4-58
Every 4000 hours 4-85
Every 50 hours 4-55
Every 500 hours 4-66
Every 8000 hours 4-89
When required 4-32
Shift up, shift down switch 6-11
Slow blow fuse 4-51
Explanation 3-72
Replacing 4-51
Starting engine
Check after 3-102
Check before 3-84
Starting switch 3-42
Steering tilt lock lever 3-64
Storage, long-term 3-151
Switch panel, front 3-4
Switch panel, right 3-5
Switches
Cooling fan reverse rotation switch 3-54
Dimmer switch 3-45
Directional selector switch 3-55, 6-23
Directional selector switch
actuation switch 3-55, 6-23
E.C.S.S. switch 3-52
Emergency steering switch 3-53
F-N-R Switch 6-11
Front wiper switch 3-51
Front working lamp switch 3-48
HI/LOW Selector switch 6-12
Hold switch 3-50, 6-22
Horn button 3-46
Horn switc 6-12
Joystick on/off switch 6-11
Kickdown switch 3-50, 6-22
Lamp switch 3-45
Monitor panel mode selector switch 1 3-49
Monitor panel mode selector switch 2 3-49
Parking brake switch 3-47
Power mode selector switch 3-42
Rear heated wire glass switch 3-52
Rear wiper switch 3-51
Rear working lamp switch 3-48
Room lamp switch 3-52
Shift up, shift down switch 6-11
Starting switch 3-42
Torque converter lock-up switch 3-56
Transmission cut-off set switch 3-44
Transmission cut-off switch 3-44
Transmission shift mode selector 3-43
Turn signal lever 3-45
Switches, explanation 3-40

T

Technical data 5-2
Noise emission 5-4
Vibration level 5-5
Tires 2-43
Handling 3-137
Maintenance 4-53
Precautions 3-137
Pressure 3-137
Torque converter
General locations 6-4
Operation 6-6
Torque converter lock-up switch 3-56
Torque converter, handling 6-3
Torque list 4-23
Towing 2-32
Towing pin 3-67
Towing, machine 3-153
Transfer case, oil change 4-73
Transmission case breather 4-74
Transmission cut-off set switch 3-44
Transmission cut-off switch 3-44
Transmission shift mode selector switch 3-43
Transportation, machine 2-28, 3-140
Troubleshooting 3-153
Battery discharges 3-159
Booster cable 3-162
Chassis 3-165
Electrical system 3-164
Engine 3-167
Towing machine 3-153
Turbocharger 4-75
Turn signal lever 3-45, 3-57
Turning 3-117

V

Vibration damper 4-84
Vibration level 5-5

W

Water pump 4-86
Wear parts 4-14
Weight table 3-145
Weights, machine 1-21
Wheel hubs 4-31, 4-62
Window washing fluid 4-42
Work equipment
Adjusting boom kickout 3-132
Adjusting bucket positioner 3-132
Bucket level indicator 3-133
Work equipment lock lever 2-8, 3-61
Work equipment, operation 3-120

8. Notes