https://truckmanualshub.com/

Installation manual

Engine

Industrial engines
DC09, DC13, DC16
OC16

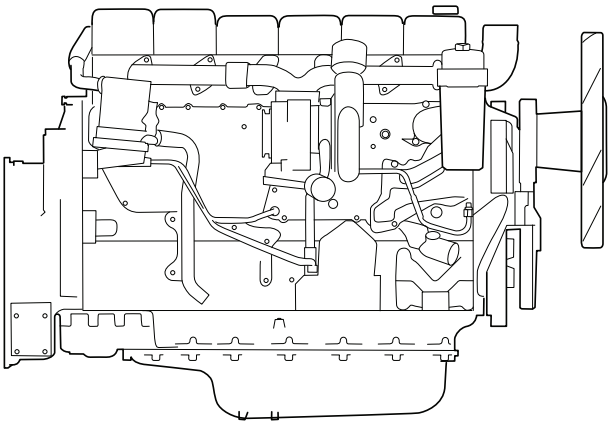

333 291

01:01 Issue 8.0 en-GB

© Scania CV AB 2016, Sweden

Downloaded from www.Manualslib.com manuals search engine

https://truckmanualshub.com/

INSTALLATION MANUAL

Engine suspension **3**
Design requirements 3
Flexible engine suspension 4
Rigid engine suspension 5
Permissible installation and operating angles 6
Flywheel housings 7
Generator set dynamics 8
Lifting the engine 8

Accessibility for maintenance and repairs **9**
Installation requirements 9
Clearances 11

Engine alignment **12**
Flexible coupling 12
Aligning engine and shafts 13

Power transmission **18**
Flexible coupling 18
Friction clutch 18

Transmission types **20**
Mechanical transmissions 20
Belt transmissions 20

Power take-offs **22**
Front-mounted power take-offs 22
Side-mounted power take-offs 25

Air compressor **31**

Torsional oscillations **32**
Data for torsional oscillation calculation 33
Torsional oscillation calculations from Scania 34

General tightening torques for screw joints **35**
Specification of normal tightening torques 35
Tightening torques 36

Sticker “Powered by Scania” **39**

© Scania CV AB 2016, Sweden

Downloaded from www.Manualslib.com manuals search engine

https://truckmanualshub.com/

Engine suspension

Design requirements

The type of engine suspension that is appropriate varies for different engine installations. In general, the following applies:

- The engine suspension should be designed for the forces it is exposed to, both continuously and momentarily during operation. Such forces are reaction forces from the transmitted torque and in some cases longitudinal acceleration, retardation and reaction forces in the engine.
- Both the engine suspension and the engine bed should be designed so that there are no resonant oscillations within the engine speed range. They should also be designed so that annoying vibrations from the engine are not transmitted to the surroundings.
- The engine bed location and the engine suspension must be designed so that the permissible angles of inclination for the engine are not exceeded. See the table in the Permissible installation and operating angles section.
- The engine suspension and engine bed should be designed in a way which allows access for maintenance and repairs.

IMPORTANT!

If the angles of inclination are exceeded, lubrication system performance will deteriorate, which can cause damage to the engine or reduce its service life.

There are two standard engine suspension designs:

- flexible engine suspension
- rigid engine suspension.

© Scania CV AB 2016, Sweden

Downloaded from www.Manualslib.com manuals search engine

https://truckmanualshub.com/

Flexible engine suspension

Flexible engine suspension dampens vibrations more effectively than rigid engine suspension. Flexible engine suspension does not require such careful alignment of the engine as rigid engine suspension. However, flexible engine suspension does not absorb longitudinal and lateral forces in the engine to the same extent as rigid engine suspension.

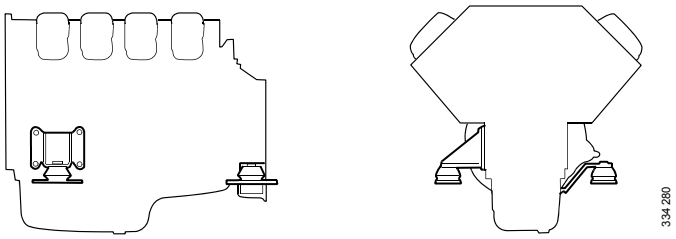

Examples of flexible engine suspension.

Insulators

Cushyfloat insulators with hardness 55 or 65 Shore are delivered as standard.

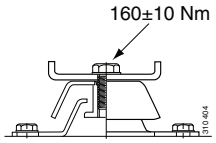

Tightening torque.

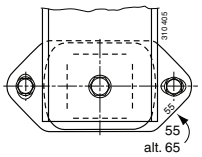

Hardness marking.

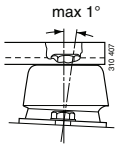

The engine bracket and frame or engine bed should be parallel.

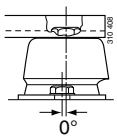

The vertical centre lines should coincide laterally.

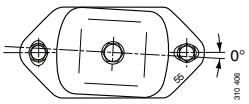

The upper and lower parts of the insulators should be parallel longitudinally.

© Scania CV AB 2016, Sweden

Downloaded from www.Manualslib.com manuals search engine

https://truckmanualshub.com/

Rigid engine suspension

A rigid engine suspension can absorb greater forces in all directions than flexible engine suspension. It requires highly accurate alignment of the engine in relation to the driven unit. On the other hand, it requires no special flexibility in the hoses, pipes and controls connected to the engine.

A rigid engine suspension can be used in engine installations where vibration causes no significant problems and where other characteristics make it desirable.

Even with a rigid engine suspension, the transmission of vibration to the engine bed can be kept low if the masses of the engine bed and connected parts are large in relation to the mass of the engine.

It is also possible to construct flexible engine suspension between the frame and the engine bed to reduce the transmission of vibration to the engine bed.

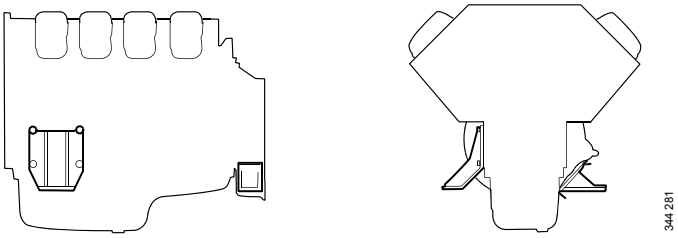

Examples of rigid engine suspension.

© Scania CV AB 2016, Sweden

Downloaded from www.Manualslib.com manuals search engine

https://truckmanualshub.com/

Permissible installation and operating angles

Maximum installation angle means maximum permissible installation angle for an engine relative to the horizontal plane. The angle indicates the limit for engine inclination during continuous operation.

Maximum operating angle means maximum permissible angle of inclination for an engine in operation and with minimum oil level. The angle may only be used for short periods. The given maximum forward or rearward operating angles are not applicable to their full extent if the engine is inclined laterally at the same time.

Engine type	Type of oil sump	Max. installation angle		Max. operating angle		Oil capacity (litres)	
		Inclination rearwards and forwards	Inclination laterally	Inclination rearwards and forwards	Inclination laterally	Min.	Max.
DC09	Deep front without ladder frame	12°	12°	30°	30°	31	36
DC09	Low	12°	12°	25°	30°	28	35
DC13	Deep front without ladder frame	12°	12°	30°	30°	30	36
DC13	Deep front with ladder frame	12°	12°	30°	30°	39	45
DC13	Low	12°	12°	25°	30°	28	34
DC13	With deep centre part	12°	12°	35°	45°	33	39
DC16, OC16	Deep front without ladder frame	12°	10°	25°	30°	40	48
DC16	Low	12°	10°	25°	30°	29	37

© Scania CV AB 2016, Sweden

Downloaded from www.Manualslib.com manuals search engine

https://truckmanualshub.com/

Flywheel housings

Silumin housings are supplied as standard on all industrial engines. The maximum permissible bending torque for a silumin housing is 10,000 Nm. This presumes that there are no axial loads from, for example, the propeller shaft, abnormal G forces or vibration.

For certain engine types, it is also possible to select a nodular iron flywheel housing. Nodular iron housings can dampen vibrations at certain engine speeds but increase vibrations at other engine speeds. Nodular iron is stronger than silumin and can therefore tolerate greater bending and torsional forces.

The stronger nodular iron housings are recommended in installations where transport causes serious stress on the flywheel housing, such as in dumper type trucks and generator sets with high outputs.

If it is difficult to determine the size and nature of the load, contact your nearest Scania distributor.

© Scania CV AB 2016, Sweden

Downloaded from www.Manualslib.com manuals search engine

https://truckmanualshub.com/

Generator set dynamics

If vibration levels in a generator set are too high, it could be due to resonance. This may be because resonant frequencies of the receiving system are the same as the frequency of the torque and disrupting power pulses that arise during normal operation of combustion engines with a crankshaft. The resonant frequencies of the system depend in turn on the mass and rigidity of component parts.

It is the responsibility of the installer to check that no resonant frequencies or vibration levels that could damage component parts are found anywhere in the engine installation.

The measurement and evaluation of vibrations in static parts is described in international standards. See ISO 8528-9.

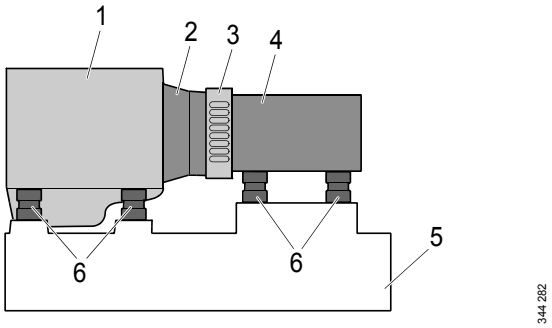

Example of generator set.
1. *Engine.*
2. *Flywheel housing.*
3. *Adapter.*
4. *Generator.*
5. *Engine bed.*
6. *Vibration insulators.*

Lifting the engine

WARNING!

The engine lifting eyes are dimensioned for lifting the engine only, not the engine together with connected equipment or frame!

© Scania CV AB 2016, Sweden

Downloaded from www.Manualslib.com manuals search engine

https://truckmanualshub.com/

Accessibility for maintenance and repairs

Installation requirements

The installer is responsible for ensuring accessibility for maintenance and repairs.

Note:

There must be sufficient space at installation so that standard times for maintenance and repairs can be attained.

The following requirements for accessibility must be met:

- Canopies and connected components must be designed so that the engine can be removed and fitted relatively easily.
- In the case of static engine installations, there should be permanent securing points for lifting devices above the unit.
- The fuel system must be easily accessible for maintenance and bleeding.
- It should be possible to read the graduations on the flywheel when adjusting valves and unit injectors.
- It should be possible to remove and fit the cylinder head, rocker covers and push-rods while leaving the engine in place.
- It must be possible to remove the oil sump in order to renew cylinder liners or pistons with the engine in place.

© Scania CV AB 2016, Sweden

Downloaded from www.Manualslib.com manuals search engine

https://truckmanualshub.com/

- It should be easy to fill and drain oil. In addition, the oil dipstick must be easily accessible.
- Centrifugal oil cleaners and oil filters must be easy to access for maintenance and for renewal.
- It should be easy to fill and drain coolant.
- Engine air filters must be located so that they are easy to access for the renewal of filter elements.

It must also be easy to carry out maintenance on the following components:

- Turbocharger
- Starter motor
- Alternator
- Coolant pump
- Radiator
- Cooling fan
- Clutch
- Batteries
- Crankcase ventilation filter

For gas engines, it must also be easy to carry out maintenance on the following components:

- Spark plug
- Flame arrestor
- Gas mixer insert
- Electric throttles
- Gas regulator
- Lambda sensor

© Scania CV AB 2016, Sweden

Downloaded from www.Manualslib.com manuals search engine

https://truckmanualshub.com/

Clearances

The most important clearances are shown in the table and illustrations. The specified measurements apply to the largest standard equipment.

Measurement	Clearance in mm				For maintenance or renewal of
	DC09	DC13	DC16	OC16	
A	150	150	150	380	cylinder liner, cylinder head, etc.
B	250	260	260	260	oil sump[1]
F	400	400	400	500	various units

1. If the oil sump has a special design, these values do not apply.

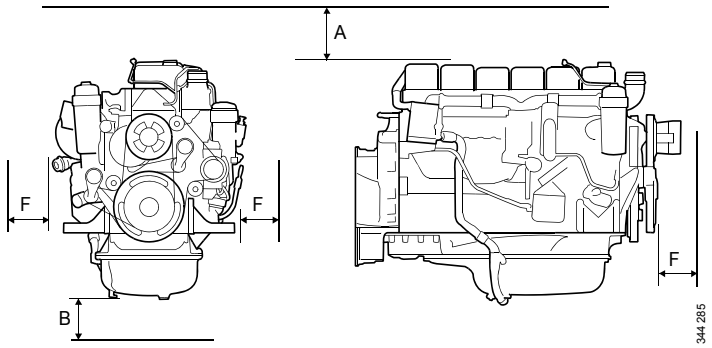

Clearances for DC09 and DC13.

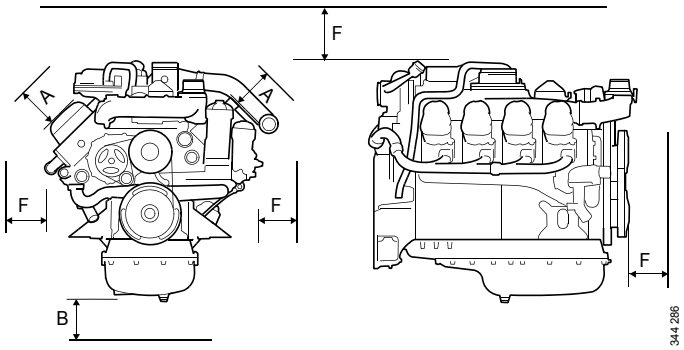

Clearances for DC16 and OC16.

© Scania CV AB 2016, Sweden

Downloaded from www.Manualslib.com manuals search engine

https://truckmanualshub.com/

Engine alignment

The alignment of the engine in relation to the driven unit is very important in order to prevent malfunctions. Otherwise there is a risk of vibration and serious stress to the crankshaft, engine brackets, drive shaft and coupling, causing damage which is costly to repair.

Alignment should be checked regularly on certain vibration-sensitive engine installations. Adjust engine alignment with shims between the engine bed and the engine suspension.

Flexible coupling

The alignment requirements are reduced if a flexible coupling is installed between the engine and the driven unit. Refer to the data on the flexible coupling concerned for permissible deviations.

Flexible coupling allows a certain angular displacement towards the output shaft. It also has an effect of evening out irregularities in torque and therefore counteracts the tendency towards torsional oscillation. The correct choice of rubber hardness reduces the stress on the driven units.

Relatively large deviations are permissible with flexible couplings. However, alignment should be as accurate as possible to achieve low vibration and a long service life on the coupling.

© Scania CV AB 2016, Sweden

Downloaded from www.Manualslib.com manuals search engine

https://truckmanualshub.com/

Aligning engine and shafts

Start from the driven shaft when aligning. First check that this is straight. Alignment is made easier if the engine brackets are equipped with adjusting screws for vertical and lateral adjustment. However, permanent setting should be made using shims.

Adjust the engine alignment vertically using shims between the engine bed and engine suspension and laterally by moving the engine sideways on the surface. Shafts with flanges: Start by aligning roughly and secure the engine to its engine bed. Mate the flanges (1) so that the guide edge of one flange enters the guide hole of the other flange.

Calculation of angular deviation

1. Fit the stand for the dial gauge (2) to the driving flange.
2. Align the tip of the dial gauge with the axial surface of the other flange as far as possible.
3. Zero the dial gauge at 12:00
4. Place one of the retaining screws through both flanges without tightening it.
5. Turn the shafts at the same time and read the dial gauge at intervals of 90° while turning one revolution. Enter the values in the table. Make sure you use the right signs.
6. Calculate the angular deviation between the shafts using the values.

Location of measurement point	Measurement value[1]	
12:00	±0	mm
3:00	±	mm
6:00	±	mm
9:00	±	mm

1. + means inwards and - means outwards

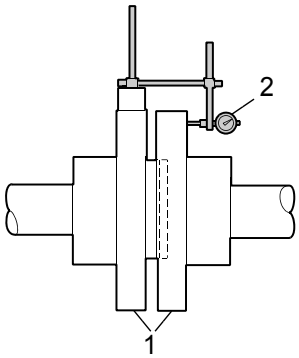

Measuring angular deviation.

© Scania CV AB 2016, Sweden

Downloaded from www.Manualslib.com manuals search engine

https://truckmanualshub.com/

Calculating thickness of required shims

Note:

Make sure you use the right signs in the calculations.

t = thickness of required shims.
L = distance between engine suspensions.
D = diameter of the flange where the dial gauge is mounted.

$$t = \frac{6 \times L}{D}$$

- If t is positive, shims should be added to the front or removed from the rear.
- If t is negative, shims should be added to the rear or removed from the front.

© Scania CV AB 2016, Sweden

Downloaded from www.Manualslib.com manuals search engine

https://truckmanualshub.com/

Calculating lateral adjustment

Note:

Make sure you use the right signs in the calculations.

s = lateral displacement of engine suspension.

L = distance between engine suspensions.

D = diameter of the flange where the dial gauge is mounted.

$$s = \frac{(3\ \text{o'clock} - 9\ \text{o'clock}) \times L}{D}$$

- If s is positive, the front engine suspension must be moved to the right.
- If s is negative, the front engine suspension must be moved to the left.

Checking parallelism of the flanges with a feeler gauge

Angular deviation between the shaft centrelines can also be checked using a 0.1 mm feeler gauge. Do this by measuring the distance between the surfaces of the flanges at the outer edges.

During measurement, the engine must be tightened onto the engine bed.

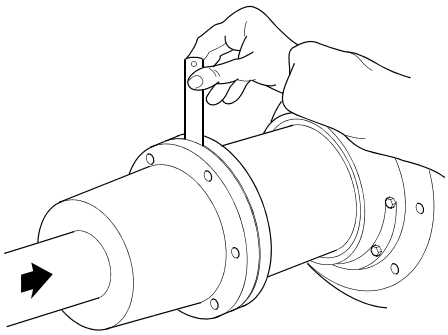

344 284

© Scania CV AB 2016, Sweden

Downloaded from www.Manualslib.com manuals search engine

https://truckmanualshub.com/

Measuring parallel displacement

1. Move the tip of the dial gauge to the radial surface of the flange. Pull apart the flanges (1) so that the guide edge is released as depicted in the figure to the right.
2. Zero the dial gauge (2) at 12:00
3. Lift or press down the driven shaft as far as the radial clearance will allow. Read the dial gauge and enter the reading with the correct sign on the radial clearance line.

   If the driven shaft is very long, there must also be compensation for bending of the shaft from its own weight. This can be obtained by lifting the end of the shaft using a spring balance, which then shows the weight of the flange and half the free part of the shaft. Deflection can then be calculated using this weight.

   The same must also be done if the drive shaft is long or has some play.
4. Zero the dial gauge again. Place one of the retaining screws through both flanges without tightening it.
5. Turn the shafts at the same time, read the dial gauge at intervals of 90° while turning one revolution and enter the values in the table. Make sure you use the right signs.
6. Calculate the parallel displacement between the shafts using these values.

Location of measurement point	Measurement value[1]	
12:00	±0	mm
3:00	±	mm
6:00	±	mm
9:00	±	mm
Radial clearance[2]	±	mm

1. + means inwards and - means outwards

2. + means lift and - means press

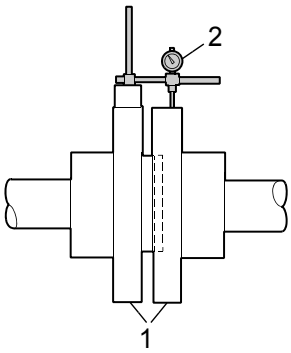

Measuring centring.

© Scania CV AB 2016, Sweden

Downloaded from www.Manualslib.com manuals search engine

https://truckmanualshub.com/

Calculating parallel displacement

Note:

Make sure you use the right signs.

Vertical

$$t = \frac{\text{6 o'clock + clearance}}{2}$$

Lateral

$$t = \frac{\text{3 o'clock + 9 o'clock}}{2}$$

Shafts without flange

If both shaft ends are free during alignment, alignment can be checked using a dial gauge (2) set up as depicted in the figure. Readings should be taken with the tip of the dial gauge in two different places at least 200 mm apart axially. Turn the shafts at the same time and read the results on the dial gauge.

Permissible deviations

After taking measurements, a final check should be made. All screws, except those for the flange joint, should be tightened to the torque specified by the manufacturer. Upon measurement, deviation should not exceed 0.1 mm.

The requirements for the accuracy of the alignment can vary depending on the design of the engine installation. If the requirements for accuracy are lower, the permissible deviation may be greater than indicated above.

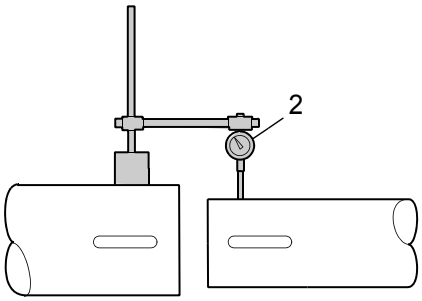

Measuring with free shaft ends.

© Scania CV AB 2016, Sweden

Downloaded from www.Manualslib.com manuals search engine

https://truckmanualshub.com/

Power transmission

Engine torque is normally transmitted to the driven unit in one of the following ways:

- Through a flexible coupling which cannot be disengaged, e.g. engines for generator sets.
- Through a friction coupling, possibly also used together with a flexible coupling, and via a reduction gear, torque converter or belt transmission.

Flexible coupling

Many engine installations require a flexible coupling between the engine and the driven unit to dampen irregularities in the system. Information about suitable flexible couplings can be obtained from your nearest Scania distributor or from the coupling supplier.

Carry out a torsional oscillation calculation before selecting a flexible coupling. When a flexible coupling is recommended based on the torsional oscillation calculation, it is important that the installed coupling and other transmission equipment follow the precise specification of the calculation.

For operation with generator set, there must be no play in the flexible coupling between the engine and generator.

Note:

For gas engines in generator operation, a single-bearing generator with a friction clutch should be installed so that the engine control unit is capable of detecting misfiring. If a flexible coupling is required in the installation, misfire detection must be deactivated in SDP3.

Friction clutch

Industrial installations use two types of friction clutches, a vehicle clutch and an industrial clutch. The industrial clutch has a greater capacity, i.e. it can transfer greater

© Scania CV AB 2016, Sweden

Downloaded from www.Manualslib.com manuals search engine

https://truckmanualshub.com/

torque than the vehicle clutch. There are many different makes of industrial clutches on the market. It is important that the industrial clutch is not subjected to loads that could cause overloading of the clutch bearings. Vehicle clutches are used together with conventional multi-ratio gearboxes, where the transmission can be disengaged.

Single-bearing clutches may not be subjected to large lateral forces and are therefore most often used in engine installations where torque is transmitted straight to the rear via a propeller shaft or similar power transmission. For heavier operation where large lateral forces arise, such as belt transmissions, Scania recommends using clutches which absorb lateral forces in the main bearings. This type of clutch does not have a support bearing in the flywheel.

It is also important that a remote-controlled clutch has no remaining pressure on the release bearing, neither when engaged nor disengaged, since the release bearing is then subject to rapid wear. For this type of clutch operation, we recommend the use of ball bearings as release bearings.

See the illustration in the Belt transmission in multi-engine installations section for how a belt transmission should be set up in a multi-engine installation.

If the engine installation has a clutch other than a friction type, e.g. hydrodynamic (wet) clutch, the necessary installation instructions can be obtained from the clutch supplier.

Note:

The crankshaft should not be subjected to axial pressure from the clutch. Check this after fitting.

© Scania CV AB 2016, Sweden

Downloaded from www.Manualslib.com manuals search engine

https://truckmanualshub.com/

Transmission types

Mechanical transmissions

Mechanical transmissions are the most common type on single engine installations. These may be multi-ratio gearboxes or reduction gears.

If an engine is supplied without a gear or gearbox, affected parts of the engine (flywheel, flywheel housings etc.) can still be adapted so that the gears and torque converters available on the market can be fitted.

For certain gears and torque converters, there are requirements to ensure that the axial run-out and radial run-out are not too great. Therefore check at installation to ensure that the supplier's requirements are met.

Belt transmissions

Belt transmissions are appropriate in, for instance, multi-engine installations where two or more engines drive a common output shaft. One of the advantages of a belt transmission is that it is easy to adapt to the appropriate gear ratio.

The belt transmission functions to some extent as a flexible coupling, runs silently and has a long service life. Apart from checking belt tension and alignment, belt transmissions do not require any special maintenance.

There are belt transmissions with different types of belts, such as single V-belts and devices consisting of two or more V-belts coupled together.

Which belt type to choose depends on several factors. More information and help in dimensioning a belt transmission can be obtained from the belt manufacturer.

Large lateral forces may arise during belt operation. Accurate alignment and checking of the belt tension are therefore necessary. A different belt tension results in increased bearing load and displacement of the centre of the load. The lateral loading can be reduced by e.g. changing the size of the pulley.

© Scania CV AB 2016, Sweden

Downloaded from www.Manualslib.com manuals search engine

https://truckmanualshub.com/

If there are large lateral forces on a pulley which is directly connected to an industrial clutch, the pulley must be seated on both sides in separate bearing brackets.

The manufacturer can provide information about permissible lateral forces and belt tensioning for belt transmission in each case.

Belt transmission in multi-engine installations

In multi-engine installations with a belt transmission, the alignment of the engine and bearings on the frame should be checked after the installation is complete.

In addition, you should also check that the pulley is properly secured to the shaft so that it cannot wander after start-up.

Shafts A and B should be sufficiently parallel that their centrelines fall within a circle with a diameter of 0.8 mm. See the illustration.

Check that the support bearings have sufficient lubricant as per the manufacturer's instructions. There are both oil and grease lubricated bearings.

IMPORTANT!

Always use paired belts or V-belts in multi-belt installations.

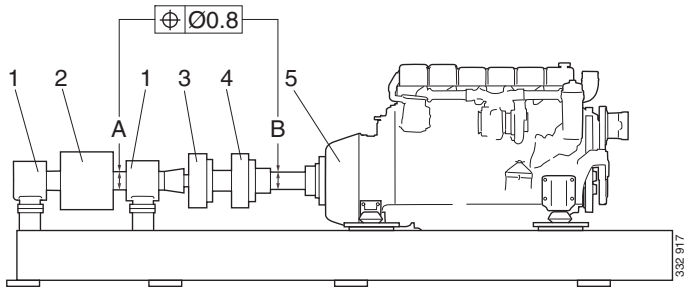

Example of engine in multi-engine installation with belt drive.

A = Bearing shaft.
B = Engine shaft.

1. *Steel bearing housing.*
2. *Pulley with belts.*
3. *Universal joint or flexible coupling.*
4. *Flexible coupling.*
5. *Industrial clutch.*

© Scania CV AB 2016, Sweden

Downloaded from www.Manualslib.com manuals search engine

https://truckmanualshub.com/

Power take-offs

The engines can be supplied with different types of power take-offs for driving units.

Note:

Only components from Scania are permitted in the belt transmission.

Front-mounted power take-offs

Example of shaft journal for direct connection of flexible coupling.

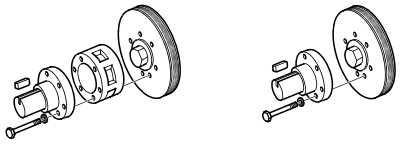

344 289

Example of pulley on crankshaft.

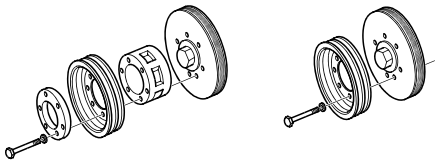

344 290

Example of shaft journal and pulley.

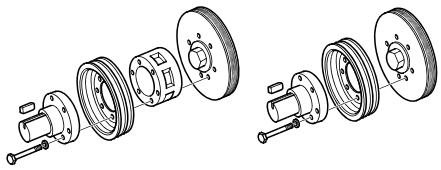

344 291

© Scania CV AB 2016, Sweden

Downloaded from www.Manualslib.com manuals search engine

https://truckmanualshub.com/

Connection of flexible coupling to front end of crankshaft

The engine must be equipped with a shaft journal or flange driver which is mounted on the crankshaft hub so that a flexible coupling (Centa A type, size 30 or 50) can be connected at the front end of the crankshaft.

The transmissible torque and power in the case of direct connection to the front end of the crankshaft are limited primarily by engine type and the type of joint between the crankshaft and hub.

Crankshaft pulley with two or more belt grooves

In order to fit this type of pulley, the cooling fan must be moved forwards.

The belt grooves are designed for 12.5 mm (0.5") narrow V-belts, but A section V-belts can also be used.

The transmission capacity of the V-belts determines the power available. Therefore it is important that the belt manufacturer's instructions are adhered to when calculating transmissible power.

As when connecting a flexible coupling or industrial clutch to the front end of the crankshaft, transmissible torque and power between the crankshaft and pulley are limited by engine type and the type of joint as shown in the following tables.

In order to avoid impermissible radial forces at the front end of the crankshaft when there are many belts in the transmission, the driven units should be positioned so that the forces balance each other out.

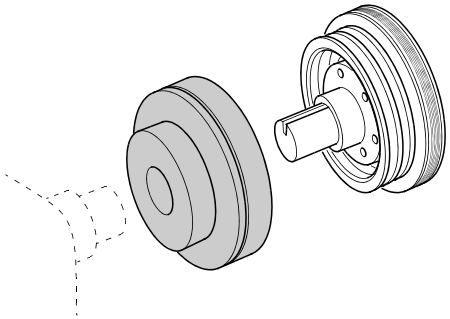

© Scania CV AB 2016, Sweden

Downloaded from www.Manualslib.com manuals search engine

https://truckmanualshub.com/

Torque take-off and transmissible power from the front end of the crankshaft

The tables below show the maximum torque take-off and transmissible power at different engine speeds.

Max torque take offs for screw joints (Nm)		
DC09	**DC13**	**DC16**
800	1,200	800

Note:

With the Centa A coupling size 30, torque take-off is limited to max. 400 Nm.

Engine speed (rpm)	Transmissible power	
	DC09, DC16	**DC13**
1,500	125 kW	188 kW
1,800	151 kW	226 kW
1,900	160 kW	239 kW
2,000	168 kW	251 kW
2,100	176 kW	264 kW

© Scania CV AB 2016, Sweden

Downloaded from www.Manualslib.com manuals search engine

https://truckmanualshub.com/

Side-mounted power take-offs

The maximum torque that can be taken off from units connected to power take-offs is indicated on the following pages.

The specified maximum torque assumes that the driven units have a relatively even drive torque, e.g. generators or vane pumps.

IMPORTANT!

In the case of units which have highly pulsed torque, e.g. piston pumps or piston compressors with one or two cylinders, the permissible torque must be reduced. The torque reduction is needed so that the average torque does not exceed the permissible torque for continuous operation and the peak torque does not exceed the maximum torque for intermittent operation.

When reducing permissible torque, consideration should be given to the torque reductions specified by the manufacturer of belts and flexible couplings.

Also assess whether connected units may have an effect on the crankshaft and cause torsional oscillations in the shaft system.

IMPORTANT!

Side-mounted power take-offs facing rearwards are not designed for driving without a load. If these power take-offs are not loaded, they must be removed. Otherwise, parts from the bearing housing may get into the engine and cause a breakdown.

Scania also recommends that SAE B power take-offs facing forwards are removed if they are not to be loaded.

© Scania CV AB 2016, Sweden

Downloaded from www.Manualslib.com manuals search engine

https://truckmanualshub.com/

Note:

If several different side-mounted power take-offs are used, the maximum permitted total torque take-off is 600 Nm.

Note:

The maximum permissible bending torque for all side-mounted power take-offs with SAE B connection is 30 Nm. This applies to all engine types.

Overview of side-mounted power take-offs for DC09 and DC13

Power take-offs	Direction	Connection	Rotation	Max. torque take-off	Gear ratio
1	Backwards	SAE B	↻	300 Nm	1:1.19
2	Forward	SAE B	↺	300 Nm	1:1.19
3	Backwards	SAE A	↻	100 Nm	1:1.71

Transmissible power

Engine speed (rpm)	Power take-off 1	Power take-off 2	Power take-off 3
1,200	45 kW	45 kW	21 kW
1,500	56 kW	56 kW	27 kW
1,800	67 kW	67 kW	32 kW
1,900	71 kW	71 kW	34 kW
2,000	71 kW	71 kW	34 kW
2,100	71 kW	71 kW	34 kW
2,200	71 kW	71 kW	34 kW

© Scania CV AB 2016, Sweden

Downloaded from www.Manualslib.com manuals search engine

https://truckmanualshub.com/

Overview of side-mounted power take-offs for DC16 and OC16

Power take-off 2 cannot be chosen for OC16.

Power take-offs	Direction	Connection	Rotation	Max torque take-off	Gear ratio
1	Backwards	SAE B	↺	300 Nm	1:1.19
2	Backwards	SAE C	↺	600 Nm	1:1.19

Transmissible power

Engine speed (rpm)	Power take-off 1	Power take-off 2
1,200	45 kW	90 kW
1,500	56 kW	112 kW
1,800	67 kW	134 kW
1,900	71 kW	142 kW
2,000	71 kW	142 kW
2,100	71 kW	142 kW
2,200	71 kW	142 kW

© Scania CV AB 2016, Sweden

Downloaded from www.Manualslib.com manuals search engine

https://truckmanualshub.com/

DC09 and DC13

Power take-off 1

The power take-off is located on the right of the rear of the engine.

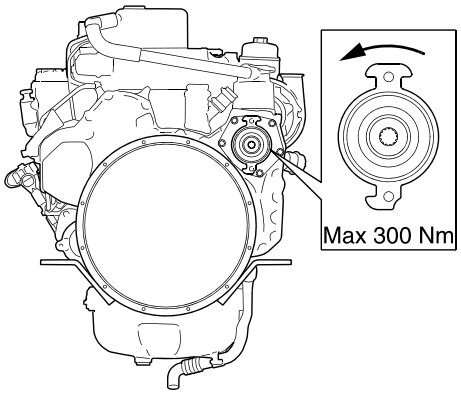

361 904

Power take-off 2

The power take-off is located low on the right of the rear of the engine, facing forward.

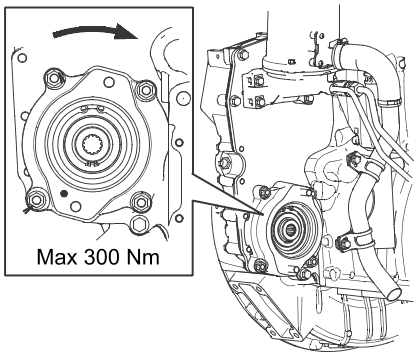

361 905

© Scania CV AB 2016, Sweden

Downloaded from www.Manualslib.com manuals search engine

https://truckmanualshub.com/

Power take-off 3

The power take-off is located on the left of the rear of the engine.

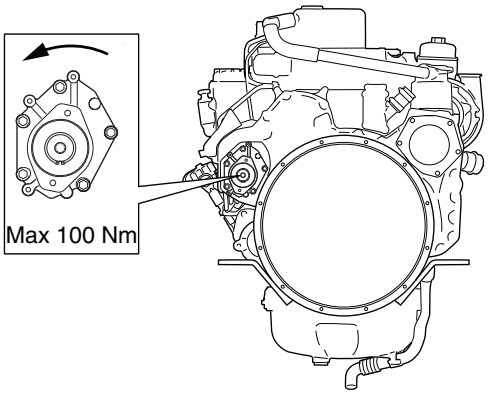

332 915

Hydraulic pump

A standard hydraulic pump can also be fitted in the same location as power take-off 3, i.e. on the left of the rear of the engine.

This hydraulic pump does not have an integrated pressure limiting valve. Such a valve must therefore be installed in the system.

Note:

When the hydraulic pump is installed, the tank must be positioned higher than the hydraulic pump for the pump to have an even flow.

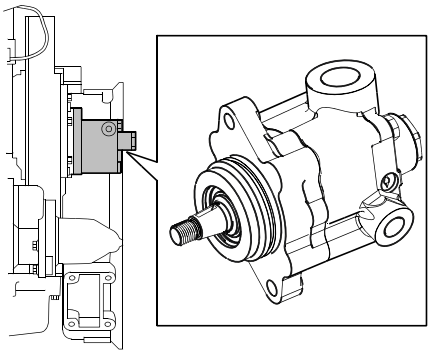

344 294

© Scania CV AB 2016, Sweden

Downloaded from www.Manualslib.com manuals search engine

https://truckmanualshub.com/

DC16, OC16

Power take-offs 1 and 2

Both power take-offs are located on the right of the rear of the engine.

Power take-off 2 cannot be chosen for OC16.

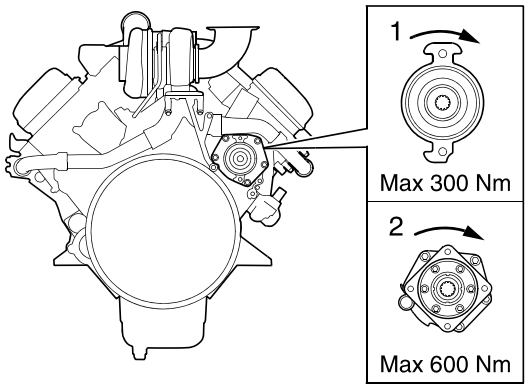

361 906

Hydraulic pump

On DC engines, a standard hydraulic pump can be fitted on the front right-hand side of the engine. The hydraulic pump is driven by the transmission via gears and the gear ratio is 1:1.75.

This hydraulic pump does not have an integrated pressure limiting valve. Such a valve must therefore be installed in the system.

Note:

When the hydraulic pump is installed, the tank must be positioned higher than the hydraulic pump for the pump to have an even flow.

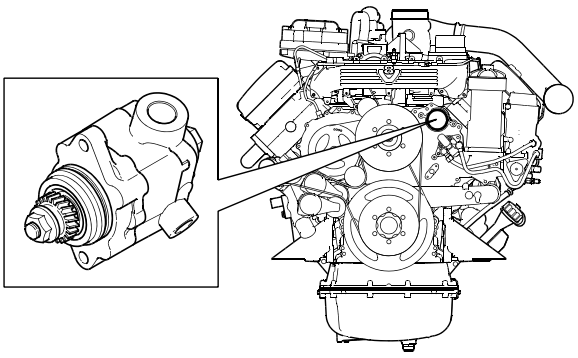

344 296

© Scania CV AB 2016, Sweden

Downloaded from www.Manualslib.com manuals search engine

https://truckmanualshub.com/

Air compressor

An engine can be equipped with an air compressor, e.g. for a vehicle with air brakes. The air compressor is delivered fitted on the engine and is driven by the engine timing gear.

The installer acquires and is responsible for equipment connected to the air compressor.

Air to the air compressor should be taken from the engine air filter. A safety valve is fitted on the air compressor outlet. The safety valve opening pressure is 19 bar. The air compressor has a fuel economy function that is activated when the system is not in use.

The figures show how a normal system is made up:

1. Air compressor
2. Safety valve
3. Safety valve
4. Relief pipe
5. Test connection, filling
6. Check valve
7. Four-way safety valve
8. Relief valve
9. Air dryer
10. Drain tap
11. Tank

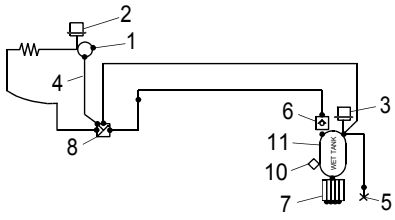

Air compressor without air dryer.

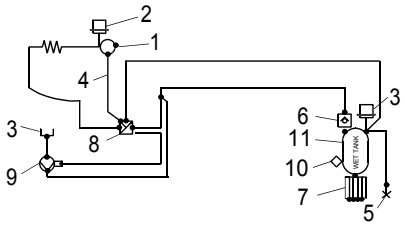

Air compressor with air dryer.

© Scania CV AB 2016, Sweden

Downloaded from www.Manualslib.com manuals search engine

https://truckmanualshub.com/

Torsional oscillations

Torsional oscillation arises in any shaft system which includes a combustion engine. Depending on the combination of the design of the shaft system and the operating speed, these oscillations may attain high amplitudes and therefore place great strain on the equipment. This may even lead to total breakdown in a part of the shaft system. This process may be very rapid.

IMPORTANT!

A torsional oscillation calculation must be carried out for each unique engine installation and be documented in conjunction with the installation report. The customer or installer is responsible for performing this calculation.

If no torsional oscillation calculation has been carried out, or one has been carried out with unsatisfactory results, Scania Engines takes no financial or technical responsibility for installation problems or engine breakdowns caused by torsional oscillations.

An unsuitably assembled installation may mean that it is necessary to limit the operating speed range or refrain from using a front-mounted power take-off.

If a torsional oscillation calculation is made at the planning stage, it is usually possible to easily adjust the shaft system to provide the safest engine installation.

© Scania CV AB 2016, Sweden

Downloaded from www.Manualslib.com manuals search engine

https://truckmanualshub.com/

Data for torsional oscillation calculation

Form for torsional oscillation calculation is available on SAIL.

Contact your nearest Scania distributor if you require help downloading the form or with the torsional oscillation calculation.

The following information is required for the calculation:

1. Engine type designation and classification society.
2. Operating speed and power.
3. The equipment fitted to the front and rear parts of the engine. State Scania part number.
4. Gear ratios.
5. Moment of inertia (j) or rotating mass (GD2) for component couplings, flanges, gears, shafts, propellers, generators etc. which rotate with the engine.
6. For couplings which can be disengaged, flexible couplings and similar, the values for the component parts are required. If the values are not available, a drawing of the part is required showing diameters, widths and thicknesses of the component parts.
7. Dynamic rigidities of flexible couplings, shafts and belt transmissions. However, for shafts the material, length, outside and inside diameters, press-in lengths, shrink-on lengths and similar can be stated. For belt transmissions, we require shaft spacing, pulley diameters, belt type, number of belts and dynamic rigidities.
8. In the case of generator sets, a drawing of the generator shaft must be included with the calculation if it is to be approved by a classification society.

© Scania CV AB 2016, Sweden

Downloaded from www.Manualslib.com manuals search engine

https://truckmanualshub.com/

Torsional oscillation calculations from Scania

Scania's torsional oscillation calculations are made with direct frequency response for all configurations up to 350 Hz in a linear system for the engine speeds in question. The calculation is based on technical data provided to Scania by the customer or manufacturer for parts forming part of the elastic mass system which are not manufactured by Scania.

An approved calculation forms a guarantee against damage caused by torsional oscillations for all rotating parts from Scania that are included in the engine installation under Scania's general warranty commitments. The approval should not be regarded as a general system warranty in any other respect.

Scania only takes responsibility for parts in Scania's product range and not for any other parts. Scania can, however, give a warning if the calculation shows that non-Scania parts are subjected to high torsional amplitudes.

Together with the different subsuppliers, the supplier of the complete engine installation to the customer should confirm the torsional capacity and provide approval for each component, based on the torsional oscillation calculation.

ISO 3046/V applies where appropriate.

The torsional oscillation calculation does not allow Scania to provide any statement or guarantee as regards hunting.

Torsional oscillation calculations may also be performed by companies other than Scania. The data required for performing these calculations can be obtained from SAIL.

© Scania CV AB 2016, Sweden

Downloaded from www.Manualslib.com manuals search engine

https://truckmanualshub.com/

General tightening torques for screw joints

Specification of normal tightening torques

The specifications in the tables on the following pages show the normal tightening torques for screws and nuts.

The following conditions apply:

- A tolerance of ±15% applies to all values unless otherwise specified.
- All contact surfaces are to be clean and free of paint and the like.
- Screws and nuts are normally not lubricated regardless of surface treatment.

Union assemblies

The specified values apply with a tolerance of ±5%. The values apply to tightening with a counterhold.

Thread inserts

The specified tightening torques also apply to screw joints with a thread insert (Heli-Coil). Thread inserts often provide greater strength compared to a directly screwed thread. This creates a stronger screw joint in, for example, aluminium. For this reason, thread inserts are used in certain joints in Scania's production.

© Scania CV AB 2016, Sweden

Downloaded from www.Manualslib.com manuals search engine

https://truckmanualshub.com/

Tightening torques

Hexagon screws, hexagon socket screws, Torx screws, hexagon nuts

Metric thread, coarse pitch

Thread	Strength class 8.8/8
	Tightening torque (Nm)
M4	2.9
M5	6
M6	9.5
M8	24
M10	47
M12	84
M14	135
M16	210
M18	290
M20	420
M22	580
M24	730

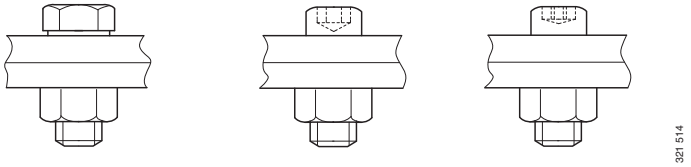

© Scania CV AB 2016, Sweden

Downloaded from www.Manualslib.com manuals search engine

https://truckmanualshub.com/

Flange screws with hexagonal head and hexagonal flange nuts

Metric thread, coarse pitch

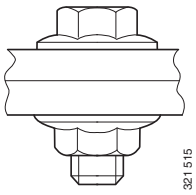

Thread	Strength class 8.8/8
	Tightening torque (Nm)
M5	6.7
M6	10.2
M8	26
M10	50
M12	92
M14	149
M16	184

Thread forming Torx screws and hexagon screws with captive washer

Modified metric thread, coarse pitch

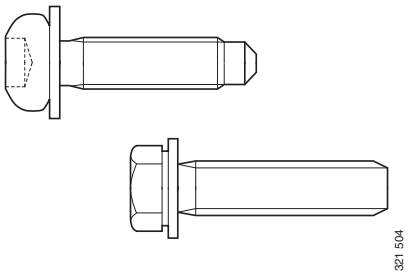

Thread	Class 8	Class 10
	Tightening torque (Nm)	
M4	2.9	-
M6	9.4	11
M8	24	26
M10	47	49
M12	80	85

© Scania CV AB 2016, Sweden

Downloaded from www.Manualslib.com manuals search engine

https://truckmanualshub.com/

Stud end in threaded hole, strength class 8.8/8

Metric thread, coarse pitch

The stud end must be tightened in the threaded hole so that the stud does not come loose when undoing the nut. To tighten the stud in the threaded hole the torque must just overcome the friction in the thread and generate a preload. The torque for locking is 50% of the normal torque for hexagon screws, hexagon socket screws, Torx screws and hexagon nuts.

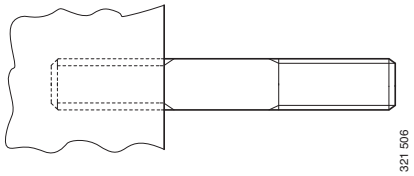

Union nuts for ferrule

Thread	Tightening torque (+/-15% Nm)			
	For pipe diameter	Steel pipe with greased steel nut	Plastic pipe with steel ferrule and brass or steel nut	Plastic pipe with brass ferrule and nut with rubber seal
M10x1	5	15	10	-
M12x1.5	6	20	10	-
M14x1.5	8	30	20	-
M16x1.5	10	40	25	15
M18x1.5	12	50	30	20
M20x1.5	12	55	35	-
M24x1.5	16	60	50	40
M30x2	22	120	-	-

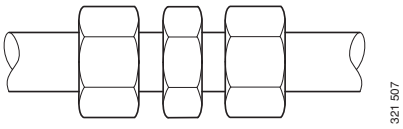

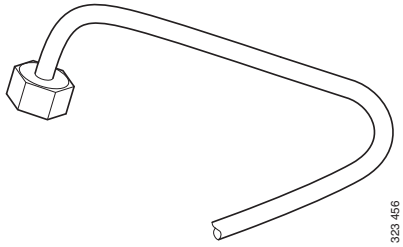

© Scania CV AB 2016, Sweden

Downloaded from www.Manualslib.com manuals search engine

https://truckmanualshub.com/

Special torques for engine suspension

Front engine suspension

Type of screw	Tightening torque
25 mm clamping length, M16, 10.9	130 Nm, 90°
50 mm clamping length, M16, 10.9	130 Nm, 135°

Rear engine suspension?

Type of screw	Tightening torque
M14, 8.8	149 Nm

Sticker “Powered by Scania”

Customers who so desire can order the sticker “Powered by Scania” to attach to the machine.

Machines operated using Scania's industrial and marine engines must be uniformly marked, therefore this is the only sticker which should be attached to the machine containing the engine.

Instructions for positioning the sticker are included. For more information, contact your nearest Scania distributor.

© Scania CV AB 2016, Sweden

Downloaded from www.Manualslib.com manuals search engine