https://truckmanualshub.com/

PREFACE

This Manual shall be well kept and thoroughly read by the operator.

- The contents of this Operation Manual include: correct operation, simple maintenance and routine inspection.
- Before operating the forklift, please read this Manual thoroughly, so as to ensure safe and efficient material handling via correct driving and proper maintenance.
- The contents of this Manual will be probably different from the actual condition due to product improvement.
- When the forklift is rented or transferred, this Manual shall be rented or transferred with the forklift.
- When you encounter problems, please contact the Sales Department of our company.

This manual is suitable for the following models of engine series forklifts developed and produced by our company:

LG20D、LG20DT、 LG25D、LG25DT

LG30D、LG30DT、 LG35D、LG35DT

This manual is the first version., the zeroth amendment.

Information about the signs

hazards	Indicate the approaching dangers which will cause death or severe injuries if not prevented. People should obey the instructions.
Warning	Indicate potential dangers which will cause death or severe injuries if not prevented. People should obey the instructions.
Caution	Indicate potential dangers which will cause mild or moderate injuries if not prevented. People should obey the instructions.
Explanation:	Words or sentences that are directly or indirectly related to the personnel safety and the maintenance of the forklift.

https://truckmanualshub.com/

Content

Description of the forklifts and their device..... 1
Ⅰ. About safety.....2
1. Main application of the forklift.....2
2. The operation place and working environment of the forklift..... 3
3. Safety problems before operation.....4
4. Safety problems during the operation.....7
5. Safety problems during repair and maintenance.....17
6. Safety problems during the installation,
adjustment and use of the attachment.....20
7. Precaution during the operation
of the liquid gas forklift.....22
8. Label plate..... 25
Ⅱ. Device operation and application method..... 30
1. Instrument part.....32
2. Switch part.....34
3. Control part.....36
4. Frame body part.....39
Ⅲ. Driving and operation..... 43
1. Operation of new forklift..... 43
2. Relationship between load and forklift stability 43
3. Load center and load curve.....44
4. Forklift stability..... 44
5. Transportation, loading and unloading of forklift.....44
6. Before and after the engine startup.....45
7. Operating the machine.....47
8、Loading.....49
9. Stacking.....50
10. Un-stacking.....51
11. Storage..... 52
IV. Regular inspection and maintenance.....54
1. Inspection requirements.....54
2. Inspecting items.....54
3、Maintenance.....60
4、Regular maintenance time able.....62
Ⅴ、Others..... 72
1、Lubrication chart.....72
2、Forklift oil.....73

Description of the forklifts and their device

This book is about the third generation engine-counterbalanced type forklift series developed and produced by our company. The new developed forklift series not only inherit all advantages of each generation forklifts, but also introduce the most advanced overseas and domestic techniques and process., apply the advanced ergonomics design to the forklift. Above all not only guarantee the reliability and practicability of products, but also strengthen the design concept of humanization. The electrical system, hydraulic system and other units adopt suppliers' products which have been tested by the market, have mature technology and reliable quality. The style of the forklift is designed by the professional company of the vehicle industy. The appearance is novelty, streamline is easy and smooth. The forklift is full of innervation, contains profound cultural deposits of Lonking and creates a new unique style.

Several functions of forklift :

1. It can alleviate the work intension , save the labour force , enhance the productivity , according to some foreign ducuments , a forklift truck can do the work , which need 8-15 persons to finish .
2. Because of enhancing the productivity and shorting the work time , so accelerate the work speed of trucks and ship .
3. Using the forklift to work , the goods can be stowed higher , for example now it can stow 3m or even higher , so the rate of using the storage can be enhanced about 30% or 40%。
4. It can use stock and container to fill goods , it makes packing simple , and save the cost of packing , cut down the cost of loading and unloading , enhance work efficiency and safety .

5.It can instend of body work , reduce damageing the workers and goods , enhance work safety .

I. About safety

Safety is significant for you, this Chapter will primarily introduce elementary safety regulations and cautions of standard forklift during normal operation, and furthermore, this Chapter is also suitable for the forklift with special mast and attachment.

1. Main application of the forklift

1) Main application of the forklift

The main application of the forklift is to load and unload, stack and carry the goods placed on the pallet. In addition, after installing the proper attachments on the forklift, the forklift can be also used to load and unload, transport and stack the goods which are not placed on the pallet.

2) The use forbidden out of the purpose

The use out of purpse indicates that forklift travels with carrying people, people are lifted high or other vehicle is towed, the application method forbidden in the Manual absolutely should not be implemented.

Instance of application out of the use range:

- The personnel standing on the fork or pallet.is lifted
- The personnel stands on the pallet to press the goods.
- Hang the wire rope on the fork to hoist goods directly.
- Tow other vehicles.
- Use fork to push goods or other vehicle.
- Use fork to open and close other truck door, etc.

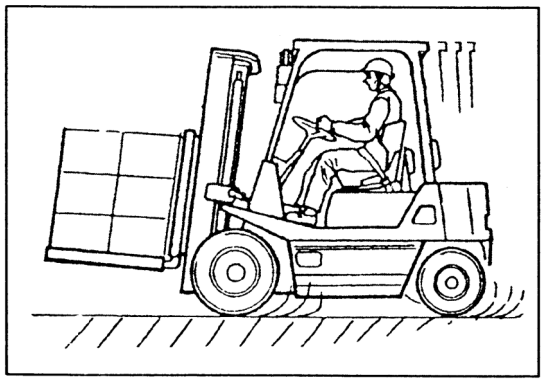

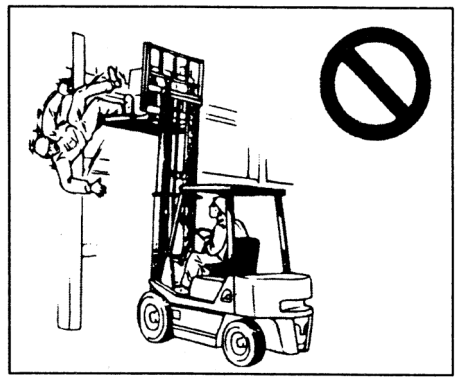

2. The operation place and working environment of the forklift

1) Ground status

The operation place for forklifts shall be even and hard road surface or ground surface withgood ventilation.

The forklift performance depends on the ground condition. Pay special attention when driving on the slope or rough road. Travel speed should be decelerated to make the machine travel slowly.

⚠Warning

- Ensure the forklift won't be trapped into the muddy road.
- Round the obstacle, when the obstacle can't be avoided, drive slowly and do not damage the vehicle chassis.

When the forklift is driven on the road surface with ice and snow, the tire chain shall be used, sudden acceleration, hard braking and sharp turn shall be avoided, and the travel speed should be controlled by the force from accelerator pedal

⚠Warning

- Tire chain can increase the adhesion between the forklift and the ground surface, but the sideslip performance will be reduced, which shall be paid special attention to.

2）Climate conditions

⚠Warning

In case of heavy wind, try not to perform the high lifting operation as possible as you can. Otherwise, the falling of the goods may cause accidental injuries to the driver.

3) Measures for cold and hot weather

a) Oil

Use the oil suitable for ambient temperature as different seasons.

b) Battery

- In cold season, under normal charging condition, the freezing point of electrolyte is about -35℃.

Battery shall be charged under excellent condition. assure the battery is at the normal condition, under which the battery can start the machine. If he battery lose power, park the forklift at the place with the high temperature. After the electrolyte frozing, the battery shell will be damaged due to volume expansion of the battery. in order to prevent electrolyte being frozen, battery shall be charged to at least 75% of gross capacity. The best method is to maintain specific gravity at 1.260 , but do not exceed this value.

- In the hot season, Because the water in the electrolyte will be vaporized, please add distilled water at any moment, check the electrolyte once a week and add distilled water. When the ambient temperature is higher, the electrolyte specific gravity

should be reduced to 1.220±0.01. The battery is more efficient under the high temperature, so there is no need of other maintenance.

Hazards

- The gas generated by the battery will be explosive, don't smoke or use open fire, don't generate electric arc or sparkle beside the battery, when the battery is stored or charged in the closed space, ventilation shall be favorable. The battery electrolyte contains sulfuric acid which will cause burnt, the eyes, skin and clothes shall avoid electrolyte, if they touch sulfuric acid, they shall be cleaned with water, when the sulfuric acid spatters into eyes, the worker shall go to hospital.

C) Coolant in the radiator

- The cooling system of the forklift is equipped with long effect antifreeze fluid. The freezing point of this fluid is -35℃.
- In the hot season, in order to approach the good cooling effect, frequently clean the exterior of the radiator. When park the machine outdoors, park the machine in the shady and cool place.

Note: Do not operate the forklift in combustible and explosive environment.

3. Safety problems before operation

1) Acquire operation qualification

- Only the trained and qualified personnel can operate the forklift.
- The characteristics of the brake, accelerator and hydraulic lever of each forklift with the same technical parameters will be probably different, read this Manual and label plate on the vehicle thoroughly and drive the forklift after being familiar with various operation.

2) Dress when driving forklift

Caution

- Please wear working clothes, boots and safety helmet when driving the forklift.
- In order to ensure safety, don't wear loose clothes to avoid the unexpected danger due to hanging.

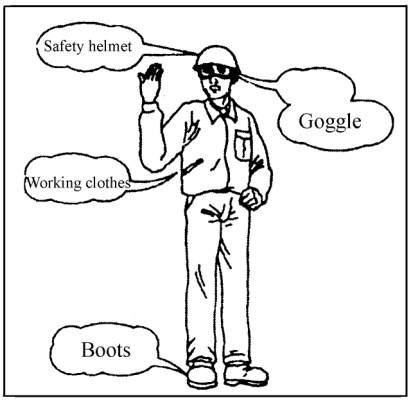

3) Drunk driving is not permitted.

·When you feel tired and are not concentrated or after dosing anesthetic or drinking wine, do not drive forklift.

4) Safety of working place

Caution

- Maintain favorable road condition and the road shall be unblocked.

- The working place shall be provided with enough light for the safety.
- When the forklift is operated on the platform or shore gangway, the forklift may rollover, please use cushion block or take other protective measures to prevent rollover.

5) Keep the cab clean

Caution

- Cab shall be kept clean all the time.
- When the hands are wet or touched with oily soil, don't operate the forklift.
- Don't place tools or other metal objects in the cab, and they will hamper the operation of joystick or pedal.

6) Integrity of forklift

Caution

- The standard forklift is equipped with overhead guard and the gear rack.

Note

- The gear rack is used to protect the operator from damaging by falling of the object. It is to be noted that the gear rack is used to avoid the falling impact of small object and case, but it can't avoid the falling impact of related load, so protective measures shall be taken for the falling object in advance.

Warning

- Without the written approval of our company, the forklift can't be refitted or increased with any working device, else the rated load or the safe operation will be probably influenced.
- Don't install the any component blocking the driver's sight.

7) Regular maintenance

Caution

- Perform daily maintenance and regular maintenance.

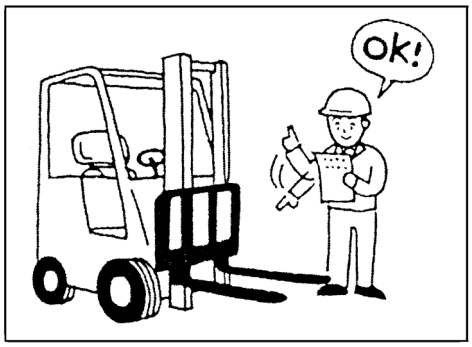

Warning

- When the forklift is damaged or has fault, stop operating it and inform the maintenance staff of the forklift Condition, before the forklift is thoroughly repaired, it can't be operated.

8) Avoid fire

Caution

In order to avoid the fire, the fire extinguisher shall be configured and the fire extinguisher shall be operated according to operating requirements.

9) Do not overload

Caution

- Do not overload, or the machine will overturns. Make sure the allowable load according to the load center.

Note

- The allowable load indicates the maximal load put at the load center of the fork.

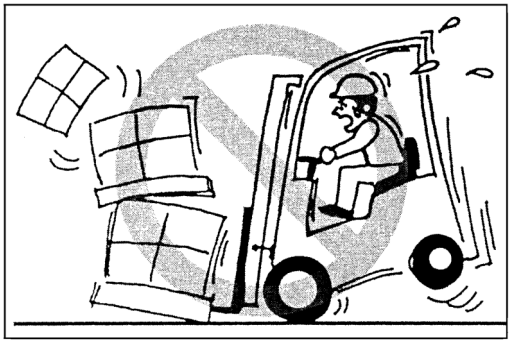

10) Use the proper pallet

Caution

- According to the goods, select the pallet with proper dimension and strength .
- Ensure the goods is on the pallet stablly wand has the proper shape.
- without the pallet,do not carry the small and bulk goods .

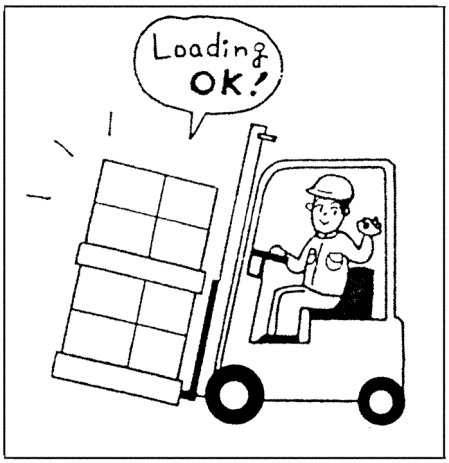

4. Safety problems during the operation

1) Cautions when forklift startup

- Pull up the hand brake.
- Put the gear shifter at neutral gear.
- Step down the inching pedal or the brake pedal.
- Adjust the seat for easy control.with the hand and foot.
- Make sure there is nobody on and under, front and rear of the forklift.

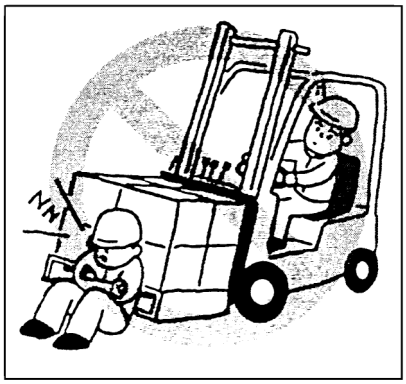

2) Cautions during the forklift operation

Caution

- When transport large goods and field of view is poor, please drive backward or drive with instruction of others.
- When the forklift travels backward, the driver should turn the face backward, after conforming the condition of rear direction, the forklift can be driven. The rear-view mirror and the back-up buzzer belong to auxiliary device.

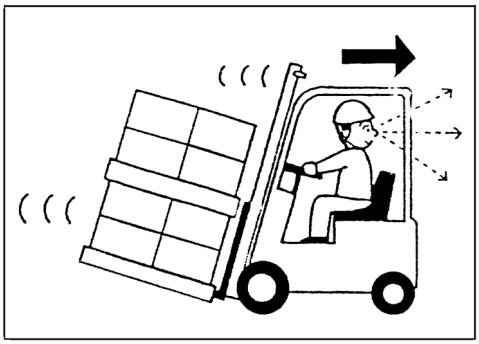

- When the forklift travels in the narrow channel, driving should be guided.
- The driver should park the forklift at cross road or other place where the view is limited, and drive the forklift when conform no one is around th e forklift.

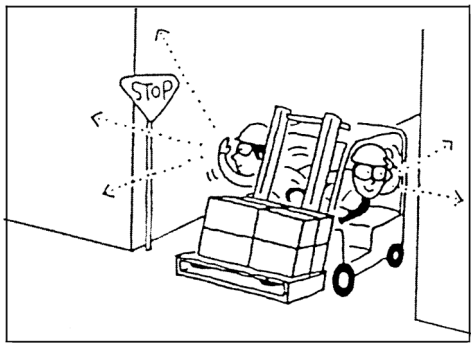

- Ensure there is not enough sufficient safe distance around the forklift or platform edge, which will prevent forklift falling.

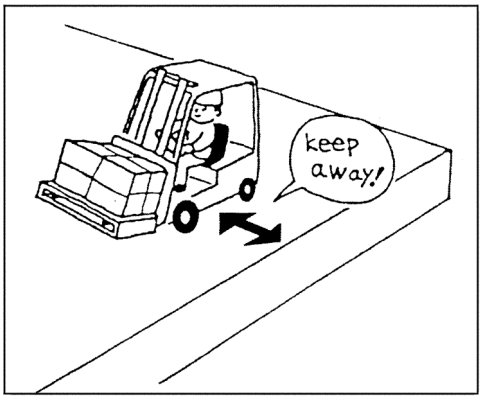

- The forklift is different from the vehicle,

it adopts rear-wheel steering, travel speed will be reduced when steering, then rotate the steering wheel to turn the forklift.

3) Do not drive the machine aggressively.

Caution

- Do not turn on the key switch when stepping down the accelerator pedal.
- Sudden start, brake or sharp turn are not permitted, sudden start or brake will make goods fall, sharp turn can make forklift overturn and cause severe accident.
- Whether the forklift is under full load or unload, the hydraulic control lever shall be controlled slowly. When the fork is at high position and the lever is controlled suddenly, goods will fall or the forklift will overtrun.

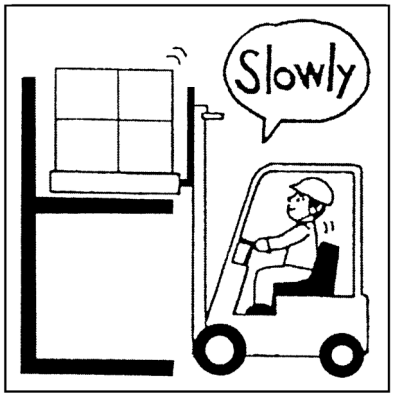

Note

- Don't drive the forklift across the stop plate or obstacle scattered on the road.

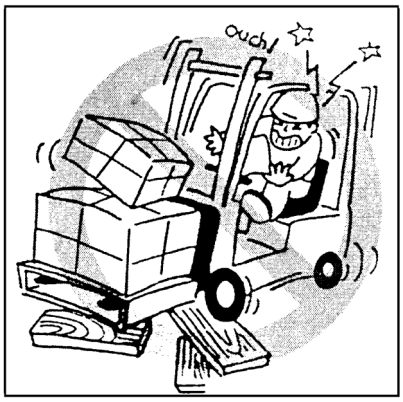

- When the forklift passes by other vehicles, reduce the travel speed and sound the horn.
- Don't drive the forklift on the soft ground.

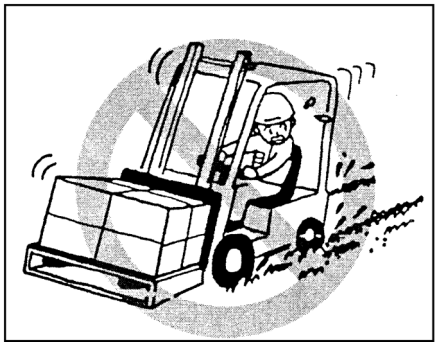

- When the forklift is driven on the wet, skidding, uneven or inclined road surface, travel speed should be reduced.
- Ensure there is a certain gap among the mast, object in interior space and entrance & exit.

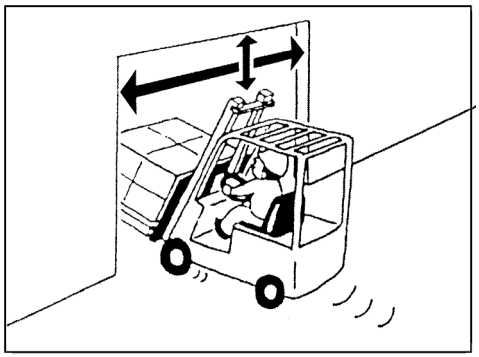

4) Do not operate the forklift when lifting the fork

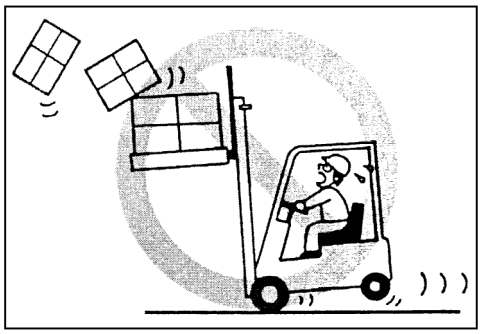

Caution

- When lifting the fork, don't operation the forklift, otherwise the unstable condition will be probably caused and forklift will probably roll over.

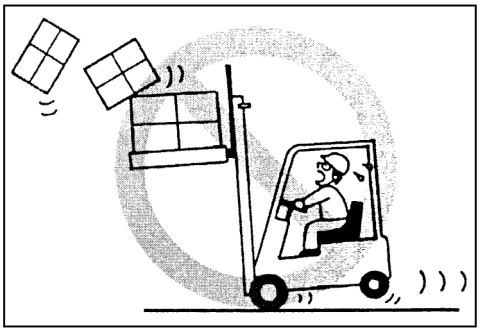

5) The fork tip can't be used for operation

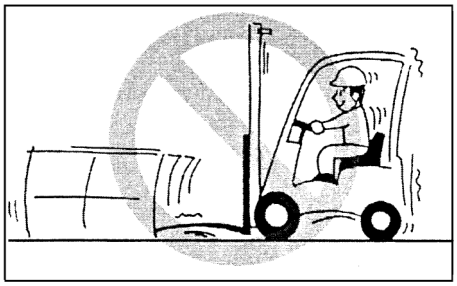

Caution

- Do not use the fork tip to push, squeeze or lift goods, when the goods is lifted with the tip, the forklift or the goods will be probably damaged.

6) Push-and-pull operation is forbidden.

Caution

- Goods can not be pushed or pulled with the forklift, or the goods may be damaged or fall.

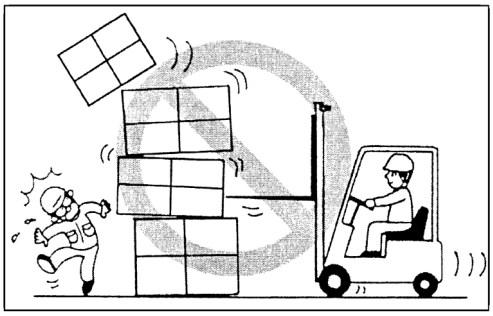

7) Travel on the slope

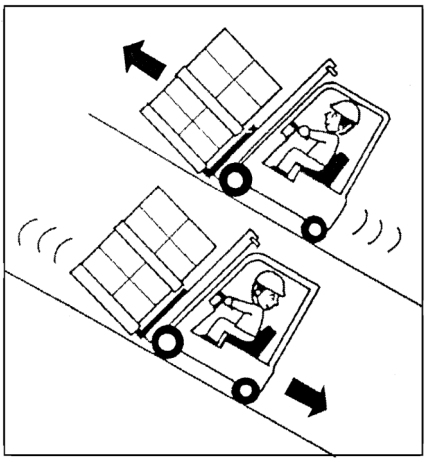

Caution

- When the forklift is travelling on the slope, do obey the following rules:

  With load: The forklift travels forward when upgrading and travels backward down-slope.

  No load: The forklift should travelsbackward upslope and travel forward down-slope.
- The forklift shall be driven with strap brake to ensure the fork won't touch the ground.
- Don't make turn or implement loading and unloading operation on the slope, or the forklift will probably roll over.

8) Imbalanced stacking is permitted

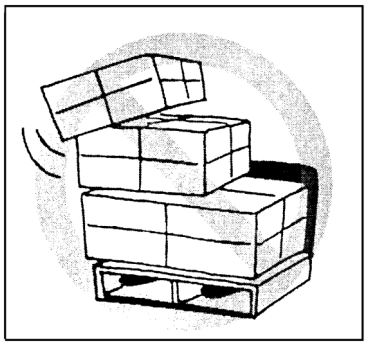

Caution

- When the forklift is operated to stack goods, the goods must be stacked safely and stably, the distance between forks should be large as possible as it can. At the same time, the fork should be inserted into the pallet accurately and the gravity center of the goods should conform to the forklift center.

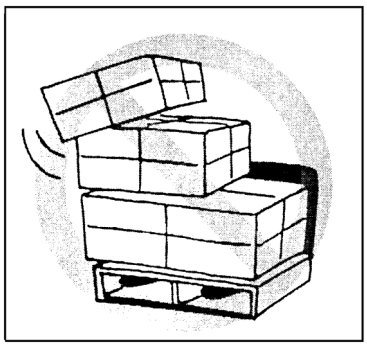

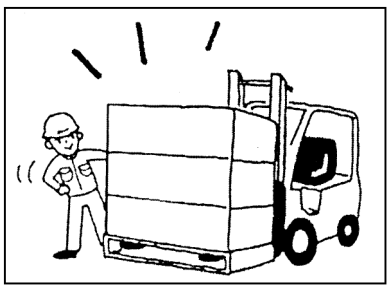

- If the imbalanced goods are transported, the goods will probably fall and the

forklift will probably roll over.

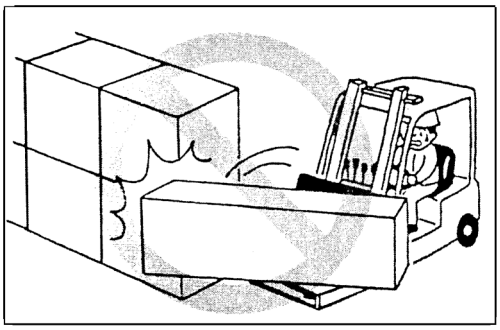

9) Personnel should not be on and under the forklift.

Caution

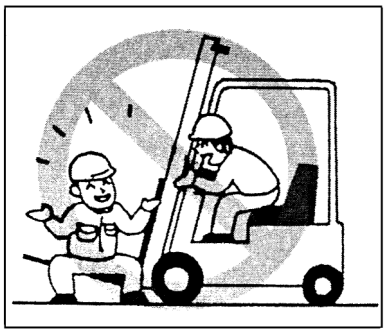

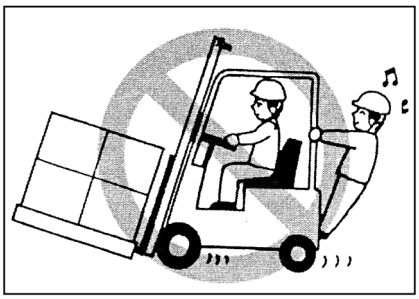

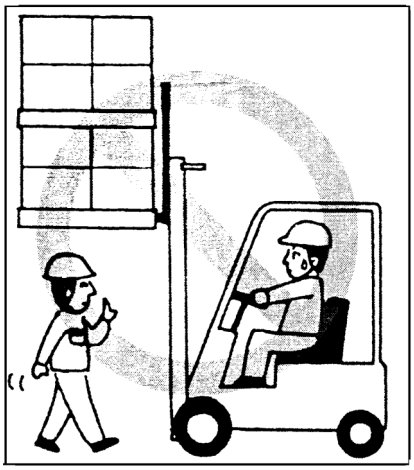

Warning

- The forklift should not travel with the personnel on the fork or pallet, and the fork and pallet can't be lifted with the personnel on it.
- The forklift can't take other personnel except the driver.
- Don't use body weight to balance the overload forklift.
- personnels are forbidden to stand on the goods or cross under the goods lifted.

10) People are not allowed to enter the mast mechanism

Warning

- The body or any part of body is forbidden to enter the mast mechanism or the space between the mast and the machine body.

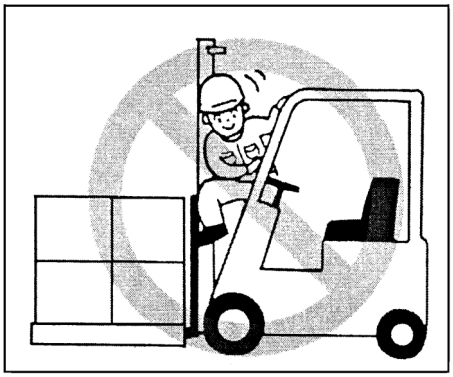

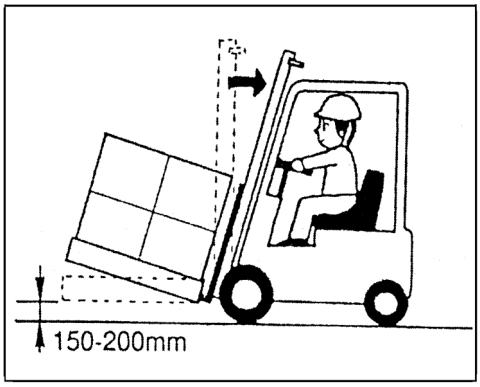

Caution

- The body must be with the gear rack, and any part of body can't be outside of the vehicle body.

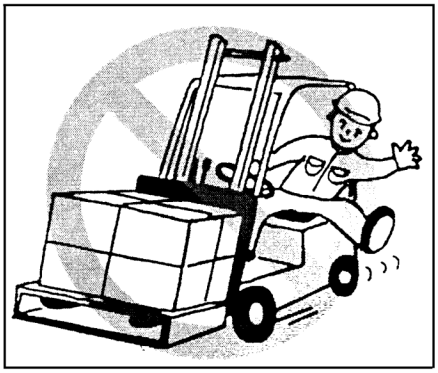

11) Before the mast tilting forward, the fork can't be lifted

- Before the mast tilting forward, the goods can't be lifted and the forklift can't be driven, before the goods is lifted or the forklift is driven, the mast shall tilt backward in position to stabilize goods, when the forklift is driven (with load or no load), the fork shall be 150~200mm above the ground.
- When the goods are lifted by the fork, the mast can't tilt forward.
- When the goods is lifted and lowered, the forklift shall be stopped.
- When the mast is under tilted condition, goods can't be loaded and unloaded.

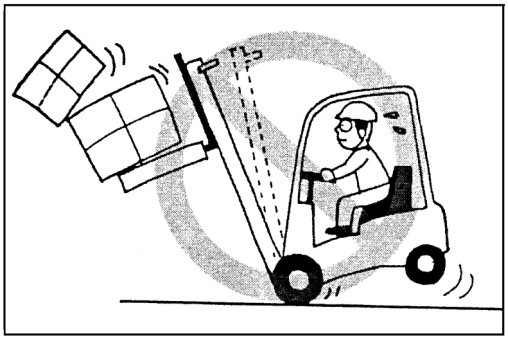

12) Operation in the trunk

- The forklift can only load and unload the goods on the goods platform on which the trailer is fixed well.
- Before the operation is started, the gangway shall be fixed well and the strength shall be checked.
- Reduce the travel speed of the forklift when getting in and out of the forklift and be careful whether the gangway is stable.

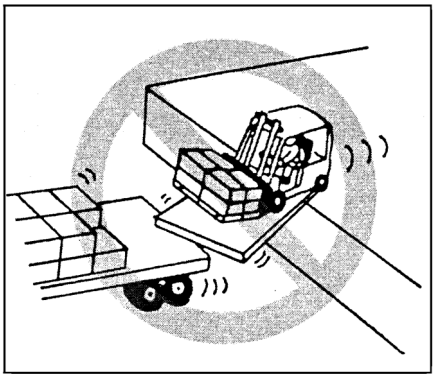

13) On and off the forklift

Warning

- Do not jump on and off .the forklift
- When getting on and off the forklift, hold the handle and step on the pedal.

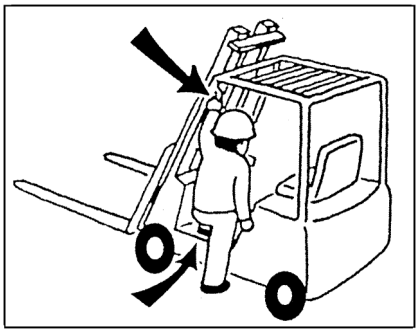

- When getting on and off the forklift, do not hold the steering wheel or joystick.

14) Goods should not be over-high

Caution

- The goods shall be against the load backrest, the goods height can't exceed the gear rack, or the goods will fall to the operator and may injure the driver.
- In order to avoid the collapse of the stacked goods, they can be transported after being fixed reliably.

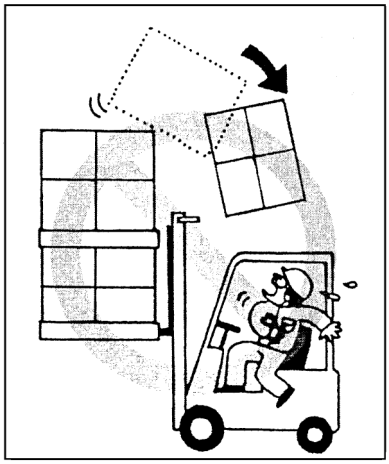

15) Chain condition

Caution

- When the chain is loose, do not take out the fork from the pallet, otherwise goods will fall or the forklift will roll over.

Note

- When the chain is loose, pull up the lifting lever a little to lift the fork, which can correct the loose condition of the chain, then take out the fork from the pallet.

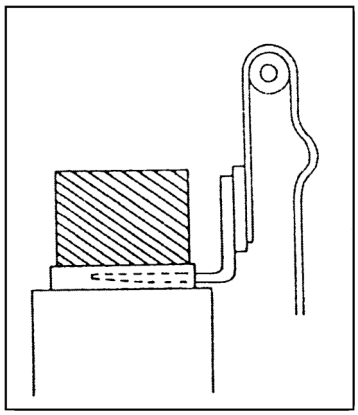

- If the chain wore during the use and the change value of the chain pitch exceeds

2% of the standard value, the chain should be replaced to ensure loading safety. If the tightness of the whole chain is not the same, the chain should be adjusted to the unique stress condition.

16) Fork regulation

- In accordance with the dimension of the pallet, regulate the fork distance to the optimum position. Pay attention to not injure the hands when adjusting.

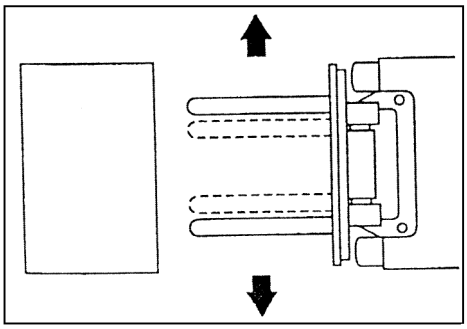

- After the fork distance is regulated, fix the fork with the fork positioning pin, if the fork isn't fixed, the fork will move during travelling and goods may fall or be crushed.

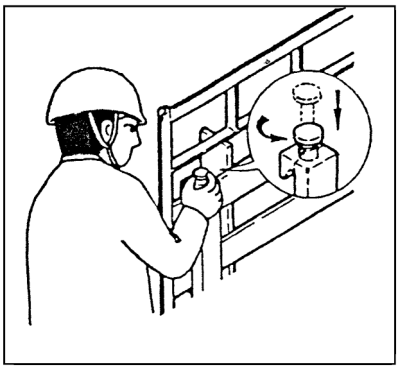

17) Transportation of over-wide goods

Caution

- When over-length and over-wide goods is transported, pay special attention to operating the forklift.
- Turn the forklift and lift the goods slowly to prevent the goods from moving, meanwhile, pay attention to safety of the surrounding area.
- When carry the over-wide goods, the forklift should be equipped with proper width fork and extension fork, the carrying capacity of the extension fork should be confirmed to the load curve requirements, within the stipulated load center, it's carrying capacity is same as that of the standard fork, and load must be lowered when load center moves forward.

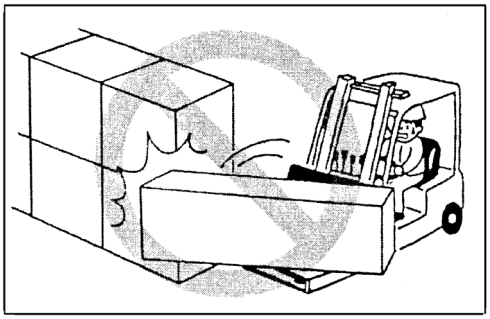

18)Goods should not be unloaded with hands

Caution

- Do not unload goods with hands to prevent unexpected injury.

19) Parking of the faulty forklift

Note

- If the forklift is parked at roadside, warning alarm or "Out of work" shouldl be marked on the vehicle and take off the key.

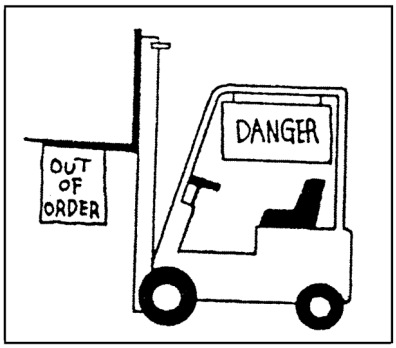

- When the fork can not fall due to the malfunction, an obvious label should be provided to prevent collision with other vehicle and pedestrian.

20) Precaution before leaving forklift and after ending up work

Note

- The mast should tilt forward slightly and the fork should be set level to the ground naturally, or the personnel may be stumbled over or injured..

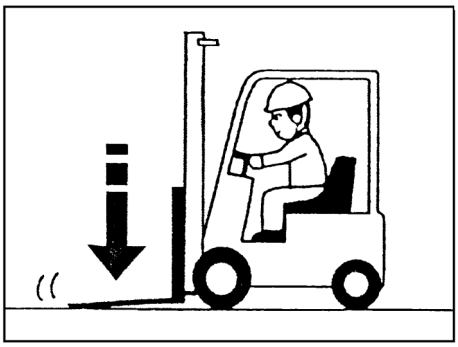

- Put the direction lever at neutral gear.
- Release the parking brake lever.
- Close the key switch and take off the key.

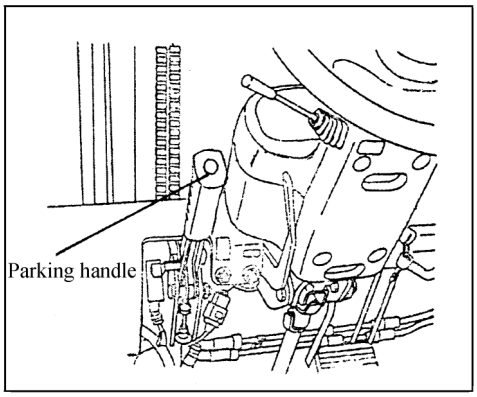

21) Parking

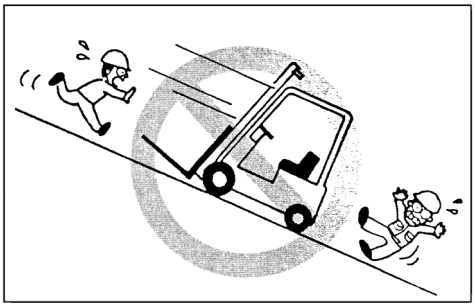

Caution

- Please park the forklift at the appointed place.
- The parking place should have sufficient strength and will not block traffic .
- Do not park the machine at the place where or nearby there are inflammable materials .
- Do not park the forklift on the slope. because the forklift will make a unexpected movement, if it's necessary

to park the forklift on the slope, not only the usual parking procedure should be obeyed, the stop block shall be put at the tire position to prevent forklift from moving.

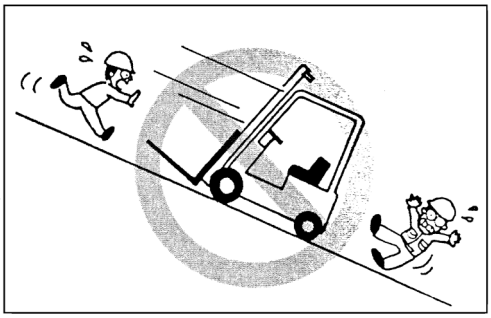

22）Noises

The maximum noise out of the forklift should not be over 104db.The measurement method should be in accordance with Standard JB/T3300. Measure the noises by the sound pressure level at the seat of the driver and by the sound power for the surroundings.

Caution

The rough or up-and-down road, or severe tire deformation will increase the noise level.

23) human body synthesis vibration acceleration is 1.31mm/s²at the maximum idle speed

5. Safety problems during repair and maintenance

1) Maintenance place

- The maintenance place should be equipped with supply maintenance equipments.
- This place should be horizontal ground.
- This place should be well ventilated.
- This place should be equipped with fire-extinguishing devices.

2) Cautions before maintenance

Caution

- No smoking.
- Wear the protective articles.
- Remove the residue oil timely.
- When the lubrication grease is filled, firstly remove the dirt oil or dust on the joint or the nozzle tip with brush or cloth, then fill the lubrication grease.
- Except that maintenance demands, the key switch should be close.
- When maintain the forklift, the fork should be lowered on the ground.
- Clean the electrical element with compressed air.

3) Cautions for repair and maintenance

Caution

- Don't put foot under the fork and do not be stumbled by the fork.
- When the forklift is raised, the cushion block or other material should be put under the inner mast to prevent the fork and mast falling suddenly.
- The bottom plate and battery box cover plate should be opened and closed carefully to prevent the finger being injured.
- When the work can't be finished at one time, symbol shall be marked so as to finish the work continually.
- Use proper tools and do not use the substitutive tool.
- Because the pressure of hydraulic circuit is very high, maintenance can not be started before reducing the internal pressure of oil circuit
- Do not use the mast assembly as the ladder.
- Before repairing and maintaining the hot machine, be careful that the temperature of hydraulic system may be higher, so wait for the machine cooling down to avoid scalding suddenly.

4) Check and replace the tire

Caution

- The tire should be assembled and disassembled by specialized staff.
- Do wear goggles when the compressed air is used.
- When charging the tire, inspect whether the locking ring of rim is equipped. Improper assembly of the locking ring may cause accidents.

5) Use jack (when tire is replaced)

Warning

- When use the jack to support the forklift, the body should not be under the forklift.

Warning

- Before using the jack to support the forklift, make sure there is no person and load on the forklift.
- When the wheel is off ground, stop using the jack and put the cushion block under the forklift to prevent it falling.
- Before support the forklift with the jack, take measures to prevent the forklift from skidding.

6) Waste discharge (electrolyte and oil, etc.) requirements

- The waste liquid and waste oil on the forklift should be reclaimed according to the provisions of local government and should not be discharged randomly.

7) Emergency treatment method for battery electrolyte during the accident

Note

When the accident occurs, deal with it according to the following methods and contact the doctor immediately.

- The electrolyte spatters on the skin: clean with water for 10~15 minutes.
- The electrolyte spatters into eyes: clean with water for 10~15 minutes.
- Contaminate large area: use soda (sodium bicarbonate) to neutralize battery electrolyte or clean with water.
- If swallow: drink a great number of water and milk.
- If electrolyte spatters on the clothes, take off clothes immediately.

8) Fasten the upper cover of battery

Caution

- Fasten the upper cover of battery to prevent leakage of battery electrolyte.
- Do not add excessive electrolyte. electric leakage will be caused by the spattered fluid.

9) Cleaning

Caution

- When the battery is on the forklift, do not clean the forklift or the battery will be damaged.
- Fasten the upper cover of battery to prevent water from coming into the battery.

10) Seawater

Caution

- Seawater will corrode the battery shell, which will damage battery or cause fire.

11)Abnormal condition of battery

⚠Caution

When the battery has the following condition, please contact the Sales Department of our company.

- The battery stinks.
- Electrolyte is dirty.
- Electrolyte concentration becomes higher.
- Electrolyte reduces too fast.

12) Do not assemble and disassemble

⚠Caution

- Don't exhaust the electrolyte from battery.
- Don't disassemble battery.
- Don't repair the battery.

13) Storage

⚠Caution

- When the battery is not used for long time, it should be stored in the well ventilated and fire-proof place.

14) Disposal of the waste battery

⚠Caution

- When the waste battery is disposed, please contact our company or the entrusted service department.

6. Safety problems during the installation, adjustment and use of the attachment

1) installation of the attachment

In order to ensure that the attachment can not slide from the right to left along with the fork arm carriage in the use process to cause safety issue, the attachment must be installed and located reasonably, reliably and safely.

After the attachment is equipped, the block of upper hook equipped with the attachment should be inserted in the gap of cross beam, to make the offset between the center lines of attachment and fork arm lower 50mm, if not the cross stability can be affected; after the attachment (paper clip, soft clip, multi-purpose steel arm clip and barrel clip etc.) with rotary function is installed, the stop block should be weld at the two sides of connection of cross beam of fork arm carriage and attachment, to prevent the left and right sliding of attachment in the operation process; when the attachment with lower hook is installed, the clearance at the mating place of the lower hook and lower cross beam of fork should be properly adjusted.

All attachments in the world adopt the hook installation, the mating installation of attachment and forklift truck should not have any issue, you should choose the attachment of mating the forklift truck strictly according to the internal standard ISO 2328 “Installation size of hook-type fork and for arm carrier”.

2) Use of the attachment

a. The operator who operates the attachment of forklift should have the practical experience of operation, at the same time the operator first should be familiar with the related indication on the nameplate of forklift, read the related use instruction (especially for the use guideline and installation instruction of professional attachment company,) fully know the basic performance and operation method of attachment, and especially have a more detailed understanding for the allowable load of forklift, lifting height, size of goods and available range of attachment.

b. When you operate the attachment of forklift with many functions (side-move, clamping or rotary etc. functions), the two actions should not be simultaneously done, the action should be done after the other action is finished.

c. The overload of forklift with attachment is forbidden, the offset is not allowed when the load is lifted at high position, for the offset load operation at high position (especially the side-move type flat clamp with combination valve, that is the shared flat clamp of side-movable oil cylinder and adjustable oil cylinder), there only is allowed a short time operation, the offset should be strictly controlled within the range of about 100mm;

d. That the forklift with attachment is driving at high position is forbidden;

https://truckmanualshub.com/

e. Standing under the attachment of forklift and the 1.5m range out of the shadow area of goods is forbidden, to avoid the accident.

f. Without our company's technical permission, any modification for the safety and performance of attachment of forklift is strictly forbidden.

Caution

The "bearing capacity" on the sample instruction issued by all attachment manufacturers only is an evaluated value for the attachment itself, and is not the bearing capacity when the whole forklift is equipped with the attachment. The bearing capacity of forklift equipped with attachment should be that the bearing capacity of forklift without attachment subtracts the weight of attachment when the load center is not changed, when the load center is changed, the bearing capacity should be confirmed according to the load curve chart.

7. Precautions during the operation of the liquid gas forklift

1) Precautions when filling the gas

a) There are two methods for refilling the fuel for the liquid gas forklift: one method is replacing the gas bomb, the other method is charging the gas into the gas bomb on the forklift directly.

- Refill gas or replace the gas bomb outdoors. The site for carry out the operation should be ventilated well, safe and conforms to the local fire protection criteria.
- The forklift should be parked stably, then shut down the forklift , and the operator should leave the seat,
- Fireworks is prohibited around and be not close to the hot source, fire source and low-lying places (avoid the liquid gas accumulating and not dispersing).
- Be cautious to depose the gas bomb. After disassembling the gas bomb from the forklift, do not impact, throw or let the gas bomb roll on the ground.
- When refilling the gas, it is necessary for the trained and experimental personnel to carry out the operation.
- when refilling the gas, related personnels should monitor the whole process， and do not leave the filed.

b) Every time replace the gas bomb or charge the gas, the operating personnel should make a habit of inspecting the gas bomb.

- Whether there is the serious indent, the scoring or the rustiness on the gas bomb body .
- Whether the appearance of all accessories on the gas bomb are damaged obviously. Whether there is any gas leakage.
- Whether there is any eyewinker which blocks the relief valve on the gas bomb.
- Inspect whether the gas bomb is within the effective period of the annual examination, if expires, declare the annual examination to the local appropriate agencies as soon as it possibly. For the gas bomb over 15years of service life, if it is not approved by the department, the gas bomb should be discarded.

⚠Caution

If any of the above status happens, do not use the gas bomb or charge the gas. Attempt to replace and repair the gas bomb.

2) The quality and composition of liquid gas fuel

The purity of the liquid gas will affect the operation of the forklift directly. If there are the impurity, the eyewinker, the moisture and excessive tar, each pipeline and accessories in the liquid gas system will be blocked, thus the fault may occur. Even slightly, the engine can not run smoothly, the output power is not sufficient. Heavily, the engine will be stopped and started up

easily.

- It is necessary to adopt the high purity with low composition of the impurity, the moisture and the tar. Especially apply the liquid gas fuel in which propylene content should not higher than 5%.
- If the local gas source is not good, be sure to perform the maintenance regularly in order to eliminate the eyewinker and the tar accumulated in the system. Replace the filter screen piece and so on, so that the engine will run smoothly. The poorer the quality of the fuel is, the shorter the maintenance period for the single time is.
- At the cold district or the temperature is below the 0℃, the natural evaporation rate gets slow, at this time, it is better to increase the propane in the liquid gas, so that the liquid gas volatilizes.

3) Disposal of the accident and the emergency

a) Fill the odorant to the general liquid gas, therefore the leakage condition can be tested easily. If smell a peculiar taste:

- Drive the forklift to the place with good ventilation in the open air. Shut down the engine. Make sure there is any fireworks around.
- Screw and close the hand cutoff valve on the gas bomb.
- Check each pipeline, interface and conversion device progressively and carefully, find out the leakage part, ask for the qualified or experimental technical pesronnel to perform the operation.

b） If the accident happens:

- Park the forklift immediately, shut down the engine..
- Screw and close the hand cutoff valve on the gas bomb.
- Make sure there is no fireworks around, use the fan to exhale the leakage gas if necessary.
- Ask for the qualified or experimental technical pesronnel to check the problem completely and perform the maintenance.

c）If the fire occurs:：

- If possible, rotate and close the hand cutoff valve switch.
- If there is the water source, water the gas bomb to cool it down.
- Inform the fire departure of firefighting.
- If the gas bomb fires, it is necessary to evacuate the personnel nearby emergently.

4）Precaution during the operation

- Do not operation the forklift at the place which has the fire source.
- All the electrical wire connection should be fast to avoid the short circuit and other faults.
- Do not use the fuel oil indicator which is on the fuel LPG forklift, prior to the liquidometer

on the gas bomb.

- Do not fill the combustible fluid to the fuel tank of the fuel LPG forklift. After eliminating the oil tank, fill the oil tank with the non-fuel antifreeze materials, then cover the oil tank port.
- Adopt the liquefied petroleum gas fuel with the high purity, good quality and composition as possible as it can.
- As the method that recommended by the original gasoline engine factory, perform the maintenance regularly, including the igniting system, the cooling system, the air intake system and the exhaust system., the engine body and other mechanical equipments, regularly replace the engine oil, the spark plug and the screen of the air filter, etc.
- The liquid system should be maintain periodically.

If there is some trouble in the liquid gas system, report to the original converted factory to repair. The converted factory will designate a repair shop to carry out the repair operation.

8. Label plate

The label plate on the vehicle is used to describe the use method and cautions of vehicle, and it's favorable for you and the vehicle, after the label plate is off the vehicle, please paste it immediately.

1) Load curve label plate (Instance，pivots to the machine labels)

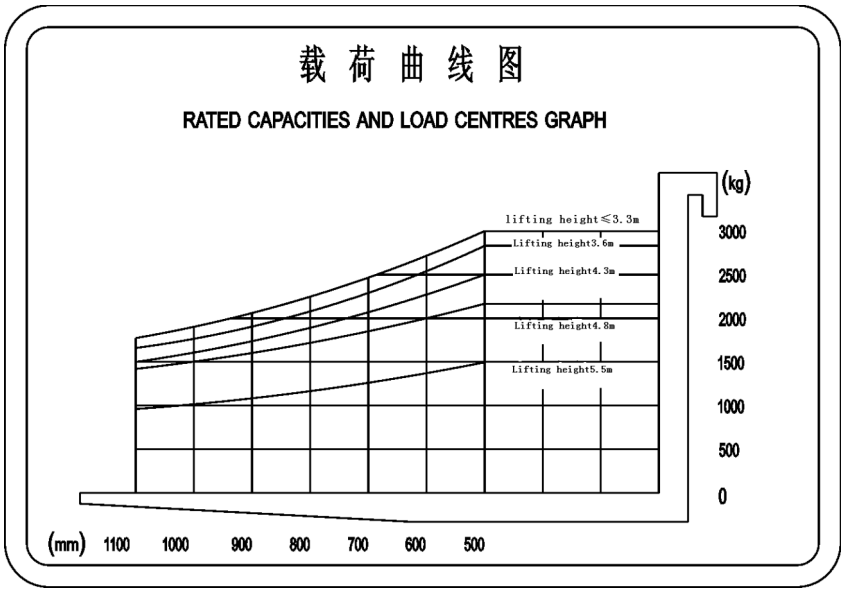

（2）Multi-way valve handle label plate

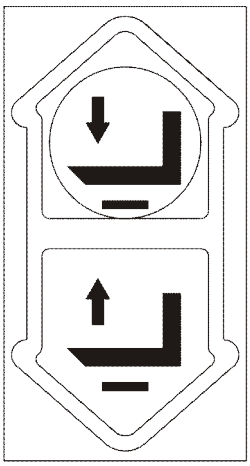

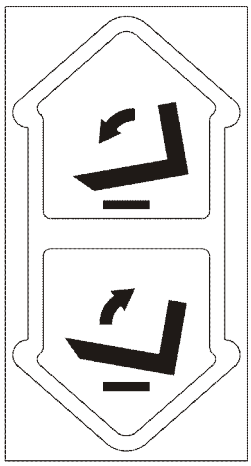

https://truckmanualshub.com/

3）Label plate of instructions

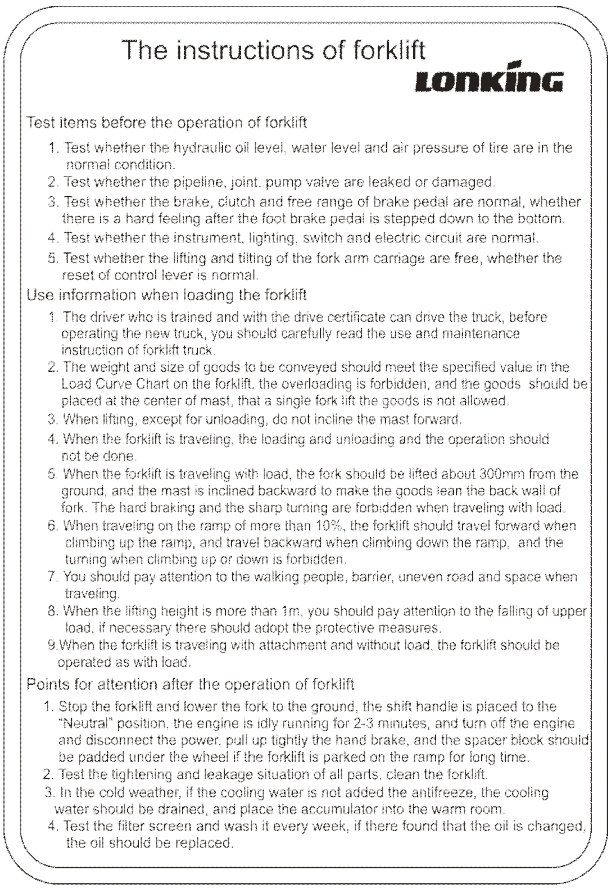

The instructions of forklift

LONKING

Test items before the operation of forklift

1. Test whether the hydraulic oil level, water level and air pressure of tire are in the normal condition.
2. Test whether the pipeline, joint, pump valve are leaked or damaged.
3. Test whether the brake, clutch and free range of brake pedal are normal, whether there is a hard feeling after the foot brake pedal is stepped down to the bottom.
4. Test whether the instrument, lighting, switch and electric circuit are normal.
5. Test whether the lifting and tilting of the fork arm carriage are free, whether the reset of control lever is normal.

Use information when loading the forklift

1. The driver who is trained and with the drive certificate can drive the truck, before operating the new truck, you should carefully read the use and maintenance instruction of forklift truck.
2. The weight and size of goods to be conveyed should meet the specified value in the Load Curve Chart on the forklift, the overloading is forbidden, and the goods should be placed at the center of mast, that a single fork lift the goods is not allowed.
3. When lifting, except for unloading, do not incline the mast forward.
4. When the forklift is traveling, the loading and unloading and the operation should not be done.
5. When the forklift is traveling with load, the fork should be lifted about 300mm from the ground, and the mast is inclined backward to make the goods lean the back wall of fork. The hard braking and the sharp turning are forbidden when traveling with load.
6. When traveling on the ramp of more than 10%, the forklift should travel forward when climbing up the ramp, and travel backward when climbing down the ramp, and the turning when climbing up or down is forbidden.
7. You should pay attention to the walking people, barrier, uneven road and space when traveling.
8. When the lifting height is more than 1m, you should pay attention to the falling of upper load, if necessary there should adopt the protective measures.
9. When the forklift is traveling with attachment and without load, the forklift should be operated as with load.

Points for attention after the operation of forklift

1. Stop the forklift and lower the fork to the ground, the shift handle is placed to the "Neutral" position, the engine is idly running for 2-3 minutes, and turn off the engine and disconnect the power, pull up tightly the hand brake, and the spacer block should be padded under the wheel if the forklift is parked on the ramp for long time.
2. Test the tightening and leakage situation of all parts, clean the forklift.
3. In the cold weather, if the cooling water is not added the antifreeze, the cooling water should be drained, and place the accumulator into the warm room.
4. Test the filter screen and wash it every week, if there found that the oil is changed, the oil should be replaced.

4) Forklift nameplate(Instance，pivots to the forklift）

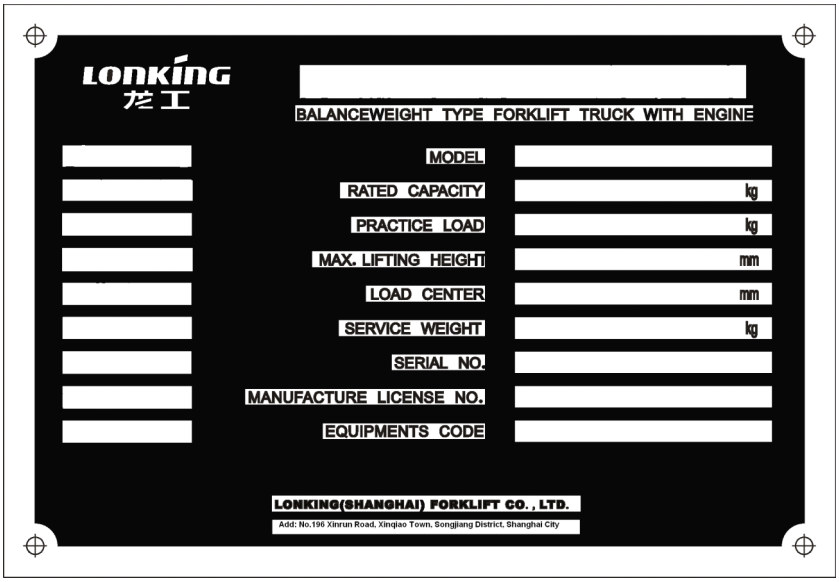

LONKING 龙工

BALANCEWEIGHT TYPE FORKLIFT TRUCK WITH ENGINE

MODEL	
RATED CAPACITY	kg
PRACTICE LOAD	kg
MAX. LIFTING HEIGHT	mm
LOAD CENTER	mm
SERVICE WEIGHT	kg
SERIAL NO.	
MANUFACTURE LICENSE NO.	
EQUIPMENTS CODE	

LONKING(SHANGHAI) FORKLIFT CO., LTD.

Add: No.196 Xinrun Road, Xinqiao Town, Songjiang District, Shanghai City

5) Lubrication chart label plate (Instance)

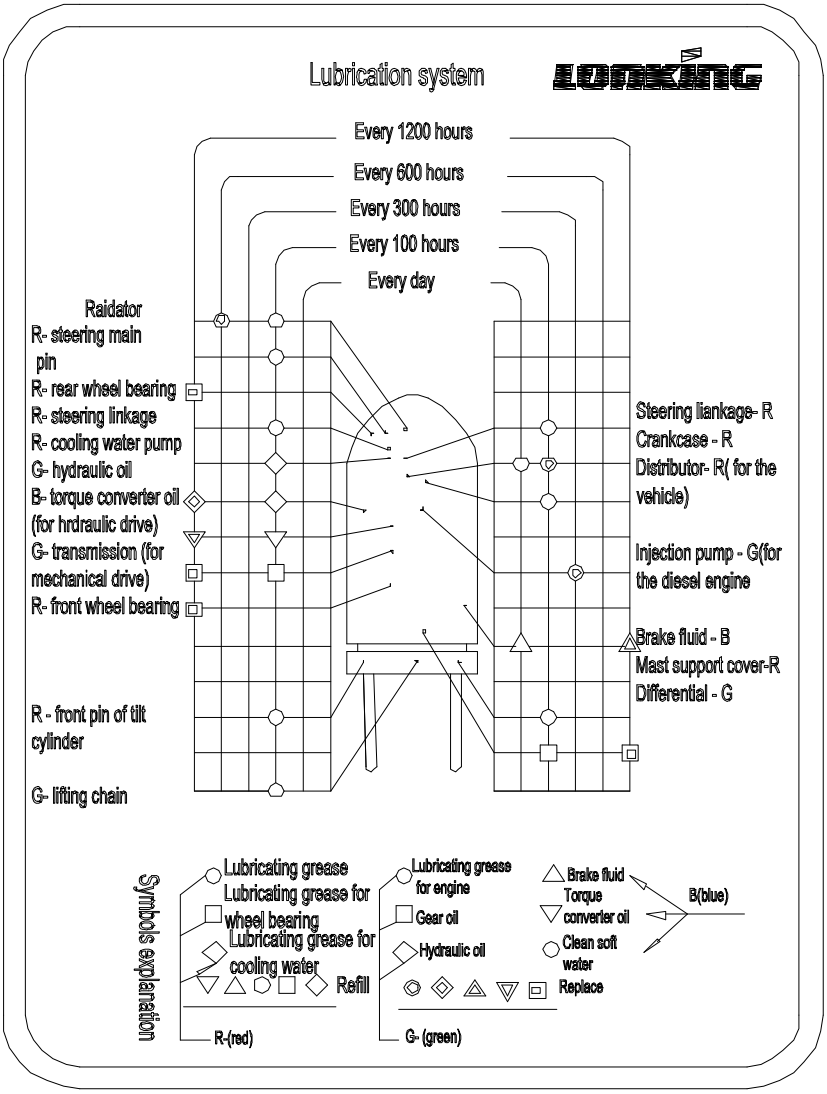

6）Speed shifting position label

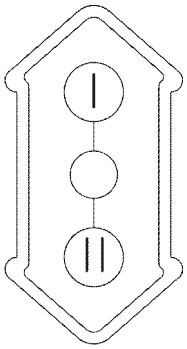

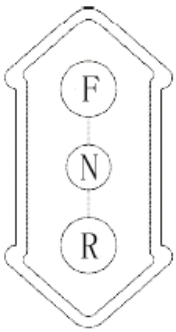

7）Speed reversing position label

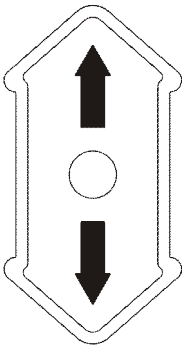

8）Safety mark label

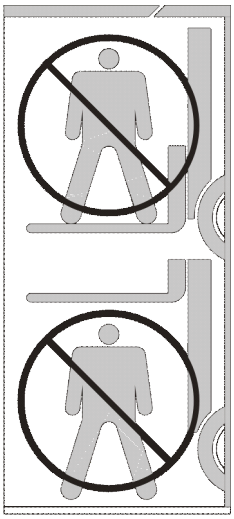

9）Lifting label

10）Lift and transport label

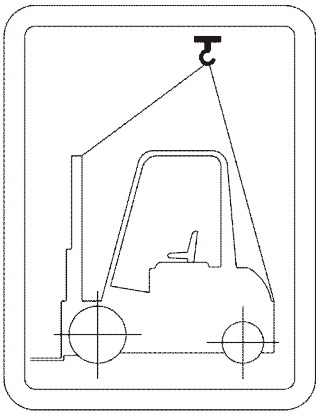

11） Tire pressure label （ inflated tire）（instance，pivots to labels on the mahcine body）

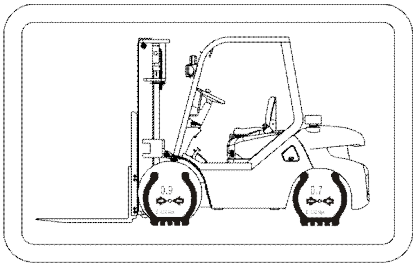

12）Caution plate of hand injury

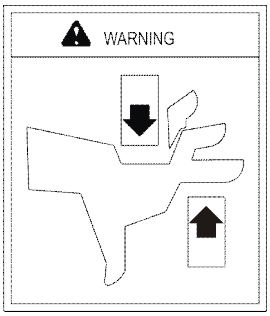

13）Adding fuel oil label

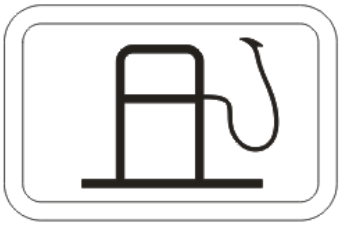

14）Adding hydraulic oil label

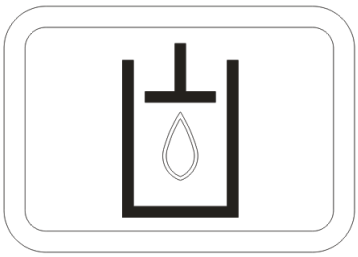

https://truckmanualshub.com/

15）Safety label plate of fan

16）No flush label

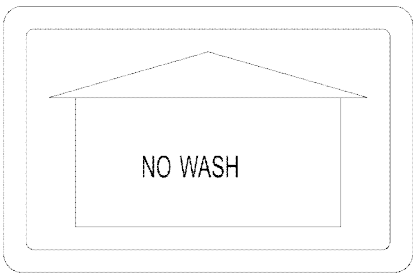

17）No lifting label

https://truckmanualshub.com/

Ⅱ. Device operation and application method

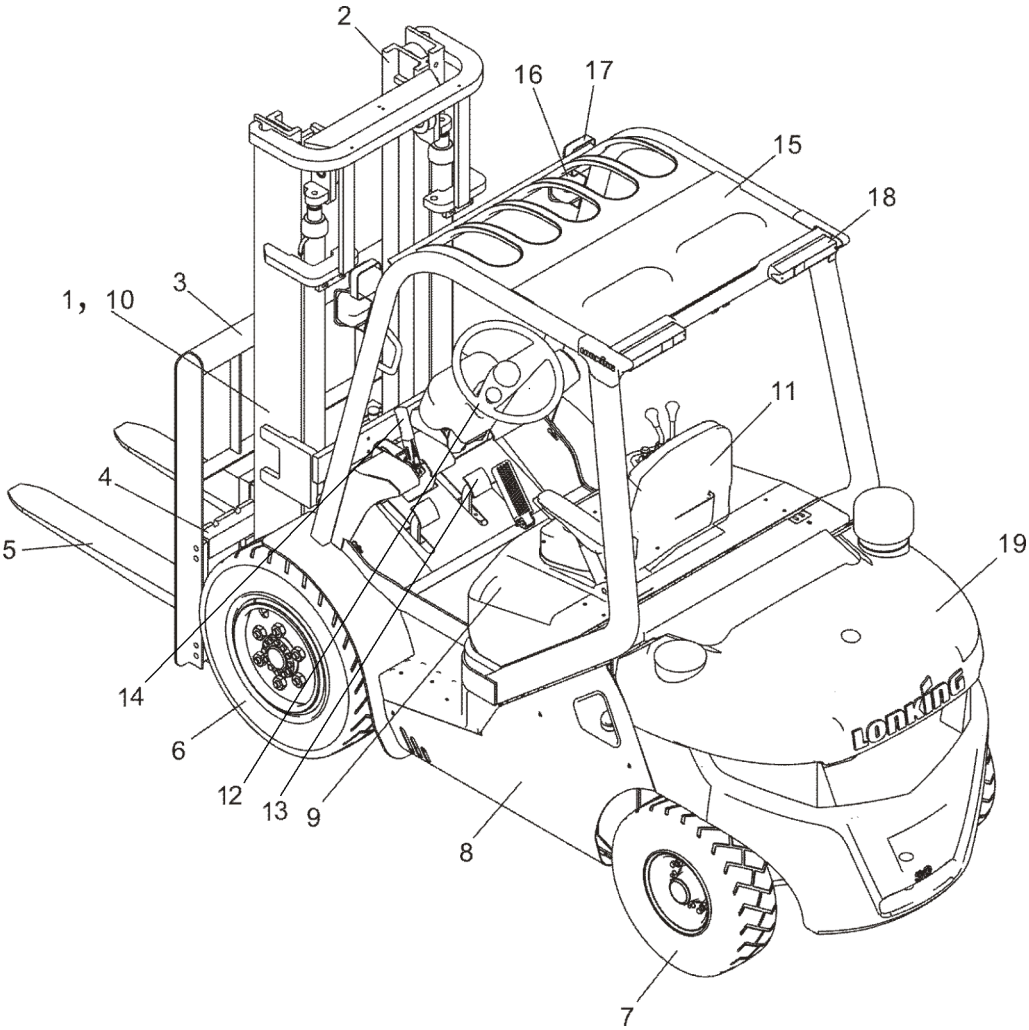

Figure 2.1 Structure of the Forklift

1. Outer mast	8. Frame	15. Overhead guard
2. Inner mast	9. Engine hood	16. Front headlamp
3. Gear rack	10. Tilting cylinder	17. Front combination lamp
4. Lift bracket	11. Seat	18. Rear combination lamp
5. Goods fork	12.The steering wheel	19. Balancing weight
6. Drive wheel	13. Service brake	
7. Steering wheel	14. Parking brake	

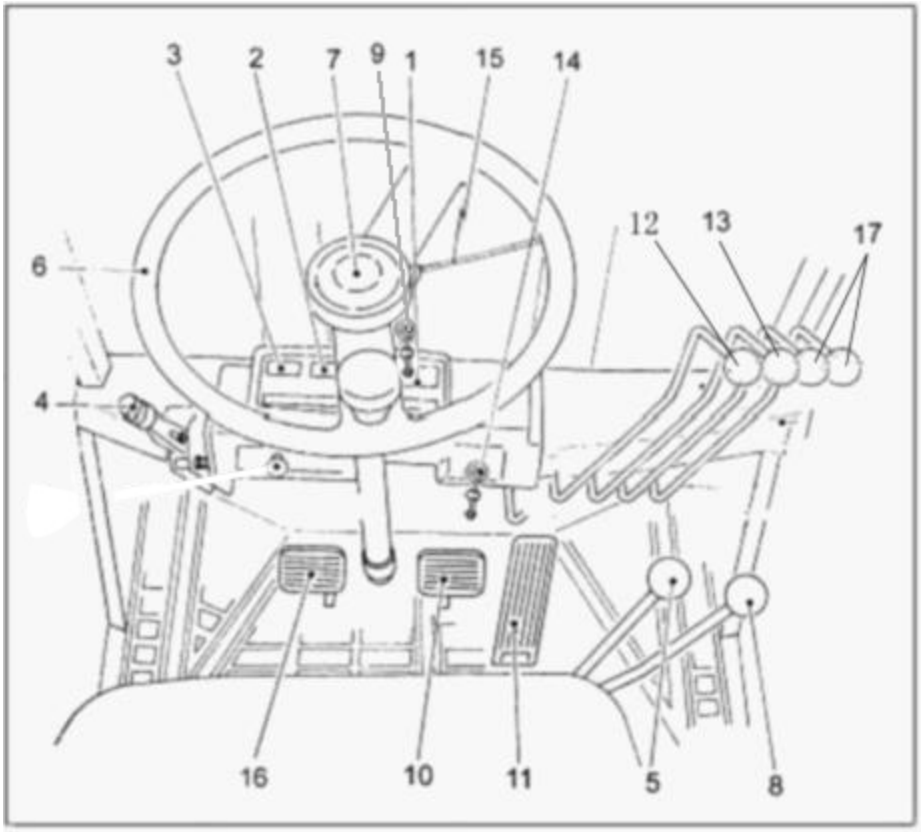

Figure 2.2 Control of the Forklift

1. Timer
2. Water temperature gauge
3. Fuel oil gauge
4. Parking brake handle
5. Forward - reverse handle
6. Steering wheel
7. Horn button
8. Speed change handle
9. Light switch
10. Braking pedal
11. Accelerating pedal
12. Lift handle
13. Tilt handle
14.preheat starting switch
15. Steering indicating switch
16. Clutch switch
17. Attachments

1. Instrument part

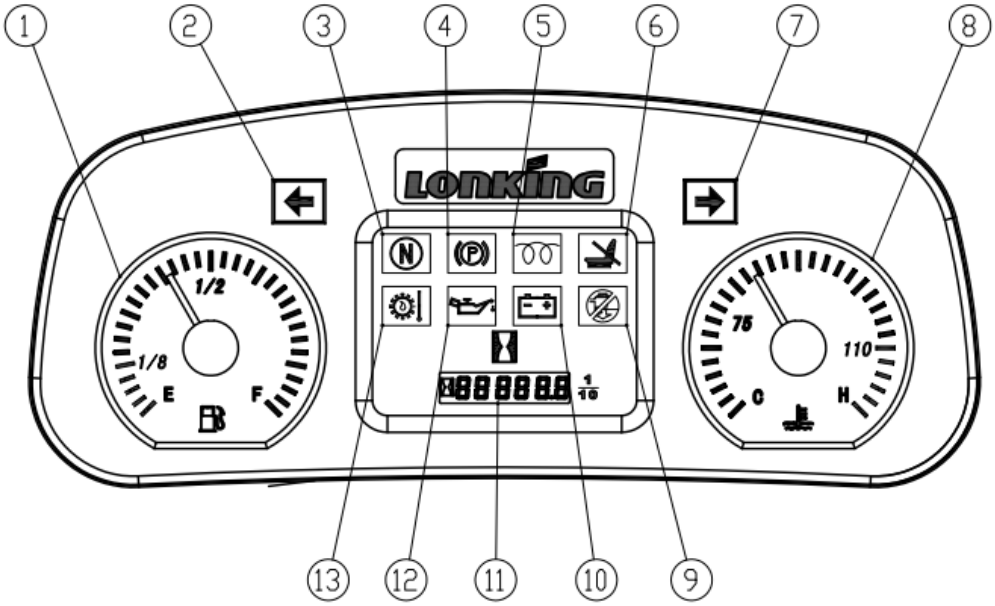

Instruction of functions

1) Fuel gauge

When move the start switch to "on" position, the gauge shows the operator the fuel capacity that left in the fuel oil tank. graduate: "E～1/8～1/2～F", "E"represents "empty","F"represents "full". Therein, E～1/8 graduate range is red area. When is fuel level is lower than 1/16, the buzzer will sound alarm.

Caution

· Do fill the oil with oil tank after daily work (or changing shifts every time), this will reduce the water condensation in the oil tank.

2) Left steering indicator

3) Neutral indicator(selected)

· Prompt the operator to start the machine only at the neutral gear.

4) Parking machine indicating lamp (selected)

· The parking brake is switched on， the indicating lamp is on, which indicates that the machine is parked.

5) Preheating display of the engine

Cold start of the machine has a whole set of "QUICK—ON—START" namely "quick start"system, there is no "preheat" position on the start switch.

Turn the key to "ON" position, the display light will be on for a while. After the light being off, turn the key to "START"position.

6) Seat switch indicator(selected)

7) Right steering indicator

8) Water temperature gauge

·This gauge is used to indicate the temperature of the engine coolant. Under normal conditions, the pointer should be within the normal area(60℃~75℃~ 110℃) .

Caution

· If the pointer is within the alarm area（110℃~120℃）, the water temperature is higher than 110℃, the buzzer will sound. Stop the operation immediately. Reduce the engine speed to lower the coolant temperature, wait for the pointer returning to the normal area.

9) Oil and water separator/Air filter alarm display (selected)

· During the engine running, when the water of oil and water separator approaches to a certain height, the light will be on.

During the engine running, the light continuously be on or flashes, shut down the engine immediately and drain the water in the oil and water separator.

Caution

· If operate the machine when the light is on, the filling pump may be damaged.

10) Charging light display

The lamp is used to display the charging condition of the battery. When move the starting switch to "ON" position, the lamp will be on. But when the engine is started and runs stably, the light will be off.

Caution

· During the operation, if the lamp continuously be on or flashes, which indicates that there are some troubles in the charging system. Do carry out an inspection immediately.

11) Timer

· The gauge is used to measure the working time of the machine. Arrange the lubricating and maintenance according the gauge.

12) Oil pressure alarm display

· This lamp is used to indicate the pressure condition of the engine lubricating oil. When move the starting switch to "ON" position, the lamp will be on. However when the engine is started and runs stably, the light will be off.

Caution

· During the operation, if the lamp continuously be on or flashes,which indicates that oil pressure is not sufficient, do perform an inspection immediately.

13) oil temperature alarm indicating lamp (selected)

· oil temperature in the transmission is higher than 120℃, the alarm lamp will be on and the buzzer will sound.

2. Switch part

1）Preheat-starting switch

OFF

This is the position which the key is inserted into or taken off. The engine will be stopped at this position.

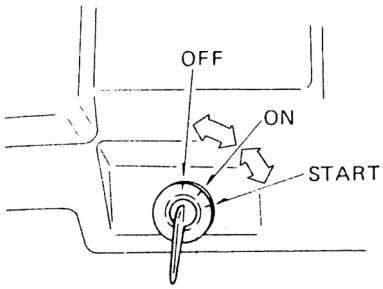

ON

When the starting switch is at "ON " position, the circuit is close. After the engine startup, the key is on this position.

START

When move the key to "START" position, the starting motor engages. When the hand is off from the key, the key will return to "ON" position by means of the spring force.

Caution

· When the engine is stopped, do not let the engine switch stay at the "ON"position, or current leakage of the battery may be caused.

· When the engine is running, do not turn the starting switch to "start" position, which will damage the motor.

· When starts the engine every time, the engaging time do not exceed 15s. Wait for about 20s before starting the engine again.

2）Light lamp⑨

The light switch is a three gear switch.

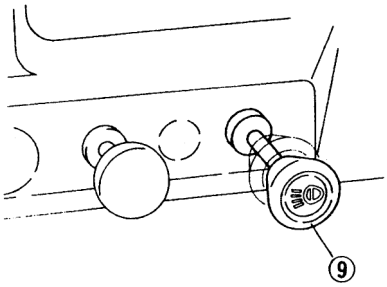

Gear / Lamp	0	Gear I	Gear II	Gear III
Width lamp	OFF	ON	ON	ON
Tail lamp	OFF	ON	ON	ON
Front headlamp（dip beam）	OFF	OFF	ON	OFF
Front headlamp（high beam）	OFF	OFF	OFF	ON

3. Control part

1) Steering wheel ①

The steering wheel is operated in a regular manner, namely when the steering wheel is rotated right, the fork-lift truck will turn to right; when the steering wheel is rotated left, the fork-lift truck will turn to left. The guide wheels are installed at the rear of the forklift, when the fork-lift truck turns, the tail can swing outwards. Practise just a little, and the steering manner will be mastered easily.

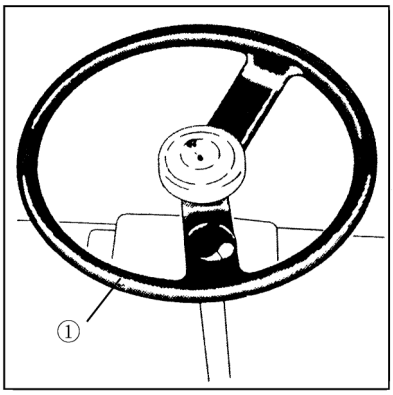

Warning

- The forklift supply power from the engine for hydraulic steering device. So when the engine is stopped, it will be difficult to turn. If turn the machine again, it is necessary to restart the engine. Do not delay.

2) Horn button ②

Press the plastic button in the middle of steering wheel to sound alarm. Even when the key switch is closed, the horn can also sound

3) Steering signal lamp switch lever③

When the handle is at the turning position, steering signal lamp will flashes.

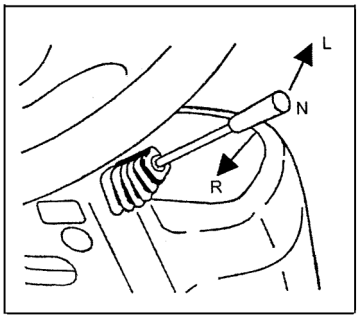

R	Right steering lamp is on
N	Middle position（OFF）
L	Left steering lamp is on

Caution

The steering signal lamp switch lever can not return to the middle position automatically. You can reset it through manual control.

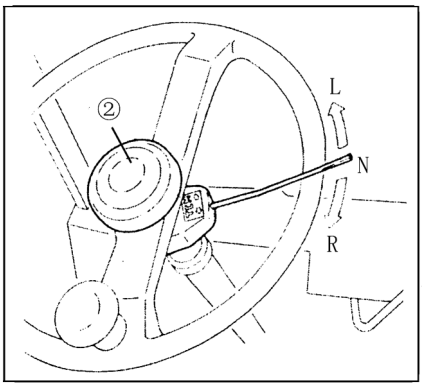

- 4）Lifting lever⑧
- Pull the lever backward to lift the fork, and push the lever forward to lower the fork. The lifting speed is controlled by the tilt angle of the lever and accelerating pedal force, and the decline speed is controlled by

the tilt angle of the lever, the bigger the angle is , the faster the speed is. The engine speed or the accelerating pedal should be not related to the decline speed of the fork.

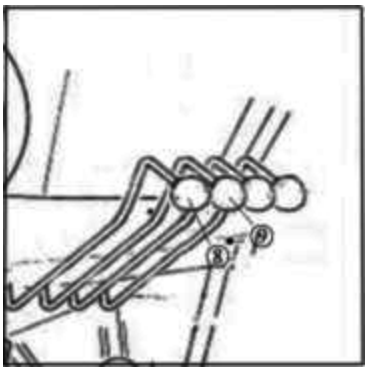

5）Tilt lever ⑨

The mast can realize tilting by means of operating this tilt lever. Pull the tilt lever backward and the mast will tilt backward, push the tilt lever forward and the mast will tilt forward. The speed of tilting forward and backward can be controlled via the tilt angle of the lever and the accelerating pedal force, the bigger the angle is, the faster the speed is.

⚠ Caution

When shutting down the engine, even if push the tilt lever forward, due to the tilt self lock device mounted in the multi-way valve , the mast will not tilt forward under the self lock state.

6）Parking brake lever ⑦

After parking the machine, pull backward the lever to activate the brake mounted on the output shaft of the transmission or on the input shaft of the drive shaft. Push forward the lever to disconnect the parking brake.

⚠ Warning

- If it is necessary to park the machine on slope, do place the wedge under the wheel.

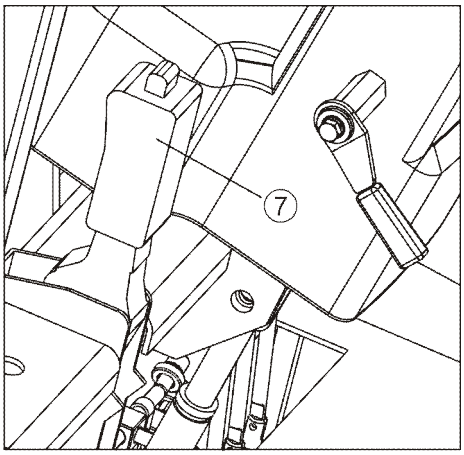

7）Gear shifting lever

The mechanical drive forklift

Forward—reverse lever ⑤

F	Forward
N	Neutral
R	Reverse

Speed change lever ④

1	Low speed
N	Neutral
2	High speed

Drive control is a bottom plate fixed device. There are 4gears, two forward gears and two reverse gears. Before shifting the gear, do step down the clutch pedal to the limit. Brake thoroughly before changing the travel direction. When move the lever to back up the forklift, the back-up light is on.

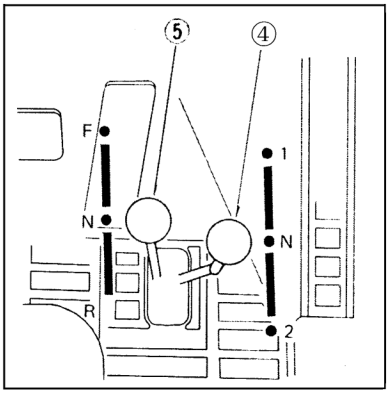

The hydraulic drive forklift

Forward —reverse lever⑥

F	Forward
N	Neutral
R	Reverse

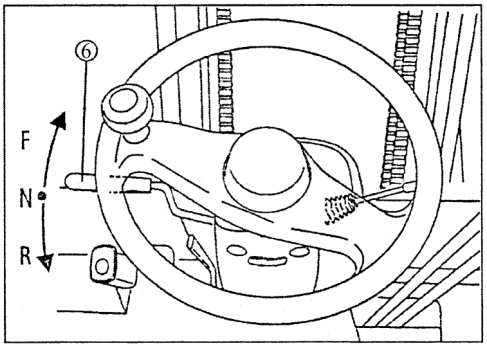

Drive control is a steering column fixed device. There are 4gears, two forward gears and two reverse gears. Park the machine thoroughly before changing the travel direction. When move the lever to back up the forklift, the back up lamp is on.

Caution

- Mount the neutral gear, do not forget to move the lever to the neutral gear before machine startup.

8）Foot control

Clutch pedal or inching pedal⑧, brake pedal⑩ and accelerating pedal⑪.

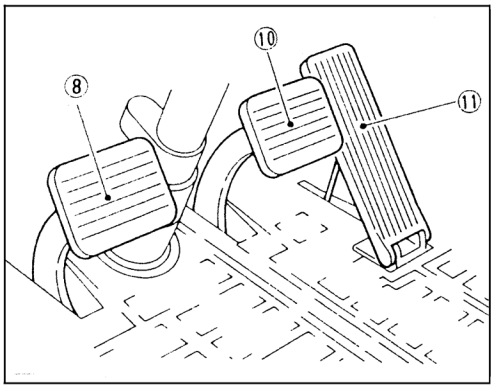

The mechanical drive forklift

Clutch pedal:

The clutch aims to allow the operator to connect and separate the engine and transmission. Step down the clutch pedal, the engine is separated from the transmission drive. Release the clutch pedal, the power is transferred to the transmission through the clutch.

Caution

· Do not operate the forklift when the clutch is under half ganged condition.

The hydraulic drive forklift

Inching pedal:

When step down the inching pedal, oil pressure in the hydraulic system will decline correspondingly, which allows the operator to carry out the inching action. When operate the lifting system at a high speed, the pedal can be used to move the machine slowly.

When step down the pedal thoroughly, it may be used as brake pedal.

hazards

· when downgrade or start on slope, do not use inching pedal, but use the brake pedal. If use the inching pedal when going down the slope, the engine will not produce

brake action and the machine will go down as inertia. As the result, the brake effect is poor. When starting the machine on the slope, if use the inching pedal, the machine will slide down because of the inertia. It is very dangerous.

Accelerating pedal

Step down the accelerating pedal to increase the speed of engine. Release the pedal, and the engine will run at an idle speed.

Brake pedal

Step down the brake pedal to make the machine reduce the speed or shut down. At the same time, the brake lamp is on.

4. Frame body part

1) Seat

Caution

- **If the seat belt is assembled, the safety belt must be fastened. Once the vehicle rolls over, the driver should hold the steering wheel and tilt the body to the opposite side. jumping off the machine is not permitted.**

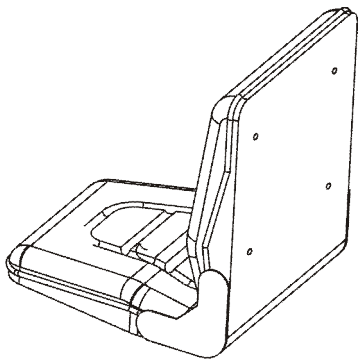

2）Seat adjusting lever

The seat position can conform to the driver body and the impact and vibration of vehicle can be absorbed by regulating the lever, so that driver will be easy to touch all the parts controlled by hands and feet. Move the lever right, and the seat will be released. Before operating the machine, regulate the seat and make sure the seat is locked reliably.

3) Overhead guard

Warning

- The roof steel grid is the component which is used to protect the driver's safety when the above article falls, if the grid isn't installed fast, or is disassembled or reformed, it'll be very dangerous that will cause personal casualty.

4) Gear rack

Caution

- The gear rack is the important safety component used to prevent the goods on the fork falling to the operator, if it's not installed fast, or disassembled or reformed, danger will be caused.

5) Engine hood

The engine hood can be opened thoroughly for easy repair and maintenance. Pull out the open handle on the left side of the engine hood, with the aid of the air spring, the engine hood will be open with a small force. When close the engine hood, press the front part of the engine until the engine hood will be locked fast.

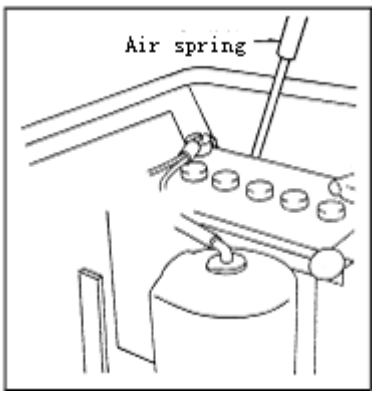

Warning

- When closing the engine hood, pay attention to not trap the finger inside it.

6）The fork positioning pin

The fork positioning pin is used to lock the fork at certain position, when the fork distance is regulated, pull up the fork positioning pin and turn 1/4 circle, regulate the fork to the required position, and the fork distance shall be regulated according to the goods to be loaded and unloaded.

Warning

· place the fork symmetric to the center lineof machine, then lock the fork positioning pin.

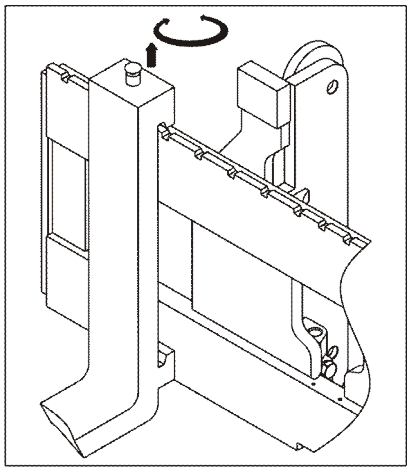

7）Towing pin

The towing pin is only used under the following conditions:

- When the forklift is trapped (for instance, tire is trapped , side tilting)
- When the forklift is loaded or unloaded from the trailer

Caution

- The forklift can't be used to tow or be towed.

8) Safety footboard and safety handle

Both sides of vehicle body are provided with safety footboard, the safety handle is installed on the left support rod of roof steel grid, the safety footboard and safety handle shall be used to get on and off the forklift to ensure safety.

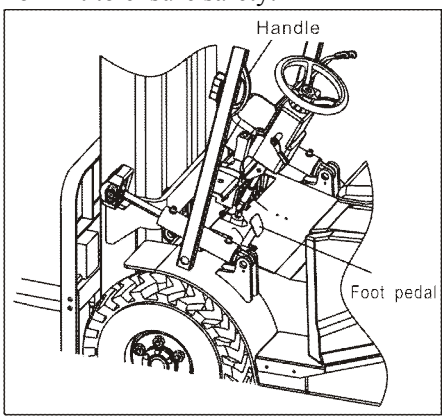

9）Fuse box

The fuse box is mounted right inside the machine body frame, on the electrical control cover in the front of starting battery..

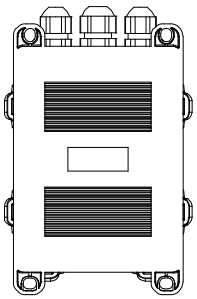

10）Brake fluid reservoir

The brake fluid reservoir is arranged under the engine hood, and the liquid level of brake fluid can be checked via the semi-transparent reservoir.

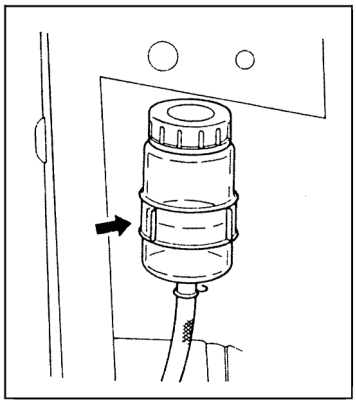

11）Hydraulic oil tank cover

The hydraulic oil tank cover is installed under the engine hood, and the hydraulic oil is filled from this oil hole, and the cover is equipped with oil dipstick.

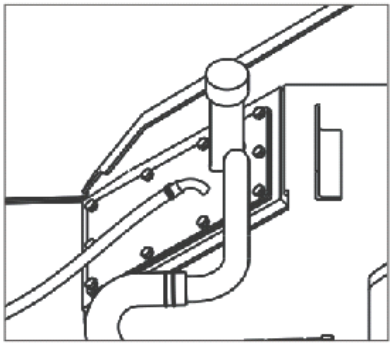

12）Fuel tank cover

The fuel tank cover is on the left rear side of the machine body,. Turn the cover counterclockwise to open.

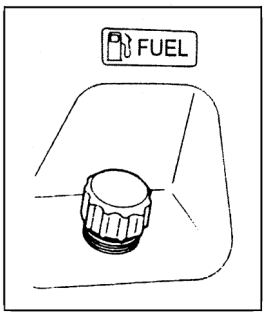

Caution

· There is a air vent inside the fuel tank. The air vent will keep the air coming into the fuel tank. If it is stopped, there will be some problems in fuel system. Do inspect whether the condition of the air vent is good when adding fuel every time.

Warning

—Adding fuel—

- Stop the machine, shut down the engine and pull up the parking brake lever. Make sure there is no open flame nearby. Do not smoke. The driver should not stay at the seat when filling the fuel.
- After filling the fuel, make sure the cover is fastened down. Loose cover will cause fuel to leak., or cause fire in extreme condition.
- Before engine startup, make sure that the fuel tank cover should be fastened down and there is no spilled fuel on and around the machine.
- When inspect the oil level, do not use the open flame, such as the match or the lighter,etc.
- Do not let the skin touch the fuel directly, or the skin may be injured. If the skin touched the fuel directly, do clean the skin with cleanse immediately.

13）water tank cover

The water tank cover is under the rear part cover plate of the engine hood. Do not open the cover plate when performing daily inspection.

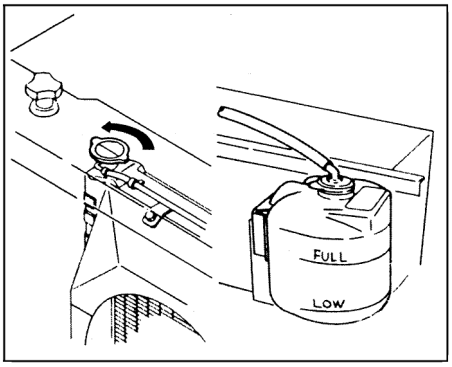

14）Fluid tank

The fluid tank is on the left side and lower part of the engine hood. The fluid level should be in the middle position between the two graduation lines (selected.).

Warning

- When the engine temperature is higher, do not open the water tank cover suddenly, turn the cover left to reduce the pressure in the water tank, then open the cover.
- Do not open the water tank cover when wearing gloves.

15) Lamps

- Confirm the working condition of lamps, if the bulb is burnt out, the lamp shade is damaged or dirty, it shall be replaced or repaired immediately.

The front side of vehicle is equipped with two headlamp B and front combination lamp C. The rear side of vehicle is equipped with the steering signal lamp, the tail lamp, the stop lamp, stop lamp and back up lamp.

16) Rear view mirrorA

Caution

- The rearview mirror shall be clean.
- Regulate the rearview mirror that the driver can watch the back.

https://truckmanualshub.com/

Ⅲ. Driving and operation

In order to maintain favorable performance, safe use and economical running of vehicle, some cautions of correct driving operation will be introduced as follows.

1. Operation of new forklift

The service life of vehicle depends on the use of new vehicle, please abide by the following during the initial 200h running.

⚠Caution

- No matter which season it is, the forklift must be warmed up for 5-10 minutes before the operation.
- Perform repair and maintenance in time.
- Do not operate and use the forklift roughly.
- Fill lubrication oil and grease and replace oil in time.
- Do not let the engine run at the high idle speed.

2. Relationship between load and forklift stability

Within the load curve, the forklift will take the front wheel center as the supporting point to maintain balance of vehicle body and the load on the fork, consider the load and load center to maintain stability of vehicle.

⚠Warning

- If work exceeds the load capacity, the rear wheel will be raised and under severe condition, and the forklift will probably roll over and cause severe accident. As the Figure, if the goods approach the tip, the result is same as increasing goods weight, under this condition, the load shall be reduced accordingly.

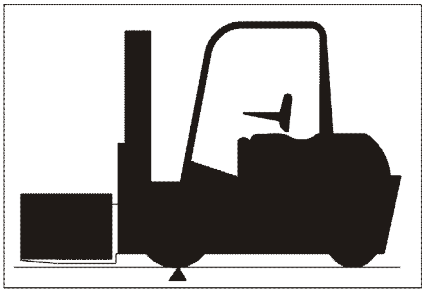

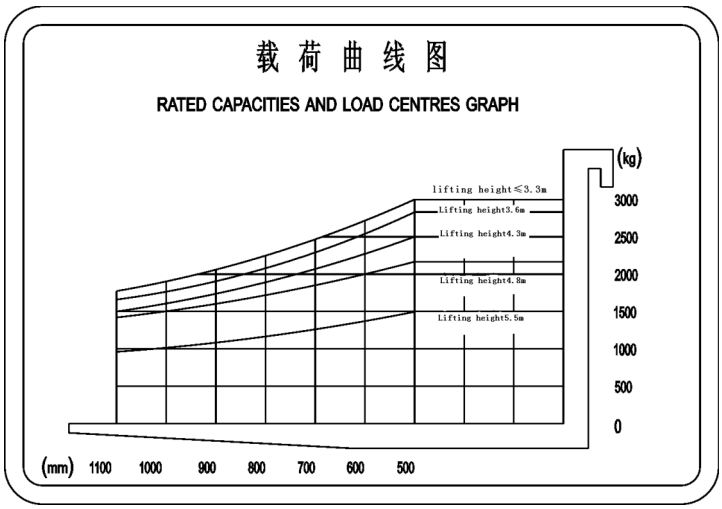

(pivots to the machine labels）

3. Load center and load curve

The load center is the distance from the front face of fork vertical section to the goods gravity center. The above load capacity chart indicates the relationship between the forklift load center and permissible load (allowable load), the load curve label plate is pasted on the vehicle, if it is damaged or lost, new one shall be used.

Warning

- If the vehicle is equipped with the attachment of handling goods, such as side shifter or wheel fork, the allowable load is lower than the corresponding standard forklift (without any attachment), and the causes are as follows:
  a) The load equivalent to the weight of attachment is decreased.
  b) Because the load center will move forward due to the length of attachment, the allowable load will be reduced in the same principle.
- If the installation of attachment cause load center to move forward, it'll be called loss of "Load center".
- The attachment can't exceed the allowable load of load curve pasted on the vehicle or attachment.

4. Forklift stability

The stability standard of forklift is stipulated in ISO of related domestic standard, however, the stability stated in these standards are not suitable for all running states, and the forklift stability will be different due to different running states.

Under the following running state, the maximal stability can be ensured:

a. Ground is leveled and hard;
b. Operate under standard no-load or load state.

Standard no-load state: The fork or other carrying accessories are 300mm above ground, the mast tilts back in position with no load.

Standard load state: The fork or other carrying accessories are 300mm above ground, under the standard allowable load of load center, mast tilts backward in position

Warning

When the goods are unloaded, the mast shall tilt forward and backward minimally, unless the load is fixed reliably or the lifting height is lowered, don't tilt forward.

5. Transportation, loading and unloading of forklift

1) Transportation of forklift

Caution

- If the forklift is in the trunk for transportation, the wheel should be blocked, and fix the forklift with rope.
- When the forklift is loaded, unloaded and transported on the road, the total length, width and height shall be considered, and relevant codes shall be abided by.

2) Loading and unloading of forklift

Caution

- Please use the gangway with sufficient length, width and strength.
- Effectively pull up the parking brake of freight vehicle and brake the wheel.
- Fix the plate in the middle of the trunk reliably and the gangway shall be free from grease.
- The right and left height of gangway shall be same so that the vehicle can be stable when it's loaded and unloaded.
- In order to prevent danger, the forklift can't be turned or moved laterally on the gangway.
- When the forklift is moved to the freight vehicle, the right and left tires shall get on the gangway slowly.

3) Lift forklift

- Only use the crane and the rope which can bear the goods weight
- Tighten the steel rope to hoisting holes at the both ends of outer master beam and the hook on the balancing weight. The steel rope connected to the balancing weight should pass through the gap of the overhead gap. Do not let the overhead guard be under stress.
- If it is necessary, use the edge protector to protect the equipment and prevent the machine from being damaged.
- Conform the center of gravity for the forklift.
- Make sure the forklift is balanceable.

6. Before and after the engine startup

1）Before the engine startup

- Before operation, inspect whether operations of all control devices and alarm devices are normal. If the device is damaged or the device is abnormal, do not start the forklift until the failure will be removed.
- Inspect the safety condition around the forklift.
- If there is grease or oil adhering to the bottom plate, the pedal, control lever or the hand of the operator, clean it out.
- Make sure the shifting lever and the multi-way lever are at the neutral gear, and the parking brake lever should be at the brake condition.
- Start the diesel engine.

Turn the preheat starting switch to"ON" until the preheat display indicating lamp is off. Then turn the preheat starting switch to "START" position. If it is difficult to start the engine, check whether the fuel level is too low, whether the air comes into the fuel system , or whether the preheat wire is broken.

2）After the engine startup

- Preheat the engine(about 5minutes)
- Inspect the sound of engine(rotation or the gear)

https://truckmanualshub.com/

Caution

- Inspect exhaust condition(concentration and the colour)
- After preheating the engine, operate the multi-way valve handle at full travel for 2-3 times. Inspect the working condition.

7. Operating the machine

1）Posture of the operator

Hold the steering wheel with left hand, and put the right hand on the steering wheel slightly and get ready to load or unload.

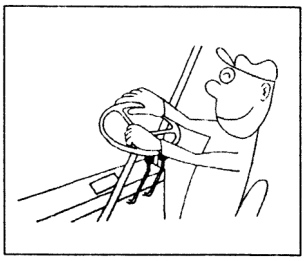

2）The basic status of operation

The fork is 150-200mm high from the ground. the mast will tilt backward to the expected position.

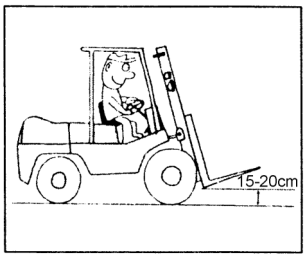

Look around the forklift, inspect the safety performance, send a signal before operating the machine.

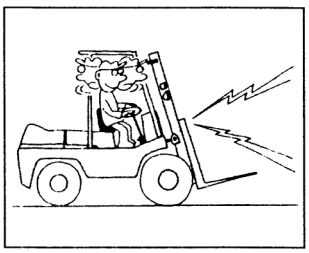

The mechanical drive forklift

Step down the clutch pedal and operate the shifting handle.

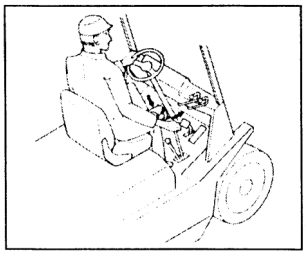

Release the parking brake handle.

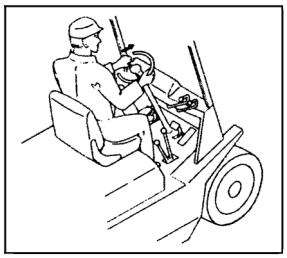

Step down the accelerating, at the same time, release the clutch pedal,the machine begins to operation.

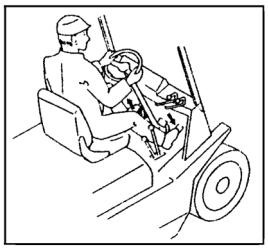

⚠ Caution

Do not put the foot on the clutch pedal.

The hydraulic drive forklift

Step down the brake pedal， operate the forward and reverse shifting handle.

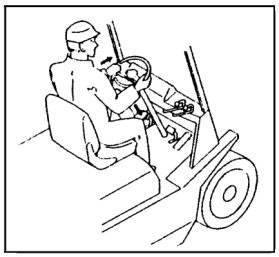

Release the parking brake lever.

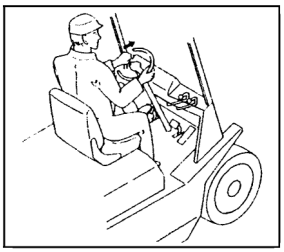

Release the brake pedal and step down the accelerating pedal, the machine will travel.

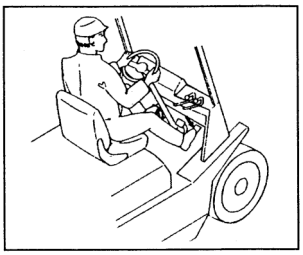

3）Gear shifting

Whenthe machine bears no load, start the machine at the high speed gear. However when the machine bears a load, start the machine at the low speed gear.

The mechanical forklift

a）Change the travel direction to stop the machine.

b）when shift the high speed gear to low speed gear or shift the low speed gear to the high speed gear, let the engine accelerate then release the accelerating pedal. At the same time, step down the clutch pedal. Change the shifting lever to the required gear, then release the clutch and step down the accelerating pedal.

The hydraulic drive forklift

a） Park the machine before changing the travel direction。

4）Speed reduction

The mechanical drive forklift

This forklift adopts synchronizing speed device, therefore there is no need of operating the clutch again. Release the accelerating pedal, step down the clutch pedal to the limit, put the speed lever at I gear position, after releasing the clutch pedal, press sown the accelerating pedal.

The hydraulic forkift

Release the accelerating pedal slightly, step down the brake pedal if necessary.

Warning

Should reduce the speed：

- At the crossing
- The crowd place.
- Rough road surface and other scraggy surfaces.
- Approach the goods or barriers

5）Steering

Different from the ordinary vehicle, the guide wheel is mounted on the rear part of forklift, which make rear part of the forklift rotates outside during steering. When carrying out steering performance, reduce the travel speed and turn the steering wheel to the expected side. The steering wheel should advance a little than the forklift with front wheel steering.

6）parking the forklift

Reduce the travel speed, step down the brake pedal to stop the machine. The shifting lever is at the neutral gear.

Caution

- When the forklift uprises the slope, do

not step the accelerating pedal to stop the machine when the torque converter is working, this will result in abnormal friction of the friction pieces or abnormal rising up of torque converter temperature. Moreover this will shorten the service life of the torque converter.

Stop the forklift, park the machine to the place at which traffic will be not blocked, and ：

a. Pull up the parking brake lever
b. Lower the fork on the ground
c. Turn the key to "OFF"position. Pull out the flaming out lever of the engine. Shut down the engine.
d. Take off the key and keep it.

Warning

- Safety stopping

a. Park the machine on the level ground--- better for capacious place. If it is necessary to park the machine on the slope, put across the machine on the slope, put the wedge under the wheel to avoid the machine sliding off
b. The machine should be parked at the appointed place or the place at which the machine will not block traffic.if necessary, set label or signal lamp around the machine.
c. Park the machine on the hard ground. Do not park the machine on soft, muddy or slippery road surface.
d. If the lifting system has been damaged, the fork can not be lowered on the ground. Hang a warning banner at the end of the forklift and park the machine at the place where the machine will not block traffic.

7） Emergency repair of faulty forklift

Caution

- If the forklift has fault suddenly during the operation, it shall be towed away and repaired to prevent hampering other vehicle or work operation。

8、Loading

（1）To ensure good lateral stability, the distance between forks should be as large as it can.
（2）When insert the fork to the pallet or to the goods directly, the forklift should be centered to the goods.
（3）The fork is related to the pallet and the fork should be inserted parallel.
（4）The fork should be inserted until the base part of the fork is inserted.
（5）Lifting the goods：

a. Lift the fork to 50~100mm above the ground, make sure whether the goods are stable.
b. Then tilt backward the mast to the expected position, lift the fork to 50~100mm from the ground, then start travelling.

（6）The goods with large volume carried will block the view, travel backward except upgrade.

Caution

- Loading direction of the fork use should not be opposite to the loading direction of the design.
- Do not use single fork to bear the good.

- Do not use the fork to tow the good.
- All parts of the fork body should not be welded.

9. Stacking

Before the forklift is operated, the following items shall be checked:

a. Ensure no goods will fall and damaged in the loading area;
b. Ensure no article and stockpile hampers safety.

The goods shall be stacked according to the following procedures:

（1）Reduce the speed when approaching the stacking area.

（2）Park the forklift before the stacking area。

（3）Check whether the surrounding area of stacking place is safe.

（4）Regulate the forklift position and drive the forklift in the front of position where the goods are stacked.

（5）Put the mast vertically and lift the fork above the stockpile.

（6）Check the stacking position and drive forklift forward and park it at proper place.

（7）Ensure the goods are above the stacking position, slowly lower the fork and ensure the goods are in position.

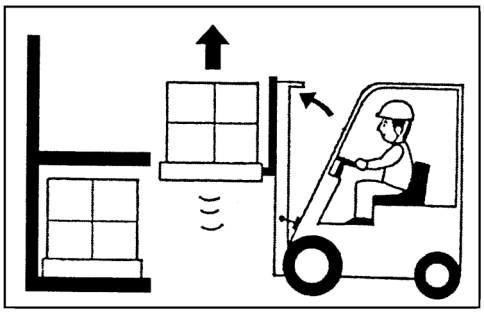

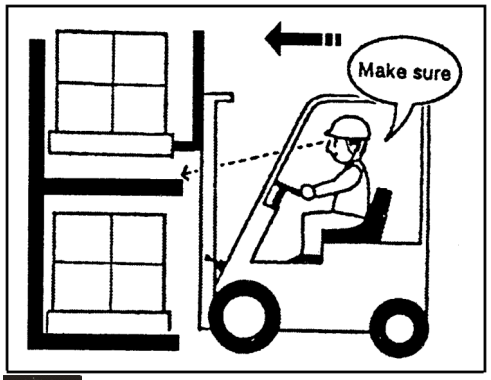

Note

When the goods aren't placed on the fork carriage or pallet fully:

a. Lower the fork until the fork hasn't carried any load;
b. Drive the forklift back of 1/4 fork length;
c. Lift the fork about 50~100mm, move the forklift forward and then place the goods at proper stacking position.

（8）Observe the space at the back of forklift, drive the forklift backward to prevent the fork colliding with the pallet or goods.

（9）Ensure the front of fork has left the goods or pallet, lower fork for driving (150~200mm above ground).

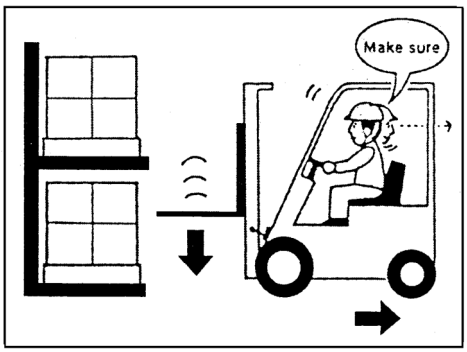

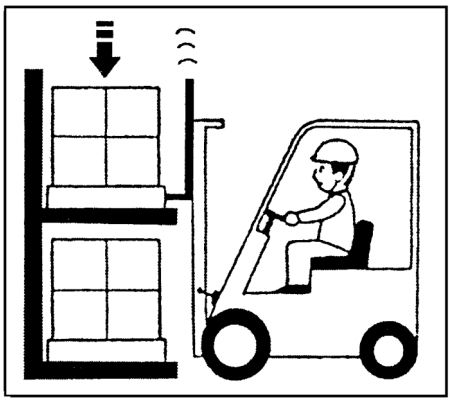

10. Un-stacking

The goods shall be un-stacked according to the following procedures:

(1) Speed shall be reduced when approaching the goods.

(2) Park the forklift before the goods (goods are 300mm from the tip).

(3) Regulate the forklift position before the goods.

(4) Ensure goods are not overloaded.

(5) Mast is vertical to ground.

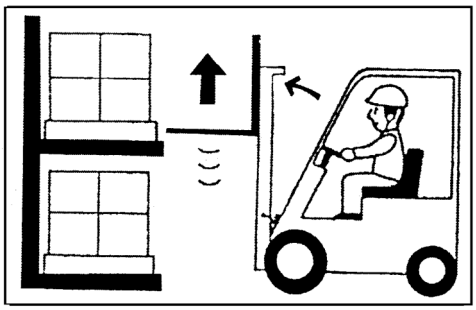

(6) Observe the fork position and drive forklift forward simultaneously until the fork is inserted into the pallet.

Note

When the fork can't be inserted into the pallet completely:

a. Insert 3/4 fork and raise the pallet a little (50~100mm), take out the pallet about 100~200mm and then lower pallet;

b. Insert the fork into the pallet completely.

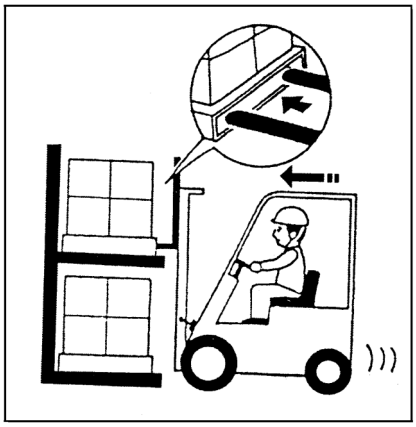

(7) After the fork is inserted into the pallet, raise the pallet (50~100mm).

(8) Observe surrounding area and drive the forklift backward until the goods are lowered.

(9) Lower the goods until it's 150~200mm above ground.

(10) The mast tilts back to ensure goods are stable.

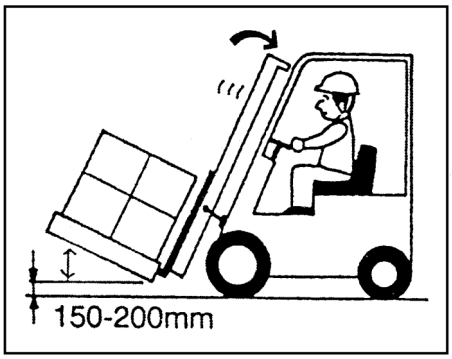

Transport the goods to destination.

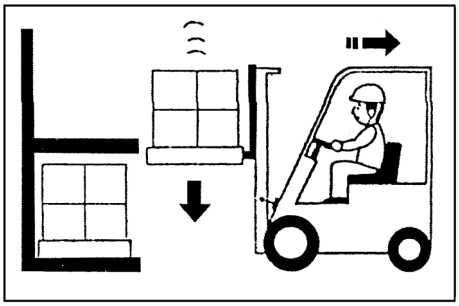

11. Storage

1) Before storage

Before the forklift is stored, clean it thoroughly and check it according to the following procedures:

a. Remove the oil and grease on the vehicle body with cloth and water;
b. When the vehicle body is cleaned, check the overall condition of vehicle, especially check whether the body is caved or damaged, whether the tire is worn out and whether the tire groove is inserted with iron nail or stone block;
c. Fill the fuel tank with appointed fuel
d. Check whether oil is leaked;
e. Fill the grease as required;
f. Check whether the hub nut and the joint face of cylinder piston rod are loosened, and whether the surface of piston rod is damaged and scraped;
g. Check whether the mast roller is stable;
h. In winter or cold season, there is no need of drain the long effect antifreeze. If it is cold water, drain it out.

⚠Warning

- If the forklift needs repair, is out of work or has unsafe factors, the condition shall be reported to the administrator, and repair the forklift until it's recovered to safety condition.

2) Routine storage

a. Park the forklift at the appointed place and block the wheel with wedge block;
b. Engage the shift lever at neutral position and pull up the parking brake lever;
c. Shut down the engine when the key is at "OFF"position. Operate the multi-way valve many times, release the residual pressure in the oil cylinder and pipeline.
d. Take off the key and keep it safe.

3) Long-term storage

Perform the following regulation and maintenance on the basis of Routine “storage”;

a. In consideration of rainy season, the forklift shall be parked at higher and hard ground;
b. After the battery is taken off from the forklift, even though the forklift is parked indoors, if the place is damp and hot, the battery shall be stored at dry, shady and cool place, and it'll be charged once per month;

A comprehensive inspection of the forklift can avoid the forklift malfunctions and prolong the service life of the forklift. The hours listed in

regular maintenance time table is based on that the forklift works for 8 hours per day and 200 hours per month..

Take a detail record after inspection, keep the record safe.

c. The exposed components such as cylinder piston rod and the shaft which will be rusted shall be brushed with anti-corrosive oil;
d. Cover the components which get easily moist
e. The vehicle shall be started at least once per week, if the cooling water is discharged, fill it and assemble the battery, remove the grease on the piston rod and shaft, start engine and warm it up thoroughly, drive the vehicle backward and forward slowly and operate the hydraulic control device several times;
f. The forklift can't be parked on the softy road such as asphalt road in summer.

4) Use of forklift after being stored for long time

a. Remove the anti-corrosive oil of exposed components;
b. Discharge the engine oil of engine crank. Discharge the hydraulic drive oil in the transmission and the gear oil in the drive axle. Clean up the interior and add new oil.
c. Remove the foreign material and water in the hydraulic oil tank;
d. Disassemble the air cylinder cover, valve and rocker shaft, inspect whether each valve clearance is normal.
e. Fill coolant to specified level.
f. Charge the battery and assemble it on the forklift and connect the lead wire of battery;
g. Check the forklift thoroughly before start.
h. Preheat the forklift.

IV. Regular inspection and maintenance

The total inspection for the forklift should be performed in advance, which can avoid the fault of forklift and prolong its service life, the number of hour listed in the periodic inspection and maintenance is based on the 8 hours of each day and 200 hours of each month.

The detailed inspection records should be made after inspection, and the records should be stored.

Caution

- Only the training and qualified personnel can maintain and repair the forklift.
- The daily and monthly inspection and maintenance can be carried out by the operator.

1. Inspection requirements

1) Only use the pure part.
2) Only use the pure or appointed grease.
3) Clean the oil refilling port and grease nipple with brush and cloth before adding oil or laying grease.
4) Park the machine on the level ground when performing oil level inspection and filling oil.
5) Carry out regular maintenance.
6) If it is necessary to working under the lifting fork or attachment, so support the fork or the attachment with supporting bar to avoid the fork and the mast sliding down.
7) If damaged parts and malfunction parts are found , report to the management personnel, do not operate the machine before repair.

2. Inspecting items

1) Leakage inspection of hydraulic oil, fuel oil and water

- Inspect whether the connector of hydraulic pipe, the engine, the water tank and drive system leak oil or water. Touch with the hand and inspect with your eyes.
- Inspect whether there is any impurity in the fuel oil.

Warning

- If fuel leakage is found before operation, do not drive the forklift. Until the leakage is eliminated, do not start the engine.

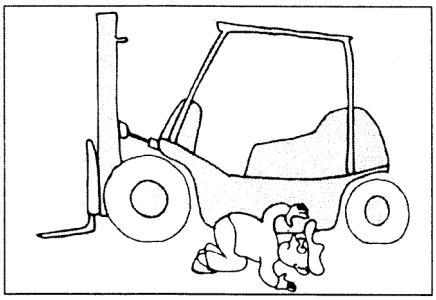

2）Air pressure inspection of tire（inflated tire）

Inspect the tire condition, too low pressure will shorten the service life of the tire and increase the consumption of fuel. Left and right air pressure is different or loss will cause different steering force.

The air pressure of tire should be according to the specified value of tire air pressure label plate.

Counterclockwise screw down the valve cap,

measure the air pressure of the tire. Adjust to the specified value if necessary. Make sure there is no air leakage , then tighten the cap.

Check whether the tire and side is damaged or cracked， and whether the wheel rim is deformed.

The tire of forklift needs high air pressure to bear heavy load,so tiny deformation of rim or damaged tire ground surface may cause accidents.

Tonnage / Tire pressure	2T－2.5T	3T－3.5T
Front wheel	0.79MPa	0.83MPa
Rear wheel	0.79MPa	0.79MPa

Warning

After assembling the tire and rim， all bolts and nuts approach to the specified torque, the can be inflated. After charge, the tire is with expanding strength, and the air pressure can't exceed the specified pressure value.

- When charge the tire with air compressor, adjust the pressure first. Maximum output pressure of air compressor is so high that the serious accidents will be caused by improper adjustment.

3）Torque inspection of hub and nut

- Inspect whether the torque of hub and the nut is correct.
- All hubs and nuts should be tightened to specified torque: 480~560N.m

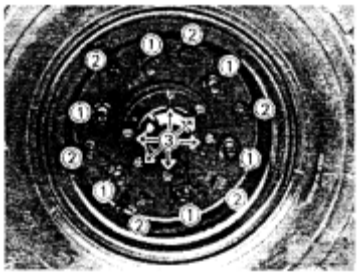

Drive wheel

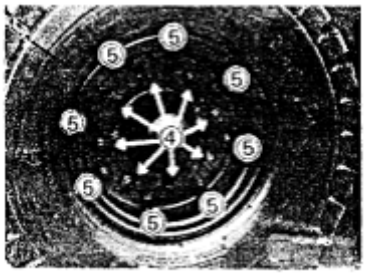

Steering wheel

① Hub nut
② Split-type front rim bolt
③ Axle shaft bolt of drive axle
④ rear hub nut
⑤ Split-type rear rim bolt

Caution

- When disassemble the hub nuts ①、④, do not take down the rim bolts ②、⑤.
- Loose of hub nuts is very dangerous, if it is loose, the wheel may fall off, as the result, the machine will overturn.

4）Inspecting the overhead guard

The overhead guard plays a protection function. Make sure the overhead guard is fixed well and all structural components are fast.

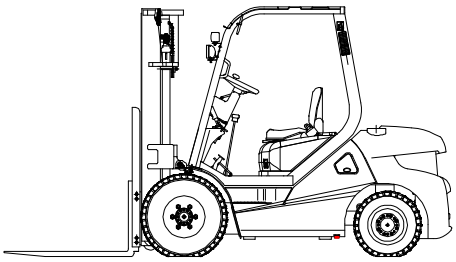

5）Brake fluid inspection

Inspect the oil level in the brake oil reservoir, the oil level should be between two graduation lines. When filling the oil, avoid dust or water coming into the oil reservoir.

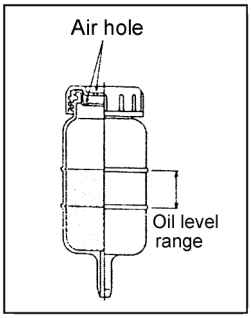

Open engine hood

Open the engine hood from the left side of machine body.

6）Eletrolyte inspection of the battery

There are upper and lower level graduation lines on the battery. The operator can observe the level and the level should be between the two lines.

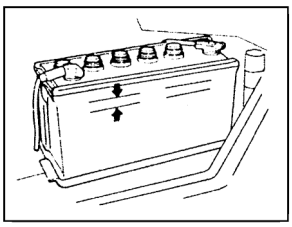

Hazards

Do not keep open flame close to the filling fluid of the battery, as the point will produce hydrogen and result in explosion.

7）Coolant level inspection

Inspect the level of refilling reservoir. The level should be between the upper and lower graduation lines, add the coolant as the requirement.

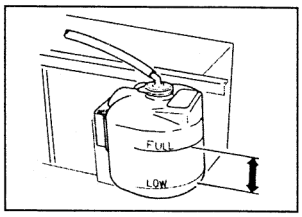

Warning

Pay attention when open the pressure cover of the water tank. Open the cover under pressure,sudden pressure release will produce stream flow, this will cause personnel injuries. Encase the cover with thin cloth or similar materials, release the cover slowly and let the stream spill, then screw down the cover. Do not wear gloves to avoid the hot water spouted scalding the hand.

8）Oil level inspection of engine

Oil dipstick of the engine is on the left side of machine body. Pull out the oil dip stick and wipe up the head of dipstick. Then insert the dipstick again and pull out it. Inspect whether the oil level should be between both two lines.

9 ） Tightness inspection of fan belt

inspect the tightness of fan belt and whether the fan belt is damaged. Press the middle

part of leather belt between water pump and the generator with the thumb.

Warning

- Shut down the engine when inspect the tightness of the fan belt.

10）Rear combination lamp

Inspect whether the rear combination lamp(tail lamp, stopping lamp and back up lamp) is damaged or contaminated.

11）Hydraulic oil level

Inspect the hydraulic oil level with oil dipstick.Pull out the oil dip stick and wipe up the dipstick. Then insert the dipstick again and pull out it. Inspect whether the oil level should be between both two lines.

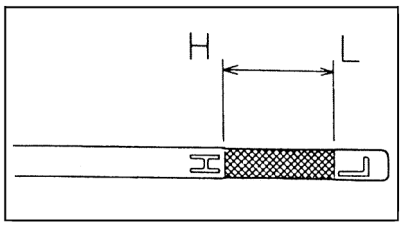

Warning

- When inspect the oil level, do shut down the engine and lower the fork on the ground. Park the forklift on the level ground.

12）Pipeline and oil cylinder

Inspect whether the hydraulic pipeline, lift and tilt cylinder leaks oil with eyes.

13）Oil level of power shifting transmission

Open the inspection cover and pull out oil filling cover. Inspect the oil level gauge, make sure the oil level is at the graduation line. If necessary, refill the special hydraulic oil.

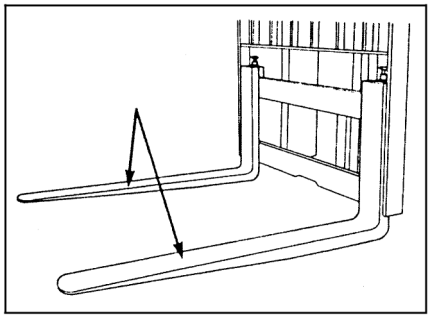

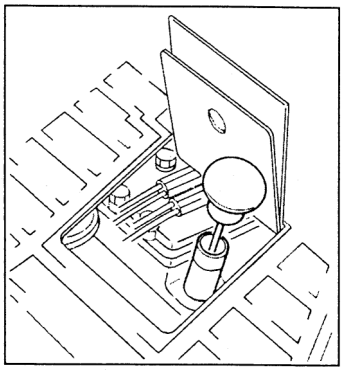

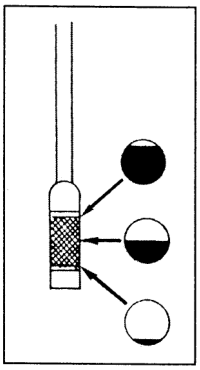

14）Gear rack inspection

Inspect the mounting bolts of gear rack are loose, tighten it if necessary.

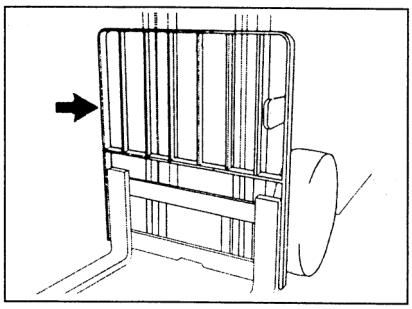

15）Fork and fork loaction pin

Check the mounting condition of location pin and whether the fork is deformed or cracked.

16 ） Front headlamp and front combination lamp

Inspect the lamp shade and the bulb are clean and damaged.

17）seat adjustment

The seat should be arranged properly. If the seat is not at the proper position,pull right the adjustment handle. Adjust the seat to the position where the hand and foot can easily control. After adjustment, move the seat forward and backward slightly. Make sure the seat is locked reliably.

18）Shifting lever inspection

Inspect whether the shifting lever is loose and the operation handle.

19）Control lever of the multi-way valve

Inspect whether the control lever (lift, tilt and attachment) is loose and the operation is easy.

20）Parking brake inspection

Make sure that parking brake is safe and reliable after pulling up the parking brake lever.

Staring the engine

Before the engine startup, make sure the shifting lever is at the neutral, the parking brake is reliable.

21）Instrument

Timer, water temperature gauge and fuel gauge can make the operator know the status of the forklift operated.

22）Fuel capacity inspection

Fuel gauge is mounted on the instrument panel. Inspect whether the oil capacity is enough for the whole day operation of the forklift.

23）Lamp and light

Turn on the lamp switch. Make sure the corresponding lamp is normal.

24）Steering signal inspection

Operate the steering signal lever to keep the steering signal lamp normal.

25）Operation inspection of horn button

Press the horn button to make sure whether the horn is normal.

26）Clutch pedal inspection

The mechanical drive forklift

Inspect whether the action of clutch pedal is stable.

For the forklift with hydraulic clutch, after the engine startup, press the clutch pedal to perform an inspection.

27）Brake pedal no stroke

Step down the brake pedal and inching pedal (only for the hydraulic forklift), make sure whether the action of each pedal is stable and can reset without interference.

28）Mast operation

Make sure that the lift bracket lifts, declines normally and the mast inclines stably. Make sure the cylinder piston travel to the end of travel, whether the operation of overflow valve and the sound of overflow is normal. Pay attention to the sound of system operation.

29）Tension test of the lifting chain

Inspect the tension of the lifting chain and whether the lifting chain.

When inspecting the tension, lift the fork to 500mm above the ground. Press the middle part of the chain. Inspect whether the tension of both left and right chains are the same. If the tension are not the same,loose the locknut (A) of dowel pin, tighten the adjustment nut(B) to adjust the chain.

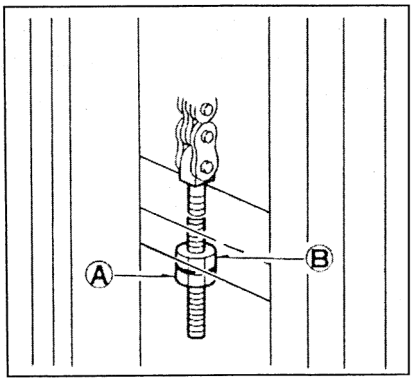

Caution

- Do use mechanical oil(such as hydraulic oil) as the lubricant oil of the lifting chain, do not use the grease.

30）Free travel of the steering wheel

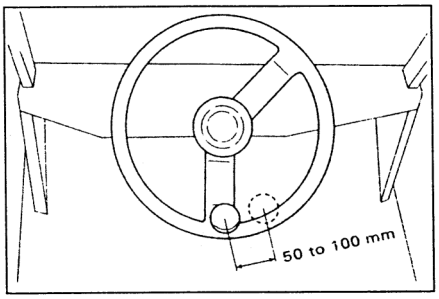

Inspect the rotation of the steering wheel and the loose condition of axle direction. Normal free travel is 50~100mm, loose in axle direction is not permitted.

31）Exhaust inspection

After preheating the engine, check the exhaust condition

Achromaticity or light blue	Normal:perfect combustion
Black	Abnormal：imperfect combustion
White	Abnormal：there is water in the fuel or the atomization of nozzle is not well.
Blue	Abnormal：burn engine oil

Inspect whether there is abnormal noise or vibration in the engine and drive system.

Hazards

- The exhaust gas from the engine is harmful, when the forklift is started or used in the closed space, the drained exhaust gas from the engine can cause the toxic risk, so there should ensure enough oxygen, and regularly test the value of exhaust gas, and the exhaust test should be done outdoors, pay attention to the fire, especially pay attention to the leakage of oil or fuel, do not leave the waste cloth and paper on the engine body, confirm the placed site of fire-extinguishing equipment and know how to use this equipment.

32）Clutch control inspection(the mechanical drive forklift)

Step down the clutch pedal, make sure the clutch engages normally without slip.

Inching pedal inspection (the hydraulic drive forklift)

Step down the inching pedal slightly, inspect

the status of speed reduction for the machine.

33）Brake inspection

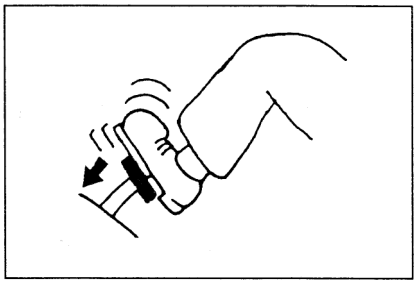

Drive the machine slowly and step down the brake pedal to check the brake effect. After stepping down the brake pedal, the brake lamp will be on.

34）Steering inspection

When the machine travels slowly,turn the steering wheel, observe the left and right steering force are the same, whether there are other abnormal phenomena.

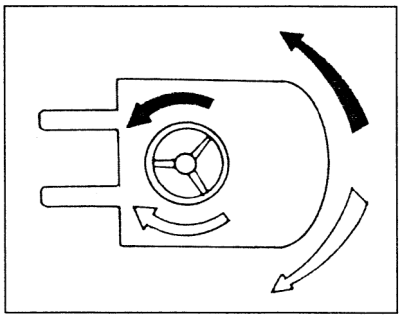

35）Parking brake inspection

Make sure that pull up parking brake lever, machines travelling at a slow speed can be stopped by brake.

36）back-up lamp inspection

When the shifting lever is at the reversing gear, the back-up lamp is on.

3、Maintenance

1 ） Drain water from oil and water separator

The engine forklift （ selected configuration）

When the indicating lamp of oil and water separator is on:

a. Shut down the engine, turn (A) part 4~5 circles. Press the pump (B). Continuously press the pump (B) until drain the water in the oil and water separator.
b. Tighten drain plug, press the pump (B) several times. Observe whether there is leakage at the plug.
c. Make sure the indicating lamp will not be on after the engine startup.

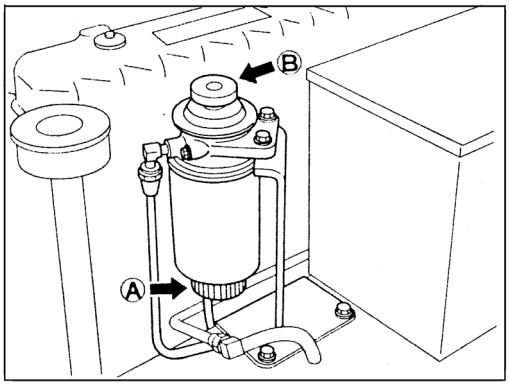

2）Exhaust of fuel system

The diesel forklift

a. Shut down the engine, loose the plug on the injection pump.
b. Tighten the plug, make sure there is no fuel leakage.
c. Press the pump to exhaust. Press the plug until the fuel will flow out of the plug.

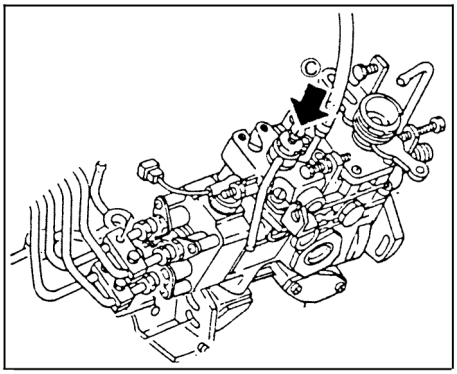

3）Replacement of wire fuse

The wire fuse can protect the electrical system and prevent the too high current damaging the electrical components. Inspect whether all parts in the circuit work normally. If any component in the circuit can not work,the corresponding wire fuse may be burned out. Replace it with new wire fuse which has the same capacity. If one part of components can not work, the ball contact may be burned out, replace it with a new contact which has the same capacity.

4）replacement and repair of the tire

Get ready for tools and the jack before replacement and repair.

a. **Front wheel**

- Park the machine on the hard road surface, unload all burden.
- Pull up parking brake lever and block the wedge. Put the jack under the vehicle body.
- Support the machine and keep the wheel on the ground. Loose the hub nuts, but do not take off them.
- Support the machine to make the wheel leave ground. Take off the nut and take down the tire.
- Assembly order of the tire is contrary to the disassembly order. Tighten the hub nuts in the diagonal order.
- After installation , inspection the tire pressure.

b. Rear wheel

Expect that the jack is put under the balancing weight, else is the same to repair and replacement method of the front wheel.

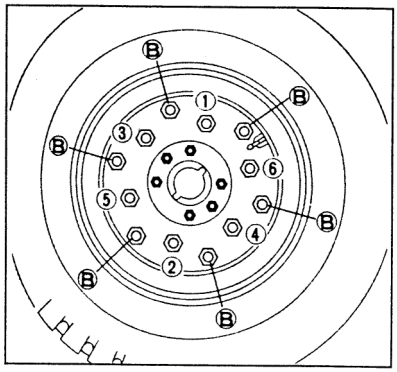

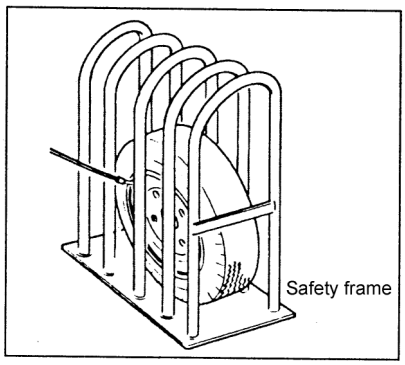

4、Regular maintenance time able

This schedule is set under the standard working time and operation condition, if the forklift truck is working in the bad condition, the maintenance ("●" indicates replacement) should be done in advance.

Engine

Test item	Test content	Tool	Per day (8h)	Per month (200h)	Every 3 months (600h)	Every 6 months (1200h)	Each year (2400h)
Engine	Visual inspect engine operation status		○	○	○	○	○
	Sound of the engine		○	○	○	○	○
	Colour of exhaust		○	○	○	○	○
	Clean and replace the air filter core			○	○	●	●
	Inspect the crank and remove the dirt.				○	○	○
	Check and adjust the valve clearance	Plug gage				○	○
	Tighten head bolts of air cylinder	Torque wrench		○Gasoline forklift only for the first time		○	○
	Check compression pressure in air cylinder	Manometer					○
Register of crank	Check stopping or damage status of the valve and the pipe.					○	○
Governor or injection pump	Check the maximum speed when the machine unloads.	Tachometer					○
Lubricating system	Whether the engine leaks oil		○	○	○	○	○
	Check oil capacity, cleaness		○	○	○	○	○
	Replace the engine oil			●50h for the first time	●	●	●
	Replace the engine oil filter core			●200h for the first time	●	●	●
Fuel system	Visually inspect whether oil pipe, oil pump and oil tank leaks oil.		○	○	○	○	○
	Inspect the fuel filter is blocked.				○	○	○

Engine

Test item	Test content	Tool	Per day (8h)	Per month (200h)	Every 3 months (600h)	Every 6 months (1200h)	Each year (2400h)
Fuel system	Clean the fuel filter (gasoline forklift)				○	○	●
	Replace the fuel filter (gasoline forklift)				●	●	●
	Check nozzle, adjustment pressure and situationn (diesel forklift)	Injection test				○	○
	Check the loose status and cleaness of the connection mechanism for vaporization （gasoline forklift）				○	○	○
	Ignition time（gasoline forklift）	Timer			○	○	○
	Injection time（diesel forklift）						○
	Drain water in the fuel tank				○	○	○
	Clean the fuel tank					○	○
	Check the fuel capacity		○	○	○	○	○
Cooling system	Coolant capacity		○	○	○	○	○
	Leakage status		○	○	○	○	○
	Aging of the hose.				○	○	○
	Performance and assembly of the water tank cover			○	○	○	○
	Clean and replace the coolant				●	●	●
	Check the tension force and the damage status of the fan belt		○	○	○	○	○

Drive system

Test item	Test content	Tool	Per day (8h)	Per month (200h)	Every 3 months (600h)	Every 6 months (1200h)	Each year (2400h)
Hydraulic transmission box	Leakage condition		○	○	○	○	○
	Test oil volume or replace oil			○	○	●	●
	Operation and loose situation of gearlever			○	○	○	○
	Control valve and hydraulic clutch performance		○	○	○	○	○
	Inching valve performance		○	○	○	○	○
	Idle stroke and power situation of inching pedal		○	○	○	○	○
	Replace the oil filter core			● 200h for the first time		●	●
Drive axle	Leakage situation		○	○	○	○	○
	Replace oil					●	●
	Loose situation of installed bolts		○	○	○	○	○

Wheel

Test item	Test content	Tool	Per day (8h)	Per month (200h)	Every 3 months (600h)	Every 6 months (1200h)	Each year (2400h)
Tire	Charged pressure	Pressure indicator	○	○	○	○	○
	Crack or damage		○	○	○	○	○
	Wearing situation of touched ground	Depthometer		○	○	○	○
	Abnormal wearing situation		○	○	○	○	○
	Whether there is nail, stone or other impurity on the tire			○	○	○	○
Install tire	Test whether the bolts are loose		○	○	○	○	○
	Test damaged situation		○	○	○	○	○
Rim and spoke rim	Damaged situation of rim, spoke rim and lock ring		○	○	○	○	○
Axle bearing	Test the loosing and noise condition			○	○	○	○
	Wipe up and re-add the lubrication oil					●	●
Axle body	Test the distortion, crack or damaged situation			○	○	○	○

Steering system

Test item	Test content	Tool	Per day (8h)	Per month (200h)	Every 3 months (600h)	Every 6 months (1200h)	Each year (2400h)
Steering wheel	Test the gap		○	○	○	○	○
	Test the axial loose condition		○	○	○	○	○
	Test the radial loose condition		○	○	○	○	○
	Test the operation status		○	○	○	○	○
Steering device	Test whether the installation bolts are loose			○	○	○	○
Steering knuckle of rear axle	Test whether the main pin is loose or damaged			○	○	○	○
	Test the bending, distortion, crack or damaged situation			○	○	○	○
	Test installation situation	Detection hammer		○	○	○	○
Steering cylinder	Test the operation situation		○	○	○	○	○
	Test whether there is leakage		○	○	○	○	○
	Test whether the installation and hinged places are loose			○	○	○	○

Brake system

Test item	Test content	Tool	Per day (8h)	Per month (200h)	Every 3 months (600h)	Every 6 months (1200h)	Each year (2400h)
Brake pedal	No stroke		○	○	○	○	○
	Pedal travel	Ruler	○	○	○	○	○
	Operation situationn		○	○	○	○	○
	There is air in the brake pipeline		○	○	○	○	○
Parking brake control	Whether the brake is safe and reliable and the travel is enough		○	○	○	○	○
	Control performance		○	○	○	○	○
Rod, pull cable,etc	Control performance			○	○	○	○
	Whether the connection is loose .			○	○	○	○
pipeline	Damage, leakage and crack			○	○	○	○
	Loose situationn of connection and clamping parts			○	○	○	○
Brake master cylinder wheel , cylinder	Leakage situationn			○	○	○	○
	Inspect the oil level and replace the oil		○	○	○	●	●
	Action of master pump and wheel cylinder						○
	The wear and damage situationn of master pump, piston cup,check valve, replace.						○
Brake drum brake shoe	Whether mounting parts of brake drum are loose	Detection hammer		○	○	○	○
	Wear situationn of friction plates	vernier caliper					○
	Action situationn of brake shoe						○
	Whether the dowel pin is rusted						○
	Damage situationn of return spring	Ruler					○
	Inspect whether the clearance of self regulator is proper when it works						○
	The wear, damage situationn of brake drum						○
Bottom plate of brake	Whether the bottom plate is deformed						○
	Whether the bottom plate is cracked						○
	Whether it is loose when mount the bottom plate	Detection hammer					○

Lifting system

Test item	Test content	Tool	Per day (8h)	Per month (200h)	Every 3 months (600h)	Every 6 months (1200h)	Each year (2400h)
Fork	Damaged, distortion and wearing situation of fork		○	○	○	○	○
	Damaged and wearing situation of locating pin				○	○	○
	The cracking and wearing situation of welding part of bottom hook of fork			○	○	○	○
Mast and fork arm carriage	Whether the welding places at the inner mast, outer mast and cross beam are cracked and damaged			○	○	○	○
	Whether there is bad welding, cracked and damages phenomenon on the welding places of tilting cylinder bracket and mast			○	○	○	○
	Whether there is bad welding, cracked and damages phenomenon on the inner and outer masts			○	○	○	○
	Whether there is bad welding, cracked and damages phenomenon on the fork arm carriage			○	○	○	○
	Whether the roller is loose			○	○	○	○
	Wearing and damaged situation of the supporting bush of mast						○
	Whether the bearing cover of mast is loose	Detection hammer		○ Only for the first time	○	○	○
	Whether the bottom bolts of lifting cylinder, top bolts of piston rod, U-bolts and bolts of guide rail of movable beam are loose	Detection hammer		○ Only for the first time	○	○	○
	The cracking and damaged situation of roller, roller shaft and the welding part			○	○	○	○
Chain sprocket	Test the tension status of chain to see whether there is distortion, damage and rust phenomenon		○	○	○	○	○
	Add oil on the chain			○	○	○	○
	Riveting pin and loosing situation			○	○	○	○
	Distortion and damage situation of sprocket			○	○	○	○
	Whether the sprocket bearing is loose			○	○	○	○
Attachments	Test whether the condition is normal			○	○	○	○

Lifting system

Test item	Test content	Tool	Per day (8h)	Per month (200h)	Every 3 months (600h)	Every 6 months (1200h)	Each year (2400h)
Lift cylinder	Whether piston rod, thread connection of piston rod are loose, deformed or damaged.			○	○	○	○
	Operating situationn		○	○	○	○	○
	Leakage situationn		○	○	○	○	○
	Wear, damage situationn of pin and cylinder bearing		○	○	○	○	○
Hydraulic pump	Whether there is oil leakage or noise in the hydraulic pump		○	○	○	○	○
	Wear situationn of the drive gear for hydraulic pump			○	○	○	○

Hydraulic system

Test item	Test content	Tool	Per day (8h)	Per month (200h)	Every 3 months (600h)	Every 6 months (1200h)	Each year (2400h)
Hydraulic oil	Oil level test		○	○	○	○	○
	Clean oil filter core			●		○	○
	Remove impurity and replace oil			●		○	○
Oil return filter	Replace oil return filter					●	●
Control valve stem	Whether the connection is loose		○	○	○	○	○
	Operation situation		○	○	○	○	○
Multi-way valve	Oil leakage		○	○	○	○	○
	Operation situations of safety valve and tilted latching valve			○	○	○	○
	Measure the pressure of safety valve					○	○
Pipeline connector	Leakage, loosing, breakage, distortion and damage situations		○	○	○	○	○
	Replace the pipe						●1-2 year

Electric

Test item	Test content	Tool	Per day (8h)	Per month (200h)	Every 3 months (600h)	Every 6 months (1200h)	Each year (2400h)
Ignition device（gasoline）	Whether the distributor cap is cracked				○	○	○
	Whether the spark plug is burned or rusted						○
	Adjust the clearance of the spark plug	specification			○	○	○
	Clean the spark plug				○	○	○
	Assembly situationn of cover and high pressure wire						○
	Whether the distributor cap is burned or rusted						○
	Wear and damaged situationn of center part for the distributor cap						○
	Adding lubricating oil to shaft				○	○	○
	Crack situationn of the pressure wire	Tester					○
Starting motor	Engagement of the small gear				○	○	○
Battry	Electrolyte capacity, clean			○	○	○	○
	Inspect the specific gravity of electrolyte	Areometer			○	○	○
Wire	Damage, fixation and loose situationn of the wire harness			○	○	○	○
	Loose situationn of electrical circuitconnection				○	○	○

Safety device and accessories

Test item	Test content	Tool	Per day (8h)	Per month (200h)	Every 3 months (600h)	Every 6 months (1200h)	Each year (2400h)
Overhead guard and	Whether the installation is fast	Detection hammer	○	○	○	○	○

gear rack	Check deformation, crack and damage situationn		○	○	○	○	○
Steering indicating lamp	Working and installation situationn		○	○	○	○	○
Horn	Working and installation situationn		○	○	○	○	○
Lamp and bulb	Working and installation situationn		○	○	○	○	○
Back up buzzer	Working and installation situationn		○	○	○	○	○
Rear view mirror	Contamination, damage situationn		○	○	○	○	○
Instrument	Working situationn of instrument		○	○	○	○	○
Seat	Check whether the bolt is loose or damaged.					○	○
Machine body	Whether frame and beam are damaged or cracked.						○
	Whether rivets and bolts are loose.	Detection hammer					○
	If necessary, check the part repaired		○	○	○	○	○
	Comprehensive inspection						○
Add grease or replace	After cleaning, check the lubricating situationn of the chassis.	Grease gun		○	○	○	○
	Check the oil fluid in the oil tank						○

Caution

- When the oil, cooling fluid and antifreeze which are different with the specified products in this truck are used, the replacement period can not be the same with the specified period in the manual. Therefore, the replacement period should be shortened half or 1/4 of the specified period in this manual.
- Although the high-viscosity oil has a wider operating temperature range, the replacement should be needed. Owing to the additive can slowly deteriorate, the oil viscosity can reduce, and the hydraulic system can be seriously damaged at the high temperature.

https://truckmanualshub.com/

Ⅴ、Others

1、Lubrication chart

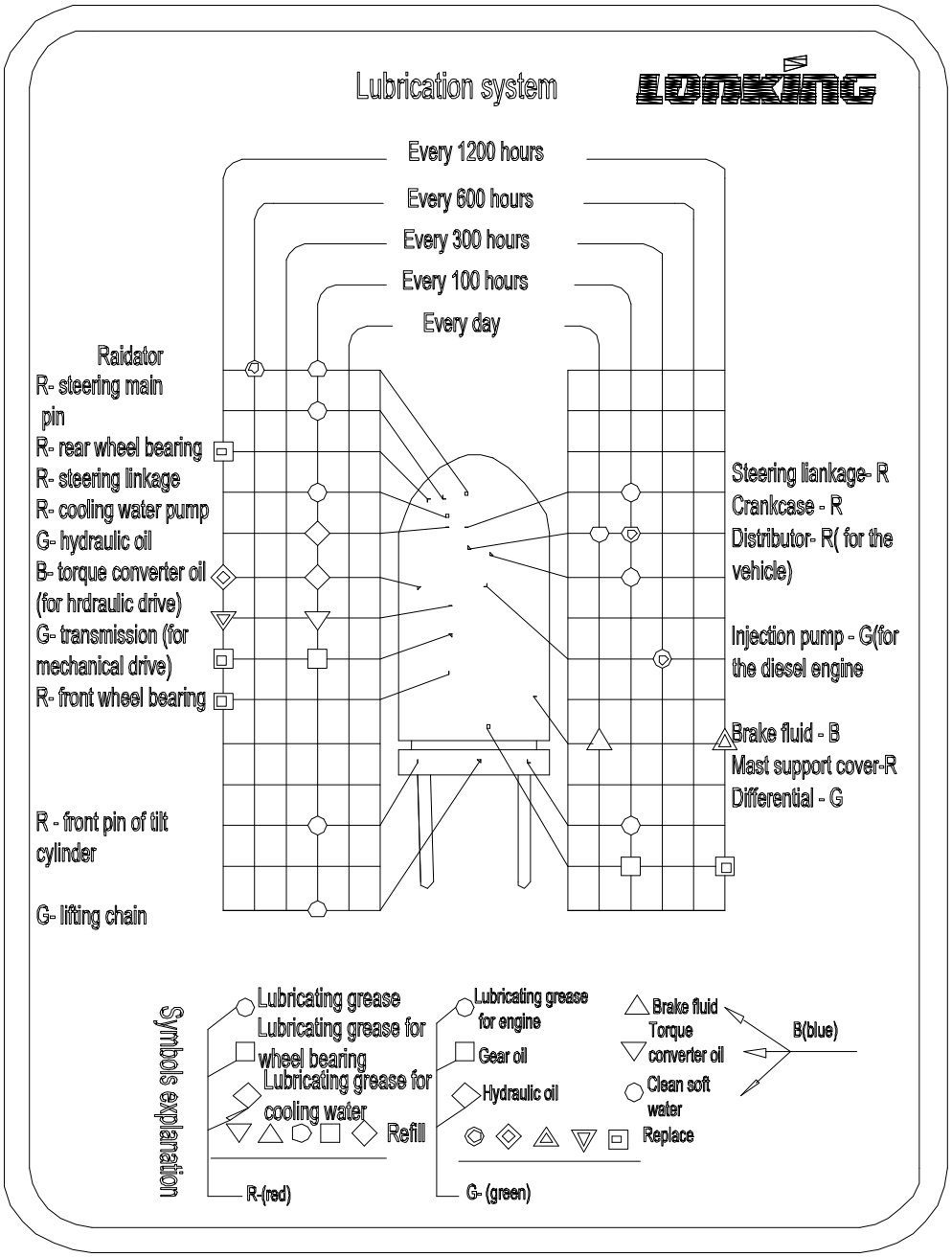

2、Forklift oil

Name	Trademark, code and operating temperature				
Gasoline	93# 或 97#				
Diesel oil	Light diesel oil trademark	0#	-10#	-20#	-35#
	Operating temperature（℃）	≥4	≥-5	-5～-14	-14～-29
Gasoline engine oil（SF） Electrical injection（SG）	Trademark or code	5W/30	10W/40	10W/30	15W/40
	Operating temperature（℃）	-30～+30	-25～+40	-25～+30	-20～+40
Diesel oil(CD)	Trademark or code	5W/30	10W/30	15W/40	20W/50
	Operating temperature（℃）	-30～+30	-25～+30	-20～+40	-15～+50
Hydraulic oil	Trademark or code	L-HM32 anti-wear hydraulic oil		L-HV32 low temperature anti-wear hydraulic oil	
	Operating temperature（℃）	≥-5		≥-20(exposed cold area)	
Hydraulic drive oil	6# hydraulic drive oil				
Brake fluid	Synthetic brake fluid				
Lubricating grease	3# universal lithium base grease (-20℃~+120℃)				
Heavy load vehicle gear oil	Trademark or code	85W/90GL-5		80W/90GL-5	
	Operating temperature（℃）	-15～+49		-25～+49	
Antifreeze	Code	FD-1	FD-2	FD-2A	FD-3
	Operating temperature（℃）	≥-25	≥-35	≥-45	≥-50

Caution

- The products of Great Wall are recommended.
- The oil products with different brands can't be used together.

https://truckmanualshub.com/

RECORD

https://truckmanualshub.com/

RECORD