https://truckmanualshub.com/

MUSTANG®

COMPACT EXCAVATORS

80M ▲ 170Z NXT2 ▲ 250Z ▲ 350Z NXT2 ▲ 450Z NXT2 ▲ 550Z ▲ 800Z NXT2 ▲ 1000M

https://truckmanualshub.com/

A LEGACY OF INNOVATION

WHAT BEGAN IN THE 19TH CENTURY AS AN AGRICULTURAL IMPLEMENT MANUFACTURER HAS GROWN INTO A 21ST CENTURY EQUIPMENT POWERHOUSE - MUSTANG COMPACT EQUIPMENT.

Known in the early years as the Owatonna Manufacturing Company, Mustang was among the first to make what is known today as the skid steer loader. Since that time, Mustang has combined old-school experience with innovative processes to offer one of the broadest lines of compact equipment available today.

MUSTANG. THE ORIGINAL WORKHORSE.

https://truckmanualshub.com/

BREAKING NEW GROUND

It's one of the many ways to describe the diverse line of Mustang compact excavators. Each model is built with the operator in mind, providing the power and comfort to exceed expectations.

Mustang compact excavators are reliable, strong, and maneuverable, making them the perfect partner on the most challenging jobsites.

- EIGHT MODELS
- 0.8 - 10.0 METRIC TONS
- ZERO-TAIL-SWING & MINIMAL TAIL-SWING
- POWER-A-TACH® ATTACHMENT MOUNTING SYSTEM
- INTEGRATED DIGITAL DISPLAY
- YANMAR TIER IV ENGINES
- ANGLE BLADE WITH FLOAT
- JOYSTICK CONTROLS
- ISO OR SAE PATTERNS
- ERGONOMIC CAB / CANOPY

MUSTANG COMPACT EXCAVATORS

https://truckmanualshub.com/

▲ POWER and ▲ PERFORMANCE

HIGH PERFORMANCE IS IN FULL SWING

TIER IV YANMAR DIESEL ENGINES

Tier IV Yanmar engines are highly efficient and utilize automatic regeneration and no fuel additives, providing clean emissions with little to no input from the operator. Known world-wide for their high torque and excellent cold starting abilities, Yanmar engines provide what is needed to power the full range of Mustang excavators.

TRUE ZERO-TAIL-SWING

170Z NXT2, 250Z, 350Z NXT2, 450Z NXT2, 550Z, 800Z NXT2

The zero-tail-swing design allows the upper structure to rotate entirely within the tracks without overhang. This feature is very beneficial when working in confined areas or near obstacles and buildings. Cast side protectors provide added protection at the base of the house.

MINIMAL TAIL-SWING

80M, 1000M

The minimal tail-swing design allows operation in tight spaces without damage to surrounding objects while providing additional stability and operator comfort. When rotated, the tail overhangs the undercarriage by less than 20% and cast side protectors provide added protection at the base of the house.

https://truckmanualshub.com/

TOTAL HYDRAULIC FLOW

80M	5.2 gpm (19.6 L/min)
170Z NXT2	15.4 gpm (58.3 L/min)
250Z	24.4 gpm (92.6 L.min)
350Z NXT2	29.3 gpm (110.9 L/min)
450Z NXT2	35.1 gpm (132.8 L/min)
550Z	36.9 gpm (139.4 L/min)
800Z NXT2	56.7 gpm (214.5 L/min)
1000M	61.6 gpm (233.2 L/min)

OPERATING WEIGHTS

	CANOPY	CAB
80M	2,348 lbs. (1065 kg)	--
170Z NXT2	3,836 lbs. (1740 kg)	--
250Z	5,919 lbs. (2685 kg)	6,217 lbs. (2820 kg)
350Z NXT2	7,905 lbs. (3585 kg)	8,214 lbs. (3725 kg)
450Z NXT2	10,417 lbs. (4725 kg)	10,814 lbs. (4905 kg)
550Z	11,850 lbs. (5375 kg)	12,247 lbs. (5555 kg)
800Z NXT2	--	18,136 lbs. (8225 kg)
1000M	--	21,550 lbs. (9775 kg)

HIGH EFFICIENCY = FUEL SAVINGS

ECO MODE

- Reduces engine RPM by 10%

AUTO DECELERATION

- Engine automatically idles when machine is not being used

=

COMBINED RESULTS

- Approximately 20% reduction in fuel consumption
- Decreased noise levels
- Cleaner Emissions

FACTORY-INSTALLED THUMB

An optional hydraulic thumb attachment comes factory installed, adding versatility and enhancing productivity for a wide variety of applications.

MUSTANG®

OPERATOR STATION

https://truckmanualshub.com/

COMFORT and PRODUCTIVITY

WRIST REST

Designed with comfort in mind, the adjustable wrist rest helps reduce operator fatigue.

PREMIUM SEAT

Fully adjustable seat with retractable belt for custom height, weight and backrest positions. Optional 3 inch (76 mm) seatbelt available.

CREATURE COMFORTS

A dome light, large cup holder, in-dash cell phone holder and multiple adjustable air vents offer both comfort and convenience.

ELEVATED PEDALS

Elevated travel pedals provide extra foot room while performing stationary work, keeping you comfortable on long work days.

https://truckmanualshub.com/

INTEGRATED LCD DISPLAY

Easy-to-use, multi-function display incorporates all warning/operation lights and machine configuration screens.

- Engine regeneration
- Hour meter & clock
- Recordable maintenance history
- Multiple language selections
- Fluid levels
- Usage monitoring
- Error codes
- Fuel consumption

CLIMATE CONTROL

Heat is standard on all cab models. Upgrade to A/C for additional comfort.

STORAGE

Storage compartments are located behind and under the seat for items you need throughout the day.

CONTROLS

TWO WAYS TO OPERATE

The operator can choose the control pattern of their preference, ISO or SAE (backhoe), with a simple turn of a mechanical lever.

PROPORTIONAL AUXILIARY HYDRAULIC FLOW

Hydraulic flow is infinitely adjustable with a rocker switch on the joystick to maximize the productivity of attachments.

EASY-TO-USE JOYSTICK

Pilot-operated joystick controls are operated by simple wrist movements to keep the operator comfortable all day.

ALL-IN-ONE CONTROL

The dozer blade angle control, angle blade float, blade height, and two-speed control switch are combined in an ergonomic joystick / lever.

BOOM LIGHT

A well-protected boom light enhances jobsite visibility and safety in darker conditions.

ANGLE BLADE with float

The blade can be angled 25° in either direction to eliminate repetitive repositioning when backfilling.

WITHIN REACH

Lights, windshield wiper, and all other controls are conveniently located on the armrests.

ANGLE BLADE

https://truckmanualshub.com/

SAFETY and SERVICEABILITY

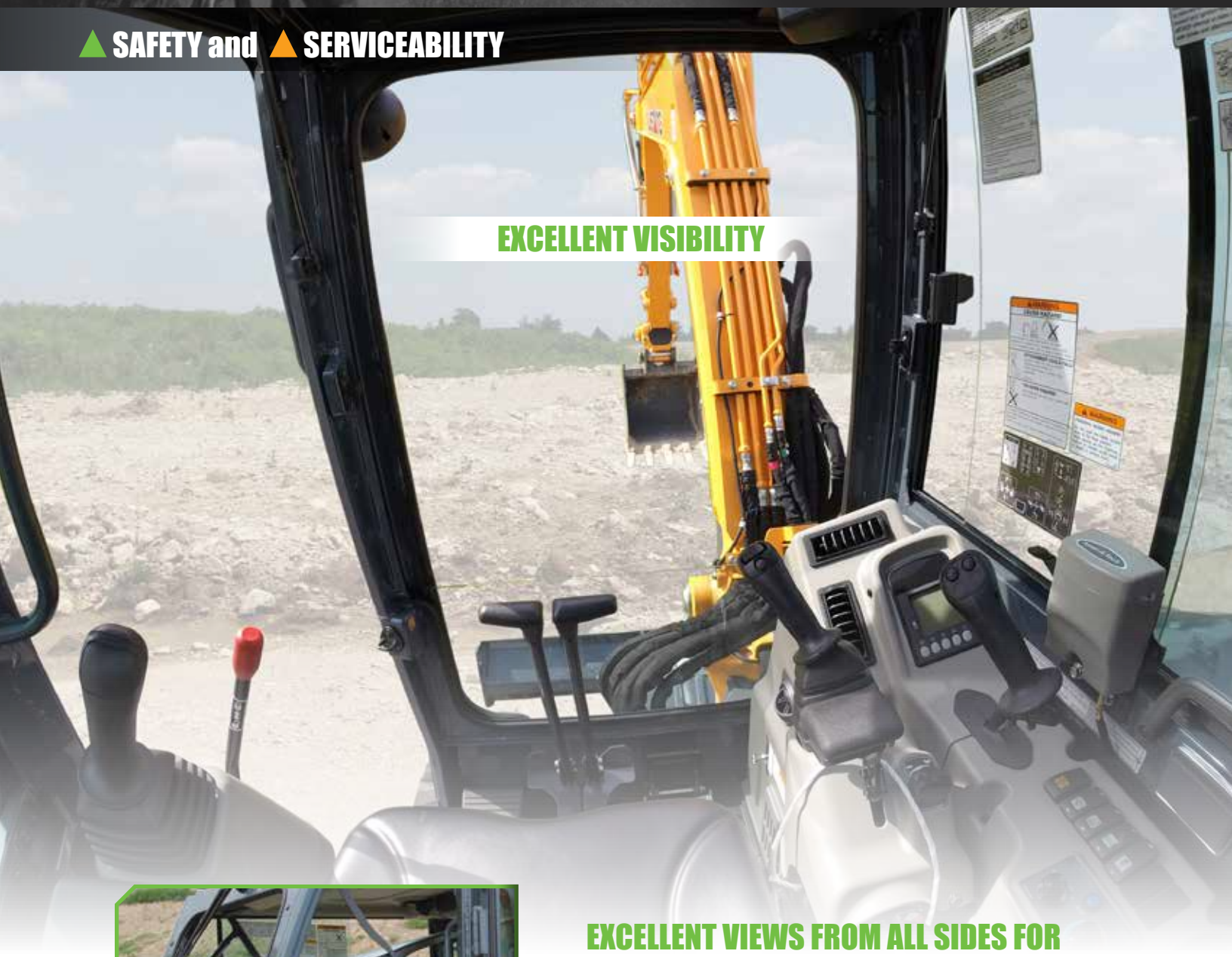

EXCELLENT VISIBILITY

EXCELLENT VIEWS FROM ALL SIDES FOR SAFE AND PRECISE OPERATION.

Excellent visibility to the front, sides and rear of the machine allow for precise material placement and reduced jobsite incidents. A high-mounted seat provides an excellent vantage point to the attachment and cutting-edge.

FOLD-UP FRONT WINDOW

The front window can be stowed overhead for additional air flow when weather permits. This feature also increases visibility and communication with bystanders when needed.

EMERGENCY SWITCH

Located by the cab door, the cut-off switch is accessible from the ground in the event of an emergency.

TRAVEL ALARM

Standard equipment on every excavator, the travel alarm notifies bystanders of your presence to increase safety.

https://truckmanualshub.com/

LESS DOWNTIME PUTS MONEY IN YOUR POCKET

BOOM PIVOT

Standing out from the competition with a single pin boom mount, the pivot is truly aligned to provide a longer life and reduced costs.

TRAVEL IN COMFORT

Long tracks featuring a staggered tread and mandrel design, combined with a short track pitch, reduce vibration and provide a smoother ride over rough terrain.

TRACK PROTECTION

An angled crawler frame and short-pitched tracks reduce soil build-up on the undercarriage, extending the life of the rollers and tracks.

EASY MAINTENANCE TRACKING

A digital display with historical monitoring and automatic, adjustable reminders and intervals provides easier tracking for maintenance procedures.

TOOL-FREE ACCESS PANELS

Quick and easy access to the battery, engine compartment, control valve, cooler & control pattern selection valve.

STANDARD TRACK DRIVE

The standard track drive system provides long track life and allows for easy aftermarket track replacment.

EXTENDABLE TRACKS

Retracted, extendable tracks provide the ability to access confined spaces, and then extend the tracks for increased stability.

MUSTANG®

LIFTING CAPACITIES

https://truckmanualshub.com/

80M	RATED LIFT CAPACITY OVER END BLADE DOWN - lbs. (kg)				RATED LIFT CAPACITY OVER END BLADE UP - lbs. (kg)				RATED LIFT CAPACITY OVER SIDE BLADE UP - lbs. (kg)			
(h) LIFT POINT HEIGHT - in. (mm)	(r) LIFT RADIUS - in. (mm)				(r) LIFT RADIUS - in. (mm)				(r) LIFT RADIUS - in. (mm)			
	MAX	78.7 (2000)	59.1 (1500)	MIN	MAX	78.7 (2000)	59.1 (1500)	MIN	MAX	78.7 (2000)	59.1 (1500)	MIN
78.7 (2000)	*485 (220)				419 (190)				353 (160)			
59.1 (1500)	*485 (220)	*485 (220)	*595 (270)		331 (150)	375 (170)	*529 (240)		265 (120)	331 (150)	441 (200)	
39.4 (1000)	*507 (230)	*573 (260)	*772 (350)	*1080 (490)	287 (130)	375 (170)	617 (280)	838 (380)	243 (110)	309 (140)	507 (230)	662 (300)
19.7 (500)	*529 (240)	*662 (300)	*1036 (470)	*1301 (590)	287 (130)	375 (170)	573 (260)	706 (320)	221 (100)	287 (130)	463 (210)	573 (260)
GROUND (0)	*529 (240)	*706 (320)	*1058 (480)	*1389 (630)	309 (140)	375 (170)	573 (260)	750 (340)	243 (110)	287 (130)	463 (210)	595 (270)
-19.7 (-500)	*573 (260)	*617 (280)	*948 (430)		375 (170)	353 (160)	595 (270)		287 (130)	287 (130)	463 (210)	
-39.4 (-1000)	*507 (230)				*507 (230)				*463 (210)			

170Z NXT2	RATED LIFT CAPACITY OVER END BLADE DOWN - lbs. (kg)				RATED LIFT CAPACITY OVER END BLADE UP - lbs. (kg)				RATED LIFT CAPACITY OVER SIDE BLADE UP - lbs. (kg)			
(h) LIFT POINT HEIGHT - in. (mm)	(r) LIFT RADIUS - in. (mm)				(r) LIFT RADIUS - in. (mm)				(r) LIFT RADIUS - in. (mm)			
	MAX	98.5 (2500)	78.7 (2000)	MIN	MAX	98.5 (2500)	78.7 (2000)	MIN	MAX	98.5 (2500)	78.7 (2000)	MIN
78.7 (2000)	*749 (340)	*705 (320)			496 (225)	*694 (315)			518 (235)	*694 (315)		
59.1 (1500)	*771 (350)	*815 (370)	*936 (425)		451 (205)	*672 (305)	*925 (420)		473 (215)	*815 (370)	*936 (425)	
39.4 (1000)	*804 (365)	*992 (450)	*1311 (595)	1466 (665)	407 (185)	628 (285)	903 (410)	1157 (525)	440 (200)	650 (295)	959 (435)	1212 (550)
19.7 (500)	*826 (375)	*1157 (525)	*1631 (740)	*2028 (920)	407 (185)	617 (280)	859 (390)	1036 (470)	440 (200)	650 (295)	914 (415)	1102 (500)
GROUND (0)	*859 (390)	*1212 (550)	*1686 (765)	*2314 (1050)	418 (190)	584 (265)	804 (365)	1146 (520)	451 (205)	628 (285)	848 (385)	1091 (495)
-19.7 (-500)	*903 (410)	*1201 (545)	*1620 (735)		462 (210)	573 (260)	782 (355)		496 (225)	617 (280)	848 (385)	
-39.4 (-1000)	*925 (420)		*1499 (680)		551 (250)		826 (375)		584 (265)		892 (405)	

250Z	RATED LIFT CAPACITY OVER END BLADE DOWN - lbs. (kg)				RATED LIFT CAPACITY OVER END BLADE UP - lbs. (kg)				RATED LIFT CAPACITY OVER SIDE BLADE UP - lbs. (kg)			
(h) LIFT POINT HEIGHT - in. (mm)	(r) LIFT RADIUS - in. (mm)				(r) LIFT RADIUS - in. (mm)				(r) LIFT RADIUS - in. (mm)			
	MAX	196.9 (5000)	157.1 (4000)	118.1 (3000)	MAX	196.9 (5000)	157.1 (4000)	118.1 (3000)	MAX	196.9 (5000)	157.1 (4000)	118.1 (3000)
118.1 (3000)	*1014 (460)				*992 (450)				837 (380)			
98.4 (2500)	*1014 (460)	*1014 (460)			881 (400)	*1014 (460)			727 (330)	*992 (450)		
78.7 (2000)	*1036 (470)	*1014 (460)			793 (360)	*1014 (460)			661 (300)	793 (360)		
39.4 (1000)	*1080 (490)	*1366 (620)	*1675 (760)		705 (320)	*1322 (600)	*1675 (760)		595 (270)	970 (440)	*1675 (760)	
GROUND (0)	*1146 (520)	*1609 (730)	*2094 (950)	*2888 (1310)	727 (330)	1058 (480)	1388 (630)	1962 (890)	595 (270)	881 (400)	1124 (510)	1521 (690)
-39.4 (-1000)	*1190 (540)	*1543 (700)	*2028 (920)	*2645 (1200)	859 (390)	1036 (470)	1322 (600)	1918 (870)	705 (320)	837 (380)	1102 (500)	1543 (700)
-59.1 (-1500)	*1168 (530)		*1675 (760)	*2116 (960)	1036 (470)		1344 (610)	1815 (840)	881 (400)		1124 (510)	1499 (680)

350Z NXT2	RATED LIFT CAPACITY OVER END BLADE DOWN - lbs. (kg)				RATED LIFT CAPACITY OVER END BLADE UP - lbs. (kg)				RATED LIFT CAPACITY OVER SIDE BLADE UP - lbs. (kg)			
(h) LIFT POINT HEIGHT - in. (mm)	(r) LIFT RADIUS - in. (mm)				(r) LIFT RADIUS - in. (mm)				(r) LIFT RADIUS - in. (mm)			
	MAX	137.8 (3500)	118.1 (3000)	98.5 (2500)	MAX	137.8 (3500)	118.1 (3000)	98.5 (2500)	MAX	137.8 (3500)	118.1 (3000)	98.5 (2500)
118.1 (3000)	*1719 (780)	*1631 (740)	*1609 (730)		1058 (480)	1322 (600)	*1565 (710)		992 (450)	1278 (580)	*1565 (710)	
78.7 (2000)	*1763 (800)	*1918 (870)	*2138 (970)	*2491 (1130)	903 (410)	1278 (580)	1653 (750)	*2447 (1110)	815 (370)	1256 (570)	1543 (700)	*2447 (1110)
39.4 (1000)	*1807 (820)	*2336 (1060)	*2888 (1310)	*3813 (1730)	793 (360)	1190 (540)	1521 (690)	1984 (900)	749 (340)	1124 (510)	1410 (640)	1807 (820)
GROUND (0)	*1873 (850)	*2601 (1180)	*3218 (1460)	*4012 (1820)	815 (370)	1124 (510)	1410 (640)	1873 (850)	793 (360)	1058 (480)	1322 (600)	1719 (780)
-39.4 (-1000)	*1940 (880)	*2403 (1090)	*2954 (1340)	*3703 (1680)	925 (420)	1080 (490)	1388 (630)	1851 (840)	881 (400)	1014 (460)	1322 (600)	1675 (760)
-59.1 (-1500)	*1918 (870)	*2050 (930)	*2579 (1170)	*3130 (1420)	1124 (510)	1080 (490)	1410 (640)	1851 (840)	1058 (480)	1058 (480)	1344 (610)	1675 (760)
-78.7 (-2000)	*1851 (840)				1477 (670)				1410 (640)			

450Z NXT2	RATED LIFT CAPACITY OVER END BLADE DOWN - lbs. (kg)				RATED LIFT CAPACITY OVER END BLADE UP - lbs. (kg)				RATED LIFT CAPACITY OVER SIDE BLADE UP - lbs. (kg)			
(h) LIFT POINT HEIGHT - in. (mm)	(r) LIFT RADIUS - in. (mm)				(r) LIFT RADIUS - in. (mm)				(r) LIFT RADIUS - in. (mm)			
	MAX	157.5 (4000)	118.1 (3000)	78.7 (2500)	MAX	157.5 (4000)	118.1 (3000)	78.7 (2000)	MAX	157.5 (4000)	118.1 (3000)	78.7 (2000)
157.5 (4000)	*2403 (1090)				*2292 (1040)				*1763 (800)			
118.1 (3000)	*2358 (1070)	*2314 (1050)			1543 (700)	*1829 (830)			1322 (600)	1587 (720)		
78.7 (2000)	*2425 (1070)	*2645 (1200)	*3306 (1500)		1300 (590)	1719 (780)	*3152 (1430)		1146 (520)	1587 (720))	*2425 (1100)	
39.4 (1000)	*2535 (1150)	*3042 (1380)	*4365 (1980)		1256 (570)	1675 (760)	2535 (1150)		1124 (510)	1499 (680)	2204 (1000)	
GROUND (0)	*2579 (1170)	*3284 (1490)	*4585 (2080)	*6459 (2930)	1300 (590)	1587 (720)	2358 (1070)	4166 (1890)	1102 (500)	1366 (620)	2028 (920)	3351 (1520)
-39.4 (-1000)	*2667 (1210)	*2910 (1320)	*4232 (1920)	*6393 (2900)	1521 (690)	1587 (720)	2403 (1090)	4387 (1990)	1322 (600)	1344 (610)	1984 (900)	3571 (1620)
-78.7 (-2000)	*2535 (11150)		*2954 (1340)		2601 (1180)		2469 (1120)		1940 (880)		2116 (960)	

https://truckmanualshub.com/

550Z	RATED LIFT CAPACITY OVER END BLADE DOWN - lbs. (kg)				RATED LIFT CAPACITY OVER END BLADE UP - lbs. (kg)				RATED LIFT CAPACITY OVER SIDE BLADE UP - lbs. (kg)			
(h) LIFT POINT HEIGHT - in. (mm)	(r) LIFT RADIUS - in. (mm)				(r) LIFT RADIUS - in. (mm)				(r) LIFT RADIUS - in. (mm)			
	MAX	157.5 (4000)	118.1 (3000)	78.7 (2500)	MAX	157.5 (4000)	118.1 (3000)	78.7 (2000)	MAX	157.5 (4000)	118.1 (3000)	78.7 (2000)
157.5 (4000)	*2403 (1090)				*2292 (1040)				*1763 (800)			
118.1 (3000)	*2358 (1070)	*2314 (1050)			1543 (700)	*1829 (830)			1322 (600)	1587 (720)		
78.7 (2000)	*2425 (1070)	*2645 (1200)	*3306 (1500)		1300 (590)	1719 (780)	*3152 (1430)		1146 (520)	1587 (720))	*2425 (1100)	
39.4 (1000)	*2535 (1150)	*3042 (1380)	*4365 (1980)		1256 (570)	1675 (760)	2535 (1150)		1124 (510)	1499 (680)	2204 (1000)	
GROUND (0)	*2579 (1170)	*3284 (1490)	*4585 (2080)	*6459 (2930)	1300 (590)	1587 (720)	2358 (1070)	4166 (1890)	1102 (500)	1366 (620)	2028 (920)	3351 (1520)
-39.4 (-1000)	*2667 (1210)	*2910 (1320)	*4232 (1920)	*6393 (2900)	1521 (690)	1587 (720)	2403 (1090)	4387 (1990)	1322 (600)	1344 (610)	1984 (900)	3571 (1620)
-78.7 (-2000)	*2535 (11150)		*2954 (1340)		2601 (1180)		2469 (1120)		1940 (880)		2116 (960)	

800Z NXT2	RATED LIFT CAPACITY OVER END BLADE DOWN - lbs. (kg)				RATED LIFT CAPACITY OVER END BLADE UP - lbs. (kg)				RATED LIFT CAPACITY OVER SIDE BLADE UP - lbs. (kg)			
(h) LIFT POINT HEIGHT - in. (mm)	(r) LIFT RADIUS - in. (mm)				(r) LIFT RADIUS - in. (mm)				(r) LIFT RADIUS - in. (mm)			
	MAX	196.9 (5000)	157.1 (4000)	118.1 (3000)	MAX	196.9 (5000)	157.1 (4000)	118.1 (3000)	MAX	196.9 (5000)	157.1 (4000)	118.1 (3000)
196.9 (5000)	*3638 (1650)		*3572 (1620)		*3550 (1610)		*3461 (1570)		2734 (1240)		*3550 (1610)	
157.5 (4000)	*3417 (1550)	*3417 (1550)	*3572 (1620)		2403 (1090)	2734 (1240)	*3417 (1550)		2271 (1030)	2491 (1130)	*3528 (1600)	
118.1 (3000)	*3483 (1580)	*3616 (1640)	*4233 (1920)	*5468 (2480)	2028 (920)	2668 (1210)	*4123 (1870)	*5336 (2420)	1896 (860)	2447 (1110)	*4145 (1880)	*5534 (2510)
78.7 (2000)	*3351 (1520)	*3946 (1790)	*5027 (2280)	*6879 (3120)	1830 (830)	2513 (1140)	3594 (1630)	*6174 (2800)	1697 (770)	2315 (1050)	3395 (1540)	4806 (2180)
39.4 (1000)	*3395 (1540)	*4255 (1930)	*5710 (2590)	*7651 (3470)	1764 (800)	2381 (1080)	3439 (1560)	4564 (2070)	1675 (760)	2249 (1020)	3175 (1440)	4255 (1930)
GROUND (0)	*3373 (1530)	*4321 (1960)	*5865 (2660)	*8070 (3660)	1830 (830)	2337 (1060)	3307 (1500)	4873 (2210)	1719 (780)	2160 (980)	3153 (1430)	4542 (2060)
-39.4 (-1000)	*3329 (1510)	*4057 (1840)	*5468 (2480)	*7585 (3440)	2028 (920)	2315 (1050)	3285 (1490)	5137 (2330)	1918 (870)	2160 (980)	3087 (1400)	4674 (2120)
-78.7 (-2000)	*2976 (1350)		*4498 (2040)	*6218 (2820)	2491 (1130)		3373 (1530)	5292 (2400)	2425 (1100)		3197 (1450)	4961 (2250)

1000M	RATED LIFT CAPACITY OVER END BLADE DOWN - lbs. (kg)				RATED LIFT CAPACITY OVER END BLADE UP - lbs. (kg)				RATED LIFT CAPACITY OVER SIDE BLADE UP - lbs. (kg)			
(h) LIFT POINT HEIGHT - in. (mm)	(r) LIFT RADIUS - in. (mm)				(r) LIFT RADIUS - in. (mm)				(r) LIFT RADIUS - in. (mm)			
	MAX	196.9 (5000)	157.1 (4000)	118.1 (3000)	MAX	196.9 (5000)	157.1 (4000)	118.1 (3000)	MAX	196.9 (5000)	157.1 (4000)	118.1 (3000)
196.9 (5000)	*3925 (1780)				*3925 (1780)				3153 (1430)			
157.5 (4000)	*3947 (1790)	*3771 (1710)	*3837 (1740)		3087 (1400)	*3771 (1710)	*3837 (1740)		2558 (1160)	*3771 (1710)	*3925 (1780)	
118.1 (3000)	*3925 (1780)	*3925 (1780)	*4520 (2050)		2646 (1200)	*3925 (1780)	*4520 (2050)		2183 (990)	3153 (1430)	*4520 (2050)	
78.7 (2000)	*3947 (1790)	*4586 (2080)	*5468 (2480)		2492 (1130)	3616 (1640)	*5468 (2480)		2029 (920)	2911 (1320)	4256 (1930)	
39.4 (1000)	*4145 (1880)	*5005 (2270)	*6813 (3090)	*9989 (4530)	2602 (1180)	3462 (1570)	5005 (2270)	7387 (3350)	1985 (920)	2822 (1280)	4079 (1850)	5821 (2640)
GROUND (0)	*4079 (1850)	*5490 (2490)	*7078 (3210)	*10033(4550)	2690 (4550)	3418 (1550)	4741 (2150)	7254 (3290)	2183 (990)	2756 (1250)	3881 (1760)	5799 (2630)
-39.4 (-1000)	*4145 (1880)	*5226 (2370)	*6858 (3110)	*9415 (4270)	2889 (1310)	3352 (1520)	4653 (2110)	7321 (3320)	2293 (1040)	2734 (1240)	3726 (1690)	5733 (2600)
-78.7 (-2000)	*4057 (1840)		*5865 (2660)	*8203 (3720)	3418 (1550)		4719 (2140)	7080 (3210)	2911 (1320)		3793 (1720)	5887 (2670)

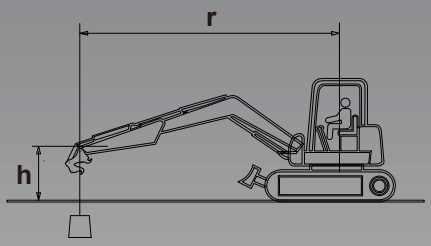

† Lifting Capacity Charts Notes

- Lifting capacity is hydraulically limited (denoted with *).
- Lifting capacity calculated with standard Power-A-Tach® quick coupler on models Z25, Z35 GEN:2, Z45 GEN:2, Z55, Z80 GEN:2, and M100
- Note where applicable specifications conform to ISO standards.
- Weight of all lifting devices and attachment must be deducted to determine load that can be lifted.
- Lift point is bucket hinge point.

MUSTANG®

SPECIFICATIONS

https://truckmanualshub.com/

		80M	170Z NXT2	250Z	350Z NXT2
ENGINE	Make	Yanmar	Yanmar	Yanmar	Yanmar
	Model	2TE67L-BV4 Tier IV	3TNV74F-SPBV Tier IV	3TNV80F Tier IV	3TNV88F-ESBV Tier IV
	Type	Diesel	Diesel	Diesel	Diesel
	Displacement (L)	30.9 cu.in. (.507)	60.6 cu.in. (0.993)	77.3 cu.in. (1.26)	100.2 cu.in. (1.64)
	Gross Power (kW) @ rpm	10.6 hp (7.9) @ 2,800	15.01 hp (11.2) @ 2400	20.4 hp (15.2) @ 2500	24.5 hp (18.2) @ 2200
	Net Power (kW) @ rpm	10.0 hp (7.5) @ 2,800	14.5 hp (10.8) @ 2400	19.7 hp (14.7) @ 2500	23.9 hp (17.8) @ 2200
	Fuel Tank (L)	2.6 gal. (9.7)	5.3 gal. (20)	8.1 gal. (30.5)	10.8 gal. (41)
	Fuel Consumption (L/hr)	0.28 gal./hr. (1.1)	0.53 gal./hr. (2)	0.95 gal./hr (3.6)	1.03 gal./hr (3.9)
HYDRAULIC SYSTEM	Pumps	2 gear	2 variable, 2 gear	2 variable, 2 gear	2 variable, 2 gear
	Total Flow Rate (L/min)	5.2 gpm (19.6)	15.4 gpm (58.3)	24.5 gpm (92.7)	29.3 gpm (110.8)
	Working Pressure (bar)	2,625 psi (181)	2,987 psi (206)	2,987 psi (206)	3,060 psi (211)
	Swing System Pressure (bar)	1,001 psi (69)	2,103 psi (145)	2,103 psi (145)	2,844 psi (196)
	Oil Cooler	Standard	Standard	Standard	Standard
	Hydraulic Tank (L)	1.5 gal. (5.7)	6.6 gal. (25)	6.6 gal. (25)	10.6 gal. (40)
UNDERCARRIAGE AND SLEWING SYSTEM	Travel Speed - dual (km/hr)	1.1 mph (1.8)	1.3/2.7 mph (2.1/4.3)	1.7/2.8 mph (2.8/4.5)	1.7/2.8 mph (2.7/4.5)
	Gradeability	20°	20°	20°	20°
	Track Type / Width (mm)	Rubber / 7.1” (180)	Rubber / 9.1” (230)	Rubber / 9.8” (250)	Rubber / 11.8" (300)
	No. of Rollers per Side (track/idle)	2/1	3/1	4/1	4/1
	Track Length on Ground (mm)	3’ 3.6” (1006)	4’ 3.4” (1305)	5' 8.8” (1748)	5' 10" (1778)
	Ground Clearance (mm)	5.1” (130)	6.9” (175)	12.6” (320)	12.6" (320)
	Ground Pressure - Cab/Canopy (kPa)	4.2 psi (28.8)	4.1 psi (28.6)	4.6/4.4 psi (31.7/30.2)	5.0/4.8 psi (34.3/33.1)
	Slew Speed	8.4 rpm	9.5 rpm	10 rpm	9.5 rpm
	Maximum Drawbar Pull (kg)	1,550 lbs (703)	4,181 lbs. (1897)	5,490 lbs. (2490)	7,306 lbs. (3314)
	Maximum Bucket Breakout (kg) with quick coupler	N/A	N/A	4,079 lbs. (1850)	5,643 lbs. (2560)
	Maximum Bucket Breakout (kg) without quick coupler	2,360 lbs. (1071)	3,417 lbs. (1550)	5,203 lbs. (2360)	7,216 lbs. (3273)
	Maximum Arm Digging Force (kg) with quick coupler	N/A	N/A	2,624 lbs. (1190)	4,226 lbs. (1917)
	Maximum Arm Digging Force (kg) without quick coupler	1,390 lbs. (631)	1,918 lbs. (870)	2,844 lbs. (1290)	4,586 lbs. (2080)
DIMENSIONS	Operating Weight with Canopy (kg)	2,348 lbs (1065)	3,836 lbs. (1740)	5,919 lbs. (2685)	7,905 lbs. (3585)
	Operating Weight with Cab (kg)	N/A	N/A	6,217 lbs. (2820)	8,214 lbs. (3725)
	A. Max. Digging Depth (mm)	4’ 11.1” (1500)	7' 2.6" (2200)	9' 8" (2950)	10' 8" (3250)
	B. Max. Vertical Wall Digging Depth (mm)	4’ 1.6” (1260)	6' 0.8" (1850)	7' 9" (2370)	7' 11" (2410)
	C. Max. Reach at Ground Level (mm)	8’ 11.5” (2730)	12' 2.1" (3710)	15' 9" (4800)	17' 3.5" (5270)
	D. Transport Length (mm)	8’ 6.4” (2600)	11' 3.8" (3450)	13' 5" (4090)	15' 8" (4770)
	E. Undercarriage Length (mm)	4’ 0” (1220)	5' 0" (1525)	6' 8" (2040)	7' 1" (2160)
	F. Max. Digging Height (mm)	9’ 0.3 (2750)	12' 1.3" (3690)	14' 8.4" (4480)	16' 9.2" (5110)
	G. Max. Dump Height (mm)	6’ 4.8” (1950)	8' 7.5" (2630)	9' 1.4" (2780)	11' 2.3" (3410)
	H. Minimum Front Swing Radius (mm)	3’ 10.5” (1180)	5' 0.4" (1535)	7' 1" (2160)	7' 1.4" (2170)
	I. Transport Height (mm)	7’ 2.6” / 5’ 1.0” (2200 / 1550)	7' 6.6" (2300)	8' 2” (2490)	8' 1" (2470)
	J. Blade Below Ground (mm)	8.3” (210)	8.1" (205)	14" (355)	14.6" (370)
	K. Overall Base Width (mm)	2’ 2.8” / 2’ 9.1” (680 / 840)	3' 1.4"/4’ 2.4” (950/1280)	4' 11.1" (1500)	5' 8.5" (1740)
	L. Track Width (mm)	7.1” (180)	9.1" (230)	9.8" (250)	11.8" (300)
	M. Ground Clearance (mm)	5.1” (130)	6.9" (175)	12.6" (320)	12.6" (320)
	N. Parallel Offset Right (mm)	1’ 1” (330)	15.7" (400)	1' 7" (485)	2' 1.2" (640)
	O. Parallel Offset Left (mm)	1’ 9.3” (540)	2' 1.2" (640)	2' 3" (705)	1' 11.2" (590)
	P. Rear End Swing Radius (mm)	2’ 4.5” (725)	2' 1.2" (640)	2' 5.5" (750)	2' 6.5" (775)
	Q. Boom Swing Angle - Left	45°	42°	47°	43°
	R. Boom Swing Angle - Right	90°	65°	74°	65°
	Max. Dig Depth with 8ft. (2.5 m) Flat Bottom	1’ 8” to 2’ 9” (840)	5' 0" (1520)	8' 2.4" (2500)	9' 1" (2770)
DOZER BLADE	Width (mm)	2’ 3” (680) to 2’ 9” (840)	3' 1” (950) to 4’ 2” (1280)	4’ 11.1” (1500)	5' 8.5" (1740)
	Height (mm)	7.1” (180)	9.3” (235)	11.6” (295)	14.6" (370)

https://truckmanualshub.com/

450Z NXT2	550Z	800Z NXT2	1000M
Yanmar	Yanmar	Yanmar	Yanmar
4TNV88C-PBV Tier IV	4TNV86CT Tier IV	4TNV98C-WBV Tier IV	4TNV98CT-VBV Tier IV
Diesel	Diesel	Diesel	Diesel
133.6 cu.in. (2.19)	128 cu.in. (2.09)	202.5 cu.in. (3.32)	202.5 cu.in. (3.32)
39.0 hp (29.1) @ 2400	47.6 hp (35.5) @ 2400	56.9 hp (42.4) @ 2000	72.0 hp (53.7) @ 2100
37.7 hp (28.1) @ 2400	44.9 hp (33.5) @ 2400	55.7 hp (41.5) @ 1900	69.3 hp (51.7) @ 2100
17.4 gal. (66)	17.4 gal. (66)	30.4 gal. (115)	30.4 gal. (115)
1.24 gal./hr (4.7)	1.35 gal./hr (5.1)	1.9 gal./hr (7.2)	2.4 gal./hr (9.1)
2 variable, 2 gear	2 variable, 2 gear	2 variable, 2 gear	2 variable, 2 gear
35.1 gpm (132.8)	36.9 gpm (139.4)	56.7 gpm (214.5)	61.6 gpm (233.2)
3,133 psi (216)	3,553 psi (245)	3,699 psi (255)	3,989 psi (275)
3,133 psi (216)	3,133 psi (216)	3,481 psi (240)	3,481 psi (240)
Standard	Standard	Standard	Standard
10.0 gal. (38)	10.0 gal. (38)	15.9 gal. (60)	15.9 gal. (60)
1.5/2.9 mph (2.4/4.6)	1.4/2.6 mph (2.2/4.2)	1.6/2.8 mph (2.5/4.5)	1.6/2.5 mph (2.7/4.4)
20°	20°	20°	20°
Rubber / 13.8” (350)	Rubber / 15.7” (400)	Rubber / 17.7” (450)	Rubber / 19.1” (485)
4/1	4/1	5/1	5/1
7' 4.4” (2246)	8' 6” (2590)	8’ 2.4” (2500)	8’ 5” (2565)
13.6” (345)	13.6” (345)	15.4” (390)	1’ 5.7” (450)
4.4/4.3 psi (30.6/29.4)	4.4/4.25 psi (30.3/29.3)	5.2 psi (35.8)	5.5 psi (37.9)
10 rpm	10 rpm	9 rpm	9.1 rpm
10,611 lbs. (4813)	12,544 lbs. (5690)	14,500 lbs. (6577)	17,243 lbs. (7821)
6,497 lbs. (2947)	7,464 lbs. (3385)	11,332 lbs. (5140)	12,216 lbs. (5541)
8,206 lbs. (3722)	9,419 lbs. (4272)	14,286 lbs. (6480)	N/A
4,676 lbs. (2121)	5,058 lbs. (2294)	8,356 lbs.(3790)	9,500 lbs. (4309)
5,103 lbs. (2315)	5,485 lbs. (2488)	9,171 lbs. (4160)	N/A
10,417 lbs. (4725)	11,850 lbs. (5375)	N/A	N/A
10,814 lbs. (4905)	12,247 lbs. (5555)	18,136 lbs. (8225)	21,550 lbs. (9775)
11' 7.8" (3550)	12' 9.5" (3900)	14’ 4.4” (4380)	14’ 10.3” (4530)
7' 9.7" (2380)	8' 4.8" (2560)	12’ 10.3” (3920)	13’ 1.9” (4010)
18' 10" (5740)	20' 1.7" (6140)	23’ 5.1” (7140)	24’ 3.3” (7400)
17' 5.4" (5320)	18' 3.7" (5580)	21’ 2.3” (6460)	21’ 3.5” (6490)
8' 6" (2590)	8' 6" (2590)	9’ 5.8” (2890)	10’ 0.9” (3070)
18' 8.4" (5700)	19' 10.6" (6060)	23’ 9.4” (7250)	25’ 4.3” (7730)
12' 0.9" (3680)	13' 3.4" (4050)	15’ 2.7” (4640)	16’ 9.6” (5120)
7' 9.7" (2380)	6' 11.1" (2110)	8’ 11.1” (2720)	9’ 1.8” (2790)
8' 4" (2540)	8' 4" (2540)	8’ 9.9” (2690)	9’ 2.6” (2810)
1' 9.3" (540)	1' 10.4" (570) / 1' 9.3" (540)[1]	1’ 6.9” (480)	1’ 6.1” (460)
6' 4.4" (1940)	6' 6.3" (1990)	7’ 5.4” (2270)	7’ 7.3” (2320)
13.8" (350)	15.7" (400)	1’ 5.7” (450)	1’ 7.1” (485)
13.6" (345)	13.6" (345)	15.4” (390)	1’ 5.7” (450)
2' 6.3" (770)	2' 6.3" (770)	2’ 0.4” (620)	2’ 1” (835)
2' 2.8" (680)	2' 2.8" (680)	2’ 9.1” (840)	2’ 8.9” (835)
3' 2.2" (970)	3' 3.2" (995)	3’ 8.7” (1135)	4’ 4.4” (1330)
68°	68°	57°	60°
68°	68°	60°	60°
10' 3" (3135)	11' 5.4" (3490)	13’ 5” (4100)	14’ 8” (4480)
6' 5.6” (1970)	6' 5.6” (1970)	7’ 5” (2260)	7’ 7” (2320)
15.7” (400)	15.7” (400)	17.7” (450)	20.5” (520)

REFERENCE DIAGRAMS

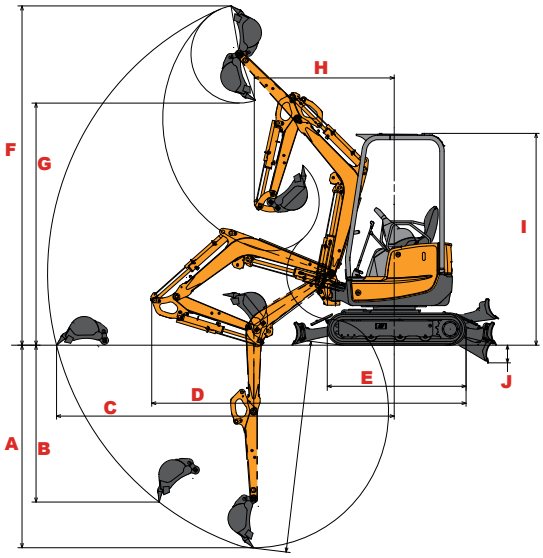

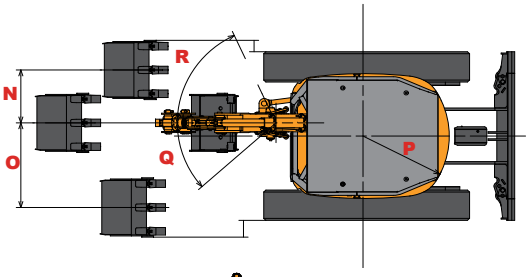

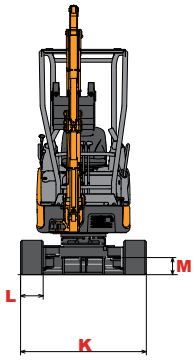

https://truckmanualshub.com/

▲ ATTACHMENTS

CRAVE VERSATILITY?

Mustang Compact Excavators are the perfect solution. With a wide variety of EDGE® attachments available, Mustang Compact Excavators are easily transformed to meet your needs. Perfect for landscape, utilities, construction or rental - these machines are up for any challenge.

BEST SELLERS

	80M	170Z NXT2	250Z	350Z NXT2	450Z NXT2	550Z	800Z NXT2	1000M
AUGERS - CHAIN DRIVE								
PA 150H Planetary Auger Drive with top link only, Hex		▲	▲	▲				
PA 210H Planetary Auger Drive with top link only, Hex			▲	▲	▲	▲	▲	▲
BREAKER								
EBX150 150 ft/lb Breaker		▲						
EBX550 550 ft/lb Breaker			▲	▲				
EBX800 800 ft/lb Breaker					▲	▲	▲	
EB1000 1,000 ft/lb Breaker					▲	▲	▲	▲
EB1500 1,500 ft/lb Breaker							▲	▲
BUCKETS								
12" (305 mm) (1.0 ft^3, .028 m^3) Heavy Duty Bucket	▲							
24" (610 mm) (2.2 ft^3, .062 m^3) Heavy Duty Bucket		▲						
24" (610 mm) (4.25 ft^3, .12 m^3) Heavy Duty Bucket			▲	▲				
24" (610 mm) (6.3 ft^3, .178 m^3) Heavy Duty Bucket					▲	▲		
24" (610 mm) (9.2 ft^3, .261 m^3) Heavy Duty Bucket							▲	▲
30" (762 mm) (2.7 ft^3, .076 m^3) Ditching Bucket		▲						
48" (1219 mm) (8.5 ft^3, .241 m^3) Ditching Bucket			▲	▲	▲	▲		
48" (1219 mm) (15.8 ft^3, .447 m^3) Ditching Bucket							▲	▲
COMPACTION WHEEL								
CW16 16" (406 mm) Compaction Wheel			▲	▲	▲	▲		
CW122 22" (559 mm) Compaction Wheel							▲	▲
COMPACTION PLATE								
EC35 Compaction Plate		▲	▲	▲				
EC65 Compaction Plate					▲	▲		
EC75 Compaction Plate							▲	▲
FROST RIPPER								
21" (533 mm) Frost Ripper			▲	▲				
24" (610 mm) Frost Ripper					▲	▲	▲	▲
THUMB								
Hydraulic Dual Tine Thumb			▲	▲	▲	▲	▲	▲

A WIDE VARIETY OF EDGE ATTACHMENTS ARE AVAILABLE FROM YOUR MUSTANG DEALER.

EDGE®
edgeattach.com

https://truckmanualshub.com/

POWER-A-TACH®

The hydraulic Power-A-Tach® quick coupler is standard equipment. Its versatile design works with a wide range of excavator attachments, utilizing the tools you already own. The operator only needs to leave the seat to remove and replace the safety pin.

REVERSE THE BUCKET

Reduce manual labor on jobsites by turning the bucket around to dig under objects or backfill. Made possible by the Power-A-Tach® quick coupler, this feature is highly beneficial to contractors in communications and utilities.

▲ PARTS & SERVICE

XPRT™ PROTECTION PLAN

Your equipment is a large investment; leave it to the experts to protect you from unforseen downtime and unexpected repair costs.

By purchasing an XPRT™ Protection Plan, you'll be purchasing peace of mind knowing that when the unexpected happens, you are backed by highly trained mechanics using only XPRT Genuine Parts.

Features Include:

- ▲ Coverage up to 5 years or 6,000 hours
- ▲ Coverage includes parts and labor
- ▲ No deductible
- ▲ Repairs done by a fully qualified technician
- ▲ Guaranteed use of genuine replacement parts
- ▲ Coverage includes parts and labor

XPRT™ GENUINE PARTS

Performing the proper preventative maintenance is a key factor to reducing unnecessary downtime and extending the life of your equipment.

When it comes to replacement parts, trust the experts who built your machine. There are spare parts and then there are GENUINE spare parts, that's the XPRT difference.

https://truckmanualshub.com/

ORIGINAL WORKHORSE

Mustang authorized dealers offer a full line of compact equipment, backed up by exceptional sales, service and parts experience.

Mustang reminds users to read and understand the operator's manual before operating any equipment. Also, make sure all safety devices and shields are in place and functioning properly.

Mustang reserves the right to add improvements or make changes in specifications at any time without notice or obligation.

○ STANDARD ● OPTIONAL

	M08	170Z NXT2	250Z		350Z NXT2		450Z NXT2		550Z		800Z NXT2	1000M
	CANOPY	CANOPY	CANOPY	CAB	CANOPY	CAB	CANOPY	CAB	CANOPY	CAB	CAB	CAB
ENGINE												
Electric Glow Plug Starting Aid	○	○	○	○	○	○	○	○	○	○	○	○
Yanmar, Naturally-Aspirated Diesel Engine	○	○	○	○	○	○	○	○			○	
Yanmar, Turbocharged Diesel Engine									○	○		○
ECO Mode & Auto Deceleration					○	○	○	○	○	○	○	○
Engine Block Heater	●	●	●	●	●	●	●	●	●	●	●	●
HYDRAULIC SYSTEM												
Power-A-Tach® Hydraulic Quick-Attach System			○	○	○	○	○	○	○	○	○	○
Factory Installed Hydraulic Thumb Attachment			●	●	●	●	●	●	●	●	●	●
Hydraulic Pumps	2	4	4	4	4	4	4	4	4	4	4	4
ISO / SAE Pattern Control Valve	○	○	○	○	○	○	○	○	○	○	○	○
Proportional Auxiliary Hydraulic Joystick Control			○	○	○	○	○	○	○	○	○	○
Two-way Auxiliary Hydraulics with Quick Couplers and Direct-to-Tank Bypass Valve	○[2]	○	○	○	○	○	○	○	○	○	○	○
UNDERCARRIAGE												
Angle Blade with Float					●	●	●	●	●	●		
Bolt-On Cutting Edge					●	●	●	●	●	●		
Automatic 2-Speed Transmission											○	○
Hydraulically Extendable Undercarriage	○	○										
Rubber Tracks	○	○	○	○	○	○	○	○	○	○	○	○
Selectable 2-Speed Transmission	○	○	○	○	○	○	○	○	○	○		○
Track Rollers	2	3	4	4	4	4	4	4	4	4	5	5
UPPER STRUCTURE												
360° Continuous Movement	○	○	○	○	○	○	○	○	○	○	○	○
Zero-Tail-Swing		○	○	○	○	○	○	○	○	○	○	
Travel Alarm		○	○	○	○	○	○	○	○	○	○	○
OPERATOR STATION												
Enclosed Cab (ROPS / FOPS)				○		○		○		○	○[1]	○[1]
Canopy (ROPS / FOPS)	○[1]	○	○		○		○		○			
Fold-Up Front Window				○		○		○		○	○	○
3" Retractable Safety Belt			●	●	●	●	●	●	●	●	●	●
Adjustable Armrests - height and angle		○	○	○	○	○	○	○	○	○	○	○
Adjustable Suspension Seat			○	○	○	○	○	○	○	○	○	○
Air Conditioning						●		●		●	○	○
Radio-Ready with Speakers and Antennae				○		○		○		○	○	○
Horn	○	○	○	○	○	○	○	○	○	○	○	○
Fuel Consumption Display							○	○	○	○	○	○
LIGHTS												
Work Light		○	○	○	○	○	○	○	○	○	○	○
Protected Boom Light	○	○	○	○	○	○	○	○	○	○	○	○
Dome Light				○		○		○		○	○	○

[1] Not FOPS compliant. [2] No tank bypass.

For more information on Mustang equipment, visit

mustangmfg.com

YouTube
MustangEquipment

Find us on Facebook
Mustang Mfg.

West Bend, WI 53095 U.S.A.
Tel: 262-334-9461
Fax: 262-338-7517
www.mustangmfg.com

Mustang Compact Excavators_(09-2017)_5M

© 2017 Manitou Americas, Inc. Mustang. A Manitou Group Brand. All rights reserved. Printed in the U.S.A.