TATA MOTORS

LPK2518HD/38/BS3/G1150/MT/ERGO/AC/14BOX

(PARTS LIST)

AUGUST 2012

Tata Motors Limited
Mumbai • Jamshedpur • Pune • Lucknow • Thane

TATA MOTORS

PRELIMINARY REMARKS

CHASSIS TYPE	VC NO	DESCRIPTION	ENGINE TYPE
448123	21679138000R	LPK2518HD/38WB/BSIII/AC/ERGO/MT6.83/G1150/INV SUS/11X20 MINING TYRE/14 CUM BOX	6 BTAA 180 HP, BSIII,

TATA MOTORS

INSTRUCTIONS

Refer Variant Table Matrix for correct applicability

The designation “Left and Right”as well as “Front” and “Rear” refer to the driving direction

The indication “First”, “Second” (e.g. Cross member of frame) are counter from the radiator side

The word “Optional” in the remarks column against an item having two or more part numbers indicates that depending or availability, the item will be supplied under any one of these part numbers

The designation “AR” in column “Quantity” stands for “As Required”

The illustrations of parts of the table are only for easy reference and they may not be exact replica of the part.

The parts fitted on the vehicle are subject to modification without prior notice.

This is a publication of the Parts Head Quarters of the TATA MOTORS LIMITED.

Any Correspondence relating to this Parts List be made to:

Technical Cell
Tata Motors Ltd.,
Parts Head Quarters,
Teen Hath Naka,
Gyan Sadhana College Service Road,
Thane-400 604.

INTRODUCTION

WHEN ORDERING PARTS, PLEASE INDICATE

Chassis Type and Chassis Number

Engine Type and Engine Number

Part No. - See Column “PART NUMBER”

Precise Description - See Column “DESCRIPTION”

WHEN ORDERING PARTS FOR AGGREGATES, PLEASE INDICATE THE AGGREGATE NUMBER

Gear Box Unit No. -

Rear Axle Unit No. -

Steering Unit No. -

2076600400R.01B	ENGINE	GROUP 00

CHASSIS TYPE: ALL

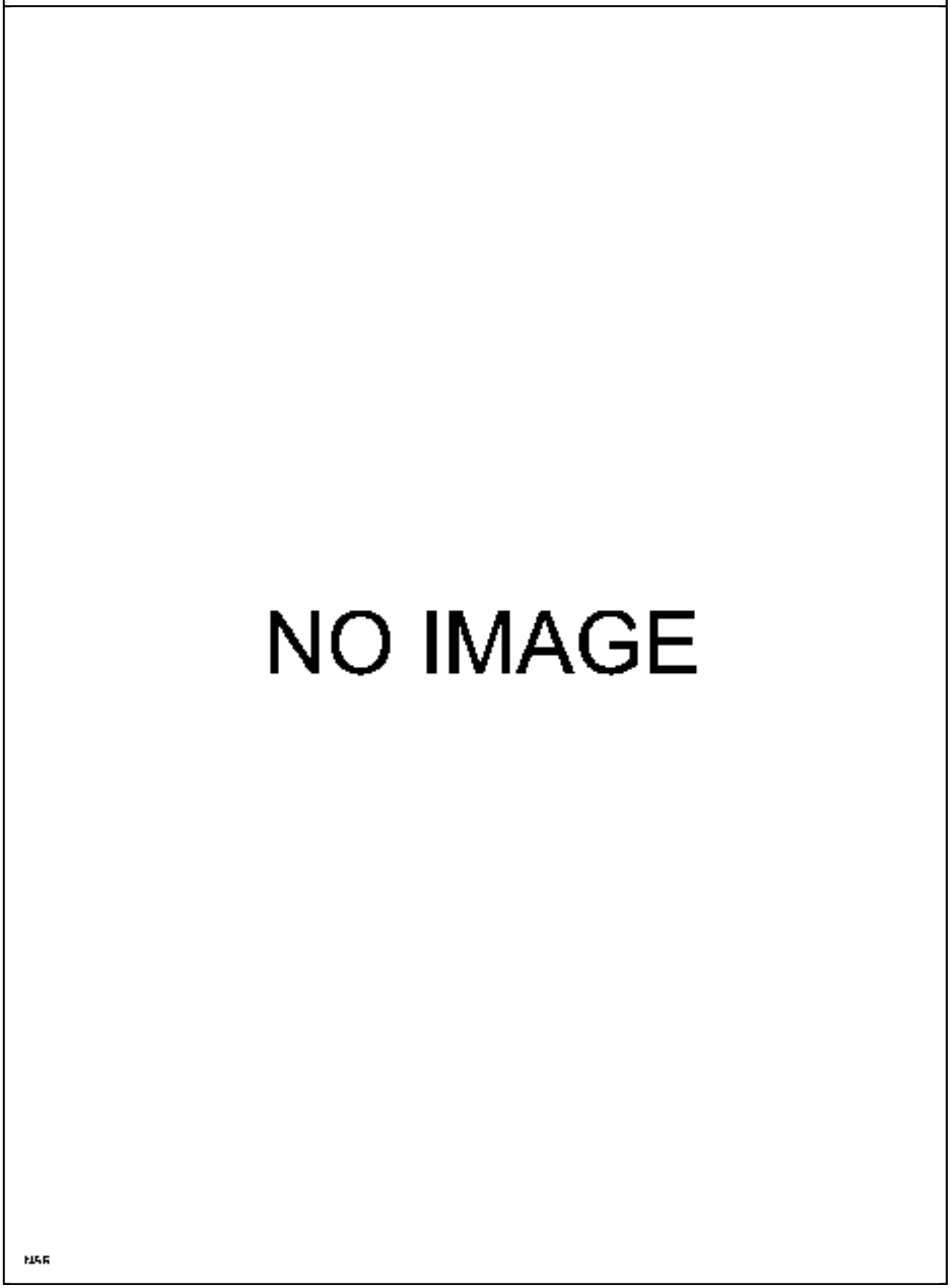

2076600400R.01B	ENGINE	GROUP 00

CHASSIS TYPE: ALL

FIG. NO.	PART NUMBER	DESCRIPTION	QTY	REMARKS
-	207601000365	ASSY-6BTAA-180HP-BS3-NEW REC ENG-WITH AC/LPK2518	1	
-	278601990145	NEW RECIPE LONG BLOCK FOR 215 HP BS 3 MECH ENG	1	

TATA MOTORS

2076600401R.01	CYLINDER BLOCK	GROUP 01

CHASSIS TYPE: ALL

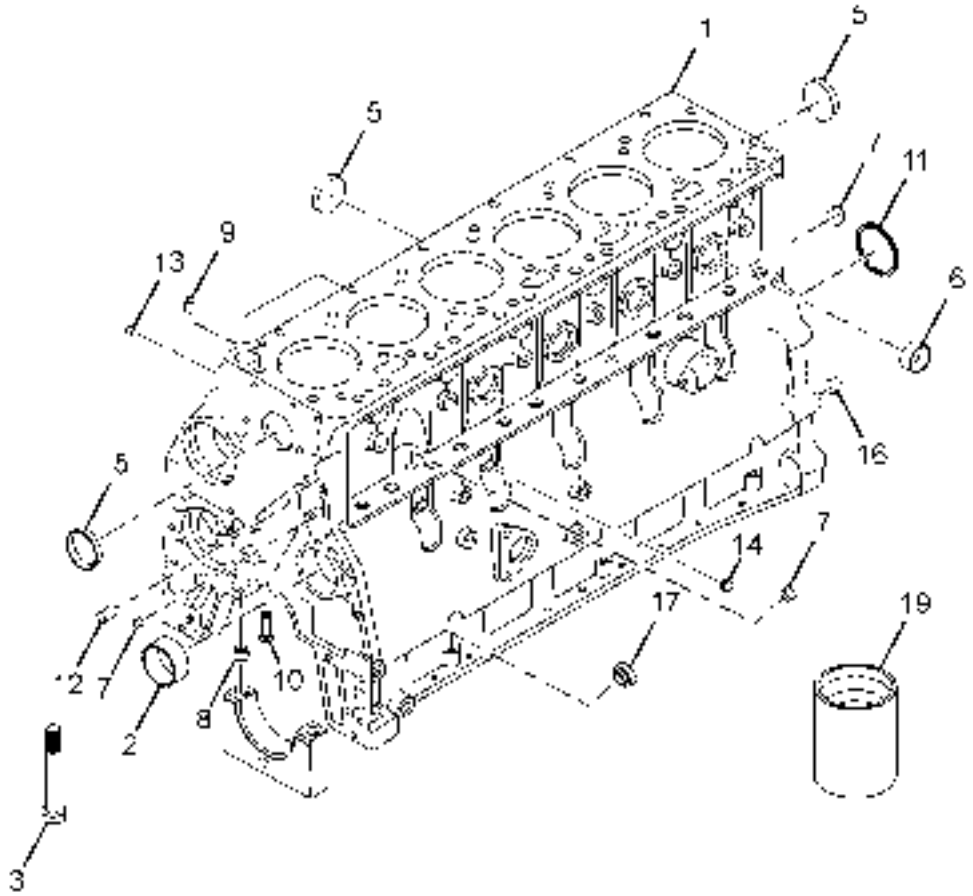

2076600401R.01	CYLINDER BLOCK	GROUP 01

CHASSIS TYPE: ALL

FIG. NO.	PART NUMBER	DESCRIPTION	QTY	REMARKS
1	278601990110	CYLINDER BLOCK STD	1	
2	278601999902	BUSHING	1	
2	278605999934	BUSHING (OVERSIZE FOR NO. 1 BORE)	1	REPAIR PURPOSE
2	278607999980	BUSHING (OVERSIZE FOR NO.2-6 BORE)	5	REPAIR PURPOSE
3	278601999903	SCREW HEX. HEAD CAP M 14 X2.0X119	14	
5	278601999905	PLUG EXPANSION	6	
6	278601999906	PLUG EXPANSION	4	
7	278601999907	PLUG EXPANSION 17.73 MM	3	REPAIR PURPOSE
8	278601999914	DOWEL RING M 18X10	14	
9	278601999908	DOWEL RING M 16X10	2	
10	278618999934	NOZZLE PISTON COOLING	6	
11	278601999910	PLUG EXPANSION	1	
12	278601999911	DOWEL PIN M 10X16	2	
13	278601999945	PLUG PIPE	1	
14	278601999913	PLUG PIPE	1	
16	278601999914	DOWEL RING	2	
17	278601999915	PLUG EXPANSION	2	
19	278601999916	SLEEVE SALVAGE (STANDARD BORE)	6	REPAIR PURPOSE
-	278605999937	PLUG EXPANSION (AT THE SIDE OF THE BLOCK FOR OIL FILL)	1	

TATA MOTORS

2076600401R.02	OIL PAN	GROUP 01

CHASSIS TYPE: ALL

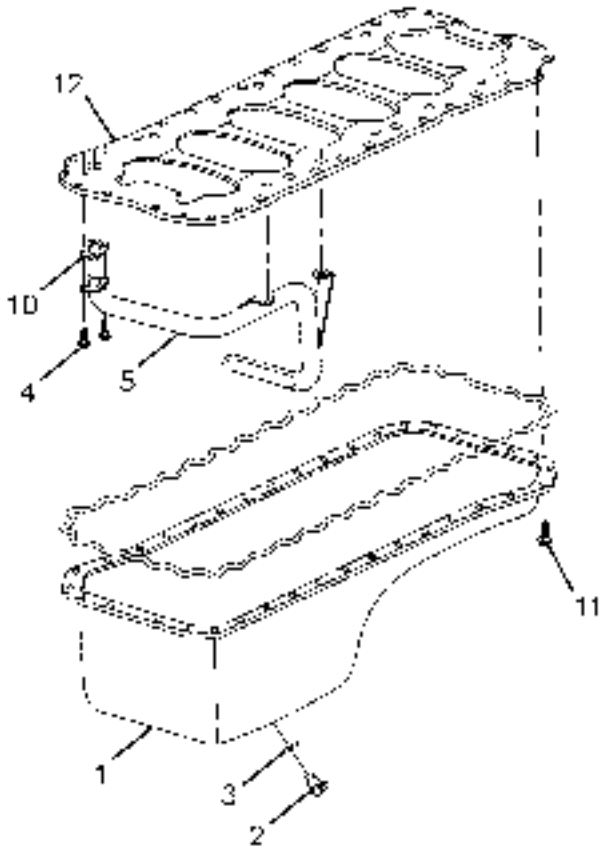

2076600401R.02	OIL PAN	GROUP 01

CHASSIS TYPE: ALL

FIG. NO.	PART NUMBER	DESCRIPTION	QTY	REMARKS
1	278618999935	PAN OIL	1	
2	278618999919	PLUG THREADED M8 X 1.50	1	
3	278618999920	WASHER SEALING	1	
4	278613998001	SCREW HEX. FLANGE HEAD CAP M8X1.25X20	4	
5	278618999922	CONNECTION OIL SUCTION	1	
10	278618999924	GASKET FLANGE	1	
11	278618999925	SCREW HEX. FLANGE HEAD CAP M 8XX1.25X25	36	
12	278618999927	PLATE CYLINDER BLOCK STIFFNER (BED PLATE)	1	

TATA MOTORS

2076600401R.03	FRONT GEAR COVER	GROUP 01

CHASSIS TYPE: ALL

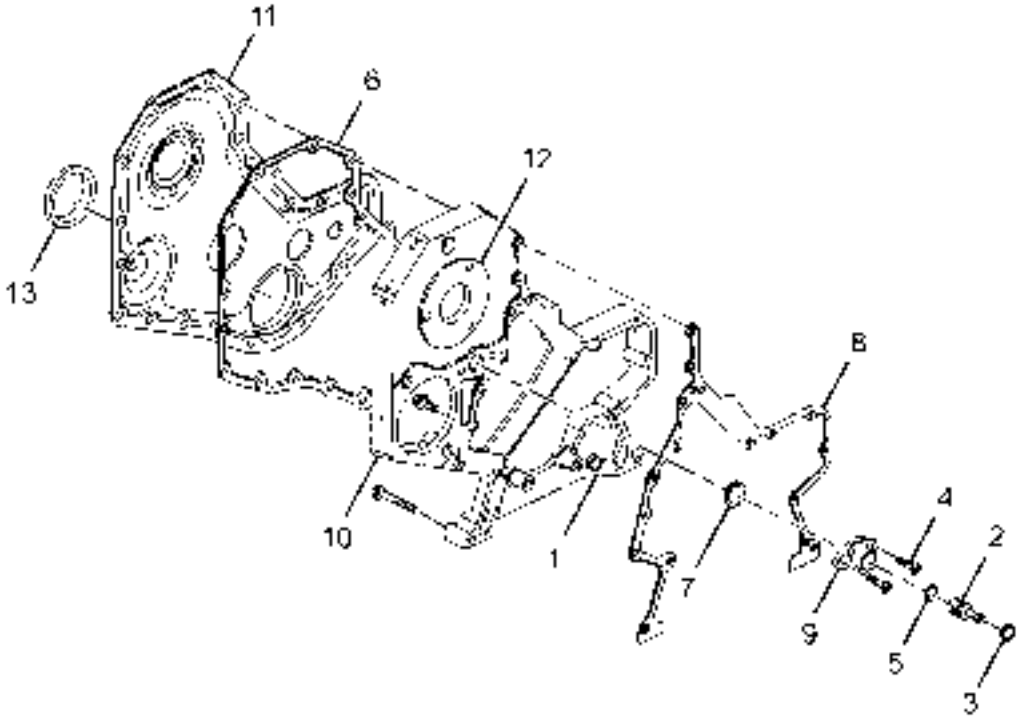

2076600401R.03	FRONT GEAR COVER	GROUP 01

CHASSIS TYPE: ALL

FIG. NO.	PART NUMBER	DESCRIPTION	QTY	REMARKS
1	278603999926	SCREW HEX. FLANGE HEAD CAP M 8X1.25X50	11	
2	278603999931	PIN TIMING	1	
3	278603999932	RING RETAINING	1	
4	278607999954	SCREW ROUND HEAD CAP M 5X0.8X17	2	
5	278603999930	SEAL 'O' RING	1	
6	278607989921	GASKET GEAR COVER	1	
7	278603999928	SEAL RECTANGULAR RING	1	
8	278607999918	GASKET GEAR HOUSING	1	
9	278603999933	HOUSING TIMING PIN	1	
10	278607989922	HOUSING GEAR	1	
11	278601989902	COVER GEAR	1	
12	278603999927	SCREW HEX. FLANGE HEAD CAP M 8X1.25X16	16	
13	278618999965	SEAL OIL	1	

TATA MOTORS

2076600401R.04	CYLINDER HEAD	GROUP 01

CHASSIS TYPE: ALL

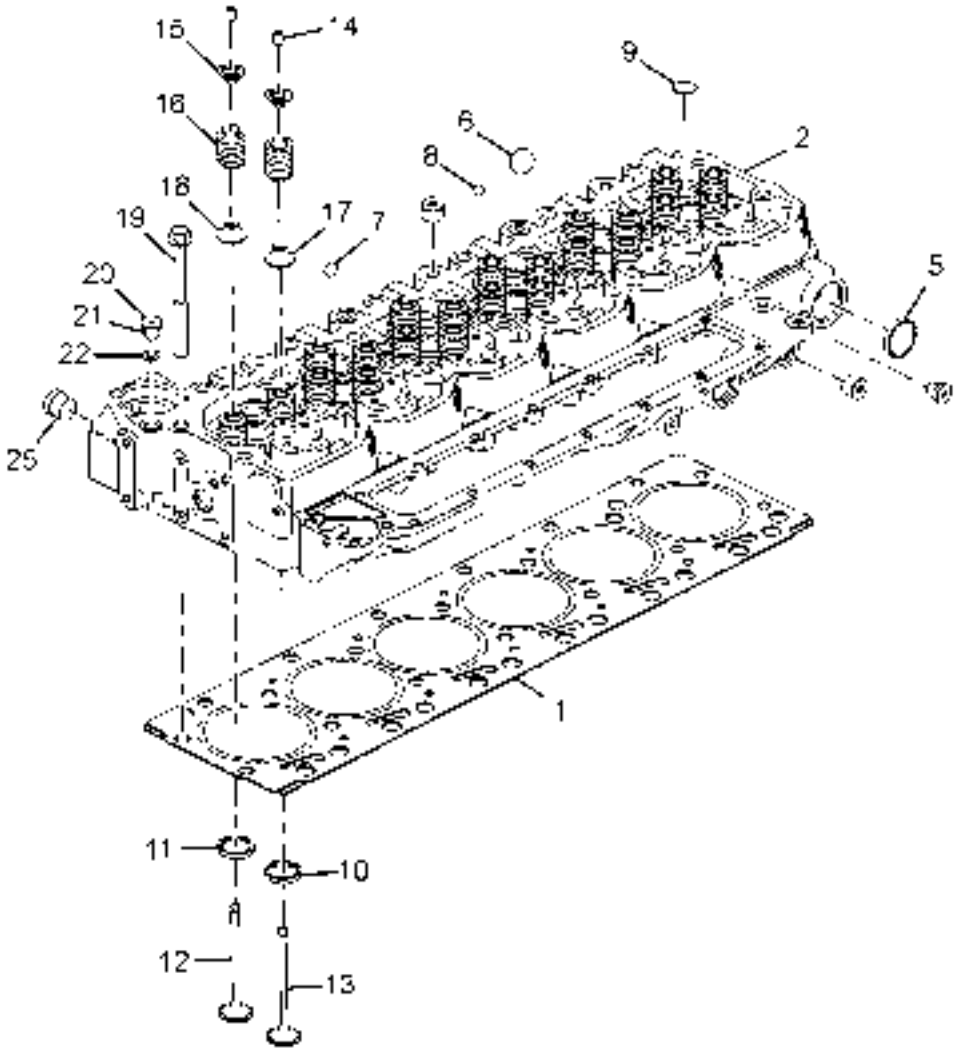

2076600401R.04	CYLINDER HEAD	GROUP 01

CHASSIS TYPE: ALL

FIG. NO.	PART NUMBER	DESCRIPTION	QTY	REMARKS
1	278601989906	GASKET, CYLINDER HEAD	1	
2	278601989907	ASSY. CYLINDER HEAD COMPLETE	1	
5	278601989909	PLUG, EXPANSION	2	
6	278601999906	PLUG EXPANSION	4	
7	278601989910	PLUG, EXPANSION	2	
8	278601989911	PLUG, EXPANSION	7	
9	278618999944	PLUG, EXPANSION	11	
10	278605999966	INSERT,VALVE INTAKE	12	
11	278605999967	INSERT,VALVE EXHAUST	12	
12	278605999968	VALVE EXHAUST	12	
13	278605999969	VALVE,INTAKE	12	
14	278605999970	COLLET,VALVE	48	
15	278605999971	RETAINER VALVE SPRING	24	
16	T06560000242	SPRING VALVE	24	
17	278605999973	SEAL,VALVE STEM	12	
18	278605999973	SEAL,VALVE STEM	12	
19	278605999975	SCREW,HEX FLANGE HEAD CAP	26	
20	278605999976	PLUG, THREADED M 14X1.5	3	
21	278601999945	PLUG, PIPE 1/2 INCH NPTF	5	
22	278601999944	PLUG PIPE	3	
25	220001153704	PLUG THREADED M 22X1.50X15.5	1	

TATA MOTORS

2076600401R.05	VALVE COVER	GROUP 01

CHASSIS TYPE: ALL

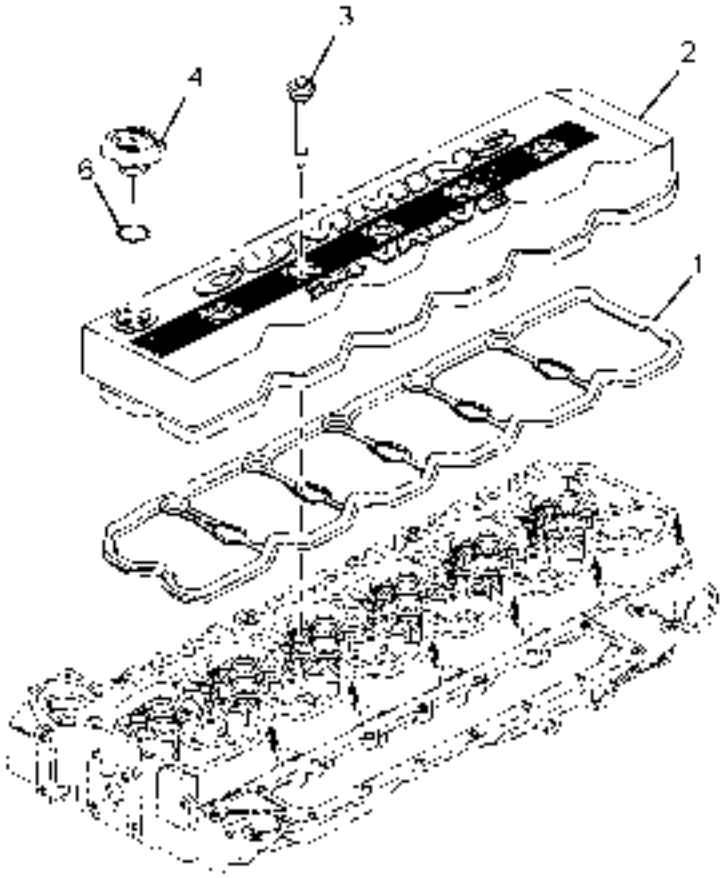

2076600401R.05	VALVE COVER	GROUP 01

CHASSIS TYPE: ALL

FIG. NO.	PART NUMBER	DESCRIPTION	QTY	REMARKS
1	278601989918	GASKET, VALVE COVER	1	
2	278601989919	COVER, VALVE	1	
3	278601989920	SCREW,CPT ISOLATOR CAP M 8X1.25X95.3	5	
4	278618999972	ASSY CAP FILLER WITH SEAL O RING	1	
6	278618999974	SEAL O RING	1	

TATA MOTORS

2076600401R.06	AIR INTAKE HEATER	GROUP 01

CHASSIS TYPE: ALL

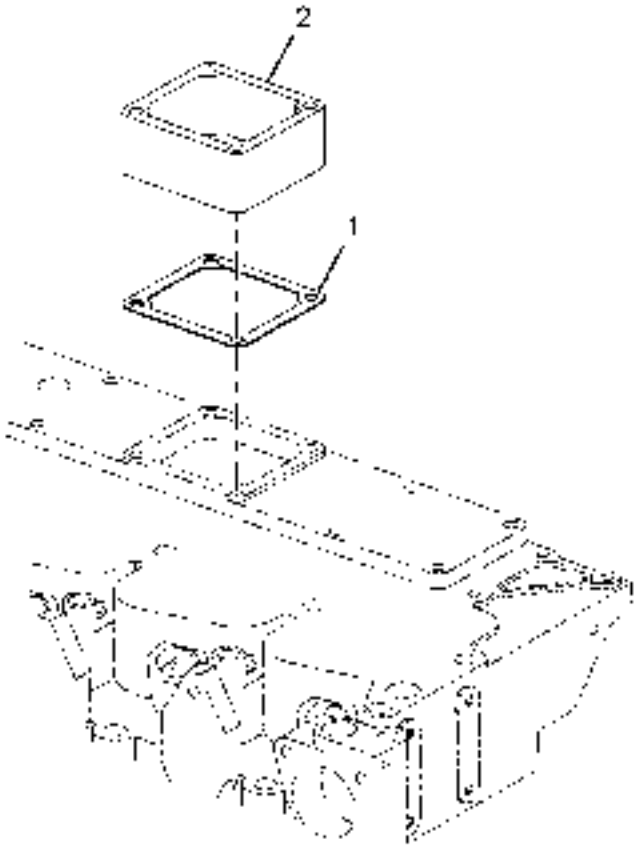

2076600401R.06	AIR INTAKE HEATER	GROUP 01

CHASSIS TYPE: ALL

FIG. NO.	PART NUMBER	DESCRIPTION	QTY	REMARKS
1	278620999941	GASKET CONNECTION	1	
2	278620999940	CONNECTION SPACER	1	

TATA MOTORS

2076600401R.07	INTAKE MANIFOLD	GROUP 01

CHASSIS TYPE: ALL

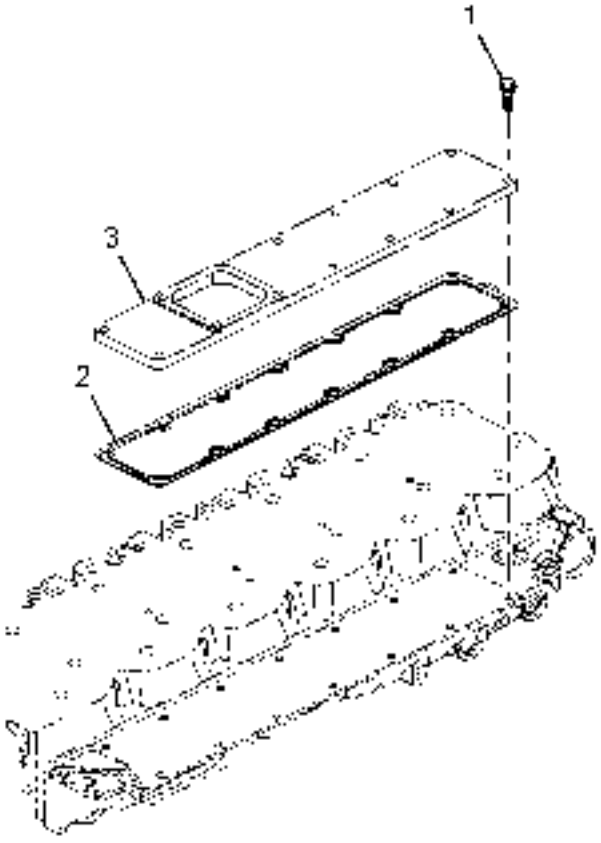

2076600401R.07	INTAKE MANIFOLD	GROUP 01

CHASSIS TYPE: ALL

FIG. NO.	PART NUMBER	DESCRIPTION	QTY	REMARKS
1	278609999901	SCREW HEX. FLANGE HEAD CAP M 8X1.25X25	10	
2	278609999937	GASKET, INTAKE MANIFOLD COVER	1	
3	T06560000298	COVER,INTAKE MANIFOLD	1	

TATA MOTORS

2076600401R.08	CAM FOLLOWER COVER	GROUP 01

CHASSIS TYPE: ALL

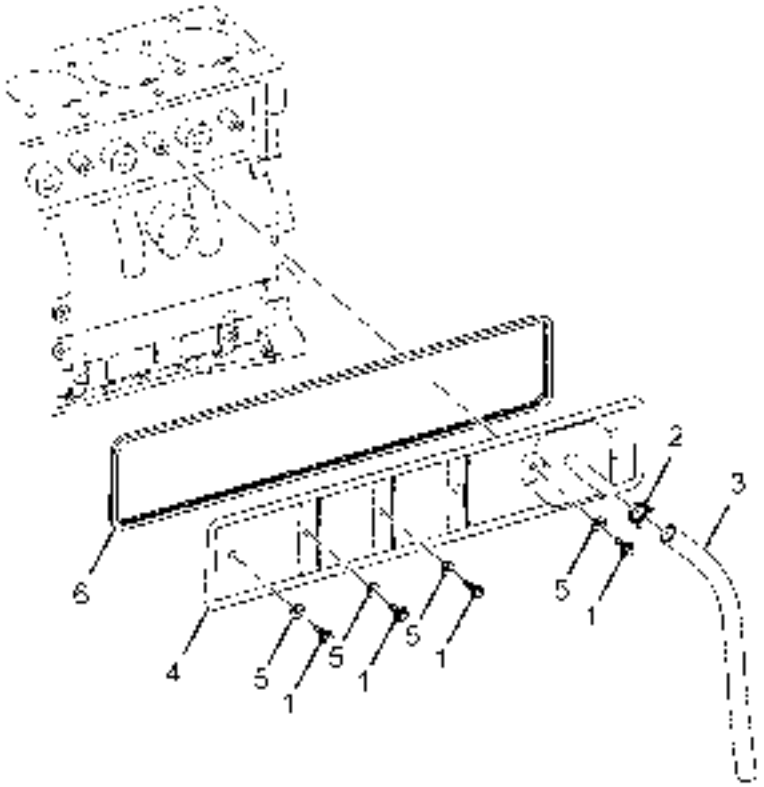

2076600401R.08	CAM FOLLOWER COVER	GROUP 01

CHASSIS TYPE: ALL

FIG. NO.	PART NUMBER	DESCRIPTION	QTY	REMARKS
1	278605999905	SCREW HEX. HEAD CAP M 8X1.25X16	4	
2	278605999907	CLAMP SPRING (HOSE)	1	
3	278605999906	HOSE PLAIN	1	
4	278605999903	COVER PUSH ROD	1	
5	278605999904	SEAL GROMMET	4	
6	278605999901	GASKET PUSH ROD COVER	1	

TATA MOTORS

2076600401R.09	AIR INTAKE CONNECTION	GROUP 01

CHASSIS TYPE: ALL

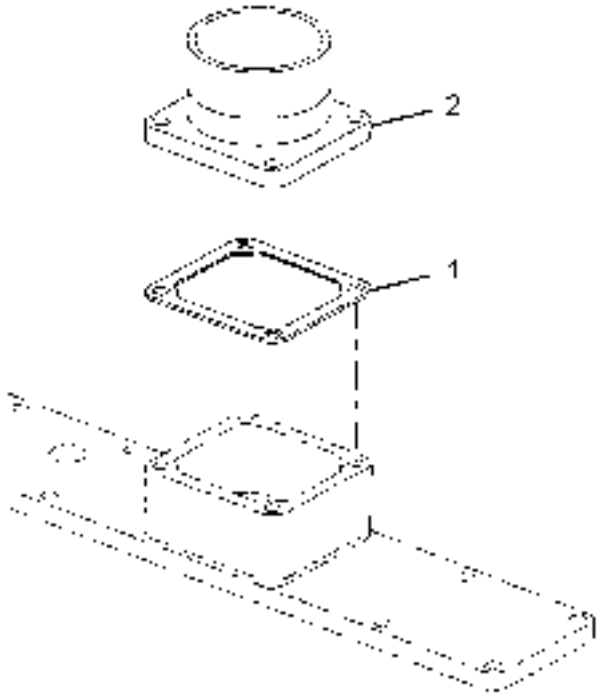

A05

2076600401R.09	AIR INTAKE CONNECTION	GROUP 01

CHASSIS TYPE: ALL

FIG. NO.	PART NUMBER	DESCRIPTION	QTY	REMARKS
1	278620999941	GASKET CONNECTION	1	
2	278601999804	CONNECTION AIR INTAKE	1	
-	278620999927	SCREW HEX FLANGE M 8X1.25X80	4	

TATA MOTORS

2076600401R.10	OIL FILL LOCATION	GROUP 01

CHASSIS TYPE: ALL

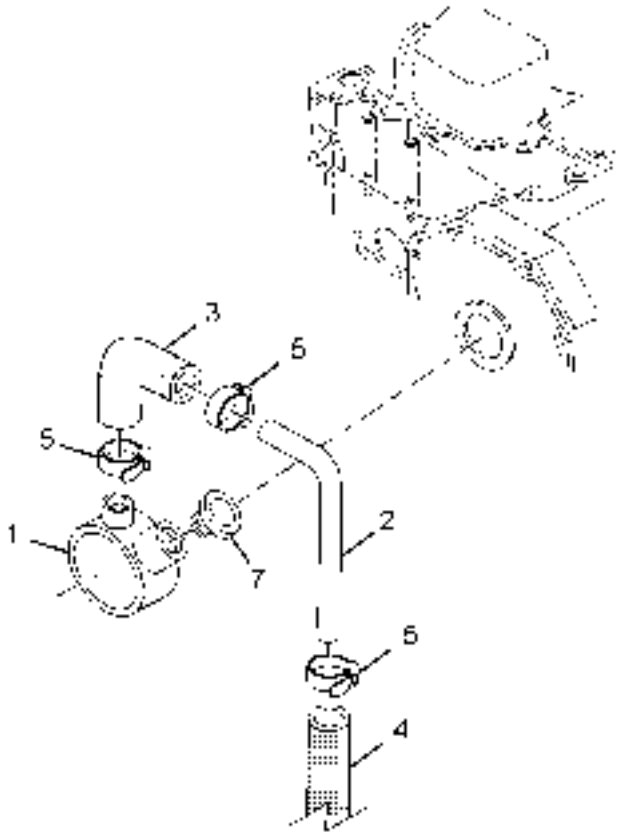

2076600401R.10	OIL FILL LOCATION	GROUP 01

CHASSIS TYPE: ALL

FIG. NO.	PART NUMBER	DESCRIPTION	QTY	REMARKS
-	278601999982	KIT BREATHER CRANKCASE	1	
		CONSISTS OF:		
1	-	BREATHER CRANKCASE	1	
2	-	TUBE BREATHER	1	
3	-	HOSE, ELBOW	1	
4	-	HOSE PLAIN	1	
5	-	CLAMP HOSE	3	
	-	SEAL RECTANGULAR	1	
7	-	CAP FILLER	1	

TATA MOTORS

2076600401R.11	DIPSTICK	GROUP 01

CHASSIS TYPE: ALL

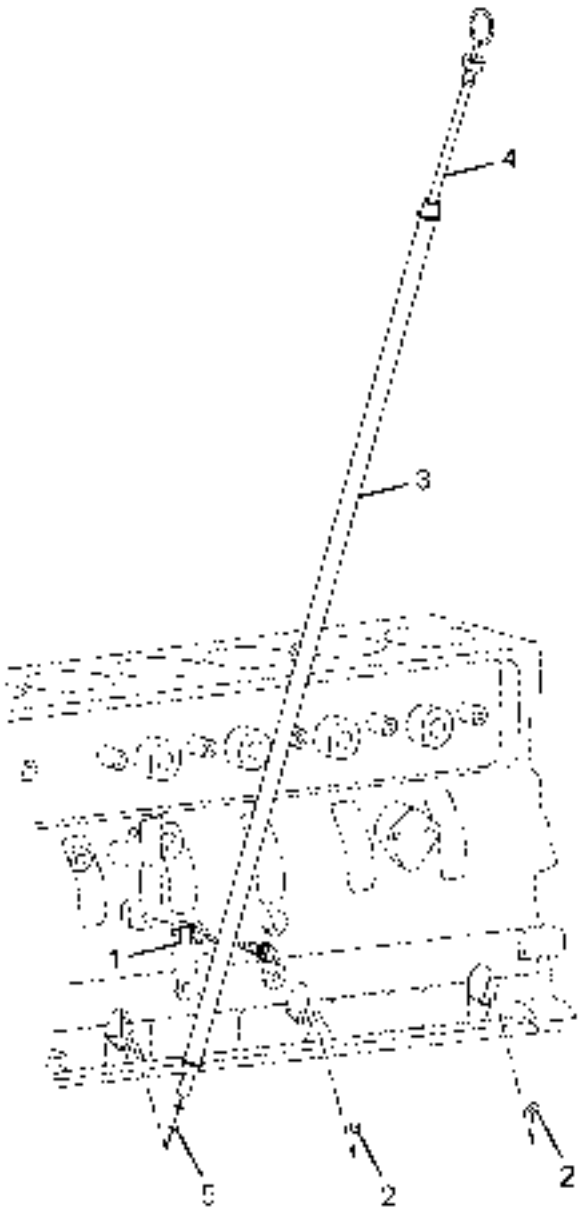

2076600401R.11	DIPSTICK	GROUP 01

CHASSIS TYPE: ALL

FIG. NO.	PART NUMBER	DESCRIPTION	QTY	REMARKS
1	278614999927	CLAMP, TUBE	1	
2	278601999915	PLUG EXPANSION	2	
3	T06560000190	TUBE, OIL GAUGE	1	
4	T06560000191	DIPSTICK	1	
5	278618999967	SEAL 'O' RING	1	

CHASSIS TYPE: ALL

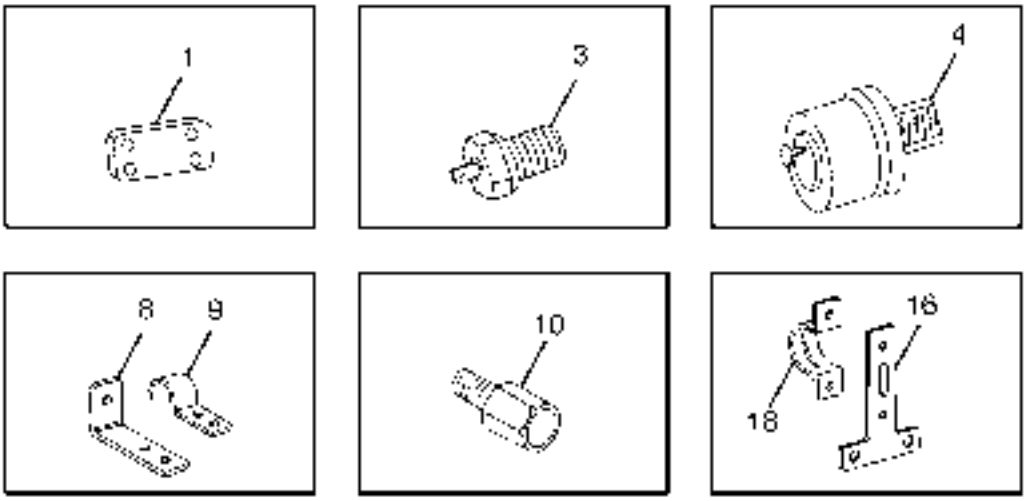

2076600401R.12A	FITMENTS ON ENGINE	GROUP 01

CHASSIS TYPE: ALL

FIG. NO.	PART NUMBER	DESCRIPTION	QTY	REMARKS
1	278603114701	BOTTOM COVER (FLY WHEEL HSG.)	1	
3	263254209903	TEMPERATURE TRANSDUCER	1	
4	265454509913	LOW OIL PRESSURE SWITCH	1	
8	278601173330	BRACKET(DIPSTICK MOUNTING)	1	
9	257642914201	CLAMP	1	
10	278618179901	ADAPTER (FOR OIL PR. TRANSDUCER)	1	
16	278609110101	ASSY.BRACKET (FOR FUEL FILTER MOUNTING)	1	
18	278509114201	CLAMP (BABY FILTER)	1	

2076600403R.01	CRANKSHAFT AND MAIN BEARING	GROUP 03

CHASSIS TYPE: ALL

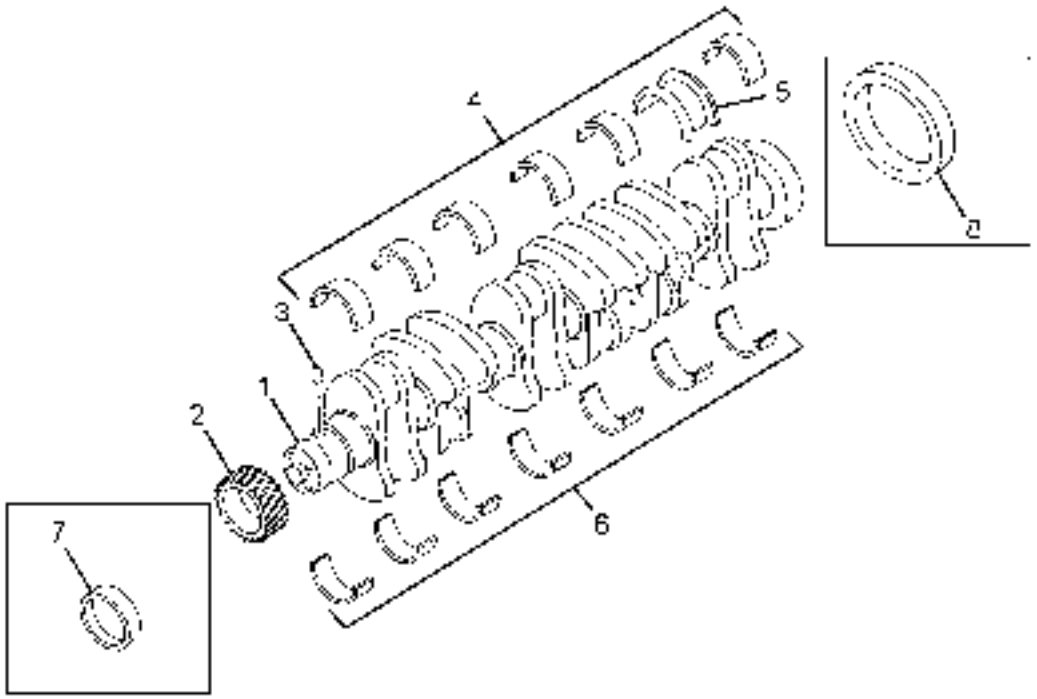

2076600403R.01	CRANKSHAFT AND MAIN BEARING	GROUP 03

CHASSIS TYPE: ALL

FIG. NO.	PART NUMBER	DESCRIPTION	QTY	REMARKS
1	278603990103	ASSY. CRANKSHAFT	1	
2	278603999905	GEAR CRANKSHAFT	1	
3	278603999906	DOWEL PIN	1	
-	278601999801	SET OF MAIN BEARING (STD) CONSISTS OF:	1	SERVICED AS A SET
4	-	BEARING MAIN (UPPER)	6	
6	-	BEARING MAIN (LOWER)	7	
5	-	BEARING CRANKSHAFT (THRUST)	1	
-	278601999802	SET OF MAIN BEARING (RS I) (0.25 MM OVERSIZE) CONSISTS OF :	1	SERVICED AS A SET
4	-	BEARING MAIN (UPPER)	6	
6	-	BEARING MAIN (LOWER)	7	
5	-	BEARING CRANKSHAFT (THRUST)	1	
-	278603990106	SET OF MAIN BEARING (RS II) (0.50 MM OVERSIZE) CONSISTS OF :	1	SERVICED AS A SET
4	-	BEARING MAIN (UPPER)	6	
6	-	BEARING MAIN (LOWER)	7	
5	-	BEARING CRANKSHAFT (THRUST)	1	
-	278603990107	SET OF MAIN BEARING (RS III) (0.75 MM OVERSIZE) CONSISTS OF:	1	SERVICED AS A SET
4	-	BEARING MAIN (UPPER)	6	
6	-	BEARING MAIN (LOWER)	7	
5	-	BEARING CRANKSHAFT (THRUST)	1	
-	278603990108	SET OF MAIN BEARING (RS IV) (1.00 MM OVERSIZE) CONSISTS OF:	1	SERVICED AS A SET
4	-	BEARING MAIN (UPPER)	6	
6	-	BEARING MAIN (LOWER)	7	
5	-	BEARING CRANKSHAFT (THRUST)	1	
7	278603999907	SLEEVE WEAR (FRONT)	1	SERVICE PART
8	278603999908	SLEEVE WEAR (REAR)	1	SERVICE PART

TATA MOTORS

2076600403R.02A	CONNECTING ROD AND PISTON	GROUP 03

CHASSIS TYPE: ALL

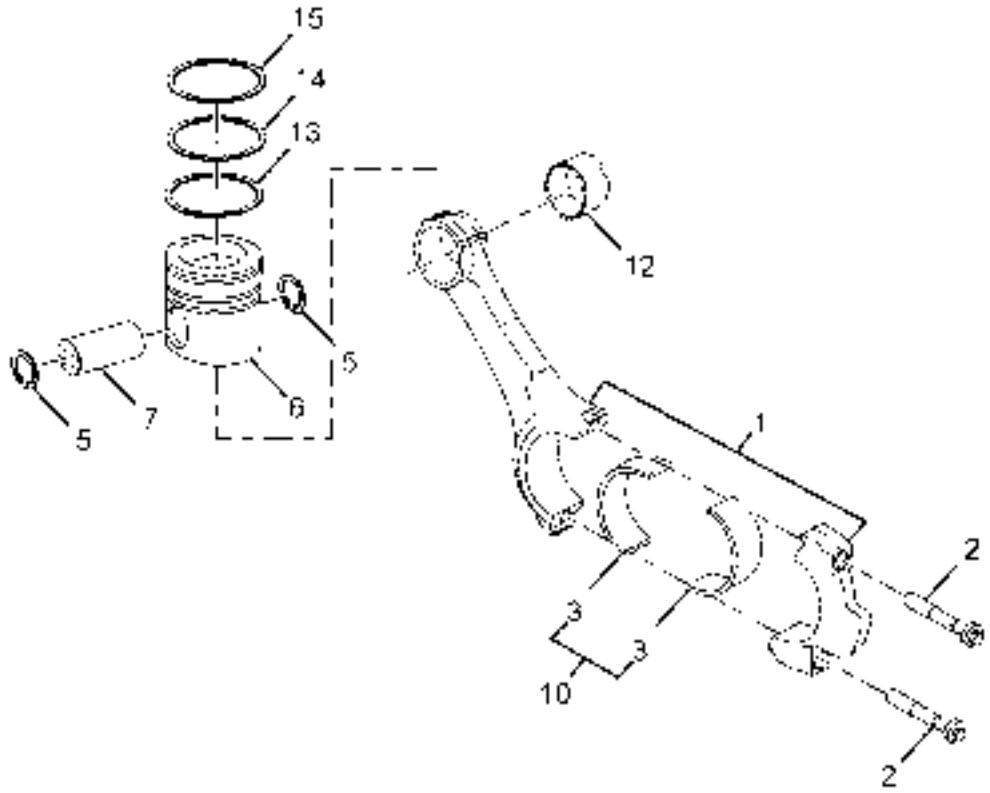

2076600403R.02A	CONNECTING ROD AND PISTON	GROUP 03

CHASSIS TYPE: ALL

FIG. NO.	PART NUMBER	DESCRIPTION	QTY	REMARKS
1	278603990102	ASSY. CON. ROD	6	
2	278603999901	SCREW CONNECTING ROD M 11X1.25X59	12	
	278603990150	BARE PISTON SET, BS III (STD) NEW RECIPE	1	
6		PISTON	6	
7		PIN, PISTON	6	
5		RING, RETAINING	12	
	278603990151	BARE PISTON SET, BS III (O/S 0.5) NEW RECIPE	1	
6		PISTON	6	
7		PIN, PISTON	6	
5		RING, RETAINING	12	
	278603990152	BARE PISTON SET, BS III (O/S 1) NEW RECIPE	1	
6		PISTON	6	
7		PIN, PISTON	6	
5		RING, RETAINING	12	
	278603990153	PISTON RING SET, BS III (STD) NEW RECIPE	1	
13		OIL RING	6	
14		COMPRESSION RING	6	
15		COMPRESSION RING	6	
	278603990154	PISTON RING SET, BS III (O/S 0.5) NEW RECIPE	1	
13		OIL RING	6	
14		COMPRESSION RING	6	
15		COMPRESSION RING	6	
	278603990155	PISTON RING SET, BS III (O/S 1) NEW RECIPE	1	
13		OIL RING	6	
14		COMPRESSION RING	6	
15		COMPRESSION RING	6	
		CON. ROD BEARING SET		
10	278603999980	SET OF CON. ROD BEARING STD CONSISTS OF :	1	SERVICED AS A SET
3		BEARING CON. ROD STD	12	NOT SERVICED LOOSE
10	278613999904	SET OF CON. ROD BEARING R/S I CONSISTS OF :	1	

2076600403R.02A	CONNECTING ROD AND PISTON	GROUP 03

CHASSIS TYPE: ALL

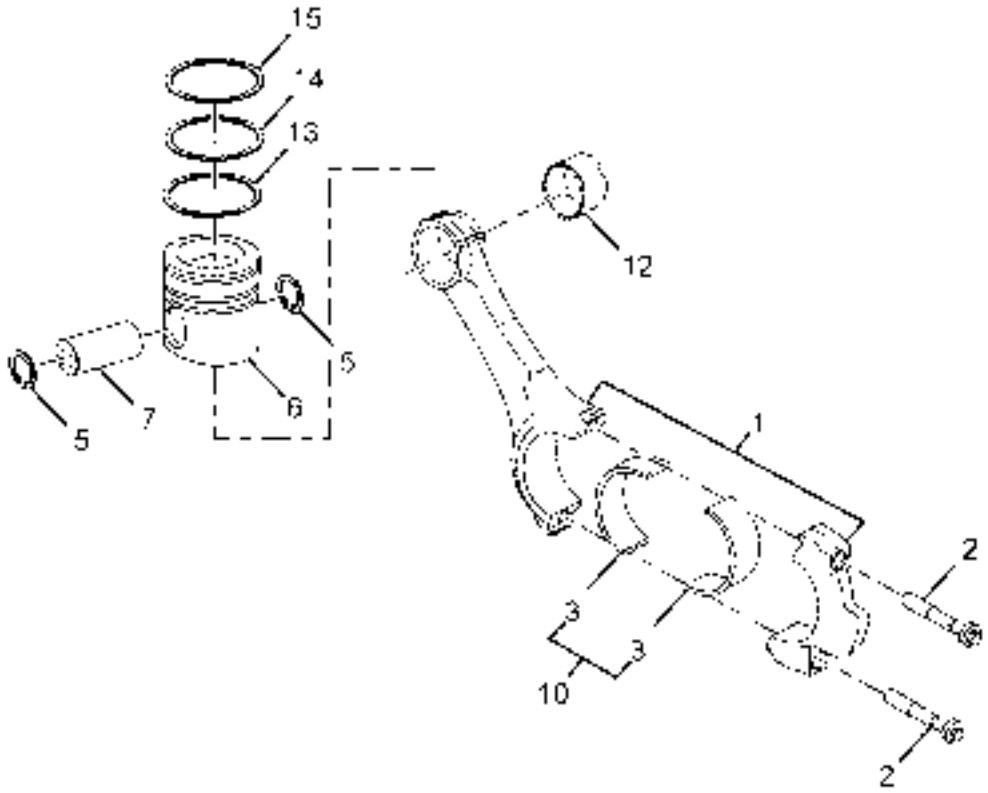

2076600403R.02A	CONNECTING ROD AND PISTON	GROUP 03

CHASSIS TYPE: ALL

FIG. NO.	PART NUMBER	DESCRIPTION	QTY	REMARKS
3		BEARING CON. ROD (0.25 MM OVERSIZE)	12	
10	278613999903	SET OF CON. ROD BEARING R/S II	1	
		CONSISTS OF :		
3		BEARING CON. ROD (0.5 MM OVERSIZE)	12	
10	278613999902	SET OF CON. ROD BEARING R/S III	1	
		CONSISTS OF :		
3		BEARING CON. ROD (0.75 MM OVERSIZE)	12	
10	278613999901	SET OF CON. ROD BEARING R/S IV	1	
		CONSISTS OF :		
3		BEARING CON. ROD (1.0 MM OVERSIZE)	12	
12	278615999923	BUSH CON. ROD	6	

TATA MOTORS

2076600403R.03	VIBRATION DAMPER	GROUP 03

CHASSIS TYPE: ALL

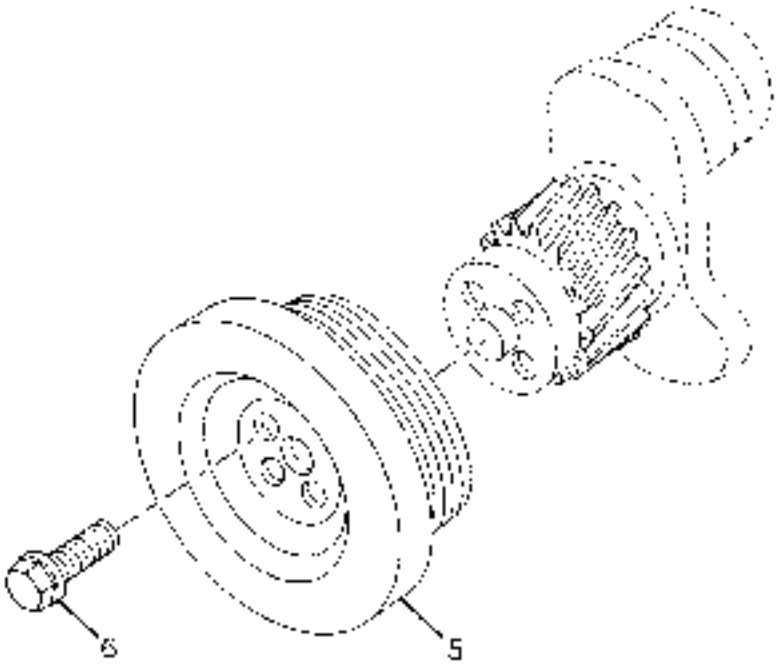

2076600403R.03	VIBRATION DAMPER	GROUP 03

CHASSIS TYPE: ALL

FIG. NO.	PART NUMBER	DESCRIPTION	QTY	REMARKS
5	278603999947	DAMPER VIBRATION	1	
6	278603999937	SCREW HEX FLANGE HD CAP M 12X1.25X36	4	

TATA MOTORS

2076600403R.04	FLYWHEEL AND FLYWHEEL HOUSING	GROUP 03

CHASSIS TYPE: ALL

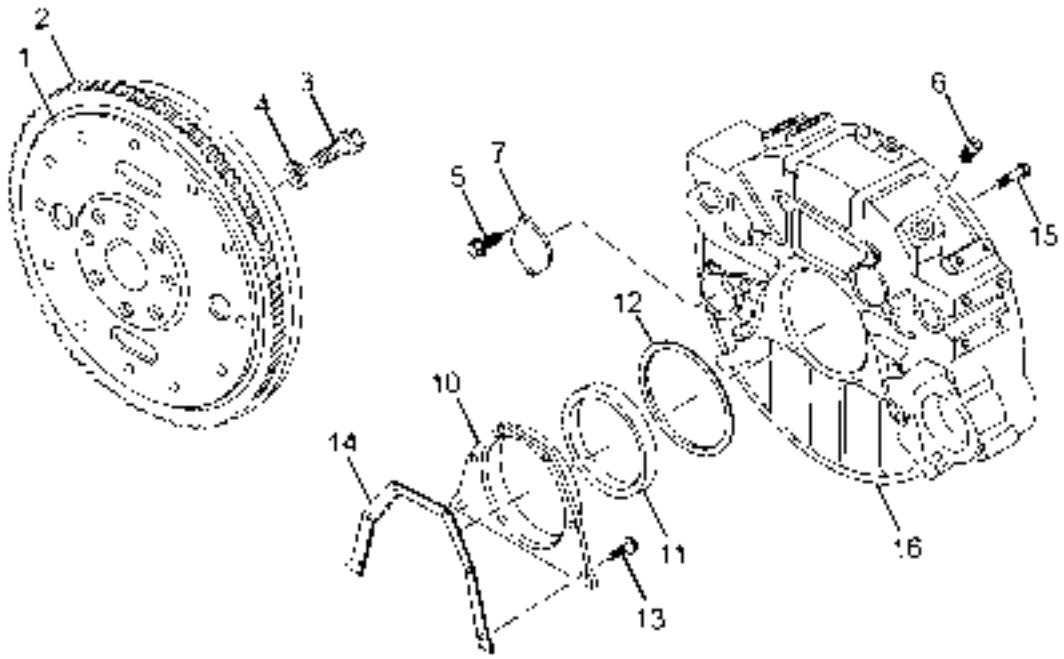

2076600403R.04	FLYWHEEL AND FLYWHEEL HOUSING	GROUP 03

CHASSIS TYPE: ALL

FIG. NO.	PART NUMBER	DESCRIPTION	QTY	REMARKS
1	278603999801	ASSY. FLYWHEEL	1	
2	278607989928	GEAR FLYWHEEL RING (TEETH=138)	1	
3	278603999910	SCREW HEX. HEAD CAP M 12X1.25X32	8	
4	278603999911	WASHER PLAIN (1.65 THICK, M 12)	8	
5	278603999927	SCREW SELF TAPPING M 8X1.25X16	2	
6	278603999913	PLUG THREADED	1	
7	278603999914	PLATE COVER	1	
10	278603999918	COVER REAR	1	
11	278618999914	OIL SEAL	1	
12	278603999920	SEAL RECTANGULAR RING	1	
13	278607999915	SCREW HEX. FLANGE HEAD CAP M 6X1.0X16	6	
14	278603999921	GASKET REAR COVER	1	
15	278603999922	SCREW HEX. FLANGE HEAD CAP M 12X1.75X40	8	
16	278603999972	HOUSING FLYWHEEL	1	

TATA MOTORS

2076600403R.05	SPACER BEARING (CLUTCH REAR)	GROUP 03

CHASSIS TYPE: ALL

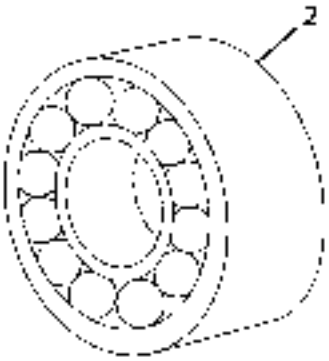

2076600403R.05	SPACER BEARING (CLUTCH REAR)	GROUP 03

CHASSIS TYPE: ALL

FIG. NO.	PART NUMBER	DESCRIPTION	QTY	REMARKS
2	278603999944	BEARING BALL	1	

TATA MOTORS

2076600405R.01	CAMSHAFT AND TAPPETS	GROUP 05

CHASSIS TYPE: ALL

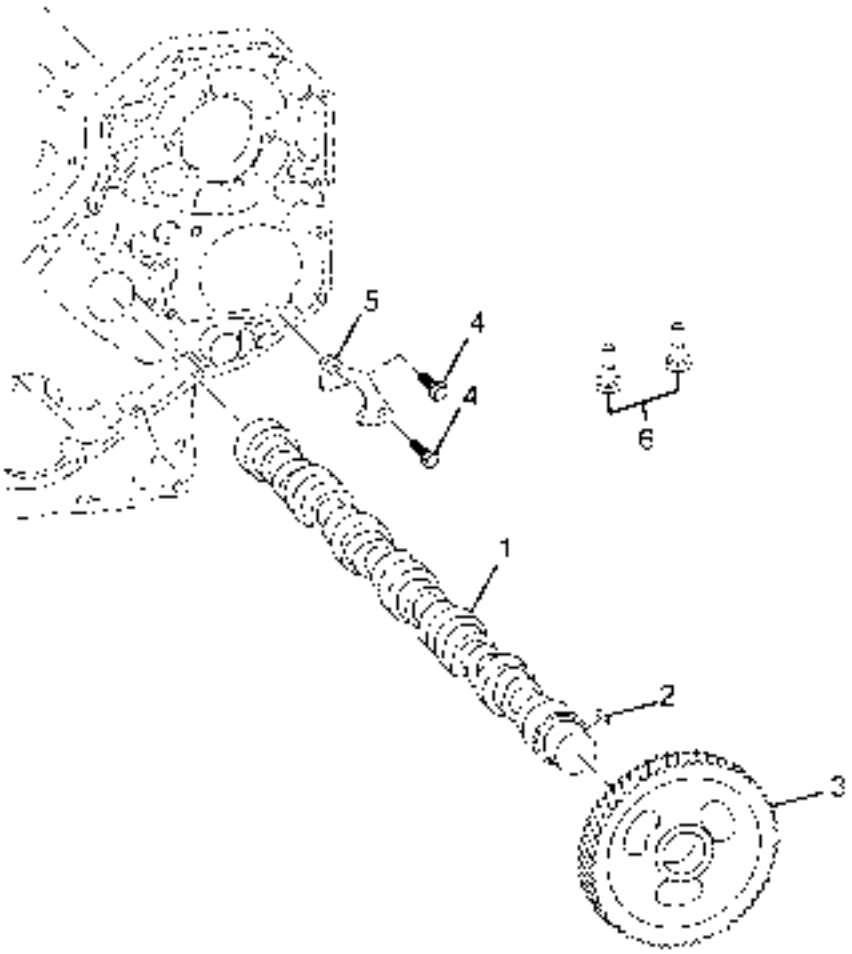

2076600405R.01	CAMSHAFT AND TAPPETS	GROUP 05

CHASSIS TYPE: ALL

FIG. NO.	PART NUMBER	DESCRIPTION	QTY	REMARKS
1	278605999977	CAMSHAFT	1	
2	T06560000124	KEY PLAIN WOODRUFF	1	
3	278605999910	GEAR CAMSHAFT	1	
4	278605999911	SCREW HEX. HEAD CAP M 8X1.25X22	2	
5	278605999912	SUPPORT CAMSHAFT	1	
6	278605999978	TAPPET, VALVE	12	

TATA MOTORS

2076600405R.02	ROCKER LEVER	GROUP 05

CHASSIS TYPE: ALL

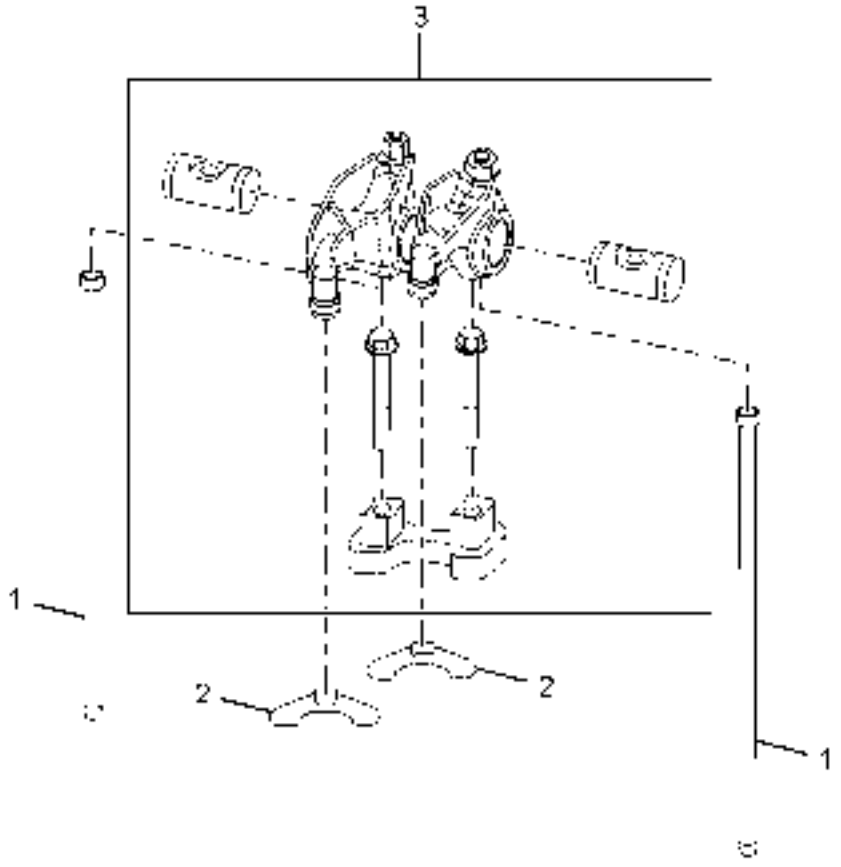

2076600405R.02	ROCKER LEVER	GROUP 05

CHASSIS TYPE: ALL

FIG. NO.	PART NUMBER	DESCRIPTION	QTY	REMARKS
1	278605999979	ROD PUSH	12	
2	278605999980	CROSS HEAD VALVE	12	
3	278605999981	ASSEMBLY ROCKER LEVER	6	

TATA MOTORS

2076600407R.01	FUEL PUMP COUPLING	GROUP 07

CHASSIS TYPE: ALL

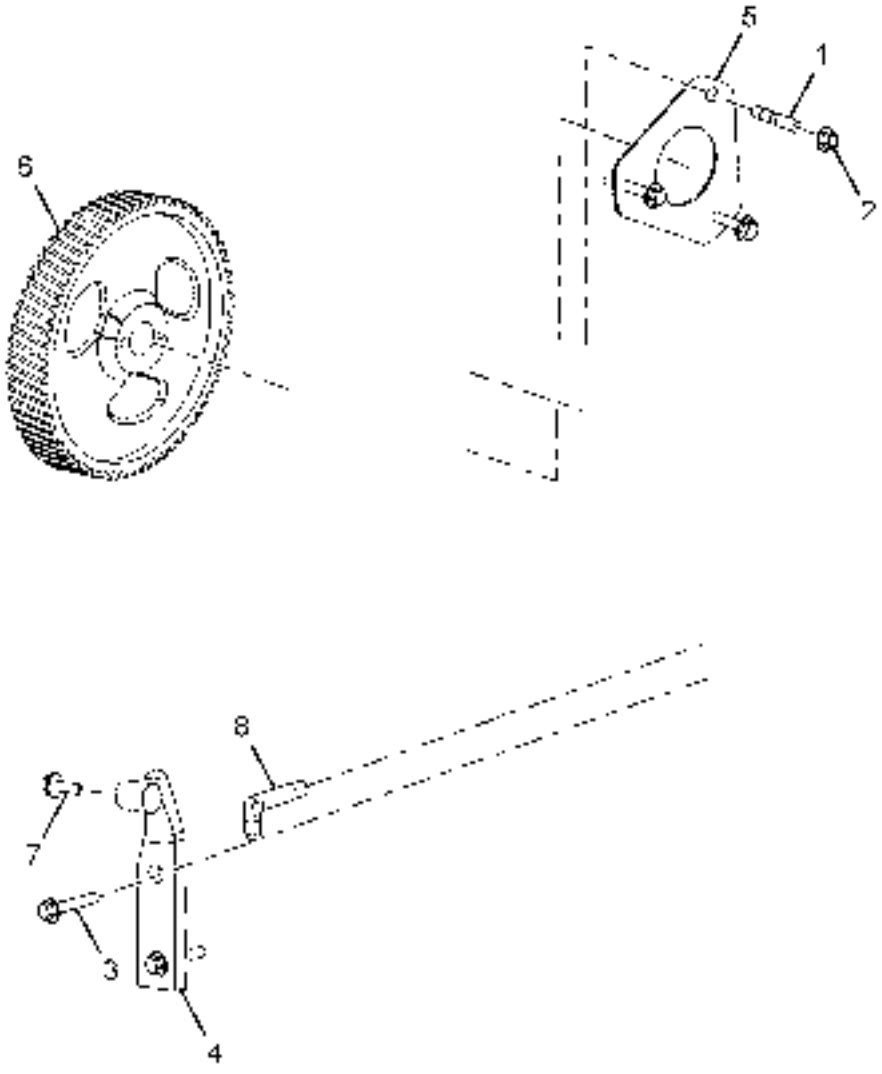

2076600407R.01	FUEL PUMP COUPLING	GROUP 07

CHASSIS TYPE: ALL

FIG. NO.	PART NUMBER	DESCRIPTION	QTY	REMARKS
1	278601999984	STUD M 8X1.25X48	3	
2	278605999941	NUT, HEXAGON FLANGE M 8X1.25	3	
3	278613998001	SCREW, HEX. FLANGE M 8X1.25X20	1	
4	278607989903	BRACE, FUEL PUMP	1	
5	278607989904	GASKET, FUEL PUMP	1	
6	278609999945	GEAR, FUEL PUMP	1	
7	278607999983	SCREW, HEX. FLANGE M 8X1.25X30	2	
8	T06560000299	ELBOW,MALE ADAPTER	1	

2076600407R.02	FUEL INJECTION PUMP	GROUP 07

CHASSIS TYPE: ALL

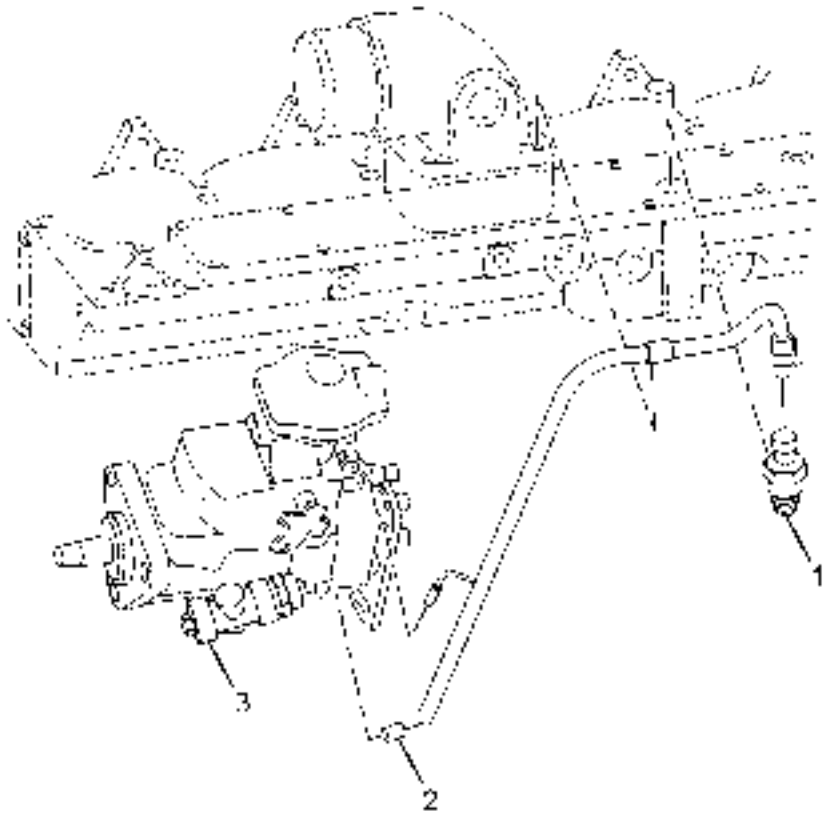

2076600407R.02	FUEL INJECTION PUMP	GROUP 07

CHASSIS TYPE: ALL

FIG. NO.	PART NUMBER	DESCRIPTION	QTY	REMARKS
1	T06560000300	SWITCH,PRESSURE	1	
2	278615999908	HARNESS, WIRING	1	
3	0460426489	PUMP,FUEL INJECTION	1	

TATA MOTORS

2076600407R.03	PUMP, FUEL TRANSFER	GROUP 07

CHASSIS TYPE: ALL

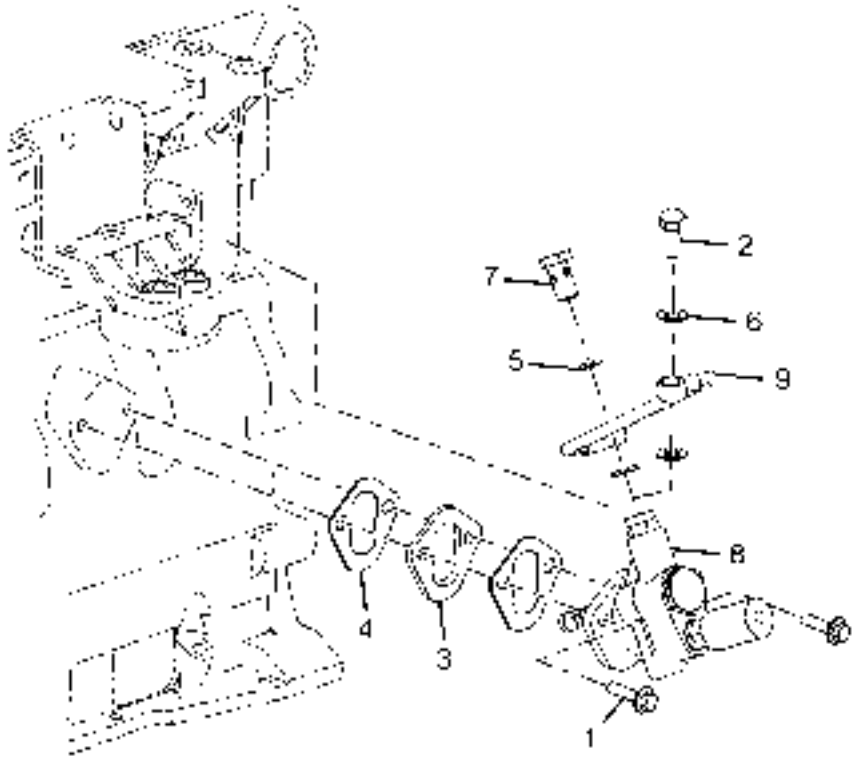

2076600407R.03	PUMP, FUEL TRANSFER	GROUP 07

CHASSIS TYPE: ALL

FIG. NO.	PART NUMBER	DESCRIPTION	QTY	REMARKS
1	278607999983	SCREW HEX FLANGE HEAD CAP M 8X1.25X30	2	
2	278607999908	SCREW, BANJO CONNECTOR M 12X1.5X24	1	
3	278607999916	SPACER MOUNTING	1	
4	220014105302	GASKET,COVER PLATE	2	
5	278607999924	WASHER, SEALING	2	
6	278607999925	WASHER, SEALING	2	
7	278607999930	SCREW BANJO CONNECTOR M 14X1.5X26	1	
8	F002A50023	PUMP FUEL TRANSFER	1	
9	T06560000303	TUBE,FUEL SUPPLY	1	

TATA MOTORS

2076600407R.04	FUEL LINES	GROUP 07

CHASSIS TYPE: ALL

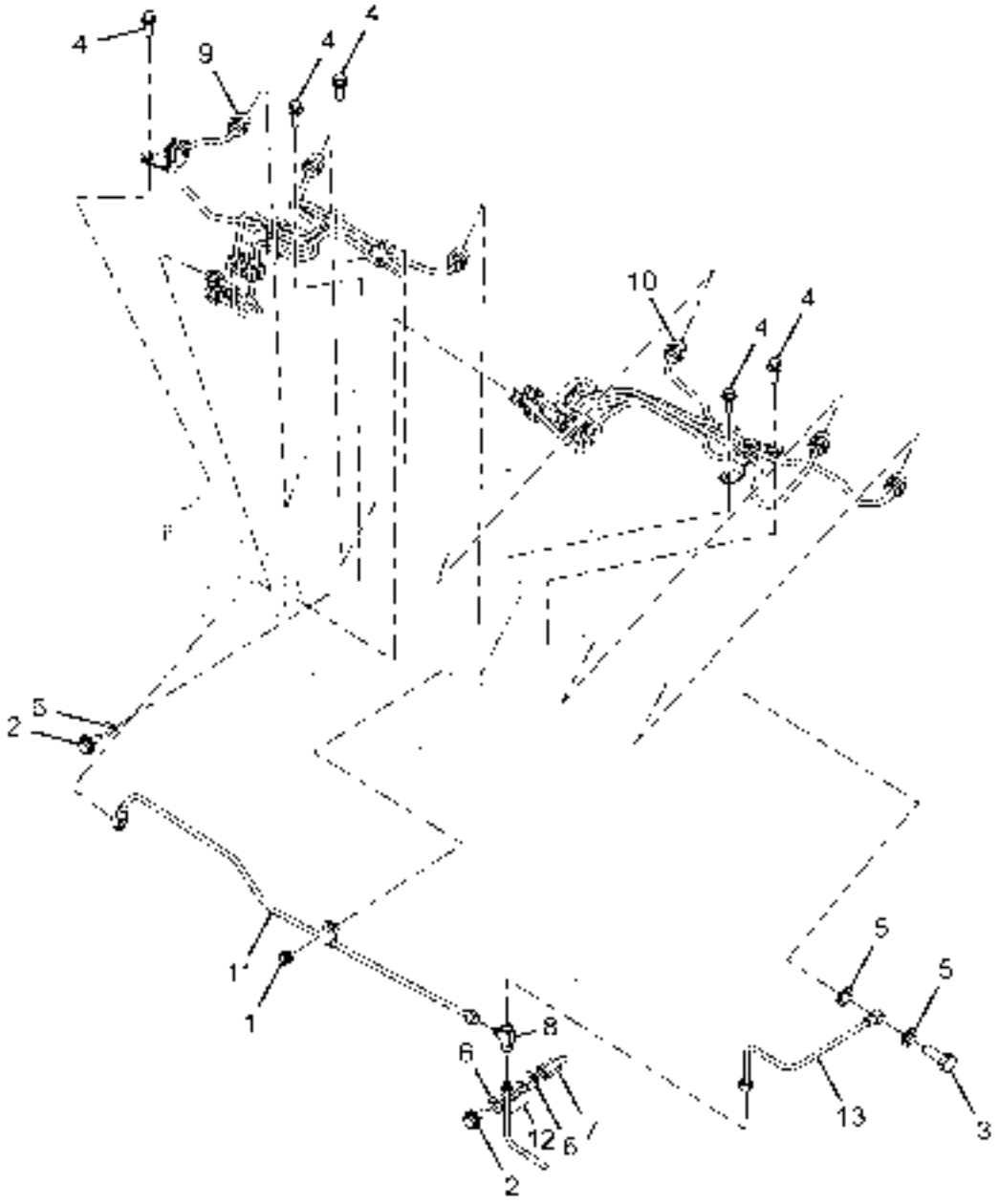

2076600407R.04	FUEL LINES	GROUP 07

CHASSIS TYPE: ALL

FIG. NO.	PART NUMBER	DESCRIPTION	QTY	REMARKS
1	278607989946	SCREW HEX FLANGE HEAD CAP M 8X1.25 X12	1	
2	278605999905	SCREW HEX FLANGE HEAD M 8X1.25X16	2	
3	278607999908	SCREW BANJO CONNECTOR M12X1.5X24	1	
4	278609999901	SCREW HEX FLANGE HD CAP M 8X1.25X25	5	
5	278607999924	WASHER SEALING 12MM	2	
6	278605999904	SEAL GROMMET	3	
7	T06560000123	SPACER,THREADED	1	
8	278607989908	TEE MALE UNION	1	
9	278601989924	TUBE INJECTOR FUEL SUPPLY	1	
10	278601989925	TUBE INJECTOR FUEL SUPPLY	1	
11	TATA00000700	TUBE FUEL DRAIN	1	
12	278607989948	TUBE FUEL DRAIN	1	
13	278607989949	TUBE FUEL DRAIN	1	

TATA MOTORS

2076600407R.05	PLUMBING FUEL FILTER	GROUP 07

CHASSIS TYPE: ALL

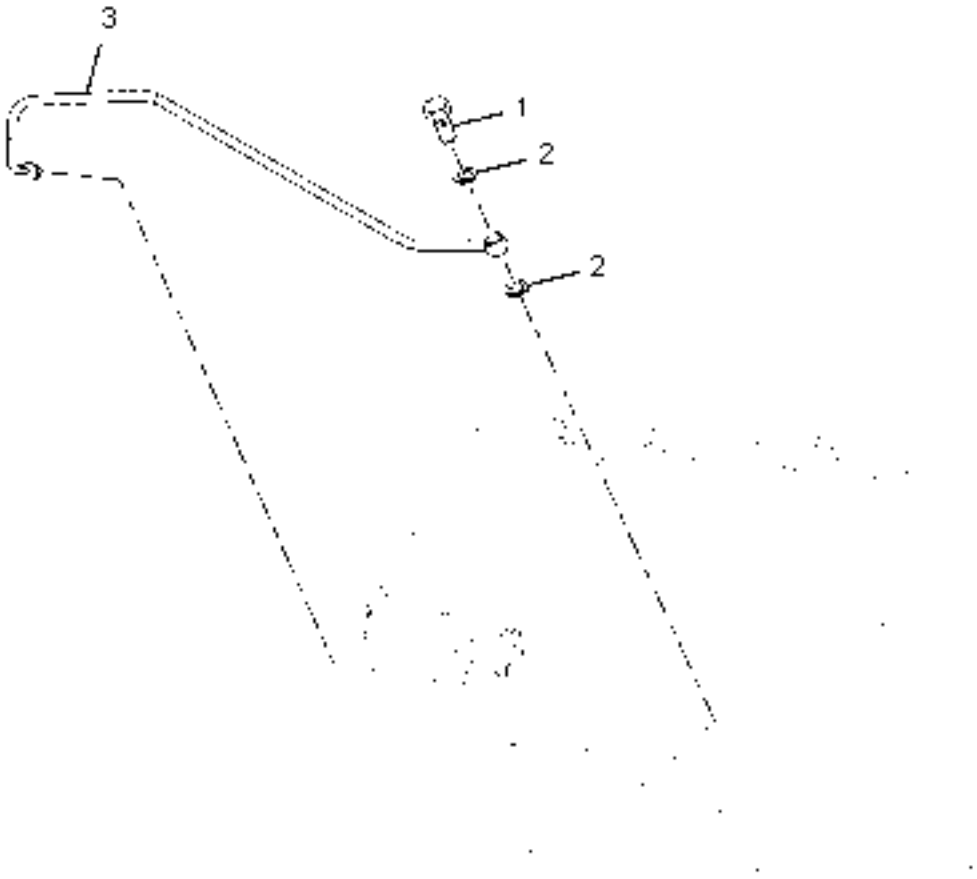

2076600407R.05	PLUMBING FUEL FILTER	GROUP 07

CHASSIS TYPE: ALL

FIG. NO.	PART NUMBER	DESCRIPTION	QTY	REMARKS
1	278609999911	SCREW BANJO CONNECTOR	1	
2	278607999924	WASHER SEALING 12MM	2	
3	T06560000293	TUBE,FUEL SUPPLY	1	

2076600407R.06	ACCESSORIES FUEL	GROUP 07

CHASSIS TYPE: ALL

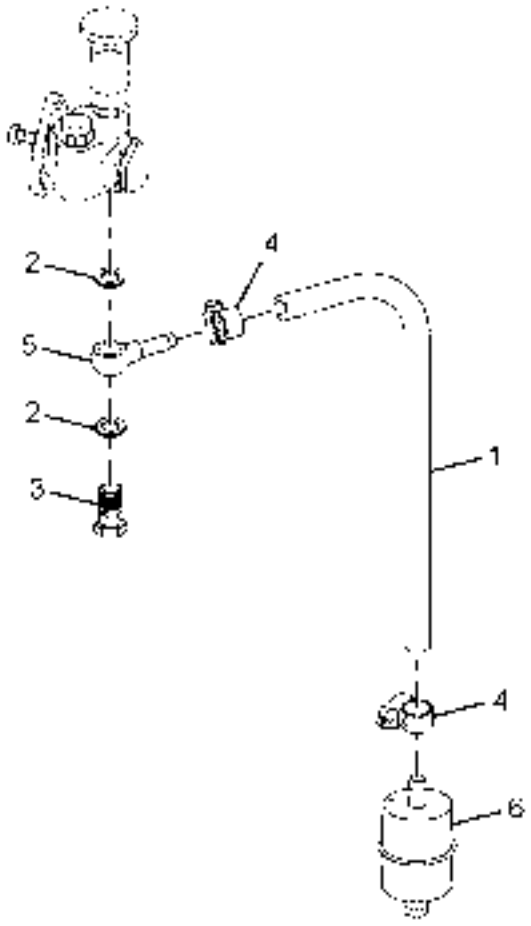

2076600407R.06	ACCESSORIES FUEL	GROUP 07

CHASSIS TYPE: ALL

FIG. NO.	PART NUMBER	DESCRIPTION	QTY	REMARKS
1	278614999934	HOSE, PLAIN	1	
2	278607999925	WASHER, SEALING	2	
3	278607999930	SCREW BANJO CONNECTOR M 14X1.5X26	1	
4	278609999922	CLAMP, HOSE	2	
5	278618999937	BANJO CONNECTOR	1	
6	278609999920	STRAINER, FUEL (15 DIA OUTLET)	1	

TATA MOTORS

2076600407R.07	PLUMBING, AIR FUEL	GROUP 07

CHASSIS TYPE: ALL

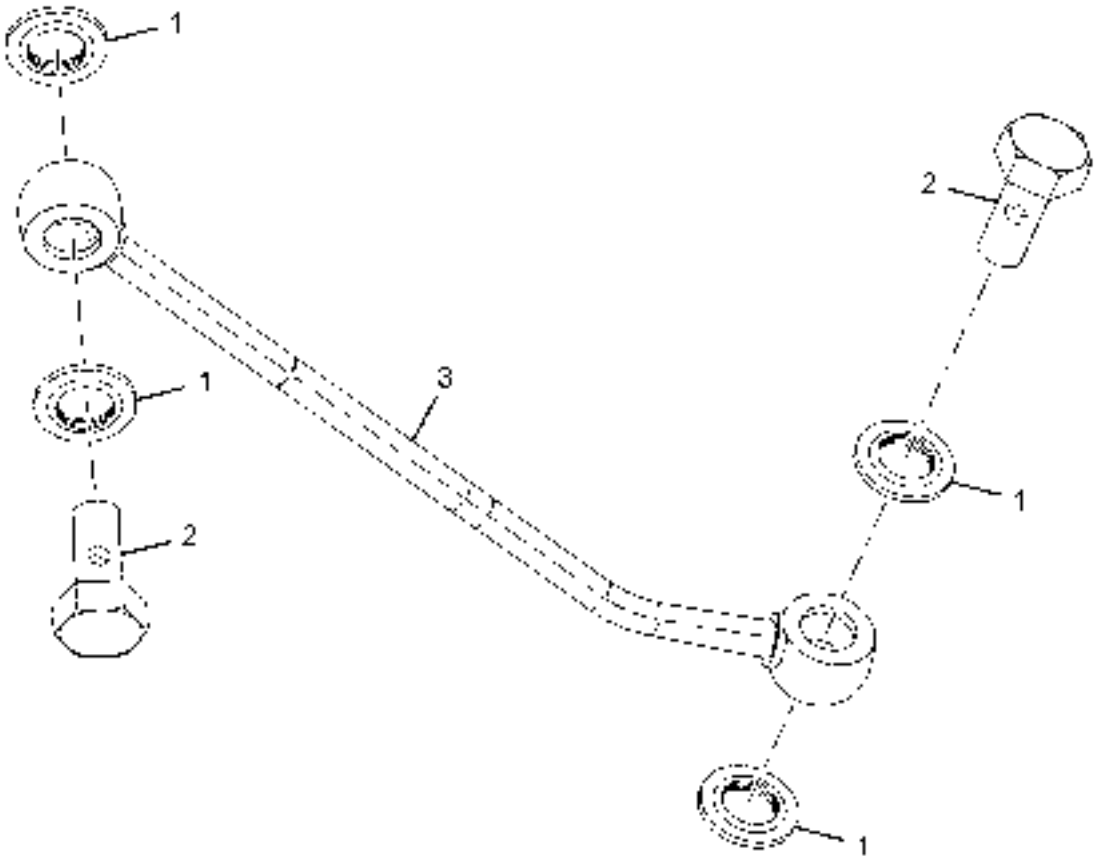

2076600407R.07	PLUMBING, AIR FUEL	GROUP 07

CHASSIS TYPE: ALL

FIG. NO.	PART NUMBER	DESCRIPTION	QTY	REMARKS
1	278607999922	WASHER SEALING 8 MM	4	
2	278607989905	SCREW BANJO CONNECTOR M 8X1X17	2	
3	T06560000304	TUBE,AIR FUEL CONTROL	1	

TATA MOTORS

2076600407R.08A	INJECTOR	GROUP 07

CHASSIS TYPE: ALL

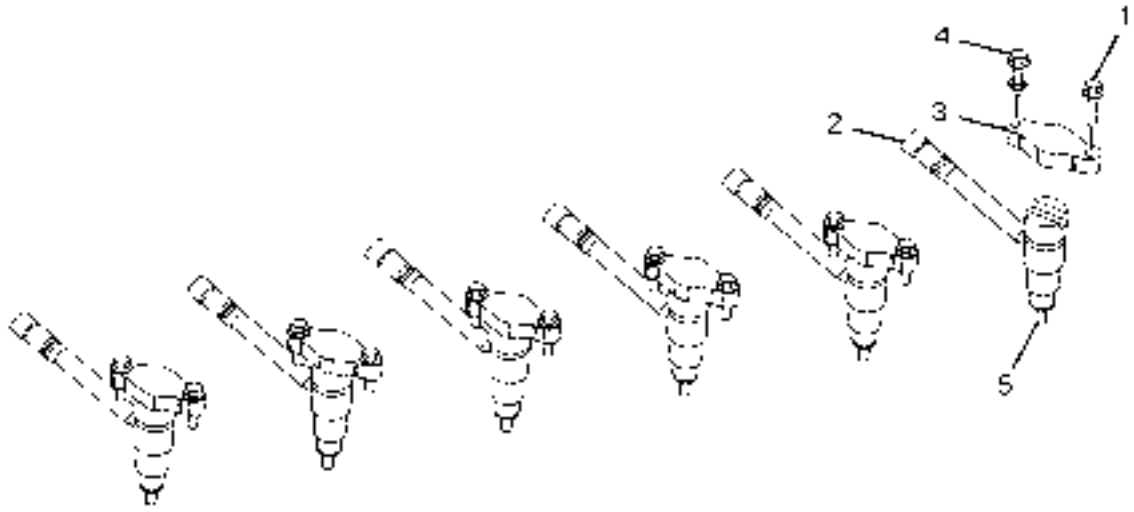

2076600407R.08A	INJECTOR	GROUP 07

CHASSIS TYPE: ALL

FIG. NO.	PART NUMBER	DESCRIPTION	QTY	REMARKS
1	278601989916	SCREW HEX FLANGE HEAD CAP M 6X1X25	6	
2	278601989921	CONNECTION MALE	6	
3	278601989922	CLAMP INJECTOR	6	
4	278601989923	SCREW HEX FLANGE HEAD CAP M6X1X25	6	
5	04321912186YE	INJECTOR	6	

2076600409R.01	FUEL FILTER	GROUP 09

CHASSIS TYPE: ALL

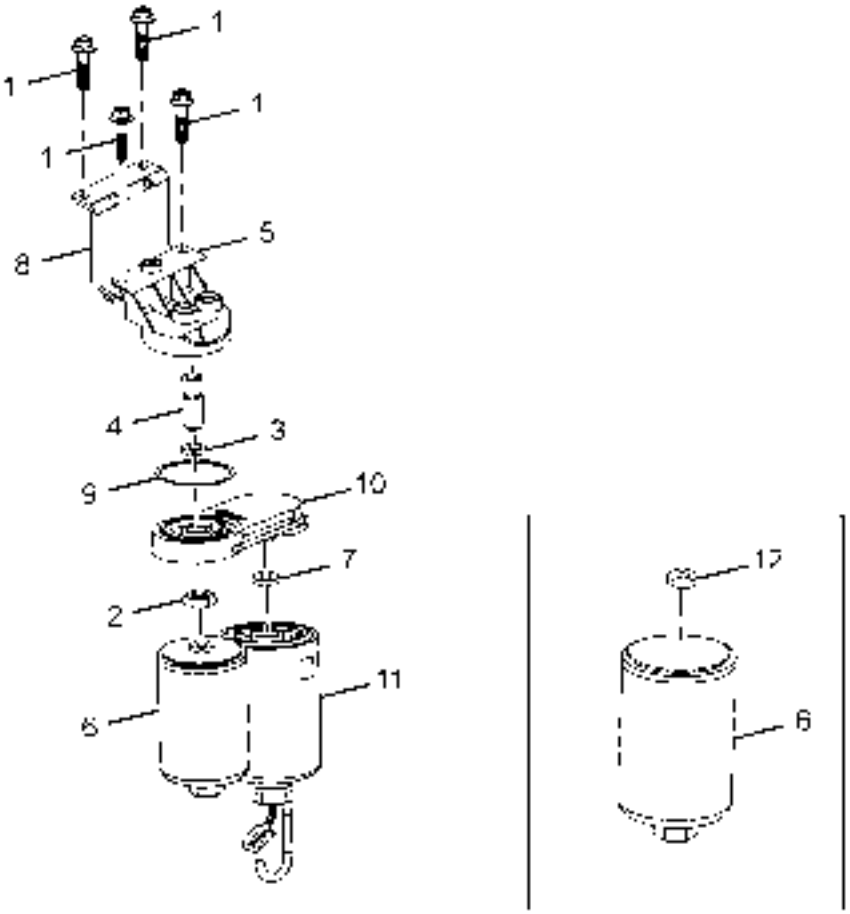

2076600409R.01	FUEL FILTER	GROUP 09

CHASSIS TYPE: ALL

FIG. NO.	PART NUMBER	DESCRIPTION	QTY	REMARKS
1	278607999906	SCREW HEX FLANGE HEAD M 8X1.25X35	4	
2	278609999902	NUT M 16X1.5	1	
3	278607999911	SEAL O RING SMALL	1	
4	278609999903	ADAPTER FILTER HEAD	1	
5	278609999963	HEAD FUEL FILTER	1	
6	278609119904	FILTER FUEL	1	
7	278615999969	GASKET,FILTER	1	
8	278609989903	BRACKET FUEL FILTER	1	
9	T06560000306	SEAL,RECTANGULAR RING	1	
10	278609999904	HEAD FUEL FILTER	1	
11	278607989914	ASSY FUEL WATER SEPARATOR WITH VALVE	1	
11	278607989916	ASSY FUEL WATER SEPARATOR WITHOUT VALVE	1	
12	278618999971	GASKET RECTANGULARF/FILTER E-II	1	

2076600409R.02	ENGINE VENT COOLANT	GROUP 09

CHASSIS TYPE: ALL

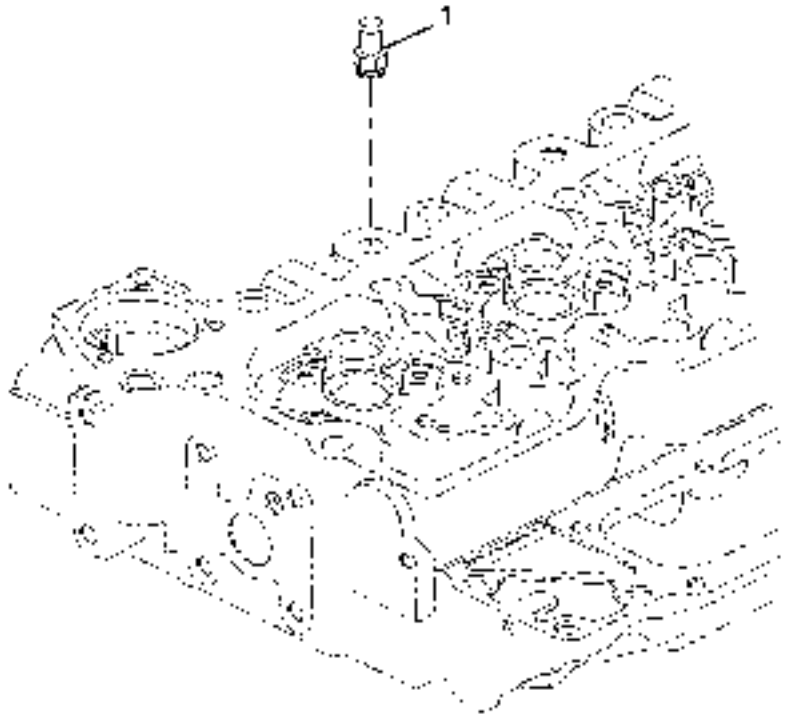

2076600409R.02	ENGINE VENT COOLANT	GROUP 09

CHASSIS TYPE: ALL

FIG. NO.	PART NUMBER	DESCRIPTION	QTY	REMARKS
1	278607989950	FITTING ORIFICE	1	

TATA MOTORS

2076600413R.01	AIR COMPRESSOR	GROUP 13

CHASSIS TYPE: ALL

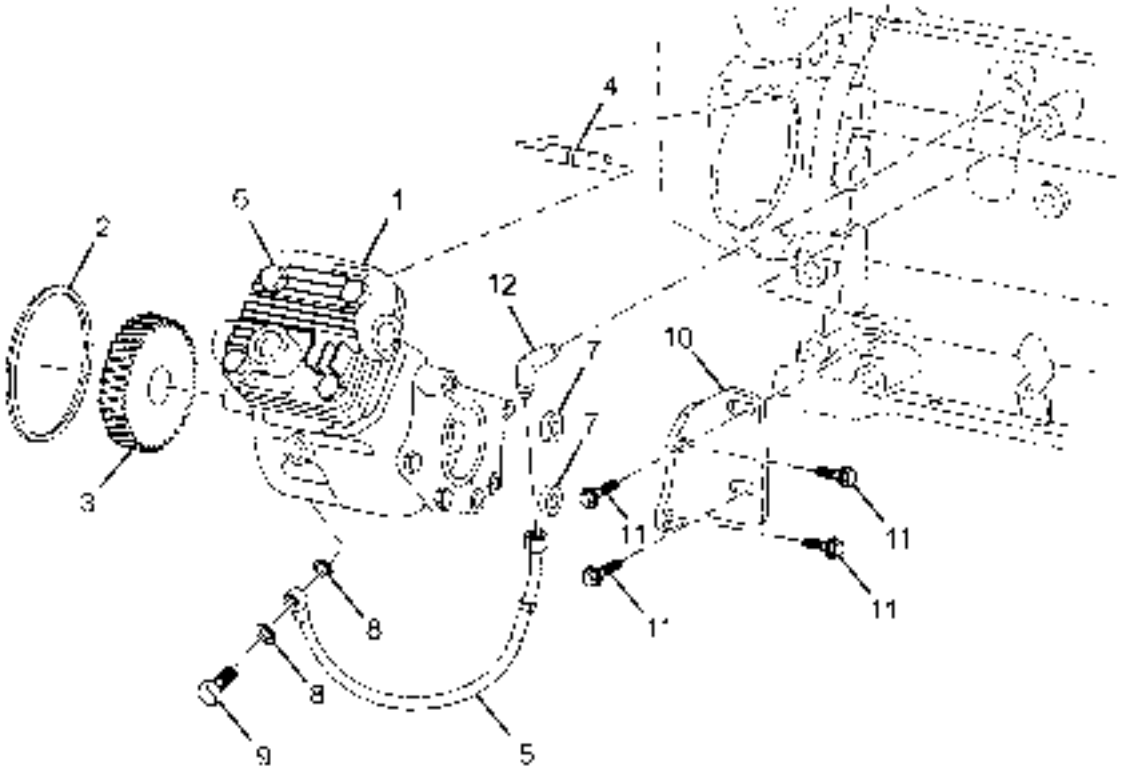

2076600413R.01	AIR COMPRESSOR	GROUP 13

CHASSIS TYPE: ALL

FIG. NO.	PART NUMBER	DESCRIPTION	QTY	REMARKS
1	278613999915	AIR COMPRESSOR TOP PORT	1	
2	278613997701	SEAL, RECTANGULAR	1	
3	278613995401	GEAR, ACCESSORY DRIVE	1	
4	278613998801	STUD	2	
5	278621999907	HOSE, FLEXIBLE	1	
6	278613996501	NUT, HEX FLANGE M 12 X 1.75	2	
7	T06560000307	SPACER,MOUNTING	2	
8	278613999101	WASHER, SEALING	2	
9	278613998003	SCREW, BANJO CONNECTOR M 10 X 1.00 X 19	1	
10	278613999907	BRACE, AIR COMPRESSOR	1	
11	278613998002	SCREW, HEX FLANGE M 8 X 1.25 X 25	4	
12	T06560000299	ELBOW MALE ADAPTER	1	

TATA MOTORS

2076600413R.02	REPAIR KIT FOR AIR COMPRESSOR	GROUP 13

CHASSIS TYPE: ALL

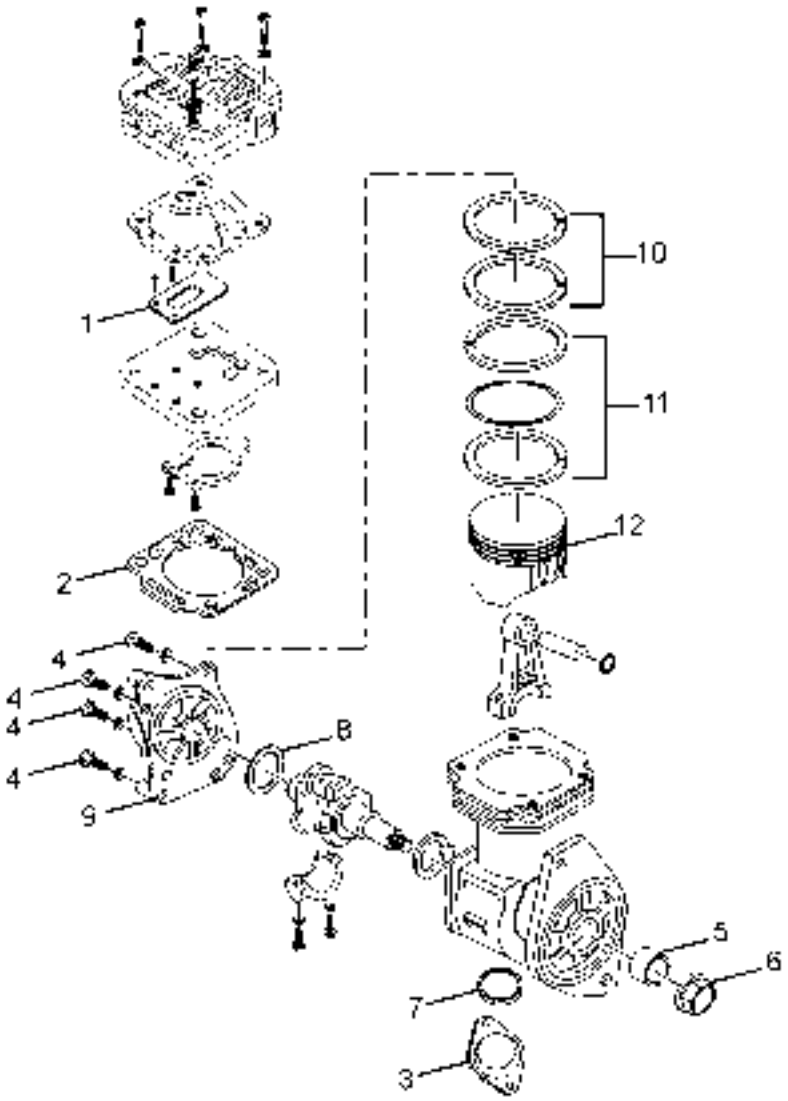

2076600413R.02	REPAIR KIT FOR AIR COMPRESSOR	GROUP 13

CHASSIS TYPE: ALL

FIG. NO.	PART NUMBER	DESCRIPTION	QTY	REMARKS
-	W61550000007	CYLINDER HEAD TOP PORT	1	
-	278613999916	GASKET KIT CYLINDER HEAD	1	
		CONSISTS OF :		
1	-	DELIVERY REED	1	
2	-	DELIVERY JOINT	1	
-	278613999917	MINOR REPAIR KIT AIR COMPRESSOR	1	
		CONSISTS OF :		
1	-	DELIVERY REED	1	
2	-	DELIVERY JOINT	1	
3	-	COVER SUMP	1	
4	-	SET SCREW	4	
-	278613999918	MAJOR REPAIR KIT AIR COMPRESSOR	1	
		CONSISTS OF :		
1	-	DELIVERY REED	1	
2	-	DELIVERY JOINT	1	
3	-	COVER SUMP	1	
4	-	SET SCREW	4	
5	-	WRAPPED BUSH	1	
6	-	NUT CRANKSHAFT	1	
7	-	O' RING	1	
8	-	SEALING RING	1	
9	-	END COVER	1	
-	278613999919	REPAIR KIT PISTON ASSY.	1	
		CONSISTS OF :		
10	-	COMPRESSION RING	2	
11	-	OIL CONTROL RING	1	
12	-	PISTON	1	
-	278613999920	REPAIR KIT PISTON RING	1	
		CONSISTS OF :		
10	-	COMPRESSION RING	2	
11	-	OIL CONTROL RING	1	

TATA MOTORS

2076600413R.03	COVER AIR COMPRESSOR	GROUP 13

CHASSIS TYPE: ALL

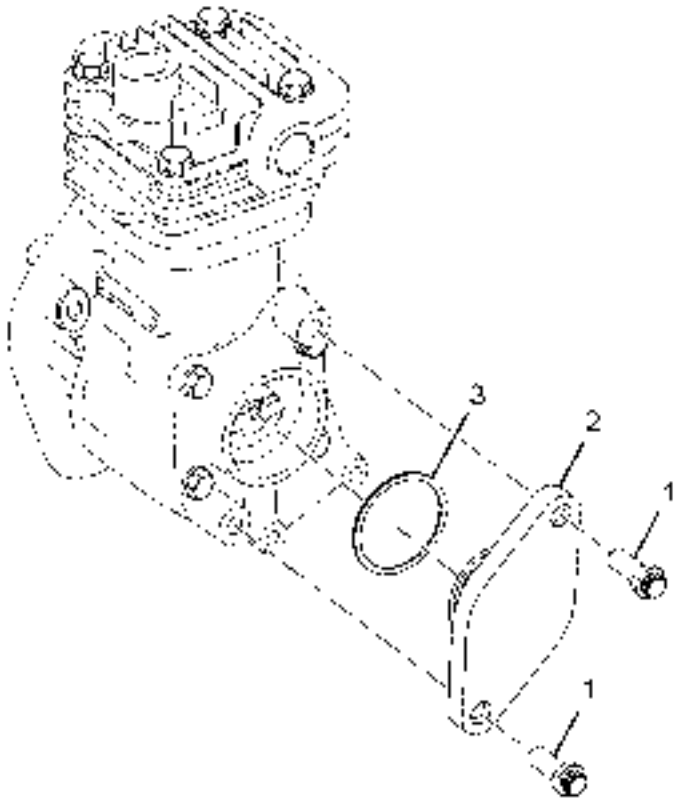

2076600413R.03	COVER AIR COMPRESSOR	GROUP 13

CHASSIS TYPE: ALL

FIG. NO.	PART NUMBER	DESCRIPTION	QTY	REMARKS
1	278607999994	SCREW TWELVE POINT M 10X1.5X25	2	
2	278613999906	COVER AIR COMPRESSOR	1	
3	278603999951	SEAL O RING	1	

TATA MOTORS

2076600414R.01	EXHAUST MANIFOLD & MOUNTING	GROUP 14

CHASSIS TYPE: ALL

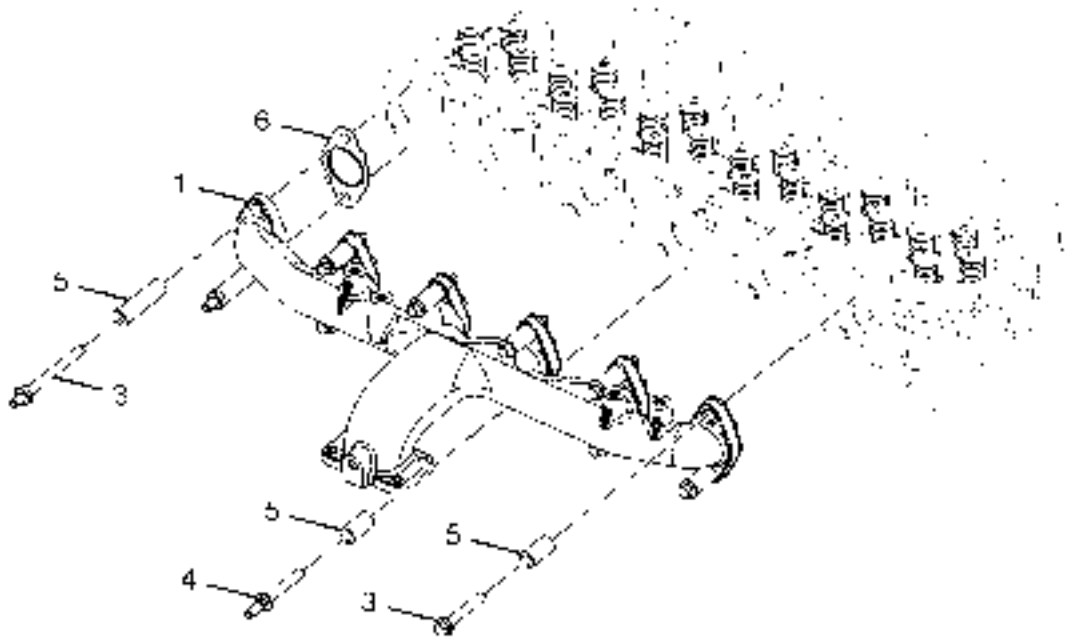

2076600414R.01	EXHAUST MANIFOLD & MOUNTING	GROUP 14

CHASSIS TYPE: ALL

FIG. NO.	PART NUMBER	DESCRIPTION	QTY	REMARKS
1	T06560000175	MANIFOLD,EXHAUST	1	
3	278614999963	SCREW HEX FLANGE HD CAP M 10X1.50X65	11	
4	278614999964	SCREW HEX FLANGE HD CAP M 10X1.50X65	1	
5	278614999965	SPACER MOUNTING	12	
6	278614999966	GASKET EXHAUST MANIFOLD	6	

TATA MOTORS

2076600414R.02	TURBOCHARGER	GROUP 14

CHASSIS TYPE: ALL

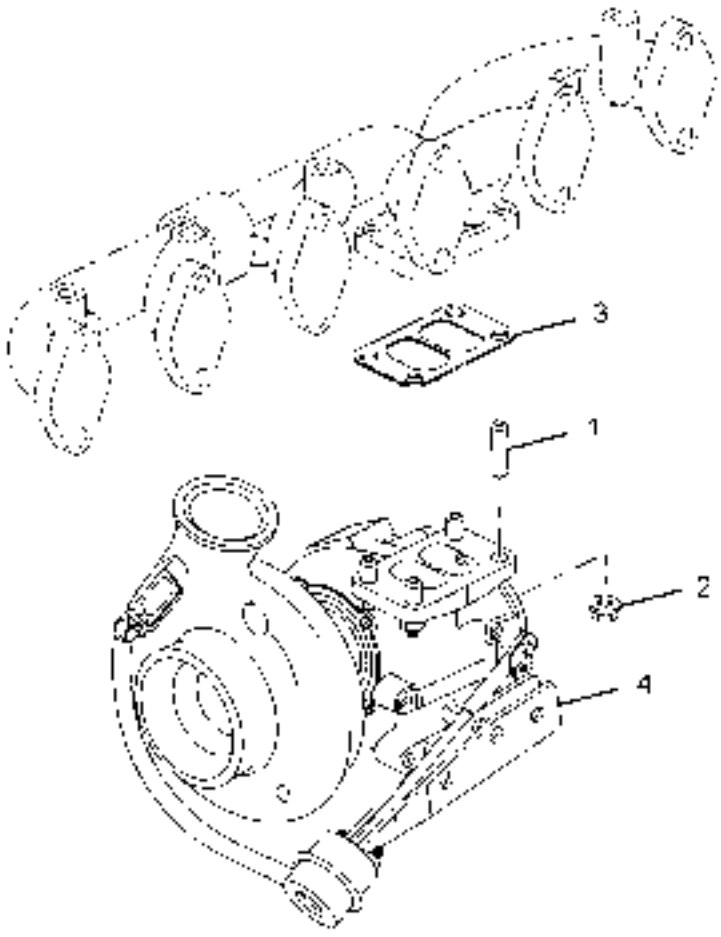

2076600414R.02	TURBOCHARGER	GROUP 14

CHASSIS TYPE: ALL

FIG. NO.	PART NUMBER	DESCRIPTION	QTY	REMARKS
1	278614999904	STUD M 10X1.5X42	4	
2	278614999905	NUT HEX FLANGE M 10X1.5	4	
3	278614999902	GASKET TURBOCHARGER	1	
4	C66610000001	TURBOCHARGER	1	

TATA MOTORS

2076600414R.03	TURBOCHARGER PLUMBING	GROUP 14

CHASSIS TYPE: ALL

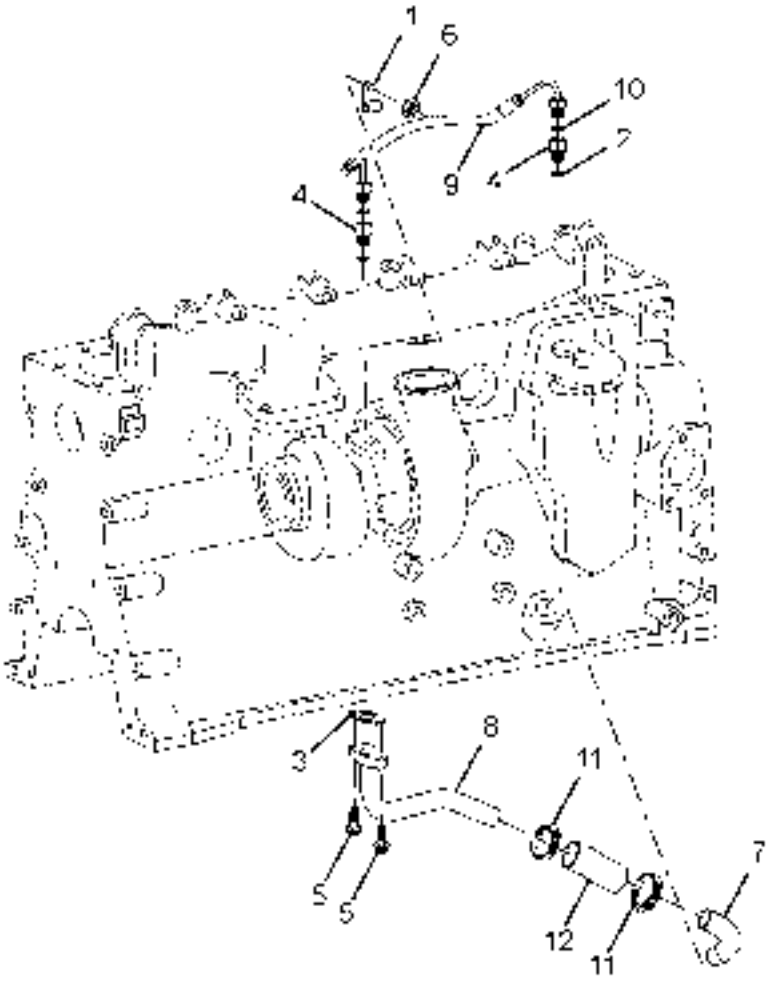

2076600414R.03	TURBOCHARGER PLUMBING	GROUP 14

CHASSIS TYPE: ALL

FIG. NO.	PART NUMBER	DESCRIPTION	QTY	REMARKS
1	278614999927	CLAMP,TUBE	1	
2	278614999920	SEAL, 'O' RING	2	
3	278614999903	GASKET, OIL DRAIN	1	
4	278615999907	CONNECTOR, FEMALE	2	
5	278613998001	SCREW, HEX. FLANGE M 8X1.25X20	2	
6	278607999907	NUT, HEX. FLANGE M 10X1.50	1	
7	278618999950	TUBE, TURBO OIL DRAIN	1	
8	278618999966	CONNECTION, TURBO OIL DRAIN	1	
9	278614999923	HOSE, FLEXIBLE	1	
10	278614999926	WASHER, SEALING (7.2 MM THK.)	2	
11	278607999967	CLAMP, HOSE	2	
12	278601999946	HOSE, PLAIN	1	

TATA MOTORS

2076600414R.04	CONNECTION AIR TRANSFER	GROUP 14

CHASSIS TYPE: ALL

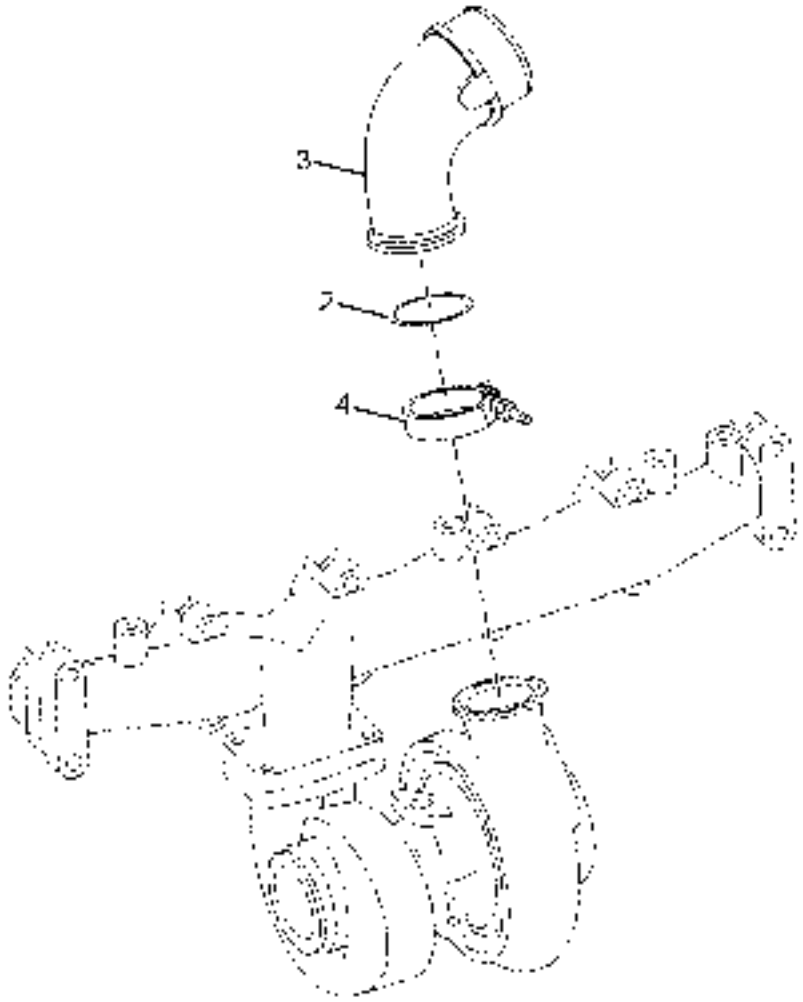

2076600414R.04	CONNECTION AIR TRANSFER	GROUP 14

CHASSIS TYPE: ALL

FIG. NO.	PART NUMBER	DESCRIPTION	QTY	REMARKS
2	278605999942	SEAL, O RING	1	
3	278601999957	PIPE, AIR TRANSFER	1	
4	278614999942	CLAMP, V BAND	1	

TATA MOTORS

2076600414R.05	CONNECTION EXHAUST OUTLET	GROUP 14

CHASSIS TYPE: ALL

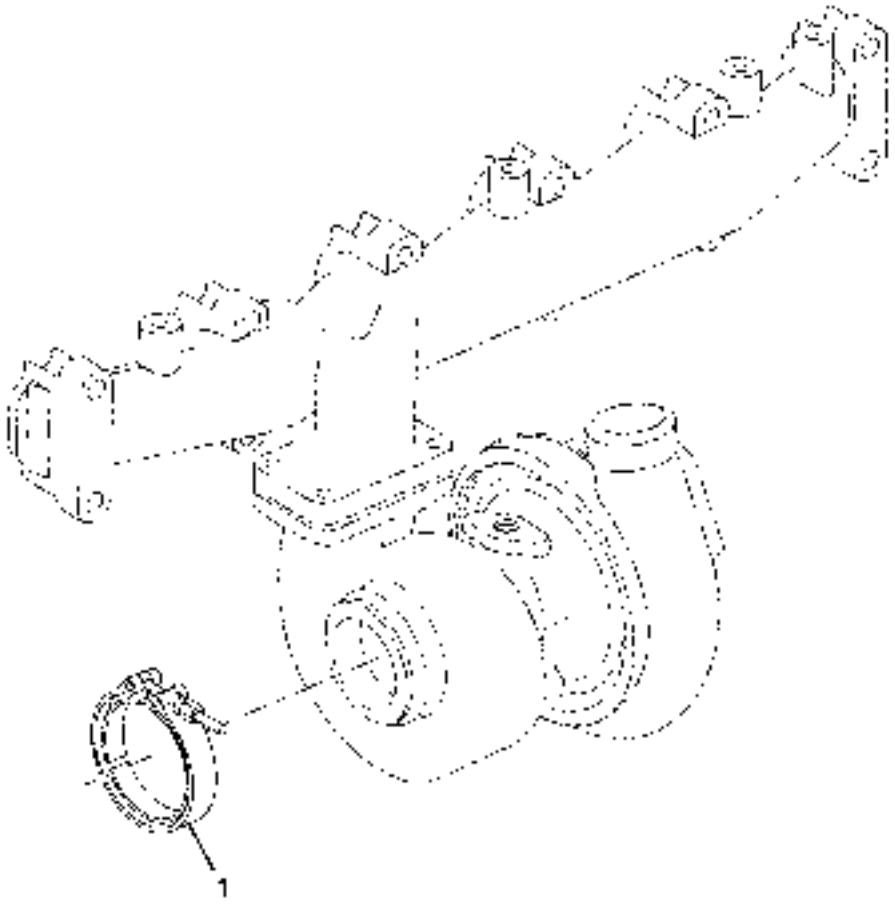

2076600414R.05	CONNECTION EXHAUST OUTLET	GROUP 14

CHASSIS TYPE: ALL

FIG. NO.	PART NUMBER	DESCRIPTION	QTY	REMARKS
1	278614999931	CLAMP V BAND	1	

2786156214R.07	INTERCOOLER AND INTERCOOLER CONNECTION	GROUP 14

CHASSIS TYPE: ALL

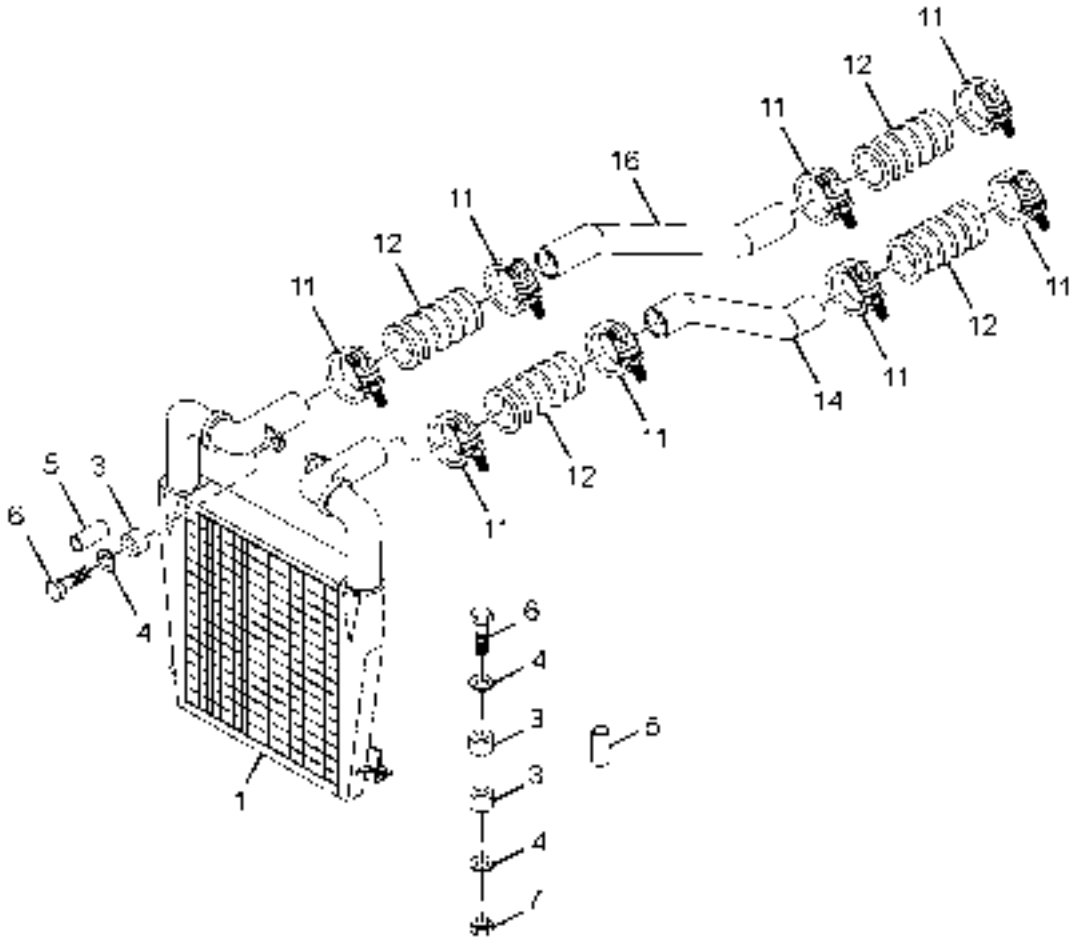

2786156214R.07	INTERCOOLER AND INTERCOOLER CONNECTION	GROUP 14

CHASSIS TYPE: ALL

FIG. NO.	PART NUMBER	DESCRIPTION	QTY	REMARKS
1	278614609973	INTER COOLER (FOR LPS 4018 TC BS III) (ALKRAFT)	1	
3	278650006302	RUBBER BUFFER	8	
4	278614609201	WASHER	4	
5	278650406903	SPACER TUBE	4	
6	11063896022	HEX BOLT M 10X55	4	
-	12460501057	BRIGHT WASHER 10.5	11	
-	12520698050	SPRING WASHER B10	11	
7	12051598073	HEX. NUT M 10	4	
11	14280599272	HOSE CLAMP SLTB - 72	2	
12	278614605802	HOSE HUMP	2	
14	278614606954	PIPE(IC TO INTAKE MANIFOLD)	1	
-	278614605804	HOSE HUMP-EPDM(IC TO ENG)	1	
16	278614603841	PIPE(TC TO IC)	1	

TATA MOTORS

2076600415R.01	STARTER MOTOR	GROUP 15

CHASSIS TYPE: ALL

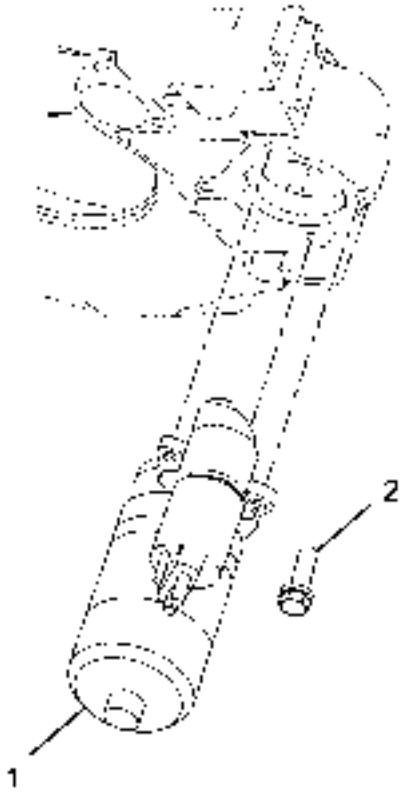

LPK1616C 05.15.01 A05

2076600415R.01	STARTER MOTOR	GROUP 15

CHASSIS TYPE: ALL

FIG. NO.	PART NUMBER	DESCRIPTION	QTY	REMARKS
1	278615999966	STARTER MOTOR 24 VOLTS	1	
2	278605999936	SCREW TWELVE POINT CAP M10X1.5X35	1	

TATA MOTORS

2076600415R.02A	ALTERNATOR & ALTERNATOR LOCATION	GROUP 15

CHASSIS TYPE: ALL

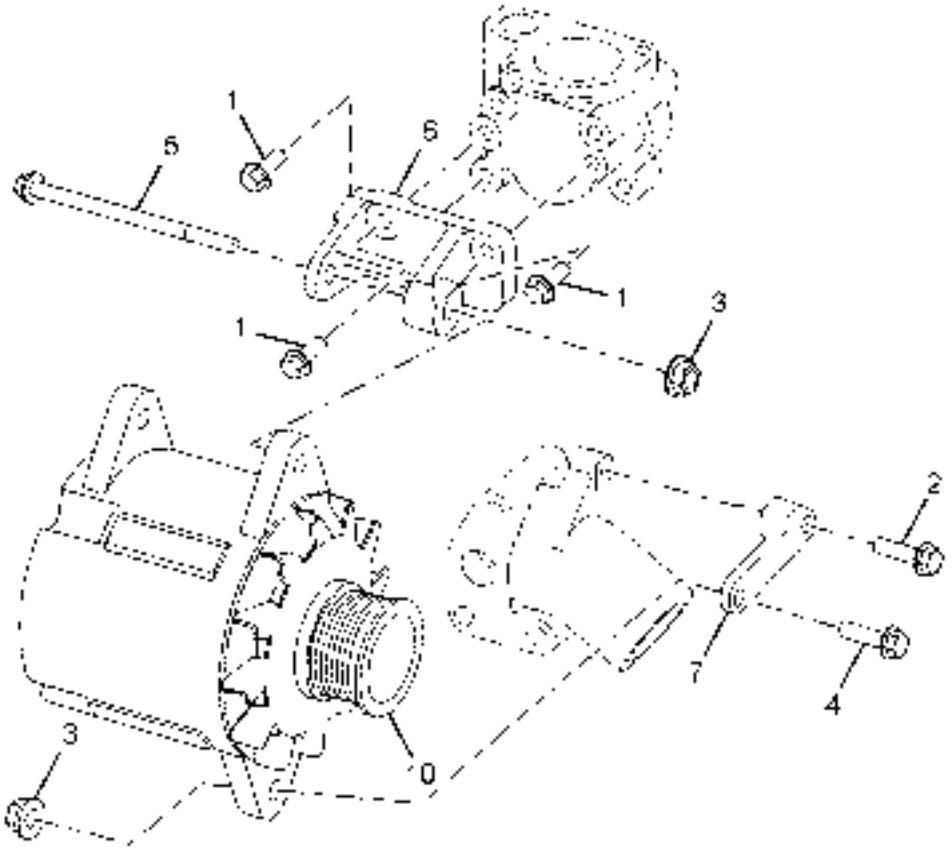

LPT 9150 30 15 02 A05

2076600415R.02A	ALTERNATOR & ALTERNATOR LOCATION	GROUP 15

CHASSIS TYPE: ALL

FIG. NO.	PART NUMBER	DESCRIPTION	QTY	REMARKS
10	T06560000317	ALTERNATOR 24 VOLTS, 45 AMPS	1	
1	278613998002	SCREW, HEX FLANGE M 8X1.25X25	3	
2	278613998001	SCREW HEX. FLANGE HEAD CAP M 8X1.25X20	2	
3	278607999907	NUT HEX FLANGE M 10X1.5	2	
4	278614999914	SCREW HEX FLANGE HD CAP M 10X1.5X30	1	
5	278615998001	SCREW HEX. FLANGE HEAD CAP M10X1.5X100	1	
6	T06560000296	SUPPORT, ALTERNATOR	1	
7	T06560000310	BRACE,ALTERNATOR	1	
-	278615998601	SPACER MOUNTING	1	
-	278605999956	CLAMP	1	

TATA MOTORS

2076600415R.03	ALTERNATOR MOUNTING	GROUP 15

CHASSIS TYPE: ALL

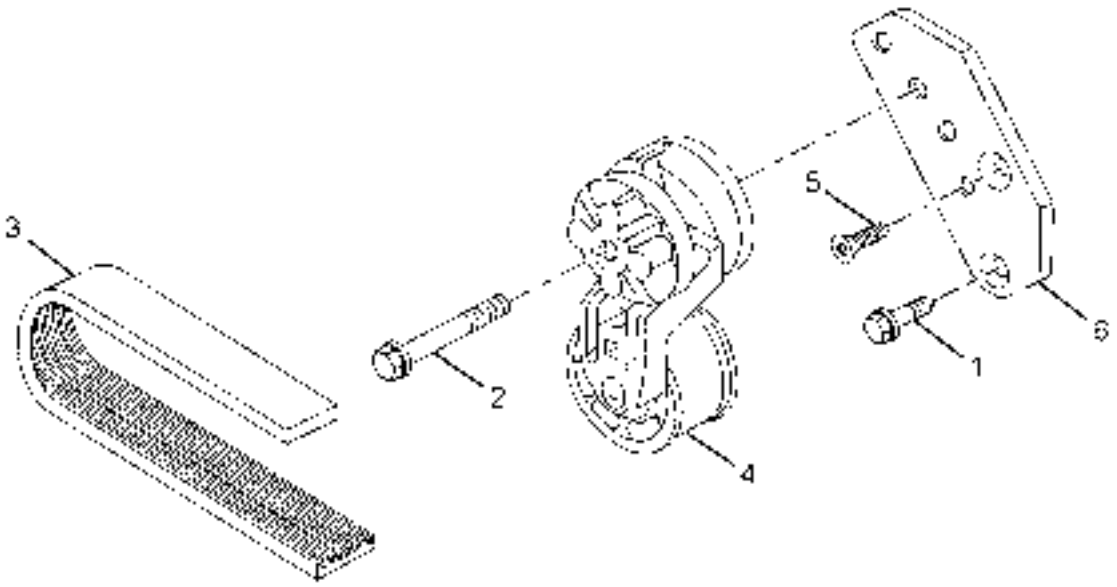

2076600415R.03	ALTERNATOR MOUNTING	GROUP 15

CHASSIS TYPE: ALL

FIG. NO.	PART NUMBER	DESCRIPTION	QTY	REMARKS
1	278613998002	SCREW HEX. FLANGE HEAD CAP M 8X1.25X25	1	
2	278615998002	SCREW FLAT HD. CAP M10X1.5X72.5	1	
3	278615996302	BELT V. RIBBED	1	
4	278615999902	TENSIONER BELT	1	
5	278615998003	SCREW FLAT HEAD M 8X1.25X25	1	
6	278615993303	BRACKET BELT TENSIONER	1	

TATA MOTORS

2076600418R.01	LUBRICATING OIL COOLER / OIL FILTER	GROUP 18

CHASSIS TYPE: ALL

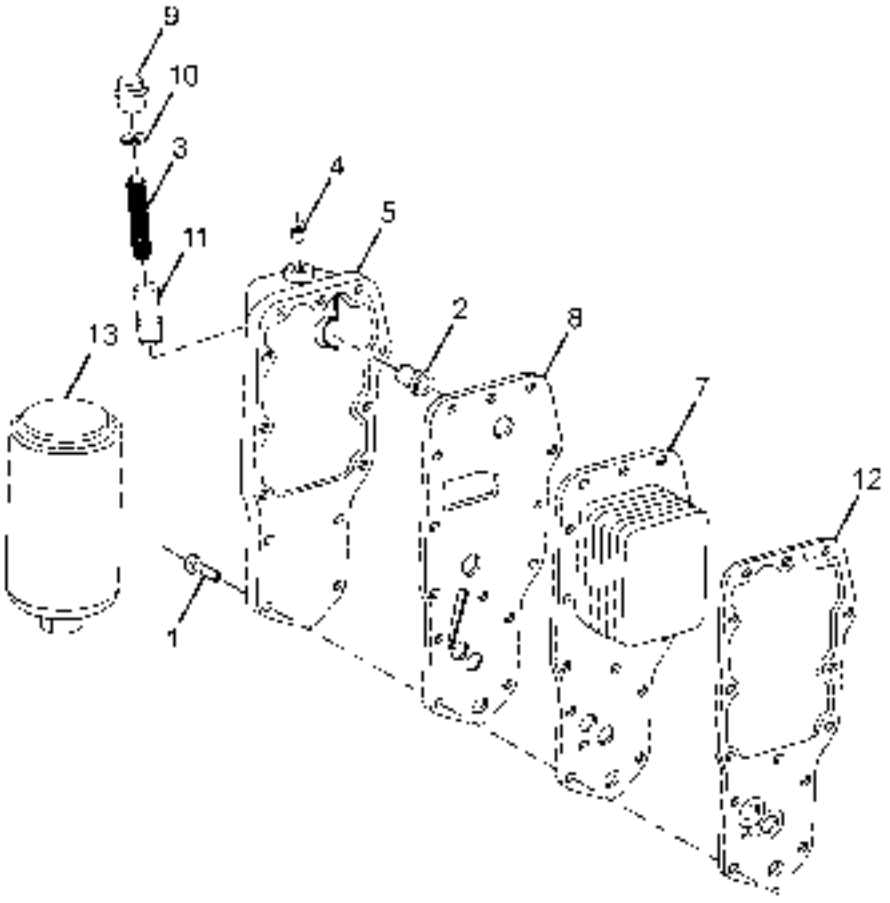

2076600418R.01	LUBRICATING OIL COOLER / OIL FILTER	GROUP 18

CHASSIS TYPE: ALL

FIG. NO.	PART NUMBER	DESCRIPTION	QTY	REMARKS
1	278607999906	SCREW HEX. HEAD CAP M 8X1.25X35	14	
2	278618999949	VALVE BYPASS	1	
3	278618999902	SPRING COMPRESSION	1	
4	278601999913	PLUG PIPE	1	
5	278618999903	HEAD LUB. OIL FILTER WITH ADAPTER	1	
7	278618999905	CORE COOLER	1	
8	278618999906	GASKET FILTER HEAD	1	
9	278618999907	PLUG THREADED	1	
10	278618999908	SEAL 'O' RING	1	
11	278618999909	PLUNGER PRESSURE REGULATOR	1	
12	278618999910	GASKET LUB. COOLER	1	
13	252718130145	CARTRIDGE LUB. OIL FILTER	1	

TATA MOTORS

2076600418R.02	OIL PUMP	GROUP 18

CHASSIS TYPE: ALL

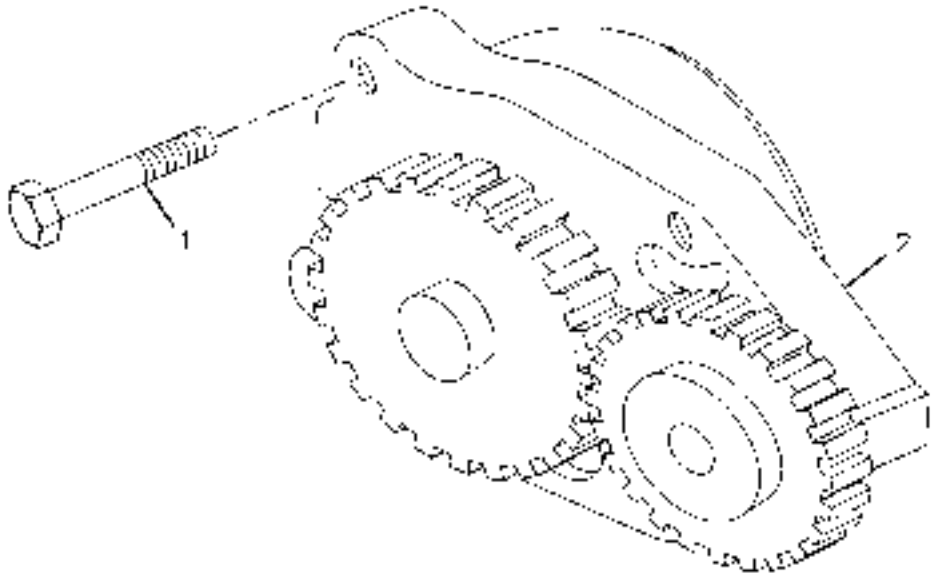

2076600418R.02	OIL PUMP	GROUP 18

CHASSIS TYPE: ALL

FIG. NO.	PART NUMBER	DESCRIPTION	QTY	REMARKS
1	278618999913	SCREW HEX. HEAD CAP M 8X1.25X30	4	
2	278618999933	PUMP LUBRICATING OIL	1	

TATA MOTORS

2076600420R.01	THERMOSTAT	GROUP 20

CHASSIS TYPE: ALL

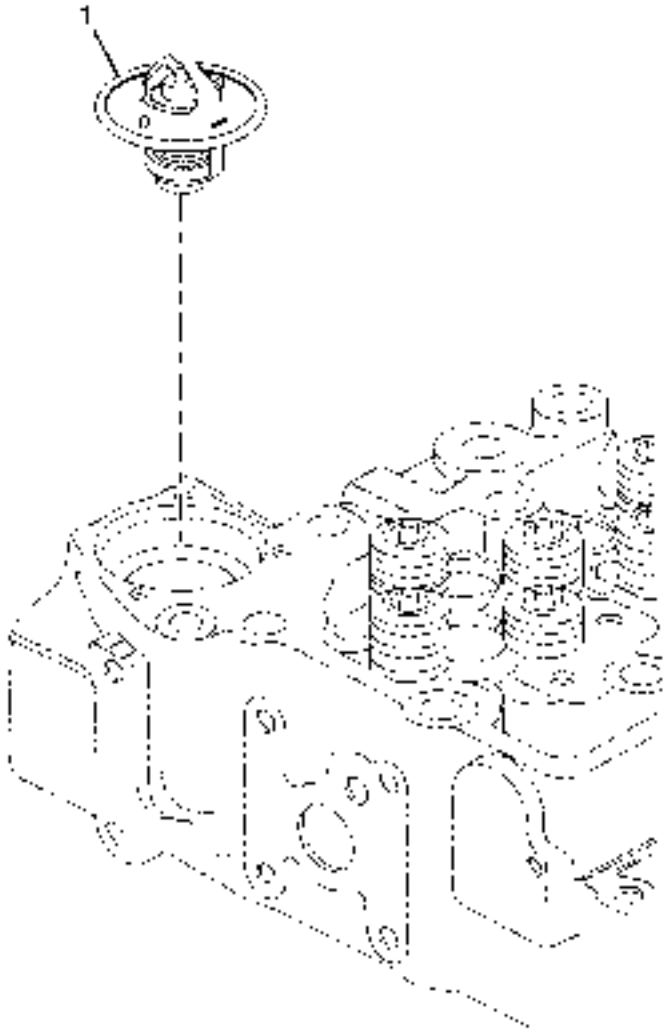

2076600420R.01	THERMOSTAT	GROUP 20

CHASSIS TYPE: ALL

FIG. NO.	PART NUMBER	DESCRIPTION	QTY	REMARKS
1	278620999973	THERMOSTAT	1	

2076600420R.02	WATER PUMP	GROUP 20

CHASSIS TYPE: ALL

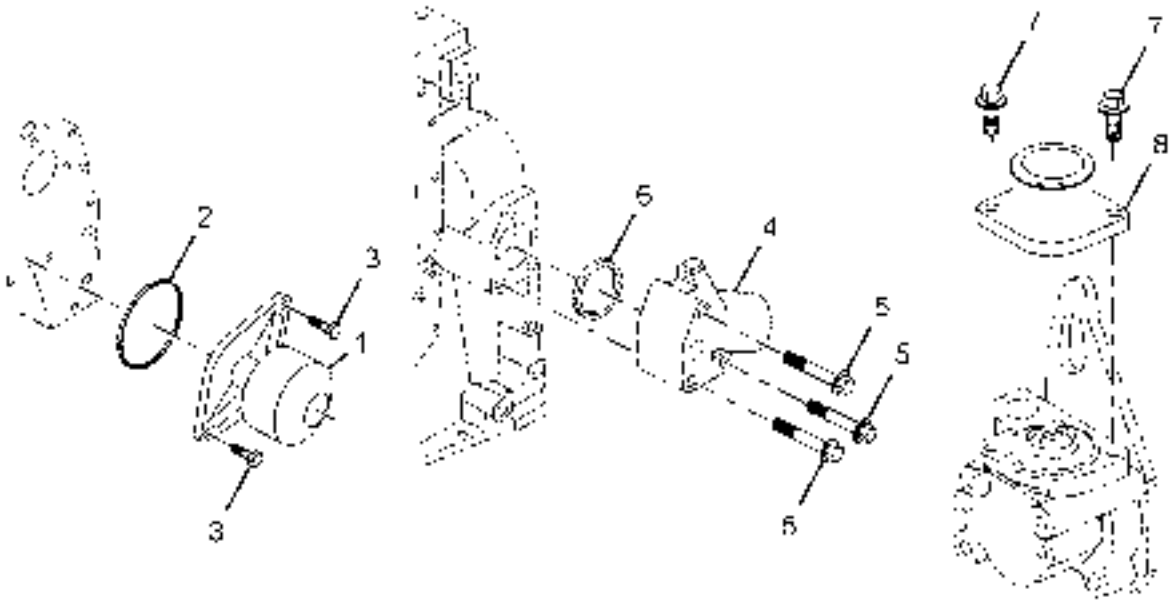

2076600420R.02	WATER PUMP	GROUP 20

CHASSIS TYPE: ALL

FIG. NO.	PART NUMBER	DESCRIPTION	QTY	REMARKS
1	278620999972	PUMP WATER	1	
2	278607999979	SEAL RECTANGULAR RING	1	
3	278605999911	SCREW HEX. HEAD CAP M 8X1.25X22	2	
		WATER INLET CONNECTION		
4	T06560000186	CONNECTION,WATER INLET	1	
5	278620999920	SCREW HEX. FLANGE HEAD CAP M 10X1.5X75	3	
6	278620999910	SEAL RECTANGULAR RING	1	
		WATER OUTLET CONNECTION		
7	278607999960	SCREW HEX. FLANGE HEAD CAP M 6X1.00X20	3	
8	278620999974	CONNECTION WATER OUTLET	1	

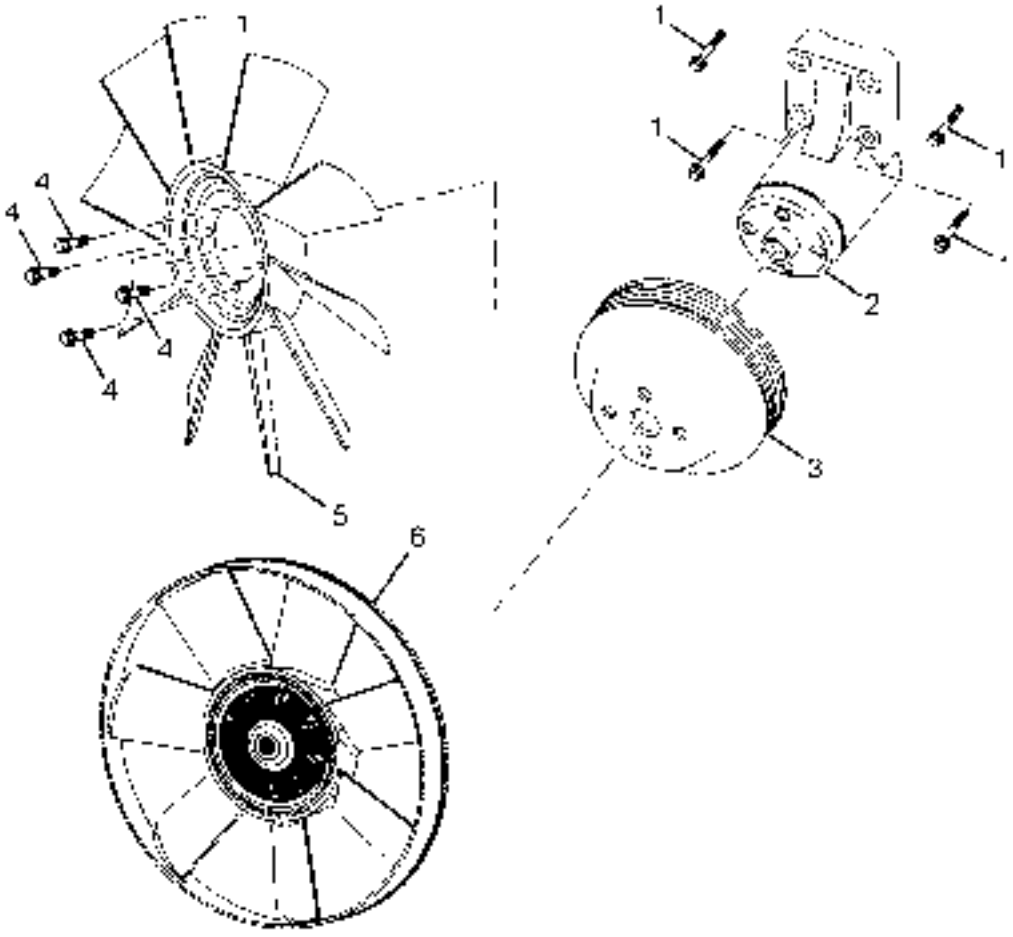
1
4
4
4
4
5
6
1
1
1
2
3

2076600420R.03	FAN AND FAN DRIVE	GROUP 20

CHASSIS TYPE: ALL

FIG. NO.	PART NUMBER	DESCRIPTION	QTY	REMARKS
1	278620999901	SCREW H.F.H.C. M8X1.25X40	4	
2	278620999902	SUPPORT FAN	1	
3	207615999902	PULLEY FAN	1	
4	207613139910	SCREW, HEX FLANGE HEAD CAP M10 X 1.5	4	
5	T06560000264	FAN ENGINE	1	UPTO JULY'2010
6	T06560000479	FAN ENGINE(Z-RING TYPE) WITH VISCOUS CLUTCH	1	FROM AUG'2010
		CONSISTS OF:		
	278620999976	FAN ENGINE BORGWARNER 22 INCH	1	SERVICEABLE
	278620999977	CLUTCH VISCOUS BORGWARNER 22 INCH	1	SERVICEABLE

2076600420R.04	CLUTCH VISCOUS FAN	GROUP 20

CHASSIS TYPE: ALL

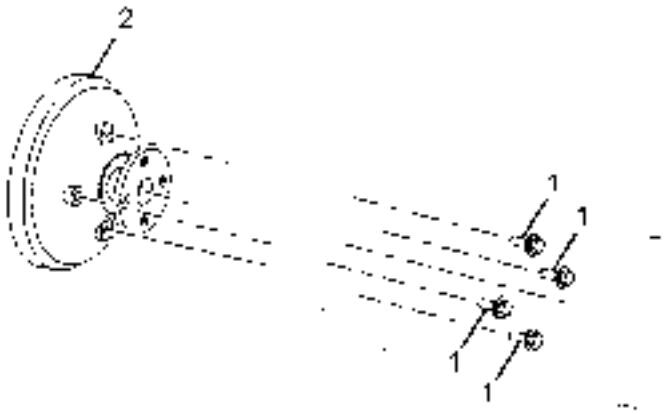

2076600420R.04	CLUTCH VISCOUS FAN	GROUP 20

CHASSIS TYPE: ALL

FIG. NO.	PART NUMBER	DESCRIPTION	QTY	REMARKS
1	278605999905	SCREW, HEX. FLANGE HEAD CAP M 8X1.25X16	4	
2	278620999937	CLUTCH,VISCOUS FAN	1	

TATA MOTORS

2076600821R.01	AIR FILTER	GROUP 21

CHASSIS TYPE: ALL

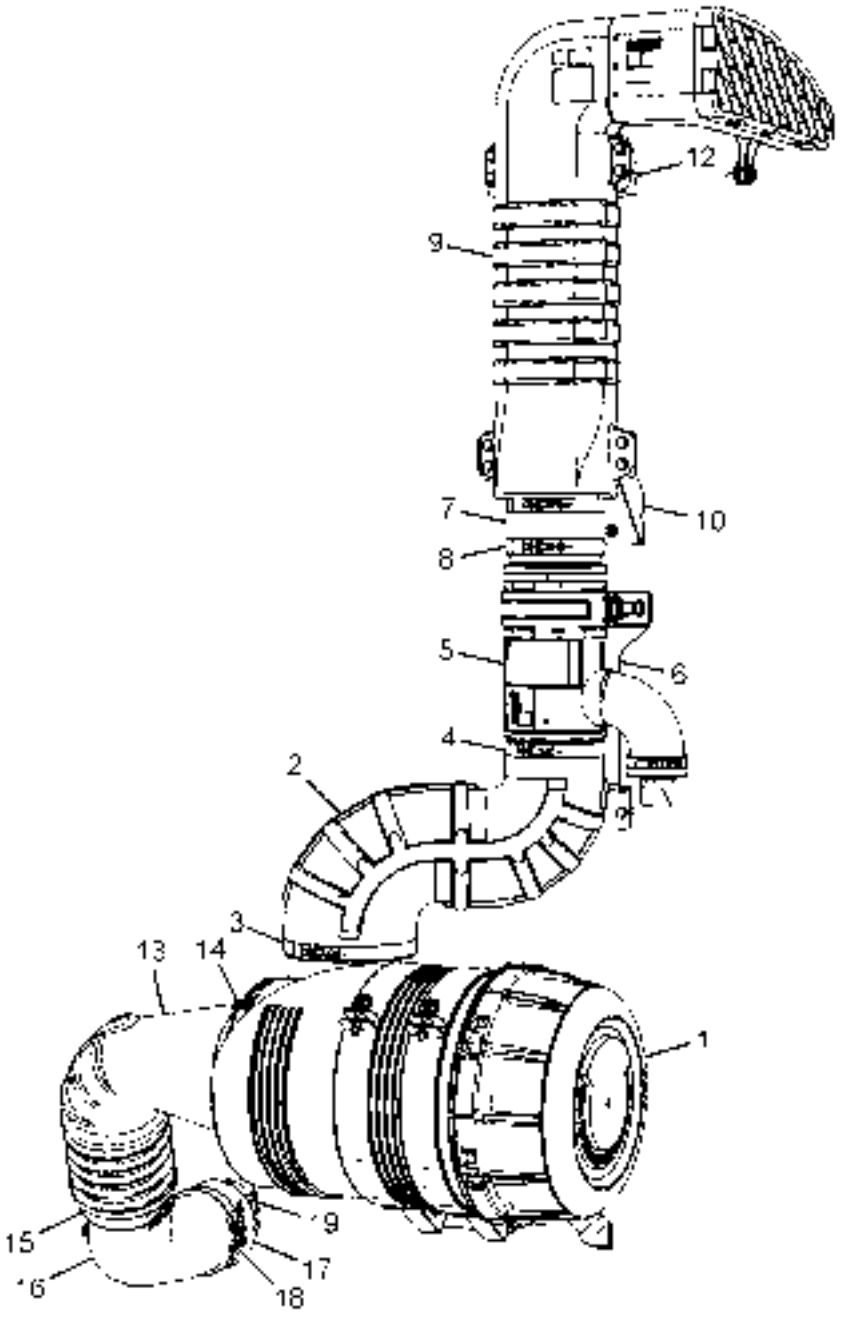

2076600821R.01	AIR FILTER	GROUP 21

CHASSIS TYPE: ALL

FIG. NO.	PART NUMBER	DESCRIPTION	QTY	REMARKS
1	278609140149	13"DIA AIR CLEANER ASY(WITH RADIAL SEAL)N	1	
2	278609135868	HOSE DEGREE(8240412)	1	
3	278609134228	HOSE CLAMP;T BOLT.(8140151)	1	
4	278609134227	HOSE CLAMP;T BOLT.(8140083)	1	
5	278609140142	ASSY.PRECLEANER;PLASTIC.	1	
6	278609140141	BRACKET MOUNTING ASY.(8391174)	1	
7	278609135870	HOSE(127.5 ID X 85 L)	1	
8	278609134227	HOSE CLAMP;T BOLT.(8140083)	1	
9	278609136337	DUCT ASSY;AIR INTAKE(8330088)	1	
10	278609133354	BRACKET MOUNTING;POWDER COATED(8358146)	1	
-	278609140140	DAMPER ASY.(8391148)	4	
12	278609133353	BRACKET MOUNTING;POWDER COATED(8358126)	1	
13	278609135872	HOSE REDUCER(BENT)(8240414)	1	
14	278609134228	HOSE CLAMP;T BOLT.(8140151)	1	
15	278609134227	HOSE CLAMP;T BOLT.(8140083)	1	
16	278609136954	PIPE;PLASTIC.(8900308)	1	
17	278609135867	HOSE REDUCER(8240451)	1	
18	278609134227	HOSE CLAMP;T BOLT.(8140083)	1	
19	252709130319	T BOLT TYPE HOSE CLAMP-TB108-M/S FLTG	1	
-	278609139934	RESTRICTION INDICATOR;ELECTROMECHANICAL.N	1	
-	278609139935	AIR FILTER;SAFETY(8200433)	1	
-	278609139936	AIR FILER; PRIMARY(8200434)	1	
-	278609140152	BRACKET ASY(8359218)	1	
-	278609140153	BRACKET ASY(POWDER COATED)(8359217)	1	

2076600422R.01	ENGINE LIFTING	GROUP 22

CHASSIS TYPE: ALL

2076600422R.01	ENGINE LIFTING	GROUP 22

CHASSIS TYPE: ALL

FIG. NO.	PART NUMBER	DESCRIPTION	QTY	REMARKS
1	278618999917	SCREW HEX.FLANGE HEAD CAP M 12 X 1.75 X 25	1	
2	278607999983	SCREW HEX FLANGE HEAD CAP M 8X1.25X30	2	
3	278614999914	SCREW HEX FLANGE HEAD CAP M 10X1.5X30	2	
4	278622999907	BRACKET LIFTING	1	
5	278622999908	BRACKET LIFTING	1	
6	278622999909	SCREW HEX FLANGE HEAD CAP	1	
7	T06560000311	SPACER,MOUNTING	1	

TATA MOTORS

2076602023R.01	A/C COMPRESSOR	GROUP 23

CHASSIS TYPE: ALL

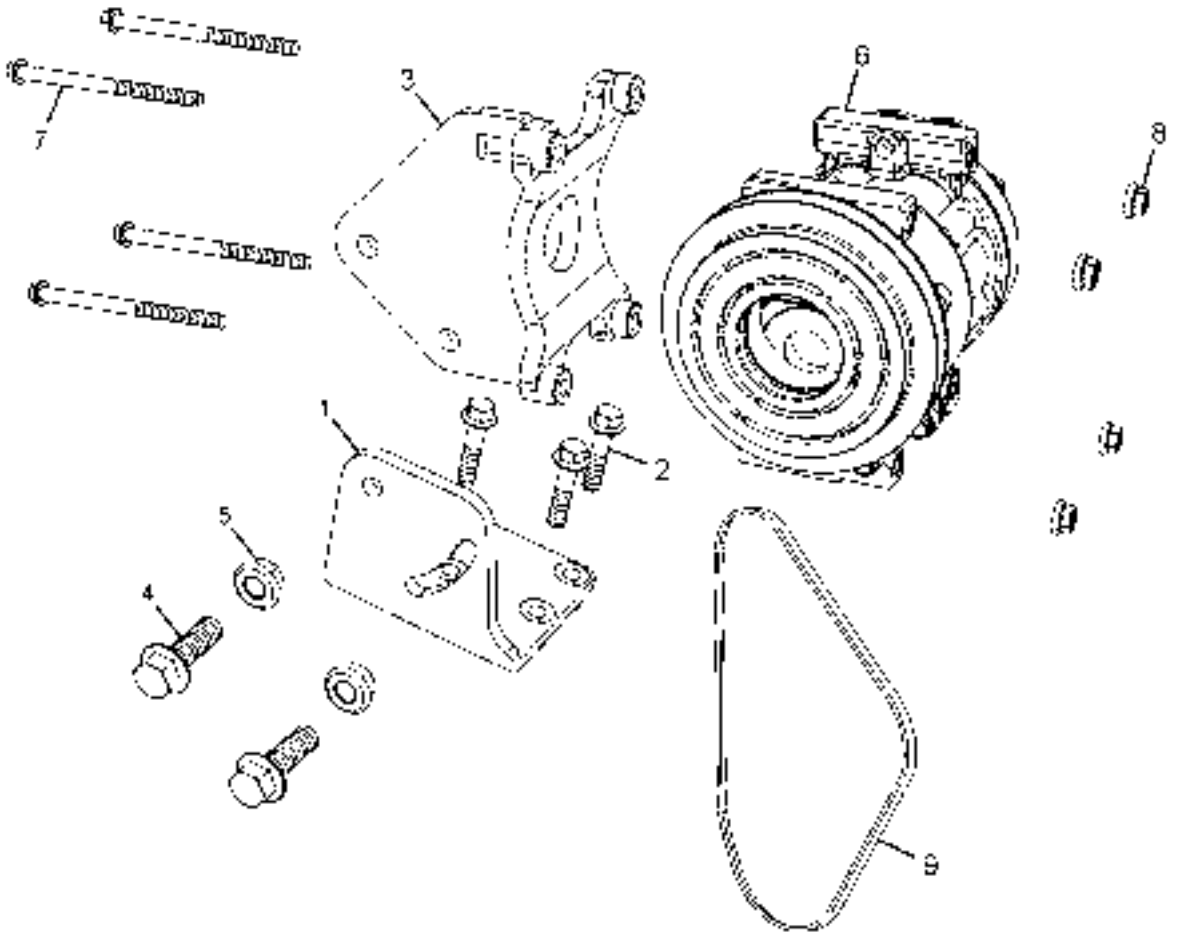

2076602023R.01	A/C COMPRESSOR	GROUP 23

CHASSIS TYPE: ALL

FIG. NO.	PART NUMBER	DESCRIPTION	QTY	REMARKS
1	207623120102	ASSY BRACKET(A/C COMP MTG)	1	
2	11071510451	HEX FL BOLT M10X45 TS17130-8.8-SS8451-8C	3	
3	278623120111	BRACKET (A/C COMP MTG)	1	
4	11071512357	HEX FL BOLT M12X35 TS17130 8.8 SS8451-8C	2	
5	12301501208	HEX FL NUT AM12 TS17430-8-SS8451-8C	2	
6	278623120112	ASSY.A/C COMPRESSOR(SVL-LPT1618 LHD)	1	
7	11071508945	HEX FL BOLT M8X120 TS17130-8.8-SS8451-8C	4	
8	12301500805	HEX FL NUT AM8 TS17430-8-SS8451S2-Y	4	
9	252520156310	V BELT (COGGED-1210 lG)	1	

2167013824R.01	ENGINE MOUNTING	GROUP 24

CHASSIS TYPE: ALL

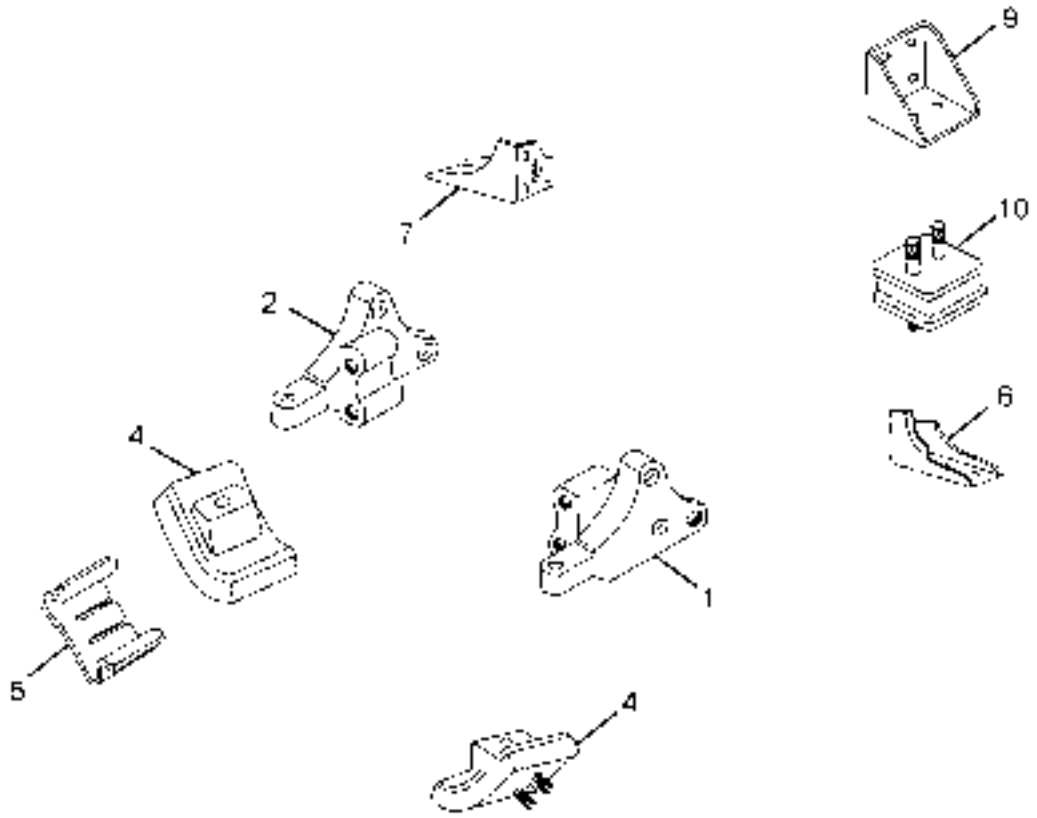

2167013824R.01	ENGINE MOUNTING	GROUP 24

CHASSIS TYPE: ALL

FIG. NO.	PART NUMBER	DESCRIPTION	QTY	REMARKS
1	277024105102	ENGINE MOUNTING ARM LH (FRONT)	1	
2	277024105101	ENGINE MOUNTING ARM RH (FRONT)	1	
4	257624100101	ASSY RUBBER SUPPORT FRONT	2	
5	3522420509	TORQUE SUPPORT	2	
-	257624109201	WASHER(ENG MTG.ARM FRT TO RUBBER SUPPORT FRT)	2	
6	216724200103	ASSY.BRACKET-LH(ENG.MTG.-REAR BOTTOM)	1	
7	216724200104	ASSY.BRACKET-RH(ENG.MTG.-REAR BOTTOM)	1	
9	216724200102	ASSY BRACKET (ENG. MTG. TOP)	2	
10	278624200101	ASSY.RUBBER SUPPORT REAR.	2	

TATA MOTORS

2724110625R.01	CLUTCH	GROUP 25

CHASSIS TYPE: ALL

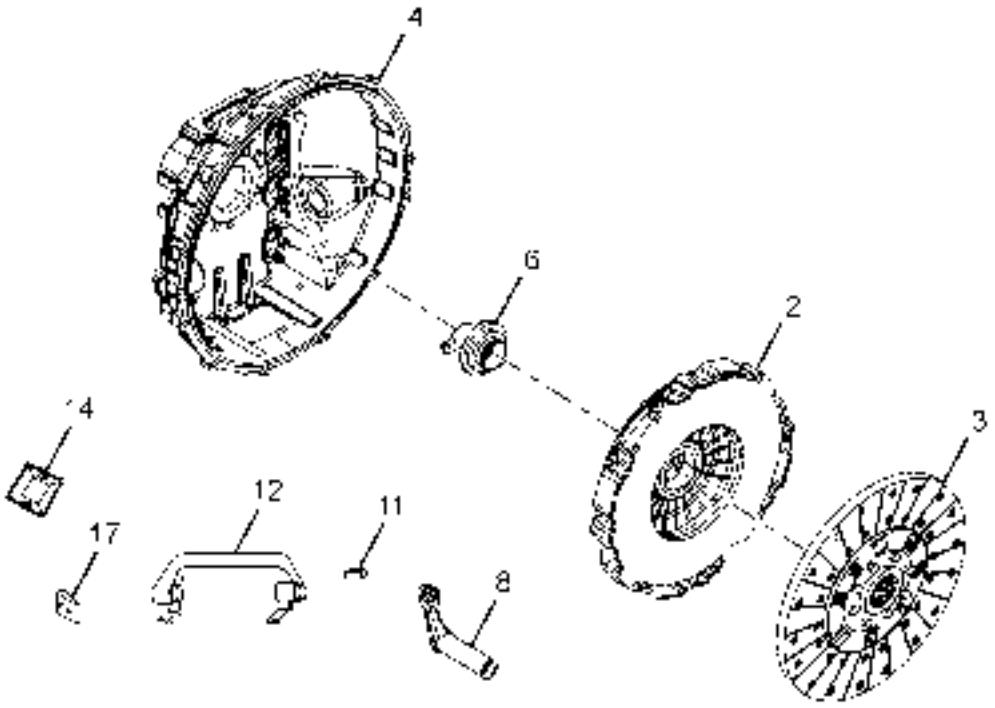

2724110625R.01	CLUTCH	GROUP 25

CHASSIS TYPE: ALL

FIG. NO.	PART NUMBER	DESCRIPTION	QTY	REMARKS
2	272425400129	380 DIA.CL.COVER ASSY(1.75"SPLINE)	1	
3	272425200134	380 DIA.CL.DISC ASSY.(1.75"SPLINE)	1	
4	272425103709	CLUTCH HOUSING (SAE 1)	1	
6	272425601602	ASSY.CLUTCH RELEASE BRG.	1	
-	272425603102	NEEDLE ROLLER BRG.-(HOUSING)	2	
-	272425607702	DUST SEAL	2	
8	272425600197	ASSY. CROSS SHAFT WITH RELEASE LEVER	1	
-	272425606003	CLUTCH RELEASE LEVER	1	
11	13600506611	PARALLEL KEY A8X7X63	1	
12	272425605108	CLUTCH RELEASE YOKE	1	
-	272425608001	SET SCREW	1	
14	0422510004J	CLUTCH COVER HOUSING UPPER	1	
17	272425108204	CLUTCH HSG. BOTTOM COVER (SAE 1)	1	
-	272425103713	ADAPTER - SAE1 TO SAE2 (FW HSG & CLUTCH	1	
-	272425400146	PRESSURE PLATE SERVICE KIT	1	
		CONSIST OF :		
		PRESSURE PLATE	1	
		NEEDLE BEARING	6	
-	272425400147	RELEASE LEVER SERVICE KIT	1	
		CONSIST OF :		
		RELEASE LEVER	3	
		EYE BOLT	3	
		NEEDLE BEARING	3	
		EYE BOLT PIN	3	
		ADJUSTING NUT	3	
		LOCK NUT	3	
		RETRACTOR SPRING	3	
		PRESSURE PLATE PIN	3	
		RETAINING RING	3	
		WASHER	6	
-	272425400148	RELEASE LEVER WITH EYE BOLT KIT	1	
		CONSIST OF :		
		EYE BOLT	3	
		NEEDLE BEARING	3	
		RELEASE LEVER	3	
		EYE BOLT PIN	3	
-	272425403704	CLUTCH COVER 380 DIA.	1	

TATA MOTORS

2724110625R.01	CLUTCH	GROUP 25

CHASSIS TYPE: ALL

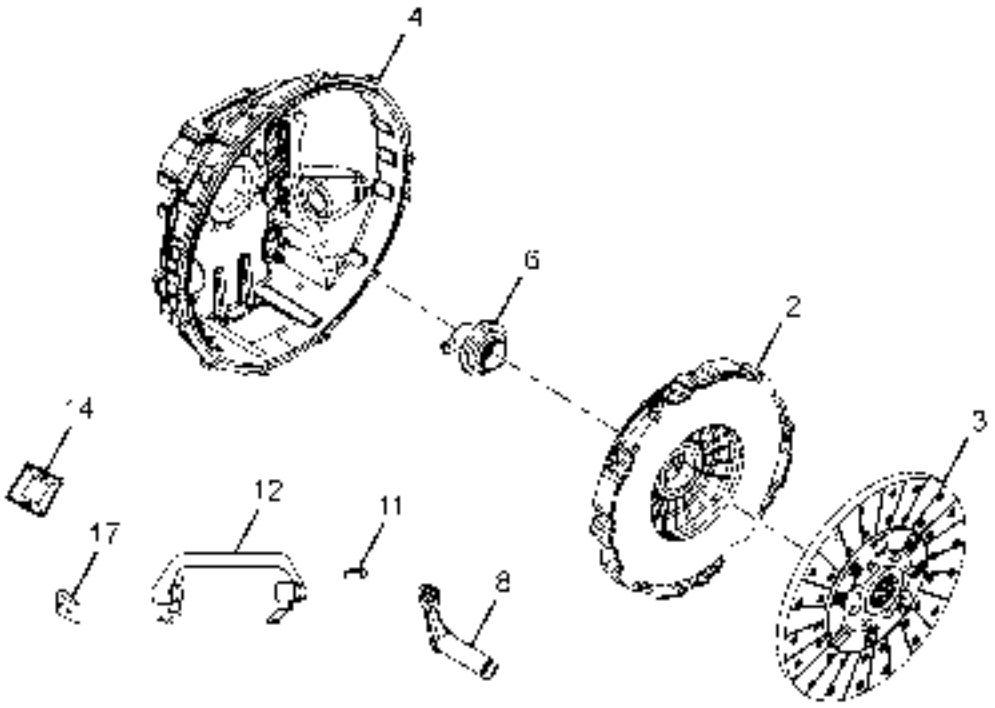

2724110625R.01	CLUTCH	GROUP 25

CHASSIS TYPE: ALL

FIG. NO.	PART NUMBER	DESCRIPTION	QTY	REMARKS
-	272425408602	CLUTCH COLLECTOR RING	1	
-	272425408706	PRESSURE SPRING 380 DIA.	1	
-	272425400150	HOLD DOWN BOLT KIT	1	
		CONSIST OF :		
		HOLD DOWN BOLT	3	
		WASHER	3	
-	272425200154	CLUTCH DISC FACING KIT	1	
		CONSIST OF :		
		FACING CERAMIC	12	
		FACING RIVETS	48	
		JOINT RIVET	12	

2167873826R.01	GEAR BOX, GEAR BOX HOUSING	GROUP 26

CHASSIS TYPE: ALL

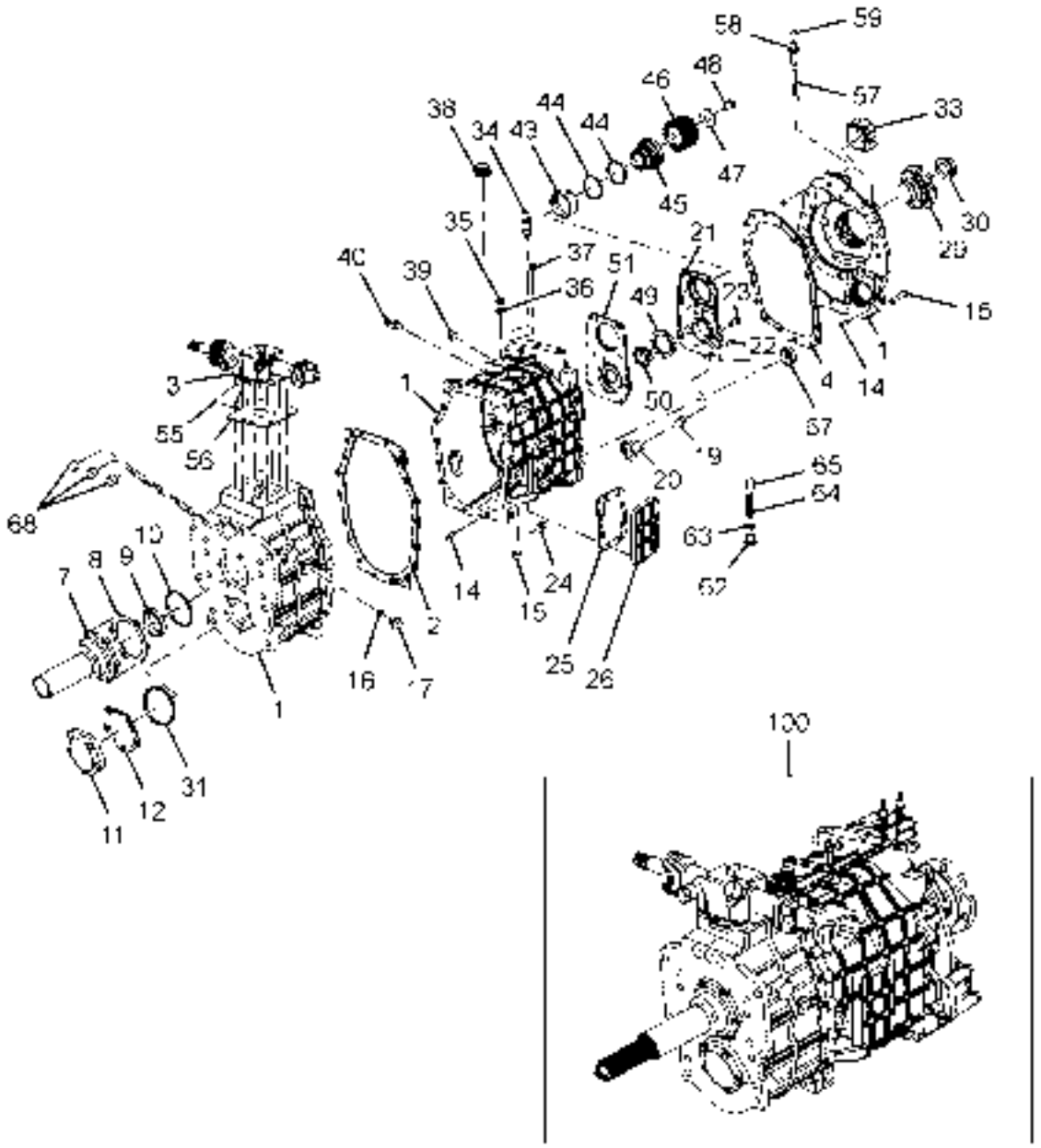

LPK 3518C/3150 2167873826R.01 011

2167873826R.01	GEAR BOX, GEAR BOX HOUSING	GROUP 26

CHASSIS TYPE: ALL

FIG. NO.	PART NUMBER	DESCRIPTION	QTY	REMARKS
100	271526010110	ASSY GEAR BOXCOMP G1400-9/12.86 DD,PTO,W/O P/S.	1	
1	271526100121	ASSY GB HOUSING FRT+INTER+REAR - DD, NON P/S	1	
2	269126105303	GASKET (HOUSING FRONT & REAR)	1	
3	271526713701	GEAR CASE COVER TOP	1	
4	271526105301	GASKET(INTERMEDIATE TO REAR HSG)	1	
7	271526253703	FRONT COVER (UPPER)	1	
8	271526255301	GASKET (FRONT COVER UPPER)	1	
9	271526207805	OILSEAL (52-72-12)	1	
10	265135308303	SHIM 0.10THK	AR	FOR SELECTION
10	265135308304	SHIM 0.15THK	AR	FOR SELECTION
10	265135308305	SHIM 0.20THK	AR	FOR SELECTION
10	265135308306	SHIM 0.25THK	AR	FOR SELECTION
10	265135308307	SHIM 0.50THK	AR	FOR SELECTION
10	265135308308	SHIM 1.50THK	AR	FOR SELECTION
10	265135308309	SHIM 0.3 THICK	AR	FOR SELECTION
10	265135308310	SHIM 0.45 THICK	AR	FOR SELECTION
10	265135308311	SHIM 1.0 THICK	AR	FOR SELECTION
11	269126303704	FRONT COVER (LOWER)	1	
12	269126305302	GASKET (FRONT COVER LOWER)	1	
14	269126106701	PIN (GEAR BOX HOUSING)	4	
15	266335107207	MAGNETIC DRAIN PLUG	1	
16	16220710240	SEALING WASHER 16X20	1	
17	271526903402	COUPLING BODY	1	
19	271526906901	INLET TUBE (OIL PUMP)	1	
20	271526900101	ASSY STRAINER	1	
21	271526903801	HOUSING OIL PUMP.	1	
22	13050508255	CYL PIN 8 M 6X25	2	
23	11341510301	HEX FL SCREW M10X30	8	
24	0009970006J	PLUG OIL FILLING	1	
25	271526355301	GASKET (R.I.COVER)	1	
26	271526353701	COVER (REV IDLER)	1	
29	271526200124	ASSY COUPLING FLANGE(180DIA.,X-SERRATED)	1	
30	271526206501	LOCK NUT (COUPLING FLANGE)	1	
31	269126308310	SHIM 0.05 THK.	AR	FOR SELECTION
31	269126308311	SHIM 0.125 THK	AR	FOR SELECTION
31	269126308312	SHIM 0.25 THK	AR	FOR SELECTION
31	269126308313	SHIM 0.5 THK.	AR	FOR SELECTION

2167873826R.01	GEAR BOX, GEAR BOX HOUSING	GROUP 26

CHASSIS TYPE: ALL

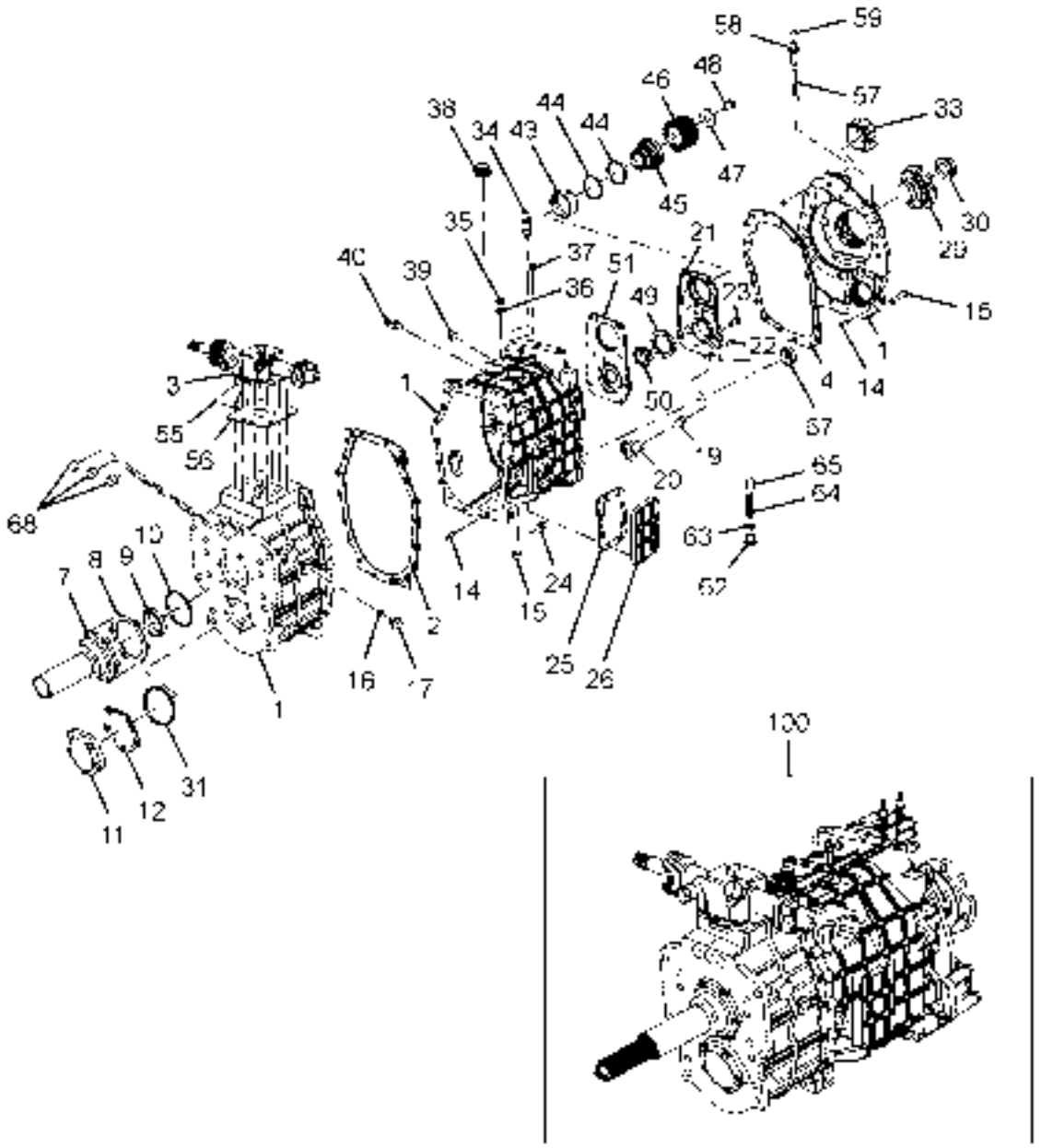

LPK 3518C/3150 2167873826R.01 011

2167873826R.01	GEAR BOX, GEAR BOX HOUSING	GROUP 26

CHASSIS TYPE: ALL

FIG. NO.	PART NUMBER	DESCRIPTION	QTY	REMARKS
33	271526203701	PISTON COVER	1	
34	270254509950	REVERSE LIGHT SWITCH	1	
35	269126107202	SEALING PLUG	4	
36	16220710282	SEALING WASHER 18X22	4	
37	271526513201	ROTATION LOCKING BOLT	1	
38	257433150102	ASSY FILTER BREATHER	1	
39	16082502401	SEALING PLUG M24X1.5	1	
40	282954509922	NEUTRAL SWITCH	1	
43	271526906902	SLEEVE (OIL PUMP)	1	
44	271526207701	SEALING RING (LUBRICATION PUMP)	2	
45	271526203401	MUFF RING (MAINSHAFT)	1	
46	271526205406	SUN GEAR	1	
47	271526208615	SPACER LOCK (SUN GEAR)	1	
48	271526203201	SCREW (SPACER LOCK-SUN GEAR)	1	
49	271526909902	OUTER ROTOR	1	
50	271526909901	INNER ROTOR	1	
51	271526903701	COVER (OILPUMP)	1	
55	269126710109	ASSY BRACKET	1	
56	271526718209	BAFFLE-PLATE (NON-POWERSHIFT)	1	
57	271526207905	SPEEDO PINION (JIS TYPE)	1	
58	271526203402	SPEEDO ADAPTOR	1	
59	250626207804	OIL SEAL	1	
62	16082001402	SEALING PLUG M14X1.5	1	
63	16221810213	SEALING WASHER 14X18	1	
64	271526908701	COMPRESSION SPRING(OIL PUMP)	1	
65	271526908202	CAP (PRESSURE RELIEF VALVE) OIL PUMP	1	
67	269026203106	CYLD.ROLLER BRG.(L/S FRT.END)	1	
68	269126108201	PLUG (SHIFTER SHAFT-REAR)	3	

2167873826R.02A	PNEUMATIC ARRANGEMENT	GROUP 26

CHASSIS TYPE: ALL

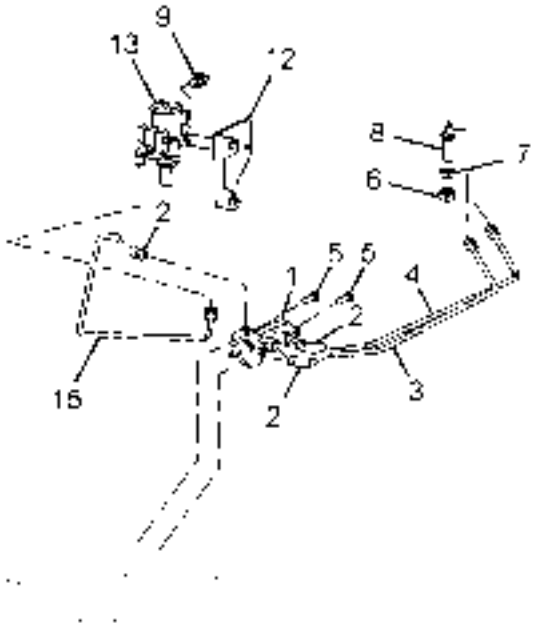

011

2167873826R.02A	PNEUMATIC ARRANGEMENT	GROUP 26

CHASSIS TYPE: ALL

FIG. NO.	PART NUMBER	DESCRIPTION	QTY	REMARKS
1	271526710122	ASSY. 4/2 PNEUMATIC VALVE (M/S REXROTH)	1	
2	271526806801	PNUEMATIC FITTING (45 DEG) G 1/8" X 6	3	
3	271526710105	ASSY. NYLON PIPE(5/2 VALVE TO HSG.)	1	
4	271526710106	ASSY. NYLON PIPE(5/2 VALVE TO CYLINDER)	1	
5	11411406255	CAP SCREW M6X25	2	
6	12051696016	HEX NUT M12X1.5	2	
7	12080996011	HEX THIN NUT M12X1.5	2	
8	16502800608	BULK HD ELBOW BODY L6	2	
9	271526806801	PNUEMATIC FITTING (45 DEG) G 1/8" X 6	3	
12	271526718202	BRACKET (FILTER & PRESSURE REGULATOR)	1	
13	271526710127	ASSY. FIL/PRES REGULATOR(5.5BAR)	1	
15	271526710144	ASSY NYLON PIPE (FPR TO 5/2 VALVE)	1	

TATA MOTORS

2167873826R.03	PTO IPH	GROUP 26

CHASSIS TYPE: ALL

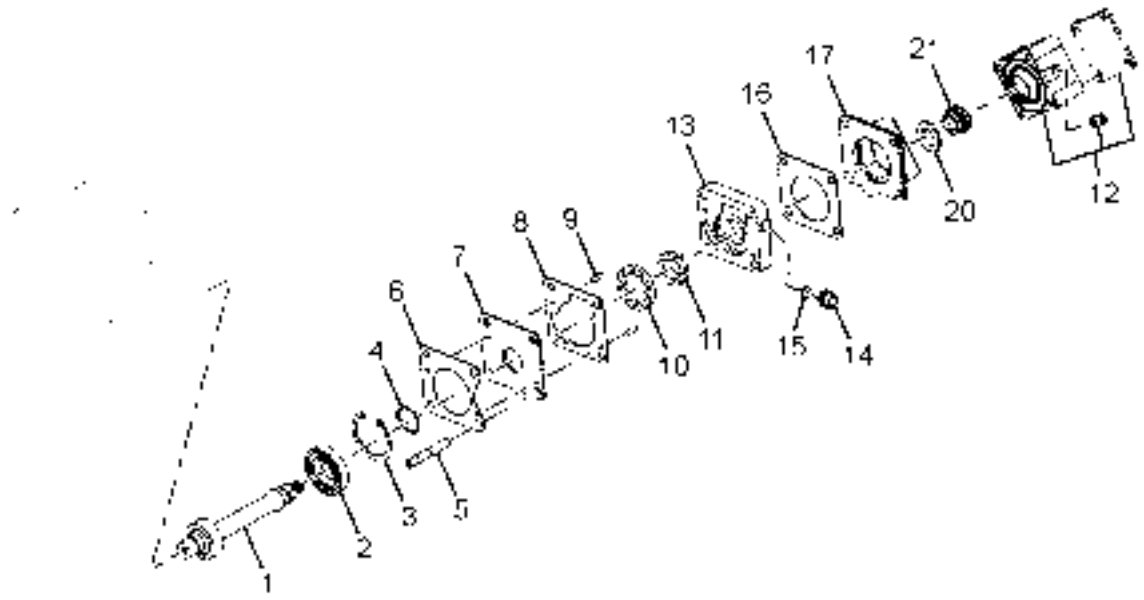

011

2167873826R.03	PTO IPH	GROUP 26

CHASSIS TYPE: ALL

FIG. NO.	PART NUMBER	DESCRIPTION	QTY	REMARKS
1	271526407901	ADAPTOR SHAFT (OIL PUMP AND REAR PTO)	1	
2	271526903101	DEEP GROOVE BALL BEARING (ADAPTOR SHAFT)	1	
3	14580608001	INTERNAL CIRCLIP 80X2.5N IS3075P2 SS8400	1	
-	271526904301	CIRCLIP (1.4 THK)	1	FOR SELECTION
4	271526904302	CIRCLIP (1.5 THK)	1	FOR SELECTION
4	271526904303	CIRCLIP (1.6 THK)	1	FOR SELECTION
4	271526904304	CIRCLIP (1.7 THK)	1	FOR SELECTION
5	271526408801	STUD (FOR OIL PUMP AND PTO)	4	
6	271526905301	GASKET (OIL COOLING)	1	
7	271526907702	PLATE OIL PUMP (OIL COOLING)	1	
-	271526207709	O-RING (12.37X2.65)	1	
8	271526905302	GASKET OIL PUMP HOUSING (REAR OIL PUMP)	1	
9	13050508255	CYL PIN 8M6X25 IS2393	2	
10	271526909902	OUTER ROTOR	1	
11	271526909901	INNER ROTOR	1	
12	271526400108	ASSY PTO IPH	1	
13	271526903803	OIL PUMP HOUSING(OIL COOLING & REAR PTO)N	1	
14	271526903402	COUPLING BODY	1	
15	16220710240	SEALING WASHER 16X20 IS3175 CU	1	
16	271526405301	GASKET (REAR PTO TO OIL PUMP)	1	
17	271526403706	ADAPTOR PTO (INTERPUMP)	1	
20	271526408606	SPACER LOCK (CLUTCH PTO)	1	
21	271526404603	CLUTCH PTO (INTERPUMP)	1	
-	271526409901	ASSY. KIT FOR IPH PTO (199K747000)	1	

TATA MOTORS

2167873826R.04A	TOP COVER	GROUP 26

CHASSIS TYPE: ALL

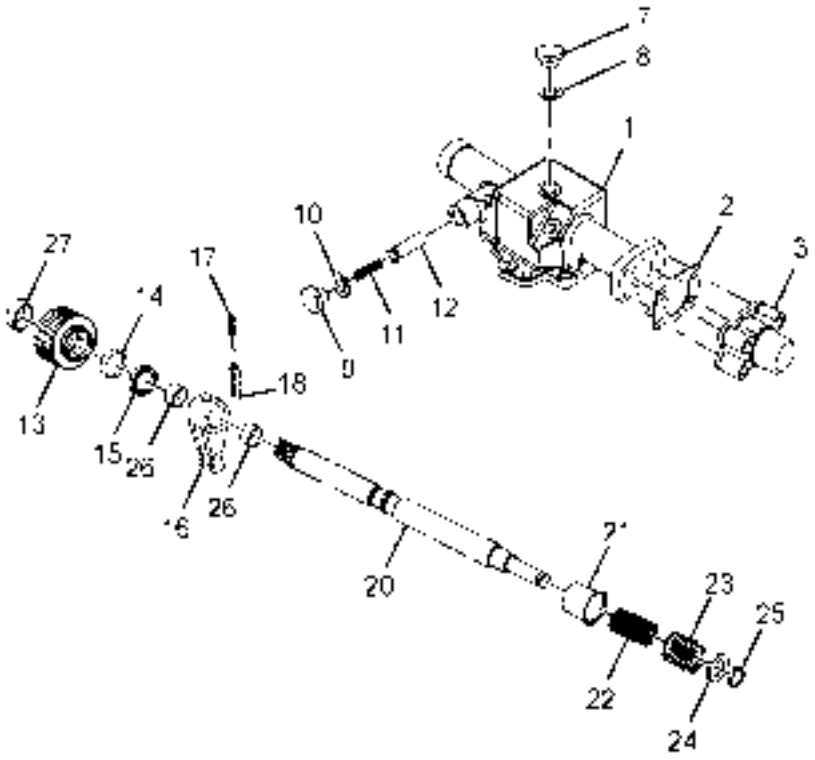

011

2167873826R.04A	TOP COVER	GROUP 26

CHASSIS TYPE: ALL

FIG. NO.	PART NUMBER	DESCRIPTION	QTY	REMARKS
1	271526713701	GEAR CASE COVER TOP	1	
2	251626715302	GASKET,SIDE COVER	1	
3	271526713805	SIDE COVER (TOP COVER)	1	
7	16081001603	SEALING PLUG AM16X1.5	1	
8	251626718602	CRINKLED WASHER	1	
9	269126107202	SEALING PLUG	3	
10	251626718603	CRINKLED WASHER.	3	
11	271526718701	COMPRESSION SPRING (OUTER)	1	
12	271526716706	PRESSURE PIECE	1	
13	250526717701	BELLOW	1	
14	250726717803	SCRAPER RING	1	
15	17061602518	OIL SEAL B25X35X7 NITRILE	1	
16	271526715101	SELECTOR & SHIFTER FINGER	1	
17	13120512409	DOWEL SLEEVE HEAVY 10X40	1	
18	13120510406	DOWEL SLEEVE HEAVY 6X40	1	
20	271526717901	SELECTOR & SHIFTER SHAFT	1	
21	271526718201	CUP (SELECTOR SHIFTER SHAFT)	1	
22	271526718702	COMPRESSION SPRING (INNER)	1	
23	271526718701	COMPRESSION SPRING (OUTER)	1	
24	251626718601	SPACER	1	
25	14550801206	CIRCLIP E 12X1.3	1	
26	250726713105	NEEDLE CAGE	2	
27	14270202501	HOSE CLIP 25	1	

2167873826R.05	SHIFTER SHAFT AND FORK	GROUP 26

CHASSIS TYPE: ALL

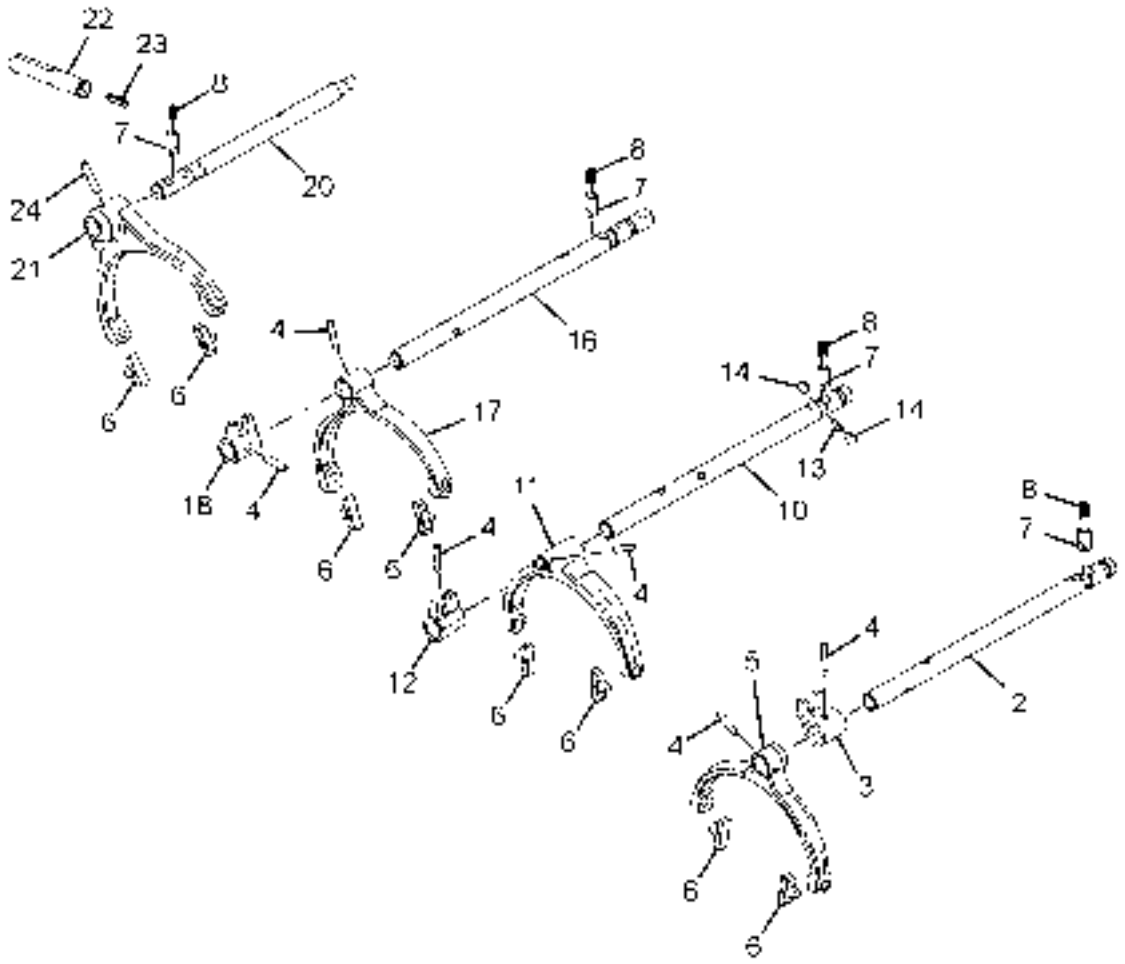

2167873826R.05	SHIFTER SHAFT AND FORK	GROUP 26

CHASSIS TYPE: ALL

FIG. NO.	PART NUMBER	DESCRIPTION	QTY	REMARKS
2	271526517903	SHIFTER SHAFT (3RD/4TH SPEED)	1	
3	271526515103	SHIFTER DOG (3RD/4TH GEAR)	1	
4	269126516705	SPIRAL PIN 8X36	6	
5	271526515104	SHIFTER FORK(3RD/4TH)	1	
6	269126519901	BRASS PAD	8	
7	269126510120	ASSY DETENT	4	
8	269126518703	COMPRESSION SPRING. (DETENT)	4	
10	271526517902	SHIFTER SHAFT (1ST/2ND SPEED)	1	
11	271526515105	SHIFTER FORK (1ST/2ND SPEED)	1	
12	271526515102	SHIFTER DOG (1ST/2ND GEAR)	1	
13	269126516703	INTERLOCK PIN	1	
14	15950400177	BALL 13.494DIA-GRADE 200 IS2898	2	
16	271526517901	SHIFTER SHAFT (REV / CRAWLER SPEED)	1	
17	271526515109	SHIFTER FORK (REVERSE/CRAWLER)	1	
18	271526515101	SHIFTER DOG (CRAWLER/REV)	1	
20	271526517904	SHIFTER SHAFT (RANGE)	1	
21	271526515106	SHIFTER FORK (RANGE)	1	
22	271526517906	INTER LOCK SHAFT	1	
23	271526518701	COMPRESSION SPRING (INTERLOCK SHAFT)	1	
24	271526516702	CYLINDRCAL PIN (HARDENED)	1	

TATA MOTORS

2167873826R.06A	MAIN SHAFT	GROUP 26

CHASSIS TYPE: ALL

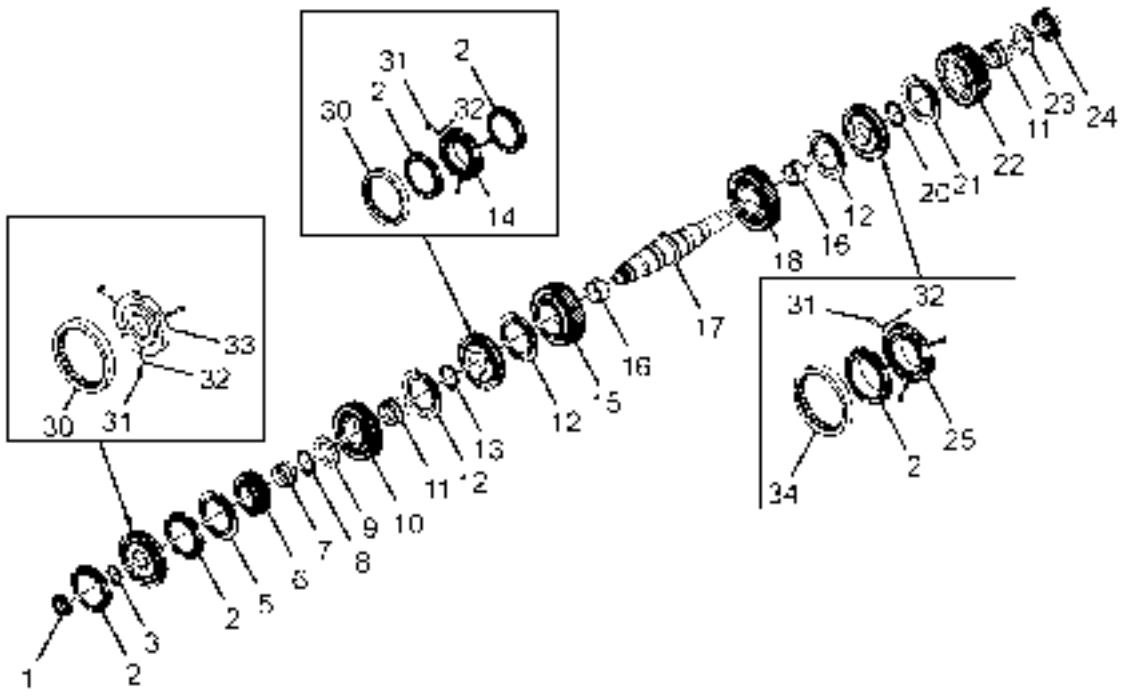

011

2167873826R.06A	MAIN SHAFT	GROUP 26

CHASSIS TYPE: ALL

FIG. NO.	PART NUMBER	DESCRIPTION	QTY	REMARKS
1	271526253103	TAPER ROLLER BEARING	1	
2	271526204613	SYNCHRONISING CONE (C/1/2/3/4) THREADED	5	
3	271526204339	CIRCLIP (2.9 THK)	1	FOR SELECTION
3	271526204340	CIRCLIP (3.0 THK)	1	FOR SELECTION
3	271526204341	CIRCLIP (3.1 THK)	1	FOR SELECTION
3	271526204342	CIRCLIP (3.2 THK)	1	FOR SELECTION
3	271526204343	CIRCLIP (3.3 THK)	1	FOR SELECTION
3	271526204344	CIRCLIP (3.4 THK)	1	FOR SELECTION
30	269126204631	SHIFTER SLEEVE (1/2,3/4,5/6 SPEED)	2	
31	269126206702	RETENTION PIN	6	
32	269126208701	COMPRESION SPRING	9	
33	271526204603	ENGAGING GEAR (3RD/4TH)	1	
5	271526204606	SYNCHRO RING (3RD/4TH SPEED)	1	
6	271526205412	3RD / 7TH SPEED GEAR (MAIN SHAFT)	1	
7	269126203143	NEEDLE CAGE 4TH/REV SPEED M/S INA	1	
8	271526204345	CIRCLIP (3.4 THK)	1	FOR SELECTION
8	271526204346	CIRCLIP (3.5 THK)	1	FOR SELECTION
8	271526204347	CIRCLIP (3.6 THK)	1	FOR SELECTION
8	271526204348	CIRCLIP (3.7 THK)	1	FOR SELECTION
8	271526204349	CIRCLIP (3.8 THK)	1	FOR SELECTION
8	271526204350	CIRCLIP (3.9 THK)	1	FOR SELECTION
8	271526204351	CIRCLIP (4.0 THK)	1	FOR SELECTION
9	271526208614	SPACER (MAIN SHAFT)	1	
10	271526205411	2ND / 6TH SPEED GEAR (MAIN SHAFT)	1	
11	269126203142	NEEDLE CAGE 3RD SPEED M/S INA	2	
12	271526204605	SYNCHRO RING (CRAWLER/1ST/2ND)	3	
13	271526204334	CIRCLIP (3.8 THK)	1	FOR SELECTION
13	271526204335	CIRCLIP (3.9 THK)	1	FOR SELECTION
13	271526204336	CIRCLIP (4.0 THK)	1	FOR SELECTION
13	271526204337	CIRCLIP (4.1 THK)	1	FOR SELECTION
13	271526204338	CIRCLIP (4.2 THK)	1	FOR SELECTION
14	271526204602	ENGAGING GEAR (1ST/2ND)	1	
15	271526205410	1ST / 5TH SPEED GEAR (MAIN SHAFT)	1	
16	271526203104	NEEDLE ROLLER AND CAGE ASSY	2	
17	271526207901	MAIN SHAFT	1	
18	271526205402	CRAWLER GEAR (MAIN SHAFT)	1	

TATA MOTORS

2167873826R.06A	MAIN SHAFT	GROUP 26

CHASSIS TYPE: ALL

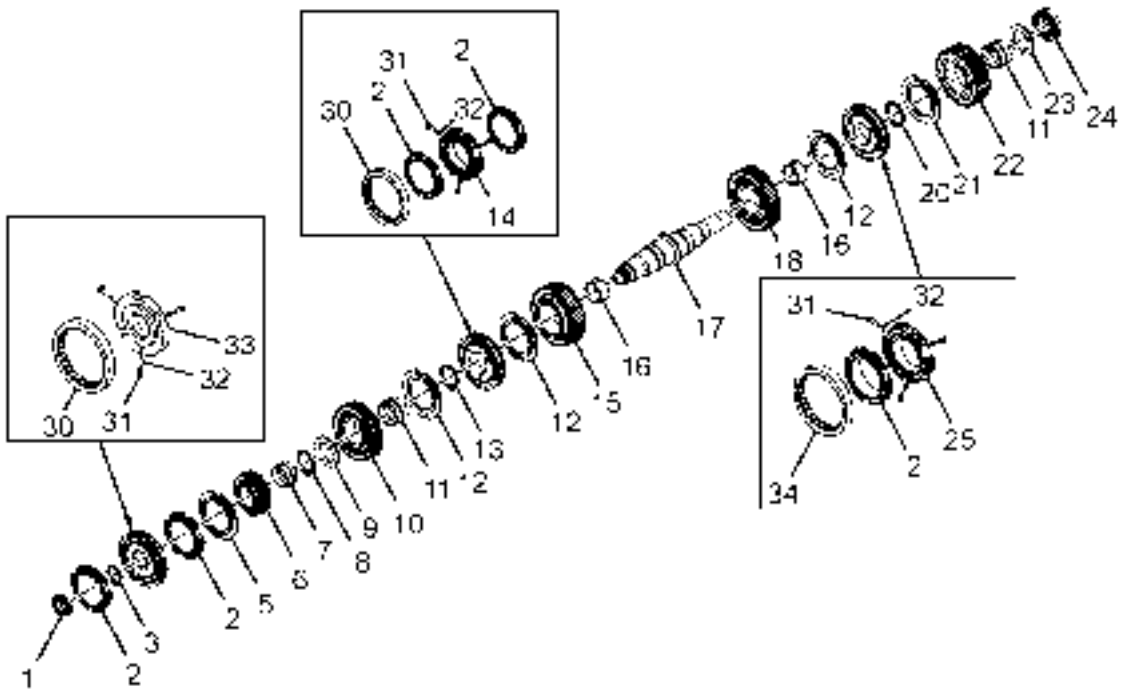

011

2167873826R.06A	MAIN SHAFT	GROUP 26

CHASSIS TYPE: ALL

FIG. NO.	PART NUMBER	DESCRIPTION	QTY	REMARKS
34	271526204612	SHIFTER SLEEVE (CRAWLER/REVERSE)	1	
20	271526204301	CIRCLIP (2.3 THK)	1	FOR SELECTION
20	271526204302	CIRCLIP (2.4 THK)	1	FOR SELECTION
20	271526204303	CIRCLIP (2.5 THK)	1	FOR SELECTION
20	271526204304	CIRCLIP (2.6 THK)	1	FOR SELECTION
20	271526204305	CIRCLIP (2.7 THK)	1	FOR SELECTION
21	271526204604	ENGAGING RING (REVERSE)	1	
22	271526205401	REVERSE SPEED GEAR (MAIN SHAFT)	1	
23	271526208601	SPACER 12.4 THK (M/SHAFT)	1	FOR SELECTION
23	271526208602	SPACER 12.3 THK (M/SHAFT)	1	FOR SELECTION
23	271526208603	SPACER 12.2 THK (M/SHAFT)	1	FOR SELECTION
23	271526208604	SPACER 12.1 THK (M/SHAFT)	1	FOR SELECTION
23	271526208605	SPACER 12.0 THK (M/SHAFT)	1	FOR SELECTION
23	271526208606	SPACER 11.9 THK (M/SHAFT)	1	FOR SELECTION
23	271526208607	SPACER 11.8 THK (M/SHAFT)	1	FOR SELECTION
23	271526208608	SPACER 11.7 THK (M/SHAFT)	1	FOR SELECTION
23	271526208609	SPACER 11.6 THK (M/SHAFT)	1	FOR SELECTION
23	271526208610	SPACER 11.5 THK (M/SHAFT)	1	FOR SELECTION
23	271526208611	SPACER 11.4 THK (M/SHAFT)	1	FOR SELECTION
23	271526208612	SPACER 11.3 THK (M/SHAFT)	1	FOR SELECTION
23	271526208613	SPACER 11.2 THK (M/SHAFT)	1	FOR SELECTION
24	266433753108	TAPER ROLLER BEARING;HUB OUTER -SKF	1	
25	271526204601	ENGAGING GEAR (CRAWLER/REV)	1	
-	269126208611	STOPPER RING.	1	

2167873826R.07A	COUNTER SHAFT	GROUP 26

CHASSIS TYPE: ALL

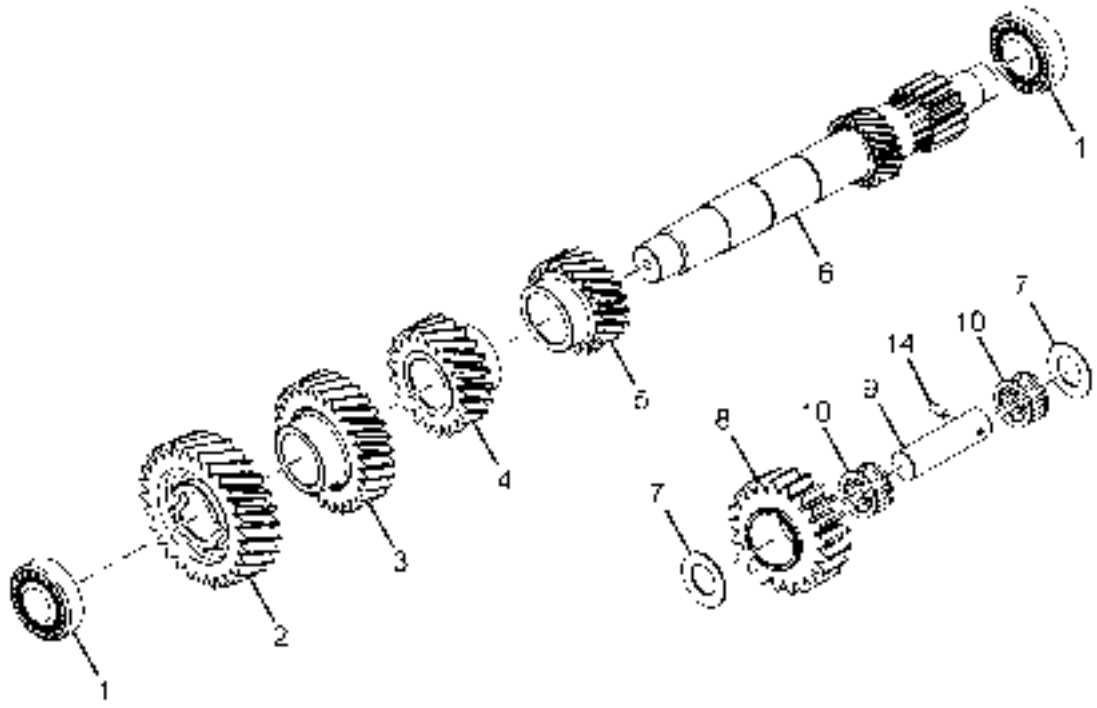

LPK 3518C/3150 2167873826R.07 011

2167873826R.07A	COUNTER SHAFT	GROUP 26

CHASSIS TYPE: ALL

FIG. NO.	PART NUMBER	DESCRIPTION	QTY	REMARKS
1	269126303109	TAPER ROLLER BEARING	2	
2	271526305408	CONSTANTMESH GEAR (COUNTER SHAFT)	1	
3	271526305407	3RD / 7TH SPEED GEAR (COUNTER SHAFT)	1	
4	271526305406	2ND / 6TH SPEED GEAR (COUNTER SHAFT)	1	
5	271526305405	1ST / 5TH SPEED GEAR (COUNTER SHAFT)	1	
6	271526307902	COUNTER SHAFT	1	
7	251626356102	THRUST WASHER (REVERSE IDLER GEAR)	2	
8	271526355401	REVERSE IDLER GEAR	1	
9	271526357901	SHAFT (REVERSE IDLER GEAR)	1	
10	251626353104	ROLLER RING [REV.IDLER GEAR]	2	
14	13052005102	CYL PIN 4M6X10 IS6689	1	

2167873826R.08	DRIVE SHAFT	GROUP 26

CHASSIS TYPE: ALL

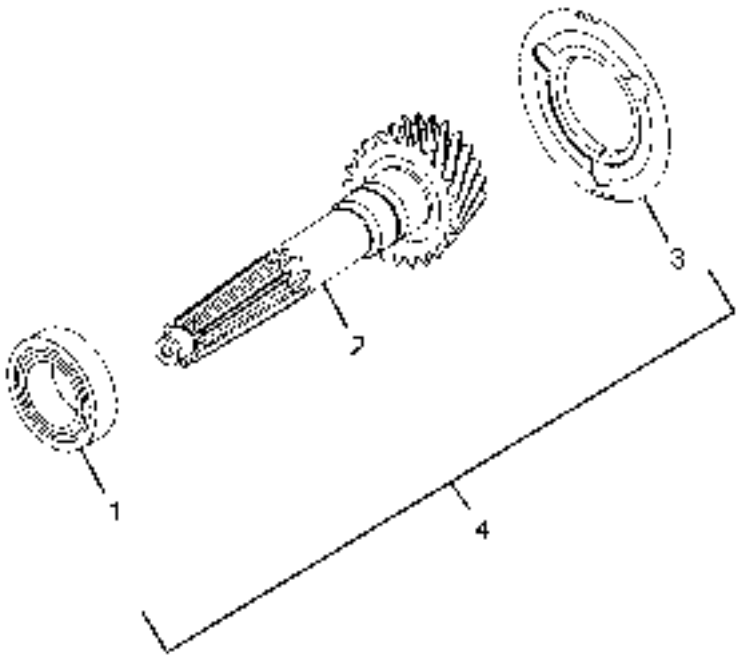

011

2167873826R.08	DRIVE SHAFT	GROUP 26

CHASSIS TYPE: ALL

FIG. NO.	PART NUMBER	DESCRIPTION	QTY	REMARKS
1	265135603101	TAPER ROLLER BEARING	1	
2	271526257911	DRIVE SHAFT-1-3/4"SPLINE SAE-1 CH HSG.	1	
3	271526254601	SYNCHRO RING (DRIVESHAFT)	1	
4	271526250115	ASSY DRIVESHAFT 1-3/4" SAE-1 CH HSG.	1	

CHASSIS TYPE: ALL

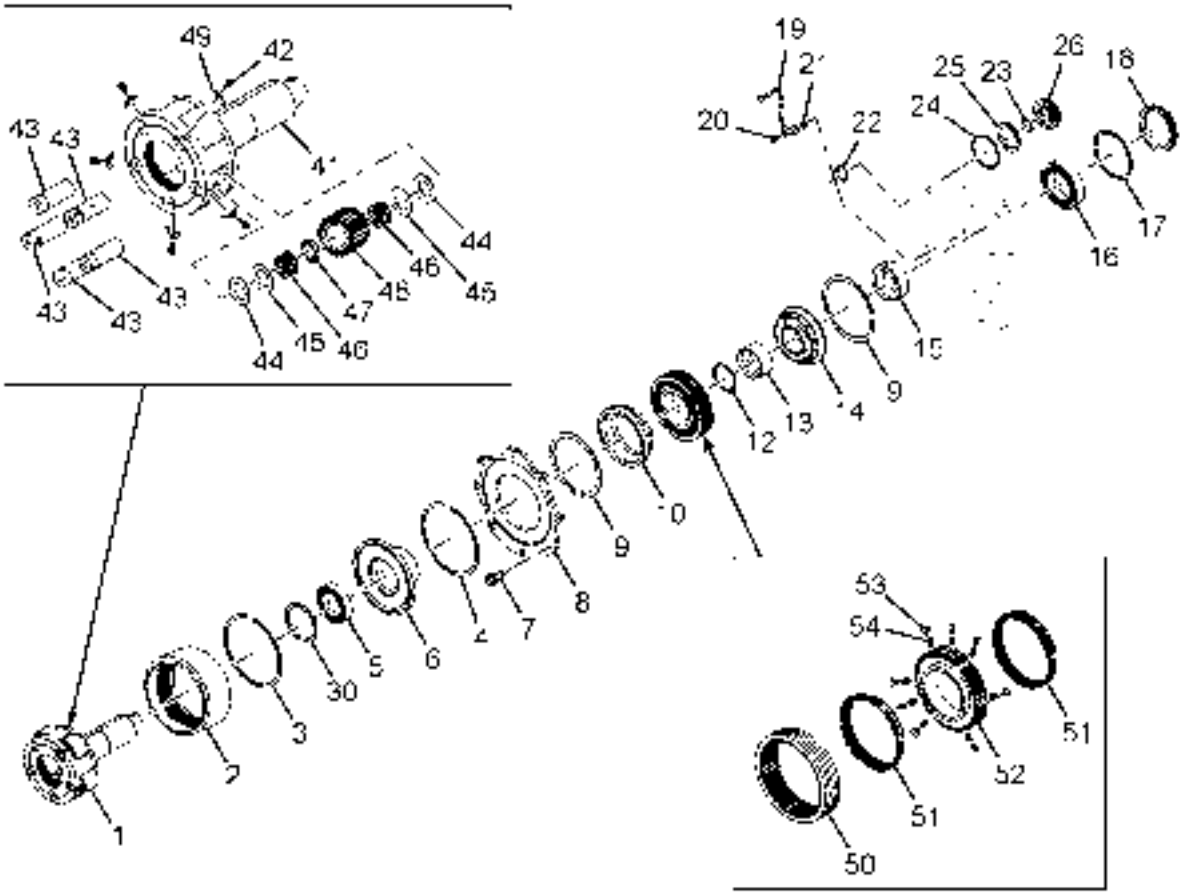

CHASSIS TYPE: ALL

FIG. NO.	PART NUMBER	DESCRIPTION	QTY	REMARKS
1	271526200113	ASSY PLANET CARRIER	1	
41	271526207906	PLANET CARRIER HOUSING-INTEGRAL	1	
42	271526203203	LOCKING SCREW (SHAFT PLANET)	5	
43	271526207903	SHAFT (PLANET)	5	
44	271526209202	THRUST WASHER	10	
45	271526209203	THRUST WASHER (PLANET)	10	
46	271526203001	PLANET ROLLER	20	
47	271526208616	SPACER (ROLLER BRG. - PLANET GEAR)	5	
48	271526205407	PLANET GEAR	5	
49	271526206101	LOCKWASHER(SHAFT(PLANET)-PLANET CARRIER)N	5	
2	271526205408	ANNULUS GEAR	1	
3	271526204322	CIRCLIP (2.7 THK)	1	FOR SELECTION
3	271526204321	CIRCLIP (2.8 THK)	1	FOR SELECTION
3	271526204320	CIRCLIP (2.9 THK)	1	FOR SELECTION
3	271526204319	CIRCLIP (3.0 THK)	1	FOR SELECTION
3	271526204318	CIRCLIP (3.1 THK)	1	FOR SELECTION
4	271526204333	CIRCLIP (2.7 THK)	1	FOR SELECTION
4	271526204317	CIRCLIP (2.8 THK)	1	FOR SELECTION
4	271526204316	CIRCLIP (2.9 THK)	1	FOR SELECTION
4	271526204315	CIRCLIP (3.0 THK)	1	FOR SELECTION
4	271526204314	CIRCLIP (3.1 THK)	1	FOR SELECTION
5	271526203102	DEEP GROOVE BALL BEARING (ANNULUS)	1	
6	271526205102	CARRIER (ANNULUS)	1	
7	271526203202	HEX COLLER BOLT (RECTION PLATE)	8	
8	271526207101	REACTION PLATE	1	
9	271526204311	CIRCLIP (3.0 THK)	2	
10	271526204607	SYNCHRO RING (LOW RANGE)	1	
50	271526204610	SHIFTER SLEEVE (RANGE SELECTION)	1	
51	271526204614	SYNCHRONISING CONE (RANGE)THREAED	2	
52	271526204608	ENGAGING GEAR (RANGE SELECTION)	1	
53	271526206701	RETENTION PIN (RANGE)	9	
54	271526208701	COMPRESSION SPRING(RANGE SYNCHRONISER)	9	
12	271526207706	O-RING (66.27X3.53) VITON	1	

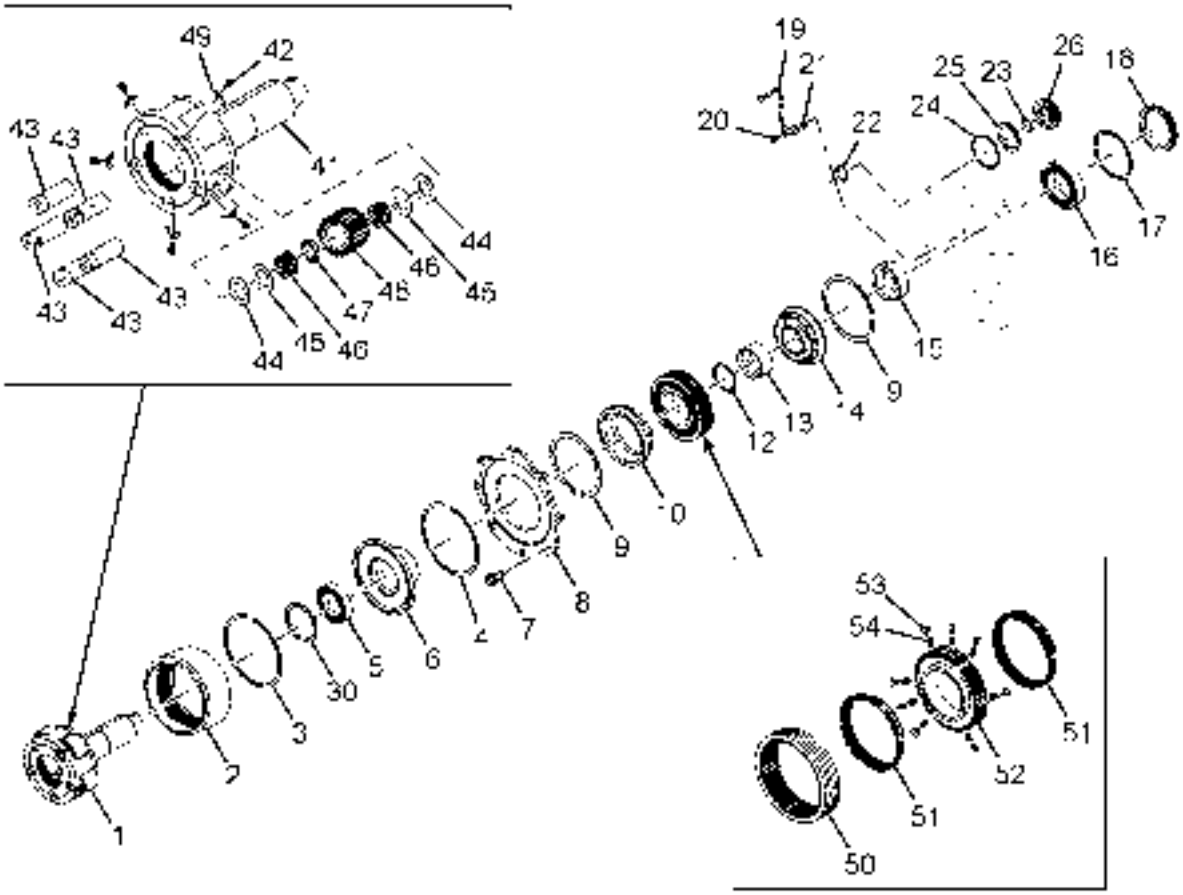
49
42
41
43
43
43
43
43
43
44
46
45
47
48
44
45
46
19
21
20
22
25
23
24
26
18
17
16
15
9
4
13
12
10
9
8
7
2
6
5
30
3
2
1
53
54
51
52
51
50

CHASSIS TYPE: ALL

FIG. NO.	PART NUMBER	DESCRIPTION	QTY	REMARKS
13	271526208617	SPACER (PLANET CARRIER)	1	
14	271526204611	SYNCHRORING (HIGH RANGE)	1	
15	271526205409	GEAR (SPEEDOMETER DRIVE)	1	
16	271526203103	DEEP GROOVE BALL BEARING(PLANET CARRIER)	1	
17	271526204328	CIRCLIP (4.2 THK)	1	FOR SELECTION
17	271526204329	CIRCLIP (4.1 THK)	1	FOR SELECTION
17	271526204330	CIRCLIP (4.0 THK)	1	FOR SELECTION
17	271526204331	CIRCLIP (3.9 THK)	1	FOR SELECTION
17	271526204332	CIRCLIP (3.8 THK)	1	FOR SELECTION
18	271526207804	OILSEAL(95-125-12)	1	
19	271526900107	OIL SPRAY TUBE (RANGE)	1	
20	271526903201	COUNTERSUNK BOLT (SPRAY BAR)	1	
21	17053501036	O-RING 10X1.8 - C-VITON TS16222	1	
22	271526207705	O-RING (21.69X2.65) VITON	1	
23	271526207707	O-RING (17.17X1.8) VITON	1	
24	271526207708	O-RING (82.27X1.8) VITON	1	
25	271526207702	O-RING (66.04X5.3) VITON	1	
26	271526206601	PISTON	1	
30	271526204327	CIRCLIP (2.2 THK)	1	FOR SELECTION
30	271526204326	CIRCLIP (2.3 THK)	1	FOR SELECTION
30	271526204325	CIRCLIP (2.4 THK)	1	FOR SELECTION
30	271526204324	CIRCLIP (2.5 THK)	1	FOR SELECTION
30	271526204323	CIRCLIP (2.6 THK)	1	FOR SELECTION

2167873826R.10	OIL COOLER SYSTEM	GROUP 26

CHASSIS TYPE: ALL

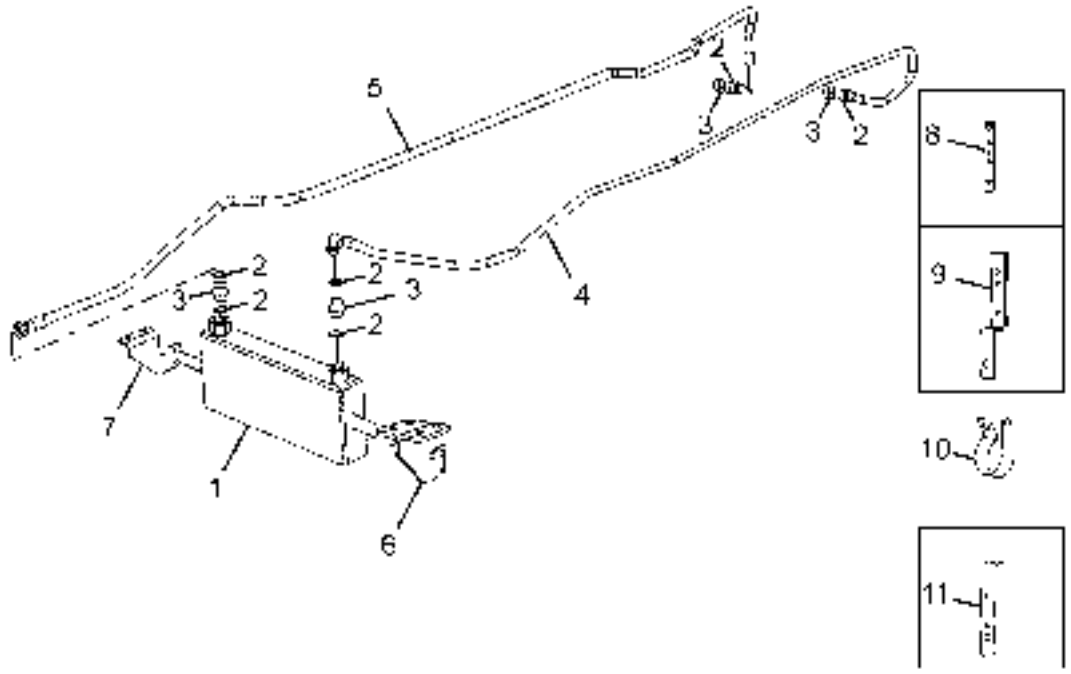

2167873826R.10	OIL COOLER SYSTEM	GROUP 26

CHASSIS TYPE: ALL

FIG. NO.	PART NUMBER	DESCRIPTION	QTY	REMARKS
1	281926900102	ASSEMBLY OILCOOLER	1	
2	16220710282	SEALING WASHER 18X22	6	
3	16442801502	COUPLING BODY 15	4	
4	284126900102	ASSY. HOSE-OIL IN	1	
5	284126900101	ASSY HOSE - OIL HOSE OUT	1	
6	281926907101	BRACKET RH (OILCOOLER ASSEMBLY)	1	
7	281926907102	BRACKET LH (OIL COOLER ASSLY.)	1	
8	206042903359	BRACKET DAMPING AIR LINES	1	
9	220243903301	Z-BRACKET	1	
10	264142904204	CLAMP	5	
11	207742903339	BRACKET	1	

TATA MOTORS

2167873826R.11A	GEAR SHIFT LINKAGE	GROUP 26

CHASSIS TYPE: ALL

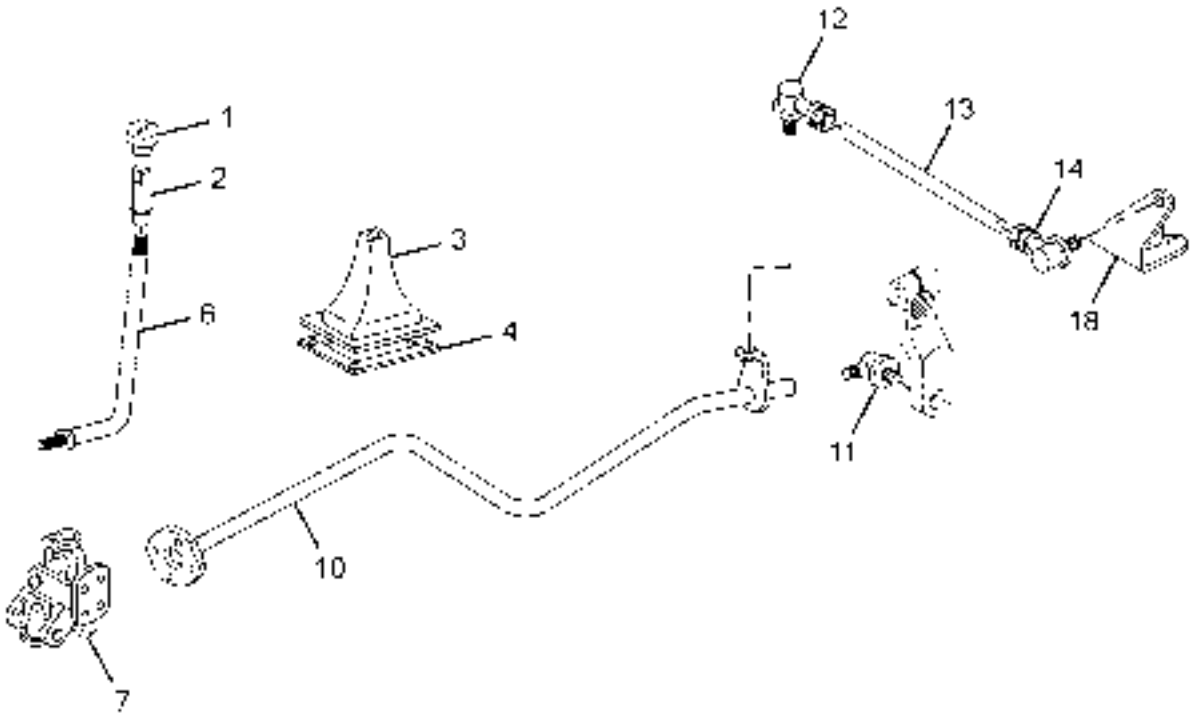

2167873826R.11A	GEAR SHIFT LINKAGE	GROUP 26

CHASSIS TYPE: ALL

FIG. NO.	PART NUMBER	DESCRIPTION	QTY	REMARKS
1	275326800104	ASSY GEAR SHIFT LEVER KNOB	1	
2	276326800113	ASSY. SPACER (G. S. LEVER)	1	
3	275126807702	REXENE BELLOW	1	
4	276326800114	ASSY. CLAMP PLATE (RUBBER BELLOW)	1	
6	275126809906	GEAR SHIFT LEVER	1	
7	217126805101	HOUSING BLOCK (G.S.LEVER)	1	
-	257526806702	PIN(HSG BLOCK TO TURNING TUBE)	1	
10	216726800116	ASSY. TURNING TUBE WITH BUSH	1	
-	257526803401	BUSH	2	
11	250726700140	ASSY. BALL & SOCKET JOINT (BIG)	1	
12	264126800224	ASSY. BALL JOINT RH THREADS	1	
13	275526707901	LINK ROD	1	
14	264126800225	ASSY. BALL JOINT LH THREADS	1	
-	216726800108	ASSY. BRACKET (G/SHIFT LINKAGE)	1	
18	269126710109	ASSY. BRACKET (ON GEAR BOX)	1	
-	275126800152	ASSY BASE PLATE	1	

TATA MOTORS

2167913829R.01	CLUTCH CONTROL	GROUP 29

CHASSIS TYPE: ALL

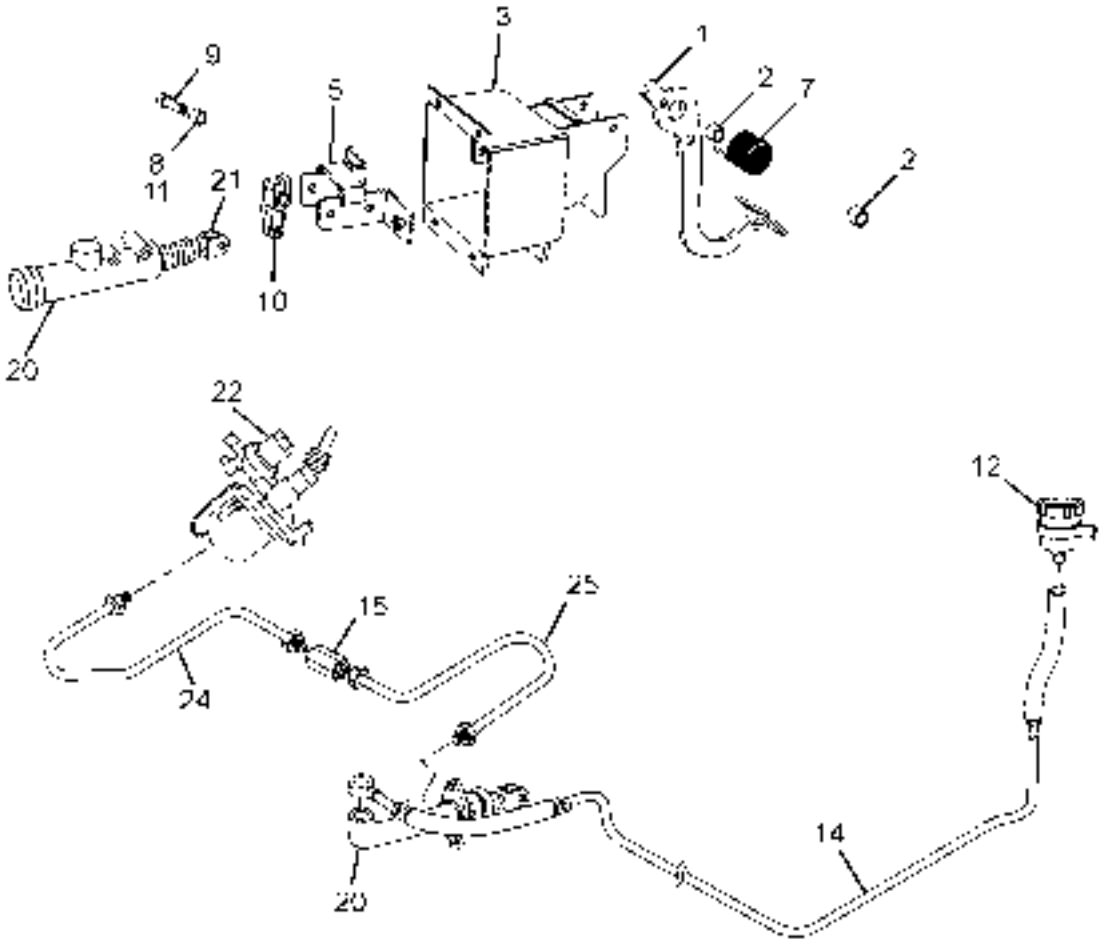

2167913829R.01	CLUTCH CONTROL	GROUP 29

CHASSIS TYPE: ALL

FIG. NO.	PART NUMBER	DESCRIPTION	QTY	REMARKS
1	208229100108	ASSY. CLUTCH PEDAL COMPLETE	1	
2	265129103401	SINTERED BUSH	2	
3	208229100107	ASSY MTG BKT COMPLETE	1	
-	264129106702	CLUTCH PEDAL PIN	1	
5	280229100122	ASSY BRACKET (MASTER CYLINDER MTG)	1	
-	13181530256	CLEVIS PIN 10F8X28X24 TS17606-SS8400	1	
7	264129108701	TORSION SPRING	1	
8	275129506301	BUSH	1	
9	257329209904	PIN	1	
10	272425606003	CLUTCH RELEASE LEVER	1	
11	275129506301	BUSH (CL RELEASE LEVER TO BOOSTER)	1	
12	220729100103	ASSY CLUTCH FLUID RESERVIOR WITH CLAMP	1	
-	257343107502	RUBBER GROMMET	1	
14	216729150109	ASSY PIPE (FROM RES TO MC)	1	
15	264142806803	ADAPTOR (TUBE TO TUBE)	1	
-	14270201700	HOSE CLIP 17 TS17669	1	
-	14270201904	HOSE CLIP 19	2	
-	16440500602	COUPLING BODY L 6M	1	
-	16220510135	SEALING WASHER 10X13.5	1	
20	261829100106	ASSY.MASTER CYLINDER- M/S BIL- 25.4 DIA.	1	
21	284629100109	ASSY FORK WITH ROD (MASTER CYL)	1	
22	501129100103	ASSY.CLUTCH BOOSTER	1	
-	208229100102	BRKT.ASSY.FOR CLUTCH BOOSTER MTG.(G1400)	1	
24	208229300101	ASSY PIPE LINE(MC TO CB 1STPIPE)	1	
25	501129300101	HYD PIPE LINE (FROM M.CYL TO C.B.PIPE-2	1	
-	16151700601	COUPLING NUT L6	1	
-	262143503304	BRACKET	1	
-	501129990101	CLUTCH BOOSTER REPAIR KIT CONSISTS OF:	1	
-	-	PROTECTION PLUG FOR BLEEDER SCREW	1	
-	-	O. RING	1	
-	-	U. RING - HYDRAULIC	1	

TATA MOTORS

2167913829R.01	CLUTCH CONTROL	GROUP 29

CHASSIS TYPE: ALL

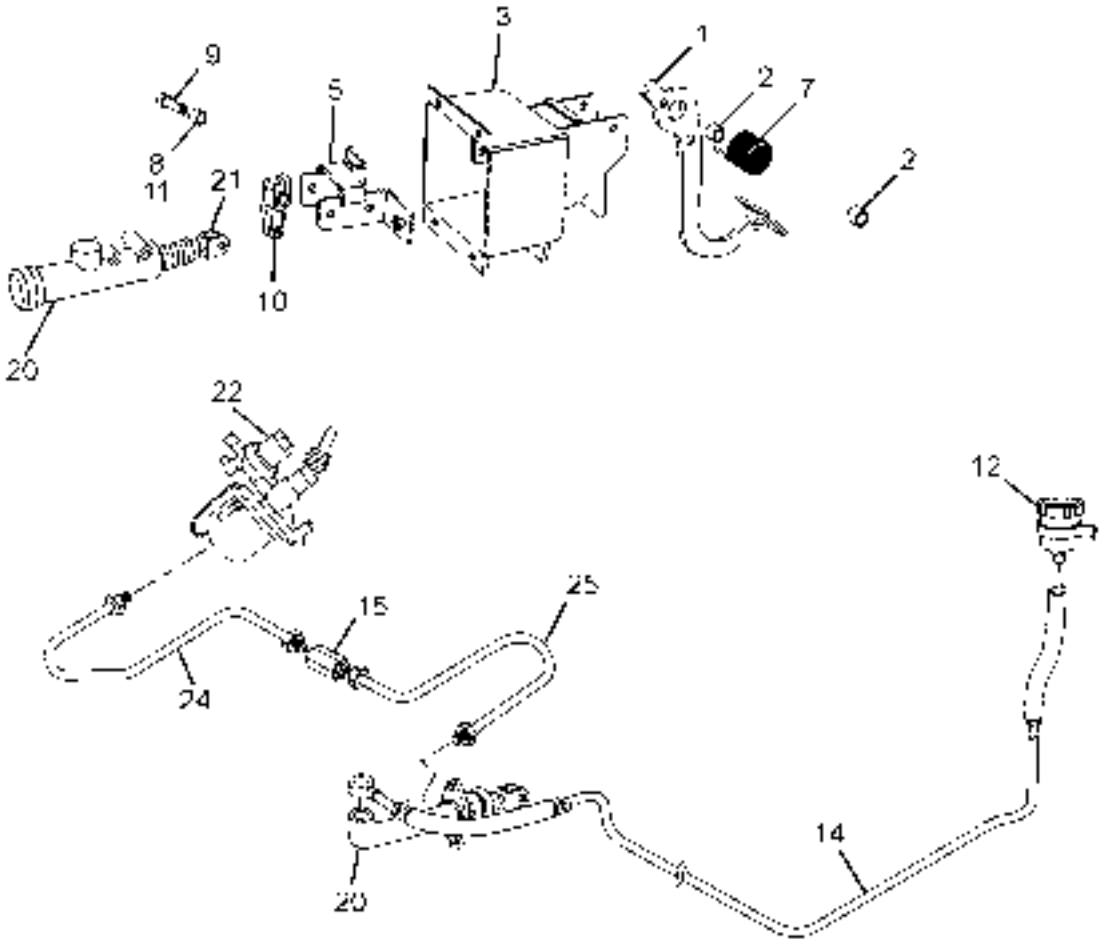

2167913829R.01	CLUTCH CONTROL	GROUP 29

CHASSIS TYPE: ALL

FIG. NO.	PART NUMBER	DESCRIPTION	QTY	REMARKS
-	-	O.RING	1	
-	-	GUIDE	1	
-	-	RETAINING WASHER (WEAR INDICATOR)	1	
-	-	SPRING-WEAR INDICATOR	1	
-	-	O.RING-WEAR INDICATOR	1	
-	-	O.RING-WEAR INDICATOR-ROD	1	
-	-	FILTER-AIR LINE	1	
-	-	U.RING-PIN	1	
-	-	O.RING-PISTON	1	
-	-	U.RING-CARTRIDGE OUTLET	1	
-	-	U.RING-CARTRIDGE INLET	1	
-	-	INLET VALVE	1	
-	-	U.RING-INLET VALVE	1	
-	-	SPRING-INLET VALVE (12)	1	
-	-	SPRING-INLET VALVE (13)	1	
-	-	EXHAUST PROTECTOR ASSY	1	
-	-	SPRING-PISTON	1	
-	-	U.RING-PISTON	1	
-	-	HANGER-PISTON	1	
-	-	FRONT PLATE	1	
-	-	O.RING	1	
-	-	RETAINING RING-PUSH ROD	1	
-	-	SEALING RING-FRONT PLATE	1	
-	-	GREASE SACHET (KLUEBER GLK 12 GRAM)	1	
-	261829100109	MAJOR REPAIR KIT FOR M/CYL. CONSISTS OF	1	
-	-	PLUNGER	1	
-	-	SEAL	1	
-	-	SHIM	1	
-	-	SEAL	1	
-	-	SPRING	1	
-	-	CIRCLIP	1	
-	-	SEAL (FOR FLUID TANK)	1	
-	-	DUST COVER	1	
-	261829100110	MINOR REPAIR KIT FOR M/CYL. CONSISTS OF	1	
-	-	SEAL	1	
-	-	SEAL	1	
-	-	SEAL (FOR FLUID TANK)	1	
-	-	DUST COVER	1	

TATA MOTORS

2082033230R.01	ACCELERATOR CONTROL	GROUP 30

CHASSIS TYPE: ALL

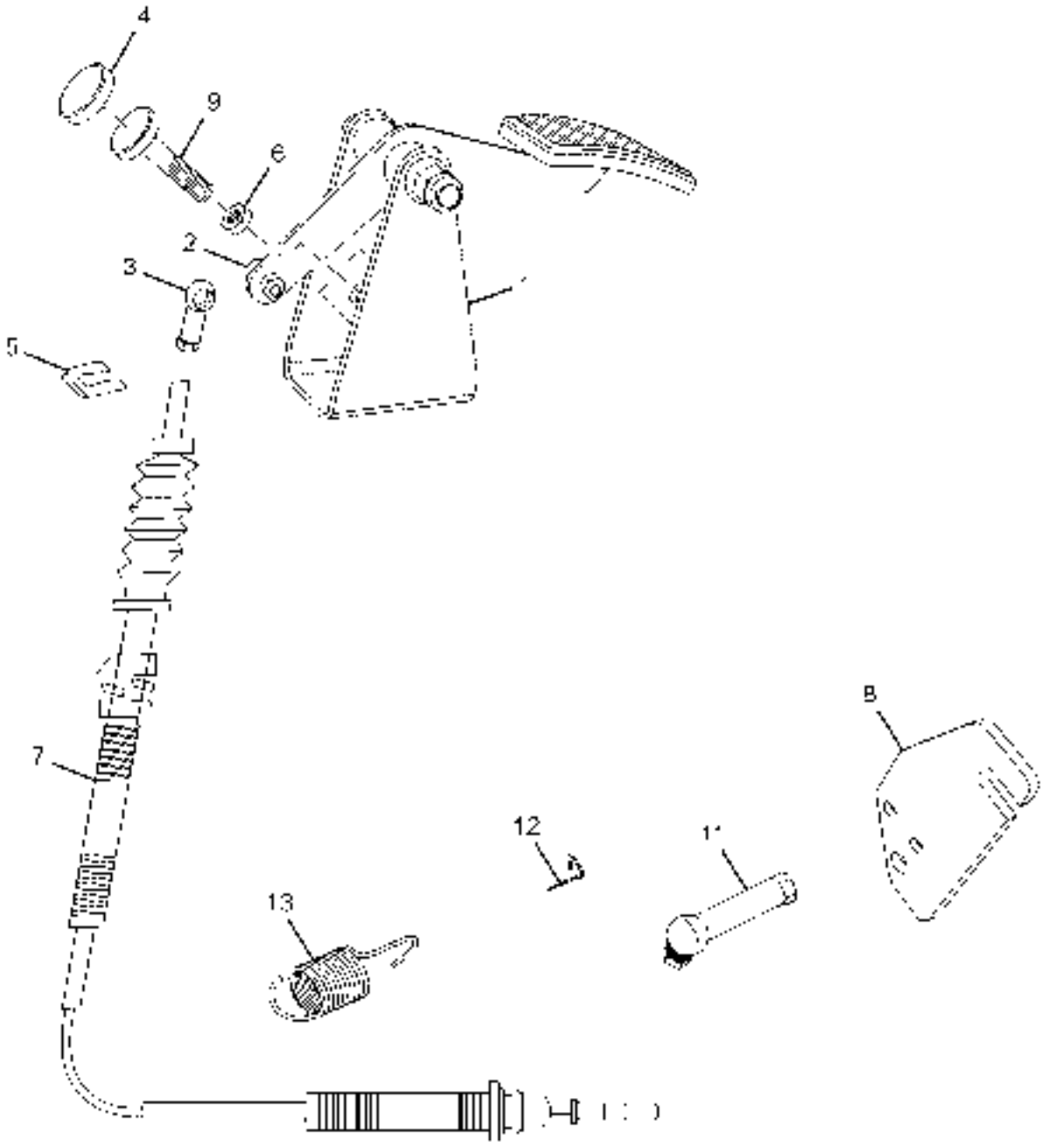

2082033230R.01	ACCELERATOR CONTROL	GROUP 30

CHASSIS TYPE: ALL

FIG. NO.	PART NUMBER	DESCRIPTION	QTY	REMARKS
1	208230100106	ASSY.ACCELERATOR PEDAL COMPLETE	1	
2	17271601000	BALL PIN C10 TS15622 SS8451-8C	2	
3	17271201001	BALL END ASSY B10 TS15624 SS8451-8C	1	
4	269630107703	RUBBER CAP (FOR ACCELERATOR STOPPER)	2	
5	265142804201	HOLDER BRAKE HOSE	1	
6	12080801007	HEX THIN NUT M10 IS1364P4-05-SS8451S2-Y	2	
7	502830100106	ASSY. PULL CABLE ACCELERATOR	1	
8	276330103301	BRACKET(ON TIMING G.B.COVER FOR ACC.)	1	
9	207429100121	ASSY STOPPER	2	
-	207430108206	BRACKET FOR ACCELERATOR CABLE MOUNTING	1	
11	0009910522	BALL END(40mm)	1	
12	14450601005	LOCKING RING 10 TS15624	1	
13	502830308702	TENSION SPRING FOR ACC CONTROL(NEAR FIP)	1	

2167913831R.01	FRAME	GROUP 31

CHASSIS TYPE: ALL

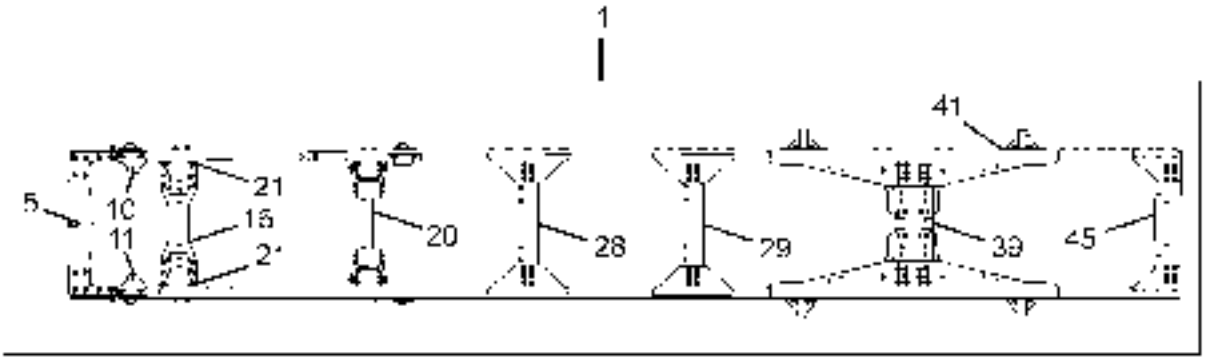

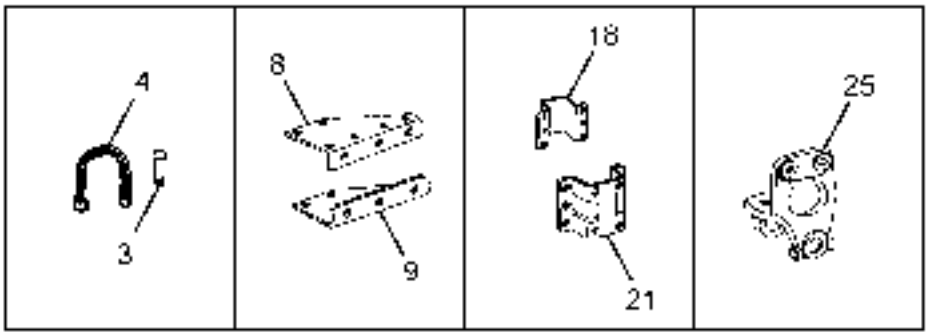

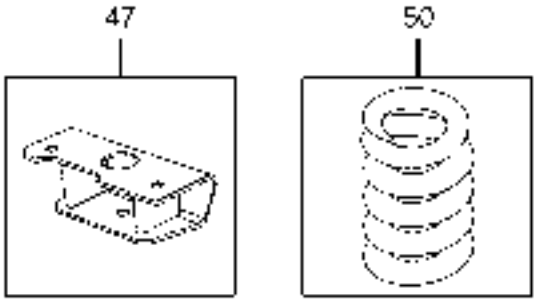

2167913831R.01	FRAME	GROUP 31

CHASSIS TYPE: ALL

FIG. NO.	PART NUMBER	DESCRIPTION	QTY	REMARKS
1	216731000114	ASSY FRAME COMPLETE	1	
-	217131308201	SPACER PLATE - FRONT SPR BKT REAR	1	
-	216731307101	REINFORCEMENT-RH (FRONT SPR BKT)	1	
-	216731307102	REINFORCEMENT-LH (FRONT SPR BKT)	1	
3	257631506701	COUPLING PIN	1	
4	3043100207	ASSY CHAIN WITH RING & LOCKING HOOK	1	
5	284131200101	ASSY BUMPER CROSS MEMBER	1	
8	217131308203	GUSSET TOP RH (BUMPER CROSS MEMBER)	2	
9	217131308204	GUSSET TOP LH (BUMPER CROSS MEMBER)	2	
10	276831200109	ASSY REINFORCEMENT RH(FRT SPR BRACKET)	1	
11	276831200110	ASSY REINFORCEMENT LH(FRT SPR BKT)	1	
16	216731200104	ASSY ENG. CROSS MEMBER (FRONT)	1	
-	216731207105	STIFFENER (2ND C.M)	2	
-	216731208601	SPACER PLATE (2ND C.M)	4	
18	276831207109	SPACER PLATE (ENG.C.M.FRONT & REAR)	2	
20	216731200113	ASSY ENGINE X-MEMBER REAR(WITH SUPPORT)	1	
21	216731200101	ASSY SUPPORT-RH(2ND C.M)	1	
21	216731200102	ASSY SUPPORT-LH (2ND C.M)	1	
25	257632103304	SPRING BRACKET - FRONT	2	
-	3409900201	BOLT (M14X1.5X45)	8	
28	217131200113	ASSY. 4TH CROSS-MEMBER(BRIZE)WITH GUSSET	1	FOR SELECTION
28	217131207110	CROSS-MEMBER (BRIDGE) W/O GUSSET	1	FOR SELECTION
-	217131207112	SUPPORT - RH (4TH CROSS-MBR)	1	
-	217131207118	SUPPORT - LH (4TH CROSS-MBR)	1	
29	217131200114	ASSY.5TH CROSS-MEMBER(BRIZE) WITH GUSSET	1	FOR SELECTION
29	217131207110	CROSS-MEMBER (BRIDGE) W/O GUSSET	1	FOR SELECTION

2167913831R.01	FRAME	GROUP 31

CHASSIS TYPE: ALL

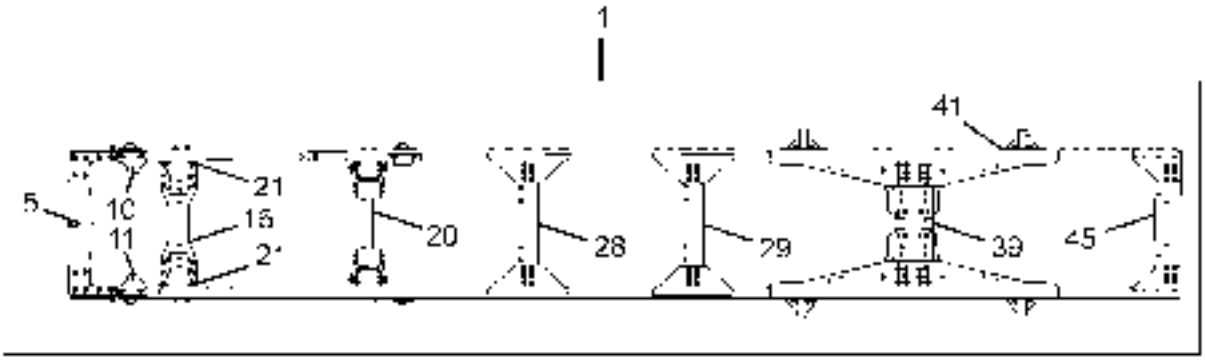

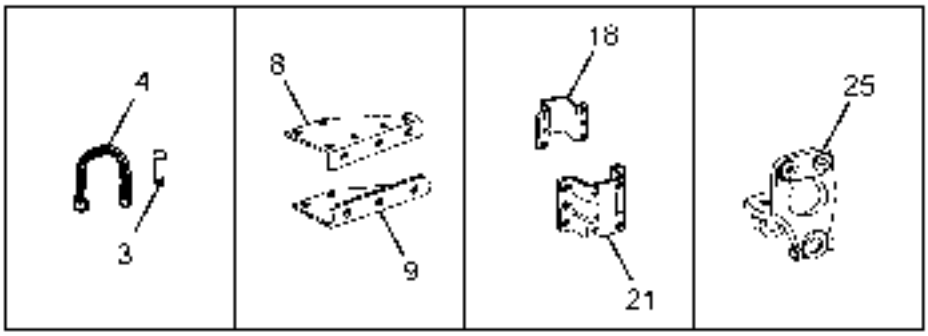

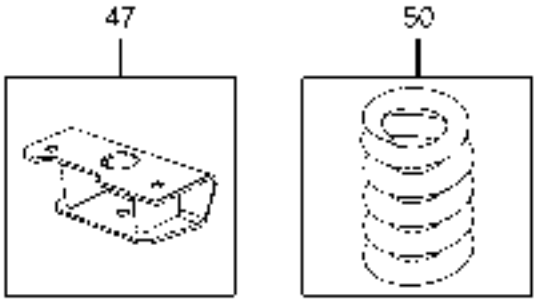

2167913831R.01	FRAME	GROUP 31

CHASSIS TYPE: ALL

FIG. NO.	PART NUMBER	DESCRIPTION	QTY	REMARKS
-	217131207115	SUPPORT - (REAR SPR-FRONT)	1	
39	501131207105	C-CHANNEL (6TH CROSS MEMBER)	2	
-	501131207103	SUPPORT - TOP (6TH CROSS MEMBER)	2	
-	501131207104	SUPPORT - BOTTOM (6TH CROSS MEMBER)	2	
41	220732408601	SPACER PLATE-ARTICULATION STOPPER	4	
45	220731200111	ASSY.END CROSS MEMBER WITH GUSSET	1	
-	217131700106	ASSY. NOISE SHIELD -CAB END	1	
47	208231200108	ASSY.BRKT.FOR 5TH SUPPORT ON G.B	1	
-	216731200111	ASSY BKT WITH PLATE-5TH SUPP ON LM-RH	1	
-	216731200112	ASSY BKT WITH PLATE-5TH SUPP ON LM-LH	1	
50	501131608701	HELICAL COMPRESSION SPRING (G B MTG.)	1	

CHASSIS TYPE: ALL

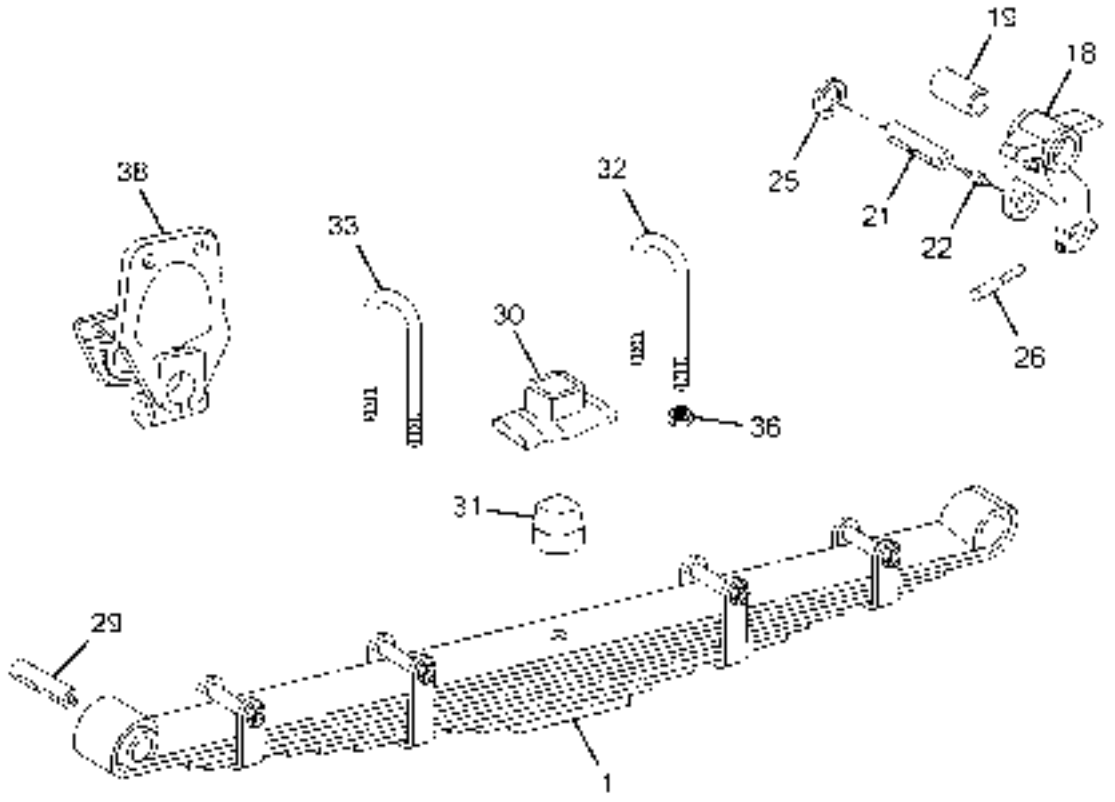

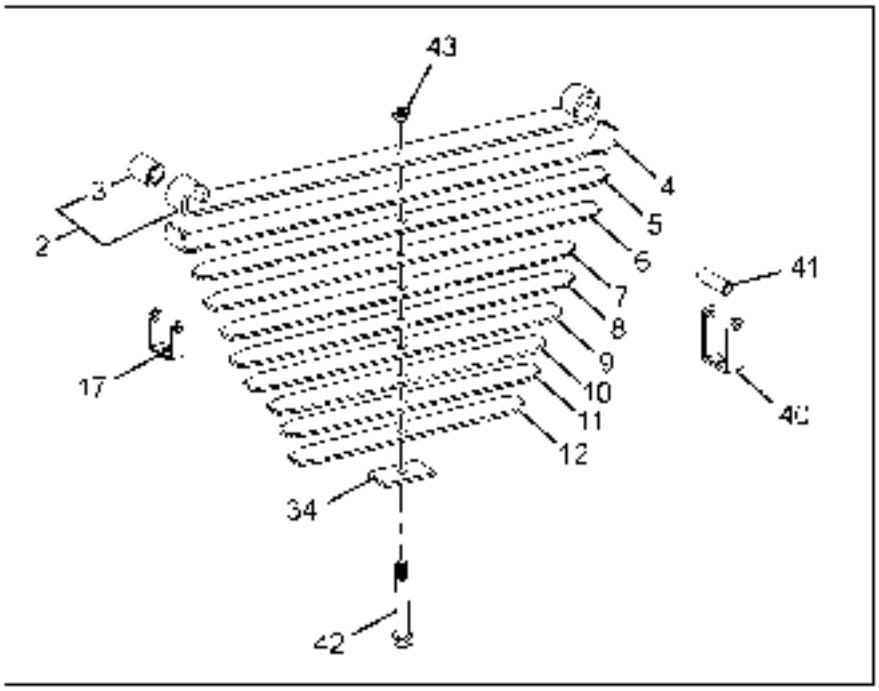

2207013832R.01B	FRONT SPRING AND SUSPENSION	GROUP 32

CHASSIS TYPE: ALL

FIG. NO.	PART NUMBER	DESCRIPTION	QTY	REMARKS
1	284132100101	FRONT SPRING ASSY.	2	
2	284132100102	ASSY. FIRST LEAF WITH BUSH	2	
3	278232103403	SPRING BUSH(FRONT-BI-METALLIC)	4	
4	284132107102	SECOND LEAF	2	
5	284132107103	THIRD LEAF	2	
6	284132107104	FOURTH LEAF	2	
7	284132107105	FIFTH LEAF	2	
8	284132107106	SIXTH LEAF	2	
9	284132107107	SEVENTH LEAF	2	
10	284132107108	EIGHTH LEAF	2	
11	284132107109	PACKING PLATE	2	
12	284132107110	PACKING PLATE	2	
17	278232104203	SPRING CLIP	4	
40	277832104201	SPRING CLIP	4	
41	263232108603	SPACER (LEAF SPRING CLIP)	8	
42	275432103201	CENTER BOLT	2	
43	12052296054	HEX NUT M12	2	
18	257632100105	SPRING SHACKLE ASSY.(FRONT SPRING)	2	
19	278232103402	SPRING BUSH (BI - METALLIC)	2	
21	257632106702	SPRING PIN	6	
22	17170601009	GREASE NIPPLE AM10X1	6	
25	257332400119	SEALING RING ASSY.	12	
26	0429900037J	COTTER PIN	6	
29	257632106702	SPRING PIN	2	
30	257632203701	GUIDE PLATE	2	
31	257632207701	RUBBER BUFFER	2	
32	277032204201	U CLMAP (310 LENGTH - M20X1.5)	2	
33	263232204203	U CLAMP	2	
34	3423220084	CASTER PLATE LH	2	
	283932208601	SPACER	4	
36	12052396075	HEX NUT M 20X1.5	16	
38	257632103304	SPRING BRACKET - FRONT	4	

TATA MOTORS

2207013832R.02A	FRONT SHOCK ABSORBER	GROUP 32

CHASSIS TYPE: ALL

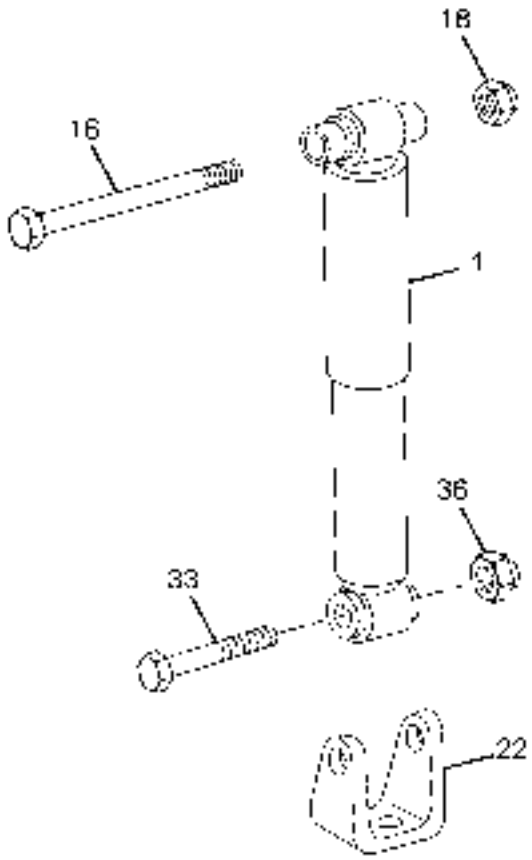

2207013832R.02A	FRONT SHOCK ABSORBER	GROUP 32

CHASSIS TYPE: ALL

FIG. NO.	PART NUMBER	DESCRIPTION	QTY	REMARKS
1	257632300110	ASSY. FRONT SHOCK ABSORBER	2	
16	11063996205	HEXBOLT M20X1.5X90(TO BRACKET UPPER)	2	
18	12140698014	NYLOC NUT M20X1.5	2	
22	270032303302	SHOCK ABSORBER BRACKET (ON FRT.AXL.BEAM)	2	
-	257632308201	LOCKING SHEET	2	
33	11063996205	HEXBOLT M20X1.5X90(TO BRACKET LOWER)	2	
36	12140698014	NYLOC NUT M20X1.5(TO BRACKET LOWER)	2	

2167583832R.04	ANTI ROLL BAR FRONT	GROUP 32

CHASSIS TYPE: ALL

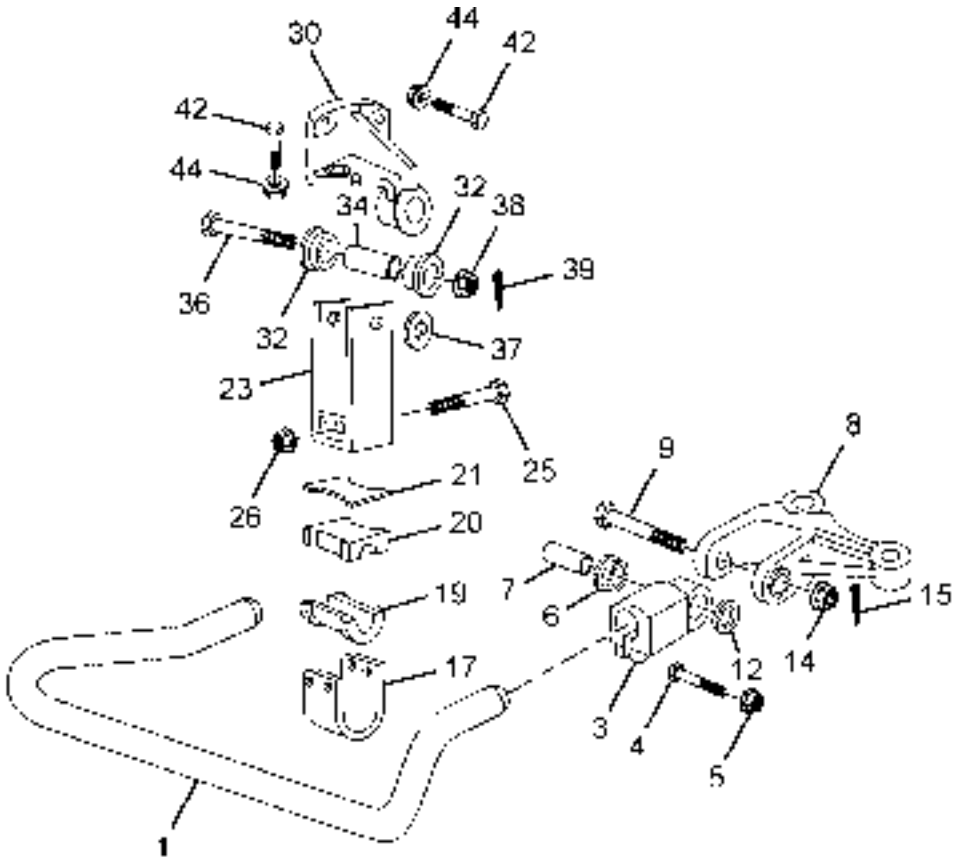

LPK25160-32 32 03

2167583832R.04	ANTI ROLL BAR FRONT	GROUP 32

CHASSIS TYPE: ALL

FIG. NO.	PART NUMBER	DESCRIPTION	QTY	REMARKS
1	257632807906	ANTI ROLL BAR (BOLTED VERSION)	1	OPTIONAL
1	257632800131	ANTI ROLL BAR (CRIMPED VERSION)	1	OPTIONAL
3	257632805105	EYE PIECE (CRIMPED VERSION)	2	FOR SELECTION
4	11063899170	HEX BOLT M 10X65	1	
5	12140501008	NYLON NUT M 10	12	
6	257632807502	RUBBER BUSH	4	
7	257632808402	SLEEVE	2	
8	206032803305	BRACKET RH	1	
8	206032803306	BRACKET LH	1	
9	264032906702	MOUNTING PIN	2	
12	257632808306	SHIM	AR	
12	257632808307	SHIM	AR	
14	12140698014	NUT M 20X1.5	2	
15	13150609369	SPLIT PIN 4X36	6	
17	257632807103	CLAMP	2	
19	257632803402	BUSH HALF (BOTTOM)	2	
20	257632803403	BUSH HALF (TOP)	2	
21	257632808302	SHIM	AR	
21	257632808303	SHIM	AR	
21	257632808304	SHIM	AR	
23	275132800103	ASSY. CONNECTING LINK	1	
25	11063896251	HEX. BOLT 10X85	2	
26	12140501008	NYLOC NUT M 10	12	
30	206032803303	BRACKET (FOR ANTIROLL BAR MOUNTING)	2	
32	257632807501	RUBBER BUSH	4	
34	257632808401	SLEEVE	2	
36	257632806703	MOUNTING PIN	2	
37	12460502100	BRIGHT WASHER 21 ST	2	
38	12102202005	CASTLE NUT M 20X1.5	2	
39	13150609369	SPLIT PIN 4X36	6	
42	11323996212	HEX SCREW M 12X45	4	
44	12140501202	NYLOC NUT M 12	8	

2167583832R.05B	REAR TANDEM SUSPENSION	GROUP 32

CHASSIS TYPE: ALL

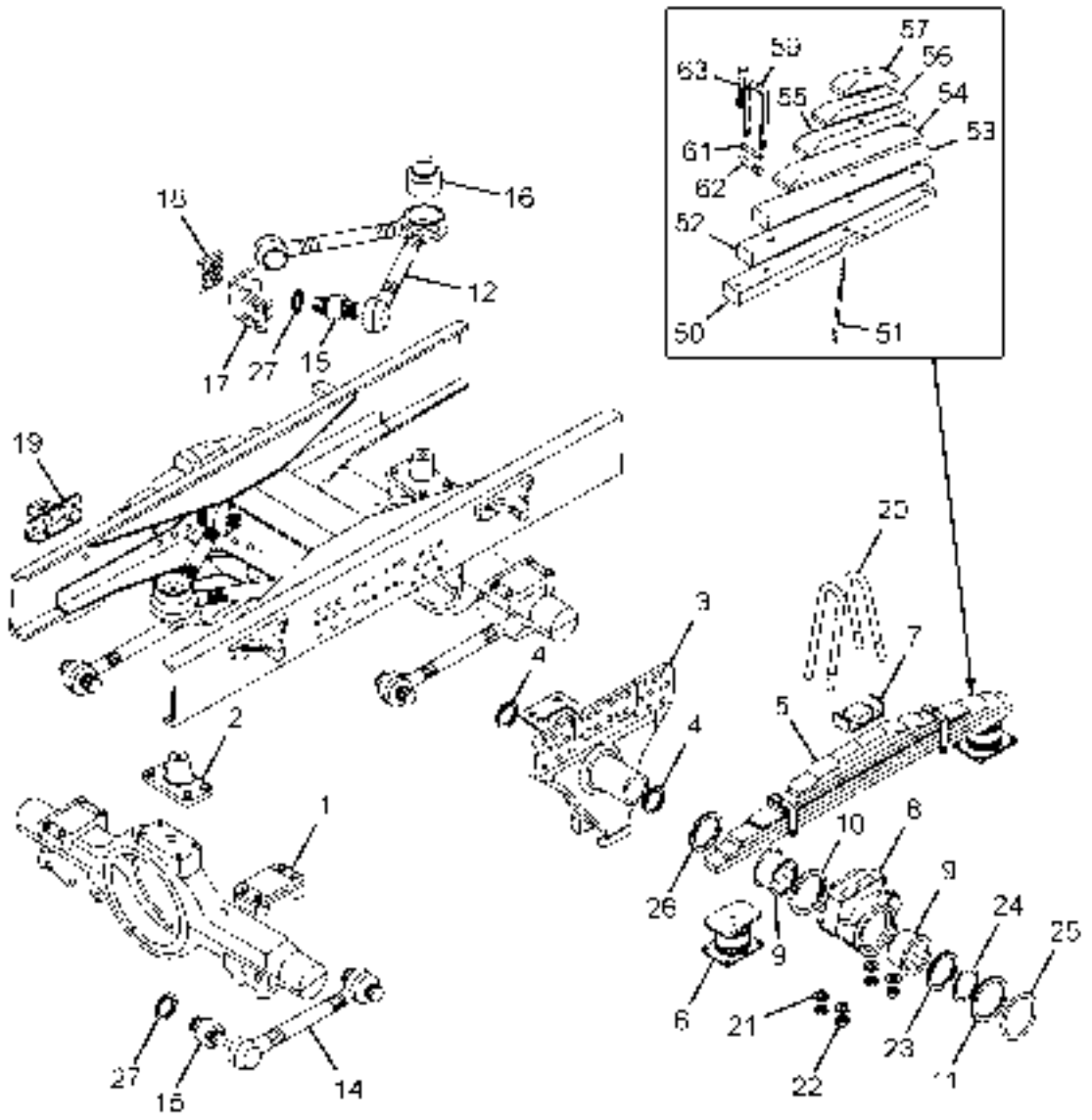

2167583832R.05B	REAR TANDEM SUSPENSION	GROUP 32

CHASSIS TYPE: ALL

FIG. NO.	PART NUMBER	DESCRIPTION	QTY	REMARKS
-	216732400110	ASSY 26T VAVE SUSP	1	NOT SERVICED
1	501132403701	AXLE CLAMP UPPER	4	
2	288032400149	ASSY.ADAPTOR PLATE (V ROD)	2	
3	216732400111	ASSY TRUNNION BRACKET VAVE (26T)	2	
4	501132408201	PLUG-END CAP	4	
5	288032400134	ASSEMBLY LEAF SPRING	2	
50	288032407108	FIRST LEAF - REAR	2	
51	288032403207	CENTER BOLT (HENDRICKSON - REAR)	2	
52	288032407102	SECOND LEAF (HENDRICKSON REAR)	2	
53	288032407103	THIRD LEAF (HENDRICKSON REAR)	2	
54	288032407104	FOURTH LEAF (HENDRICKSON REAR)	2	
55	288032407105	FIFTH LEAF (HENDRICKSON REAR)	2	
56	288032407106	SIXTH LEAF-REAR	2	
57	288032407107	SEVENTH LEAF (HENDRICKSON REAR)	2	
-	288032406505	HEX NUT (REAR - CENTER BOLT)	2	
59	288032404202	SPRING CLIP (LEAF SPRING - REAR)	4	
-	288032409203	WASHER (SPRING CLIP-REAR)	8	
61	288032403208	HEX BOLT (M10) (SPRING CLIP-REAR)	4	
-	288032406506	HEX NUT (M10) (SPRING CLIP-REAR)	4	
62	288032408601	SPACER (SPRING CLIP-REAR)	4	
63	288032403227	HEX BOLT M16X2X70-10.9 ZINC PLATING	4	
6	288032400135	RUBBER BOLSTER SPRING	4	
7	216732403704	GUIDE PLATE	2	
8	216732400113	ASSLY.PIVOT HOUSING	2	
9	288032403401	BUSHING POLYMER	4	
10	288032407801	SEAL TRUNNION	2	
11	288032400137	CAP-END CLOSURE & SEAL	2	
12	288032400147	LINK A-FRAME	2	
-	288032400142	LINK ASSEMBLY -FRAME	2	
14	288032400138	LINK TORQUE ROD	4	
15	288032400140	TORQUE ROD BAR PIN BUSH	8	
16	288032400148	CENTER BUSH ASSY. (V-ROD)	2	
17	288032403706	CORNER BRACKET	4	
18	501132403712	PLATE CORNER BRACKET	4	
19	288032403707	AXLE STOP	4	

2167583832R.05B	REAR TANDEM SUSPENSION	GROUP 32

CHASSIS TYPE: ALL

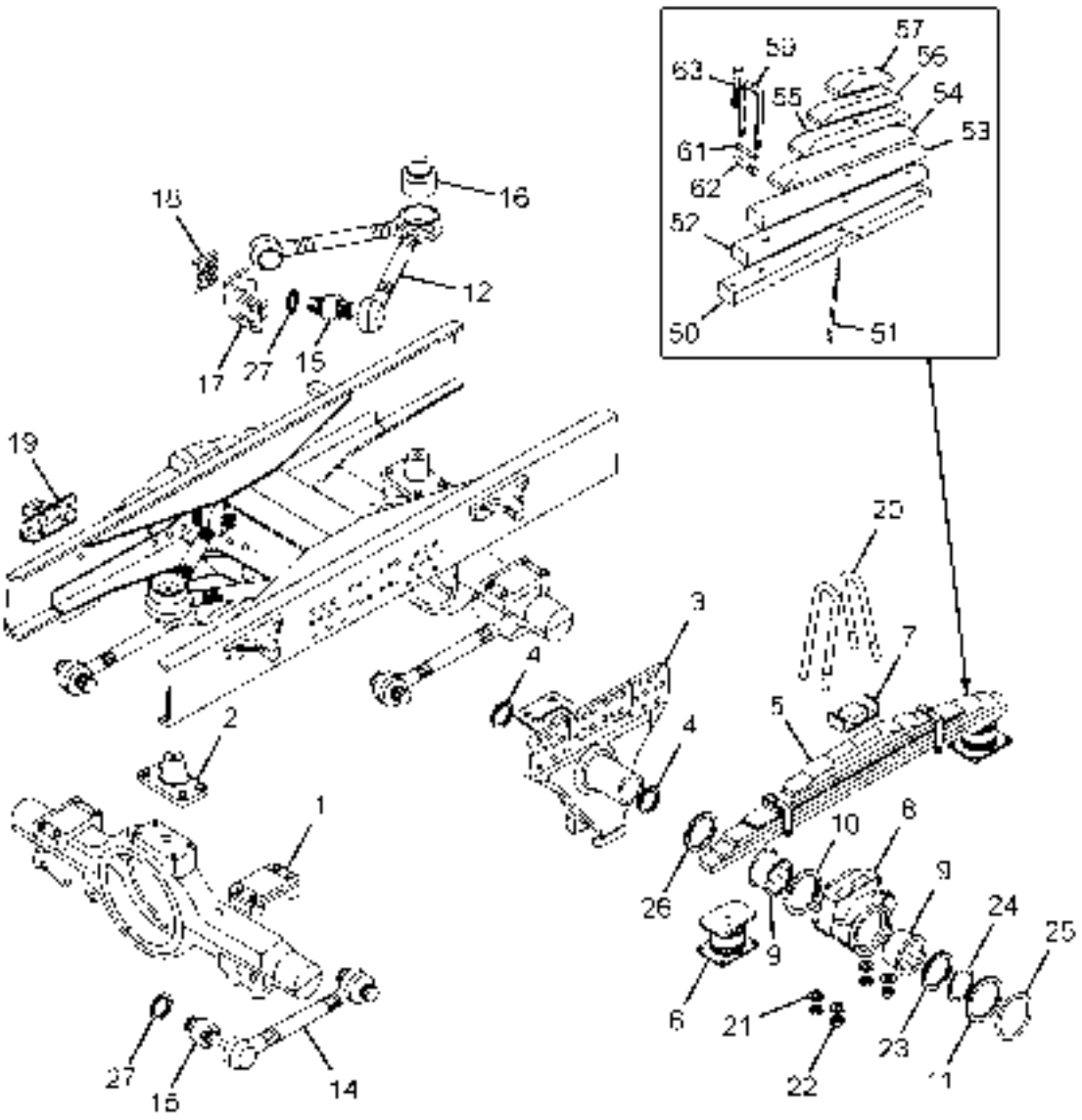

2167583832R.05B	REAR TANDEM SUSPENSION	GROUP 32

CHASSIS TYPE: ALL

FIG. NO.	PART NUMBER	DESCRIPTION	QTY	REMARKS
20	216732404205	U-BOLT M24X2 CLASS-10.9	4	
21	216732409202	M24 HARDENED WASHER	8	
22	216732406502	HEX.NUT M24X2 GRD.10 PREVAILING TORQUE TYPE	8	
23	288032409202	THRUST WASHER OUTER	2	
24	288032404302	EXTERNAL CIRCLIP	2	
25	288032404303	INTERNAL CIRCLIP	2	
26	288032409201	THRUST WASHER INNER	2	
27	288032408602	CIRCULAR ROD END	8	
-	288032409901	GREASE NIPPLE M8X1 TRUNNION HOUSING	2	

2167313833R.01A	FRONT AXLE	GROUP 33

CHASSIS TYPE: ALL

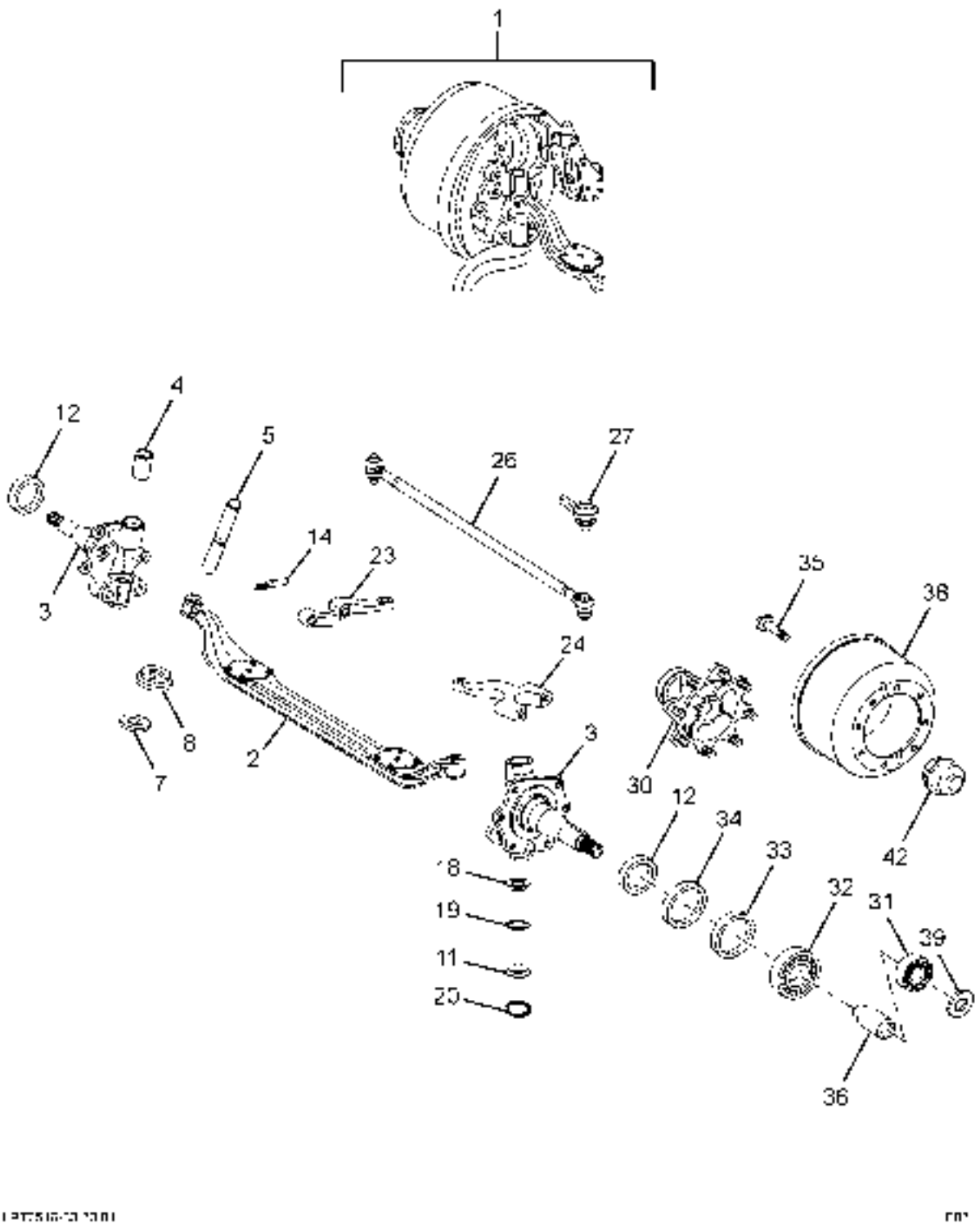

2167313833R.01A	FRONT AXLE	GROUP 33

CHASSIS TYPE: ALL

FIG. NO.	PART NUMBER	DESCRIPTION	QTY	REMARKS
1	216733000102	ASSY.FRONT AXLE COMPL.W/BRAKES-180 LINER	1	
2	257633105110	FRONT AXLE BEAM NORMAL	1	
3	257533200125	ASSY STUB AXLE NORMAL	2	
4	257533203401	BUSH (FOR KING PIN).	4	
5	257633206709	KING PIN NORMAL	2	
	257533209203	THRUST WASHER UPPER NORMAL	1	
7	257533209207	THRUST WASHER LOWER NORMAL	1	
8	257633203109	TAPERED ROLLER THRUST BEARING NORMAL	1	
	257633207201	PLUG (STUB AXLE-TOP)	2	
11	257533206301	DUST CAP(STUB AXLE)	2	
12	257633208601	SPACER	2	
	257633209212	THRUST WASHER	AR	FOR SELECTION
	257633209215	THRUST WASHER	AR	FOR SELECTION
	257633209216	THRUST WASHER	AR	FOR SELECTION
	257633209217	THRUST WASHER	AR	FOR SELECTION
	257633209218	THRUST WASHER	AR	FOR SELECTION
	257633209219	THRUST WASHER	AR	FOR SELECTION
	257633209220	THRUST WASHER	AR	FOR SELECTION
	257633209221	THRUST WASHER	AR	FOR SELECTION
	257633209222	THRUST WASHER	AR	FOR SELECTION
14	257633206707	COTTER PIN (KING PIN TO STUB AXLE)	2	
18	257633208202	SEALING CAP (STUB AXLE)	4	
19	257633207702	GASKET RING	2	
20	14580605002	INTERNAL CIRCLIP 50X2N	4	
23	257633805104	STEERING ARM LH	1	
23	257633805106	STEERING ARM RH	1	
24	257633805107	STEERING ARM TOP	1	
26	257633800103	ASSY.TIE ROD	1	
27	0003382629	ASSY. BALL JOINT LH	1	
27	0003383429	ASSY. BALL JOINT RH	1	
30	263133400101	ASSY.WHEEL HUB,FRONT WITH HUB BOLT AND BEARINGS	2	FOR SELECTION
30	263133400108	ASSY.WHEEL HUB,FRONT WITH HUB BOLT AND W/O BEARINGS	2	FOR SELECTION
31	257633403103	TAPER ROLLER BEARING, OUTER	2	
32	257633403101	TAPER ROLLER BEARING, INNER	2	
33	257633408601	SPACER	2	
34	257633407801	SEALING RING	2	

TATA MOTORS

2167313833R.01A	FRONT AXLE	GROUP 33

CHASSIS TYPE: ALL

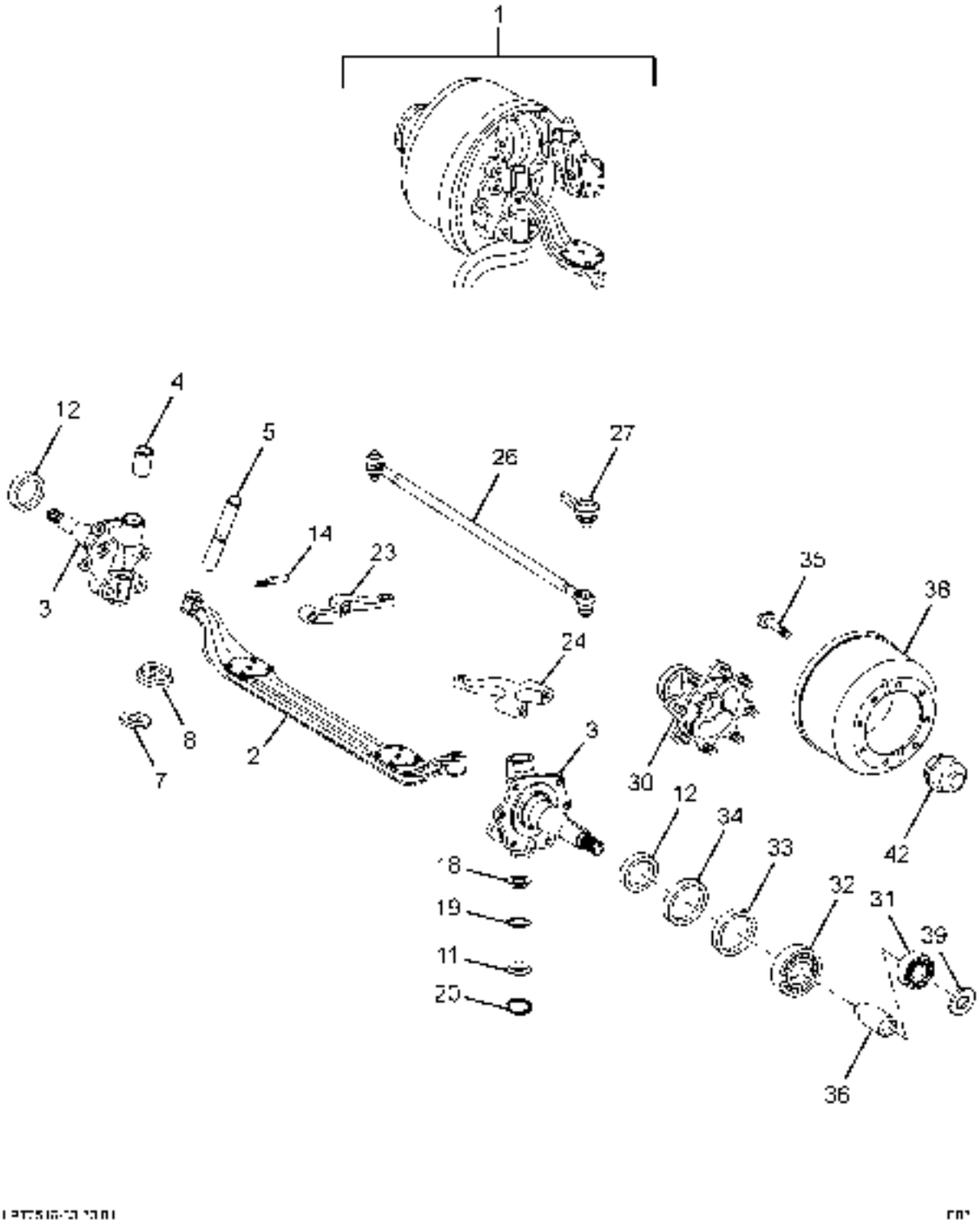

CHASSIS TYPE: ALL

FIG. NO.	PART NUMBER	DESCRIPTION	QTY	REMARKS
35	263140106701	HUB BOLT (M22)	20	
36	257333408602	SPACER TUBE	2	
	257433408304	SHIM 1.0 THK	AR	
	257433408305	SHIM 0.5 THK	AR	
	257433408306	SHIM 0.3 THK	AR	
	257433408307	SHIM 0.1 THK	AR	
38	289242303701	BRAKE DRUM-REAR (410X220)	2	
39	257533409201	THRUST WASHER	2	
42	257333403703	FRONT HUB COVER	2	
	282133209202	WASHER	1	
		REPAIR KITS		
	0003300003J	TIE ROD REPAIR KIT	1	
		CONSISTS OF		
		UPPER BALL CUP	2	
		LOWER BALL CUP	2	
		PRESSURE SPRING	2	
		LOCKING RING	2	
		SPHERICAL PIN	2	
		CASTLE NUT	2	
		SEAL CAP	2	
		THRUST WASHER (BRASS)	2	
		THRUST WASHER (STEEL)	2	
	885433161612	KING PIN REPAIR KIT WITH MINOR KIT & BUSH STD (38.25MM)	1	
		CONSISTS OF :		
		KING PIN STD	2	
		KING PIN BUSH	4	
	885433011612	KING PIN REPAIR KIT WITH MINOR KIT & BUSH O/S I (38.35MM)	1	
		CONSISTS OF :		
		KING PIN O/S I	2	
		KING PIN BUSH	4	
		MINOR KIT	**1**	
	885433021612	KING PIN REPAIR KIT WITH MINOR KIT & BUSH O/S II (38.45MM)	1	
		CONSISTS OF :		
		KING PIN O/S II	2	
		KING PIN BUSH	4	
		MINOR KIT	**1**	
	885433031612	KING PIN REPAIR KIT WITH MINOR KIT & BUSH O/S III (38.55MM)	1	
		CONSISTS OF :		

TATA MOTORS

2167313833R.01A	FRONT AXLE	GROUP 33

CHASSIS TYPE: ALL

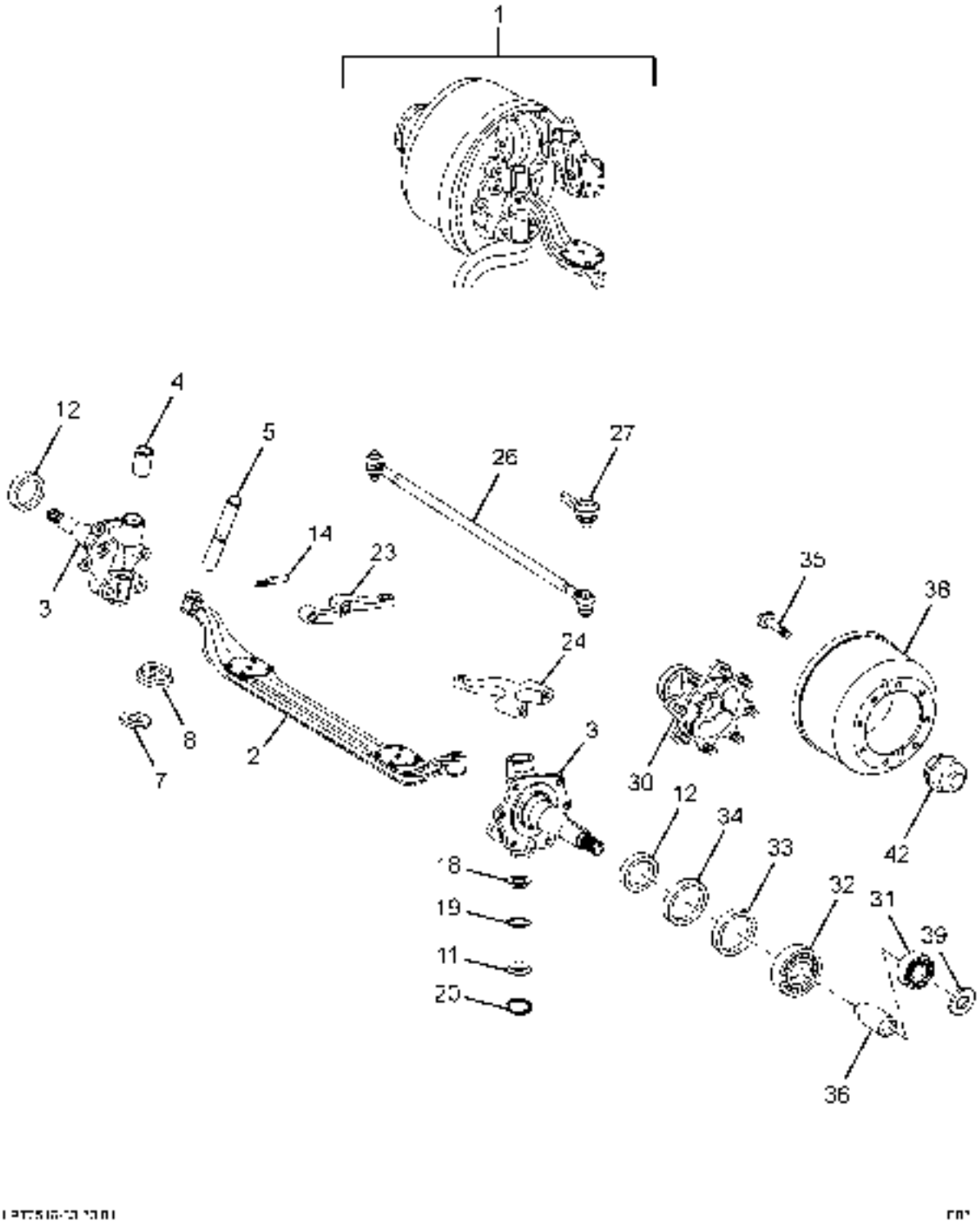

CHASSIS TYPE: ALL

FIG. NO.	PART NUMBER	DESCRIPTION	QTY	REMARKS
		KING PIN O/S III	2	
		KING PIN BUSH	4	
		MINOR KIT	**1**	
	885433041612	KING PIN REPAIR KIT WITH MINOR KIT & W/O BUSH STD (38.25MM)	1	
		CONSISTS OF :		
		KING PIN STD	1	
		MINOR KIT	**1**	
	885433051612	KING PIN REPAIR KIT WITH MINOR KIT & W/O BUSH O/S I (38.35MM)	1	
		CONSISTS OF :		
		KING PIN O/S I	1	
		MINOR KIT	**1**	
	885433061612	KING PIN REPAIR KIT WITH MINOR KIT & W/O BUSH O/S II (38.45MM)	1	
		CONSISTS OF :		
		KING PIN O/S II	1	
		MINOR KIT	**1**	
	885433071612	KING PIN REPAIR KIT WITH MINOR KIT & W/O BUSH O/S III (38.55MM)	1	
		CONSISTS OF :		
		KING PIN O/S III	1	
		MINOR KIT	**1**	
	885433081612	MINOR KIT	1	
		CONSISTS OF :		
		COTTER BOLT	2	
		‘O’ RING	4	
		CIRCLIP B-50	4	
		SEALING CAP	4	
		HEX NUT M 8	2	
		SPRING WASHER	2	
		GREASE NIPPLE	4	

2167313833R.02A	FRONT WHEEL BRAKE	GROUP 33

CHASSIS TYPE: ALL

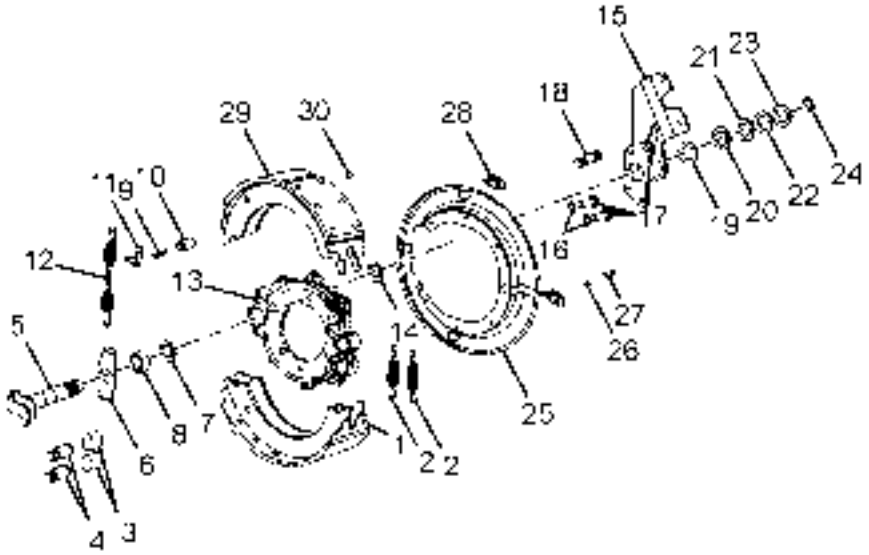

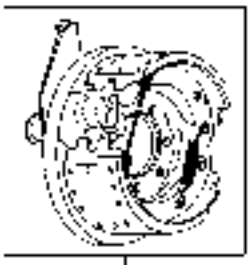

2167313833R.02A	FRONT WHEEL BRAKE	GROUP 33

CHASSIS TYPE: ALL

FIG. NO.	PART NUMBER	DESCRIPTION	QTY	REMARKS
50	287942100105	ASSY FRONT BRAKE LH WITH DUST COVER	1	
50	287942100109	ASSY FRONT BRAKE RH WITH DUST COVER	1	
1	257342310179	ASSY BRAKE SHOE WITHOUT LINING	4	
1	257342310148	ASSY BRAKE SHOE W/LINING & ROLLER (AF-235 LINING)	4	
2	257342108708	SPRING- BRK SHOE RETAINING	4	
3	257342103401	BUSHING- ANCHOR PIN	4	
4	257342106723	ANCHOR PIN- BRAKE SHOE	4	
5	261842107903	FRONT S CAM SHAFT-RH	1	
5	261842107904	FRONT S CAM SHAFT-LH	1	
6	257342109211	WASHER- CAM HEAD	2	
7	257342107701	SEAL- CAM SHAFT	4	
8	257342103402	BUSHING- CAM	4	
9	257342103403	PIN-RETURN SPRING	4	
10	257342107903	ROLLER- BRAKE SHOE	4	
11	257342104301	RETAINER- ROLLER	4	
12	257342108703	RETURN SPRING- BRAKE SHOE	2	
13	257342100203	SPIDER ASSY (WITH BUSHES & SEAL) LH	1	
13	257342100202	SPIDER ASSY (WITH BUSHES & SEAL) RH	1	
14	257342105301	GASKET-BRACKET & SPIDER	2	
15	257342108304	BRACKET ASSY LH	1	
15	257342108305	BRACKET ASSY RH	1	
16	257342109204	WASHER BRACKET CAP SCREW	8	
17	257342108007	CAP SCREW CHAMPER BRACKET	8	
18	257342309906	FITTING GREASE	2	
19	257342309215	WASHER 2.5 MM	2	
20	257342309216	WASHER 0.3 MM	4	
21	257342309217	WASHER 0.5 MM	4	
22	257342309218	WASHER 1.0 MM	2	
23	257342309219	WASHER 2.5 MM	2	
24	261842104301	LOCK RING- CAM SHAFT	2	
25	257342308208	DUST SHEILD- TOP	2	
25	257342308205	DUST SHIELD BOTTOM	2	
26	257342108005	CAP SCREW- DUST SHIELD	12	
27	257342109208	WASHER- DUST SHIELD	12	
28	257342106802	PLUG- DUST SHIELD	4	
29	263242130104	BRAKE SHOE LINING (AF-235 LINING)	8	

2167313833R.02A	FRONT WHEEL BRAKE	GROUP 33

CHASSIS TYPE: ALL

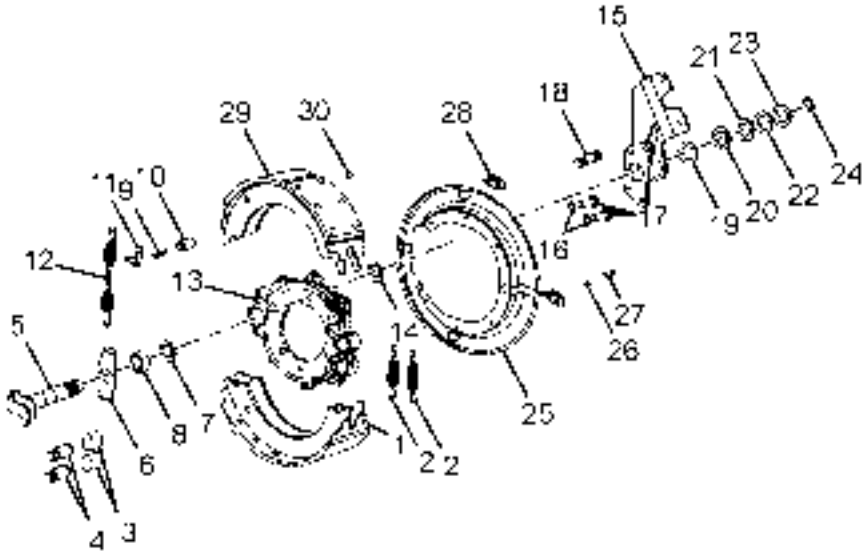

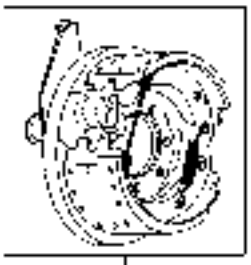

CHASSIS TYPE: ALL

FIG. NO.	PART NUMBER	DESCRIPTION	QTY	REMARKS
29	263242310127	BRAKE SHOE LINING (RAF7 LINING)	8	
30	257342107405	RIVET	80	
-	263242310141	MINOR O/H KIT	1	
		CONSISTS OF :		
11		RETAINER SHOE ROLLER	4	
30		RIVET	80	
10		ROLLER BRAKE SHOE	4	
12		RETURN SPRING BRAKE SHOE	2	
2		SPRING BRAKE SHOE RETAINING	4	
-	263242310133	MINOR O/H KIT REAR	1	
		CONSISTS OF :		
11		RETAINER SHOE ROLLER	4	
30		RIVET	80	
10		ROLLER BRAKE SHOE	4	
12		RETURN SPRING BRAKE SHOE	2	
2		SPRING BRAKE SHOE RETAINING	4	
29		BRAKE SHOE LINING	8	
-	257342100150	CAM SHAFT SERVICE KIT CAM BRAKE FRONT	1	
		CONSISTS OF :		
8		BUSHING- CAM	4	
7		SEAL- CAM SHAFT	4	
24		LOCK RING- CAM SHAFT	2	
-	263242130102	KIT-BRAKE SHOE LINING ASSY.-AF235(REAR)	1	
		CONSISTS OF :		
29		BRAKE SHOE LINING (AF-235 LINING)	8	
30		RIVET	80	
-	263242310139	LINED SHOE KIT AF-235 LINING	1	
		CONSISTS OF :		
1		ASSY BRAKE SHOE WITHOUT LINING	4	
29		BRAKE SHOE LINING (AF-235 LINING)	8	
30		RIVET	80	
-	263242310140	BRAKE SHOE & LINER KIT-AF-235 LINING	1	
		CONSISTS OF :		
1		ASSY BRAKE SHOE WITHOUT LINING	4	
29		BRAKE SHOE LINING (AF-235 LINING)	8	
-	257342100148	MINOR SERVICE KIT-BRAKE	1	
		CONSISTS OF :		
9		PIN-RETURN SPRING	4	
11		RETAINER- ROLLER	4	

2167313833R.02A	FRONT WHEEL BRAKE	GROUP 33

CHASSIS TYPE: ALL

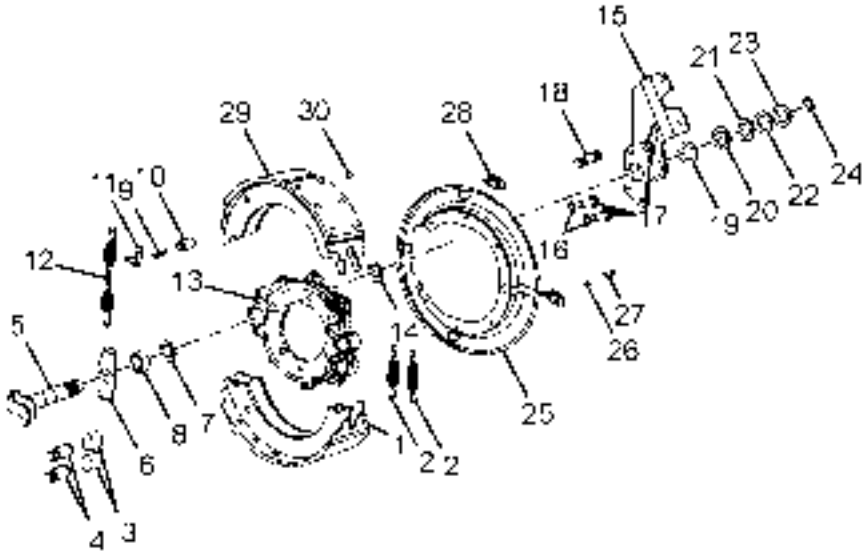

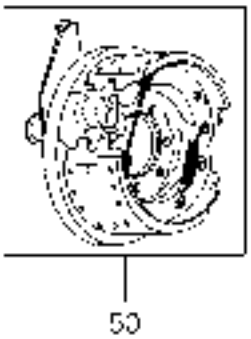

2167313833R.02A	FRONT WHEEL BRAKE	GROUP 33

CHASSIS TYPE: ALL

FIG. NO.	PART NUMBER	DESCRIPTION	QTY	REMARKS
10		ROLLER- BRAKE SHOE	4	
12		RETURN SPRING- BRAKE SHOE	2	
2		SPRING- BRK SHOE RETAINING	4	
-	263242310137	BRAKE SPRING KIT	1	
		CONSISTS OF :		
11		RETAINER- ROLLER	4	
12		RETURN SPRING- BRAKE SHOE	2	
2		SPRING- BRK SHOE RETAINING	4	
-	257342310182	CAMSHAFT WASHER KIT	1	
		CONSISTS OF :		
6		WASHER- CAM HEAD	2	
19		WASHER 2.5 MM	2	
20		WASHER 0.3 MM	4	
21		WASHER 0.5 MM	4	
22		WASHER 1.0 MM	2	
23		WASHER 2.5 MM	2	

TATA MOTORS

2167023833R.02	FRONT WHEEL BRAKES CAM (BIL)	GROUP 33

CHASSIS TYPE: ALL

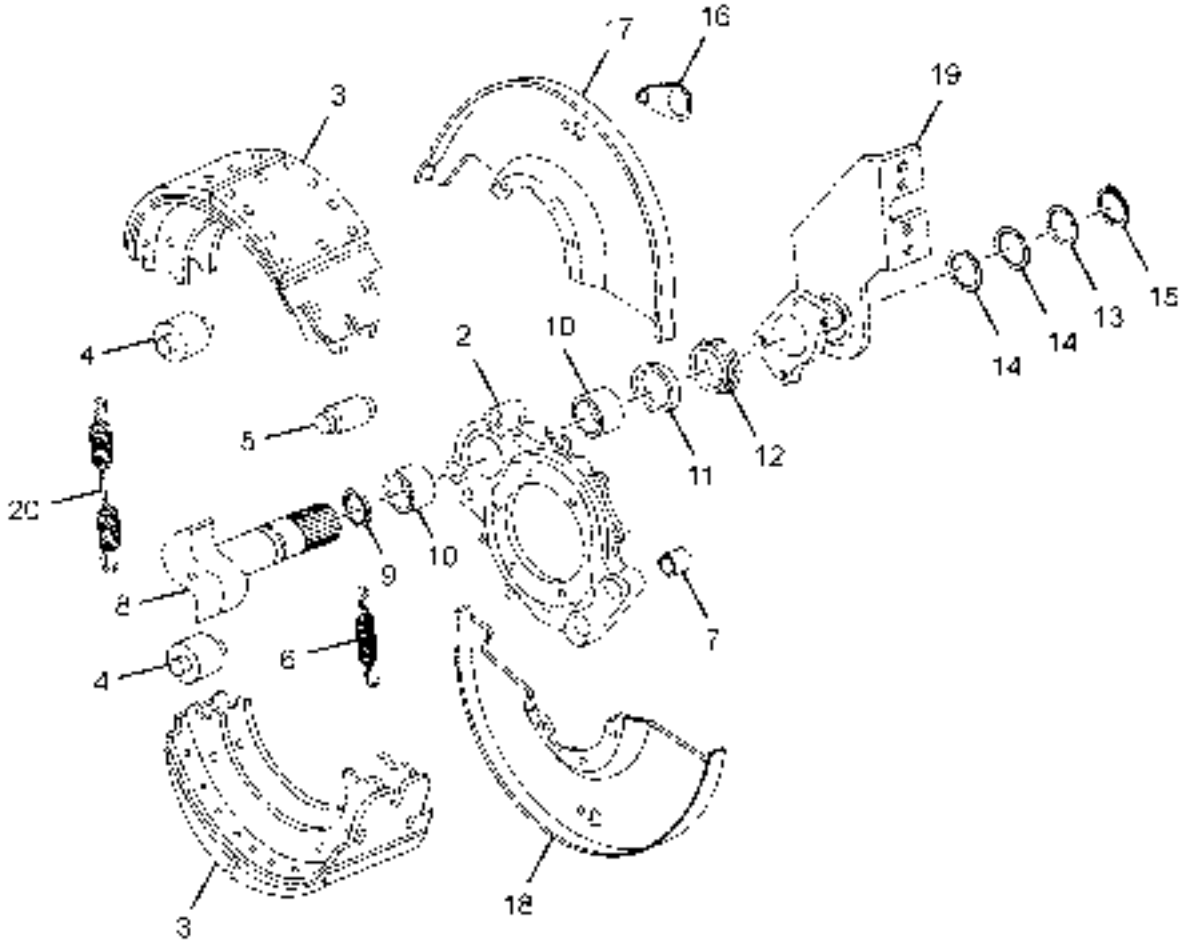

2167023833R.02	FRONT WHEEL BRAKES CAM (BIL)	GROUP 33

CHASSIS TYPE: ALL

FIG. NO.	PART NUMBER	DESCRIPTION	QTY	REMARKS
-	277842100132	ASSY.FRT. BRAKE RH	1	FOR SELECTION AS A SET WITH M/S.AAL
-	277842100131	ASSY.FRT. BRAKE LH	1	FOR SELECTION AS A SET WITH M/S.AAL
2	257542113701	TORQUE PLATE LH	1	
2	257542113702	TORQUE PLATE RH	1	
3	277842130105	ASSY. BRAKE SHOE WITH NON ASBESTOS BRAKE LINING (FRONT)	4	
4	257342109902	ROLLER	4	
5	257342106724	FULCRUM	4	
6	257342108704	SPRING (PULL OFF) FULCRUM END	4	
7	257342103404	FULCRUM PIN BUSH	4	
8	257342107904	CAM SHAFT LH	1	
8	257342107905	CAM SHAFT RH	1	
9	257342107702	O' RING	2	
10	257342103405	DELRIN BUSH	4	
11	257342107801	OIL SEAL	2	
12	257342108405	SLEEVE (SLACK ADJ. END)	2	
13	257342109209	WASHER	2	
14	257342108301	SHIM 0.5 MM	2	FOR SELECTION
14	257342108302	SHIM 1.0 MM	2	FOR SELECTION
15	257342104303	CIRCLIP	2	
16	257342107501	GROMMET	4	
17	257342118211	DUST COVER TOP	2	
18	257342118210	DUST COVER BOTTOM	2	
19	257342100156	ASSY. FLANGE, TUBE & BRACKET LH	1	
19	257342100157	ASSY. FLANGE, TUBE & BRACKET RH	1	
20	257342108705	SPRING PULL OFF, CAM END	2	
		BRAKE LINING SET		
-	885442011616	SET OF BRAKE LININGS W/O RIVETS (WHEEL SET) FRONT STD NASB	1	FOR SELECTION
-	885442021616	SET OF BRAKE LININGS W/O RIVETS (WHEEL SET) FRONT RS 1 NASB	1	FOR SELECTION
-	885442031616	SET OF BRAKE LININGS W/O RIVETS (WHEEL SET) FRONT RS 2 NASB	1	FOR SELECTION

TATA MOTORS

2167023833R.03	FRONT WHEEL BRAKE (M/S. AAL)	GROUP 33

CHASSIS TYPE: ALL

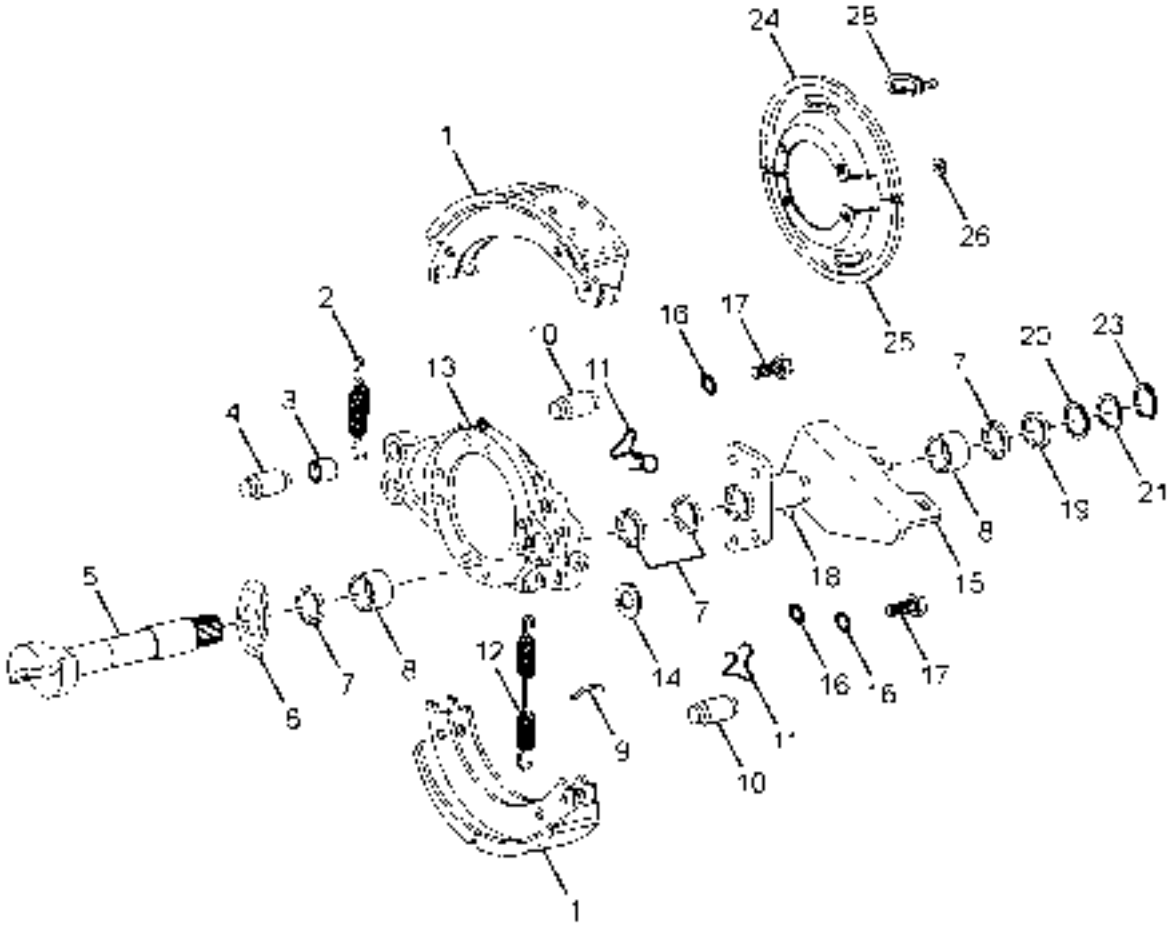

2167023833R.03	FRONT WHEEL BRAKE (M/S. AAL)	GROUP 33

CHASSIS TYPE: ALL

FIG. NO.	PART NUMBER	DESCRIPTION	QTY	REMARKS
-	263242100153	ASSY FRONT AXLE BRAKE RH WITH DUST COVER	1	FOR SELECTION AS A SET WITH M/S. BIL
-	263242100154	ASSY FRONT AXLE BRAKE LH WITH DUST COVER	1	FOR SELECTION AS A SET WITH M/S. BIL
1	257342310179	BRAKE SHOE LINING & ROLLER ASSY.	4	
2	257342108708	SPRING (BRAKE SHOE RETURN)	4	
3	257342103401	BUSH (ANCHOR PIN)	2	
4	257342106723	ANCHOR PIN (BRAKE SHOE)	2	
5	261842107902	CAMSHAFT LH	1	
5	261842107901	CAMSHAFT RH	1	
6	257342109211	WASHER (CAM HEAD)	2	
7	257342107701	SEAL (CAMSHAFT)	2	
8	257342103402	BUSH (CAMSHAFT)	4	
9	257342103403	PIN	4	
10	257342107903	ROLLER (BRAKE SHOE)	4	
11	257342104301	RETAINER (BRAKE SHOE ROLLER)	4	
12	257342108703	RETURN SPRING (BRAKE SHOE)	2	
13	257342100180	SPIDER BRAKE LH	1	
13	257342100181	SPIDER BRAKE RH	1	
14	257342105301	GASKET (CHAMBER BRACKET)	1	
15	257342103301	BRACKET LH	1	
15	257342103302	BRACKET RH	1	
16	257342109204	WASHER (BRACKET FOR CAP SCREW)	4	
17	257342108007	CAP SCREW (CHAMBER BRACKET)	4	
18	257342109901	FITTING GREASE (CHAMBER BRACKET)	1	
19	261842109202	WASHER	2	
20	261842109203	WASHER	2	
21	261842109204	WASHER (HARDENED)	2	
23	261842104301	LOCK RING	2	
24	257342100182	DUST SHIELD TOP	2	
25	257342108208	DUST SHIELD BOTTOM	1	
26	257342109208	WASHER	12	
28	257342106802	PLUG	4	
-	257342106704	COLLARED PIN	4	
-	257342106720	COLLARED PIN	4	
-	257342103206	BOLT	4	
-	257642106501	CASTLE NUT	4	
-	13150609369	SPLIT PIN AX36	12	

TATA MOTORS

2167023833R.03	FRONT WHEEL BRAKE (M/S. AAL)	GROUP 33

CHASSIS TYPE: ALL

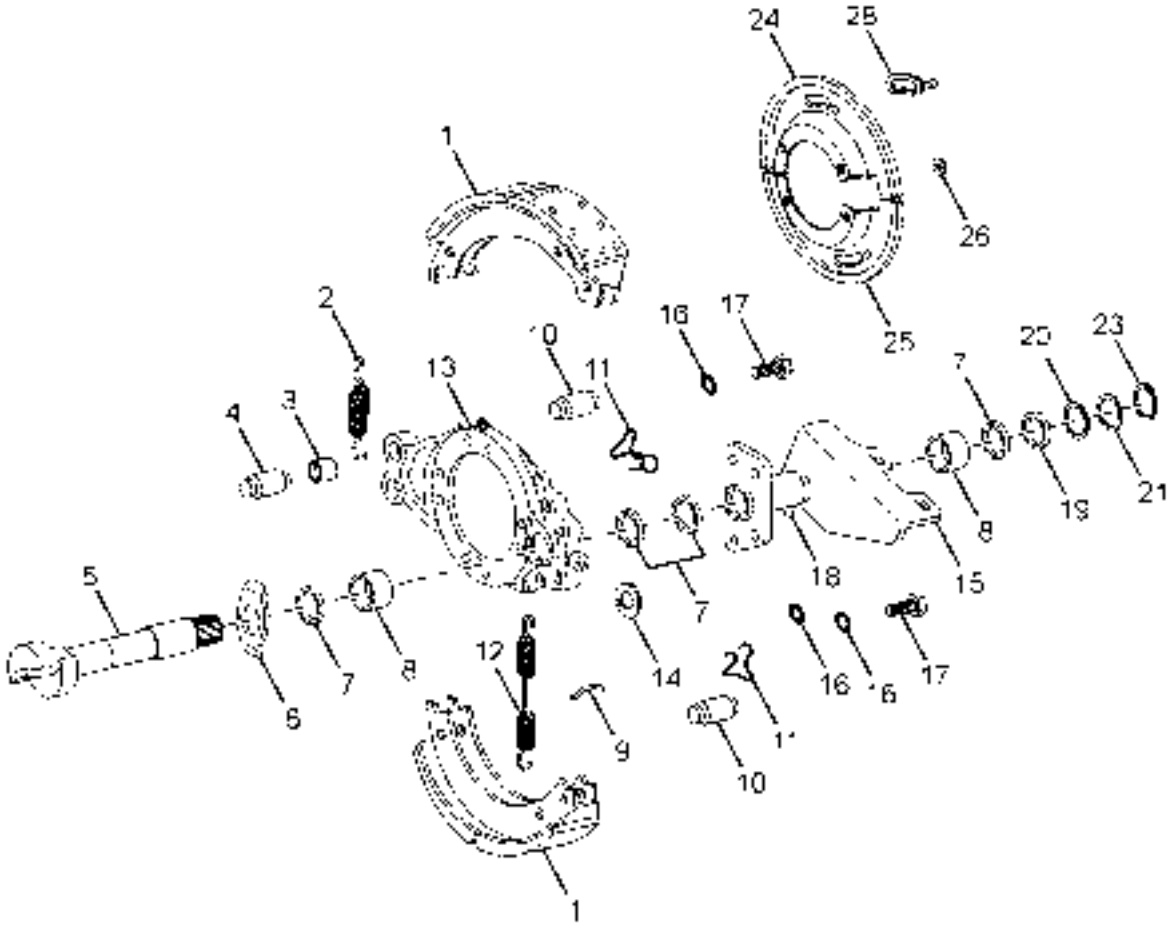

2167023833R.03	FRONT WHEEL BRAKE (M/S. AAL)	GROUP 33

CHASSIS TYPE: ALL

FIG. NO.	PART NUMBER	DESCRIPTION	QTY	REMARKS
		REPAIR KITS		
-	257342100183	FRONT BRAKE OVERHAUL KIT (MINOR)	1	
		CONSISTS OF :		
		BRAKE LINING	8	
		RETAINING SPRING	4	
		RETURN SPRING	2	
		ROLLER	4	
		RETAINER	4	
		RIVETS	80	
-	257342100148	SERVICE KIT (MINOR) FRONT	1	
		CONSISTS OF :		
		SPRING (RETAINING)	4	
		SPRING (RETURN)	2	
		ROLLER (BRAKE SHOE)	4	
		RETAINER	4	
		PIN (RETURN SPRING)	4	
-	257342100149	BRAKE SPRING KIT (FRONT)	1	
		CONSISTS OF :		
		SPRING (RETAINING)	4	
		SPRING (RETURN)	2	
		RETAINER (SHOE ROLLER)	2	
-	257342100150	SERVICE KIT FOR CAMSHAFT (FRONT)	1	
		CONSISTS OF :		
		BUSH	4	
		SEAL	2	
		LOCK RING	2	
		BRAKE LINING SET		
-	885442011616	SET OF BRAKE LININGS W/O RIVETS (WHEEL SET) FRONT STD NASB	1	FOR SELECTION
-	885442021616	SET OF BRAKE LININGS W/O RIVETS (WHEEL SET) FRONT RS 1 NASB	1	FOR SELECTION
-	885442031616	SET OF BRAKE LININGS W/O RIVETS (WHEEL SET) FRONT RS 2 NASB	1	FOR SELECTION

TATA MOTORS

2725051035R.01A	REAR AXLE (MERITOR BOGIE AXLE)	GROUP 35

CHASSIS TYPE: ALL

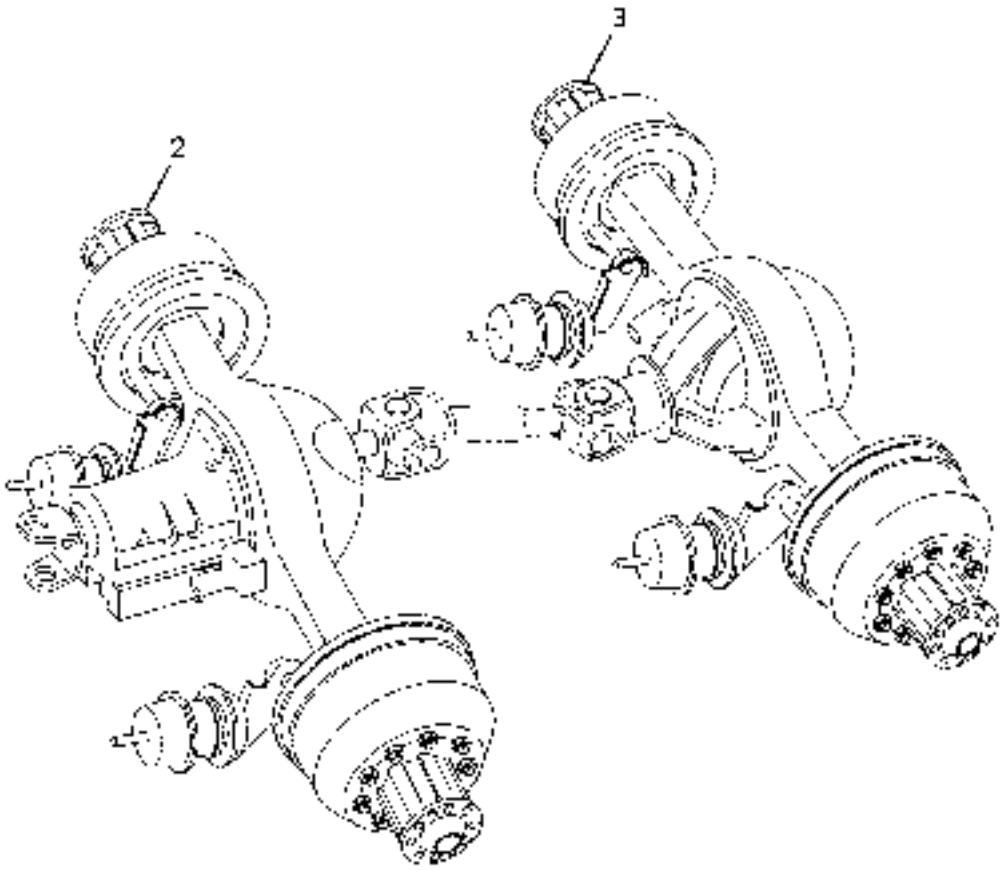

LPK2018C 35 35.01 R1 E05

2725051035R.01A	REAR AXLE (MERITOR BOGIE AXLE)	GROUP 35

CHASSIS TYPE: ALL

FIG. NO.	PART NUMBER	DESCRIPTION	QTY	REMARKS
2	272535000228	MT28-1495;R/FWD;1905;6.83;180SER TML HUBN	1	
3	272535000248	MT28-1495;R/RWD;1905;6.83;T-150;TML HUB END.	1	

TATA MOTORS

2725051035R.02	FORWARD DIFFERENTIAL CARRIER	GROUP 35

CHASSIS TYPE: ALL

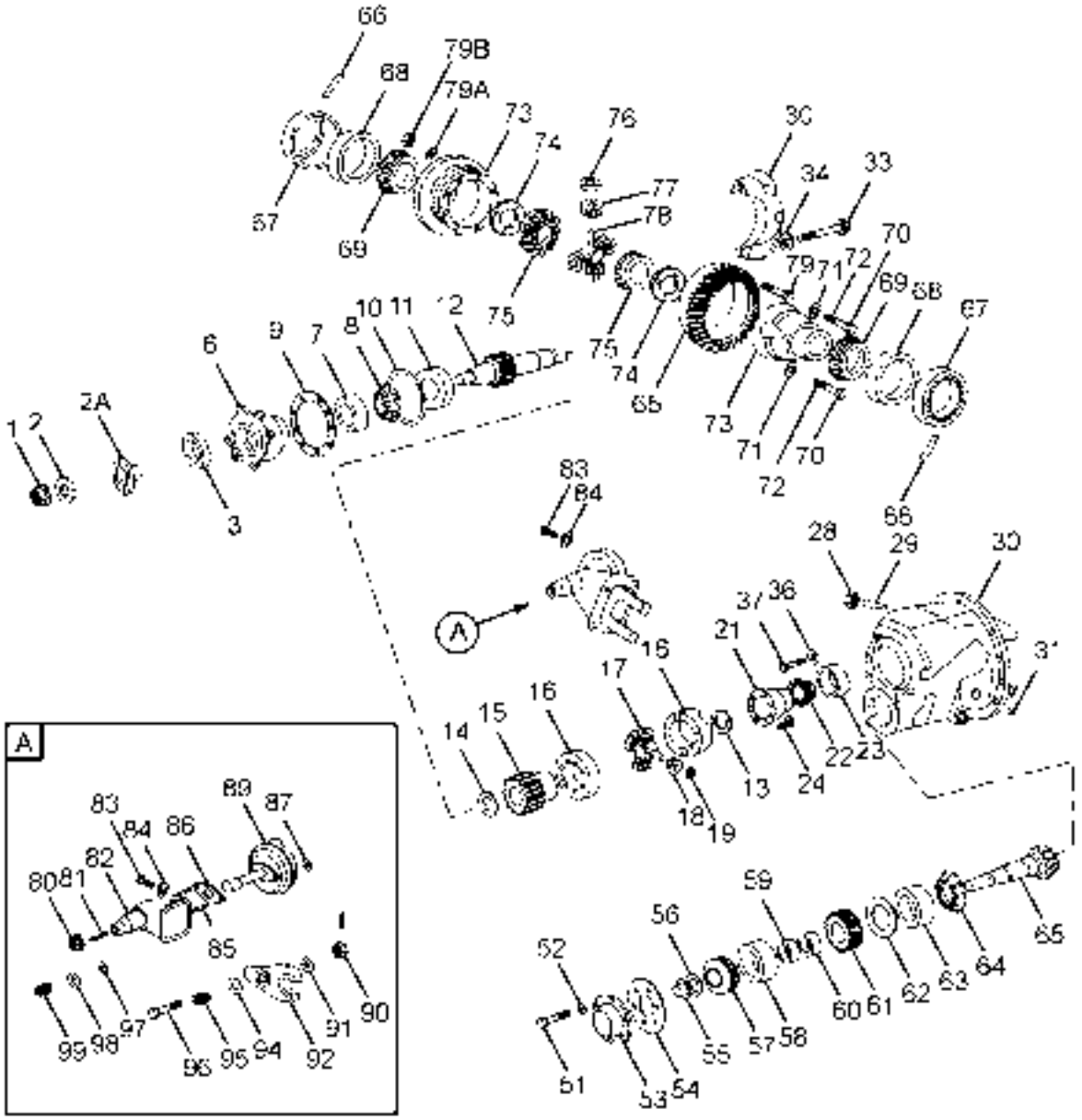

2725051035R.02	FORWARD DIFFERENTIAL CARRIER	GROUP 35

CHASSIS TYPE: ALL

FIG. NO.	PART NUMBER	DESCRIPTION	QTY	REMARKS
-	272535300176	CARRIER ASSY DIFFERENTIAL	1	
1	272535306508	NUT INPUT SHAFT	1	
2	272535309202	WASHER-DRIVE PINION NUT	1	
2	272535300164	COUPLING FLANGE 180 DIA (INPUT)	1	
3	M69070000001	OIL SEAL	1	
-	M69070000003	SLEEVE- OIL SEAL	1	
-	M69070000004	KIT FASTERNER BRG CAGE	1	
		CONSISTS OF:		
		CAP SCREW	7	
		WASHER	7	
6,7,8	272535300142	BRG.CAGE ASSY.INPUTSHAFT	1	
7,8	272535303116	CUP & CONE BRG	1	
9	272535300154	SHIM KIT	1	
		CONSISTS OF:		
9	-	SHIM - 0.003"	3	
9	-	SHIM - 0.005"	2	
9	-	SHIM - 0.010"	1	
10	272535307705	`O` RING	1	
11	272535304601	COLLAR CLUTCH	1	
12	272535307904	INPUT SHAFT	1	
13	272535309904	RETAINER-INPUT SHAFT	1	
14	272535309218	THRUST WASHER	1	
15	272535305411	GEAR INTEGRAL	1	
-	272535300141	DIFF.CASE & NEST ASSY	1	SHOWN AS FIG NO.16,17,18,19,24 IN THE ART
17	272535305111	SPIDER DIFF.-INTER AXLE	1	
18	272535305408	PINION.DIFF. INTER AXLE	4	
19	272535309211	THRUST WASHER	4	
21	272535305409	SIDE GEAR-INTER AXLE	1	
22,23	272535303118	CUP & CONE BRG.	1	
24	272535308006	CAP SCREW	8	
-	272535306511	NUT	8	
-	272535100103	THRUST SCREW & JAM NUT KIT	1	
		CONSISTS OF:		
28	-	NUT	1	
29	-	SCREW - THRUST	1	
-	272535110111	DIFF.CARRIER & CAP ASSY	1	SHOWN AS FIG NO.30,33,34 IN THE ART
-	272535307704	SILASTIC(SHIFT HSG & COVER TO HSG)	AR	
31	272535307201	PLUG FILLER	1	

TATA MOTORS

2725051035R.02	FORWARD DIFFERENTIAL CARRIER	GROUP 35

CHASSIS TYPE: ALL

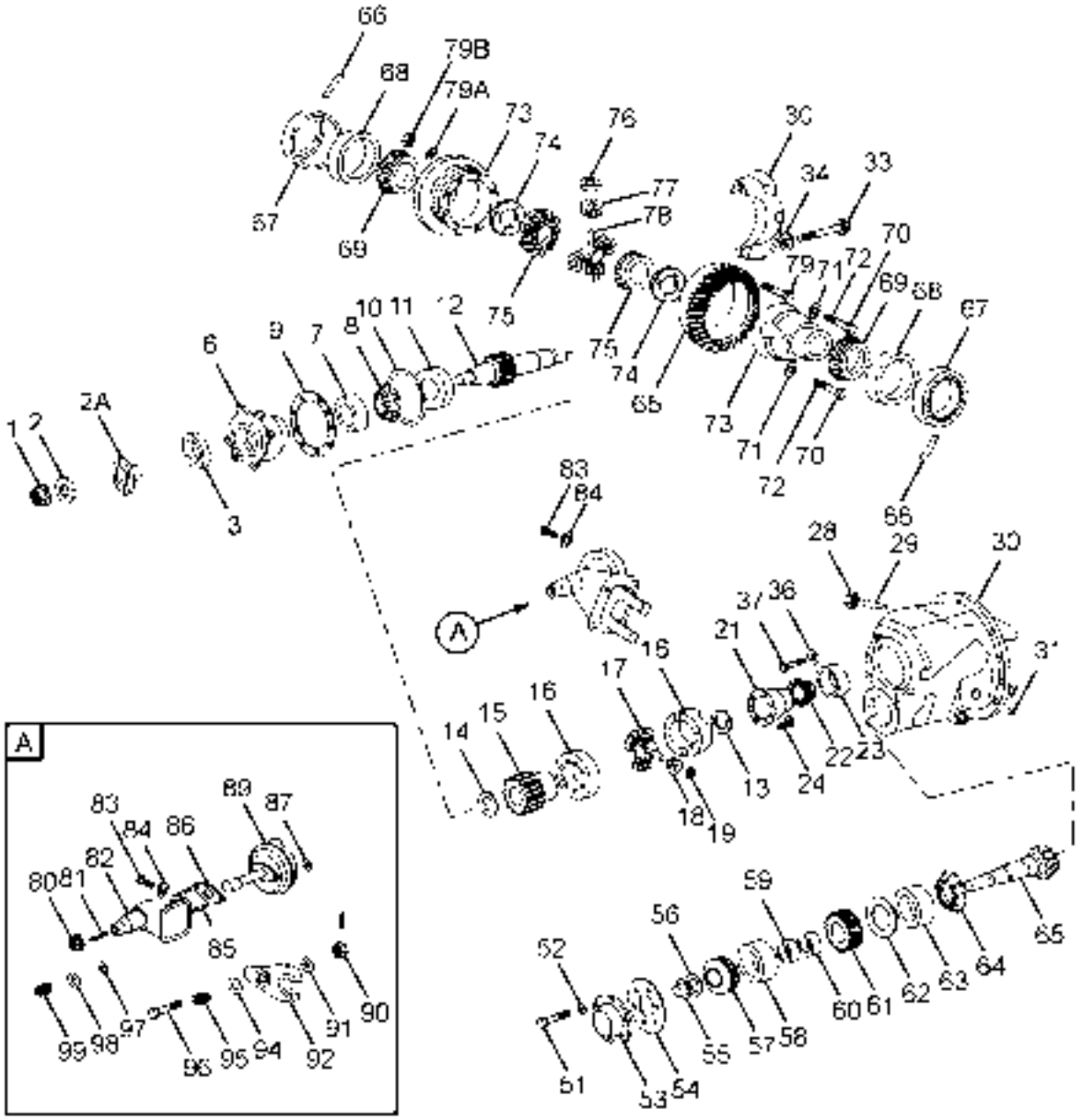

2725051035R.02	FORWARD DIFFERENTIAL CARRIER	GROUP 35

CHASSIS TYPE: ALL

FIG. NO.	PART NUMBER	DESCRIPTION	QTY	REMARKS
-	272535300150	FASTENER KIT	1	
		CONSISTS OF:		
33	-	CAP SCREW	4	
34	-	WASHER FLAT	4	
66	-	COTTER	2	
51	272535308005	CAP SCREW-PINION BRG.COVER	6	
52	272535309206	WASHER-FLAT	6	
53	272535304702	COVER - PINION DRIVE	1	
54	272535307704	SILASTIC GASKET	AR	
55	272535306508	NUT- DRIVE PINION DRIVE	1	
56	272535309220	WASHER FLAT	1	
57,58	272535303111	CUP & CONE BRG.R/FWD PINION	1	
59	272535308602	SPACER	1	
60	272535300155	SPACER KIT	1	
		CONSISTS OF:		
60	-	SPACER-PINION BEARING- 0.500"	1	
60	-	SPACER-PINION BEARING- 0.501"	1	
60	-	SPACER-PINION BEARING- 0.502"	1	
60	-	SPACER-PINION BEARING- 0.503"	1	
60	-	SPACER-PINION BEARING- 0.504"	1	
60	-	SPACER-PINION BEARING- 0.505"	1	
60	-	SPACER-PINION BEARING- 0.506"	1	
60	-	SPACER-PINION BEARING- 0.507"	1	
60	-	SPACER-PINION BEARING- 0.508"	1	
60	-	SPACER-PINION BEARING- 0.509"	1	
60	-	SPACER-PINION BEARING- 0.510"	1	
60	-	SPACER-PINION BEARING- 0.511"	1	
61	272535305412	GEAR DRIVEN- HELICAL	1	
62	272535300159	SHIM KIT	1	
		CONSISTS OF:		
62	-	SHIM -0.003"	4	
62	-	SHIM -0.005"	4	
62	-	SHIM -0.010"	4	
62	-	SHIM -0.030"	1	
63,64	272535303114	CUP & CONE BRG.INNER	1	
65	272535300160	DRIVE GEAR & PINION ASSY 6.83	1	6X41
66	272535309901	COTTER	2	
67	272535306510	RING-BEARING ADJ	2	
68,69	272535303110	CUP & CONE BRG.R/FWD PINION	2	
-	272535300149	DIFF.CASE MTG FASTNR KIT	1	
		CONSISTS OF:		
70	-	CAP SCREW	12	

TATA MOTORS

2725051035R.02	FORWARD DIFFERENTIAL CARRIER	GROUP 35

CHASSIS TYPE: ALL

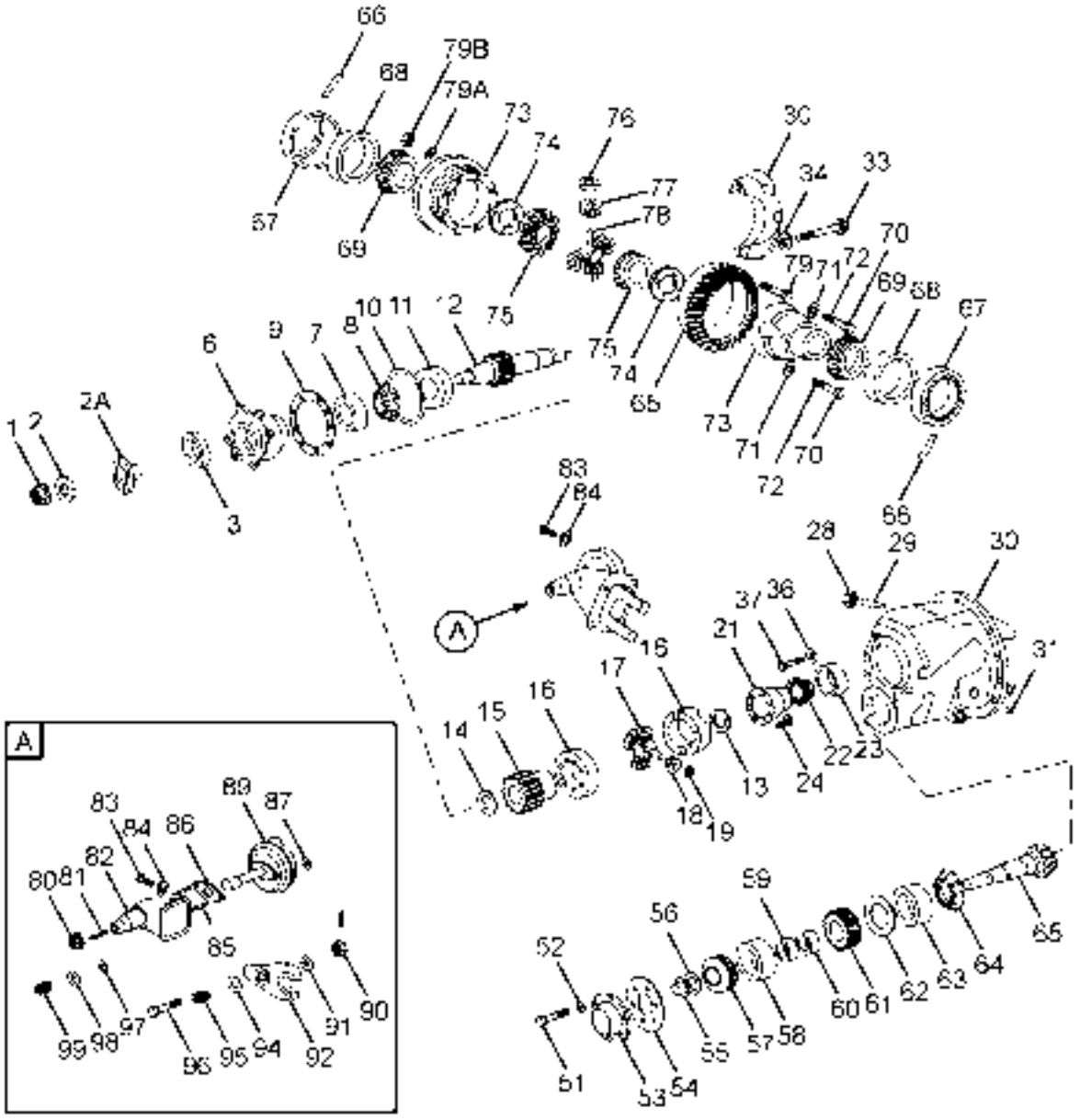

2725051035R.02	FORWARD DIFFERENTIAL CARRIER	GROUP 35

CHASSIS TYPE: ALL

FIG. NO.	PART NUMBER	DESCRIPTION	QTY	REMARKS
71	-	WASHER FLAT	12	
72	272535309915	LOCTITE	1	
-	272535300135	DIFF.CAGE ASSY	1	SHOWN AS 70 TO 73 IN THE ART
-	272535300134	DIFF.CASE & NEST ASSY.	1	SHOWN AS 70 TO 78 IN THE ART
-	272535300145	THRUST WASHER KIT	1	
		CONSISTS OF:		
74	-	THRUST WASHER-SIDE GEAR	2	
76	-	THRUST WASHER- DIFF PINION	4	
75	272535305410	SIDE GEAR-MAIN DIFF.	2	
77	272535305407	PINION.DIFF	4	
78	272535305110	SPIDER-DIFF	1	
-	272535300152	GEAR HARDWARE KIT	1	
		CONSISTS OF:		
79	-	CAP SCREW	12	
79A	-	WASHER FLAT	12	
79B	-	NUT	12	
80	272535906501	NUT JAM	1	
81	272535308001	ADJUSTING SCREW	1	
82	272535113701	SHIFT HOUSING	1	
83	272535903201	CAP SCREW	4	
84	272535309206	WASHER-FLAT	4	
85	272535903201	CAP SCREW	2	
86	272535307704	SILASTIC GASKET	AR	
87	272535309205	WASHER-CHAMBER TO HSG.	2	
89	A-3261-C-289	CHAMBER ASSY AIR SHIFT	1	
90	272535906502	NUT-SHIFT FORK BOLT	1	
91	272535303001	BALL-SHIFT FORK	1	
92	M69070000005	SHIFT FORK & YOKE ASSY.	1	
94	272535309207	WASHER-FLAT	1	
95	272535908702	SPRING	1	
96	272535903202	BOLT-SHIFT FORK	1	
97	272535309221	WASHER	1	
98	272535309208	WASHER	1	
99	272535908701	SPRING	1	
-	272535300144	DIFF.SPIDER KIT	1	
	-	COTTER	2	
	-	WASHER THRUST	4	
	-	WASHER THRUST	2	
	-	PINION DIFF FIN.	4	
	-	GEAR DIFF SIDE FIN.	2	
	-	SPIDER DIFF FIN.	1	

TATA MOTORS

2725051035R.03	REAR AXLE HOUSING FORWARD REAR	GROUP 35

CHASSIS TYPE: ALL

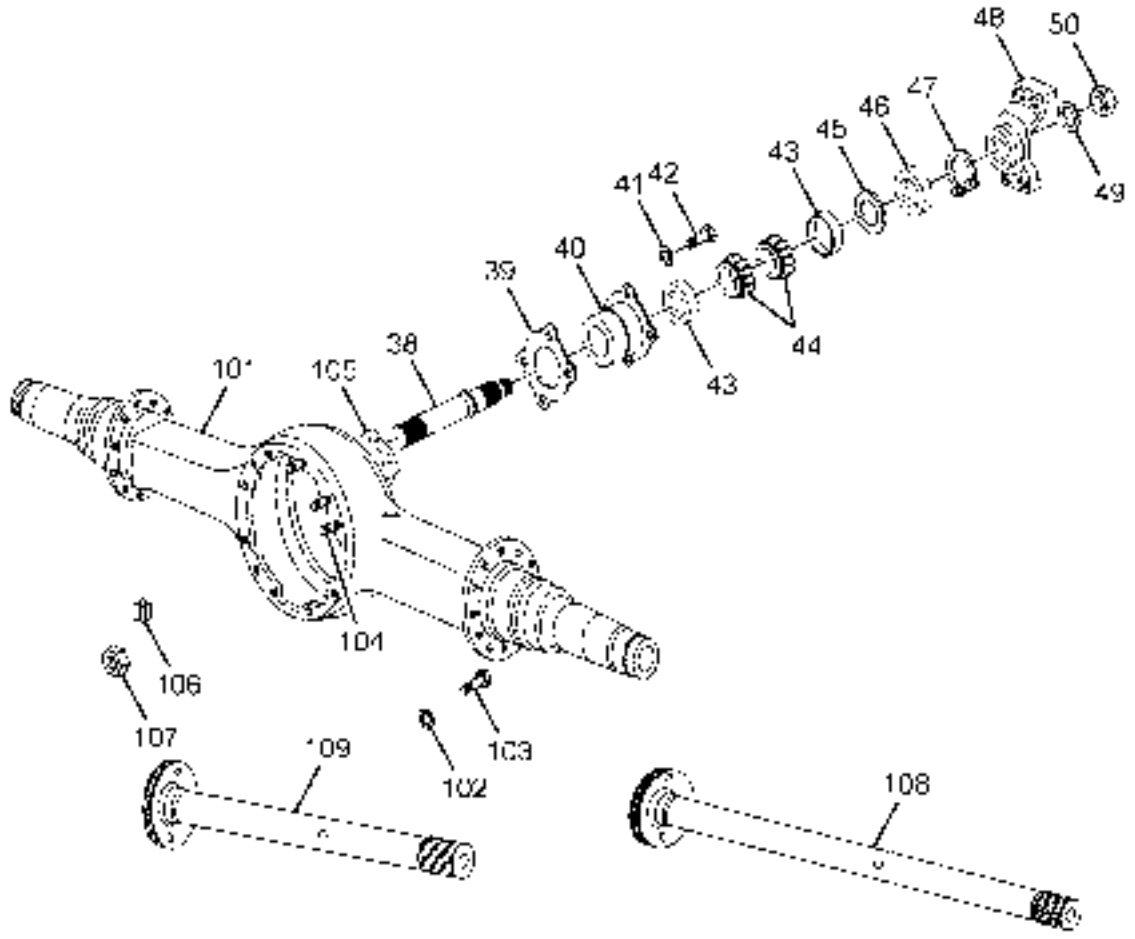

LPK2018C 35 35.03 E05

2725051035R.03	REAR AXLE HOUSING FORWARD REAR	GROUP 35

CHASSIS TYPE: ALL

FIG. NO.	PART NUMBER	DESCRIPTION	QTY	REMARKS
38	272535307903	THRU SHAFT	1	
39	272535307704	SILASTIC GASKET	AR	
-	272535300143	BRG CAGE ASSY THRU SHAFT	1	SHOWN AS FIG NO.40,43,44 IN THE ART
-	272535300125	THRU SHAFT MTG FASTNERS KIT CONSISTS OF:	1	
41	-	WASHER FLAT	4	
42	-	CAP SCREW	4	
43,44	M69070000006	BRG.CUP & CONE	2	
45	272535300156	SNAP RING KIT,CONSISTS OF:	1	
45	-	RING - SNAP, THICK 0.155"	1	
45	-	RING - SNAP, THICK 0.159"	1	
45	-	RING - SNAP, THICK 0.161"	1	
45	-	RING - SNAP, THICK 0.164"	1	
45	-	RING - SNAP, THICK 0.167"	1	
45	-	RING - SNAP, THICK 0.170"	1	
45	-	RING - SNAP, THICK 0.182"	1	
46	M69070000001	OIL SEAL	1	
47	272535309903	RING SNAP	1	
48	M69070000007	COMPANION FLANGE ASSY	1	
49	272535309210	WASHER-DRIVE PINION NUT	1	
50	272535306509	NUT-DRIVE PINION	1	
101	272535100120	BEAM ASY.REAR-FWD,MERITOR	1	
-	M69070000009	CARRIER MTG.FASTENERS KIT CONSISTS OF:	1	
102	-	WASHER FLAT	14	
103	-	CAP SCREW	10	
104	-	STUD	4	
	-	STUD	2	
107	-	NUT	4	
105	272535100112	ASSY.BREATHER (MERITOR)	1	
106	272535307202	PLUG DRAIN MAGNETIC	1	
108	272535707916	AXLE SHAFT-LONG	1	
109	272535707915	AXLE SHAFT-SHORT	1	

TATA MOTORS

2725050335R.05	REAR DIFFERENTIAL CARRIER	GROUP 35

CHASSIS TYPE: ALL

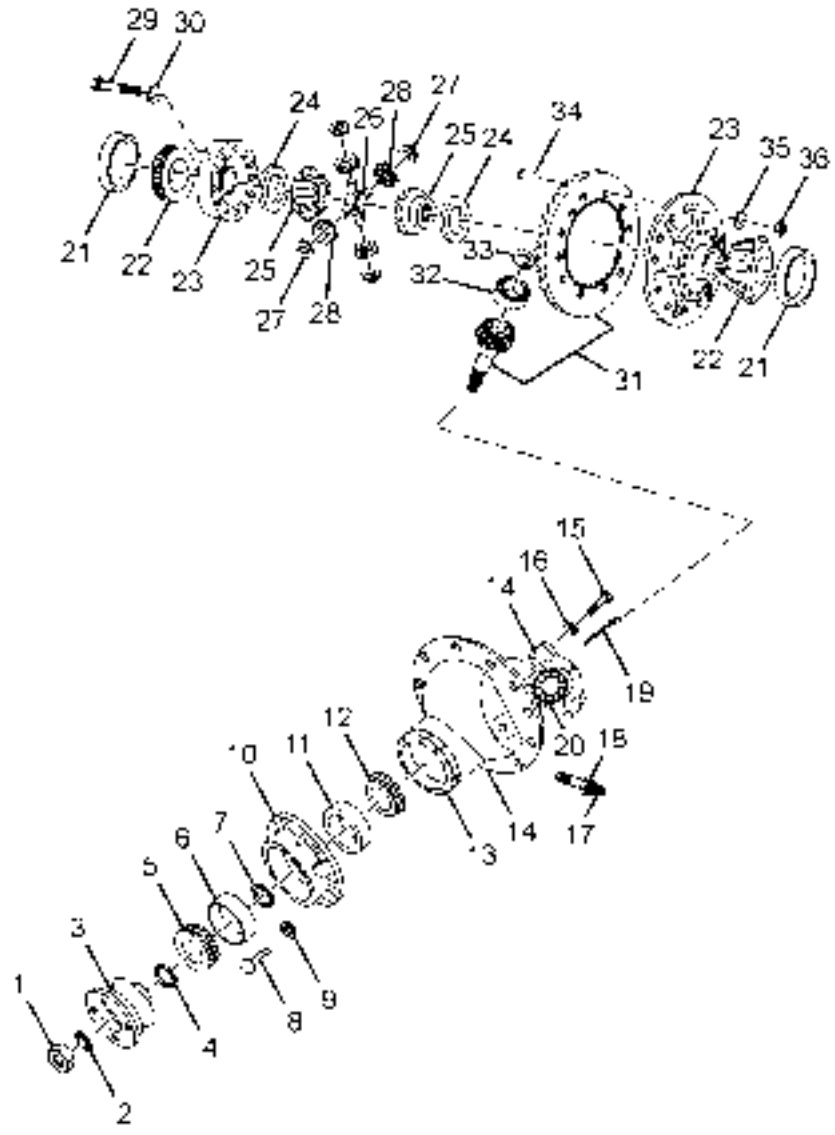

LPK2018C 35 35.05 E05

2725050335R.05	REAR DIFFERENTIAL CARRIER	GROUP 35

CHASSIS TYPE: ALL

FIG. NO.	PART NUMBER	DESCRIPTION	QTY	REMARKS
-	M69070000010	CARRIER ASSY.DIFFERENTIAL	1	
1	272535306509	NUT-DRIVE PINION	1	
2	272535309210	WASHER-DRIVE PINION NUT	1	
4	272535307707	OIL SEAL ASSY	1	
-	272535300146	INPUT SHAFT KIT,	1	
		CONSISTS OF:		
1	-	NUT-DRIVE PINION	1	
2	-	WASHER-DRIVE PINION NUT	1	
4	-	OIL SEAL ASSY	1	
3	272535300132	COUP.FLG ASSY O/P FWD	1	
5,6	272535303115	CUP & CONE BRG.OUTER	1	
7	272535300153	SPACER KIT	1	
-	272535300148	PINION CAGE MTG FASTENER KIT,	1	
		CONSISTS OF:		
8	-	CAP SCREW	8	
9	-	WASHER,FLAT	8	
-	272535300138	PINION CAGE ASSY	1	SHOWN AS FIG. NO. 5,6,10,11,12 IN THE ART
11,12	272535303114	CUP & CONE BRG.INNER	1	
13	272535300151	SHIM KIT	1	
		CONSISTS OF:		
13	-	SHIM 0.003"	3	
13	-	SHIM 0.005"	1	
13	-	SHIM 0.01"	3	
-	272535110110	CARRIER & CAP ASSY	1	SHOWN AS FIG. NO. 14,15,16 IN THE ART
-	272535307201	PLUG FILLER	1	
-	272535300150	CARRIER & CAP MOUNTING FASTENER KIT,	1	
		CONSISTS OF:		
15	-	CAP SCREW	4	
16	-	WASHER FLAT	4	
19	-	COTTER	2	
17,18	272535100103	THRUST SCREW & JAM NUT KIT,	1	
		CONSISTS OF:		
	-	NUT	1	
	-	SCREW - THRUST	1	
20	272535306510	RING-BEARING ADJ	2	
21,22	272535303110	CUP & CONE BRG.R/FWD PINION	2	
-	272535300134	DIFF.CASE & NEST ASSY.	1	SHOWN AS FIG. NO. 23 TO 30 IN THE ART

TATA MOTORS

2725050335R.05	REAR DIFFERENTIAL CARRIER	GROUP 35

CHASSIS TYPE: ALL

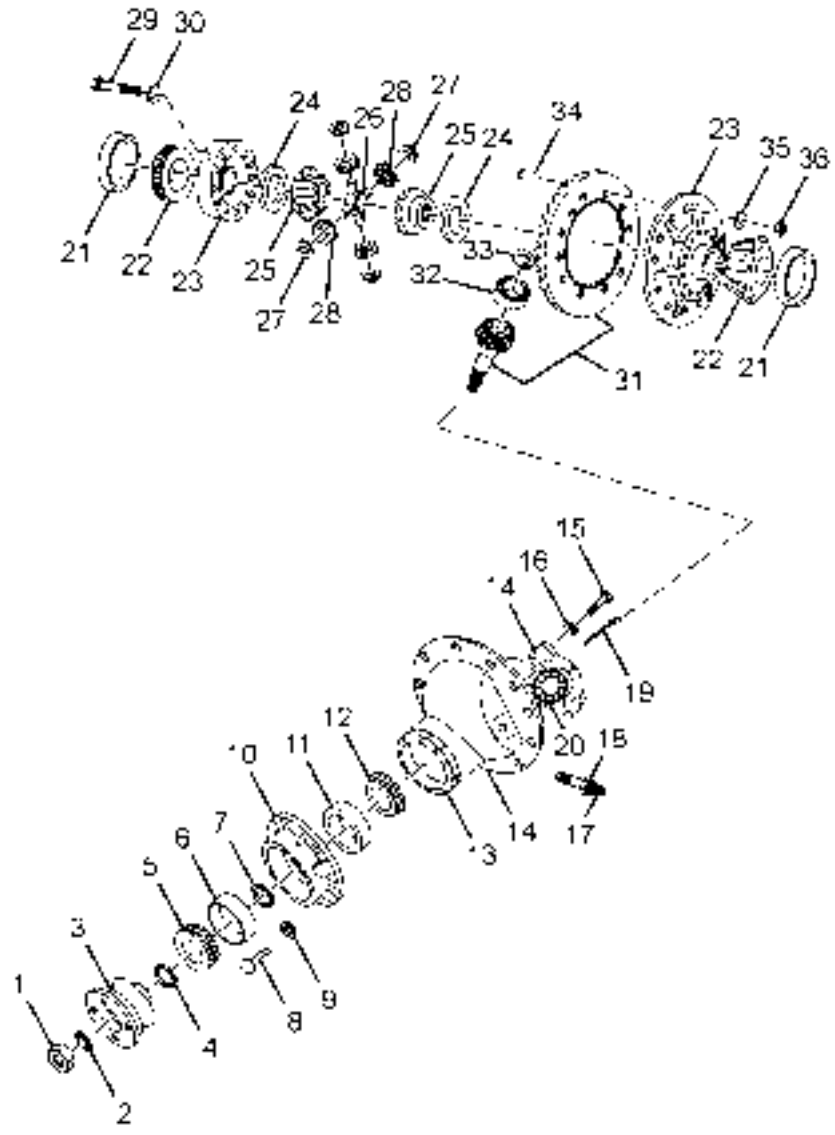

LPK2018C 35 35.05 E05

2725050335R.05	REAR DIFFERENTIAL CARRIER	GROUP 35

CHASSIS TYPE: ALL

FIG. NO.	PART NUMBER	DESCRIPTION	QTY	REMARKS
-	272535300135	DIFF.CAGE ASSY	1	SHOWN AS FIG. NO. 23,29,30 IN THE ART
-	272535300145	THRUST WASHER KIT, CONSISTS OF:	1	
24	-	THRUST WASHER-SIDE GEAR	2	
27	-	THRUST WASHER- DIFF PINION	4	
25	272535305410	SIDE GEAR-MAIN DIFFE	2	
26	272535305110	SPIDER-DIFF	1	
28	272535305407	PINION.DIFF	4	
-	272535300149	DIFF.CASE MTG FASTNR KIT, CONSISTS OF:	1	
29	-	CAP SCREW	12	
30	-	WASHER FLAT	12	
31	272535300161	DRIVE GEAR & PINION 6.83	1	6X41
32	272535303113	PILOT BEARING	1	
-	272535309902	RETAINER (NOSE BRG.)	1	
33	272535309905	RING LOCK	1	
-	272535300152	GEAR HARDWARE KIT CONSISTS OF:	1	
34	-	CAP SCREW	12	
35	-	WASHER FLAT	12	
36	-	NUT	12	
-	272535300144	DIFF.SPIDER KIT	1	
	-	COTTER	2	
	-	WASHER THRUST	4	
	-	WASHER THRUST	2	
	-	PINION DIFF FIN.	4	
	-	GEAR DIFF SIDE FIN.	2	
	-	SPIDER DIFF FIN.	1	

TATA MOTORS

2725051035R.06	REAR AXLE HOUSING REAR REAR	GROUP 35

CHASSIS TYPE: ALL

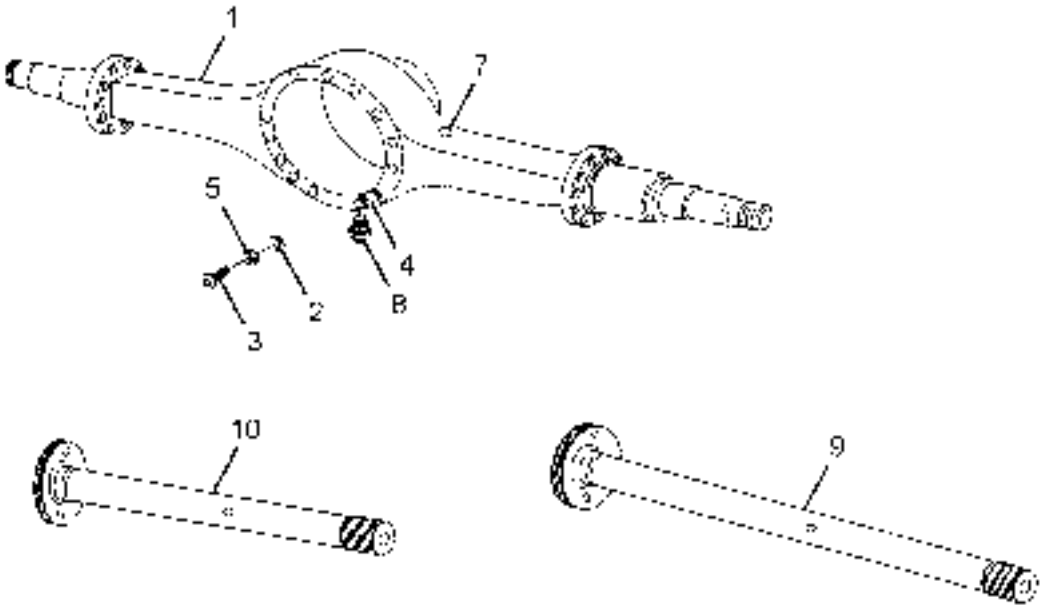

LPK2018C 35 35.06 E05

2725051035R.06	REAR AXLE HOUSING REAR REAR	GROUP 35

CHASSIS TYPE: ALL

FIG. NO.	PART NUMBER	DESCRIPTION	QTY	REMARKS
1	272535100121	BEAM ASY.REAR-RWD,MERITOR	1	
-	272535100117	CARRIER MTG.FASTENERS KIT	1	
		CONSISTS OF:		
2	-	WASHER FLAT	14	
3	-	CAP SCREW	10	
4	-	STUD	4	
5	-	NUT	4	
-	272535307704	SILASTIC GASKET	AR	
7	272535100112	ASSY.BREATHER (MERITOR)	1	
8	272535307202	PLUG DRAIN MAGNETIC	1	
9	272535707916	AXLE SHAFT-LONG	1	
10	272535707915	AXLE SHAFT-SHORT	1	

2725050335R.07	REAR AXLE WITH TATA WHEEL ENDS	GROUP 35

CHASSIS TYPE: ALL

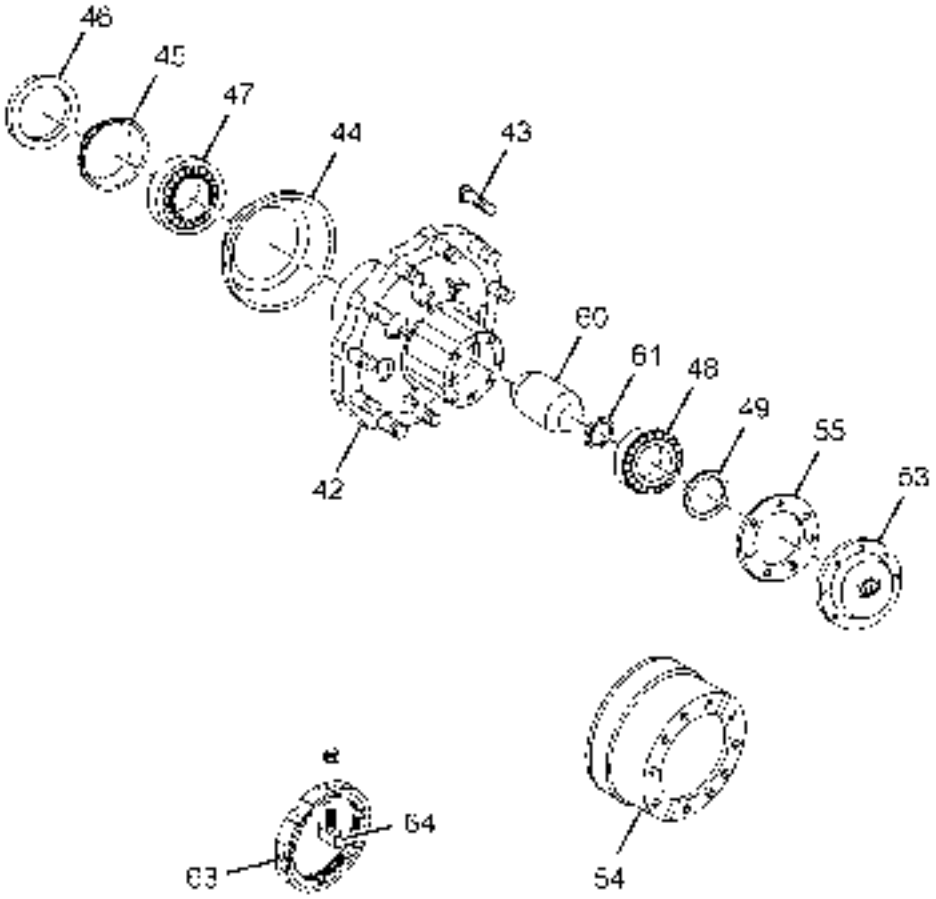

2725050335R.07	REAR AXLE WITH TATA WHEEL ENDS	GROUP 35

CHASSIS TYPE: ALL

FIG. NO.	PART NUMBER	DESCRIPTION	QTY	REMARKS
-	266835108601	PRESSURE RING	4	
42	273235600102	ASSY.REAR HUB COMPLETE.(WITH BRGS., OIL SEAL)	4	
42	273235600103	ASSY.REAR HUB (WITHOUT BRGS.& OIL SEALS)	4	
43	263140206701	HUB BOLT REAR (M22)	40	
44	273235608201	OIL CATCHER (ABS)	4	
45	266835608601	SPACER RING (HUB OUTER SEAL)	4	
46	266835607701	OIL SEAL (INNER-RUBBER CASING)	4	
47	266835603101	TAPER ROLLER BEARING INNER	4	
48	266835603102	TAPER ROLLER BEARING OUTER	4	
-	266835607702	OIL SEAL (OUTER-RUBBER CASING)	4	
49	266835608602	SPACER	4	
53	266835600105	ASSY.HUB COVER (BIGGER HUB)WITH GASKET	4	
53	266835604701	COVER,REAR HUB (BIGGER HUB)	4	
55	266835605301	GASKET,REAR HUB (BIGGER HUB)	4	
60	266835608603	SPACER TUBE (BETWEEN HUB BRGS.)	4	
61	266835608302	SHIM-0.10 THK	AR	FOR SELECTION
61	266835608303	SHIM-0.15 THK.	AR	FOR SELECTION
61	266835608304	SHIM-0.20 THK	AR	FOR SELECTION
61	266835608305	SHIM-0.25 THK.	AR	FOR SELECTION
61	266835608306	SHIM-0.30 THK	AR	FOR SELECTION
61	266835608307	SHIM-0.5 THK.	AR	FOR SELECTION
61	266835608308	SHIM-1.0 THK	AR	FOR SELECTION
61	266835608309	SHIM-1.5 THK.	AR	FOR SELECTION
-	266835608604	TONGUE SPACER (HUB OUTER BEARING)	4	
63	266835606501	HUB LOCK NUT	4	
64	266835608001	PIN (HUB LOCK NUT)	4	
54	263142103701	BRAKE DRUM SPIGOTTED.	4	

2725051035R.08	BRAKE REAR FWD	GROUP 35

CHASSIS TYPE: ALL

NO IMAGE

2725051035R.08	BRAKE REAR FWD	GROUP 35

CHASSIS TYPE: ALL

FIG. NO.	PART NUMBER	DESCRIPTION	QTY	REMARKS
-	280142300125	ASSY REAR BRAKE RH WITH D/C. AAL	1	
-	280142300127	ASSY REAR BRAKE LH WITH D/C.AAL	1	

2725051035R.09	BRAKE REAR RWD	GROUP 35

CHASSIS TYPE: ALL

NO IMAGE

2725051035R.09	BRAKE REAR RWD	GROUP 35

CHASSIS TYPE: ALL

FIG. NO.	PART NUMBER	DESCRIPTION	QTY	REMARKS
-	287942300179	REAR BRK ASSY. RH WITH D/C M/S MERITOR.	1	
-	287942300185	REAR BRAKE LH WITH D/C M/S MERITOR.	1	

2171103840R.01A	WHEELS	GROUP 40

CHASSIS TYPE: ALL

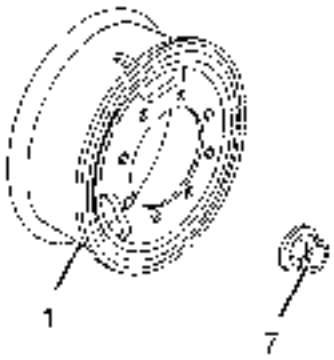

2171103840R.01A	WHEELS	GROUP 40

CHASSIS TYPE: ALL

FIG. NO.	PART NUMBER	DESCRIPTION	QTY	REMARKS
1	288040000104	ASSY WHEEL RIM 8.0X20 - WIL	11	FOR SELECTION
1	288040000105	ASSY WHEEL RIM 8.0X20 STEEL-(KLL)	11	FOR SELECTION
7	263140100107	ASSY. WHEEL NUT	60	

TATA MOTORS

2171103840R.02	SPARE WHEEL CARRIER	GROUP 40

CHASSIS TYPE: ALL

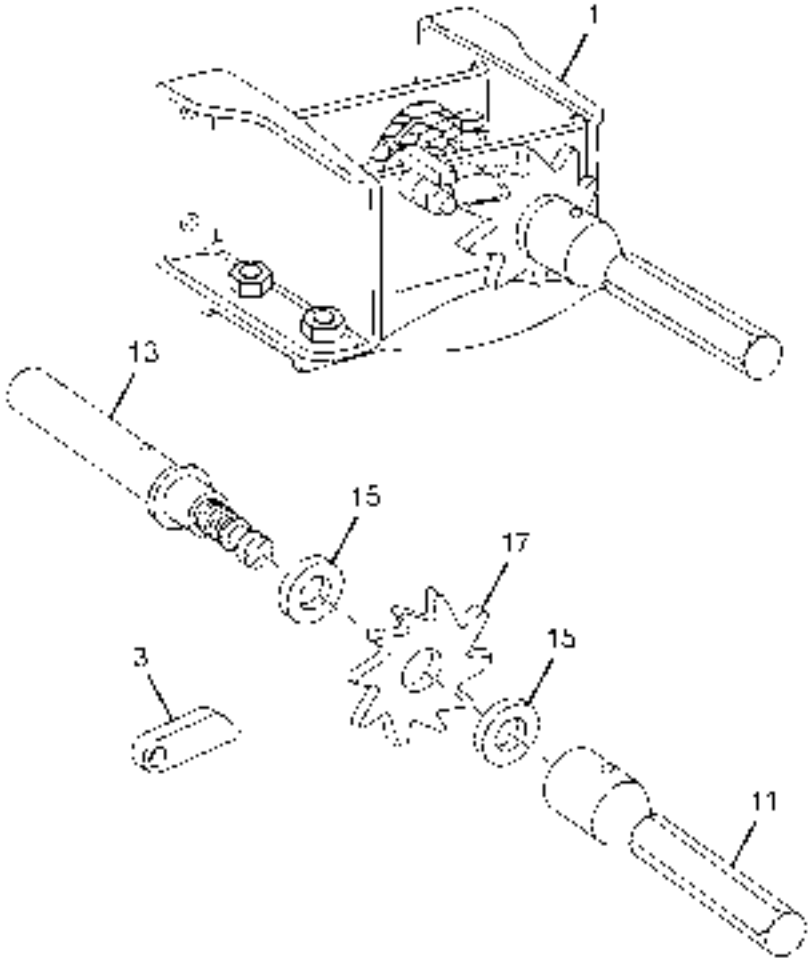

2171103840R.02	SPARE WHEEL CARRIER	GROUP 40

CHASSIS TYPE: ALL

FIG. NO.	PART NUMBER	DESCRIPTION	QTY	REMARKS
1	217140300103	ASSY SPARE WHEEL CARRIER	1	
3	257640307109	RATCHET ARM	1	
11		ASSY.HANDLE.	1	NOT SERVICED
13	257340300111	ASSY. SHAFT	1	
15	257340306301	FRICTION PAD	2	
17	257640307108	RATCHET WHEEL	1	

2167613841R.01A	PROPELLER SHAFT	GROUP 41

CHASSIS TYPE: ALL

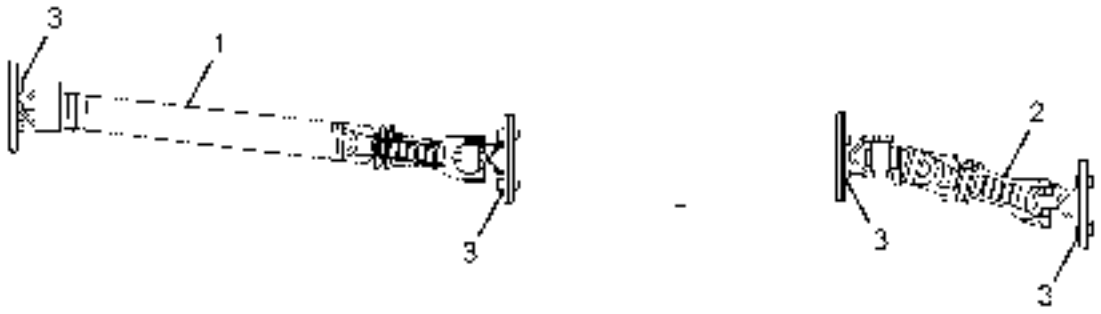

2167613841R.01A	PROPELLER SHAFT	GROUP 41

CHASSIS TYPE: ALL

FIG. NO.	PART NUMBER	DESCRIPTION	QTY	REMARKS
1	501141120101	ASSY.PROP SHAFT FRONT(1245 CLOSED)-RSB	1	
2	216741120120	ASSY PROP.SHAFT-IN-AXL(600-CLOSED)RSB	1	
-	11064114508	H/BOLT M14X1.5X50	2	
-	12052301406	HEX NUT M14X1.5	2	
3	501141106101	LOCKING PLATE (150 PCD, 70 DEG. & M14)	4	

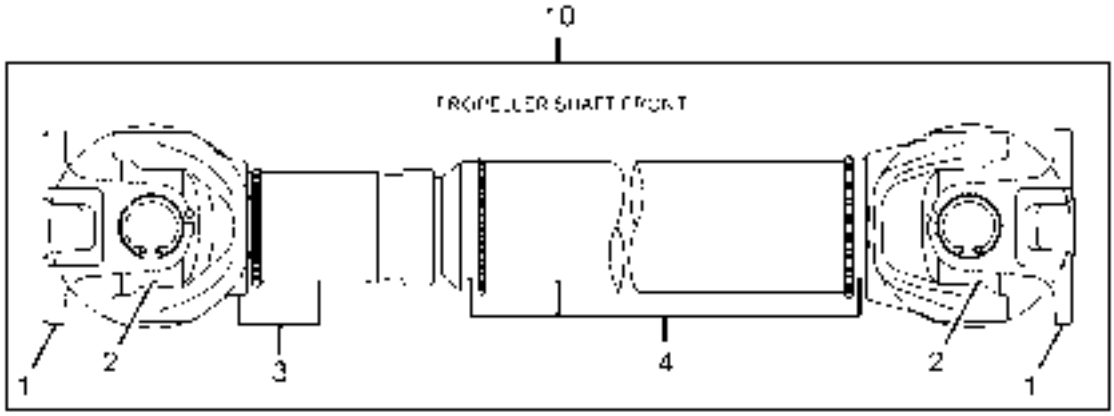
2D
PROPELLER SHAFT FRONT
1
2
3
4
2
1

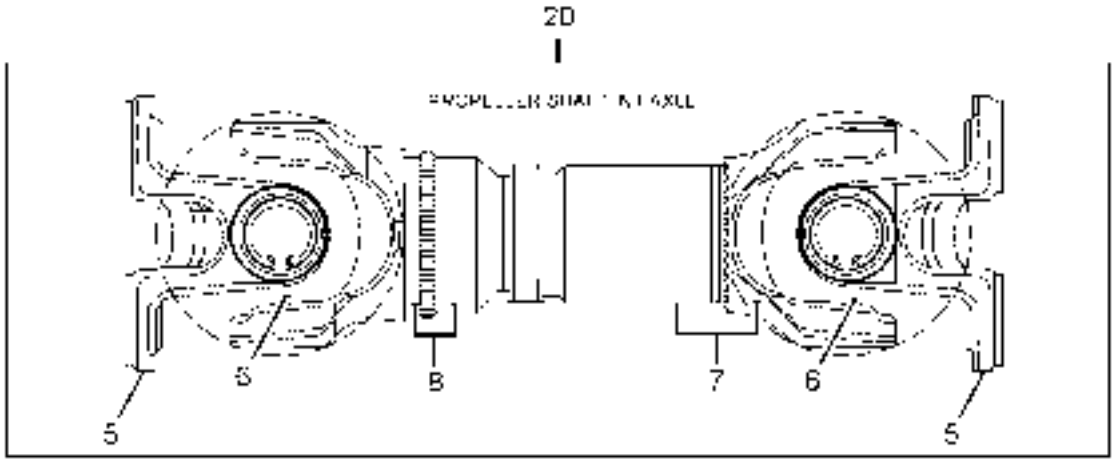
2D
PROPELLER SHAFT INTAXLE
5
6
8
7
6
5

2167613841R.02	PROPELLER SHAFT COMPONENTS (RSB)	GROUP 41

CHASSIS TYPE: ALL

FIG. NO.	PART NUMBER	DESCRIPTION	QTY	REMARKS
10	501141120101	ASSY.PROP SHAFT FRONT(1245 CLOSED)-RSB	1	
1	281941125101	FLANGE YOKE(MAIN SHAFT)-RSB	2	
2	281941120104	CROSS ASSY.(MAIN SHAFT)-RSB	2	
3	281941120102	LONG FORK SUB ASSY.(MAIN SHAFT)-RSB	1	
4	501141120105	SHORT FORK, TUBE & REAR HOUSING ASSY.	1	
20	216741120120	ASSY PROP.SHAFT-IN-AXL(600-CLOSED)RSB	1	
5	216741125105	FLANGE YOKE	2	
6	216741120107	CROSS ASSY	2	
7	216741120122	LONG FORK SUB ASSY	1	
8	216741120135	SHORT FORK SUB ASSY.	1	
-	220741208202	CHANNEL(GUARD MTG)	1	
-	220741108201	PROP. SHAFT GUARD	1	

2167873843R.02A	BRAKE AGGREGATES AND PIPES	GROUP 43

CHASSIS TYPE: ALL

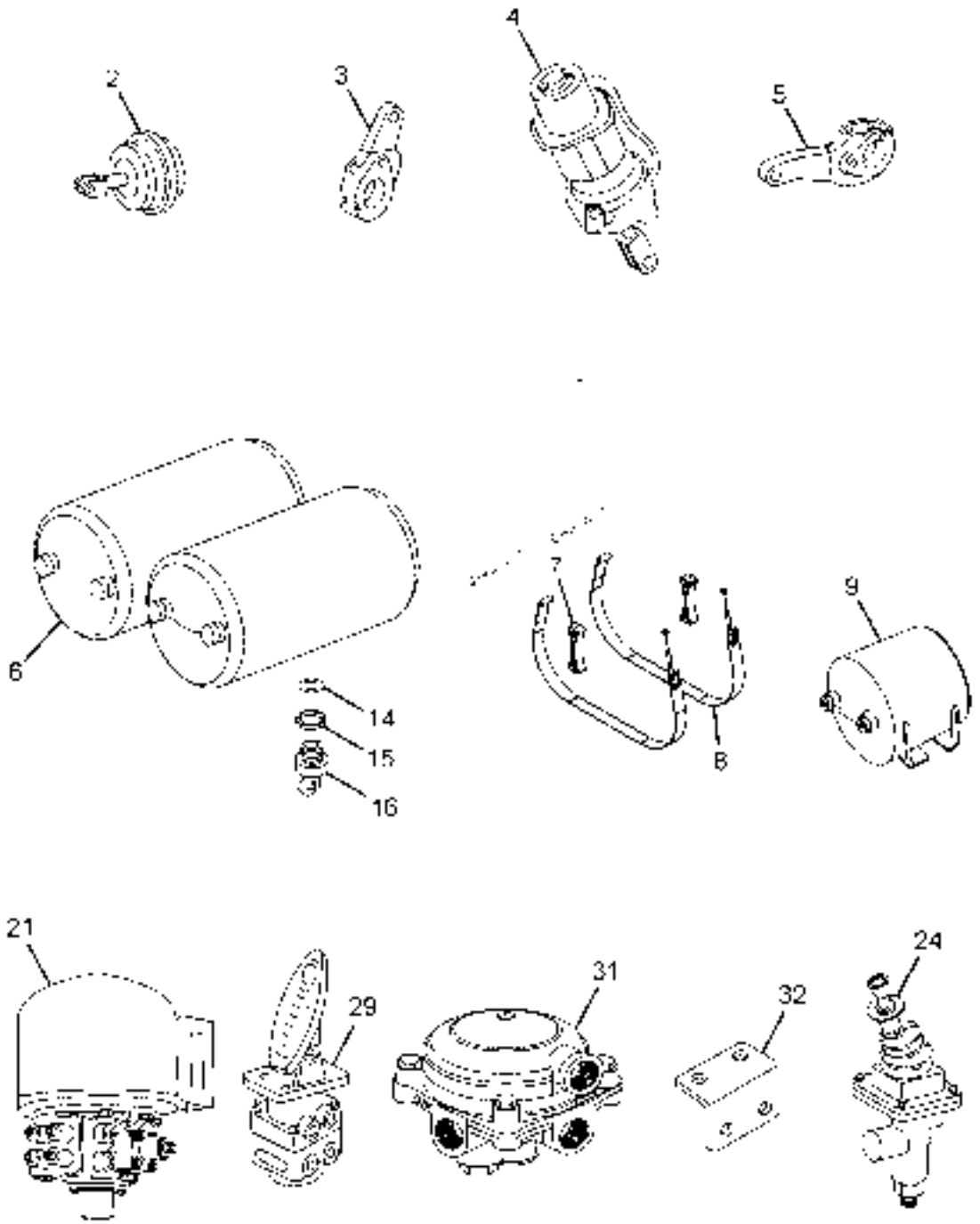

CHASSIS TYPE: ALL

FIG. NO.	PART NUMBER	DESCRIPTION	QTY	REMARKS
3	277842100171	M/S HALDEX STRAIGHT SLACK ADJUSTER WITH WEAR SENS	2	HALDEX, FOR SELECTION
3	277842100159	ASSY.SLACK ADJUSTER FRT	2	KB, FOR SELECTION
3	277842300182	ASSY.SLACK ADJUSTER FRT	2	M/S.MEI, FOR SELECTION
5	277842300156	ASSY.SLACK ADJUSTER RR-LH	1	KB, FOR SELECTION
5	277842300101	ASSY.SLACK ADJUSTER RR-LH	1	HALDEX, FOR SELECTION
5	277842300183	ASSY.SLACK ADJUSTER RR-LH	1	HALDEX, FOR SELECTION
5	277842300153	ASSY.SLACK ADJUSTER RR-RH	1	KB, FOR SELECTION
5	277842300102	ASSY.SLACK ADJUSTER RR-RH	1	HALDEX, FOR SELECTION
5	277842300184	ASSY.SLACK ADJUSTER RR-RH	1	M/S.MEI, FOR SELECTION
-	257342303207	HEX BOLT	8	
-	12302598027	HEX NUT W/COLLAR M16X1.5	8	
-	287942308240	ANCHOR BRACKET LH.	1	
-	287942308243	ANCHOR BRACKET RH	1	
-	257342106720	COLLARED PIN (M/S AAL)	2	
-	257542103206	BOLT (M/S BIL) NON STG SIDE	2	
-	257342103212	BOLT (FOR M/S BIL)	2	
-	257342103213	BOLT (FOR M/S AAL)	2	
-	284642106706	COLLARED PIN (FOR M/S BIL)	2	
-	278242303402	BUSH(CHAMBER MOUNTING BRACKET)-AAL	1	
6	263243200114	ASSY.AIR TANK WITH SEALING PLUG FOR VOSSN	2	
7	257643208602	SPACER BLOCK	2	
8	288043200130	ASSY. STRAP	2	
9	220743200103	SUB ASSY AIR TANK(15 LTR)70 MM BKT C.D	1	
14	257643509201	THRUST RING	2	
15	17050501175	O-RING 20.30X2.62	2	
16	257643790159	WATER DRAIN VALVE TILT TYPE	1	
2	501142100102	BRAKE CHAMBER TYPE 27	2	
4	278243700145	BRAKE ACTUATOR(VOSS)24/75-SCL	1	
21	278243700143	DRYING & DISTRIBUTION UNIT HI PR VOSS (SCL)	1	
24	263243700188	GRADUATED HAND CONTROL VALVE (SCL)-VOSS	1	

2167873843R.02A	BRAKE AGGREGATES AND PIPES	GROUP 43

CHASSIS TYPE: ALL

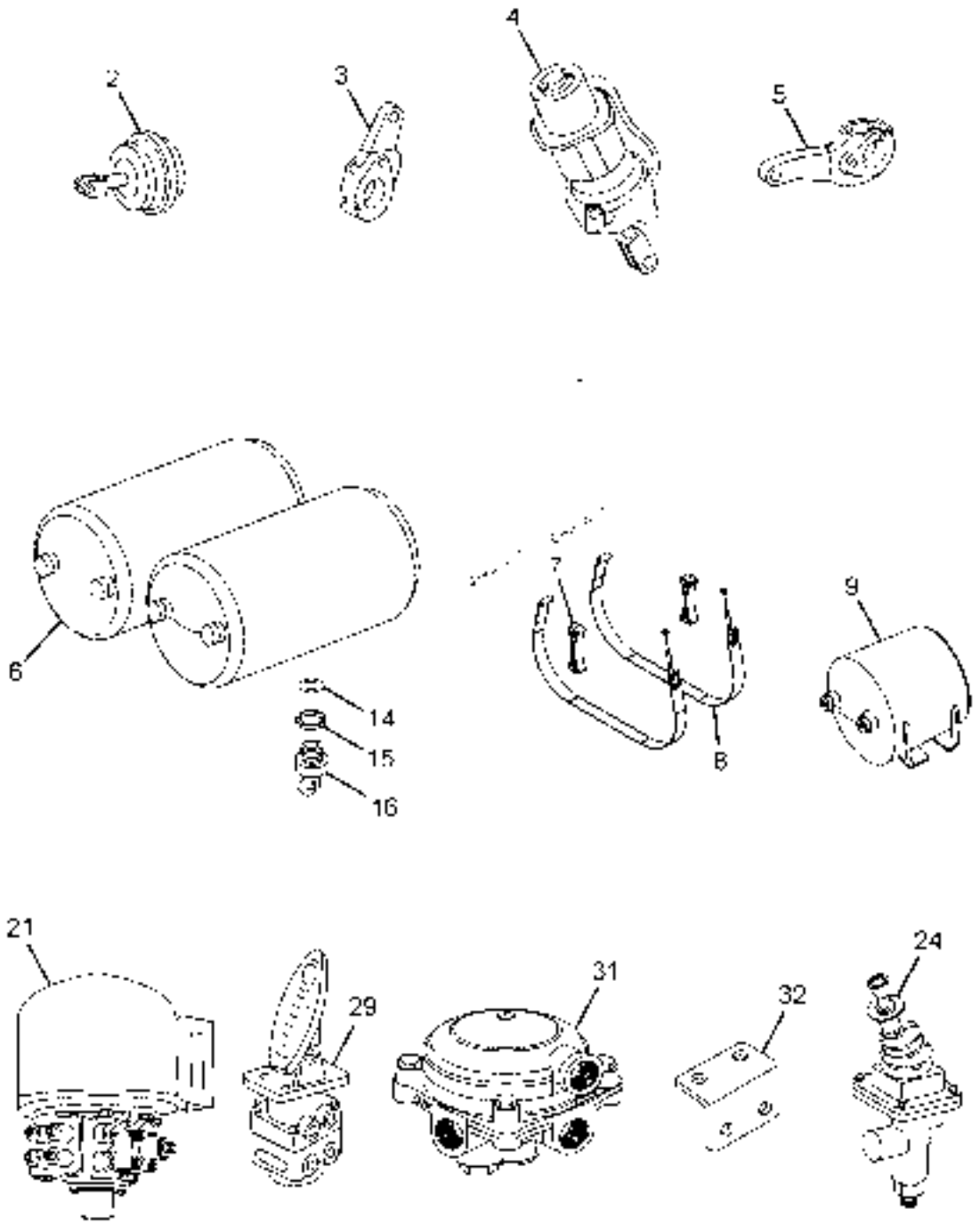

2167873843R.02A	BRAKE AGGREGATES AND PIPES	GROUP 43

CHASSIS TYPE: ALL

FIG. NO.	PART NUMBER	DESCRIPTION	QTY	REMARKS
-	217143200116	ASSY.BRACKET FOR HBV,ISO VALVE,PTO ETC	1	
29	263243700109	DUAL BRAKE VALVE-VOSS-SCL	1	
-	216743208201	BASE PLATE (DUAL BRAKE VALVE)	1	
31	278243700147	RELAY VALVE (ALL VOSS PORTS)-SCL	1	
31	283943700118	RELAY VALVE(ONE DELIVERY PORT PLUG)-SCL	1	
32	278242107101	BRACKET (RELAY VALVE MTG.)	3	
-	215435900101	LEVER TYPE CONTROL VALVE	1	
-	257635908205	SAFETY PLATE FOR DIFF LOCK LEVER	1	
-	216743910102	ASSY COMP INLET PIPE	1	
-	216743900127	ASSY.COMPRE. 1ST PIPE WITH ASSY.COMPRES	1	
-	216743900125	ASSY.COMP.2ND PIPE (TAURUS)	1	
-	217143910190	3/8"HOSE ASSY.WITH 'O'RING NIPPLE 615LG.N	1	
-	220743900113	ASSY. COMPRESSOR 4TH PIPE	1	
-	220743900127	ASSY.NYLON PIPE SET COMPLETE (VOSS)SCL	1	

TATA MOTORS

2167513843R.02A	FRONT BRAKE CHAMBER VOSS (SCL)	GROUP 43

CHASSIS TYPE: ALL

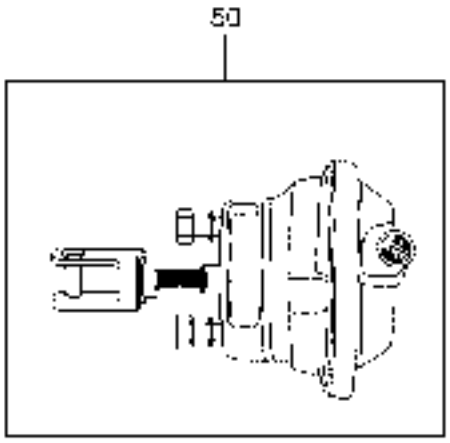

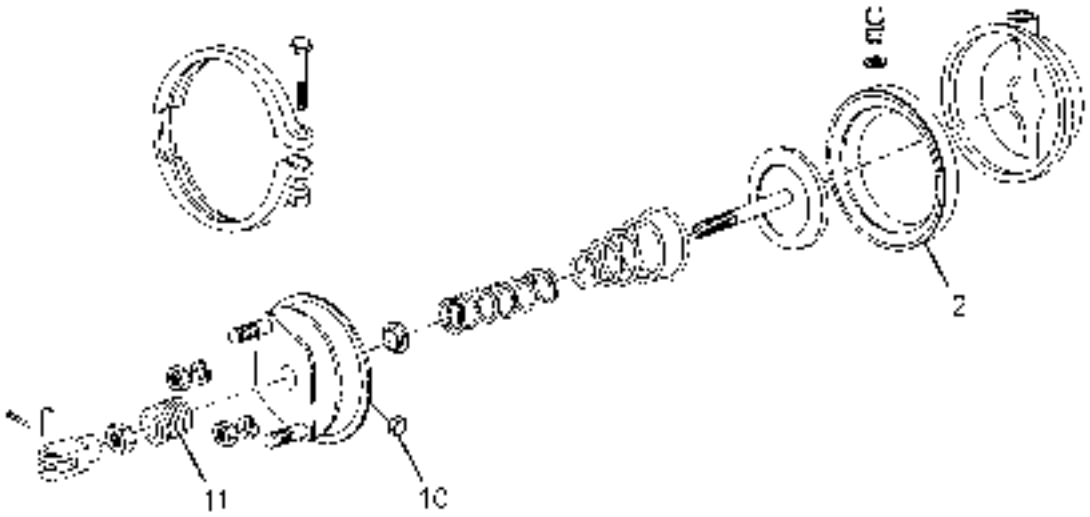

2167513843R.02A	FRONT BRAKE CHAMBER VOSS (SCL)	GROUP 43

CHASSIS TYPE: ALL

FIG. NO.	PART NUMBER	DESCRIPTION	QTY	REMARKS
50	501142100102	BRAKE CHAMBER TYPE 27	2	VOSS TYPE
-	501143700116	REPAIR KIT MSP 8/79 OF WABCO FOR BRAKE CHAMBER (TYPE-27)	1	VOSS TYPE
2	270742307702	DIAPHRAGM (WTIL PART NO. M870460)	1	
11	270742309001	GAITER(SCL P NO M275040)	1	
10	501143707701	CHECK VALVE(SCL P NO M275530)	1	

TATA MOTORS

2167513843R.03	REAR BRAKE ACTUATOR VOSS(SCL)	GROUP 43

CHASSIS TYPE: ALL

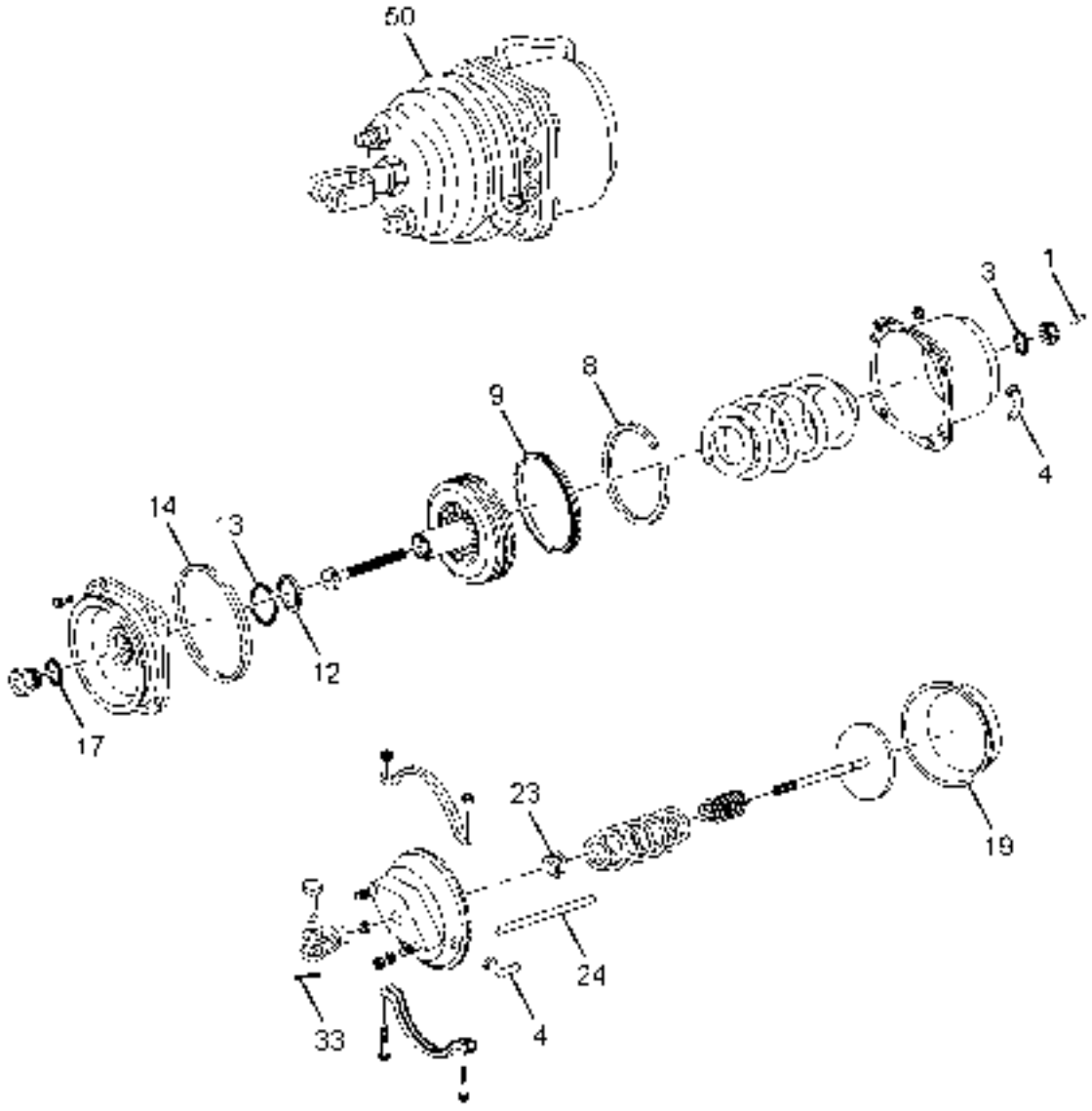

D05

2167513843R.03	REAR BRAKE ACTUATOR VOSS(SCL)	GROUP 43

CHASSIS TYPE: ALL

FIG. NO.	PART NUMBER	DESCRIPTION	QTY	REMARKS
50	278243700145	BRAKE ACTUATOR(VOSS)24/75-SCL-FWD REAR	2	VOSS TYPE
-	263243910169	REPAIR KIT SPRING BRAKE ACTUATOR TYPE-24/75,CONSISTS OF:	1	
1		KNURL PIN	1	
3		SEALING WASHER	1	
4		ELBOW	2	
8		BEARING	1	
9		INTEGRAL SEAL	1	
14		SEALING RING	1	
13		BEARING	1	
12		SEALING RING	1	
17		SEALING RING	1	
19		DIAPHRAGM	1	
23		DUST SEAL	1	
24		TUBE	1	
		CHECK VALVE	1	
		GAITER	1	
33		SPLIT PIN	1	
		NG12 RETAINING CLIP	2	
		SPRING ELEMENT	2	
		P2C FITTING	2	
		GREASE SACHET	4	

2167513843R.04	AUTO SLACK ADJUSTER	GROUP 43

CHASSIS TYPE: ALL

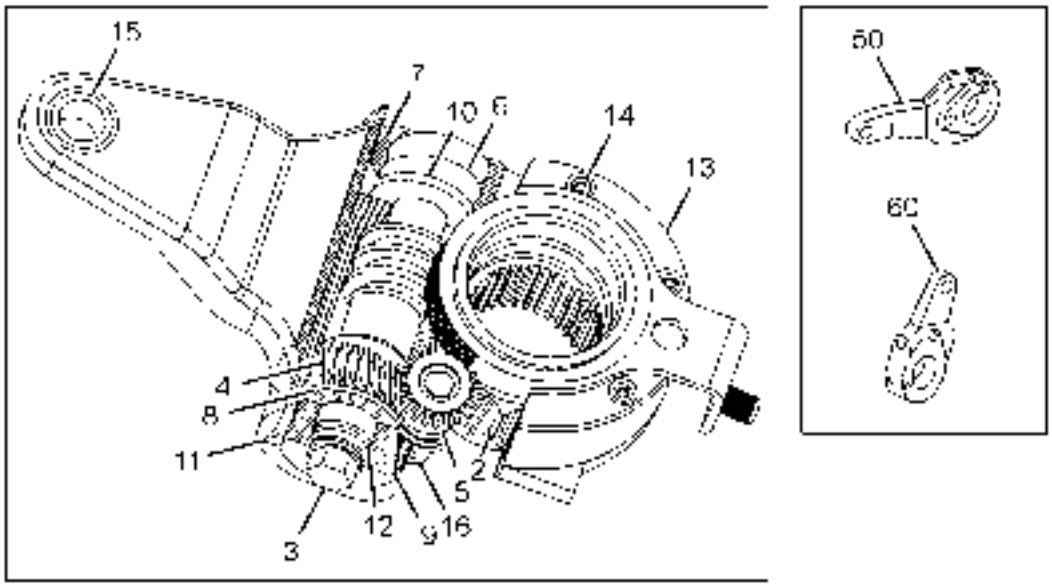

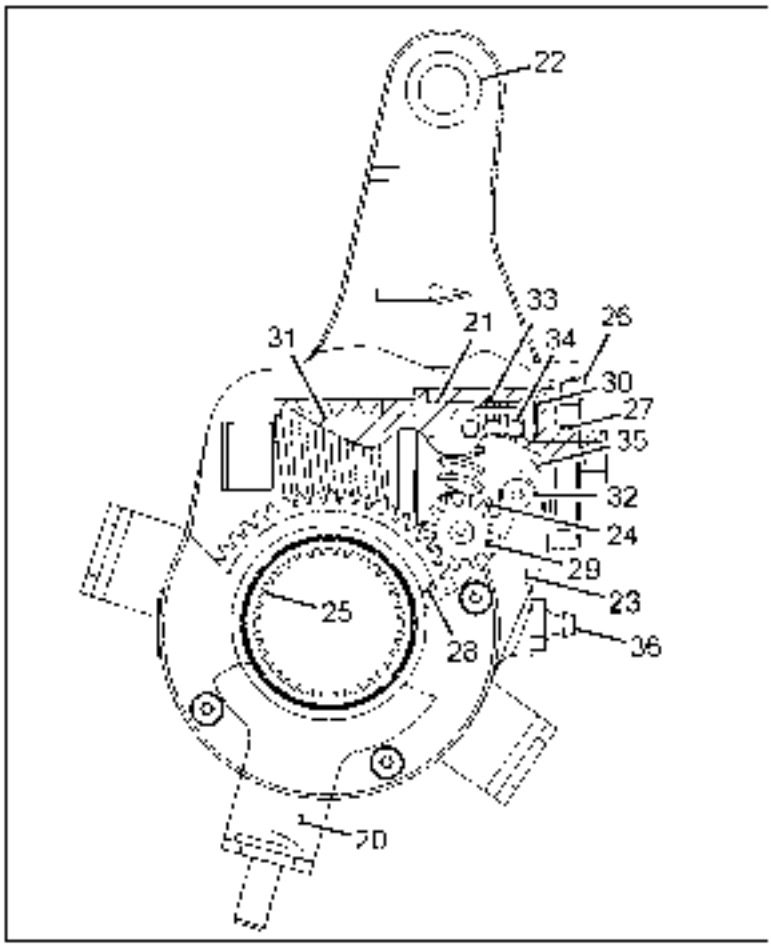

2167513843R.04	AUTO SLACK ADJUSTER	GROUP 43

CHASSIS TYPE: ALL

FIG. NO.	PART NUMBER	DESCRIPTION	QTY	REMARKS
50	277842300102	ASSY SLACK ADJUSTER REAR-RH(AUTO)-HALDEX	1	FOR SELECTION
50	277842300184	ASSY SLACK ADJUSTER REAR-RH(AUTO)-MEI	1	FOR SELECTION
50	277842300153	ASSY SLACK ADJUSTER REAR-RH(AUTO)-KB	1	FOR SELECTION
50	277842300101	ASSY SLACK ADJUSTER REAR-LH(AUTO)-HALDEX	1	FOR SELECTION
50	277842300183	ASSY SLACK ADJUSTER REAR-LH(AUTO)-MEI	1	FOR SELECTION
50	277842300156	ASSY SLACK ADJUSTER REAR-LH(AUTO)-KB	1	FOR SELECTION
60	277042300104	ASSY.AUTO.ADJUSTER 43MM-RH REAR RWD AXLE	1	
60	277042300105	ASSY.AUTO.ADJUSTER 43MM-LH REAR RWD AXLE	1	
-	277842300165	KIT-AUTOMATIC SLACK ADJUSTER	1	FOR MEI MAKE SLACK ADJ
2		WORM WHEEL-AUTO SLACK ADJ.	1	
3		WORM SHAFT-AUTO.ADJUSTER	1	
4		CLUTCH WORM WHEEL	1	
5		ASSY.PINION AND RATCHET	1	
6		SPRING-AUTO ADJUSTER	1	
7		SPRING RETAINER-AUTO.ADJ.	1	
8		THRUST BEARING-AUTO.ADJ.	1	
9		BEARING RETAINER	1	
10		SPRING SEAT-AUTO ADJUSTER	1	
11		RIVET TUBULAR-AUTO.ADJUSTER	2	
12		O'RING-AUTO ADJUSTER	1	
13		ASSY.COVER PLATE	1	
14		COUNTERSUNK HEAD SCREW	7	
15		TAIL BUSH-AUTO.ADJUSTER	1	
16		RETAINING SPRING	1	
-	277842300172	MINOR KIT-AUTO.SLACK ADJUSTER	1	FOR HALDEX MAKE SLACK ADJ
		CONSISTS OF:		
		GASKET-AUTO ADJUSTER	1	
		RIVET-AUTO ADJUSTER	2	
		O'RING 12X3-AUTO.ADJUSTER	1	
		O'RING 44.2X3-AUTO ADJUSTER	2	

2167513843R.04	AUTO SLACK ADJUSTER	GROUP 43

CHASSIS TYPE: ALL

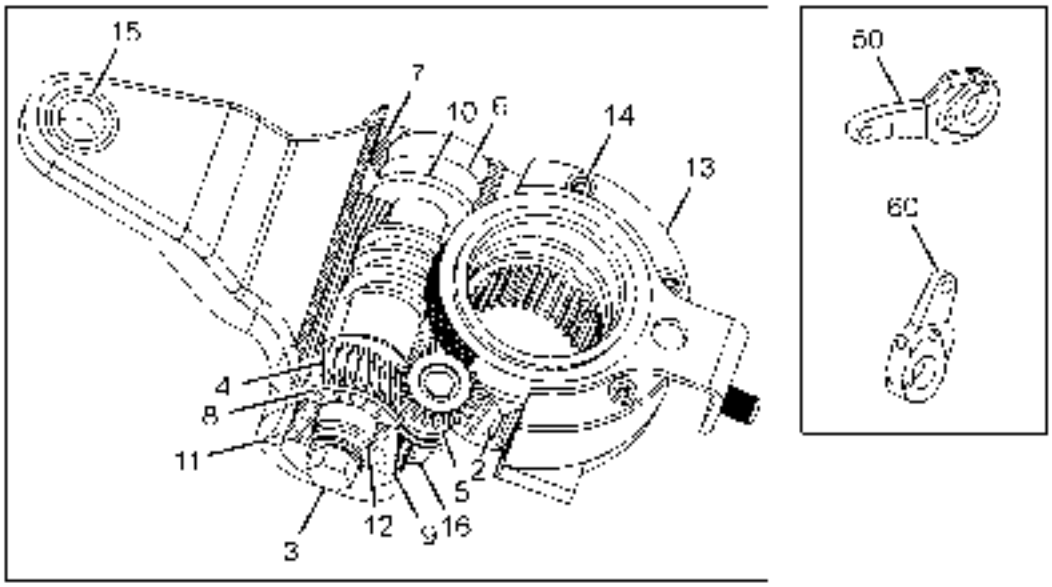

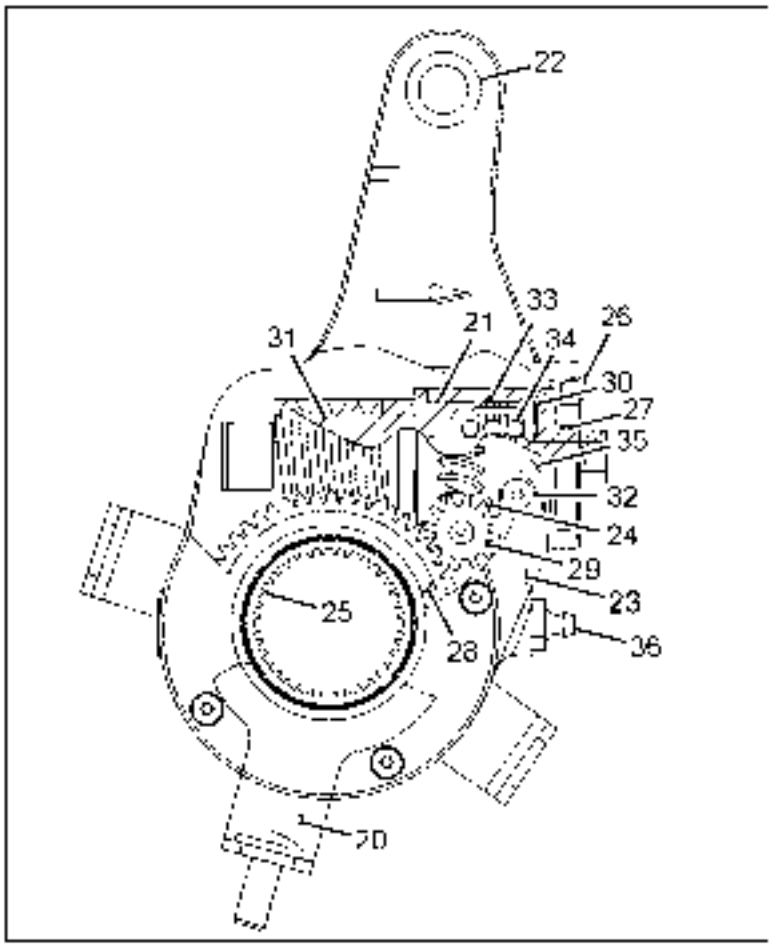

2167513843R.04	AUTO SLACK ADJUSTER	GROUP 43

CHASSIS TYPE: ALL

FIG. NO.	PART NUMBER	DESCRIPTION	QTY	REMARKS
-	277842300168	KIT-AUTO. SLACK ADJUSTER	1	FOR HALDEX MAKE SLACK ADJ
		CONSISTS OF:		
		ASSY.REGULATOR WHEEL	1	
		NEEDLE BEARING-AUTO.ADJ.	1	
		BUSHING 12.7 MM	1	
		CONTROL ARM BUSHING	1	
		FRONT COVER-AUTO.ADJUSTER	1	
		REAR COVER-AUTO.ADJUSTER	1	
		GASKET-AUTO ADJUSTER	1	
		WORM SHAFT-AUTO ADJUSTER	1	
		CLUTCH WHEEL-AUTO ADJUSTER	1	
		RIVET-AUTO ADJUSTER	2	
		O'RING 12X3-AUTO.ADJUSTER	1	
		O'RING 44.2X3-AUTO ADJUSTER	2	
		TORX SCREW-AUTO.ADJUSTER	7	
		COIL SPRING-AUTO.ADJUSTER	1	
		THRUST WASHER-AUTO.ADJ.	1	
-	277842300171	MINOR KIT-AUTO.SLACK ADJ	1	FOR KB MAKE SLACK ADJ
		CONSISTS OF:		
23		GASKET	1	
		ROUND GASKET	1	
26		RIVET	1	
27		O'RING	1	
28		O'RING	1	
30		END COVER SCREW	1	
		GREASE SACHET	1	
-	277842300164	KIT-AUTOMATIC SLACK ADJUSTER	1	FOR KB MAKE SLACK ADJ
		CONSISTS OF:		
20		REFERANCE UNIT ASSY	1	
21		CLUTCH BEARING	1	
22		ARM BUSHING	1	
		ROUND SIDE COVER	1	
23		GASKET	1	
		ROUND GASKET	1	
24		CLUTCH WHEEL	1	
25		WORM WHEEL	1	
26		RIVET	1	
27		O'RING	1	
28		O'RING	2	
29		ADJUSTMENT SCREW	1	

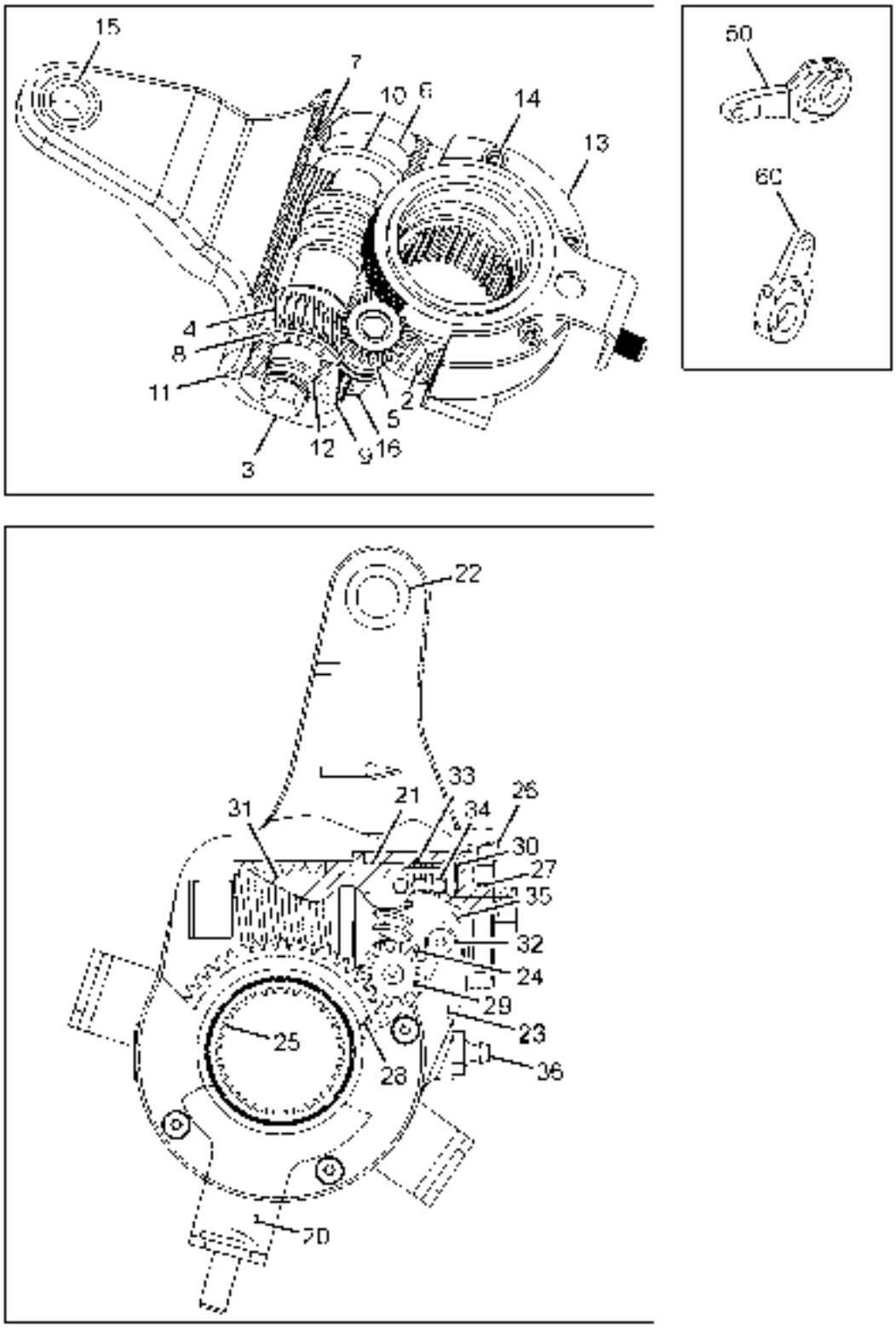
15
7
10
6
14
13
4
8
11
2
5
12
16
3
50
60
22
33
21
31
34
26
30
27
35
32
24
29
23
36
25
28
70

2167513843R.04	AUTO SLACK ADJUSTER	GROUP 43

CHASSIS TYPE: ALL

FIG. NO.	PART NUMBER	DESCRIPTION	QTY	REMARKS
30		END COVER SCREW	1	
31		WORM SCREW	1	
32		SCREW SIDE COVER	11	
33		CLUTCH SPRING	1	
34		POWER SPRING	1	
35		CLUTCH RING	1	
36		GREASE NIPPLE	1	
		GREASE SACHET	1	

TATA MOTORS

2207013843R.05	DRYING & DISTRIBUTION UNIT(SCL)	GROUP 43

CHASSIS TYPE: ALL

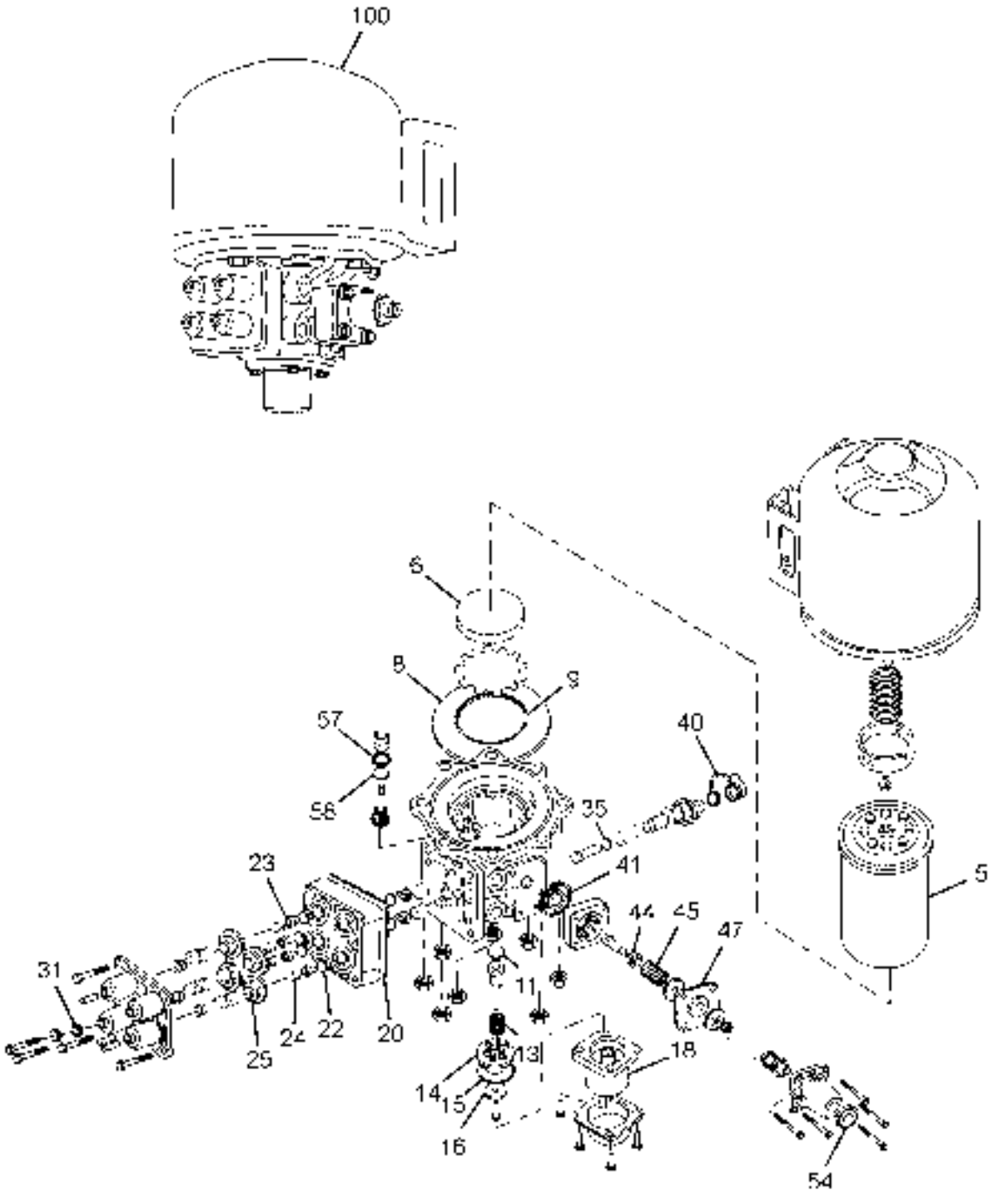

2207013843R.05	DRYING & DISTRIBUTION UNIT(SCL)	GROUP 43

CHASSIS TYPE: ALL

FIG. NO.	PART NUMBER	DESCRIPTION	QTY	REMARKS
100	278243700144	DRYING & DISTRIBUTION UNIT (SCL)	1	VOSS TYPE
-	278243700188	REPAIR KIT DRYING & DISTRIBUTION UNIT HI PR VOSS	1	FOR VOSS TYPE DDU
5	-	DESSICANT CARTRIDGE	1	
6	-	FILTER	1	
8	-	SEALING RING	1	
9	-	SEALING RING	1	
11	-	SEALING RING	1	
13	-	SPRING	1	
14	-	VALVE SEAT	1	
15	-	SEALING RING	1	
16	-	SPHERICAL VALVE	1	
18	-	SILENCER ASSY	1	
20	-	GASKET	1	
22	-	SEALING RING	6	
23	-	VALVE	6	
24	-	SPRING	7	
25	-	DIAPHRAGM	1	
31	-	LIP SEAL ASSY	1	
-	-	SPECIAL WASHER	1	
35	-	SEALING RING	1	
-	-	SEALING RING	1	
40	-	CAP	1	
41	-	GASKET	1	
44	-	BONDED VALVE	1	
45	-	INLET VALVE SPRING	1	
47	-	DIAPHRAGM	1	
54	-	EXHAUST FLAP	1	
57	-	SPHERICAL VALVE	1	
58	-	SEALING RING	1	
-	-	NG12 RETAINING CLIP	4	
-	-	NG8 RETAINING CLIP	1	
-	-	NG8 SPRING ELEMENT	1	
-	-	SPRING ELEMENT	4	
-	-	P2C FITTING	4	
-	-	GREASE SACHET	2	

TATA MOTORS

2167513843R.06	HAND CONTROL VALVE (SCL)	GROUP 43

CHASSIS TYPE: ALL

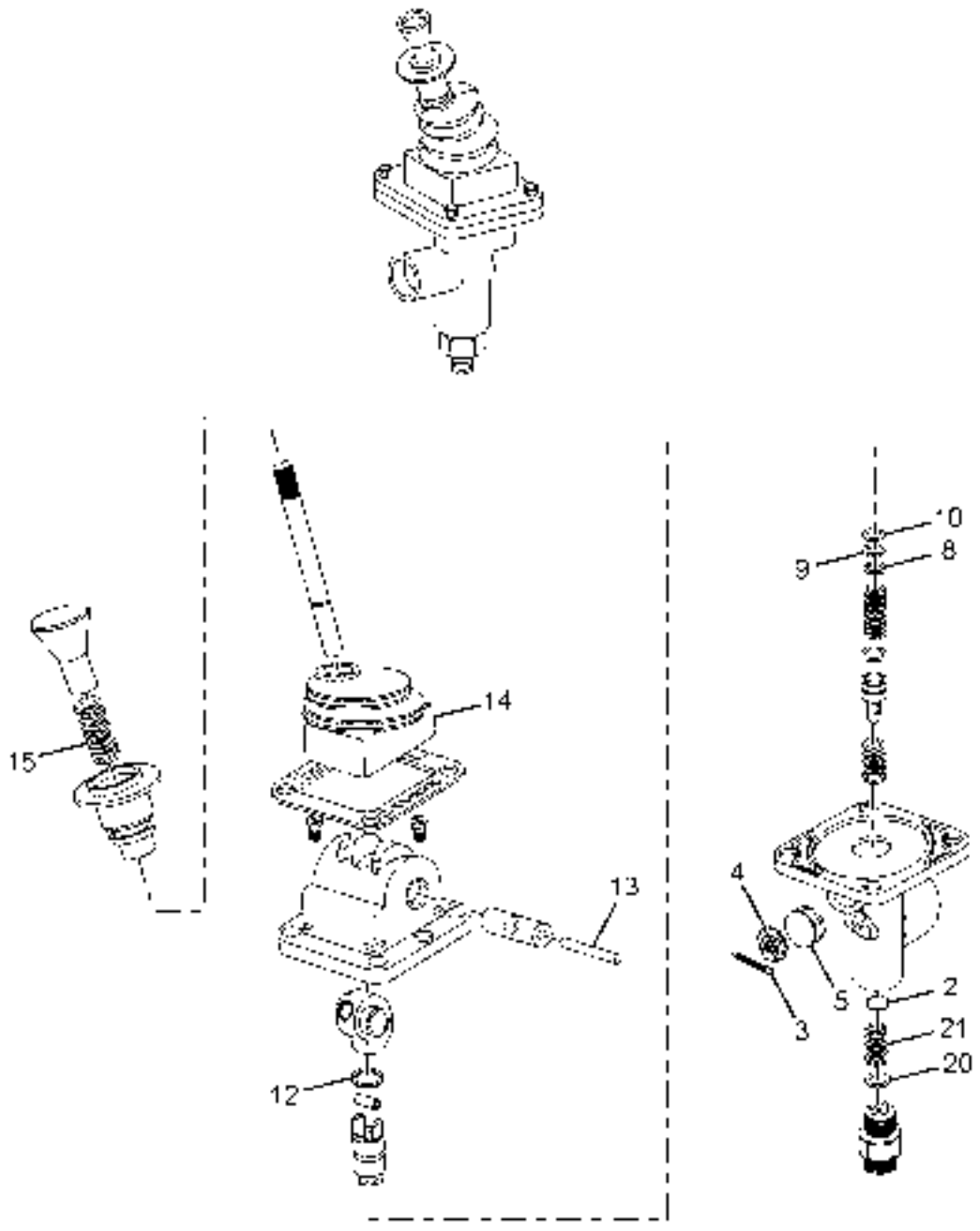

2167513843R.06	HAND CONTROL VALVE (SCL)	GROUP 43

CHASSIS TYPE: ALL

FIG. NO.	PART NUMBER	DESCRIPTION	QTY	REMARKS
-	263243700188	GRADUATED HAND CONTROL VALVE	1	
-	278243700190	REPAIR KIT GRADUATED HAND BRAKE VALVE	1	
		CONSISTS OF:		
2	-	VALVE	1	
20	-	SEALING RING	2	
21	-	VALVE SPRING	2	
5	-	FILTER	1	
4	-	STRAINER PLATE	1	
-	-	WASHER	1	
8	-	SHIM	1	
9	-	SHIM	1	
10	-	SHIM	1	
12	-	SEALING RING	1	
13	-	TENSION PIN	1	
14	-	GAITER	1	
15	-	SPRING	1	
-	-	NG8 RETAINING CLIP	1	
-	-	NG8 SPRING ELEMENT	1	
-	-	NG12 RETAINING CLIP	1	
3	-	SPLIT PIN	1	
-	-	SPRING ELEMENT	1	
-	-	P2C FITTING	1	
-	-	GREASE SACHET	1	

TATA MOTORS

2167513843R.07	DUAL BRAKE VALVE VOSS (SCL)	GROUP 43

CHASSIS TYPE: ALL

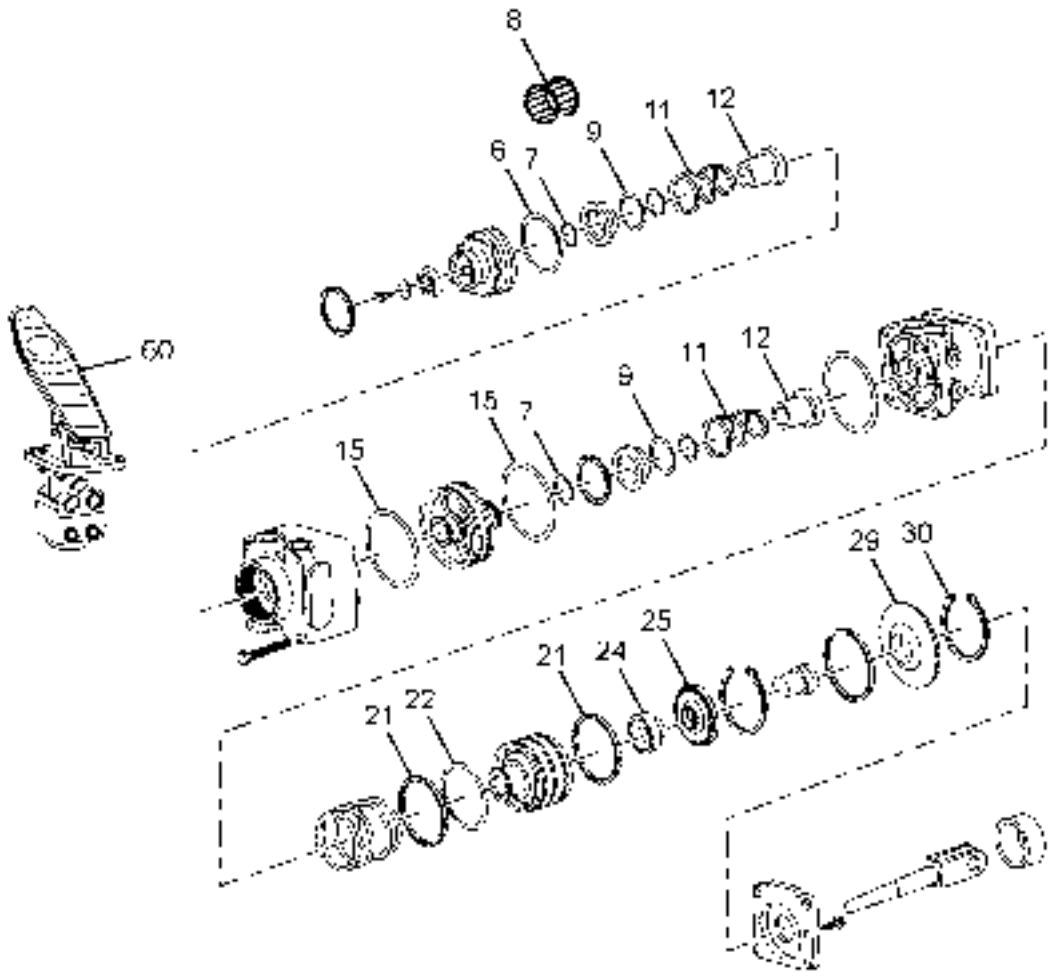

2167513843R.07	DUAL BRAKE VALVE VOSS (SCL)	GROUP 43

CHASSIS TYPE: ALL

FIG. NO.	PART NUMBER	DESCRIPTION	QTY	REMARKS
60	263243700109	DUAL BRAKE VALVE-VOSS	1	VOSS TYPE
-	263243910168	REPAIR KIT DUAL BRAKE VALVE(SCL)	1	FOR VOSS TYPE
		CONSISTS OF :		
		SILENCER COVER	1	
		MESH	1	
		SEALING RING	1	
6		SEALING RING	2	
7		SEALING RING	2	
8		FILTER	2	
9		SEALING RING	2	
11		SPRING	2	
12		VALVE	2	
15		SEALING RING	2	
21		GUIDE RING	2	
22		SEALING RING	1	
24		RUBBER SPRING	1	
25		SPRING SEAT	1	
29		BOOT	1	
30		SPLIT PIN	4	
		BOOT	1	
		RETAINING CLIP	4	
		RETAINING CLIP	2	
		NG8 SPRING ELEMENT	2	
		SEALING RING	1	
		SPRING ELEMENT	4	
		P2C FITTINGS	1	

2167513843R.08	RELAY VALVE VOSS SCL	GROUP 43

CHASSIS TYPE: ALL

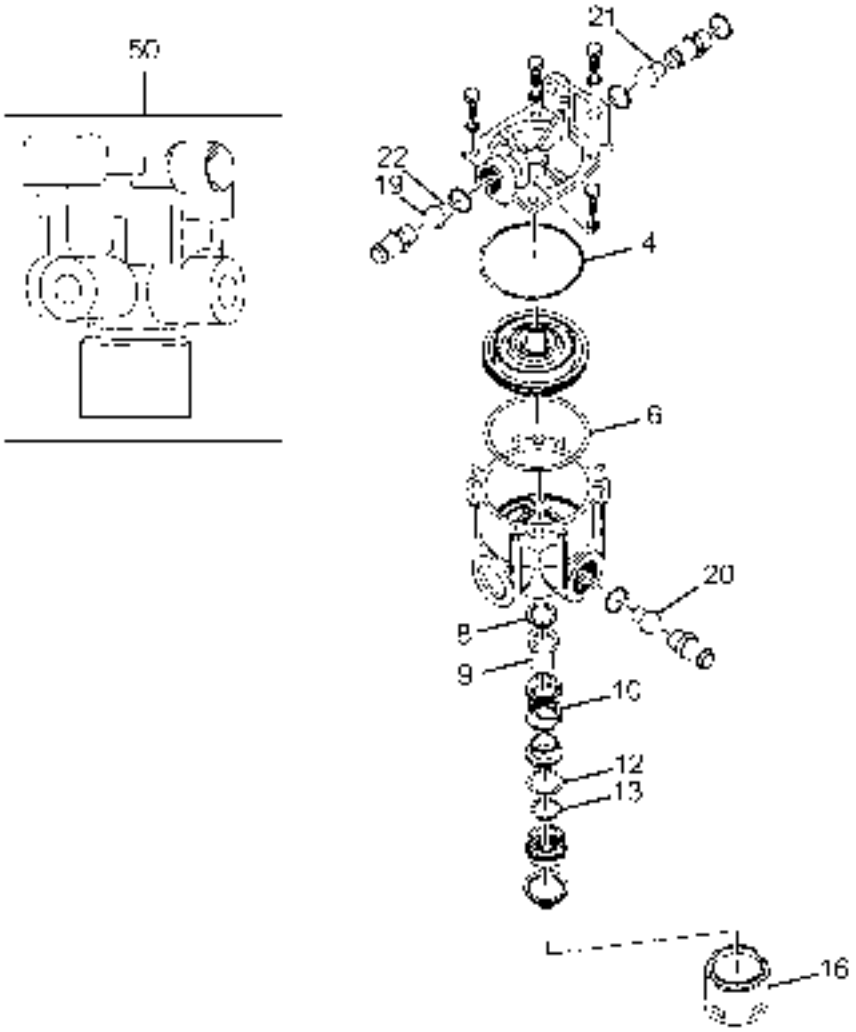

2167513843R.08	RELAY VALVE VOSS SCL	GROUP 43

CHASSIS TYPE: ALL

FIG. NO.	PART NUMBER	DESCRIPTION	QTY	REMARKS
50	278243700147	RELAY VALVE (ALL VOSS PORTS)-SCL	1	
50	283943700118	RELAY VALVE(ONE DELIVERY PORT PLUG)-SCL	1	
50	283943700119	RELAY VALVE(ONE DELIVERY PORT ADAPTOR)-SCL	1	
-	278243700106	REPAIR KIT RELAY VALVE-SCL-VOSS TYPE	1	VOSS TYPE SCL BRAKE
		CONSISTS OF :		
4	-	SEALING RING	1	
6	-	SEALING RING	1	
8	-	VALVE GUIDE	1	
9	-	VALVE	1	
10	-	VALVE SPRING	1	
12	-	SEALING RING	1	
13	-	SEALING RING	1	
16	-	SILENCER ASSY	1	
19	-	NG12 RETAINING CLIP	3	
20	-	NG8 RETAINING CLIP	1	
21	-	NG12 SPRING ELEMENT	3	
22	-	NG8 SPRING ELEMENT	1	
	-	P2C FITTING	1	
	-	GREASE SACHET	1	

2167903846R.01	STEERING LINKAGES	GROUP 46

CHASSIS TYPE: ALL

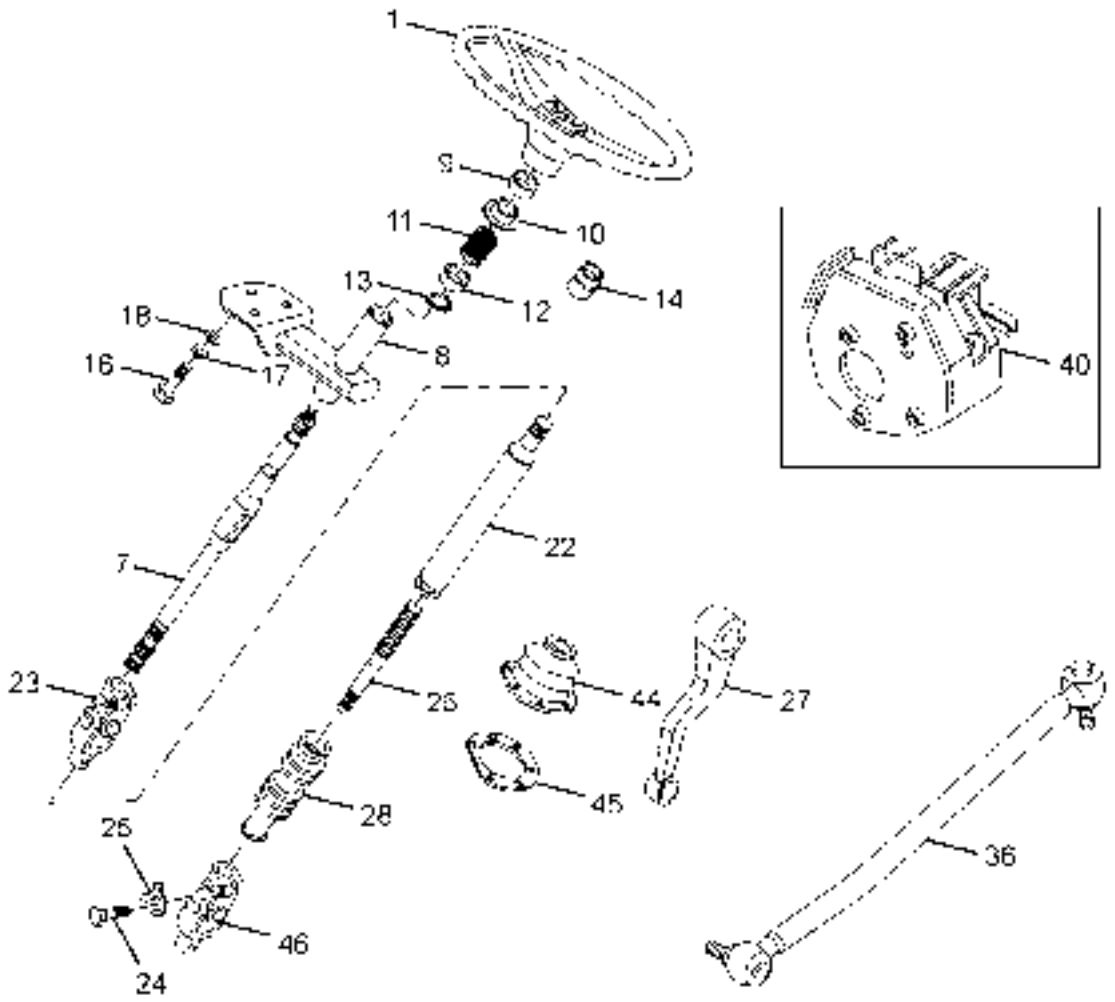

CHASSIS TYPE: ALL

FIG. NO.	PART NUMBER	DESCRIPTION	QTY	REMARKS
1	280846400101	ASSY STG.WHEEL COMPLETE 470DIA	1	
7	208246200103	ASSY. STEERING SPINDLE (TOP)	1	
8	208246100105	ASSY. STEERING COLUMN SUPPORT	1	
9	264146207920	SPACER	1	
10	265446209915	SPRING SEAT	1	
11	265446208711	COMPRESSION SPRING	1	
12	265446208278	SPRING SEAT CUP	1	
13	14550602009	EXT.CIRCLIP 20X1.2N	1	
14	264046203102	SRDG BEARING	2	
16	11323998045	HEX. SCREW M 10X25	3	
17	12460501057	BRIGHT WASHER 10.5	3	
18	12520698050	SPRING WASHER B10	3	
-	263246204301	SPRING CLIP (FOR STG. COL. BELLOW)	1	
22	208246200101	ASSY. STEERING SPINDLE (FOR RANE & CHINA)	1	FOR RANE & CHINA POWER STRG
22	208246200102	ASSY. STEERING SPINDLE(FOR ZF)	1	FOR ZF POWER STRG
23	265146600102	ASSY.UNIVERSAL JOINT	1	
-	265146603201	BOLT	2	
24	3219900401	HEX. SCREW	2	
25	12580601055	TAB WASHER 10.5	2	
26	263246207909	STEERING SPINDLE (BOTTOM)	1	
28	263246206302	RUBBER BELLOW	1	
27	257646305106	PITMAN ARM	1	
36	284646000128	ASSY.DRAG LINK-(M/S QHT)	1	
40	217146100102	ASSY. STEERING G/B & CONTROL MTG.BKT(RH) SERVICE BULLETINS\CVBU\SPT-B-015-11	1	
44	275146106301	RUBBER BELLOW	1	
45	257646108206	CLAMPING RING	1	
46	257346200106	ASSY. U.J. STEERING	1	FOR ZF POWER STRG
46	257346200108	ASSY. U.J. STEERING	1	FOR RANE POWER STRG
-	263246107501	PROTECTIVE COVER	1	
-	217146807503	RUBBER GROMMET	1	
-	217146807504	RUBBER GROMMET	1	

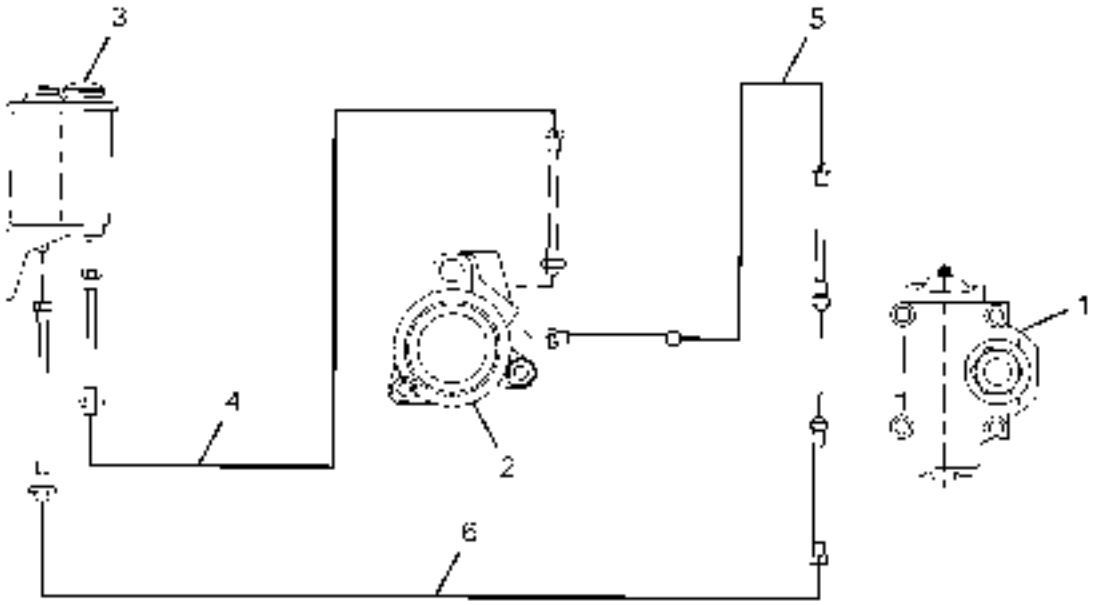
3
5
1
4
2
6

CHASSIS TYPE: ALL

FIG. NO.	PART NUMBER	DESCRIPTION	QTY	REMARKS
1	278246600128	ASSY.STG.GEAR BOX -(M/S ZF)	1	
1	278246600130	ASSY STG.GEAR BOX(M/S RANE)	1	
2	275446600103	POWER STEERING PUMP(INDIGENOUS-DIRECT DRIVE)-M/S ZF	1	
2	275446600101	POWER STEERING PUMP W/O FITTINGS (RANE)	1	
3	278244400101	HYD.STEERING TANK ASSY-M/S ZF	1	FOR SELECTION
3	278244400101	PLASTIC HYDRAULIC RESERVOIR	1	FOR SELECTION
3	277046600102	ASSY STEERING TANK(PLASTIC VERSION)-M/S RANE	1	FOR SELECTION
3	278244400102	HYD.STEERING TANK ASSY-M/S RANE	1	FOR SELECTION
-	275461100116	ASSY.BRACKET(POWER STEERING TANK MTG.)	1	
-	275546604601	COUPLING	1	
-	209646150167	KIT ASSY PIPES-ZF	1	FOR ZF P/STRG
		CONSISTS OF:		
4	217146800124	SUCTION LINE HOSE ASSEMBLY	1	FOR ZF P/STRG
5	217146800126	PRESSURE LINE HOSE ASSY.	1	FOR ZF P/STRG
6	217146800125	RETURN LINE HOSE ASSEMBLY	1	FOR ZF P/STRG
-	207746800158	ASSY MALE ADAPTOR	1	FOR ZF P/STRG
-	207746800159	ASSY MALE ADAPTOR	2	FOR ZF P/STRG
-	207746800160	ASSY MALE ADAPTOR	1	FOR ZF P/STRG
-	209646150165	KIT ASSY PIPES-RANE	1	FOR RANE & CHINA P/STRG
		CONSISTS OF:		
4	217146800124	SUCTION LINE HOSE ASSEMBLY	1	FOR RANE & CHINA P/STRG
5	217146800126	PRESSURE LINE HOSE ASSY.	1	FOR RANE & CHINA P/STRG
6	217146800125	RETURN LINE HOSE ASSEMBLY	1	FOR RANE & CHINA P/STRG
-	207746800158	ASSY MALE ADAPTOR	1	FOR RANE & CHINA P/STRG
-	207746800159	ASSY MALE ADAPTOR	1	FOR RANE & CHINA P/STRG
-	207746800160	ASSY MALE ADAPTOR	2	FOR RANE & CHINA P/STRG
-	-	NOTE: ZF & RANE STRG SYSTEM ARE IN SELECTION		

2782016046R.03	STEERING GEAR BOX (ZF)	GROUP 46

CHASSIS TYPE: ALL

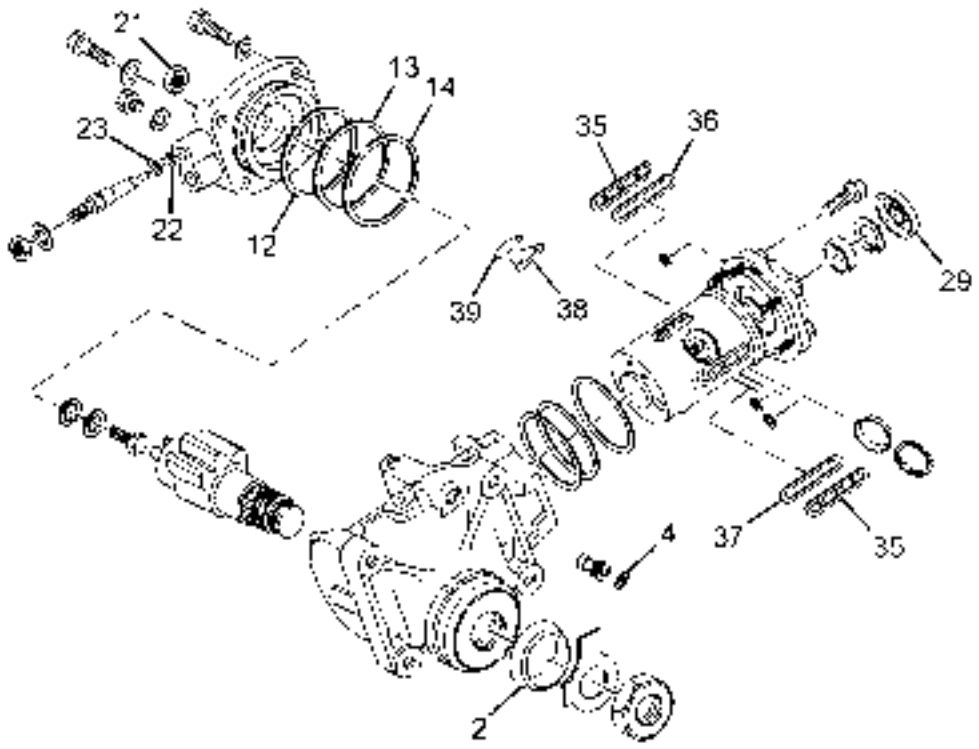

2782016046R.03	STEERING GEAR BOX (ZF)	GROUP 46

CHASSIS TYPE: ALL

FIG. NO.	PART NUMBER	DESCRIPTION	QTY	REMARKS
1	278246600128	ASSY POWER STEERING GEAR BOX (M/S Z F) -BALL & NUT TYPE	1	
-	257346210102	SEAL KIT (POWER STEERING GEAR BOX) CONSISTS OF :	1	
2		DUST SEAL	1	
		GASKET	3	
		SUPPORT RING	3	
4		'O' RING	1	
13		'O' RING	1	
12		'O' RING	1	
14		SEALING RING	1	
21		SEALING NUT	1	
22		'O' RING	2	
23		'O' RING	2	
29		PROTECTIVE CAP	1	
35		GASKET	2	
36		GASKET	2	
37		GASKET	2	
38		GASKET	2	
39		GASKET	2	
		GASKET	2	

2167903846R.03	STEERING PUMP	GROUP 46

CHASSIS TYPE: ALL

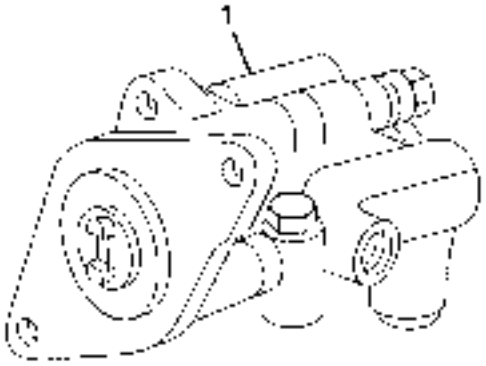

2167903846R.03	STEERING PUMP	GROUP 46

CHASSIS TYPE: ALL

FIG. NO.	PART NUMBER	DESCRIPTION	QTY	REMARKS
1	275446600103	ASSY POWER STEERING PUMP (DIRECT DRIVE) (ZF)	1	USE AS PER POWER STEERING KIT
1	275446600101	ASSY POWER STEERING PUMP (DIRECT DRIVE) (RANE)	1	USE AS PER POWER STEERING KIT
-	275546604601	COUPLING (DRIVE)	1	
-	257323100102	POWER STEERING PUMP SEAL KIT (ZF)	1	
		CONSISTS OF :		
-	-	OIL SEAL	1	
-	-	O' RING	1	
-	-	SUPPORT RING	1	
-	-	PROFILE SEALING RING	1	
-	261846600110	POWER STEERING PUMP SEAL KIT (RANE)	1	
		CONSISTS OF :		
-	-	DOUBLE LIP OIL SEAL	1	
-	-	O'RING	1	

2167113846R.07	HYDRAULIC TANK (ZF)	GROUP 46

CHASSIS TYPE: ALL

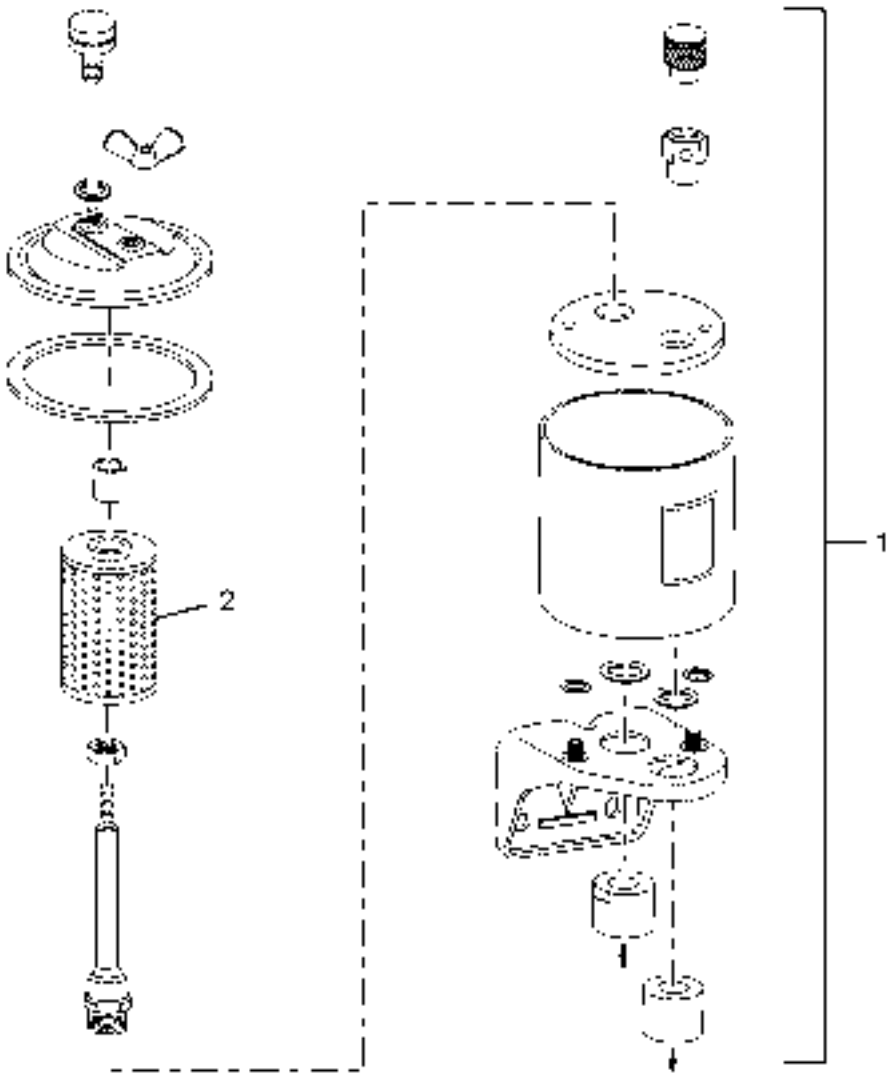

2167113846R.07	HYDRAULIC TANK (ZF)	GROUP 46

CHASSIS TYPE: ALL

FIG. NO.	PART NUMBER	DESCRIPTION	QTY	REMARKS
1	278244400101	HYD. TANK ASSY. (ZF)	1	FOR SELECTION
1	278244400101	PLASTIC HYDRAULIC RESERVOIR	1	FOR SELECTION
2	257344400128	FILTER ASSY.	1	FOR METALLIC TANK
2	278246609901	CARTRIDGE	1	FOR PLASTIC TANK
-	257344407704	GASKET	1	

2167113846R.08	HYDRAULIC TANK (RANE)	GROUP 46

CHASSIS TYPE: ALL

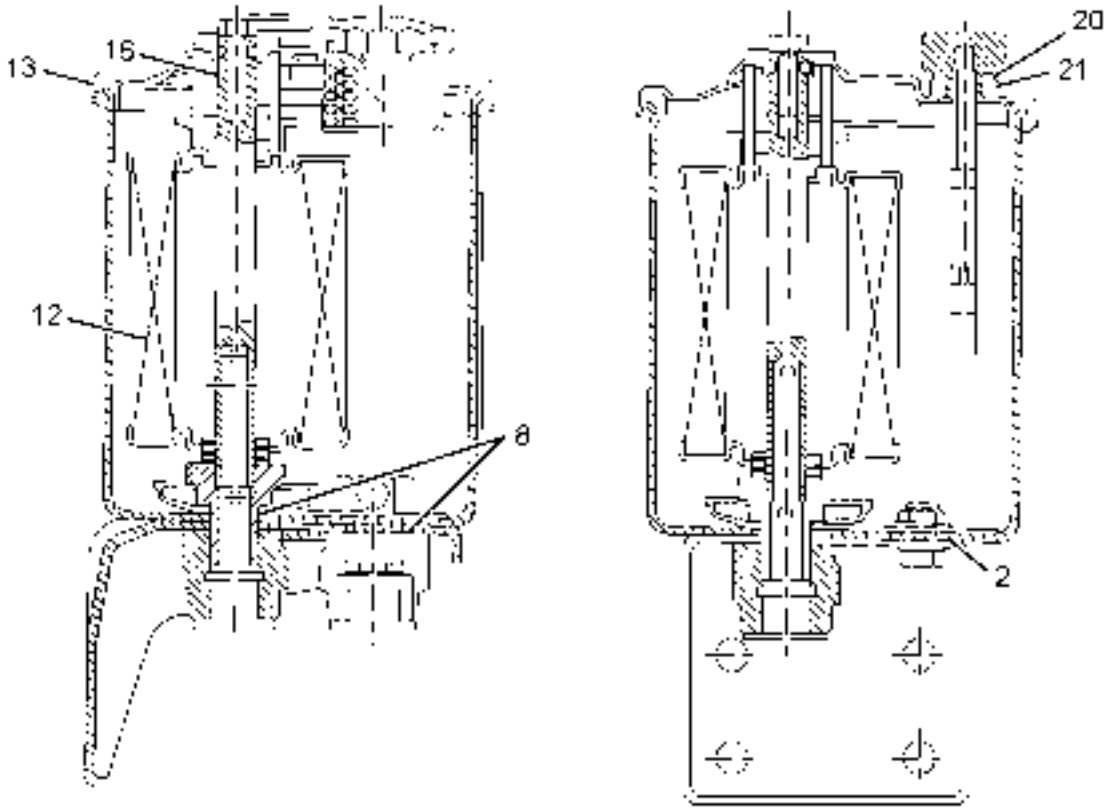

2167113846R.08	HYDRAULIC TANK (RANE)	GROUP 46

CHASSIS TYPE: ALL

FIG. NO.	PART NUMBER	DESCRIPTION	QTY	REMARKS
-	278244400102	HYDRAULIC STEERING TANK ASSY - RANE	1	FOR SELECTION
-	277046600102	STEERING TANK ASSY. (PLASTIC VERSION)	1	FOR SELECTION
12	257344500107	FILTER ASSY.	1	FOR METALLIC TANK
12	277046609901	CARTRIDGE	1	FOR PLASTIC TANK
13	257344507703	COVER SEAL	1	
-	257344500104	OIL FILTER CAP ASSY.	1	
-	257344500111	DIPSTICK ASSY.	1	
-	257344500106	SERVICE KIT	1	
		CONSISTS OFF :		
2	-	O' RING	2	
8	-	O' RING	2	
12	-	FILTER ASSY.	1	
13	-	COVER SEAL	1	
16	-	STEEL + RUBBER + WASHER	1	
20	-	O' RING	1	
21	-	O' RING CUP	1	

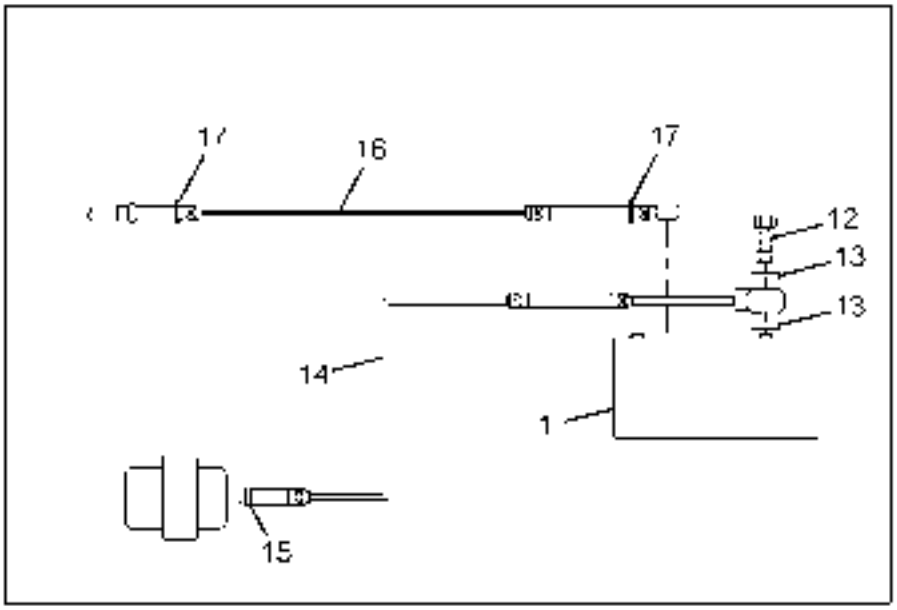
16
17
12
13
13
14
1
15

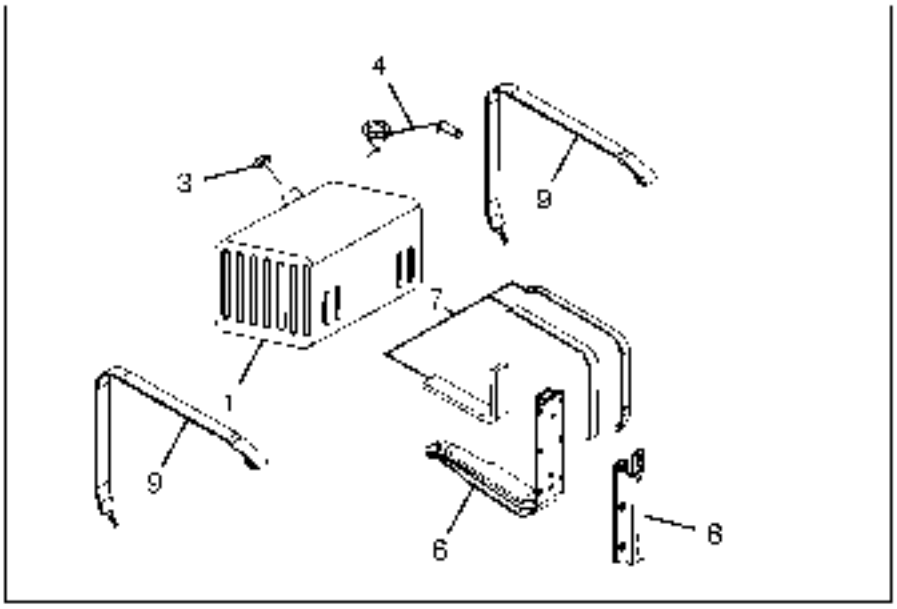
4
3
9
7
1
9
6
6

2167873847R.01	FUEL SYSTEM	GROUP 47

CHASSIS TYPE: ALL

FIG. NO.	PART NUMBER	DESCRIPTION	QTY	REMARKS
1	501147990101	KIT ASSY FUEL TANK AND RUBBER BEADING RH	1	
3	0424700605J	ASSY FUEL TANK CAP	1	
4	289254200116	FUEL TANK UNIT (400LTRS)	1	
6	501147500102	ASSY L SUPPORT (RECT FUEL TANK 300 LTR)	2	
7	284647500104	ASSY.OF RUBBER PACKING-STR.& ASSY.STRAP	2	
8	501147500101	ASSY BRKT FUEL TANK MTG.	2	
9	288047500104	ASSY STRAP	2	
12	206847107202	BANJO BOLT	1	
13	206747609201	COATED WASHER.	2	
14	220747600103	ASSY.TUBE WITH CRIMPED R/HOSE SUCTION PI	1	
15	14280500225	HOSE CLAMP 22	1	
16	216747600101	ASSY.TUBE WITH CRIMPED R/HOSE RETURN PIP	1	
17	14280500161	HOSE CLAMP 16	1	
-	206042903357	BRACKET DAMPING AIR LINIS	1	
-	207847604201	CLAMP (10X15)	3	
-	16220510216	SEALING WASHER 14X18	1	

2167873849R.01	EXHAUST SYSTEM	GROUP 49

CHASSIS TYPE: ALL

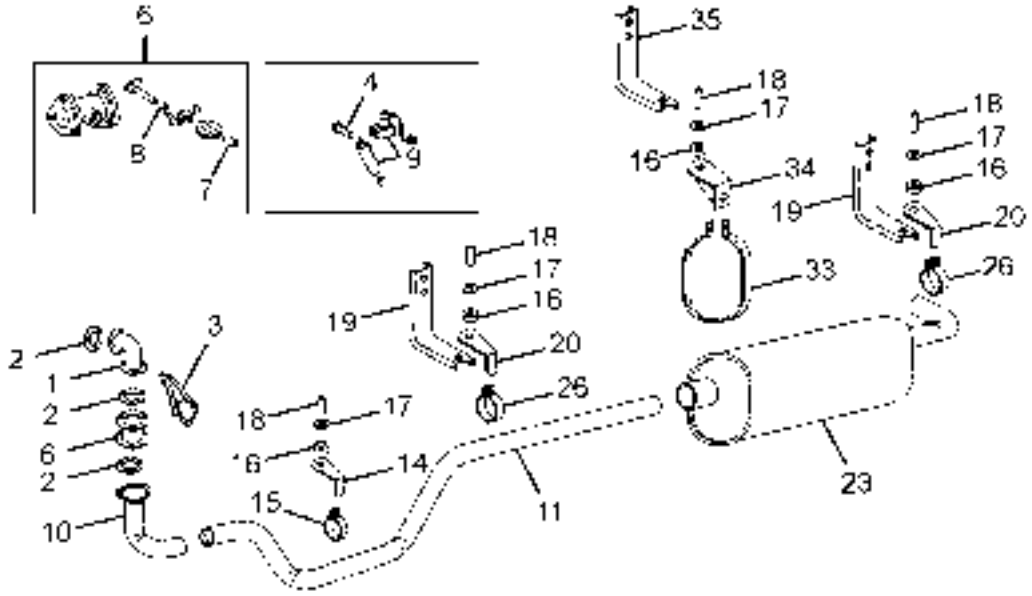

2167873849R.01	EXHAUST SYSTEM	GROUP 49

CHASSIS TYPE: ALL

FIG. NO.	PART NUMBER	DESCRIPTION	QTY	REMARKS
1	208249200102	ASSY. EXHAUST PIPE (TC MTG.)	1	
2	276349205301	GASKET	2	
-	501149200107	EXHAUST BRAKE MTG. BRKT.(TC OUTLET)	1	
3	276349200126	ASSY.BRACKET.	1	
4	275449206701	PIN	1	
6	276349200123	ASSY.EXHAUST BRAKE UNIT.	1	
7	3521441250	BUSH	1	
8	3521441350	BUSH	1	
9	209154200102	EXHAUST BRAKE CYLINDER (24V)	1	
10	216749200108	ASSY. EXHAUST PIPE-FRONT	1	
11	216749200111	ASSY. EXHAUST PIPE(INTERMEDIATE)	1	
14	216749203301	BRACKET (INTMEDIATE PIPE MTG.)	1	
15	257649208205	PIPE CLAMP	1	
16	257649007502	RUBBER BUFFER	2	
17	257649009202	WASHER	2	
18	257649006902	TUBE	1	
19	257649008203	BRACKET	1	
20	216749203304	BRACKET	1	
23	216749200106	ASSY. MUFFLER WITH TAIL PIPE	1	
26	275149204202	EXHAUST CLAMP	1	
35	257649000115	ASSY BRACKET	1	
34	216749203303	BRACKET	1	
33	217149204201	CLAMP (MUFFLER SUPPORT)	1	

TATA MOTORS

2076602050R.01	RADIATOR	GROUP 50

CHASSIS TYPE: ALL

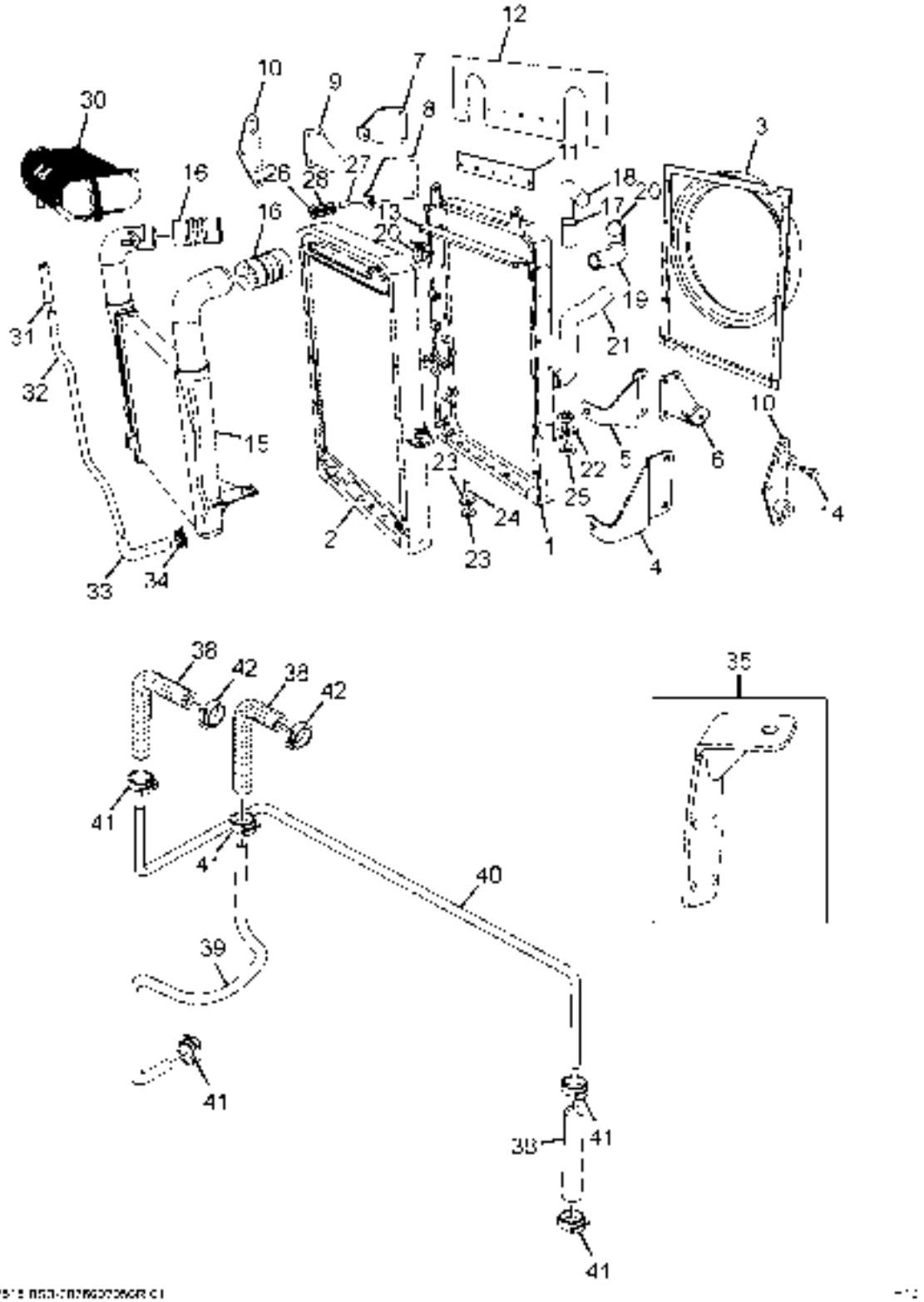

2076602050R.01	RADIATOR	GROUP 50

CHASSIS TYPE: ALL

FIG. NO.	PART NUMBER	DESCRIPTION	QTY	REMARKS
1	207650000229	ASSY.RADIATOR FRAME	1	
2	278650110301	RADIATOR ASSY-BANCO(LPS4018TC)	1	
3	207650506343	FAN SHROUD (24" JET RING FAN)	1	
4	207650000225	ASSY BRACKET-LH(CONDENSER MTG BOTTOM)	1	
5	207650000227	ASSY BRACKET-LH (CONDENSER MTG TOP)	1	
6	207650000223	ASSY BRACKET-LH (RAD MTG-ON RAD FRAME)	1	
7	207650000226	ASSY BRACKET-RH (CONDENSER MTG TOP)	1	
8	207650000224	ASSY BRACKET-RH(CONDENSER MTG BOTTOM)	1	
9	207650000222	ASSY BRACKET-RH (RAD MTG-ON RAD FRAME)	1	
10	278650000227	ASSY. BRACKET	2	
12	207650507708	FLAP	1	
11	278650008261	SUPPORT PLATE(FOR RUBBER FLAP)LPS4018TC	1	
13	278650000252	ASSY.SHIELD(FOR SEALING)	1	
14	11324014286	HEX SCR M14X1.5X28	8	
15	278614609973	INTER COOLER (FOR LPS 4018 TC BS III) (ALKRAFT)	1	
16	278614605802	HOSE HUMP	2	
17	278650105822	RUBBER HOSE	1	
18	207650116923	PIPE (ENGINE TO RADIATOR)	1	
19	278650115846	HOSE (RADIATOR INLET)	1	
20	14280599302	HOSE CLAMP TB36 SAE J1508	3	
21	278650115801	RAD. BOTTOM HOSE	1	
22	278650000233	BRACKET SIDE-LH	1	
22	278650000234	BRACKET SIDE-RH	1	
23	257450009202	WASHER (47DIA)	4	
24	257450006904	SPACER TUBE (35 long)	2	
25	257450006301	RUBBER BUFFER	4	
26	278650006302	RUBBER BUFFER	8	
27	278650406903	SPACER TUBE	4	
28	278614609201	WASHER	4	
30	252550100286	RESERVE TANK ASSY. COMPLETE	1	
31	278550105803	HOSE (20 ID x 110 l)	1	
32	207650116924	WATER FILL PIPE (AUX W/TANK TO RAD BOT)	1	

TATA MOTORS

2076602050R.01	RADIATOR	GROUP 50

CHASSIS TYPE: ALL

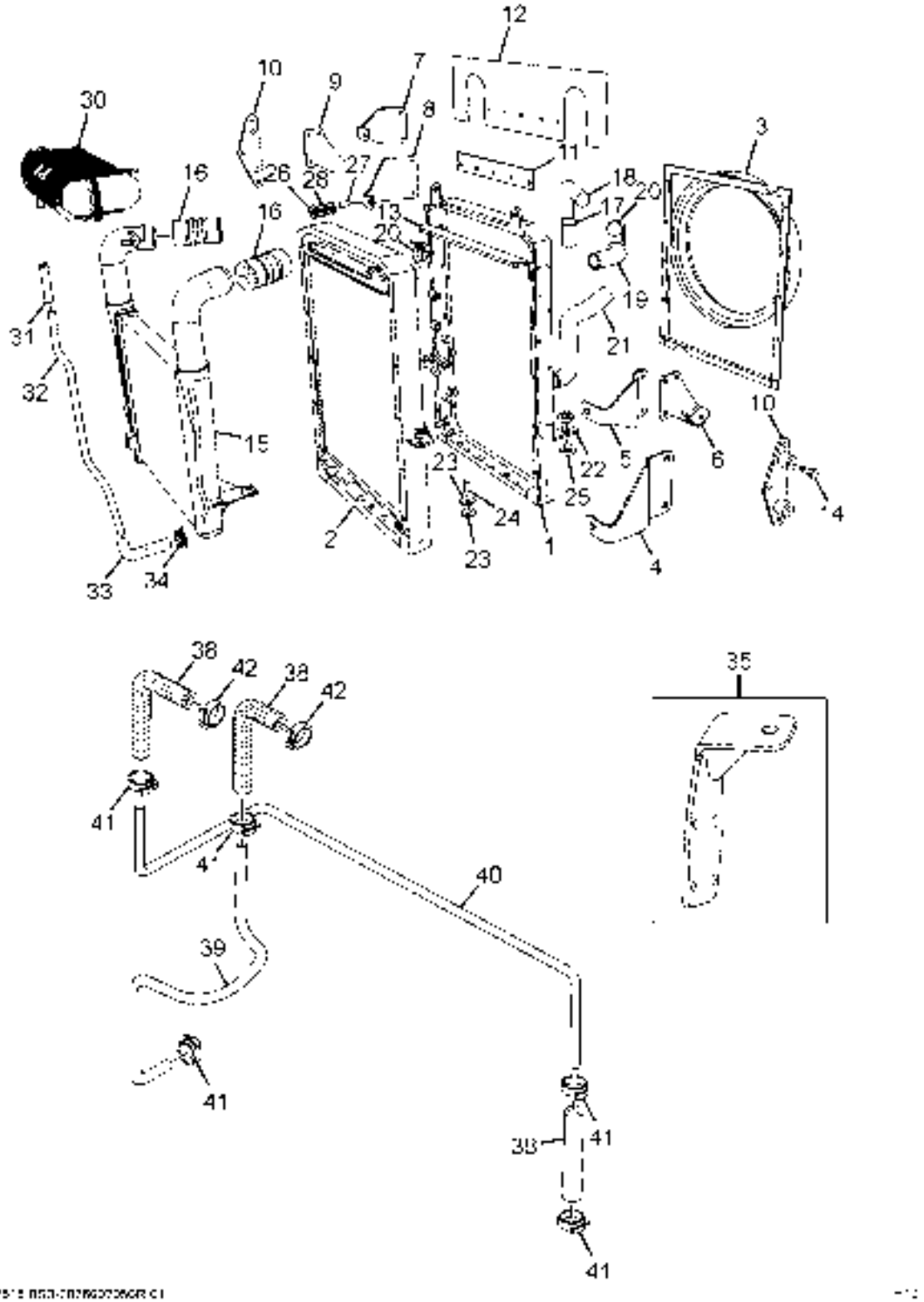

2076602050R.01	RADIATOR	GROUP 50

CHASSIS TYPE: ALL

FIG. NO.	PART NUMBER	DESCRIPTION	QTY	REMARKS
33	278650115860	RUBBER HOSE (28.6 TO 20 DIA)	1	
34	14300512403	SPRING BAND CLAMP 40DX12W TS17665	2	
35	207650000220	ASSY BRACKET RH (RAD MTG-ON CHASSIS)	1	
35	207650000221	ASSY BRACKET LH (RAD MTG-ON CHASSIS)	1	
-	278650109936	DRAIN COCK	1	
38	278650105838	RUBBER HOSE (6 IDx80 LONG)	3	
39	278650126938	VENT TUBE (ENGINE TO AUX. WATER TANK)	1	
40	252550105894	HOSE (550 LONG)	1	
41	14300512144	SPR. BD CLAMP 14DX12W	5	
42	14300512152	SPR. BD CLAMP 15DX12W	1	

2157348854R.01	CABLE SET AND ROUTING	GROUP 54

CHASSIS TYPE: ALL

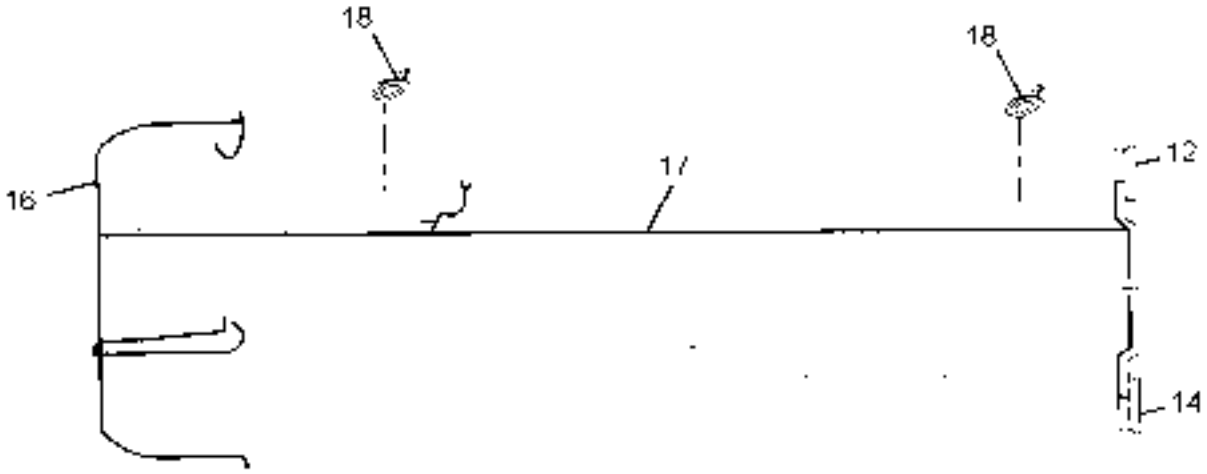

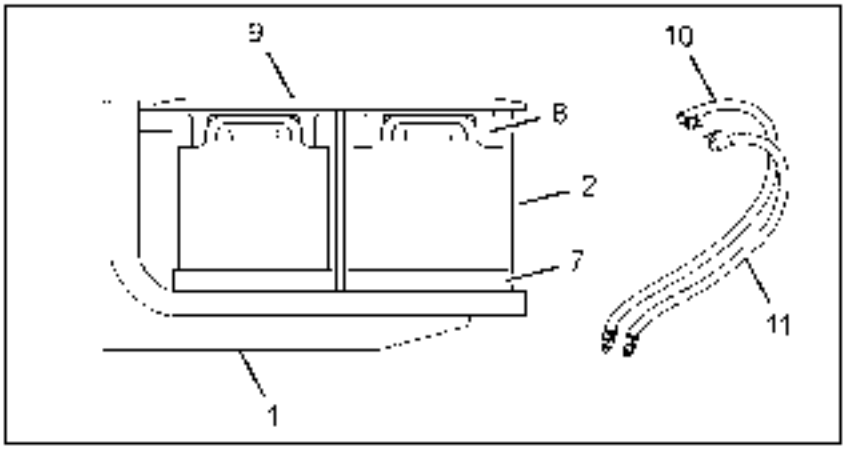

C12

2157348854R.01	CABLE SET AND ROUTING	GROUP 54

CHASSIS TYPE: ALL

FIG. NO.	PART NUMBER	DESCRIPTION	QTY	REMARKS
1	278454100103	ASSY SUPPORT BATTERY	2	
2	278254103201	CLAMPING STUD	4	
7	278254106301	BATTERY TRAY (PLASTIC)	1	
8	216154100109	ASSY BATT.COVER PLASTIC	1	
9	278454108201	CLAMP TOP (BATTERY CLAMPING)	2	
10	208254100112	ASSY BATT CABLE(+VE) 50SQM COT (BCS-STM)N	1	
11	208254110107	ASSY BATT CABLE (-VE) 50SQMCOT(BCS-STM)	1	
-	208254100109	ASSY BATT CABLE +VE 50QMM(BATT-BCS)-500LN	1	
-	215754110103	ASSY.BATT.CABLE -VE 50 SQMM 1530MM	1	
-	208254100108	ASSY BATT CABLE (LINK)-50SQMM - (200MM)	1	
12	261854440102	ASSY TAIL LAMP RH MSSL 24V	1	
14	261854440101	ASSY TAIL LAMP LH MSSL 24V	1	
16	216754660126	W/H MAIN LPK-2518;BSIII;24V;ERGO PACK WITH M/S;SA	1	
17	216754620109	WIRING HARNESS TAIL	1	
-	208254660155	W/H ENGINE LPK-2518;TC;BS-III TYA	1	
-	208254620105	WIRING HARNESS BATT TAP (PIGTAIL) 24V	1	
-	216754620103	W/H ROOF-NS CAB LPK2518/2516TC -M/S MSSLN	1	
18	257354208205	CLIP	18	
-	261854660108	W/H STOP LT SW.& LP SW.(M/S TATA-YAZAKI)N	1	

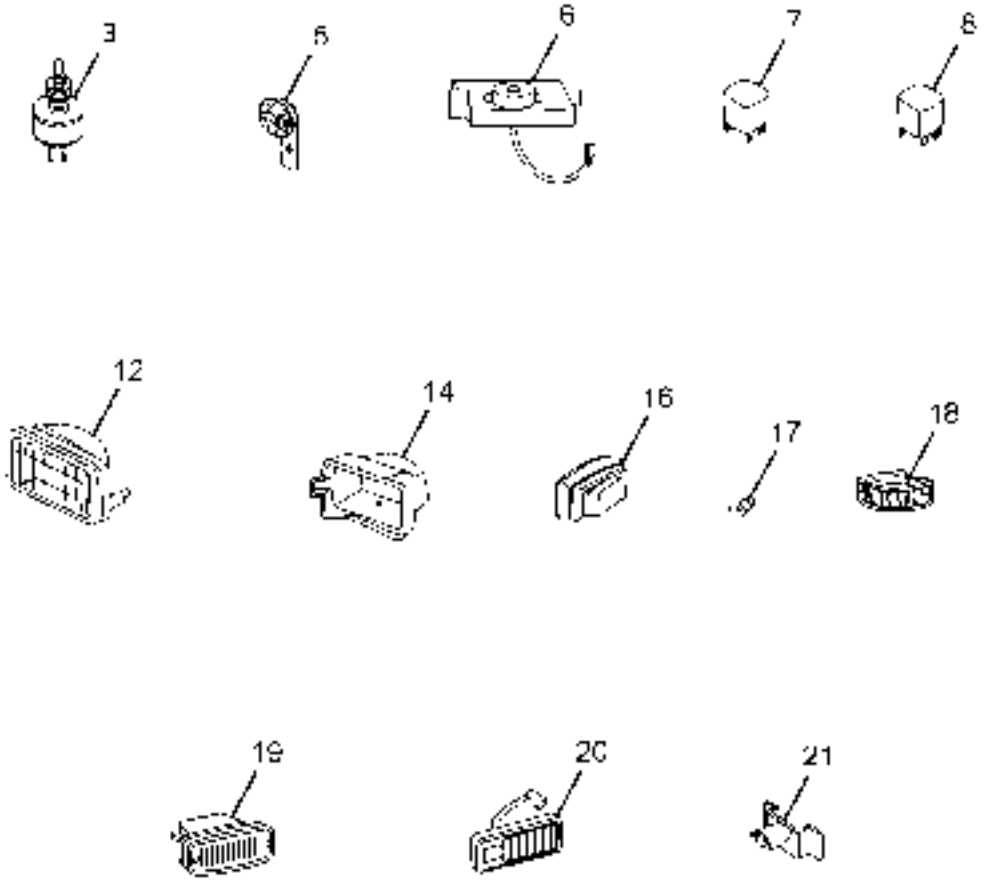
3
5
6
7
8
12
14
16
17
18
19
20
21

CHASSIS TYPE: ALL

FIG. NO.	PART NUMBER	DESCRIPTION	QTY	REMARKS
3	257654509909	STOP LIGHT SWITCH	2	
5	257354249910	HORN (24V)W/O RIS CAPACITOR	2	
6	265154200158	ELECTRIC BUZZER FOR MSSL HARNESS	1	
7	277054244902	RELAY 24V	6	
8	260854504901	RELAY (24V)-STARTER	1	
12	284154440115	ASSY MOTRSD.H/L LH W/O RIM 24V(AUTOLITE)N	1	
12	284154440114	ASSY MOTRSD.H/L RH W/O RIM 24V(AUTOLITE)N	1	
-	265454609919	SLEEVE ADAPTOR FOR HEAD LAMP	2	
14	259281100131	ASSY HEAD LAMP DOME	2	
-	283954559925	HEAD LAMP LEVELLING SWITCH	1	
16	276054400102	ASSY HATCH BACK LAMP 24V	1	
17	62120510105	LAMP 24V 10W	1	
18	262554440102	ASSY BLINKER RH WITH BULB 24V	1	
18	262554440101	ASSY BLINKER LH WITH BULB 24V	1	
19	264154440135	ASSY.SIDE IND.LAMPE'CER AMBER 24V-LH-JAYN	1	
19	264154440134	ASSY.SIDE IND.LAMPE'CER AMBER 24V-RH-JAYN	1	
20	262554440105	ASSY TOP MARKER LAMP LH WITH BULB 24V	1	
20	262554440106	ASSY TOP MARKER LAMP RH WITH BULB 24V	1	
21	257654400121	ASSY ENGINE LAMP	1	
-	215754408206	MOUNTING BRACKET - REAR ILLUMINATION LAMP	1	

2157348854R.03	INST CLUSTER AND EQUIPMENTS	GROUP 54

CHASSIS TYPE: ALL

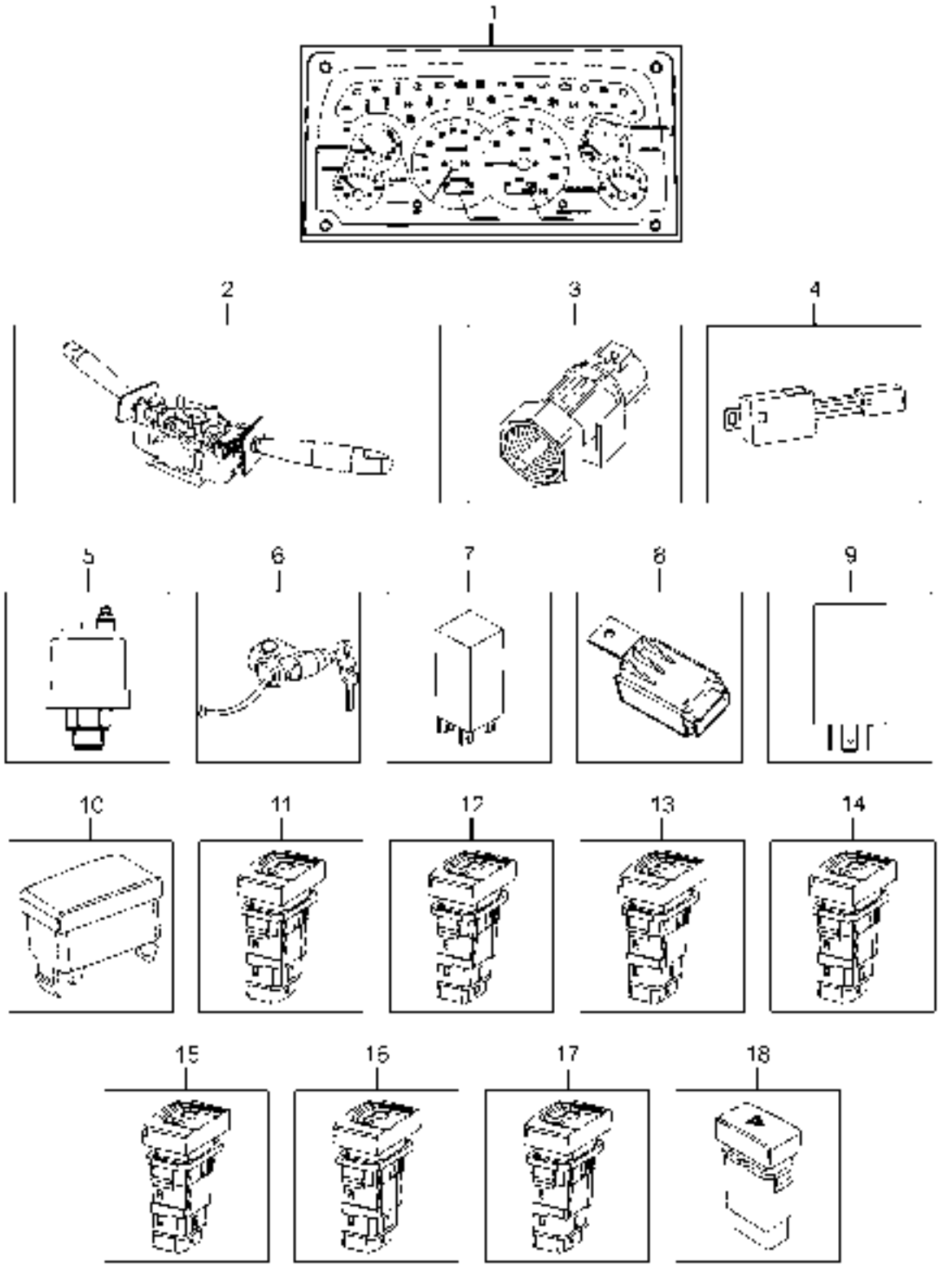

2157348854R.03	INST CLUSTER AND EQUIPMENTS	GROUP 54

CHASSIS TYPE: ALL

FIG. NO.	PART NUMBER	DESCRIPTION	QTY	REMARKS
1	216754209942	INST CLUSTER 24V;41/6;8070 PULSES/KM	1	
2	278054506909	COMBI SWITCH;TWO LEVER(470 STG)	1	
3	264354208217	SPEED SENSOR 12/24V (8 PULSE)ESPEEDO	1	
4	503054209912	WATER IN FUEL IND-	1	
5	208254109908	AIR PRESSURE TRANSDUCER	1	
6	265854500134	STEERING LOCK CUM IGNITION SW.	1	
7	257354244901	HORN TIMER 24 V	1	
8	264354200154	FAN OUT UNIT FOR EIII ESPEEDO;12V/24V	1	
9	283954209906	WIPER CONTROLLER 24V	1	
10	283954506301	DUMMY FACIA SWITCH COVER	8	
11	283954559901	EXHAUST BRAKE SW 24V (FACIA SW)	1	
12	283954559903	FRONT FOG LAMP SW;24V(FACIA SW)	1	
13	283954559904	REAR FOG LAMP 24V- FACIA SW	1	
14	283954559907	DIFFERENTIAL LOCK SW;24V-FACIA SW	1	
15	283954559914	ENGINE LAMP SW; 24V-FACIA SW	1	
16	283954559916	REAR ILLUMINATION LAMP SW;24V-FACIA SW	1	
17	283954559909	INTER AXLE DIFF LOCK; 24V-FACIA SW	1	
18	283954559924	HAZARD WARNING SW-24V	1	
-	215754100184	THERMOAMPLIFIER	1	

TATA MOTORS

2679013960R.01	NON SLEEPER CAB	GROUP 60

CHASSIS TYPE: ALL

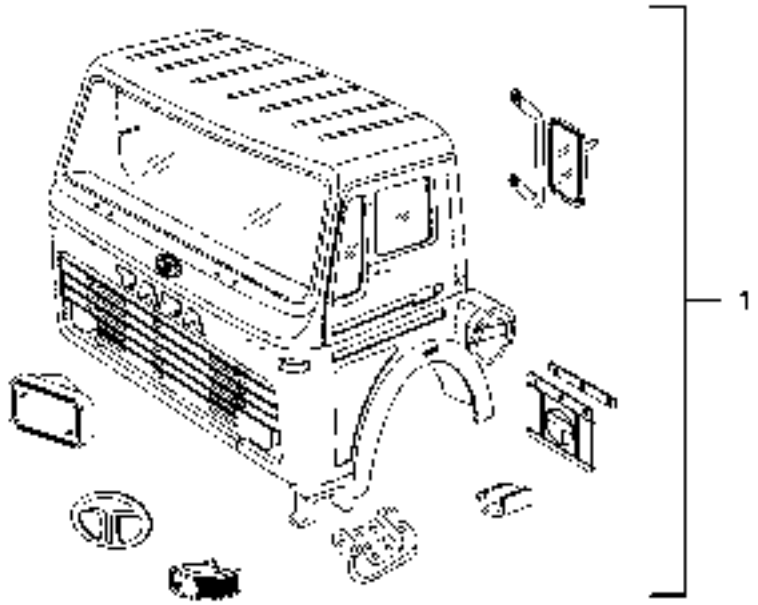

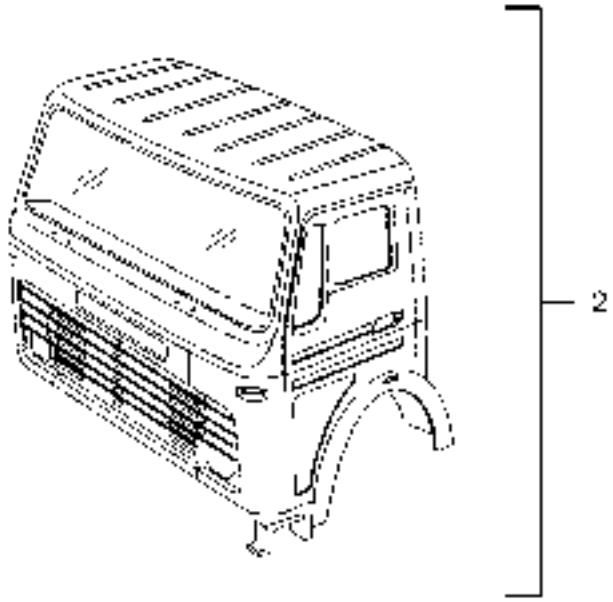

2679013960R.01	NON SLEEPER CAB	GROUP 60

CHASSIS TYPE: ALL

FIG. NO.	PART NUMBER	DESCRIPTION	QTY	REMARKS
1	267960110161	ASSY CAB COMPL	1	
2	267960110155	ASSY BODY SHELL PAINTED -RHD	1	

2679013960R.02	CAB SHEET METAL AND FITMENTS	GROUP 60

CHASSIS TYPE: ALL

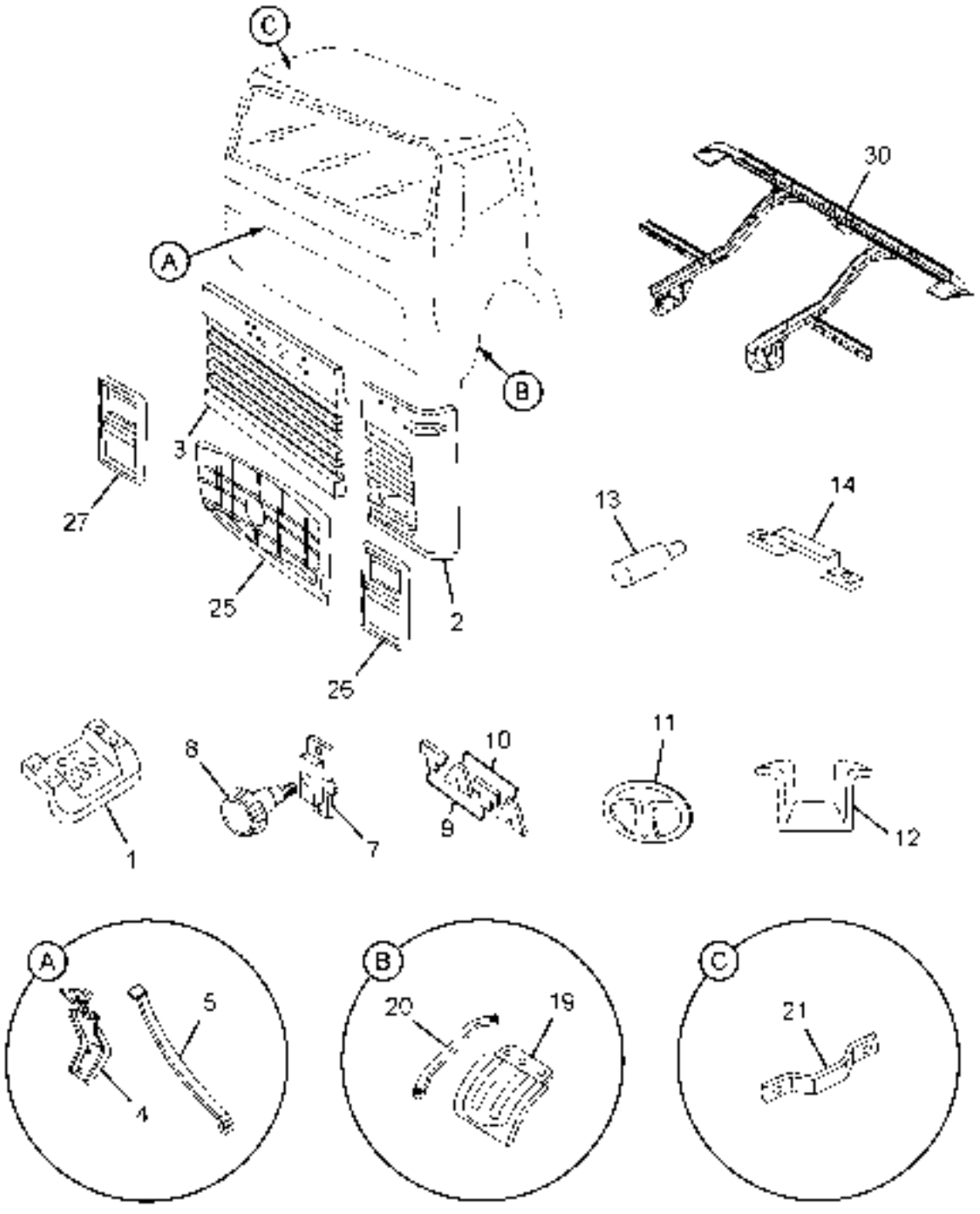

CHASSIS TYPE: ALL

FIG. NO.	PART NUMBER	DESCRIPTION	QTY	REMARKS
30	267961000121	ASSY SUBSTRUCTURE -RHD	1	
-	267961600111	ASSY FLOOR PANEL LH RHD	1	
-	267961600102	ASSY.FLOOR PANEL RH-RHD	1	
-	267961608207	FLOOR PANEL CENTRE	1	
1	257666608263	STEP BOARD BOTTOM	2	
12	275181108201	STEP (ADDITIONAL)	2	
-	257666600120	ASSY STEP WELL COMPLETE L H	1	
-	257666600121	ASSY STEP WELL COMPLETE R H	1	
2	284162508201	PANEL FACE SIDE BOOTOM-LH	1	
2	284162508202	PANEL FACE SIDE BOTTOM-RH	1	
-	257660100176	ASSY TIE MEMBER FRONT	1	
-	257662500131	ASSY.PANEL OUTER W/S BOTTOM-RHD	1	
3	284175100101	ASSY.CENTRE FLAP WELDED.	1	
25	284181100103	ASSY.GRILLE COMPLETE(CENTRE FLAP)	1	
26	284181106301	GRILLE SIDE-LH	1	
27	284181106302	SIDE GRILLE RH	1	
4	275160102902	HINGE LEAF(CENTRE FLAP)	2	
-	275160106701	HINGE PIN	2	
-	275160103401	BUSH(CENTRE FLAP)	4	
5	275160106901	STAY ROD (CENTRE FLAP)	1	
-	257675100121	ASSY BRACKET [CENTRE FLAP STAY]	1	
-	267969106305	REAR WALL LINING TOP	1	
-	267969106306	REAR WALL LINING BOTTOM	1	
7	350272300111	ASSY LOCK (CENTRE FLAP)	2	
8	206075100107	ASSY KNOB CENTRE FLAP	2	
-	257675207501	BUSH CENTRE FLAP	2	
9	274275206301	LETTER`T'(NEW STYLISED)	2	
10	274275206302	LETTER`A'(NEW STYLISED)	2	
-	264068809901	CLIP (MASCOT)	12	
-	257675203309	BRACKET (LOCK)	2	
-	257675206308	RUBBER STOPPER	2	
11	278281100109	ASSY`T'EMBLEM COMPLETE WITH GRILLE	1	FOR SELECTION
11	268075200105	ASSY.`T'EMBLEM(OVAL STYLISED) W/O GRILLE	1	FOR SELECTION
13	257675200109	ASSY RUBBER BUFFER	2	
14	275160105601	GRAB HANDLE (FRONT FACE)	2	
19	257666508205	MUDGUARD FRONT L H	1	

TATA MOTORS

2679013960R.02	CAB SHEET METAL AND FITMENTS	GROUP 60

CHASSIS TYPE: ALL

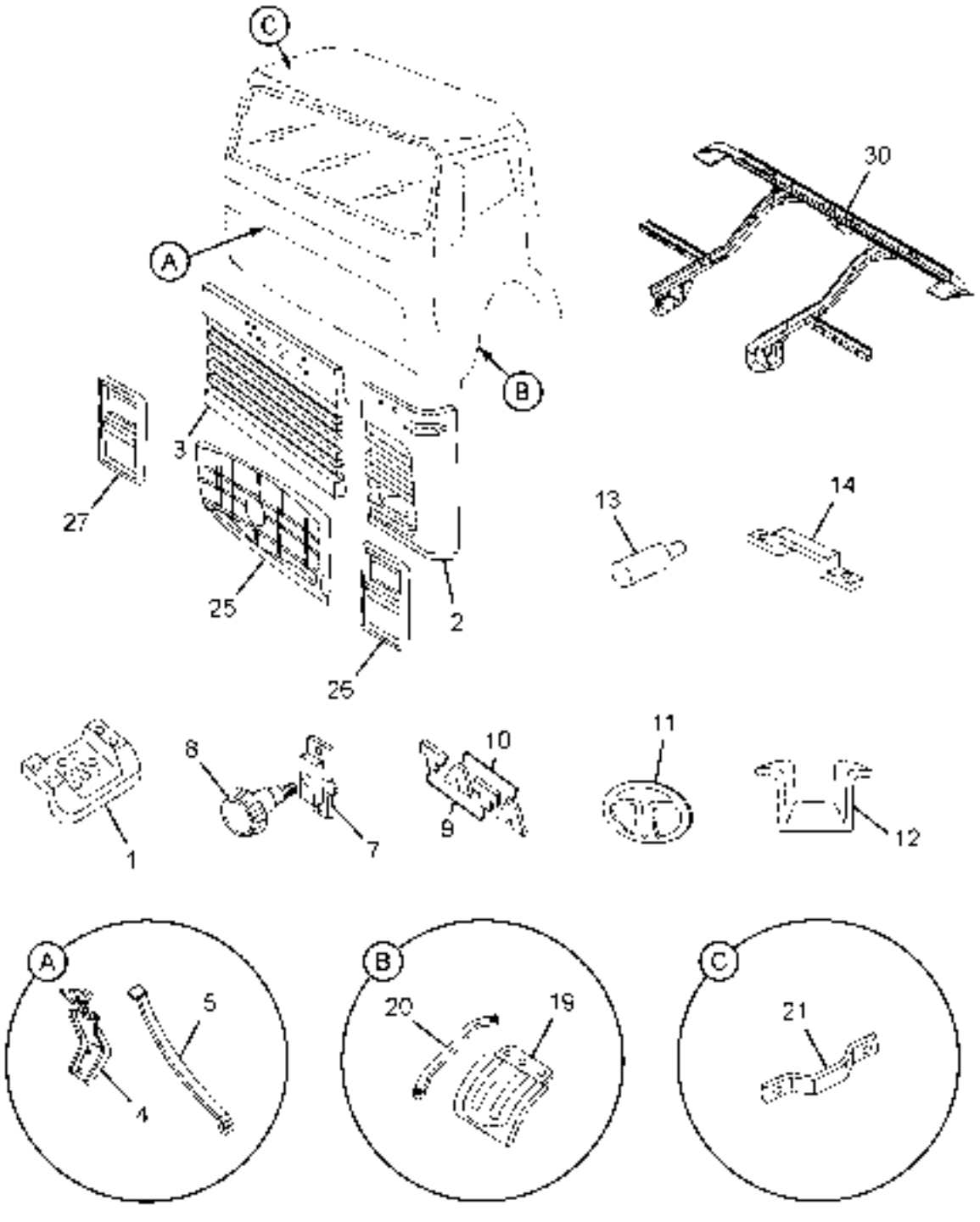

CHASSIS TYPE: ALL

FIG. NO.	PART NUMBER	DESCRIPTION	QTY	REMARKS
19	257666508206	MUDGUARD FRONT R H	1	
20	257566506908	SUPPORT [MUDGUARD FRT] LH	1	
20	257566506909	SUPPORT(MUDGUARD FRT) RH	1	
21	257388706303	GRAB HANDLE	4	
-	284188106305	MUDFLAP REAR	2	
-	284161600105	ASSY EXTN. MUDGUARD REAR-LH	1	
-	284161600106	ASSY EXTN. MUDGUARD REAR-RH	1	
-	284181100107	ASSY ARRESTOR SPRAY SUPPRESSION	2	
-	257566500102	ASSY MUDGURD LH REAR	1	
-	267961600107	ASSY.MUDGUARD-RH(REAR)	1	
-	257666500111	ASSY SUPPORT MUD GUARD REAR LH	1	
-	257666500112	ASSY SUPPORT MUD GUARD REAR RH	1	
-	267961108204	GUSSET REAR MUDGUARD(AIR FILTER MTG.)	1	
-	275461100116	ASSY.BRACKET(POWER STEERING TANK MTG.)	1	

2679013960R.03	CAB FITMENTS	GROUP 60

CHASSIS TYPE: ALL

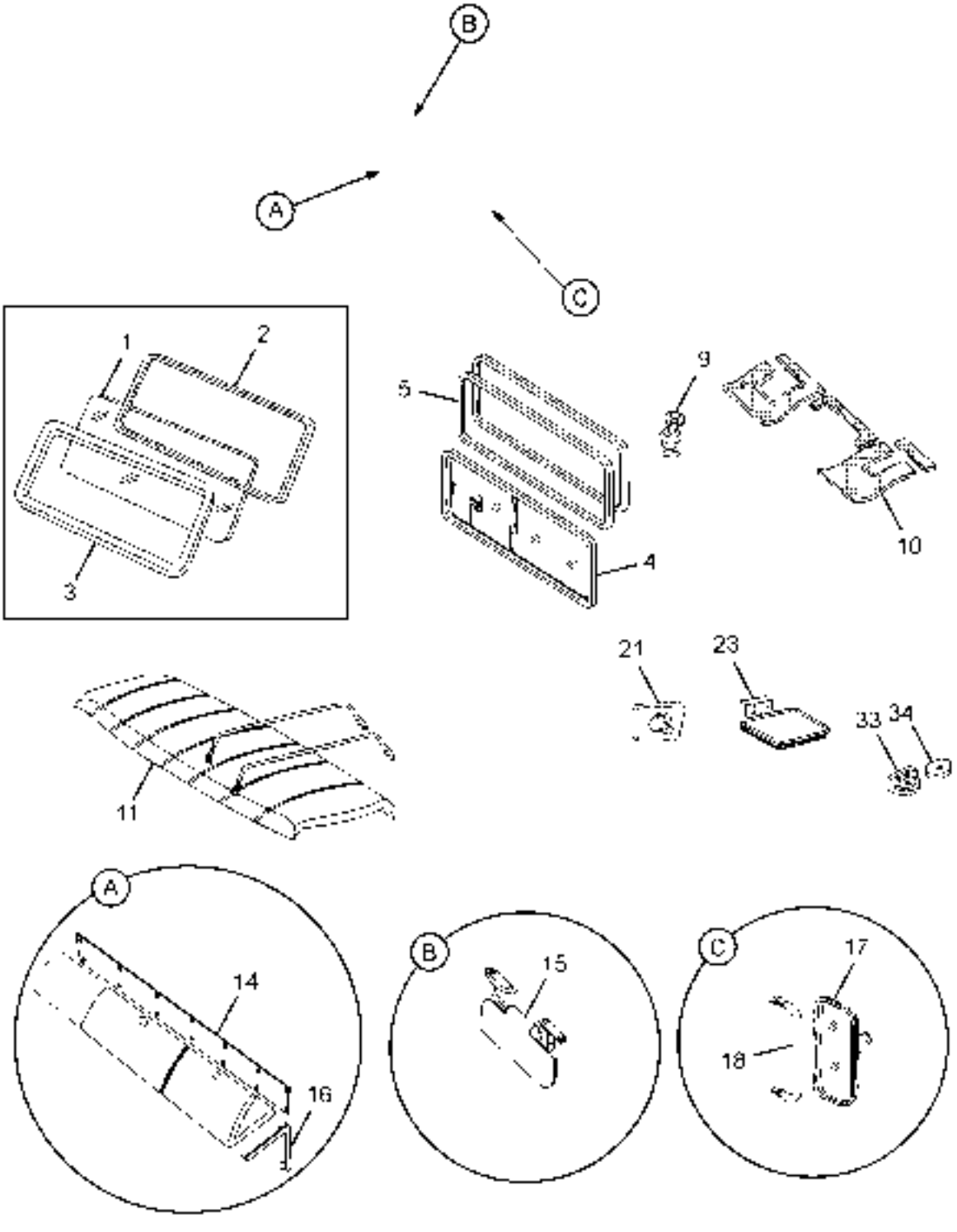

CHASSIS TYPE: ALL

FIG. NO.	PART NUMBER	DESCRIPTION	QTY	REMARKS
1	257667102316	WIND SHIELD GLASS (SINGLE PIECE)	1	
2	257667106336	RUBBER MOULD (WIND SCREEN)	1	
3	257667100121	ASSY REAR WINDOW COMPLETE	1	
4	257667102319	GLASS WITH 2 HOLES (REAR WINDOW)	1	
4	257667102320	GLASS WITHOUT HOLES (REAR WINDOW)	1	
5	257667106339	RUBBER MOULD REAR WINDOW M/S PULSAR	1	
9	257668900120	ASSY LOCK-GLOVE BOX	1	
10	267968400108	ASSY COMPOSITE FLOOR MAT RHD	1	
11	267969506301	MOULDED ROOF(HEADLINER)NON SLP-M/S SUPREN	1	
14	257669200108	ASSY.PADDING(DASH BOARD)	1	
15	257581100101	ASSY.SUNVISOR RH	1	
15	257581100102	ASSY.SUNVISOR LH	1	
16	257681500119	ASSY. GRAB HANDLE (DASH BOARD)	2	
-	257681506903	GRAB RAIL-LH	1	
-	257681506904	GRAB RAIL-RH	1	
17	257681100152	ASSY REAR VIEW MIRROR OUTER RH	1	
17	257681100153	ASSY REAR VIEW MIRROR OUTER LH	1	
18	257681100106	ASSY TUBULAR FRAME (REAR VIEW MIRROR)	2	
21	257681100146	ASSY PROXIMITY MIRROR	1	
23	274781100119	ASSY WIDE ANGLE MIRROR	1	
33	257681103301	BRACKET(LOWER) TOP MTG (REAR WIEW MIRROR)	2	
34	257681103302	BRACKET(LOWER) BOTTOM MTG (REAR VIEW MIRROR)	2	
-	257681106332	REFLECTIVE TAPE-CENTRE(WHITE)	1	
-	257681106333	REFLECTIVE TAPE-SIDE(WHITE)	2	
-	257681106334	REFLECTIVE TAPE SIDE DOOR(YELLOW)	2	
-	257681106335	REFLECTIVE TAPE SIDE(YELLOW)	2	

2679013972R.01	DOOR AND FITMENTS	GROUP 72

CHASSIS TYPE: ALL

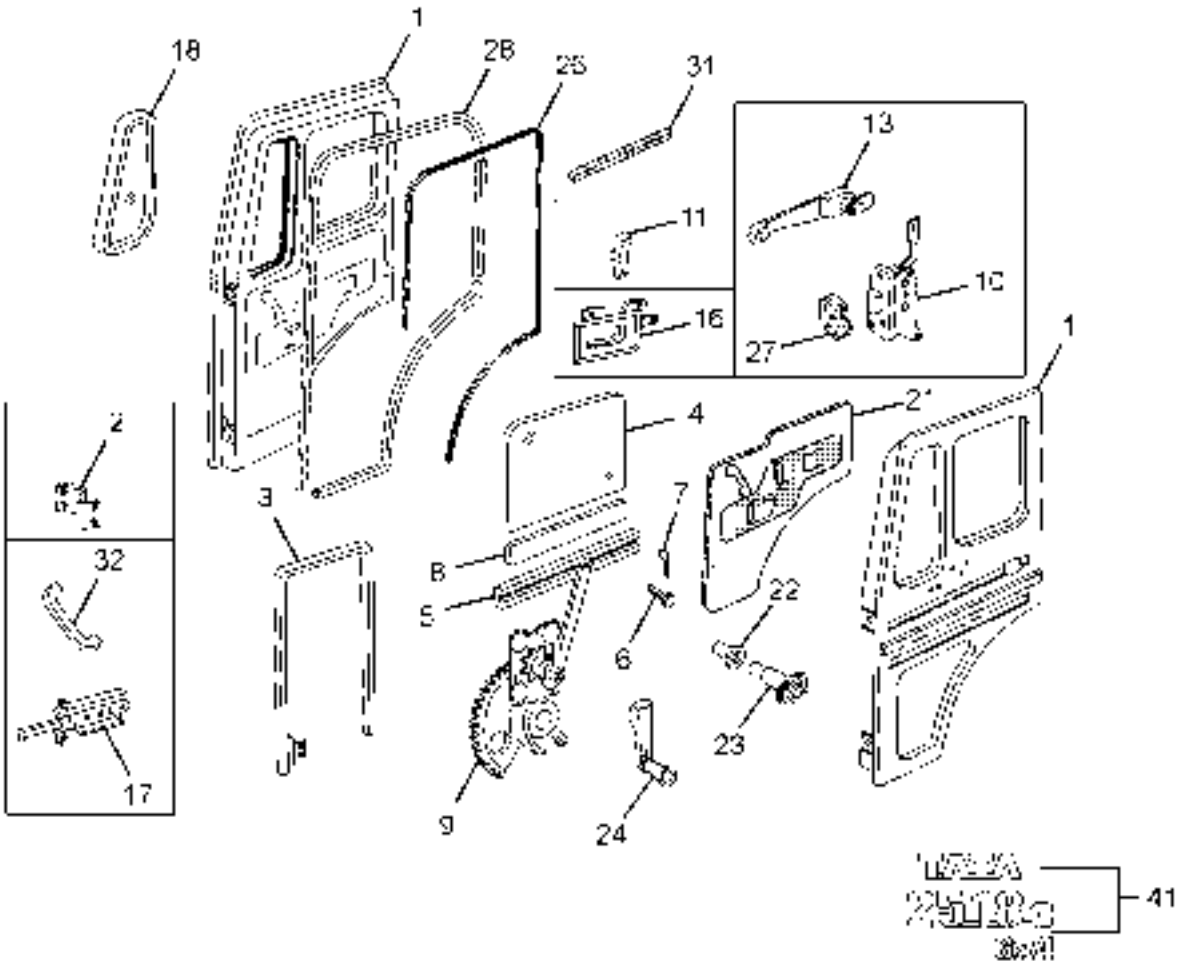

2679013972R.01	DOOR AND FITMENTS	GROUP 72

CHASSIS TYPE: ALL

FIG. NO.	PART NUMBER	DESCRIPTION	QTY	REMARKS
1	257672200165	ASSY DOOR SHELL LH	1	
1	257672200159	ASSY DOOR SHELL RH	1	
-	257662100149	ASSY DOOR POST L.H. RHD	1	
-	257662100148	ASSY DOOR POST RH RHD	1	
2	257672300152	ASSY.HINGE COMPLETE	4	
3	257672500148	ASSY.FRAME COMPLETE (REG. WINDOW)	2	
4	257672502303	GLASS PANE [REG WINDOW]	2	
5	257672500143	ASSY.DOOR GLASS HOLDER	2	
6	257672506716	PIN (GLASS HOLDER)	4	
7	13150606149	SPLIT PIN 2X14	4	
8	257672502513	VELVET CHANNEL	2	
9	265172500130	ASSY.WINDOW REGULATOR LH	1	
9	265172500131	ASSY.WINDOW REGULATOR RH	1	
10	265172300111	ASSY. DOOR LOCK COMPLETE LH	1	
10	265172300112	ASSY. DOOR LOCK COMPLETE RH	1	
11	257672315602	KNOB	2	
13	257672300112	DOOR HANDLE OUTER RH	1	
13	265172300157	ASY.DOOR HANDLE OUTER W/O LOCK LHRHD.MIN	1	
16	265872300127	ASSY.INNER HANDLE L.H (RT)	2	
17	268072300106	ASSY DOOR CHECK	1	
18	268072502303	GLASS PANE(QUARTER WINDOW)-CLEAR	1	
-	268072306306	RUBBER MOULD FIXED QUARTER GLASS	1	
21	257572700102	ASSY DOOR PADDING LH	1	
21	257572700101	ASSY DOOR PADDING RH	1	
22	265472706310	DOOR PAD CLIP (TOP CAB)	24	
23	265472706307	DOOR PAD CLIP (BOTTOM)	24	
24	268072310101	ASSY. HANDLE(FOR WINDOW REGULATOR)	2	
26	257672306318	DOOR SEALING OUTER	2	
27	257672318204	STRIKER LH	1	
27	257672318205	STRIKER RH	1	
-	257672316711	MOUNTING PIN (STRIKER)	2	
28	257672306320	DOOR SEALING INNER	2	
31	257672506321	GRIP BEADING (DOOR)	4	
32	265172506316	GRAB HANDLE (DOOR)	2	
41	267981800105	ASSY."TATA 2518 C 6X4"MASCOT	1	
-	267981900109	ASSY ENGINE SHIELDING LH RHD	1	

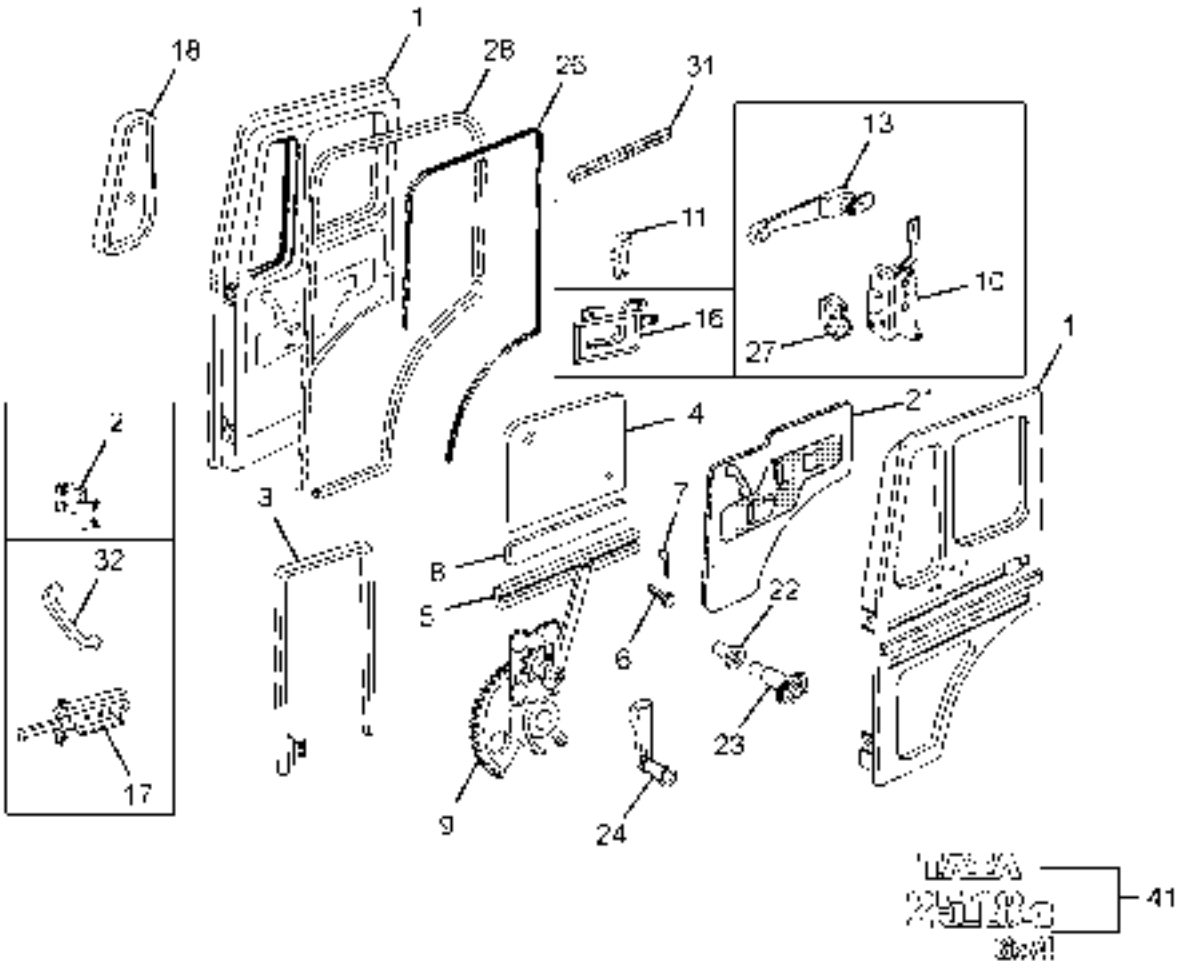
1
18
28
25
31
13
11
10
16
27
2
4
3
7
8
5
6
22
23
9
24
32
17
41

2679013972R.01	DOOR AND FITMENTS	GROUP 72

CHASSIS TYPE: ALL

FIG. NO.	PART NUMBER	DESCRIPTION	QTY	REMARKS
-	267981900110	ASSY ENGINE SHIELDING RH RHD	1	
-	265472706317	MAGAZINE POCKET LH (DARKER GRAY)	1	
-	265472706318	MAGAZINE POCKET RH (DARKER GRAY)	1	
-	284172300109	KIT FOR LOCKS	1	
		CONSISTS OF :		
-	-	OUTER HANDLE LOCK LH	1	
-	-	OUTER HANDLE LOCK RH	1	
-	-	GLOVE BOX LOCK	1	
-	-	KEY	2	
-	267972300102	ASSY.DOVE TAIL-BOTTOM(DOOR SIDE)	2	
-	267881106305	REFLEX REFLECTOR (FRONT DOOR)	1	

2157354182R.01	WIPER ARRANGEMENT	GROUP 82

CHASSIS TYPE: ALL

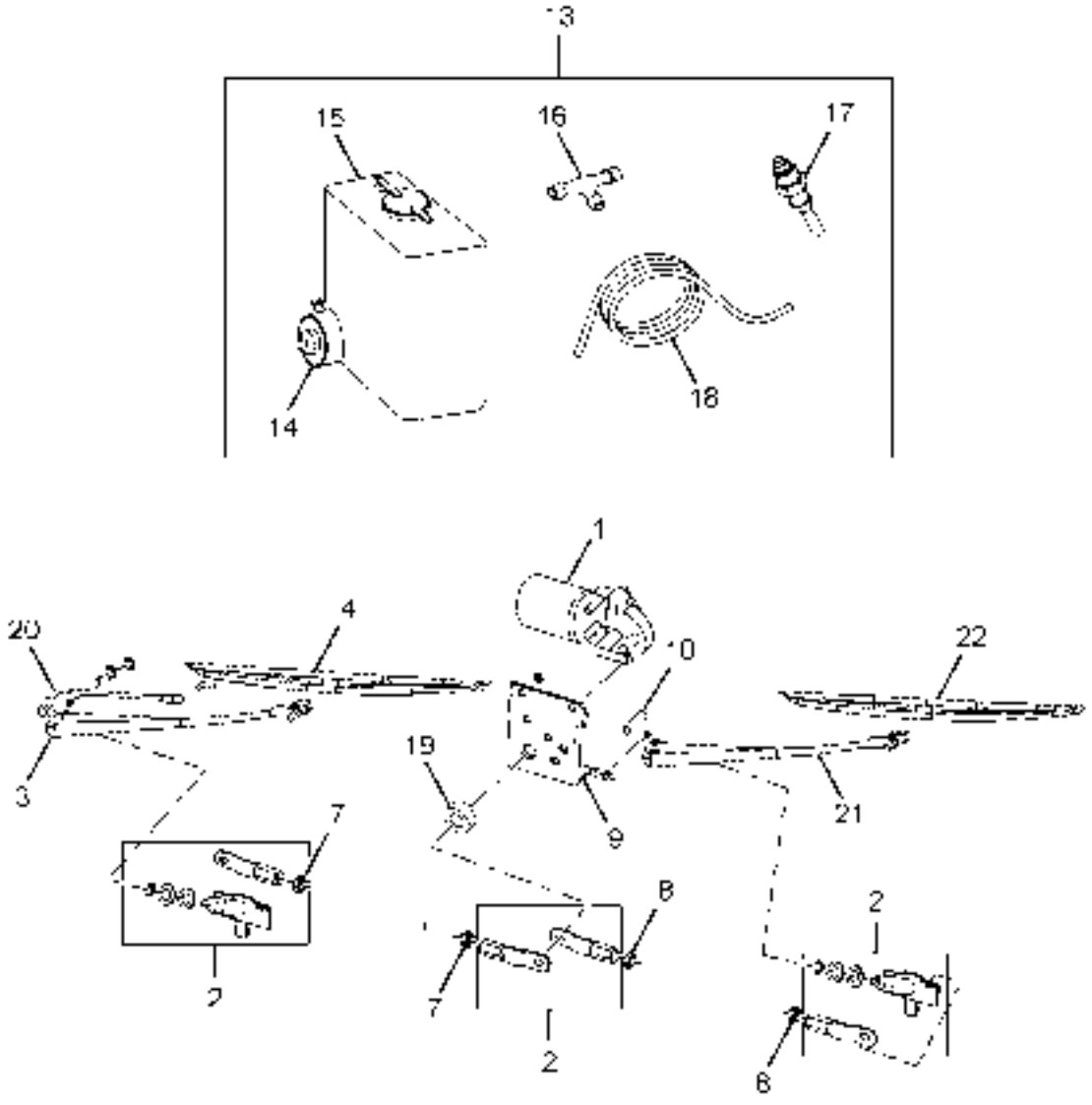

2157354182R.01	WIPER ARRANGEMENT	GROUP 82

CHASSIS TYPE: ALL

FIG. NO.	PART NUMBER	DESCRIPTION	QTY	REMARKS
1	270782400105	WIPER MOTR.24V;17W-RHD(2SPEED)MSSL	1	
-	276782400102	ASSY.WIPER ARM,BLADE & SUPPORT ARM (DRIVER)	1	
3	257682400125	ASSY.WIPER ARM (DRIVER)	1	
4	257682400128	ASSY. WIPER BLADE (DRIVER)	1	
20	257682400126	ASSY.SUPPORT ARM	1	
-	276782400103	ASSY.WIPER ARM & BLADE (CODRIVER)	1	
21	257682400127	ASSY.WIPER ARM (CODRIVER)	1	
22	257682400129	ASSY. WIPER BLADE (CODRIVER) 600 MM LONG	1	
7	12080801007	HEX THIN NUT M10	2	
8	12080899023	HEX THIN NUT M10 LH	2	
9	276782408201	BRACKET (MOTOR MOUNTING)	1	
19	0009971881J	RUBBER GROMMET	4	
10	0429920020J	SLEEVE	4	
-	265182409952	BALL PIN	1	
-	265182407501	RUBBER WASHER	1	
2	268082400105	ACCESSORY KIT WIPER MOTOR M/S LUCAS-TVS CONSISTS OF :	1	
-	-	FINAL SPINDLE UNIT 1	1	
-	-	FINAL SPINDLE UNIT 2	1	
-	-	LINK END ASSY RH	2	
-	-	LINK END ASSY LH	2	
-	-	LINK END NUT LH	2	
-	-	LINK END NUT RH	2	
13	265182400106	KIT ELECTRICAL WINDSHIELD WASHER CONSISTS OF :	1	
14	-	PUMP ASSY	1	
15	-	TANK	1	
16	-	T-JOINT	1	
17	-	NOZZLE UNIT	2	
18	-	TUBE 2000 MM LONG	1	
-	-	OMEGA CLIP	8	
-	257686900103	ASSY BRACKET LH-RHD (W/S WASHER)	1	

TATA MOTORS

2167473883R.01	AC UNIT DETAILS	GROUP 83

CHASSIS TYPE: ALL

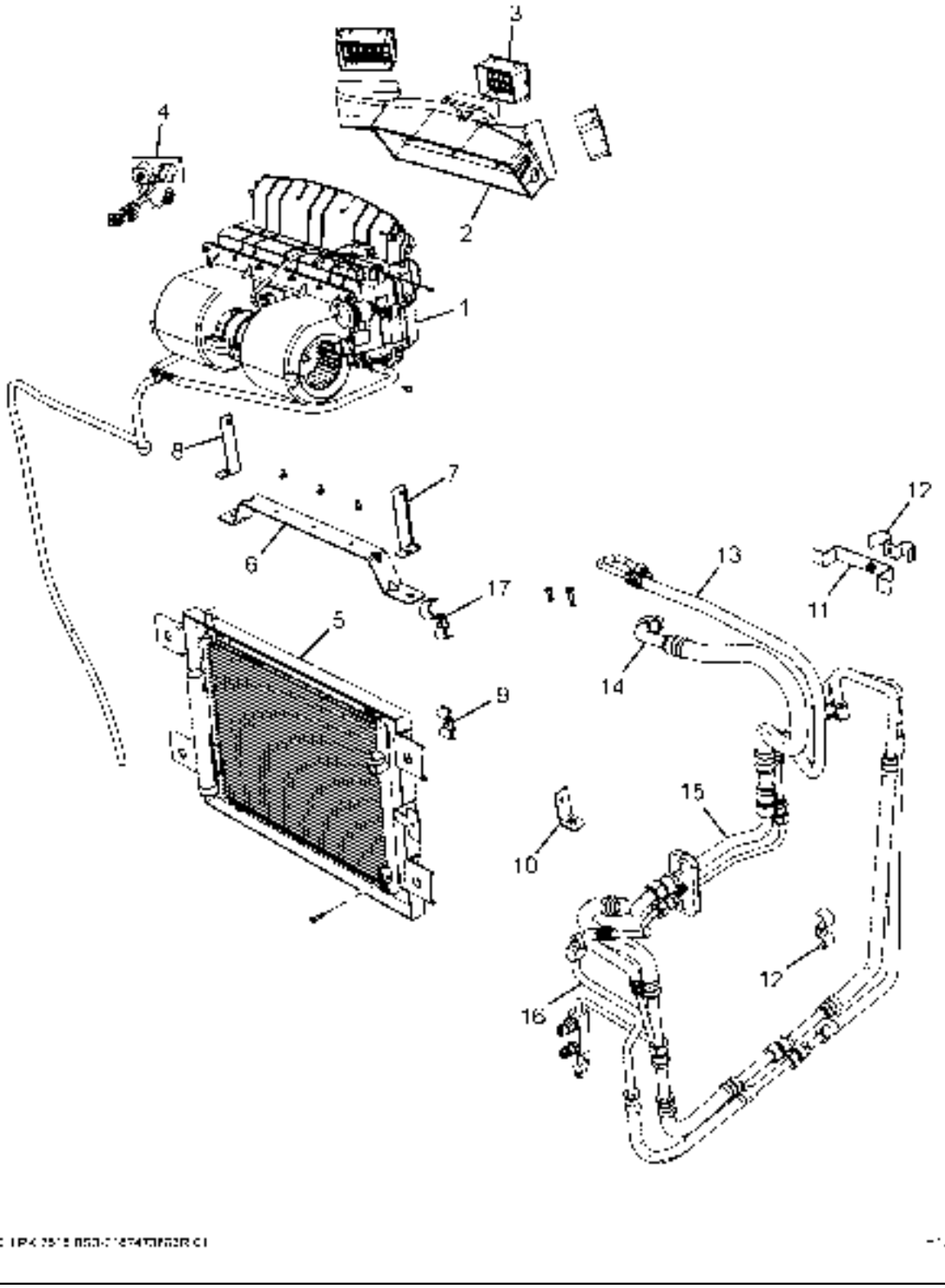

2167473883R.01	AC UNIT DETAILS	GROUP 83

CHASSIS TYPE: ALL

FIG. NO.	PART NUMBER	DESCRIPTION	QTY	REMARKS
1	216783400101	ASSY.FRONT AC UNIT (M/S. SANDEN VIKAS)	1	
14	216783406902	ASSY SUCTION PIPE	1	
13	216783406903	ASSY LIQUID PIPE	1	
15	216783406904	ASSY_LIQUD_SUCTION PIPE_DAROMA	1	
4	216783400104	ASSY. CONTROL PANEL	1	
7	216783403301	AC UNIT MTG BKT LH	1	
8	216783403302	AC UNIT MTG BKT RH	1	
6	216783403303	AC UNIT MTG BKT CENTER	1	
2	216783106301	FACE DUCT	1	
-	216783403315	MTG BKT FIREWALL	1	
9	281683604213	CLAMP FOR AC HOSES	1	
17	281683604207	CLAMP FOR AC HOSES	1	
11	216783403307	AC HOSE MTG BKT	1	
12	216783403304	AC HOSE CLAMP	2	
10	216783403305	MTG BKT FOR AC PIPE	1	
3	284568900126	ASSY VENT NOZZLE LH B002	3	
5	216783400102	ASSY. CONDENSER WITH FRAME	1	
16	216783406901	ASSY. DISCHARGE PIPE	1	

TATA MOTORS

2207013887R.01	TIPPING BODY	GROUP 87

CHASSIS TYPE: ALL

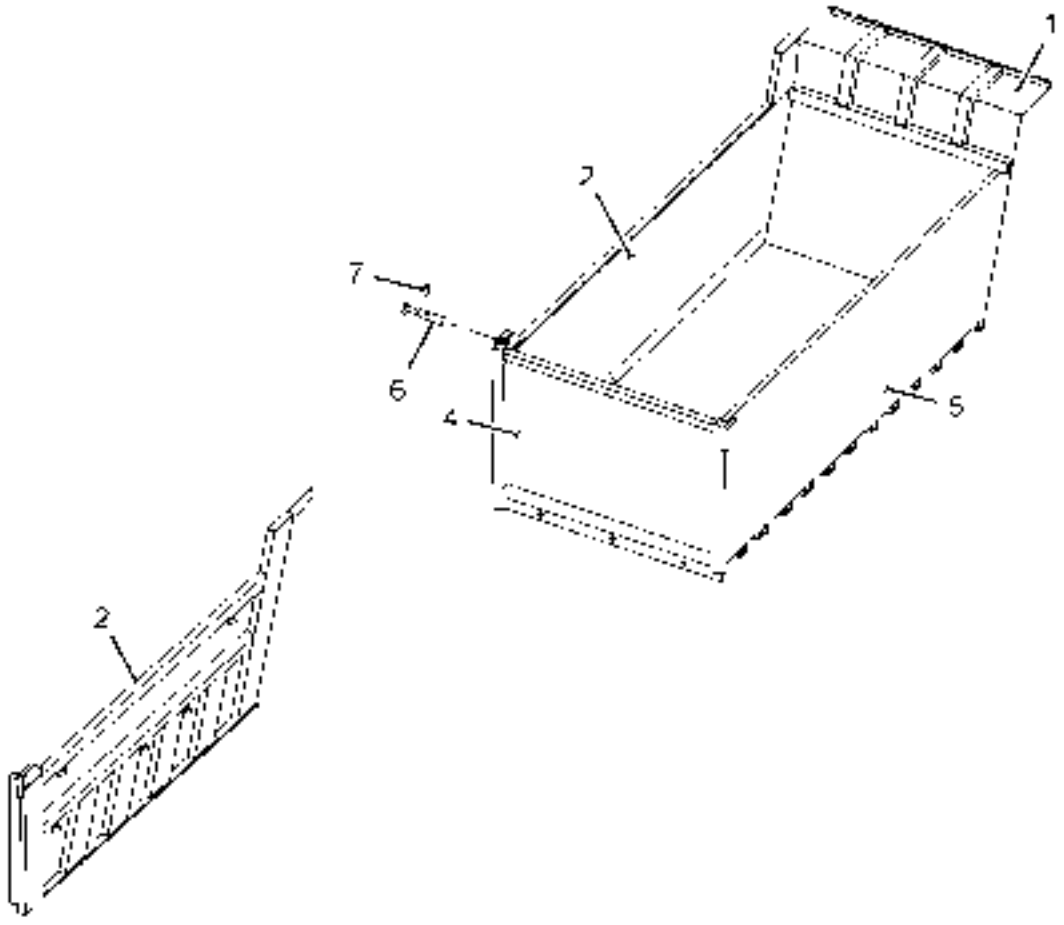

2207013887R.01	TIPPING BODY	GROUP 87

CHASSIS TYPE: ALL

FIG. NO.	PART NUMBER	DESCRIPTION	QTY	REMARKS
	220787000101	ASSY KIT COMPL-16CUM BOX BODY & HYD TIPPING	1	
	220787300101	ASSY.TIPPING BODY COMPLETE-16 CUM BOX	1	
1	221787208201	HEAD BOARD	1	FOR 16CUM STD
1	221787208202	HEAD BOARD	1	FOR 14CUM ROCKBODY
1	221787208203	HEADBOARD	1	FOR 1OCUM STD IRONORE
2	221787308205	SIDE BOARD RHS	1	FOR 16CUM STD
2	221787308207	SIDE BOARD RHS	1	FOR 14CUM ROCKBODY
2	221787308209	SIDE BOARD RHS	1	FOR 1OCUM STD IRONORE
2	221787308204	SIDE BOARD LHS	1	FOR 16CUM STD
2	221787308206	SIDE BOARD LHS	1	FOR 14CUM ROCKBODY
2	221787308208	SIDE BOARD LHS	1	FOR 1OCUM STD IRONORE
4	221787400105	TAILDOOR ASSEMBLY	1	FOR 16CUM STD
4	221787400106	TAILDOOR ASSEMBLY	1	FOR 1OCUM STD IRONORE
5	221787100129	FLOOR ASSEMBLY	1	FOR 16CUM STD
5	221787100131	FLOOR ASSEMBLY	1	FOR 14CUM ROCKBODY
5	221787100133	FLOOR ASSEMBLY	1	FOR 1OCUM STD IRONORE
6	217187306702	TAILDOOR HINGE PIN	1	FOR 16CUM STD & 10CUM STD IRONORE
7	275144129902	GREASE NIPPLE	1	FOR 16CUM STD & 10CUM STD IRONORE

TATA MOTORS

2207013887R.02	SUB FRAME	GROUP 87

CHASSIS TYPE: ALL

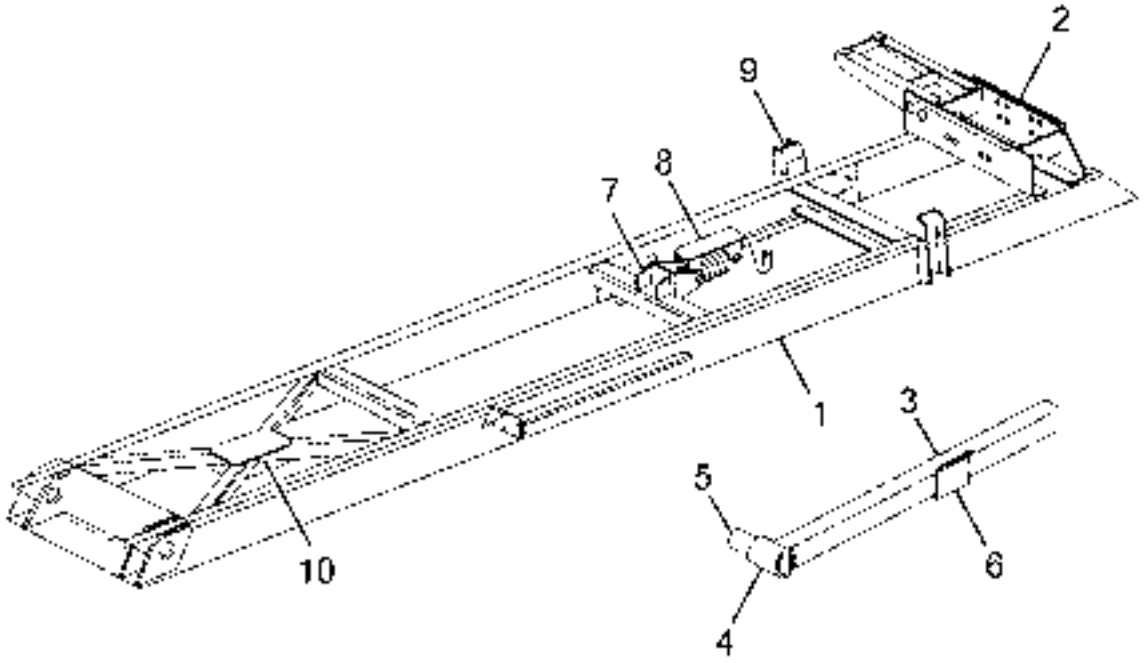

LPK 3513C 2207013887R 02 E09

2207013887R.02	SUB FRAME	GROUP 87

CHASSIS TYPE: ALL

FIG. NO.	PART NUMBER	DESCRIPTION	QTY	REMARKS
1	221787100130	SUBFRAME ASSEMBLY	1	FOR 16CUM STD
1	221787100132	SUBFRAME ASSEMBLY	1	FOR 14CUM ROCKBODY
1	221787100134	SUBFRAME ASSEMBLY	1	FOR 1OCUM STD IRONORE
2	221787108215	CRADLE+50L TANK MTG BKT	1	FOR 16CUM STD & 10CUM STD IRONORE
2	221787108216	CRADLE+65L TANK MTG BKT	1	FOR 14CUM ROCKBODY
3	221787300121	BODY PROP ASSEMBLY	2	
4	275144129902	GREASE NIPPLE	2	
5	221787303410	BODY PROP BUSH	2	
6	221787308201	BODY PROP REST	2	
7	217187100103	HYFIX LOCKING BAR MOUNTING KIT	1	
8	217187100104	HYFIX ASSEMBLY	1	
9	221787308202	BODY GUIDE	2	FOR 16CUM STD & 10CUM STD IRONORE
9	221787308203	BODY GUIDE	2	FOR 14CUM ROCKBODY
10	221787100135	CROSS BRACING ASSEMBLY	1	FOR 16CUM STD & 10CUM STD IRONORE
10	217187109901	CROSS BRACING ASSEMBLY	1	FOR 14CUM ROCKBODY

TATA MOTORS

2207013887R.03	SUB FRAME MOUNTING	GROUP 87

CHASSIS TYPE: ALL

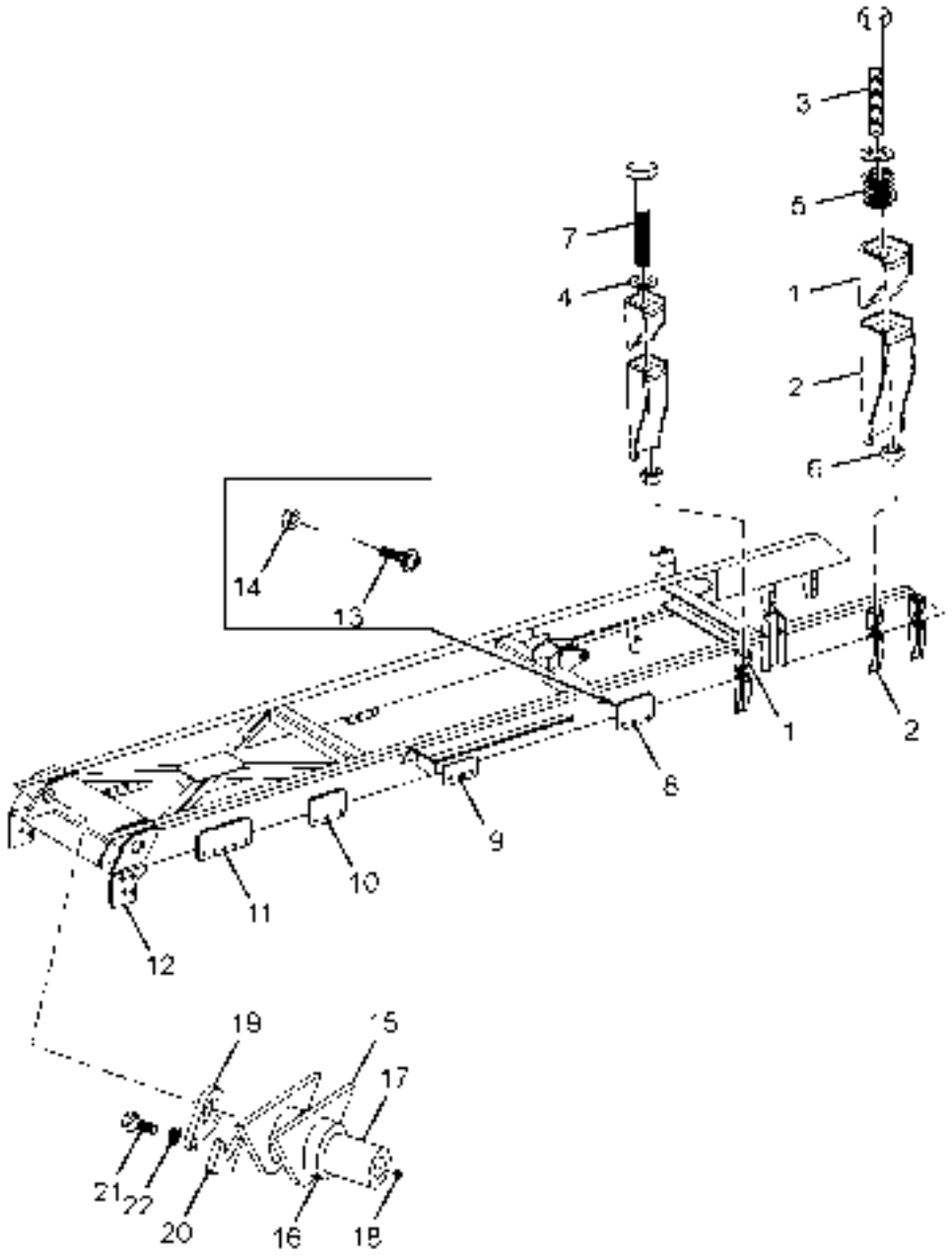

E09

2207013887R.03	SUB FRAME MOUNTING	GROUP 87

CHASSIS TYPE: ALL

FIG. NO.	PART NUMBER	DESCRIPTION	QTY	REMARKS
1	221787109911	UPPER PIVOT	6	
2	221787109910	LOWER PIVOT ATTACHMENT2	6	
3	217187103203	PIVOT BOLT M16 X 150	4	
4	400244109201	WASHER M 16	4	
5	400287108701	PIVOT SPRING	4	
6	221787106503	NYLOC NUT M16 COARSE THREAD	6	
7	217187103202	PIVOT BOLT M 16 X 110	2	
8	221787108220	ATTACHMENT PLATE 1	2	
9	221787108219	ATTACHMENT PLATE 2	2	
10	221787108223	ATTACHMENT PLATE 3	2	
11	221787108221	ATTACHMENT PLATE 4	2	
12	221787108222	ATTACHMENT PLATE 5	2	
13	221787103205	SERR. FLANGE BOLT M 12X40	20	
13	221787103206	SERR. FLANGE BOLT M 12X50	32	
14	217144106501	NYLOC NUT M 12X1.25P	52	
15	400287103401	REAR HINGE BUSH ASSEMBLY	2	
16	217187103402	REAR HINGE INNER BUSH	2	
17	221787106709	REAR HINGE PIN	2	
18	275144129902	GREASE NIPPLE	2	
19	221787107131	LOCKING PLATE	2	
20	221787107132	STOPPER PLATE	2	
21	11063812406	HEX. HEAD BOLT M 12X35	2	
22	221787109206	M12 SPRING WASHER SQ. SECTION	2	

TATA MOTORS

2207013887R.04	TAILDOOR LOCKING MECHANISM(16 CUM STD)	GROUP 87

CHASSIS TYPE: ALL

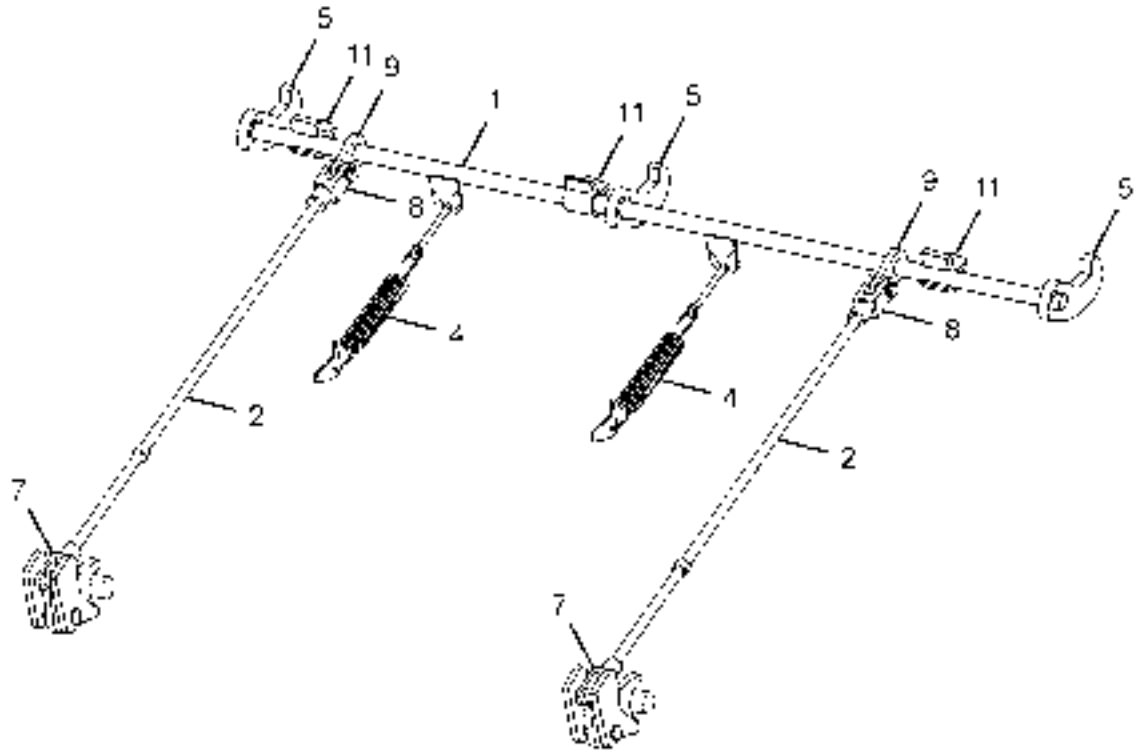

2207013887R.04	TAILDOOR LOCKING MECHANISM(16 CUM STD)	GROUP 87

CHASSIS TYPE: ALL

FIG. NO.	PART NUMBER	DESCRIPTION	QTY	REMARKS
1	1F214002	CROSS ROD	1	
2	217187306001	TIE ROD ASSY	2	
4	217187308701	TENSION SPRING	2	
5	1F214003	LOCKING HOOK	3	
7	217187306003	FORK RH THREAD	2	
8	400287306001	FORK LH THREAD	2	
9	217187307901	CAM	2	
11	221787100123	TAILDOOR LOCKING BUSH ASSEMBLY	3	

TATA MOTORS

2207013887R.05	TAILDOOR LOCKING MECHANISM(10 CUM STD)	GROUP 87

CHASSIS TYPE: ALL

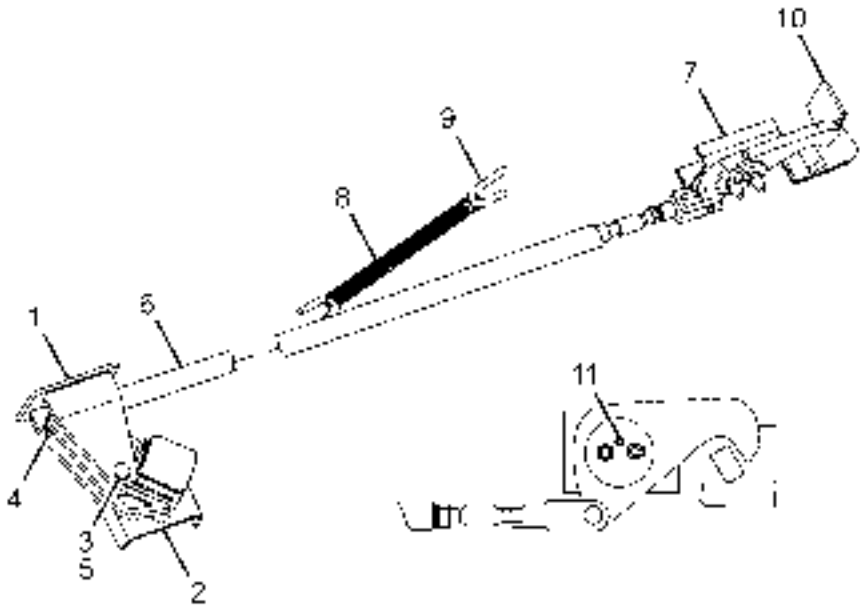

2207013887R.05	TAILDOOR LOCKING MECHANISM(10 CUM STD)	GROUP 87

CHASSIS TYPE: ALL

FIG. NO.	PART NUMBER	DESCRIPTION	QTY	REMARKS
1	221787100124	CAM MTG ASSEMBLY	2	
2	221787100125	CAM HAMMER ASSEMBLY	2	
3	221787106710	PIN FOR CAM MTG	2	
4	400287306701	FORK PIN	2	
5	221787103405	BUSH	2	
6	221787100126	PULLING PIPE ASSEMBLY 1900L	2	
7	221787100127	HOOK ASSEMBLY	2	
8	221787108703	TENSION SPRING SIDE LOCKING	2	
9	221787108218	SPRING HOOK	4	
10	221787100128	HOOK BLOCK ASSEMBLY	2	
11	275144129902	GREASE NIPPLE	2	

TATA MOTORS

2207013887R.06	TIPPING CYLINDER MOUNTING	GROUP 87

CHASSIS TYPE: ALL

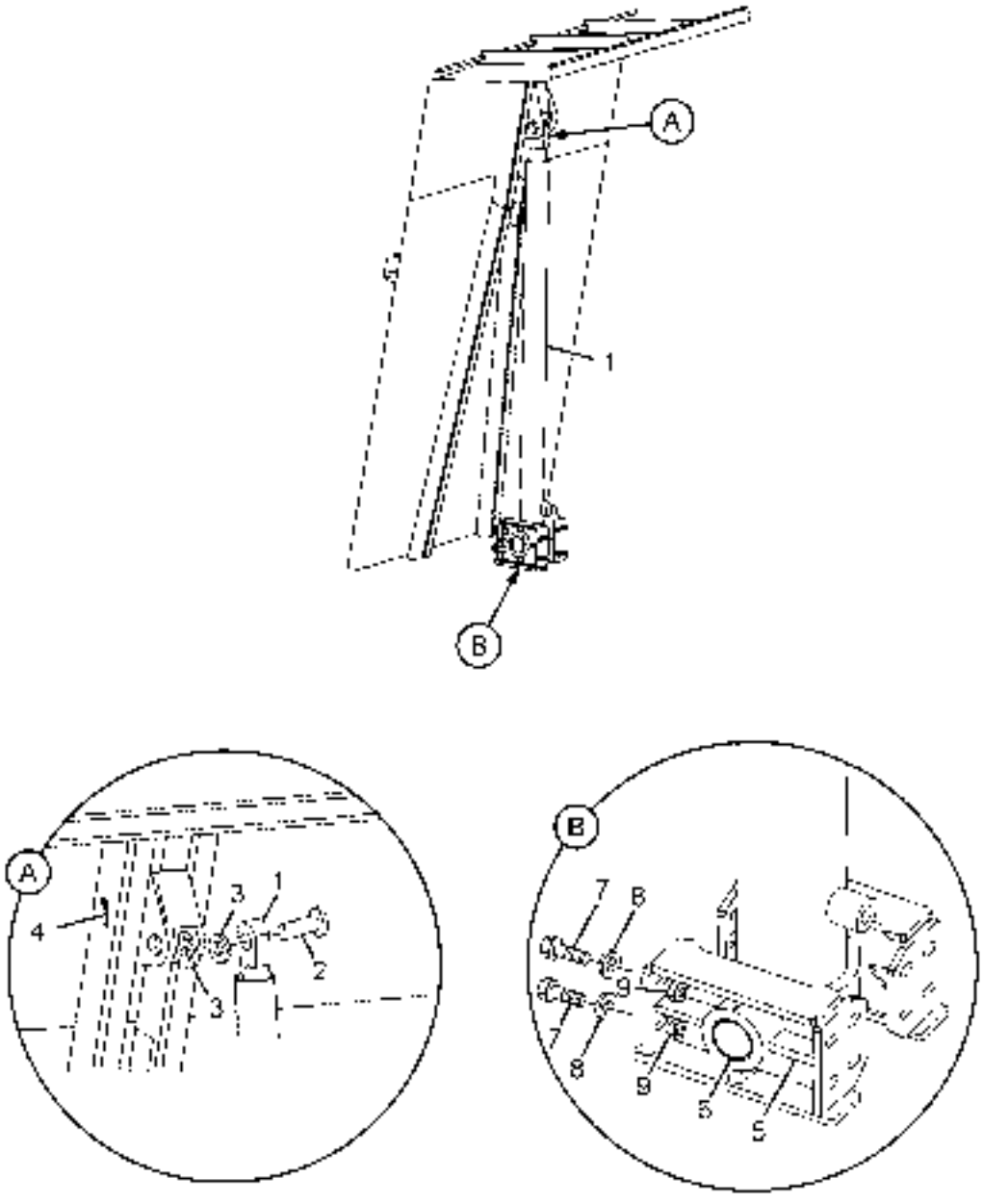

2207013887R.06	TIPPING CYLINDER MOUNTING	GROUP 87

CHASSIS TYPE: ALL

FIG. NO.	PART NUMBER	DESCRIPTION	QTY	REMARKS
1	221744405009	TIPING CYLINDER FE129-3-03700	1	FOR 16CUM STD & 10CUM STD IRON ORE
1	71534221	TIPING CYLINDER FE129-3-03880	1	FOR 14CUM ROCKBODY
2	217144106701	CYLINDER MOUNTING PIN	1	
3	221744408601	CYLINDER MOUNTING SPACER	2	
4	217144106702	COTTER PIN CYL. MTG.	1	
5	221787108217	CHASSIS BKT/CYL MTG BRACKET	2	
6	221787103406	IGUS BUSH 6065 40	2	
7	221787103207	HEX. HEAD BOLT M16X1.5X60	16	
8	400244106501	NUT M16 X 1.5P	16	
9	221787109207	M16 HARDENED WASHER 32/17*5	32	

TATA MOTORS

2207013887R.07	HYDRAULIC TANK MOUNTING	GROUP 87

CHASSIS TYPE: ALL

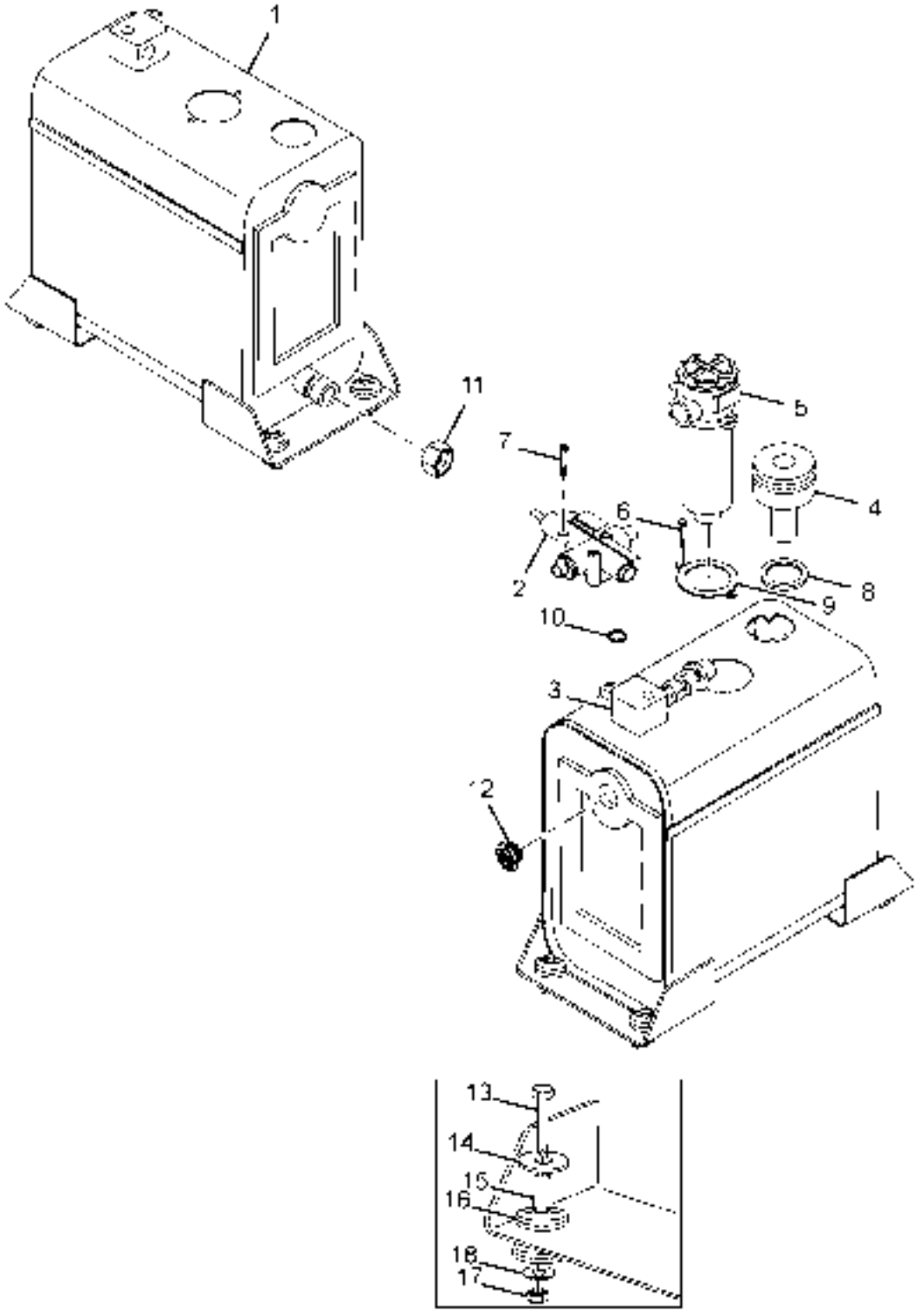

2207013887R.07	HYDRAULIC TANK MOUNTING	GROUP 87

CHASSIS TYPE: ALL

FIG. NO.	PART NUMBER	DESCRIPTION	QTY	REMARKS
1	221744400104	OIL TANK ASSY 50L	1	FOR 16CUM STD & 10CUM STD IRON ORE
1	400244109905	OIL TANK ASSY 65L	1	FOR 14CUM ROCKBODY
2	275144100113	TIPPING VALVE 3DHMP 170B	1	
3	221787109003	VALVE MTG BLOCK	1	
4	221744400101	AIR BREATHER ASSEMBLY	1	
5	275144100116	RETURN LINE FILTER ASSY	1	
6	400244108002	HEX. HEAD SCREW M 8X30	2	
7	217144103201	ALLEN KEY BOLT M 8X 80	1	
8	275144167701	SEAL	1	
9	221787107712	RETURN LINE FILTER GASKET	1	
10	217144109001	VALVE BLOCK MTG. 'O' RING	1	
11	221787100122	SUCTION OUTLET ASSEMBLY	1	
12	221744406804	OIL LEVEL INDICATOR 1*1/4INCH BSP	1	
13	11063812635	HEX. HEAD BOLT M12X75	1	
14	221787109204	WASHER - OILTANK MTG	1	
15	221787103404	BUSH - OILTANK MTG	1	
16	221787107709	RUBBER PAD - OILTANK MTG	2	
17	221787106502	NYLOC NUT M12 COARSE	1	
18	221787109203	WASHER M12	1	

TATA MOTORS

2207013887R.08	HYFIX ASSEMBLY	GROUP 87

CHASSIS TYPE: ALL

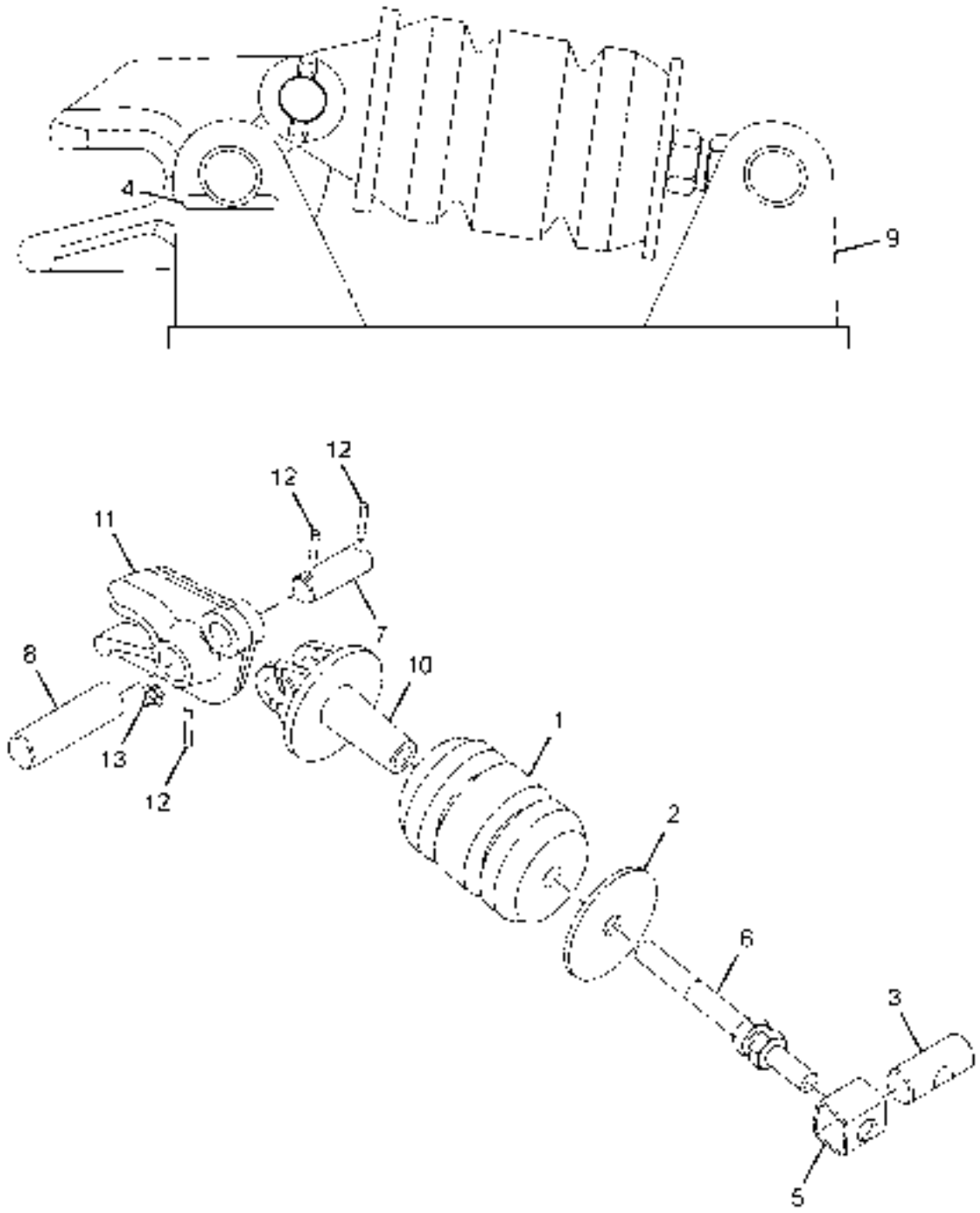

2207013887R.08	HYFIX ASSEMBLY	GROUP 87

CHASSIS TYPE: ALL

FIG. NO.	PART NUMBER	DESCRIPTION	QTY	REMARKS
	217187100104	HYFIX ASSY	1	
1	217187106301	HYFIX RUBBER	1	
	217187100103	HYFIX LOCKING BAR MOUNTING KIT	1	
		CONSISTS OF :		
		HYFIX LOCKING BAR PLATE	1	
		HYFIX LOCKING BAR	1	
2		COMPRESSION PLATE	1	
3	400244406704	HYFIX PIN - 3 (31.5X80L)	1	
4		LOCKING PLATE	1	NOT SERVICED
5		HYFIX PIVOTING	1	NOT SERVICED
6	400244408801	HYFIX STUD SET(M20 NUT+PIN)	1	
7	400244406702	HYFIX PIN - 2 (25X85L)	1	
8	400244406701	HYFIX PIN - 1 (31.5X110L)	1	
9		FRAME	1	NOT SERVICED
10	400287105602	HYFIX MOUNTING EYE (MACHINED)	1	
11	400287105601	HYFIX HOOK	1	
12	400244406703	HYFIX SECURE(SPRING DOWEL)PIN	3	
13	275144129902	GREASE NIPPLE - STRAIGHT	1	

2207013887R.09	AIR CONTROL VALVE & PNEUMATIC CONNECTIONS	GROUP 87

CHASSIS TYPE: ALL

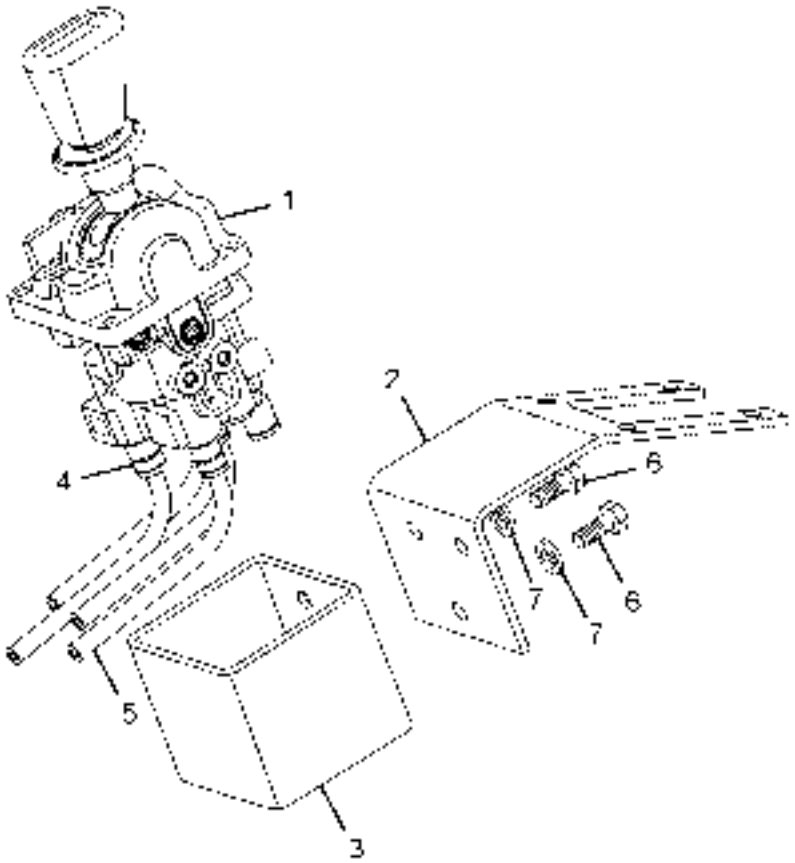

2207013887R.09	AIR CONTROL VALVE & PNEUMATIC CONNECTIONS	GROUP 87

CHASSIS TYPE: ALL

FIG. NO.	PART NUMBER	DESCRIPTION	QTY	REMARKS
1	221787109004	AIR CONTROL VALVE	1	
2	221744103306	AIR VALVE MOUNTING BRACKET	1	
3	221744103307	AIR CONTROL VALVE COVER	4	
4	275144134601	STRAIGHT COUPLING 1/8INCH	5	
5	275144136901	AIR TUBE 6X4 [25 M]	1	
6	11323998347	HEX. SCREW M6X14	3	
7	221787109205	PLAIN WASHER M6	3	
	217144105802	FLEXIBLE TUBE PVC 20MM- PER MTR	1	
	275144134201	NYLON TIE 4X 254	10	

TATA MOTORS

2207013887R.10	HOSE CONNECTIONS	GROUP 87

CHASSIS TYPE: ALL

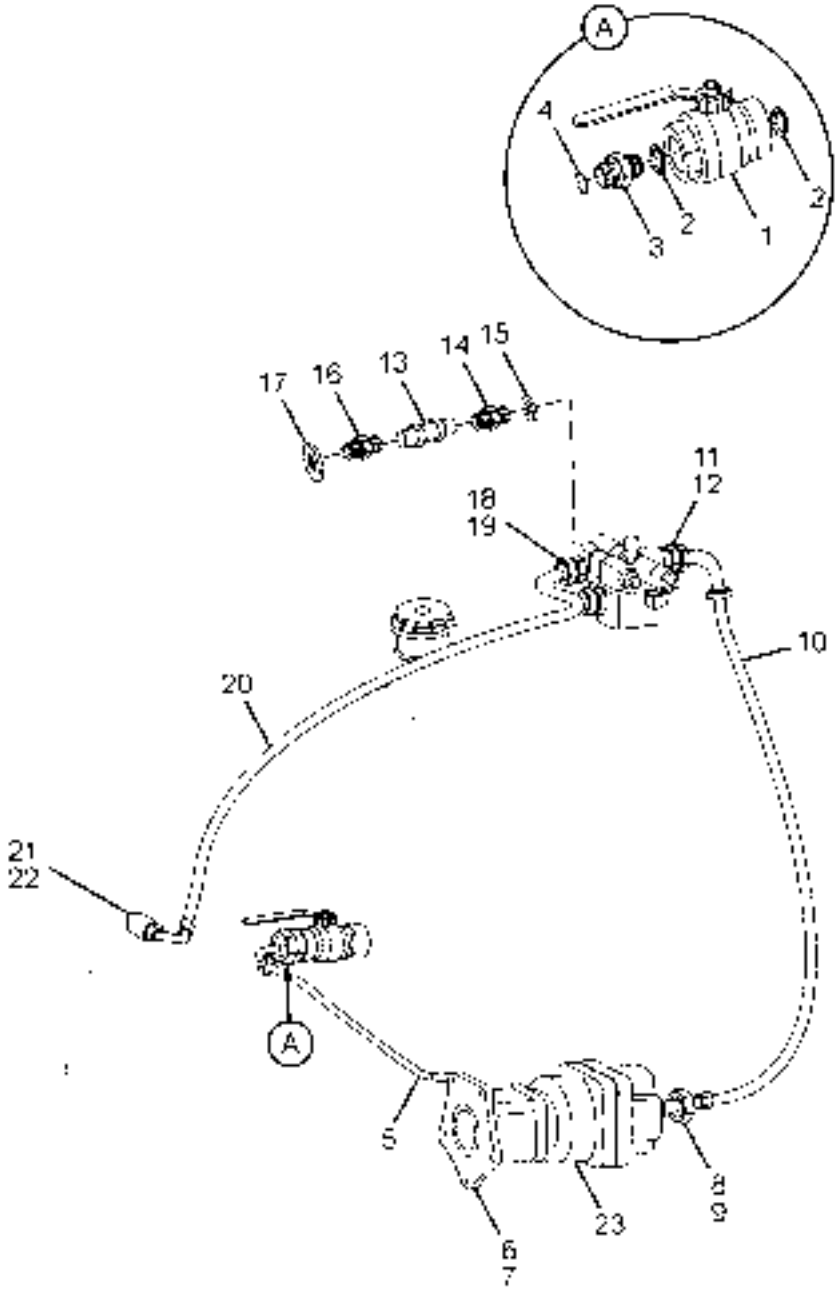

LPK 3518C 2207013887R 10 E09

2207013887R.10	HOSE CONNECTIONS	GROUP 87

CHASSIS TYPE: ALL

FIG. NO.	PART NUMBER	DESCRIPTION	QTY	REMARKS
1	275144179001	BALL VALVE	1	
2	275144179201	COPPER WASHER 38X 44X 2.5	2	
3	217144106801	ADAPTOR 1 1/2INCH BSP MALE X1-7/6INCH UN	1	
4	217144107706	O RING 23.52 X 1.78	1	
5	221787105804	HOSE (TANK TO PUMP)	1	FOR 16CUM STD & 14CUM ROCKBODY
5	221787105803	HOSE (TANK TO PUMP)	1	FOR 10CUM STD IRONORE
6	400244109911	ADAPTOR 1 1/4INCH BSP(M)X1 7/16INCH	1	
7	275144177701	DOWTY SEAL 1 1/4INCH	1	
8	400244109912	ADAPTOR 1INCH BSP(M)X1 3/16INCH	1	
9	275144177704	DOWTY SEAL 1INCH	1	
10	221787105802	HOSE 3/4"I.D X 1800 SAE100R2	1	
11	217144106804	ADAPTOR 3/4 INCH BSP M X 1-3/16 INCH UNF ORS	1	
12	275144177702	DOWTY SEAL 3/4 INCH	1	
13	400144990129	SEAMLESS TUBE ASSY	1	FOR 16CUM STD & 14CUM ROCKBODY
13	400144990128	SEAMLESS TUBE ASSY	1	FOR 10CUM STD IRONORE
14	217144106804	ADAPTOR 3/4INCH BSP MX 1-3/16INCH UNF OR	1	
15	275144177702	DOWTY SEAL 3/4INCH	1	
16	217144106803	ADAPTOR 3/4INCH BSP MALE X M 30 X 2	1	
17	275144177701	DOWTY SEAL 1 1/4INCH	1	
18	217144106804	ADAPTOR 3/4INCH BSP MX 1-3/16INCH UNF OR	1	
19	275144177702	DOWTY SEAL 3/4INCH	1	
20	275144175803	HOSE (VALVE TO CYLINDER)	1	
21	400244109912	ADAPTOR 1INCH BSP(M)X1 3/16INCH	1	
22	275144177704	DOWTY SEAL 1INCH	1	
23	H80880000038	PUMP 82 LTR	1	

TATA MOTORS

2207013887R.11	RETURN LINE FILTER ASSEMBLY	GROUP 87

CHASSIS TYPE: ALL

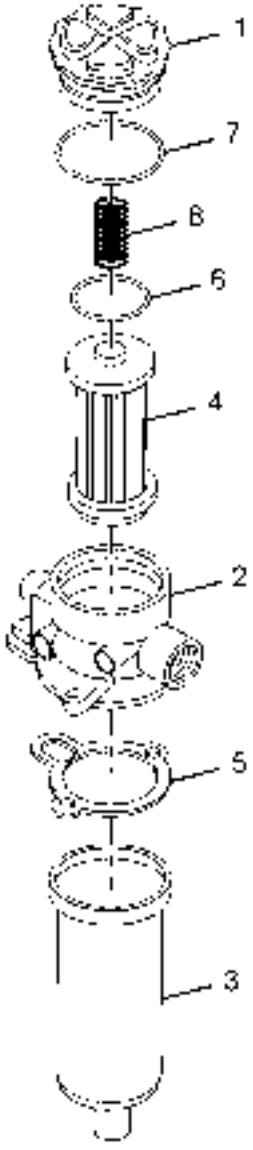

2207013887R.11	RETURN LINE FILTER ASSEMBLY	GROUP 87

CHASSIS TYPE: ALL

FIG. NO.	PART NUMBER	DESCRIPTION	QTY	REMARKS
	275144100116	ASSY FILTER-RETURN LINE ON HYD TANK LPK	1	
1	275144157401	FILTER CAP	1	
2	400244109907	RETN. LINE FILTER BODY M/C	1	
3	14896928	FLANGE PIPE	1	
4	275144159901	ELEMENT FILTER	1	
8	275144158701	SPRING	1	
	275144150102	SEAL KIT-FILTER RETURN LINE	1	
		CONSISTS OF :		
5		FLANGE SEAL	1	
6		O' RING	1	
7		O' RING	1	

TATA MOTORS

2207013887R.12	BREATHER ASSY	GROUP 87

CHASSIS TYPE: ALL

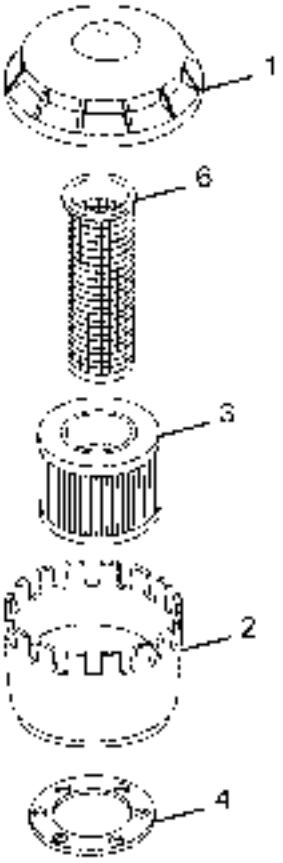

2207013887R.12	BREATHER ASSY	GROUP 87

CHASSIS TYPE: ALL

FIG. NO.	PART NUMBER	DESCRIPTION	QTY	REMARKS
	275144100117	ASSY FILTER-BREATHER	1	
1	275144164701	COVER	1	
2	275144168201	FILTER HOUSE	1	
3	275144169901	ELEMENT FILTER-BREATHER	1	
4	275144167701	SEAL	1	
	275144163201	BOLT - BREATHER	6	
6	275144169201	SLEEVE	1	

TATA MOTORS

2207013887R.13	TIPPING VALVE 3DHMP	GROUP 87

CHASSIS TYPE: ALL

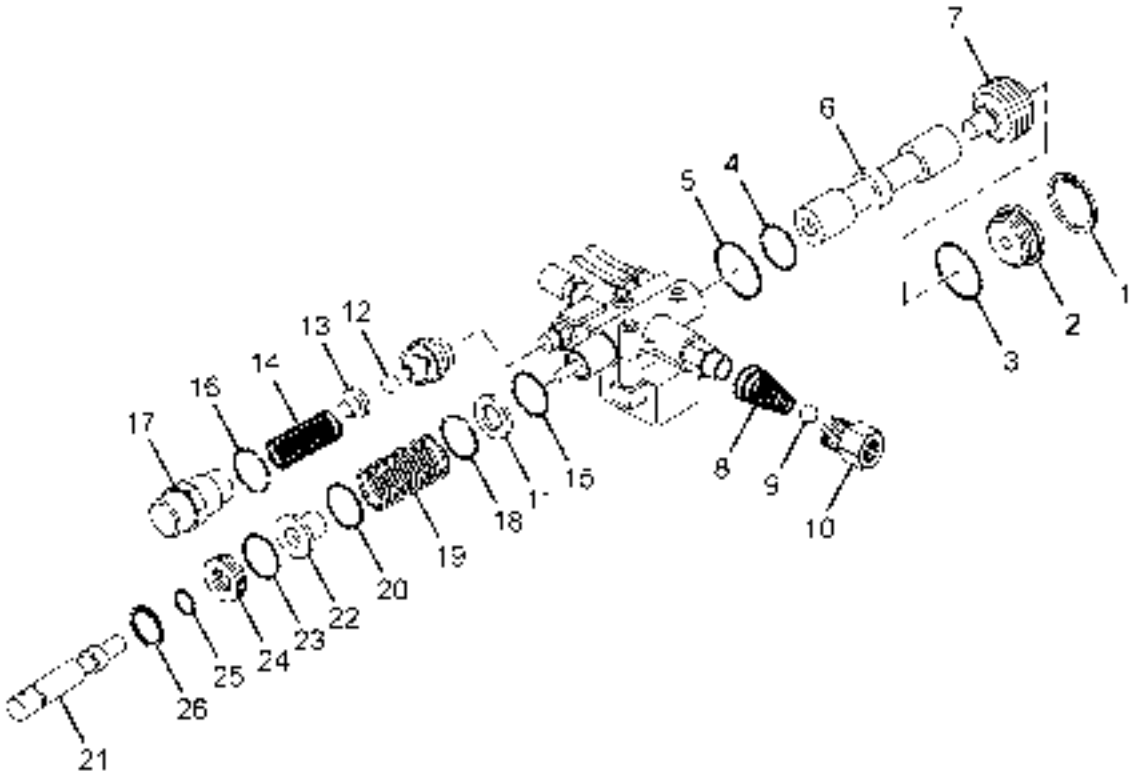

2207013887R.13	TIPPING VALVE 3DHMP	GROUP 87

CHASSIS TYPE: ALL

FIG. NO.	PART NUMBER	DESCRIPTION	QTY	REMARKS
	275144100113	ASSY. TIPPER VALVE	1	
1		CIRCLIP	1	NOT SERVICED
2		COVER	1	NOT SERVICED
3		O RING	1	NOT SERVICED
4		O RING	1	NOT SERVICED
5		O RING	1	NOT SERVICED
6		SPOOL	1	NOT SERVICED
7		VALVE BLOCK	1	NOT SERVICED
8		CHECK VALVE SPRING	1	NOT SERVICED
9		STEEL BALL	1	NOT SERVICED
10		CONNECTOR	1	NOT SERVICED
11		DOWTY WASHER	1	NOT SERVICED
12		STEEL BALL	1	NOT SERVICED
13		BALL SLIDEWAY	1	NOT SERVICED
14		RELIEF VALVE SPRING	1	NOT SERVICED
15		O RING	1	NOT SERVICED
16		DOWTY WASHER	1	NOT SERVICED
17		RELIEF VALVE BODY	1	NOT SERVICED
18		O RING	1	NOT SERVICED
19		TIE ROD SPRING	1	NOT SERVICED
20		O RING	1	NOT SERVICED
21		TIE ROD	1	NOT SERVICED
22		TIE ROD CUP	1	NOT SERVICED
23		O RING	1	NOT SERVICED
24		DISC	1	NOT SERVICED
25		O RING	1	NOT SERVICED
26		CIRCLIP	1	NOT SERVICED
	221787108702	3-DHMP VALVE RELIEF SPRING	1	
	275144110102	SEAL KIT TIPPING VALVE	1	
		CONSISTS OF :		
3		O RING	1	
4		O RING	1	
5		O RING	1	
15		O RING	1	
18		O RING	1	
20		O RING	1	
23		O RING	1	
25		O RING	1	

TATA MOTORS

2207013887R.14	TIPPING CYLINDER FE129-3-03700-K1529	GROUP 87

CHASSIS TYPE: ALL

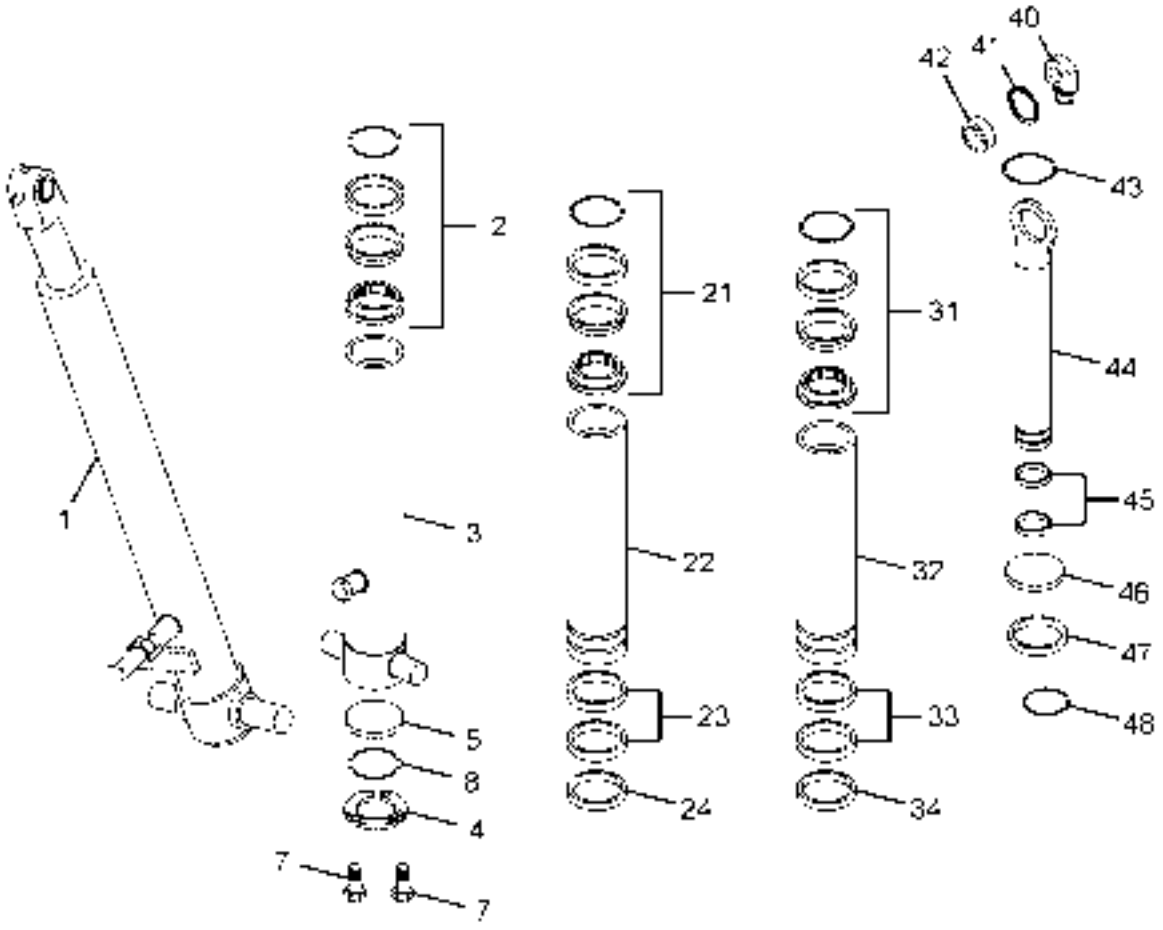

2207013887R.14	TIPPING CYLINDER FE129-3-03700-K1529	GROUP 87

CHASSIS TYPE: ALL

FIG. NO.	PART NUMBER	DESCRIPTION	QTY	REMARKS
1	221744405009	TIPING CYLINDER FE129-3-03700	1	FOR 16CUM STD & 10CUM STD IRONORE
2	221744990112	PACKSET FOR BASE DIA 149	1	
3	221787106902	BASE TUBE 149-1479-4/4SAE-190	1	
4	221787107128	LOCKING PLATE TYPE 149	3	
5	221787107129	BOTTOM PLATE TYPE 149	1	
7	221787103208	BOLT M8 X 20	6	
8	221787107801	SEAL BOTTOM PLATE TYPE 149	1	
21	221744990111	PACKSET FOR STAGE DIA 129	1	
22	221787109909	STAGE 129-1440-HC-A/S	1	
23	221744409903	SLIDER DIA 129	2	
24	221744409905	LIFTRING 129	1	
31	221744990110	PACKSET FOR STAGE DIA 110	1	
32	221787109907	STAGE 110-1440-DS-HC A/S	1	
33	221744409902	SLIDER 110	2	
34	221744409904	LIFTRING 110	1	
40	221787106602	PISTON EYE TYPE 091 M/CED	1	
41	221787104301	CIRCLIP GE 50 DO	1	
42	221787103101	SPHERICAL BEARING	1	
43	221787107707	O' RING PISTON TOP 091	1	
44	221787106603	PISTON S 091-1445-HC A/S	1	
45	221744409901	SLIDER DIA-91	2	
46	221787107130	BOTTOM PLATE PISTON TYPE 091	1	
47	221787107708	O' RING PISTON BOTTOM 091	1	
48	221787209901	SNAP RING FOR PISTON TYPE 091	1	
	221787109914	COMPLETE PACK SET	1	

TATA MOTORS

2207013887R.15	TIPPING CYLINDER FE129-3-03880	GROUP 87

CHASSIS TYPE: ALL

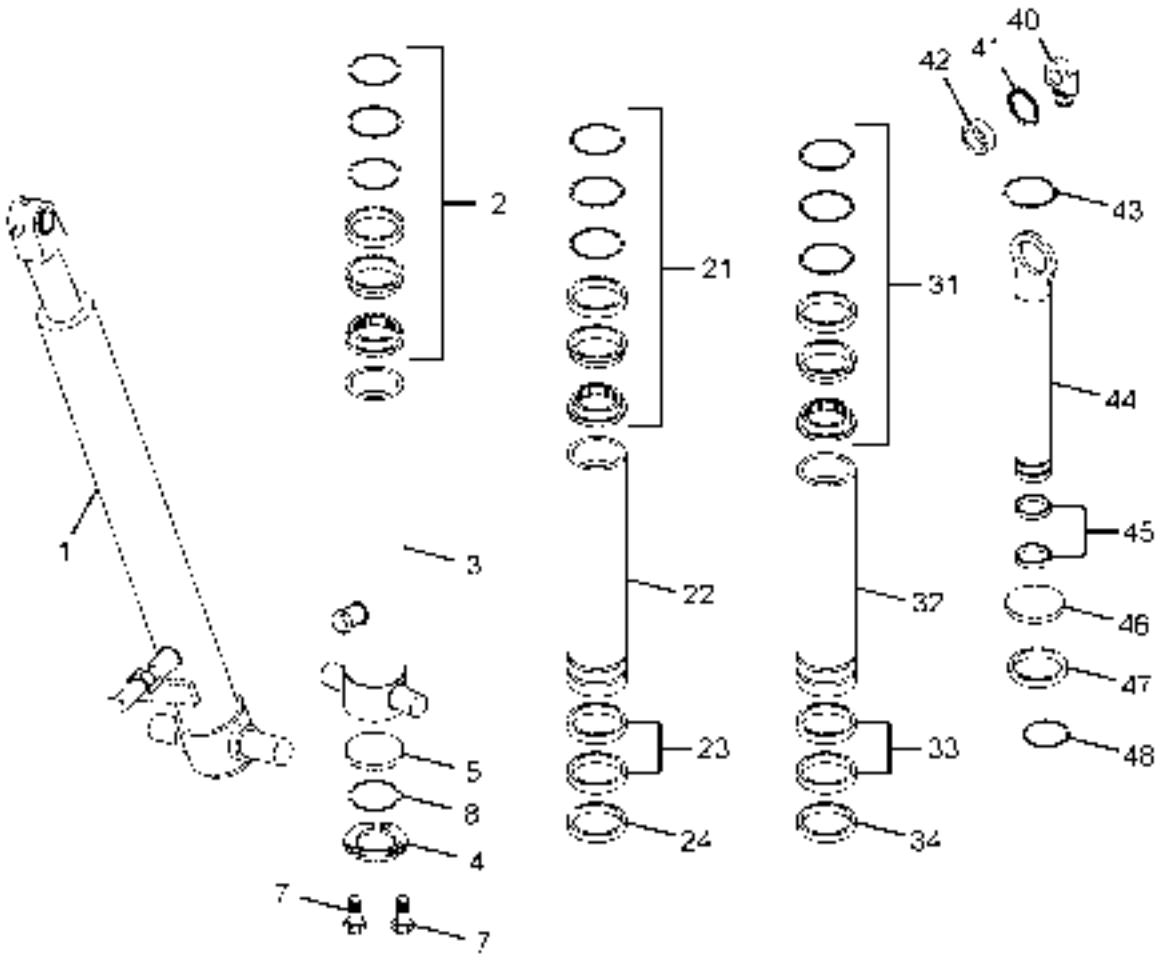

2207013887R.15	TIPPING CYLINDER FE129-3-03880	GROUP 87

CHASSIS TYPE: ALL

FIG. NO.	PART NUMBER	DESCRIPTION	QTY	REMARKS
1	71534221	TIPING CYLINDER FE129-3-03880	1	FOR 14CUM ROCKBODY
2	221744990112	PACKSET FOR BASE DIA 149	1	
3	221787106903	BASE TUBE 149-1559-4/4SAE-190	1	
4	221787107128	LOCKING PLATE TYPE 149	3	
5	221787107129	BOTTOM PLATE TYPE 149	1	
7	221787103208	BOLT M8 X 20	6	
8	221787107801	SEAL BOTTOM PLATE TYPE 149	1	
21	221744990111	PACKSET FOR STAGE DIA 129	1	
22	221787109915	STAGE DIA 129-1520-HC	1	
23	221744409903	SLIDER DIA 129	2	
24	221744409905	LIFTRING 129	1	
31	221744990110	PACKSET FOR STAGE DIA 110	1	
32	221787109908	STAGE 110-1520-DS A/S	1	
33	221744409902	SLIDER 110	2	
34	221744409904	LIFTRING 110	1	
40	221787106602	PISTON EYE TYPE 091 M/CED	1	
41	221787104301	CIRCLIP GE 50 DO	1	
42	221787103101	SPHERICAL BEARING	1	
43	221787107707	O' RING PISTON TOP 091	1	
44	221787106604	PISTON S 091-1525-HC A/S	1	
45	221744409901	SLIDER DIA-91	2	
46	221787107130	BOTTOM PLATE PISTON TYPE 091	1	
47	221787107708	O' RING PISTON BOTTOM 091	1	
48	221787209901	SNAP RING FOR PISTON TYPE 091	1	
	221787109914	COMPLETE PACK SET	1	

TATA MOTORS

2679011788R.01	BUMPER, ENGINE HOOD, FENDER	GROUP 88

CHASSIS TYPE: ALL

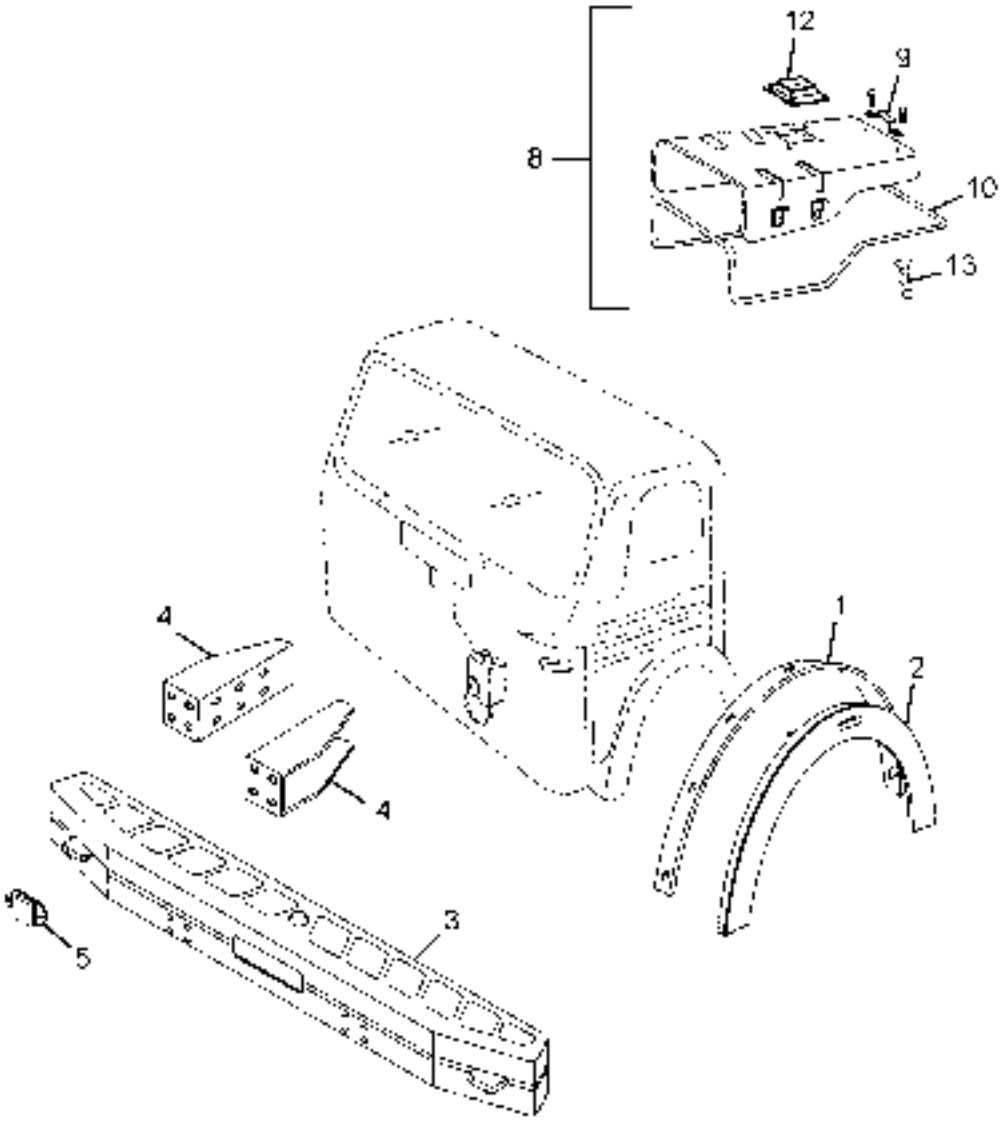

2679011788R.01	BUMPER, ENGINE HOOD, FENDER	GROUP 88

CHASSIS TYPE: ALL

FIG. NO.	PART NUMBER	DESCRIPTION	QTY	REMARKS
1	284188107701	BEADING FENDER LH	1	
1	284188107702	BEADING FENDER RH	1	
2	284188106303	FENDER TRIM LH	1	
2	284188106304	FENDER TRIM RH	1	
3	275188500115C0	ASSY BUMPER WITH REFLECTOR - BLACK	1	
4	257688500135	ASSY BRACKET (BUMPER SUPPORT)	2	
5	257354410137	ASSY REFLEX REFLECTOR - WHITE	2	
8	284188700101	ASSY ENGINE HOOD COMPLETE-RHD	1	
9	257388706303	GRAB HANDLE	2	
10	284188707101	SEALING RUBBER(ENGINE HOOD)	1	
12	275126800152	ASSY BASE PLATE	1	
-	259288708203	CLAMPING PLATE(E/HOOD BASE PLATE)	2	
-	275188708201	CLAMPING PLATE (HEAT INSULATION)	10	
13	259288700103	ASSY.TOGGLE CLAMP(ENGINE HOOD)	4	
-	260188700103	ASSY NUT PLATE(E/HOOD TOGGLE CLAMP)	4	

TATA MOTORS

2679011989R.01C	CAB MOUNTING	GROUP 89

CHASSIS TYPE: ALL

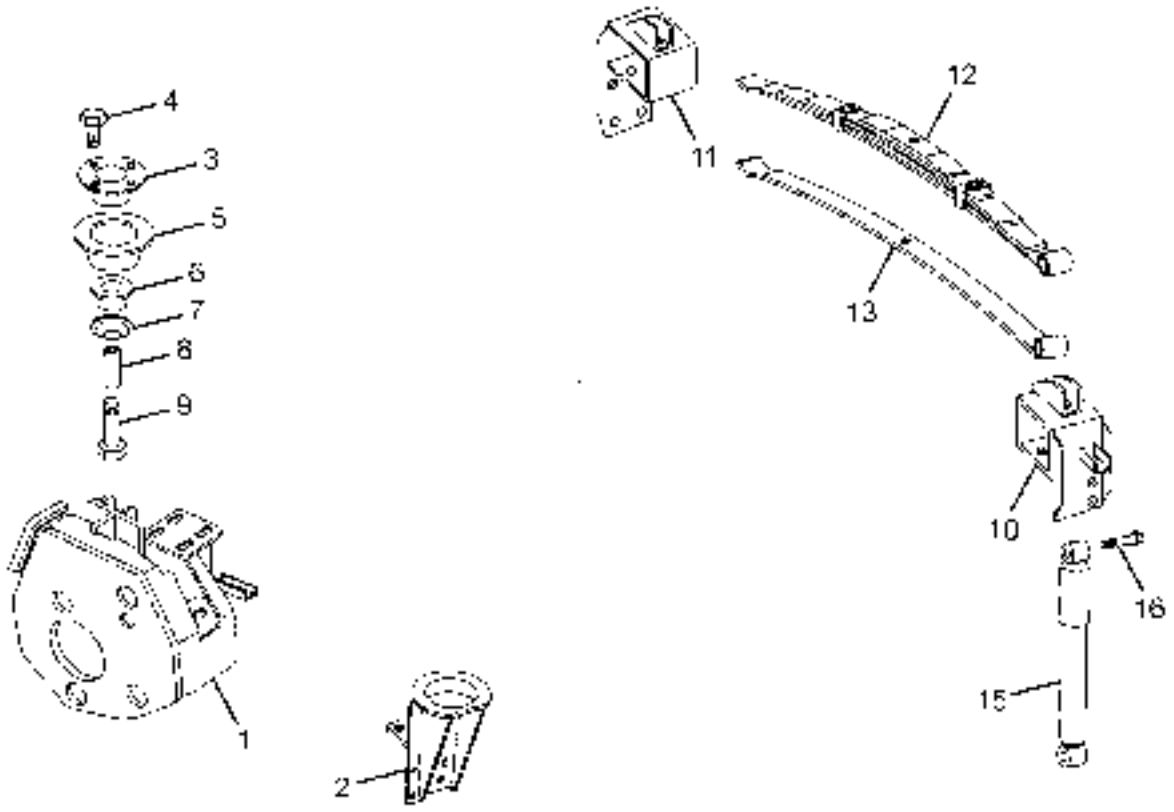

2679011989R.01C	CAB MOUNTING	GROUP 89

CHASSIS TYPE: ALL

FIG. NO.	PART NUMBER	DESCRIPTION	QTY	REMARKS
-		**CAB MOUNTING FRONT**		
1	217146100102	ASSY. STEERING G/B & CONTROL MTG.BKT(RH) SERVICE BULLETINS\CVBU\SPT-B-015-11	1	
2	257689100104	ASSY FRONT MTG BRACKET LH	1	
3	257689103702	MOUNTING CUP FRONT	2	
4	265440306702	SCREW WITH NYLON INSERT	8	
5	257689107705	RUBBER BUFFER (CONE)	2	
6	257689107704	RUBBER BUFFER (LOWER)	2	
7	257689107128	PLATE (FRONT MTG.)	2	
8	257689108602	SPACER TUBE (FRONT MTG.)	2	
9	257699100104	PIN WITH NYLON INSERT	2	
		CAB MOUNTING REAR		
10	267989100120	ASSY BRKT REAR LH (CAB & SHOCK ABSORBER)N	1	
11	267989100121	ASSY BRKT REAR RH (CAB & SHOCK ABSORBER)N	1	
12	267989100113	ASSY SPRING CAB MTG. REAR	1	
13	257689107112	1ST LEAF	1	
15	350132060104	SHOCK ABSORBER-GABRIEL	2	
16	257689106703	PIN (SHOCK ABSORBER)	4	

2679011391R.01A	SEAT AND SEAT BELTS	GROUP 91

CHASSIS TYPE: ALL

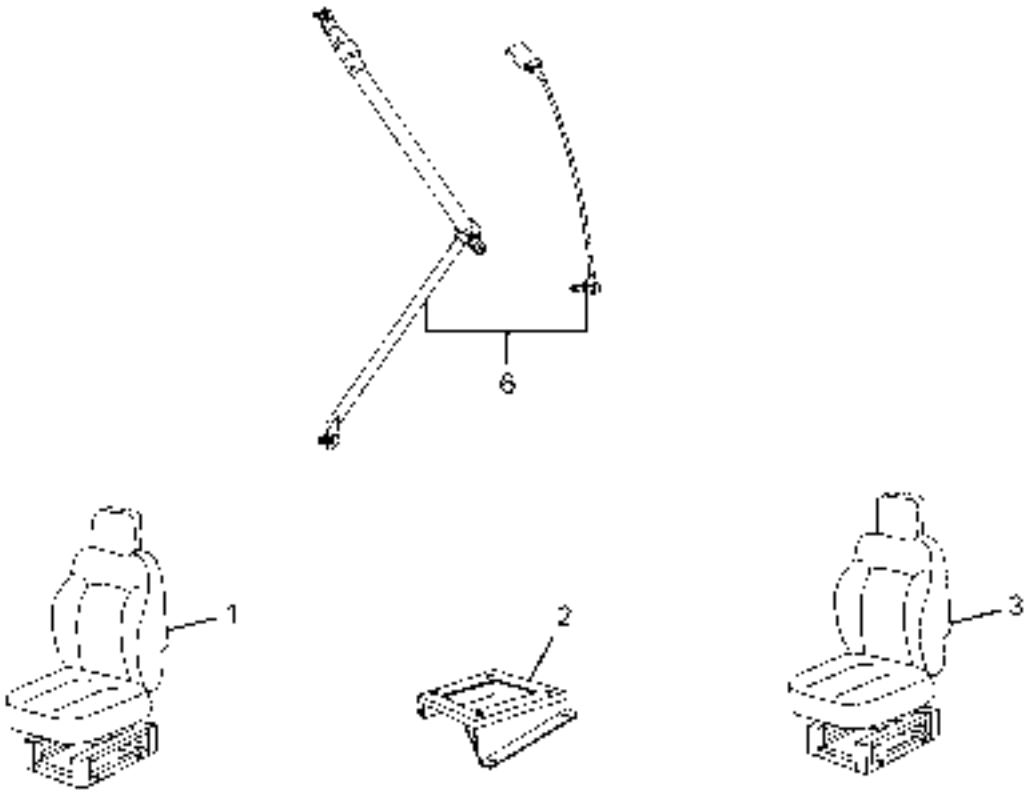

2679011391R.01A	SEAT AND SEAT BELTS	GROUP 91

CHASSIS TYPE: ALL

FIG. NO.	PART NUMBER	DESCRIPTION	QTY	REMARKS
1	265191000131	DRIVER SEAT ASSY.W/HEAD REST-RHD	1	
3	265191000135	ASSY.CO-DRIVER SEAT WITH HEAD REST	1	
2	257691700133	ASSY SEAT STAND DRIVER	1	
2	257691700134	ASSY SEAT STAND CO-DRIVER	1	
6	268091500104	ASSY. SEAT BELT COMPLETE DRIVER	1	