https://truckmanualshub.com/

SPM15-SMS-001_EN

WARNING

Do not use the stacker before reading and understanding this operating instructions.

NOTE!

Keep for future reference.

Operating Instructions

SPM1516, SPM1525, SPM1530, SPM1529A

Welcome to use our electric stacker. Your stacker is made of high quality steel and SPED mast and was designed to give a durable, reliable and easy to use product. For your safety and correct operation, please carefully read this instruction book and warnings on the stacker before using it.
This Operation Instruction of the stacker is edited for you to completely acquire and master the safety operation of the stacker.
Specifications of different types of the stackers are described in this Operation Instruction. During operation and maintenance, please apply the relevant parts for the type of the stacker.

☞ **All of the information reported herein is based on data available at the moment of printing. We reserves the right to modify our own products at any moment without notice and incurring in any sanction. So, it is suggested to always verify possible updates.**

1 Technical Specifications

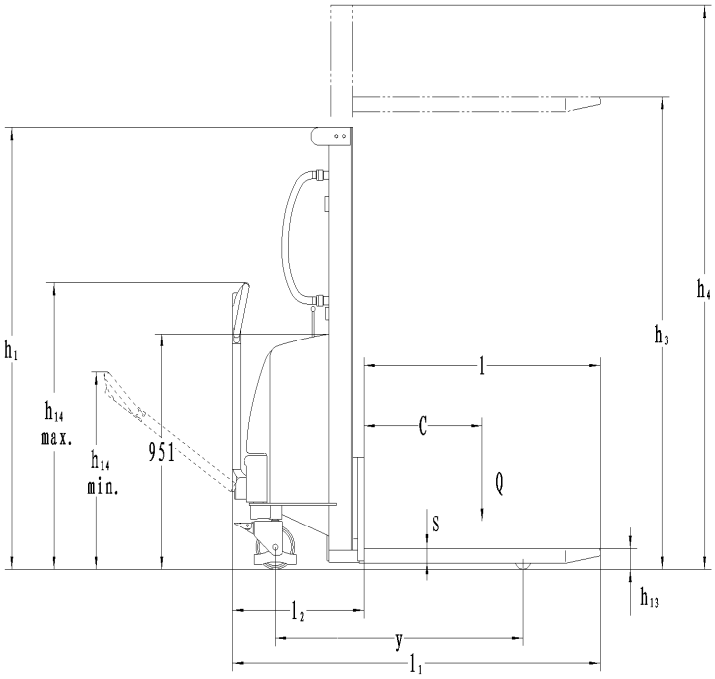

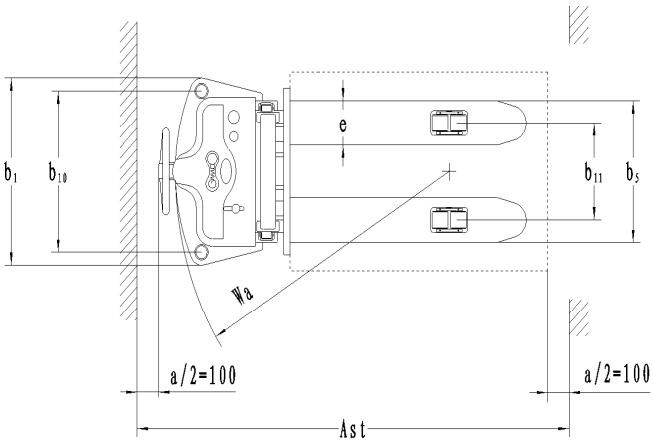

Technical Data

Characteristics	1.2	Model of manufacture	SPM1516	SPM1525	SPM1530	SPM1529A
	1.3	Drive: (electric-battery or mains,diesel,petrol,fuel gas,manual)	manual	manual	manual	manual
	1.4	Type of operation (hand,pedestrian,standing,seated,order picker)	pedestrian	pedestrian	pedestrian	pedestrian
	1.5	Load capacity / rated load Q (kg)	1500	1500	1500	1500
	1.6	Load centre distance c (mm)	600	600	600	600
	1.9	Wheelbase y (mm)	1160	1160	1160	1160
Weight	2.1	Weight (including battery) kg	436	516	543	554
Wheels Chassis	3.1	Types (solid rubber,superelastic,nylon, polyurethane)	Nylon/PU	Nylon/PU	Nylon/PU	Nylon/PU
	3.2	Type size,front mm	180x50	180x50	180x50	180x50
	3.3	Type size, rear mm	74x70	74x70	74x70	74x70
	3.5	Wheels,number front/rear	2/4	2/4	2/4	2/4
	3.6	Track width, front b_{10} (mm)	658	658	658	658
	3.7	Track width, rear b_{11} (mm)	390/490	390/490	390/490	390/490
Basic Dimensions	4.2	Lowered mast height h_1 (mm)	1980	1780	2030	1980
	4.3	Free lift h_2 (mm)				1440
	4.4	Lift height h_3 (mm)	1600	2500	3000	2900
	4.5	Extended mast height h_4 (mm)	1980	3020	3520	3420
	4.9	Height of handle min./max. h_{14} (mm)	790/1156	790/1156	790/1156	790/1156
	4.15	Fork height lowered h_{13} (mm)	85	85	85	85
	4.19	Overall length L_1 (mm)	1720/1570	1720/1580	1720/1580	1720/1580
	4.20	Length to face of forks L_2 (mm)	610/670	610/670	610/670	610/670
	4.21	Overall width b_1 (mm)	762	762	762	762
	4.22	Fork dimensions s/e/L (mm)	60/180/1100 60/150/900	60/180/1100 60/150/900	60/180/1100 60/150/900	60/180/1100 60/150/900
	4.25	Width over forks b_5 (mm)	570 330~640	570 330~640	570 330~640	570 330~640
	4.33	Aisle width for pallets 1000×1200 crossways Ast (mm)	2145	2145	2145	2145
	4.34	Aisle width for pallets 800×1200 lengthways Ast (mm)	2175	2175	2175	2175
	4.35	Turning radius Wa (mm)	1280	1280	1280	1280
Performance	5.2	Lift speed ,laden/unladen mm/s	65/100	65/100	65/100	72/112
	5.3	Lowering speed ,laden/unladen mm/s	85/70	85/70	85/70	96/80
	5.11	Parking brake	manual	manual	manual	manual
E-Motor	6.2	Lift motor rating at S_3 15% kw	1.5	1.5	1.5	1.5
	6.4	Battery voltage ,nominal capacity K_5 V/Ah	12/150	12/150	12/150	12/150
	6.5	Battery weight kg	45	45	45	45

Residual Capacity at different lifting height

Up to h3 mm	ACTUAL CAPACITY (Q) kg	
1500	1500	
2500	1500	
3000	800	
Load centre distance (C) mm	600	

2 SAFETY GUIDANCE

2.1 Operator should read all warning signs and instructions here and on the stacker before using it.
2.2 Do not operate a stacker unless you are familiar with it and have been trained or authorized to do so.
2.3 Do not operate a stacker unless you have checked its condition. Give special attention to the chain, the wheels, the handle, the guide frame, the pilot wheel, the mast, battery, etc.
2.4 Do not use on a slopping ground or on a barbaric or explosive danger environment.
2.5 Do not take up any people on the forks.
2.6 When forks lifting, forbid anyone to stand under the forks or pass through the forks.
2.7 The operator had better take on gloves for labor protecting.
2.8 Do not move the stacker when the goods are lifted to the height more than 300mm.
2.9 When the goods have been transported or lifted, all people should be away from the forks for 600mm.
2.10 The weight of goods should be distributed on the two forks, do not use only one fork. The center of gravity of goods should be in the center of two forks.
2.11 Do not load over maximum capacity.
2.12 Before using or charging it, check cell liquid, if not enough, full it with distilled water.
2.13 Charging should be in dry and ventilated location, and far away from the fire.
2.14 Keeping the forks in the lowest position if not using.
2.15 At other special condition or place, the operator should be carefully to operate the stacker.

3 MAINTENANCE

3.1 Hydraulic oil

Please check the oil level every six months. The oil can be hydraulic oil: **ISO VG32**, its viscosity should be 32cSt at 40°C, total volume is about 4.0lt. use temperature -20°C~50 ^{o}C

Replace the hydranlic oil (every 12 months).

3.2 Daily check and maintenance

It is necessary to check the stacker daily. Special attention should be paid to the wheels, the axles, as thread, rags, etc., it may block the wheels, the fork and the mast, the chain, the battery should be checked, too. The forks should be unloaded and lowered in the lowest position when the job is over.

3.3 Lubrication

Use motor oil or grease to lubricate all movable parts.

3.4 Maintenance of battery: Keep all the screw caps on each cell battery dry and clean. Each connecting terminal and cable terminal should be tightened and painted with clean grease. The exposed connecting terminal and connecting rod of battery should be covered with anti-slip insulated cover.

3.5 Recharge the battery fully and carry out usual battery maintenance.

Maintenance charge the battery every third month and check the fluid level.

4 HOW TO CHARGE STORAGE BATTERY

4.1 Charge storage battery when its voltage is less than 10 Volt.

4.2 Please check the battery liquid before charging, if it is not enough, add some distilled water.

4.3 The charging environment should be ventilated and far away from the fire.

4.4 If the stacker not use for long time, charge it for not less than two hours every week.

4.5 The voltage on the indicator should not be over 15 Volt when charging.

4.6 Do not use the stacker when charging.

5 CONTROL PANEL

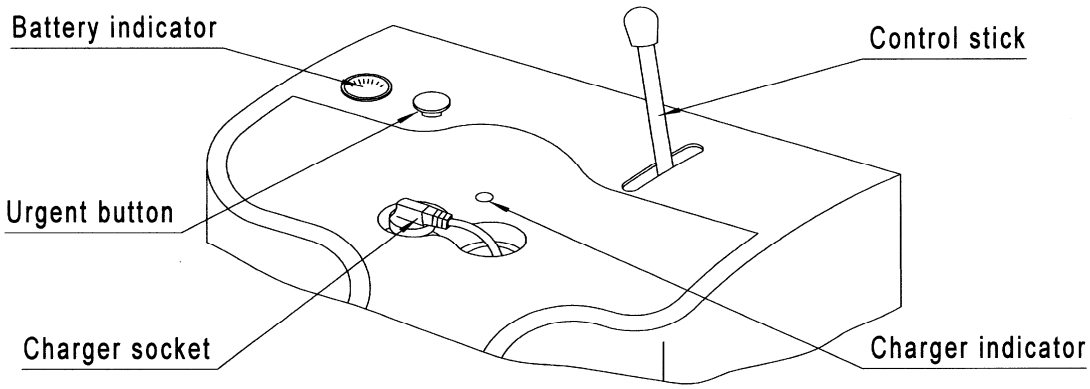

5.1 Urgent button

When you press down this switch, it will switch off the power, and then you turn it clockwise, it will switch on the power.

5.2 Battery indicator

It indicates the voltage of battery. When its voltage is less than 10 Volt, you should not use this stacker, you must charge it.

5.3 Control stick

This stick controls the forks to lower or lift.

5.4 Charger socket

6 TROUBLES SHOOTING

No	Trouble	Clause	Fixing Methods
1	The forks can not be up the max. height.	-The hydraulic oil is not enough.	-Pour in the oil.
2	The forks can not be lifted up.(Motor is rotary)	-Without hydraulic oil. -The oil has impurities.	-Fill in the oil. -Change the oil.
3	The motor cannot run.	-The urgent switch is pressed down, cut off the power. -The voltage is too lower. -The connectors of electrical wire is loose. -The contactor of DC motor is bad.	-Turn it clockwise, switch on the power -Charge it. -Turn it firm. -Replace with new one.
4	The forks cannot be descended.	-The piston rod or mast is deformed resulting from partial loading slanting to one side or over-loading. -The fork was kept in the high position for long time with piston rod bared to arise in rusting and jamming of the rod. -The release valve of pump is not opened.	- Replace with new one. -Keeping the fork in the lowest position if not using, and pay more attention to lubricate the rod. -Check it, if damaged, replace with new one.
5	Leaks	-Sealing parts worn or damaged. -Some part cracked or worn into small.	-Replace with the new one. -Replace with the new one.
6	The fork descends without the release valve worked.	-The impurities in the oil cause the release valve to be unable to close tight. -Sealing parts worn or damaged. -The release valve is damaged.	-Replace with new oil. -Replace with the new one. -Replace with the new one.
7	Battery cannot be charged	-Battery is bad. -The charging plug is loose.	-Replace with the new one. -Turn it firm.

⚠ **DO NOT ATTEMP TO REPAIR THE STACKER UNLESS YOU ARE TRAINED AND AUTHORIZED TO DO SO.**

https://truckmanualshub.com/

7 Hydraulic Flow Diagram

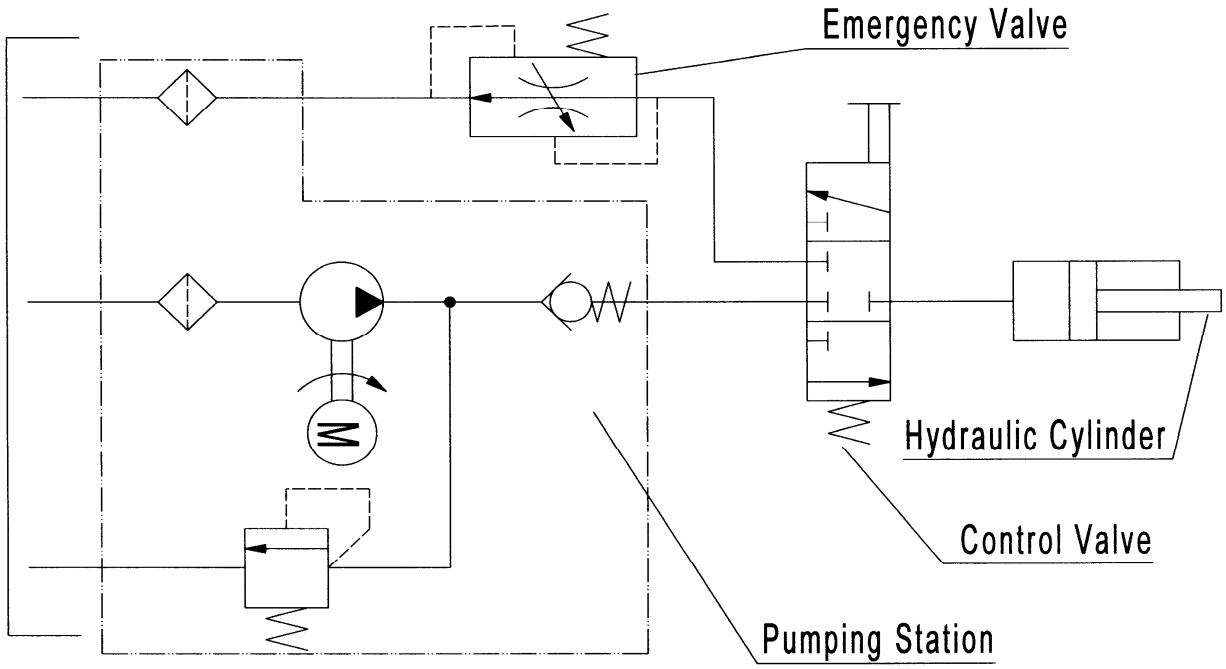

8 Electric Wires Diagram

8.1 CIRCUIT DIAGRAM

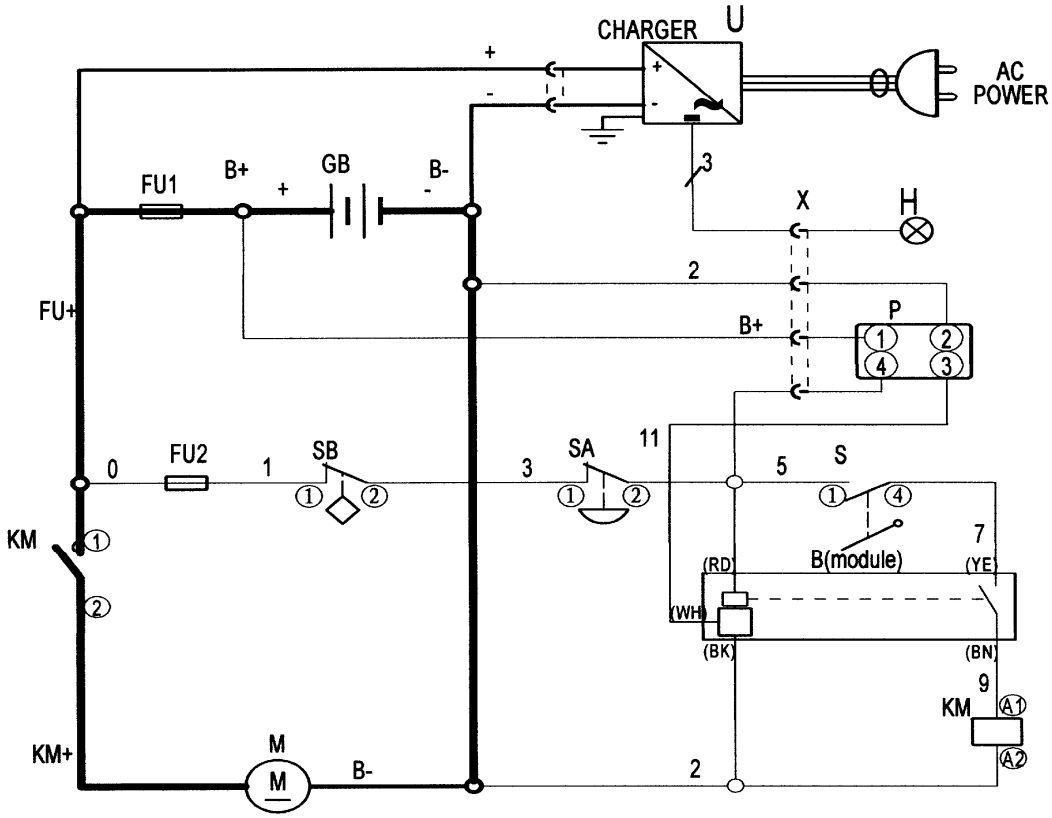

https://truckmanualshub.com/
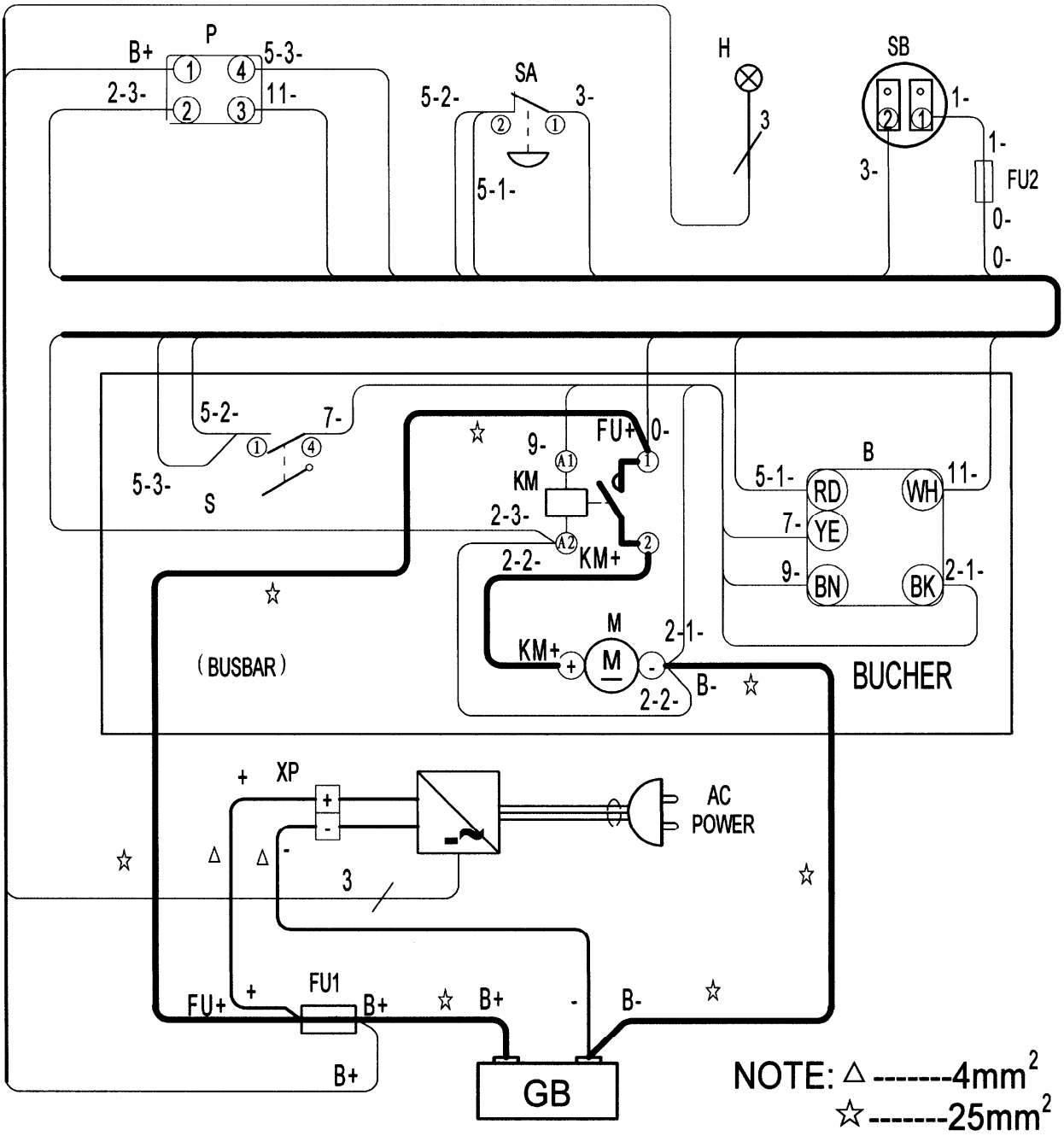
8.2 CONNECTION DIAGRAM