https://truckmanualshub.com/

Offshore Forklift Trucks

Sichelschmidt GmbH
material handling

https://truckmanualshub.com/

Forklift trucks for the Offshore Industry

Extreme conditions

Explosive atmospheres, salt water, damp air, extremely low temperatures, confined spaces and rough handling by operators: these are just some of the challenges that forklift trucks have to overcome when working in the harsh environment of the offshore industry. From the North Sea to the Pacific, Sichelschmidt's offshore forklifts have been the tried and tested solution to these exacting conditions – day in and day out for over thirty years.

Designed for demanding requirements

Acknowledged for their robust design and build, Sichelschmidt's three- and four- wheel explosion proof counterbalance and reach trucks form the basis of its offshore range. Following in-depth analysis of the offshore sector, Sichelschmidt's Offshore Package has been developed to address the specific requirements of these applications.

Salt water resistant finish

The surfaces of all the forklift components are treated in such a way that they can withstand long exposure to the salty atmosphere. All coated parts benefit from salt water resistant base coat and high performance finish to a specified depth. All connecting elements also undergo specialist treatments to prevent corrosion.

Tightly sealed

The pistons of all hydraulic cylinders are nickel and chromium plated. Components such as hydraulic valves, handbrake and the controls of the operator-machine interface are protected from spray water permeation by special seals.

Ex-compliant drive technology

Rigorous attention has also been paid to the explosion proof features of the drive units – the powerful, encased Ex-compliant 48V + 80V-ASM-AC drives. The design of all electrical and mechanical components eliminates the risk of them being an ignition source in an explosive atmosphere.

https://truckmanualshub.com/

Explosion protection – right from the start

Sichelschmidt's offshore forklifts are no-compromise machines, designed and built from the outset for explosion proof operation and which benefit from the company's forty years plus of experience in the field. The machines are compliant with industry specific guidelines such as ATEX-Directives or NEC 500, which are also recognised in the offshore sector.

Battery charging in Ex-zones

In contrast to other industry sectors there are no non-Ex-zones on drilling platforms where battery charging can be carried out without the risk of explosion. Sichelschmidt has therefore developed a charging system which accords to the required safety levels in Ex-zones. The connection between the battery and charging unit is housed in a charging box, well protected from the ambient atmosphere. Should the box be opened during charging the process is immediately interrupted.

Diverse range

As well as offering its standard range of three- and four-wheel counterbalance trucks for the offshore industry, Sichelschmidt's Offshore Package enables its complete range of Ex-trucks to be modified for tough operations such as oil drilling platform and supply ship applications. And if your offshore forklifts are needed for one-off or unusual applications, then you've come to the right place. Our expertise in the development and manufacture of specialist machines is second to none, offshore technology included.

Globally renowned and proven

Sichelschmidt's Ex-range has long been acknowledged by major offshore suppliers and operators for its proven reliability and long life operation. Together with our business partners we have enjoyed a close working relationship with leading exploration operations and equipment suppliers going back to 1981. A global sales and service network guarantees prompt service and rapid delivery of spare parts wherever you are – even on the high seas.

Under reserve of technical modifications.

https://truckmanualshub.com/

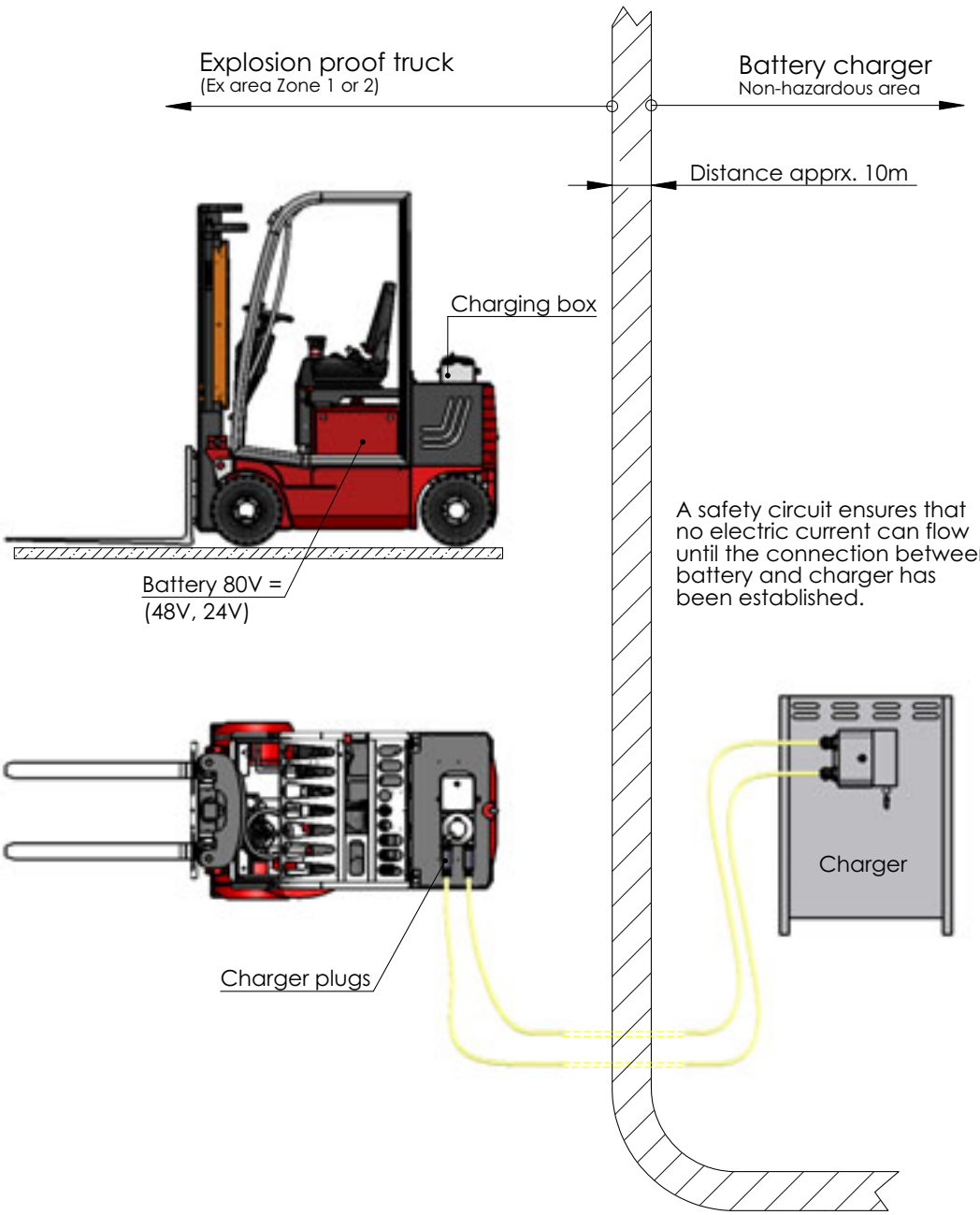

By releasing the safety screw, a contactor automatically breaks the electric circuit and then the charging plugs may be safely removed from their sockets.

Sichelschmidt GmbH
material handling

Im Hilingschen 32
D-58300 Wetter (Germany)

Phone +49 (0) 23 35 - 63 09 - 0
Telefax +49 (0) 23 35 - 63 09 - 88

www.sichelschmidt.de
e-mail info@sichelschmidt.de