https://truckmanualshub.com/

Pinguely-Haulotte

OPERATING AND MAINTENANCE INSTRUCTIONS

SELF-PROPELLED LIFT
HA 20PX - HA 26PX

242 031 6110 - E 10.02 GB

ISO 9001
GROUPE
PINGUELY
HAULOTTE

ARTICULEES MATS TELESCOPIQUES CISEAUX TRACTEES

Haulotte®
L'ACCES A L'ESPACE

PINGUELY HAULOTTE • LA PERONNIERE - BP 9 - 42152 L'HORME • Tél. +33 (0) 4 77 29 24 24 • Fax SAV +33 (0) 4 77 31 28 11
email haulotte@haulotte.com • Web www.haulotte.com

https://truckmanualshub.com/

https://truckmanualshub.com/

GENERAL

You have just taken delivery of your mobile elevating work platform

It will give you complete satisfaction if you follow the operating and maintenance instructions exactly.

The purpose of this instruction manual is to help you in this.

We stress the importance:

- of complying with the safety instructions relating to the machine itself, its use and its environment,
- of using it within the limits of its performances,
- of proper maintenance upon which its service life depends.

During and beyond the warranty period, our After-Sales Department is at your disposal for any service you might need.

Contact in this case our Local Agent or our Factory After-Sales Department, specifying the exact type of machine and its serial number.

When ordering consumables or spares, use this documentation, together with the «Spares» catalogue so as to receive original parts, the only guarantee of interchangeability and perfect operation.

This manual is supplied with the machine and is included on the delivery note.

REMINDER: You are reminded that our machines comply with the provisions of the «Machines Directive» 89/392/EEC of June 14th 1989 as amended by the directives 91/368/EEC of June 21st 1991, 93/44/EEC of June 14th 1993, 93/68/EEC of July 22nd 1993 and 89/336/EEC of May 3rd 1989, directive 2000/14/CE and directive EMC/89/336/CE.

Caution !
The technical data contained in this manual cannot involve our responsibility and we reserve the right to proceed with improvements or modifications without amending this manual.

CONTENTS

1 - GENERAL RECOMMENDATIONS - SAFETY 1

1.1 - GENERAL WARNING 1

1.1.1 - Manual 1

1.1.2 - Labels 1

1.1.3 - Safety 1

1.2 - GENERAL SAFETY INSTRUCTIONS 2

1.2.1 - Operators 2

1.2.2 - Environment 2

1.2.3 - Using the machine 2

1.3 - RESIDUAL RISKS 4

1.3.1 - Risks of jerky movements and tipping over 4

1.3.2 - Electrical risk 4

1.3.3 - Risk of explosion or burning 4

1.3.4 - Risks of collision 4

1.4 - INSPECTIONS 5

1.4.1 - Periodic inspections 5

1.4.2 - Examination of machine suitability 5

1.4.3 - State of conservation 5

1.5 - REPAIRS AND ADJUSTMENTS 6

1.6 - VERIFICATIONS WHEN RETURNING TO SERVICE 6

1.7 - BEAUFORT SCALE 6

2 - PRESENTATION 7

2.1 - IDENTIFICATION 7

2.2 - MAIN COMPONENTS 8

2.3 - WORK AREA 9

2.3.1 - Work area, HA 20P 9

2.3.2 - Work area, HA 26P 10

2.4 - TECHNICAL CHARACTERISTICS 11

2.4.1 - HA 20PX technical characteristics 11
2.4.2 - HA 26PX technical characteristics. 12

2.5 - OVERALL DIMENSIONS 13
2.5.1 - HA 20PX overall dimensions 13
2.5.2 - HA 26PX overall dimensions 14

2.6 - LABELS 15
2.6.1 - Common «yellow» labels 15
2.6.2 - Common «orange» labels 15
2.6.3 - Common «red» labels 16
2.6.4 - Other common labels 17
2.6.5 - Labels specific to models 18
2.6.5.1 - For HA20PX machine 18
2.6.5.2 - For HA26PX machine 18
2.6.6 - Labels specific to Holand 18
2.6.7 - Labels specific to Australia 19
2.6.8 - Option : organic hydraulic oil 19
2.6.9 - Built-in generator in option 20
2.6.10 - References of the machine's labels 21
2.6.11 - Labels positioning 22

3 - OPERATING PRINCIPLE 23

3.1 - HYDRAULIC CIRCUIT 23
3.1.1 - Travel, slewing, arm lifting and boom raising movements 23
3.1.2 - Telescoping, pendular, platform rotation, compensation and steering movements 23
3.1.3 - Telescoping, boom raising, arm lifting and pendular cylinders 23
3.1.4 - Platform rotation 23
3.1.5 - Compensation 23
3.1.6 - Travel (moving the machine) 23

3.2 - ELECTRICAL CIRCUIT 24
3.2.1 - General 24
3.2.2 - Automatic engine stop 24
3.2.3 - Platform load monitor 24
3.2.4 - Checking the inclination 24
3.2.5 - High travel speed 24
3.2.6 - Hour counter 25

3.2.7 - Reach limitation (HA 26PX) 25

3.3 - EMERGENCY ASSISTANCE AND RESCUE 25

3.3.1 - Rescue 25

3.3.2 - Emergency assistance 25

3.3.3 - Manual emergency assistance system 26

4 - USING THE MACHINE 31

4.1 - OPERATING SAFETY DEVICES 31

4.1.1 - Movement (control from the «platform» post) 31

4.1.2 - Emergency or recovery procedure 31

4.2 - OFFLOADING - LOADING - MOVEMENT - PRECAUTIONS 32

4.2.1 - Offloading by lifting 32

4.2.2 - Offloading with ramps 33

4.2.3 - Loading 33

4.2.4 - Travel 34

4.2.5 - Filling the fuel tank 34

4.3 - OPERATIONS BEFORE FIRST PUTTING INTO SERVICE 35

4.3.1 - Familiarisation with the control stations 35

4.3.1.1 - «Turret» control post 35

4.3.1.2 - «Platform» control post 36

4.3.2 - Checks before using the machine 37

4.3.2.1 - Movement zone 37

4.3.2.2 - General appearance 37

4.3.3 - Built-in generator (option) 39

4.3.3.1 - Instructions 39

4.4 - PUTTING INTO SERVICE 40

4.4.1 - Operations from the ground 40

4.4.1.1 - Starting the engine: Photo 4, page 35 40

4.4.1.2 - Testing the movements (Photo 4, page 35) 40

4.4.1.3 - Switching to «platform» control 40

4.4.2 - Operations from the platform 41

4.4.2.1 - Testing the control post 41

4.4.2.2 - Testing the movements 41

4.5 - EMERGENCY AND BACK-UP OPERATIONS 42

4.5.1 - Emergency assistance with the stand-by electropump unit 42

4.5.2 - Back-up 42

4.5.3 - Uncoupling 43

5 - MAINTENANCE 45

5.1 - GENERAL RECOMMENDATIONS 45

5.2 - MAINTENANCE SCHEDULE 46

5.2.1 - Consumables 46

5.2.2 - Maintenance diagram 47

5.3 - OPERATIONS 48

5.3.1 - Summary table 48

5.3.2 - Procedure 49

5.3.2.1 - Hydraulic oil filter : 49

5.3.2.2 - Drive wheel reducers 49

5.3.2.3 - Slew ring 49

5.3.3 - List of consumables 50

6 - OPERATING FAULTS 51

7 - SAFETY SYSTEM 53

7.1 - FUNCTIONS OF THE TURRET CABINET FUSES AND RELAYS 53

7.2 - FUNCTION OF THE SAFETY SWITCHES 53

8 - ELECTRICAL DIAGRAM 55

8.1 - E 448 DIAGRAM - SHEET 01/05 55

8.2 - E 448 DIAGRAM - SHEET 02/05 56

8.3 - E 448 DIAGRAM - SHEET 03/05 57

8.4 - E 448 DIAGRAM - SHEET 04/05 58

8.5 - E 448 DIAGRAM - SHEET 05/05 59

8.6 - NOMENCLATURE 60

9 - HYDRAULIC DIAGRAMS 63

9.1 - HA 20PX / HA 26PX DIAGRAM - REFERENCE B15390 63

9.2 - NOMENCLATURE, B15390 DIAGRAM 64

https://truckmanualshub.com/

1 - GENERAL RECOMMENDATIONS - SAFETY

1.1 - GENERAL WARNING

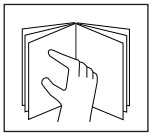

1.1.1 - Manual

This manual is designed to familiarise the operator with HAULOTTE self-propelled platforms in order to ensure efficient and safe use. However, it cannot replace the basic training required by any user of site equipment.

The site manager is bound to inform the operators of the instructions contained in the manual. He is also responsible for applying the «user regulations» in force in the country of use.

Before using the machine, it is essential to understand all these instructions in order to ensure safe and efficient operation.

This manual must be kept available for all operators. Additional copies can be supplied by the manufacturer on request

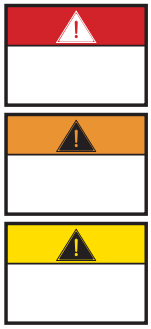

1.1.2 - Labels

Potential dangers and machine instructions are indicated on labels and plates. All instructions on such plates must be read.

All labels conform to the following colour code:

- Red indicates a potentially fatal danger.
- Orange indicates a danger of causing serious injury.
- Yellow indicates a danger that may cause material damage or slight injury.

The site manager must ensure that these labels are in good condition and remain legible. Additional copies can be supplied by the manufacturer on request.

1.1.3 - Safety

Ensure that any persons entrusted with the machine are fit to meet the safety requirements that its use imposes.

Avoid any working method that may jeopardise safety. Any use not compliant with the instructions may cause risk and damage to persons and property.

Caution !

To attract the reader's attention instructions are signalled by this sign.

This manual must be kept by the user throughout the machine's service life, including in the case of loan, lease and resale.

Ensure that all plates or labels relative to safety and hazards are complete and legible.

1.2 - GENERAL SAFETY INSTRUCTIONS

1.2.1 - Operators

Operators must be aged over 18, and hold an operating permit issued by their employer after undergoing a medical check and a practical test that prove they are apt to operate the machine.

Caution !
Only trained operators can use Haulotte self-propelled platforms.

There must always be at least two operators present, so that one can always:

- Take fast action if necessary.
- Take over the controls in case of accident or malfunction.
- Monitor and prevent movement of vehicles and people near the platform.
- Guide the platform operator if required.

1.2.2 - Environment

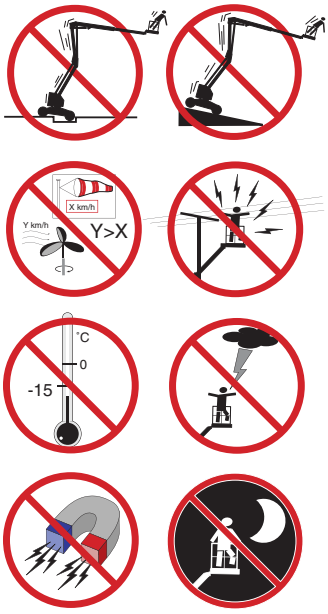

Never use the machine:

- On ground that is soft, unstable, congested.
- On a ground that has a slope greater than permissible limit.
- In winds greater than the permissible limit. If used outside, use an anemometer to ensure that the wind speed does not exceed the permissible limit.
- Near power lines (check minimum safe approach distances according to voltage carried).
- In temperatures less than -15°C (especially in refrigerated chambers). Consult us if it is necessary to work below -15°C.
- In explosive atmospheres.
- In poorly-ventilated areas, since the exhaust fumes are toxic.
- During storms (risk of lightning).
- In the dark, unless the optional floodlight is fitted.
- In the presence of intense electromagnetic fields (radar, moving and high currents).

DRIVING ON PUBLIC ROADS IS PROHIBITED.

1.2.3 - Using the machine

In normal service (i.e. operating from the platform), the platform/turntable control select key must be removed and kept at ground level by a person who is present and trained in rescue/emergency assistance manoeuvres.

Do not use the machine:

- with a load greater than allowed load,
- if wind speed exceeds the maximum
- with more than maximum authorised number of occupants in platform,
- with a side load in the platform greater than permissible limit.

https://truckmanualshub.com/

To reduce the risks of **serious falls, operators must respect the following instructions**:

- Hold the guardrail firmly when lifting or driving the platform.
- Remove any traces of oil or grease from the platform steps, floor or guardrails.
- Wear personal protective equipment suited to working conditions and conform to local regulations, particularly when working in hazardous areas.
- Never disable the limit switches of the safety devices.
- Avoid contact with stationary or moving obstacles.
- Do not increase the platform operating height by means of ladders or other accessories.
- Never use the guardrails to climb into or out of the platform (use the steps provided).
- Never climb on the guardrails when the platform is up.
- Avoid driving the machine at high speed in narrow or congested areas.
- Never use the machine without putting in place the platform safety bar or closing the safety gate.
- Never climb on the covers.

Caution !
Never use the platform as a crane, hoist or lift.
Never use the machine to pull or tow.
Never use the boom as a ram or thruster or to lift the wheels.

To reduce the risks of tipping over, operators **must follow these instructions**:

- Never disable the limit switches of the safety devices.
- Never move the control handles from one direction to the other without stopping in the «O» position. (To stop when travelling, gradually move the handle to «O», keeping your foot down on the pedal.).
- Do not exceed the maximum load or the number of occupants allowed in the platform.
- Spread the load and if possible place in the centre of the platform.
- Check that the ground resists the pressure and load per wheel.
- Avoid contact with stationary or moving obstacles.
- Do not drive the platform at high speed in narrow or congested areas.
- Do not drive the platform in reverse gear (poor visibility).
- Do not use the machine with a congested platform.
- Do not use the machine with equipment or objects hanging from the guardrails or boom.
- Do not use the machine with items liable to increase the wind load (e.g. panels).
- Never carry out maintenance on the machine with the platform raised, without first installing the required safety provisions (overhead crane, crane).
- Perform the daily checks and monitor the machine's good working order during periods of use.
- Preserve the machine from any uncontrolled intervention when it is not in operation.

NOTE : *Do not tow the platform. (It has not been designed for towing and must be transported on a trailer).*

1.3 - RESIDUAL RISKS

1.3.1 - Risks of jerky movements and tipping over

Caution !
The direction of travel can be reversed after a 180° turntable rotation. Take account of the colour of the arrows on the chassis compared with the direction of travel (green = forward, red = reverse)
Thus, moving the manipulator in the direction of the green arrow on the control panel will move the machine according to the direction indicated by the green arrow on the chassis. Similarly, moving a manipulator in the direction of the red arrow on the control panel, will move the machine in the direction of the red arrow on the chassis

Risks of jerky movement and tipping over are high in the following situations:

- Sudden action on the controls.
- Overloading of the platform.
- Uneven ground (Be careful during thaw periods in winter).
- Gusts of wind.
- Contact with an obstacle on the ground or at a height.
- Working on platforms, pavements, etc.

Allow sufficient stopping distances:

- 3 meters at high speed,
- 1 meter at low speed.

Allow sufficient stopping distances: 3 metres at high speed and 1 metre at low speed.

Do not alter or neutralise any components connected in any way to the machine's safety or stability.

Do not place or fasten a load so that it overhangs the machine's parts.

Do not touch adjacent structures with the elevator arm.

1.3.2 - Electrical risk

Caution !
If the machine has a 220 V 16A max. plug, the extension must be connected to a mains socket protected by a 30 mA differential circuit breaker.

Electrical risks are high in the following situations:

- Contact with a live line (check safety distances before operation near electricity lines).
- Use during storms.

1.3.3 - Risk of explosion or burning

The risks of explosion or burning are high in the following situations:

- Working in explosive or inflammable atmosphere.
- Filling the fuel tank near naked flames.
- Contact with the hot parts of the motor.
- Use of a machine generating hydraulic leakage.

1.3.4 - Risks of collision

- Risk of crushing people in the machine operation zone (when travelling or manoeuvring equipment).
- The operator must assess the risks above him before using the machine.
- Pay attention to the position of the arms during turntable rotation.
- Adapt movement speed to conditions related to the ground, traffic, slope and movement of people, or any other factor that may cause a collision.
- When driving down the ramp of a truck, ensure sufficient space is available for safe unloading.
- Check brake pad wear regularly to avoid all risk of collision.

https://truckmanualshub.com/

1.4 - INSPECTIONS

Comply with the national regulations in force in the country of machine use.

For FRANCE: Order dated 9 June 1993 + circular DRT 93 dated 22 September 1993 which specify:

1.4.1 - Periodic inspections

The machine must be inspected every 6 months in order to detect any defects liable to cause an accident.

These inspections are performed by an organisation or personnel specially designated by the site manager and under his responsibility (whether or not they belong to the company) Articles R 233-5 and R 233-11 of the French Labour Code.

The results of these inspections are recorded in a safety register kept by the site manager and constantly available to the labour inspector and the site safety committee (if one exists) and the list of specially designated personnel (Article R 233-5 of the French Labour Code).

Moreover, before each use, check the following:

- the operator's manual is in the storage compartment on the platform,
- the stickers are placed according to the section concerning "Labels and their positions",
- oil level and any elements in the mainteance operation table
- look out for any danaged, incorrectly installed, modified or missing parts.

NOTE : This register can be obtained from trade organisations, and in some cases from the OPPBTP or private prevention agencies.

The designated persons must be experienced in risk prevention (Articles R 233-11 or order n° 93-41).

No member of personnel is allowed to perform any check whatsoever during machine operation (Article R 233-11 of the French Labour Code).

1.4.2 - Examination of machine suitability

The manager of the site where the machine is operated must ensure the machine is suitable, i.e. capable of performing the work in complete safety, and in compliance with the operating manual. Furthermore, the French order of 9 June 1993 addresses problems relative to leasing, examination of the state of conservation, checking upon operation after repairs, and test conditions (static test coefficient 1.25; dynamic test coefficient 1.1). All users must consult this order's requirements and comply with them.

1.4.3 - State of conservation

Detect any deterioration liable to cause hazardous situations (concerning safety devices, load limiters, tilt sensor, cylinder leaks, deformation, welds, bolt tightness, hoses, electrical connections, tyre state, excessive mechanical gaps).

NOTE : If the machine is rented/leased, the user responsible for the machine must examine its state of conservation and suitability. He must obtain assurance from the leaser that general periodic inspections and pre-operation inspections have been performed.

1.5 - REPAIRS AND ADJUSTMENTS

These cover major repairs, and work on or adjustments to safety systems or devices (of a mechanical, hydraulic or electrical nature).

These must be performed by personnel from or working for PINGUELY-HAULOTTE who will use only original parts.

Any modification not controlled by PINGUELY-HAULOTTE is unauthorised.

The manufacturer cannot be held responsible if non-original parts are used or if the work specified above is not performed by PINGUELY-HAULOTTE-approved personnel.

1.6 - VERIFICATIONS WHEN RETURNING TO SERVICE

To be performed after:

- extensive disassembly-reassembly operation,
- repair affecting the essential components of the machine,
- any accident caused by the failure of an essential component.

It is necessary to perform a suitability examination, a state of conservation examination, a static test, a dynamic test (see coefficient in paragraph (see Chap 1.4.2, page 5).

Caution !
These test must be performed by a competent person.

1.7 - BEAUFORT SCALE

The Beaufort Scale of wind force is accepted internationally and is used when communicating weather conditions. It consists of number 0 - 17, each representing a certain strength or velocity of wind at 10m (33 ft) above ground level in the open.

Description of Wind		Specifications for use on land	MPH	m/s
0	Calm	Calm; smoke rises vertically	0-1	0-0.2
1	Light Air	Direction of wind shown by smoke	1-5	0.3-1.5
2	Light Breeze	Wind felt on face; leaves rustle; ordinary vanes moved by wind	6-11	1.6-3.3
3	Gentle Breeze	Leaves and small twigs in constant motion; wind extends light flag	12-19	3.4-5.4
4	Moderate Breeze	Raises dust and loose paper; small Branches are moved	20-28	5.5-7.9
5	Fresh Breeze	Small trees in leaf begin to sway; crested wavelets form on inland waterways	29-38	8.0-10.7
6	Strong Breeze	Large branches in motion; whistling heard in telephone wires; umbrellas used with difficulty	39-49	10.8-13.8
7	Near Gale	Whole trees in motion; inconvenience felt when walking against wind	50-61	13.9-17.1
8	Gale	Breaks twigs off trees; generally impedes progress	62-74	17.2-20.7
9	Strong Gale	Slight structural damage occurs (chimney pots and slates removed)	75-88	20.8-24.4

https://truckmanualshub.com/

2 - PRESENTATION

HA 20PX and HA 26PX self-propelled lifts are designed for any high work within the limit of their characteristics (see Chapter 2.4, page 11) and complying with all the safety instructions particular to the machine and to the locations where it is used.

The main operating post is in the «basket».

The turret operating post is an emergency or back-up post.

2.1 - IDENTIFICATION

A plate (Fig 1, page 7), fixed on the back right of the chassis, bears all the indications (engraved) enabling the machine to be identified.

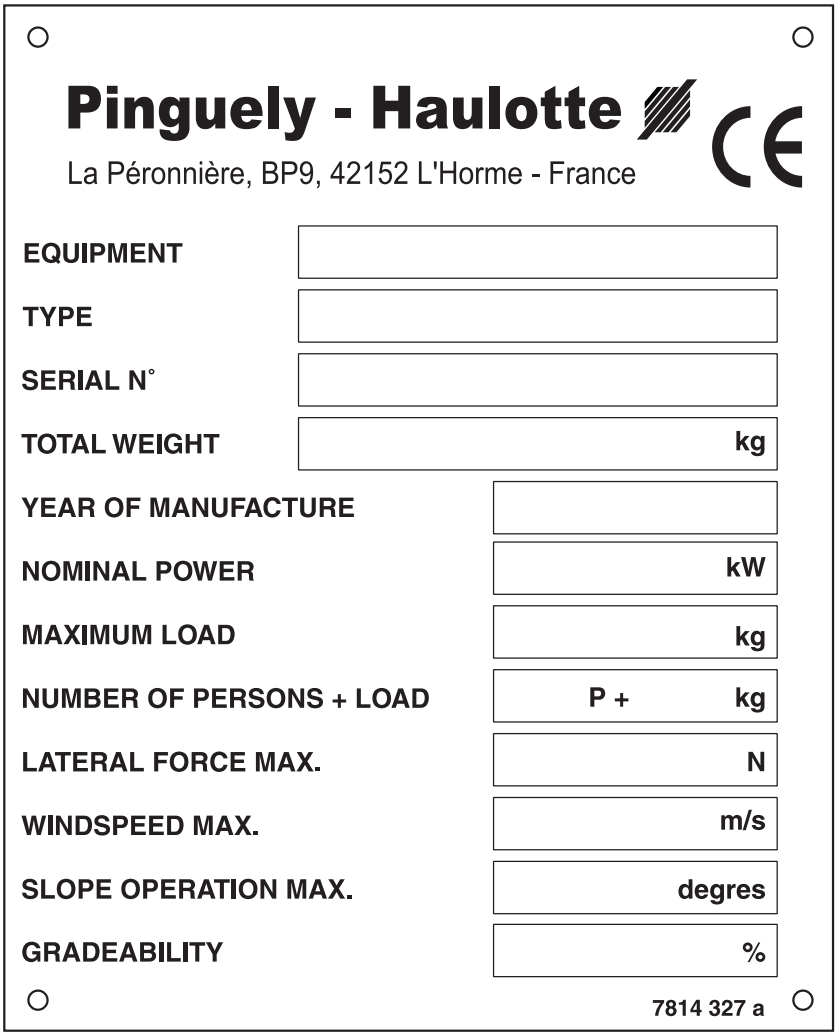

Fig. 1 - Name plate

REMINDER: Whenever requesting information, intervention or spares, specify the type and serial number.

2.2 - MAIN COMPONENTS

01 - Rolling chassis
02 - Front steered and drive wheels
03 - Rear steered and drive wheels
04 - Pendular
05 - Platform support with load limiter
06 - Platform
07 - «Basket» control panel
08 - Compensation input cylinder
09 - 2-piece boom
10 - Slewing ring
11 - Turret
12 - Hoods
13 - Boom support
14 - Hydraulic travel motors and reducer
15 - Hydraulic travel motors and reducer
16 - Right compartment (hydraulic and diesel tanks, control panel)
17 - Arm
18 - Tie rod
19 - Left compartment (engine + pump + starting battery)
20 - Bottom counterweight (HA 26PX)
21 - Top counterweight
22 - Lifting and fixing lugs

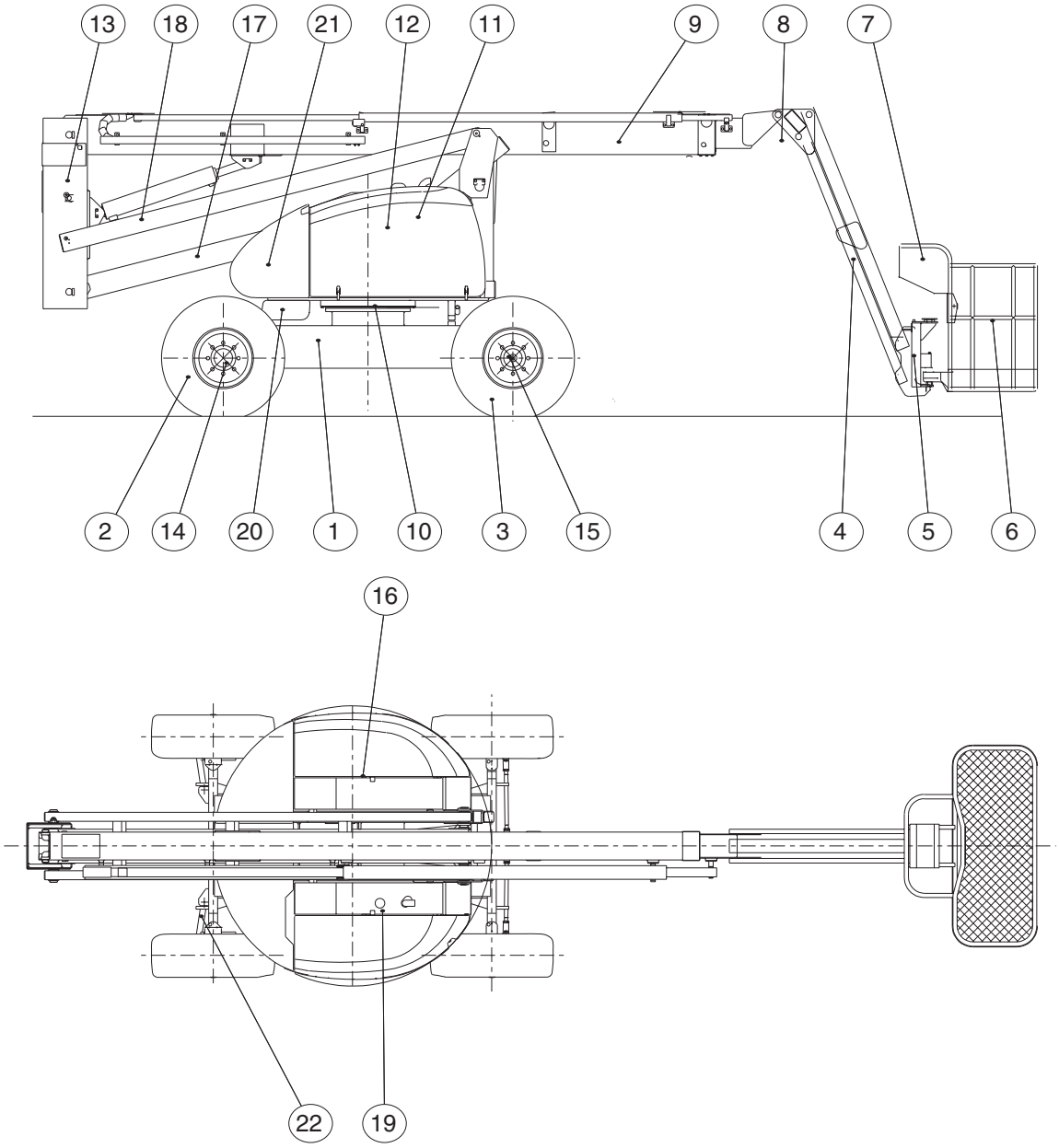

Fig. 2 - Location of main components

2.3 - WORK AREA

2.3.1 - Work area, HA 20P

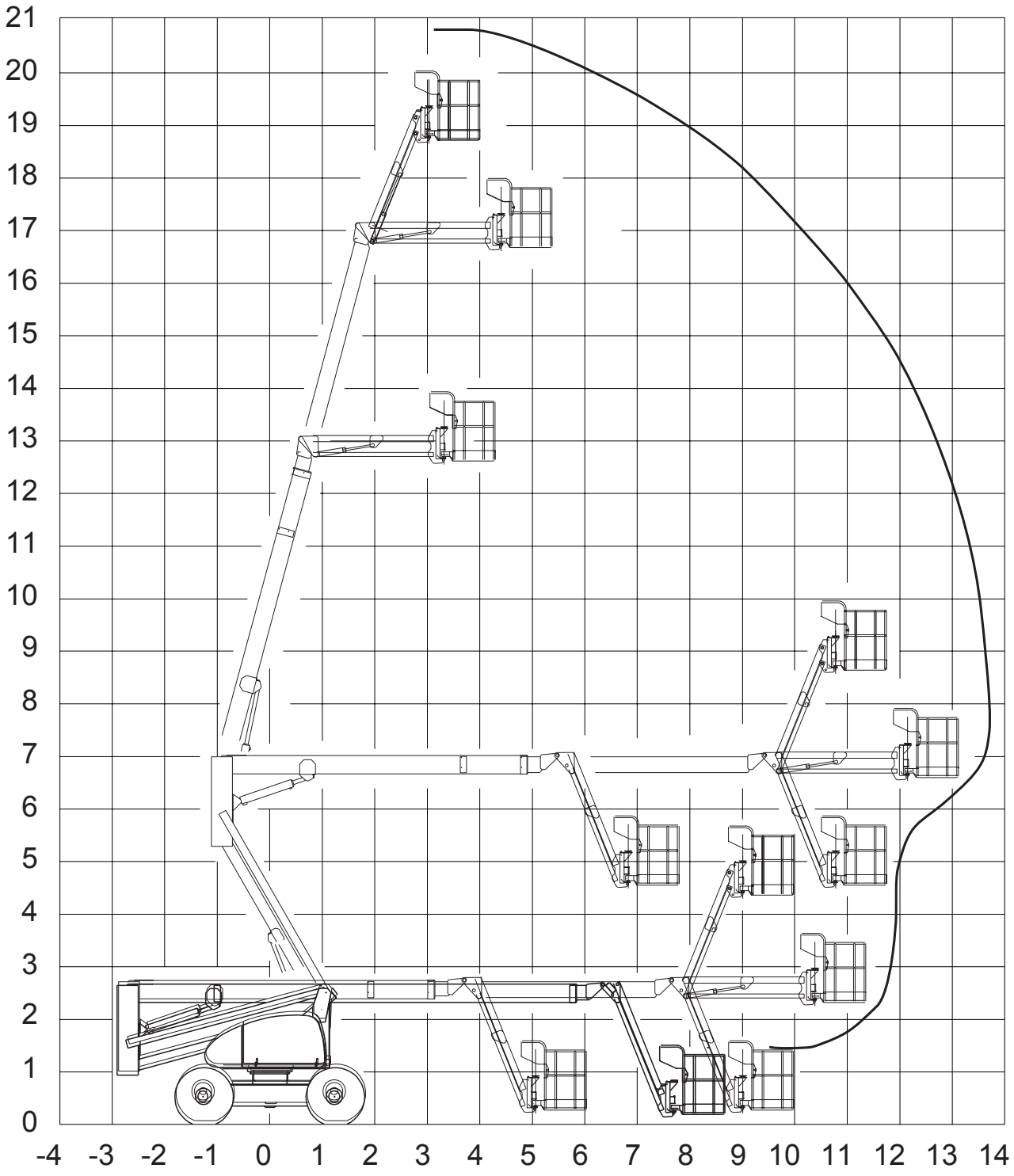

2.3.2 - Work area, HA 26P

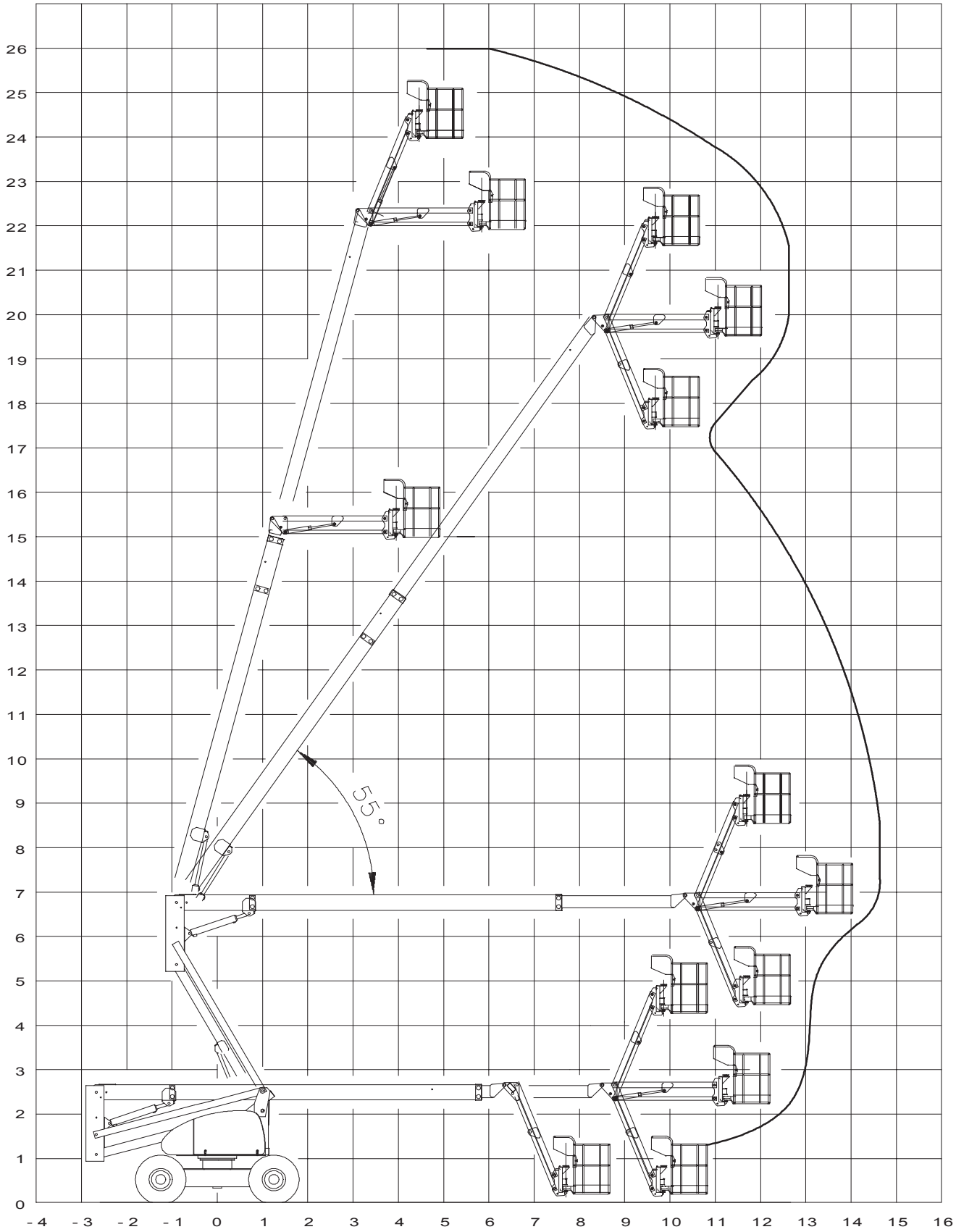

2.4 - TECHNICAL CHARACTERISTICS

2.4.1 - HA 20PX technical characteristics

DESIGNATIONS	HA 20PX
Load	250 kg, including 2 peoples
Maximum lateral manual force	40 kg
Max. wind speed	60 km/h
Floor height	18,65 m
Working height	20,65 m
Overall length	9,00 m
Overall width	2,35 m
Overall height	2,67 m
Wheelbase	2,60 m
Ground clearance	420 mm
max. reach	13,50 m
Boom range	0° + 75°
Telescoping (stroke)	4200 mm
Turret rotation	Continuous
Max. force on wheel	6194 daN
Reducer (efficiency = 95%)	30
Max. travel slope	40%
Tyre sizes	15 - R22
Outside turning radius	3,9 m
Tilt - Monitor	5° (≈ 9%)
Hydraulic reservoir	150 litres
Diesel tank	150 litres
Total weight	12 260 kg
Number of drive wheels	4
Number of steered wheels	4
Differential lock	YES
Hydraulic brakes	YES
Freewheeling	YES
Wheel nut tightening torque	32 mdaN
Slewing ring nuts tightening torque	27 mdaN
Vibration level at feet	< 0,5/s2
Vibration level at hands	< 2,5/s2
DEUTZ diesel engine Power Idling power output Consumption Idling consumption	F4L 1011 F 51.6 HP / 38 kW at 2400 rpm 20.4 HP / 15 kW at 1250 rpm 230 g/kWh 230 g/kWh
45 cm3/rev LOADSENSING hydraulic pump	85 l/min max.
Hydraulic pressure: General Travel Steering Slewing Equipment	 240 bar 240 bar 240 bar 100 bar 240 bar
Travel speed (proportional)	LS: 1.2 km/h HS: 4.5 km/h
max. ground pressure with 250 kg -hard ground (concrete) -loose ground (mud)	 14,0 daN/cm2 4,3 daN/cm2
Starting battery	1 X 12 V - 95 Ah
Supply voltage	12 V
Acoustic power	108 dB (A)
Noise level at 10 meters	73.9 dB (A)

2.4.2 - HA 26PX technical characteristics.

DESIGNATIONS	HA 26PX
Load	230 kg, including 2 peoples
Maximum lateral manual force	40 kg
Max. wind speed	45 km/k
Floor height	24,00 m
Working height	26,00 m
Overall length	11,90 m
Overall width	2,35 m
Overall height	2,67 m
Wheelbase	2,60 m
Ground clearance	420 mm
max. reach	14,6 m
Boom range	0° + 75°
Telescoping (stroke)	6915 mm
Turret rotation	Continuous
Reducer (efficiency = 95%)	30
Max. travel slope	40%
Tyre sizes	15 - R22
Outside turning radius	3,9 m
Tilt - Monitor	3°
Hydraulic reservoir	150 litres
Diesel tank	150 litres
Total weight	14 150 kg
Number of drive wheels	4
Number of steered wheels	4
Differential lock	YES
Hydraulic brakes	YES
Freewheeling	YES
Wheel nut tightening torque	32 mdaN
Slewing ring nuts tightening torque	27 mdaN
Vibration level at feet	< 0,5/s²
Vibration level at hands	< 2,5/s²
DEUTZ diesel engine Power Idling power output Consumption Idling consumption	F4L 1011 F 51.6 HP / 38 kW at 2400 rpm 20.4 HP / 15 kW at 1250 rpm 230 g/kWh 230 g/kWh
45 cm3/rev LOADSENSING hydraulic pump	85 l/min max.
Hydraulic pressure: General Travel Steering Slewing Equipment	 240 bar 240 bar 240 bar 100 bar 240 bar
Travel speed (proportional)	LS: 1.2 km/h HS: 4.5 km/h
max. ground pressure with 250 kg -hard ground (concrete) -loose ground (mud)	 16,0 daN/cm2 4,6 daN/cm2
Max. force on wheel	6970 daN
Starting battery	1 X 12 V - 95 Ah
Supply voltage	12 V
Acoustic power	108 dB (A)
Noise level at 10 meters	73.9 dB (A)

2.5 - OVERALL DIMENSIONS

2.5.1 - HA 20PX overall dimensions

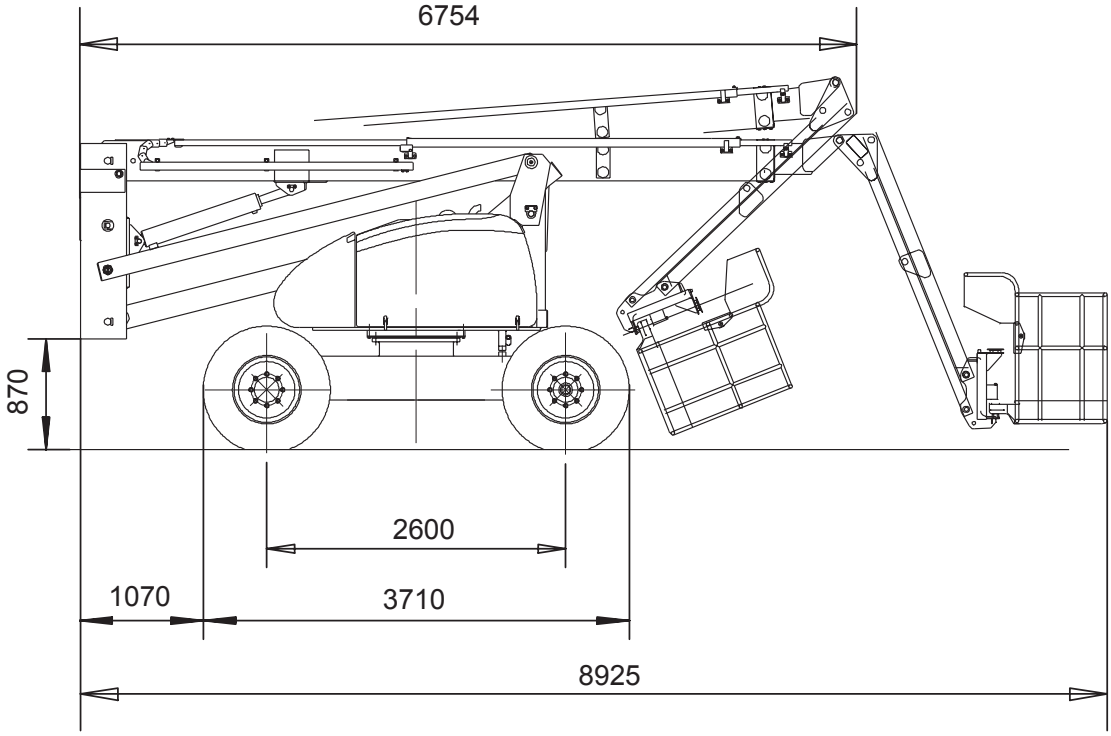

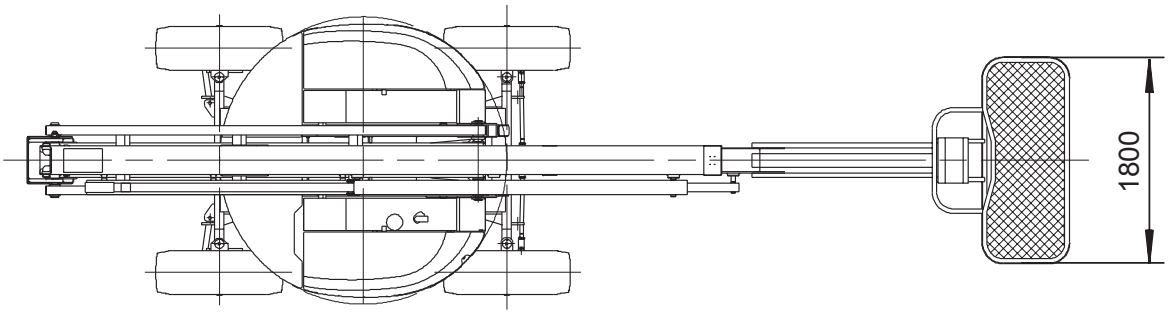

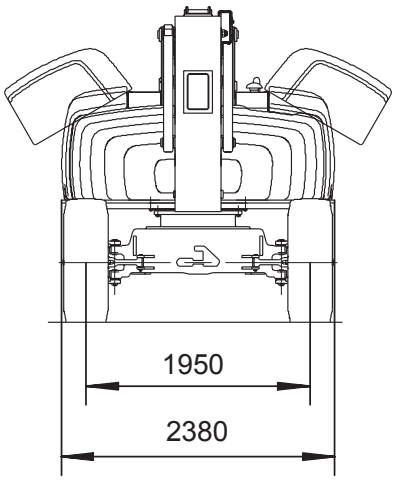

2.5.2 - HA 26PX overall dimensions

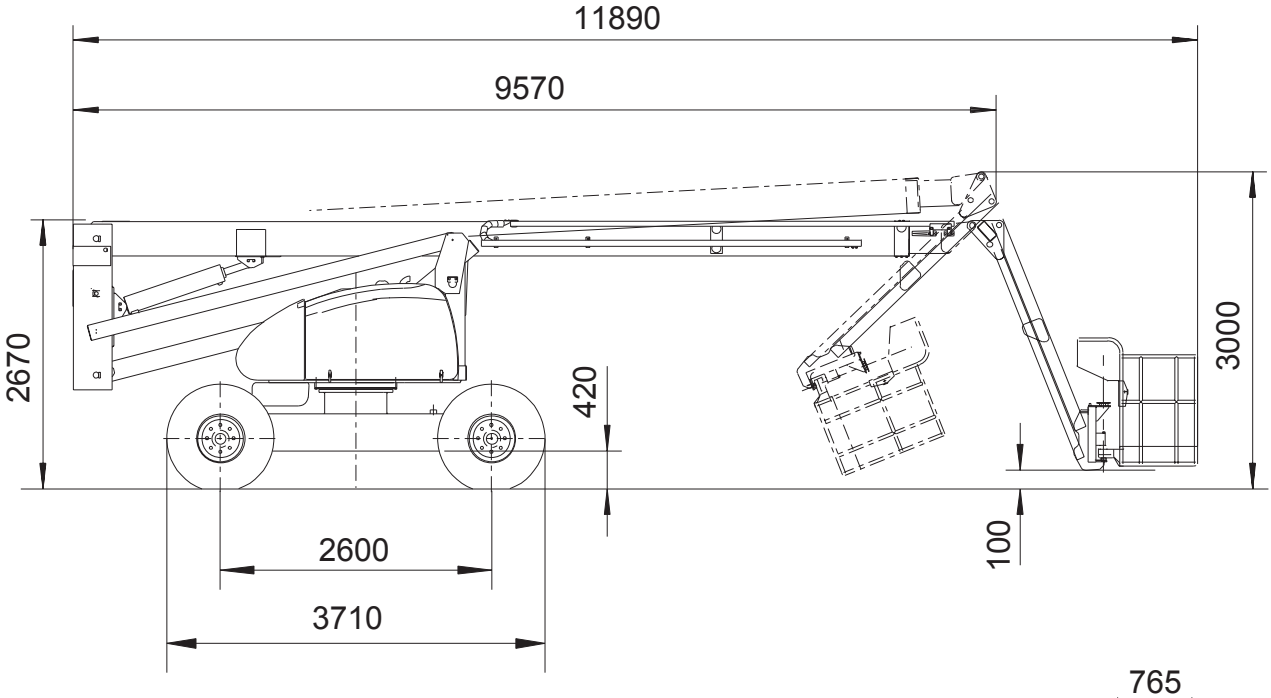

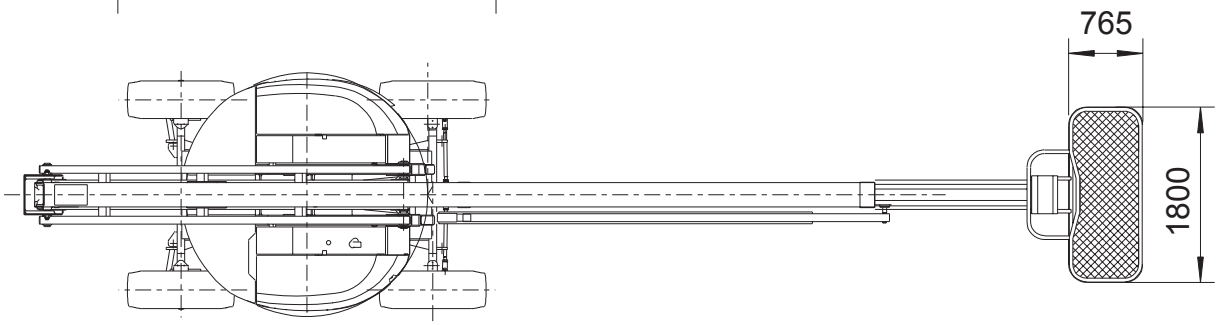

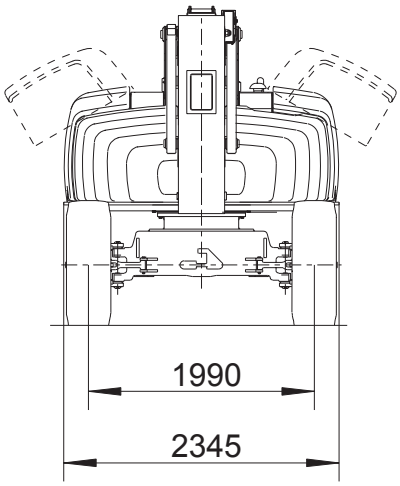

2.6 - LABELS

2.6.1 - Common «yellow» labels

1

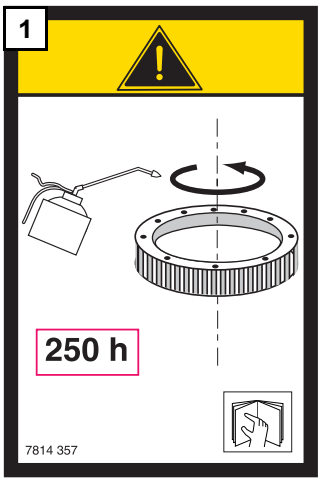

2

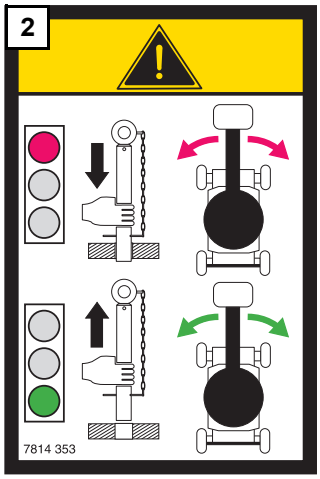

3

4

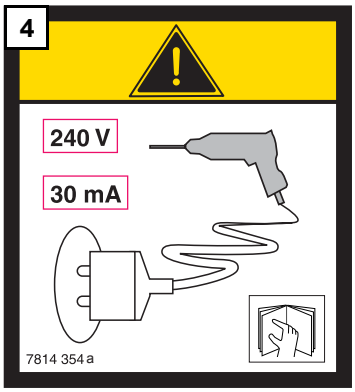

5

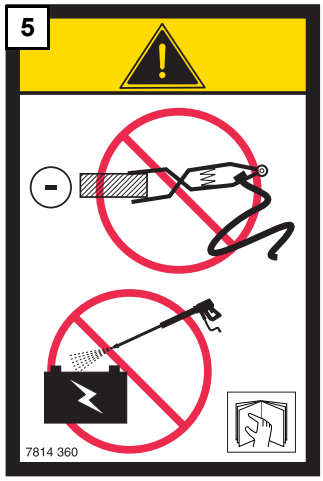

2.6.2 - Common «orange» labels

6

RECOMMENDATIONS FOR USE

BEFORE USING THIS MACHINE
THE OPERATOR MUST

1 - Read and understand the information in the operator's manual and the information marked on the machine, and become familiar with the controls.
2 - Receive training and practical experience in operating the machine, under the employer's supervision.
3 - Ensure that maintenance is performed according to the manufacturer's instructions.
4 - Refrain from using the machine in the event of any malfunction.
5 - Not wash the electrical components with a washer pressure.
6 - Not remove any parts which might affect the stability.
7 - Not modify the machine without the manufacturer's approval.
8 - Not use the machine as a welding earth.
9 - Not weld on the machine without first disconnecting the battery terminals. See the instructions in the maintenance manual.

DAILY INSPECTION

1 - Check the level of diesel fuel (for diesel engine platforms).
2 - Check that there are no apparent defects (hydraulic leaks, loose bolts, loose electric connections)
3 - Check that the tilt indicator operates correctly by sounding the buzzer.

INSTRUCTIONS BEFORE USE

1 - Remove the rotation locking pin (if there is a turntable).
2 - IMPORTANT when using the AC power line to the work platform, the power plug must be connected to an electrical installation protected by a 30 mA circuit breaker (C15 100 standard).

START-UP

1 - Turn the battery isolater switch to the "on" position.
2 - Unlock the emergency stop button then press the starter button.
3 - If the machine does not start, wait 10 seconds then repeat the operation.

THE MACHINE
MUST NOT BE USED
WHILE CHARGING THE BATTERIES

7814 345

2.6.3 - Common «red» labels

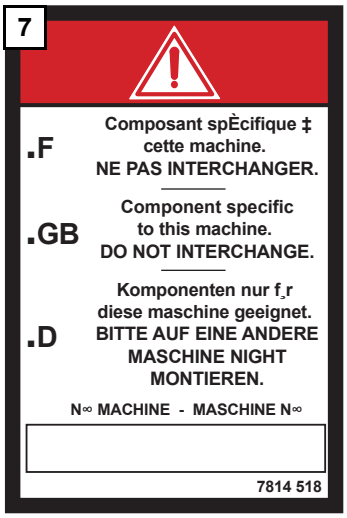

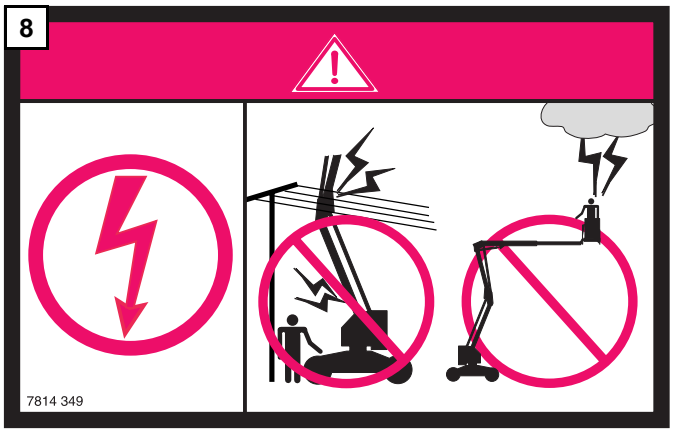

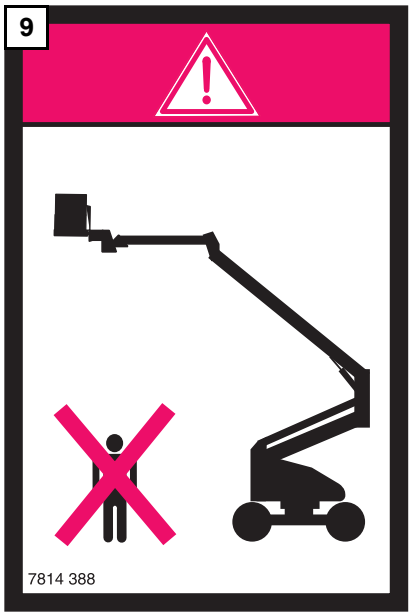

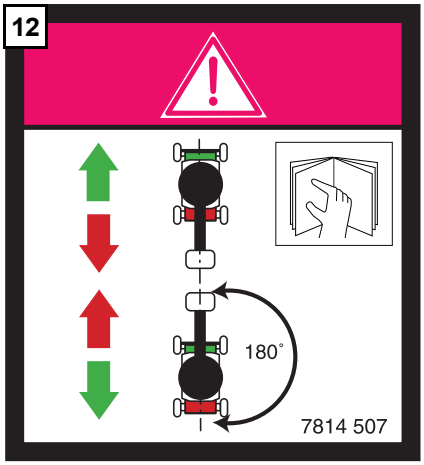

2.6.4 - Other common labels

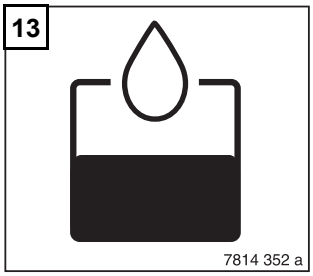

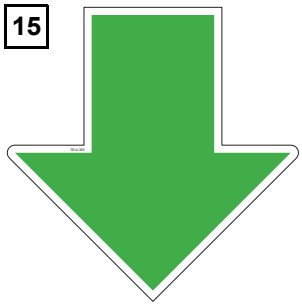

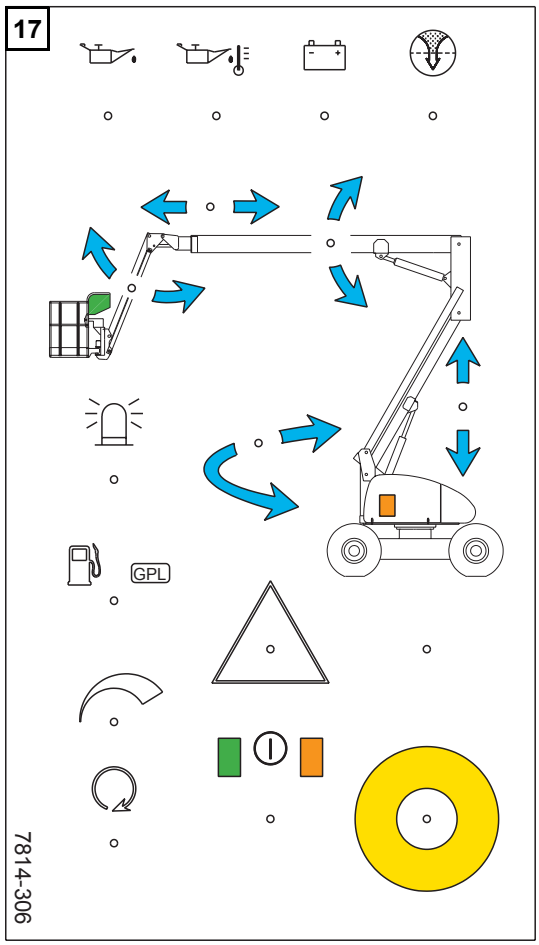

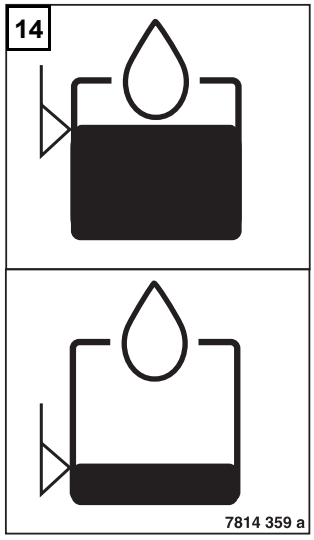

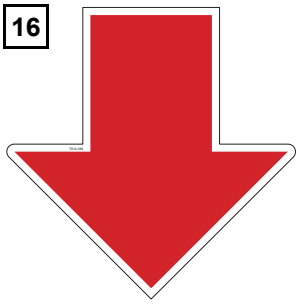

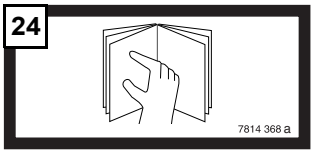

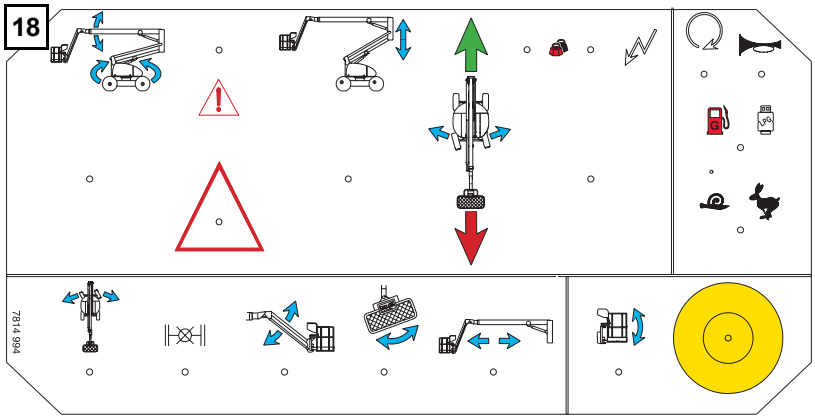

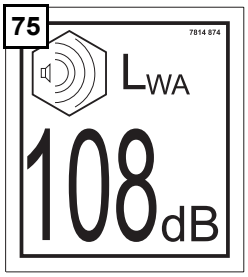

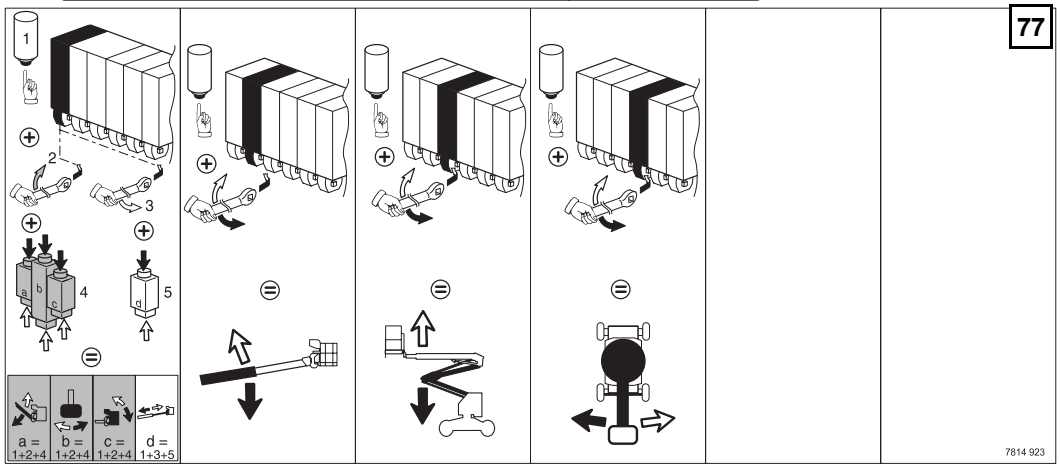

2.6.5 - Labels specific to models

2.6.5.1 -For HA20PX machine

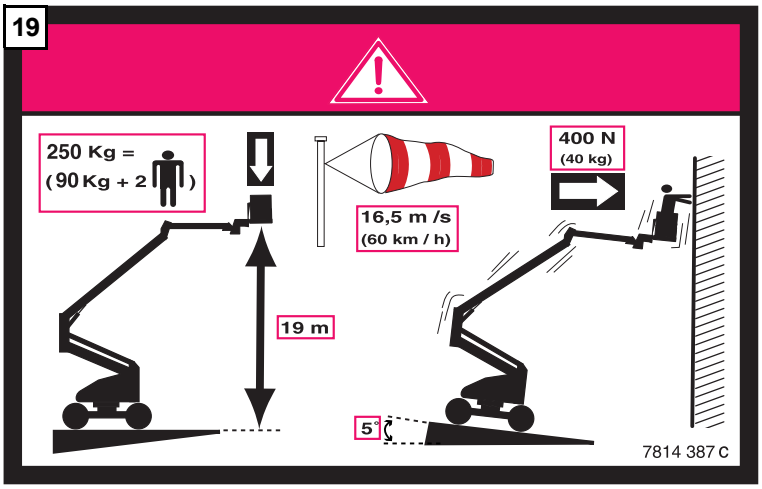

2.6.5.2 -For HA26PX machine

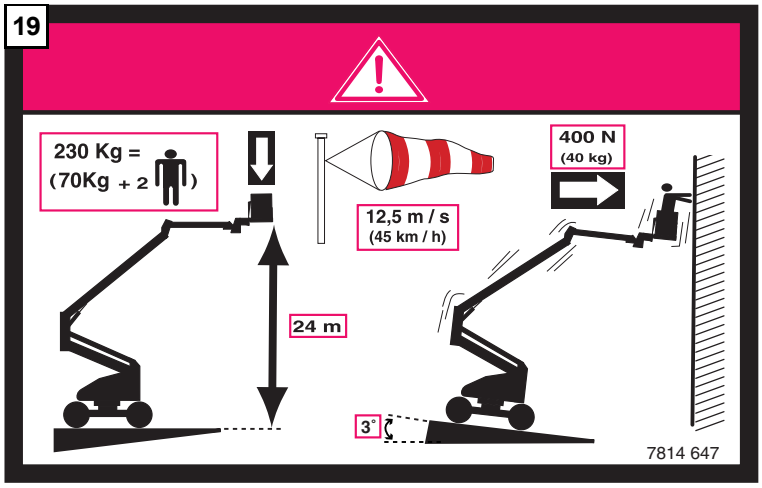

2.6.6 - Labels specific to Holand

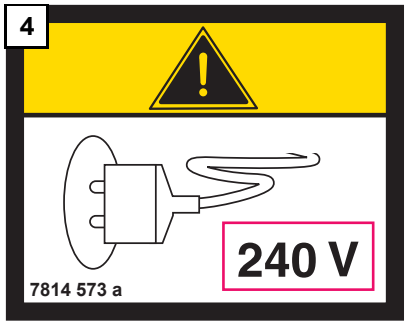

2.6.7 - Labels specific to Australia

20

21

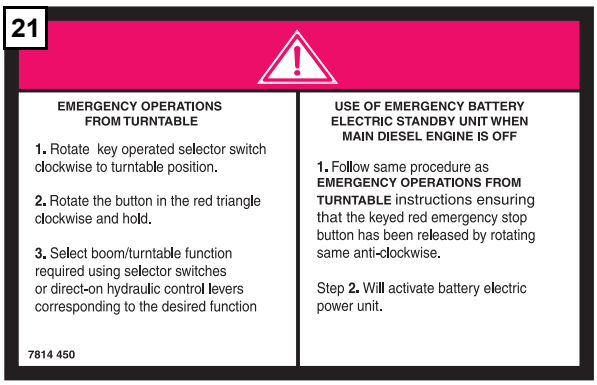

22

23

4

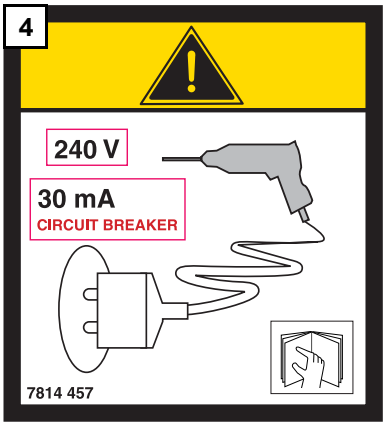

6

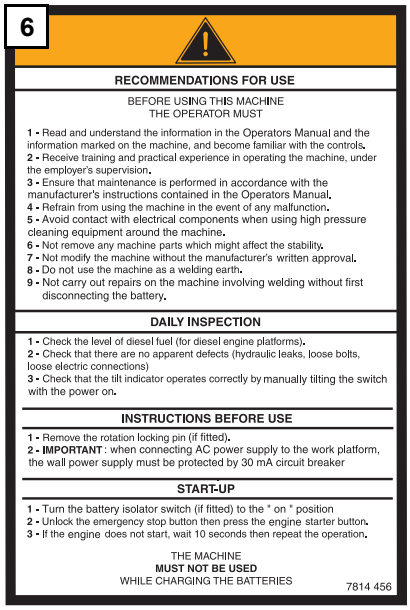

RECOMMENDATIONS FOR USE

BEFORE USING THIS MACHINE
THE OPERATOR MUST

1 - Read and understand the information in the Operators Manual and the information marked on the machine, and become familiar with the controls.
2 - Receive training and practical experience in operating the machine, under the employer's supervision.
3 - Ensure that maintenance is performed in accordance with the manufacturer's instructions contained in the Operators Manual.
4 - Refrain from using the machine in the event of any malfunction.
5 - Avoid contact with electrical components when using high pressure cleaning equipment around the machine.
6 - Not remove any machine parts which might affect the stability.
7 - Not modify the machine without the manufacturer's written approval.
8 - Do not use the machine as a welding earth.
9 - Not carry out repairs on the machine involving welding without first disconnecting the battery.

DAILY INSPECTION

1 - Check the level of diesel fuel (for diesel engine platforms).
2 - Check that there are no apparent defects (hydraulic leaks, loose bolts, loose electric connections)
3 - Check that the tilt indicator operates correctly by manually tilting the switch with the power on.

INSTRUCTIONS BEFORE USE

1 - Remove the rotation locking pin (if fitted).
2 - **IMPORTANT** : when connecting AC power supply to the work platform, the wall power supply must be protected by 30 mA circuit breaker

START-UP

1 - Turn the battery isolator switch (if fitted) to the " on " position
2 - Unlock the emergency stop button then press the engine starter button.
3 - If the engine does not start, wait 10 seconds then repeat the operation.

THE MACHINE
MUST NOT BE USED
WHILE CHARGING THE BATTERIES

7814 456

8

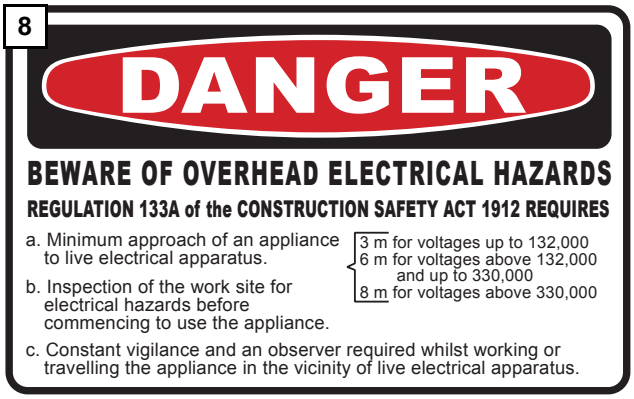

2.6.8 - Option : organic hydraulic oil

76

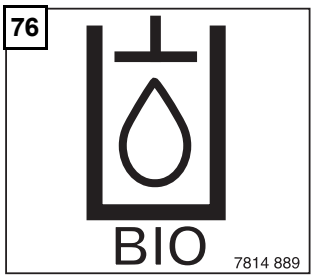

2.6.9 - Built-in generator in option

78

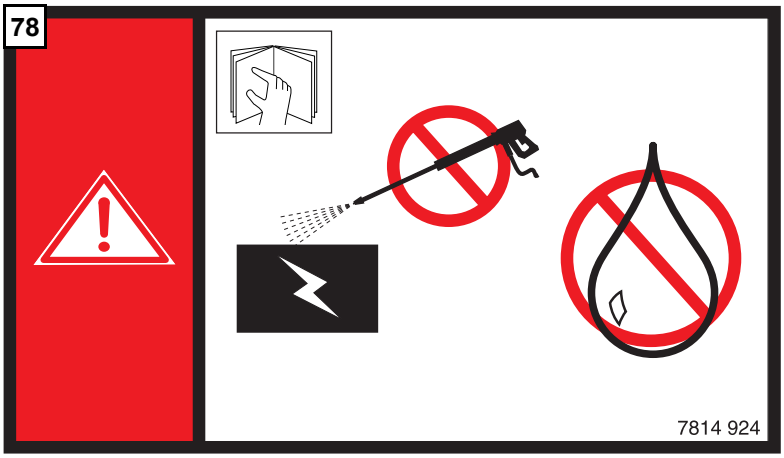

79

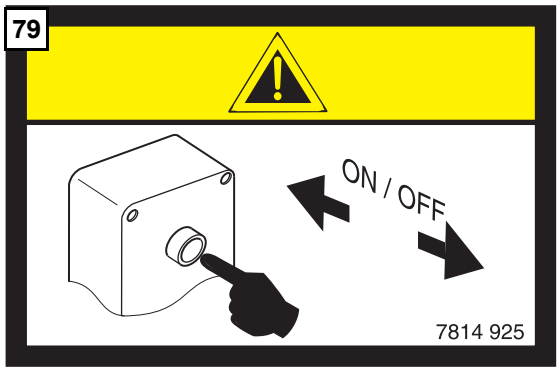

2.6.10 -References of the machine's labels

Item	Code	Qty	Designation
1	**30 7814 3570**	1	Greasing of the rotation ring
2	**30 7814 3530**	2	Before slewing, remove the rod
3	**30 7814 3640**	2	Do not climb onto the hood
4	**30 7814 3540 a**	1	The plug must be connected
4	**30 7814 5730**	1	220V plug for Holland
5	**30 7814 3600**	2	Do not wash... Do not use the machine...
6	**30 7814 3240**	1	Operating instruction (French)
6	**30 7814 3430**	1	User instructions (Spanish)
6	**30 7814 3440**	1	User instructions (German)
6	**30 7814 3450**	1	User instructions (English) and for bi-energy (Australian)
6	**30 7814 3460**	1	User instructions (Italian)
6	**30 7814 3470**	1	User instructions (Dutch)
6	**30 7814 4560**	1	Diesel operating instruction (Australia)
6	**30 7814 4940**	1	User instructions (Danish)
6	**30 7814 5540**	1	User instructions (Finnish)
6	**30 7814 5830**	1	User instructions (Portuguese)
7	**30 7814 5180**	1	Multi-language, do not interchange
8	**30 7814 3490**	1	Risk of electrocution: this machine is not isolated
8	**30 7814 4430**	1	Australian standard electrocution danger (Australia)
9	**30 7814 3880**	2	Do not park in the area in which the machine is working
10	**30 7814 3630**	2	Risk of crushing of body
11	**30 7814 3620**	2	Risk of crushing (hands and fingers)
12	**30 7814 5070**	1	Danger: direction of travel
13	**30 7814 3520**	1	Hydraulic oil
14	**30 7814 3590**	1	«High and low level» hydraulic oil
15	**30 7814 3930 a**	1	Green arrow (forwards)
16	**30 7814 3940 a**	1	Green arrow (backwards)
17	**30 7814 3060**	1	Turret panel
18	**30 7814 9940**	1	«Basket» panel
19	**30 7814 6470**	2	Floor height + load capacity for HA26 PX
19	**30 7814 3870 c**	2	Floor height + load capacity for HA20 PX
20	**30 7814 4520**	2	Harness load rating (Australia)
21	**30 7814 4500**	1	Emergency operation (Australia)
22	**30 7814 4490 a**	4	Load rating of each sling (Australia)
23	**30 7814 4510**	1	Fuel filling with pump nozzle (Australia)
24	**30 7814 3680 b**	1	Refer to the Operating Manual
25	**30 7814 5700**	1	The plug must be connected (Australia)
26	**B12759**		Haulotte
27	**30 7814 3240 a**	1	Name plate (french)
27	**30 7814 3250 a**	1	Name plate (spanish)
27	**30 7814 3260 b**	1	Name plate (german)
27	**30 7814 3270 a**	1	Name plate (italian)
27	**30 7814 3280 a**	1	Name plate (italian)
27	**30 7814 3290 a**	1	Name plate (dutch)
27	**30 7814 4960 a**	1	Name plate (danish)
27	**30 7814 5550 a**	1	Name plate (finnish)
27	**30 7814 5840 a**	1	Name plate (Portuguese)
27	**30 7814 5950 a**	1	Name plate (swedish)
28	**30 7814 7650**		Name
29	**S2954**		Haulotte
75	**30 7814 8740**	1	Acoustic power
76	**30 7814 8890**	1	Organic hydraulic oil
77	**30 7814 9230**	1	Manual emergency operation assistance label
78	**30 7814 9240**	2	Built-in generator (option)
79	**30 7814 9250**	1	Built-in generator button (option)
80	**242 180 8660**		Yellow and black adhesive marking

2.6.11 -Labels positioning

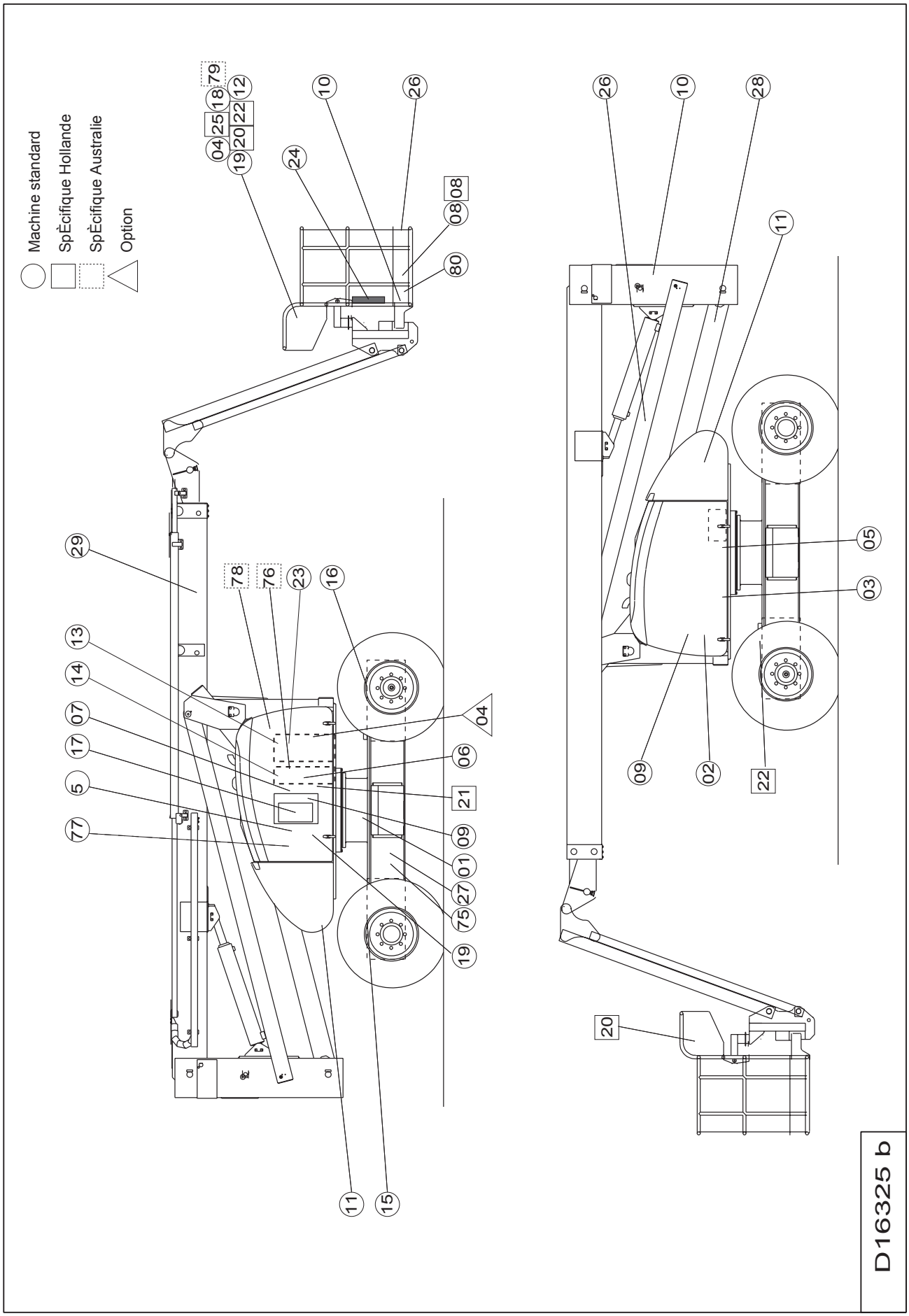

3 - OPERATING PRINCIPLE

3.1 - HYDRAULIC CIRCUIT

All the machine's movements are performed by the hydraulic power supplied by an open-circuit self-regulating piston pump, equipped with a «LOAD SENSING» compensator.

3.1.1 - Travel, slewing, arm lifting and boom raising movements

Carried out in pressure-compensated proportional distribution. The pump's flow rate, through the «LOAD SENSING» line, adapts automatically to suit the demand. In neutral, there is no pump flow.

3.1.2 - Telescoping, pendular, platform rotation, compensation and steering movements

Are controlled by 4-way solenoid valves. On/off flow. A spool in the proportional position valve supplies the flow necessary for these movements.

3.1.3 - Telescoping, boom raising, arm lifting and pendular cylinders

Are equipped with leaktight and flanged balancing valves.

3.1.4 - Platform rotation

Caution!
Adjustment can only be carried out by specialist personnel.

Uses a hydraulic motor. The rotation speed is adjustable by the chokes

3.1.5 - Compensation

Works by oil transfer between 2 cylinders with similar characteristics.

The compensation input cylinder is equipped with a flanged piloted valve double.

3.1.6 - Travel (moving the machine)

Four two-speed hydraulic motors mounted in the wheels drive the wheels via epicyclic reducers.

The pressure supply of these motors eliminates the action of the brake. As soon as the movement stops, the brake puts itself back in position under the action of springs

On each axle there is provided a hydraulic differential lock.

The two travel speeds (high, low) are controlled by a switch.

Low travel speed	High travel speed
The four motors are high-output.	The four motors are piloted by a solenoid valve, low-output.
Each axle receives half of the flow supplied by the pump, thanks to two proportional sliding spools, controlled by the same manipulator. On each axle, the motors are supplied in parallel. They each receive a quarter of the pump's flow. A hydraulic differential lock is provided.	The manipulator controls the two proportional trays and the pump output is shared between the right and left wheels. On either side, the motors are in series.

3.2 - ELECTRICAL CIRCUIT

3.2.1 - General

The electrical energy used for the controls and heat engine starting is supplied by a 12-volt battery.

For the purpose of not enabling the machine to be used beyond its possibilities, safety devices are provided to protect the personnel and the machine.They immobilise the machine or neutralise the movements.

In this case poor knowledge of the characteristics and operation of the machine can lead one to believe that there is a breakdown when in fact it is the safety devices which are working properly.

It is therefore essential to assimilate all the instructions in the following chapters.

Caution!
Do not carry out any operations before having assimilated the instructions in Chapter 4.3, page 35.

3.2.2 - Automatic engine stop

The engine is automatically switched off when:

- the alternator is no longer working.
- the oil temperature is too high.
- the oil pressure is too low.

3.2.3 - Platform load monitor

If the platform load reaches 100% of the maximum permitted load, the buzzer alerts the operator.

If load in the platform reaches 110% of maximum authorised load, the control circuit is disconnected, disabling all movements except turntable rotation. Load must be removed to reset.

If machine overload is reached when a movement has already been started, this movement is not stopped. Machine movement will be disabled when the manipulator is returned to the neutral position.

3.2.4 - Checking the inclination

In the work position (machine extended) the tilt sensor emits a sound when the maximum allowable tilt is reached. If this state continues after a period of 1 to 2 seconds, the following movements are disabled: arm lifting, jib, travel and boom lifting.

When the telescope is fully retracted, the boom lifting movement is re-enabled.

The travel function is disabled until all elevation elements are stowed. The machine can then be moved to an allowed tilt.

NOTE : Machine unfolded, the tilt monitor box gives an audible signal so long as the slope is greater than the permitted threshold, indicating to the operator that it will be impossible to deploy the platform further.

3.2.5 - High travel speed

The high travel speed is permitted only when the platform is completely folded.

When the boom is raised or the arms deployed or the telescopic cylinder extended, only the micro-speed is possible in travel.

3.2.6 - Hour counter

An hour counter indicates how long the heat engine has been operating.

3.2.7 - Reach limitation (HA 26PX)

When the boom's angle is less than 55°, telescoping is limited. The maximum reach is then 13.2 m.

3.3 - EMERGENCY ASSISTANCE AND RESCUE

Caution!
Operations to be carried out by a trained and qualified operator.

3.3.1 - Rescue

This is where the operator in the platform is no longer in a position to control the movements although the machine is working normally. Here too, a qualified operator on the ground can use the turret panel with the main diesel power supply to bring the operator in the platform down.

3.3.2 - Emergency assistance

A stand-by electropump unit controlled from the platform or the turret makes it possible to overcome a fault on the main pump.

If an operating problem does not allow the user in the platform to come down to the ground, a qualified operator on the ground can do it using the electric pump and electric controls on the turret panel.

Instructions:

- Turn the key to the "turntable station" position (Ref 15 Photo 4, page 35)
- Activate the standby unit control switch (Ref 10 Photo 4, page 35).
- Activate the switches corresponding to the movements required (Ref 5, 6, 7, 8, 9 Photo 4, page 35).

3.3.3 - Manual emergency assistance system

If the diesel engine is working, and in case of breakdown not allowing the use of arm lifting, boom raising, turret slewing, pendular, basket rotation, compensation of turret and platform panels, it is possible to perform these movements using the mechanical levers, and pushing the manual control of the solenoid valve situated at the top on the general distribution block.

Caution!
To make these operations, there must be three operators on the ground.

NOTE : Before any use of the machine, it is essential to read and understand the emergency help label.

Manual emergency help label

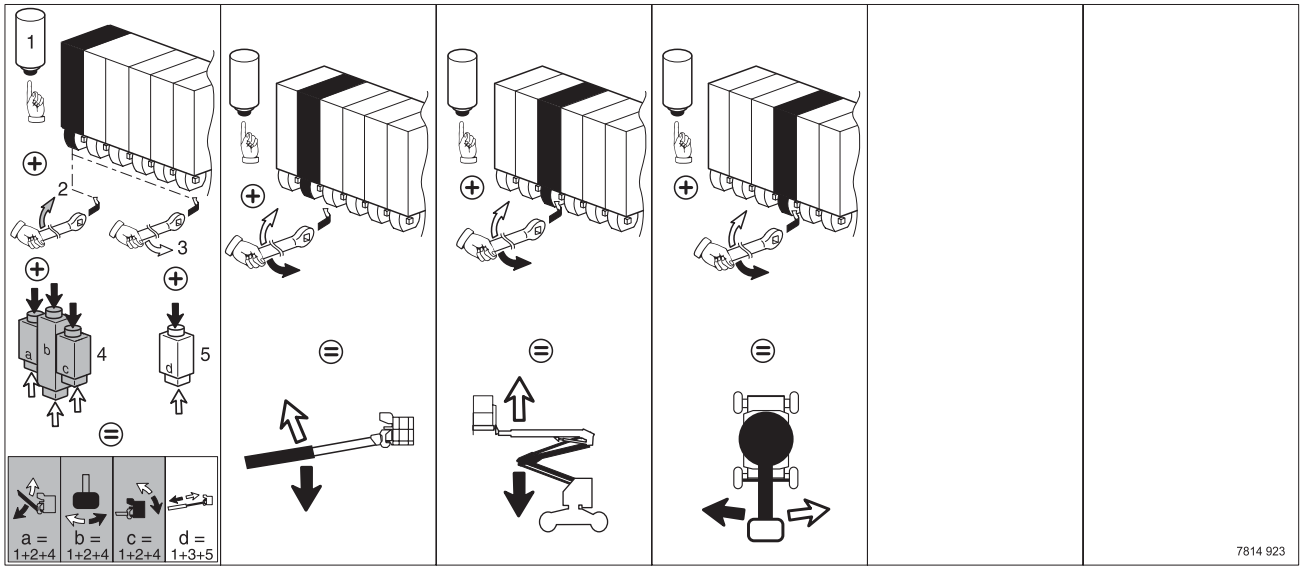

https://truckmanualshub.com/

Photo 1 Manual emergency system

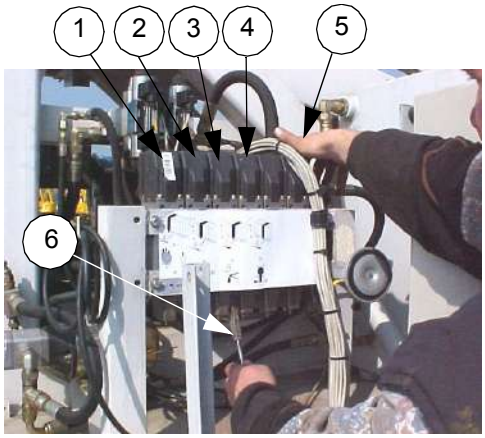

- ***Manual emergency system for turntable orientation:***

Instructions:
- Take hold of the lever (Ref 6, Photo 1, page 27).
- Position the lever on the distributing valve (Ref 4, Photo 1, page 27).
- Press the manual control on the electrovalve (Ref 5, Photo 1, page 27).
- Press the manual control and at the same time:
  * move the lever up to turn the turntable to the right, as seen from the basket,
  * move the lever down to turn the turntable to the left, as seen from the basket.

- ***Manual emergency system for arm lifting:***

Instructions:
- Take hold of the lever (Ref 6, Photo 1, page 27).
- Position the lever on the distributing valve (Ref 3, Photo 1, page 27).
- Press the manual control on the electrovalve (Ref 5, Photo 1, page 27).
- Press the manual control and at the same time:
  * move the lever up to lift the arm,
  * move the lever down to lower the arm.

- ***Manual emergency system for boom lifting:***

Instructions:
- Take hold of the lever (Ref 6, Photo 1, page 27).
- Position the lever on the distributing valve (Ref 2, Photo 1, page 27).
- Press the manual control on the electrovalve (Ref 5, Photo 1, page 27).
- Press the manual control and at the same time:
  * move the lever up, to lift the boom.
  * move the lever down, to retract the boom.

Photo 2 Distribution unit on / off - Jib - Basket rotation - Compensation

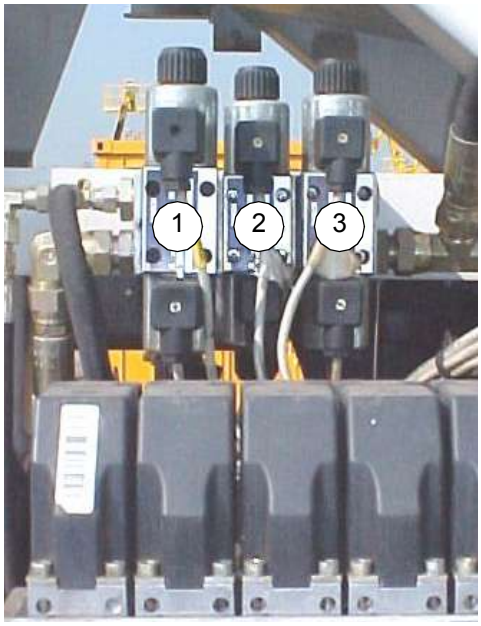

- ***Manual emergency system for the jib:***

Instructions:
- Take hold of the lever (Ref 6, Photo 1, page 27).
- Position the lever on the distributing valve (Ref 1, Photo 1, page 27).
- At the same time, press the manual control on the electrovalve (Ref 5, Photo 1, page 27) and the distributing valve corresponding to jib movement (Ref 1, Photo 2, page 28)
- Press the manual control and the distributing valve corresponding to jib movement at the same time, move the lever up.

- ***Manual emergency system for basket rotation:***

Instructions:
- Take hold of the lever (Ref 6, Photo 1, page 27).
- Position the lever on the distributing valve (Ref 1, Photo 1, page 27).
- At the same time, press the manual control on the electrovalve (Ref 5, Photo 1, page 27) and the distributing valve corresponding to basket rotation movement (Ref 2, Photo 2, page 28).
- Press the manual control and the distributing valve corresponding to basket rotation movement at the same time, move the lever up.

- ***Manual emergency system for compensation:***

Instructions:
- Take hold of the lever (Ref 6, Photo 1, page 27).
- Position the lever on the distributing valve (Ref 1, Photo 1, page 27).
- At the same time, press the manual control on the electrovalve (Ref 5, Photo 1, page 27) and the distributing valve corresponding to compensation movement (Ref 3, Photo 2, page 28)
- Press the manual control and the distributing valve corresponding to the compensation movement at the same time, move the lever up.

https://truckmanualshub.com/

Photo 3 Distribution unit on/off - Telescoping

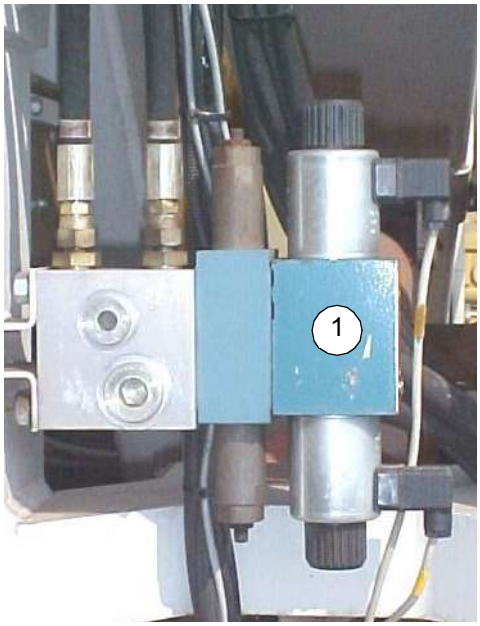

- ***Manual emergency system for telescoping:***

Instructions:

- Take hold of the lever (Ref 6, Photo 1, page 26).
- Position the lever on the distributing valve (Ref 1, Photo 1, page 27).
- At the same time, press the manual control on the electrovalve (Ref 5, Photo 1, page 27) and on the distributing valve corresponding to telescoping movement (Ref 1, Photo 3, page 29)
- Press the manual control and the distributing valve corresponding to the telescoping movement at the same time, move the lever down.

4 - USING THE MACHINE

4.1 - OPERATING SAFETY DEVICES

For the purpose of not enabling the machine to be used beyond its possibilities, safety devices are provided to protect the personnel and the machine.

Caution!
They immobilise the machine or neutralise the movements.

In this case poor knowledge of the characteristics and operation of the machine can lead one to believe that there is a breakdown when in fact it is the safety devices which are working properly.

It is therefore essential to assimilate all the instructions in the following chapters.

Caution!
Do not carry out any operations before having assimilated the instructions in Chapter 4.3, page 35.

4.1.1 - Movement (control from the «platform» post)

In order to move the machine, it is necessary to put the «dead man's» safety device into service by keeping the manipulator's button depressed.

Releasing the safety device's button causes travel to stop.

Travel is possible up to a maximum slope of 5° (about 9%) : HA20, 3° : HA26 .

Caution!
When travelling, the boom raising, arm lifting and turret slewing movements are not possible.

NOTE : The high and low travel speeds are possible only if the telescope is retracted and if the boom is down to the horizontal position. Otherwise, the micro-speed is automatically selected.

4.1.2 - Emergency or recovery procedure

In the event of the need to proceed with an emergency or recovery operation, the safety devices being neutralised

Caution!
Only a competent operator can carry out these operations.

4.2 - OFFLOADING - LOADING - MOVEMENT - PRECAUTIONS

Caution!
When transporting the machine, it is compulsory to lock the turret by means of locking rod situated under the turret (Photo 10, page 38).

Caution!
An incorrect operation can cause the machine to fall and cause very serious bodily injury and material damage.

NOTE : Before any operation, check the condition of the machine, so as to make sure that it has not been damaged during transport. Otherwise, make the necessary reserves with the carrier in writing.

Carry out the offloading operations on a stable, sufficiently resistant (see Ground pressure - Chapter 2.4, page 11), flat and uncluttered surface.

4.2.1 - Offloading by lifting

Fig 3, page 32

Caution!
Never stand under or too close to the machine during operations.

- Use a lifting beam with 4 slings.
- Precautions. Make sure that:
  - the lifting accessories are in good condition and have sufficient capacity.
  - the slinging accessories can support the load and do not have abnormal wear.
  - the slinging lugs are clean and in good condition.
  - the personnel performing the operations is authorised to use lifting equipment.
- Offloading :
  - hook the 4 slings on the 4 slinging lugs.
  - lift slowly, making sure that the load is evenly distributed, and set the machine down slowly.

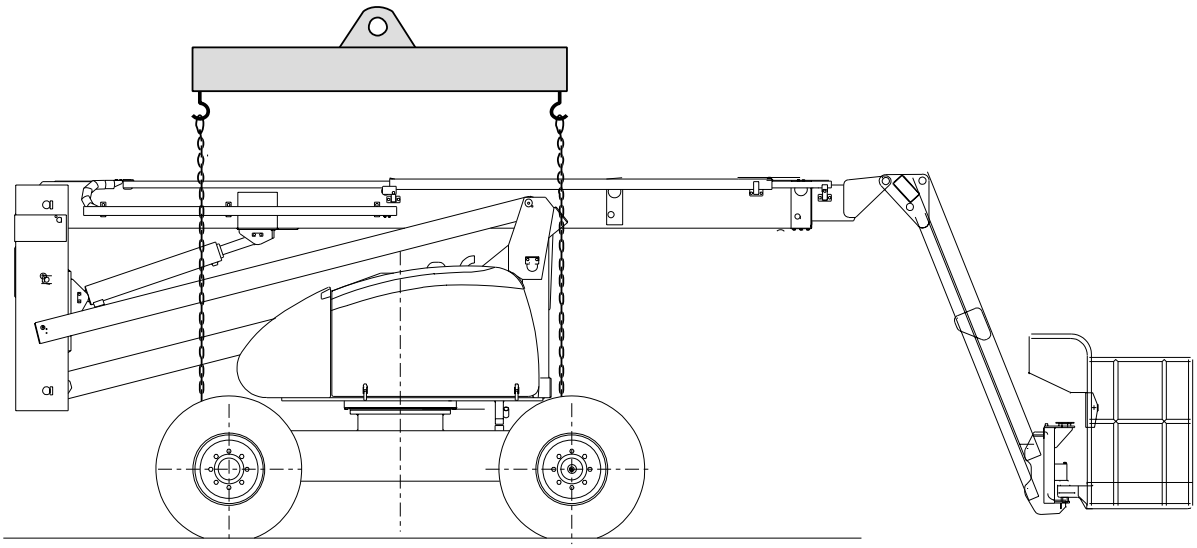

Fig. 3 - Offloading by lifting

4.2.2 - Offloading with ramps

Precautions : make sure that the ramps can support the load and that adherence is sufficient to avoid any risk of slipping during the operation and that they are correctly fixed.

Caution!
Since this method requires the machine to be switched on, refer to Chapter 4.4, page 40 to avoid any risk of incorrect operation.

Select low travel speed.

NOTE : Since the slope of the ramp is practically always greater than the maximum working slope (5°), it is necessary to have the boom and the arms lowered to authorise travel. In this case, the buzzer sounds but travel is possible.

If the slope is greater than the maximum travel slope (see Chapter 2.4, page 11): use a hoist in addition to traction.

4.2.3 - Loading

Fig 4, page 33

The precautions are identical to the offloading precautions.

Chocks must be provided in accordance with the sketch below.

In order to go up a lorry's ramps, select high speed.

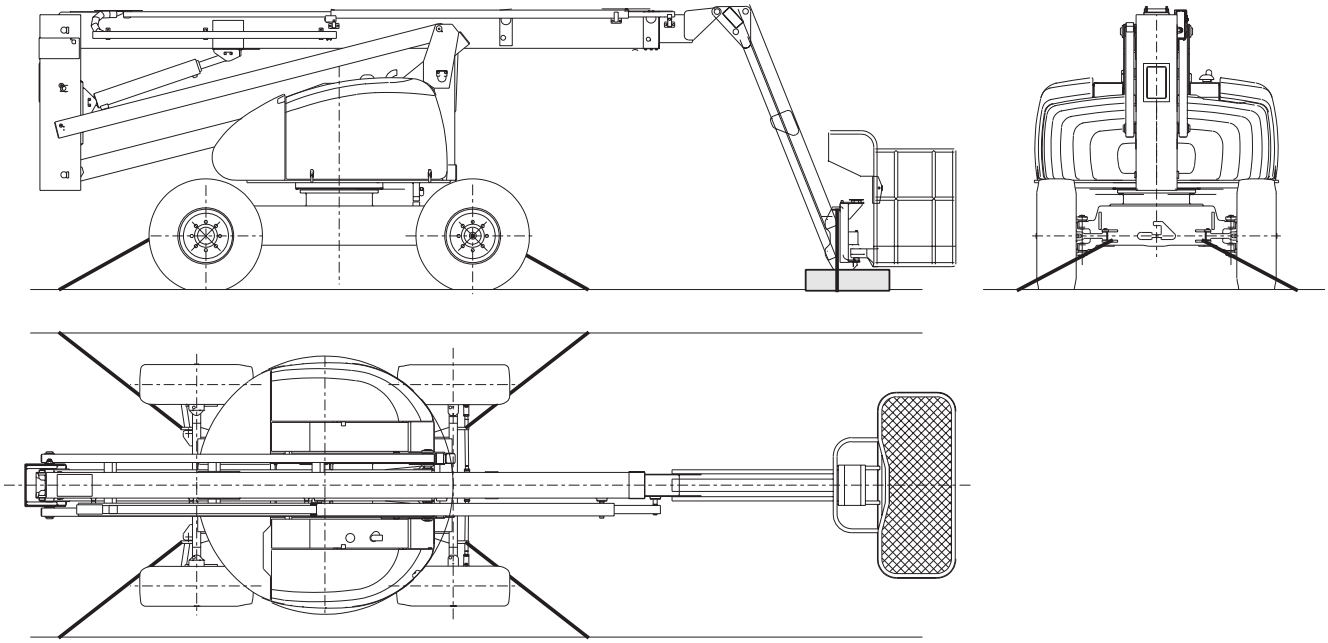

Fig. 4 - Loading

4.2.4 - Travel

Caution!
It is forbidden to travel on the public highway.

- Comply carefully with the traffic instructions or regulations where the machine is travelling.
- On uneven ground, do a prior reconnaissance of the route before beginning high work.
- Always keep a sufficient distance away from unstable edges or tilts.
- Make sure that there is no one in the immediate vicinity of the machine before carrying out a movement or travelling.

4.2.5 - Filling the fuel tank

- Make sure, before any filling operation, that the fuel is the one recommended and that it is stored cleanly so as not to be polluted.
- Do not pump from a drum if the latter is not decanted and never use the bottom.

Because of fire risks during tank filling, take the following precautions :

- do not smoke,
- switch off the heat engine if it is on,
- stand downwind so as not to be sprayed with fuel,
- with the pump's pouring spout, touch the outside of the filling hole before beginning to fill up, so as to avoid the risk of sparks due to static electricity,
- replace the tank filler cap properly and clean off any fuel which has run outside the tank.

4.3 - OPERATIONS BEFORE FIRST PUTTING INTO SERVICE

REMINDER: Before any operation, familiarise yourself with the machine by referring to this manual, the engine's manual, and the instructions on the various plates.

4.3.1 - Familiarisation with the control stations

IMPORTANT : before each machine operation or after a period of inactivity, consult the starting operations (Chapter 5.3, page 48) in order to check the various levels and certain maintenance points.

4.3.1.1 -«Turret» control post

Photo 4 Turret control panel.

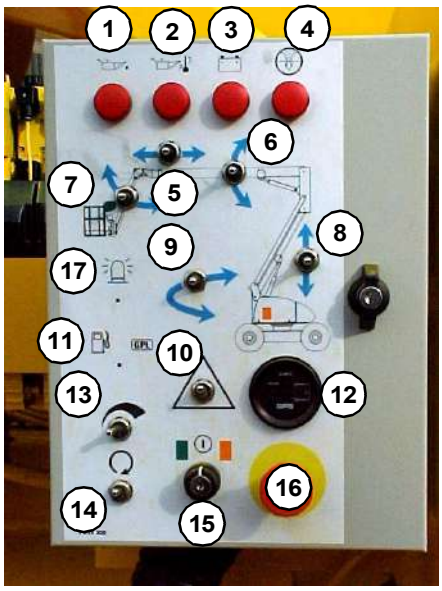

1 - Engine oil pressure warning light
2 - Engine temperature warning light
3 - Battery charge indicator
4 - Filter clogging indicator
5 - Boom telescoping control
6 - Boom raising control
7 - Pendular control
8 - Lifting control
9 - Turret slewing control
10 - Stand-by unit control
11 - Diesel/LPG selector switch
12 - Hour counter
13 - Engine acceleration control
14 - Engine starting switch
15 - Turret/platform control post selection
16 - Emergency stop switch
17 - Revolving light control
18 - 220 V single-phase - 16 A power point
19 - Tilt monitor box

Photo 5 a/ Tilt - b/ 220V plug socket

Caution!
When using a pressure washer, do not aim the jet directly at the electrical equipment cabinets and boxes.

4.3.1.2 -«Platform» control post

Photo 6 Platform control panel

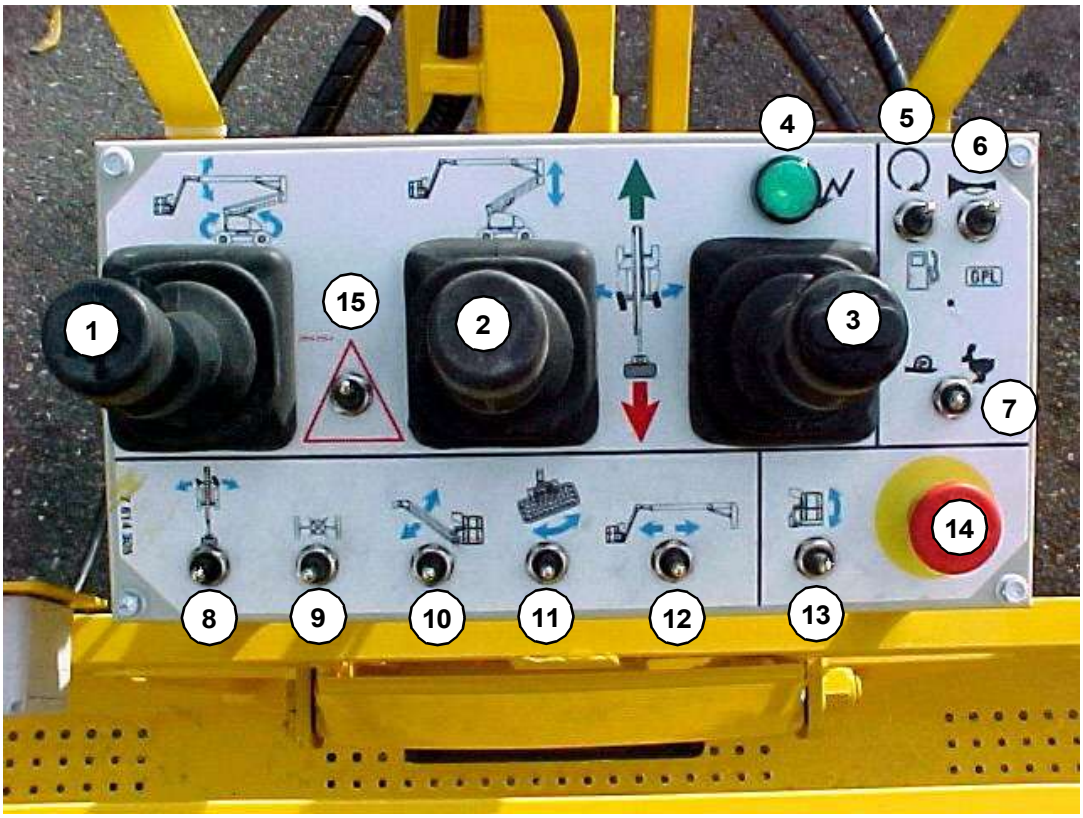

1. Boom lifting and slewing manipulator
2. Arm lifting manipulator
3. Travel and steering manipulator

NOTE : The manipulators are equipped with a dead man's safety switch.

4. Mains «on» warning light
5. Starting switch
6. Horn switch
7. Low/high speed selector switch
8. Steering switch
9. Differential lock switch
10. Pendular switch
11. Platform rotation switch
12. Telescope switch
13. Compensation switch
14. Emergency stop switch
15. Stand-by control
16. 220 V single-phase - 16 A plug socket (Photo 7, page 36)

Photo

4.3.2 - Checks before using the machine

4.3.2.1 -Movement zone

- Make sure that the machine is on flat and stable ground which can support the weight of the machine (see Chapter 2.4, page 11 - Ground pressure).

NOTE : See table, Chapter 2.4, page 11, for max. permitted tilts.

- Make sure that no obstacle can interfere with the following movements:
  - travel (machine travel)
  - turret slewing
  - boom raising and telescoping : see sketch, Chapter 2.3, page 9

4.3.2.2 -General appearance

- Make sure that the turret rotation locking rod (Photo 10, page 38) is removed.
- Visually inspect all of the machine: chipped paint or battery acid leaks must attract your attention.
- Check that there are no bolts, nuts, connectors and hoses undone, no oil leaks, no electric conductors cut or disconnected.
- Check the arms, boom and platform: no visible damage, no signs of wear or deformation.
- Check that there are no leaks and no signs of wear, impacts, scratches, rust or foreign matter on the rods of the cylinders.
- Check that there are no leaks on the wheel reducers.
- Hydraulic control block and pump: no leaks, components tight.
- Check that the reducers are not disconnected.
- Check the tightness of the wheel nuts and the tyre wear.
- Check the cleanness and tightness of the battery terminals: loose terminals or corrosion cause loss of power.
- Check the battery electrolyte level: the level must be about 10 mm above the plates; top up if necessary with distilled water.

Caution!
Comply with the battery manufacturer's safety instructions.

- Check the condition of the main control panel's supply cable.
- Check the operation of the emergency stops.

Caution!
These machines are not isolated and must not be put into service near power lines.

- Check the cleanness of the air filter: see engine manual.
- Check the following levels:
  - engine oil: dipstick (item 1 Photo 8, page 38); if necessary top up (see engine manual).
  - hydraulic oil (item 1 Photo 9, page 38), if necessary top up by filling through the cap (item 2, Photo 9, page 38).
  - Diesel level : the min. and max. levels are visible when the hood is closed thanks to 2 slots. Fill up if necessary (cap, item 3, Photo 9, page 38).

Caution!
When topping up, use the products recommended in the Ingredients Chapter 5.2.1, page 46

- Check the hydraulic oil filter's clogging indicator (item 2 Photo 8, page 38). If the red mark is visible, replace the filter cartridge (see Chapter 5.3.2, page 49).

- Check the operation of the tilt monitoring box (item 19, Photo 5, page 35) by inclining the support plate. Beyond an angle of 5° it must give an audible signal.

Photo 8 Engine

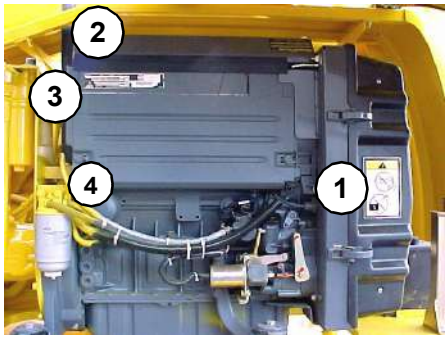

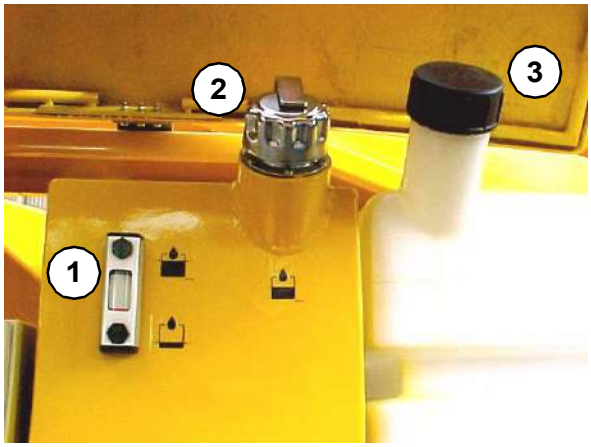

Photo 9 Engine oil and diesel tank

Photo 10 Turret rotation lock

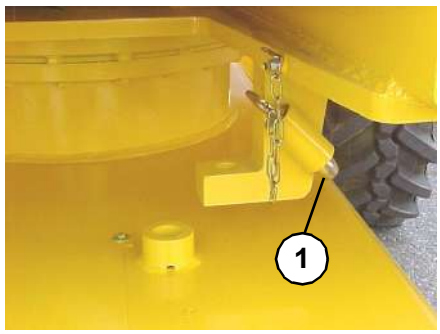

- Turret rotation locking rod:
  - make sure that the turret rotation locking rod (item. 1 Photo 10, page 38) is removed.

Caution!
When transporting the machine, it is compulsory to lock the turret by means of locking rod situated under the turret (Photo 10, page 38).

4.3.3 - Built-in generator (option)

Caution!
Do not expose the built-in generator to direct contact with a jet of water or a high pressure cleaner.

The built-in generator enables voltage supply (220V or 110V depending on the option chosen) in the platform to enable connection of a tool, with maximum power 3.3 KW.

Photo 11 - Built-in generator and

Photo 12 - socket in the basket

4.3.3.1 -Instructions

- Switching on the built-in generator
  - Start the machine and allow the motor to warm up for 15 minutes before use.
  - Press the button above the electric socket (the motor accelerates) and the button's green light indicator comes on (Photo 12, page 39
  - Connect the tool to the socket.
  - At any time, you can change the tool.

NOTE : When using the built-in generator, you cannot make any machine movements. To make a movement, you must switch off the built-in generator (see instructions below).

- Switching off the built-in generator
  - Disconnect the tool from the socket
  - Press the button above the electric socket (the motor slows down) and the green light indicator goes out. (Photo 12, page 39.
  - Movement is active once again, you can make any movements.

4.4 - PUTTING INTO SERVICE

Caution!
Putting into service must begin only when all the operations in the previous chapter have been scrupulously carried out.

REMINDER: The main operating post is in the platform.

Caution!
In normal use the «turret» operating post is an emergency or back-up post and must be used only if absolutely necessary.

To become familiar with the machine, you should perform the first movements on the ground, leaving the machine in the transport position: counterweight at the front and boom lowered.

When the counterweight is placed above the steered wheels, the travel and direction controls react in the opposite direction.

4.4.1 - Operations from the ground

4.4.1.1 -Starting the engine: Photo 4, page 35

- Make sure that the emergency stop button (item 16) is pulled out.
- Put the control post selection key switch (item 15) in the «ground control» position (pictograms). In this position the «platform» panel's controls are overridden.
- The battery charge (item 3) and engine oil pressure (item 1) warning lights are «on». The air filter clogging light (item 4) is «off».
- Press the starting button (item 14); when the engine has started, the «on» lights (items 1 and 3) go off.

NOTE : If the engine does not start, switch off the ignition by pressing the emergency stop button and start the operation again.

- Allow the engine to warm up, and in the meantime check that the hour counter (item 12), engine and pump are working properly.

4.4.1.2 -Testing the movements (Photo 4, page 35)

Caution!
Make sure before any movement that no obstacle can interfere with the operations.

- Test the arms lifting movement in the «up» and then «down» direction (switch, item 8).
- Test the boom raising movement in the «up» and then «down» direction (switch, item 6).
- Stop the boom «down» movement when it is in the horizontal position.
- Then test the turret slewing movements in both directions (switch, item 9) and the boom's extension and then retraction telescoping (switch, item 5), then lower the boom again completely.

4.4.1.3 -Switching to «platform» control

- Put the control post's key selector switch (item 15, **Photo 4, page 35**) in the «platform» position (green rectangle).
- Check the operation of the tilt monitoring box (item 19, Photo 6, page 36).

4.4.2 - Operations from the platform

(Photo 6, page 36)

- Get into the basket, complying with the maximum load instructions, and if necessary distributing the load over the whole platform.

Caution!
MAXIMUM LOAD:
HA20P: 250 kg
HA26P: 230 kg
(including 2 people)

NOTE : If you are approaching the maximum load, the buzzer must give an audible signal. If this load is exceeded, all the machine's movements are cut off. It is then necessary to shed the load. There is no load restriction with the reach.

4.4.2.1 -Testing the control post

- Make sure before any operation that the green light (item 4) is «on». This indicates that the machine is «on» and that the control post's selector switch is in the «platform» position.
- Make sure that the emergency stop button (item 14) is unlocked.
- Check the operation of the horn.

Caution!
High speed is possible only if the machine is folded. Even slightly deployed, only the low speed is permitted.

The work can begin.

4.4.2.2 -Testing the movements

In order to carry out a movement, it is necessary to choose the corresponding manipulator or selector switch.

Press the «dead man's» switch and operate the desired manipulator.

The speed and angle of the manipulator will give progressiveness of the movement.

If the floor is not horizontal, correct the position of the platform with the corresponding selector switch.

Test the telescoping, pendular and basket rotation movements with the associated selector switch.

Test the front axle's steering movement using the selector switch located on the travel manipulator's handle, and test the rear axle's movement using the selector switch situated on the platform's panel.

Test the 2 travel speeds by operating the high or low speed selector switch

The direction of the movements is indicated by blue arrows.

4.5 - EMERGENCY AND BACK-UP OPERATIONS

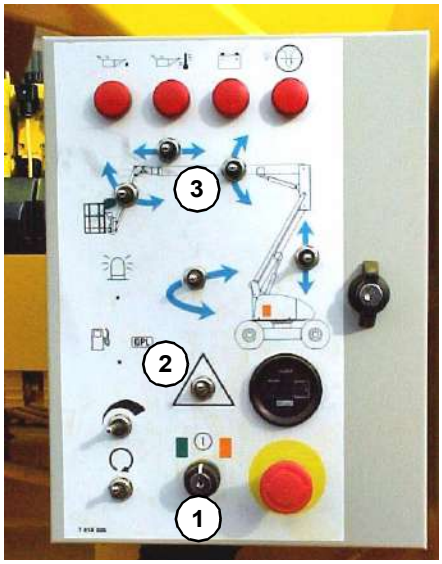

Photo 13 - Stand-by unit control

4.5.1 - Emergency assistance with the stand-by electropump unit

There is a means for carrying out the movements when the main power supply is working badly. This is an electropump unit powered by the starting battery. This can be controlled both from the turret panel and from the platform panel.

- Operating instructions:
  - Select the control panel that you want to validate (green or orange) (item. 1)
  - Activate the emergency control and hold in position (item. 2).
  - Activate the switch corresponding to the movements required and hold in position (item. 3).

4.5.2 - Back-up

If the machine is in normal operation and the operator, on the platform, is unable to lower the platform to the ground, an operator on the ground can do it:

- Put the selection key (item 15, photo 1) in the «turret» position.
- Control the desired movements by means of the controls corresponding to normal operation.

https://truckmanualshub.com/

4.5.3 - Uncoupling

Photo 14 Cap

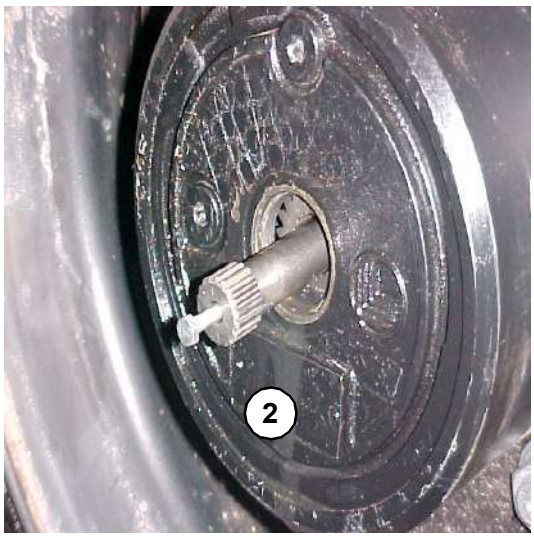

Photo 15 Grooved central pin

It is possible to uncouple the reducers of the 2 wheels in 4x2x4 and 4 wheels in 4x4x4 so as to be able to tow the machine.

To tow the machine, use a rigid tow bar in order to avoid any risk of accident.

- Unscrew the cap (item 1 - Photo 14, page 43) (central nut).
- Using a 6 x 50 screw, remove the grooved central pin (item 2 - Photo 15, page 43).
- Screw the cap back into place.

When the cap is removed, oil flows from the reducer.

NOTE : After repair work on the machine it will be necessary :
** to correctly reposition the cap on each wheel.*
** to top up according to the instructions in Chapter 5.3.2, page 49.*

Caution!
In this configuration, the machine is no longer braked. To tow the machine, it is essential to use a rigid bar and not to exceed 5 kph.

5 - MAINTENANCE

5.1 - GENERAL RECOMMENDATIONS

The maintenance operations indicated in this manual are given for normal conditions of use.

In difficult conditions: extreme temperatures, high humidity, polluting atmosphere, high altitude, etc., some operations must be carried out more frequently and special precautions must be taken. Refer to the engine manual and your local PINGUELY-HAULOTTE agent.

Only qualified and competent personnel can carry out any work on the machine and they must comply with the safety instructions relating to the protection of personnel and environmental protection.

Caution!
For the engine part, refer to the instructions in the engine manufacturer's manual.

Regularly check the operation of the safety devices:

* Tilt : buzzer + stop (travel cut as well as boom raising, arm raising and telescope extension).
* Platform overload - load > permitted load (see tables, Chapter 2.5, page 13, Chapter 2.6, page 15), buzzer + complete stopping of all movements, except basket rotation.
* High speed impossible (or intermediate speed for 4x4 model) if boom raised, arm raised, telescope extended.

Caution!
Do not use the machine as a welding earth.
Do not weld without disconnecting the battery's (+) and (-) terminals.
Do not start other vehicles with the batteries connected.

5.2 - MAINTENANCE SCHEDULE

The schedule on the next page indicates the intervals, the maintenance points (parts) and the ingredients to be used.

- The mark in the symbol indicates the maintenance point depending on the interval.
- The symbol represents the consumable to be used (or the operation to be carried out).

5.2.1 - Consumables

CONSUMABLE	SPECIFICA-TION	SYMBOL	Lubricants used by PINGUELY-HAULOTTE	ELF	TOTAL
Engine oil	SAE 15W40		SHELL RIMULA-X		
Gearbox oil	SAE 90		ESSO	TRANSELF	TM 80 W/90
Hydraulic oil	AFNOR 48602 ISO VG 46		BP SHF ZS 46	HYDRELF DS 46	EQUIVIS ZS 46
Organic hydraulic oil (option)	BIO ISO 46				
Lithium extreme pressure grease	ISO - XM - 2				
Lead-free grease	Grade 2 or 3		ESSO GP GREASE	MULTIMOTIVE 2	MULTIS EP 2
Replacement or special operation					
Grease			Ceplattyn KG 10 HMF		FUCHS
Grease			Energrease LS - EP2		BP

https://truckmanualshub.com/

5.2.2 - Maintenance diagram

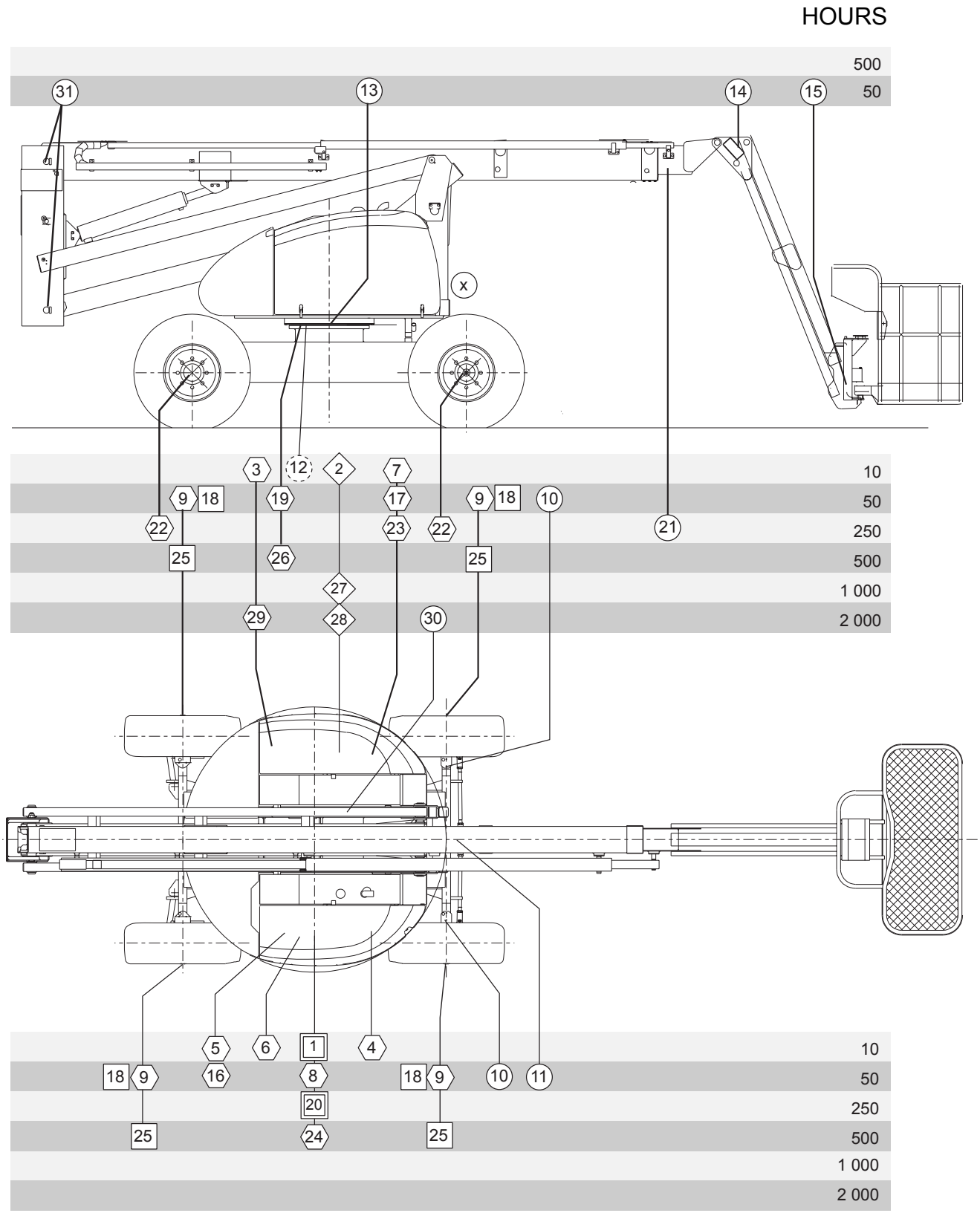

5.3 - OPERATIONS

5.3.1 - Summary table

INTERVALS	OPERATIONS	ITEMS
Each day or before each putting into service	• Check the following levels: - engine oil - hydraulic oil - diesel - electric batteries • Check the cleanness of the following: - gasoil pre-filter - engine air filter - machine (check in particular the watertightness of the connectors and hoses), take this opportunity to check the condition of the tyres, cables and all accessories and equipment. • Check the clogging of the hydraulic oil filter: an indicator indicates clogging; change the cartridge when the mark appears.	 1 2 3 4 5 6 7
Every 50 hours	• Engine: see engine manufacturer's manual • Check the level of the drive wheel reducers (see Chapter 5.3.2.2, page 49) • Grease: - the wheel pivot pins: 8 points - steering axle, centre pivot and slot pin: 10 points - slewing ring : bearing (2 points) - slewing ring : teeth (brush) - pendular hinge pin: 2 points - pendular link piece hinge pin: 4 points - boom bottom shaft: 1 point • Clean gasoil pre-filter	8 9 10 11 12 13 14 15 31 16
After the first 50 hours	• Change the hydraulic filter's cartridge (see 250 hour interval) • Drain the drive wheel reducers (see 500 hour interval) - 2 points for 4x2 model - 4 points for 4x4 model • Check the tightness of the slewing ring screws (torque: 27 daNm)	17 18 19
Every 250 hours	• Engine: see engine manufacturer's manual • Grease the telescope's friction parts (spatula) • Check the condition of the telescopic cylinder friction pads • Check the tightness of the wheel nuts (torque: 32 daNm) • Change the hydraulic filter's cartridge	20 21 22 23
Every 500 hours	• Engine: see engine manufacturer's manual • Drain the wheel reducers. Fill up again: capacity : 4 x 1.4 l • Ring screw : check tightness and tighten if necessary (torque: 27 daNm)	24 25 26
OPTION : every 500 hours or every 6 months	• Empty the hydraulic oil tank completely if you have the «organic hydraulic oil» option	27
Every 1000 hours or every year	• Engine: see engine manufacturer's manual • Drain the hydraulic oil reservoir	 27
Every 2000 hours	• Engine: see engine manufacturer's manual • Drain the hydraulic oil complete circuit and reservoir • Drain and clean the diesel tank • Grease: rotation reducer: 1 point	 28 29 30

REMINDER: All these intervals must be reduced if working in difficult conditions (refer to the After-Sales Department if necessary).

5.3.2 - Procedure

Caution!
For filling and lubrication, use only the lubricants recommended in the table of Chapter 5.2, page 46

NOTE : Collect the drained oils so as not to pollute the environment.

5.3.2.1 -Hydraulic oil filter :

Photo 16 Hydraulic oil filter

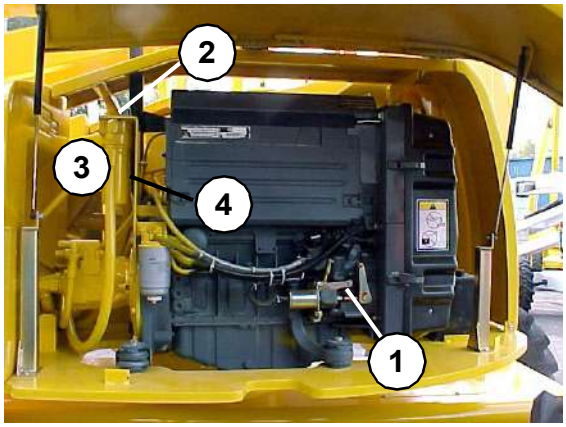

Filter with a clogging indicator.

- Change the cartridge (3) when the clogging mark appears in the indicator (2).

NOTE : Clogging must be checked when the oil is hot. When the oil is cold the mark can appear because of the viscosity of the oil.

- Undo the base nut (4) and remove the cartridge.
- Fit a new cartridge

Caution!
Before removal, make sure that the oil circuit is no longer pressurised and that the oil is no longer at too high a temperature.

5.3.2.2 -Drive wheel reducers

Photo 17 Wheel reducer

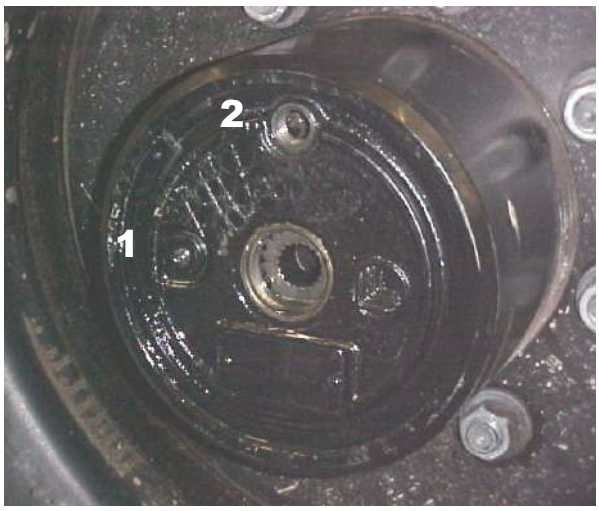

To check the oil level and to do an oil change it is necessary to remove the wheel. To do this, immobilise the machine and raise it using a jack or a hoist.

- Checking the oil level:
  - Rotate the wheel so as to put 1 plug (1) on a horizontal line and 1 plug (2) on a vertical line.
  - Undo the plug (1) and check the level which must be flush with the hole, if necessary top up.
  - Tighten the plug.
- Doing an oil change :
  - In the same position, undo the 2 plugs and let the oil run out.
  - Fill as indicated above.
  - Tighten the plugs.

Caution!
Make sure that the machine is correctly chocked, and that the lifting equipment has sufficient capacity and is in good condition.

5.3.2.3 -Slew ring

After any dismantling of the slew ring (item. 13 of the maintenance diagram), grease the outer teeth using a brush. See the list of consumables given in Chapter 5.2.1, page 46.

5.3.3 - List of consumables

- Hydraulic filter cartridge
- Air filter element
- Diesel pre-filter
- Diesel filter
- Engine oil filter

6 - OPERATING FAULTS

REMINDER: Complying with the machine's operating and maintenance instructions will prevent the majority of faults. However, some may occur and, before doing any work, it is essential to look in the following table (see chapter 6, page 41) to see if they are listed in it. Then follow the instructions. Otherwise, it will be necessary to contact the PINGUELY-HAULOTTE agent or the factory's After-Sales Department.

Before diagnosing a fault, it is necessary to check that:

- the fuel tank is not empty
- the batteries are correctly charged
- the turret's and platform's mushroom-headed emergency stop switches are unlocked
- the relays («basket» control panel - turret cabinet) are correctly pushed into their bases.

FAULT	PROBABLE CAUSES	REMEDIES
Engine does not start or stops	• Diesel tank empty • Batteries discharged • Fuse on printed circuit board (in electrical equipment cabinet) defective • Mushroom-headed switch depressed • Engine in «safety» mode: oil pressure, overheating, alternator charge, air filter clogging • Charge light bulb burnt out • Air filter clogging light «on» • Engine safety relay defective • Bad battery cable and terminal contacts	• Fill the tank • Recharge the batteries • Replace the defective fuses • Reset • See engine manufacturer's manual or call in After-Sales Department • Change the bulb • Change the cartridge • Replace the relay • Undo the terminals and clean them
Lack of pressure or power on the pump	• Air filter clogged • Engine speed too low • Oil leak on connector, hose, component • Oil filter dirty	• Change the filter • Adjust the speed (see After-Sales Department) • Repair or replace (see After-Sales Department) • Replace oil filter cartridge
No movement on platform	• Turret key selector switch in the wrong position • Overload on the platform • «Dead man's» safety device not actuated • Manipulator malfunction • Defect on the solenoid valve for the movement chosen • Lack of hydraulic oil • HA20P : Tilt or slope > 5°: up lifting cut-off • HA26P : Tilt or slope > 3°: up lifting cut-off	• Put it in the platform position • Shed load • Press the «dead man's» switch and keep it depressed during the movement • Replace the manipulator (see After-Sales Department) • Replace the solenoid valve or its coil • Top up • Lower arms and boom to reset • Lower arms and boom to reset

FAULT	PROBABLE CAUSES	REMEDIES
No high speed	• Platform slightly deployed	• Lower the arms and the boom completely
No direction movement	• Lack of hydraulic oil • «Dead man's» safety device not actuated	• Top up • Press the «dead man's» switch and keep it depressed during the movement
No travel, telescope extension, arms and boom raising, and buzzer sounding	• HA20P : Slope or tilt > 5° • HA26P : Slope or tilt > 3°	• Retract first of all the telescope, lower the arms and the boom to reset
The turret does not rotate	• The rotation locking rod is inserted in the chassis	• Pull out the rod
Hydraulic pump noisy	• Lack of oil in the reservoir	• Top up
Cavitation of the hydraulic pump	• Oil viscosity too high	• Drain the circuit and replace with the recommended oil
No adherence on a drive wheel	• Insufficient load on a wheel	• Adjust the lock key
Buzzer sounding	• HA20P : Slope or tilt > 5° • HA26P : Slope or tilt > 3° • Load on the platform close to cut-off • Hydraulic oil temperature too high	• Reset by retracting the telescopic cylinder and by lowering the boom • Shed load • Allow to cool
Electropump does not work	• Battery cut-out open • Fuses not serviceable • Batteries defective or discharged • The battery cables do not establish contact	• Close the battery cut-out • Replace the fuses • Replace or charge the batteries. • Clean and tighten the terminals

NOTE : In the turret box, LEDs indicate the state of each output so as to verify if the output is indeed activated.

7 - SAFETY SYSTEM

7.1 - FUNCTIONS OF THE TURRET CABINET FUSES AND RELAYS

(see Chapter 8, page 55)

KA2	Heat engine starting
KP1	Heat engine stopping
KT2	Acceleration of movements (electromotor)
KMG	Mains supply
KM4	Electropump contactor
FU1–10 A	Engine stop circuit fuse
FU3–80 A	Accelerator circuit fuse
FU4–30 A	General circuit fuse
FU5–3 A	Fuse for circuit for controlling movements from turret
FU6–3 A	Fuse for circuit for controlling movements from platform
FU7–20 A	Solenoid valve supply circuit fuse
FU8–5 A	Turret/platform control circuit fuse
FU9–20 A	Accessories circuit fuse
FU10–3 A	Circuit fuse
FU11–250 A	Engine circuit fuse

7.2 - FUNCTION OF THE SAFETY SWITCHES

(see Chapter 8, page 55)

SB1	Mushroom-headed emergency stop button (turret)
SB2	Mushroom-headed emergency stop button (platform)
SQ1	Tilt unit, prohibits by a cut, the arm lifting, boom raising, telescoping, pendular raising and travel movements
SQ4	Tilt reset, if machine folded (arm)
SQ5	Overload 1st audible alarm. Threshold of 90% of maximum charge reached
SQ6	Overload 2nd alarm - Cut-out. Cuts all the movements on platform except basket rotation
B1	Air filter switch: Engine cut-out if air filter clogged
B2	Engine temperature switch: Engine cut-out if temperature too high
B3	Engine oil pressure switch: Engine cut-out if pressure insufficient
B4	Hydraulic oil temperature switch: audible warning if temperature too high

8 - ELECTRICAL DIAGRAM

8.1 - E 448 DIAGRAM - SHEET 01/05

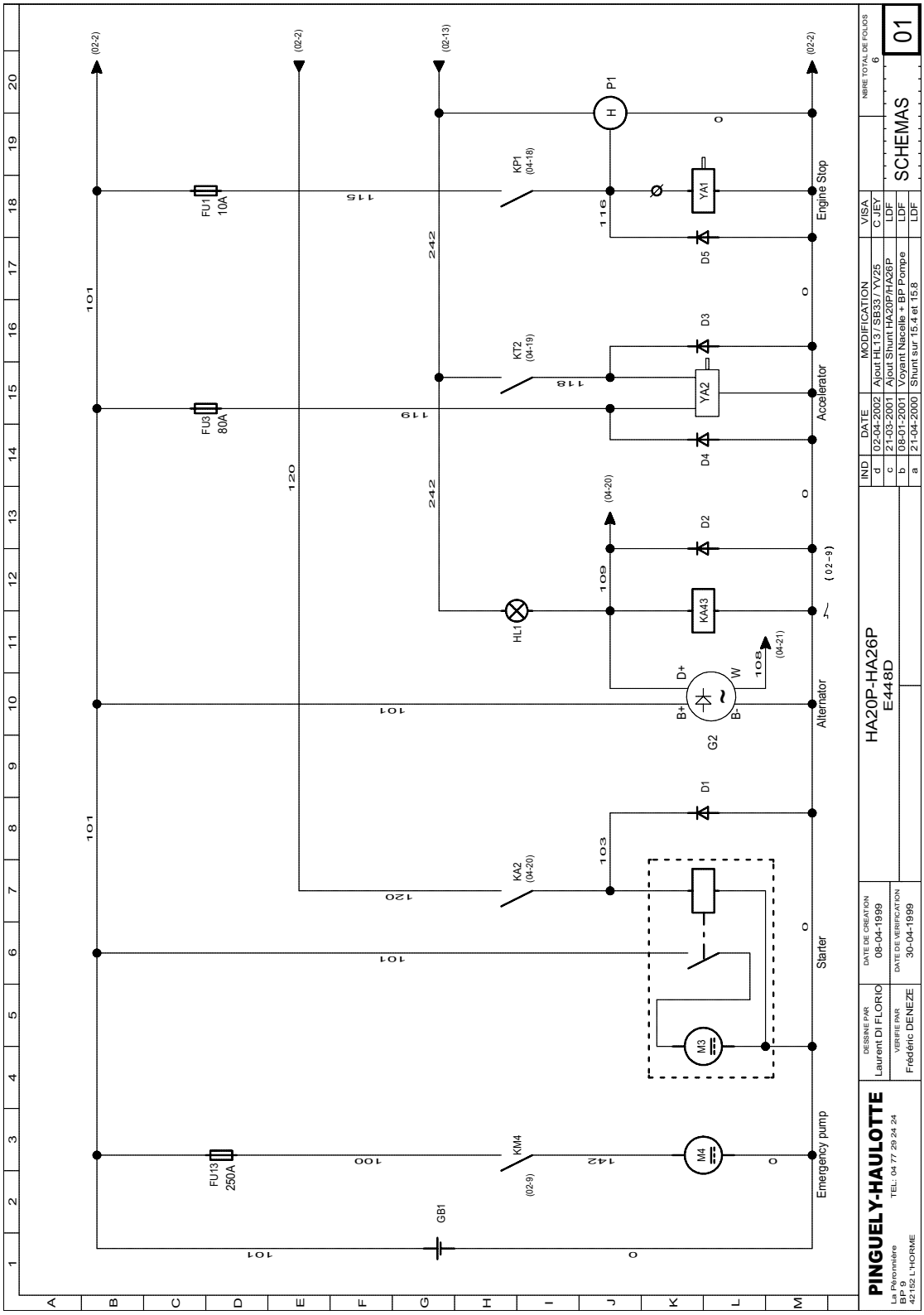

8.2 - E 448 DIAGRAM - SHEET 02/05

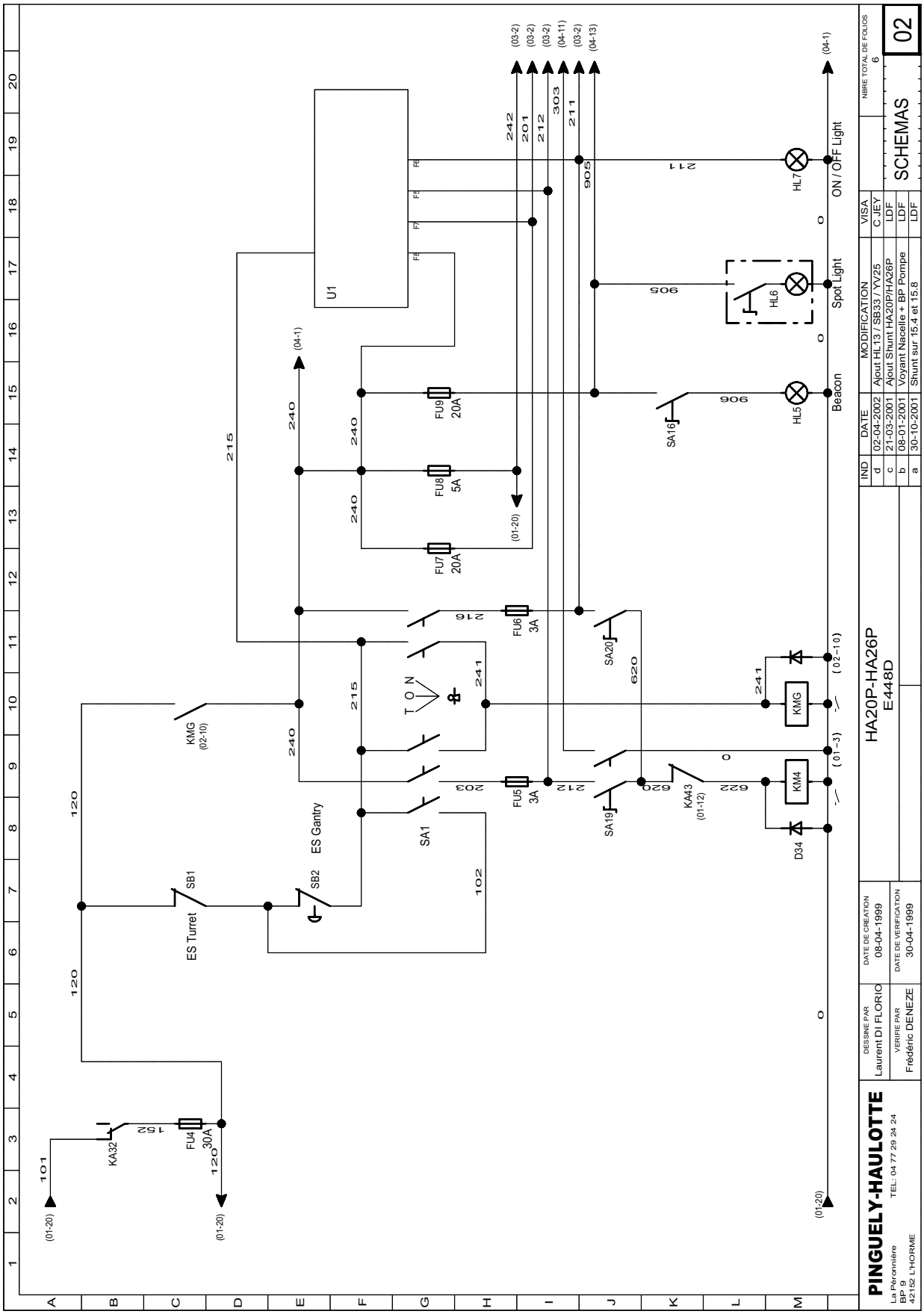

8.3 - E 448 DIAGRAM - SHEET 03/05

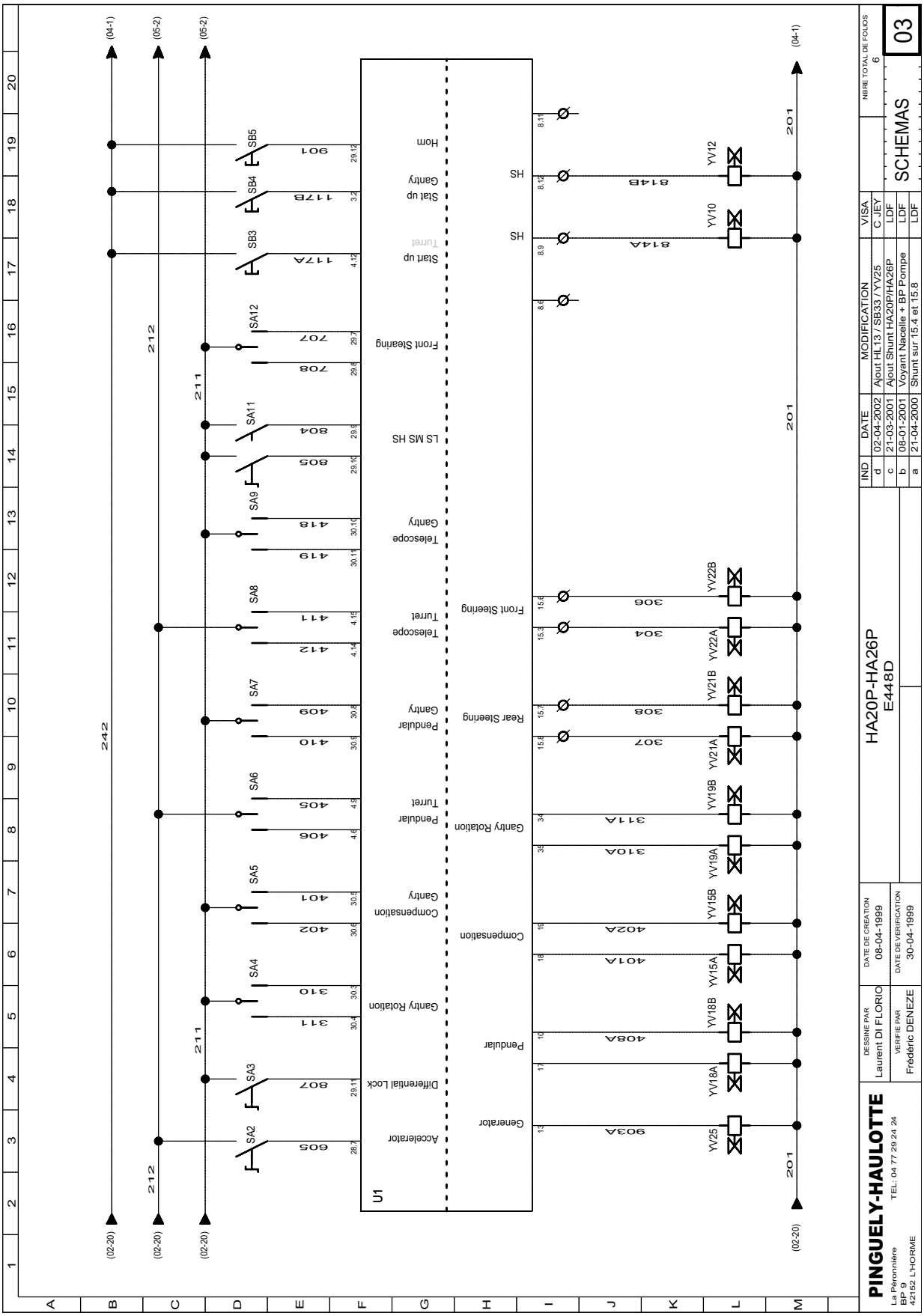

8.4 - E 448 DIAGRAM - SHEET 04/05

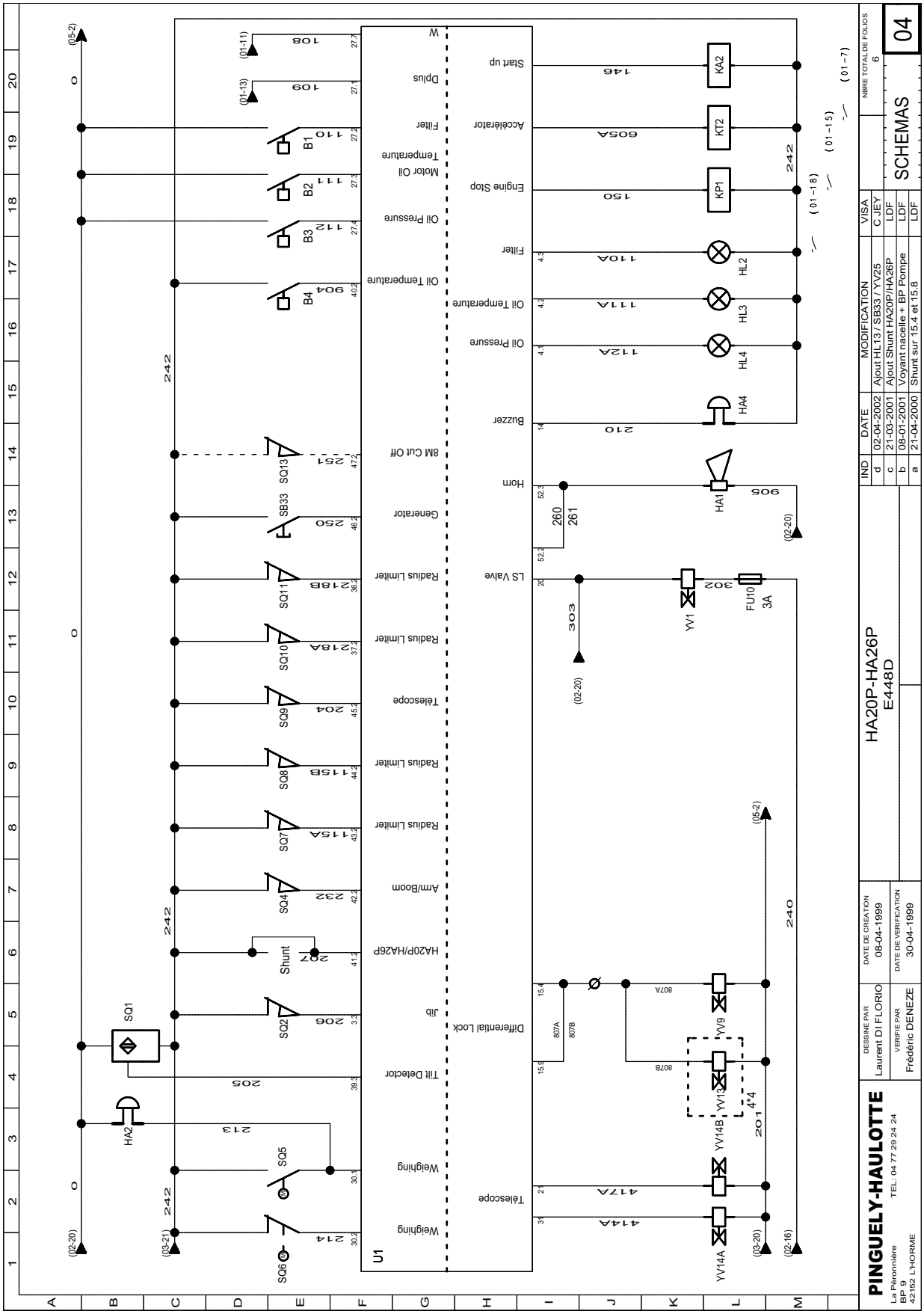

8.5 - E 448 DIAGRAM - SHEET 05/05

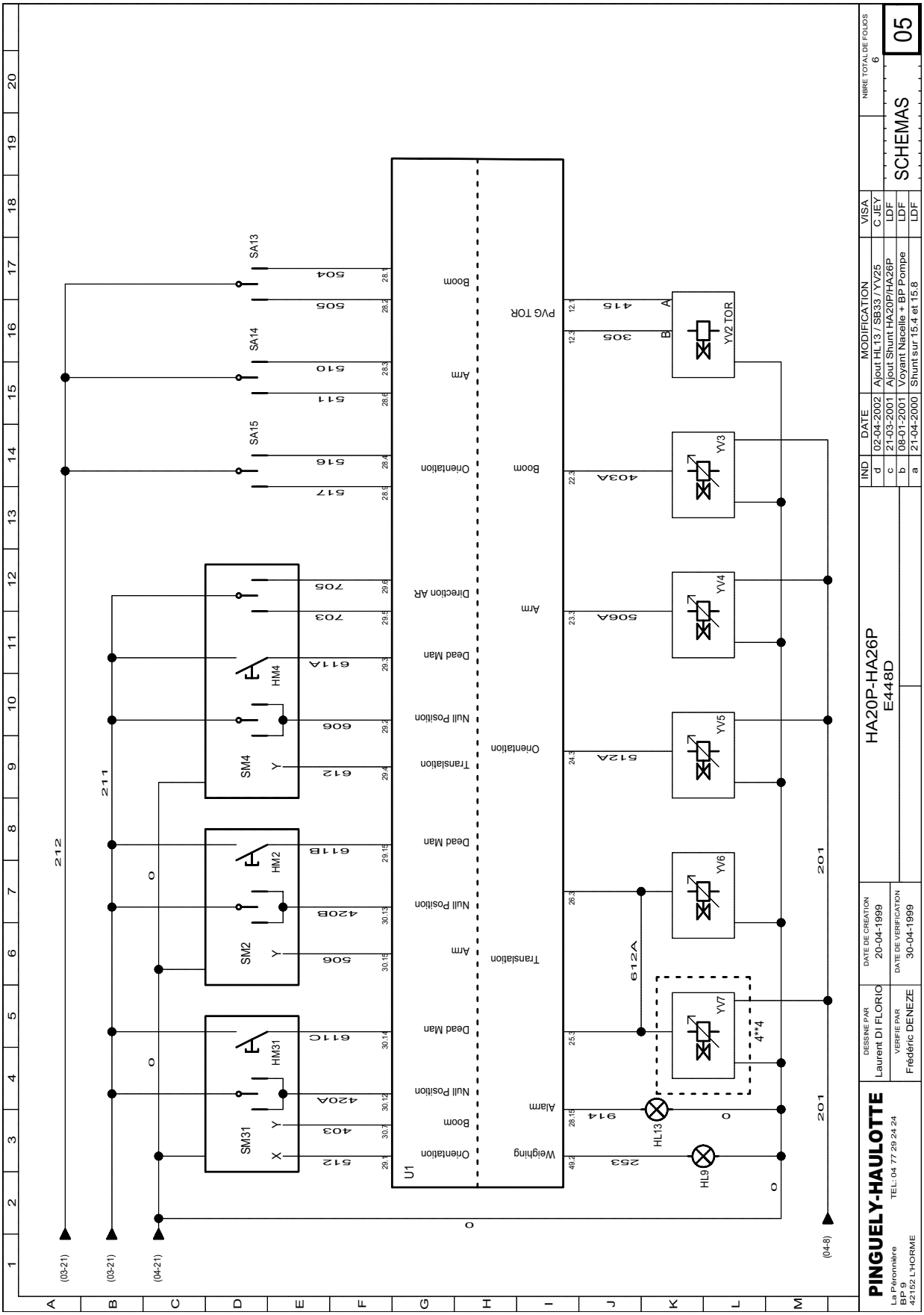

8.6 - NOMENCLATURE

ITEM	FOLIO-COL	DESIGNATION
SB1	02 -7	Mushroom-headed button
SB2	02 -7	Mushroom-headed button
SB3	03 -17	Turret starting switch
SB4	03 -18	Platform starting switch
SB5	03 -19	Warning switch
SA1	02 -10	Post selection key switch
SA2	03 -2	Accelerator switch
SA3	03 -3	Differential lock switch
SA4	03 -5	Platform rotation switch
SA5	03 -6	Platform compensation switch
SA6	03 -8	Turret pendular switch
SA7	03 -9	Platform pendular switch
SA8	03 -11	Turret telescoping switch
SA9	03 -12	Platform telescoping switch
SA11	03 -14	Low/medium/high speed switch
SA12	03 -15	Forward direction switch
SA13	05 -17	Turret raising switch
SA14	05 -15	Turret lifting switch
SA15	05 -14	Turret slewing switch
HL1	01 -12	Battery charging light
HL2	04 -17	Air filter light
HL3	04 -16	Oil temperature light
HL4	04 -16	Oil pressure light
HL7	02 -18	Power light
SM31	05 -4	Boom raising/slewing control
SM2	05 -6	Arm lifting controller
SM4	05 -10	Travel/direction controller
SQ1	04 -4	Tilt detector
SQ2	04 -5	Pendular position switch
SQ4	04 -7	Arm/boom position switch
SQ5	04 -2	Threshold 1 weighing position switch
SQ6	04 -1	Threshold 2 weighing position switch
SQ9	04 -10	Telescoping position switch
KMG	02 -10	General relay
KP1	04 -18	Engine stop relay
KT2	04 -19	Accelerator relay
KA2	04 -20	Starter relay
FU1	01 -18	Engine stop circuit fuse
FU3	01 -15	Accelerator circuit fuse
FU4	02 -3	General circuit fuse
FU5	02 -9	Turret movements control circuit fuse
FU6	02 -11	Platform movements control circuit fuse
FU7	02 -12	Solenoid valves supply circuit fuse
FU8	02 -14	Turret/platform common circuit fuse
FU9	02 -15	Accessories circuit fuse
FU10	04 -12	YV1 circuit fuse
FU11	01 -3	SOS M4 engine circuit fuse
U1	02/03/04/05	
YV1	04 -12	Load Sensing solenoid valve
YV2	05 -16	On/off control selection solenoid valve
YV3	05 -14	Boom raising control solenoid valve
YV4	05 -11	Arm lifting control solenoid valve
YV5	05 -9	Slewing control solenoid valve

https://truckmanualshub.com/

ITEM	FOLIO-COL	DESIGNATION
YV6	05 -7	4x2 travel control solenoid valve
YV9	04 -6	4x2 differential lock control solenoid valve
YV14	04 -2	Telescoping control solenoid valve
YV15	03 -6	Compensation control solenoid valve
YV18	03 -4	Pendular control solenoid valve
YV19	03 -7	Platform rotation control solenoid valve
P1	01 -19	Hour counter
HA1	04 -14	Horn
HA2	04 -3	Weighing buzzer
HA4	04 -14	Tilt warning
YV7	05 -5	Travel control solenoid valve
YV10	03 -17	Travel speeds combination solenoid valve
YV12	03 -18	Travel speeds combination solenoid valve
YV13	04 -4	Differential lock control solenoid valve
YV21	03 -10	FORWARD direction control solenoid valve
YV22	03 -11	REVERSE direction control solenoid valve
KM4	01 -3	M4 electropump contactor
SQ7	04 -8	Engine cut-out position switch
SQ8	04 -9	Engine cut-out position switch
SQ10	04 -11	Movement cut-out position switch
SQ11	04 -12	Movement cut-out position switch
B1	04 -19	Air filter pressure controller
B2	04 -18	Engine oil temperature pressure controller
B3	04 -18	Engine oil pressure controller
B4	04 -17	Hydraulic oil temperature pressure controller
B5	04 -16	Gas pressure controller (option)
		BEACON OPTION
HL5	02 -15	Beacon
SA16	02 -15	Single-pole switch
		8 m CUT-OUT OPTION
SQ12	04 -13	8 m cut-out position switch
SQ13	04 -14	8 m cut-out position switch
SQ3	06 -6	Shunt travel 26 m (tilt 3°)
HL9	05 -2	Fault light indicator

9 - HYDRAULIC DIAGRAMS

9.1 - HA 20PX / HA 26PX DIAGRAM - REFERENCE B15390

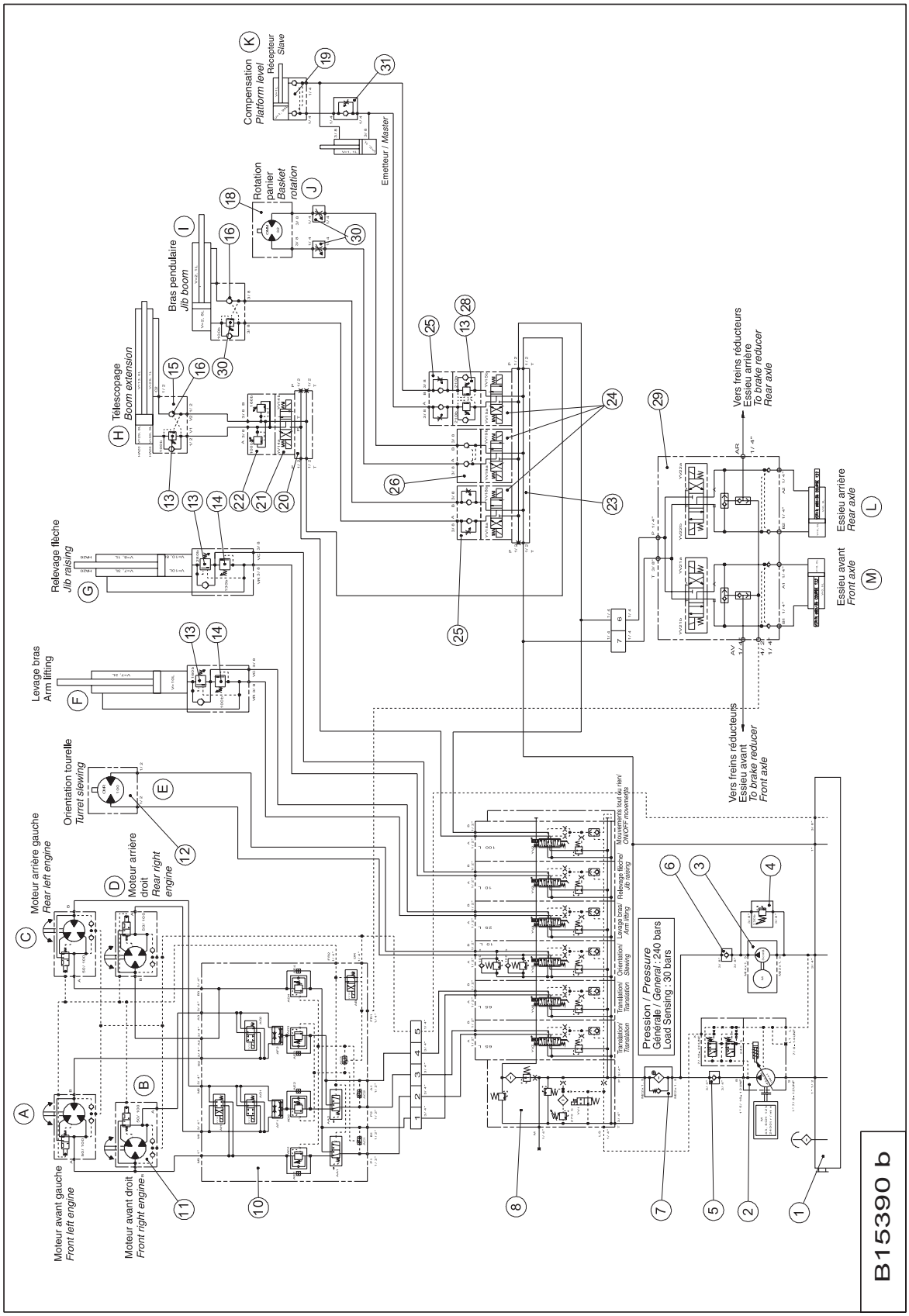

9.2 - NOMENCLATURE, B15390 DIAGRAM

ITEM	DESIGNATION
A	Left front engine
B	Right front engine
C	Left rear engine
D	Right rear engine
E	Turret slewing
F	Arm lifting
G	Boom raising
H	Telescoping
I	Pendular arm
J	Platform rotation
K	Compensation
L	Front axle
M	Rear axle
N	Travel
O	On/off movement
1	Hydraulic reservoir unit
2	LS piston pump, max. 45cm3/rev.
3	1500W, 3cm3, 12V electric pump unit
4	3/8 " BSPP in line pressure limiter
5	3/4 " BSPP non-return valve, 0.5 bar
6	3/8 " BSPP non-return valve, 0.5 bar
7	Pressure filter + clogging indicator
8	PVG32 12V S5086 distribution block
10	4x4 12V S5095 travel block
11	Double-displacement hydraulic motor
12	Hydraulic motor
13	Cartridge balancing valve, r=3:1
14	Cartridge pressure limiter
15	S5136 telescoping block
16	Cartridge non-return valve
18	Hydraulic motor
19	Flanged piloted double non-return valve
20	CETOP5 base plate, 1 section
21	12V NG10 4/3 AB towards T solenoid valve
22	CETOP5 double pressure limiter
23	CETOP3 base plate, 3 sections
24	12V NG6 4/3 AB towards T solenoid valve
25	CETOP3 double (pressure) flow limiter
26	CETOP3 piloted double non-return valve
28	CETOP3 body, 2 T11 housings
29	12V S5054 steering/brake release block