https://truckmanualshub.com/

Model 855E/855E HD Series Detachable Semitrailer Operator's Manual

Eastern Wrecker Sales Inc

LANDOLL CORPORATION
1900 North Street
Marysville, Kansas 66508
(785) 562-5381
800-428-5655 ~ WWW.LANDOLL.COM

F-916-0217 **02/2017**

https://truckmanualshub.com/

Eastern Wrecker Sales Inc

https://truckmanualshub.com/

Table of Contents

1 Introduction and Safety Information

Introduction 1-1
Understanding Safety Statements 1-2

2 Standard Specifications

General Torque Specifications (rev. 4/97) 2-3
Hydraulic Fitting Torque Specifications 2-4

3 Operating Instructions

General 3-1
Parking Brake 3-1
Air Brake System 3-1
Anti-Lock Brake System (ABS) 3-1
Nitro Stinger/Nitro Spreader (Option) 3-1
Electrical 3-3
Hydraulic 3-3
Pre-Coupling of Semitrailer and Tractor 3-3
Coupling of the Tractor to the Semitrailer 3-4
Connecting Tractor Services to the Semitrailer 3-4
Tractor and Semitrailer Check-Out 3-5
Towing the Semitrailer 3-6
Parking the Trailer 3-7
Uncoupling Towing Vehicle from Semitrailer 3-7
Trailer Lift Lever 3-7
Swing Out Outrigger Platform Extension Set-Up 3-9
Preparation for Loading and Unloading 3-11
Loading the Semitrailer 3-13
Securing the Load 3-13
Preparation for Transport 3-14
Unloading the Semitrailer 3-14
Air Ride Operation 3-15
Anti-Lock Brake System (ABS) 3-15
Cold Weather Operation 3-16
Hot Weather Operation 3-16

4 Maintenance and Lubrication

Maintenance Schedule 4-1
Inspection 4-1
Lubrication 4-1

Eastern Wrecker Sales Inc

https://truckmanualshub.com/

Maintenance Procedures **4-6**
Repair Parts 4-6
Tools and Equipment 4-6
Torque Values 4-6
Cleaning 4-6
Gooseneck, Frame, And Deck **4-7**
Repairing Structural Defects 4-7
Hydraulic System **4-7**
General 4-7
Hydraulic Engine Package (Option) **4-7**
Electrical System **4-7**
Suspension Maintenance **4-8**
Air Ride Height Adjustment 4-11
Alignment **4-12**
Wheel Alignment 4-12
Axle Alignment 4-14
Manual Alignment Procedure 4-14
Air Ride Suspension Axles 4-14
Brake System Maintenance **4-15**
General 4-15
Spring Air Brake Chambers 4-15
Caging the Power Spring 4-15
Removal 4-16
Installation 4-16
Emergency Relay Valve Maintenance 4-16
Brake Assembly Maintenance 4-16
Brake Adjustment 4-17
Disassembly for 16-1/2” x 7” Brakes 4-17
Reassembly for 16-1/2” x 7” Brakes 4-17
Automatic Slack Adjuster 4-19
Operational Check 4-19
Replacing Slack Adjuster 4-19
Adjusting Slack Adjuster 4-20
Hub and Drum Maintenance **4-21**
Wheel Bearing Lubrication and Adjustment **4-23**
Adjustment 4-23
Tire Maintenance **4-23**
Tire Inflation 4-23
Tire Matching 4-24
Tape Measuring Method 4-24
Straight Edge or String Method 4-24
Mounting Tire and Wheel (Hub Type) 4-25

5 Troubleshooting Guide

Electrical 5-1
Tires - Wheels - Suspension 5-2
Brakes 5-4
Brake Drums 5-6
Hydraulic System 5-7

Eastern Wrecker Sales Inc

https://truckmanualshub.com/

Chapter 1

Introduction and Safety Information

Introduction

This manual provides operating, servicing, and maintenance instructions for Model 855E/855E HD semitrailer, manufactured by Landoll Corporation, Marysville, Kansas 66508.

CHAPTER 1 Gives basic instructions on the use of this manual and understanding the safety statements.

CHAPTER 2 Gives product specifications for the trailer, including measurements and component specifications. A Standard Bolt Torque Table is provided to give guidelines for bolt torques to be used when servicing this product.

CHAPTER 3 Gives instructions for the proper operation of the equipment.

CHAPTER 4 Gives general maintenance procedures, a maintenance schedule, and a lubrication schedule. Improper maintenance will void your warranty.

IF YOU HAVE ANY QUESTIONS CONTACT:
LANDOLL CORPORATION
1900 NORTH STREET
MARYSVILLE, KANSAS 66508

PHONE # (785) 562-5381 or (800) 428-5655
OR
FAX # (888) 527-3909

CHAPTER 5 Is a troubleshooting guide to aid in diagnosing and solving problems with the trailer.

PARTS MANUAL Is a separate manual showing the various assemblies, sub-assemblies, and systems. Refer to that manual when ordering Landoll replacement parts. Order parts from your Landoll dealer.

WARRANTY The Warranty Registration form is included with the product documents. Fill it out and mail it within 15 days of purchase.

NOTE: IMPROPER ASSEMBLY, MODIFICATION, OR MAINTENANCE OF YOUR LANDOLL MACHINE CAN VOID YOUR WARRANTY.

COMMENTS Address comments or questions regarding this publication to:

LANDOLL CORPORATION
1900 NORTH STREET
MARYSVILLE, KANSAS 66508
ATTENTION: PUBLICATIONS - DEPT. 55

Eastern Wrecker Sales Inc

https://truckmanualshub.com/

Understanding Safety Statements

You will find various types of safety information on the following pages and on the machine signs (decals) attached to the vehicle. This section explains their meaning.

The Safety Alert Symbol means ATTENTION! YOUR SAFETY IS INVOLVED!

DANGER

Danger means a life-threatening situation exists. Death can occur if safety measures or instructions on this label are not properly followed.

WARNING

Warning means serious injury or death can occur if safety measures or instructions on this label are not properly followed.

CAUTION

Caution means serious equipment or other property damage can occur if instructions on this label are not properly followed.

NOTE

Means that failure to follow these instructions could cause damage to the equipment or cause it to operate improperly.

NOTE

Make sure you read and understand the information contained in this manual and on the machine signs (decals) before you attempt to operate or maintain this vehicle.

The safety statements contained in this manual relate to the operation of the Model 855E/855E HD.

Eastern Wrecker Sales Inc

https://truckmanualshub.com/

Chapter 2

Standard Specifications

MODEL 855E/855E HD	
GENERAL SPECIFICATIONS	
GOOSENECK	12’-5” Dual pin settings w/ 7 position Fifth wheel ride height 10’-9” Standard on 855-48CA Models
KING PIN SETTING	10’-9” Gooseneck = 15” 12’-5” Gooseneck dual pins = 15” & 33”
TIRE SIZE	255/70R22.5 LRH Double Coin
BRAKE SIZE	16-1/2” x 7” Full air w/ spring brakes on 3 wheel axle - ABS 4S/2M
ELECTRICAL HOOKUP	7-Way Connector
AIR HOOKUP	Color Coded Gland Hands
LOADED DECK HEIGHT	19-1/2”
LOAD GROUND CLEARANCE	6-1/2”
SWING CLEARANCE:	10’-9” Gooseneck = 90” 12’-5” Gooseneck dual swing = 108” & 90”

CAPACITY	
FRAME CAPACITY	110,000 LB. Distributed 110,000 LB. Concentrated in 12’
SWING OUT EXTENSION MAXIMUM CAPACITY	55,000 LB. Distributed 55,000 LB. Concentrated in 12’

HYDRAULIC HOOKUP	
QUICK COUPLERS	Flat Face, 3/4” Body Size
MAXIMUM OPERATING PRESSURE	2500 PSI
OPERATING FLOW	20 GPM Recommended; 50 GPM Max (Flow control limits functions to 20 GPM)

Eastern Wrecker Sales Inc

https://truckmanualshub.com/

SPECIFIC BOLT TORQUES	
AIR RIDE SUSPENSION	
EQUALIZER BEAM PIVOT AND ADAPTER BOLTS-DESIGNATED W/ *NEWAY* ON BOLTHEAD	800 FT. LBS.
EQUALIZER BEAM PIVOT AND ADAPTER BOLTS-DESIGNATED W/ *HOLLAND NEWAY* ON BOLTHEAD	550 FT. LBS.
SHOCK ABSORBER MOUNTING	150 FT. LBS.
AIR SPRING MOUNTING	
1/2”	35 FT. LBS
3/4”	35 FT. LBS
WHEEL FASTENERS	
OUTER SPINDLE NUTS	250 - 400 FT. LBS.
PILOT WHEEL NUTS	450 - 500 FT. LBS.

NOTE: Capacity ratings are frame capacities only. Actual load capacities may be restricted by factors such as gross axle weight ratings (GAWR) or state and federal regulations. Tires, brakes, axles, or wheels may also limit capacity.

NOTE: Tractor hydraulic power supply must be capable of operating at this pressure and flow rate and be equipped with a pressure relief valve set at this pressure.

Eastern Wrecker Sales Inc

https://truckmanualshub.com/

General Torque Specifications (rev. 4/97)

TORQUE SPECIFIED IN FOOT POUNDS - This chart provides tightening torques for general purpose applications when special torques are not specified on process or drawing. Assembly torques apply to plated nuts and capscrews assembled without supplemental lubrication (as received condition). They do not apply if special graphite moly-disulfide or other extreme pressure lubricants are used. When fasteners are dry (solvent cleaned) add 33% to as received condition torque. Bolt head identification marks indicate grade and may vary from manufacturer to manufacturer. Thick nuts must be used on grade 8 capscrews. Use value in [ ] if using prevailing torque nuts.

UNC SIZE	SAE Grade 2	SAE Grade 5	SAE Grade 8	UNF SIZE	SAE Grade 2	SAE Grade 5	SAE Grade 8
1/4-20	4 [5]	6 [7]	9 [11]	1/4-28	5 [6]	7 [9]	10 [12]
5/16-18	8 [10]	13 [13]	18 [22]	5/16-24	9 [11]	14 [17]	20 [25]
3/8-16	15 [19]	23 [29]	35 [42]	3/8-24	17 [21]	25 [31]	35 [44]
7/16-14	24 [30]	35 [43]	55 [62]	7/16-20	27 [34]	40 [50]	60 [75]
1/2-13	35 [43]	55 [62]	80 [100]	1/2-20	40 [50]	65 [81]	90 [112]
9/16-12	55 [62]	80 [100]	110 [137]	9/16-18	60 [75]	90 [112]	130 [162]
5/8-11	75 [94]	110 [137]	170 [212]	5/8-18	85 [106]	130 [162]	180 [225]
3/4/10	130 [162]	200 [250]	280 [350]	3/4-16	150 [188]	220 [275]	320 [400]
7/8-9	125 [156]	320 [400]	460 [575]	7/8-14	140 [175]	360 [450]	500 [625]
1-8	190 [237]	408 [506]	680 [850]	1-14	210 [263]	540 [675]	760 [950]
1-1/8-7	270 [337]	600 [750]	960 [1200]	1-1/8-12	300 [375]	660 [825]	1080 [1350]
1-1/4-7	380 [475]	840 [1050	1426 [1782]	1-1/4-12	420 [525]	920 [1150]	1500 [1875]
1-3/8-6	490 [612]	1010 [1375]	1780 [2225]	1-3/8-12	560 [700]	1260 [1575]	2010 [2512]
1-1/2-6	650 [812]	1460 [1825]	2360 [2950]	1-1/2-12	730 [912]	1640 [2050]	2660 [3325]
1-3/4-5	736 [920]	1651 [2063]	2678 [3347]	1-3/4-12	920 [1150]	2063 [2579]	3347 [4183]

METRIC:
Coarse thread metric class 10.9 fasteners and class 10.0 nuts and through hardened flat washers, phosphate coated, Rockwell “C” 38-45. Use value in [ ] if using prevailing torque nuts.

Nominal thread diameter (mm)	Newton Meters (Standard Torque)	Foot Pounds (Standard Torque)	Nominal Thread Diameter (mm)	Newton Meters (Standard Torque)	Foot Pounds (Standard Torque
6	10 [14]	7 [10]	20	385 [450]	290 [335]
7	16 [22]	12 [16]	24	670 [775]	500 [625]
8	23 [32]	17 [24]	27	980 [1105]	730 [825]
10	46 [60]	34 [47]	30	1330 [1470]	990 [1090]
12	80 [125]	60 [75]	33	1790 [1950]	1340 [1450]
14	125 [155]	90 [115]	36	2325 [2515]	1730 [1870]
16	200 [240]	150 [180]	39	3010 [3210]	2240 [2380]
18	275 [330]	205 [245]	----------	----------	----------

Table 2-1: General Torque Specifications

Eastern Wrecker Sales Inc

https://truckmanualshub.com/

Hydraulic Fitting Torque Specifications

TORQUE IS SPECIFIED IN FOOT POUNDS- 37° JIC, ORS, & ORB (REV. 10/97)

This chart provides tightening torques for general purpose applications when special torques are not specified on process or drawing. Assembly torques apply to plated nuts and capscrews assembled without supplemental lubrication (as received condition). They do not apply if special graphite moly-disulfide or other extreme pressure lubricants are used. When fasteners are dry (solvent cleaned) add 33% to as received condition torque. Bolt head identification marks indicate grade and may vary from manufacturer to manufacturer. Thick nuts must be used on grade 8 capscrews. Use value in [ ] if using prevailing torque nuts.

Parker Brand Fittings

Dash Size	37 Degree JIC	O-Ring (ORS)	O-Ring Boss (ORB)
-4	11-13	15-17	13-15
-5	14-16	----------	21-23
-6	20-22	34-36	25-29
-8	43-47	58-62	40-44
-10	55-65	100-110	58-62
-12	80-90	134-146	75-85
-16	115-125	202-218	109-121
-20	160-180	248-272	213-237
-24	185-215	303-327	238-262
-32	250-290	----------	310-340

Gates Brand Fittings

Dash Size	37 Degree JIC	O-Ring (ORS)	O-Ring Boss (ORB)
-4	10-11	10-12	14-16
-5	13-15	----------	----------
-6	17-19	18-20	24-26
-8	34-38	32-40	37-44
-10	50-56	46-56	50-60
-12	70-78	65-80	75-83
-14	----------	65-80	----------
-16	94-104	92-105	111-125
-20	124-138	125-140	133-152
-24	156-173	150-180	156-184
-32	219-243	----------	----------

Aeroquip Brand Fittings

Dash Size	37 Degree JIC	O-Ring (ORS)	O-Ring Boss (ORB)
-4	11-12	10-12	14-16
-5	15-16	----------	16-20
-6	18-20	18-20	24-26
-8	38-42	32-35	50-60
-10	57-62	46-50	75-80
-12	79-87	65-70	125-135
-14	----------	----------	160-180
-16	108-113	92-100	200-220
-20	127-133	125-140	210-280
-24	158-167	150-165	270-360
-32	245-258	----------	----------

Table 2-2: Hydraulic Fitting Torque Specifications

Eastern Wrecker Sales Inc

https://truckmanualshub.com/

Chapter 3

Operating Instructions

General

This section supplies information for operation of the semitrailer. It describes and locates controls and gives general operation procedures. Read all instructions, warnings, cautions, and danger notes before attempting to operate the semitrailer. Operators must have proper training before operating the semitrailer. **(See Figure 3-1 for location of semitrailer parts.)**

WARNING

Do not operate the semitrailer with any known fault that might endanger the occupants, nearby workers, other traffic, the load, or the equipment.

WARNING

Do not operate the semitrailer until you have read the operator's manual and completely understand the proper use and function of all controls. Improper use can cause personal injury, damage to your semitrailer and cargo, and cause time-consuming breakdowns.

Parking Brake

The parking brakes are automatically applied by spring pressure with the air actuators of the braking system when air pressure in the emergency line drops below 50 psi. This may be done within the truck using the trailer parking/emergency valve or by disconnecting the emergency gladhands.

Air Brake System

The air brake system of the semitrailer is operated from the towing vehicle after coupling. The towing vehicle's air system must be coupled to the semitrailer and charged to 90 psi minimum before the brakes can adequately function.

Anti-Lock Brake System (ABS)

The Anti-Lock Brake System of the semitrailer is constant powered by the auxiliary (blue) circuit of the seven way electrical connector, with backup power from the stop lamp (red) circuit, and ground through the white wire. It is necessary that the blue circuit is hot when the tractor key switch is on. The blue circuit on the trailer may not be used to power any additional auxiliary devices while the semitrailer is moving forward. If a fault exists in the ABS, normal braking will occur, but the wheels may lock. Service the ABS as soon as possible.

CAUTION

The auxiliary (blue) circuit is for powering the semitrailer ABS. This circuit must be hot when the tractor key switch is on. No other electrical devices may be powered by this circuit while the semitrailer is moving forward.

CAUTION

If a fault exists in the semitrailer ABS, normal braking will occur, but wheels may lock. Service the ABS as soon as possible.

Nitro Stinger/Nitro Spreader (Option)

Refer to the Nitro Stinger or Nitro Spreader Operating Manual from the vendor for operation, maintenance, and service instructions. If another manual is required, it can be obtained by requesting Landoll p/n F-699.

Eastern Wrecker Sales Inc

https://truckmanualshub.com/

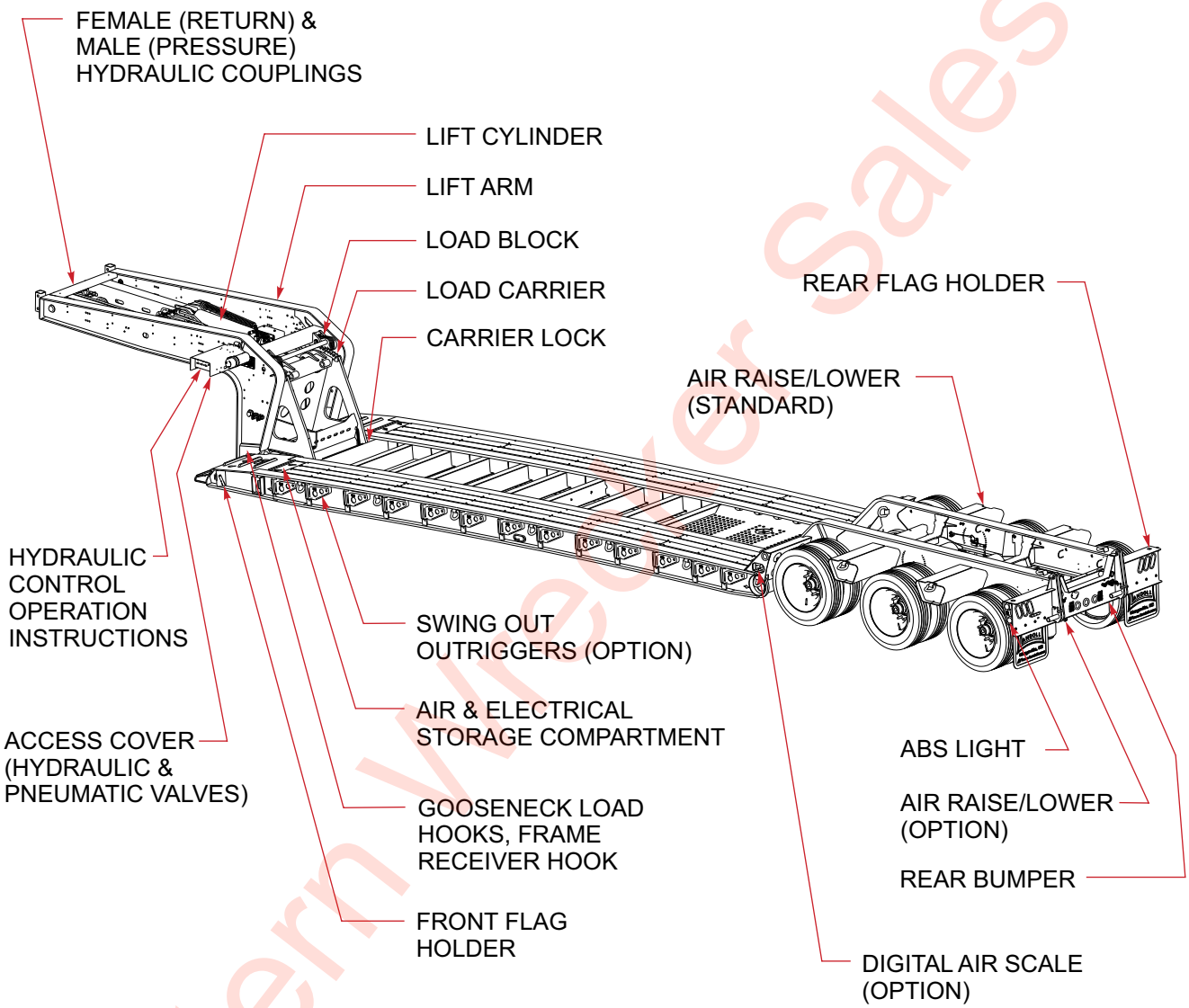

Figure 3-1: Trailer Terminology

Eastern Wrecker Sales Inc

https://truckmanualshub.com/

Electrical

The only electrical operation required of the operator is interconnection of the towing vehicle electrical cable plug with the semitrailer electrical receptacle.

It is necessary that the tractor blue wire be connected to the appropriate electrical source on the tractor.

Hydraulic

Controls are located on the driver's side of the trailer. A hydraulic pump must be coupled to the trailer hydraulic system before any hydraulic controls can function. The hydraulic system is designed to operate at 2500 psi maximum pressure and approximately 20 gpm flow capacity. The control valve has built-in flow control that can handle 50 gpm max and it limits the functions to 20 gpm.

Tractor must be equipped with a relief valve set at a maximum 2500 psi.

Pre-Coupling of Semitrailer and Tractor

1. Slowly back the tractor/truck (towing vehicle) up to the front end of the semitrailer so the kingpin of the semitrailer is centered between the tractor fifth wheel jaws. Stop the towing vehicle just inches ahead of the semitrailer. Set tractor parking brake.
2. Check the semitrailer king pin plate. It should be in a horizontal position. The king pin plate should be the same height, to slightly lower, than the latch area of the fifth wheel plate of the towing vehicle. If necessary, connect the tractor hydraulic lines, or start the semitrailer hydraulic power engine. Use the **TRAILER LIFT** lever to raise or lower the kingpin plate sufficiently to set proper coupling height **(See "Trailer Lift Lever" on page 3-7.)** Drain all air and moisture from the towing vehicle air brake system following towing vehicle manufacturer's instructions.
3. Connect the service and emergency air hoses of the towing vehicle to their respective gladhand on the front of the semitrailer; red emergency line to the gladhand with the **"EMERGENCY"** tag, and the blue service line to the gladhand with the **"SERVICE"** tag **(See Figure 3-2.)** Chock the semitrailer wheels before activating the semitrailer air supply valve in the towing vehicle. Set the parking brakes.

WARNING

Failure to chock semitrailer wheels could allow movement of the semitrailer resulting in serious personal injury, death, or damage to property in its path.

4. Check the air brake operations of the semitrailer as follows:
   a. Apply brakes and inspect brake action on all wheels for prompt application.
   b. Release brakes. All brakes should release immediately. Air pressure should discharge quickly from the relay emergency valve.
   c. Disconnect the emergency air line from the semitrailer gladhand. Trailer brakes should promptly set.
   d. Re-connect the emergency air line to the semitrailer and activate the semitrailer air supply valve. The semitrailer brakes should set.

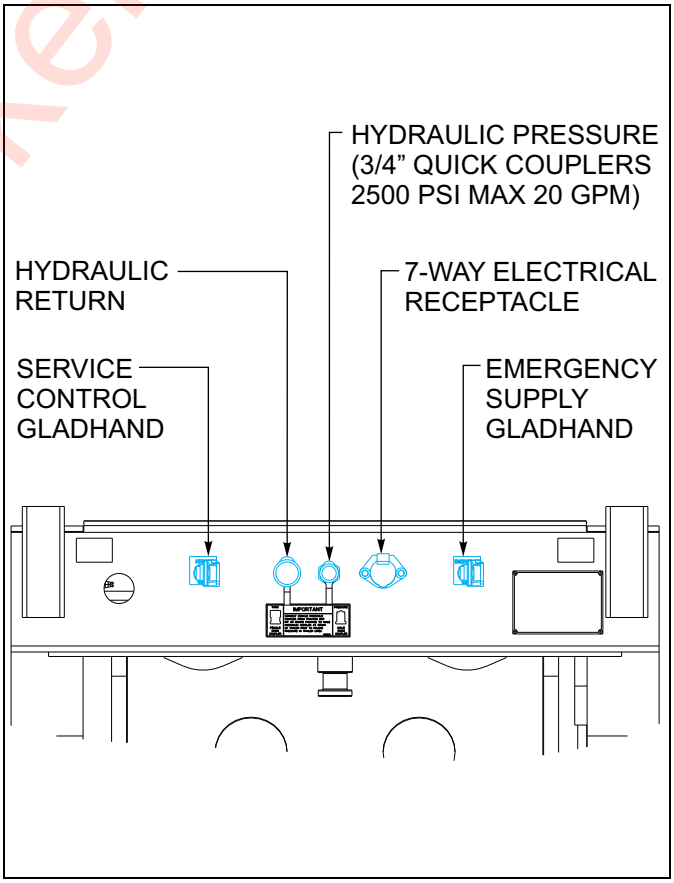

Figure 3-2: Service Hookups

Eastern Wrecker Sales Inc

https://truckmanualshub.com/

Coupling of the Tractor to the Semitrailer

DANGER

Keep all personnel clear of front, rear, and sides of towing vehicle and semitrailer during coupling, component operations, and uncoupling. Failure to stay clear can result in serious personal injury or death.

1. Verify the semitrailer wheels are chocked and brakes function properly.
2. Make certain the coupler of the towing vehicle's fifth wheel is open by pulling the latch handle.
3. Slowly back the towing vehicle so its fifth wheel contacts the front of the king pin plate on the semitrailer and slips under it. Continue backing until the fifth wheel coupler locks onto the semitrailer kingpin.
4. Verify the vehicle coupling is secure by attempting to pull the tractor forward a few inches. If the tractor disconnects from the semitrailer, locate source of coupling failure; repair before continuing; and repeat **steps 3 and 4.**
5. Check that the towing vehicle couples securely to the semitrailer before setting towing vehicle and semitrailer parking brakes.

IMPORTANT

Keep brakes engaged for remainder of hookup, checkout procedures, and parking.

Connecting Tractor Services to the Semitrailer

1. Connect the towing vehicle 7-pole electrical plug to the electrical receptacle on the front of the semitrailer **(See Figure 3-2.)**

IMPORTANT

The key on the plug and the keyway in the socket must be properly aligned before inserting the plug into the semitrailer socket.

CAUTION

Hydraulic operating pressures greater than 2500 psi can cause damage to the trailer.

2. If you have not already done so, connect the tractor hydraulic lines to the semitrailer.

IMPORTANT

Some oil may need to be removed from the tractor reservoir to allow room for 5.5 gallons of additional oil displaced from the trailer hydraulic system.

3. Air Lines **(See "Pre-Coupling of Semitrailer and Tractor" on page 3-3.)**

Eastern Wrecker Sales Inc

https://truckmanualshub.com/

Tractor and Semitrailer Check-Out

WARNING

Failure to properly set and check parking brake, and chock wheels when parking and during storage, could allow movement of the truck/semitrailer rig resulting in serious personal injury, death, or damage to property in its path.

CAUTION

Failure to support the semitrailer fully on the load blocks during transport, may result in damage to the load, the semitrailer, and possible serious injury or death to individuals near the semitrailer.

1. Activate the hydraulic power source.
2. Using the **TRAILER LIFT** lever, the trailer height can be adjusted **(See "Preparation for Loading and Unloading" on page 3-11.)**
3. Before moving the trailer, activate the **TRAILER LIFT lever** "DOWN" until the semitrailer load carrier rests completely on the load blocks **(See Figure 3-1 and See Table 3-1.)**
4. Check the operation of all lights and signals on the semitrailer for proper response to switch positions (stop, right turn, left turn, and clearance). Check operation of remote function if present.
5. Check tire inflation, adjust as needed to the pressure listed on the semitrailer VIN plate, located on the front of the semitrailer.
6. Check tractor/semitrailer for air leaks. If air leakage is found, repair the defect before transporting.
7. Check the oil in each hub for proper level and freedom from contamination. If hubs are contaminated with water, dirt or some other foreign material, clean before transporting.
8. Check tractor air pressure. Pressure must not fall below 90 psi, even after activating brakes a couple of times. Set parking brake and carefully remove all wheel chocks. Set emergency brake and try pulling forward. The semitrailer wheels must not rotate. If semitrailer brakes do not apply, **DO NOT** transport until defect, or defects, are repaired.

Eastern Wrecker Sales Inc

https://truckmanualshub.com/

Towing the Semitrailer

Driving the towing vehicle with the semitrailer coupled behind requires constant attention to the overall length of the combination. The “hinged-in-the-middle” configuration of the tractor and semitrailer, load, and weight effect performance. Turning, passing, acceleration, braking, stopping, and backup require special considerations. When executing steep grades or turning tight curves, the semitrailer must not be allowed to push the towing vehicle, or jack knifing the semitrailer with the towing vehicle may result. Application of the semitrailer brakes to keep the semitrailer in tow will help prevent this pushing. Braking should begin before descending a hill or attempting a curve, to assure control.

CAUTION

When operating semitrailer, do not back over curb. This will cause severe damage to undercarriage.

1. Make a moving test of the semitrailer brakes at low, and medium speeds before traveling at highway speed.
   a. The Anti-Lock Brake System (ABS) warning lamp mounted at left rear side of the semitrailer should come on when power is supplied to the ABS by turning the tractor keyswitch on. The warning lamp should go off once the semitrailer exceeds 4 mph. If the warning lamp does not go off, a fault exists in the semitrailer ABS. Once the vehicle speed exceeds 4 mph, the light should remain off unless a fault occurs or the keyswitch is turned off, then on again.

CAUTION

If a fault exists in the semitrailer ABS, normal braking will occur, but wheels may lock. Service the ABS as soon as possible.

2. Monitor the air pressure gauge on the dash of the towing vehicle. Pressure should not fall below 90 psi at any time.
3. The semitrailer wheels track to the inside of the towing vehicle during turns. Thus, turning corners requires a wide swing to prevent “curb hopping”, and to allow the semitrailer wheels to clear any obstacle on the inside of the corner.
4. To stop, use a gradual and smooth application of brakes. If grabbing occurs, apply less pressure - grabbing brakes are not efficient.

WARNING

Always check behind and under the truck and semitrailer for persons or objects before moving. Failure to check can lead to serious personal injury or death to others, or damage to property.

5. Backing should be done with care. Tail overhang, semitrailer length, and allowable space must be taken into consideration when backing the semitrailer.

Eastern Wrecker Sales Inc

https://truckmanualshub.com/

Parking the Trailer

1. Position truck/semitrailer rig on a level, solid surface.
2. Set the **PARKING BRAKE**, **not the semitrailer hand brake**, and check for proper brake holding.
3. Chock wheels of semitrailer.
4. Check for any air leaks in lines, relay valve, brake pods, or any other air system component.

WARNING

When leaving the semitrailer unattended, position all hydraulic controls to the neutral or "off" position or disconnect the tractor hydraulic hook-up.

Uncoupling Towing Vehicle from Semitrailer

1. Park the semitrailer according to instructions in **"Parking the Trailer" on page 3-7.**
2. Disconnect the emergency and service air lines and attach them to the tractor gladhand holders. If present, install dummy gladhands on trailer couplings.
3. Disconnect the 7-pole cable and hydraulic lines from the semitrailer and store with the tractor.
4. Pull the tractor fifth wheel plate latch release lever.
5. Attempt to pull the tractor forward. If the tractor uncouples, verify all service lines are disconnected and semitrailer wheels are chocked. If tractor does not disconnect, repeat **steps 4 and 5.**
6. Pull the tractor away from the semitrailer.

DANGER

Always check behind and under the truck and semitrailer for persons or objects before moving. Failure to check can lead to serious personal injury or death to others, or damage to property.

Trailer Lift Lever

The **TRAILER LIFT lever** is located on the driver's side of the gooseneck assembly **(See Figures 3-1 and 3-3.)** It is the middle lever and has three positions:

TRAILER LIFT LEVER	
UP	This position raises the semitrailer deck, allowing the load blocks to be lowered into transport position.
CENTER	This is the neutral position. The semitrailer stays in its current position.
DOWN	This position lowers the semitrailer deck to the ground, allowing the detachment of the gooseneck or allowing the weight of the semitrailer deck and load to rest on the load blocks. Also, this lowers the gooseneck lift arms, permitting the transport of the detached gooseneck.

Table 3-1: Trailer Tilt Lever

Eastern Wrecker Sales Inc

https://truckmanualshub.com/

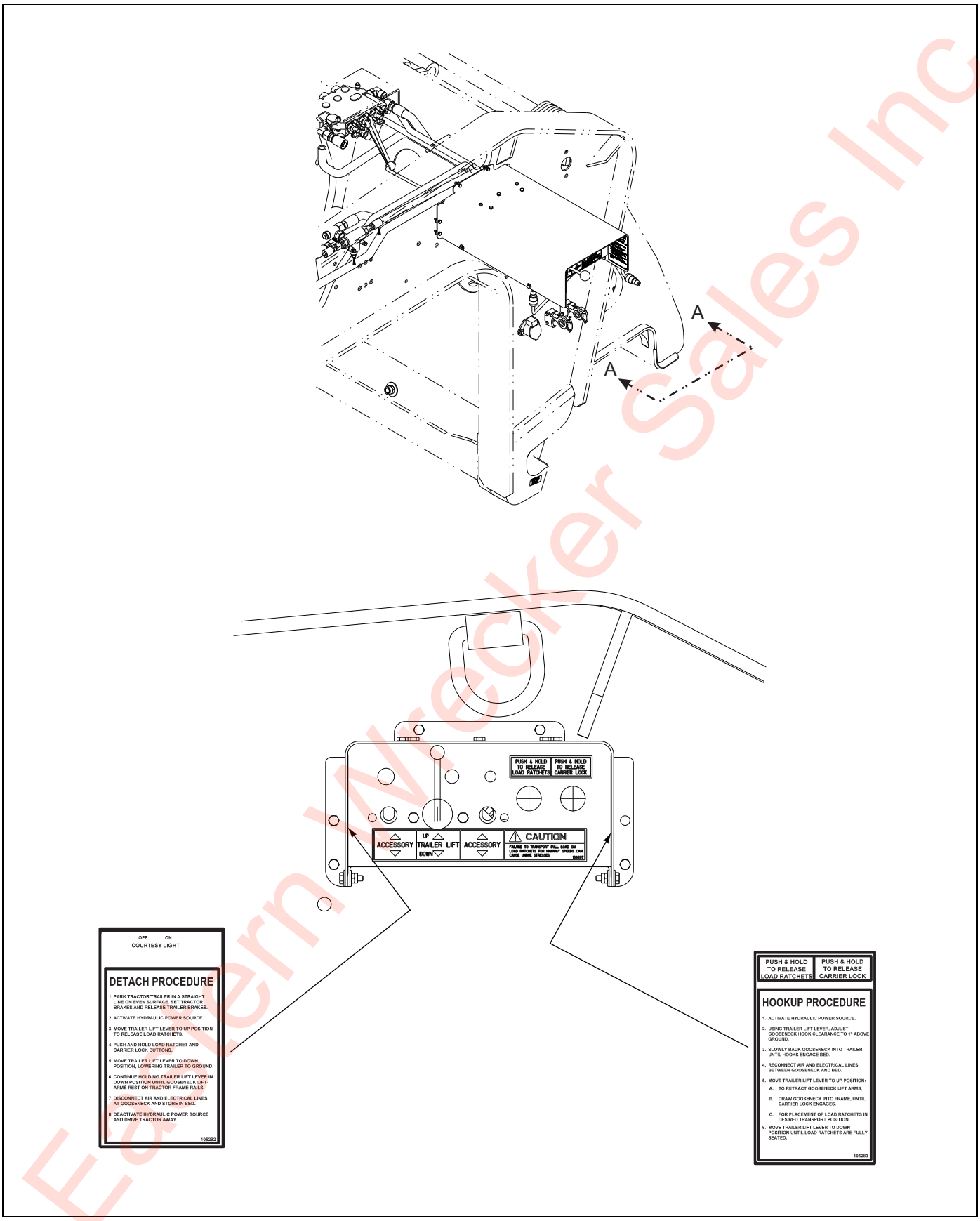

Figure 3-3: Hydraulic Controls

Eastern Wrecker Sales Inc

https://truckmanualshub.com/

Swing Out Outrigger Platform Extension Set-Up

DANGER

Do not operate if any extension is not locked in place. Inspect all extensions to insure each is locked securely in position.

1. Use extension brackets to increase the platform width to support wide loads.
2. Lift up and rotate swing-out outriggers outward **(See Figure 3-4.)**
3. Place extension planks on outriggers.

WARNING

1. **Top of extension planks must be flush with main deck boards.**
2. **Centerline of tracks or tires must be loaded on the main deck, not on extension brackets.**
3. **Failure to load extension brackets properly can result in equipment damage and personal injury.**

4. Center the load on the trailer. DO NOT load to one side. Position the load for proper weight distribution. **(See "Preparation for Loading and Unloading" on page 3-11)** for loading procedure.

WARNING

1. **Do not overload extensions. overwidth ratings are given in standard specifications.**
2. **Do not secure load to overwidths or undercarriage. Secure load frame to mounted d-rings or gotchas located in the approach plate and frame beam flanges. Failure to do so may cause serious injury or death.**

Eastern Wrecker Sales Inc

https://truckmanualshub.com/

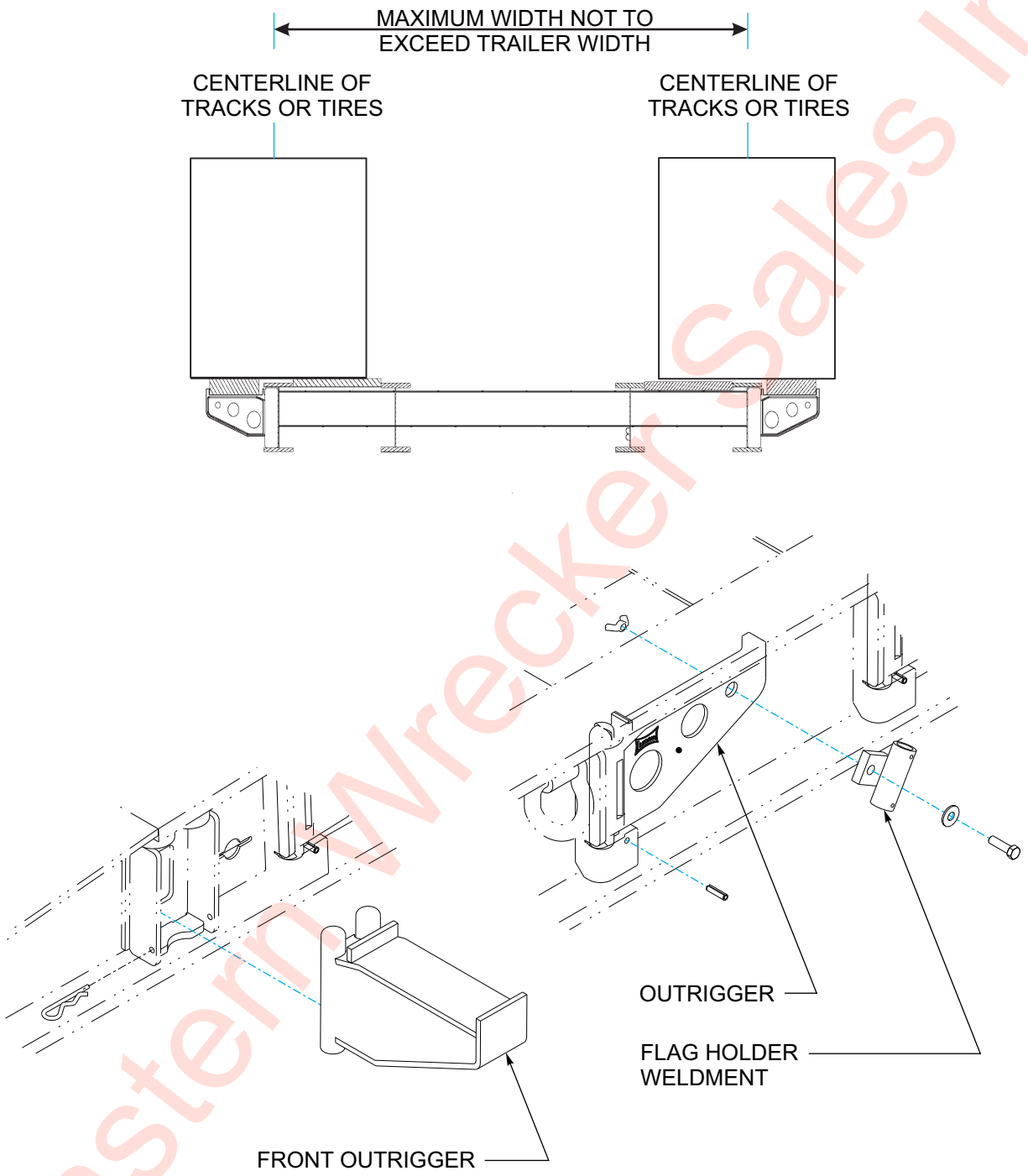

Figure 3-4: Swing Out Outrigger Platform Extension

Eastern Wrecker Sales Inc

https://truckmanualshub.com/

Preparation for Loading and Unloading

CAUTION

Model 855E/855E HD semitrailer maximum concentrated load in a 12 ft. area is 110,000 lbs.

WARNING

1. **The semitrailer must be coupled to a tractor.**
2. **Before operating: DO NOT exceed the gross axle weight ratings for any axle on your vehicle. The combined weight of the semitrailer and cargo must not exceed the gross vehicle weight rating (GVWR) of the trailer.**

DANGER

Be sure to keep feet and all other parts of your body clear of the bottom of the semitrailer during lowering operation. Failure to keep your feet or body clear may result in serious personal injury or death.

1. Practice all standard industrial safety standards. Do not load any payload that will overload any component of the trailer or cause an unsafe condition.
2. Park the tractor/semitrailer in a straight line on level even surface. Set the tractor brakes and release the semitrailer brakes **(See Figure 3-5.)**
3. Start operation of hydraulic power system.
4. Shut off gladhands and disconnect the air and electrical service lines from the semitrailer to the gooseneck and store in the storage compartment provided in the driver's side approach plate.
5. Move **TRAILER LIFT lever** to the up position, raising the semitrailer.
6. Push **LOAD BLOCK RELEASE BUTTON** raising the load blocks up.
7. Push carrier lock release button to allow carrier to rotate when activating **TRAILER LIFT lever**.
8. Continue to push **RELEASE BUTTONS** while moving **TRAILER LIFT lever** to the down position, lowering the semitrailer to the ground.
9. Continue to push **LOAD BLOCK RELEASE BUTTON** and **TRAILER LIFT lever** to down position until the teeth on load carrier go past the load block. Continue to push the **CARRIER LOCK RELEASE BUTTON** and **TRAILER LIFT lever** to down position until the carrier lock goes past the carrier lock stop. The release buttons will not need to be pushed after they clear the stops.
10. Continue with **TRAILER LIFT lever** in the down position until the gooseneck lift arms rest on the tractor frame rails. A clearance of 1/8 to 1/4 inch should be obtained between the gooseneck load hooks and the frame receiver hooks.
11. Pull the tractor forward a few inches and determine that the gooseneck has detached from the semitrailer. If the gooseneck does not detach from the semitrailer, repeat **steps 10 and 11.** When gooseneck does detach from trailer, proceed to pull the tractor away from the semitrailer.

Eastern Wrecker Sales Inc

https://truckmanualshub.com/

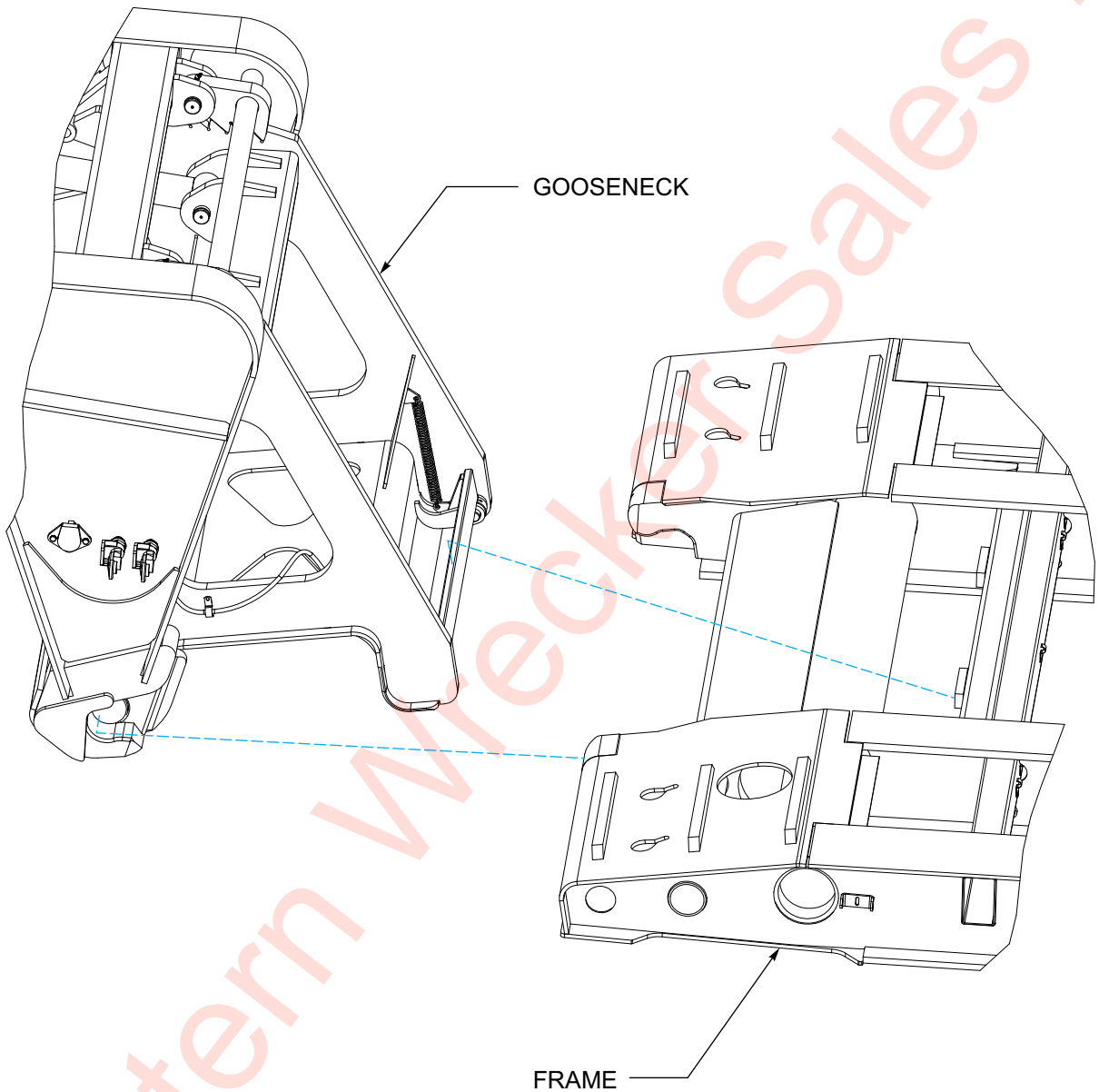

Eastern Wrecker Sales Inc

Figure 3-5: Gooseneck Attachment to Frame

https://truckmanualshub.com/

Loading the Semitrailer

1. Set the semitrailer up for loading as outlined in **“Preparation for Loading and Unloading” on page 3-11.**
2. Drive the load onto the semitrailer. Insure that the load is steering straight up onto the semitrailer and does not maneuver off the side of the semitrailer. Load a stationary load by means of a forklift, crane, or other means satisfactory to the constitution of the load. Position the load accordingly for proper weight distribution.
3. Chain the load down in accordance with instructions in **“Securing the Load” on page 3-13.**

Securing the Load

WARNING

Do not allow slack in tiedowns. A shifting load may create enough momentum to break hi-test chains or strap ties. Slack in tiedowns may result in damage to the load, and death or serious injury to persons near the load.

1. All items of the semitrailer load must be securely tied to the deck, front and rear, using the D-rings on the semitrailer frame. The load must be tied with chain or ratchet straps sufficient to withstand the weight of the load using standard approved tiedown methods.
2. No slack is allowed in the tie down chains or straps. Use binders with chains or a ratchet type buckle on straps to eliminate any slack in the tiedowns.

IMPORTANT

More information about cargo securement may be found at http://www.fmcsa.dot.gov/cargosecurement.pdf.

Remember that regulations vary from state to state. for state regulations, see http://www.fhwa.dot.gov/webstate.htm.

Eastern Wrecker Sales Inc

https://truckmanualshub.com/

Preparation for Transport

1. After securing the load, following the steps as outlined in **"Securing the Load" on page 3-13,** back the tractor until the gooseneck is within a few inches of the front of the semitrailer.
2. Using the **TRAILER LIFT** lever, to lower or raise the gooseneck, as necessary, until the load hooks are aligned with the receiver hooks.
3. Slowly back the gooseneck into the semitrailer until the gooseneck hooks guide into place.
4. Move the **TRAILER LIFT lever** to up position. The load carrier will rotate so the lift arms come off the truck frame. Continue to rotate load carrier up. To eliminate the load block making noise while it goes past the teeth on the load carrier, push **LOAD BLOCK RELEASE BUTTON** to raise the load blocks up until the load carrier raises the trailer to the desired position.
5. Using the **TRAILER LIFT** lever, raise the semitrailer until load carrier locks into place and enough clearance is obtained to seat the load blocks.
6. Reconnect the electrical and air service lines from the semitrailer to the gooseneck. The 7 pole electrical connector attaches to the receptacle in the side of the gooseneck. Open shutoff gladhands to connect service and emergency air hoses to their respective gladhand on the side of the gooseneck.

DANGER

Failure to support the semitrailer fully on the load blocks during transport and parking may result in damage to the load, the semitrailer, and possible serious injury or death to individuals near the semitrailer. The gooseneck may be used in the lowered or raised positions to avoid low clearance obstacles or high centering. NEVER exceed 2 miles an hour when transporting the semitrailer in this manner.

CAUTION

The gooseneck may be used in the lowered or raised positions to avoid low clearance obstacles or high centering. Never exceed 2 miles an hour when transporting the semitrailer in this manner.

Unloading the Semitrailer

1. Prepare to unload the semitrailer by following the steps outlined in **"Preparation for Loading and Unloading" on page 3-11.**
2. Remove the chains and binder or the tie-straps from the load.
3. Drive the load off the front of the semitrailer or remove a stationary load by means of a forklift, crane, or other means satisfactory to the constitution of the load.
4. Reattach the gooseneck to the semitrailer following the steps as outlined in **"Preparation for Transport" on page 3-14.**

WARNING

When removing load, insure that the load is steering straight so it does not maneuver off the side of the semitrailer. Failure to so could result in damage to equipment, injury, or death.

5. Shut down hydraulic power system.

Eastern Wrecker Sales Inc

https://truckmanualshub.com/

Air Ride Operation

1. Trailer air pressure must be maintained above 90 PSI before operating. **PROTECTION VALVES** are used to maintain 65 PSI air brake pressure during suspension or remote system air loss.
2. The semitrailer is equipped with a ride height control valve located on center axle.

CAUTION

If suspension air loss should occur, completely deflate suspension and temporarily operate on the air springs internal rubber bumpers. Carefully proceed to the nearest semitrailer service facility. To deflate the air suspension, rotate the valve control arms down about 45° to exhaust the air. To restore to normal operation, simply reverse the procedure.

Anti-Lock Brake System (ABS)

Vehicle standards FMVSS No. 121, anti-lock brake system requires all trailers manufactured after March 1, 1998 with air brake systems to have ABS. Each trailer (including a trailer converter dolly) shall be equipped with an anti-lock brake system that controls the wheels of at least one axle of the trailer. Wheels on other axles of the trailer may be indirectly controlled by the anti-lock brake system.

NHTSA Docket 92-29; notice 11 published September 23, 1996 specifies the ABS warning light be mounted near the rear of the left side of the trailer **(See Figure 3-1.)**

Decal or lens marking with ABS to identify the lamp.

The lamp must illuminate one time whenever power is supplied to the ABS. At any time the light remains on when power is supplied there is a malfunction to the system.

The ABS used on the semitrailer is a commercial unit. Single axle trailers use a two sensor, one modulator system. Tandem axle semitrailers use a four sensor, two modulator system. Sensors are located at each hub of the front and rear axles, and each modulator controls one side of the trailer.

The ABS is constant powered by the auxiliary (blue) circuit, center pin on the semitrailer seven way electrical connector. This circuit must be hot whenever the tractor keyswitch is on. This circuit must also not be used to power any additional electrical devices while the semitrailer is moving forward. However, additional devices such as remote controls may be powered from the auxiliary circuit while the semitrailer is stationary. Back up power to the ABS is supplied through the stop lamp (red) circuit, No. 4 pin on the seven way connector, and ground is supplied by the white wire, No. 1 pin.

CAUTION

The auxiliary (blue) circuit is for powering the semitrailer ABS. This circuit must be hot when the tractor key switch is on. No other electrical devices may be powered by this circuit while the semitrailer is moving forward.

Malfunction in the ABS is signaled by illumination of the ABS warning lamp located at the left rear side of the semitrailer. The warning lamp will come on and stay on while power is supplied to the ABS on a moving vehicle, if there is a fault. If a fault in the ABS exists, normal braking will still occur, but wheels may lock. The semitrailer is still operable, but the system should be serviced as soon as possible.

CAUTION

If a fault exists in the semitrailer ABS, normal braking will occur, but wheels may lock. Service the ABS as soon as possible.

Refer to ABS maintenance manual supplied with semitrailer to answer basic questions for the anti-lock brake system, obtain outline procedures on how to adjust, test, remove, and install ABS components, as well as how to test for faults in the system by using “Blink Code Diagnostics”; and illustrates ABS components, wiring, and plumbing installation diagrams.

Eastern Wrecker Sales Inc

https://truckmanualshub.com/

Cold Weather Operation

1. Cold weather causes lubricants to congeal, insulation and rubber parts to become hard, which may lead to problems found in bearings, electrical systems, and air systems. Moisture attracted by warm parts can condense, collect and freeze to immobilize equipment. The truck/semitrailer operator must always be alert for indicators of cold weather malfunctions.
2. During any extended stop period, neither the service nor parking brake should be used as they can freeze up. Use wheel chocks to secure the vehicle from moving.
3. Check all structural fasteners, air system fittings, gaskets, seals and bearings for looseness that can develop due to contraction with cold. Do not over-tighten.
4. Check tire inflation. Tire inflation decreases when the temperature decreases.
5. Periodically check drain holes in the bottom of the relay valve (for trailers with air brakes) and storage compartments. They must be open at all times to avoid moisture entrapment.

Hot Weather Operation

1. Hot weather operation can create certain problems which must be checked. Expansion of parts result in tightening of bearings, fasteners, and moving parts. Failure of gaskets or seals can occur.
2. The semitrailer should be parked in the shade if possible. Long exposure to the sun will shorten service life of rubber components (i.e., tires, light and hose grommets, hoses, etc.) and paint life.
3. Check tire pressure early in the day before beginning operations while the tire is cool. Replace all valve stem caps after checking.
4. If the area is extremely humid, protect electrical terminals with ignition insulation spray. Coat paint and bare metal surfaces with an appropriate protective sealer.
5. The use of a filter-lubricator in the towing vehicle's air delivery system is recommended.

Eastern Wrecker Sales Inc

https://truckmanualshub.com/

Chapter 4

Maintenance and Lubrication

This section contains instructions necessary for proper maintenance of the semitrailer. The 855E/855E HD semitrailer is designed for years of service with minimal maintenance. However, proper maintenance is important for durability and safe operation and is an owner/user responsibility.

Maintenance Schedule

Trailer maintenance includes periodic inspection and lubrication. **Table 4-2, Maintenance Schedule**, lists the recommended maintenance and lubrication tasks by time interval and by accumulated mileage (use whichever occurs first). **Table 4-3, Hydraulic Engine Maintenance Schedule,** list the recommended maintenance tasks for the hydraulic engine package.

DANGER

Operating the tractor or trailer with defective, broken or missing parts may result in serious injury or death, damage to the tractor/trailer, its cargo, or property in its path.

Inspection

1. Inspect the tractor, the trailer, and trailer parts periodically for damage or signs of pending failure. Damaged or broken parts must be repaired or replaced at once. Determine the cause of any binding or hydraulic leakage at once. Correct the problem before using the tractor or trailer.
2. Use the **“Troubleshooting Guide” on page 5-1** to check for “SYMPTOMS” and “PROBLEMS” of any trailer system not functioning correctly, or where wear, distortion, or breakage are found. Administer “REMEDY” according to the right-hand column of the troubleshooting section.

Lubrication

Figures 4-1 and 4-2 and Table 4-1 detail lubrication points and intervals, method of application, and lubricant required, and illustrate the location of each part to be lubricated. During inspections of the trailer, if lubricants are found to be fouled with dirt or sand, those parts should be cleaned with paint thinner, dried, and relubricated immediately. Dirt in a lubricant forms an abrasive compound that will wear parts rapidly.

WARNING

Paint thinner and other solvents are flammable and toxic to eyes, the skin, and respiratory tract. Avoid skin and eye contact. Good general ventilation is normally adequate. Keep away from open flames or other combustible items.

Eastern Wrecker Sales Inc

https://truckmanualshub.com/

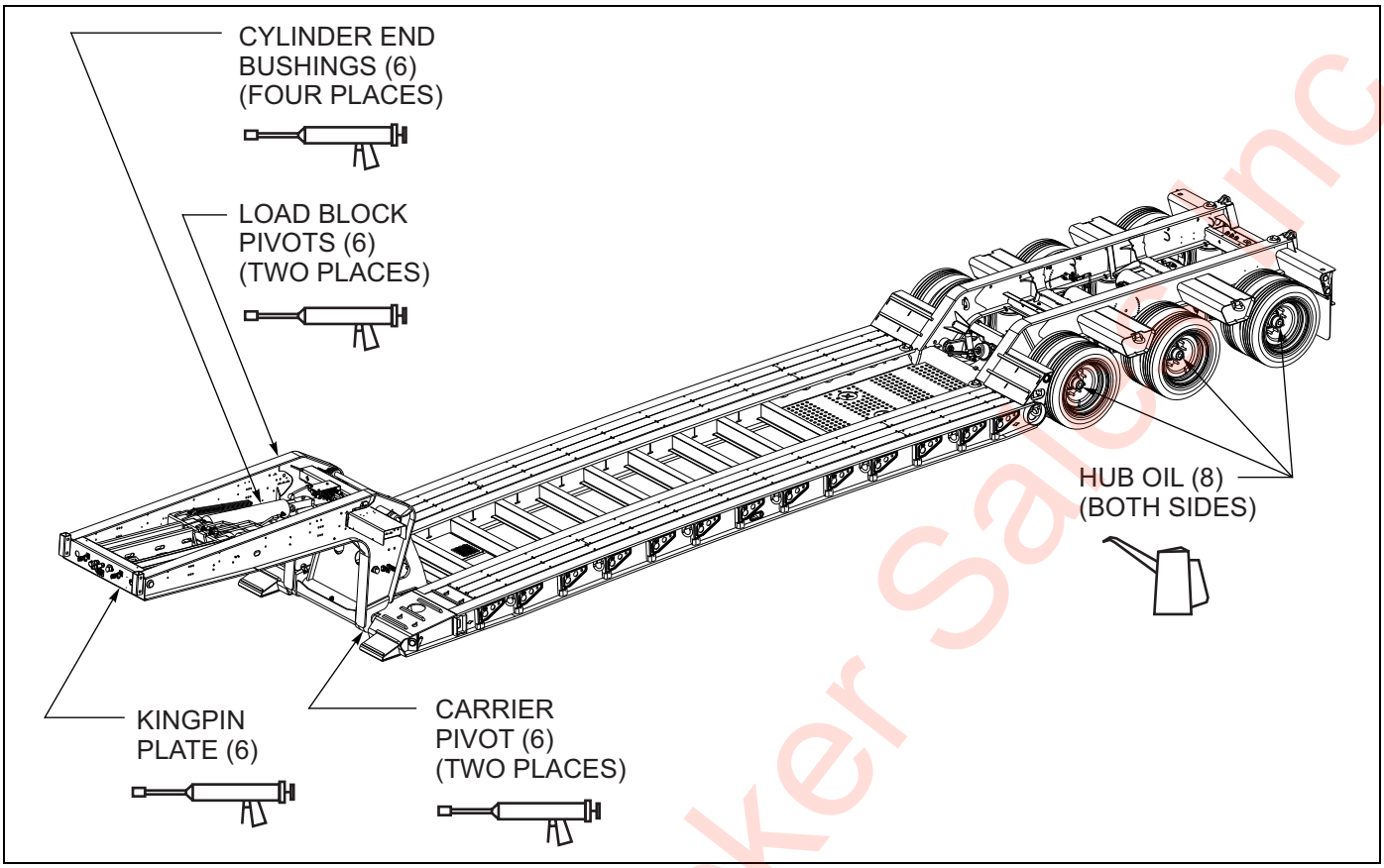

Figure 4-1: Lubrication Points (1 of 2)

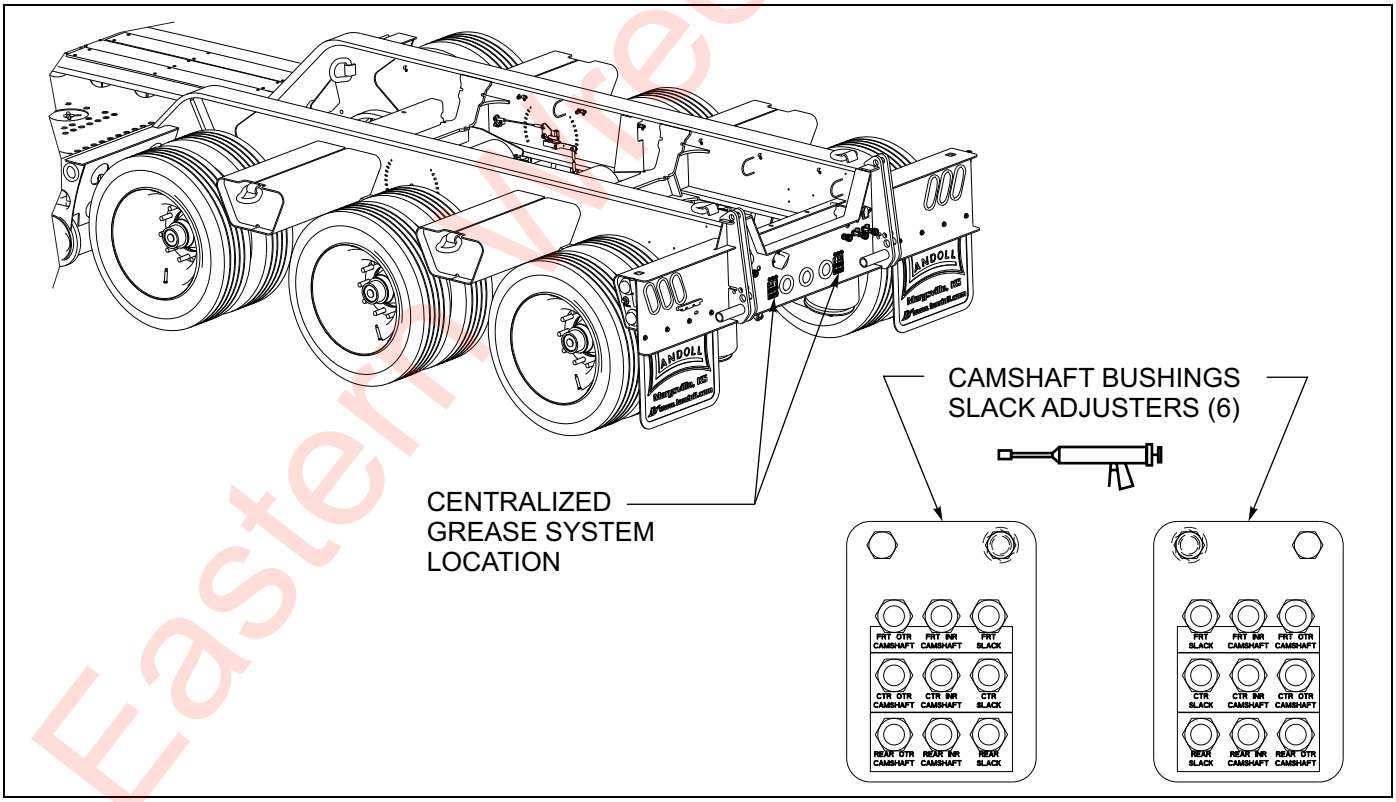

Figure 4-2: Lubrication Points (2 of 2)

Eastern Wrecker Sales Inc

https://truckmanualshub.com/

LUBE	SEASON	BRAND & PRODUCT (WEIGHT AND/OR TYPE)				
		EXXON	MOBIL	PHILLIPS 66	TEXACO	SHELL
1	ALL YEAR	NUTO H 32	DTE 24	Mega Flow HVI 32 SAE 5W-20	Rando HD 32	Tellus T 32
2	ALL YEAR	-----	-----	-----	-----	Aeroshell 64MS
3	ALL YEAR	-----	-----	76 Moly Low Temp Grease	-----	-----
4	SUMMER	-----	Mobilube HD SAE 85W-140	-----	-----	-----
	WINTER	-----	Mobilube 1 SHC SAE 75W-90	-----	-----	-----
5	SUMMER	-----	Mobilgear 600XP460	-----	-----	-----
	WINTER	-----	Mobilgear 600XP100	-----	-----	-----
6	ALL YEAR	Beacon EP	Mobilux EP	Mulitiplex Red	Multifak EP	Alvania EP
7	ALL YEAR	Teresstic 32	DTE Light	Condor 32 or Magnus 32	Regal Oil R&O 32	Turbo T 32
8	ALL YEAR	Gear Oil GX SAE 80W-90	Mobilube HD SAE 80W-90	Superior MP SAE 80W-90	Multi-gear EP SAE 80W-90	Spirax A SAE 80W-90
9	ABOVE 0°	Super Flow 10W-30	Drive Clean 5000 10W-30	Kendall Synthetic Blend 10W30	Havoline 10W-30	Formula Shell 10W-30
	BELOW 32°	Super Flow 5W-20, 5W-30	Drive Clean 5000 5W20 or 7500 5W30	Kendall Synthetic Blend 5W-20, 5W-30	Havoline 5W-20, 5W-30	Formula Shell 5W-20, 5W30

Table 4-1: Lubrication Specifications

Eastern Wrecker Sales Inc

https://truckmanualshub.com/

NORMAL OPERATING SERVICE INTERVALS							
ITEM	1st 5 Hours or 50 Miles	Weekly or 500 Miles	Monthly or 2,000 Miles	6 Months or 12,000 Miles	Yearly or 25,000 Miles	LUBE #	NOTES
LIGHTS	I	I					
WIRING & CONNECTIONS	I		I				
FASTENERS	I,T		I				b
KING PIN AND PLATE	I		C,I,L			6	c
BRAKE AIR SYSTEM	I	I	I				
RELAY VALVES					I,C		
BRAKE ADJ & WEAR	I		I,T				d
SLACK ADJUSTERS	I	I		L		6	c
CAMSHAFT ASSEMBLIES	I	I			L	6	c
HUB OIL	I	I,L			R	8	c
WHEEL BEARINGS	I			I,T			c
TIRE INFLATION & WEAR	I	I					e
WHEEL LUG NUTS	I,T	I	I,T				f
SUSPENSION ALIGNMENT	I		I				
AIR RIDE SUSPENSION			I,T		I,T		
FRAME & U/C ROLLERS			L				c
HYDRAULIC OIL	I	I			R	1	c
HYDRAULIC FILTER	R			R			
HOSES ***(Inspect & Replace as needed)***	I		I		I,R		
PLASTIC WEAR STRIPS	I		I	C		6	g
ENGINE						9	
WARN - 12K PLANETARY WINCH GEAR CASE	I		I			2	c
WARN - 20K & 30K PLANETARY WINCH GEAR CASE	I		I			3	c
DP - 12K, 15K, 20K, & 30K WINCH GEAR CASE	I		I			4	c
BRADEN - 12K & 20K WINCH GEAR CASE	I		I			5	c
WARN - 12K PLANETARY WINCH CABLE ASSY	I		I,L			7	c, h
WARN - 20K & 30K PLANETARY WINCH CABLE ASSY	I		I,L			7	c, h
DP - 12K, 15K, 20K, & 30K WINCH CABLE ASSY	I		I,L			7	c, h
BRADEN - 12K & 20K WINCH CABLE ASSY	I		I,L			7	c, h

I - Inspect, R - Replace, T - Tighten/Adjust Torque, L - Lubricate, C - Clean

a. Perform at the time shown. Shorten service intervals when operating in severe or dirty conditions.

b. **See Table 2-1 and 2-2** for correct torque specifications.

c. **See Table 4-1** for recommended lubricant.

d. **See "Brake System Maintenance" on page 4-15** for procedures.

e. See Serial Number Plate on the front of the semitrailer for proper inflation requirements.

f. See **"Wheel Bearing Lubrication and Adjustment" on page 4-23** for procedure.

g. Plastic wear strips are self lubricating. If chatter or squealing occurs grease wear strip.

h. Inspect prior to and after each use.

Table 4-2: Maintenance Schedule

Eastern Wrecker Sales Inc

https://truckmanualshub.com/

HYDRAULIC ENGINE MAINTENANCE SCHEDULE				
OPERATION	AFTER EACH CYCLE OF INDICATED HOURS			
	8	25	100	200
FILL FUEL TANK	X			
CHECK OIL LEVEL	X			
CHECK AIR CLEANER FOR DIRTY, LOOSE, OR DAMAGED PARTS	*X			
CHECK AIR INTAKE AND COOLING AREAS, CLEAN AS NECESSARY	*X			
SERVICE PRECLEANER ELEMENT		*X		
SERVICE AIR CLEANER ELEMENT			*X	
CHANGE OIL			X	
CHECK SPARK PLUG CONDITION AND GAP			X	
REMOVE COOLING SHROUDS AND CLEAN COOLING AREAS			X	
CHANGE OIL FILTER				X

NOTES:
*PERFORM THESE MAINTENANCE PROCEDURES MORE FREQUENTLY UNDER EXTREMELY DUSTY, DIRTY CONDITIONS.

Table 4-3: Hydraulic Engine Maintenance Schedule

WARNING

Breathing exhaust gases can result in severe personal injury or death. Do not use air cleaner, exhaust elbow, or connecting parts as a supporting step. Damage to these and connecting parts can cause an exhaust leak.

Eastern Wrecker Sales Inc

https://truckmanualshub.com/

Maintenance Procedures

Repair Parts

Repair parts are illustrated and listed in a separate parts manual. Replacement of parts due to wear is determined by examination and measurement in the Maintenance Procedures of this section.

Tools and Equipment

Tools, equipment, and personnel normally found in a facility capable of making truck repairs will be adequate for maintenance of the semitrailer. No other special tools or equipment should be necessary.

Torque Values

Table 2-1 and Table 2-2 list torque values for standard hardware and hydraulic fittings. They are intended as a guide for average applications involving typical stresses and mechanical surfaces. Values are based on the physical limitations of clean, plated, and lubricated hardware. In all cases, when an individual torque value is specified, it takes priority over values given in this table. Replace original fasteners with hardware of equal grade.

Cleaning

1. Wash semitrailer to remove all accumulated dirt and grime.
2. Use any mineral spirits paint thinner (or its equivalent) to remove grease and oil from all parts of the trailer. Rinse degreasing solution off with cold water.
3. Inspect semitrailer for cause of any reported troubles.

WARNING

Paint thinner and other solvents are flammable and toxic to eyes, skin, and respiratory tract. Avoid skin and eye contact. Good general ventilation is normally adequate. Keep away from open flames or other combustible items.

4. Scrape, sand, prime, and repaint areas where finish is missing or where there is evidence of corrosion.
5. Replace any missing or illegible decals. Replace any missing or damaged reflective tape.
6. Use Troubleshooting Guide to check for “SYMPTOMS” AND “PROBLEMS” of any semitrailer system not functioning correctly, or where wear, distortion, or breakage can be found. Administer “REMEDY” according to right-hand column of Troubleshooting guide.
7. After disassembling any components, thoroughly clean dirt and old lubricant from all parts. Do not use a wire brush on any bearing parts or surfaces — use a stiff bristle brush. Do not use compressed air, or spin bearing parts when cleaning. These practices can throw solvents, dirt, or metal particles into your eyes. Dry clean parts with lint free, clean, soft, absorbent, cloth or paper. Wash and dry hands.
8. Inspect seals, seal wiping surfaces, bearing caps, and bearing cones for wear, pitting, chipping, or other damage.

Eastern Wrecker Sales Inc

https://truckmanualshub.com/

Gooseneck, Frame, And Deck

Repairing Structural Defects

If any structural defect is found, the fault must be corrected before further use of the vehicle. To continue usage could endanger the trailer, its load, personnel, traffic, and properties. If any cracks or breaks are found, contact the Landoll factory for repairs. Inspect the deck daily for broken or missing planks or missing attachments. Replace any defective parts promptly.

Hydraulic System

General

1. Check the oil level of the tractor wet kit weekly, or after any leakage. **See Table 4-1** for proper hydraulic oil. Check the hydraulic oil level with hydraulic cylinders in the retracted position and the hydraulic pump disengaged. Enough volume in tank (approximately 15 gallons) above hydraulic oil level must be available to accept extra oil from cylinders when retracted.
2. Overfilling can cause hydraulic fluid overflow during operation.
3. Hydraulic system pressure relief valves should be set at 2500 psi.
4. Check hoses weekly for cracks or leaks. If a valve or line leaks, it should be replaced immediately.
5. Hydraulic oil should be filtered and fluid contamination needs to be a nominal value maximum of ISO 4406 19/17/14.

Hydraulic Engine Package (Option)

The hydraulic engine package should be inspected weekly to insure continued proper operation. The inspection should include:

1. Check the hydraulic oil level weekly, or after any leakage. **See Table 4-1** for proper hydraulic oil. With all hydraulic cylinders in the retracted position and with the engine stopped, check the hydraulic oil level.
2. Check hoses weekly for cracks or leaks. If a valve or line leaks, it should be replaced immediately.
3. Check the engine oil each time before using. Oil level should be maintained between the “ADD” and “FULL” marks on the oil dip stick. For further maintenance procedures and proper lubrication specifications, please refer to the engine owner’s manual that was supplied with the hydraulic engine package.
4. Replace hydraulic filter with new filter at least every 6 months or more often under adverse conditions.
5. Use the fuel recommended for the engine package installed on you trailer.

Electrical System

1. Maintenance of the electrical system consists of inspection and minor servicing. Any wire, connection or electrical component showing signs of corrosion, wear, breakage or unraveling must be repaired or replaced.

NOTE

See parts manual for electrical components and wire diagram.

2. Frayed or unraveling wire must have the defective section removed and replaced with wire of the same color and gauge. Seal all connections and insulate.
3. Corroded terminals must have the corrosion removed, source of corrosion neutralized and the terminals resealed, protected, and insulated.
4. Fuse or circuit breaker burn-out or blow-out usually indicates an electrical short-circuit, although a fuse can occasionally fail from vibration. Insert a second fuse or reset the breaker. If this fuse immediately burns out or the breaker trips, locate the cause of the electrical short and repair.
5. A light that repeatedly burns-out usually indicates a loose connection, poor system ground, or a malfunctioning voltage regulator. Locate the source of the problem and repair. System grounds must be grounded to bare metal surfaces. Paint, grease, wax, and other coatings act as insulators. Replacement lamps must be equivalent to the factory installed lamp.

Eastern Wrecker Sales Inc

https://truckmanualshub.com/

Suspension Maintenance

See Figures 4-3 and 4-4 for Triple Axle and Triple Axle w/ Flip Axle Air Ride Suspension drawings.

1. Physically check all nuts, bolts, and air line fittings for proper torque **(See Table 4-4.)**

AIR SUSPENSION TORQUE CHART				
SIZE	1-1/8”-7	1/2”-13	*3/4”-16	3/4”-10
TORQUE IN FT. LBS	**800 OR 550	35	35	150

Table 4-4: Air Suspension Torque Chart

* Air Spring Connections Only.

** First number listed is torque required if bolt head designated with Neway; Second number listed is torque required if bolt head designated with Holland Neway.

2. Check all other suspension components for any sign of damage, looseness, wear or cracks.
3. With trailer on level surface and air pressure in excess of 65 psi, all air springs should be of equal firmness. The height control valve on right side of front axle controls all air springs on tandem axle suspensions.
4. The height control valve on right side of center axle controls ride height for all air springs on triple axle suspension.

Eastern Wrecker Sales Inc

https://truckmanualshub.com/

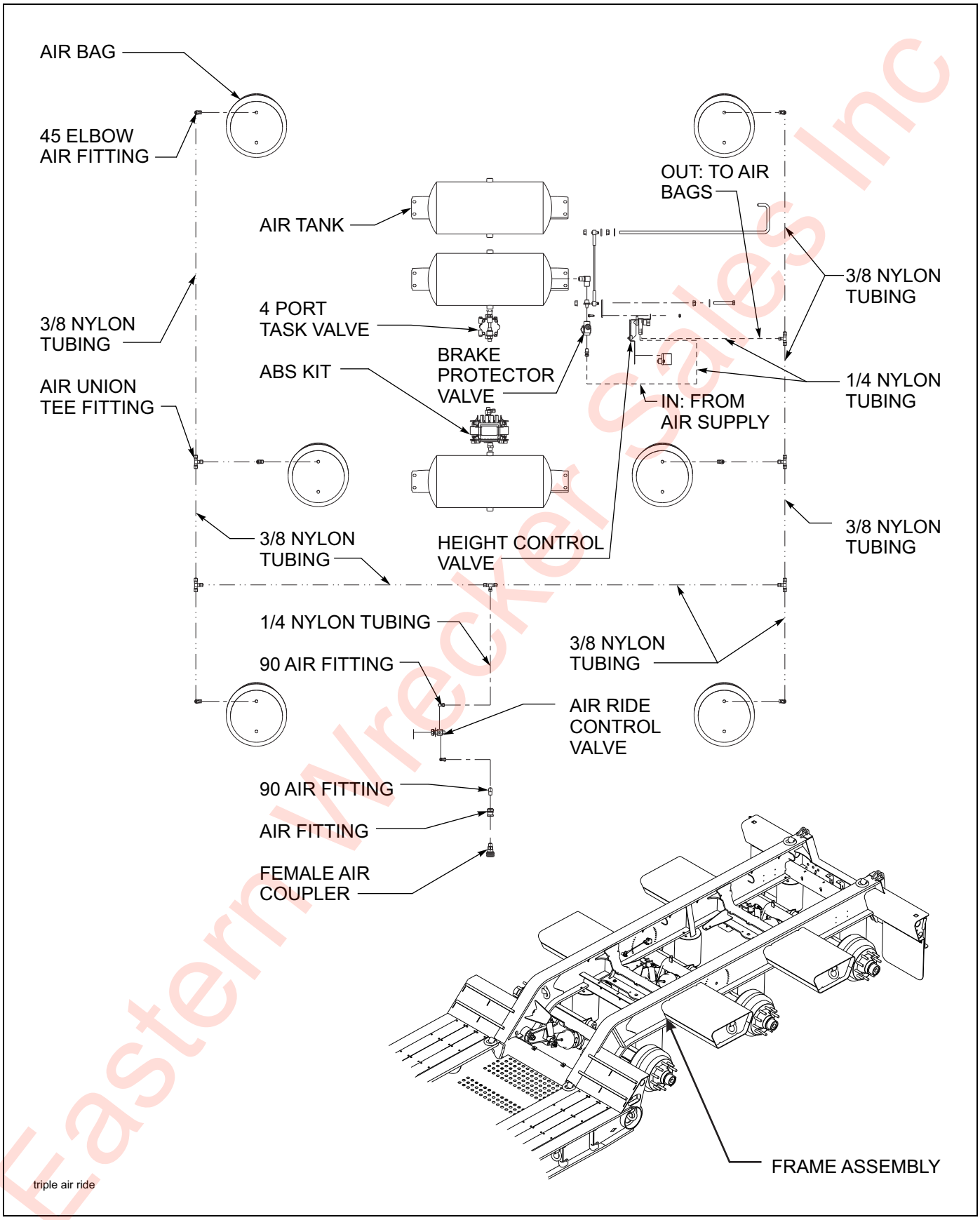

Figure 4-3: Triple Axle Air Ride Suspension System

Eastern Wrecker Sales Inc

https://truckmanualshub.com/

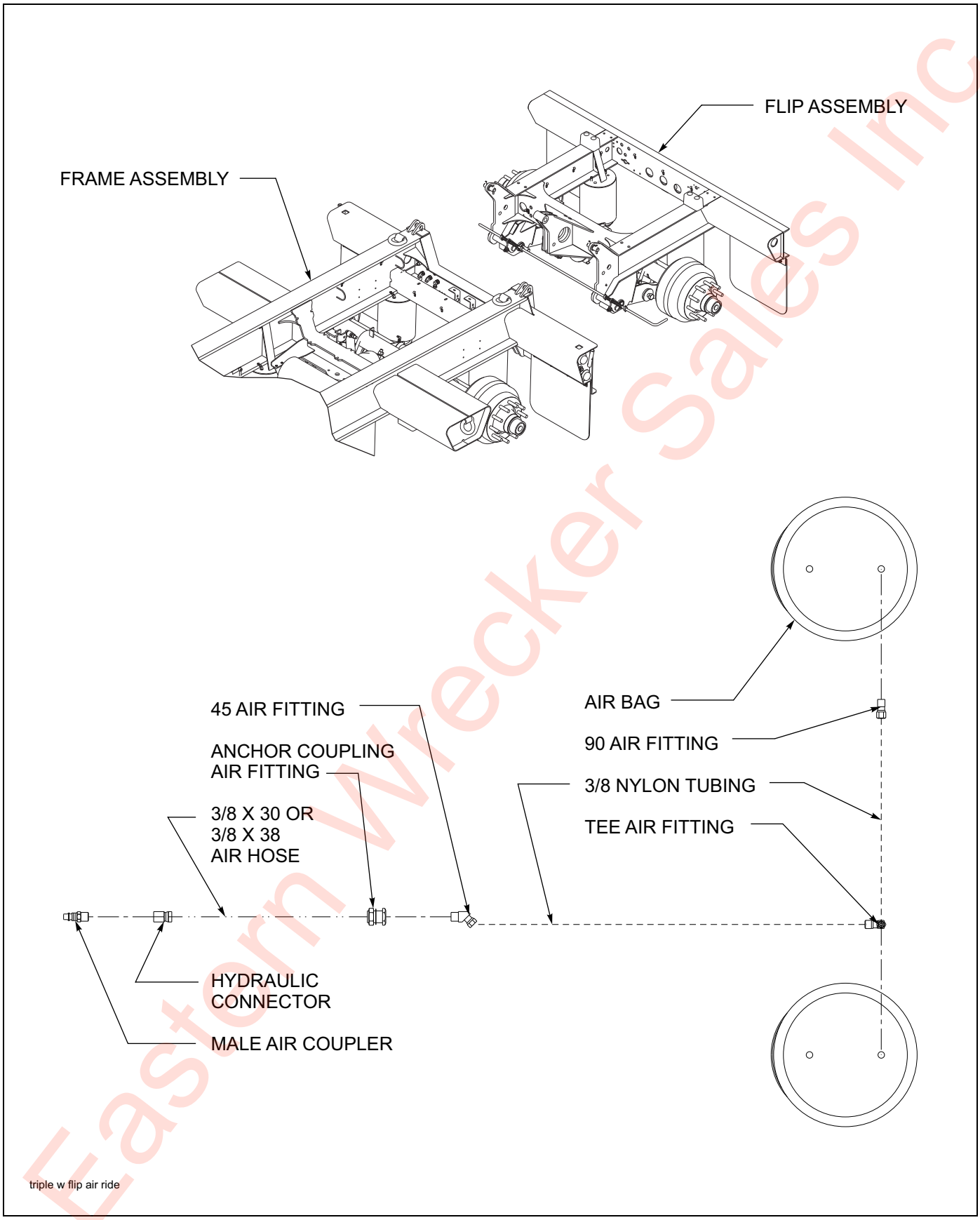

Eastern Wrecker Sales Inc

Figure 4-4: Triple Axle w/ Flip Air Ride Suspension System

https://truckmanualshub.com/

Air Ride Height Adjustment

(See Figure 4-5 for parts identification.)

1. Before adjusting, the vehicle must be empty with the kingpin at operating height and have air supplied to the trailer.
2. Disconnect linkage at the control arm and raise control arm to the “up” position, raising the trailer until a block can be placed between axle tube and undercarriage frame **(See Figure 4-5.)**
3. Position the wood block between the axle tube and frame according to table below. Block height is dependent upon suspension ride height and/or axle brake size.

AIR SUSPENSION RIDE HEIGHT AND BLOCK		
BRAKE SIZE	**RIDE HEIGHT**	**BLOCK HEIGHT**
16-1/2” Dia.	9"	6.5"

4. Lower the trailer by exhausting air from the air springs by moving the control arm to the “down” position (about 45°) until the axle tube is resting on the block.
5. Check the ride height to make sure it is correct. Consult Landoll Service Center if correct height cannot be obtained.
6. Loosen the 1/4” adjusting lock nut located on the adjusting block, allowing the control arm to move approximately 1 inch. Move the adjusting block until holes align, then insert locating pin. **(See Figure 4-5.)**
7. Align the control arm linkage to the control arm lower bracket and re-tighten the 1/4" adjusting lock nut to 2-4 ft.lbs. The ride height valve should now be correctly adjusted.
8. Remove the locating pin.
9. The block can now be removed by using the height control valve as an improvised jack by disconnecting the control arm at the lower bracket and pushing the control arm to an “up” position.
10. Remove the block and reconnect the linkage. This allows the Automatic Height Control Valve to resume normal operation.
11. Check the air ride height. If necessary, go through the adjustment procedure again until the proper air ride height is achieved.
12. Check the air ride height periodically and adjust as needed.

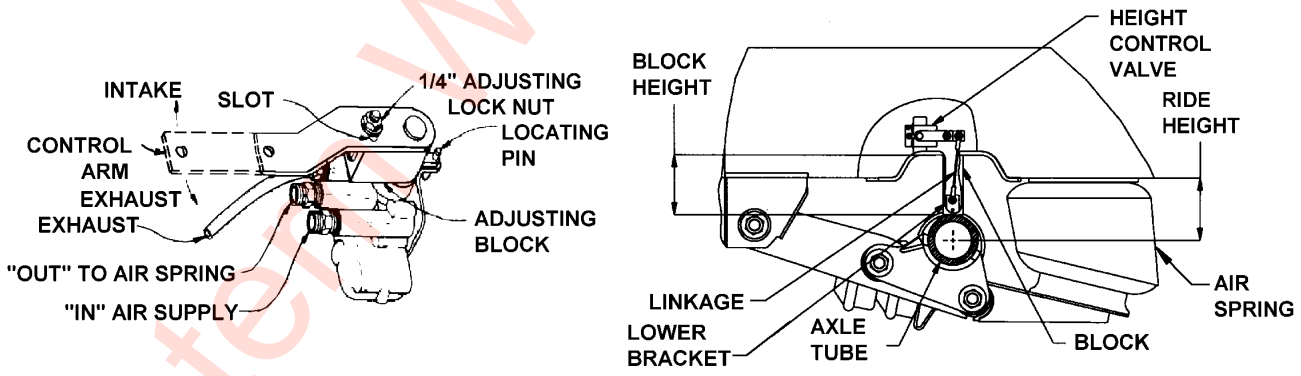

Figure 4-5: Air Ride Height Adjustment

Eastern Wrecker Sales Inc

https://truckmanualshub.com/

Alignment

Wheel Alignment

DANGER

To prevent a life threatening accident:

1. **Support trailer and undercarriage so tires are off the ground.**
2. **Support the trailer and undercarriage on jack stands with sufficient capacity to support the total weight of the trailer and any load which it may be carrying.**

When trailer tires show signs of scuffing, feather-edging or uneven wear, examine the trailer for damaged suspension (frame, shocks, linkage, etc.), axle, wheel bearings and wheels. Proper wheel alignment and wheel bearing adjustment is essential for proper tire wear. The simplest form of checking wheel alignment “toe” is by running the trailer over a “SCUFF GAUGE”. A scuff gauge reading of 16 feet or less per mile is considered satisfactory. If a scuff gauge is not readily available, or edge wear on one side of a tire is occurring signifying positive or negative camber, alignment can be checked as follows:

1. Remove wheel, hub and bearing assemblies.
2. Place a 3-point axle gauge against the front side of the axle, and adjust each axle gauge point to the axle. (Double point end against the inner and outer wheel bearing surfaces of the spindle being checked and the other point on the inner bearing surface on the other spindle.)**(See Figure 4-6.)**
3. Move the axle gauge and place against the back side of the axle. If either of the points of double point end fails to touch the axle surface, a bent spindle is evident. A point gap of .015" or more is considered excessive tire “toe” and the axle must be replaced **(See Figure 4-6.)**
4. Follow the same procedures as in **steps 2 and 3,** except place the axle gauge above and below the axle. If gauge point gap is found, the axle has positive or negative camber. The trailer axle has no camber from the factory. If it is found to have positive or negative camber, axle replacement is necessary. **See Figure 4-7** for examples of camber.

Eastern Wrecker Sales Inc

https://truckmanualshub.com/

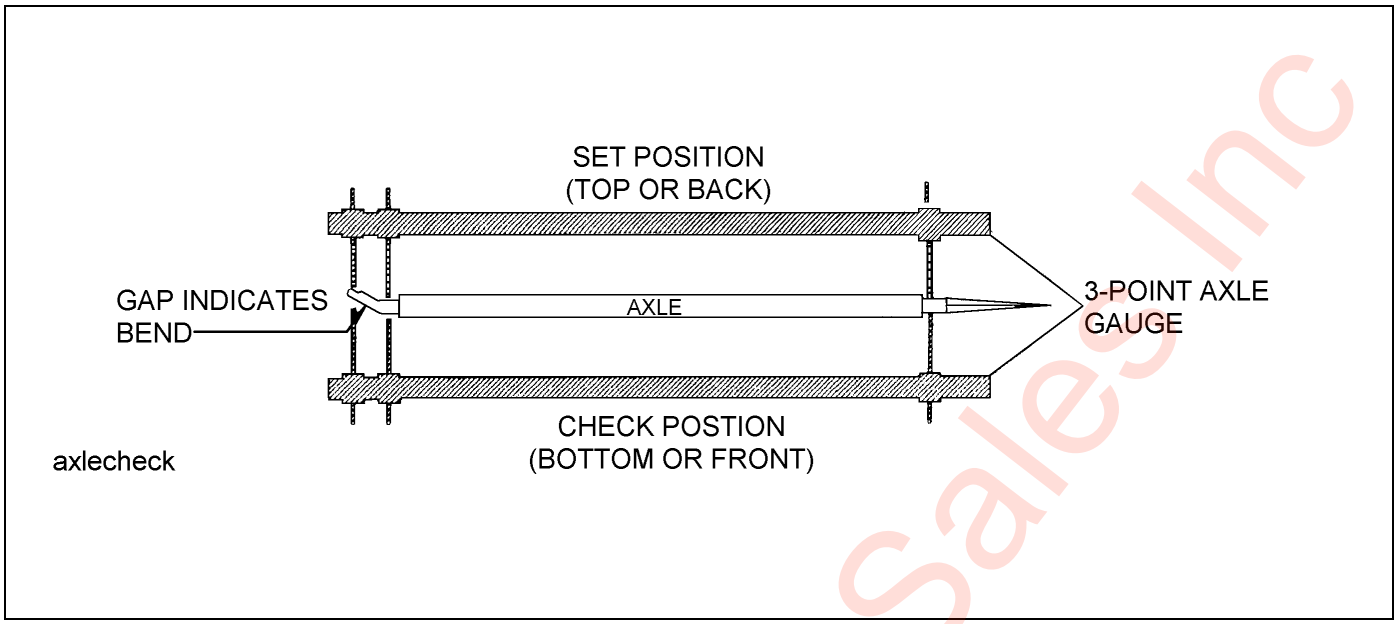

Figure 4-6: Checking Axle for Bend

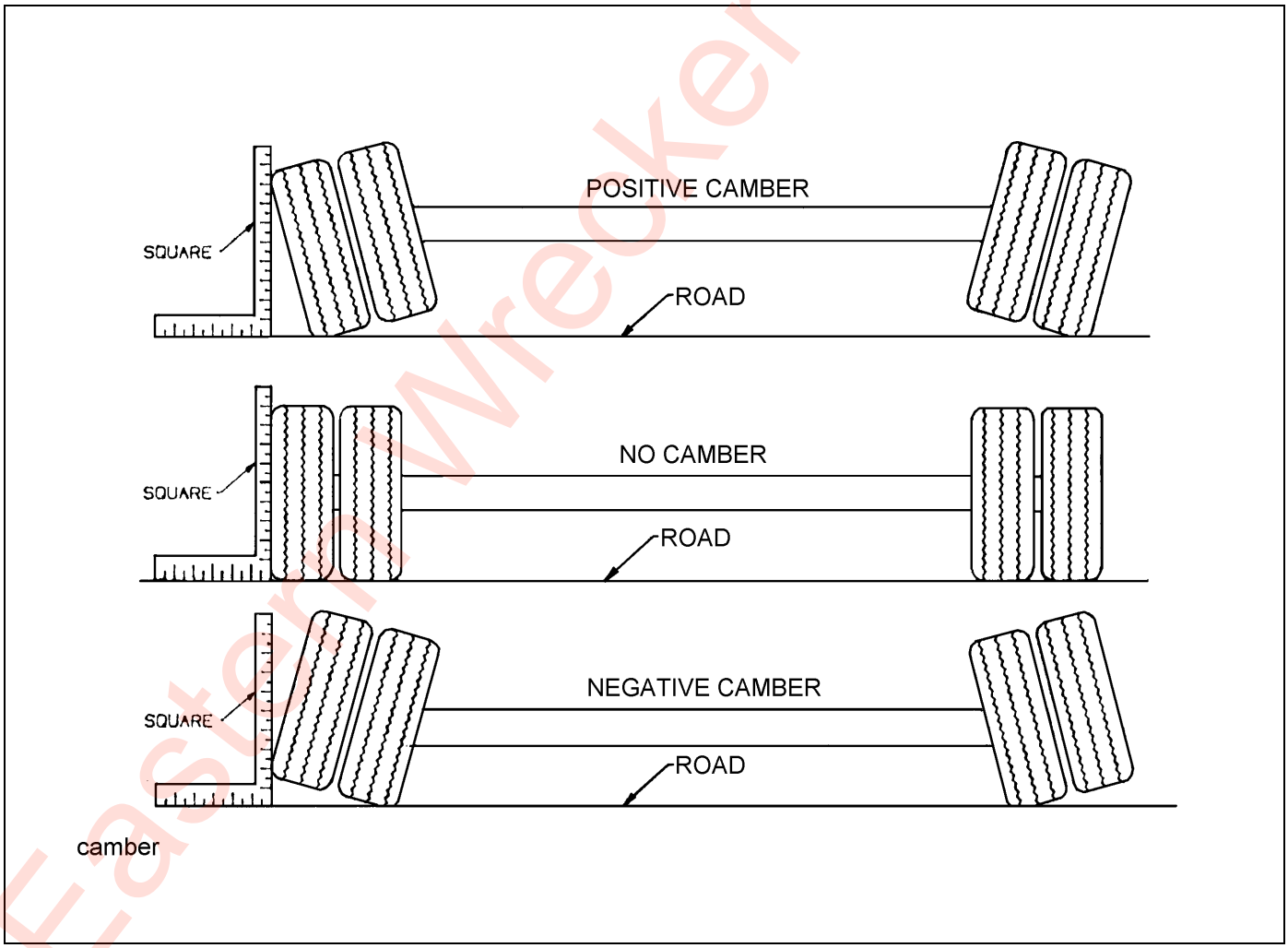

Figure 4-7: Examples of Camber

Eastern Wrecker Sales Inc

https://truckmanualshub.com/

Axle Alignment

Proper axle to king pin alignment is necessary to obtain straight tracking. If axle alignment is off, “dog-tracking” occurs. Check alignment manually or by using a semitrailer alignment machine. In either case, a thorough inspection of the complete suspension must be performed and all defects corrected before aligning.

Manual Alignment Procedure

1. Position semitrailer on a firm and level surface. Insure that the undercarriage is in the rear most position. Eliminate any suspension binding due to sharp turns or unusual maneuvers.
2. Detach tractor from the semitrailer and jack the trailer up sufficiently to permit measuring from the underside of the trailer.
3. Suspend a plumb bob at axle height from the center of the king pin.
4. Measure (D) from the plumb bob to the center point on one end of the axle. Record this measurement **(See Figure 4-8.)**
5. Measure (D1) to the other end of the axle in the same manner as in **step 4.** Record this measurement **(See Figure 4-8.)**
6. Set D about 1/8” shorter than D1 to insure proper trailer tracking on slope of road.
7. The suspensions must be in good repair with no binding or other restrictions before aligning. All defective parts of the suspension or axles must be replaced immediately.

Air Ride Suspension Axles

The air ride suspension is aligned and adjusted at the factory and it should not be necessary to align the axles. If, however it does become necessary to align the axles, the procedure is as follows:

1. To align air ride suspension axles, locate the front axle equalizer beam pivot bolt in front hanger at front end of lock nut. Loosen the suspension pivot bolt lock nut. Rotate the head of the pivot bolt. For axle alignment forward, rotate bolt head clockwise. For axle alignment rearward, rotate the bolt head counter-clockwise. Both sides of axle need to be adjusted to prevent axle rise or fall.
2. Align the front axle using the method outlined in **“Manual Alignment Procedure” on page 4-14.**
3. After proper alignment has been obtained, tighten the suspension pivot bolt nut to the torque listed in the table on **page 4-8.**
4. Align the rear axle to the front axle. Locate the rear axle equalizer beam pivot bolt in hanger at front end of driver’s side rear axle equalizer beam. Loosen the suspension pivot bolt lock nut. Rotate the head of the pivot bolt. For axle alignment forward, rotate bolt head clockwise. For axle alignment rearward, rotate the bolt head counter-clockwise. The rear axle should be parallel with the front axle, with the dimensions Y and Y1 being the same.
5. Align the rear axle to the center axle in the same manner, as **step 4,** with dimensions Z and Z1 being the same. The rear axle should also be parallel with the front axle, with dimensions Y plus Z equal to Y1 plus Z1.
6. Tighten the suspension pivot bolt nut to the torque listed in the table on **page 4-8.**

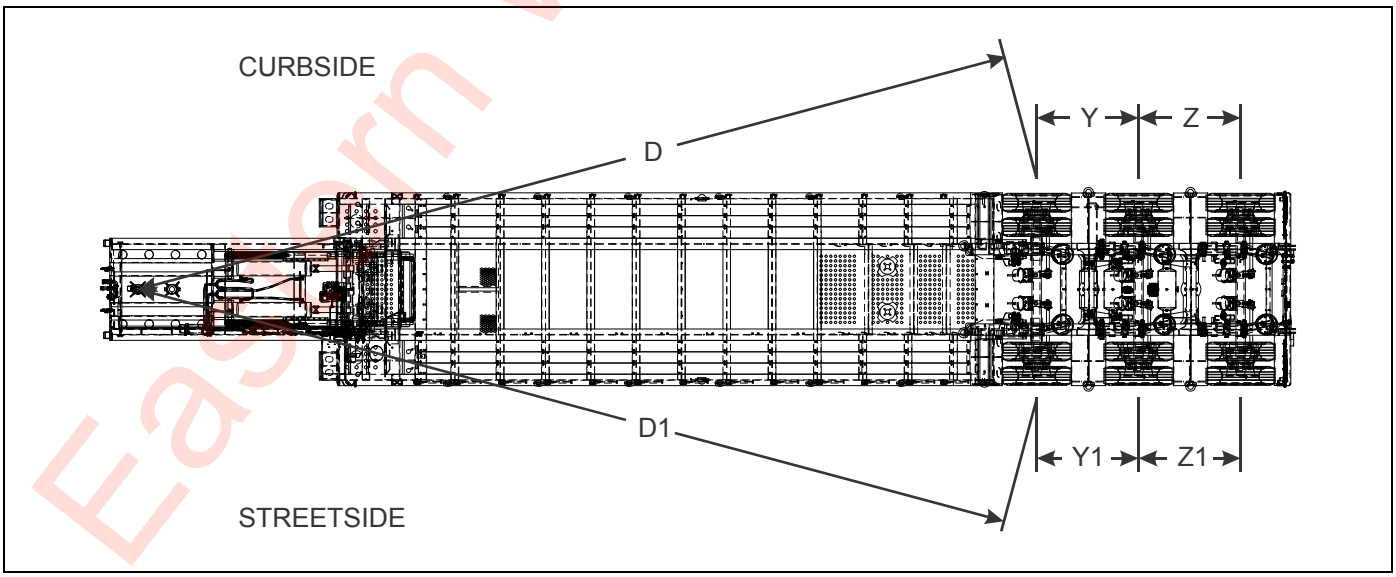

Figure 4-8: Checking Axle Alignment

Eastern Wrecker Sales Inc

https://truckmanualshub.com/

Brake System Maintenance

WARNING

1. **When crawling under the semitrailer is necessary, chock all wheels of the trailer and tractor. When jacking is necessary, chock all wheels and support the semitrailer undercarriage with jack stands sufficient to withstand the weight of the semitrailer and load. Failure to take adequate safety measures may result in serious personal injury or death.**
2. **Use great care if wheels or brake drums must be handled. They may be very hot and can cause serious burns.**

General

A daily general inspection will reveal the most common problems found in the spring brake system. This inspection should include the following:

1. Check air hoses for chafing, bends, kinks, or damaged fittings. Replace defective hoses.
2. Check the brake system for loose, missing, deformed, or corroded fasteners. Replace and tighten defective hardware.
3. Check brake linings for excessive wear or distortion.
4. Drain air reservoir daily. A drain cock on the bottom of each air reservoir vents the tank to drain collected water and oil. If held open, air pressure in the tanks is relieved, causing the emergency or parking brakes to be applied **(See Figure 4-9.)**

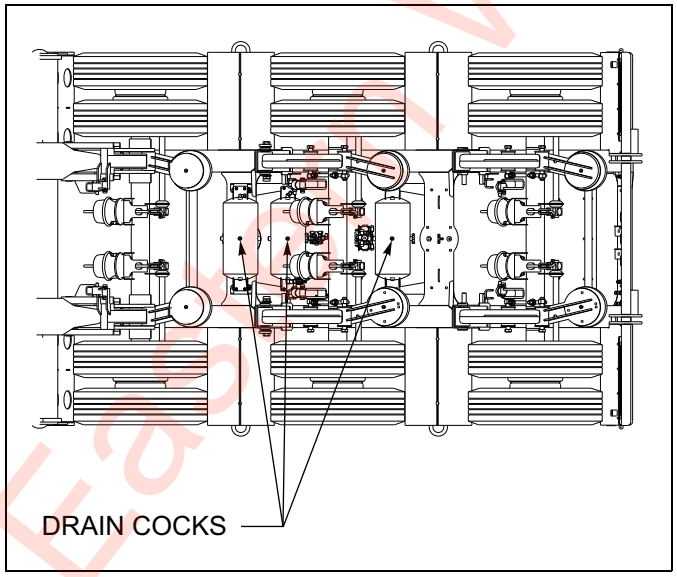

Figure 4-9: Drain Cock Locations

Spring Air Brake Chambers

Check for faulty units. Check the condensation holes on the underside of the brake chambers to make sure they are open. The spring brake has two brake chambers, a service chamber and an emergency chamber or spring chamber. Service brake chambers should be disassembled and cleaned at 50,000 miles or yearly. The diaphragm and any marginal parts should be replaced. When replacing the service diaphragm, replace the corresponding parts for the other chamber on the same axle (to aid in even brake application and release). Examine yoke pin for wear and replace as necessary. The spring chamber should not be serviced. Replace entire unit (both service and spring chamber) if spring chamber becomes faulty.

WARNING

The spring brake chamber employs a spring with high forces. service should not be attempted except by a qualified service person. Serious injury or death may result.

Caging the Power Spring

1. Chock the trailer wheels.
2. Remove dust cap from spring brake chamber.
3. Remove the release bolt from it's holding brackets and insert it into the spring brake chamber. DO NOT USE AN IMPACT WRENCH TO CAGE THE SPRING BRAKE.
4. Turn the bolt until the spring brake is caged. This should be 2-1/4 to 2-1/2 inches of release bolt extension.
5. The brakes should now be totally released. Do not operate loaded trailer with brake manually released.
6. To reset the spring brake, turn the release bolt until the spring is released. Remove the release bolt and store it in its brackets.
7. Snap the dust cap back in place on the chamber.

Eagan Wrecker Sales Inc.

https://truckmanualshub.com/

Removal

1. Chock all tractor and trailer wheels and drain the air system.
2. Mark the brake chamber for proper air line port alignment for reassembly.
3. CAGE THE POWER SPRING following the steps outlined in **"Caging the Power Spring" on page 4-15.**
4. Disconnect the slack adjuster from the connecting rod by removing the clevis pin **(See Figure 4-12.)**
5. Mark all air service lines for proper reinstallation and disconnect from the brake chamber.
6. Remove the brake chamber from the axle brackets.

Installation

1. CAGE THE POWER SPRING following the steps outlined in **"Caging the Power Spring" on page 4-15.**
2. Position the inlet ports by loosening the service chamber clamp bands and rotating center housing such that ports are located according to alignment marks made during disassembly, then retighten the clamp bands.
3. Position the breather hole in the downward facing position by loosening the clamp bands on the spring brake chamber and rotating the chamber housing until the breather hold faces downward. Retighten the clamp bands.
4. Remount the brake chamber on the axle brackets and reconnect the air service hoses and the slack adjuster connecting rod **(See Figure 4-12.)**

IMPORTANT

Be sure the service line is on the service chamber port and the emergency line is on the spring brake port.

5. Check for leakage by charging the air system to a minimum of 90 psi and applying soap suds to the brake chamber and connections. If a growing bubble is detected or bubbles are blown away, locate the source of the leak and repair.
6. Insure that the clamp band is properly seated and tight **before** uncaging the power spring.

Emergency Relay Valve Maintenance

Every 3600 operating hours, 100,000 miles, or yearly, the Emergency Relay Valve should be disassembled, cleaned, and lubricated by a trained technician.

WARNING

Repair or replacement of the relay/emergency valve is a complex operation and should be performed by trained service personnel. Contact a Landoll authorized service center or the Landoll factory for servicing.

Brake Assembly Maintenance

The brake assemblies should be inspected and adjusted every 2,000 miles or monthly. Examine the brake linings visually to locate the lining showing the greatest amount of wear. The wheel and drum should be removed and the linings replaced if the thinnest portion of the lining is 3/8 in. (9.5 mm) or less. Do not allow the linings to wear thin enough that the lining rivet contacts the drum **(See Figure 4-10.)** Lubricate brake assembly per **Figures 4-1 and 4-2, and Table 4-2.**

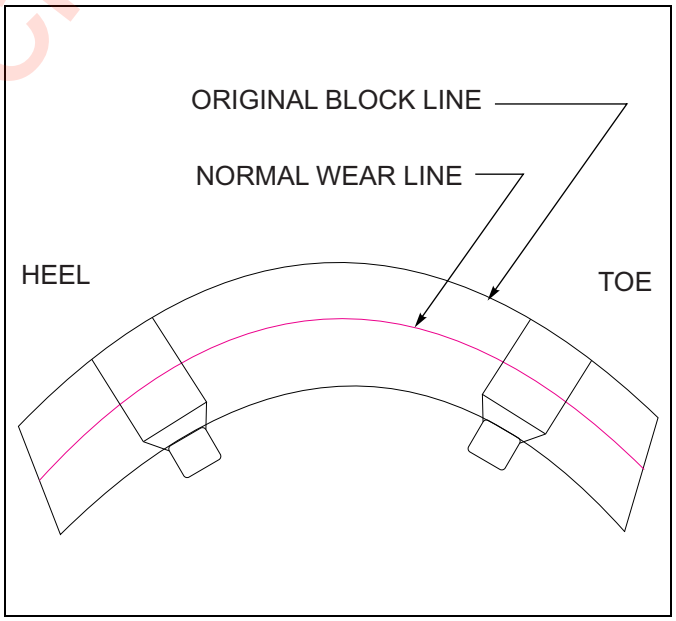

Figure 4-10: Brake Lining Wear

WARNING

DO NOT allow grease to contact brake linings as this could result in reduced braking performance.

Eastern Wrecker Sales Inc

https://truckmanualshub.com/

Brake Adjustment

This semitrailer is equipped with automatic slack adjusters which compensate for brake lining wear and keep brakes adjusted. Brakes should not be adjusted manually except when relining brakes.

Disassembly for 16-1/2” x 7” Brakes

1. Release brakes and back off slack adjuster **(See Figure 4-11.)**
2. Remove slack adjuster lock ring and slack adjuster.
3. Remove drum assembly.
4. Disengage the roller retainers from the rollers.
5. Press down on the bottom brake shoe and remove the lower cam roller. Lift the top shoe and take out the top cam roller.
6. Lift out the shoe retractor spring, which is now free of tension.
7. Swing the lower shoe back approximately 180° to relieve the tension on the shoe keeper springs. Remove the springs and slip the shoes off the anchor pins.
8. Remove camshaft lock ring, spacer washer(s) and camshaft.
9. After removing the shoes, completely inspect all brake components, servicing as necessary.

Reassembly for 16-1/2” x 7” Brakes

1. Install new anchor pin bushings, camshaft bushing and camshaft seals into the spider **(See Figure 4-11.)**

IMPORTANT

When installing camshaft seals, the seal on the slack adjuster side is installed facing into spider. This allows grease to purge outside the brake assembly when greasing the camshaft bushing.

2. Install cam roller, retainer clip and retractor spring retainers onto the camshaft.
3. Install 1/8" thick camshaft washer onto the camshaft.
4. Install the camshaft into the spider. Install spacer washer and lock ring retainer on camshaft before sliding the camshaft through the camshaft support bracket. Install the slack adjuster, washer and lock ring retainer.
5. Install the brake keeper onto the shoes. Install shoes onto the spider by placing shoes in place on the anchor pins, then “wrap” the two shoes into place about the spider.
6. Install the shoe retractor spring onto the shoes.
7. Connect slack adjuster to brake chamber pushrod.
8. Adjust automatic slack adjuster as outlined in **“Adjusting Slack Adjuster” on page 4-20.**

Eastern Wrecker Sales Inc

https://truckmanualshub.com/

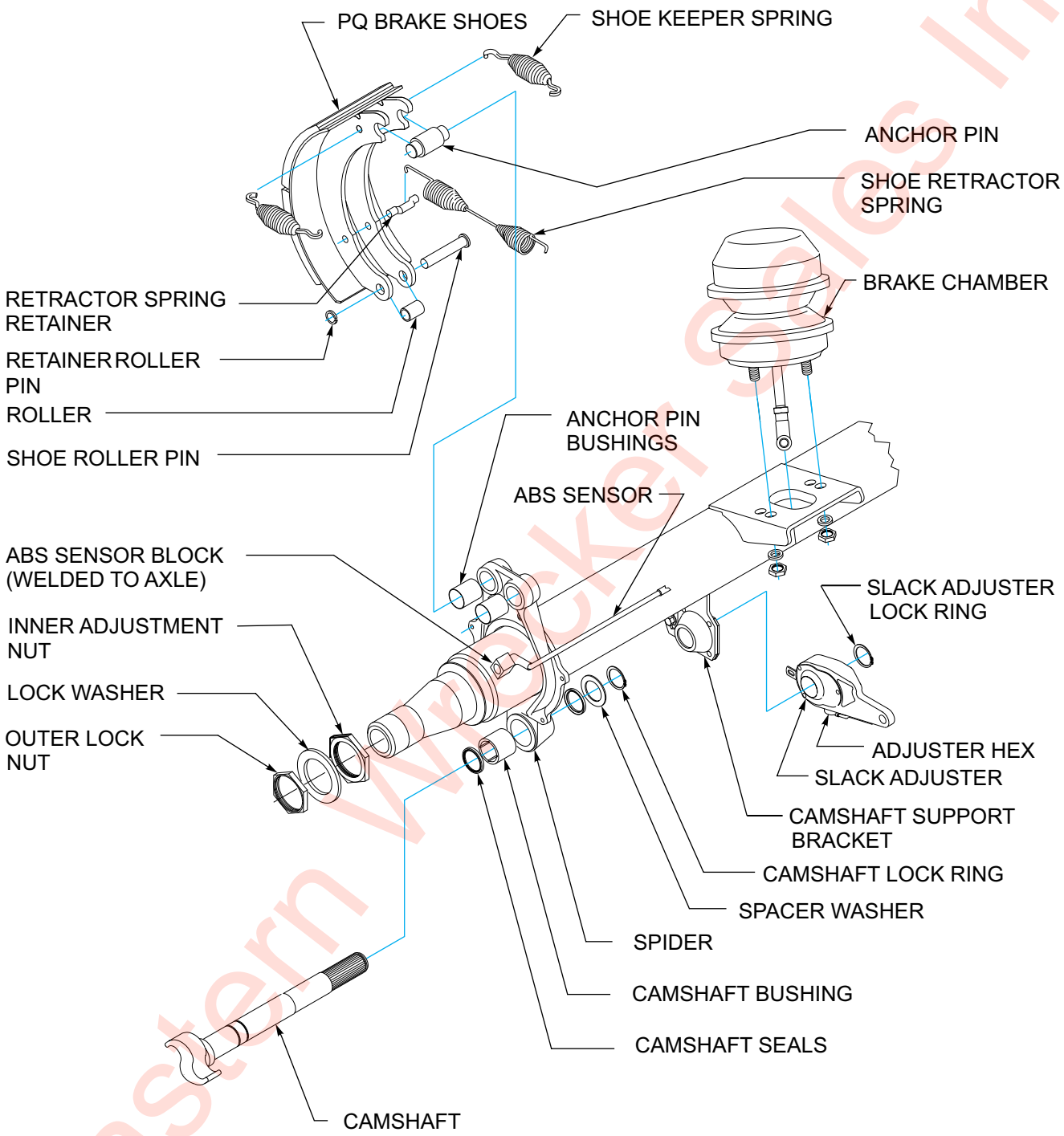

Figure 4-11: Axle and Brake Assembly

Eastern Wrecker Sales Inc

https://truckmanualshub.com/

Automatic Slack Adjuster

The semitrailer automatic slack adjusters provide the means for routine brake adjustment to compensate for lining wear. Inspect slack adjusters every 2,000 miles to assure correct operation.

CAUTION

The installation guide must be used when installing or reinstalling automatic slack adjuster. Failure to do so may result in improperly adjusted brakes which may cause brake damage or lead to brake failure.

Operational Check

1. Block wheels to prevent vehicle from rolling.
2. Check that the push rod is fully retracted, apply air to release spring brake **(See Figure 4-12.)**
3. Turn adjustment hex counterclockwise to create an excessive clearance condition. (A ratcheting sound will occur.)
4. Make a full service brake application. On release, allow sufficient time for brake to fully retract. During the brake release, observe rotation of the adjustment hex (attach a wrench on the hex to make this movement easier to see). This rotation indicates that an excessive clearance condition has been determined by the slack adjuster, and it is making an adjustment to compensate. On each subsequent brake release the amount of adjustment and push rod travel will be reduced until the desired clearance is achieved.
5. The push rod stroke should be 1-1/2” to 2" with an 100 to 105 PSI service brake application.
6. Measure the movement of the push rod from the completely released position to the applied position by marking the push rod where it exits the air chamber before and after application.
7. If the brakes have been running tight, the control arm location should be checked.

WARNING

If the adjuster appears not to be operating, check the other brake components for proper function and eliminate any binding. Recheck the automatic slack adjuster. If the adjuster is not functioning, the unit must be replaced because failure of proper adjustment function will result in loss of brakes.

Replacing Slack Adjuster

1. Chock wheels to prevent vehicle from rolling. Release spring and service brake. Air chamber push rod must be **fully released.**
2. To maintain a fully released parking brake, a minimum of 105 psi reservoir pressure must be maintained. If air pressure is not available the spring brake must be manually caged.
3. Remove the existing slack adjuster and clevis - DO NOT REMOVE EXISTING JAM NUT **(See Figure 4-12.)**
4. Install the new clevis (with 1/2" pin) onto the pushrod up to the jam nut -DO NOT TIGHTEN JAM NUT.
5. Fit the installation guide over the cam splines so the 1/2" pin slots face the air chamber.
6. Swing the guide into the clevis until the appropriate slot totally engages 1/2" pin.
7. Observe the guide pointer arrow:
   If the guide pointer is <u>above</u> the clevis pointer, adjust clevis CCW for alignment.
   If the guide pointer is <u>below</u> the clevis pointer, adjust clevis CW for alignment.
8. Reposition clevis until the guide pointer aligns with the clevis pointer.
9. Verify by engaging 1/4" pin through the clevis and guide.
10. Tighten jam nut to 50 ft.-lbs. torque min.
11. Remove the guide from cam shaft.
12. If the push rod threads extend through the clevis more than 1/16", remove clevis and cut rod to length.
13. If the push rod is not fully engaged in clevis body, install a new push rod - cut to length.
14. Install the slack adjuster on the cam shaft.
15. Rotate the manual adjuster shaft CW until the slack adjuster arm holes align with the clevis. Install 1/2” and 1/4” pins and cotter pins.

Eastern Wrecker Sales Inc

https://truckmanualshub.com/

Adjusting Slack Adjuster

1. Rotate the manual adjuster clockwise until brake shoes contact drum.
2. Back off manual adjuster 1/2 turn. (counterclockwise)
3. Manually uncage the spring brake.
4. Build up vehicle air pressure.
5. Fully apply and release the brakes several times to check for adequate clearance to all adjacent components.
6. Measure the distance from air chamber to 1/2" pin. Apply brakes with 100-105 psi air pressure and remeasure distance to 1/2" pins.
7. The stroke (difference of these two measurements) must be less than 2 inches.

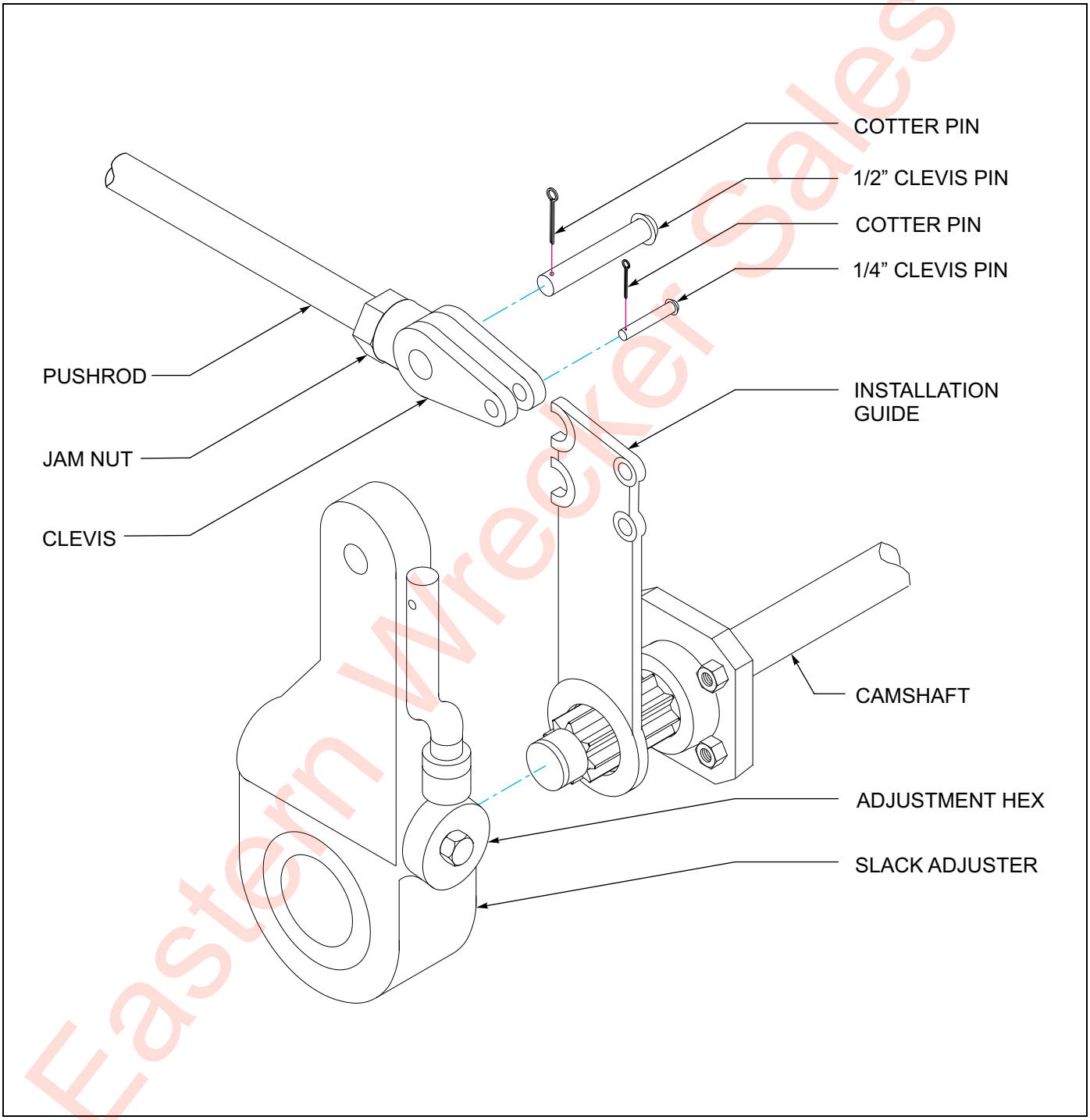

Figure 4-12: Slack Adjuster

Eastern Wrecker Sales Inc

https://truckmanualshub.com/

Hub and Drum Maintenance

1. Clean and inspect the brake drums whenever relining the brakes. To be suitable for further service, the brake drum should pass the following checks.
   a. The brake surface should be free of scoring, excessive heat checks and cracks.
   b. The brake surface diameter should be within the maximum diameter cast or stamped on the drum.
   c. The mounting holes and pilot must be round and true.
   d. The mounting surface must be clean and flat.

WARNING

Failure to replace faulty brake drums will result in an unreliable braking system, and may lead to an accident.

2. It may be necessary to turn or resurface the braking surface to remove small heat checks or other surface defects resulting from normal use.
   a. The maximum diameter cast into the back plate portion of the brake drum is the maximum diameter or discard diameter to which the brake drum may be turned or worn and still be usable. If any portion of the brake surface exceeds the maximum diameter it must be discarded. The maximum is .120 over the nominal new diameter unless stated otherwise on the casting. The maximum diameter cast into the brake drum supersedes all published information.
   b. When resurfacing a drum, allow at least 0.040 inches under the maximum diameter for additional wear.

WARNING

Turning a brake drum beyond 0.040 inches under the maximum diameter will result in a weaker brake drum and may result in an accident.

3. Replacement of the brake drum is required if any of the following conditions exist:
   a. The brake drum is cracked.
   b. The brake surface is heat checked, grooved or worn beyond the rebore limit or the maximum diameter.
   c. The back plate is cracked.
   d. The bolt holes are elongated.
   e. The brake drum has been severely overheated.
   f. The brake drum is out-of-round.

CAUTION

Replace brake drums in pairs to achieve the same braking power on both wheels and maintain an even braking load on the axle. Failure to do this may significantly reduce the performance, service life, and/or safety of your vehicle.

4. Replace the hub and drum as follows: **(See Figure 4-13.)**
   a. Remove the brake drum **(See Figure 4-13.)** It may be necessary to release the slack adjuster.
   b. Remove hub cap and catch lubricant in a pan.
   c. Remove outer spindle nut, spindle locking washer, inner spindle nut, and bearing. Remove hub from axle.
   d. Using an appropriate driver, remove inner bearing cone, and seal.
   e. Using an appropriate driver, remove bearing cups from hub.
   f. Check that the hub cavity is clean. If the hub is to be reused, clean it thoroughly.
   g. Insert bearing cups into the hub.
   h. Clean the mounting surfaces with a good grade commercial cleaner and soft rag. Dry all component parts with a clean, absorbent cloth or paper. Lubricant will not adhere to surfaces wet with solvent.
   i. Install inner bearing, cone, and seal.

Eastern Wrecker Sales Inc

https://truckmanualshub.com/

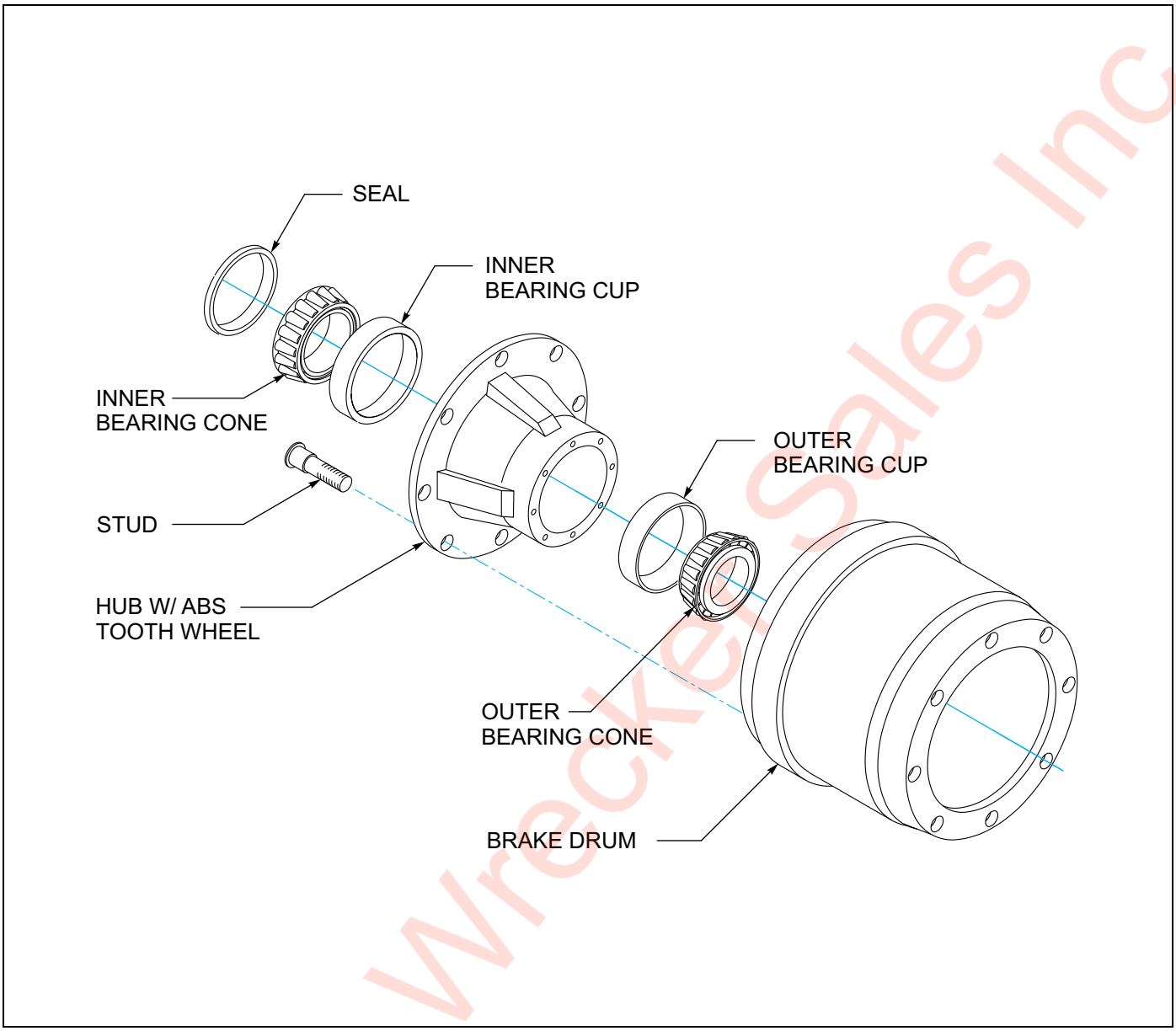

Figure 4-13: Outboard Hub and Drum

IMPORTANT

Do not mix new cups with old cones or new cones with old cups.

j. Place the hub or wheel over the axle spindle being careful to align the hub bore with the axle. Do not damage the seal. Support the hub assembly until the outer bearing cone and spindle nut are installed, to avoid damaging the seal.

k. Install the outer bearing cone and inner spindle nut, tightening the nut until it is snug against the outer bearing cone. Remove the hub support allowing the hub to rest on the bearings.

l. Install and adjust bearings **(See "Wheel Bearing Lubrication and Adjustment" on page 4-23.)**

m. Install the hub cap with the proper gasket. Tighten the cap screws of the hub cap to 15 to 20 ft.-lbs. of torque.

n. Remove the filler plug and fill the hub cavity to the recommended level with a gear type oil.

o. Place the drum over the hub and brake shoes being careful not to damage the threads on the studs. Make sure the drum seats flat against the hub flange and mates properly with the hub pilot. There should be no interference between the brake drum pilot chamfer and the corner radius on the hub. If interference exists, the hub will not be able to function properly.

Eastern Wrecker Sales Inc

https://truckmanualshub.com/

Wheel Bearing Lubrication and Adjustment

With semitrailer sitting level, the oil level must be checked daily and maintained between the “ADD” and “FULL” lines on the hub cap window. Check for cracked windows, missing filler plugs, and oil leaks. Add hub oil through the “POP-IN” filler plug located in the center of the hub windows. Re-install the “POP-IN” plugs after filling each hub. Adjust wheel bearings and change oil every 50,000 miles or with each brake lining replacement, which ever occurs first.

Adjustment

1. With a drain pan under the hub cap, remove the hub cap assembly allowing oil to drain.
2. Lift the wheel off of the ground.
3. Adjust slack adjuster to eliminate brake drag during tire/wheel rotation.
4. Remove outer lock nut and inner nut and lock washer.
5. Tighten the inner adjustment nut to a minimum of 75 ft.-lbs., while rotating wheel to insure proper seating of the bearings and cups in the wheel hub.
6. Loosen the inner adjustment nut so that the wheel will turn freely.
7. Retighten the inner adjustment nut to 50 ft.-lbs. while rotating the wheel, to properly position the bearings for the final adjustment.
8. Loosen the inner adjustment nut 1/3 turn.
9. Install the spindle nut lock washer so that the dowel on the inner nut will align with a hole in the lock washer and the washer tang fits in the spindle keyway.
10. Install the outer lock nut and tighten to 250-300 ft.-lbs. End-play of .001" to .010" must be present in the adjusted wheel bearing assembly.

DANGER

Failure to torque the outer lock nut properly could cause the wheel to come off during vehicle operation resulting in property damage or loss of life.

11. Install the hub cap with a new gasket and fill with oil to the full mark **(See Table 4-1.)**
12. Adjust brakes according to **“Brake Adjustment” on page 4-17.**
13. Check hub oil level after the wheel has set level in one position for a few minutes to allow the oil to work into the bearings.

Tire Maintenance

Tire Inflation

Tire inflation will cause tire to ground contact characteristics as shown in **Figure 4-14.** Tire inflation should be checked daily while the tire is cold, and during road stops. Checking the tire pressures while tires are hot will give a faulty increased pressure reading. Adjusting tire air pressure to the specified amount while tires are hot will produce improper tire to road contact and thus abnormal wear. Do not exceed cold inflation pressure listed on the semitrailer VIN plate located on the front of the trailer. Exceeding cold inflation pressure will result in damaged tire bodies, rims, and wheels. Replace all valve stem caps when pressure checking/adjusting has been completed. Remove any foreign objects from between duals.

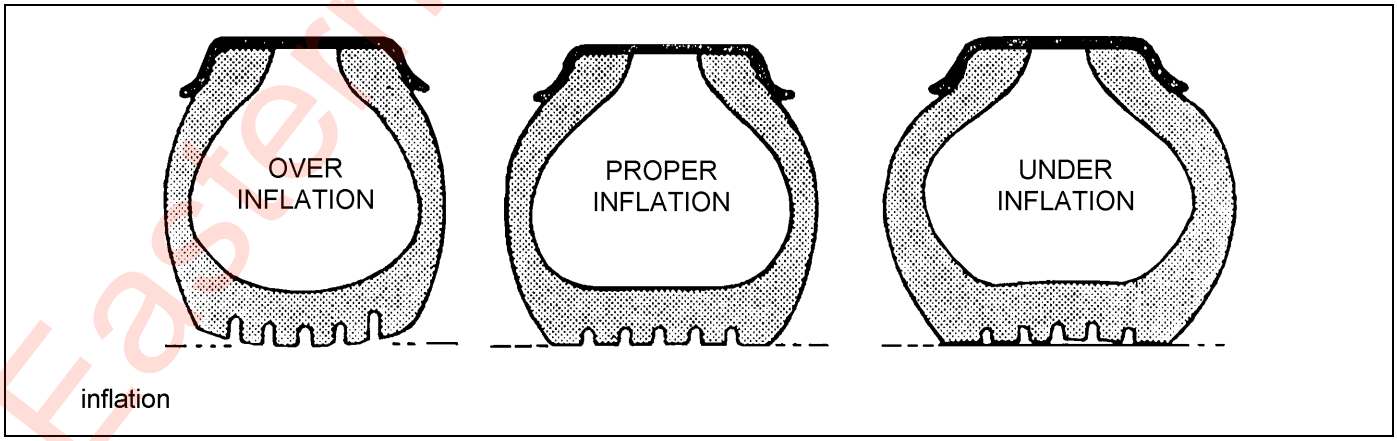

Figure 4-14: Tire Inflation Examples

Eastern Wrecker Sales LLC

https://truckmanualshub.com/

Tire Matching

Both tires on the same spindle must be the same size in order to properly distribute the load and braking forces between them. The tire must be mounted on a rim and properly inflated before measuring. If there is an allowable difference in size the smaller tire should be mounted to the inside position of the duals.

Tape Measuring Method

Measure around each tire on the tread surface. A maximum difference of 3/4” is allowed between the two mating tires of a dual **(See Figure 4-15.)**

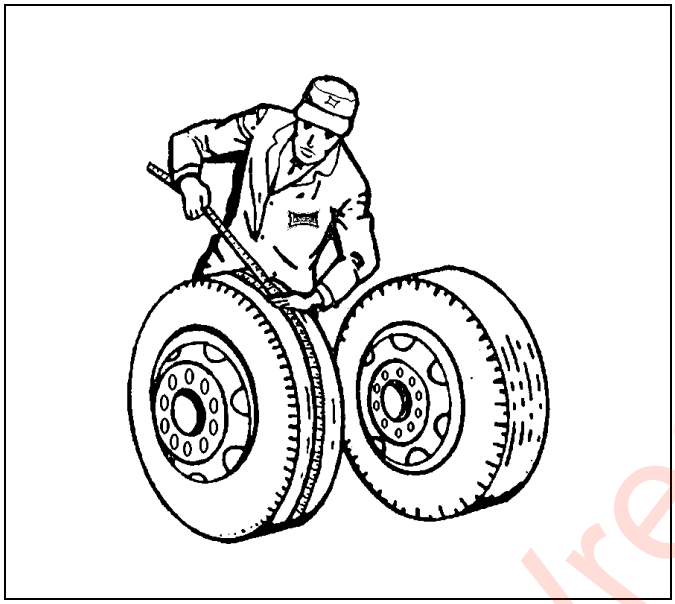

Figure 4-15: Measuring Tape Method

Straight Edge or String Method

(This method cannot be used if tire and wheel assemblies are not mounted on the axle.) Jack trailer up until the wheels are off of the ground. Hold a straight edge against the tires of both ends of an axle. A gap at one tire indicates a smaller tire. A maximum of 1/8” gap is allowed **(See Figure 4-16.)**

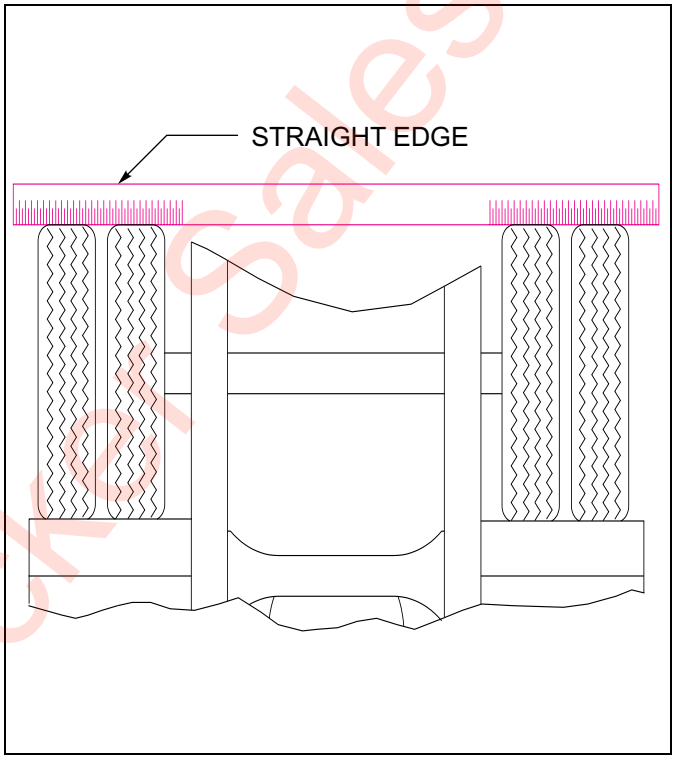

Figure 4-16: Straight Edge Method

Eastern Wrecker Sales Inc

https://truckmanualshub.com/

Mounting Tire and Wheel (Hub Type)

1. Make sure that all mounting surfaces are clean and free of rust, dirt or paint. A wire brush may be used to clean these surfaces **(See Figure 4-17.)**
2. Position the inner disc wheel over the studs, being careful not to damage the stud threads. Make sure that the disc wheel is flat against the mounting surface and that there is clearance between the disc wheel taper and brake drum.
3. Position the outer disc wheel being careful not to damage the stud threads. Be sure the valve stems for both the inner and outer tire are accessible.
4. Install the flange nut (pilot mount) and tighten to 50 foot-pounds using the sequence in **Figure 4-18.** Then tighten to full torque of 450 to 500 foot-pounds.
5. Torque will drop after the first 50 to 100 miles of operation. Check the nuts for proper torque after this interval and re-tighten them.

WARNING

Use a torque wrench to assure proper torque. Insufficient torque can cause stud breakage and damage wheel pilots. Overtorque can overstress the studs and strip the threads.

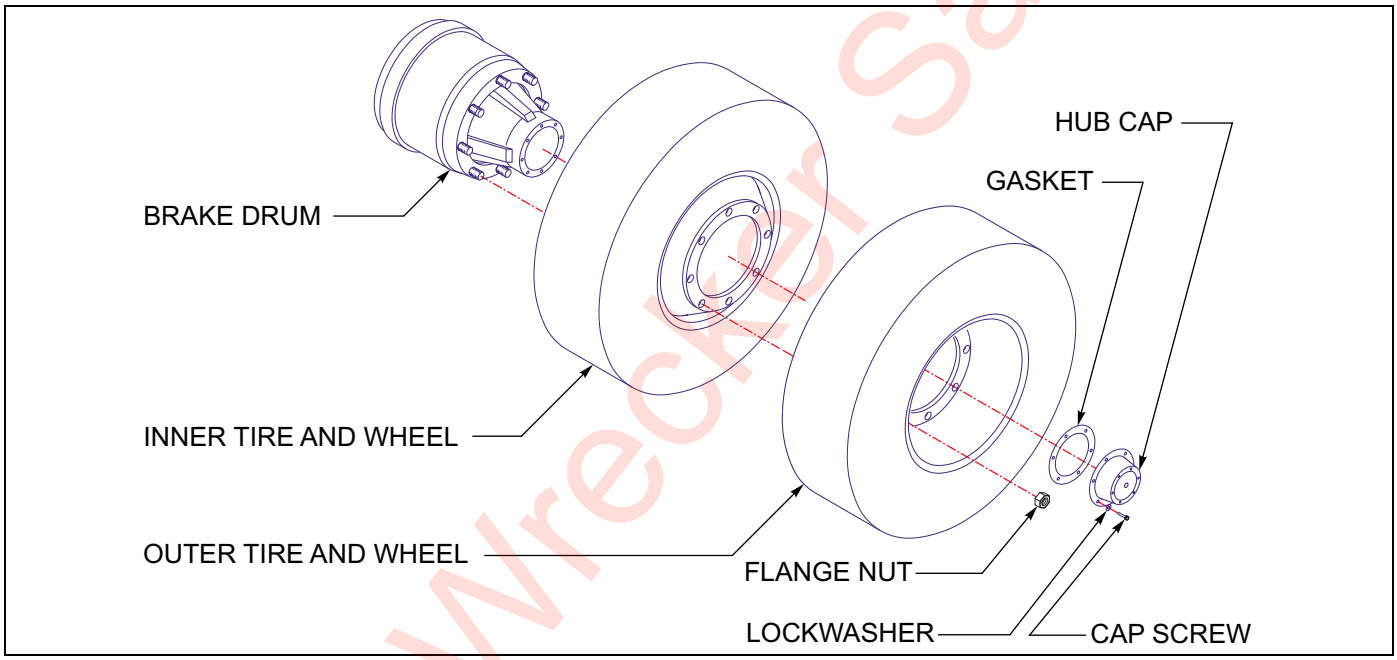

Figure 4-17: Mounting Tires and Wheels

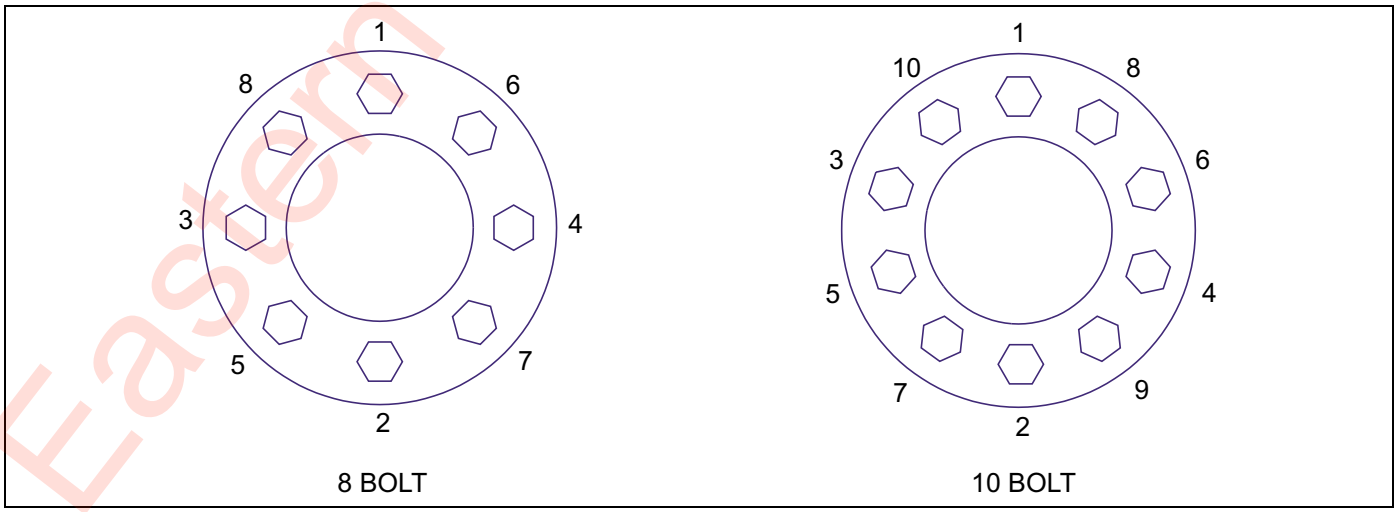

Figure 4-18: Stud Tightening Sequence

Eastern Wrecker Sales Inc

https://truckmanualshub.com/

Page Intentionally Blank

Eastern Wrecker Sales Inc

https://truckmanualshub.com/

Chapter 5

Troubleshooting Guide

Troubleshooting should be performed by a trained and competent technician. Landoll Corporation is not responsible for equipment that is improperly maintained. Contact an authorized Landoll Service center for servicing.

Electrical

Most electrical system problems show up as a burned out light or fuse, or inoperative electrical component. Wiring, grounds, or components may be at fault. Locate the symptom in this section that best identifies your electrical problem. Check out each possible problem under that symptom. If the problem cannot be located, see an automotive electrical specialist. For maintenance procedures see **“Electrical System” on page 4-7.**

PROBLEM	PROBABLE CAUSE	SOLUTION
NO LIGHTS	Fuse blown	Replace fuse.
	Connection at plug-in	Tighten connection.
	Broken or corroded wires	Replace wire.
	Ground wire loose	Clean and tighten ground.
LIGHTS FLICKERING	Wires shorted or loose	Locate, insulate, replace, or tighten
	Grounding through fifth wheel	Locate broken ground wire (tractor or semitrailer).
LIGHTS DIM	Voltage difference between semitrailer and tractor	Match bulbs with tractor voltage.
	Grounding through fifth wheel	Locate broken ground wire (tractor or semitrailer).
LIGHTS BRIGHT AND BURN OUT	Voltage difference between semitrailer and tractor	Match bulbs with tractor voltage.
FUSE BLOW-OUT OR CIRCUIT BREAKER TRIPPING	Vibration	Locate source of vibration and repair.
	Short circuit	Replace fuse and try all accessories. If fuse blows right away, locate short and repair.
LAMP BULB BURN OUT	Vibration	Locate source of vibration and repair.
	Short circuit	Replace fuse and try all accessories. If fuse blows right away, locate short and repair.
	Loose connection	Check lamp sockets and ground connections.
	Intermittent short	Locate short and repair.
	Improper voltage	Check voltage regulator output.

Eastern Wrecker Sales Inc.

https://truckmanualshub.com/

Tires - Wheels - Suspension

Most tire, wheel, and suspension related problems are due to excessive loads, extreme conditions, and improper maintenance. Tire, wheel, and suspension problems can be easily detected and solved by checking the following guide. For maintenance procedures, refer to the following sections:

- **“Hydraulic System” on page 4-7**
- **“Alignment” on page 4-12**
- **“Hub and Drum Maintenance” on page 4-21**
- **“Wheel Bearing Lubrication and Adjustment” on page 4-23**
- **“Tire Maintenance” on page 4-23**

PROBLEM	PROBABLE CAUSE	SOLUTION
VIBRATIONS WHILE DRIVING	Improper tire inflation	Inflate to proper pressure **(See “Tire Inflation” on page 4-23.)**
	Tires cupped or have flat spots	Replace tires.
	Wheels bent or loose	Replace or tighten.
	Tires incorrectly mounted	Remount **(See “Mounting Tire and Wheel (Hub Type)” on page 4-25.)**
	Mud in wheels	Clean wheels.
	Tire(s) out of balance	Balance tires.
	Brakes dragging	Locate cause and repair.
	Object(s) stuck between duals	Remove object(s).
RAPID TIRE WEAR/DETERIORATION:		
CENTER TREAD WEAR	Over inflation	Deflate to correct inflation **(See “Tire Inflation” on page 4-23.)**
SHOULDER TREAD WEAR - BOTH SHOULDERS	Under inflation	Increase inflation to correct PSI. Check axle alignment **(See “Tire Inflation” on page 4-23.)**
	Overload	Loads are above rated tire capacity. DO NOT load above rated tire capacity.
SHOULDER TREAD WEAR - ONE SHOULDER	Axle damage	Straighten or replace axle **(See “Axle Alignment” on page 4-14.)**
	Axles not parallel	Check axle alignment.
OVERALL TREAD WEAR	Overloading	Check tire load rating.
	High speeds	Adjust speed according to road and load conditions.
	Incorrect dual matching	Properly match dual tires **(See “Tire Matching” on page 4-24.)**
TIRE FLAT SPOTS	Quick stops	Adjust braking practices.
	Grabbing brakes	Adjust brakes properly **(See “Brake Adjustment” on page 4-17.)**
	Worn or loose wheel bearings	Adjust or replace as needed **(See “Hub and Drum Maintenance” on page 4-21.)**
	Out of balance wheels and tire	Balance wheels and tires. Check ABS system function.
UNEVEN WEAR	Suspension bushings worn	Replace bushings **(See “Hub and Drum Maintenance” on page 4-21.)**
	Worn or loose wheel bearings	Adjust or replace as needed.
	Out of balance wheels and tires	Balance wheels and tires.
RIM FAILURE*:		

Eastern Wrecker Sales Inc

https://truckmanualshub.com/

PROBLEM	PROBABLE CAUSE	SOLUTION
CRACKING	Overinflated tires	Deflate tire to proper PSI.
	High speeds	Adjust speed according to road and load conditions.
	High speed cornering	Adjust cornering practices.
	Over loading	Check rim load rating.
***IN ALL INSTANCES OF RIM FAILURE, REPLACE THE RIM IMMEDIATELY!**		
BENDING OR WARPING	Curb-hopping or potholes	Adjust turning practices and adjust speed accordingly with road conditions.
	Improper tightening sequence	Follow proper tightening sequence **(See Figure 4-18.)**
BROKEN STUDS*	Over tightening	Use correct torque when mounting **(See Table 2-1)**
*REPLACE BROKEN STUDS BEFORE USING THE SEMITRAILER!		
SEMITRAILER TRACKING PROBLEMS:		
TRACKS TO ONE SIDE	Axle alignment	Re-align axle **(See "Axle Alignment" on page 4-14.)**
TRACKS TO EITHER SIDE	Broken or bent springs or equalizers	Replace defective parts.
	Axles not parallel	Re-align axles.
AIR RIDE HEIGHT PROBLEMS:		
TOO HIGH	Axle to control valve linkage	Readjust linkage.
	Height Control Valve internal leak	Repair or replace valve.
TOO LOW	Axle to control valve linkage	Readjust linkage.
	Height Control Valve filter plugged	Clean or replace valve.
	Pressure Protection Valve filter plugged	Clean or replace valve.
	System air pressure low (65 PSI minimum required)	Troubleshoot air supply.
UNEVEN FROM SIDE TO SIDE	Linkage adjustment	Readjust linkage
	Exhaust port plugged	Clean or replace valve(s).
	Height control valve internal leak	Repair or replace valve.
	Supply line to one height control valve pinched, restricted, or plugged	Repair or replace line.

Eastern Wrecker Sales Inc

https://truckmanualshub.com/

Brakes

For maintenance procedures, see **"Brake System Maintenance" on page 4-15** .

PROBLEM	PROBABLE CAUSE	SOLUTION
NO BRAKES OR BRAKES ARE INTERMITTENT	Brake air system improperly connected	Reconnect hand valves properly.
	Relay/Emergency valve plugged	Clean valve.
	Defective tractor protection valve	Repair or replace.
	Restricted tubing or hose line	Locate and eliminate restriction.
	Broken line	Locate break and repair.
	Tractor air system failure	Troubleshoot tractor air system and repair. Check ABS system function.
SINGLE BRAKE DRAGGING OR LOCKED	Broken internal brake component	Locate and replace broken part **(See "Brake Assembly Maintenance" on page 4-16.)**
	Flat spot on cam roller or cam shaft	Replace and lubricate.
	Improper adjustment	Adjust slack adjusters **(See "Automatic Slack Adjuster" on page 4-19.)**
	Spider bushing or cam bracket bushing binding	Lubricate or replace bushing.
	Improper lubrication	Lubricate per **Figures 4-1 and 4-2.**
	Worn brake shoe bushing	Replace bushing.
	Brake drum distortion	Replace drum.
	Broken brake chamber spring	Replace spring.
	Brake chamber pushrod binding	Re-align brake chamber bracket.
	Air brake line loose or broken	Tighten or repair.
UNEVEN BRAKES	**See "SINGLE BRAKE DRAGGING OR LOCKED"**	
	Restriction in hose	Locate restriction and remove.
	Worn brake linings	Reline brakes.
	Grease on linings	Reline brakes.
	Broken slack adjuster	Replace slack adjuster **(See "Replacing Slack Adjuster" on page 4-19.)**
	Leaking brake chamber diaphragm	Replace diaphragm.
BRAKES APPLY TOO SLOWLY	Brakes need adjusting or lubrication	Adjust or lubricate as needed.
	Low air pressure in brake system (below 105 PSI)	Check tractor air system.
	Restricted tubing or hose	Locate restriction and remove.
	Defective relay valve	Clean or replace.
	Call Factory or see qualified Trailer/Brake Technician	
BRAKES RELEASE TOO SLOWLY	Brakes need adjusting or lubrication	Adjust or lubricate as needed.
	Brake rigging binding	Align brakes or replace bent parts.
	Exhaust port of relay valve restricted or plugged	Clean valve.
	Tractor pressure too low	Adjust to provide 105 psi min.

Eastern Wrecker Sales Inc

https://truckmanualshub.com/

PROBLEM	PROBABLE CAUSE	SOLUTION
ALL BRAKES DO NOT RELEASE	Air system improperly connected to tractor	Tighten or adjust connections.
	Brake valve on tractor is applied	Release brake.
	Relay emergency valve in emergency position	Check line pressure and check valve.
	Restricted tubing or line	Locate restriction and remove.
	Defective tractor protection valve	Troubleshoot tractor air system.
	Parking brakes locked	Troubleshoot air system.
	Moisture in air system	Check air system.
	Tractor pressure too low	Adjust to provide 105 psi min.
INSUFFICIENT BRAKES	Brakes need adjusting	Adjust brakes **(See "Brake Adjustment" on page 4-17.)**
	Brakes need lubricating	Lubricate brakes.
	Brakes need relining	Reline brakes.
	Low air pressure	Troubleshoot air system.
	Defective relay emergency valve	Repair or replace.
	Brakes overheated	Stop and allow brakes to cool, locate cause of overheating.
BRAKES GRABBING	Grease on brake linings	Reline brakes.
	Brake rigging binding	Align brakes or replace bent parts.
	Defective brake valve on tractor	Repair or replace valve.
	Defective relay emergency valve	Repair or replace valve.
EXCESSIVE LEAKAGE WITH BRAKES RELEASED	Relay emergency valve leaking	Repair or replace valve
	Leaking tubing or hose	Replace defective part.
EXCESSIVE LEAKAGE WITH BRAKES APPLIED	Relay emergency valve leaking	Repair or replace valve.
	Leaking brake chamber diaphragm	Replace diaphragm.
	Call Factory or see qualified Trailer/Brake Technician.	
	Leaking tubing or hose	Replace defective part.
EXCESSIVE LEAKAGE WITH EMERGENCY SYSTEM ONLY APPLIED - NO LEAKAGE WITH NORMAL BRAKING	Defective relay emergency valve	Repair or replace valve.
EXCESSIVE WATER PRESENT IN BRAKE SYSTEM	Reservoir not drained often enough	Drain reservoir daily.
EXCESSIVE OIL PRESENT IN BRAKE SYSTEM	Compressor on tractor passing excessive oil	Repair compressor.
BRAKE WILL NOT APPLY PROPERLY	Flat spot on cam roller or camshaft	Replace and lubricate.
BRAKES WILL NOT APPLY WHEN EMERGENCY LINE IS DISCONNECTED	Initial air pressure too low	Allow air system to build up to minimum 90 PSI and stabilize.
	Defective relay valve	Repair or replace valve.
	Air line leak	Locate leak and repair.
	Brake chamber leak	Locate leak and repair or replace.
ABS WARNING LIGHT STAYS ON	Refer to Rockwell WABCO ABS maintenance manual supplied with semitrailer, for system function and use of blink code diagnostics.	

Eastern Wrecker Sales Inc

https://truckmanualshub.com/

Brake Drums

For maintenance procedures, refer the following sections:

- **“Suspension Maintenance” on page 4-8**
- **“Alignment” on page 4-12**
- **“Brake System Maintenance” on page 4-15**
- **“Hub and Drum Maintenance” on page 4-21**
- **“Wheel Bearing Lubrication and Adjustment” on page 4-23**

PROBLEM	PROBABLE CAUSE	SOLUTION
EXCESSIVE LOSS OF BRAKES OR FADING	Overheated brake drums	Check for defective or misadjusted brake linings, distorted or over-machined drums. Also check for operating conditions or loads that create severe or excessive brake applications.
BRAKES PULL TO EITHER SIDE	Drums of different diameters	Replace with drums of same diameter.
	Foreign matter in drums	Clean drums out.
ROUGH OR NOISY BRAKING ACTION	Defective drums	Pull drums and inspect for any of the following; Heat spotted drums, grease spotting, blue drums, scored drums, excessive wear at rivet holes or edges, polished drums, out of round drums, unbalanced drums, worn/damaged brake components, foreign matter in drums. Correct situation or replace defective part(s).
VIBRATION IN RIDE	Defective drums or out-of-round	Replace drums.
	Out-of-balance drums	Balance drums.

Eastern Wrecker Sales Inc

https://truckmanualshub.com/

Hydraulic System

Most hydraulic system failures follow the same pattern: a gradual or sudden loss of pressure or flow with a resulting loss of cylinder or motor power. Any one of the system's components may be at fault. By following step-by-step procedures, the trouble can be located in a short time.

PROBLEM	PROBABLE CAUSE	SOLUTION
SEMITRAILER LOCKED IN TILTED POSITION	Dirty or damaged components	Clean or repair as needed.
SYSTEM INOPERATIVE	Not enough oil in system	Fill, check for leaks.
	Wrong oil in system	Change oil, see specifications **(See Table 4-1).**
	Filter dirty or clogged	Drain oil and replace filter.
	Hydraulic lines dirty or collapsed	Clean or replace as necessary.
	Air leaks in pump suction line	Repair or replace as necessary.
	Worn or dirty pump	Clean, repair or replace. Check for contaminated oil. Drain and flush.
	Badly worn components	Examine for internal leakage. Replace faulty components. Check for cause of wear.
	Leakage	Check all components, and relief valve for proper settings.
	Excessive load	Check unit specifications for load limit **(See "Standard Specifications" on page 2-1.)**
	Slipping or broken pump drive	Repair or replace couplings. Check for alignment.
	Valve Compensator stuck	Clean, Repair or Replace.
SYSTEM OPERATES ERRATICALLY	Air in the system	Check suction side of system for leaks. Repair leaks.
	Cold oil	Allow ample warm-up time. Use proper weight oil for operating temperature.
	Dirty or damaged components	Clean or repair as needed.
	Restriction in filters or lines	Clean and/or replace filter or lines.
	Not enough oil in system	Fill and check for leaks.
SYSTEM OPERATES SLOWLY	Oil viscosity too high, or "cold oil"	Allow oil to warm up before operating.
	Low pump drive speed	Increase engine speed (check pump owners manual for specifications).
	Low oil level	Check reservoir and add oil as necessary.
	Air in system	Check suction side for leaks. Repair leaks.
	Badly worn pump, valves, cylinders, etc.	Repair or replace faulty component(s) as necessary.
	Restrictions in lines or filter	Clean and/or replace filter or lines.
	Improper adjustments	Check orifices, relief valves, etc. Adjust as necessary.
	Oil leaks	Tighten fittings. Replace seals, gaskets and damaged lines.
SYSTEM OPERATES TOO FAST	Engine running too fast	Reduce engine speed.

Eastern Wrecker Sales Inc

https://truckmanualshub.com/

PROBLEM	PROBABLE CAUSE	SOLUTION
OVER HEATING OF OIL IN SYSTEM	Oil passing through relief valve for excessive time	Return control valve to neutral when not in use.
	Incorrect, low, dirty oil	Use recommended oil **(See Table 4-1.)** Fill reservoir with clean oil. Replace filter.
	Engine running too fast	Reduce engine speed.
	Excessive component internal leakage	Repair or replace component as necessary.
	Restriction in filters or lines	Clean and/or replace filter or lines.
	Insufficient heat radiation	Clean dirt and mud from reservoir and components.
	Malfunctioning component	Repair or replace.
FOAMING OF OIL	Incorrect, low, or dirty oil	Replace, clean or add oil as needed.
	Water in oil	Replace oil.
	Air leaks	Check suction line and component seals for suction leaks. Replace defective parts.
NOISY PUMP	Low, incorrect, foamy oil	Replace, clean, or add oil as needed.
	Suction line plugged	Clean out obstruction or replace line. Flush system, replace filter.
	Pump damaged	Repair or place.
LEAKY PUMP	Damaged or worn shaft seal	Replace seal and/or shaft and check for misalignment.
	Loose or broken parts	Tighten or replace.
CYLINDERS MOVE WITH CONTROL VALVE IN NEUTRAL POSITION	Leaking cylinder seals or fittings	Replace worn seals or fittings.
	Control valve not centering when released	Check linkage for binding and repair.
	Valve damaged	Repair or replace.
CONTROL VALVE LEAKS	Seals damaged or worn	Replace seals or valve.
CYLINDER LEAKS	Seals worn or damaged	Replace seals or cylinder.
	Rod damaged	Replace.
	Barrel damaged	Replace.
CYLINDERS DO NOT FUNCTION, OR CREEP WITH PTO DISENGAGED	Leaking fittings or cylinder seals	Tighten loose fittings. Replace worn seals or fittings.
	Counter balance valve or O-ring leak	Replace defective component.

Eastern Wrecker Sales Inc

https://truckmanualshub.com/

Eastern Wrecker Sales Inc

https://truckmanualshub.com/

Equipment from Landoll Corporation is built to exacting standards ensured by ISO 9001 registration at all Landoll manufacturing facilities.

Model 855E/855E HD Series Detachable Semitrailer Operator's Manual

Re-Order Part Number F-916-0217

LANDOLL CORPORATION
1900 North Street
Marysville, Kansas 66508
(785) 562-5381
800-428-5655 ~ WWW.LANDOLL.COM

Copyright 2010. Landoll Corporation
"All rights reserved, including the right to reproduce this material or portions thereof in any form"

Eastern Wrecker Sales Inc