https://truckmanualshub.com/

Haulotte GROUP

OPERATING AND MAINTENANCE INSTRUCTIONS

SELF-PROPELLED SCISSOR PLATFORM

COMPACT 8, 8W, 10N, 10 and 12

242 032 6060 - E 10.05 Ind. A GB

Haulotte Groupe - La Péronnière - BP 9 - 42152 l'Horme - France • Tél : +33 (0)4 77 29 24 24 - Fax : +33 (0)4 77 29 43 95

https://truckmanualshub.com/

https://truckmanualshub.com/

Distribué par / *Distributed by/ Distribuito da*

Haulotte France
Tél / *Phone* +33 (0)4 72 88 05 70
Fax / *Fax* +33 (0)4 72 88 01 43

Centre Mondial Pièces de Rechange
Spare Parts International Centre
Tél / *Phone* +33 (0)4 77 29 24 51
Fax / *Fax* +33 (0)4 77 29 98 88

Haulotte Hubarbeitsbühnen
Tél / *Phone* + 49 76 33 806 920
Fax / *Fax* + 49 76 33 806 82 18

Haulotte Portugal
Tél / *Phone* + 351 21 955 98 10
Fax / *Fax* + 351 21 995 98 19

Haulotte UK
Tél / *Phone* + 44 (0) 1952 292753
Fax / *Fax*² + 44 (0) 1952 292758

Haulotte U.S. Inc.
Main tool free 1-877-HAULOTTE
Service tool free *1*-877-HAULOT-S

Haulotte Asia
Tél / *Phone* + 65 6536 3989
Fax / *Fax* + 65 6536 3969

Haulotte Netherlands BV
Tél / *Phone* + 31 162 670 707
Fax / *Fax* + 31 162 670 710

Haulotte Australia PTY Ltd
Tél / *Phone* + 61 3 9706 6787
Fax / *Fax* + 61 3 9706 6797

Haulotte Italia
Tél / *Phone* + 39 05 17 80 813
Fax / *Fax* + 39 05 16 05 33 28

Haulotte Do Brazil
Tél / *Phone* + 55 11 3026 9177
Fax / *Fax* + 55 3026 9178

Haulotte Scandinavia AB u.b.
Tél / *Phone* + 46 31 744 32 90
Fax / *Fax* + 46 31 744 32 99

Haulotte Iberica - Madrid
Tél / *Phone* + 34 91 656 97 77
Fax / *Fax* + 34 91 656 97 81

Haulotte Iberica - Sevilla
Tél / *Phone* + 34 95 493 44 75
Fax / *Fax* + 34 95 463 69 44

https://truckmanualshub.com/

REVIEW JOURNAL

Issue	Date	Subject
10.05	27/10/2005	Created (Index a)

https://truckmanualshub.com/

GENERAL

You have just taken delivery of your mobile elevating work platform

It will give you complete satisfaction if you follow the operating and maintenance instructions exactly.

The purpose of this instruction manual is to help you in this.

We stress the importance:

- of complying with the safety instructions relating to the machine itself, its use and its environment,
- of using it within the limits of its performances,
- of proper maintenance upon which its service life depends.

During and beyond the warranty period, our After-Sales Department is at your disposal for any service you might need.

Contact in this case our Local Agent or our Factory After-Sales Department, specifying the exact type of machine and its serial number.

When ordering consumables or spares, use this documentation, together with the «Spares» catalogue so as to receive original parts, the only guarantee of interchangeability and perfect operation.

This manual is supplied with the machine and is included on the delivery note.

REMINDER: You are reminded that our machines comply with the provisions of the «Machines Directive» 89/392/EEC of June 14th 1989 as amended by the directives 91/368/EEC of June 21st 1991, 93/44/EEC of June 14th 1993, 93/68/EEC of July 22nd 1993 and 89/336/EEC of May 3rd 1989, directive 2000/14/CE and directive EMC/89/336/CE.

Caution!
The technical data contained in this manual cannot involve our responsibility and we reserve the right to proceed with improvements or modifications without amending this manual.

CONTENTS

1 - GENERAL RECOMMENDATIONS - SAFETY 1

1.1 - GENERAL WARNING 1
1.1.1 - Manual 1
1.1.2 - Labels 1
1.1.3 - Safety 1

1.2 - GENERAL SAFETY INSTRUCTIONS 2
1.2.1 - Operators 2
1.2.2 - Environment 2
1.2.3 - Using the machine 2

1.3 - RESIDUAL RISKS 4
1.3.1 - Risks of jolting - Overturning 4
1.3.2 - Electrical risks 4
1.3.3 - Risks of explosion or burning 4
1.3.4 - Risks of collision 4
1.3.5 - Abnormal noise 4

1.4 - VERIFICATIONS 4
1.4.1 - Routine verifications 4
1.4.2 - Examination of suitability of a machine 5
1.4.3 - State of conservation 5

1.5 - REPAIRS AND ADJUSTMENTS 5

1.6 - VERIFICATIONS AT THE TIME OF PUTTING BACK INTO SERVICE 5

1.7 - BEAUFORT SCALE 6

1.8 - MINIMUM SAFETY DISTANCES 6

2 - PRESENTATION 7

2.1 - IDENTIFICATION 7

2.2 - GENERAL OPERATION 7

2.3 - MAIN COMPONENTS 8

2.4 - WORK AREA 9
2.4.1 - Work area, Compact 8 9
2.4.2 - Work area, Compact 8W 10
2.4.3 - Work area, Compact 10N 11
2.4.4 - Work area, Compact 10 12
2.4.5 - Work area, Compact 12 13

2.5 - TECHNICAL CHARACTERISTICS 14
2.5.1 - Compact 8, 8W technical characteristics 14
2.5.2 - Compact 10N, 10 technical characteristics 15
2.5.3 - Compact 12 technical characteristics 16

2.6 - OVERALL DIMENSIONS 17
2.6.1 - Compact 8 17
2.6.2 - Compact 8W 17
2.6.3 - Compact 10N 17
2.6.4 - Compact 10 18
2.6.5 - Compact 12 18

2.7 - LABELS 19
2.7.1 - Common "yellow" labels 19
2.7.2 - Common "orange" labels 19
2.7.3 - Common "red" labels 20
2.7.4 - Other common labels 20
2.7.5 - Labels specific to models 21
2.7.6 - Labels specific : Option 22
2.7.7 - References of the machine's labels 22
2.7.8 - Positioning of the labels on the machine 23

3 - OPERATING PRINCIPLE 25

3.1 - HYDRAULIC CIRCUIT 25
3.1.1 - Raising the lift 25
3.1.2 - Travel (machine travel) 25
3.1.3 - Steering 25

3.2 - ELECTRICAL CIRCUIT 25
3.2.1 - Electronic variable speed unit 25
3.2.2 - Battery charge monitor / Hour counter 25

3.3 - SAFETY 28
3.3.1 - Checking the inclination 28
3.3.2 - Travel speeds 28
3.3.3 - Pothole safety system 29
3.3.4 - Platform load control 29

4 - USING THE MACHINE 31

4.1 - GENERAL INSTRUCTIONS 31
4.1.1 - The machine's environment 31
4.1.2 - Manual extension 31

4.2 - OFFLOADING - LOADING 32
4.2.1 - Offloading by lifting 32
4.2.2 - Offloading with ramps 33
4.2.3 - Loading 33
4.2.4 - Transport instructions 33

4.3 - OPERATIONS BEFORE FIRST PUTTING INTO SERVICE 33
4.3.1 - Familiarisation with the control posts 34
4.3.2 - Checks before any putting into service 35

4.4 - DRIVING 36
4.4.1 - General recommendations 36
4.4.2 - Operations from the ground (see Photo 9, page 34) 37
4.4.3 - Operation from the platform (see Photo 10, page 34) 37

4.5 - USING THE ON-BOARD CHARGER 38
4.5.1 - Characteristics 38
4.5.2 - Starting charging 38
4.5.3 - Holding charge 38
4.5.4 - Interrupting charging 38
4.5.5 - Precautions in use 39

4.6 - USING AND SERVICING BATTERIES 39
4.6.1 - Recommendations 39
4.6.2 - Putting into service 39
4.6.3 - Discharging 39
4.6.4 - Charging 40
4.6.5 - Servicing 40

4.7 - RESCUE AND REPAIR OPERATIONS 41
4.7.1 - Emergency lowering 41
4.7.2 - Manual repair 42
4.8 - BRAKE RELEASE 42

5 - MAINTENANCE 43
5.1 - GENERAL RECOMMENDATIONS 43
5.2 - MAINTENANCE DEVICE 43
5.3 - MAINTENANCE SCHEDULE 44
5.3.1 - Consumables 44
5.3.2 - Maintenance diagram 45
5.4 - OPERATIONS 46
5.4.1 - Summary table 46
5.4.2 - Procedure 46
5.4.3 - Greasing of the slideways: 48
5.4.4 - List of consumables 48
5.5 - MANUFACTURER'S RECOMMENDATIONS 48

6 - OPERATING FAULTS 49
6.1 - PLATFORM LIFTING SYSTEM 49
6.2 - TRAVEL SYSTEM 50
6.3 - DIRECTION SYSTEM 50

7 - ELECTRIC DIAGRAM 51
7.1 - ELECTRIC COMPONENTS 52
7.2 - WIRING DIAGRAM E614 53
7.3 - POSITION AND FUNCTION OF CONTACT SWITCHES 54
7.3.1 - SQ1: Low position contactor 54
7.3.2 - SQ3: Top position contactor 54
7.3.3 - SQ4: Travel interruption switch (for Compact 12 only) 54
7.3.4 - SQ5 & SQ6: Pothole system out 54
7.3.5 - SQ 7: Extension system out 54

7.3.6 - SQ 10 : Tilt sensor 54
7.3.7 - A1: Angle sensor 54
7.3.8 - G1: Pressure sensor 54

8 - HYDRAULIC DIAGRAMS 57

8.1 - HYDRAULIC COMPONENTS (COMPACT 8, 8W, 10N, 10) 58

8.2 - HYDRAULIC DIAGRAM 118P251510B 59

8.3 - HYDRAULIC COMPONENTS FOR COMPACT 12 59

8.4 - HYDRAULIC DIAGRAM 121P251530B 59

https://truckmanualshub.com/

1 - GENERAL RECOMMENDATIONS - SAFETY

1.1 - GENERAL WARNING

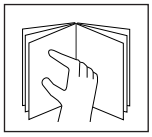

1.1.1 - Manual

The purpose of this manual is to help the operator to get to know HAULOTTE self-propelled lifts so as to use them efficiently and SAFELY. It cannot, however, replace the basic training necessary for any user of site plant.

The head of establishment has an obligation to ensure that operators know the instructions in the instruction manual. The head of establishment is also responsible for the implementation of the "user regulations" in force in the country of use.

Before using the machine, it is essential for safe use of the platform and its efficiency to familiarise yourself with all these instructions.

This instruction manual must be kept available to any operator. Additional copies can be supplied by the manufacturer on request.

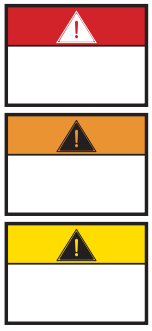

1.1.2 - Labels

The potential dangers and instructions concerning the machine are indicated by labels and plates. It is necessary to read the instructions appearing on them.

All of the labels comply with the following colour code:

- The colour red indicates a potentially mortal danger.
- The colour orange indicates a danger which may cause serious injury.
- The colour yellow indicates a danger which may cause material damage or slight injury.

The head of the establishment must make sure that these labels are in good condition, and must take the necessary steps to keep them legible. Additional labels can be supplied on request by the manufacturer.

1.1.3 - Safety

Ensure that any person to whom you entrust the machine is capable of assuming the safety requirements of its use.

Avoid any working mode liable to jeopardise safety. Any use not compliant with the instructions could lead to risks and injury to people and damage to property.

Caution!
In order to attract the reader's attention, the instructions will be preceded by this standardized sign.

The operating manual must be kept by the user throughout the machine's life including in the event of loan, hiring-out or re-sale.

Make sure that all the plates or labels relating to safety and danger are complete and legible.

1.2 - GENERAL SAFETY INSTRUCTIONS

1.2.1 - Operators

The operators must be over 18 and must hold an operating permit issued by the employer after he has checked their medical fitness and after they have passed a practical lift driving/operating test.

Caution!
Only trained operators can use Haulotte self-propelled lifts.

There must be at least two operators so that one of them can:

- Intervene quickly if necessary.
- Take the controls in the event of an accident or breakdown.
- Monitor and prevent machines and pedestrians going round the lift.
- Guide the lift's operator if required.

1.2.2 - Environment

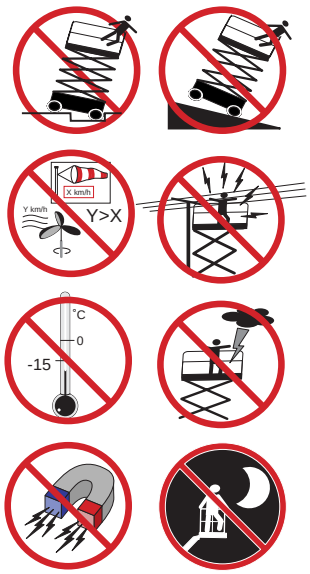

Never use the machine:

- On soft, unstable, cluttered ground.
- On ground with a bank greater than the permissible limit.
- With exposure to a wind greater than the permissible threshold. If used outside, make sure, using an anemometer, that the wind speed is less than or equal to the permissible threshold.
- Near power lines (find out the minimum approach distance depending on the voltage). In temperatures below -15°C (particularly in cold stores). Consult us if it is necessary to work below -15°C.
- In explosive areas.
- During storms (risk of lightning).
- At night without floodlighting.
- When there are very strong electromagnetic fields (radar, mobiles and high currents).

DO NOT TRAVEL ON PUBLIC HIGHWAYS.

1.2.3 - Using the machine

It is important to ensure that in normal use, that is lift operation, the lift post selection key remains in the lift position so as to be able to control the lift from the platform. In the event of a problem on the platform, a person present and trained in emergency/standby manoeuvres can assist by putting the key in the ground control position.

Do not use the machine with:

- A load greater than the nominal load.
- More people than the authorized number.
- A lift lateral force greater than the permissible value.
- A wind greater than the permissible speed.

https://truckmanualshub.com/

In order to avoid any risk of a serious fall, it is essential for operators to comply with the following instructions:

- Hold on to the guard rails firmly when the lift is being raised or driven.
- Wipe any traces of oil or grease off the steps, floor and hand rails.
- Wear individual protective equipment suited to the working conditions and local regulations in force, particularly when working in a dangerous area.
- Do not neutralise the limit switches on the safety devices.
- Avoid hitting fixed or moving obstacles.
- Do not increase the working height by using ladders or other accessories.
- Do not use the guard rails as a means of access for getting onto and off the platform (use the steps provided for this purpose on the machine).
- Do not climb onto the guard rails when the platform is in the raised position.
- Do not drive the lift at high speed in areas which are narrow or not cleared.
- Do not use the machine without fitting the lift's protective bar or without closing the safety gate.
- Do not climb onto the covers.

Caution!
Never use the platform as a crane, goods lift or lift. Never use the platform to pull or tow.

In order to avoid risks of overturning, it is essential for operators to comply with the following instructions:

- Do not neutralise the limit switches on the safety devices.
- Avoid operating the control levers for one direction in the opposite direction without stopping in the " 0 " position (in order to stop during travelling, move the manipulator's lever gradually).
- Comply with the maximum load as well as the number of people authorized on the lift.
- Distribute the loads and place them if possible in the centre of the lift.
- Verify that the ground can take the pressure and load per wheel.
- Avoid hitting fixed or moving obstacles.
- Do not drive the lift at high speed in areas which are narrow or not cleared.
- Keep speed under control when turning.
- Do not drive the lift in reverse (lack of visibility).
- Do not use the machine with a cluttered lift.
- Do not use the machine with equipment or objects suspended from the guard rails.
- Do not use the machine with elements which could increase the wind load (e.g.: panels).
- Do not carry out machine maintenance operations when it is raised without having put in place the necessary safety devices (travelling crane, crane).
- Carry out the daily checks and monitor proper operation during periods of use.
- Protect the machine from any unsupervised intervention when it is not in service.

NOTE : *Do not tow the lift (it has not been designed for that and must be transported on a trailer).*

1.3 - RESIDUAL RISKS

1.3.1 - Risks of jolting - Overturning

The risks of jolting or overturning are considerable in the following situations:

- sudden operation of the control levers,
- overload of the lift,
- ground weakness (Beware of thawing in winter),
- gusting wind,
- hitting an obstacle on the ground or high up,
- working on quays, bays, pavements, etc...

Allow a sufficient stopping distance:

- 3 metres at high speed,
- 1 metre at low speed.

1.3.2 - Electrical risks

Caution!
If the machine has a 220 V power point, max. 16 A, it is essential for the extension lead to be connected to a mains outlet protected by a 30 mA quick-trip circuit-breaker.

The electrical risks are considerable in the following situations:

- hitting a power line,
- use in stormy weather.

“Minimum safety distances”, page 6

1.3.3 - Risks of explosion or burning

The risks of explosion or burning are considerable in the following situations:

- work in an explosive or flammable atmosphere,
- using a machine with hydraulic leaks.

1.3.4 - Risks of collision

- Risks of crushing people present in the area in which the machine is operating (during travelling or operation of the equipment).
- Evaluation by the operator, before any use, of the risks above him.

1.3.5 - Abnormal noise

When the platform is started, the user must listen for abnormal noise :

- seizure,
- discharge of an equilibrium valve,
- discharge of a pressure limiter, etc.

If abnormal noise is detected, the user must stop using the equipment immediately and contact the PINGUELY HAULOTTE After-Sales department to detect the source of the problem.

1.4 - VERIFICATIONS

Comply with the national regulations in force in the country of use.

For FRANCE: Order of March 1st 2004 + circular DRT 93-22 September 1993 specifying:

1.4.1 - Routine verifications

The machine must be the subject of routine inspections every 6 months so that any defect liable to cause an accident is detected.

These inspections must be carried out by an organisation or personnel specially designated by the head of establishment and under the latter's responsibility (company's personnel or not) (Articles R 233-5 and R 233-11 of the Code du Travail).

The result of these inspections must be entered in a safety register opened by the head of establishment and kept constantly available to the works inspector and

safety committee of the establishment, if there is one, as well as a list of the specially designated personnel (Article R 233-5 of the Code du Travail).

NOTE : Such register can be obtained from the trade organisations and some of them can be obtained from the OPPBTP or private prevention organisations.

The people designated must be experienced in the field of risk prevention (Articles R 233-11 of Decree n° 93-41).

It is forbidden to allow any worker to proceed, during the operation of the machine, with any verification whatsoever (Article R 233-11 of the Code du Travail).

1.4.2 - Examination of suitability of a machine

The head of the establishment in which this equipment is put into service must make sure of the suitability of the machine, that is, that it is appropriate for the works to be carried out safely and that it is used in accordance with the instruction manual. In addition, in the above-mentioned French order of March 1st 2004, problems associated with hiring, the examination of the state of conservation, verification at the time of putting back into service after repair, as well as coefficient 1.25 static test and coefficient 1.1 dynamic test conditions are mentioned. Each person responsible using the machine must acquaint himself and follow the requirements of this decree.

1.4.3 - State of conservation

Detect any damage liable to be the cause of dangerous situations (safety devices, load limiters, tilt monitor, leaks from cylinders, deformation, condition of welds, tightness of bolts, hoses, electrical connections, condition of tyres, excessive mechanical play).

NOTE : In the case of hiring, the person responsible using the hired machine has the responsibility of examining the state of conservation and for examining suitability. He must check with the hirer that the routine general verifications and verifications before putting into service have indeed been carried out.

1.5 - REPAIRS AND ADJUSTMENTS

Major repairs, maintenance work or adjustments on the safety elements or systems (concerns mechanics, hydraulics and electricity).

They must be carried out by PINGUELY-HAULOTTE personnel or personnel working on behalf of PINGUELY-HAULOTTE who must use original parts only.

Any modification outside PINGUELY-HAULOTTE's control is not authorised.

The manufacturer is not liable if original parts are not used or if the work specified above is not carried out by PINGUELY-HAULOTTE approved personnel.

1.6 - VERIFICATIONS AT THE TIME OF PUTTING BACK INTO SERVICE

To be carried out after:

- major removal/refitting,
- a repair involving the machine's essential parts,
- any accident caused by the failure of an essential part.

It is necessary to proceed with an examination of suitability, an examination of the state of conservation, a static test, a dynamic test (see coefficients, § 1.4.2, page 5).

1.7 - BEAUFORT SCALE

The Beaufort Scale of wind force is accepted internationally and is used when communicating weather conditions. It consists of number 0 - 17, each representing a certain strength or velocity of wind at 10m (33 ft) above ground level in the open.

Description of Wind		Specifications for use on land	MPH	m/s
0	Calm	Calm; smoke rises vertically.	0-1	0-0.2
1	Light Air	Direction of wind shown by smoke.	1-5	0.3-1.5
2	Light Breeze	Wind felt on face; leaves rustle; ordinary vanes moved by wind.	6-11	1.6-3.3
3	Gentle Breeze	Leaves and small twigs in constant motion; wind extends light flag.	12-19	3.4-5.4
4	Moderate Breeze	Raises dust and loose paper; small Branches are moved.	20-28	5.5-7.9
5	Fresh Breeze	Small trees in leaf begin to sway; crested wavelets form on inland waterways.	29-38	8.0-10.7
6	Strong Breeze	Large branches in motion; whistling heard in telephone wires; umbrellas used with difficulty.	39-49	10.8-13.8
7	Near Gale	Whole trees in motion; inconvenience felt when walking against wind.	50-61	13.9-17.1
8	Gale	Breaks twigs off trees; generally impedes progress.	62-74	17.2-20.7
9	Strong Gale	Slight structural damage occurs (chimney pots and slates removed).	75-88	20.8-24.4

1.8 - MINIMUM SAFETY DISTANCES

Our machines are not insulated, hence, it is important to maintain a safety distance from the electrical power cables and devices according to applicable government regulations and the following diagram :

Voltage	Minimum safety distance in meters
Up to 300V	avoid contact
from 300 V to 50 kV	3,05 m
from 50 kV to 200 kV	4,60 m
from 200 kV to 350 kV	6,10 m
from 350 kV to 500 kV	7,62 m
from 500 kV to 750 kV	10,67 m
from 750 kV to 1000 kV	13,72 m

2 - PRESENTATION

Compact 8, 8W, 10N, 10 and 12 self-propelled lifts are designed for any high work within the limit of their characteristics (see Chapter 2.5, page 14) and complying with all the safety instructions particular to the machine and to the locations where it is used.

The main operating post is on the platform.

The lift operating post is an emergency post.

2.1 - IDENTIFICATION

A plate, fixed on the back right of the chassis, bears all the indications (engraved) enabling the machine to be identified.

Pinguely - Haulotte

La Péronnière, BP9, 42152 L'Horme - France

EQUIPMENT		
TYPE		
SERIAL N°		
TOTAL WEIGHT		kg
YEAR OF MANUFACTURE		
NOMINAL POWER		kW
GRADEABILITY		%
	INSIDE USE	*OUTSIDE USE*
MAXIMUM LOAD	kg	kg
NUMBER OF PERSONS + LOAD	P + kg	P + kg
LATERAL FORCE MAX.	N	N
WINDSPEED MAX.	m/s	m/s
SLOPE OPERATION MAX.	degres	degres

7814 621

REMINDER :Whenever requesting information, intervention or spares, specify the machine type and serial number.

2.2 - GENERAL OPERATION

The electric motor, powered by the batteries, operates a two-section hydraulic pump. The first section supplies pressurized oil for steering and travelling as well as low-speed elevating; the second section for travelling and high-speed elevating. The oil is directed towards the various parts by solenoid-operated valves.

2.3 - MAIN COMPONENTS

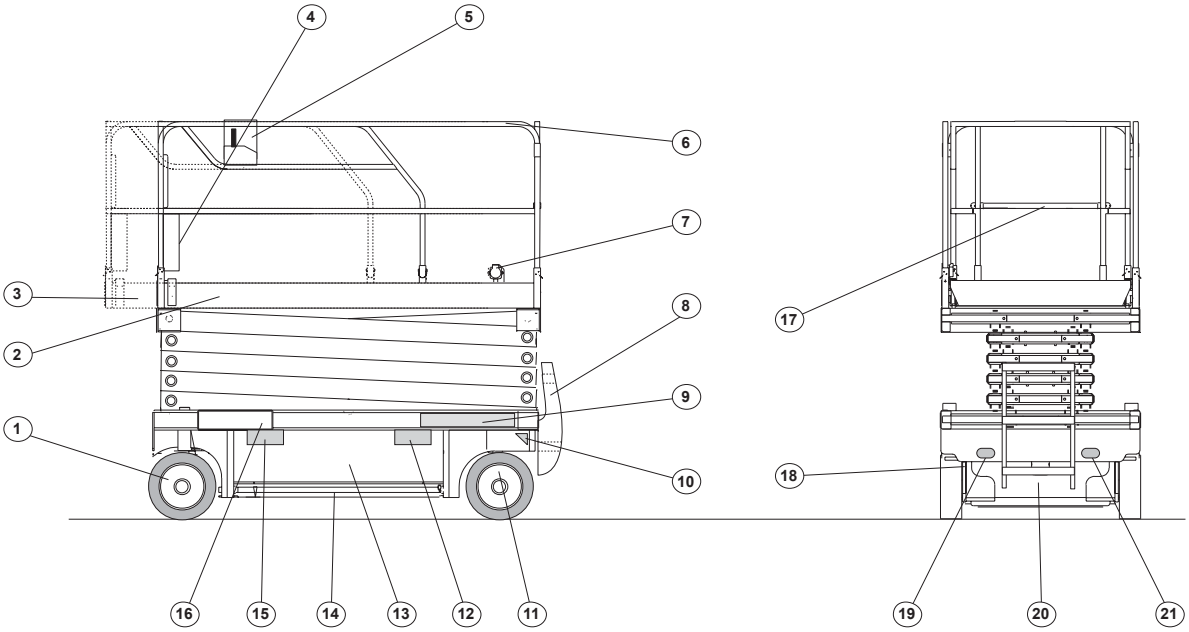

01 - Drive/steered front wheel

02 - Platform

03 - Extensions

04 - Document box

05 - Top panel box

06 - Protective bar

07 - 220V plug

08 - Access ladder

09 -Bottom panel

10- Anchoring point

11- Rear wheel

12,15 - Location for the fork-lift truck forks

13- Box

14 - Anti-tipping over device (retraction)

16 - Chassis

17- Platform access bar

18 - Battery tray locking

19, 21- Anchoring points

20- Battery tray

2.4 - WORK AREA

2.4.1 - Work area, Compact 8

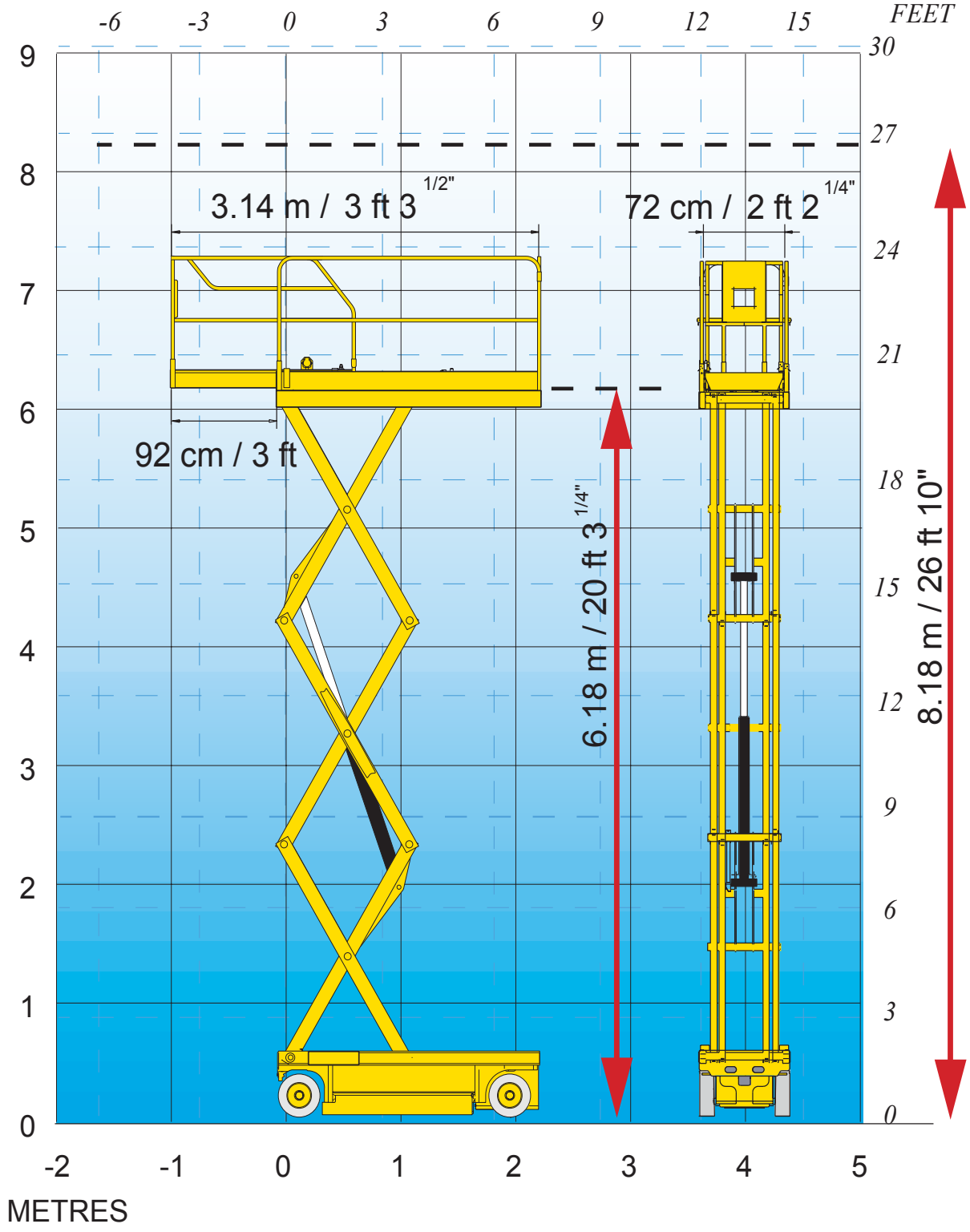

2.4.2 - Work area, Compact 8W

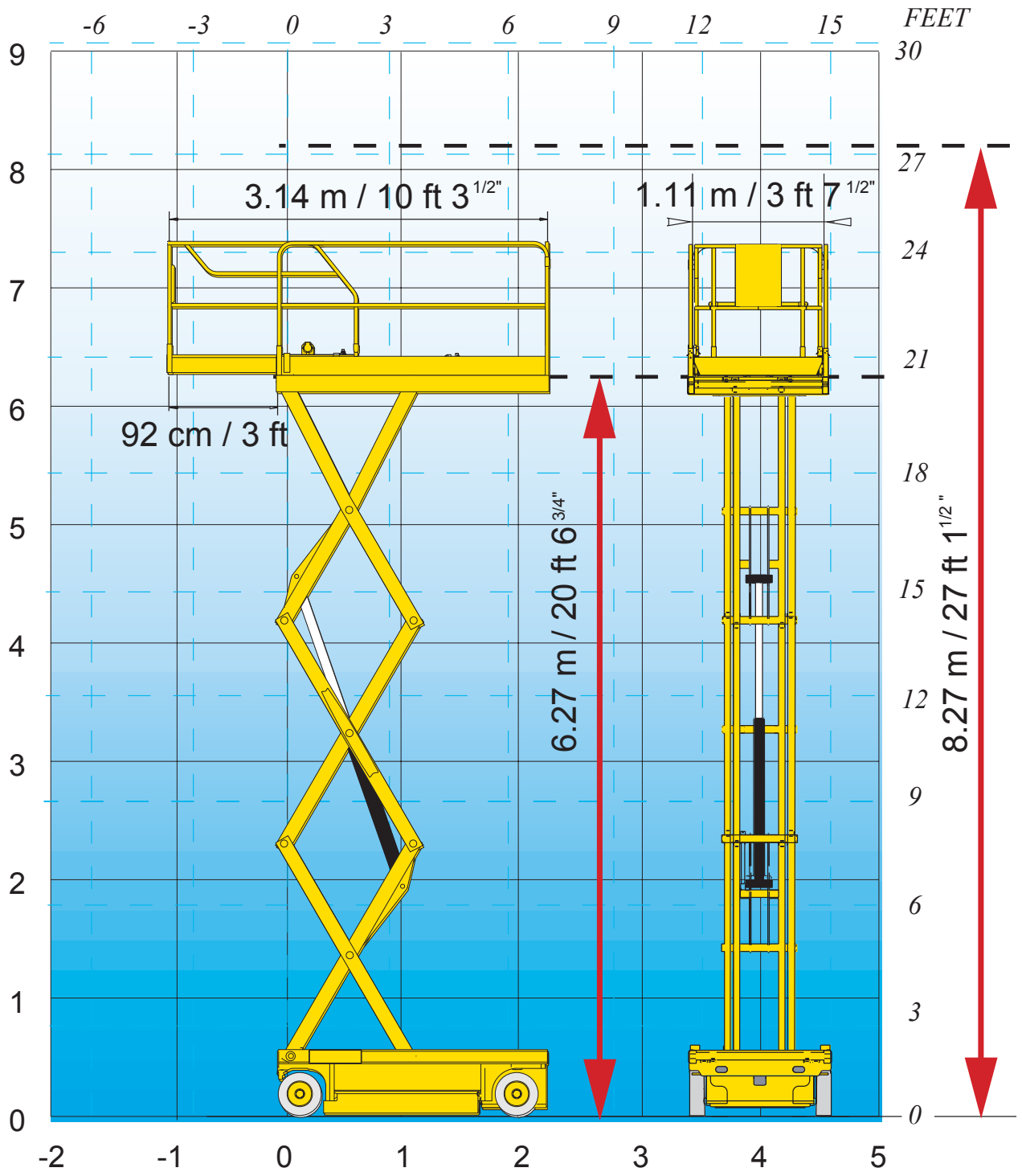

2.4.3 - Work area, Compact 10N

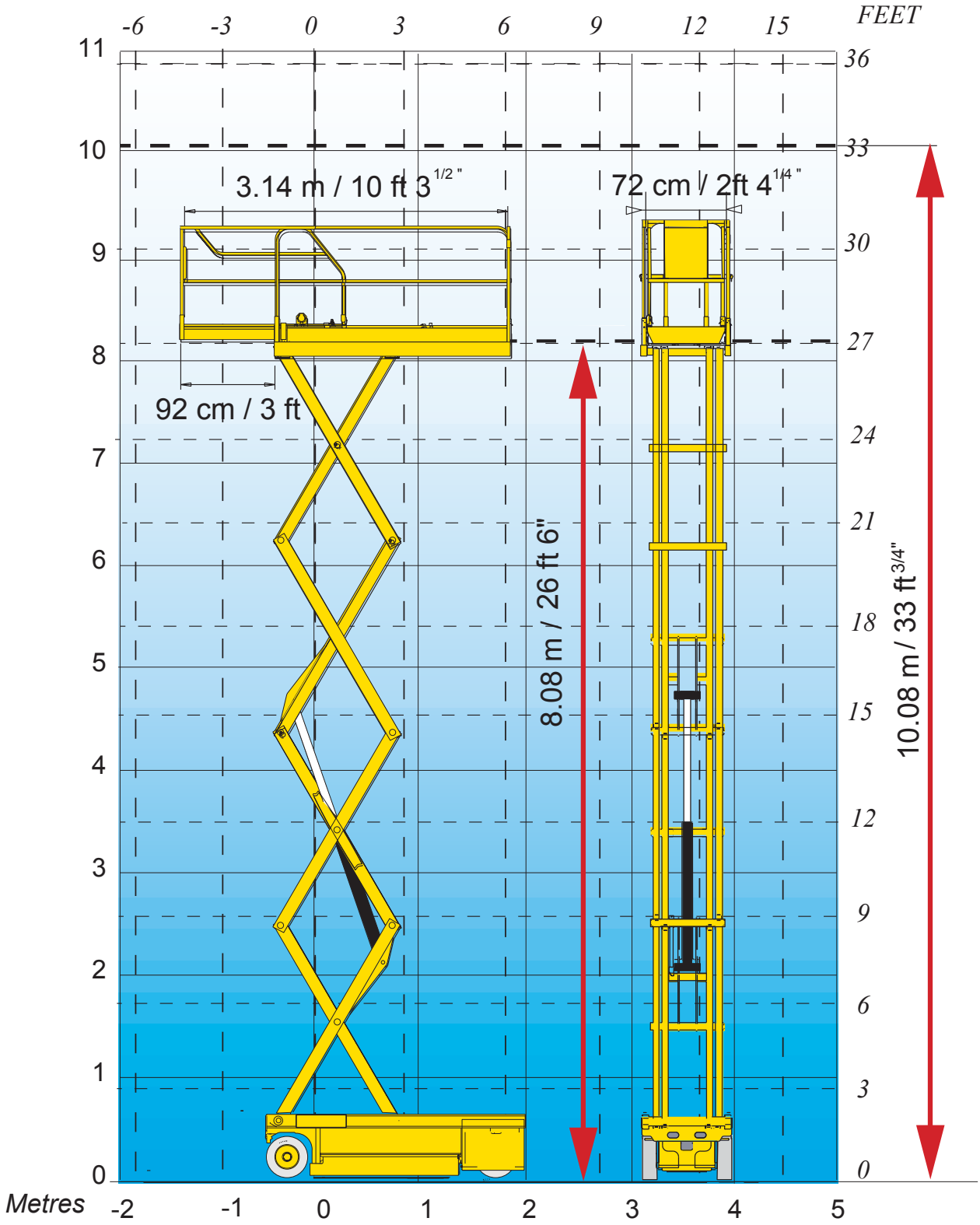

2.4.4 - Work area, Compact 10

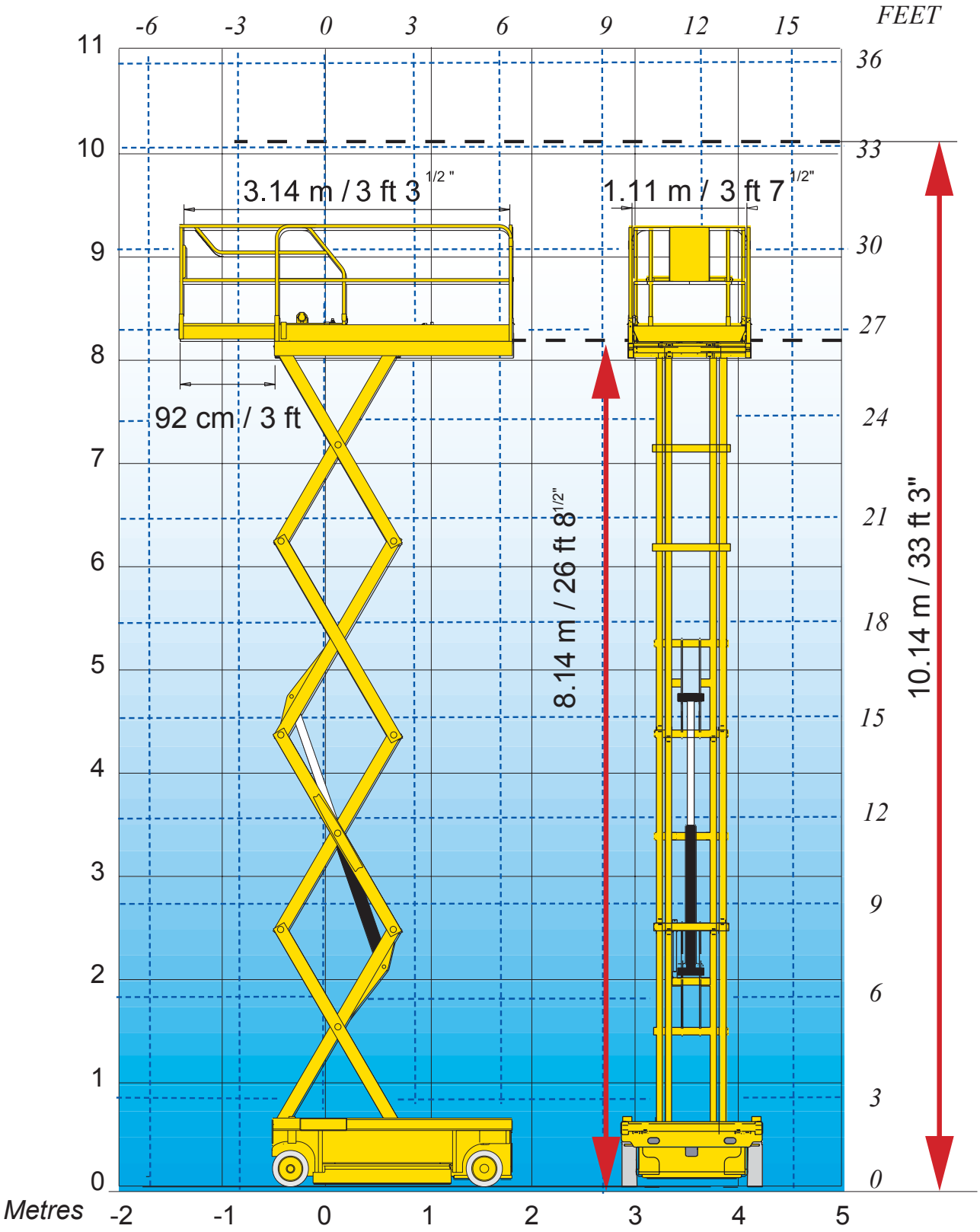

2.4.5 - Work area, Compact 12

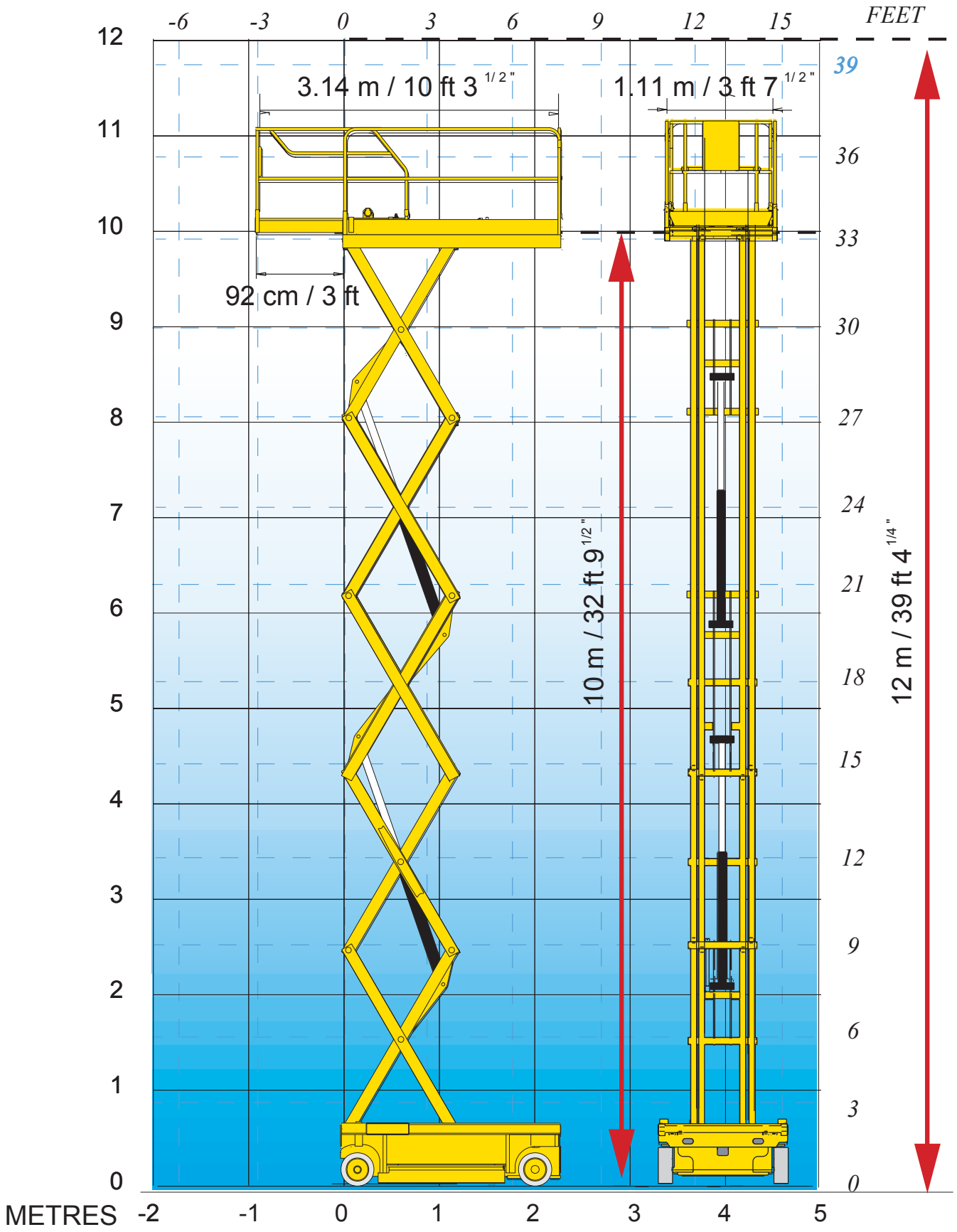

2.5 - TECHNICAL CHARACTERISTICS

2.5.1 - Compact 8, 8W technical characteristics

Designation	Compact 8	Compact 8W
Load (indoor use)	350 kg, including 2 persons	450 kg, including 3 persons
Load (outdoor use)	350 kg, including 1 person	450 kg, including 1 person
Lateral manual force (indoor use)	40 daN	40 daN
Lateral manual force (outdoor use)	20 daN	20 daN
Max. wind speed (indoor use)	0 mph	0 mph
Max. wind speed (outdoor use)	27.96 mph	27.96 mph
Floor height	6.18 m	6.27 m
Working height	8.18 m	8.27 m
Length folded	2.31 m	
Length folded with steps	2.48 m	
Overall width	0.81 m	1.20 m
Height folded (guard rail)	1.99 m	2.14 m
Height folded (platform)	0.87 m	1.02 m
Wheelbase	1.86 m	
Ground clearance	130 mm	
Ground clearance, anti-tipping over device deployed	25 mm	
Platform dimensions	2.3 m x 0.8 m	2.3 m x 1.2 m
Extension dimensions	0.92 m x 0.62 m	0.92 m x 1 m
Extension capacity	150 Kg	
Travel speed, machine folded	0/2.17 mph	
Travel speed, machine raised	0/0.62 mph	
Inside turning radius	0,34 m	0.2 m
Outside turning radius	2,38 m	2.5 m
Max. travel slope	25%	23%
Max. permissible tilt	2°	3°
Hydraulic reservoir	25 l	
Total weight	1730 Kg	1950 Kg
Max. load on one wheel	864 daN	1290 daN
Max. ground pressure	13.2 daN/cm^2	17.3 daN/cm^2
Number of drive wheels	2	2
Number of steered wheels	2	2
Tyres	non-marking ; solid rubber	
Diameter of wheels	380 mm	
Freewheeling	YES	
Movements	proportional controls	
Batteries	24 V - 180 Amp/h C5	24 V - 250 Amp/h C5
General hydraulic pressure Travel Steering Lifting	200 bars 200 bars 150 bars 165 bars	
Raising time	37 s	44 s
Lowering time	41 s	56 s
EC standards	YES	

2.5.2 - Compact 10N, 10 technical characteristics

Designation	*Compact 10N*	*Compact 10*
Load (indoor use)	230 kg including 2 persons	450 kg including 3 persons
Load (outdoor use)	forbidden	450 kg including 1 person
Lateral manual force (indoor use)	40 daN	40 daN
Lateral manual force (outdoor use)	forbidden	20 daN
Max. wind speed (indoor use)	0 mph	0 mph
Max. wind speed (outdoor use)	forbidden	45 km/h
Floor height	8.08 m	8.14 m
Working height	10.08 m	10.14 m
Length folded	2.31 m	
Length folded with steps	2.48 m	
Overall width	1.20 m	
Height folded (guard rail)	2.18 m	2.26 m
Height folded (platform)	1.07 m	1.14 m
Wheelbase	1.86 m	
Ground clearance	130 mm	
Ground clearance, anti-tipping over device deployed	25 mm	
Platform dimensions	2.3 m x 0.8 m	2.3 m x 1.2 m
Extension dimensions	0.92 m x 0.62 m	0.92 m x 1 m
Extension capacity	120 Kg	150 kg
Travel speed, machine folded	0/2.17 mph (variable)	
Travel speed, machine raised	0.62 mph	
Inside turning radius	0,34 m	0,2 m
Outside turning radius	2.38 m	2.5 m
Max. travel slope	23%	
Max. permissible tilt	2°	3°
Hydraulic reservoir	25 l	
Total weight	2160 Kg	2330 Kg
Max. load on one wheel	1048 daN	1473 daN
Max. ground pressure	15,96 daN/cm^2	17.7 daN/cm^2
Number of drive wheels	2	2
Number of steered wheels	2	2
Tyres	solid rubber 38x13x5 cm	
Diameter of wheels	380 mm	
Freewheeling	YES	
Movements	proportional controls	
Batteries	24 V - 180 Amp/h C5	24 V - 250 Amp/h C5
General hydraulic pressure Travel Steering Lifting	220 bars 220 bars 150 bars 165 bars	
Raising time	51 s	
Lowering time	42 s	
EC standards	YES	

2.5.3 - Compact 12 technical characteristics

Désignation	*Compact 12*
Load (indoor use)	300 kg including 3 persons
Load (outdoor use)	300 kg including 1 person
Lateral manual force (indoor use)	40 daN
Lateral manual force (outdoor use)	20 daN
Max. wind speed (indoor use)	0 mph
Max. wind speed (outdoor use)	27.96 mph
Floor height	10 m
Working height	12 m
Length folded	2.31 m
Length folded with steps	2.48 m
Overall width	1.20 m
Height folded (guard rail)	2.38 m
Height folded (platform)	1.26 m
Wheelbase	1.86 m
Ground clearance	130 mm
Ground clearance, anti-tipping over device deployed	25 mm
Platform dimensions	2.3 m x 1.2 m
Extension dimensions	0.92 m x 1m
Extension capacity	150 kg
Travel speed, machine folded	0/2.17 mph (variable)
Travel speed, machine raised	0.62 mph
Inside turning radius	0,2 m
Outside turning radius	2.5 m
Max. travel slope	23%
Max. permissible tilt	3°
Hydraulic reservoir	25 l
Total weight	2630 kg
Max. load on one wheel	1784 daN
Max. ground pressure	19.3 daN/cm^2
Number of drive wheels	2
Number of steered wheels	2
Tyres	solid rubber 38x13x5 cm
Diameter of wheels	380 mm
Freewheeling	YES
Movements	proportional controls
Batteries	24 V - 250 Amp/h C5
General hydraulic pressure Travel Steering Lifting	240 bars 240 bars 150 bars 155 bars
Raising time	85 s
Lowering time	50s
EC standards	YES

2.6 - OVERALL DIMENSIONS

2.6.1 - Compact 8

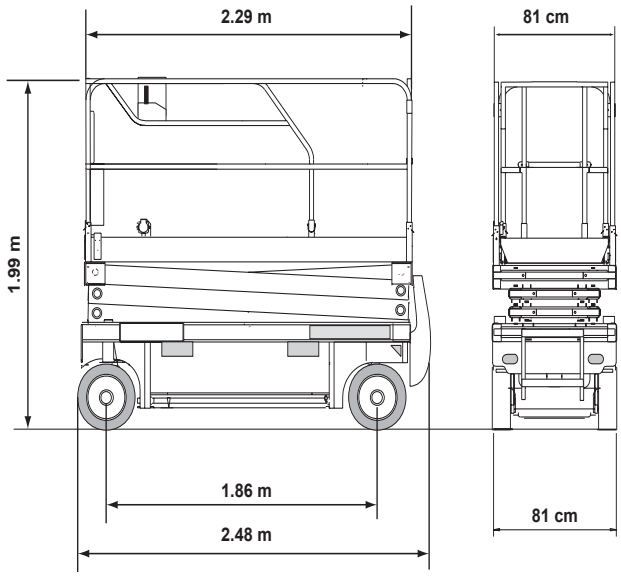

2.6.2 - Compact 8W

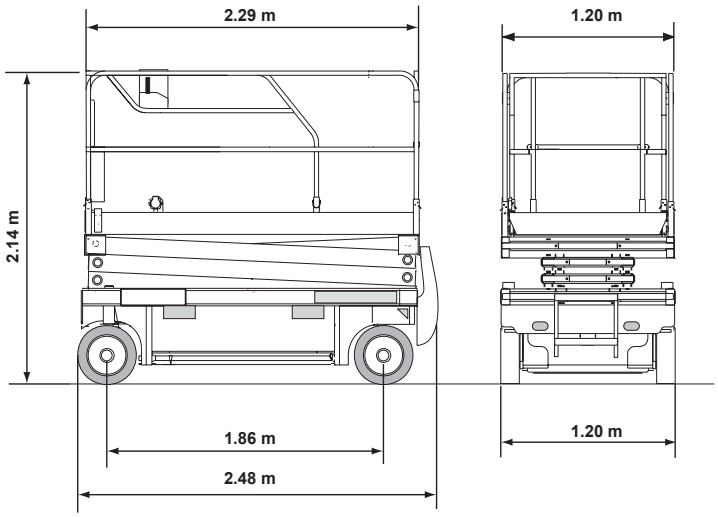

2.6.3 - Compact 10N

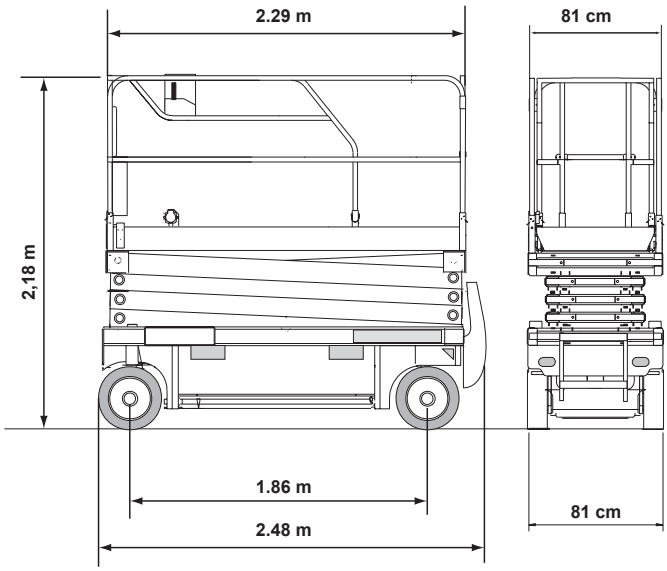

2.6.4 - Compact 10

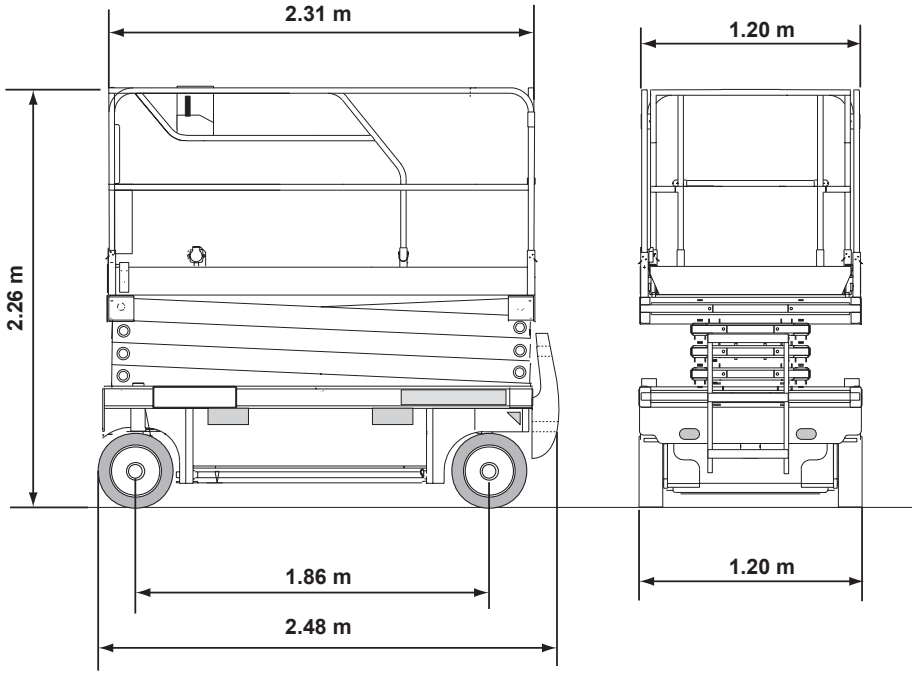

2.6.5 - Compact 12

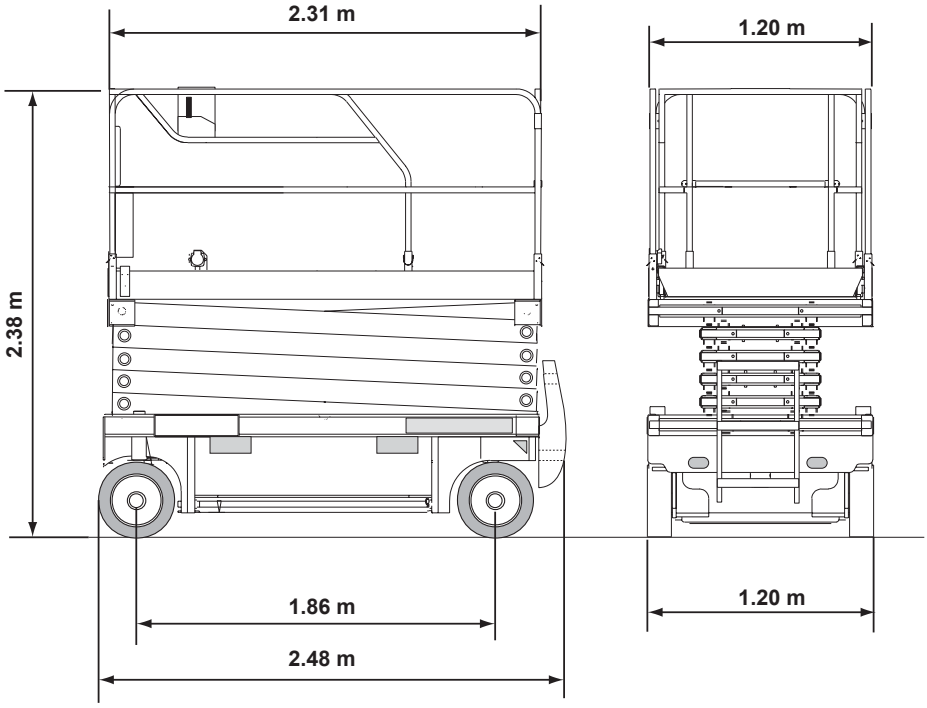

2.7 - LABELS

2.7.1 - Common "yellow" labels

6

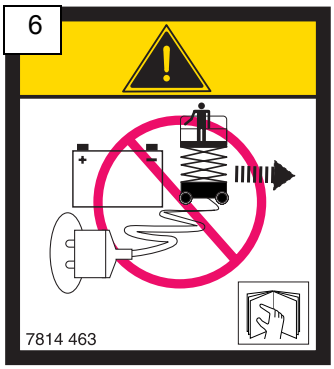

8

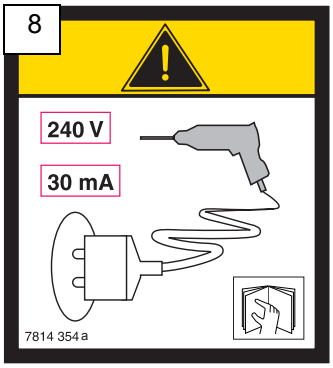

11

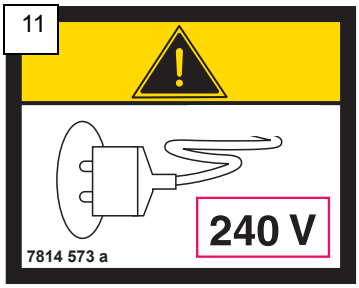

14

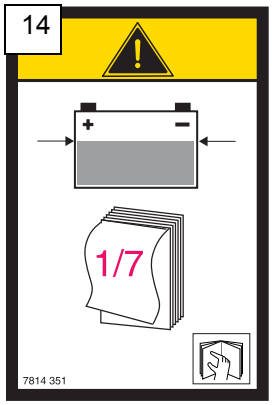

17

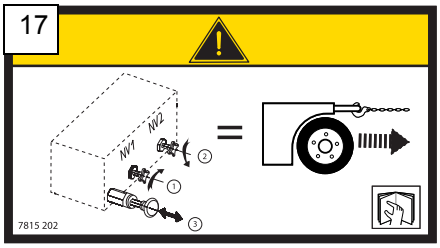

23

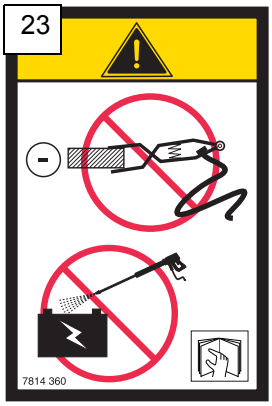

25

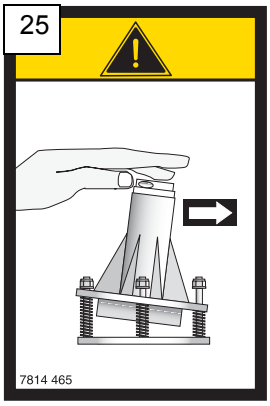

27

2.7.2 - Common "orange" labels

15

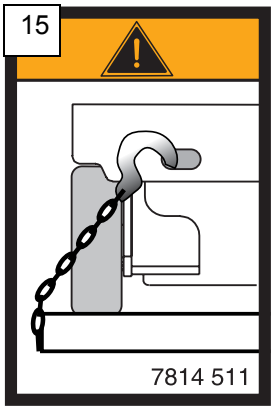

16

28

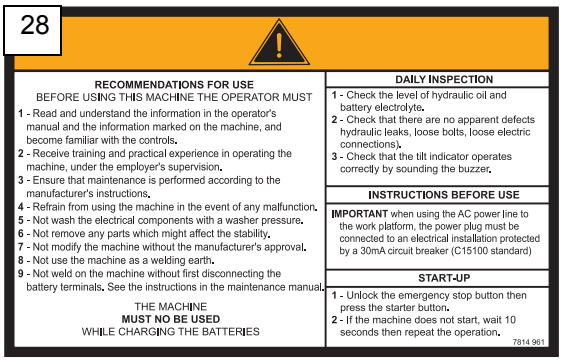

RECOMMENDATIONS FOR USE
BEFORE USING THIS MACHINE THE OPERATOR MUST

1 - Read and understand the information in the operator's manual and the information marked on the machine, and become familiar with the controls.
2 - Receive training and practical experience in operating the machine, under the employer's supervision.
3 - Ensure that maintenance is performed according to the manufacturer's instructions.
4 - Refrain from using the machine in the event of any malfunction.
5 - Not wash the electrical components with a washer pressure.
6 - Not remove any parts which might affect the stability.
7 - Not modify the machine without the manufacturer's approval.
8 - Not use the machine as a welding earth.
9 - Not weld on the machine without first disconnecting the battery terminals. See the instructions in the maintenance manual.

THE MACHINE
MUST NO BE USED
WHILE CHARGING THE BATTERIES

DAILY INSPECTION

1 - Check the level of hydraulic oil and battery electrolyte.
2 - Check that there are no apparent defects hydraulic leaks, loose bolts, loose electric connections).
3 - Check that the tilt indicator operates correctly by sounding the buzzer.

INSTRUCTIONS BEFORE USE

IMPORTANT when using the AC power line to the work platform, the power plug must be connected to an electrical installation protected by a 30mA circuit breaker (C15100 standard)

START-UP

1 - Unlock the emergency stop button then press the starter button.
2 - If the machine does not start, wait 10 seconds then repeat the operation.

7814 981

2.7.3 - Common "red" labels

5

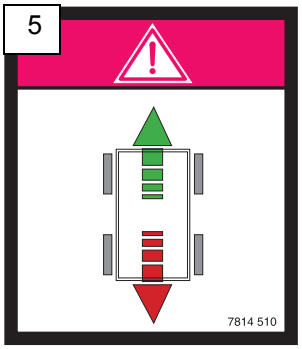

10

12

13

18

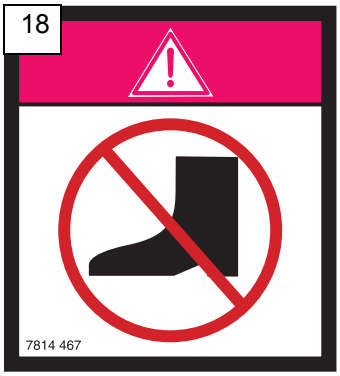

21

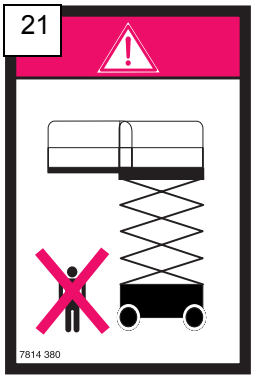

22

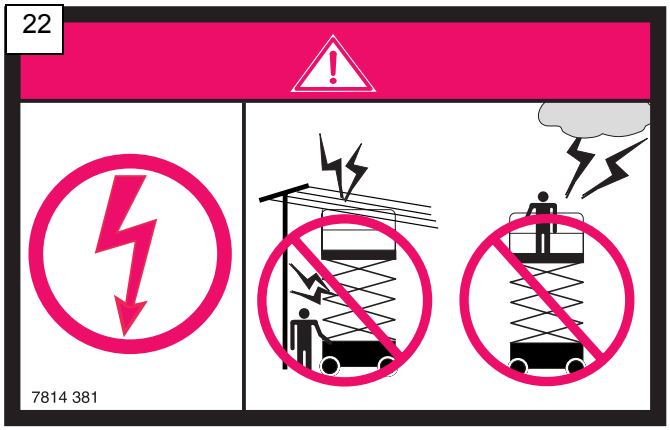

57

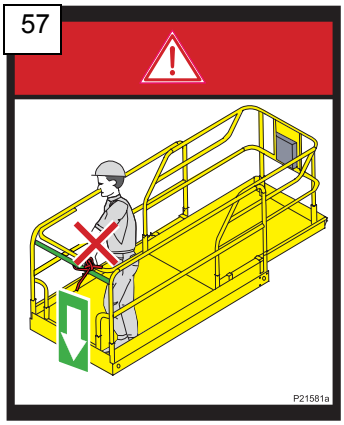

2.7.4 - Other common labels

4

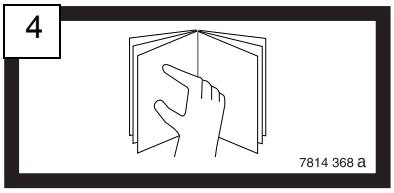

7

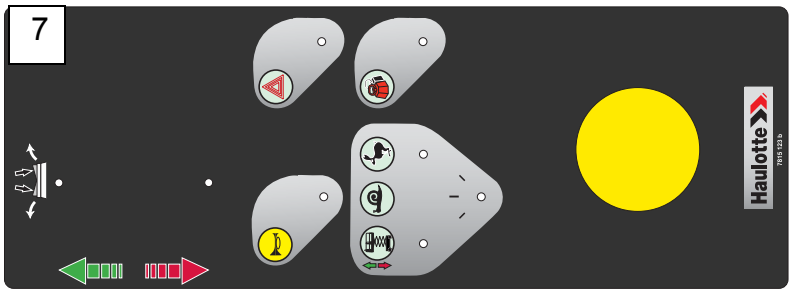

19

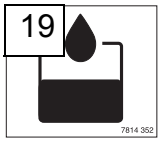

20

24

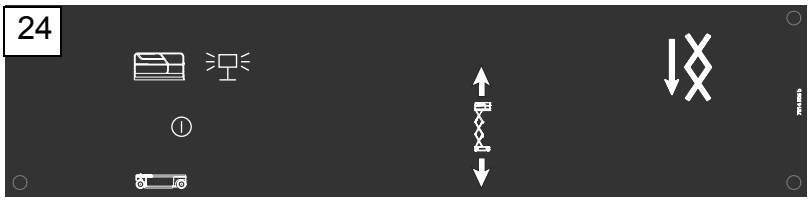

2.7.5 - Labels specific to models

2.7.5.1 -Compact 8

3a

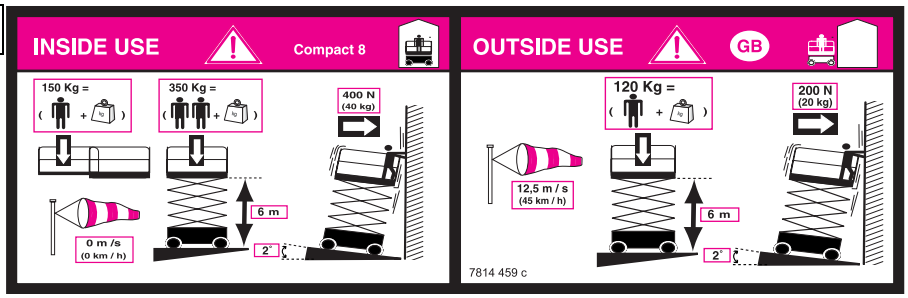

58

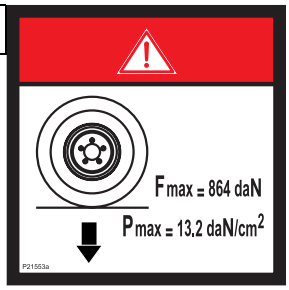

2.7.5.2 -Compact 8W

3b

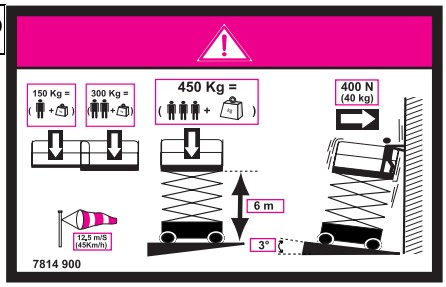

58

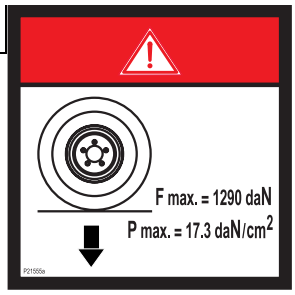

2.7.5.3 -Compact 10N

3c

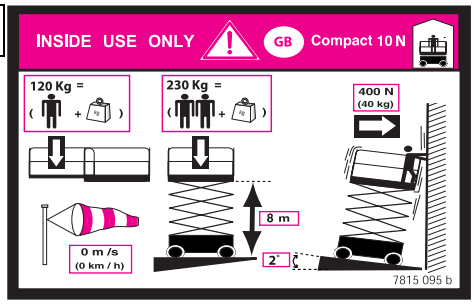

58

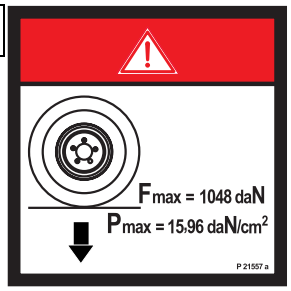

2.7.5.4 -Compact 10

3d

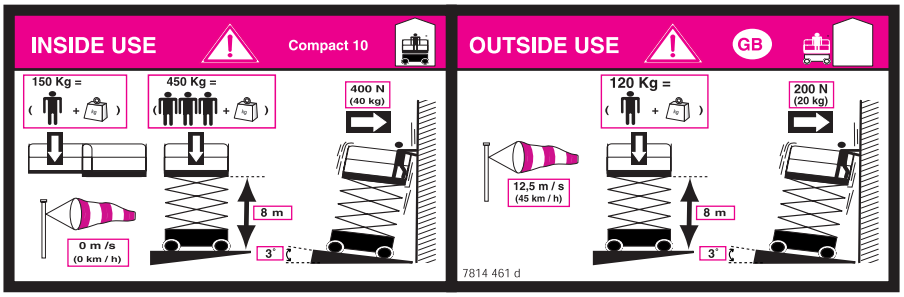

58

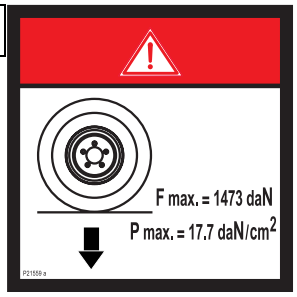

2.7.5.5 -Compact 12

3e

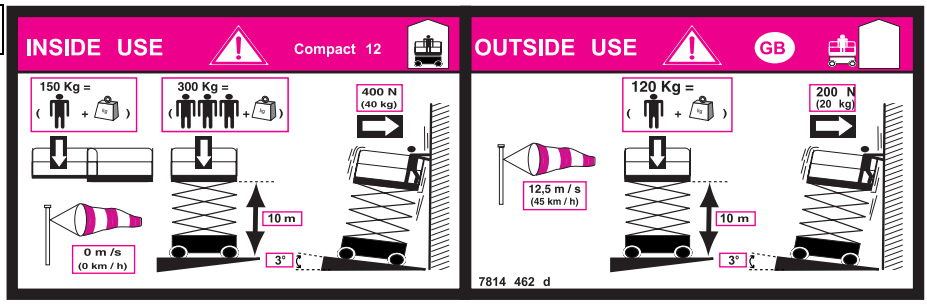

58

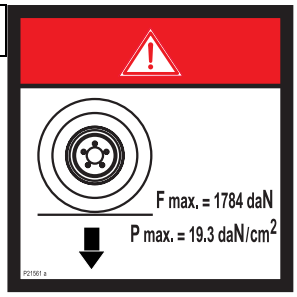

2.7.6 - Labels specific : Option

2.7.6.1 -*Organic hydraulic oil*

19

2.7.7 - References of the machine's labels

Item	Code	Qty	Designation
1	2420327810	1	Spare parts manual - Compact 10
1	2420327830	1	Spare parts manual - Compact 12
1	2420327850	1	Spare parts manual - Compact 8
1	2420327870	1	Spare parts manual - Compact 8W
1	2420327890	1	Spare parts manual - Compact 10N
2	2420326060	1	User’s manual
3	3078150950	1	10N floor height + load capacity
3	3078144590	1	8 floor height + load capacity
3	3078149000	1	8W floor height + load capacity
3	30781446100	1	10 floor height + load capacity
3	3078144620	1	12 floor height + load capacity
4	3078143680	1	Refer to the user's manual
5	3078145100	1	DANGER : direction of travel
6	3078144630	1	Risk of damage : do not use the machine during battery charging
7	3078151230	1	Information : Lift panel label
8	3078143540	1	Information : 240V plug
9	3078145120	2	"Compact 8 " sticker
9	3078145130	2	"Compact 8W " sticker
9	3078145140	2	"Compact 10 " sticker
9	3078145150	2	"Compact 12 " sticker
9	3078150900	2	"Compact 10N" sticker
10	3078149010	4	Risk of crushing of upper limbs (hands/fingers)
11	3078145730	1	Information : 240V plug
12	3078143610	1	Risk of injury : wear protective clothing
13	3078145310	1	Risk of overturning : Locking of the battery tray
14	3078143510	1	Risk of damage : servicing of batteries
15	3078145110	4	Information : Anchoring hook location.
16	3078143830	4	Information : Fork-lift truck fork location.
17	3078152020	1	Procedure : freewheeling - brake release
18	3078144670	2	Risk of crushing : crushing of feet (potholes)
19	3078143520	1	Information : Hydraulic oil
19	3078148890	1	Organic hydraulic oil (option)
20	307P217080	2	" HAULOTTE " graphic
21	3078143800	2	Risk of crushing, do not park in the machine's work area
22	3078143810	1	Electrical risk: This machine is not insulated
23	3078143600	1	Electrical risk: Do not use the machine as a welding earth. Do not wash...
24	3078145060	1	Information : bottom panel label

Item	Code	Qty	Designation
25	3078144650	1	Risk of overturning : verification of tilt
27	3078144710	1	Stop time during lowering (English)
28	3078149610	1	Information : operating instructions (English)
57	307P215810	1	Sliding bar
58	307P215550	4	Load on one wheel - Compact 8W
58	307P215530	4	Load on one wheel - Compact 8
58	307P215570	4	Load on one wheel - Compact 10N
58	307P215590	4	Load on one wheel - Compact 10
58	307P215610	4	Load on one wheel - Compact 12

2.7.8 - Positioning of the labels on the machine

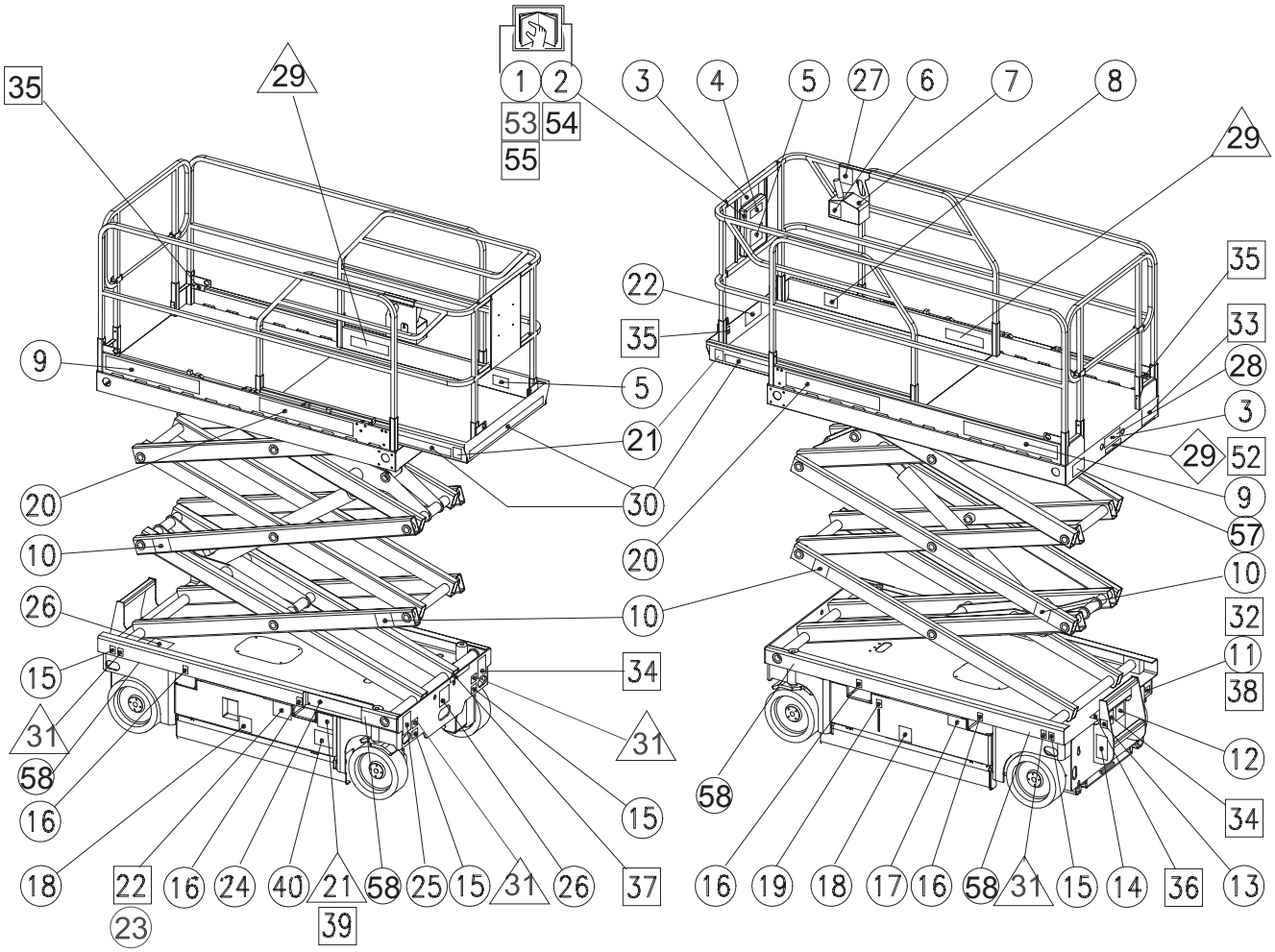

Positions communes **tous pays** / Common positions - **all countries**

Positions supplémentaires **Australie et Hollande** / Extra positions - **Australia and Holland**

Positions supplémentaires **USA** / Extra positions - **USA**

Positions supplémentaires Italie / Extra positions - Italy

3 - OPERATING PRINCIPLE

3.1 - HYDRAULIC CIRCUIT

All the machine's movements are provided by the hydraulic energy supplied by a gear pump driven by a variable-speed electric motor.

In the event of a breakdown, manual back-up action enables the scissors to be lowered.

3.1.1 - Raising the lift

For raising the lift, the number of cylinders differs depending on whether an COMPACT 8, 8W, 10N, 10 or 12 is being used.

The cylinders are controlled by on/off valves via a variable speed unit which gives the progressiveness of the movement.

A single movement at a time is possible.

Caution!
Do not change the settings. If there is a problem, call PINGUELY-HAULOTTE

3.1.2 - Travel (machine travel)

Two travel speeds (high/low) are controlled by a switch.

High travel speed: The 2 motors are supplied in series, they receive the pump's flow which goes into one motor and then the other.

Low travel speed: The 2 motors are supplied in parallel, each receives half of the pump's flow.

The supply of pressure to these engines eliminates the brake's action. As soon as the movement stops, the brake returns to its position under the action of springs.

3.1.3 - Steering

Steering is impossible in the raising position.

Steering is controlled using the button on top of the manipulator.

3.2 - ELECTRICAL CIRCUIT

The electrical energy used for the controls and starting is supplied by four 6-volt batteries in series.

An on-board charger enables these batteries to be recharged overnight by connection to a 16A domestic socket.

3.2.1 - Electronic variable speed unit

This is the central part for all the lift's operation. Its role is to control the speed of movements and travel, adapting the motor-driven pump's rotation speed to suit a given control order. The variable speed unit receives the signal from the control manipulator, but also information on the nature of the movement to be carried out and the state of the safety devices. In the event of a problem or breakdown, refer to the various tables concerning operating faults (see Chapter 6, page 49).

3.2.2 - Battery charge monitor / Hour counter

This combines in a single unit the following functions :

- State of charge of the batteries
- Hour counter
- Resetting.

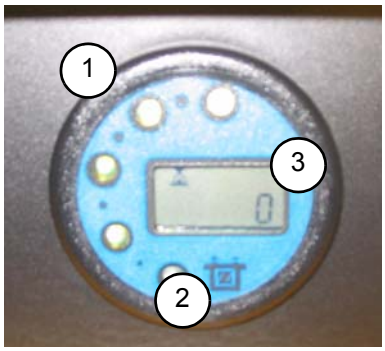

Photo 1

3.2.2.1 -State of charge of the batteries

The state of charge of the battery is indicated by 5 LEDs:

- When the battery is correctly charged, four green LEDs are on. (item 1 Photo 1, page 26)
- When the battery discharges itself, the LEDs go out one by one.
- When the battery is discharged, the red LED (item 2, Photo 1, page 26) comes on, raising is cut but travel remains possible.
- It is compulsory to recharge the batteries otherwise they would be excessively discharged and damaged.

3.2.2.2 -Hour counter

The hours are counted on the screen (item 3, Photo 1) when the electric pump unit is operating. At that time the " timer " flashes.

3.2.2.3 -Resetting

This takes place when the battery is correctly recharged

Photo 2

3.2.2.4 -Alarm : Problem on the machine

When there is a problem on the machine

- the operator on the platform is warned by flashes (see Photo 2, page 26). The problem can be identified from the number of flashes (see table below).
- the operator on the ground is warned by a numerical indication. The problem can be identified from the number displayed on the hour counter's screen (see table below).

Alarm code	Number of flashes (MDI)	Message	Description	Solution
AL01	3	**EVP NOT OK**	• Defective coil or YV7/YV9 coil's supply.	• Look for failure on the lifting cylinders' lowering coil(s).
AL06	6	**SERIAL ERROR #1**	• Incorrect or lack of reception of serial card's signal to chopper.	• Look for failure on: - the platform console's serial card; - the bundle; - the connections between the platform's console and the chopper. • Other possible reason: incorrect cabling on the MDI line or the MDI display.
AL13	6	**EEPROM KO**	• Fault in the chopper's EEPROM.	• Replace the chopper.
AL32	3	**VMN NOT OK**	• Low VMN at rest or inconsistent with the applied VMN at work.	• Check the chopper's isolation between B- and P terminals. • If the value is below 65 KOhms, replace the chopper. • Otherwise replace the motor.
AL37	4	**CONTACTOR CLOSED**	• SB1's contact stuck.	• Check SB1.
AL38	4	**CONTACTOR OPEN**	• SB1's auxiliary contact faulty.	• Check SB1.
AL49	5	**I=O EVER**	• Null current on movement request.	• Replace the chopper.

Alarm code	Number of flashes (MDI)	Message	Description	Solution
AL53	5	**STBY I HIGH**	• High current at rest.	• Replace the chopper.
AL60	3	**CAPACITOR CHARGE**	• Capacitors do not charge on starting the machine.	• Replace the chopper.
AL62	9	**TH. PROTECTION**	• Chopper's thermal protection: temperature over 75°C/167F	• Replace the chopper.
AL66	8	**BATTERY LOW**	• Batteries discharged.	• Check: - the batteries - the charger - the electric circuit's supply.
AL73	1	**POWER FAILURE**	• Short circuit on an electrovalve's coil or the horn or SB1's coil.	• Check: - the electrovalves' various coils, - the horn; - SB1 contactor's coil.
AL74	4	**DRIVER SHORTED**	• SB1 conctactor's driver faulty or in short circuit.	• Defective SB1 or chopper.
AL75	4	**CONTACTOR DRIVER**	• SB1 conctactor's driver malfunctioning or will not close.	• Defective SB1 or chopper.
AL78	2	**VACC NOT OK**	• Manipulator at rest.	• Check the joystick's output voltage using the console's TESTER mode. • In the case of an incorrect programing, adjust the values calibrating the serial card. • Otherwise replace the chopper.
AL79	2	**INCORRECT START**	• Incorrect starting sequence.	• Check the joystick's output data using the console's TESTER mode, then replace either the joystick or the chopper, according to the tests' results.
AL80	2	**FORW+BACK**	• Backward and forward movements requested simultaneously.	• Check the joystick's output data using the console's TESTER mode, then replace either the joystick or the chopper, according to the tests' results.
AL90	4	**DRIVER 1 KO**	• YV6 coil in short circuit.	• Check YV6 electrovalve's coil and its connections.
AL93	0	**WRONGINPUT CONF.**	• The platform console's ENABLE starting switch is closed while a movement is requested from the chassis control panel.	• Replace the chassis control panel's lift switch.
AL94	6	**MICRO CONTROL KO**	• The Siemens calculator does not respond correctly.	• Replace the chopper.

Alarm code	Number of flashes (MDI)	Message	Description	Solution
AL95	7	**PRESSURE NOT OK**	• Alarm.	• Check: - - the continuity of the cable bundle between the weighing card and the variator.
AL97	5	**CURR. PROTECTION**	• Current out of control.	• Replace the chopper.
AL98	0		• The hour shown on the MDI and the chopper differ.	• Wait for 6 minutes after putting into service. • If the problem remains, connect the console instead of the MDI. • In this configuration, if the machine functions again, MDI fault. • If the machine still does not function, defective bundle or chopper.
AL99	6	**CHECK UP NEEDED**	• The 'Check up' function has been activated.	• Deactivate the 'CHECK UP ENABLE' function using the console.

3.3 - SAFETY

3.3.1 - Checking the inclination

Caution!
Do not raise the platform unless the machine is on a hard, firm and level surface.

Do not consider the slope alarm as a level indicator. In the work position (above 1.50 metres), the tilt monitor box gives a signal audible from the platform when the maximum permissible inclination is reached.

If this situation persists, after a time delay of 1 to 2 seconds, the platform's elevating and travel controls are cut off (lower the platform again in order to be able to travel again).

Caution!
Risk of overturning when the buzzer sounds.

NOTE : It is essential to check operation every day at the time of the verifications before putting into service. (see " tilt operation " Photo 3, page 28).

Photo 3

3.3.2 - Travel speeds

- The high travel speed is authorized when the lift is in the low position or below 1.50 metres.
- The low speed is possible when the platform is in the low position or below 1.50 metres.
- The crawling speed is triggered automatically when the platform is above 1.50 metres.

3.3.3 - Pothole safety system

Caution!
Do not put your feet towards the pothole safety systems, so as to avoid risks of crushing.

When the platform is raised above 1.50 metres, the pothole protection system deploys itself automatically. Only the crawling speed is then possible in travel. They retract automatically when the platform is lowered below 1.50 metres and when high- or low-speed drive is engaged. If the pothole safety systems are not deployed, the crawling speed and raising are automatically cut off.

Photo 4

Photo 5

3.3.4 - Platform load control

If an overload is detected on the platform, no movement can be performed from the upper control station. The overload light indicator on the platform panel and the buzzer alert the operator.The load needs to be removed from the platform, so that all the controls can become operational again.

4 - USING THE MACHINE

4.1 - GENERAL INSTRUCTIONS

4.1.1 - The machine's environment

Caution!
Do not use the machine if the wind speed exceeds 45 kph.

4.1.1.1 -Outdoors (Compact 8, 8W, 10, 12)

For use outdoors, it is important to comply with the operating instructions as well as the recommendations so as to avoid any risk of an accident.

The factors to be complied with for use outdoors are in particular :

- The maximum load not to be exceeded (see the table of characteristics, Table 2.5, page 14)
- The maximum wind speed (see the table of characteristics, Table 2.5, page 14)
- The lateral manual force (see the table of characteristics, Table 2.5, page 14)
- The ground texture must be hard and firm.

REMINDER :Compact 10N machines are not meant for outdoor use.

4.1.1.2 -Indoors

For use indoors, it is important to comply with the operating instructions as well as the recommendations so as to avoid any risk of an accident.

The factors to be complied with for use indoors are in particular :

- The maximum load not to be exceeded (see the table of characteristics, Table 2.5, page 14)
- The lateral manual force (see the table of characteristics, Table 2.5, page 14)
- The ground texture must be hard and firm

4.1.2 - Manual extension

The platforms are equipped with a single manual extension with two possible notches.

Conditions of use :

- Depress the pedal and push as far as the first or second notch according to the desired extension (see Photo 6 and Photo 7, page 32).
- When transporting the lift on a trailer or vehicle, it is essential for the manual extension to be locked and for the extension to be retracted (see Photo 8, page 32).
- It is recommended not to exceed the advocated load in order to make the manual move of the extension easier.

Photo 6

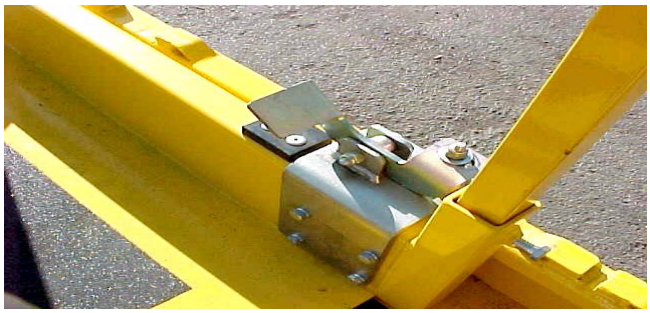

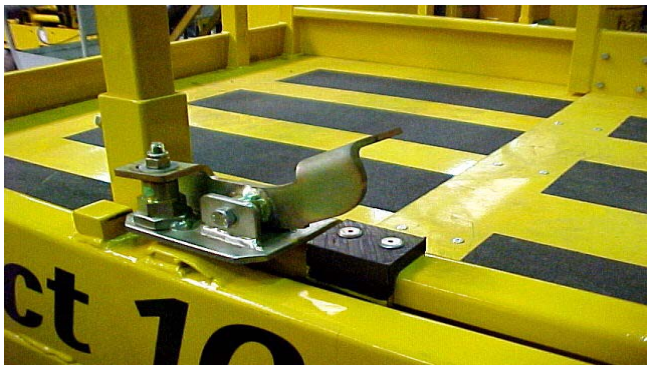

Photo 7

Photo 8

4.2 - OFFLOADING - LOADING

IMPORTANT: Before any operation, check the condition of the machine, so as to make sure that it has not been damaged during transport. Otherwise, make the necessary reserves with the carrier in writing.

NOTE : An incorrect operation can cause the machine to fall and cause very serious bodily injury and material damage.

Caution!
Carry out the offloading operations on a stable, sufficiently resistant, flat and uncluttered surface.

4.2.1 - Offloading by lifting

Precautions : Make sure that:

- the machine is totally folded
- the lifting accessories are in good condition and have sufficient capacity.
- the personnel performing the operations is authorised to use lifting equipment.

Offloading :

Offloading can be carried out using a fork-lift truck, or using straps placed in the places provided for this purpose (see sketch below).

If there is a problem, it is recommended that you contact PINGUELY-HAULOTTE's After-Sales Department.

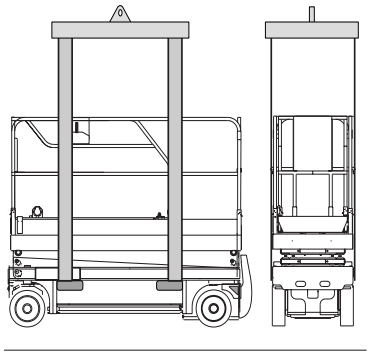

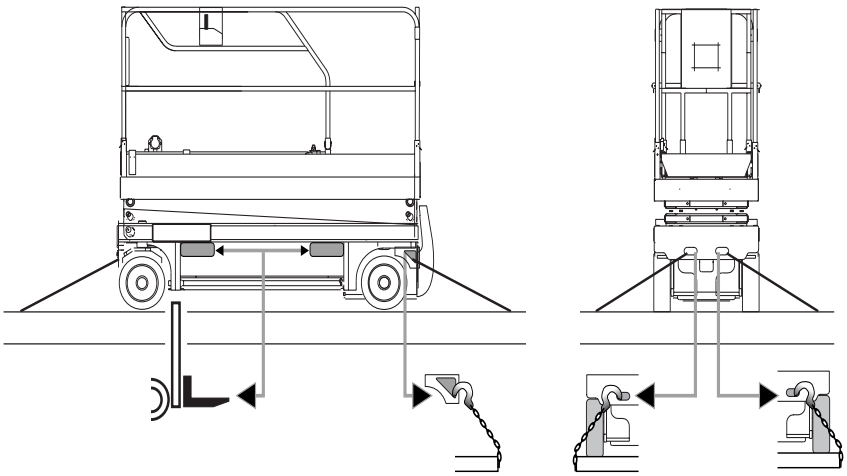

Caution!
Never stand under or too close to the machine during operations.

4.2.2 - Offloading with ramps

Precautions : Make sure that:

- the machine is totally folded.
- the ramps can support the load and that adherence is sufficient to avoid any risk of slipping during the operation and that they are correctly fixed.

IMPORTANT: Since this method requires the machine to be switched on, refer to Chapter 4.3, page 33 to avoid any risk of incorrect operation.

Select low travel speed.

Caution!
Do not go down ramps in high speed mode.

NOTE : For ramps over 25%, the battery tray may well hit the ground. If the slope is greater than the maximum travel slope, use a hoist in addition to traction or retention.

4.2.3 - Loading

The precautions are identical to the offloading precautions.

The machine must be secured in accordance with the sketch below.

To go up a lorry's ramps, select low travel speed.

4.2.4 - Transport instructions

- When transporting the machines, make sure that the capacities of the vehicle, of the loading surfaces and of the straps and ties are sufficient to take the weight of the machine.
- The machine must be on a level surface or attached before the brakes are released.

4.3 - OPERATIONS BEFORE FIRST PUTTING INTO SERVICE

During its manufacture, each lift is the subject of continuous quality controls.

Transport can cause damage. You must report any damage to the carrier before the machine is put into service for the first time.

REMINDER :Before any operation, familiarise yourself with the machine by referring to this manual, the engine's manual, and the instructions on the various plates.

4.3.1 - Familiarisation with the control posts

All the movements are controlled from a control box situated on the platform's extension.

This is the main driving post ; it must not be moved to another place on the platform otherwise the " FORWARD " and " REVERSE " controls may be inverted.

The control box situated on the chassis is an emergency post only.

NOTE : Do not execute any manoeuvres before having assimilated the instructions in Chapter 4.4, page 36.

It is essential to have very good knowledge of the characteristics and operation of the machine, because some breakdowns can lead you to think that there is a breakdown when it is the safety devices which are working correctly.

4.3.1.1 -Chassis control station (see Photo 9)

Photo 9

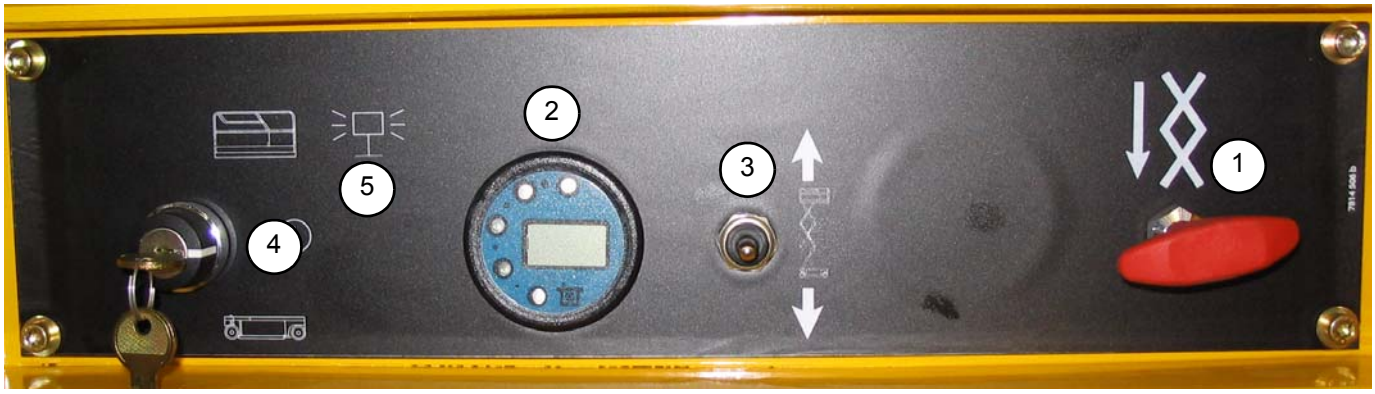

1/ Emergency assistance pull rod
2/ Hour counter/battery charge state
3/ Raising/lowering switch
4/ Control post activation key
5/ Revolving light (option)

4.3.1.2 -Platform control station

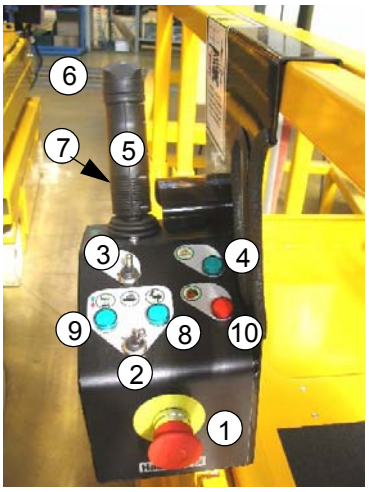

Photo 10

1/ Emergency stop switch
2/ Selection of movement (low speed, high speed, elevating, lowering)
3/ Warning signal control
4/ Visual fault indicator: see Table 3.2.2.4, page 26
5/ Manipulator
6/ Steering control switch
7/ Dead man
8/ Visual indicator: travel
9/ Visual indicator: movement
10/ Visual indicator: weighing

4.3.2 - Checks before any putting into service

4.3.2.1 -Safety bar

Photo 11

Make sure that the safety bar slides freely to permit access to the platform (see Photo 11, page 35).

Before any putting into service, the machine must undergo visual inspection.

4.3.2.2 -General mechanical appearance of the machine

- Visual inspection of all of the machine : chipped paint, missing or loose parts or battery acid leaks must attract your attention.
- Check that there are no bolts, nuts, connectors and hoses undone, no hydraulic oil leaks, no electric conductors cut or disconnected.
- Check the wheels : no nuts loose or missing.
- Check the tyres : no cuts or wear.
- Check the lifting and steering cylinders : no evidence of damage, oxidation or foreign bodies on the rod.
- Inspect the platform and the scissor arms : no visible damage, wear or deformation.
- Check the steered axle : no excessive wear on the pivot pins, no loose or missing parts, no deformation or visible cracks.
- Check the condition of the control box's power cable.
- Check that there is a manufacturer's rating plate, warning labels and user's manual.
- Check the condition of the guard rails and sliding access bar.

4.3.2.3 -Machine's environment

- Check that a serviceable fire extinguisher is close to hand.
- Always work on hard ground capable of supporting the maximum load per wheel.
- Do not use the machine in a temperature below -15°, particularly in a cold store.
- Wipe any trace of oil or grease off the floor, ladder and hand rails.
- Make sure that there is no-one in the immediate vicinity of the machine before raising or lowering the platform.
- Make sure that no obstacle can interfere with the
  - travel (machine travel)
  - platform raising movements.
  - NOTE : see " work area " sketch (Chapter 2.4, page 9).

4.3.2.4 -Hydraulic system

- Check the pump and the hydraulic control block : no leaks, components properly fixed.
- Check the hydraulic oil level

4.3.2.5 -Batteries.

- Check the cleanness and tightness of the battery's terminals regularly (loose terminals or corrosion cause loss of power).
- Check the battery electrolyte level: the level must be about 10 mm above the plates; top up if necessary with distilled water.
- Verify the sliding operation of the battery trays (see Photo 16, page 39).

4.3.2.6 -Safety devices

- Verify the operation of the top and bottom emergency stop switches (see Photo 12 and Photo 14).
- Verify the operation of the tilt indicator (see Photo 13, page 36 with the platform raised, by operating the latter (with the red emergency stop switch unlocked, the buzzer must sound when the machine's limit angle is reached).
- Verify that the limit switches are free from any foreign body.
- Verify the visual and audible alarms.

Photo 12

Photo 13

Photo 14

Caution!
These machines are not isolated and must not be put into service near power lines.

Caution!
If the machine has a 220 volt power point/plug, it is essential for the extension cable to be connected to a mains socket protected by a 30 mA quick-trip circuit-breaker.

4.4 - DRIVING

IMPORTANT: The machine must only be put into service once all the verification operations have been finished.

After use, always put the fuse in the STOP position.

4.4.1 - General recommendations

- Verify before travelling or doing any work high up that there are no people, obstacles, holes and slopes, and that the ground is flat, hard and firm and above all capable of taking the weight of the wheels.
- Always keep a sufficient distance away from unstable edges or tilts.
- Make sure that there is no one in the immediate vicinity of the machine before carrying out a movement or travelling. Be particularly vigilant if the extension is out, as visibility is reduced.

REMINDER :It is forbidden to travel on the public highway.

- In order to move the machine, it is necessary not to be in overload. Otherwise, the machine is immobilized.
- The travel manoeuvre can be carried out only from the control post situated on the platform.
- It is impossible to do travelling and platform elevating simultaneously.

4.4.2 - Operations from the ground (see Photo 9, page 34)

4.4.2.1 -Recommendations

Dangers of crushing:

- Keep your hands and limbs away from the cross-pieces.
- Use common sense and good preparation when operating the machine with the ground control. Keep a safe distance between the machine and fixed obstacles.
- From the controls situated on the chassis, only the elevating and lowering controls are possible.

4.4.2.2 -Procedure

Raising:

- Pull the circuit-breaker.
- Turn the key (on the chassis side) holding it so as to see the five LEDs come on according to the charge in the batteries (see Photo 9, item 4).
- Holding the key (on the chassis side), raise the platform for simple verification or for a rescue using the switch (see Photo 9, item 3).
- In order to stop an operation, release the key or the switch.

Lowering:

- Pull the circuit-breaker.
- Turn the key (on the chassis side) holding it so as to see the five LEDs come on according to the charge in the batteries (see Photo 9, item 4).
- Holding the key (on the chassis side), lower the platform for simple verification or for a rescue using the switch (see Photo 9, item 3). Lowering finishes with the alarm.
- In order to stop an operation, release the key or the switch.

4.4.3 - Operation from the platform (see Photo 10, page 34)

Caution!
Before any operations, make sure that the chosen movement has been selected.

4.4.3.1 -Recommendations:

- Do not operate the machine if the guard rails are not correctly installed and if the entrance is not closed in the operating position.
- Beware of reduced visibility and blind spots when travelling or when operating the machine.
- Make sure that the platform is correctly positioned in extension when moving the machine.
- Operators are strongly recommended to wear an officially approved helmet when operating the machine.
- Inspect the work place, looking for overhead obstructions or other possible dangers.
- Do not drive the machine acrobatically and do not sit astride the machine.
- Adapt the travel speed to suit the conditions of the ground, traffic and slope, the position of people and any other factor which could cause a collision.
- Do not operate a machine where a crane or other machine is operating high up, except if the crane's controls have been locked and/or precautions have been taken to avoid any collision.

The platform emergency stop cuts the line switch (battery breaker).

4.4.3.2 -Procedure

Raising.

- Select the " elevating " mode using the switch (see Photo 10, item 2).
- Operate the manipulator to raise the lift after depressing the "dead-man's handle" (see Photo 10, page 34, item 5).

Lowering.

- Operate the manipulator to lower the lift after depressing the "dead-man's handle" (see Photo 10, page 34, item 5).

During lowering at the height of 1.5 metres, a time delay of 3 to 5 seconds is triggered so as to verify that no-one is under the machine so as not to have any risk of crushing. Lowering finishes with the alarm.

Travel.

Travel is done using the manipulator after depressing the " dead-man's handle ". Two speeds are possible in the lift's bottom position or below 1.5 metres (high and low speed). These two speeds need to be selected using the switch (see Photo 10, item 2).

When the lift is elevated above 1.5 metres, only the crawling speed is possible.

Steering can be carried out simultaneously using the switch on the top of the manipulator.

4.5 - USING THE ON-BOARD CHARGER

Caution!
Set the chassis emergency stop on the 'OFF' position before recharging.

4.5.1 - Characteristics

The traction batteries must be charged with the charger provided for this purpose. DO NOT OVERCHARGE THEM.

- Charger : 24 V - 30 A.
- Power supply : single-phase 220 V - 50 Hz.
- Voltage supplied : 24 V.
- Charge time : about 11 hours for batteries 70% to 80% discharged.

Caution!
In cold weather, the charging time increases.

4.5.2 - Starting charging

Photo 15

Starting is automatic on connection to the mains. The charger is equipped with 1 indicator light :

- The indicator signals charging in progress.

State	Description
RED on	Machine charging
YELLON on	80% charged
GREEN on	Machine charging complete

4.5.3 - Holding charge

If the charger remains connected to the mains for a period greater than 48 hours, it re-starts a charging cycle after the end of the preceding charge so as to compensate for self-discharging.

4.5.4 - Interrupting charging

The charger is stopped by disconnecting the mains plug. If it is necessary to operate the machine during a charging cycle, it is necessary to disconnect the charger. This might reduce the battery's life time. After the operation, re-connect the charger again.

4.5.5 - Precautions in use

- Avoid recharging the batteries if the temperature of the electrolyte is over 40C.
- Let it cool down.
- Keep the top of the batteries dry and clean. An incorrect connection or corrosion can cause considerable loss of power.
- If new batteries are fitted, recharge after 3 or 4 hours of use and do so 3 to 5 times.
- The charger has been adjusted in the factory with the cable with which it is equipped. If this cable is replaced, it is important to contact the PINGUELY-HAULOTTE factory so that they can give you their agreement.

4.6 - USING AND SERVICING BATTERIES

4.6.1 - Recommendations

Photo 16

Dangers of burning :

- Batteries contain acid. Always wear protective clothing and goggles when working with batteries.
- Avoid spilling or touching battery acid. Spilt battery acid can be neutralized with sodium diaocarbonate and water.
- Do not expose the battery or the charger to water and/or rain.

Dangers of explosion :

- Keep sparks, flames and burning tobacco away from the battery. Batteries give off an explosive gas.
- The battery tray must remain open throughout the recharging cycle.
- Do not touch the battery terminals or the cable clamps with tools which could cause sparks.

The batteries are your platform's energy source.

Here are a few tips which will enable you to make the best possible use of their capacity without any risk of premature damage.

4.6.2 - Putting into service

Check that the electrolyte level is correct.

Use the batteries sparingly during the initial cycles. Make sure that you do not exceed discharges greater than 80% of the rated capacity. The batteries give their full capacity after about ten work cycles. Do not add water before these ten cycles.

4.6.3 - Discharging

- Never discharge the batteries to over 80% of their capacity in 5 hours.
- Never leave the batteries discharged.
- If the traction battery is discharged and if only a single charge monitor LED is on, it is impossible to elevate the platform. Lowering remains possible.
- Procedure for emergency or rescue (see Chapter 4.7, page 41).
- Make sure that the monitor is working properly.
- In cold weather, do not put off recharging because the electrolyte could freeze.

4.6.4 - Charging

Caution!
All the controls are cut off when the 220V plug is connected for charging the batteries.

- When to recharge ?
  - when the batteries are discharged between 35 and 80% of their rated capacity
  - after a long period un-used.
- How to recharge ?
  - make sure that the mains is suited to the charger's consumption.
  - top up with electrolyte to the minimum level if an element has a level below this minimum.
  - operate in clean, well-ventilated premises without any flame nearby.
  - open the cover.
  - use the machine's on-board charger. It has a charging rate appropriate to the capacity of the batteries.
- During charging :
  - do not remove or open the caps on the elements.
  - make sure that the temperature of the elements does not exceed 45°C (be attentive in summer or in premises with a high ambient temperature).
- After charging :
  - top up with electrolyte if necessary.

Caution!
Do not electric arc weld the machine without having disconnected the batteries.Do not use the batteries to start another machine.

4.6.5 - Servicing

- Check the electrolyte levels before charging once a week in normal use.
- If necessary, top up :
  - with distilled or demineralised water
  - after charging.
- Never add acid (if it is spilt, contact PINGUELY-HAULOTTE's After-Sales Department).
- Never leave discharged batteries un-used.
- Avoid overflows.
- Clean the batteries to prevent any formation of salts or current leakage.
  - wash the top without removing the caps
  - dry with compressed air, with clean cloths…
  - grease the terminals.
- The servicing operations on the batteries must be carried out safely (wearing gloves and goggles).

In order to diagnose the state of your batteries quickly, record once a month the density of each element, using a hydrometer, as a function of the temperature using the graphs below (do not carry out measurement directly after filling).

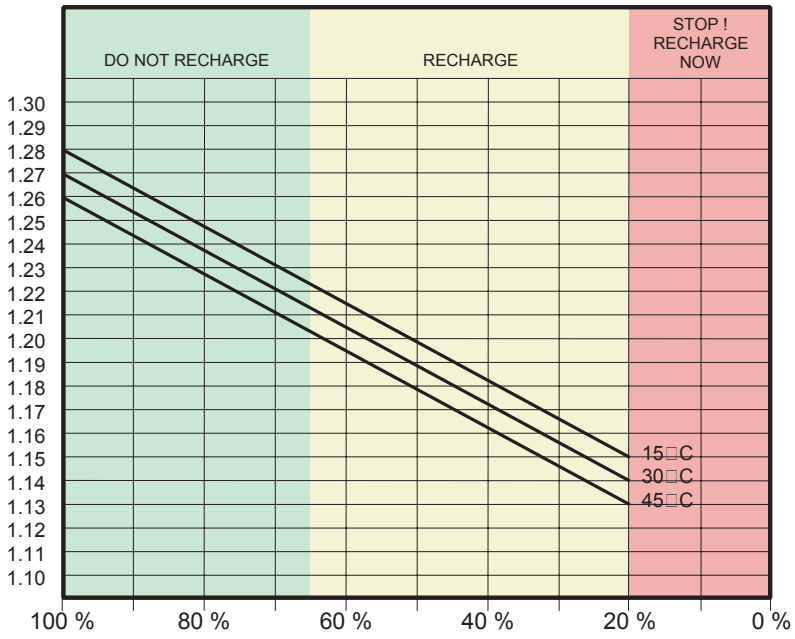

State of charge of a battery as a function of density and temperature.

4.7 - RESCUE AND REPAIR OPERATIONS

Caution!
Only a competent operator may perform repairs or rescue operations.

4.7.1 - Emergency lowering

This is the case in which the operator on the platform is no longer able to control the movements, even though the machine is functioning as normal. A competent operator on the ground may operate the control station at the base-frame with the main power supply to bring the operator on the platform back down.

Rescue procedure:

- place the key selector from selection of control station to position "ground control" (no. 1). In this position the controls of the control station at the platform will be cancelled.
- Continuing to hold the key (on the chassis side), lower the platform using the switch provided if you need to help the person on the platform.
- To stop an operation, release the key.

NOTE : During rescue and emergency manoeuvres from the ground with the extension deployed, it is essential to ensure that there are no obstacles under the platform (wall, beam, power line, etc.).

Caution!
It is prohibited to lower overloads using emergency lowering at the risk of overturning the lift.

4.7.2 - Manual repair

Photo 17

If an operating fault prevents the operator on the platform from coming back down, a competent operator may bring the platform back down from the control station at the base-frame.

Procedure of manual lowering of the platform

- In the event of a breakdown, lowering of the platform can be carried out thanks to the standby pull rod on the bottom control box (see Photo 17).
- Release to stop the platform when being lowered.

4.8 - BRAKE RELEASE

Caution!
It is vital to use a traction bar between the towing vehicle and the front of the machine in order to avoid any risk that it might career out of control. These towing operations must be carried out at low speed, and must remain under the responsibility of the operator.

Brake release is carried out manually (see Photo 18).

Procedure :

- Screw valve NV1
- Operate hand pump until brake release is complete
- Unscrew NV2
- Drive at low speed
- Once in place :
  - Screw NV2
  - Unscrew NV1

Photo 18

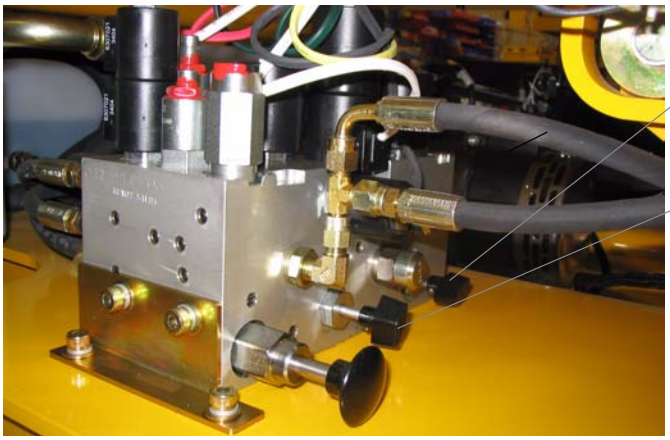

NV2 **MK4**

NV1

After any manual braking and once the machine has been put back into operation, check that the brakes are functioning on a ramp of maximum admissible incline.

5 - MAINTENANCE

5.1 - GENERAL RECOMMENDATIONS

Caution!
Do not use the machine as a welding earth. Do not weld without disconnecting the battery's (+) and (-) terminals. Do not start other vehicles with the batteries connected.

The maintenance operations indicated in this manual are given for normal conditions of use.

In difficult conditions: extreme temperatures, high humidity, polluting atmosphere, high altitude, etc., some operations must be carried out more frequently and special precautions must be taken. Refer to PINGUELY-HAULOTTE's After Sales Service.

Only qualified and competent personnel can carry out any work on the machine and they must comply with the safety instructions relating to the protection of personnel and environmental protection.

At regular intervals, check the operation of the safety devices:

1°) Tilt: buzzer + stopping (travel cut as well as lifting).

2°) Platform overload - load

5.2 - MAINTENANCE DEVICE

This maintenance leg device enables the operator to work without any risk under the machine.

Procedure : For the COMPACT 8, 10 N (see Photo 19)

Fitting the maintenance leg:

Photo 19

- Park the elevating platform on firm horizontal ground.
- Make sure that the two emergency stop switches are in the " ON " position.
- Turn the chassis's ignition key to the " Chassis " position.
- Position the chassis raising switch upwards so as to elevate the platform.
- Turn the maintenance leg forwards and let it hang vertically on the bottom pin pivot tube.
- Push the raising switch into the bottom position so as to lower the platform gradually until the maintenance leg is resting on the bottom pivot tube.

Removing the maintenance leg:

- Push the chassis's raising switch into the top position and raise the platform gradually until the maintenance leg is disengaged from the bottom pivot tube.
- Turn the maintenance leg backwards so that it is resting in the storage position on the cylinder mount.
- Push the chassis's raising switch into the bottom position and lower the platform completely.

Procedure : For the COMPACT 8W, 10, 12 (see Photo 20)

These operations are done on both sides of the lift.

Fitting the maintenance leg:

Photo 20

- Park the elevating platform on firm horizontal ground.
- Make sure that the two emergency stop switches are in the " ON " position.
- Turn the chassis's ignition key to the " Chassis " position.
- Position the chassis raising switch upwards so as to elevate the platform.
- Unscrew, turn the maintenance leg and let it hang vertically.
- Push the raising switch into the bottom position so as to lower the platform gradually until the maintenance leg is resting on the two fixing points (top and bottom).

Removing the maintenance leg:

- Push the chassis's raising switch into the top position and raise the platform gradually until the maintenance leg is disengaged.
- Turn the maintenance leg until it is resting in the storage position and screw again to fix it.
- Push the chassis's raising switch into the bottom position and lower the platform completely.

5.3 - MAINTENANCE SCHEDULE

The schedule on the next page indicates the intervals, the maintenance points (parts) and the ingredients to be used.

- The mark in the symbol indicates the maintenance point depending on the interval.
- The symbol represents the consumable to be used (or the operation to be carried out).

5.3.1 - Consumables

Consumable	Specification	Symbol	Lubrifiers used by Pinguely-Haulotte	ELF	TOTAL
Hydraulic oil Organic hydraulic oil (option) 'Intense cold' hydraulic oil	AFNOR 48602 ISO VG 46 BIO ISO 46 ISO 6743-4	◇	BP SHF ZS 46 SHELL TELLUS 32	HYDRELF DS 46	EQUIVIS ZS 46
Lithium grease		◌	SHELL ALVANIA EP (LF) 3		
Exchange or specific operation		⬡			

5.3.1.1 -'Intense cold' hydraulic oil conditions of use

This oil is meant for working at low temperature.

⚠ ***Caution!***

The ambient temperature must not exceed 15°C. In the opposite case, use a standard or organic hydraulic oil.

5.3.2 - Maintenance diagram

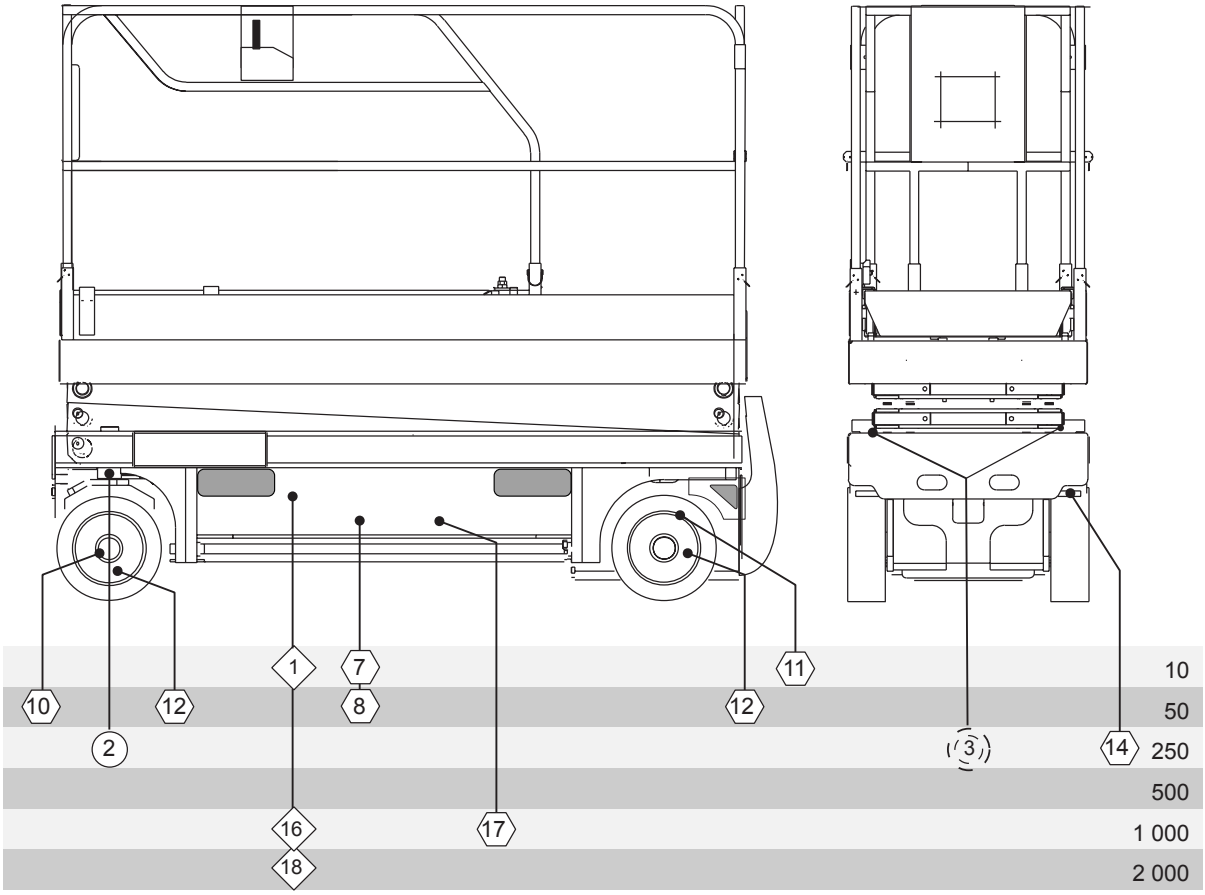

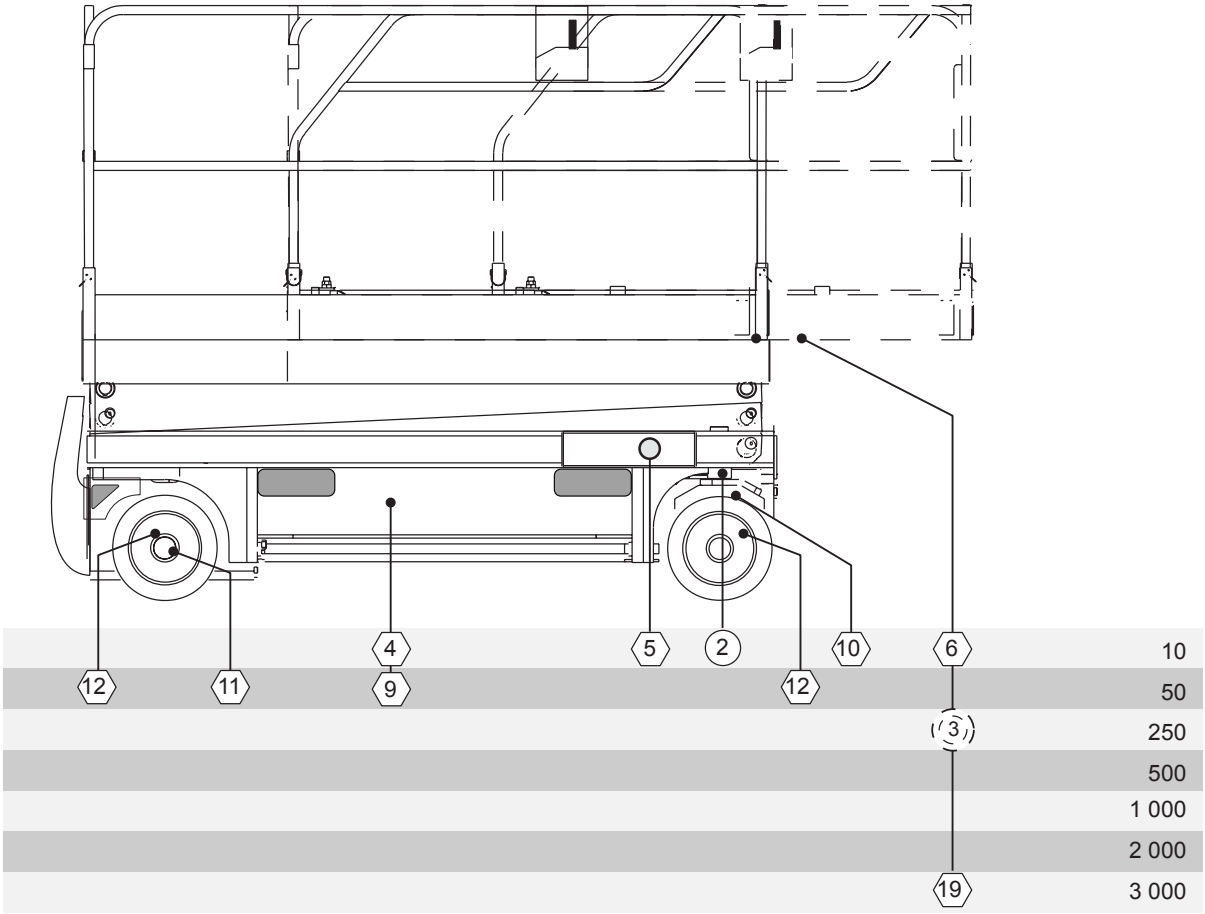

5.4 - OPERATIONS

5.4.1 - Summary table

IMPORTANT: If "ORGANIC" OR "EXTREME COLD" OIL IS USED, FREQUENCIES IN THE TABLE BELOW ARE REDUCED BY HALF

INTERVALS	OPERATIONS	ITEM
Each day or before each putting into service	• Check the following levels: - hydraulic oil - electric batteries - charge of batteries, using indicator • Check the cleanness of the following: - machine (check in particular the watertightness of the connectors and hoses), take this opportunity to check the condition of the tyres, cables and all accessories and equipment. - Lift slideway for extension • Check the clogging of the hydraulic oil filter.	 1 4 5 6 7
Every 50 hours	Caution : After the first 50 hours: • Change the hydraulic filter's cartridge (see 250 hour interval) • Check the condition of the battery cables (remove if worn) • Check the tightness: - of the screws and bolts in general - of the front motor fixing screw (9 daNm) - of the rear brake fixing screw (9 daNm) - of the wheel nuts (torque 110 daNm)	 8 9 10 11 12
Every 250 hours	• Change the hydraulic filter's cartridge • Grease : - the pivot pins on the steered wheels - the friction parts of the slideways (spatula) • Check : - the connection of the battery charger - the level of the batteries	13 2 3 14 15
Every 500 hours	• Drain the organic hydraulic oil tank (option) • Drain the 'intense cold' oil tank	
Every 1000 hours or every year	• Drain the hydraulic oil tank • Clean the motor-driven pump unit's carbon brush	16 17
Every 2000 hours	• Drain the hydraulic oil complete circuit and reservoir	18
Every 3000 hours or every 4 years	• Check - the condition of the slideways - the condition of the electric cables and hydraulic hoses, etc.	 19 20

5.4.2 - Procedure

IMPORTANT:

- For filling and lubrication, use only the lubricants recommended by PINGUELY-HAULOTTE. If there is a problem, contact the After-Sales Department.
- Collect used oil putting it in a recipient to avoid environment contamination.

5.4.2.1 -Hydraulic oil reservoir

- Ensure the hydraulic oil level in the tank is sufficient.

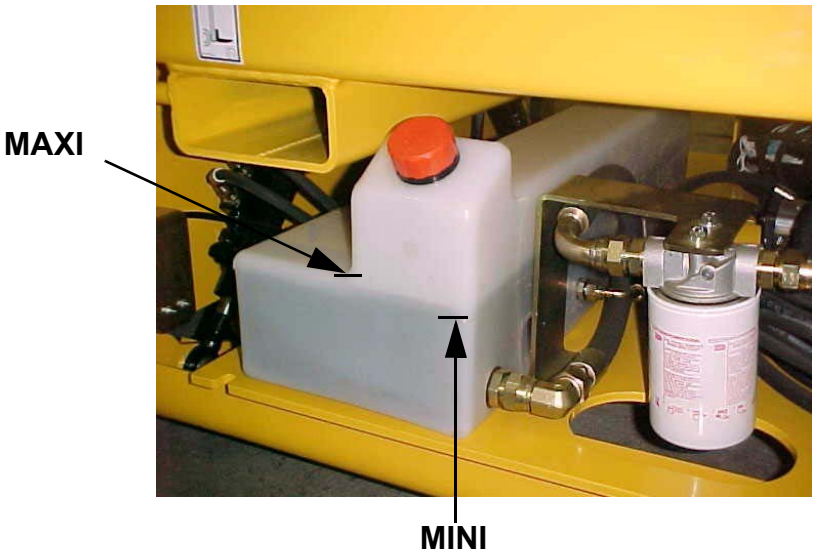

- Unscrew the body and remove the cartridge. Fit a new cartridge

Photo 21

5.4.2.2 - Hydraulic oil filter

See Photo 21

- Change the cartridge.

Caution!

Before removal, make sure that the oil circuit is no longer pressurised and that the oil is no longer at too high a temperature.

5.4.2.3 -Greasing of pivot pin on steered wheels:

see Photo 22

Grease the pivot pins with lead-free grease.

Photo 22

5.4.3 - Greasing of the slideways:

Photo 23

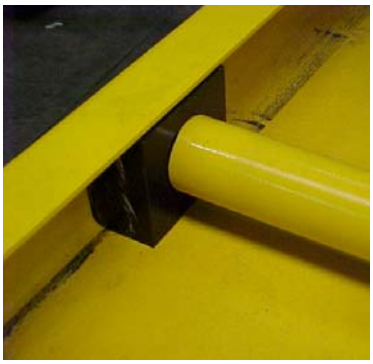

see Photo 23

Grease the slideways with lead-free grease using a spatula

5.4.4 - List of consumables

- Hydraulic filter cartridge. See Photo 21, page 47.

5.5 - MANUFACTURER'S RECOMMENDATIONS

IMPORTANT: For any repair, use original spare parts certified by the manufacturer. Any failure to comply with this rule will result in serious safety and stability risks of the machine.

IMPORTANT: For heavy maintenance operations requiring the dismantling of one or more components of the machine, please contact the manufacturer for particular recommendations in order to avoid any dangerous situation.

IMPORTANT: Before any dismantling of a component affecting the lifting structure it is imperative to carry out statics and dynamics tests each time the machine is going to be put in operation.Chap. 1.4.2, page 5.

6 - OPERATING FAULTS

These few pages should enable you to " get over " any operating problem you may have on your scissor lift.

If a problem arises which is not covered in this chapter or which is not resolved by the solutions appearing below, it will be necessary to consult qualified technical personnel before proceeding with any maintenance operation. It is also necessary to note that most of the problems encountered on the machine will come mainly from the electrical and hydraulic systems.

Before anything else, check that :

- The batteries are charged. If they are the green leds are on.
- The two mushroom-headed emergency stop switches on the chassis control box and on the platform control box are unlocked.

Caution!
Bubbles + pressure + heat = unacceptable situation. Risk of explosion.

NOTE : Cavitation (emulsified oil) can lead to incorrect operation of hydraulic components. It takes about 4 hours for oil emulsified by cavitation effect to return to normal.

6.1 - PLATFORM LIFTING SYSTEM

ANOMALY	VERIFICATION	PROBABLE CAUSE	SOLUTION
No movement when the lifting switch on the unit is operated and the manipulator is engaged.	Check whether the movements are done when the lifting selector switch on the chassis control box is operated.	• Control switch is not working. • Manipulator is not working. • Lack of oil in the hydraulic circuit	• Replace the switch (After-Sales Department)._ Replace the manipulator (After-Sales Department) • Top up with oil as necessary. • Top up with oil as necessary.
The platform does not go up		• Load too great on the platform (personnel or equipment) • Lack of oil in the hydraulic circuit. • Batteries discharged more than 80%, the monitor cuts up lifting.	• Reduce the load. • Top up with oil as necessary. • Recharge the batteries or switch to heat engine mode.
The platform does not go down		• Load too great on the platform (personnel or equipment).	• duce the load
The platform goes up and goes down jerkily.		• Lack of oil in the hydraulic circuit.	• Top up with oil as necessary.

6.2 - TRAVEL SYSTEM

ANOMALY	VERIFICATION	PROBABLE CAUSE	SOLUTION
No movement when the switch is in the travel position and the manipulator on the platform control box is operated.		• Manipulator is not working. • Lack of oil in the hydraulic circuit.	• Repair or replace the manipulator (After-Sales Department). • Top up with oil as necessary.
The machine runs away downhill.		• Balancing valve incorrectly adjusted or is not working properly.	• Adjust or replace the balancing valve (After-Sales Department).

6.3 - DIRECTION SYSTEM

ANOMALY	VERIFICATION	PROBABLE CAUSE	SOLUTION
No movement when the manipulator is operated.		• Lack of oil in the hydraulic circuit. • The control manipulator is not working.	• Top up with oil as necessary. • Replace the manipulator (After-Sales Department).
Hydraulic pump noisy.		• Lack of oil in the reservoir.	• Top up with oil as necessary.
Cavitation of the hydraulic pump. (Vacuum in the pump due to a lack of oil).	The hydraulic oil takes on a cloudy appearance, becomes opaque and goes white. (presence of bubbles).	• Oil viscosity too high	• Drain the circuit and replace with the recommended oil.
Overheating of the hydraulic circuit.		• Oil viscosity too high. • Lack of hydraulic oil in the reservoir.	• Drain the circuit and replace with the recommended oil. • Top up with oil as necessary.
The system works in an irregular manner.		• The hydraulic oil is not at an optimum operating temperature.	• Do several movements without a load so that the oil can warm up.

https://truckmanualshub.com/

7 - ELECTRIC DIAGRAM

7.1 - ELECTRIC COMPONENTS

Component	Description
A1	Angle sensor
FU1	Power fuse
FU2	Chopper output protective fuse
FU3	Controls protective fuse
FU4	Working light protective fuse
G1	Pressure sensor
GB1	Battery
HA1	Buzzer
HL1	Situation light indicator
HL2	Flashing light
HL3	Working light
HL4	Lifting light indicator
HL5	Machine travel light indicator
HL6	Tilt light indicator
KA1	Buzzer relay
M1	Motorpump unit
PT1	M.D.I display
RCH	Battery charger relay
SA1	Control post selection
SA2	Movement selection
SA3	Platform travel / lifting selection
SA4	Working light switch
SB1	Battery cut-off / Emergency stop (chassis)
SB2	Emergency stop (platform)
SB3	Buzzer control
SM1	Manipulator
SQ1	Low position contactor
SQ10	Tilt sensor
SQ3	Top position contactor
SQ4	Travel interruption switch
SQ5/SQ6	Pothole system out
SQ7	Extension system out
U1	Battery charger
U2	Electronic chopper
U4	Serial card
U5	Weighing card
YV	Electrovalve

7.2 - WIRING DIAGRAM E614

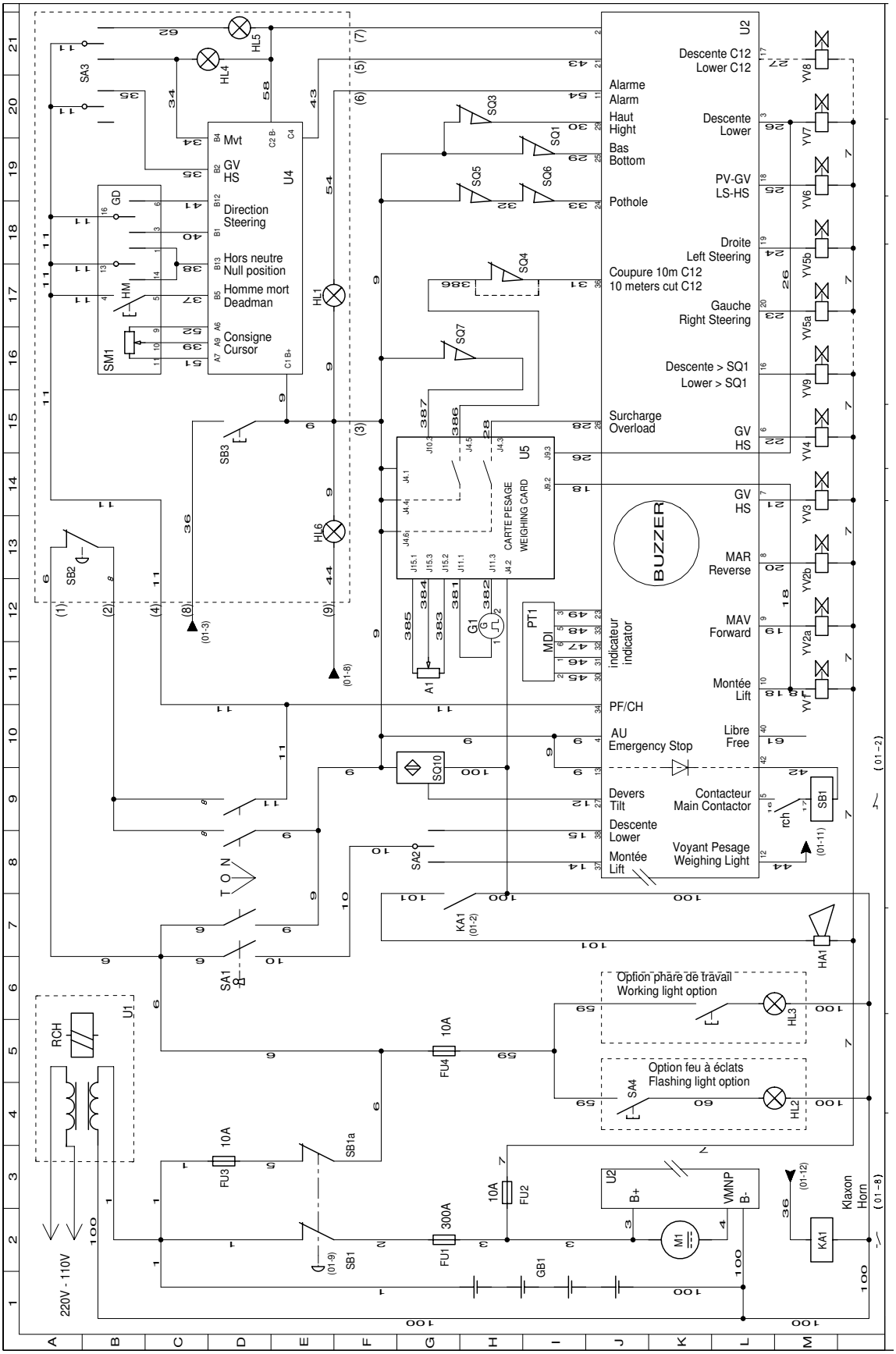

7.3 - POSITION AND FUNCTION OF CONTACT SWITCHES

7.3.1 - SQ1: Low position contactor

- Raising :
  - Tilt sensor activated;
  - Micro-speed activated;
  - Activates the pothole system check and prevents potholes from retracting.
- Lowering :
  - Anti crushing safety device activated;
  - Tilt sensor deactivated;
  - Deactivates the pothole system check (SQ5 & SQ6) and allows potholes to retract.

7.3.2 - SQ3: Top position contactor

- Raising is stopped when the maximum height has been reached.
- Motorpump group cut-off.

7.3.3 - SQ4: Travel interruption switch (for Compact 12 only)

- Raising : Disables travel movements when the working height is over 10 m / ~ 33 ft (floor height over 8 m/~ 26ft).
- Lowering : Allows travel movements when the working height is under 10 m / ~ 33 ft (floor height under 8 m/~ 26ft).

7.3.4 - SQ5 & SQ6: Pothole system out

Contactor SQ 5: Checks the left pothole's position. • 0 = Device closed. • 1 = Device open.	Contactor SQ 6: Checks the right pothole's position. • 0 = Device closed • 1 = Device open.

7.3.5 - SQ 7: Extension system out

- signals whether the extension of the platform is in or out.

7.3.6 - SQ 10 : Tilt sensor

See “Checking the inclination”, page 28.

7.3.7 - A1: Angle sensor

- signals the raised position of the platform.

7.3.8 - G1: Pressure sensor

- signals the load on the platform.

Contact switches' positioning

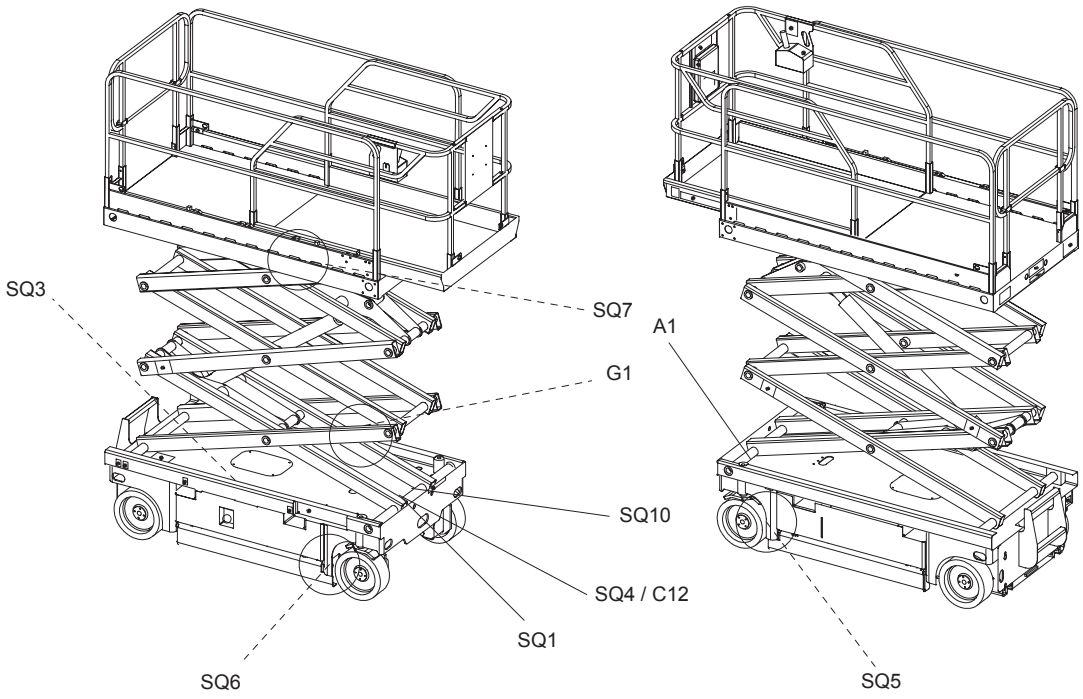

8 - HYDRAULIC DIAGRAMS

8.1 - HYDRAULIC COMPONENTS (COMPACT 8, 8W, 10N, 10)

Component	Description
1	Motor pump unit
2	Filter
3	Hydraulic block
4	Hydraulic motors
5	Pothole cylinder
6	Lifting cylinder including:
6a	Safety block including:
6a1	One-way valve + spray nozzle
6a2	Electrovalve + manual control
7	Pressure sensor
8	Brake
9	Steering cylinder
10	Hydraulic tank

8.2 - HYDRAULIC DIAGRAM 118P251510B

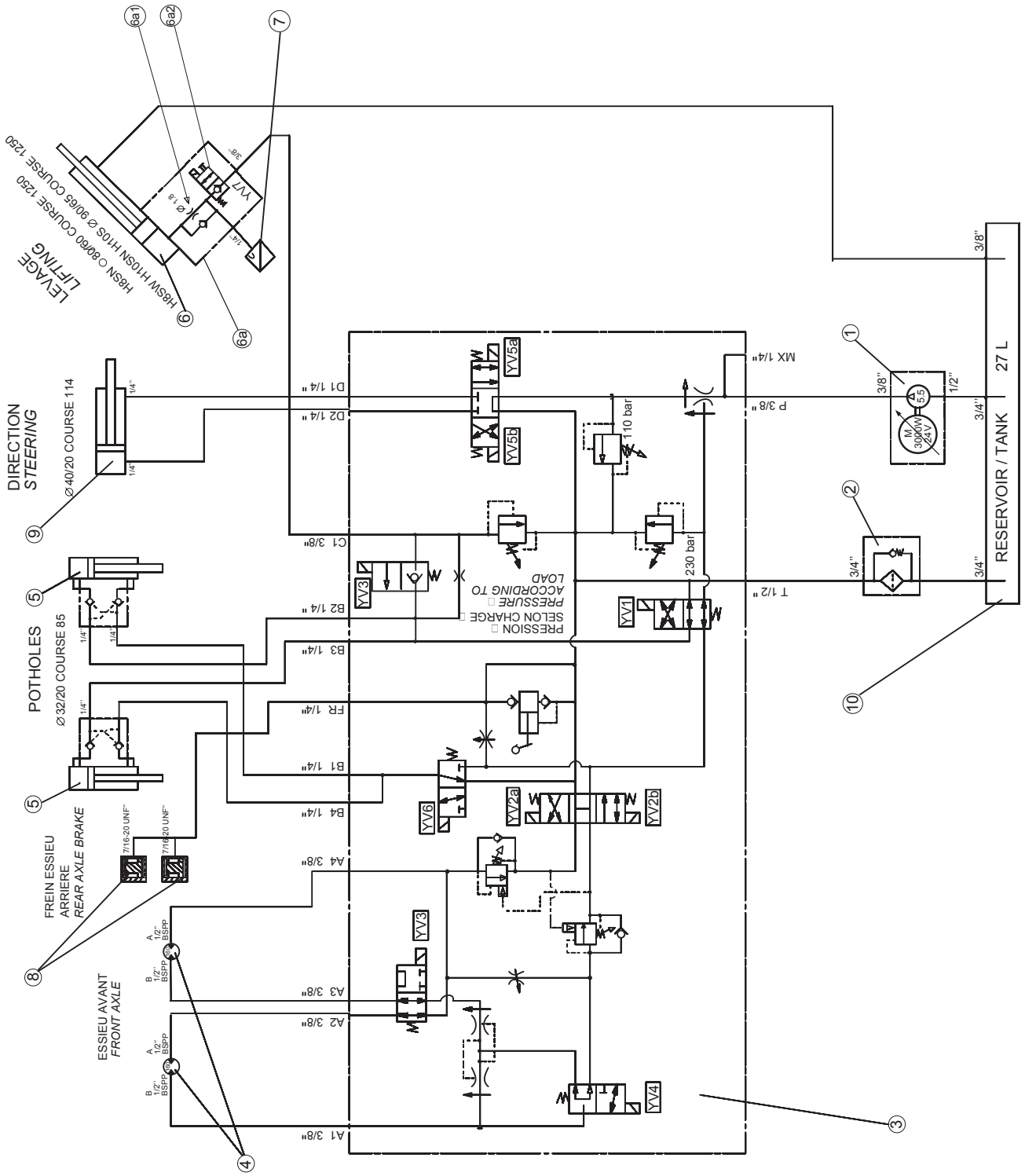

8.3 - HYDRAULIC COMPONENTS FOR COMPACT 12

Component	Description
1	Motor pump unit
2	Filter
3	Hydraulic block
4	Hydraulic motors
5	Pothole cylinder
6	Lifting cylinder including:
6a	Safety block including:
6a1	One-way valve + spray nozzle
6a2	Electrovalve + manual control
6a3	One-way valve
7	Pressure sensor
8	Brake
9	Steering cylinder
10	Hydraulic tank
11	Lifting cylinder including:
11a	Safety block including:
11a1	One-way valve + spray nozzle
11a2	Electrovalve
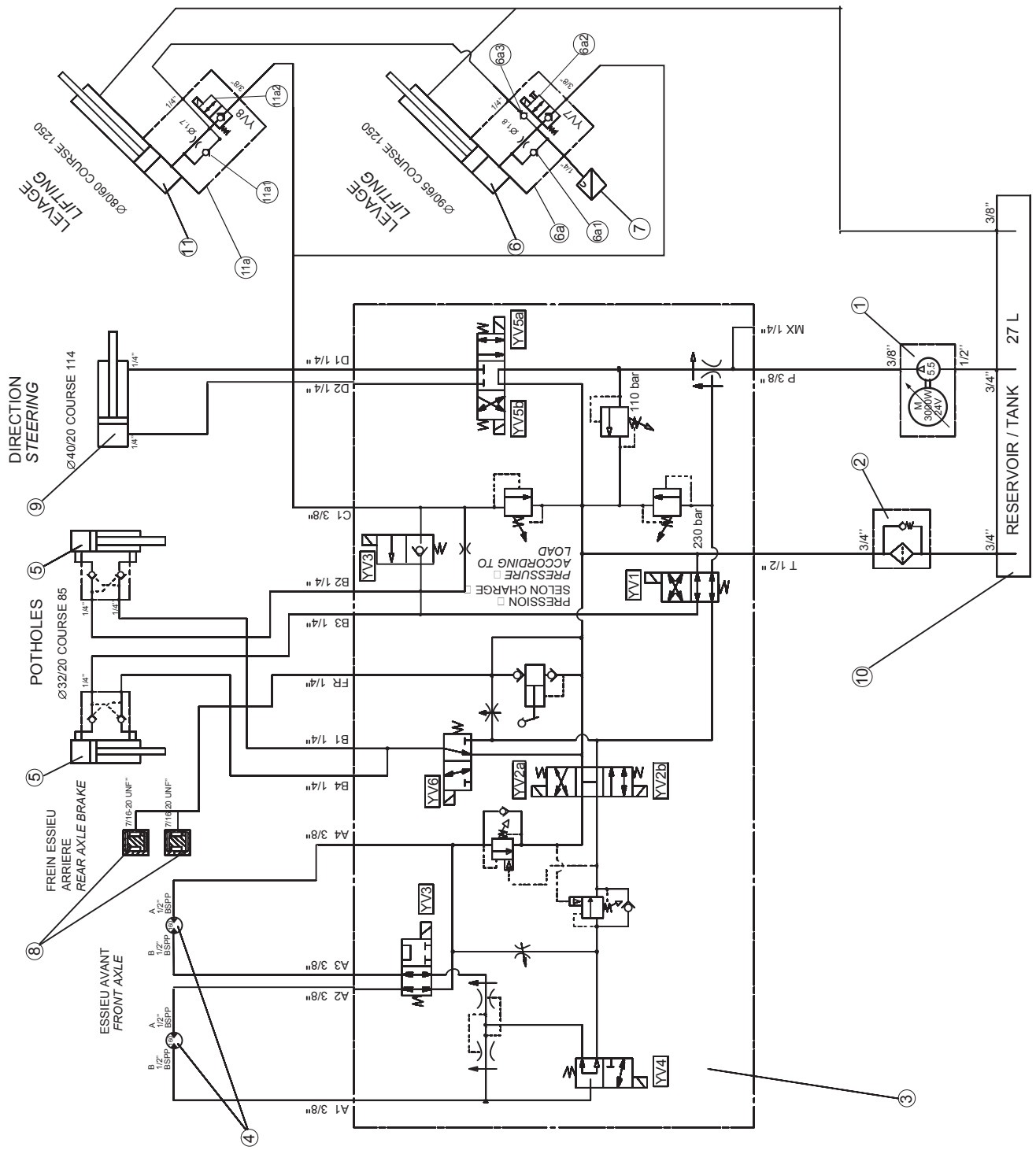
8.4 - HYDRAULIC DIAGRAM 121P251530B