https://truckmanualshub.com/

PREFACE

1. This Parts Catalog is the 2nd edition of Yanmar crawler back-hoe Vio70 for Europe.

Pub. No. : 000Y00S3631

Published : Fed., 1998

2. Parts catalog history

	Parts catalog NO.	Published	Remarks
1st edition	000Y00S3630	Apr.,1997	Scrap old edition
2nd edition	000Y00S3631	Fed.,1998	

3. Model name

SECTION	Column	Model name	M/#	Manufactured
Ⅰ(Vehicle)	(A)	VIO70(EP)	00711～	1997/1～
Ⅱ(Engine)	(A)	4TNE98-BV		

4. Your understanding is asking that this parts catalog is not a technical data manual setting forth as servicing procedures, This parts catalog is using simplified illustration.
Be sure to use Yanmar Genuine Parts in your maintenance servicing of Yanmar products.
Be careful not to use the simple parts available in the market, otherwise their use in repairing causes such as an early breakage, for instance.

How to read this Parts Catalog.

1.Parts mentioned in Parts Catalog may not necessarily be standard equipping parts
2.Parts change may be made without prior notice.
3.Form of this Parts Catalog.

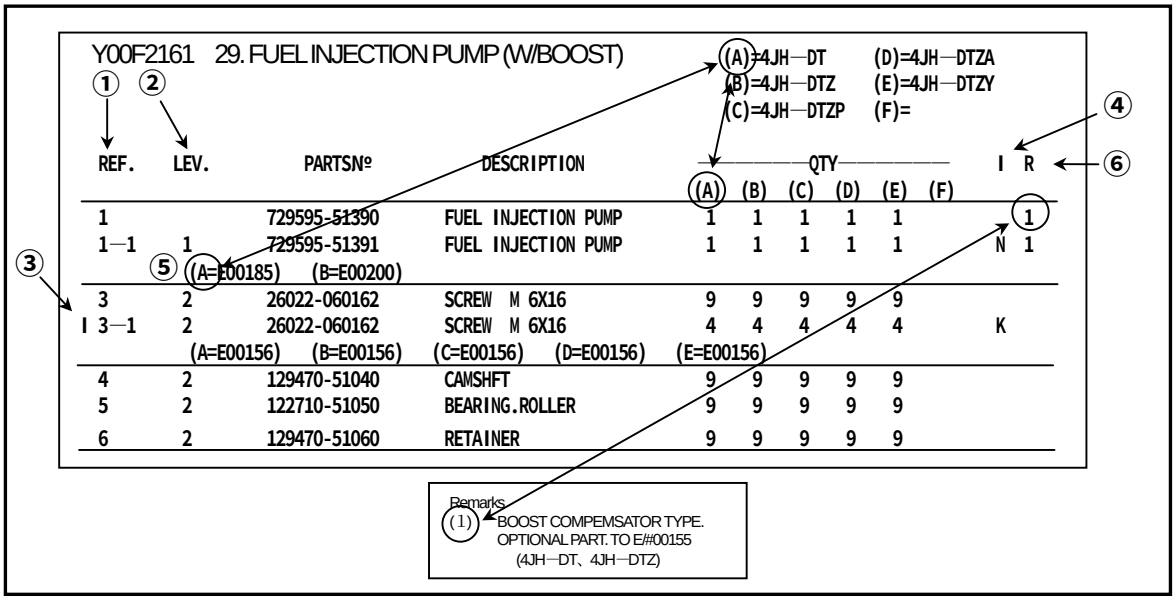

①Ref. No,

The Ref. No, in the list may not be in accordance with the Ref. No, on illustration.

(Ex.) illustration No, List heed No,

1 1 (Before change) → 1 1 (After change)

When interchangeable symbol N, and k, illustrations for the new parts are sometimes omitted.

②Lev. (Level)

Indication and Meaning of Level

Level Hereunder is given the relation among the number of number (1,2,3) the level and the nominal parent-child relationship.

1 ----- Parent parts (Assembly parts)
2 ----- Child parts included in " 1 " (Semi-Assembly parts, component parts of Assembly parts.)
3 ----- Child parts included in " 2 ", Grand-child parts in terms of " 1 ".
(Component parts of Semi-Assembly parts.)

Note) A parts of non-sale parts are illustrated but not listed.

③Change Mark

Change Mark " I " is given to the part for which a design change was made at this time.
The design change was not shown in the last published Parts Catalog.

④Interchangeability Mark

In the case where a part change took place, one of the following interchangeability marks is indicated for that part

Symbol	Interchangeability	Contents note
N	Old ○→ ×← New	New Part is interchangeable for Old Part but not interchangeable conversely.
Q	Old ×→ ○← New	New Part is not interchangeable for Old Part but interchangeable conversely.
R	Old ○→ ○← New	New Part is interchangeable for Old Part and vice versa.
S	Old ×→ ×← New	New Part is not interchangeable for Old Part and vice versa.
W		Part newly added.
Z		Part discontinued.
F		Not interchangeable single part but interchangeable by set of the related parts.
K		Changed only in quantity used.

⑤Effective Machine No,

When a part is changed, Effective Machine No, of a Model for which the part is applicable is indication
In each column of (A)-(F).

Product Symbol	Product No,	Product Symbol	Product No,
C	Clutch No, Compressor No,	M	Machine No,
D	Drive No,	T	Tractor No,
E	Engine No,	Note 1)※	Date

Note 1) Date may follow the symbol in some cases.(Ex.) ※1996.01
Note 2) As far as engine models shown by " XXX " are concerned, the modification of the parts could not be Predicted or the engine models themselves could not be identified.
Note 3) (A=E/#00185) means that the design change on the part has been effective for the model at the, column (A) (in the case, for 4JH-DT) on and from E/#(Engine Serial Number) 00185

⑥Remarks Mark

Figures or alphabets (Symbols) are entered in the remark column.
The comments (remarks) on the pertinent parts are indicated in the lower part of the list by the same symbols a those stated above.

https://truckmanualshub.com/

WIRING DIAGRAM

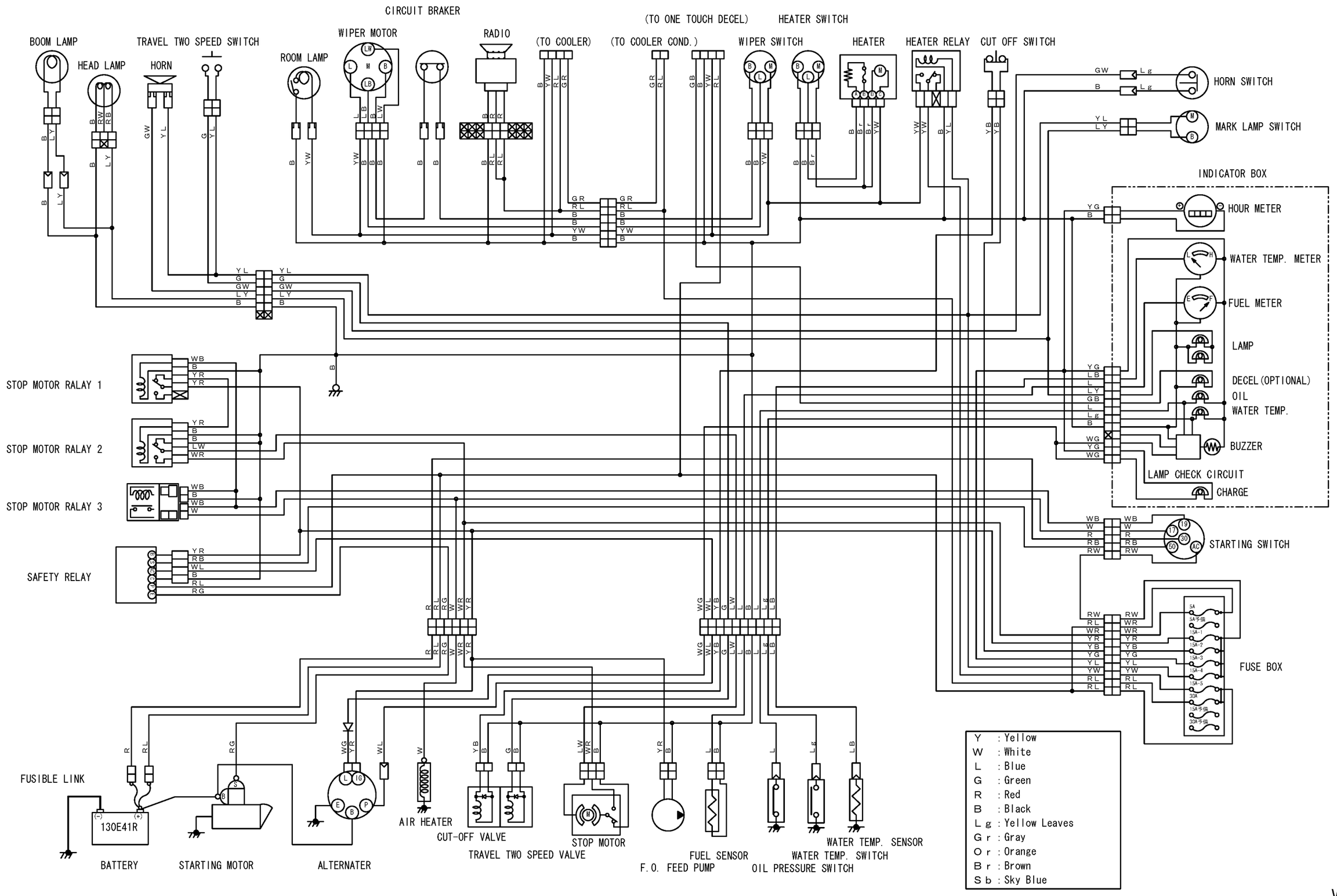

V1070(EP)

https://truckmanualshub.com/

1 [VEHICLE PAINTED COLOR] TO M/#01235

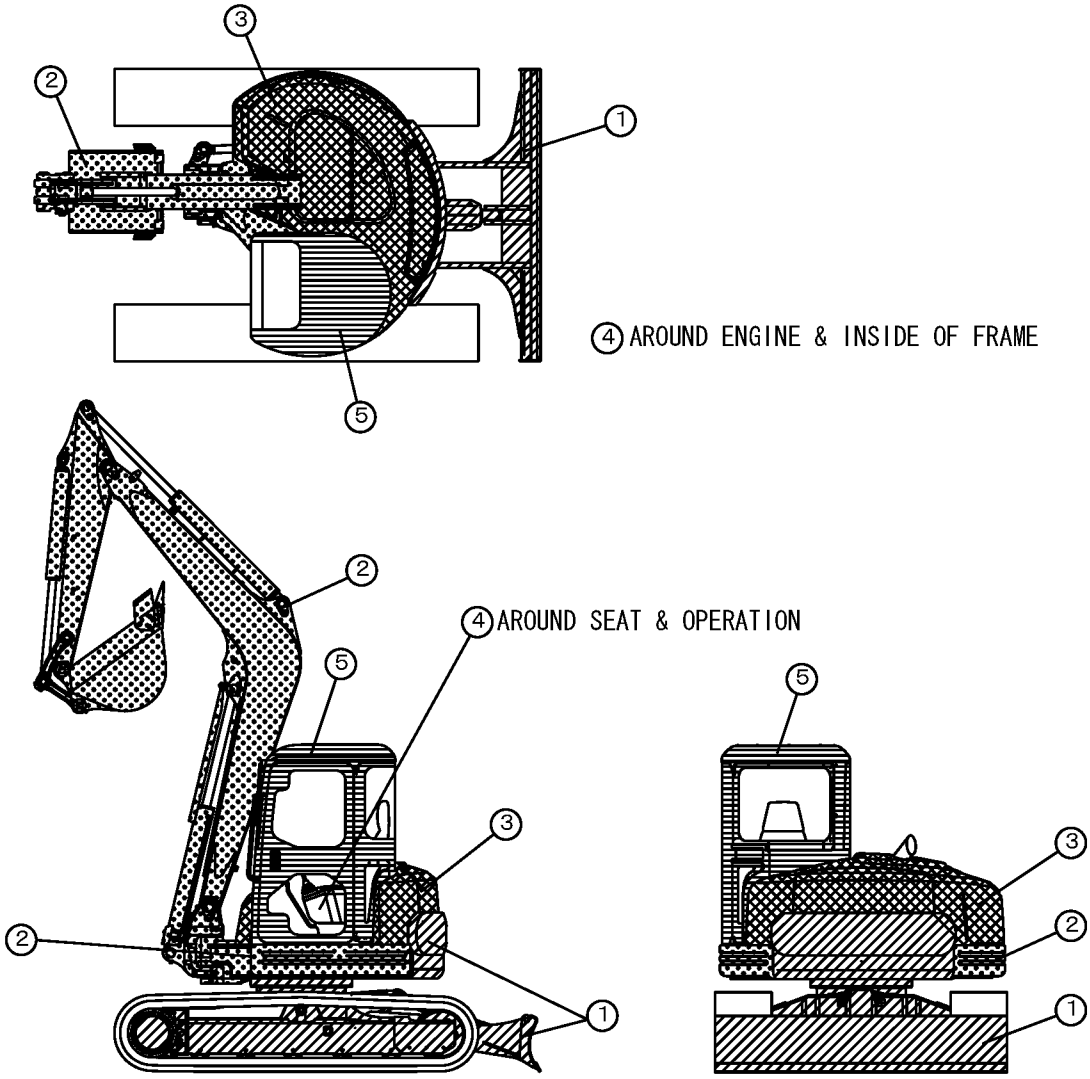

Part	Desc-ription	Painted Color	Munsel No.	Color Code
①		YANMAR New Deep Green	0.6B2.2/4.2	88
②		YANMAR Pear Cock Green	3.85BG5.31/9.15	97
③		YANMAR Citrous Green	4.84GY8.42/6.99	96
④		YANMAR Dark Olive Grey	5.39Y2.92/0.78	72
⑤		YANMAR Warm Grey	7Y5.3/0.8	73

https://truckmanualshub.com/

2 [PAINT PART NO.] TO M/#01235

Part	Paint Color	Paint Part No.		
		16L Can	4L Can	SPRAY
①	YANMAR New Deep Green	981101-09588	977620-40880	977620-30881
②	YANMAR Pear Cock Green	981101-09597	977620-40970	977620-30971
③	YANMAR Citrous Green	981101-09599	977620-40990	977620-30991
④	YANMAR Dark Olive Grey	-------	977620-40720	TOR-90460003
⑤	YANMAR Warm Grey	-------	-------	TOR-90450003

3 [COLOR OF MAIN PARTS] TO M/#01235

Part	Paint Color	Main Parts
①	YANMAR New Deep Green	driving frame part blade
②	YANMAR Pear Cock Green	turning frame part operation machine part
③	YANMAR Citrous Green	bonnet part
④	YANMAR Dark Olive Grey	engine related operation part frame interior parts
⑤	YANMAR Warm Grey	cabin body and door

https://truckmanualshub.com/

1 [VEHICLE PAINTED COLOR] FROM M/#01236

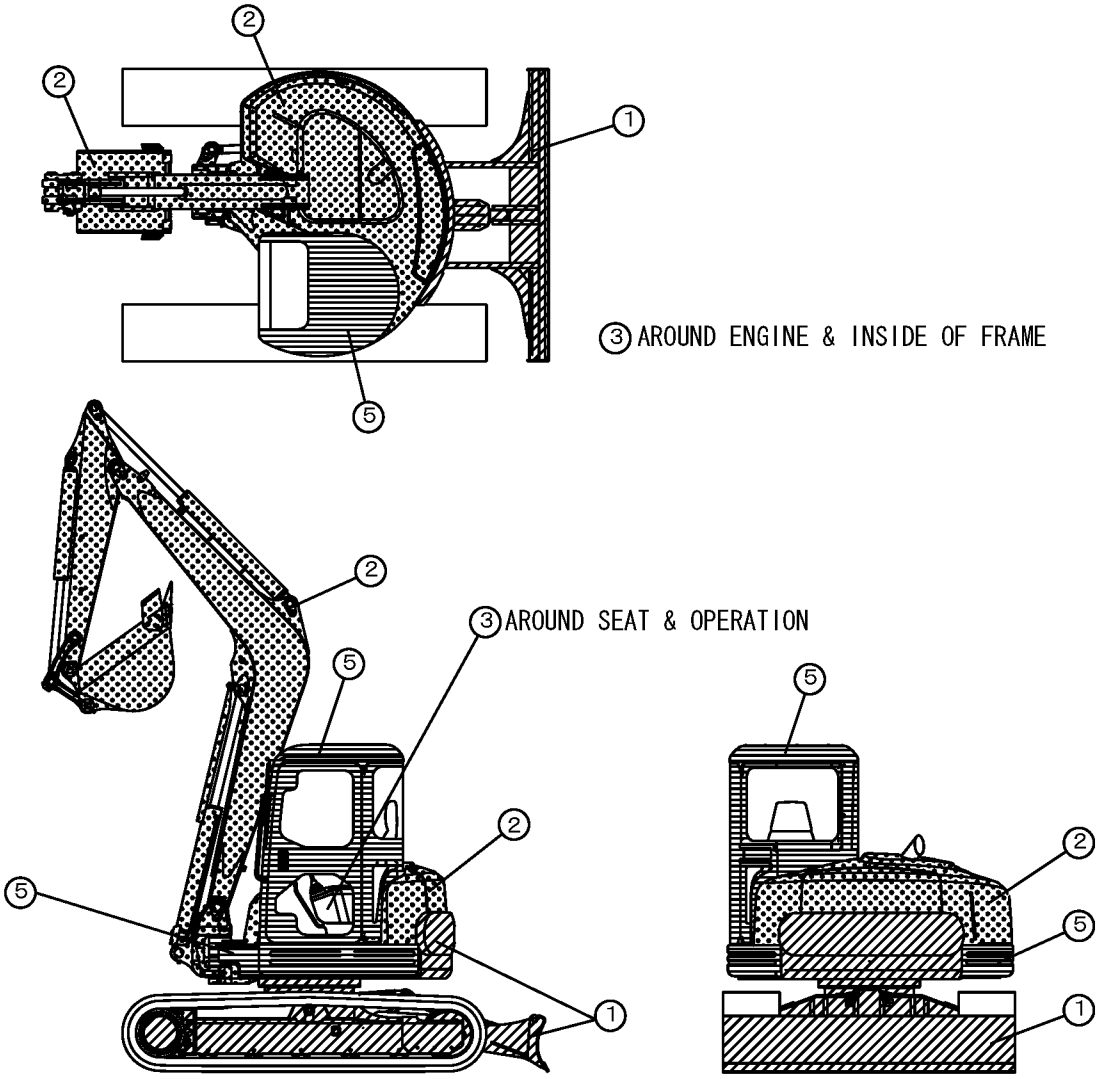

Part	Desc-ription	Painted Color	Munsel No.	Color Code
①		YANMAR Deep Green	6.36BG2.11/1.76	82
②		YANMAR New Permanent Yellow	5.2Y8.5/11	87
③		YANMAR Warm Gray	7Y5.3/0.8	73
④		YANMAR Dark Olive Gray	5.39Y2.92/0.78	72
⑤		YANMAR New Grayish Green	2.9BG4.8/3.0	86

https://truckmanualshub.com/

2 [PAINT PART NO.] FROM M/#01236

Part	Paint Color	Paint Part No.		
		16L Can	4L Can	SPRAY
①	YANMAR Deep Green	981101-09517	977620-40820	977620-30N31
②	YANMAR New Permanent Yellow	981101-09519	977620-40870	977620-30871
③	YANMAR Warm Gray	-------	-------	TOR-90450003
④	YANMAR Dark Olive Gray	-------	977620-40720	TOR-90460003
⑤	YANMAR New Grayish Green	981101-09616	977620-40860	977620-30861

3 [COLOR OF MAIN PARTS] FROM M/#01236

Part	Paint Color	Main Parts
①	YANMAR Deep Green	driving frame part blade
②	YANMAR New Permanent Yellow	bonnet part operation machine part
③	YANMAR Warm Gray	turning frame part cabin body and door
④	YANMAR Dark Olive Gray	operation part frame interior parts
⑤	YANMAR New Grayish Green	engin related frame interior parts

https://truckmanualshub.com/

PICTURESQUE INDEX(1)・・・MAIN PARTS

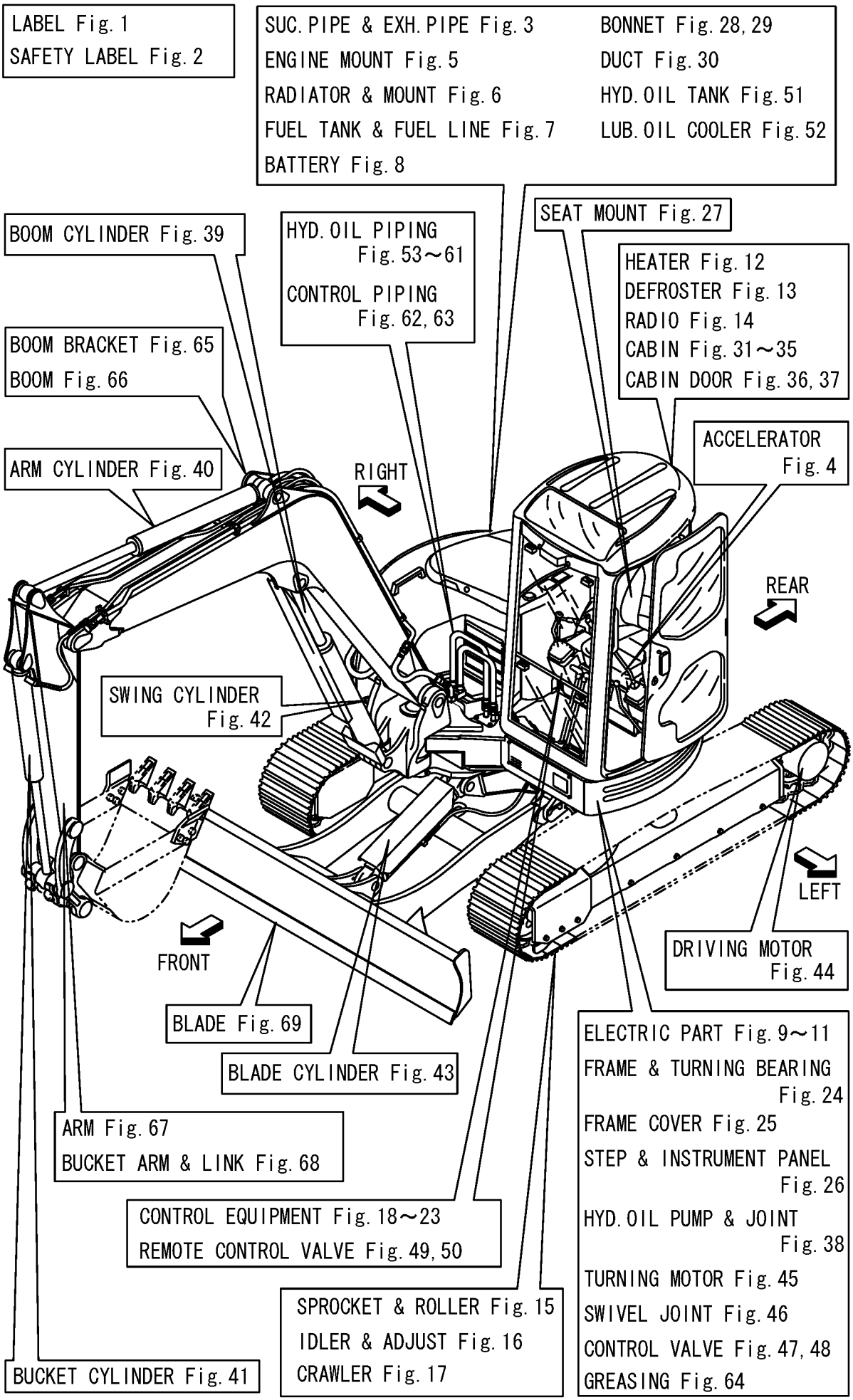

https://truckmanualshub.com/

PICTURESQUE INDEX(2) ・・・HYDRAULIC SECTION

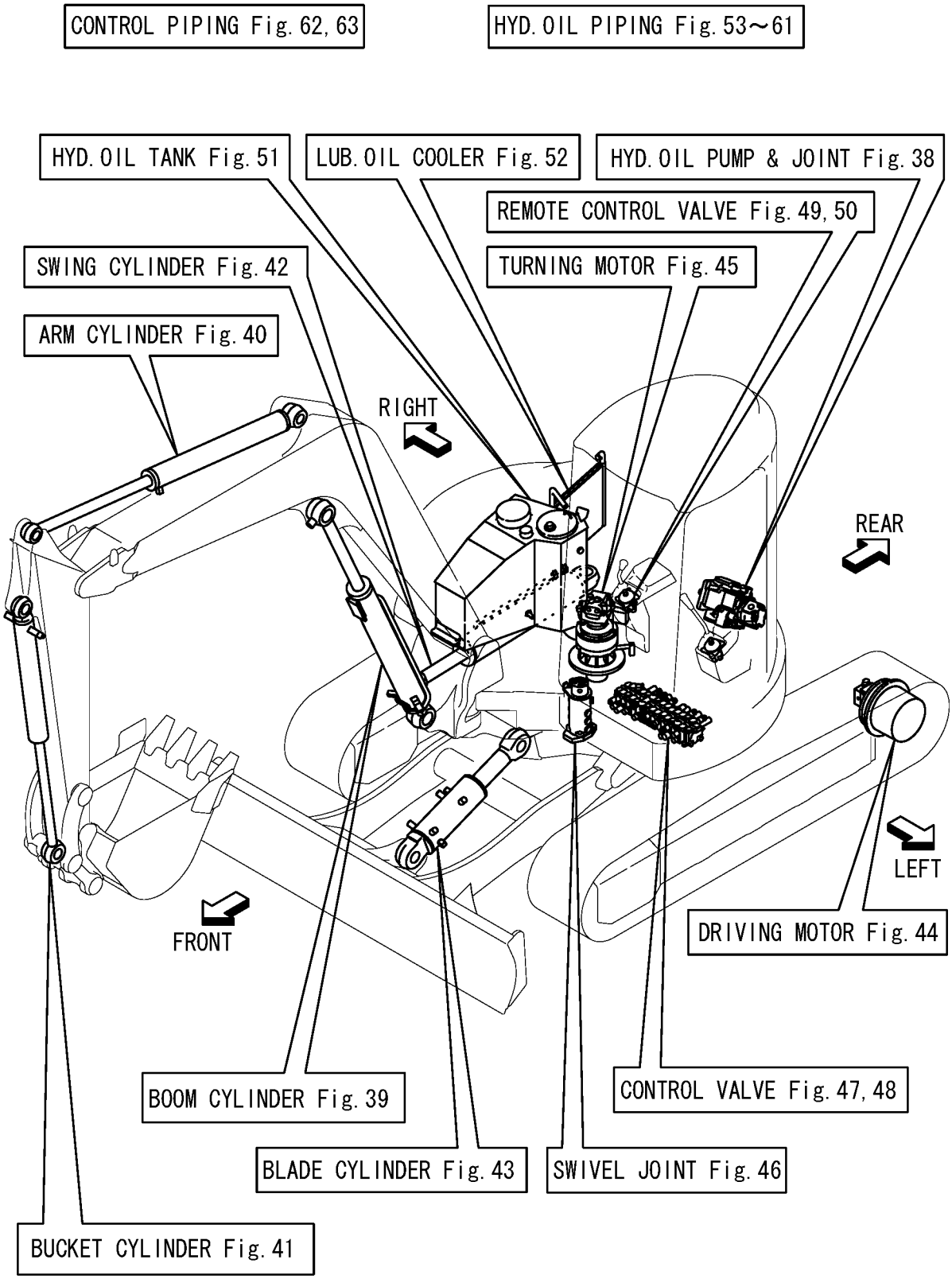

https://truckmanualshub.com/

PICTURESQUE INDEX(3) ・・・FIGURE

Fig.1 LABEL(EP)

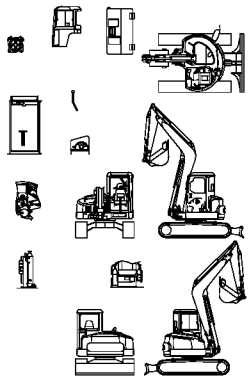

Fig.2 SAFETY LABEL(EP)

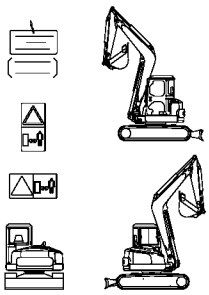

Fig.3 SUC.PIPE & EXH.PIPE

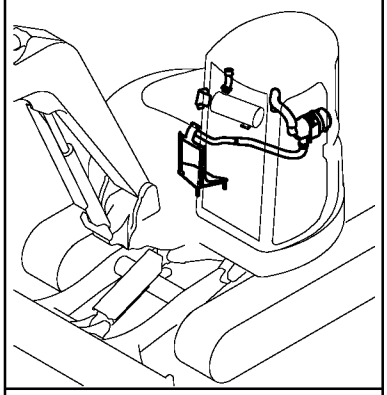

Fig.4 ACCELERATOR

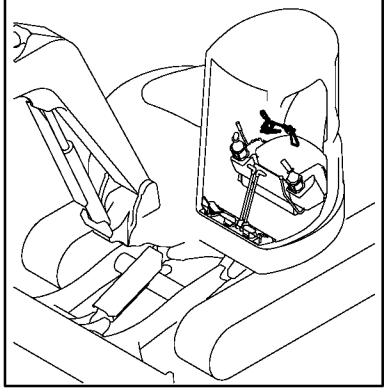

Fig.5 ENGINE MOUNT

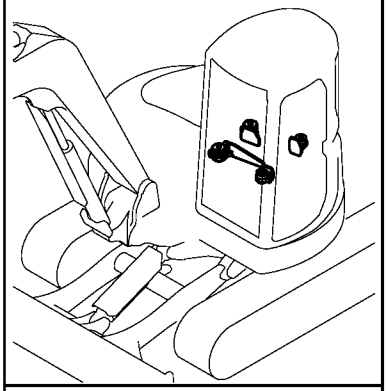

Fig.6 RADIATOR & MOUNT

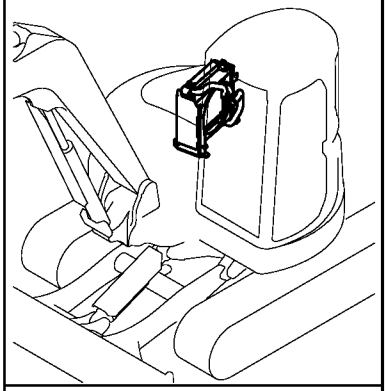

Fig.7 FUEL TANK & FUEL LINE

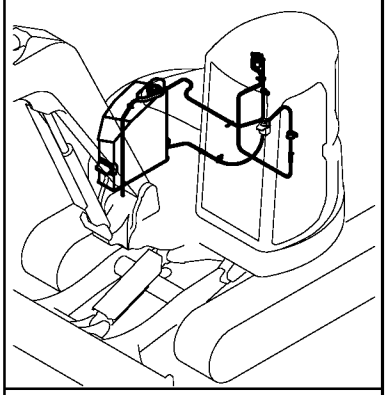

Fig.8 BATTERY

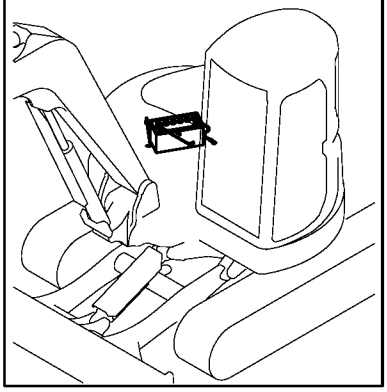

Fig.9 ELECTRIC PART(WIRING)

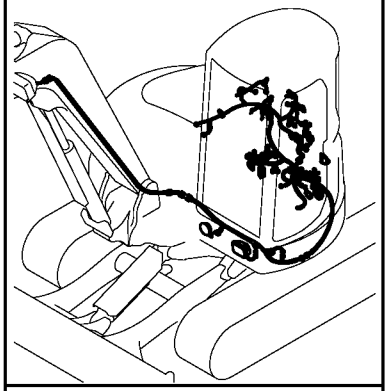

Fig.10 ELECTRIC PART(EQUIPMENT)

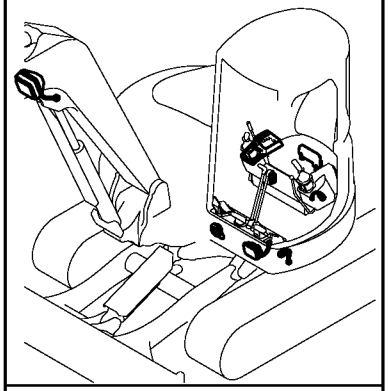

Fig.11 ELECTRIC PART(CABIN)

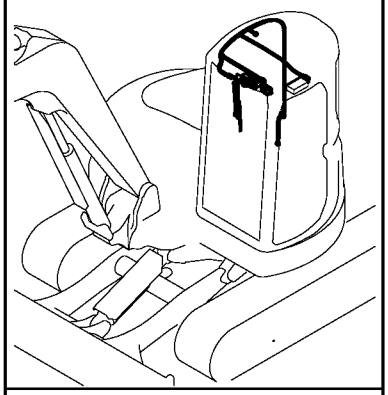

Fig.12 HEATER

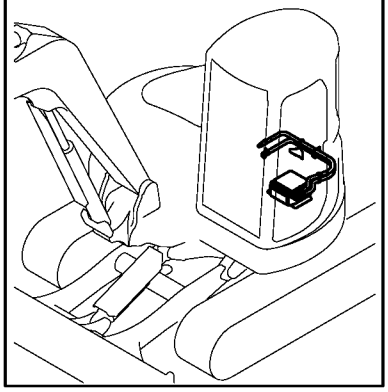

https://truckmanualshub.com/

Fig.13 DEFROSTER

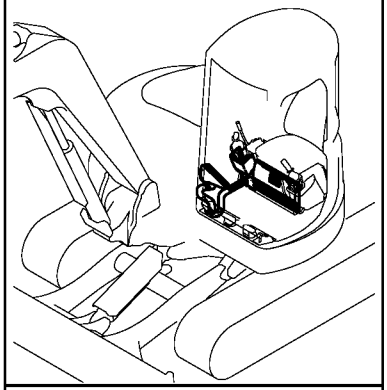

Fig.14 RADIO

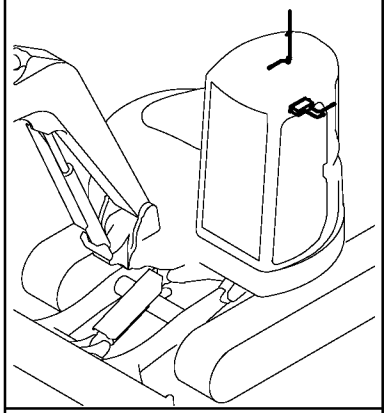

Fig.15 SPROCKET & ROLLER

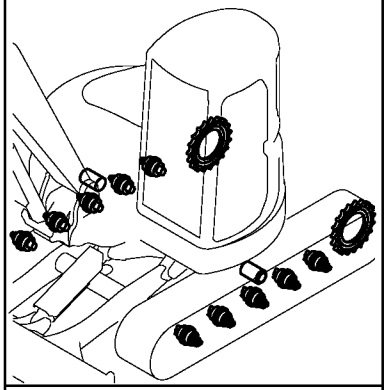

Fig.16 IDLER & ADJUST

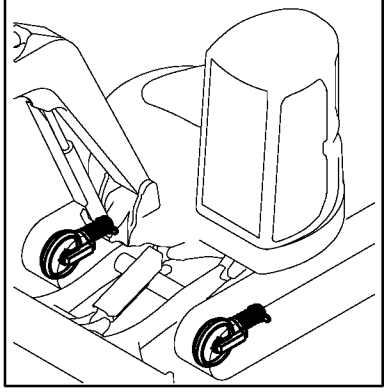

Fig.17 CRAWLER

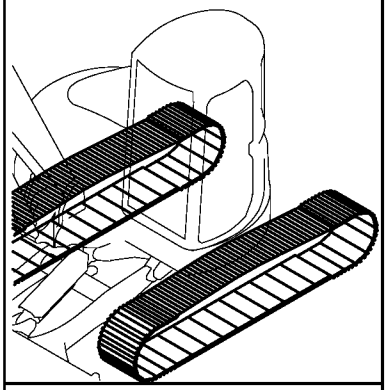

Fig.18 CONTROL EQUIP. (LEVER STAND & LOCK LEVER)

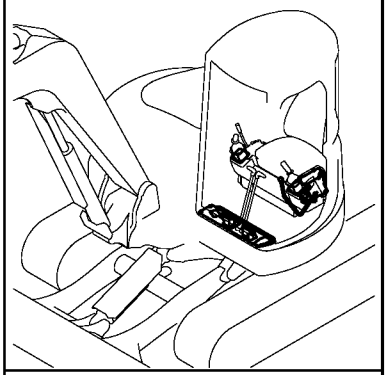

Fig.19 CONTROL EQUIP. (DRIVE)

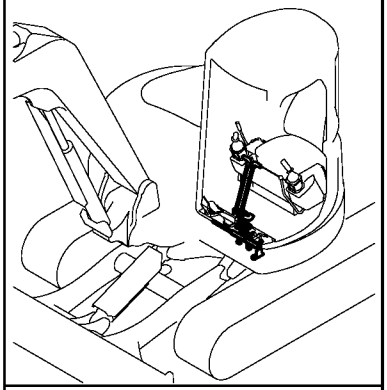

Fig.20 CONTROL EQUIP. (SWING)

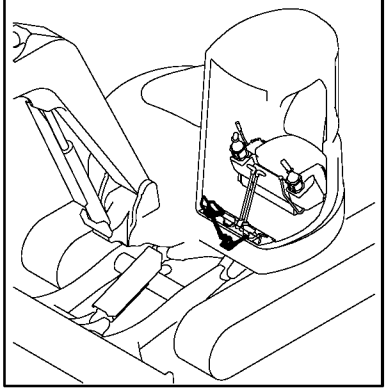

Fig.21 CONTROL EQUIP. (BLADE)

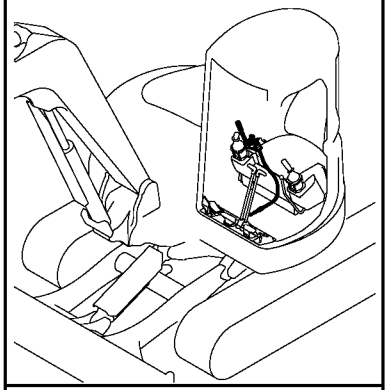

Fig.22 CONTROL EQUIP. (LOW-HIGH PEDAL)

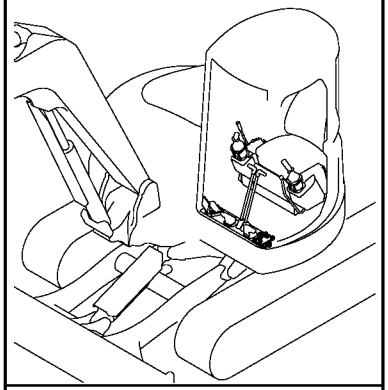

Fig.23 CONTROL EQUIP. (P.T.O.)

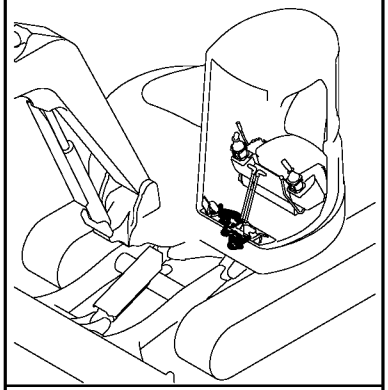

Fig.24 FRAME & TURNING BEARING

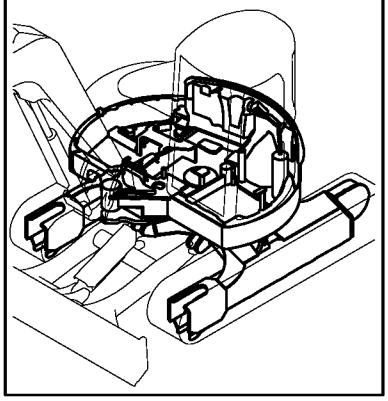

https://truckmanualshub.com/

PICTURESQUE INDEX(3) ・・・FIGURE

Fig.25 FRAME COVER

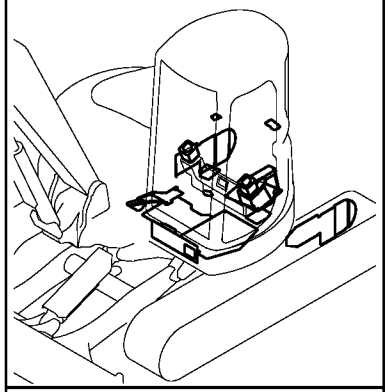

Fig.26 STEP & INSTRUMENT PANEL

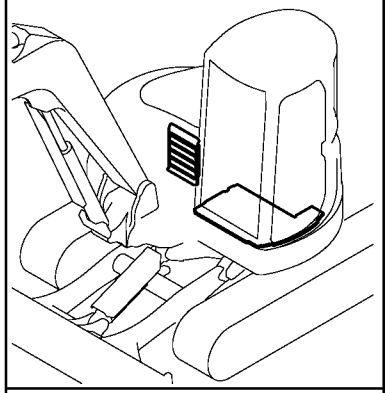

Fig.27 SEAT MOUNT

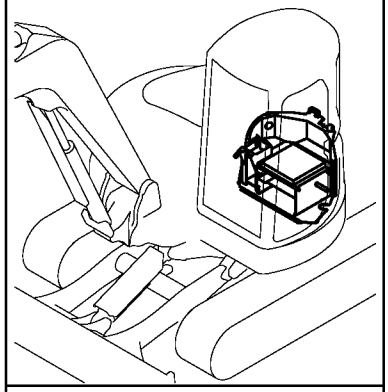

Fig.28 BONNET;1
(BODY & UPPER COVER)

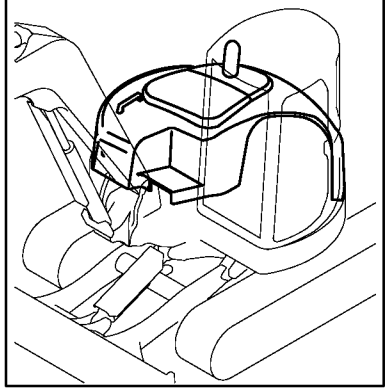

Fig.29 BONNET;2
(SIDE, REAR COVER)

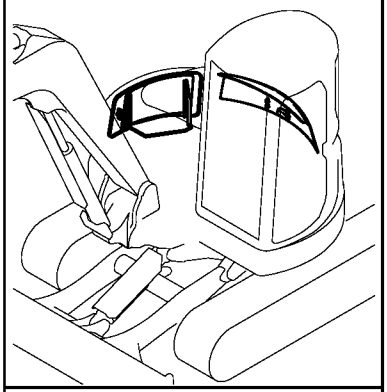

Fig.30 DUCT

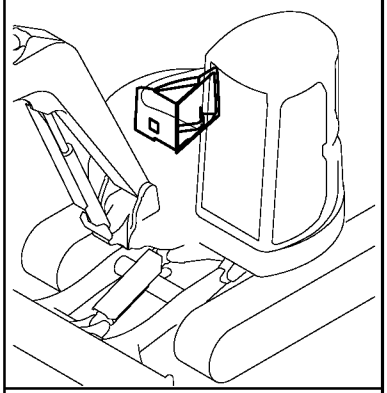

Fig.31 CABIN;1(BODY)

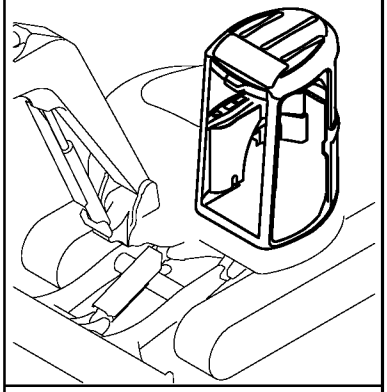

Fig.32 CABIN(New);1(BODY)

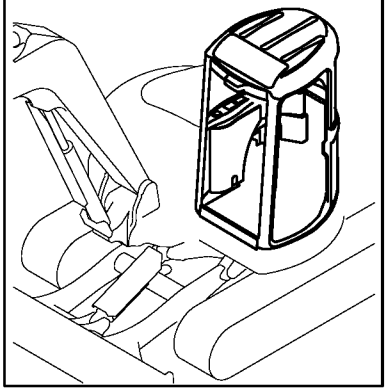

Fig.33 CABIN;2(SASH)

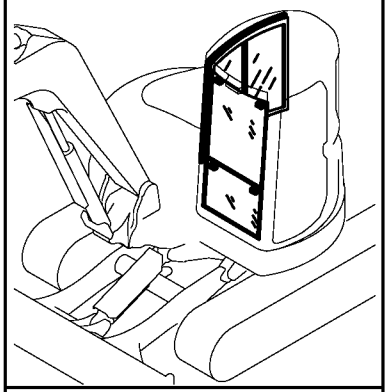

Fig.34 CABIN(New);2(SASH)

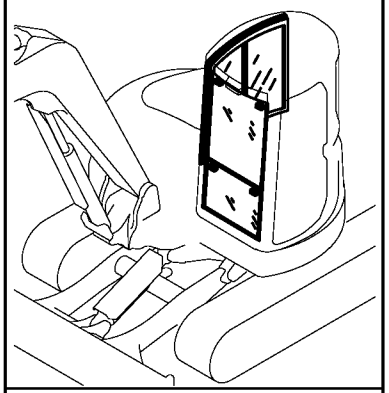

Fig.35 CABIN;3(FITTING PART)

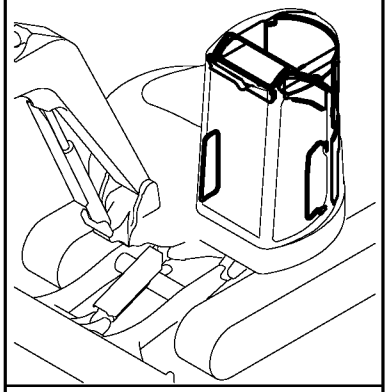

Fig.36 CABIN DOOR;1(BODY)

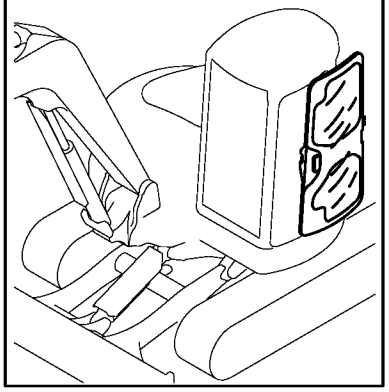

https://truckmanualshub.com/

PICTURESQUE INDEX(3) ・・・FIGURE

Fig.37 CABIN DOOR;2 (FITTING PART)

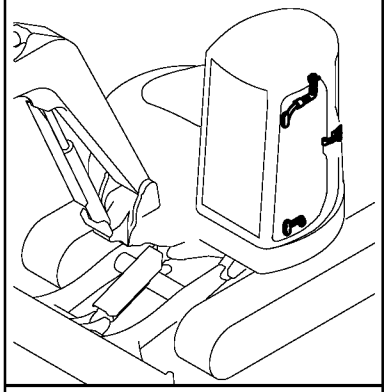

Fig.38 HYD.OIL PUMP & JOINT

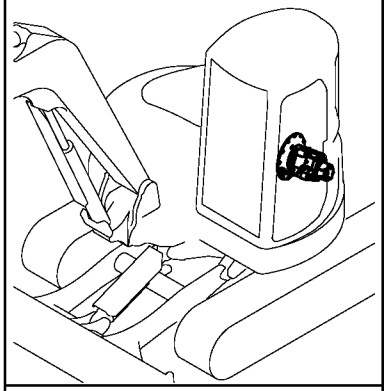

Fig.39 BOOM CYLINDER

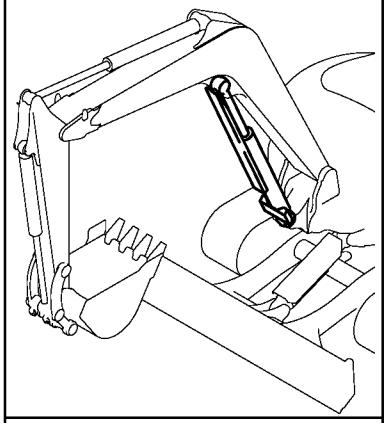

Fig.40 ARM CYLINDER

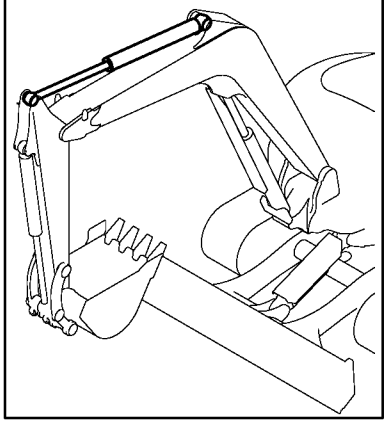

Fig.41 BUCKET CYLINDER

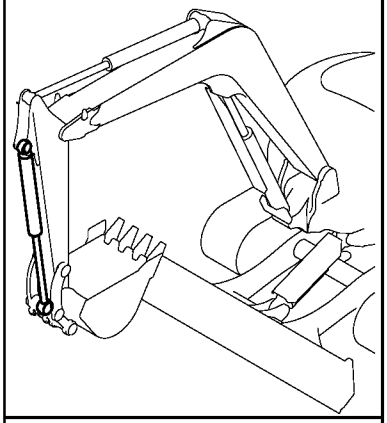

Fig.42 SWING CYLINDER

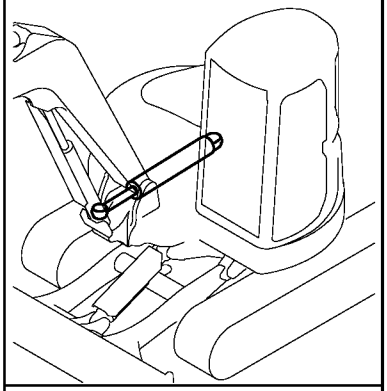

Fig.43 BLADE CYLINDER

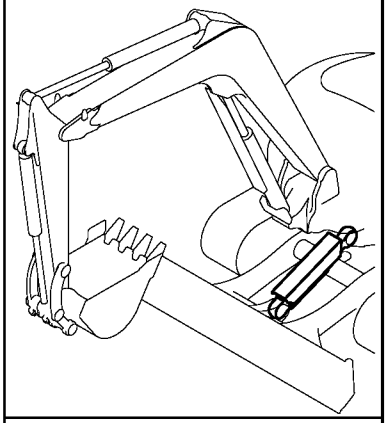

Fig.44 DRIVING MOTOR

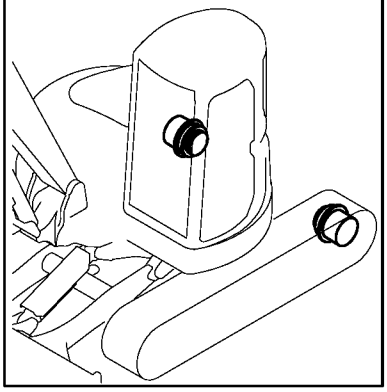

Fig.45 TURNING MOTOR

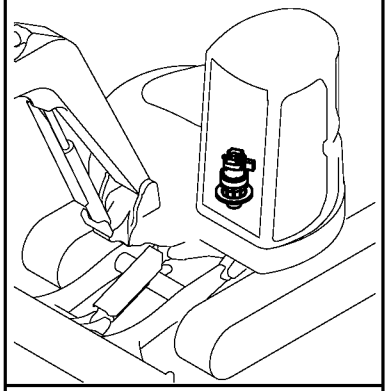

Fig.46 SWIVEL JOINT

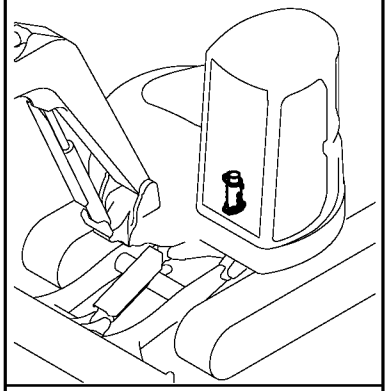

Fig.47 CONTROL VALVE(1/2)

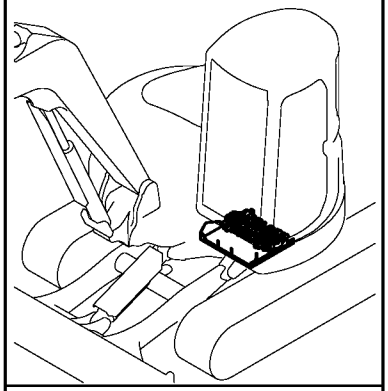

Fig.48 CONTROL VALVE(2/2)

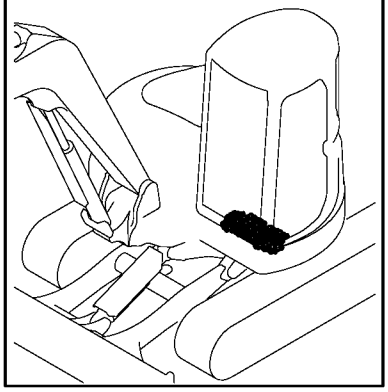

https://truckmanualshub.com/

Fig.49 REMOTE CONTROL VALVE(L)

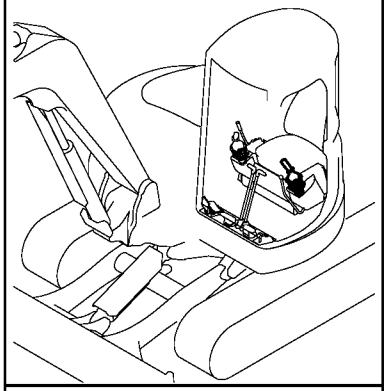

Fig.50 REMOTE CONTROL VALVE(R)

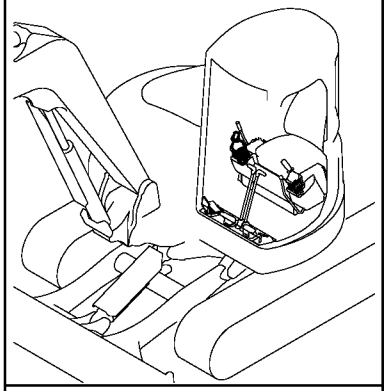

Fig.51 HYD.OIL TANK

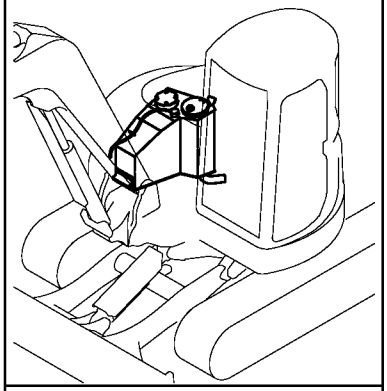

Fig.52 LUB.OIL COOLER

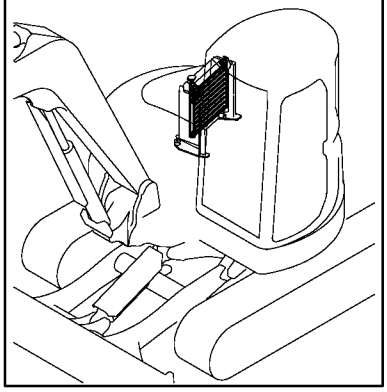

Fig.53 HYD.OIL PIPING (TANK～PUMP～VALVE)

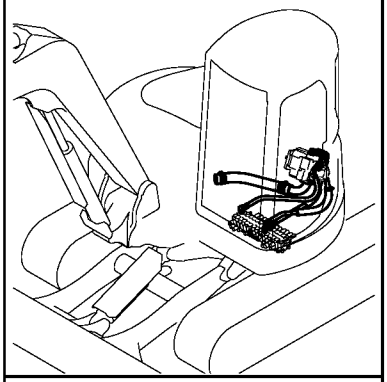

Fig.54 HYD.OIL PIPING (VALVE～MOTOR,BOOM)

Fig.55 HYD.OIL PIPING (VALVE～SWIVEL,SWING)

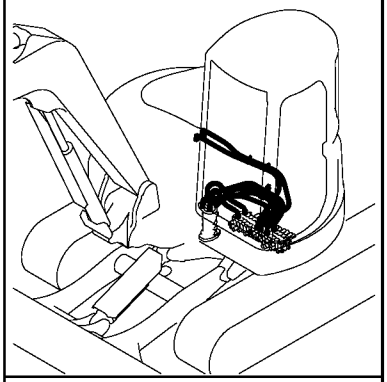

Fig.56 HYD.OIL PIPING(RETURN;1)

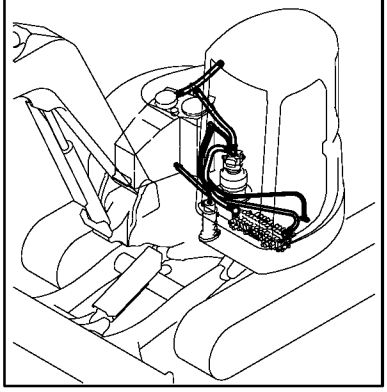

Fig.57 HYD.OIL PIPING(RETURN;2)

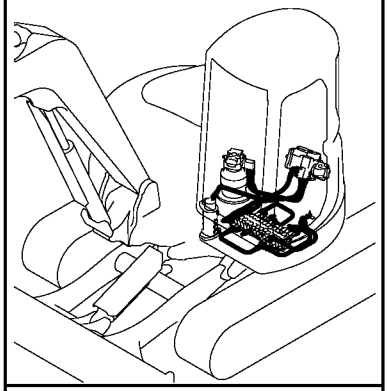

Fig.58 HYD.OIL PIPING (P.T.O.FRAME END)

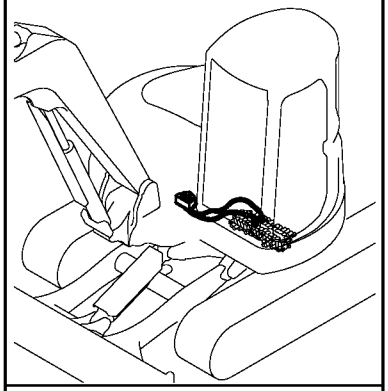

Fig.59 HYD.OIL PIPING (TRACK FRAME)

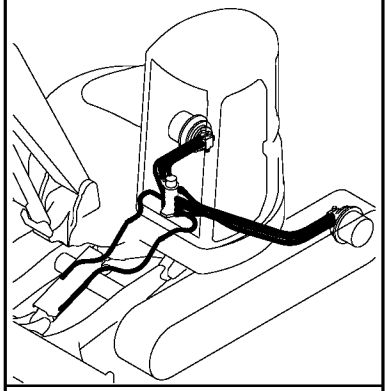

Fig.60 HYD.OIL PIPING(BOOM)

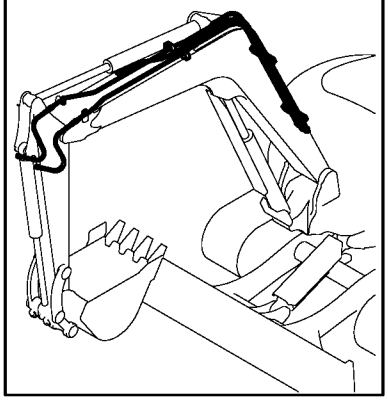

https://truckmanualshub.com/

PICTURESQUE INDEX(3) ・・・FIGURE

Fig.61 HYD.OIL PIPING (P.T.O.BOOM END)

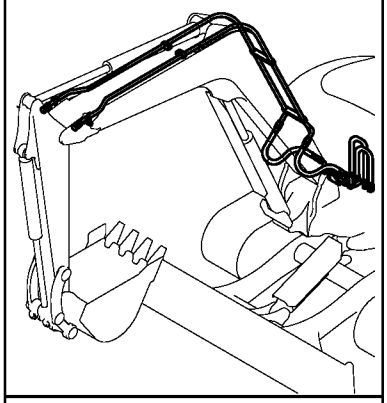

Fig.62 CONTROL PIPING (PUMP～VALVE～RETURN)

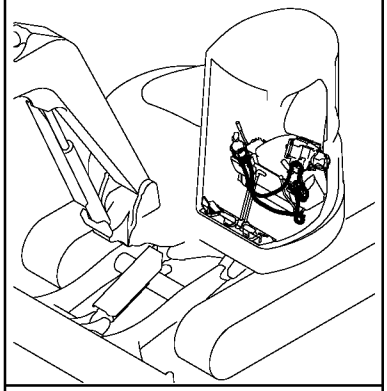

Fig.63 CONTROL PIPING (DIRECT SPEC.)

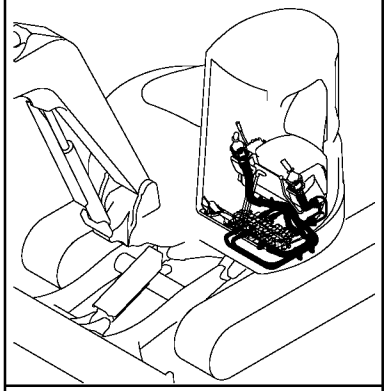

Fig.64 GREASING

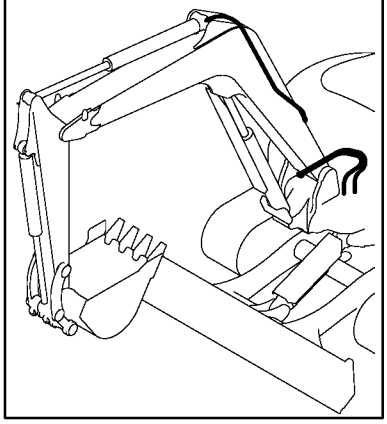

Fig.65 BOOM BRACKET

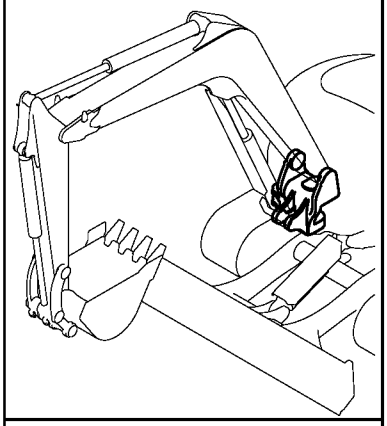

Fig.66 BOOM

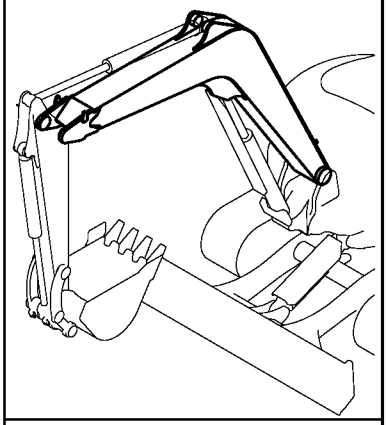

Fig.67 ARM

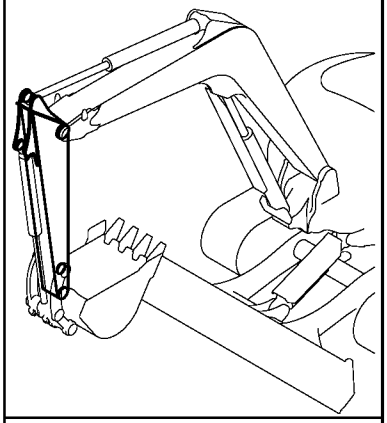

Fig.68 BUCKET ARM & LINK

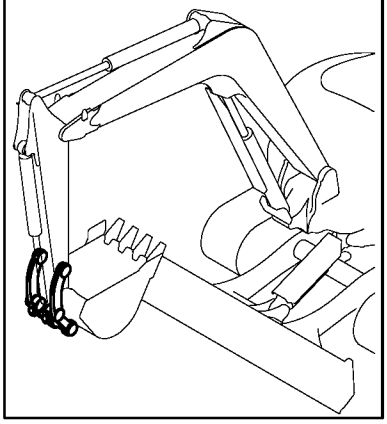

Fig.69 BLADE

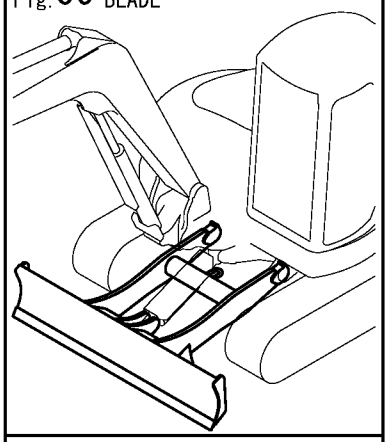

https://truckmanualshub.com/

```
1,1,,772187-03210,,"LABEL SET, VIO70",1,,,,,,,,,,,,,,,,,
2,2,,172187-03130,,"LABEL, VIO70",2,,,,,,,,,,,,,,,,,
3,2,,172187-03140,,"LABEL, REAR",1,,,,,,,,,,,,,,,,,
4,2,,172143-03180,,LABEL,1,,,,,,,,,,,,,,,,,
5,2,,172164-03180,,"MARK,NO.1",1,,,,,,,,,,,,,,,,,
6,2,,172147-03210,,"LABEL,2 SPEED",1,,,,,,,,,,,,,,,,,
7,2,,172187-03550,,"LABEL,OILING(F,G)",1,,,,,,,,,,,,,,,,,,
8,2,,172147-03340,,LABEL,1,,,,,,,,,,,,,,,,,
9,2,,172187-03340,,LABEL,2,,,,,,,,,,,,,,,,,
10,2,,172141-03360,,"LABEL, START SWITCH",1,,,,,,,,,,,,,,,,,,
11,2,,172187-03510,,LABEL,1,,,,,,,,,,,,,,,,,
12,2,,172187-03520,,LABEL,1,,,,,,,,,,,,,,,,,
13,2,,172187-03530,,LABEL,1,,,,,,,,,,,,,,,,,
14,2,,172187-03540,,LABEL,1,,,,,,,,,,,,,,,,,
15,2,,172187-03560,,"LABEL,FUEL(F,G)",1,,,,,,,,,,,,,,,,,
16,2,,172187-03580,,LABEL,1,,,,,,,,,,,,,,,,,
17,2,,22857-300050,,"SCREW 3X 5",4,,,,,,,,,,,,,,,,,
18,2,,933112-55700,,"LABEL, SUB-TANK",1,,,,,,,,,,,,,,,,,
19,2,,172187-03190,,LABEL(PATTERN-A),1,,,,,,,,,,,,,,,,,
21,1,,172183-03280,,"LABEL,LOCK",1,,,,,,,,,,,,,,,,,
23,1,,172164-03200,,"LABEL,BRAND",1,,,,,,,,,,,,,,,,,
24,1,,172164-03210,,"LABEL, CAB.",1,,,,,,,,,,,,,,,,,
25,1,,172187-03570,,LABEL,1,,,,,,1,,,,,,,,,,
26,1,,172164-03720,,LABEL,1,,,,,,,,,,,,,,,,,
27,1,,172164-03730,,LABEL,1,,,,,,,,,,,,,,,,,
28,1,,172187-03650,,"LABEL,GRIP F,G",1,,,,,W,,*,M/#XXXX,,,,,,,,,,I
```

https://truckmanualshub.com/

Fig.1 LABEL (EP)

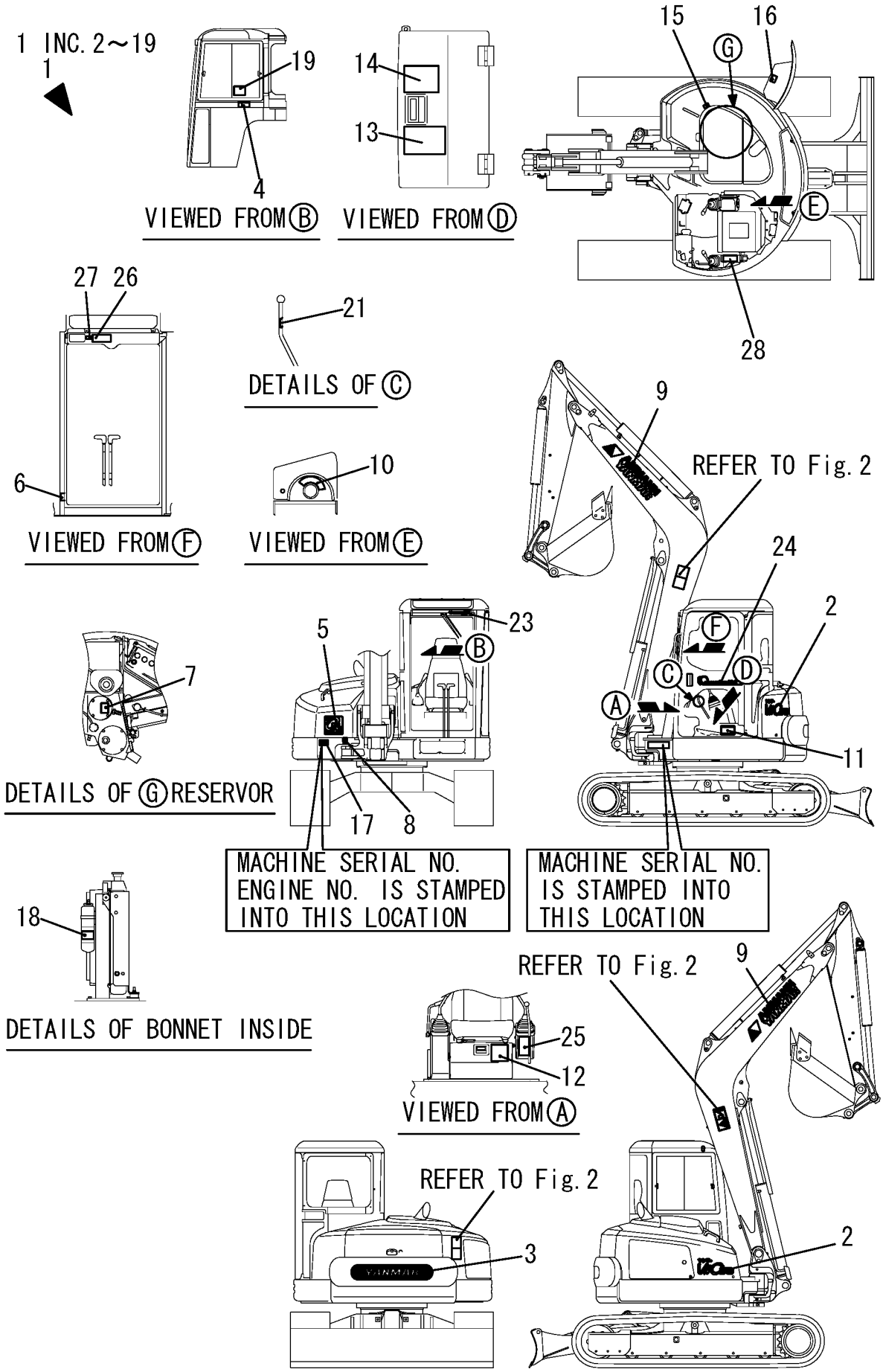

https://truckmanualshub.com/

```
1,1,,172171-03420,,"CAUTION PLATE ASSY",1,,,,,,,,,,,,,,,,,,
2,1,,172187-03600,,LABEL,1,,,,,,,,,,,,,,,,,
3,1,,172187-03620,,LABEL,2,,,,,,,,,,,,,,,,,
```

https://truckmanualshub.com/

Fig.2 SAFETY LABEL (EP)

1

(IN THE OPERATION MANUAL CASE)

2

3

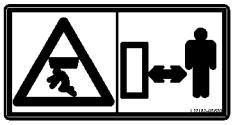

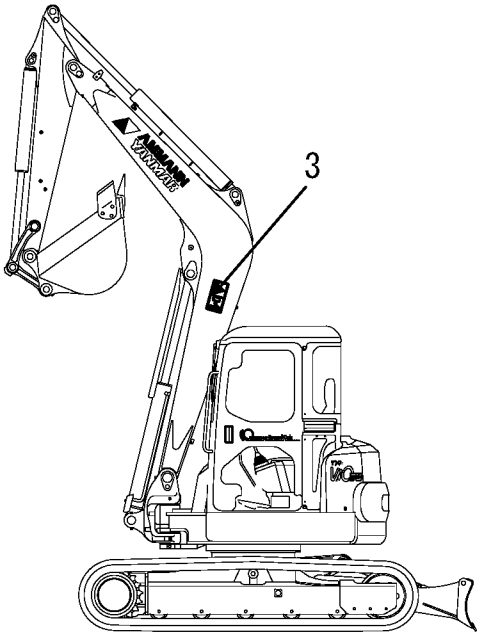

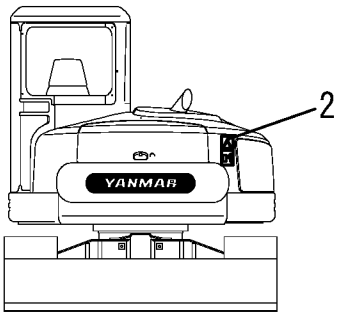

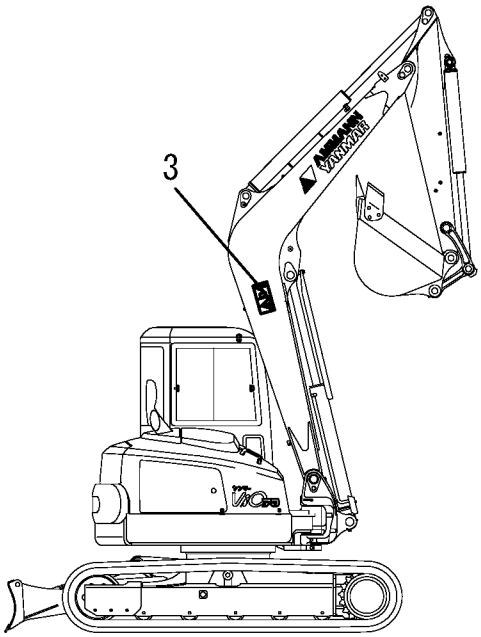

https://truckmanualshub.com/

```
1,1,,172187-11310,,COVER,1,,,,,,,,,,,,,,,,
2,1,,172187-11350,,"EXH. PIPE",1,,,,,,,,,,,,,,,,
3,1,,172187-11400,,CLAMP,1,,,,,,,,,,,,,,,,
4,1,,22137-080000,,"WASHER 8, POLISHED",2,,,,,,,,,,,,,,,,
5,1,,22217-080000,,"SPRING WASHER  8",2,,,,,,,,,,,,,,,,
6,1,,26106-100652,,"BOLT M10X 65 PLATED",1,,,,,,,,,,,,,,,,,,
7,1,,26116-080162,,"BOLT 8X16",2,,,,,,,,,,,,,,,,
8,1,,26706-100002,,"NUT M10",1,,,,,,,,,,,,,,,,
9,1,,933152-09280,,"BAND 170",1,,,,,,,,,,,,,,,,
10,1,,172187-11520,,HOSE,1,,,,,,,,,,,,,,,,
11,1,,172187-11640,,BRACKET,1,,,,,,,,,,,,,,,,
12,1,,172187-11550,,"SUPORT, HOSE",1,,,,,,,,,,,,,,,,
13,1,,172158-78250,,"CLAMP 45",2,,,,,,,,,,,,,,,,
14,1,,22217-100000,,"SPRING WASHER 10",1,,,,,,,,,,,,,,,,
15,1,,22137-100000,,"WASHER 10,POLISHED",2,,,,,,,,,,,,,,,,
16,1,,22217-100000,,"SPRING WASHER 10",3,,,,,,,,,,,,,,,,
17,1,,23000-080000,,"CLAMP 80",3,,,,,,,,,,,,,,,,
18,1,,26013-080202,,"BOLT W/WASHER M8X20",2,,,,,,,,,,,,,,,,
19,1,,26013-100202,,"BOLT W/WASHER M10X20",2,,,,,,,,,,,,,,,,
20,1,,26013-120252,,"BOLT M12X 25",2,,,,,,,,,,,,,,,,
21,1,,26116-101002,,"BOLT M10X100",3,,,,,,,,,,,,,,,,
22,1,,172187-11500,,"AIR CLEANER",1,,,,,,,,,,,,,,,,
24,2,,119808-12540,,"VALVE, UNLOADER",1,,,,,,,,,,,,,,,,
25,2,,129062-12560,,ELEMENT,1,,,,,,,,,,,,,,,,
26,2,,129062-12570,,COVER-ASSY,1,,,,,,,,,,,,,,,,
27,1,,22117-100000,,"WASHER 10",1,,,,,,,,,,,,,,,,
28,1,,172187-11510,,PIPE,1,,,,,,,,,,,,,,,,
28-1,1,,172187-11650,,"SILENCER, INTAKE",1,,,,,,N,,72187548,M/#01041,,,,,,,,,,I
29,2,,172187-11660,,"HOSE,SUC. A",1,,,,,,W,,72187548,M/#01041,,,,,,,,,,I
30,2,,172187-11670,,"HOSE,SUC. A",1,,,,,,W,,72187548,M/#01041,,,,,,,,,,I
31,2,,172187-11680,,"SILENCER,SUC.",1,,,,,,W,,72187548,M/#01041,,,,,,,,,,I
32,2,,23000-080000,,"CLAMP 80",2,,,,,,W,,72187548,M/#01041,,,,,,,,,,I
```

https://truckmanualshub.com/

Fig.3 SUC.PIPE & EXH.PIPE

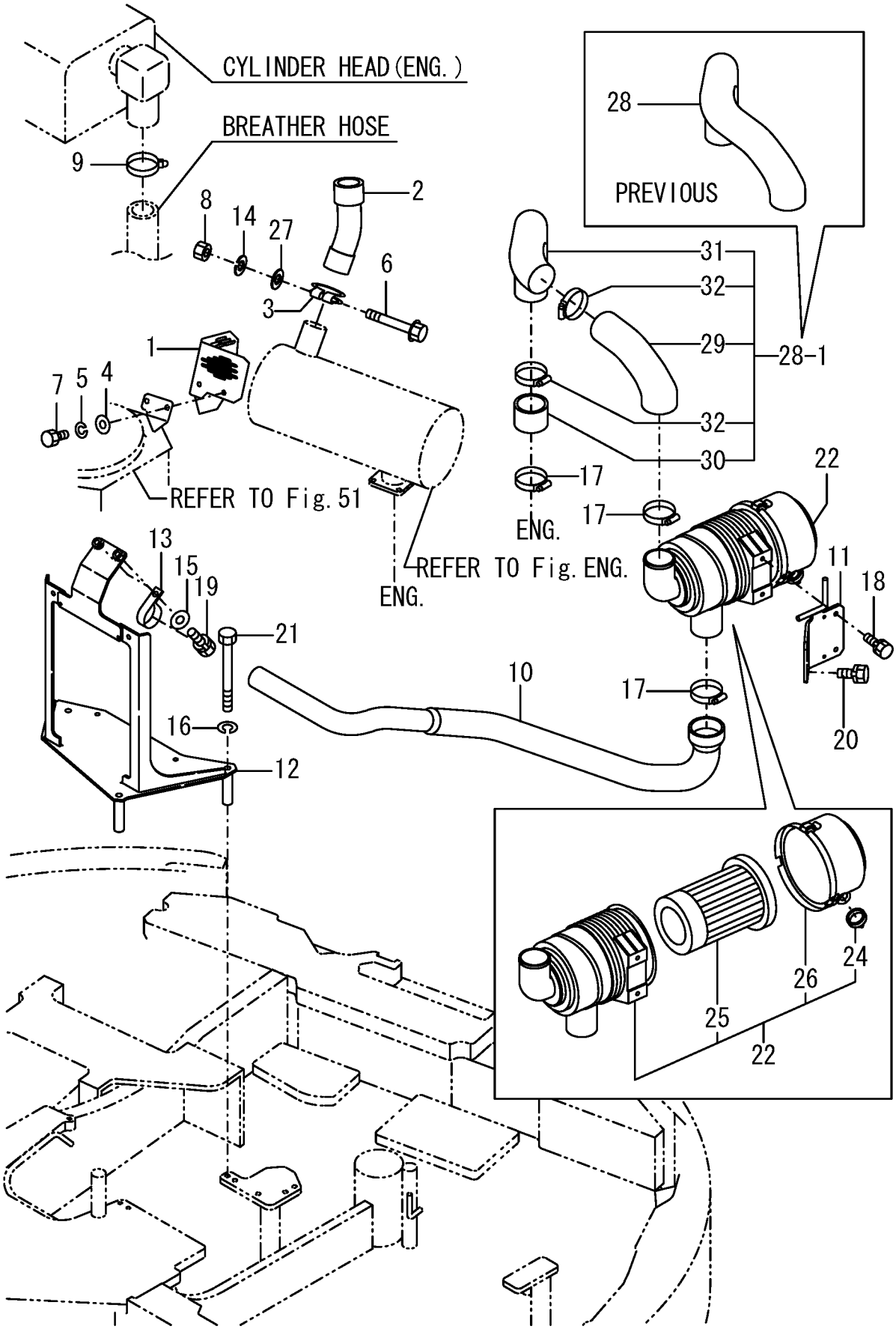

https://truckmanualshub.com/

```
1,1,,172187-12100,,"LEVER, ACCELERATOR",1,,,,,,,,,,,,,,,,,
2,2,,172165-12140,,GRIP(RED,1,,,,,,,,,,,,,,,,,
3,1,,172187-12120,,SUPPORT,1,,,,,,,,,,,,,,,,,
4,1,,172137-12270,,"JOINT, CABLE",1,,,,,,,,,,,,,,,,,
5,1,,1C6281-52310,,"PIN 6,COME-OFF SNAP",2,,,,,,,,,,,,,,,,,,
6,1,,1A1040-56900,,"PIN  6X 17",2,,,,,,,,,,,,,,,,,
7,1,,22137-060000,,"WASHER 6, POLISHED",2,,,,,,,,,,,,,,,,,,
8,1,,26013-100162,,"BOLT M10X 16",2,,,,,,,,,,,,,,,,,
9,1,,26013-100252,,"BOLT W/WASHER M10X25",2,,,,,,,,,,,,,,,,,,
10,1,,172187-12110,,"CABLE, ACCELERATOR",1,,,,,,,,,,,,,,,,,,
```

https://truckmanualshub.com/

Fig.4 ACCELERATOR

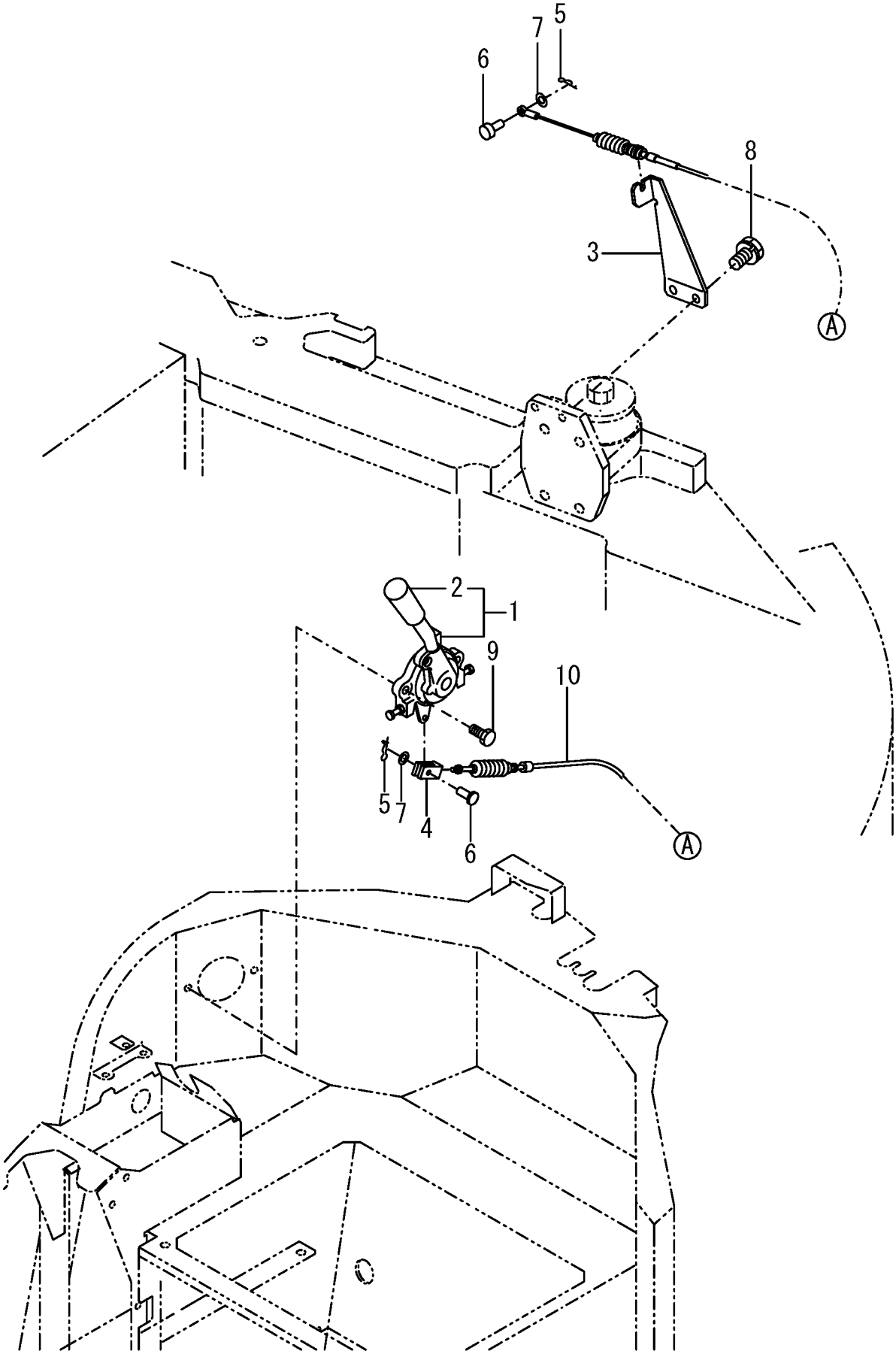

https://truckmanualshub.com/

```
1,1,,172162-13170,,WASHER,2,,,,,,,,,,,,,,,,,,
2,1,,172162-13180,,"MOUNT,ENGINE",8,,,,,,,,,,,,,,,,,,
3,1,,172165-13220,,WASHER,8,,,,,,,,,,,,,,,,,,
4,1,,172187-13700,,"BRACKET, FR",1,,,,,,,,,,,,,,,,,,
5,1,,172187-13730,,"BRACKET, RF",1,,,,,,,,,,,,,,,,,,
6,1,,172187-13760,,"BRACKET, RR",1,,,,,,,,,,,,,,,,,,
7,1,,172187-13800,,"BRACKET, LR",1,,,,,,,,,,,,,,,,,,
8,1,,172187-13830,,STOPPER,2,,,,,,,,,,,,,,,,,,
9,1,,172187-13870,,"BOLT 16X30",1,,,,,,,,,,,,,,,,,,
10,1,,1E6480-16920,,"BOLT 10X35",12,,,,,,,,,,,,,,,,,,
11,1,,172137-46040,,"SEAT, SPRING",12,,,,,,,,,,,,,,,,,,
12,1,,22217-100000,,"SPRING WASHER 10",12,,,,,,,,,,,,,,,,,,,,
13,1,,22217-120000,,"SPRING WASHER",8,,,,,,,,,,,,,,,,,,
14,1,,22217-160000,,"SPRING WASHER 16",4,,,,,,,,,,,,,,,,,,,,
15,1,,26076-120352,,"BOLT M12X 35",8,,,,,,,,,,,,,,,,,,
16,1,,26076-161302,,"BOLT 16*130",3,,,,,,,,,,,,,,,,,,
```

https://truckmanualshub.com/

Fig.5 ENGINE MOUNT

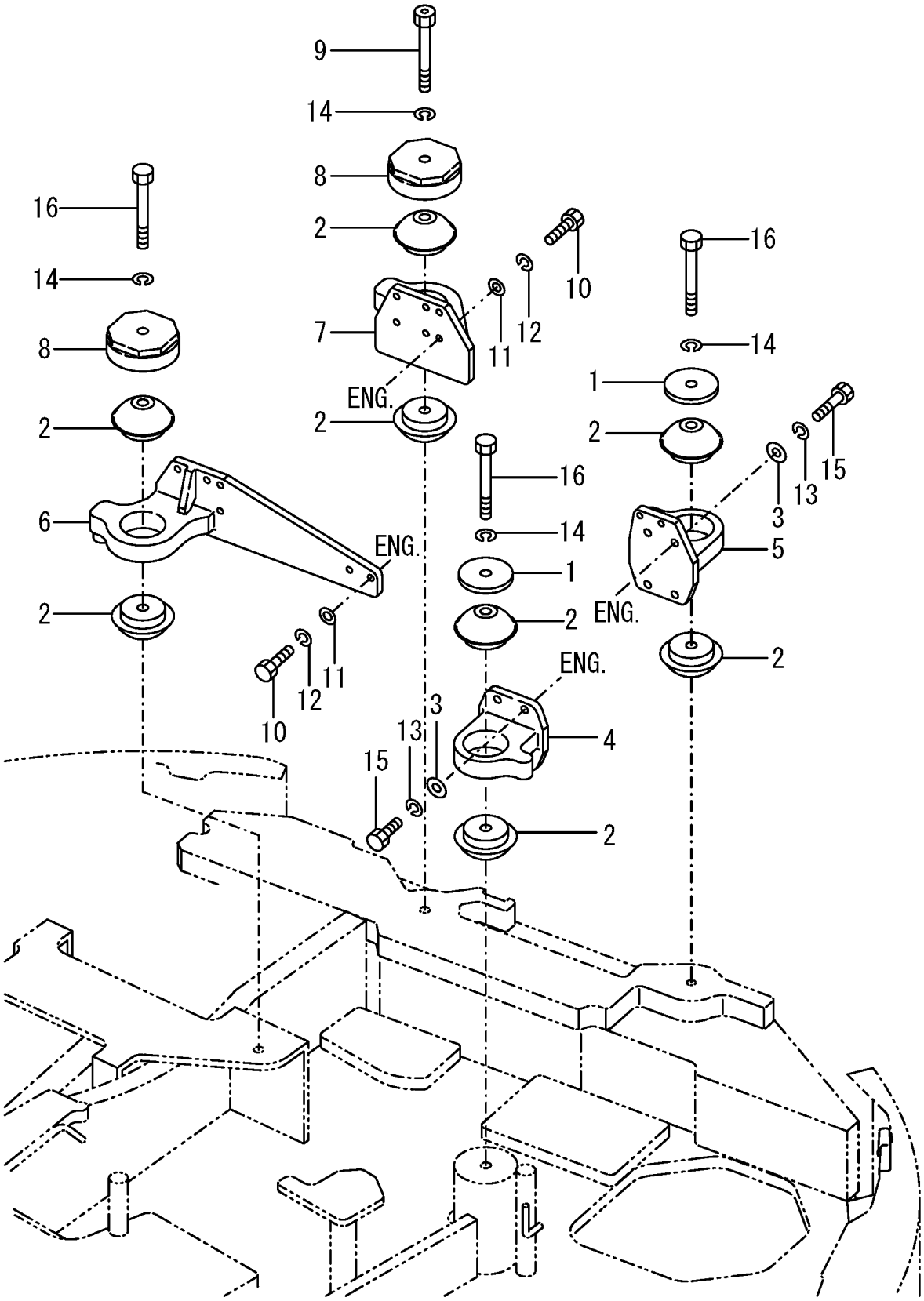

```
1,1,,172187-13250,,"MOUNT L",1,,,,,,,,,,,,,,,,,
2,2,,172187-13530,,"SEAL A, RADIATOR",1,,,,,,,,,,,,,,,,,
3,2,,172187-13540,,"SEAL B, RADIATOR",1,,,,,,,,,,,,,,,,,
4,1,,172187-13261,,SHURAUD,1,,,,,,,,,,,,,,,,,
5,1,,172187-13300,,"HOSE A, RADIATOR",1,,,,,,,,,,,,,,,,,
6,1,,172187-13310,,"HOSE B, RADIATOR",1,,,,,,,,,,,,,,,,,
7,1,,172187-13320,,"MOUNT R",1,,,,,,,,,,,,,,,,,
8,2,,172187-13530,,"SEAL A, RADIATOR",1,,,,,,,,,,,,,,,,,
9,2,,172187-13540,,"SEAL B, RADIATOR",1,,,,,,,,,,,,,,,,,
10,1,,172187-13360,,SEAL,1,,,,,,,,,,,,,,,,,
11,1,,172187-13370,,SEAL,1,,,,,,,,,,,,,,,,,
12,1,,172187-13390,,"BRACKET R",1,,,,,,,,,,,,,,,,,
13,1,,172187-13420,,"BRACKET L",1,,,,,,,,,,,,,,,,,
14,1,,172187-13480,,"SEAL 560",1,,,,,,,,,,,,,,,,,
15,1,,172124-13500,,"MOUNT, RADIATOR",2,,,,,,,,,,,,,,,,,
16,1,,172187-13501,,WIRE,1,,,,,,,,,,,,,,,,,
17,1,,172187-13550,,"HOSE 1200",1,,,,,,,,,,,,,,,,,
18,1,,172162-13780,,"MOUNT 42-87,EVAPORTR",2,,,,,,,,,,,,,,,,,
19,1,,26716-100002,,"NUT 10",4,,,,,,,,,,,,,,,,,
20,1,,172171-14610,,"HOSE 260,FUEL",1,,,,,,,,,,,,,,,,,
21,1,,171064-44510,,"SUB-TANK ASSY",1,,,,,,,,,,,,,,,,,
22,2,,171064-44520,,"BODY, SUB-TANK",1,,,,,,,,,,,,,,,,,
23,2,,121450-44531,,CAP,1,,,,,,,,,,,,,,,,,
24,2,,124450-44560,,CLAMP,1,,,,,,,,,,,,,,,,,
25,2,,121470-44581,,GASKET,1,,,,,,,,,,,,,,,,,
26,2,,23065-070225,,"HOSE 7X 225",1,,,,,,,,,,,,,,,,,
27,1,,124450-44550,,"CLAMP, SUB-TANK",1,,,,,,,,,,,,,,,,,
28,1,,121256-44600,,"BRACKET, SUB-TANK",1,,,,,,,,,,,,,,,,,
29,1,,121450-49110,,"COCK ASSY, 3-WAY",1,,,,,,,,,,,,,,,,,
30,2,,121450-49100,,"BODY, COCK",1,,,,,,,,,,,,,,,,,
31,2,,121250-49121,,PLUG,1,,,,,,,,,,,,,,,,,
32,2,,24311-000160,,"O-RING 1A P-16.0",1,,,,,,,,,,,,,,,,,
33,1,,124766-59050,,"CLAMP 12",4,,,,,,,,,,,,,,,,,
34,1,,172162-62540,,"SEAL,STEP L",1,,,,,,,,,,,,,,,,,
35,1,,22217-080000,,"SPRING WASHER  8",3,,,,,,,,,,,,,,,,,
36,1,,22217-080000,,"SPRING WASHER  8",6,,,,,,,,,,,,,,,,,
37,1,,22217-080000,,"SPRING WASHER  8",2,,,,,,,,,,,,,,,,,
38,1,,22217-080000,,"SPRING WASHER  8",2,,,,,,,,,,,,,,,,,
39,1,,22217-100000,,"SPRING WASHER 10",4,,,,,,,,,,,,,,,,,
40,1,,23010-050000,,"CLAMP 50",4,,,,,,,,,,,,,,,,,
41,1,,26013-100252,,"BOLT W/WASHER M10X25",4,,,,,,,,,,,,,,,,,
42,1,,26022-080162,,"SCREW M 8X 16",2,,,,,,,,,,,,,,,,,
43,1,,26051-080002,,"NUT M 8",4,,,,,,,,,,,,,,,,,
44,1,,26116-080162,,"BOLT 8X16",3,,,,,,,,,,,,,,,,,
45,1,,26116-080162,,"BOLT 8X16",6,,,,,,,,,,,,,,,,,
46,1,,26116-080162,,"BOLT 8X16",2,,,,,,,,,,,,,,,,,
47,1,,26116-080252,,"BOLT M 8X 25 PLATED",2,,,,,,,,,,,,,,,,,
48,1,,172187-13900,,RADIATOR,1,,,,,,,,,,,,,,,,,
48-1,1,,172187-13901,,RADIATOR,1,,,,,N,,72187566,M/#01106,,,,,,,,,,I
50,2,,172187-13920,,"HOSE, RUBBER",1,,,,,,,,,,,,,,,,,
51,2,,119259-44570,,"CAP, RADIATOR",1,,,,,,,,,,,,,,,,,
52,2,,121250-44590,,CLAMP,2,,,,,,,,,,,,,,,,,
```

https://truckmanualshub.com/

Fig. 6 RADIATOR & MOUNT

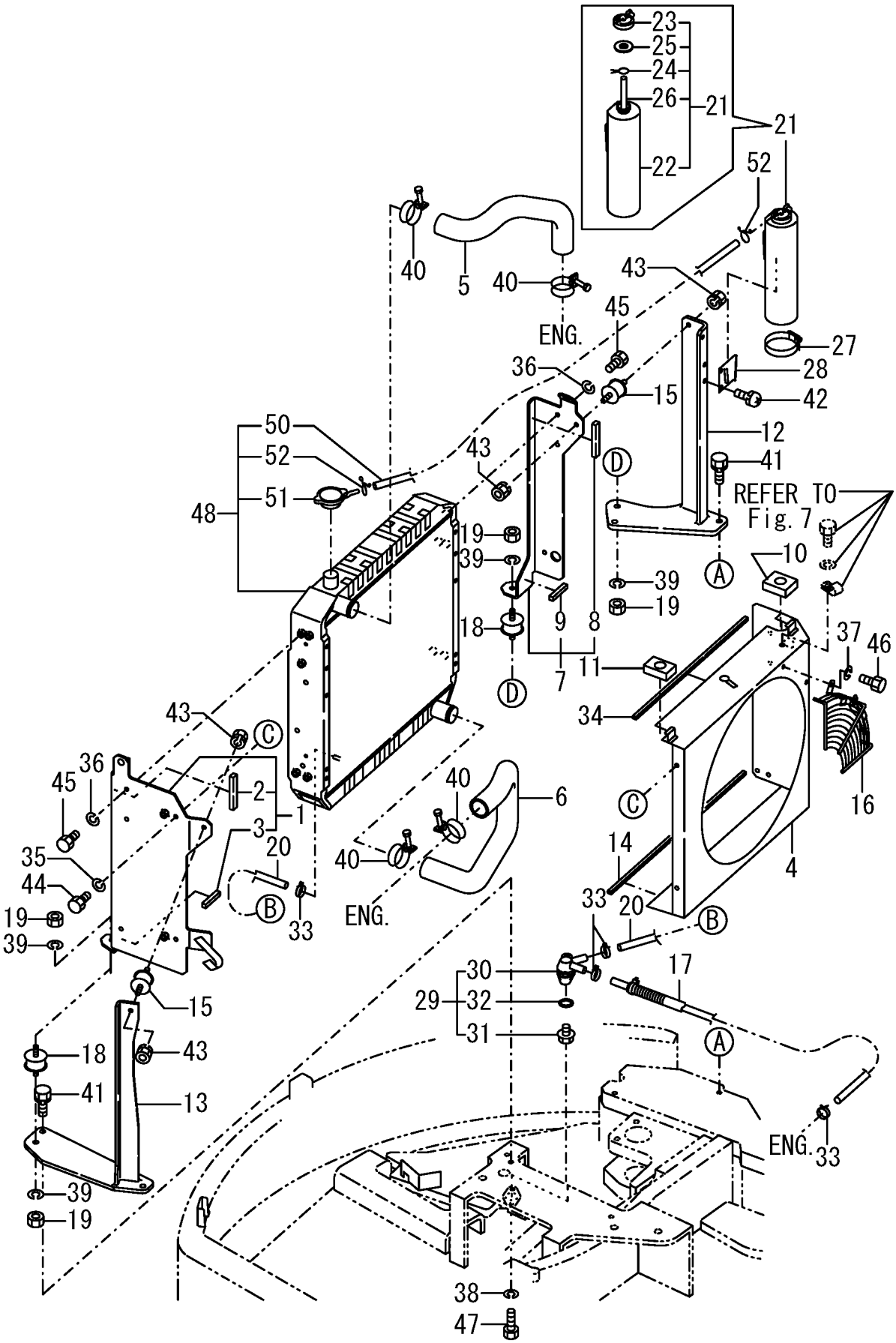

```
1,1,,772187-14100,,"FUEL TANK",1,,,,,,,,,,,,,,,,
2,2,,104200-11920,,COCK,1,,,,,,,,,,,,,,,,
4,2,,172162-14200,,GASKET,1,,,,,,,,,,,,,,,,
5,2,,172187-14220,,GAUGE,1,,,,,,,,,,,,,,,,
6,2,,172187-14240,,HOSE,1,,,,,,,,,,,,,,,,
7,2,,172141-14260,,FLOAT,1,,,,,,,,,,,,,,,,
8,2,,172187-14280,,CAP,1,,,,,,,,,,,,,,,,
9,3,,172187-14320,,GASKET,1,,,,,,,,,,,,,,,,
10,2,,172187-14500,,"FUEL CATCH",1,,,,,,,,,,,,,,,,
11,2,,172187-14510,,HOSE,1,,,,,,,,,,,,,,,,
12,2,,22217-050000,,"SPRING WASHER  5",5,,,,,,,,,,,,,,,,
13,2,,23010-014000,,"CLAMP 14",2,,,,,,,,,,,,,,,,
14,2,,23080-013000,,"CLAMP 13,HOSE",1,,,,,,,,,,,,,,,,
15,2,,26557-050122,,"SCREW M 5X 12",5,,,,,,,,,,,,,,,,
16,2,,172187-14290,,"FUEL INLET NET",1,,,,,,,,,,,,,,,,
17,1,,22217-160000,,"SPRING WASHER 16",4,,,,,,,,,,,,,,,,
18,1,,26116-160402,,"BOLT M16X 40 PLATED",4,,,,,,,,,,,,,,,,
19,1,,172187-14390,,HOSE,1,,,,,,,,,,,,,,,,
20,1,,172187-14430,,HOSE,1,,,,,,,,,,,,,,,,
21,1,,172187-14460,,CLAMP,4,,,,,,,,,,,,,,,,
22,1,,172187-14470,,HOSE,1,,,,,,,,,,,,,,,,
23,1,,172171-14610,,"HOSE 260,FUEL",1,,,,,,,,,,,,,,,,
24,1,,172122-16600,,W-CLAMP,1,,,,,,,,,,,,,,,,
25,1,,119225-52102,,"PUMP ASSY, FUEL FEED",1,,,,,,,,,,,,,,,,
26,1,,129335-55705,,"SEPARATOR,WATER",1,,,,,,,,,,,,,,,,
27,2,,104200-55321,,"VALVE, TAPER",1,,,,,,,,,,,,,,,,
28,2,,104200-55330,,"SPRING, TAPER VALVE",1,,,,,,,,,,,,,,,,
29,2,,104200-55341,,"HANDLE, COCK",1,,,,,,,,,,,,,,,,
30,2,,121254-55510,,"CUP, STRAINER",1,,,,,,,,,,,,,,,,
31,2,,102103-55520,,O-RING,1,,,,,,,,,,,,,,,,
32,2,,110250-55610,,"RING, RETAINING",1,,,,,,,,,,,,,,,,
33,2,,121257-55720,,"SPRING, SCREEN",1,,,,,,,,,,,,,,,,
34,2,,121257-55731,,FLOAT,1,,,,,,,,,,,,,,,,
36,2,,101720-55750,,"PLUG 6",2,,,,,,,,,,,,,,,,
37,2,,104200-55750,,"SCREW M 4",1,,,,,,,,,,,,,,,,
38,2,,121850-55710,,SCREEN,1,,,,,,,,,,,,,,,,
39,2,,23418-060000,,"GASKET 6, NYLON",2,,,,,,,,,,,,,,,,
40,2,,24311-240100,,"O-RING 1A P-10A",1,,,,,,,,,,,,,,,,
41,1,,124766-59050,,"CLAMP 12",8,,,,,,,,,,,,,,,,
42,1,,22137-160000,,"WASHER 16,POLISHED",4,,,,,,,,,,,,,,,,
43,1,,22137-060000,,"WASHER 6, POLISHED",2,,,,,,,,,,,,,,,,
44,1,,22217-080000,,"SPRING WASHER  8",1,,,,,,,,,,,,,,,,
45,1,,22217-100000,,"SPRING WASHER 10",4,,,,,,,,,,,,,,,,
46,1,,26013-060162,,"BOLT M 6X 16",2,,,,,,,,,,,,,,,,
47,1,,26116-080652,,"BOLT M 8X 65 PLATED",1,,,,,,,,,,,,,,,,
48,1,,26116-100162,,"BOLT M10X 16 PLATED",4,,,,,,,,,,,,,,,,
49,1,,933152-09280,,"BAND 170",1,,,,,,,,,,,,,,,,
50,1,,933168-55770,,"BAND 146",1,,,,,,,,,,,,,,,,
```

https://truckmanualshub.com/

Fig. 7 FUEL TANK & FUEL LINE

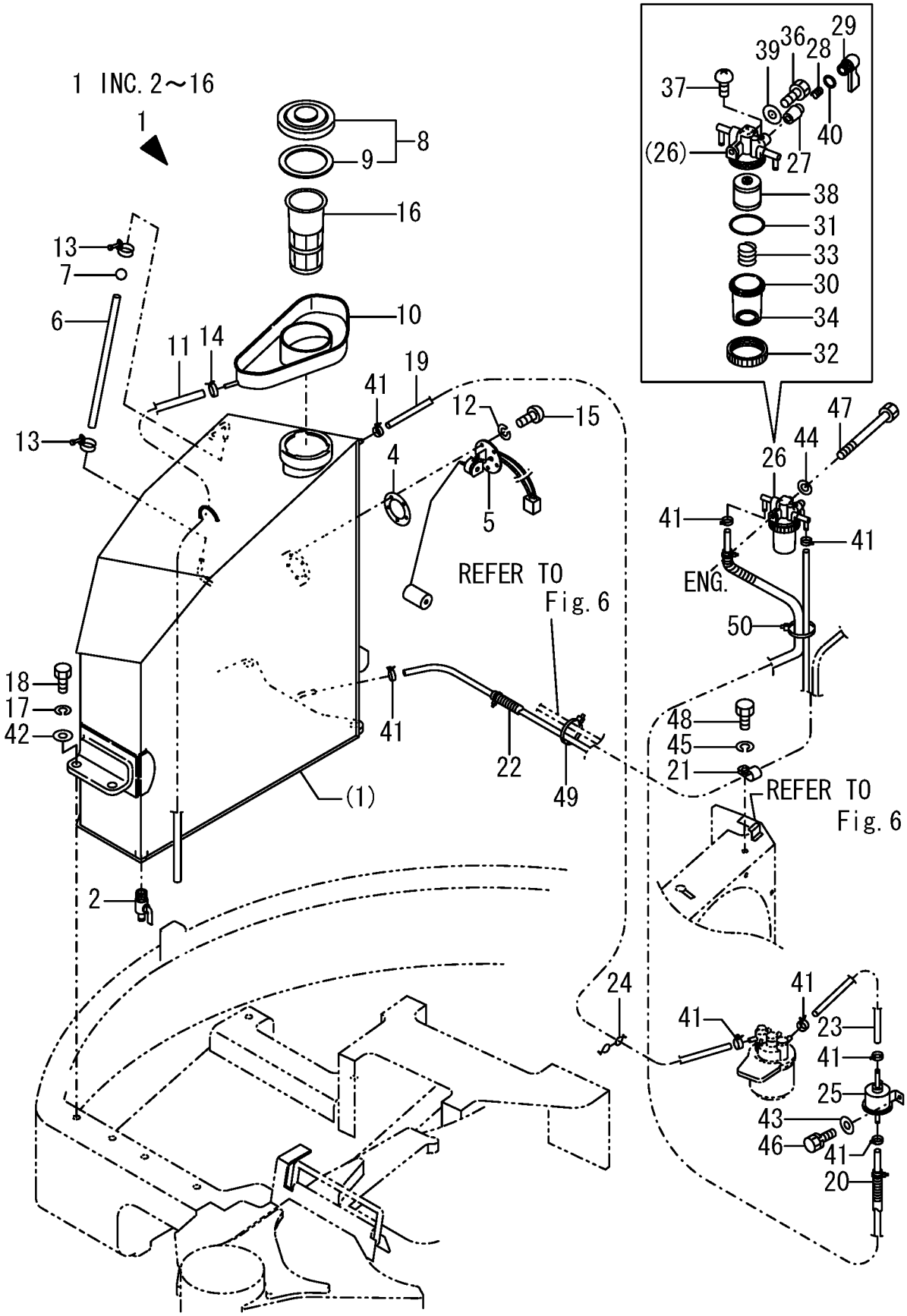

https://truckmanualshub.com/

```
1,1,,172187-16100,,"CODE, BATTERY +",1,,,,,,,,,,,,,,,,,
2,2,,172187-16120,,"CODE, BATTERY +",1,,,,,,,,,,,,,,,,,
3,2,,172187-16130,,"WIRE, FUSIBLE",1,,,,,,,,,,,,,,,,,
4,1,,172187-16110,,"CODE, BATTERY -",1,,,,,,,,,,,,,,,,,
5,1,,172187-16150,,BATTERY,1,,,,,,,,,,,,,,,,,
6,1,,22217-080000,,"SPRING WASHER  8",1,,,,,,,,,,,,,,,,,
7,1,,22217-100000,,"SPRING WASHER 10",1,,,,,,,,,,,,,,,,,
8,1,,26116-100162,,"BOLT M10X 16 PLATED",1,,,,,,,,,,,,,,,,,,
9,1,,26716-080002,,"NUT M 8",1,,,,,,,,,,,,,,,,,
10,1,,172112-16201,,"RETAINER, BATTERY",1,,,,,,,,,,,,,,,,,
11,1,,172512-16350,,"ROD, CLAMP",2,,,,,,,,,,,,,,,,,
12,1,,22157-080000,,"WASHER  8",2,,,,,,,,,,,,,,,,,
13,1,,26716-080002,,"NUT M 8",4,,,,,,,,,,,,,,,,,
```

https://truckmanualshub.com/

Fig.8 BATTERY

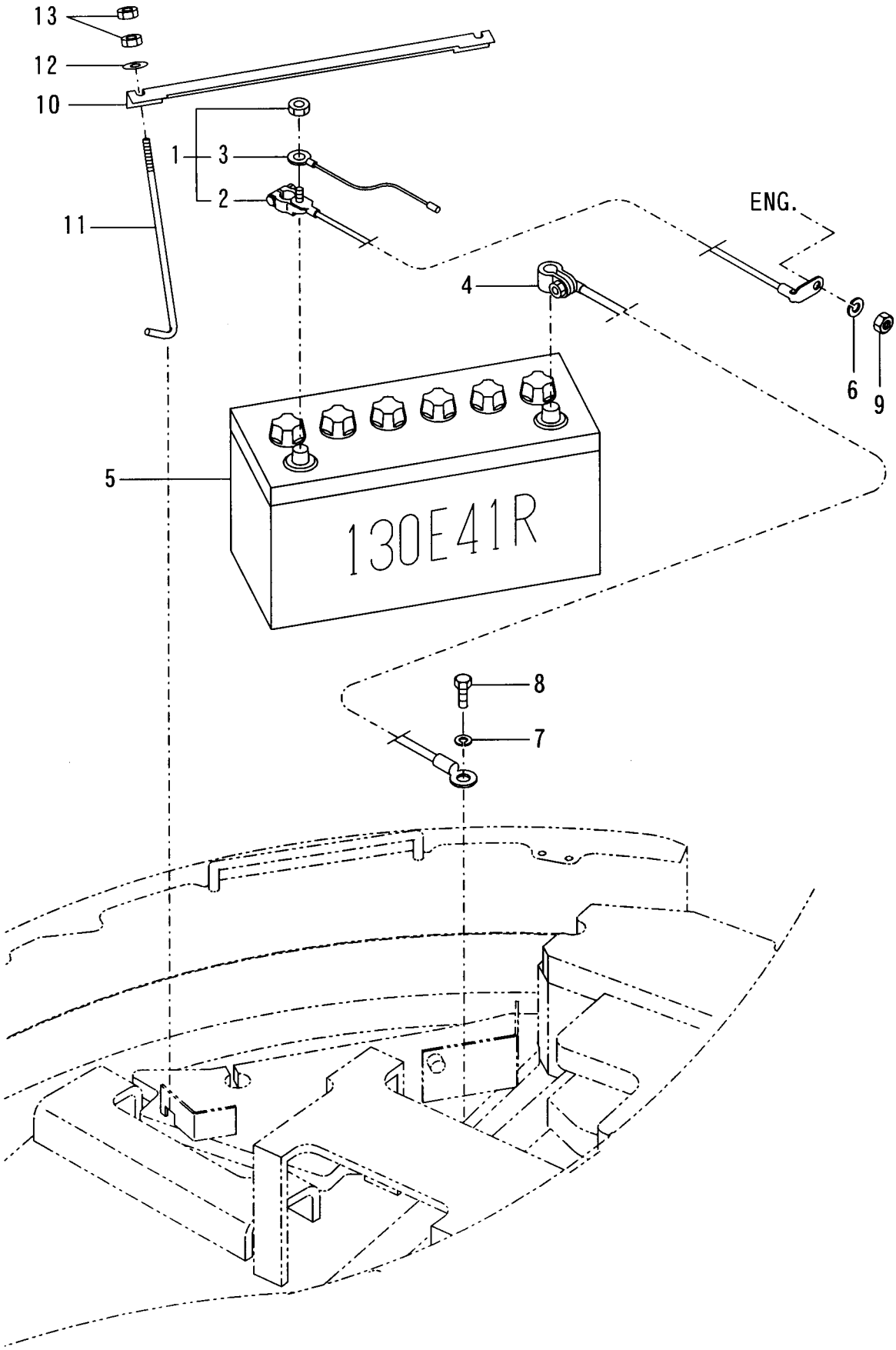

https://truckmanualshub.com/

```
1,1,,172126-11510,,"BAND 300",3,,,,,,,,,,,,,,,,
2,1,,172187-16500,,"HARNESS A",1,,,,,,,,,,,,,,,,
3,1,,172187-16511,,"NARNESS B",1,,,,,,,,,,,,,,,,
4,1,,172187-16520,,"HARNESS C",1,,,,,,,,,,,,,,,,
5,1,,172187-16530,,"HARNESS D",1,,,,,,,,,,,,,,,,
6,1,,933152-09280,,"BAND 170",2,,,,,,,,,,,,,,,,
7,1,,172187-16560,,GROMMET,2,,,,,,,,,,,,,,,,
8,1,,172187-16600,,"CODE, ENGINE EARTH",1,,,,,,,,,,,,,,,,
9,1,,194440-51620,,"CLAMP, WIRE HARNESS",2,,,,,,,,,,,,,,,,
10,1,,194440-51620,,"CLAMP, WIRE HARNESS",1,,,,,,,,,,,,,,,,
11,1,,1A1380-58050,,"GROMMET 16X20X4.5",1,,,,,,,,,,,,,,,,
12,1,,172131-78350,,"GROMMET 13.5",1,,,,,,,,,,,,,,,,
13,1,,22137-100000,,"WASHER 10,POLISHED",2,,,,,,,,,,,,,,,,
14,1,,22137-100000,,"WASHER 10,POLISHED",1,,,,,,,,,,,,,,,,
15,1,,22217-050000,,"SPRING WASHER  5",1,,,,,,,,,,,,,,,,
16,1,,22217-080000,,"SPRING WASHER  8",2,,,,,,,,,,,,,,,,
17,1,,22217-080000,,"SPRING WASHER  8",1,,,,,,,,,,,,,,,,
18,1,,22217-100000,,"SPRING WASHER 10",2,,,,,,,,,,,,,,,,
19,1,,22217-100000,,"SPRING WASHER 10",1,,,,,,,,,,,,,,,,
20,1,,26116-080162,,"BOLT 8X16",2,,,,,,,,,,,,,,,,
21,1,,26116-080162,,"BOLT 8X16",1,,,,,,,,,,,,,,,,
22,1,,26116-100162,,"BOLT M10X 16 PLATED",2,,,,,,,,,,,,,,,,
23,1,,26116-100162,,"BOLT M10X 16 PLATED",1,,,,,,,,,,,,,,,,
24,1,,26716-050002,,"NUT M 5",1,,,,,,,,,,,,,,,,
25,1,,933152-09280,,"BAND 170",5,,,,,,,,,,,,,,,,
26,1,,172122-79920,,CLAMP,1,,,,,,,,,,,,,,,,
```

https://truckmanualshub.com/

Fig. 9 ELECTRIC PART (WIRING)

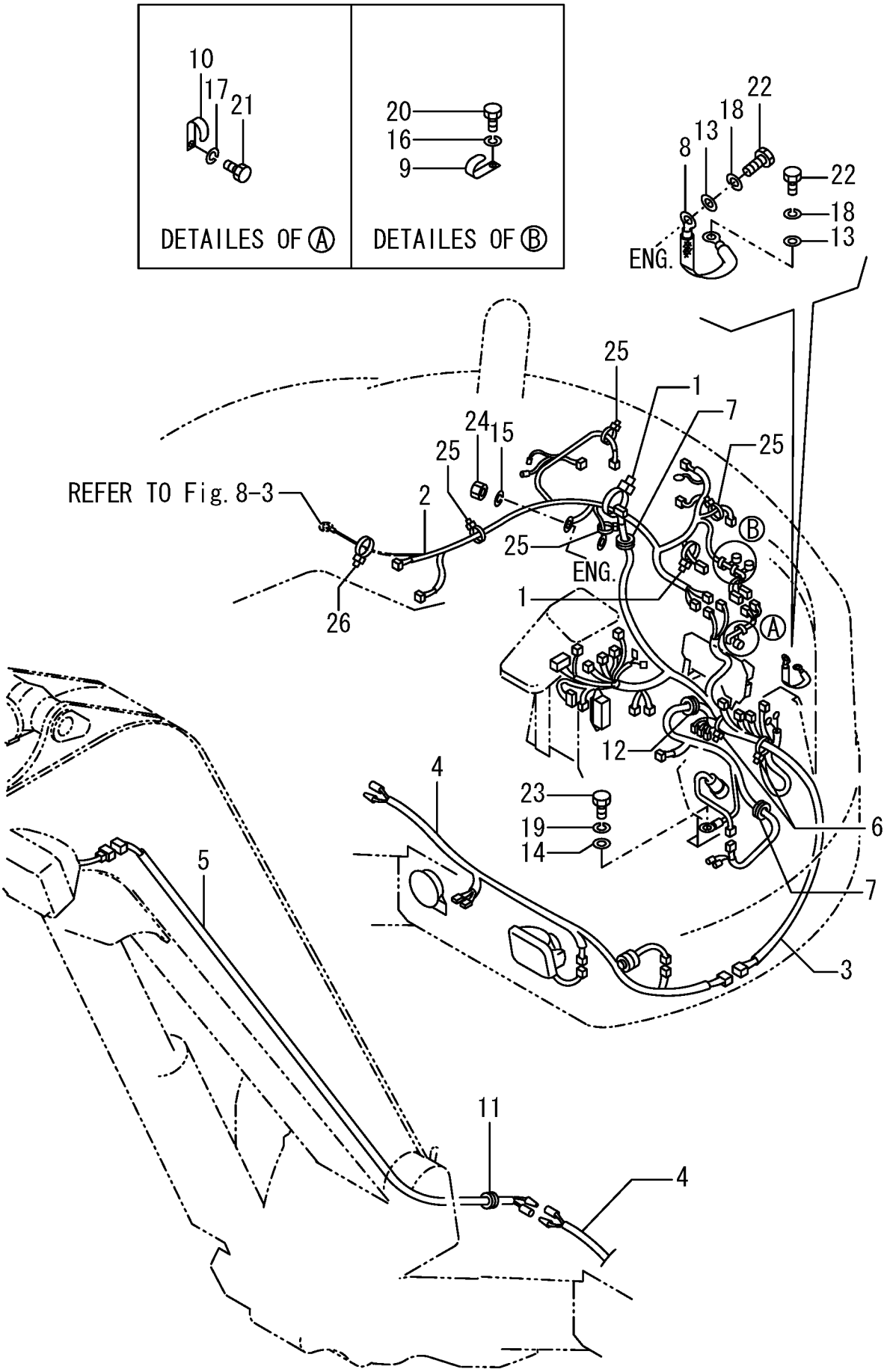

https://truckmanualshub.com/

```
1,1,,172187-17100,,"SWITCH, START",1,,,,,,,,,,,,,,,,,
2,2,,172187-17070,,CODE,1,,,,,,,,,,,,,,,,,
3,2,,172187-17080,,"COVER M5",3,,,,,,,,,,,,,,,,,
4,2,,172187-17090,,"COVER M4",2,,,,,,,,,,,,,,,,,
6,2,,933110-00301,,"KEY ASSY",1,,,,,,,,,,,,,,,,,
7,1,,172187-17110,,BRACKET,1,,,,,,,,,,,,,,,,,
8,1,,172164-17140,,SWITCH,1,,,,,,,,,,,,,,,,,
9,1,,172187-17150,,PLATE,1,,,,,,,,,,,,,,,,,
10,1,,172187-17200,,"BOX, FUSE",1,,,,,,,,,,,,,,,,,,
11,2,,172175-17120,,PULLER,1,,,,,,,,,,,,,,,,,
13,2,,172187-17220,,COVER,1,,,,,,,,,,,,,,,,,
14,2,,29420-050000,,HUSE,2,,,,,,,,,,,,,,,,,
15,2,,29420-150000,,HUSE,6,,,,,,,,,,,,,,,,,
16,2,,29420-300000,,"FUSE B30",2,,,,,,,,,,,,,,,,,
17,1,,172162-17400,,"LAMP COMP.,WORKING",1,,,,,,,,,,,,,,,,,
18,2,,172141-17211,,"BULB 12V55W",1,,,,,,,,,,,,,,,,,
19,1,,172162-17410,,"LAMP ASSY, HEADLIGHT",1,,,,,,,,,,,,,,,,,,
20,2,,29220-788200,,BULB,1,,,,,,,,,,,,,,,,,
21,1,,194464-52190,,"SWITCH, SAFETY START",1,,,,,,,,,,,,,,,,,,
22,1,,119247-77100,,"RELAY, SAFETY",3,,,,,,,,,,,,,,,,,
23,1,,129136-77200,,"RELAY, SAFETY",1,,,,,,,,,,,,,,,,,
24,1,,119650-77910,,"RELAY, GROW",1,,,,,,,,,,,,,,,,,
27,1,,22217-080000,,"SPRING WASHER  8",2,,,,,,,,,,,,,,,,,
28,1,,22217-080000,,"SPRING WASHER  8",3,,,,,,,,,,,,,,,,,
29,1,,26013-060162,,"BOLT M 6X 16",2,,,,,,,,,,,,,,,,,
30,1,,26013-080162,,"BOLT W/WASHER M8X16",2,,,,,,,,,,,,,,,,,,
31,1,,26022-060122,,"SCREW M 6X 12",3,,,,,,,,,,,,,,,,,
32,1,,26022-060122,,"SCREW M 6X 12",2,,,,,,,,,,,,,,,,,
33,1,,26022-060202,,"SCREW M 6X 20",2,,,,,,,,,,,,,,,,,
34,1,,26022-060202,,"SCREW M 6X 20",2,,,,,,,,,,,,,,,,,
35,1,,26116-080202,,"BOLT M 8X 20 PLATED",3,,,,,,,,,,,,,,,,,,
36,1,,26716-080002,,"NUT M 8",2,,,,,,,,,,,,,,,,,
37,1,,26776-160002,,"LOCK NUT M16 PLATED",1,,,,,,,,,,,,,,,,,,
38,1,,26776-180002,,"NUT M18,LOCK",1,,,,,,,,,,,,,,,,,
39,1,,933110-05300,,HORN,1,,,,,,,,,,,,,,,,,
40,1,,172187-17252,,"BOX, INDICATOR",1,,,,,,,,,,,,,,,,,
53,2,,172187-17380,,"BULB,T6.5-13.5V-2W",4,,,,,,,,,,,,,,,,,
58,2,,172187-17480,,"BULB,T5-14V-2W",2,,,,,,,,,,,,,,,,,
59,1,,172519-63240,,"BOLT  8X 16",4,,,,,,,,,,,,,,,,,
```

https://truckmanualshub.com/

Fig. 10 ELECTRIC PART (EQUIPMENT)

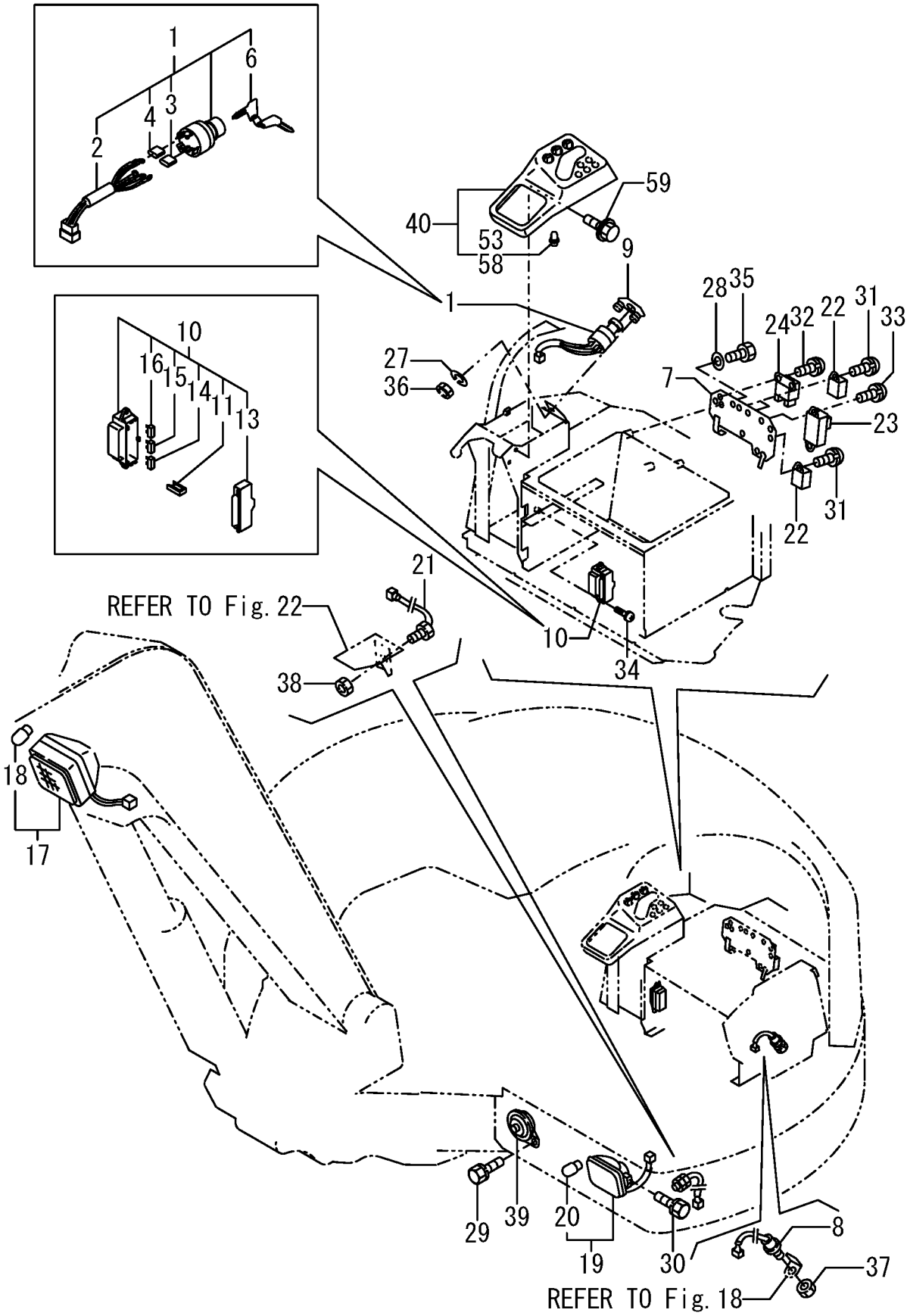

https://truckmanualshub.com/

```
1,1,,22857-400100,,"SCREW 4X10",2,,,,,,,,,,,,,,,,,,
2,1,,933113-05150,,"LAMP, ROOM",1,,,,,,,,,,,,,,,,,,
3,2,,933113-05160,,"BULB (12V5W)",1,,,,,,,,,,,,,,,,,,
4,1,,172164-17200,,"MOTOR, WIPER",1,,,,,,,,,,,,,,,,,,
5,1,,172164-17210,,"ARM, WIPER",1,,,,,,,,,,,,,,,,,,
6,1,,172162-17320,,"BLADE 400,WIPER",1,,,,,,,,,,,,,,,,,,,
7,1,,172187-17450,,BRAKER,1,,,,,,,,,,,,,,,,,,
8,1,,26013-060122,,"BOLT M 6X 12",3,,,,,,,,,,,,,,,,,,
9,1,,26022-050202,,"SCREW M 5X 20",1,,,,,,,,,,,,,,,,,,,
10,1,,172187-16551,,"HARNESS F",1,,,,,,,,,,,,,,,,,,
11,1,,933152-09280,,"BAND 170",2,,,,,,,,,,,,,,,,,,
12,1,,172643-11610,,BUSH,1,,,,,,,,,,,,,,,,,,
```

https://truckmanualshub.com/

Fig.11 ELECTRIC PART(CABIN)

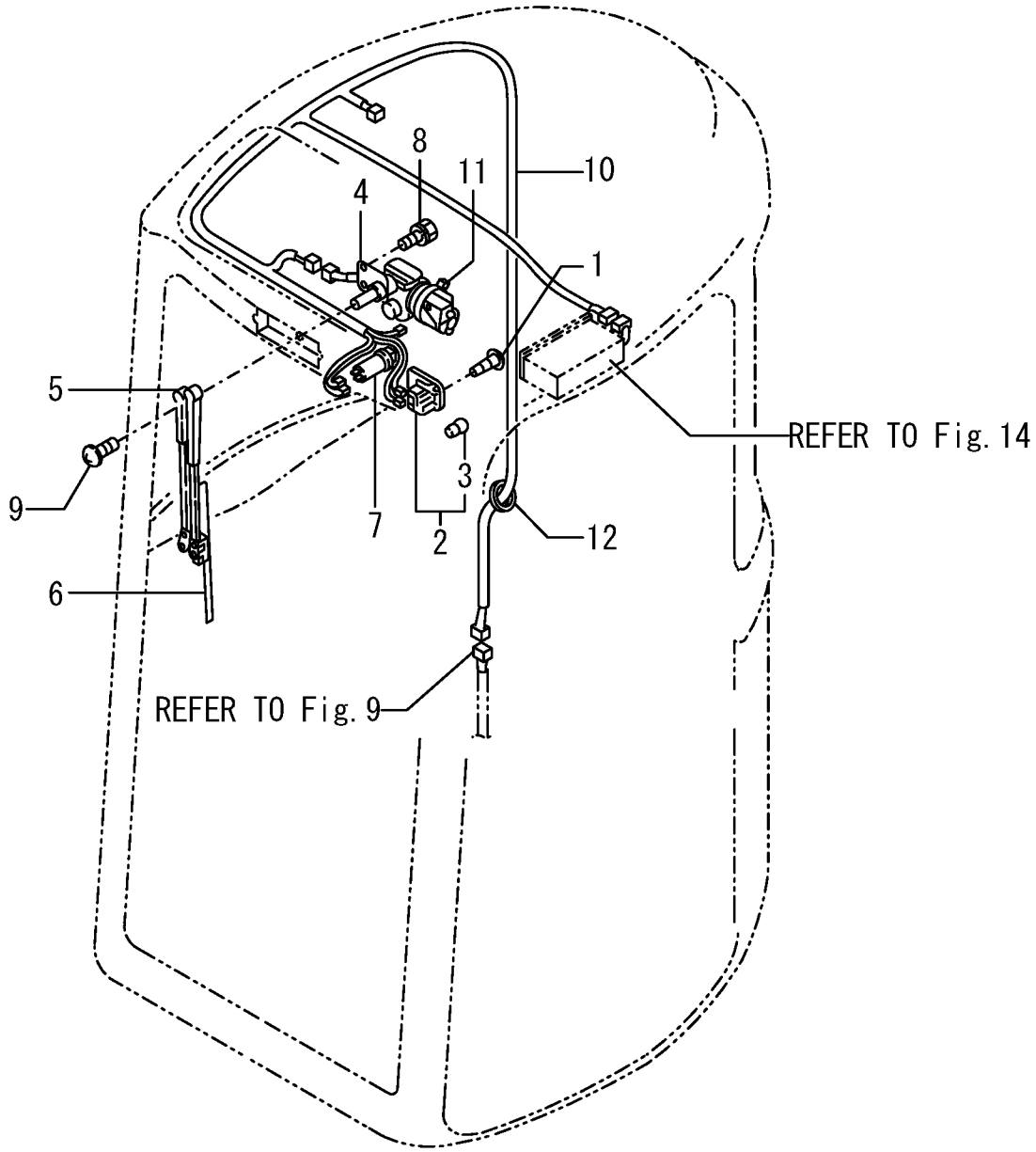

https://truckmanualshub.com/

```
1,1,,172187-17600,,HEATER,1,,,,,,,,,,,,,,,,,,
2,1,,172187-17610,,PLATE,1,,,,,,,,,,,,,,,,,,
2-1,1,,172187-17590,,"PLATE,HEATER BASE
EV",1,,,,,,N,,72187511,M/#00921,,,,,,,,,,I
3,1,,172187-17630,,VALVE,1,,,,,,,,,,,,,,,,,,
4,1,,172187-17660,,"HOSE, HEATER",2,,,,,,,,,,,,,,,,,,
5,1,,172187-17691,,GUIDE,1,,,,,,,,,,,,,,,,,,
6,1,,172637-76110,,"ADAPTER, DRAIN",1,,,,,,,,,,,,,,,,,,
7,1,,172122-79930,,"CLAMP B",2,,,,,,,,,,,,,,,,,,
8,1,,22217-080000,,"SPRING WASHER  8",2,,,,,,,,,,,,,,,,,,
9,1,,22857-500100,,"SCREW 5X10,TAPPING",8,,,,,,,,,,,,,,,,,,
10,1,,23000-022000,,"CLAMP 22",4,,,,,,,,,,,,,,,,,,
11,1,,26013-100202,,"BOLT W/WASHER M10X20",4,,,,,,,,,,,,,,,,,,
12,1,,26116-080162,,"BOLT 8X16",2,,,,,,,,,,,,,,,,,,
13,1,,933166-24240,,"ELBOW, SWIVEL JOINT",1,,,,,,,,,,,,,,,,,,
14,1,,933171-15680,,"GROMMET 40X13",2,,,,,,,,,,,,,,,,,,
```

https://truckmanualshub.com/

Fig. 12 HEATER

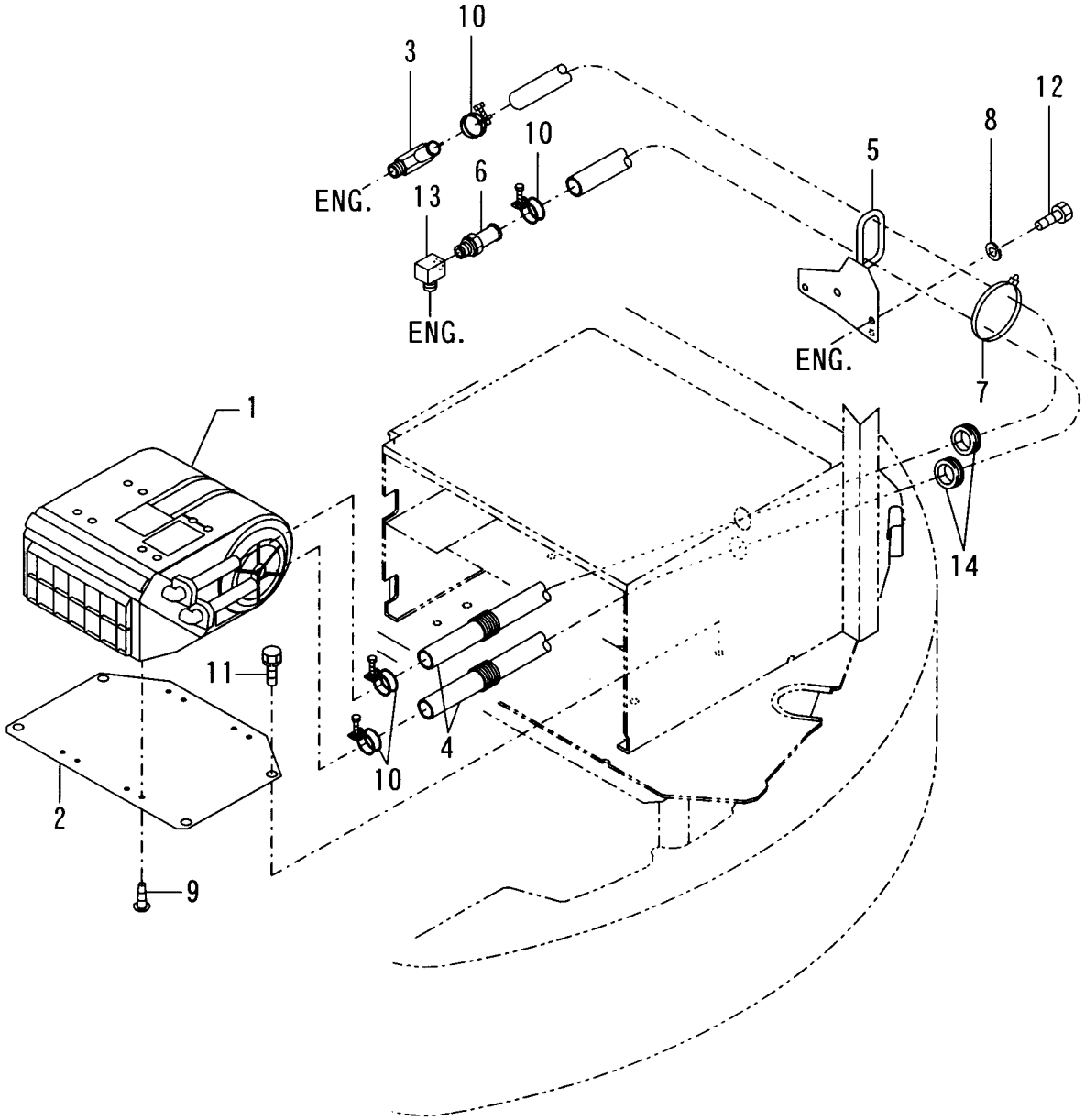

https://truckmanualshub.com/

```
1,1,,172164-17701,,BRACKET(DEFROSTER,1,,,,,,,,,,,,,,,,,
2,1,,172120-17710,,"NOZZLE, DEFROSTER",1,,,,,,,,,,,,,,,,,,
3,1,,172142-17830,,HOSE,1,,,,,,,,,,,,,,,,,
4,1,,172164-45880,,"BOLT  6X 16",2,,,,,,,,,,,,,,,,,
5,1,,172187-61420,,"HANDLE, LOCK",1,,,,,,,,,,,,,,,,,
6,1,,172187-61600,,GRILLE,1,,,,,,,,,,,,,,,,,
7,1,,172187-61690,,VENTILATOR,1,,,,,,,,,,,,,,,,,
8,1,,172187-61700,,"DUCT C",1,,,,,,,,,,,,,,,,,
9,1,,172187-61750,,"DUCT D",1,,,,,,,,,,,,,,,,,
10,1,,172187-63200,,"COVER R",1,,,,,,,,,,,,,,,,,
11,1,,172519-63240,,"BOLT  8X 16",6,,,,,,,,,,,,,,,,,
12,1,,172158-78250,,"CLAMP 45",1,,,,,,,,,,,,,,,,,
13,1,,22137-100000,,"WASHER 10,POLISHED",1,,,,,,,,,,,,,,,,,
14,1,,22137-100000,,"WASHER 10,POLISHED",2,,,,,,,,,,,,,,,,,
15,1,,26013-080162,,"BOLT W/WASHER M8X16",2,,,,,,,,,,,,,,,,,
16,1,,26013-080162,,"BOLT W/WASHER M8X16",2,,,,,,,,,,,,,,,,,
17,1,,26013-080202,,"BOLT W/WASHER M8X20",2,,,,,,,,,,,,,,,,,
18,1,,26013-100202,,"BOLT W/WASHER M10X20",1,,,,,,,,,,,,,,,,,
19,1,,26013-100252,,"BOLT W/WASHER M10X25",2,,,,,,,,,,,,,,,,,
20,1,,26557-050102,,"SCREW M 5X 10",2,,,,,,,,,,,,,,,,,
21,1,,933110-58400,,"GROMMET 43",1,,,,,,,,,,,,,,,,,
```

https://truckmanualshub.com/

Fig. 13 DEFROSTER

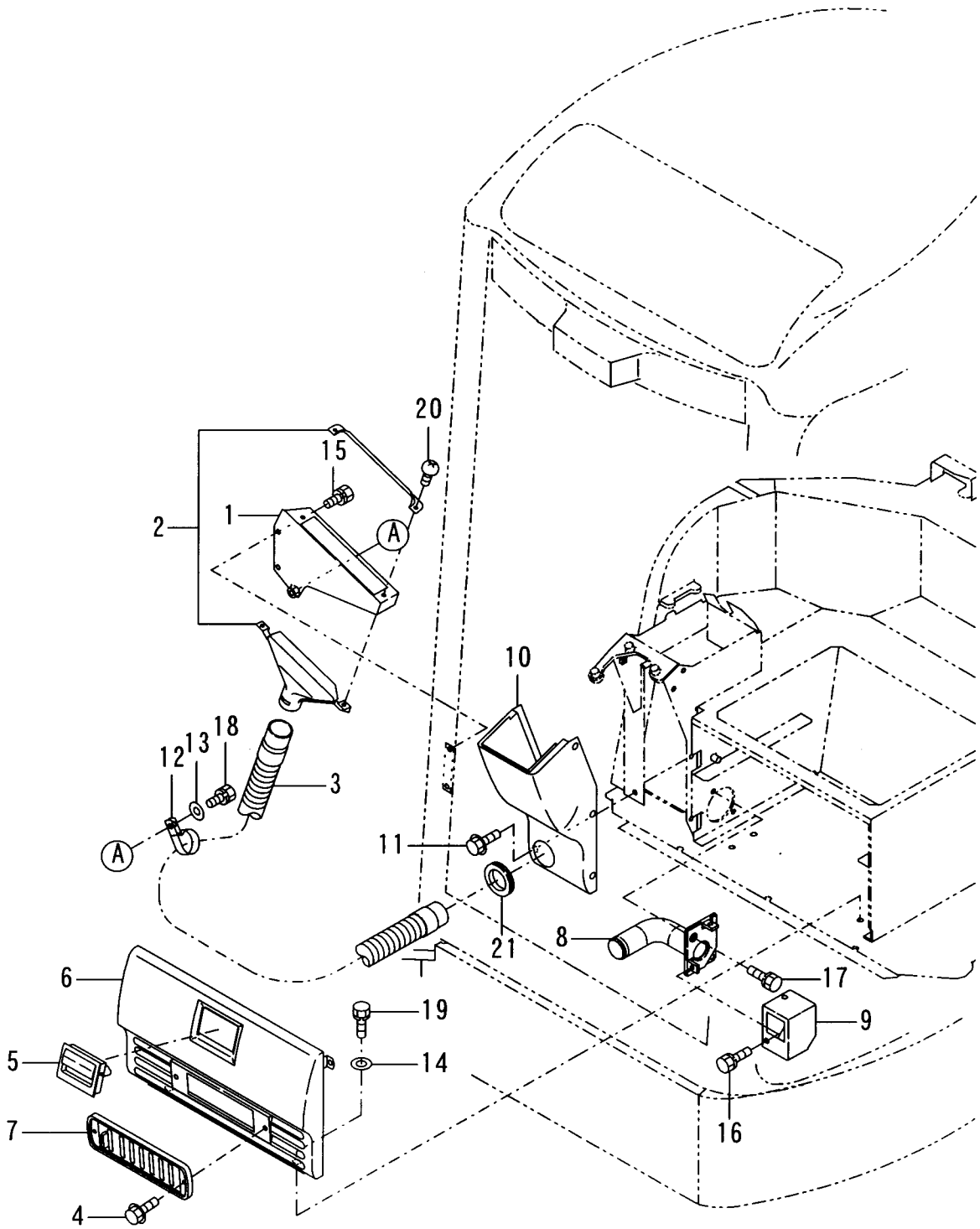

https://truckmanualshub.com/

```
1,1,,172187-17840,,RADIO(EP,1,,,,,,,,,,,,,,,,,,
1-1,1,,172187-17841,,"RADIO (EP,AS",1,,,,,,S,,72187562,M/#01145,,,,,,,,,,,I
2,1,,172187-17810,,ANTENNA,1,,,,,,,,,,,,,,,,,,
3,1,,172187-17820,,"BRACKET F",1,,,,,,,,,,,,,,,,,,
4,1,,172187-17830,,"BRACKET R",1,,,,,,,,,,,,,,,,,,
5,1,,22217-050000,,"SPRING WASHER  5",4,,,,,,,,,,,,,,,,,,
6,1,,22217-080000,,"SPRING WASHER  8",2,,,,,,,,,,,,,,,,,,
7,1,,26116-080162,,"BOLT 8X16",2,,,,,,,,,,,,,,,,,,
8,1,,26557-050082,,"SCREW M 5X  8",4,,,,,,,,,,,,,,,,,,
9,1,,26716-040002,,"NUT M 4",2,,,,,,,,,,,,,,,,,,
```

https://truckmanualshub.com/

Fig. 14 RADIO

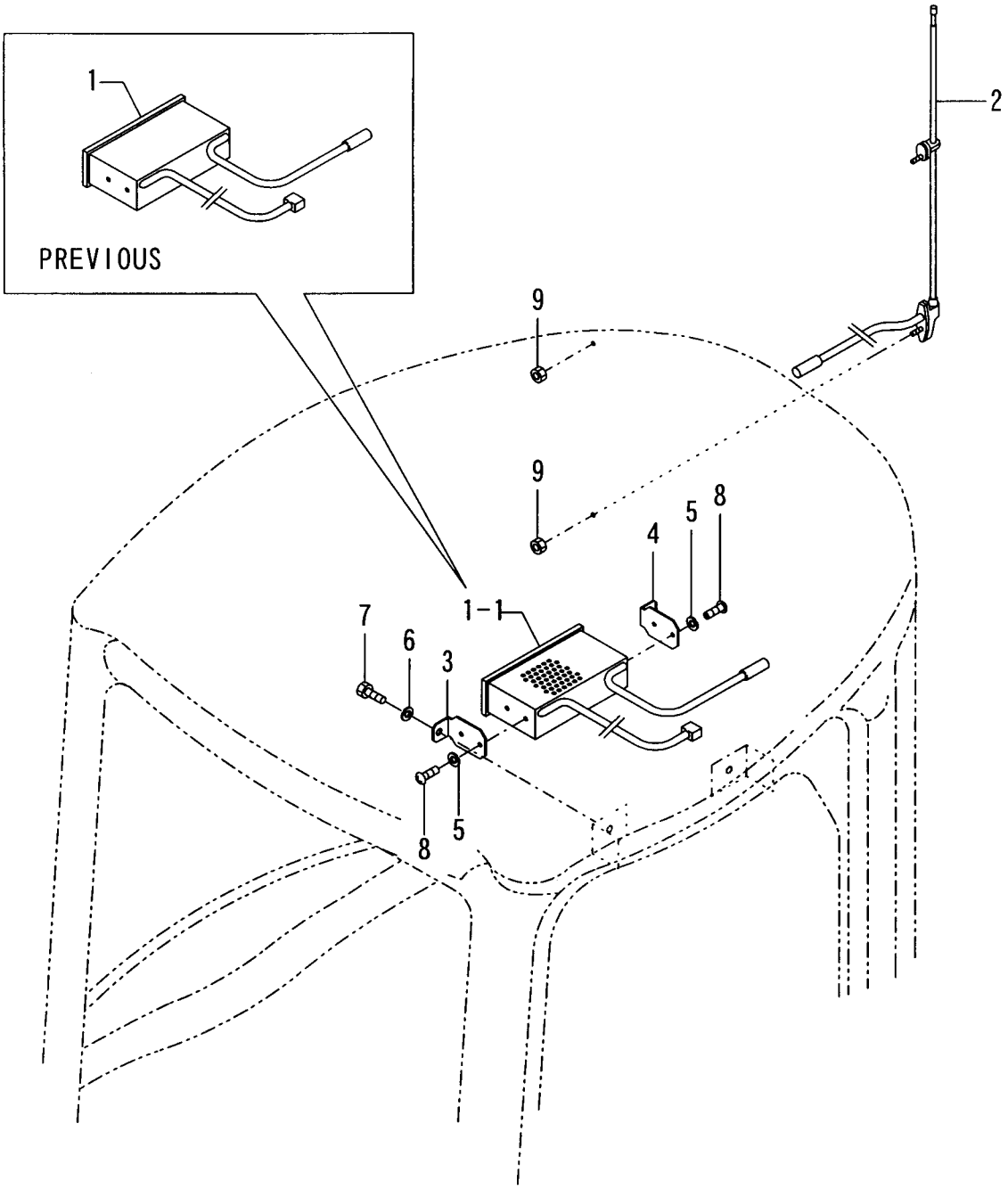

https://truckmanualshub.com/

```
1,1,,172187-29100,,SPROCKET,2,,,,,,,,,,,,,,,,,,
2,1,,22217-140000,,"SPRING WASHER 14",24,,,,,,,,,,,,,,,,,,
3,1,,26116-140352,,"BOLT M14X 35 PLATED",24,,,,,,,,,,,,,,,,,,
4,1,,172187-37301,,"ROLLER COMP.",10,,,,,,,,,,,,,,,,,,
4-1,1,,172187-37302,,"ROLLER, LOWER",10,,,,,,N,,72187550,M/#01041,,,,,,,,,
6,2,,172187-37320,,SHAFT,10,,,,,,,,,,,,,,,,,,
7,2,,172187-37331,,"SEAL COVER A",10,,,,,,,,,,,,,,,,,,
7-1,2,,172187-37332,,"SEAL COVER A",10,,,,,,N,,72187550,M/#01041,,,,,,,,,
8,2,,172187-37341,,"SEAL COVER B",10,,,,,,,,,,,,,,,,,,
8-1,2,,172187-37342,,"SEAL COVER B",10,,,,,,N,,72187550,M/#01041,,,,,,,,,
9,2,,182900-55790,,BUSHING,20,,,,,,,,,,,,,,,,,,,,I
10,2,,182900-55680,,"FLOATING SEAL",20,,,,,,,,,,,,,,,,,,,,I
11,2,,22242-000320,,"CIRCLIP   32",10,,,,,,,,,,,,,,,,,,
12,2,,24311-000320,,"O-RING 1A P-32.0",20,,,,,,,,,,,,,,,,,,
13,2,,933171-13691,,"PLUG PT1/8",10,,,,,,,,,,,,,,,,,,
14,1,,22217-200000,,"SPRING WASHER 20",20,,,,,,,,,,,,,,,,,,
15,1,,26116-200402,,"BOLT M20X40",20,,,,,,,,,,,,,,,,,,
16,1,,22217-160000,,"SPRING WASHER 16",2,,,,,,,,,,,,,,,,,,
17,1,,26116-160852,,"BOLT M16X 85 PLATED",2,,,,,,,,,,,,,,,,,,
18,1,,26716-160002,,"NUT M16",2,,,,,,,,,,,,,,,,,,
19,1,,172187-37501,,"ROLLER ASSY, CARRIER",2,,,,,,,,,,,,,,,,,,
19-1,1,,172187-37502,,"ROLLER ASSY,CARRIER",2,,,,,,N,,72187520,M/#00952,,,,,,,,,
21,2,,172187-37521,,SHAFT,2,,,,,,,,,,,,,,,,,,
22,2,,172187-37530,,"WASHER, CARRIER",2,,,,,,,,72460260,,,,,,,,,,,I
23,2,,172187-37540,,"CAP, CARRIER ROLLER",2,,,,,,,,72460260,,,,,,,,,,,I
24,2,,172187-37550,,SEAL,2,,,,,,,,72460260,,,,,,,,,,,I
25,2,,22242-000300,,"CIRCLIP   30",2,,,,,,,,72460260,,,,,,,,,,,I
26,2,,24105-062064,,"BALL BEARING",4,,,,,,,,72460260,,,,,,,,,,,I
27,2,,933171-13691,,"PLUG PT1/8",2,,,,,,,,72460260,,,,,,,,,,,I
28,2,,22252-000621,,"CIRCRIP 62",2,,,,,,W,,72187520,M/#00952,,,,,,,,,
```

https://truckmanualshub.com/

Fig.15 SPROCKET & ROLLER

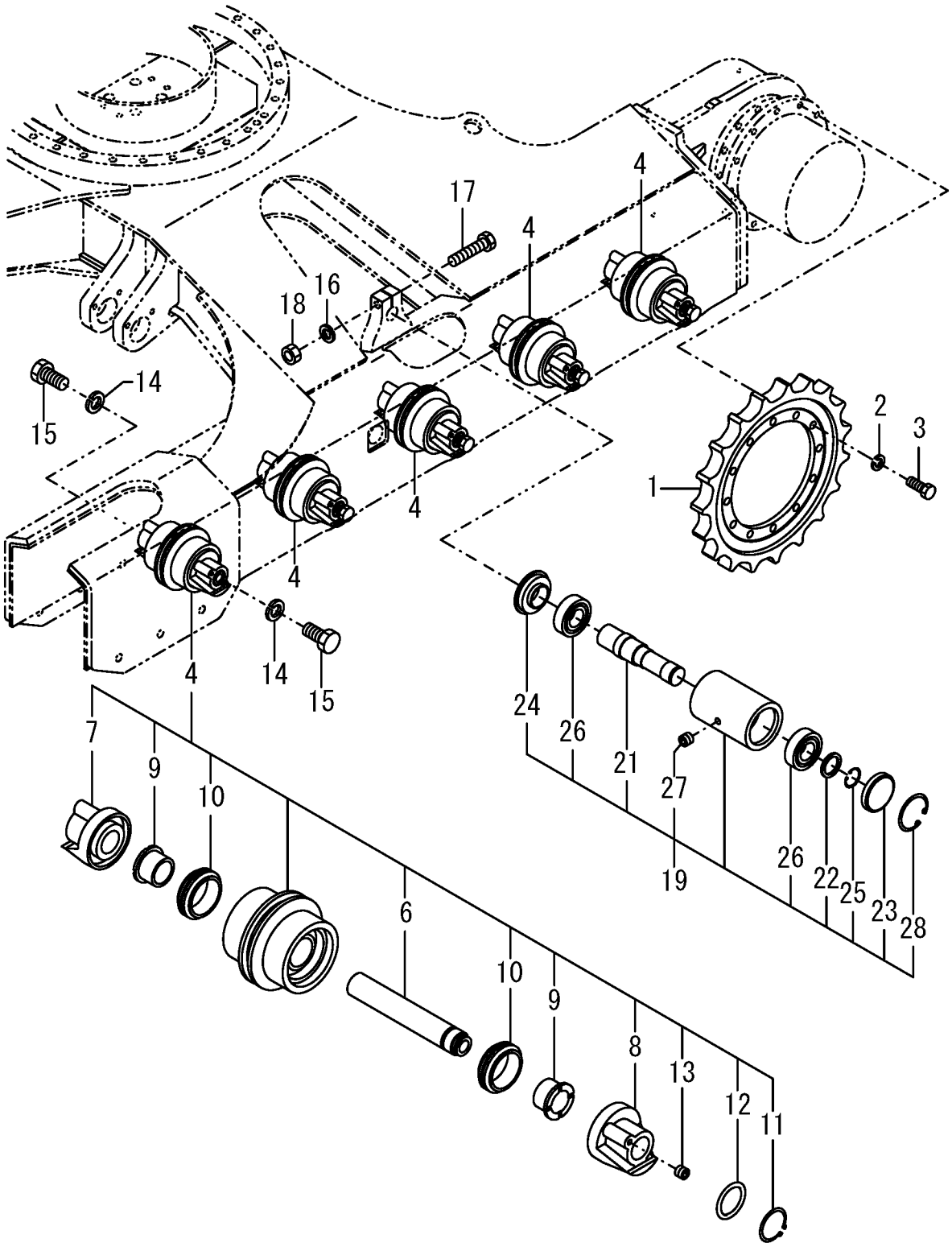

https://truckmanualshub.com/

```
1,1,,772187-37100,,"IDLER ASSY",2,,,,,,,1,,,,,,,,,,,
2,2,,172187-37191,,"IDLER 380",2,,,,,,,,,,,,,,,,,,
4,3,,182900-57380,,BUSHING,4,,,,,,,,,,,,,,,,,,
5,2,,182900-54140,,"FLOATING SEAL ASS'Y",4,,,,,,,,,,,,,,,,,,
6,2,,182900-55720,,"IDLER SEAL COVER",4,,,,,,,,,,,,,,,,,,
7,2,,182900-55730,,SHAFT,2,,,,,,,,,,,,,,,,,,
8,2,,182900-55740,,"PIN 14",4,,,,,,,,,,,,,,,,,,
9,2,,24311-000380,,"O-RING 1A P-38.0",4,,,,,,,,,,,,,,,,,,
10,2,,933171-13691,,"PLUG PT1/8",2,,,,,,,,,,,,,,,,,,
11,1,,772187-37110,,"IDLER ASSY,IRON",2,,,,,,,2,,,,,,,,,,,
12,2,,172187-37110,,"IDLER 365",2,,,,,,,,,,,,,,,,,,
14,3,,182900-57380,,BUSHING,4,,,,,,,,,,,,,,,,,,
15,2,,182900-54140,,"FLOATING SEAL ASS'Y",4,,,,,,,,,,,,,,,,,,,
16,2,,182900-55720,,"IDLER SEAL COVER",4,,,,,,,,,,,,,,,,,,
17,2,,182900-55730,,SHAFT,2,,,,,,,,,,,,,,,,,,
18,2,,182900-55740,,"PIN 14",4,,,,,,,,,,,,,,,,,,
19,2,,24311-000380,,"O-RING 1A P-38.0",4,,,,,,,,,,,,,,,,,,
20,2,,933171-13691,,"PLUG PT1/8",2,,,,,,,,,,,,,,,,,,
21,1,,172187-37700,,"ADJUST, CRAWLER",2,,,,,,,,,,,,,,,,,,
22,1,,172162-37770,,"TUBE COMP.,ADJUSTER",2,,,,,,,,,,,,,,,,,,,
23,1,,172162-37800,,PISTON,2,,,,,,,,,,,,,,,,,,
24,1,,172162-37810,,"PLATE,ADJUSTER",2,,,,,,,,,,,,,,,,,,
25,1,,172122-37843,,"VALVE ASSY, NIPPLE",2,,,,,,,,,,,,,,,,,,
26,2,,24315-000140,,"O-RING 1B P-14.0",2,,,,,,,,,,,,,,,,,,
27,2,,24761-020000,,"NIPPLE PT1/8,GREASE",2,,,,,,,,,,,,,,,,,,
28,1,,22217-140000,,"SPRING WASHER 14",8,,,,,,,,,,,,,,,,,,
29,1,,24325-000550,,"O-RING 1B G-55.0",2,,,,,,,,,,,,,,,,,,
30,1,,26116-140602,,"BOLT M14X 60 PLATED",8,,,,,,,,,,,,,,,,,,
31,1,,933126-50500,,"SEAL 5569811, DKB",2,,,,,,,,,,,,,,,,,,
32,1,,933138-12101,,"RING G55,BACKUP",2,,,,,,,,,,,,,,,,,,
```

https://truckmanualshub.com/

Fig.16 IDLER & ADJUST

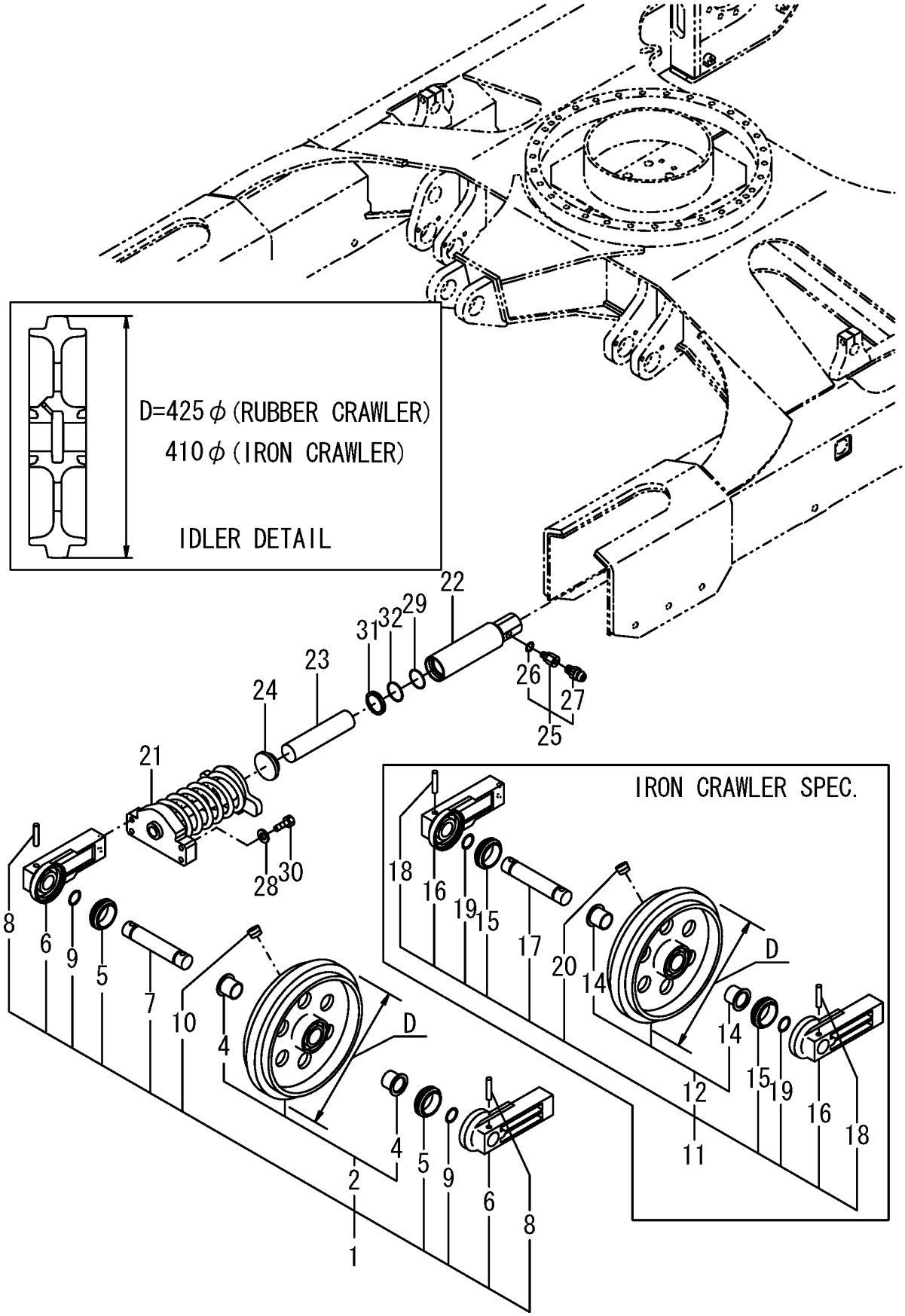

https://truckmanualshub.com/

```
1,1,,172187-38100,,"TRACK SHOE(1 MACHINE",1,,,,,,Z,1,72187680,M/#05396,,,,,,,,,
3,3,,172187-38130,,SHOE,38,,,,,,,,,,,,,,,,,,
4,3,,172187-38140,,BUSH,2,,,,,,,,,,,,,,,,,,
5,3,,182900-54080,,"NUT,SHOE",152,,,,,,,,,,,,,,,,,,
6,3,,182900-55800,,BUSHING,36,,,,,,,,,,,,,,,,,,
9,3,,182900-57550,,PIN,36,,,,,,,,,,,,,,,,,,
10,3,,182900-57560,,PIN,2,,,,,,,,,,,,,,,,,,
11,3,,182900-57570,,SEAL,72,,,,,,,,,,,,,,,,,,
12,3,,182900-57580,,SEAL,4,,,,,,,,,,,,,,,,,,
13,3,,182900-57590,,"BOLT,SHOE",152,,,,,,,,,,,,,,,,,,
15,3,,172187-38130,,SHOE,40,,,,,,,,,,,,,,,,,,
16,3,,172187-38140,,BUSH,2,,,,,,,,,,,,,,,,,,
17,3,,182900-54080,,"NUT,SHOE",160,,,,,,,,,,,,,,,,,,
18,3,,182900-55800,,BUSHING,38,,,,,,,,,,,,,,,,,,
21,3,,182900-57550,,PIN,38,,,,,,,,,,,,,,,,,,
22,3,,182900-57560,,PIN,2,,,,,,,,,,,,,,,,,,
23,3,,182900-57570,,SEAL,76,,,,,,,,,,,,,,,,,,
24,3,,182900-57580,,SEAL,4,,,,,,,,,,,,,,,,,,
25,3,,182900-57590,,"BOLT,SHOE",160,,,,,,,,,,,,,,,,,,
26,1,,172187-38150,,"TRACK SHOE 450 ASSY",2,,,,,,W,2,72187680,M/#05396,,,,,,,,,
27,2,,172455-38120,,"LINK ASSY",2,,,,,,,,,,,,,,,,,,
32,3,,172455-38220,,"BUSH, TRACK",76,,,,,,,,,,,,,,,,,,
33,3,,172455-38230,,"PIN, TRACK",76,,,,,,,,,,,,,,,,,,
34,3,,172455-38240,,"BUSH, MASTER",2,,,,,,,,,,,,,,,,,,
35,3,,172455-38250,,"PIN, MASTER",2,,,,,,,,,,,,,,,,,,
36,3,,172455-38260,,COLLER,4,,,,,,,,,,,,,,,,,,
37,3,,172455-38270,,"COTTER PIN",2,,,,,,,,,,,,,,,,,,
38,3,,172455-38280,,SEAL,152,,,,,,,,,,,,,,,,,,
39,2,,172187-38160,,"TRACK SHOE",78,,,,,,,,,,,,,,,,,,
40,2,,172455-38160,,NUT,156,,,,,,,,,,,,,,,,,,
41,2,,172455-38160,,NUT,156,,,,,,,,,,,,,,,,,,
42,2,,172455-38170,,BOLT,156,,,,,,,,,,,,,,,,,,
43,2,,172455-38170,,BOLT,156,,,,,,,,,,,,,,,,,,
44,1,,182900-57510,,SHOE,2,,,,,,,3,,,,,,,,,,
44-1,1,,172187-38601,,"CRAWLER, RUBBER",2,,,,,,R,3,72187538,M/#00995,,,,,,,,
45,1,,172187-38300,,"TRACK ASSY, MASTER",1,,,,,,W,,24780170,*2003.09,,,,,,,,,,I
46,2,,172187-38160,,"TRACK SHOE",1,,,,,,W,,24780170,*2003.09,,,,,,,,,,I
47,2,,172455-38160,,NUT,4,,,,,,W,,24780170,*2003.09,,,,,,,,,,I
48,2,,172455-38170,,BOLT,4,,,,,,W,,24780170,*2003.09,,,,,,,,,,I
51,3,,172455-38240,,"BUSH, MASTER",1,,,,,,W,,24780170,*2003.09,,,,,,,,,,I
```

https://truckmanualshub.com/

P/C NEWS No:Y00S3631-3
PUBLISHED:2003/09

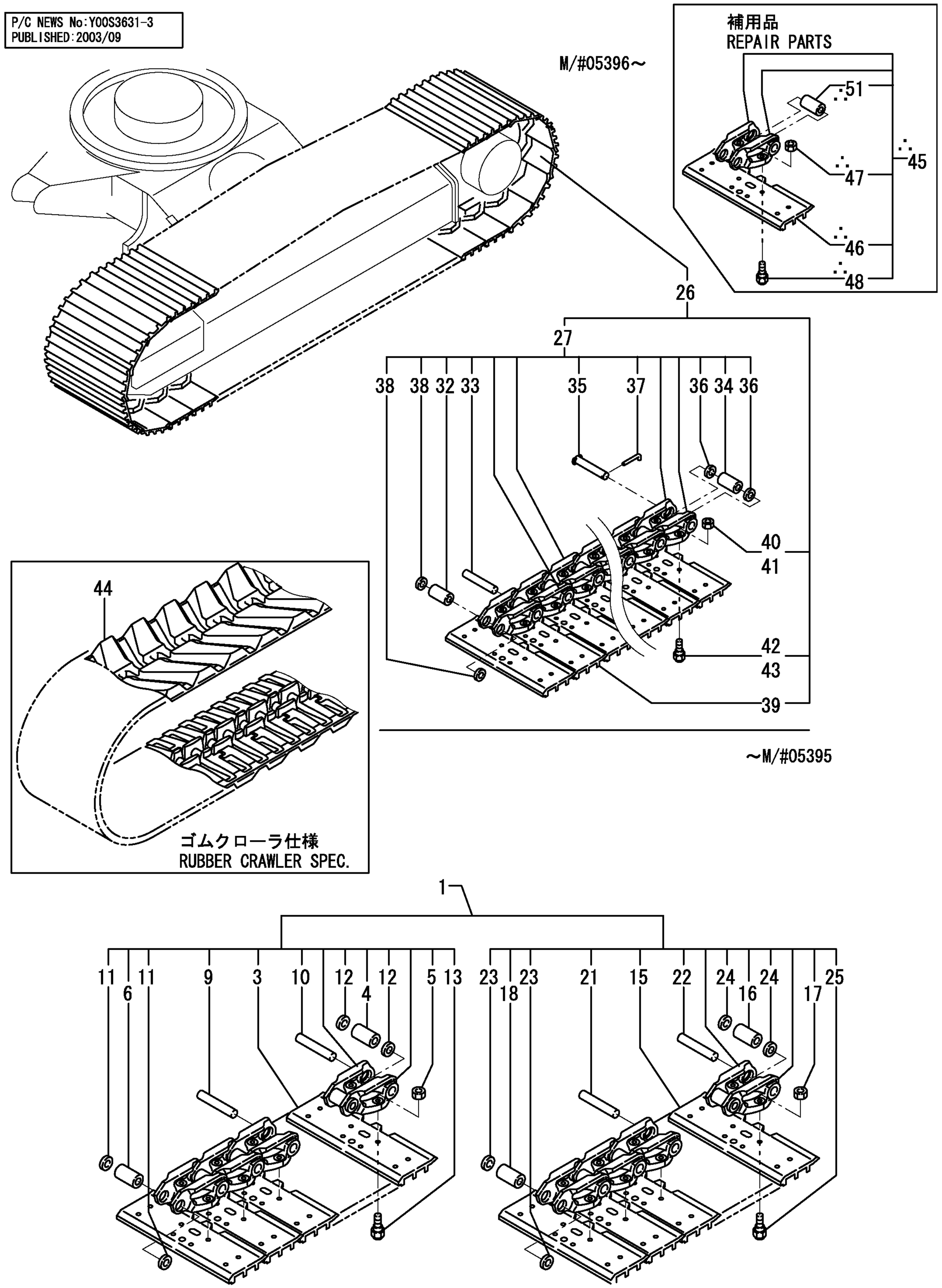

∴MARKED PART HAS BEEN CHANGED(ADDED).

https://truckmanualshub.com/

```
1,1,,172187-17180,,BRACKET,1,,,,,,,,,,,,,,,,,
2,1,,1D4070-23580,,"GRIP,RED ROUND",1,,,,,,,,,,,,,,,,,
3,1,,172187-45400,,"LINK STAND",1,,,,,,,,,,,,,,,,,
4,1,,172124-46200,,"O-RING 27X5.7",2,,,,,,,,,,,,,,,,,
5,1,,172187-46600,,"FOOTLEST L",1,,,,,,,,,,,,,,,,,
6,1,,172187-46651,,"LEVER STNAD",1,,,,,,,,,,,,,,,,,
7,2,,172141-41370,,"BUSH 2015",2,,,,,,,,,,,,,,,,,
8,2,,24550-025150,,"BUSH 25X15",2,,,,,,,,,,,,,,,,,
9,1,,172187-46800,,"LOCK ARM CMP",1,,,,,,,,,,,,,,,,,
10,1,,172187-46820,,"HOSE GUIDE L",1,,,,,,,,,,,,,,,,,
11,1,,172165-47680,,"LEVER L",1,,,,,,,,,,,,,,,,,
12,1,,172165-47550,,BUSH,1,,,,,,,,,,,,,,,,,
13,1,,172165-47621,,"GUIDE (L) ASSY, LOCK",1,,,,,,,,,,,,,,,,,
14,1,,172187-47010,,"BRACKET R,EP",1,,,,,,,,,,,,,,,,,
15,1,,172165-47801,,"SPRING, GAS",1,,,,,,,,,,,,,,,,,
16,1,,172165-47980,,"SHIM 42X25.5X0.5",2,,,,,,,,,,,,,,,,,
17,1,,172165-47990,,"WASHER 25.5X42",1,,,,,,,,,,,,,,,,,
18,1,,1A1380-56661,,"SPRING,ROTARY RETURN",1,,,,,,,,,,,,,,,,,
19,1,,22137-080000,,"WASHER 8, POLISHED",2,,,,,,,,,,,,,,,,,
20,1,,22137-080000,,"WASHER 8, POLISHED",2,,,,,,,,,,,,,,,,,
21,1,,22242-000250,,"CIRCLIP 25S",1,,,,,,,,,,,,,,,,,
22,1,,22272-000070,,"CIRCLIP E- 7",1,,,,,,,,,,,,,,,,,
23,1,,22351-030032,,"SPRING PIN 3X32",1,,,,,,,,,,,,,,,,,
24,1,,22351-060040,,"SPRING PIN 6X40",1,,,,,,,,,,,,,,,,,
25,1,,22417-200200,,"COTTER PIN 2.0X20",2,,,,,,,,,,,,,,,,,
26,1,,24311-000340,,"O-RING 1A P-34.0",2,,,,,,,,,,,,,,,,,
27,1,,24761-020000,,"NIPPLE PT1/8,GREASE",2,,,,,,,,,,,,,,,,,
28,1,,26013-080162,,"BOLT W/WASHER M8X16",3,,,,,,,,,,,,,,,,,
29,1,,26013-080162,,"BOLT W/WASHER M8X16",6,,,,,,,,,,,,,,,,,
30,1,,26013-080202,,"BOLT W/WASHER M8X20",2,,,,,,,,,,,,,,,,,
31,1,,26013-080202,,"BOLT W/WASHER M8X20",2,,,,,,,,,,,,,,,,,
32,1,,26013-100202,,"BOLT W/WASHER M10X20",5,,,,,,,,,,,,,,,,,
33,1,,26013-100202,,"BOLT W/WASHER M10X20",2,,,,,,,,,,,,,,,,,
34,1,,172187-47020,,"BRACKET L,EP",1,,,,,,,,,,,,,,,,,
35,1,,26013-060202,,"BOLT M 6X 20",8,,,,,,,,,,,,,,,,,
```

https://truckmanualshub.com/

Fig. 18 CONTROL EQUIP. (LEVER STAND & LOCK LEVER)

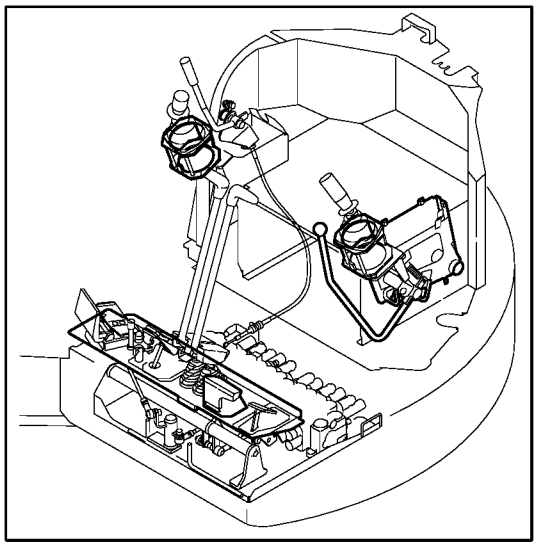

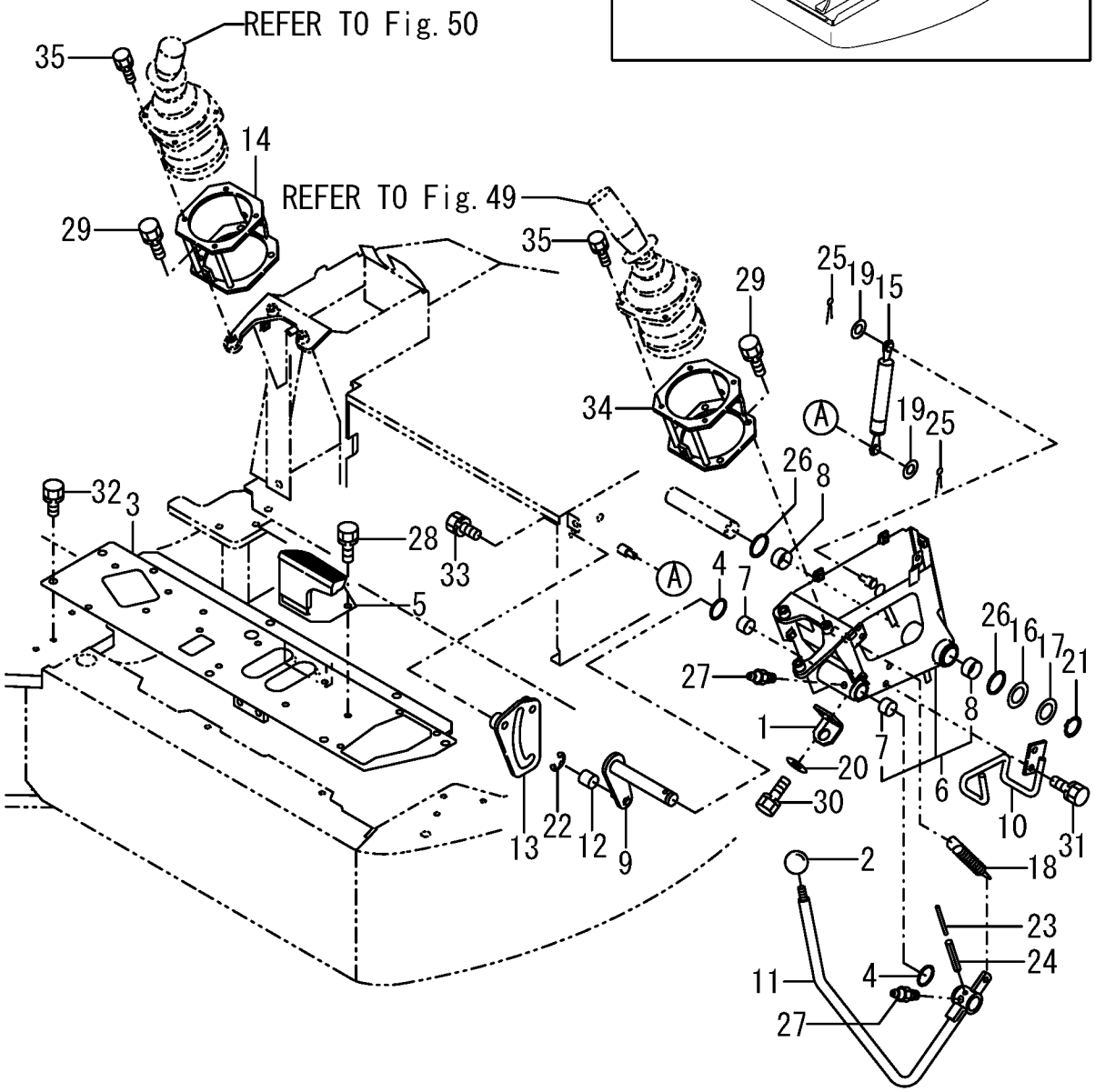

https://truckmanualshub.com/

```
1,1,,172141-41340,,BOOTS,2,,,,,,,,,,,,,,,,,
2,1,,172187-45100,,"LEVER L COMP.",1,,,,,,,,,,,,,,,,,
3,2,,172141-41370,,"BUSH 2015",2,,,,,,,,,,,,,,,,,
5,1,,172187-45150,,"LEVER R CMP.",1,,,,,,,,,,,,,,,,,
6,2,,172141-41370,,"BUSH 2015",2,,,,,,,,,,,,,,,,,
8,1,,172187-45870,,"GRIP L, DRIVE",1,,,,,,,,,,,,,,,,,
9,1,,172187-45880,,"GRIP R, DRIVE",1,,,,,,,,,,,,,,,,,
10,1,,22137-040000,,"WASHER 4, POLISHED",2,,,,,,,,,,,,,,,,,
11,1,,26116-100404,,"BOLT M10X 40 PLATED",2,,,,,,,,,,,,,,,,,
12,1,,26116-100604,,"BOLT M10X 60 PLATED",2,,,,,,,,,,,,,,,,,
13,1,,26587-040122,,"SCREW M 4X 12",2,,,,,,,,,,,,,,,,,
14,1,,26716-100002,,"NUT 10",4,,,,,,,,,,,,,,,,,
15,1,,172187-45190,,SHAFT,1,,,,,,,,,,,,,,,,,
16,1,,172124-46200,,"O-RING 27X5.7",3,,,,,,,,,,,,,,,,,
17,1,,24761-020000,,"NIPPLE PT1/8,GREASE",2,,,,,,,,,,,,,,,,,
18,1,,26013-100252,,"BOLT W/WASHER M10X25",2,,,,,,,,,,,,,,,,,
19,1,,172187-45220,,"PEDAL L CMP(GRAY:72)",1,,,,,,,,,,,,,,,,,
20,1,,172187-45250,,"PEDAL PAD L",1,,,,,,,,,,,,,,,,,
21,1,,172187-45260,,"PEDAL R CMP(GRAY:72)",1,,,,,,,,,,,,,,,,,
22,1,,172187-45280,,"PEDAL PAD R",1,,,,,,,,,,,,,,,,,
23,1,,26013-060302,,"BOLT M 6X 30",4,,,,,,,,,,,,,,,,,
24,1,,172164-45230,,"ROD 135 ASSY",2,,,,,,,,,,,,,,,,,
25,1,,172122-46590,,"ELBALL 8",2,,,,,,,,,,,,,,,,,
26,1,,22137-080000,,"WASHER 8, POLISHED",2,,,,,,,,,,,,,,,,,
27,1,,22417-160160,,"COTTER PIN 1.6X16",2,,,,,,,,,,,,,,,,,
28,1,,26051-080002,,"NUT M 8",4,,,,,,,,,,,,,,,,,
29,1,,933110-54100,,"PIN 4.75X14",2,,,,,,,,,,,,,,,,,
```

https://truckmanualshub.com/

Fig. 19 CONTROL EQUIP. (DRIVE)

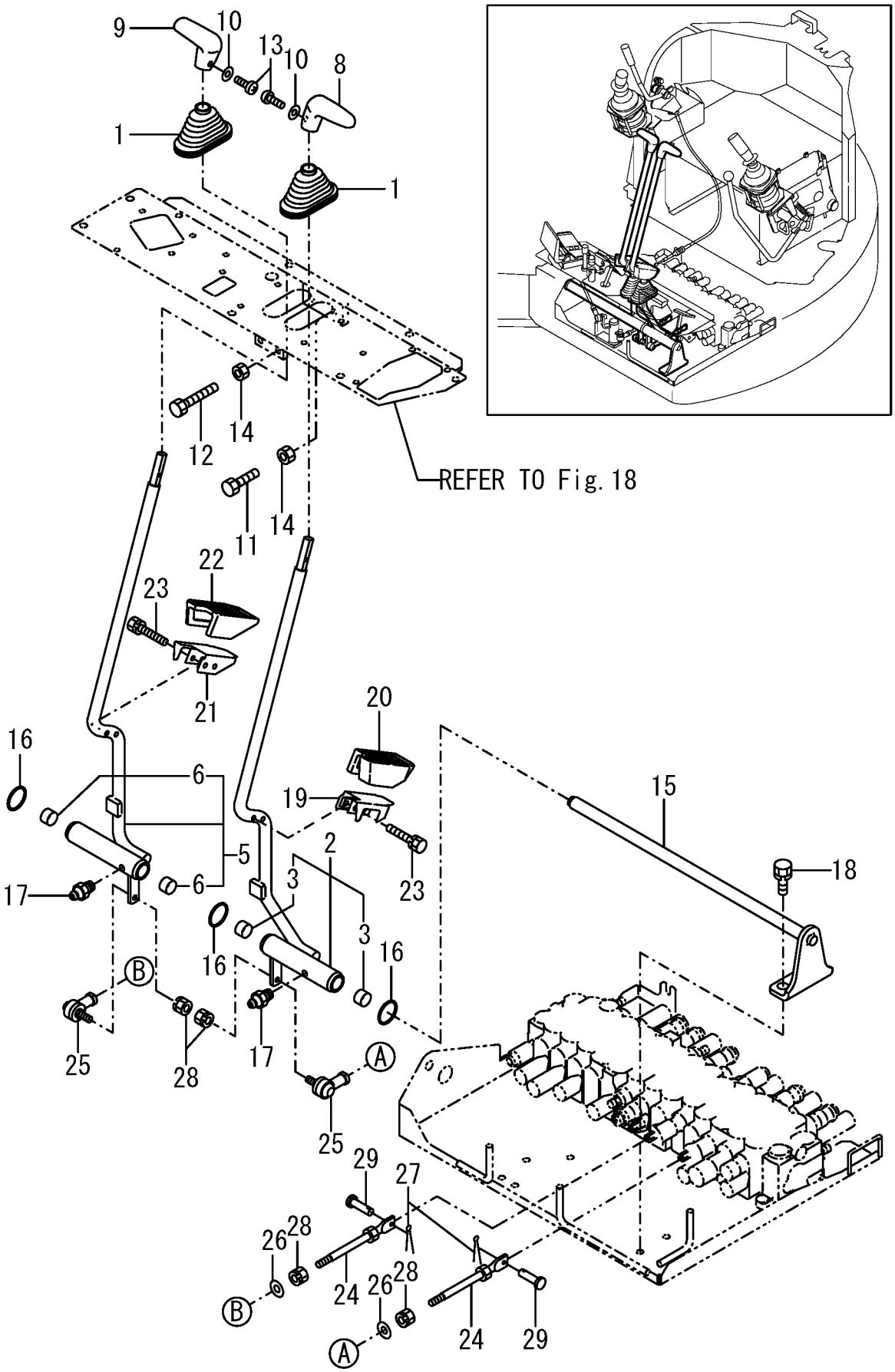

https://truckmanualshub.com/

```
1,1,,172187-45530,,"SHAFT CMP",1,,,,,,,,,,,,,,,,,
2,1,,172187-45560,,"LINK ASSY, PEDAL",1,,,,,,,,,,,,,,,,,
3,2,,172141-41360,,"BUSH 1415",2,,,,,,,,,,,,,,,,,
5,1,,172187-45690,,"SHAFT ASSY, SWING",1,,,,,,,,,,,,,,,,,
6,1,,1A1040-45890,,"WASHER 10 36 4.5",1,,,,,,,,,,,,,,,,,
7,1,,172124-46200,,"O-RING 27X5.7",2,,,,,,,,,,,,,,,,,
8,1,,22137-080000,,"WASHER 8, POLISHED",1,,,,,,,,,,,,,,,,,
9,1,,22217-080000,,"SPRING WASHER  8",1,,,,,,,,,,,,,,,,,
10,1,,22217-100000,,"SPRING WASHER 10",1,,,,,,,,,,,,,,,,,
11,1,,24311-000210,,"O-RING 1A P-21.0",2,,,,,,,,,,,,,,,,,
12,1,,24761-020000,,"NIPPLE PT1/8,GREASE",2,,,,,,,,,,,,,,,,,
13,1,,933110-54100,,"PIN 4.75X14",1,,,,,,,,,,,,,,,,,
14,1,,26013-080162,,"BOLT W/WASHER M8X16",3,,,,,,,,,,,,,,,,,
15,1,,26013-100252,,"BOLT W/WASHER M10X25",2,,,,,,,,,,,,,,,,,
16,1,,26116-080304,,"BOLT M8 X 30 PLATED",2,,,,,,,,,,,,,,,,,
17,1,,26116-100202,,"BOLT M10X 20 PLATED",1,,,,,,,,,,,,,,,,,
18,1,,26716-080002,,"NUT M 8",1,,,,,,,,,,,,,,,,,
19,1,,26716-080002,,"NUT M 8",2,,,,,,,,,,,,,,,,,
20,1,,172187-45500,,"PEDAL ASSY, SWING",1,,,,,,,,,,,,,,,,,
21,1,,172187-45650,,"SHAFT, PEDAL COVER",1,,,,,,,,,,,,,,,,,
22,1,,172187-45720,,"COVER ASSY, PEDAL",1,,,,,,,,,,,,,,,,,
23,1,,172187-45760,,"COVER PAD",1,,,,,,,,,,,,,,,,,
24,1,,172157-45990,,"BOOTS, PEDAL",1,,,,,,,,,,,,,,,,,
25,1,,172165-46340,,BOLT,2,,,,,,,,,,,,,,,,,
26,1,,22137-100000,,"WASHER 10,POLISHED",2,,,,,,,,,,,,,,,,,
27,1,,22417-250200,,"COTTER PIN 2.5X20",2,,,,,,,,,,,,,,,,,
28,1,,194200-37780,,"LS-NUT 8",1,,,,,,,,,,,,,,,,,
29,1,,172734-41300,,"BALL, LINK",1,,,,,,,,,,,,,,,,,
30,1,,172187-45770,,"ROD 178",1,,,,,,,,,,,,,,,,,
31,1,,172168-45880,,"ROD 230",1,,,,,,,,,,,,,,,,,
32,1,,172122-46590,,"ELBALL 8",2,,,,,,,,,,,,,,,,,
33,1,,22137-080000,,"WASHER 8, POLISHED",3,,,,,,,,,,,,,,,,,
34,1,,26051-080002,,"NUT M 8",5,,,,,,,,,,,,,,,,,
35,1,,22417-160160,,"COTTER PIN 1.6X16",1,,,,,,,,,,,,,,,,,
36,1,,172187-45600,,BRACKET,1,,,,,,,,,,,,,,,,,
37,1,,172187-45660,,"LINK ASSY, SWING",1,,,,,,,,,,,,,,,,,
38,2,,172141-41370,,"BUSH 2015",2,,,,,,,,,,,,,,,,,
```

https://truckmanualshub.com/

Fig.20 CONTROL EQUIP. (SWING)

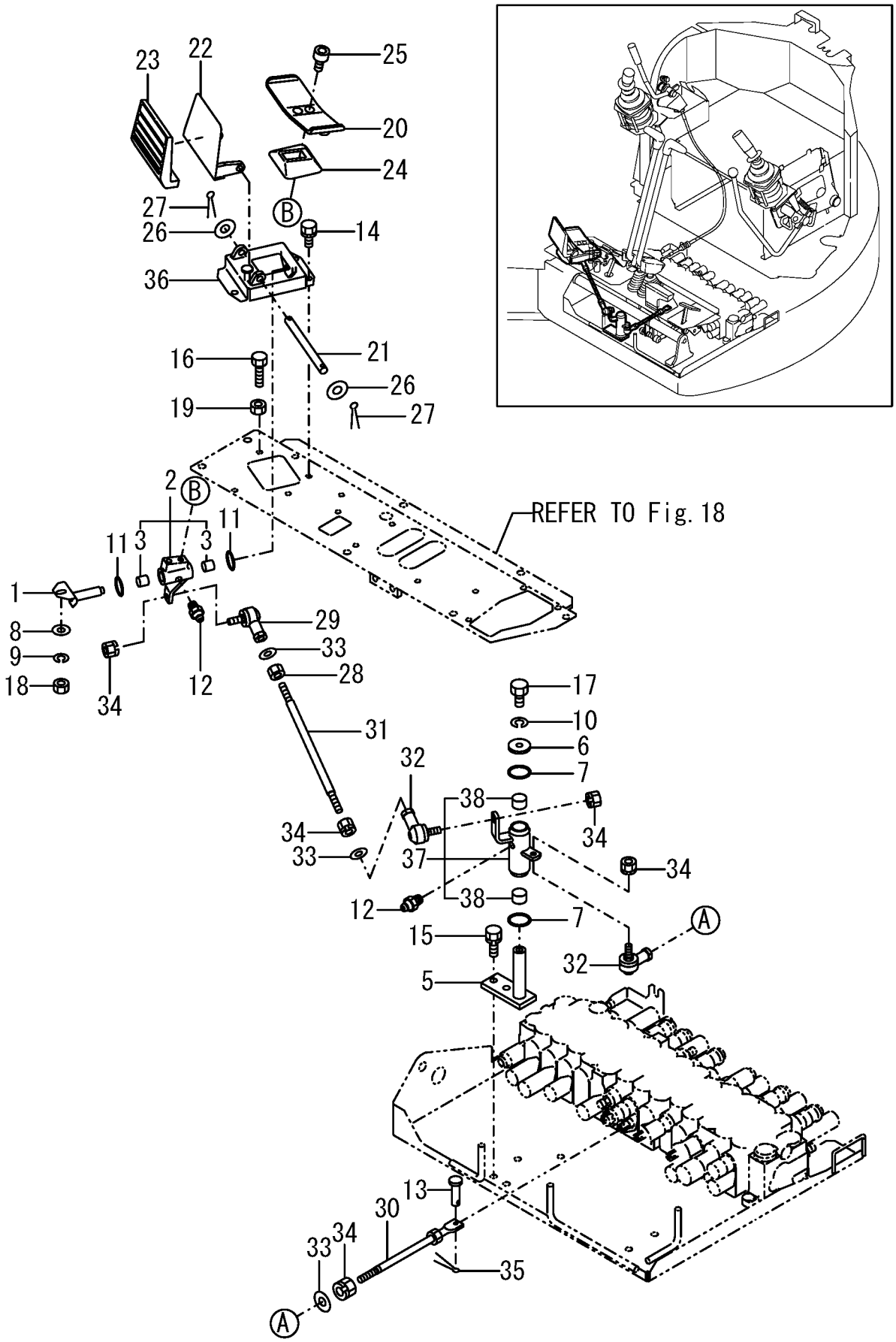

https://truckmanualshub.com/

```
1,1,,172964-12140,,GRIP(BLACK,1,,,,,,,,,,,,,,,,,
2,1,,172187-45810,,"LEVER ASSY,EP",1,,,,,,,,,,,,,,,,,
3,1,,172187-47110,,"BRACKET ASSY,EP",1,,,,,,,,,,,,,,,,,
4,2,,172141-41360,,"BUSH 1415",2,,,,,,,,,,,,,,,,,
6,1,,24311-000210,,"O-RING 1A P-21.0",2,,,,,,,,,,,,,,,,,
7,1,,26013-100202,,"BOLT W/WASHER M10X20",2,,,,,,,,,,,,,,,,,,
8,1,,26347-100002,,"U-NUT M10",1,,,,,,,,,,,,,,,,,
9,1,,26450-080352,,"BOLT M 8X 35",2,,,,,,,,,,,,,,,,,
10,1,,26716-080002,,"NUT M 8",2,,,,,,,,,,,,,,,,,
11,1,,172187-45800,,"CABEL, BLADE",1,,,,,,,,,,,,,,,,,
12,1,,22417-160160,,"COTTER PIN 1.6X16",1,,,,,,,,,,,,,,,,,
13,1,,26051-080002,,"NUT M 8",1,,,,,,,,,,,,,,,,,
14,1,,933110-54100,,"PIN 4.75X14",1,,,,,,,,,,,,,,,,,
15,1,,172187-47140,,"LINK ASSY, BLADE EP",1,,,,,,,,,,,,,,,,,
16,1,,22117-100000,,"WASHER 10",1,,,,,,,,,,,,,,,,,
```

https://truckmanualshub.com/

Fig.21 CONTROL EQUIP. (BLADE)

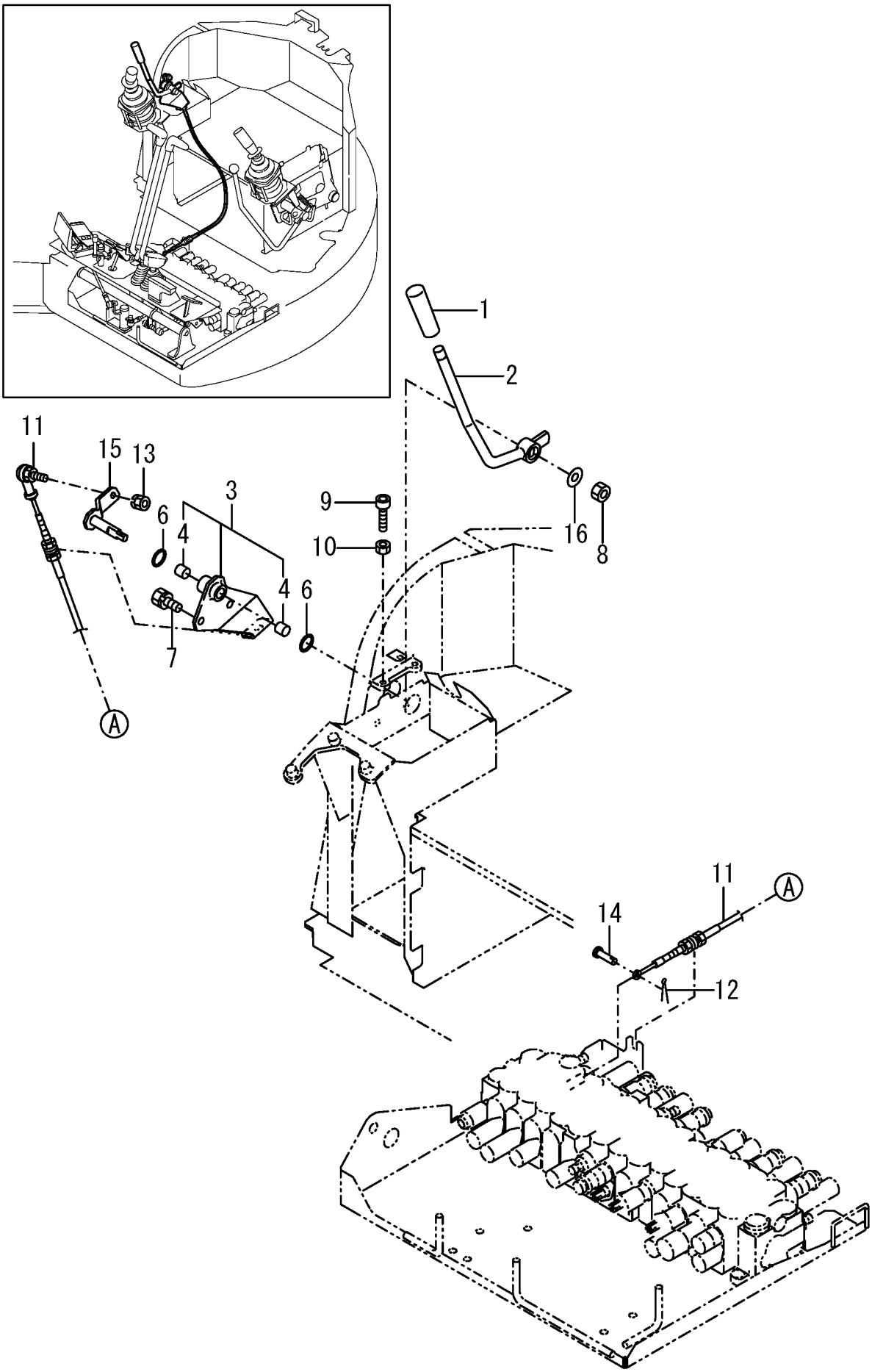

https://truckmanualshub.com/

```
1,1,,172162-12480,,"SPRING,RETURN",1,,,,,,,,,,,,,,,,,
2,1,,1A1040-43900,,"SPRING WASHER",1,,,,,,,,,,,,,,,,,
3,1,,172187-45900,,"PEDAL ASSY",1,,,,,,,,,,,,,,,,,
4,1,,172187-45930,,"BRACKET ASSY, PEDAL",1,,,,,,,,,,,,,,,,,,
5,1,,172187-45960,,"BRACKET ASSY, PEDAL",1,,,,,,,,,,,,,,,,,,
6,2,,172141-41360,,"BUSH 1415",2,,,,,,,,,,,,,,,,,
8,1,,172187-45990,,"PEDAL PAD",1,,,,,,,,,,,,,,,,,
9,1,,24311-000210,,"O-RING 1A P-21.0",2,,,,,,,,,,,,,,,,,
10,1,,26013-080162,,"BOLT W/WASHER M8X16",2,,,,,,,,,,,,,,,,,,
11,1,,26013-080162,,"BOLT W/WASHER M8X16",3,,,,,,,,,,,,,,,,,,
12,1,,26013-080202,,"BOLT W/WASHER M8X20",1,,,,,,,,,,,,,,,,,,
```

https://truckmanualshub.com/

Fig.22 CONTROL EQUIP.(LOW-HIGH PEDAL)

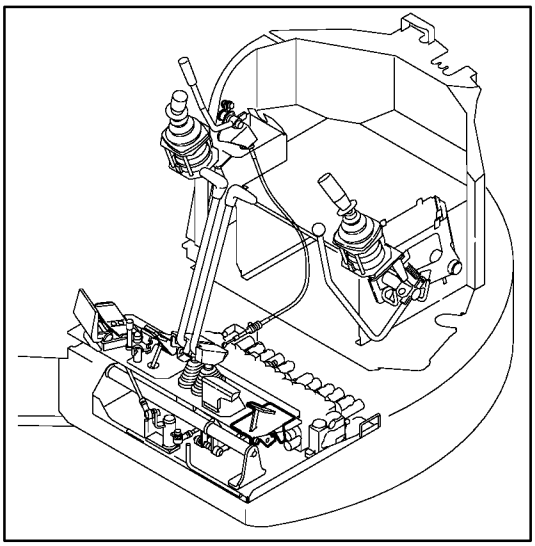

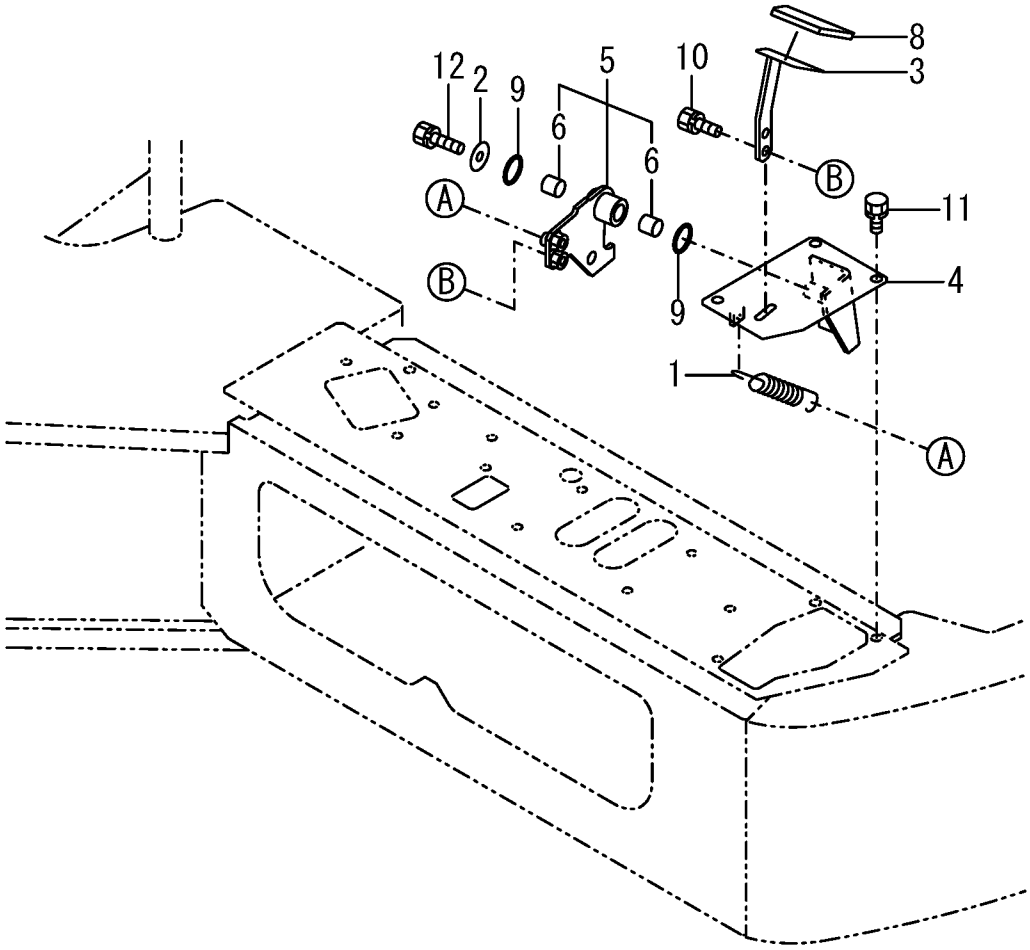

https://truckmanualshub.com/

```
1,1,,172187-03200,,"LABEL,P.T.O. LOCK",1,,,,,,,,,,,,,,,,,
2,1,,172068-28490,,"SPRING  8",2,,,,,,,,,,,,,,,,,
3,1,,172068-28490,,"SPRING  8",2,,,,,,,,,,,,,,,,,
4,1,,172110-45150,,"PIN (Q)",1,,,,,,,,,,,,,,,,,
5,1,,1A1040-45890,,"WASHER 10 36 4.5",1,,,,,,,,,,,,,,,,,
6,1,,172187-46110,,"LINK ASSY, PTO",1,,,,,,,,,,,,,,,,,
7,2,,172141-41370,,"BUSH 2015",2,,,,,,,,,,,,,,,,,
9,1,,172187-46140,,BRACKET,1,,,,,,,,,,,,,,,,,
10,1,,172187-46190,,"ROD A ASSY",1,,,,,,,,,,,,,,,,,
11,1,,172124-46200,,"O-RING 27X5.7",2,,,,,,,,,,,,,,,,,
12,1,,172187-46210,,ROD,1,,,,,,,,,,,,,,,,,
13,1,,172187-46220,,"PEDAL A ASSY(GRAY:73",1,,,,,,,,,,,,,,,,,
14,2,,172141-41360,,"BUSH 1415",2,,,,,,,,,,,,,,,,,
16,1,,172187-46290,,"PEDAL B CMP(GRAY:73)",1,,,,,,,,,,,,,,,,,
17,1,,172187-46340,,"PEDAL BASE",1,,,,,,,,,,,,,,,,,
18,1,,172187-46400,,"BRACKET    (GRAY:73)",1,,,,,,,,,,,,,,,,,
19,1,,172187-46430,,SHAFT,1,,,,,,,,,,,,,,,,,
20,1,,172187-46440,,"PLATE ASSY",1,,,,,,,,,,,,,,,,,
21,1,,172187-46500,,"PEDAL PAD",1,,,,,,,,,,,,,,,,,
22,1,,172122-46590,,"ELBALL 8",2,,,,,,,,,,,,,,,,,
23,1,,172116-46630,,"KNOB, LOCK LEVER",1,,,,,,,,,,,,,,,,,
24,1,,22137-080000,,"WASHER 8, POLISHED",1,,,,,,,,,,,,,,,,,
25,1,,22137-080000,,"WASHER 8, POLISHED",1,,,,,,,,,,,,,,,,,
26,1,,22137-080000,,"WASHER 8, POLISHED",2,,,,,,,,,,,,,,,,,
27,1,,22417-160160,,"COTTER PIN 1.6X16",1,,,,,,,,,,,,,,,,,
28,1,,22417-160160,,"COTTER PIN 1.6X16",1,,,,,,,,,,,,,,,,,
29,1,,24311-000210,,"O-RING 1A P-21.0",2,,,,,,,,,,,,,,,,,
30,1,,24761-050000,,"NIPPLE C,GREASE",1,,,,,,,,,,,,,,,,,
31,1,,26013-080162,,"BOLT W/WASHER M8X16",1,,,,,,,,,,,,,,,,,
32,1,,26013-080162,,"BOLT W/WASHER M8X16",3,,,,,,,,,,,,,,,,,
33,1,,26013-100162,,"BOLT M10X 16",1,,,,,,,,,,,,,,,,,
34,1,,26013-100252,,"BOLT W/WASHER M10X25",2,,,,,,,,,,,,,,,,,
35,1,,26051-080002,,"NUT M 8",4,,,,,,,,,,,,,,,,,
36,1,,26116-080304,,"BOLT M8 X 30 PLATED",1,,,,,,,,,,,,,,,,,
37,1,,26756-080002,,"LOCK NUT M 8 PLATED",2,,,,,,,,,,,,,,,,,
38,1,,26450-080302,,"BOLT M 8X 30",1,,,,,,,,,,,,,,,,,
39,1,,26668-080002,,"CAP NUT M 8",1,,,,,,,,,,,,,,,,,
40,1,,26716-080002,,"NUT M 8",1,,,,,,,,,,,,,,,,,
41,1,,26716-080002,,"NUT M 8",2,,,,,,,,,,,,,,,,,
42,1,,933110-54100,,"PIN 4.75X14",1,,,,,,,,,,,,,,,,,
```

https://truckmanualshub.com/

Fig.23 CONTROL EQUIP. (P.T.O.)

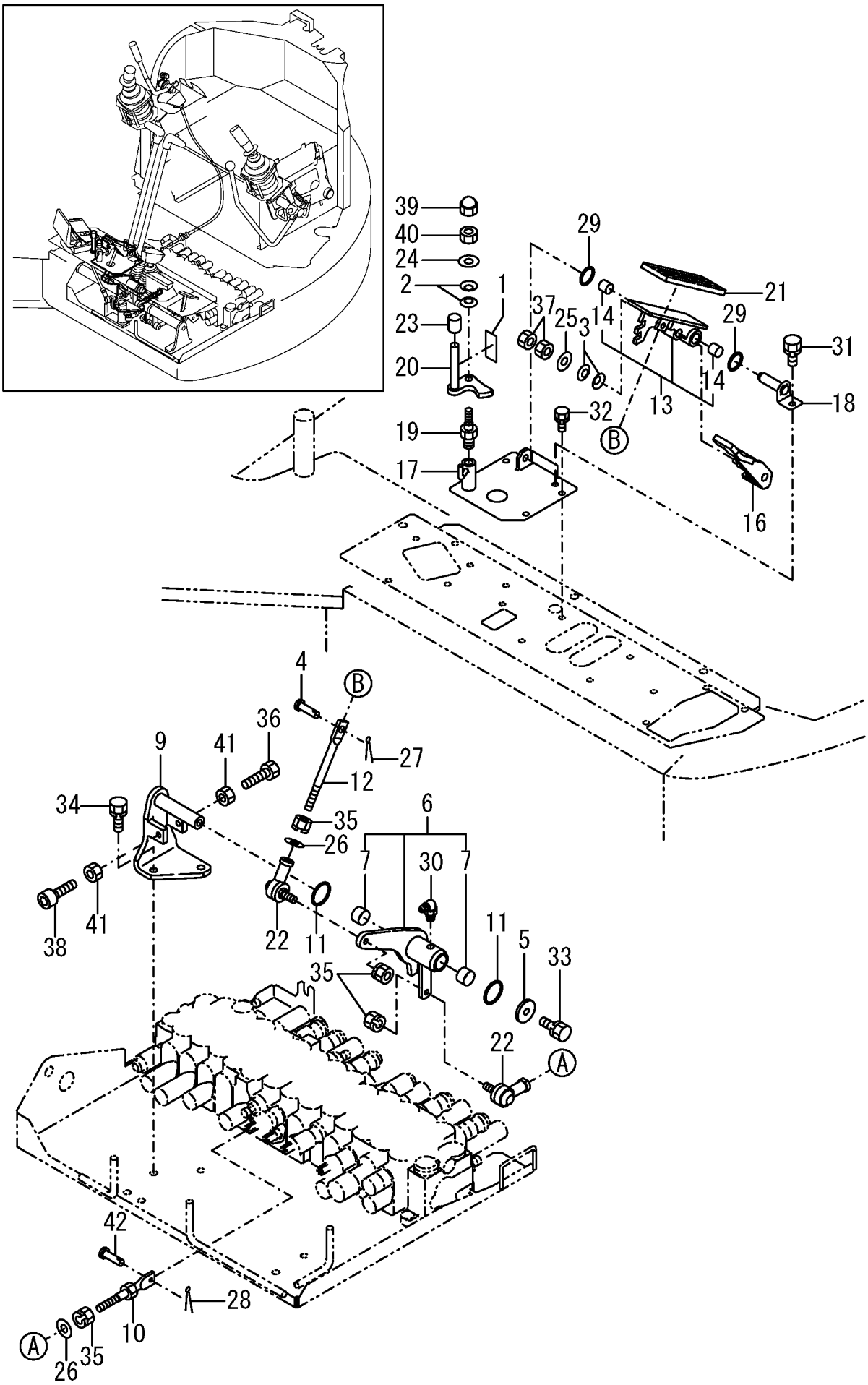

```
1,1,,172187-50100-2,,"FRAME ASSY(GREEN:88)",1,,,,,,,,,,,,,,,,,,,,I
1A,1,,172187-50100-1,,"FRAME ASSY(GREEN:82)",1,,,,,,,,,,,,,,,,,,,,I
2,1,,172141-50890,,GROMMET,2,,,,,,,,,,,,,,,,,,
3,1,,172187-50800,,"PLATE L, GUARD",2,,,,,,,1,,,,,,,,,,
3-1,1,,172187-50801-1,,"PLATE L, GUARD
(82)",2,,,,,,N,,72187553,M/#01041,,,,,,,,,,I
4,1,,172187-50810,,"PLATE R, GUARD",2,,,,,,,1,,,,,,,,,,
4-1,1,,172187-50811-1,,"PLATE R, GUARD
(82)",2,,,,,,N,,72187553,M/#01041,,,,,,,,,,I
5,1,,22137-160000,,"WASHER 16,POLISHED",12,,,,,,,1,,,,,,,,,,
6,1,,22217-160000,,"SPRING WASHER 16",12,,,,,,,1,,,,,,,,,,
7,1,,26116-160402,,"BOLT M16X 40 PLATED",12,,,,,,,1,,,,,,,,,,
8,1,,172187-53300-2,,"WEIGHT    (GREEN:88)",1,,,,,,,,,,,,,,,,,,,,I
8A,1,,172187-53300-1,,"WEIGHT    (GREEN:92)",1,,,,,,,,,,,,,,,,,,,,I
9,1,,172187-53310,,"BOLT 24X210",2,,,,,,,,,,,,,,,,,,
10,1,,172187-53320,,"WASHER 24.5X65X8",3,,,,,,,,,,,,,,,,,,
11,1,,172187-53330,,"BOLT 24X140",1,,,,,,,,,,,,,,,,,,
12,1,,172187-54100,,"TURNING FRAME   (97)",1,,,,,,,,,,,,,,,,,,
12A,1,,172187-54100-1,,"TURNING FRAME   (86)",1,,,,,,,,,,,,,,,,,,,,I
13,2,,172187-54750,,"BUSH 100X80",1,,,,,,,,,,,,,,,,,,
14,2,,172187-54760,,"BUSH 100X40",1,,,,,,,,,,,,,,,,,,
21,1,,172162-57650,,"BOLT M16X90",30,,,,,,,,,,,,,,,,,,
22,1,,172162-57660,,"PIN 16X40,STRAIGHT",2,,,,,,,,,,,,,,,,,,
23,1,,172162-57660,,"PIN 16X40,STRAIGHT",2,,,,,,,,,,,,,,,,,,
24,1,,172187-68100,,"MOUNT CMP",1,,,,,,,,,,,,,,,,,,
25,1,,22217-160000,,"SPRING WASHER 16",3,,,,,,,,,,,,,,,,,,
26,1,,26116-160452,,"BOLT M16X 45 PLATED",3,,,,,,,,,,,,,,,,,,
27,1,,172187-57600,,"TURNING BEARING",1,,,,,,,,,,,,,,,,,,
29,2,,172187-57630,,"SEAL, UPPER",1,,,,,,,,,,,,,,,,,,
30,2,,172187-57640,,"SEAL, LOWER",1,,,,,,,,,,,,,,,,,,
31,1,,172187-57610,,"BOLT 16X80",28,,,,,,,,,,,,,,,,,,
```

https://truckmanualshub.com/

Fig.24 FRAME & TURNING BEARING

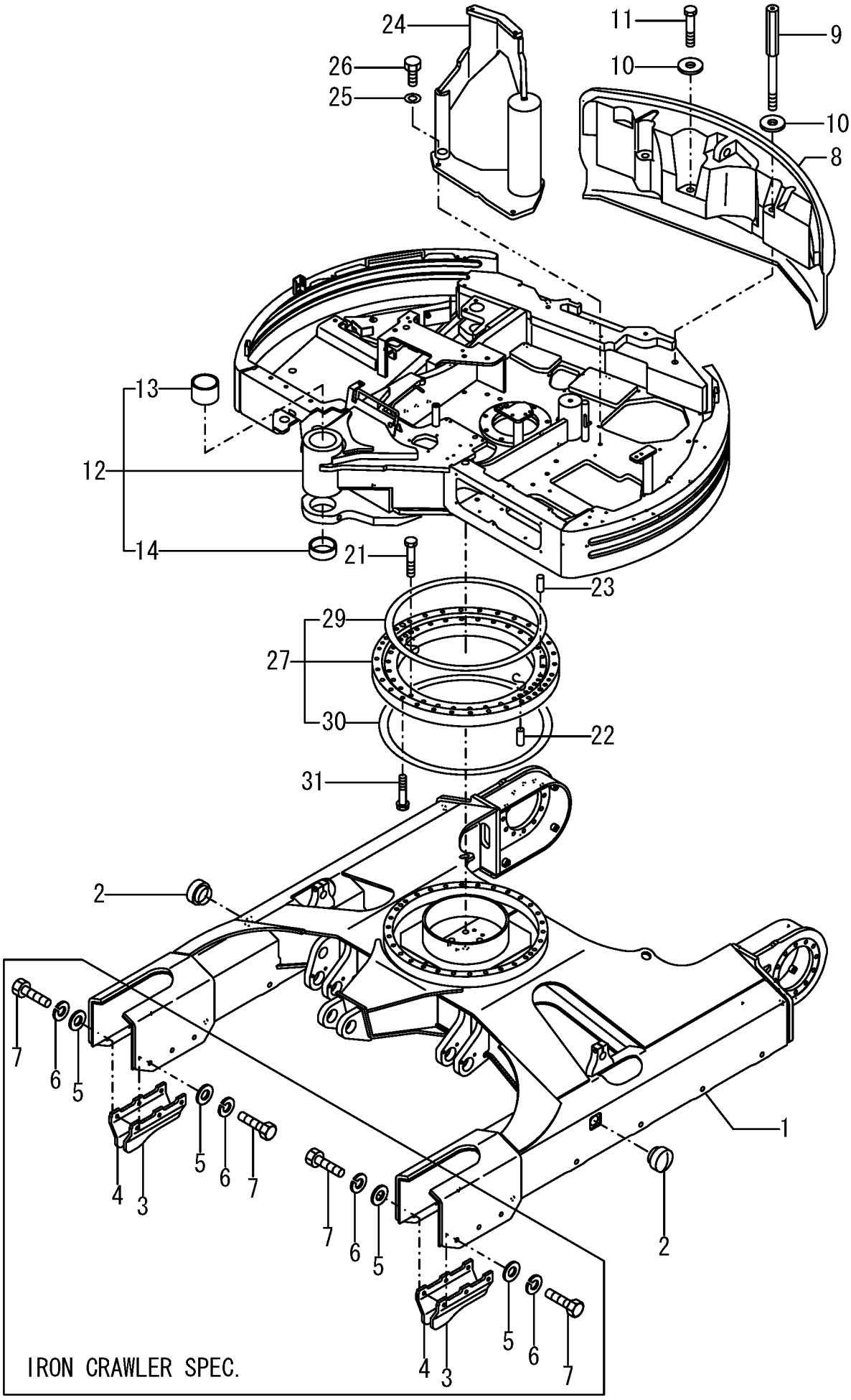

https://truckmanualshub.com/

```
1,1,,172187-61101,,"COVER,LAMP(GREEN:97)",1,,,,,,,,,,,,,,,,,
1A,1,,172187-61101-1,,"COVER,LAMP(GREEN:86)",1,,,,,,,,,,,,,,,,,,,,I
2,1,,172187-61120,,"COVER, A",1,,,,,,,,,,,,,,,,,
3,1,,172187-61130,,"COVER, PUMP",1,,,,,,,,,,,,,,,,,
4,1,,172187-61140,,"COVER, DRAIN",1,,,,,,,,,,,,,,,,,
5,1,,172187-61150,,"COVER, TURNING DRAIN",1,,,,,,,,,,,,,,,,,,
6,1,,172187-61180,,"COVER ASSY",1,,,,,,,,,,,,,,,,,
6-1,1,,172187-61080,,"COVER ASSY,EV",1,,,,,,N,,72187511,M/#00921,,,,,,,,,,I
7,1,,26116-120302,,"BOLT M12X 30 PLATED",4,,,,,,,,,,,,,,,,,,
8,1,,172187-61330,,COVER,1,,,,,,,,,,,,,,,,,
9,1,,172187-61350,,COVER,1,,,,,,,,,,,,,,,,,
10,1,,172187-61360,,"COVER, HARNESS",1,,,,,,,,,,,,,,,,,
11,1,,172162-61500,,RUBBER,4,,,,,,,,,,,,,,,,,
12,1,,172187-61500,,"COVER, UNDER",1,,,,,,,,,,,,,,,,,
13,1,,172187-61510,,"COVER L.DRIVE   (88)",1,,,,,,,,,,,,,,,,,
13A,1,,172187-61510-1,,"COVER L, DRIVE  (82)",1,,,,,,,,,,,,,,,,,,,,I
14,1,,172187-61520,,"COVER R.DRIVE   (88)",1,,,,,,,,,,,,,,,,,
14A,1,,172187-61520-1,,"COVER R, DRIVE  (82)",1,,,,,,,,,,,,,,,,,,,,I
15,1,,172519-63240,,"BOLT  8X 16",6,,,,,,,,,,,,,,,,,
16,1,,22137-100000,,"WASHER 10,POLISHED",8,,,,,,,,,,,,,,,,,,
17,1,,22157-100000,,"WASHER 10",2,,,,,,,,,,,,,,,,,
18,1,,22157-120000,,"WASHER 12",4,,,,,,,,,,,,,,,,,
19,1,,22217-080000,,"SPRING WASHER  8",1,,,,,,,,,,,,,,,,,
20,1,,22217-080000,,"SPRING WASHER  8",2,,,,,,,,,,,,,,,,,
21,1,,22217-100000,,"SPRING WASHER 10",2,,,,,,,,,,,,,,,,,
22,1,,22217-100000,,"SPRING WASHER 10",3,,,,,,,,,,,,,,,,,
23,1,,22217-100000,,"SPRING WASHER 10",4,,,,,,,,,,,,,,,,,
24,1,,22217-100000,,"SPRING WASHER 10",3,,,,,,,,,,,,,,,,,
25,1,,22217-100000,,"SPRING WASHER 10",3,,,,,,,,,,,,,,,,,
26,1,,22217-100000,,"SPRING WASHER 10",2,,,,,,,,,,,,,,,,,
27,1,,26116-100202,,"BOLT M10X 20 PLATED",10,,,,,,,,,,,,,,,,,,
28,1,,22217-100000,,"SPRING WASHER 10",10,,,,,,,,,,,,,,,,,
29,1,,22217-120000,,"SPRING WASHER",4,,,,,,,,,,,,,,,,,
30,1,,26106-100162,,"BOLT M10X 16 PLATED",2,,,,,,,,,,,,,,,,,
31,1,,26106-100162,,"BOLT M10X 16 PLATED",2,,,,,,,,,,,,,,,,,
32,1,,26116-080162,,"BOLT 8X16",1,,,,,,,,,,,,,,,,,
33,1,,26116-080162,,"BOLT 8X16",2,,,,,,,,,,,,,,,,,
34,1,,26116-100202,,"BOLT M10X 20 PLATED",2,,,,,,,,,,,,,,,,,
35,1,,26116-100202,,"BOLT M10X 20 PLATED",3,,,,,,,,,,,,,,,,,
36,1,,26116-100202,,"BOLT M10X 20 PLATED",4,,,,,,,,,,,,,,,,,
37,1,,26116-100202,,"BOLT M10X 20 PLATED",3,,,,,,,,,,,,,,,,,
38,1,,26116-100202,,"BOLT M10X 20 PLATED",3,,,,,,,,,,,,,,,,,
39,1,,26116-100202,,"BOLT M10X 20 PLATED",2,,,,,,,,,,,,,,,,,
40,1,,172162-62540,,"SEAL,STEP L",2,,,,,,,,,,,,,,,,,
41,1,,172187-63300,,"COVER,EP",2,,,,,,,,,,,,,,,,,
42,1,,172162-68370,,BOLT,6,,,,,,,,,,,,,,,,,
43,1,,172187-63140,,"INSTRUMENT PANEL L",1,,,,,,,,,,,,,,,,,
44,1,,172187-63150,,"COVER L",1,,,,,,,,,,,,,,,,,
45,1,,172519-63240,,"BOLT  8X 16",4,,,,,,,,,,,,,,,,,
46,1,,172519-63240,,"BOLT  8X 16",5,,,,,,,,,,,,,,,,,
```

https://truckmanualshub.com/

Fig. 25 FRAME COVER

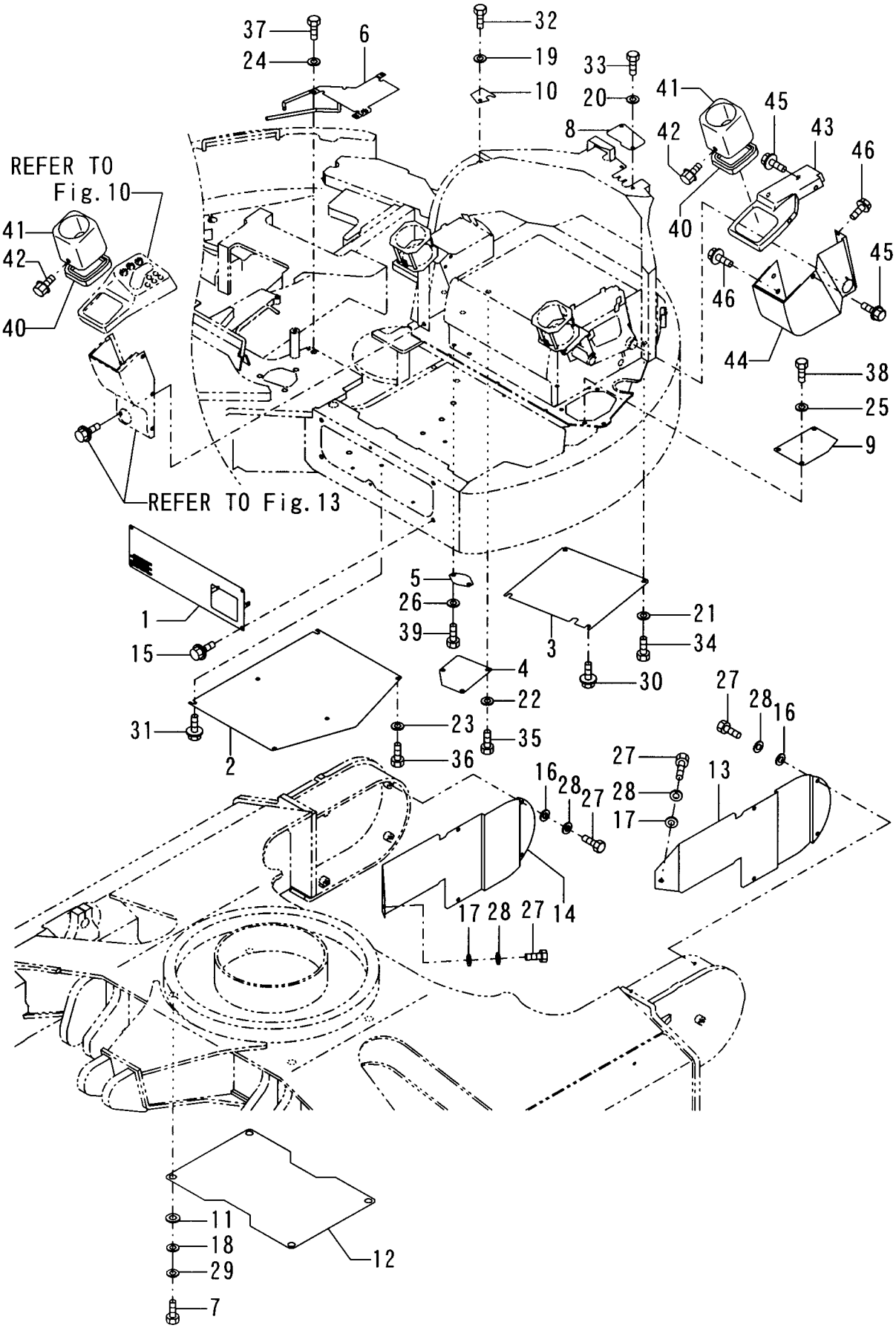

https://truckmanualshub.com/

```
1,1,,172187-61220,,"COVER,BONNET(GREEN96",1,,,,,,,,,,,,,,,,,,
1A,1,,172187-61220-1,,"COVER,BONNET    (87)",1,,,,,,,,,,,,,,,,,,,,,,I
2,1,,172187-62130,,STEP,1,,,,,,,,,,,,,,,,,,
3,1,,22217-100000,,"SPRING WASHER 10",7,,,,,,,,,,,,,,,,,,
4,1,,26116-100202,,"BOLT M10X 20 PLATED",7,,,,,,,,,,,,,,,,,,
5,1,,172187-62140,,MAT,1,,,,,,,,,,,,,,,,,,
6,1,,26116-080162,,"BOLT 8X16",4,,,,,,,,,,,,,,,,,,
7,1,,22217-080000,,"SPRING WASHER  8",4,,,,,,,,,,,,,,,,,,
```

https://truckmanualshub.com/

Fig.26 STEP & INSTRUMENT PANEL

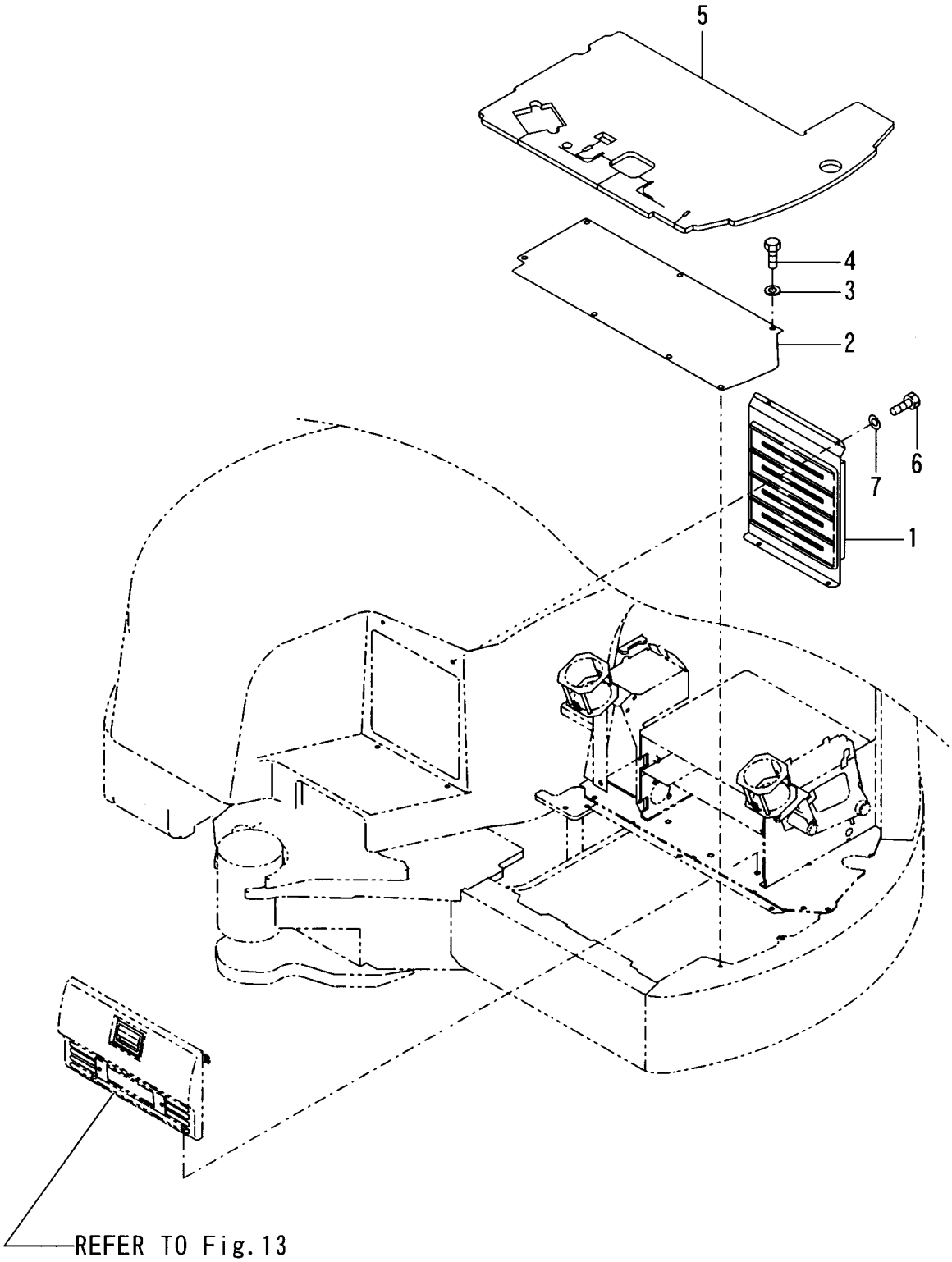

https://truckmanualshub.com/

```
1,1,,172151-62240,,GROMMET,1,,,,,,,,,,,,,,,,,,
2,1,,22137-100000,,"WASHER 10,POLISHED",2,,,,,,,,,,,,,,,,,,
3,1,,172151-62240,,GROMMET,1,,,,,,,,,,,,,,,,,,
4,1,,172187-64790,,SEAL,1,,,,,,,,,,,,,,,,,,
5,1,,172187-64900,,PLUG,2,,,,,,,,,,,,,,,,,,
6,1,,172187-64850,,"PLATE, SEAT(EP",1,,,,,,,,,,,,,,,,,,
7,1,,172187-64650,,"PLATE ASSY",1,,,,,,,,,,,,,,,,,,
8,1,,26013-100202,,"BOLT W/WASHER M10X20",5,,,,,,,,,,,,,,,,,,
9,1,,26013-100202,,"BOLT W/WASHER M10X20",4,,,,,,,,,,,,,,,,,,
10,1,,26013-100202,,"BOLT W/WASHER M10X20",4,,,,,,,,,,,,,,,,,,
11,1,,172187-64192,,"MOUNT ASSY, SEAT",1,,,,,,,,,,,,,,,,,,
```

https://truckmanualshub.com/

Fig.27 SEAT MOUNT

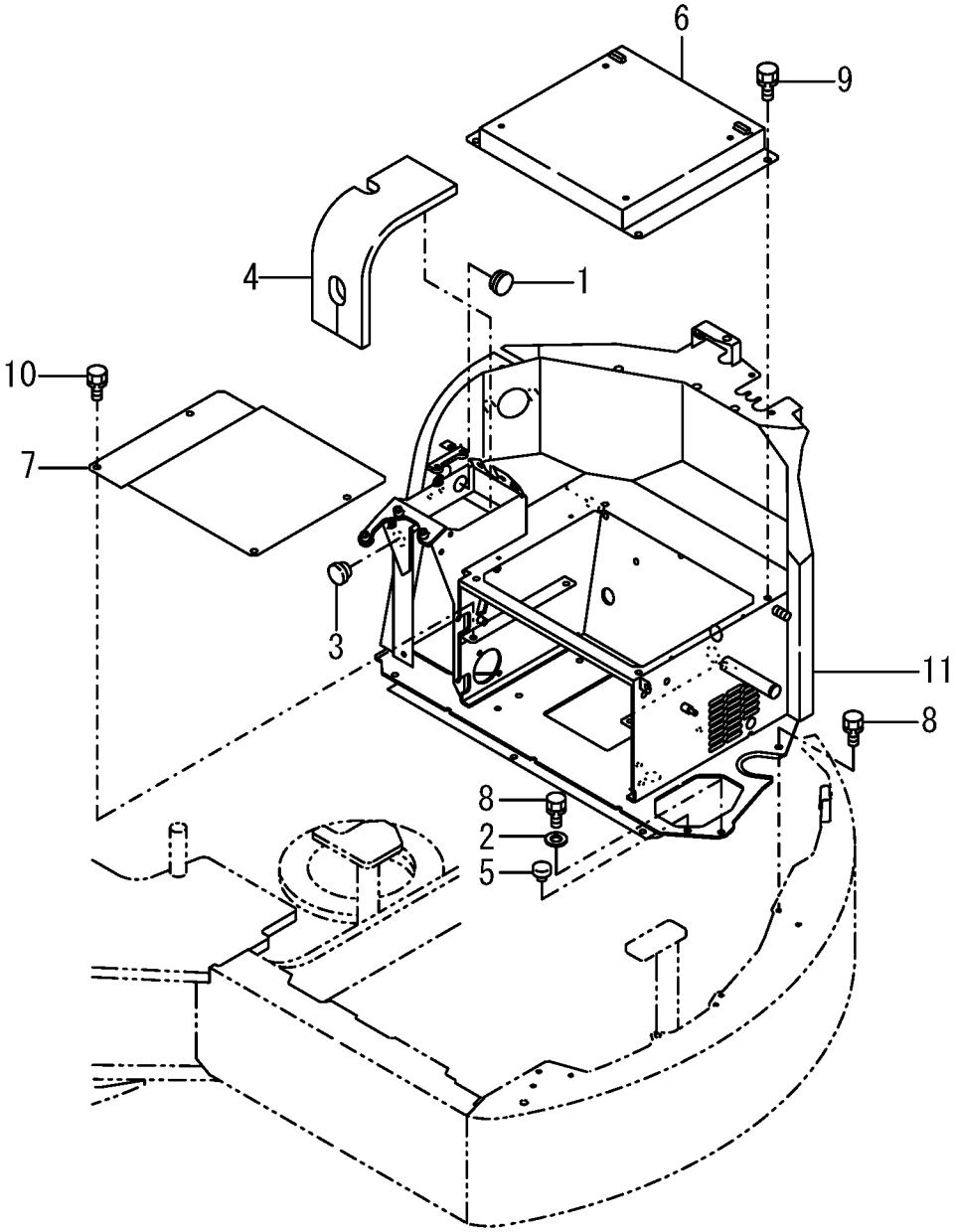

https://truckmanualshub.com/

```
1,1,,172164-45980,,"GRIP, BONNET",1,,,,,,,,,,,,,,,,,
2,1,,172187-65100,,"COVER ASSY(GREEN:96)",1,,,,,,,,,,,,,,,,,,
2-1,1,,172187-66500,,"COVER CMP,EV
(87)",1,,,,,,S,,72438003,M/#01236,,,,,,,,,,I
4,2,,172187-66110,,"RUBBER, SEAL",1,,,,,,,,,,,,,,,,,
5,2,,172187-66120,,"RUBBER 2040",1,,,,,,,,,,,,,,,,,
6,2,,172187-66140,,"RUBBER 580",1,,,,,,,,,,,,,,,,,
7,2,,172187-66160,,"SEAL, BONNET",1,,,,,,,,,,,,,,,,,
8,2,,172187-66170,,"SEAL, BONNET",1,,,,,,,,,,,,,,,,,
9,2,,172187-66310,,RUBBER,1,,,,,,,,,,,,,,,,,
10,2,,172187-66320,,"RUBBER 370",1,,,,,,,,,,,,,,,,,
11,2,,172187-66330,,RUBBER,1,,,,,,,,,,,,,,,,,
12,1,,172187-65130,,"COVER A   (GREEN:96)",1,,,,,,,,,,,,,,,,,
12A,1,,172187-65130-1,,"COVER A  (YELLOW:87)",1,,,,,,,,,,,,,,,,,,,,I
13,1,,172187-65170,,"COVER     (GREEN:96)",1,,,,,,,,,,,,,,,,,
13A,1,,172187-65170-1,,"COVER    (YELLOW:87)",1,,,,,,,,,,,,,,,,,,,,I
15,2,,172187-66220,,"SEAT, NON-SLIP",1,,,,,,,,,,,,,,,,,
16,1,,172187-65200,,"CATCH ASSY, COVER",1,,,,,,,,,,,,,,,,,
17,1,,172187-65290,,"BRACKET ASSY",1,,,,,,,,,,,,,,,,,
18,1,,172187-65330,,"BRACKET L",1,,,,,,,,,,,,,,,,,
19,1,,172164-65460,,"SEAL,DUCT",1,,,,,,,,,,,,,,,,,
20,1,,172187-65460,,"PLATE, LOCK",1,,,,,,,,,,,,,,,,,
21,1,,172187-65470,,"BRACKET A ASSY, LOCK",1,,,,,,,,,,,,,,,,,,
22,1,,172187-65501,,"BRACKET B",1,,,,,,,,,,,,,,,,,
23,1,,172187-65530,,"BRACKET A",1,,,,,,,,,,,,,,,,,
24,1,,172187-65540,,"BRACKET B",1,,,,,,,,,,,,,,,,,
25,1,,172187-65550,,"BRACKET ASSY",1,,,,,,,,,,,,,,,,,
26,1,,172164-65610,,COVER,1,,,,,,,,,,,,,,,,,
27,1,,172187-65980,,"PLATE, CATCH",1,,,,,,,,,,,,,,,,,
28,1,,172164-66170,,"KEY ASSY, CYLINDER",1,,,,,,,,,,,,,,,,,
29,1,,172187-66400,,"STAY ASSY, GRIP",1,,,,,,,,,,,,,,,,,
30,1,,172187-66421,,"BRACKET ASSY, COVER",1,,,,,,,,,,,,,,,,,
31,1,,172187-69240,,"ROD ASSY, STOPPER",1,,,,,,,,,,,,,,,,,
32,1,,172187-69250,,BRACKET,1,,,,,,,,,,,,,,,,,
33,1,,22137-060000,,"WASHER 6, POLISHED",2,,,,,,,,,,,,,,,,,
34,1,,22137-080000,,"WASHER 8, POLISHED",4,,,,,,,,,,,,,,,,,
35,1,,22137-080000,,"WASHER 8, POLISHED",13,,,,,,,,,,,,,,,,,
36,1,,22137-100000,,"WASHER 10,POLISHED",11,,,,,,,,,,,,,,,,,
37,1,,22137-100000,,"WASHER 10,POLISHED",1,,,,,,,,,,,,,,,,,
38,1,,22217-080000,,"SPRING WASHER  8",2,,,,,,,,,,,,,,,,,
39,1,,22217-080000,,"SPRING WASHER  8",4,,,,,,,,,,,,,,,,,
40,1,,22417-200200,,"COTTER PIN 2.0X20",2,,,,,,,,,,,,,,,,,
41,1,,26013-060122,,"BOLT M 6X 12",2,,,,,,,,,,,,,,,,,
42,1,,26013-080162,,"BOLT W/WASHER M8X16",11,,,,,,,,,,,,,,,,,
43,1,,26013-080202,,"BOLT W/WASHER M8X20",4,,,,,,,,,,,,,,,,,
44,1,,26013-100202,,"BOLT W/WASHER M10X20",1,,,,,,,,,,,,,,,,,
45,1,,26013-100252,,"BOLT W/WASHER M10X25",6,,,,,,,,,,,,,,,,,
46,1,,26013-100302,,"BOLT M10X 30",3,,,,,,,,,,,,,,,,,
47,1,,26013-100402,,"BOLT M10X 40",4,,,,,,,,,,,,,,,,,
48,1,,26116-080162,,"BOLT 8X16",4,,,,,,,,,,,,,,,,,
49,1,,26116-080604,,"BOLT M8X 60",1,,,,,,,,,,,,,,,,,
50,1,,26347-100002,,"U-NUT M10",1,,,,,,,,,,,,,,,,,
51,1,,26557-080252,,"SCREW 8X25",2,,,,,,,,,,,,,,,,,
52,1,,26716-080002,,"NUT M 8",1,,,,,,,,,,,,,,,,,
53,1,,22157-100000,,"WASHER 10",2,,,,,,,,,,,,,,,,,
54,1,,933110-00301,,"KEY ASSY",1,,,,,,,,,,,,,,,,,
55,1,,933171-20390,,"LIGHT, EVER",1,,,,,,,1,,,,,,,,,,,
```

https://truckmanualshub.com/

Fig.28 BONNET;1(BODY & UPPER COVER)

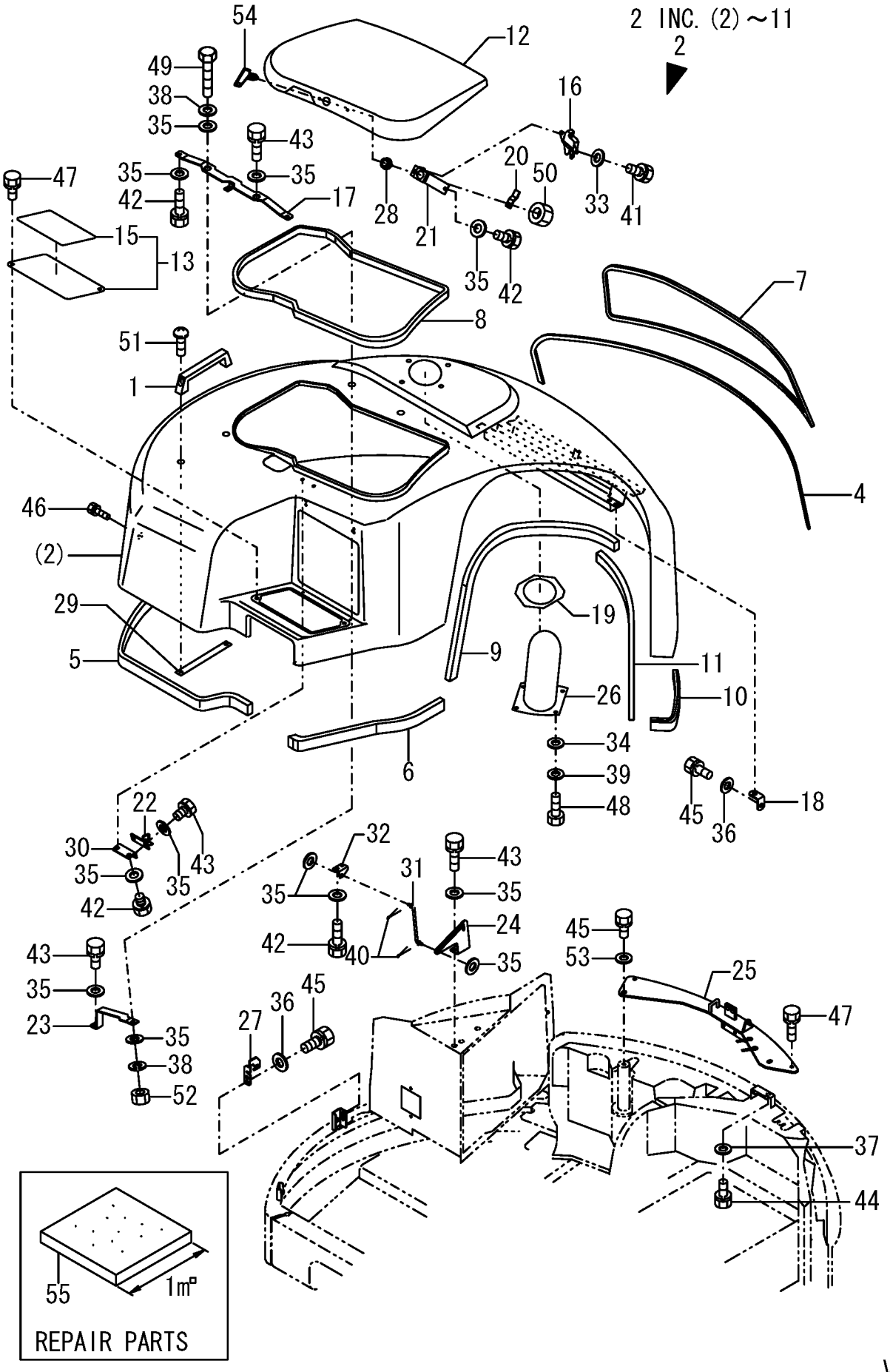

https://truckmanualshub.com/

```
1,1,,172157-45840,,"WASHER 8X18X4",1,,,,,,,,,,,,,,,,,,
2,1,,172187-65120,,"BONNET ASSY(GREEN:96",1,,,,,,,,,,,,,,,,,,,,
2-1,1,,172187-66520,,"BONNET CMP(EV
(87)",1,,,,,,S,,72438003,M/#01236,,,,,,,,,,I
3,1,,172187-65180,,"BRACKET A",1,,,,,,,,,,,,,,,,,,
4,1,,172187-65210,,"LEVER ASSY, LOCK",1,,,,,,,,,,,,,,,,,,
5,1,,172187-65240,,"PLATE, LOCK",1,,,,,,,,,,,,,,,,,,
6,1,,172734-65260,,"PIN, BONNET LEVER",1,,,,,,,,,,,,,,,,,,
7,1,,172187-65270,,"PLATE, CATCH",1,,,,,,,,,,,,,,,,,,
8,1,,172734-65270,,"SPRING, CATCH",1,,,,,,,,,,,,,,,,,,
9,1,,172187-65350,,"BRACKET ASSY",1,,,,,,,,,,,,,,,,,,
10,1,,172187-65400,,"SPRING, GAS",1,,,,,,,,,,,,,,,,,,
11,1,,172187-65420,,"BRACKET R",1,,,,,,,,,,,,,,,,,,
12,1,,172124-65480,,CATCHER,1,,,,,,,,,,,,,,,,,,
13,1,,172187-65750,,"DUCT B ASSY",1,,,,,,,,,,,,,,,,,,
14,1,,172187-65810,,"COVER B   (GREEN:96)",1,,,,,,,,,,,,,,,,,,
14A,1,,172187-65810-1,,"COVER B  (YELLOW:87)",1,,,,,,,,,,,,,,,,,,,,,,I
15,2,,172187-66340,,"SEAL A, COVER B",1,,,,,,,,,,,,,,,,,,
16,2,,172187-66350,,"SEAL B, COVER B",1,,,,,,,,,,,,,,,,,,
17,1,,172187-65820,,"PLATE A, LOCK",1,,,,,,,,,,,,,,,,,,
18,1,,172187-65830,,"PLATE B, LOCK",1,,,,,,,,,,,,,,,,,,
19,1,,172187-65860,,CHANNEL,1,,,,,,,,,,,,,,,,,,
20,1,,172187-65870,,"BRACKET ASSY",1,,,,,,,,,,,,,,,,,,
21,1,,172187-66460,,"STAY ASSY, DUCT",1,,,,,,,,,,,,,,,,,,
22,1,,172187-65960,,"LOCK PLATE ASSY",1,,,,,,,,,,,,,,,,,,
23,1,,172164-66170,,"KEY ASSY, CYLINDER",1,,,,,,,,,,,,,,,,,,
24,1,,172164-66170,,"KEY ASSY, CYLINDER",1,,,,,,,,,,,,,,,,,,
25,1,,22117-080000,,"WASHER  8",2,,,,,,,,,,,,,,,,,,
26,1,,22137-080000,,"WASHER 8, POLISHED",12,,,,,,,,,,,,,,,,,,
27,1,,22137-080000,,"WASHER 8, POLISHED",10,,,,,,,,,,,,,,,,,,
28,1,,22137-080000,,"WASHER 8, POLISHED",2,,,,,,,,,,,,,,,,,,
29,1,,22137-100000,,"WASHER 10,POLISHED",4,,,,,,,,,,,,,,,,,,
30,1,,22137-100000,,"WASHER 10,POLISHED",13,,,,,,,,,,,,,,,,,,
31,1,,22417-200200,,"COTTER PIN 2.0X20",3,,,,,,,,,,,,,,,,,,
32,1,,22417-200200,,"COTTER PIN 2.0X20",1,,,,,,,,,,,,,,,,,,
33,1,,22417-200200,,"COTTER PIN 2.0X20",2,,,,,,,,,,,,,,,,,,
34,1,,22487-080120,,"PIN  8X 12",1,,,,,,,,,,,,,,,,,,
35,1,,26013-080162,,"BOLT W/WASHER M8X16",10,,,,,,,,,,,,,,,,,,
36,1,,26013-080162,,"BOLT W/WASHER M8X16",4,,,,,,,,,,,,,,,,,,
37,1,,26013-080202,,"BOLT W/WASHER M8X20",4,,,,,,,,,,,,,,,,,,
38,1,,26013-100202,,"BOLT W/WASHER M10X20",7,,,,,,,,,,,,,,,,,,
39,1,,26013-100252,,"BOLT W/WASHER M10X25",4,,,,,,,,,,,,,,,,,,
40,1,,26013-100452,,"BOLT M10X 45",1,,,,,,,,,,,,,,,,,,
41,1,,26347-100002,,"U-NUT M10",1,,,,,,,,,,,,,,,,,,
42,1,,26347-100002,,"U-NUT M10",1,,,,,,,,,,,,,,,,,,
43,1,,172187-66450,,"SHIM, CATCH PLATE",2,,,,,,,,,,,,,,,,,,
44,1,,933110-00301,,"KEY ASSY",1,,,,,,,,,,,,,,,,,,
```

https://truckmanualshub.com/

Fig.29 BONNET;2(SIDE,REAR COVER)

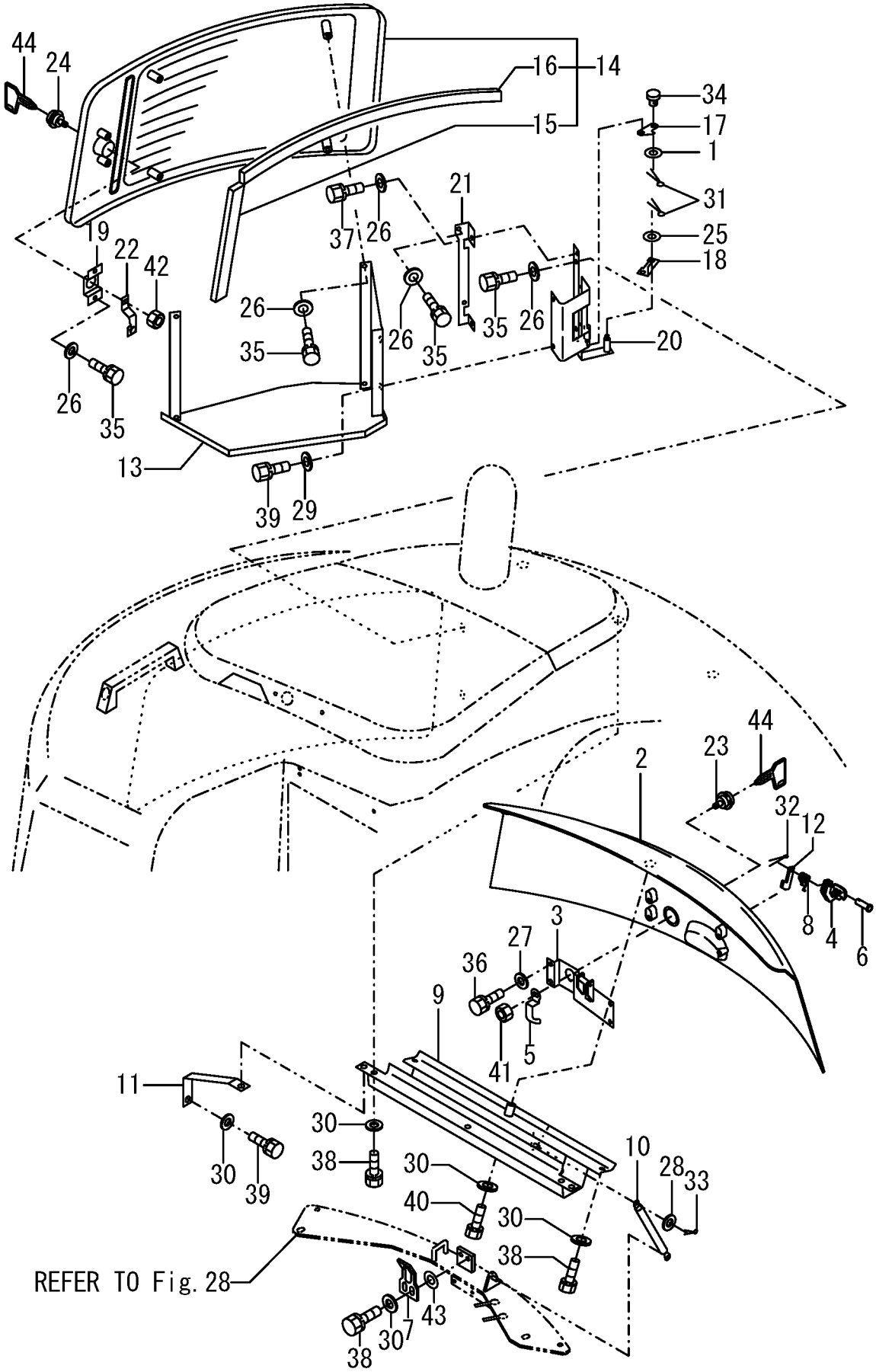

https://truckmanualshub.com/

```
1,1,,172187-65280,,COVER,1,,,,,,,,,,,,,,,,,,
2,1,,172187-65740,,DUCT,1,,,,,,,,,,,,,,,,,,
6,2,,172187-65680,,"RUBBER 1780",1,,,,,,,,,,,,,,,,,,
9,2,,172171-65780,,"RUBBER,SEAL C",1,,,,,,,,,,,,,,,,,,
10,2,,172165-66230,,"RUBBER,SEAL C",1,,,,,,,,,,,,,,,,,,
15,1,,22217-080000,,"SPRING WASHER  8",2,,,,,,,,,,,,,,,,,,
16,1,,22217-100000,,"SPRING WASHER 10",1,,,,,,,,,,,,,,,,,,
17,1,,26013-100202,,"BOLT W/WASHER M10X20",2,,,,,,,,,,,,,,,,,,,,
18,1,,26116-080162,,"BOLT 8X16",2,,,,,,,,,,,,,,,,,,
19,1,,26116-101002,,"BOLT M10X100",1,,,,,,,,,,,,,,,,,,
```

https://truckmanualshub.com/

Fig.30 DUCT

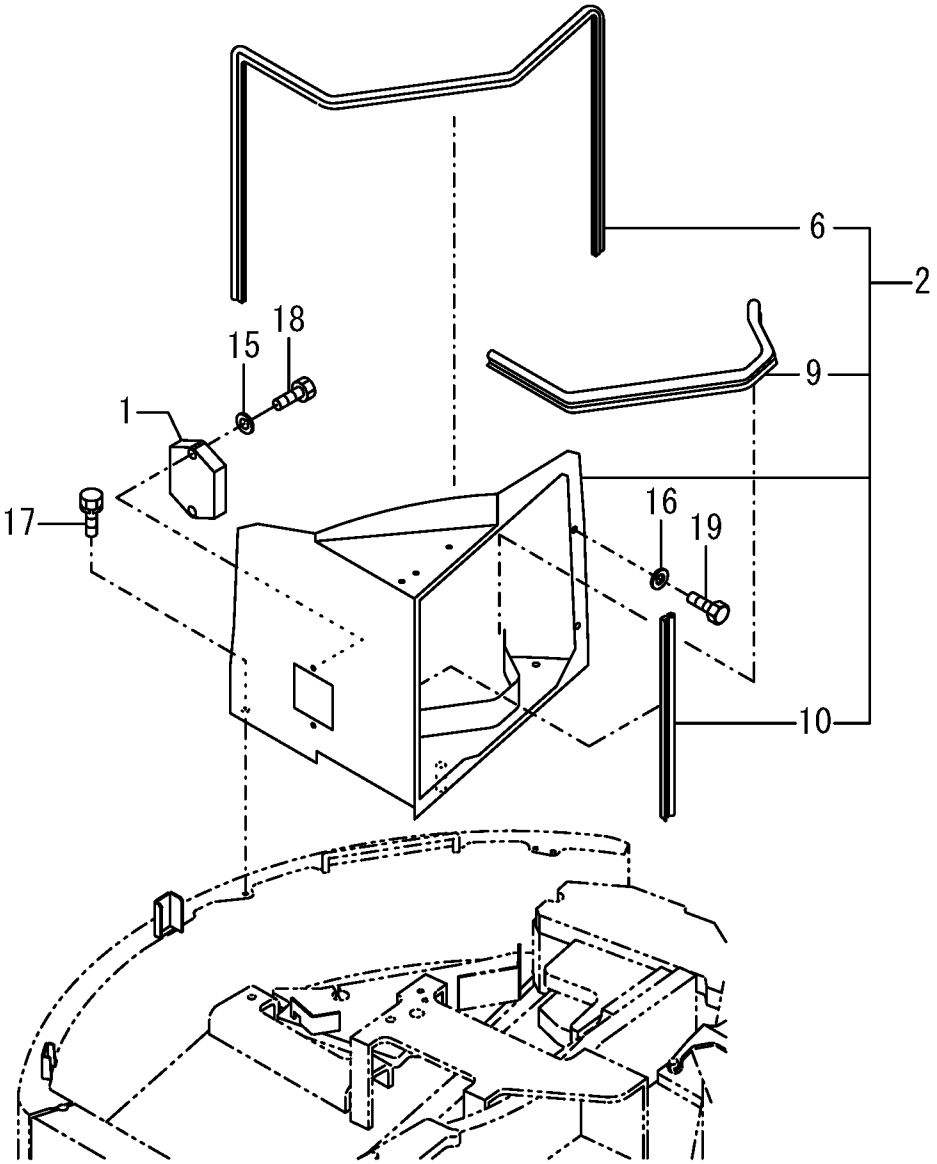

https://truckmanualshub.com/

```
1,1,,772187-68470,,"CABIN ASY(EP(GRAY:73",1,,,,,,,,,,,,,,,,,,
2,2,,172176-67780,,GROMMET,1,,,,,,,,,,,,,,,,,
3,2,,172176-17150,,ASHTRAY,1,,,,,,,,,,,,,,,,,
4,3,,172176-17160,,BEZEL,1,,,,,,,,72176228,,,,,,,,,,,I
5,2,,1A6260-64200,,CLIP,4,,,,,,,,,,,,,,,,,
6,2,,1A6260-64200,,CLIP,3,,,,,,,,,,,,,,,,,
7,2,,172176-67040-1,,"COVER, LINK",1,,,,,,,,,,,,,,,,,,,,,I
8,2,,194145-04810,,"WASHER 10",9,,,,,,,,,,,,,,,,,
9,2,,172176-67181,,GRIP,1,,,,,,,,,,,,,,,,,
10,2,,172176-67341,,"LINK A",1,,,,,,,,,,,,,,,,,
11,2,,172176-67740,,"SHIM T=0.8",5,,,,,,,,,,,,,,,,,
12,2,,172176-67741,,"SHIM T=1.2",5,,,,,,,,,,,,,,,,,
13,2,,172176-67760,,"PANEL, FRONT",1,,,,,,,,,,,,,,,,,
14,2,,172176-67870,,TRAY,1,,,,,,,,,,,,,,,,,
15,2,,172176-67880,,HOLDER,1,,,,,,,,,,,,,,,,,
16,2,,172176-68030,,WASHER,2,,,,,,,,,,,,,,,,,
17,2,,172137-68120,,PIN,2,,,,,,,,,,,,,,,,,
18,2,,172176-68160,,GROMMET,1,,,,,,,,,,,,,,,,,
19,2,,172176-68200,,WASHER,2,,,,,,,,,,,,,,,,,
20,2,,172176-68200,,WASHER,2,,,,,,,,,,,,,,,,,
21,2,,172187-68411,,"CABIN ASSY (GRAY:73)",1,,,,,,,,,,,,,,,,,,
22,2,,172162-69071,,COATHANGER,1,,,,,,,,,,,,,,,,,
23,2,,172187-69170,,"COVER, HARNESS",1,,,,,,,,,,,,,,,,,
24,2,,172187-69200,,"COVER (A)",1,,,,,,,,,,,,,,,,,
25,2,,172187-69190,,"COVER, SIDE B",1,,,,,,,,,,,,,,,,,
26,2,,172176-69320,,"SEAL,DOOR",1,,,,,,,,,,,,,,,,,
27,2,,172187-69540,,"SEAL, CABIN",1,,,,,,,,,,,,,,,,,
28,2,,172176-69780,,SEAL,1,,,,,,,,,,,,,,,,,
29,2,,172176-69890,,"LINK B",1,,,,,,,,,,,,,,,,,
30,2,,22157-080000,,"WASHER  8",2,,,,,,,,,,,,,,,,,
31,2,,22217-100000,,"SPRING WASHER 10",2,,,,,,,,,,,,,,,,,
32,2,,22867-300080,,"SCREW 3X 8",2,,,,,,,,,,,,,,,,,
33,2,,26013-080162,,"BOLT W/WASHER M8X16",2,,,,,,,,,,,,,,,,,
34,2,,26013-080252,,"BOLT M 8X 25",2,,,,,,,,,,,,,,,,,
35,2,,26013-100302,,"BOLT M10X 30",9,,,,,,,,,,,,,,,,,
36,2,,26022-050162,,"SCREW M 5X 16",4,,,,,,,,,,,,,,,,,
37,2,,26022-060162,,"SCREW M 6X 16",4,,,,,,,,,,,,,,,,,
38,2,,26450-080202,,"BOLT M 8X 20",2,,,,,,,,,,,,,,,,,
39,2,,26589-060162,,"SCREW M6,BINDING",2,,,,,,,,,,,,,,,,,
40,2,,26589-060162,,"SCREW M6,BINDING",2,,,,,,,,,,,,,,,,,
41,2,,26716-100002,,"NUT 10",2,,,,,,,,,,,,,,,,,
42,2,,172122-17190,,CLIP,1,,,,,,,,,,,,,,,,,
```

https://truckmanualshub.com/

Fig.31 CABIN;1(BODY)

TO M/#01077

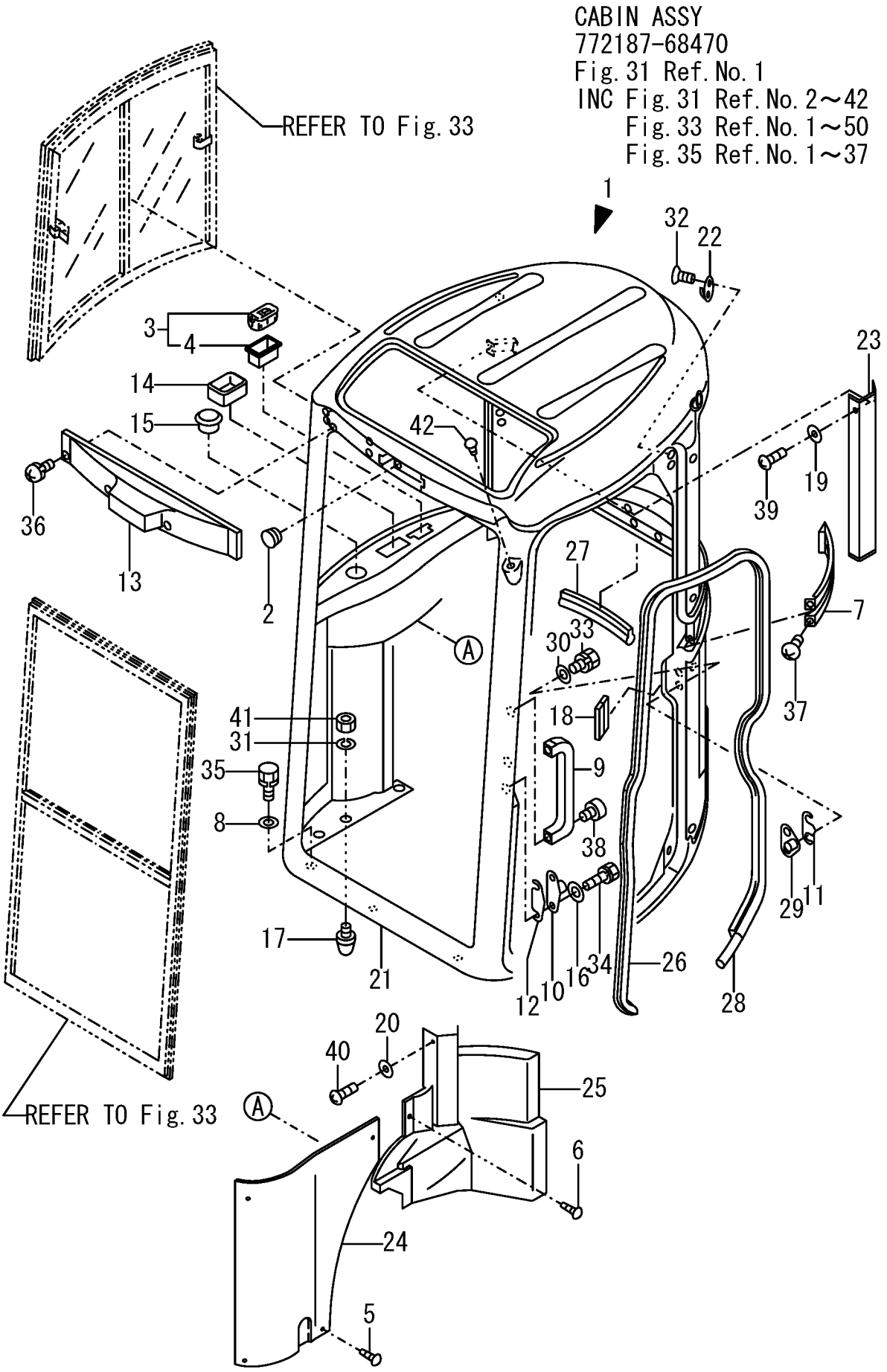

https://truckmanualshub.com/

```
1,1,,772187-68471,,"CABIN ASSY(EP   (86)",1,,,,,,,,,,,,,,,,,,,,I
2,2,,172176-67780,,GROMMET,1,,,,,,,,,,,,,,,,,,,,I
3,2,,172176-17150,,ASHTRAY,1,,,,,,,,,,,,,,,,,,,,I
4,3,,172176-17160,,BEZEL,1,,,,,,,,72176228,,,,,,,,,,,I
5,2,,1A6260-64200,,CLIP,4,,,,,,,,,,,,,,,,,,,,I
6,2,,1A6260-64200,,CLIP,3,,,,,,,,,,,,,,,,,,,,I
7,2,,172176-67040-2,,COVER.LINK(GREEN:86),1,,,,,,,,,,,,,,,,,,,,I
8,2,,194145-04810,,"WASHER 10",9,,,,,,,,,,,,,,,,,,,,I
9,2,,172176-67181,,GRIP,1,,,,,,,,,,,,,,,,,,,,I
10,2,,172176-67341,,"LINK A",1,,,,,,,,,,,,,,,,,,,,I
11,2,,172176-67740,,"SHIM T=0.8",5,,,,,,,,,,,,,,,,,,,,I
12,2,,172176-67741,,"SHIM T=1.2",5,,,,,,,,,,,,,,,,,,,,I
13,2,,172176-67760,,"PANEL, FRONT",1,,,,,,,,,,,,,,,,,,,,I
14,2,,172176-67870,,TRAY,1,,,,,,,,,,,,,,,,,,,,I
15,2,,172176-67880,,HOLDER,1,,,,,,,,,,,,,,,,,,,,I
16,2,,172176-68030,,WASHER,2,,,,,,,,,,,,,,,,,,,,I
17,2,,172137-68120,,PIN,2,,,,,,,,,,,,,,,,,,,,I
18,2,,172176-68160,,GROMMET,1,,,,,,,,,,,,,,,,,,,,I
19,2,,172176-68200,,WASHER,2,,,,,,,,,,,,,,,,,,,,I
20,2,,172176-68200,,WASHER,2,,,,,,,,,,,,,,,,,,,,I
21,1,,172187-68413-1,,"CABIN ASSY(GREEN:86)",1,,,,,,,,,,,,,,,,,,,,I
22,2,,172162-69071,,COATHANGER,1,,,,,,,,,,,,,,,,,,,,I
23,2,,172187-69170,,"COVER, HARNESS",1,,,,,,,,,,,,,,,,,,,,I
24,2,,172187-69200,,"COVER (A)",1,,,,,,,,,,,,,,,,,,,,I
25,2,,172187-69210,,"COVER (B)",1,,,,,,,,,,,,,,,,,,,,I
26,2,,172176-69320,,"SEAL,DOOR",1,,,,,,,,,,,,,,,,,,,,I
27,2,,172187-69540,,"SEAL, CABIN",1,,,,,,,,,,,,,,,,,,,,I
28,2,,172176-69780,,SEAL,1,,,,,,,,,,,,,,,,,,,,I
29,2,,172176-69890,,"LINK B",1,,,,,,,,,,,,,,,,,,,,I
30,2,,22157-080000,,"WASHER  8",2,,,,,,,,,,,,,,,,,,,,I
31,2,,22217-100000,,"SPRING WASHER 10",2,,,,,,,,,,,,,,,,,,,,I
32,2,,22867-300080,,"SCREW 3X 8",2,,,,,,,,,,,,,,,,,,,,I
33,2,,26013-080162,,"BOLT W/WASHER M8X16",2,,,,,,,,,,,,,,,,,,,,I
34,2,,26013-080252,,"BOLT M 8X 25",2,,,,,,,,,,,,,,,,,,,,I
35,2,,26013-100302,,"BOLT M10X 30",9,,,,,,,,,,,,,,,,,,,,I
36,2,,26022-050162,,"SCREW M 5X 16",4,,,,,,,,,,,,,,,,,,,,I
37,2,,26022-060162,,"SCREW M 6X 16",4,,,,,,,,,,,,,,,,,,,,I
38,2,,26450-080202,,"BOLT M 8X 20",2,,,,,,,,,,,,,,,,,,,,I
39,2,,26589-060162,,"SCREW M6,BINDING",2,,,,,,,,,,,,,,,,,,,,I
40,2,,26589-060162,,"SCREW M6,BINDING",2,,,,,,,,,,,,,,,,,,,,I
41,2,,26716-100002,,"NUT 10",2,,,,,,,,,,,,,,,,,,,,I
42,2,,172122-17190,,CLIP,1,,,,,,,,,,,,,,,,,,,,I
43,1,,172519-63240,,"BOLT  8X 16",4,,,,,,,,,,,,,,,,,,,,I
44,1,,172187-68050,,"SEAL,COVER FRONT",1,,,,,,,,,,,,,,,,,,,,I
45,1,,172187-68060,,"RUBBER,STOPPER",2,,,,,,,,,,,,,,,,,,,,I
46,1,,172187-68070,,"COVER,FRONT SASH(86)",1,,,,,,,,,,,,,,,,,,,,I
```

https://truckmanualshub.com/

Fig.32 CABIN(NEW);1(BODY)

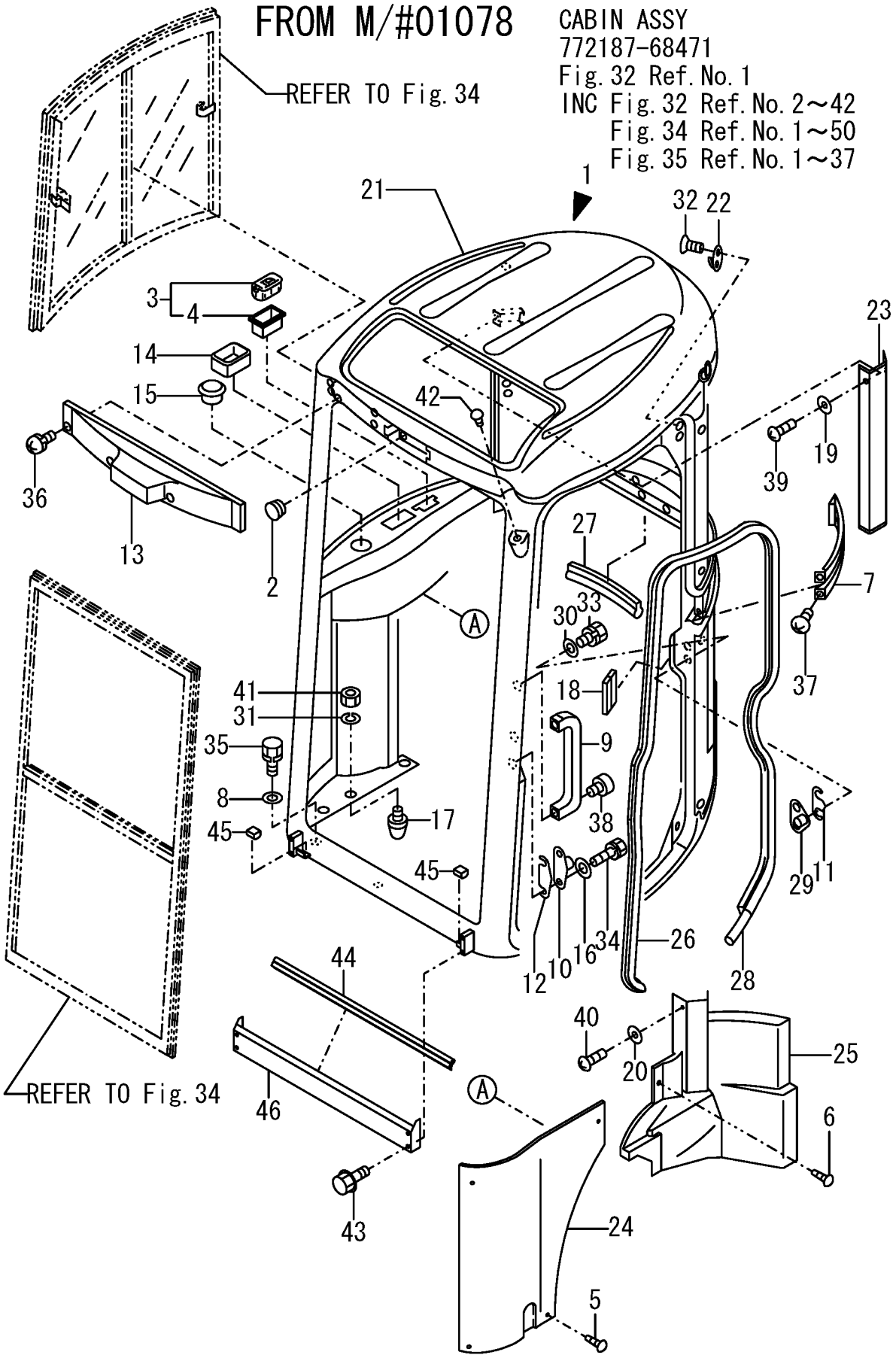

https://truckmanualshub.com/

```
1,2,,172176-67050,,SASH,1,,,,,,,,,,,,,,,,,
2,3,,172176-66620,,"FRAME ASSY",1,,,,,,,,,,,,,,,,,
4,4,,172176-66760,,"GLASS RUN",1,,,,,,,,,,,,,,,,,
5,4,,172176-66770,,"GLASS RUN",1,,,,,,,,,,,,,,,,,
6,4,,172176-66780,,"RUBBER STOPPER",1,,,,,,,,,,,,,,,,,
7,4,,172176-66820,,"RUBBER STOPPER",1,,,,,,,,,,,,,,,,,
8,3,,172176-66800,,GLASS,1,,,,,,,,,,,,,,,,,
9,4,,172176-66600,,LOCK,1,,,,,,,,,,,,,,,,,
12,4,,172176-66750,,SCREW,2,,,,,,,1,,,,,,,,,,
14,3,,172176-66810,,GLASS,1,,,,,,,,,,,,,,,,,
15,4,,172176-66610,,LOCK,1,,,,,,,,,,,,,,,,,
17,4,,172176-66750,,SCREW,2,,,,,,,2,,,,,,,,,,
19,4,,172176-66790,,"CHANNEL, CENTER",1,,,,,,,,,,,,,,,,,
20,2,,172176-67060,,"WINDOW, FRONT",1,,,,,,,,,,,,,,,,,
21,3,,172176-66590,,"FRAME ASSY",1,,,,,,,,,,,,,,,,,
23,4,,172176-66890,,"GLASS RUN",1,,,,,,,,,,,,,,,,,
24,4,,172176-66990,,"GLASS RUN",1,,,,,,,,,,,,,,,,,
25,4,,172176-66900,,"RUBBER STOPPER",2,,,,,,,,,,,,,,,,,
26,3,,172176-66970,,GLASS,1,,,,,,,,,,,,,,,,,
27,4,,172176-66550,,"LOCK ASSY (LH)",1,,,,,,,,,,,,,,,,,
30,4,,172176-66950,,SCREW,2,,,,,,,3,,,,,,,,,,
31,4,,172176-66960,,SCREW,1,,,,,,,3,,,,,,,,,,
32,4,,172176-66560,,LOCK,1,,,,,,,,,,,,,,,,,
35,4,,172176-66950,,SCREW,2,,,,,,,4,,,,,,,,,,
36,4,,172176-66960,,SCREW,1,,,,,,,4,,,,,,,,,,
38,3,,172176-66980,,GLASS,1,,,,,,,,,,,,,,,,,
39,4,,172176-66570,,"LOCK ASSY (LOW:LH",1,,,,,,,,,,,,,,,,,
41,4,,172176-66930,,SCREW,2,,,,,,,5,,,,,,,,,,
42,4,,172176-66940,,SCREW,1,,,,,,,5,,,,,,,,,,
43,4,,172176-66580,,"LOCK ASSY (LOW:RH",1,,,,,,,,,,,,,,,,,
45,4,,172176-66930,,SCREW,2,,,,,,,6,,,,,,,,,,
46,4,,172176-66940,,SCREW,1,,,,,,,6,,,,,,,,,,
48,4,,172176-66910,,"CHANNEL, CENTER",1,,,,,,,,,,,,,,,,,
49,2,,172176-67200,,"RUBBER, FRONT",1,,,,,,,,,,,,,,,,,
50,2,,172176-67210,,"RUBBER, SIDE",1,,,,,,,,,,,,,,,,,
```

https://truckmanualshub.com/

Fig. 33 CABIN; 2 (SASH)

TO M/#01077

CABIN ASSY
772187-68470
Fig. 31 Ref. No. 1
INC Fig. 31 Ref. No. 2～42
Fig. 33 Ref. No. 1～50
Fig. 35 Ref. No. 1～37

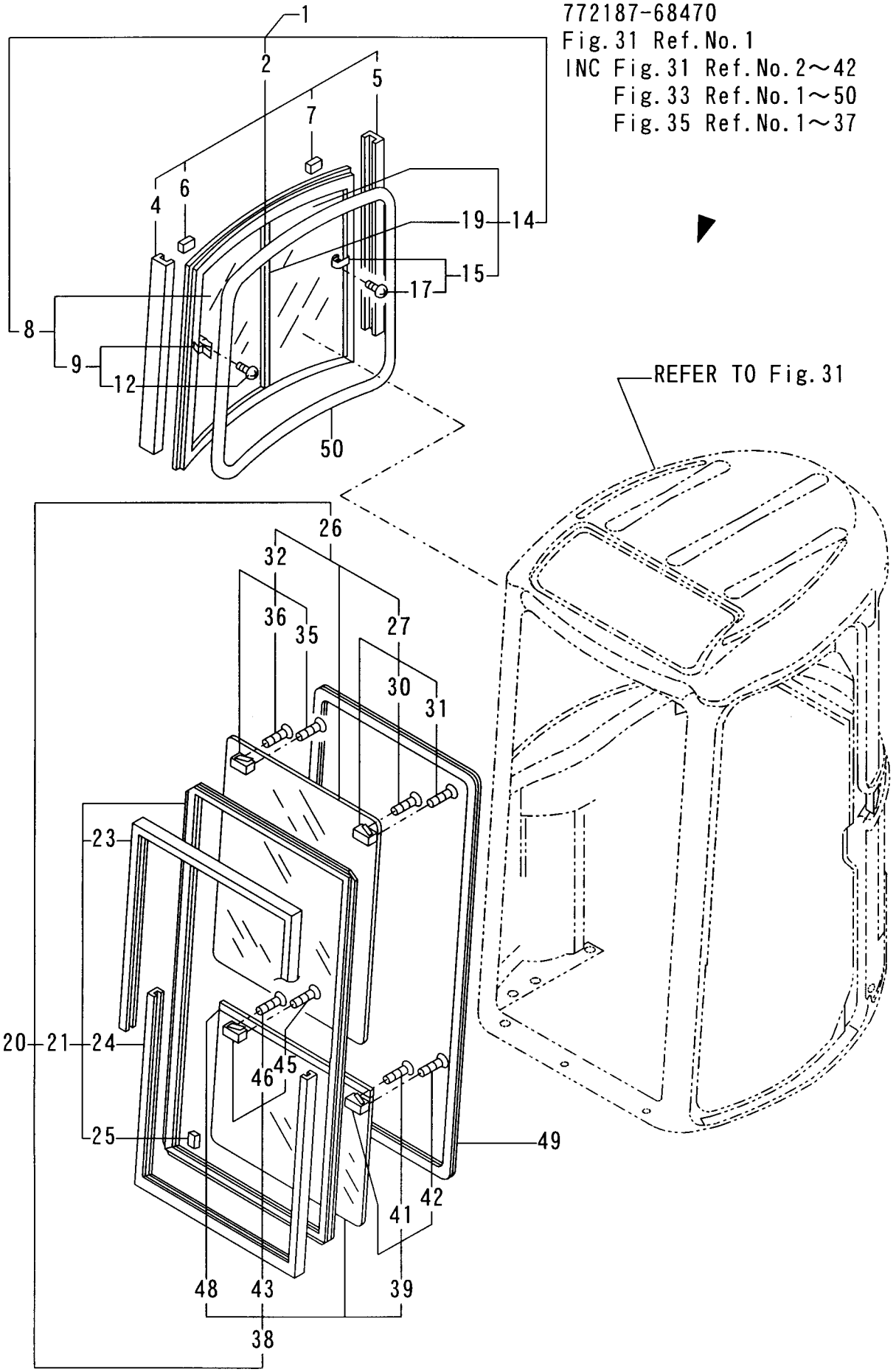

https://truckmanualshub.com/

```
1,2,,172176-67050,,SASH,1,,,,,,,,,,,,,,,,,,,I
2,3,,172176-66620,,"FRAME ASSY",1,,,,,,,,,,,,,,,,,,,I
4,4,,172176-66760,,"GLASS RUN",1,,,,,,,,,,,,,,,,,,,I
5,4,,172176-66770,,"GLASS RUN",1,,,,,,,,,,,,,,,,,,,I
6,4,,172176-66780,,"RUBBER STOPPER",1,,,,,,,,,,,,,,,,,,,I
7,4,,172176-66820,,"RUBBER STOPPER",1,,,,,,,,,,,,,,,,,,,I
8,3,,172176-66800,,GLASS,1,,,,,,,,,,,,,,,,,,,I
9,4,,172176-66600,,LOCK,1,,,,,,,,,,,,,,,,,,,I
12,4,,172176-66750,,SCREW,2,,,,,,,1,,,,,,,,,,,,I
14,3,,172176-66810,,GLASS,1,,,,,,,,,,,,,,,,,,,I
15,4,,172176-66610,,LOCK,1,,,,,,,,,,,,,,,,,,,I
17,4,,172176-66750,,SCREW,2,,,,,,,2,,,,,,,,,,,,I
19,4,,172176-66790,,"CHANNEL, CENTER",1,,,,,,,,,,,,,,,,,,,I
20,2,,172187-67800,,"WINDOW, FRONT",1,,,,,,,,,,,,,,,,,,,I
21,3,,172187-67920,,"FRAME ASSY",1,,,,,,,,,,,,,,,,,,,I
23,4,,172187-67860,,"GLASS RUN",1,,,,,,,,,,,,,,,,,,,I
24,4,,172187-67870,,"GLASS RUN",1,,,,,,,,,,,,,,,,,,,I
25,2,,172187-67880,,"RUBBER,STOPPER",2,,,,,,,,,,,,,,,,,,,I
26,3,,172187-67930,,GLASS,1,,,,,,,,,,,,,,,,,,,I
27,4,,172187-67850,,"LOCK ASSY (UP:LH",1,,,,,,,,,,,,,,,,,,,I
30,4,,172187-67890,,SCREW,3,,,,,,,3,,,,,,,,,,,,I
32,4,,172187-67840,,"LOCK ASSY (UP:RH",1,,,,,,,,,,,,,,,,,,,I
35,4,,172187-67890,,SCREW,3,,,,,,,4,,,,,,,,,,,,I
38,3,,172187-67940,,GLASS,1,,,,,,,,,,,,,,,,,,,I
39,4,,172176-66570,,"LOCK ASSY (LOW:LH",1,,,,,,,,,,,,,,,,,,,I
41,4,,172176-66930,,SCREW,2,,,,,,,5,,,,,,,,,,,,I
42,4,,172176-66940,,SCREW,1,,,,,,,5,,,,,,,,,,,,I
43,4,,172176-66580,,"LOCK ASSY (LOW:RH",1,,,,,,,,,,,,,,,,,,,I
45,4,,172176-66930,,SCREW,2,,,,,,,6,,,,,,,,,,,,I
46,4,,172176-66940,,SCREW,1,,,,,,,6,,,,,,,,,,,,I
48,2,,172176-66910,,"CHANNEL, CENTER",1,,,,,,,,,,,,,,,,,,,I
49,2,,172176-67200,,"RUBBER, FRONT",1,,,,,,,,,,,,,,,,,,,I
50,2,,172176-67210,,"RUBBER, SIDE",1,,,,,,,,,,,,,,,,,,,I
```

https://truckmanualshub.com/

Fig.34 CABIN(NEW);2(SASH)

FROM TO M/#01078

CABIN ASSY
772187-68471
Fig.32 Ref.No.1
INC Fig.32 Ref.No.2～42
Fig.34 Ref.No.1～50
Fig.35 Ref.No.1～37

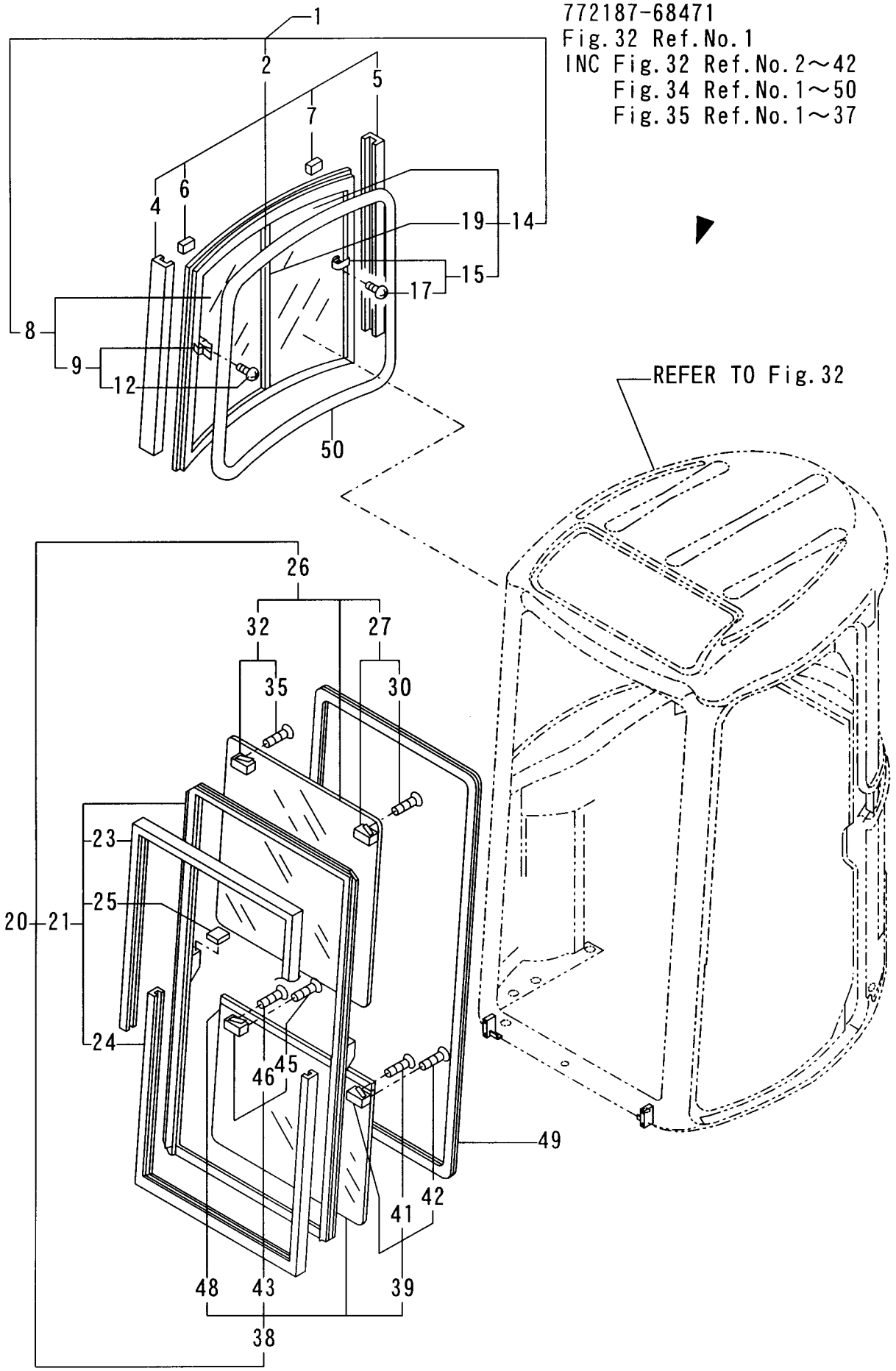

https://truckmanualshub.com/

```
1,2,,194145-04810,,"WASHER 10",3,,,,,,,,,,,,,,,,,
2,2,,172164-62490,,"SEAT, STEP",1,,,,,,,,,,,,,,,,,
3,2,,1A6260-64200,,CLIP,4,,,,,,,,,,,,,,,,,
4,2,,172176-67070,,"ACRYLIC, ROOF",1,,,,,,,,,,,,,,,,,
5,2,,172176-67110,,"TRIM, ROOF",1,,,,,,,,,,,,,,,,,
6,2,,172176-67141,,"TRIM, REAR",1,,,,,,,,,,,,,,,,,
7,2,,172176-67691,,"TRIM, SIDE",1,,,,,,,,,,,,,,,,,
8,2,,172176-67710,,"GLASS L",1,,,,,,,,,,,,,,,,,
9,2,,172176-67720,,"GLASS R",1,,,,,,,,,,,,,,,,,
10,2,,172176-67730,,RUBBER,1,,,,,,,,,,,,,,,,,
11,2,,172187-68200,,"BRACKET ASSY",1,,,,,,,,,,,,,,,,,
12,2,,172187-68540,,"STOPPER, DOOR",1,,,,,,,,,,,,,,,,,
13,2,,172187-68810,,PLATE,1,,,,,,,,,,,,,,,,,
14,2,,172187-68300,,"GLIP ASSY,EP",1,,,,,,,,,,,,,,,,,
15,2,,172187-68980,,"BRACKET A",1,,,,,,,,,,,,,,,,,
16,2,,172187-69160,,"PANEL, FRONT IN",1,,,,,,,,,,,,,,,,,
17,2,,172176-69750,,SEAL,1,,,,,,,,,,,,,,,,,
18,2,,172176-69770,,SEAL,1,,,,,,,,,,,,,,,,,
19,2,,172176-69820,,"COLLAR, GLASS",4,,,,,,,,,,,,,,,,,
20,2,,172176-69820,,"COLLAR, GLASS",4,,,,,,,,,,,,,,,,,
21,2,,172176-69830,,"GLASS, REAR",1,,,,,,,,,,,,,,,,,
22,2,,172176-69860,,"LINK A",1,,,,,,,,,,,,,,,,,
23,2,,22137-100000,,"WASHER 10,POLISHED",4,,,,,,,,,,,,,,,,,
24,2,,22137-100000,,"WASHER 10,POLISHED",2,,,,,,,,,,,,,,,,,
25,2,,22137-100000,,"WASHER 10,POLISHED",4,,,,,,,,,,,,,,,,,
26,2,,22137-120000,,"WASHER 12,POLISHED",3,,,,,,,,,,,,,,,,,
27,2,,22157-080000,,"WASHER  8",2,,,,,,,,,,,,,,,,,
28,2,,22217-060000,,"SPRING WASHER  6",2,,,,,,,,,,,,,,,,,
29,2,,26013-080202,,"BOLT W/WASHER M8X20",2,,,,,,,,,,,,,,,,,
30,2,,26013-100252,,"BOLT W/WASHER M10X25",4,,,,,,,,,,,,,,,,,
31,2,,26013-100252,,"BOLT W/WASHER M10X25",2,,,,,,,,,,,,,,,,,
32,2,,26013-100302,,"BOLT M10X 30",3,,,,,,,,,,,,,,,,,
33,2,,26013-120352,,"BOLT M12X 35",3,,,,,,,,,,,,,,,,,
34,2,,26579-060202,,"SCREW 6X 20",4,,,,,,,,,,,,,,,,,
35,2,,26579-060202,,"SCREW 6X 20",4,,,,,,,,,,,,,,,,,
36,2,,26589-060162,,"SCREW M6,BINDING",2,,,,,,,,,,,,,,,,,
37,2,,26013-100352,,"BOLT M10X 35",4,,,,,,,,,,,,,,,,,
38,1,,172176-68200,,WASHER,9,,,,,,,,,,,,,,,,,
39,1,,172187-69150,,"PANEL, ROOF",1,,,,,,,,,,,,,,,,,
40,1,,26589-060162,,"SCREW M6,BINDING",9,,,,,,,,,,,,,,,,,
41,1,,172176-67810,,RIVET,4,,,,,,,,,,,,,,,,,
```

https://truckmanualshub.com/

Fig.35 CABIN;3(FITTING PART)

CABIN ASSY
772187-68470
Fig.31 Ref.No.1
INC Fig.31 Ref.No.2～42
Fig.33 Ref.No.1～50
Fig.35 Ref.No.1～37

CABIN ASSY
772187-68471
Fig.32 Ref.No.1
INC Fig.32 Ref.No.2～42
Fig.34 Ref.No.1～50
Fig.35 Ref.No.1～37

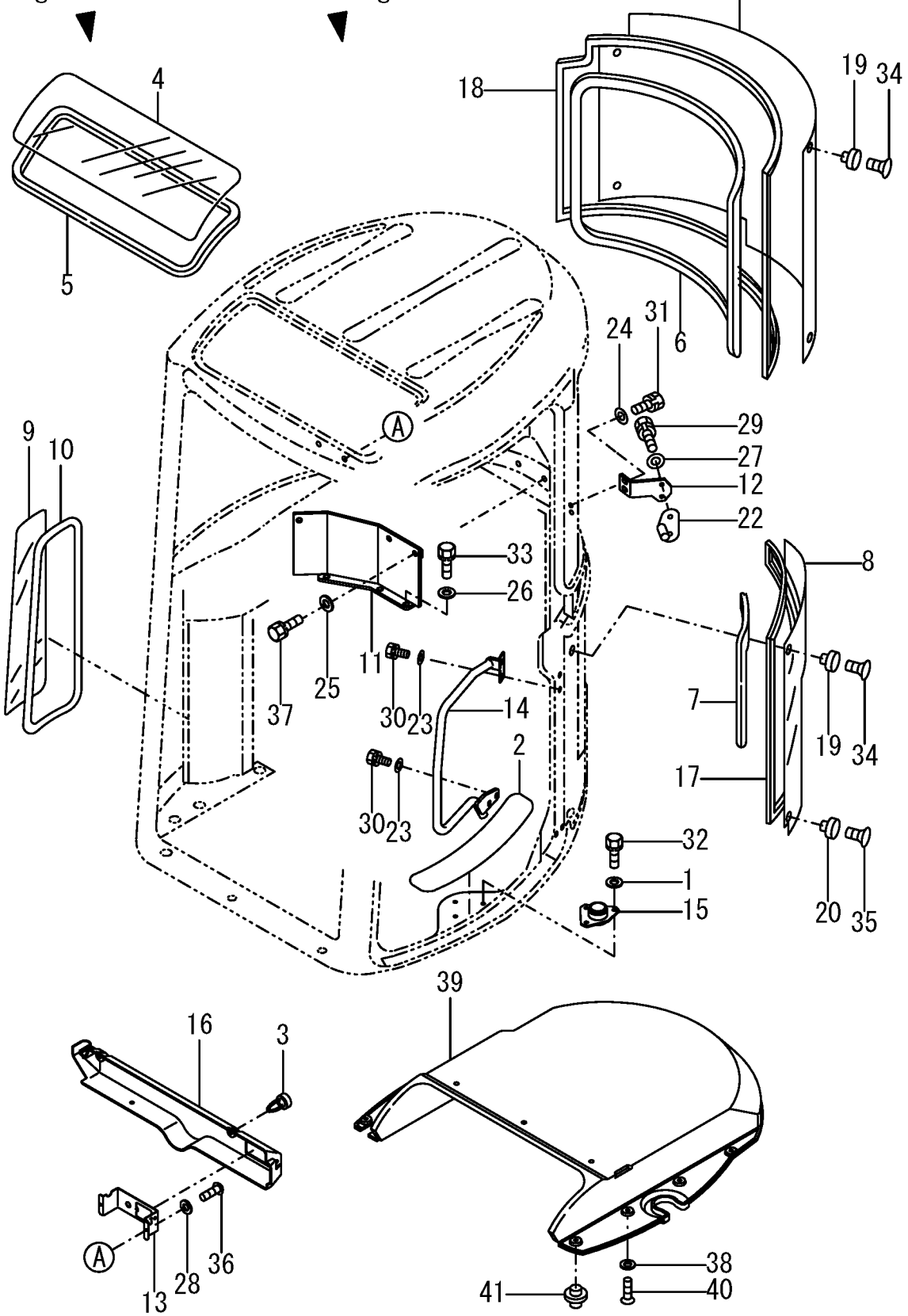

https://truckmanualshub.com/

```
1,1,,772176-68902-1,,"DOOR ASSY  (GRAY:73)",1,,,,,,,,,,,,,,,,,
1A,1,,772176-68902-2,,"DOOR ASSY (GREEN:86)",1,,,,,,,,,,,,,,,,,,,,I
2,2,,172176-67000-1,,"COVER A,DOOR(GRAY:73",1,,,,,,,,,,,,,,,,,
2A,2,,172176-67000-2,,"COVER A,DOOR    (86)",1,,,,,,,,,,,,,,,,,,,,I
3,2,,172176-67090,,CATCH,1,,,,,,,,,,,,,,,,,
4,2,,172176-67100,,"HANDLE ASSY.",1,,,,,,,,,,,,,,,,,
5,2,,172176-67121,,"TRIM, DOOR UN",1,,,,,,,,,,,,,,,,,
6,2,,172176-67131,,"TRIM, DOOR UP",1,,,,,,,,,,,,,,,,,
7,2,,172176-67150,,RUBBER,2,,,,,,,,,,,,,,,,,
8,2,,172176-67231-1,,"COVER B,DOOR(GRAY:73",1,,,,,,,,,,,,,,,,,
8A,2,,172176-67231-2,,"COVER B,DOOR    (86)",1,,,,,,,,,,,,,,,,,,,,I
9,2,,172176-67250,,"PIPE 15",2,,,,,,,,,,,,,,,,,
10,2,,172176-67400,,ROD,1,,,,,,,,,,,,,,,,,
11,2,,172176-67410,,BOLT,1,,,,,,,,,,,,,,,,,
12,2,,172176-67800,,BOLT,1,,,,,,,,,,,,,,,,,
13,2,,172176-67891,,"MOLD, DOOR",1,,,,,,,,,,,,,,,,,
14,2,,172176-68170,,"RUBBER, STOPPER",2,,,,,,,,,,,,,,,,,
15,2,,172176-68240,,"CORD, RUBBER",1,,,,,,,,,,,,,,,,,
16,2,,172176-68900-1,,"DOOR ASSY  (GRAY:73)",1,,,,,,,,,,,,,,,,,
16A,2,,172176-68900-2,,"DOOR ASSY (GREEN:86)",1,,,,,,,,,,,,,,,,,,,,I
17,2,,172162-69460,,"KEY ASSY, CYLINDER",1,,,,,,,,,,,,,,,,,
18,2,,172162-69480,,"LOCK ASSY",1,,,,,,,,,,,,,,,,,
19,2,,172162-69541,,"HANDLE,OUTER",1,,,,,,,,,,,,,,,,,
20,2,,172176-69760,,SEAL,1,,,,,,,,,,,,,,,,,
21,2,,172176-69800,,"GLASS, DOOR",1,,,,,,,,,,,,,,,,,
22,2,,172176-69810,,"SEAL, DOOR GLASS",1,,,,,,,,,,,,,,,,,
23,2,,172176-69820,,"COLLAR, GLASS",4,,,,,,,,,,,,,,,,,
24,2,,172176-69911,,PLATE,1,,,,,,,,,,,,,,,,,
25,2,,172176-69931,,LEVER,1,,,,,,,,,,,,,,,,,
26,2,,22137-060000,,"WASHER 6, POLISHED",1,,,,,,,,,,,,,,,,,
27,2,,22137-060000,,"WASHER 6, POLISHED",3,,,,,,,,,,,,,,,,,
28,2,,22417-200200,,"COTTER PIN 2.0X20",1,,,,,,,,,,,,,,,,,
29,2,,26013-060302,,"BOLT M 6X 30",3,,,,,,,,,,,,,,,,,
30,2,,26022-050102,,"SCREW M 5X 10",8,,,,,,,,,,,,,,,,,
31,2,,26022-060122,,"SCREW M 6X 12",2,,,,,,,,,,,,,,,,,
32,2,,26022-060122,,"SCREW M 6X 12",1,,,,,,,,,,,,,,,,,
33,2,,26022-060162,,"SCREW M 6X 16",3,,,,,,,,,,,,,,,,,
34,2,,26579-060202,,"SCREW 6X 20",4,,,,,,,,,,,,,,,,,
35,2,,26716-080002,,"NUT M 8",4,,,,,,,,,,,,,,,,,
36,2,,26716-080002,,"NUT M 8",2,,,,,,,,,,,,,,,,,
37,2,,26716-080002,,"NUT M 8",1,,,,,,,,,,,,,,,,,
38,2,,172164-03210,,"LABEL, CAB.",1,,,,,,,,,,,,,,,,,
39,1,,933110-00301,,"KEY ASSY",1,,,,,,,,,,,,,,,,,
```

https://truckmanualshub.com/

Fig.36 CABIN DOOR;1(BODY)

DOOR ASSY
772176-68902
Fig.36 Ref.No.1
INC Fig.36 Ref.No.2～38
Fig.37 Ref.No.1～36

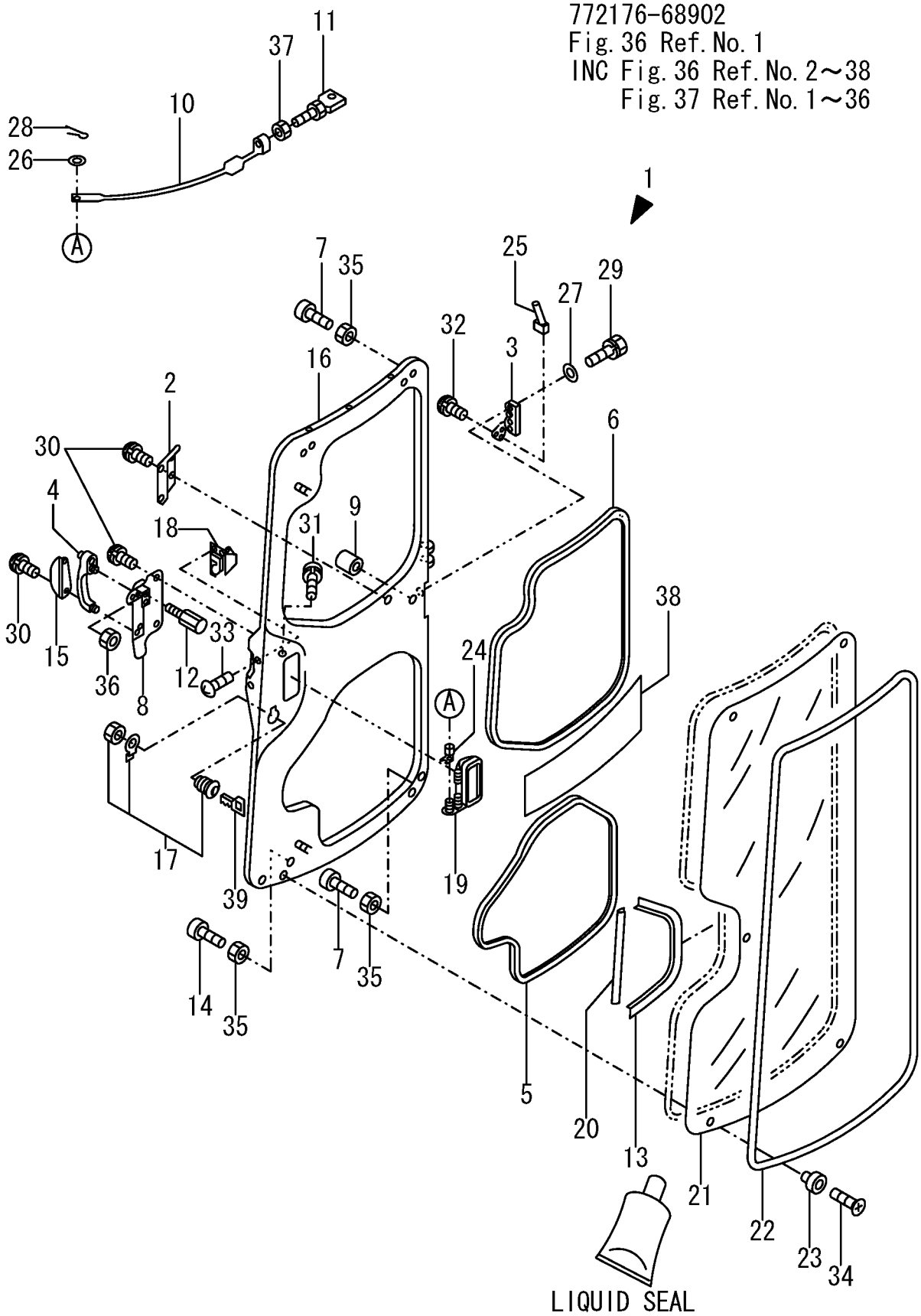

https://truckmanualshub.com/

```
1,2,,172176-68390,,BOLT,8,,,,,,,,,,,,,,,,,
2,2,,172176-69340,,"BRACKET, DOOR U",2,,,,,,,,,,,,,,,,,
3,2,,172187-69350,,"LINK, DOOR (A)",1,,,,,,,,,,,,,,,,,
4,3,,172141-41370,,"BUSH 2015",2,,,,,,,,,,,,,,,,,
6,2,,172176-69390,,"LINK ASSY, DOOR",1,,,,,,,,,,,,,,,,,
7,3,,172141-41370,,"BUSH 2015",2,,,,,,,,,,,,,,,,,
9,2,,172187-69390,,"LINK, DOOR (B)",1,,,,,,,,,,,,,,,,,
10,2,,172187-69420,,"BOLT M16X 90",1,,,,,,,,,,,,,,,,,
11,2,,172176-69450,,"COVER U",2,,,,,,,,,,,,,,,,,
12,2,,172176-69470,,"BRACKET A",1,,,,,,,,,,,,,,,,,
13,2,,172187-69490,,"NUT 16",1,,,,,,,,,,,,,,,,,
14,2,,172176-69560,,PIN,1,,,,,,,,,,,,,,,,,
15,2,,172176-69600-1,,"BRACKET    (GRAY:73)",1,,,,,,,,,,,,,,,,,
15A,2,,172176-69600-2,,"BRACKET   (GREEN:86)",1,,,,,,,,,,,,,,,,,,,,,I
16,2,,172176-69790,,SHAFT,2,,,,,,,,,,,,,,,,,
17,2,,172176-69980-1,,"ARM W/BUSH,LINK (73)",1,,,,,,,,,,,,,,,,,
17A,2,,172176-69980-2,,"ARM W/BUSH, LINK(86)",1,,,,,,,,,,,,,,,,,,,,,I
19,3,,24550-014150,,"BUSH 14X15",4,,,,,,,,,,,,,,,,,
20,2,,172176-69990,,"BEARING 2542",2,,,,,,,,,,,,,,,,,
21,2,,22137-100000,,"WASHER 10,POLISHED",3,,,,,,,,,,,,,,,,,
22,2,,22137-100000,,"WASHER 10,POLISHED",4,,,,,,,,,,,,,,,,,
23,2,,22137-100000,,"WASHER 10,POLISHED",4,,,,,,,,,,,,,,,,,
24,2,,22157-100000,,"WASHER 10",2,,,,,,,,,,,,,,,,,
25,2,,22217-100000,,"SPRING WASHER 10",4,,,,,,,,,,,,,,,,,
26,2,,22217-100000,,"SPRING WASHER 10",4,,,,,,,,,,,,,,,,,
27,2,,22252-000420,,"CIRCLIP   42",2,,,,,,,,,,,,,,,,,
28,2,,22351-040032,,"SPRING PIN 4X32",2,,,,,,,,,,,,,,,,,
29,2,,22351-040032,,"SPRING PIN 4X32",2,,,,,,,,,,,,,,,,,
30,2,,24321-000350,,"O-RING 1A G-35.0",2,,,,,,,,,,,,,,,,,
31,2,,26013-100202,,"BOLT W/WASHER M10X20",2,,,,,,,,,,,,,,,,,
32,2,,26013-100252,,"BOLT W/WASHER M10X25",3,,,,,,,,,,,,,,,,,
33,2,,26716-100002,,"NUT 10",4,,,,,,,,,,,,,,,,,
34,2,,26716-100002,,"NUT 10",4,,,,,,,,,,,,,,,,,
35,2,,26716-160002,,"NUT M16",1,,,,,,,,,,,,,,,,,
36,2,,933171-21630,,"PIN, SWING LINK",1,,,,,,,,,,,,,,,,,
```

https://truckmanualshub.com/

Fig.37 CABIN DOOR;2(FITTING PART)

DOOR ASSY
772176-68902
Fig.36 Ref.No.1
INC Fig.36 Ref.No.2～38
Fig.37 Ref.No.1～36

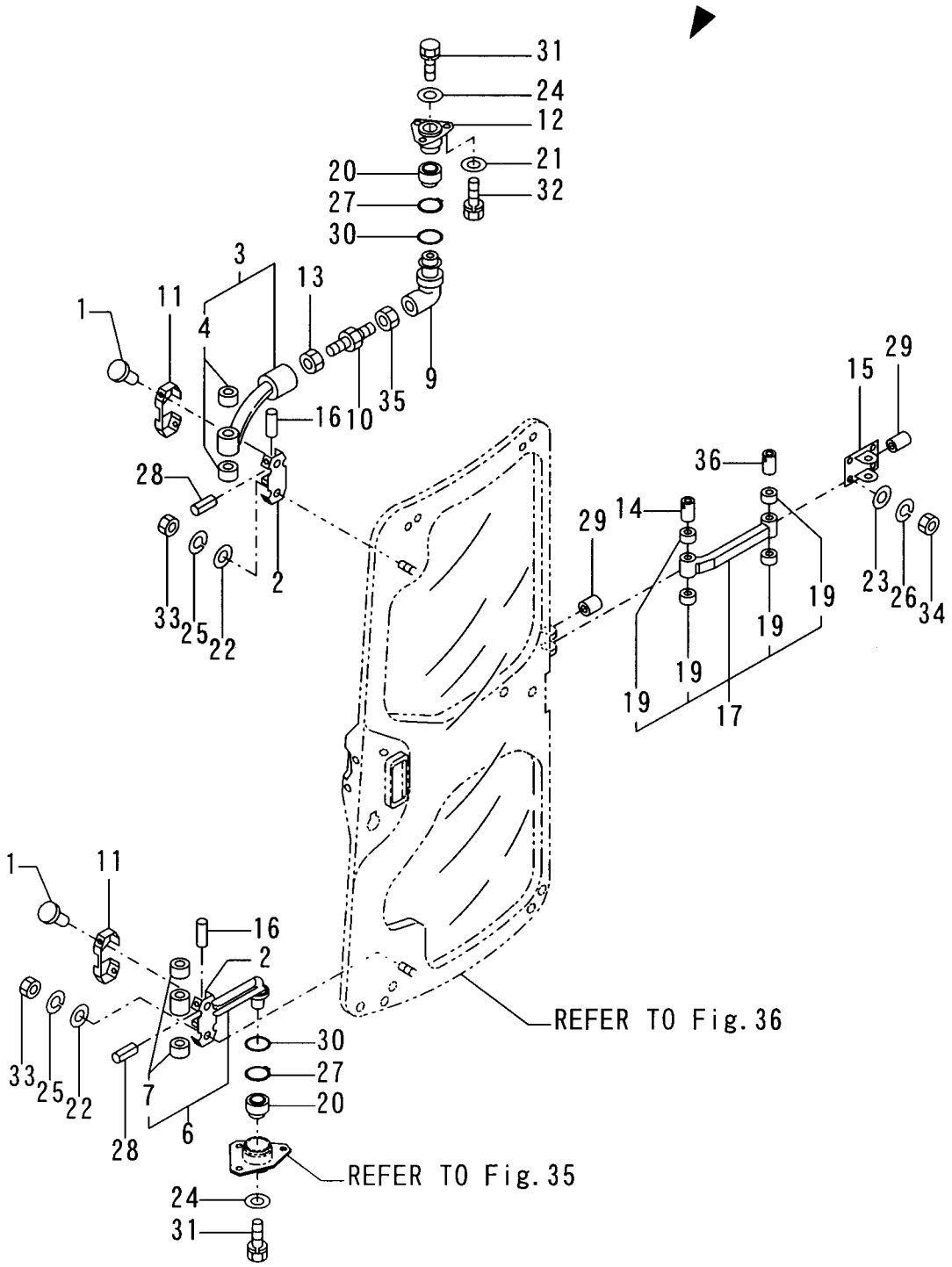

https://truckmanualshub.com/

```
1,1,,172187-73100,,"PUMP, PISTON",1,,,,,,,,,,,,,,,,,
2,2,,172187-73110,,SHAFT,1,,,,,,,,,,,,,,,,,
6,3,,172187-73240,,SEAL,1,,,,,,,,,,,,,,,,,
7,3,,172187-73250,,"O-RING 151",1,,,,,,,,,,,,,,,,,
11,2,,172187-73120,,"ROTARY GROUP",1,,,,,,,,,,,,,,,,,
26,4,,24315-000080,,"O-RING 1B P-8.0",2,,,,,,,,,,,,,,,,,
29,4,,24315-000110,,"O-RING 1B P-11.0",2,,,,,,,,,,,,,,,,,
30,3,,172187-75600,,"CONTROL PLATE",1,,,,,,,,,,,,,,,,,
32,3,,172187-75620,,"BOLT 14X 40",2,,,,,,,,,,,,,,,,,
33,3,,172187-75630,,"BOLT 14X 65",2,,,,,,,,,,,,,,,,,
34,3,,172187-75640,,"BOLT 14X 75",1,,,,,,,,,,,,,,,,,
38,3,,172187-75680,,GASKET,1,,,,,,,,,,,,,,,,,
39,3,,24315-000050,,"O-RING 1B P-5.0",2,,,,,,,,,,,,,,,,,
40,3,,24321-001050,,"O-RING 1A G-105.0",1,,,,,,,,,,,,,,,,,
52,3,,24311-000440,,"O-RING 1A P-44.0",1,,,,,,,,,,,,,,,,,
62,3,,24315-000160,,"O-RING 1B P-16.0",1,,,,,,,,,,,,,,,,,
63,3,,24315-000200,,"O-RING 1B P-20.0",2,,,,,,,,,,,,,,,,,
64,3,,24315-000290,,"O-RING 1B P-29.0",2,,,,,,,,,,,,,,,,,
66,2,,172187-73160,,PUMP,1,,,,,,,,,,,,,,,,,
70,3,,172187-75880,,O-RING,1,,,,,,,,,,,,,,,,,
75,2,,172187-73170,,"PUMP, GEAR",1,,,,,,,,,,,,,,,,,
80,3,,24325-000900,,"O-RING 1B G-90.0",1,,,,,,,,,,,,,,,,,
81,2,,172187-73180,,VALVE,1,,,,,,,,,,,,,,,,,
85,3,,172162-74860,,BOLT,4,,,,,,,,,,,,,,,,,
86,3,,24311-000160,,"O-RING 1A P-16.0",4,,,,,,,,,,,,,,,,,
87,3,,26450-080252,,"BOLT M 8X 25",2,,,,,,,,,,,,,,,,,
91,3,,24321-000750,,"O-RING 1A G-75.0",1,,,,,,,,,,,,,,,,,
92,3,,26450-080222,,"BOLT M 8X 22",4,,,,,,,,,,,,,,,,,
99,3,,172141-74430,,O-RING,1,,,,,,,,,,,,,,,,,
105,1,,172164-73110,,VALVE,1,,,,,,,,,,,,,,,,,
106,1,,22217-160000,,"SPRING WASHER 16",4,,,,,,,,,,,,,,,,,
107,1,,26116-160452,,"BOLT M16X 45 PLATED",4,,,,,,,,,,,,,,,,,,
108,1,,172187-71110,,"BOLT 10X30-65",1,,,,,,,,,,,,,,,,,
109,1,,172187-71100,,"COVER, FLYWHEEL",1,,,,,,,,,,,,,,,,,
110,1,,22217-100000,,"SPRING WASHER 10",1,,,,,,,,,,,,,,,,,,
111,1,,26013-100302,,"BOLT M10X 30",11,,,,,,,,,,,,,,,,,
112,1,,172187-71200,,CUPRING,1,,,,,,,,,,,,,,,,,
113,1,,172187-71210,,"BOLT 14X 50",3,,,,,,,,,,,,,,,,,
```

https://truckmanualshub.com/

Fig.38 HYD. OIL PUMP & JOINT

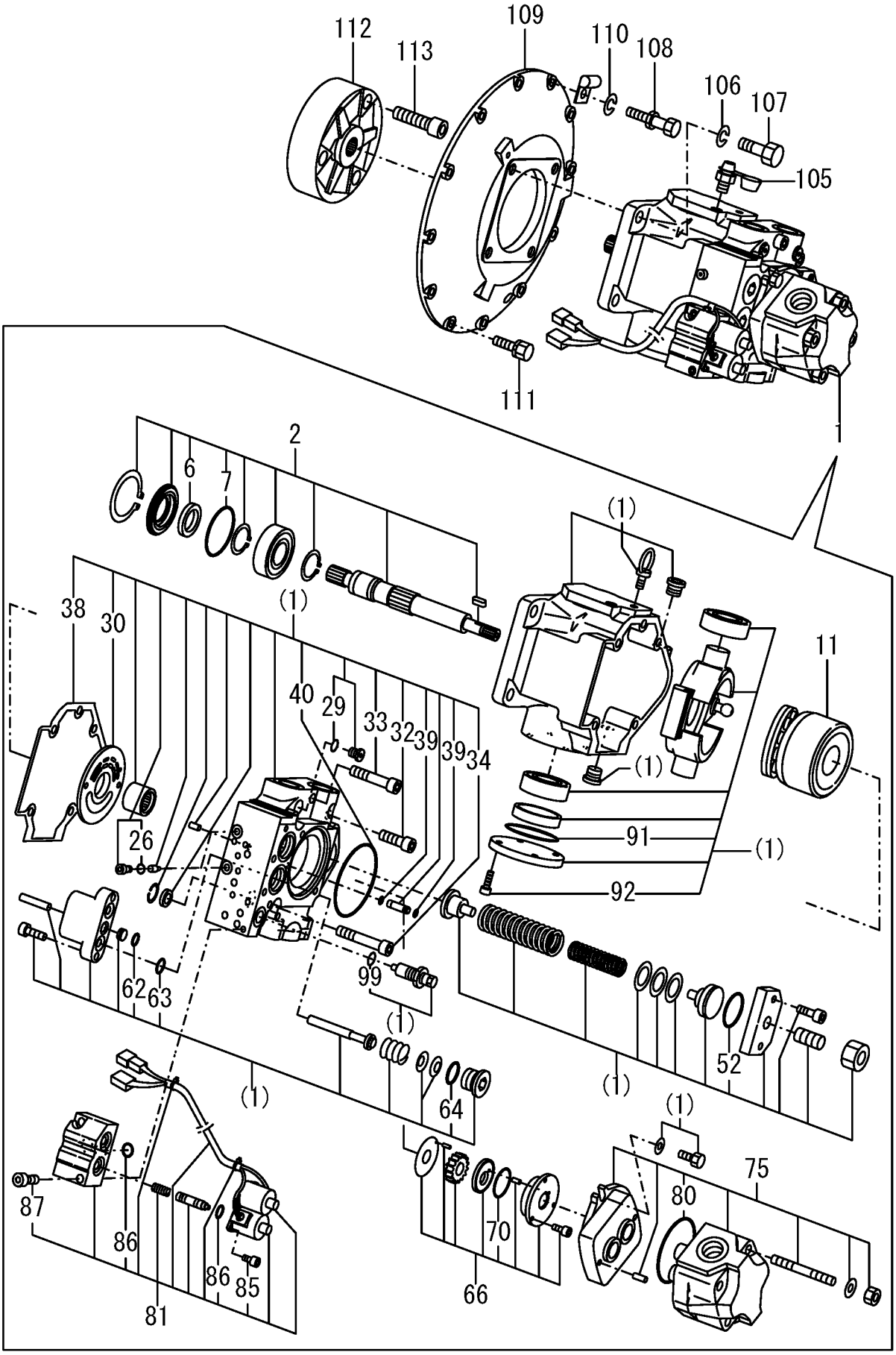

https://truckmanualshub.com/

```
1,1,,172162-61770,,"GUIDE,SLIDE",2,,,,,,,,,,,,,,,,,
2,1,,172187-72910,,"COVER,SLIDE(GREEN:97",1,,,,,,,,,,,,,,,,,,
2-1,1,,172187-72910-1,,"COVER,SLIDE
(87)",1,,,,,,S,1,XXX,M/#01236,,,,,,,,,,I
3,1,,172187-72950,,"GUARD ASSY(GREEN:97)",1,,,,,,,,,,,,,,,,,,
3-1,1,,172187-72950-1,,"GUARD ASSY
(87)",1,,,,,,S,1,XXX,M/#01236,,,,,,,,,,I
4,1,,22217-100000,,"SPRING WASHER 10",1,,,,,,,,,,,,,,,,,,
5,1,,22217-100000,,"SPRING WASHER 10",2,,,,,,,,,,,,,,,,,,
6,1,,26116-100162,,"BOLT M10X 16 PLATED",2,,,,,,,,,,,,,,,,,,
7,1,,26116-100202,,"BOLT M10X 20 PLATED",1,,,,,,,,,,,,,,,,,,
8,1,,933147-03400,,"WASHER, BRAKE ARM",1,,,,,,,,,,,,,,,,,,
9,1,,933168-14170,,"SPRING 16",2,,,,,,,,,,,,,,,,,,
10,1,,172187-72400,,"CYLINDER,BOOM   (97)",1,,,,,,,,,,,,,,,,,,
10-1,1,,172187-72400-1,,"CYLINDER,BOOM
(87)",1,,,,,,S,1,XXX,M/#01236,,,,,,,,,,I
10-2,1,,172187-72400-1,,"CYLINDER,BOOM
(87)",1,,,,,,Z,2,72187677,M/#05096,,,,,,,,,,I
11,2,,182900-34230,,NUT,1,,,,,,,,,,,,,,,,,,
12,2,,172187-72530,,"TUBE,BOOM C(GREEN97",1,,,,,,,,,,,,,,,,,,
12-1,2,,172187-72530-1,,"TUBE,BOOM C
(87)",1,,,,,,S,1,XXX,M/#01236,,,,,,,,,,I
14,3,,172187-72490,,BUSH,1,,,,,,,,,,,,,,,,,,
15,3,,182900-24790,,SEAL,2,,,,,,,,,,,,,,,,,,
16,2,,172187-72540,,"ROD CMP, BOOM",1,,,,,,,,,,,,,,,,,,
18,3,,172187-72490,,BUSH,1,,,,,,,,,,,,,,,,,,
19,3,,182900-24790,,SEAL,2,,,,,,,,,,,,,,,,,,
20,2,,172187-72250,,"SEAL SET",1,,,,,,,,,,,,,,,,,,
29,2,,172187-72790,,"SEAL SET, PISTON",1,,,,,,,,,,,,,,,,,,
32,2,,172187-72590,,"HEAD CMP",1,,,,,,,,,,,,,,,,,,
33,3,,182900-60960,,BUSHING,1,,,,,,,,,,,,,,,,,,
35,2,,172187-72450,,PISTON,1,,,,,,,,,,,,,,,,,,
36,2,,172187-72480,,PLUNGER,1,,,,,,,,,,,,,,,,,,
37,2,,172187-72500,,"TUBE      (GREEN:97)",1,,,,,,,,,,,,,,,,,,
37-1,2,,172187-72500-1,,"TUBE
(YELLOW:87)",1,,,,,,S,1,XXX,M/#01236,,,,,,,,,,I
38,2,,172187-72510,,BOLT,1,,,,,,,,,,,,,,,,,,
39,2,,24761-020000,,"NIPPLE PT1/8,GREASE",1,,,,,,,,,,,,,,,,,,
40,2,,24761-050000,,"NIPPLE C,GREASE",1,,,,,,,,,,,,,,,,,,
41,2,,953KM0-00222,,WASHER,1,,,,,,,,,,,,,,,,,,
```

https://truckmanualshub.com/

Y00S3631-1

Fig.39 BOOM CYLINDER(PREVIOUS)

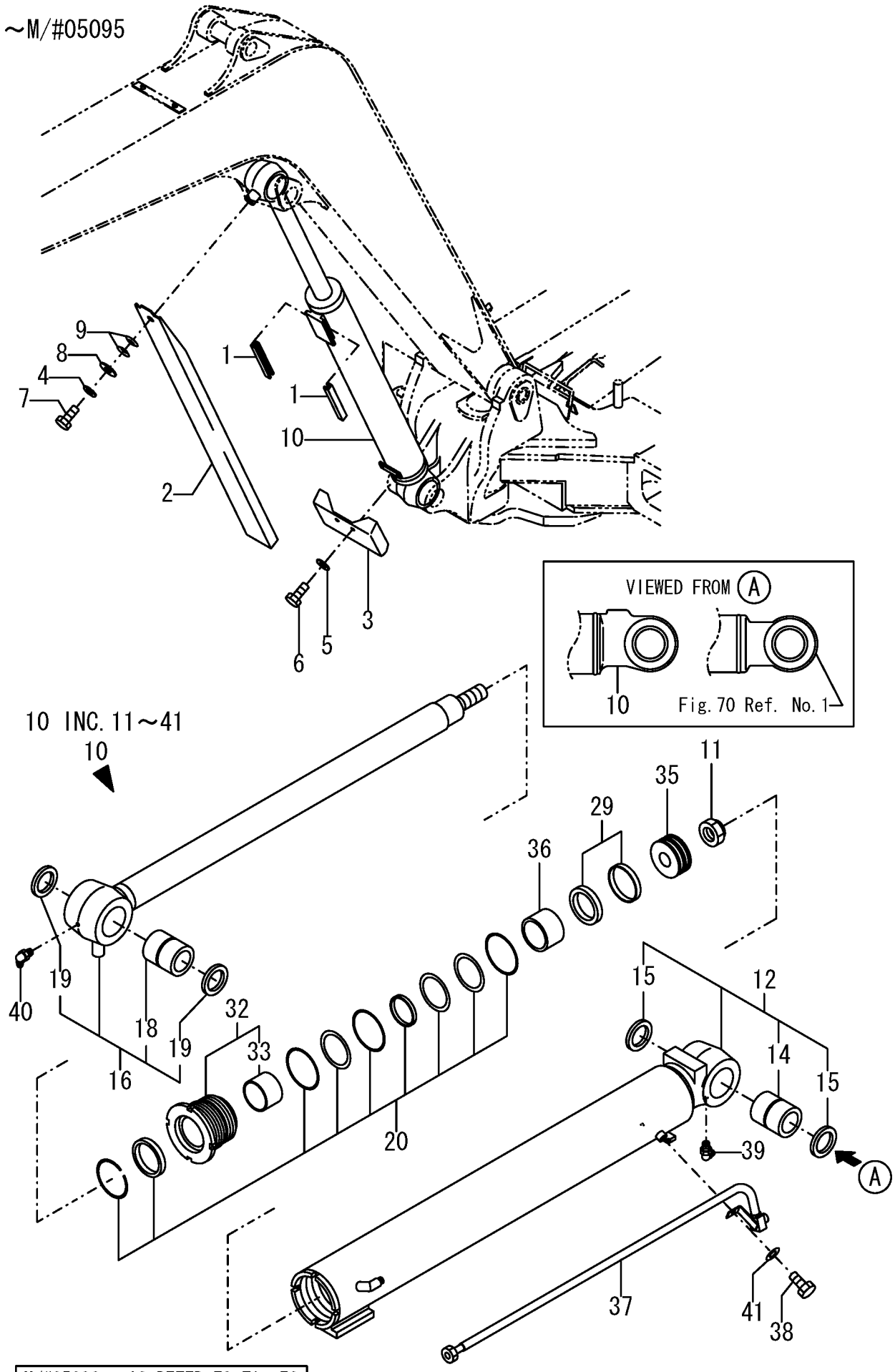

M/#05096~ IS REFER TO Fig.70

https://truckmanualshub.com/

```
1,1,,172187-72600,,"CYLINDER,ARM(GREEN97",1,,,,,,,,,,,,,,,,,,
1-1,1,,172187-72600-1,,"CYLINDER,ARM
(87)",1,,,,,,S,1,XXX,M/#01236,,,,,,,,,,I
1-2,1,,172187-72600-1,,"CYLINDER,ARM
(87)",1,,,,,,Z,2,72187687,M/#05396,,,,,,,,,,I
2,2,,182900-33970,,BALL,9,,,,,,,,,,,,,,,,,,
3,2,,172187-72720,,"TUBE,ARM  (GREEN:97)",1,,,,,,,,,,,,,,,,,,
3-1,2,,172187-72720-1,,"TUBE,ARM
(YELLOW:87)",1,,,,,,S,1,XXX,M/#01236,,,,,,,,,,I
5,3,,172187-72700,,BUSH,1,,,,,,,,,,,,,,,,,,
6,3,,182900-53650,,SEAL,2,,,,,,,,,,,,,,,,,,
7,2,,172187-72730,,ROD,1,,,,,,,,,,,,,,,,,,
9,3,,172187-72690,,BUSH,1,,,,,,,,,,,,,,,,,,
10,3,,182900-53650,,SEAL,2,,,,,,,,,,,,,,,,,,
11,2,,172187-72020,,"SEAL SET",1,,,,,,,,,,,,,,,,,,
20,2,,172187-72740,,"SEAL SET",1,,,,,,,,,,,,,,,,,,
23,2,,172187-72750,,"HEAD CMP",1,,,,,,,,,,,,,,,,,,
24,3,,182900-34250,,BUSHING,1,,,,,,,,,,,,,,,,,,
26,2,,172187-72640,,PISTON,1,,,,,,,,,,,,,,,,,,
27,2,,172187-72650,,NUT,1,,,,,,,,,,,,,,,,,,
28,2,,172187-72660,,PLUNGER,1,,,,,,,,,,,,,,,,,,
29,2,,172187-72670,,PLUNGER,1,,,,,,,,,,,,,,,,,,
30,2,,172187-72680,,CAP,1,,,,,,,,,,,,,,,,,,
31,2,,24761-040000,,"NIPPLE B,GREASE",1,,,,,,,,,,,,,,,,,,
```

https://truckmanualshub.com/

Fig. 40 ARM CYLINDER (PREVIOUS)

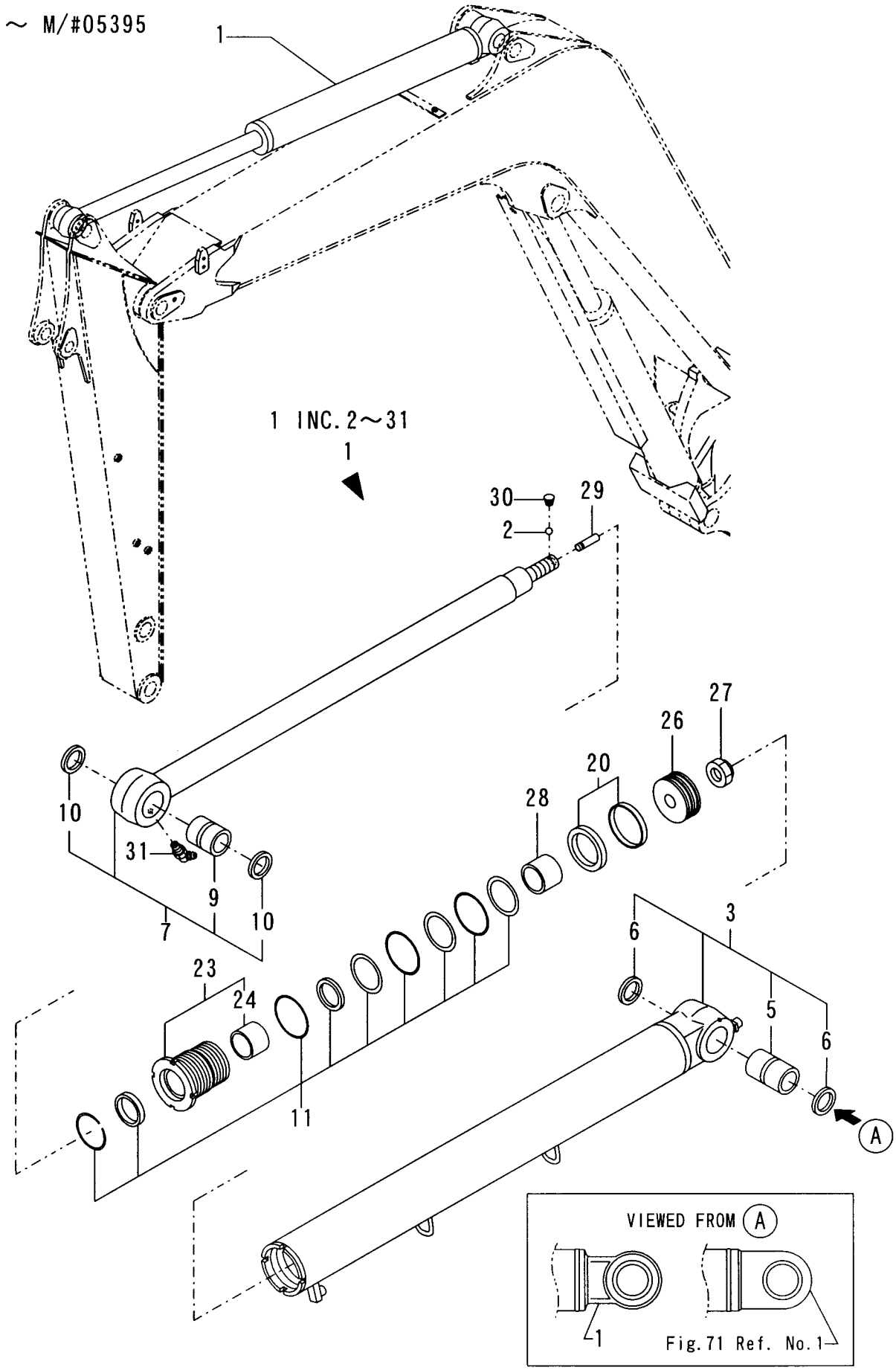

M/#05096~ IS REFER TO Fig. 71

```
1,1,,172187-72801,,"CYL.ASSY,BUCKET (97)",1,,,,,,,,,,,,,,,,,,
1-1,1,,172187-72801-1,,"CYL.
ASSY,BUCKET(87)",1,,,,,,S,1,XXX,M/#01236,,,,,,,,,,I
1-2,1,,172187-72801-1,,"CYL.
ASSY,BUCKET(87)",1,,,,,,Z,2,72187685,M/#05345,,,,,,,,,,I
2,2,,172187-72870,,"TUBE,BUCKET(GREEN97",1,,,,,,,,,,,,,,,,,,
2-1,2,,172187-72870-1,,"TUBE,BUCKET
(87)",1,,,,,,S,1,XXX,M/#01236,,,,,,,,,,I
3,3,,182900-24780,,BUSHING,1,,,,,,,,,,,,,,,,,,
4,3,,172511-91320,,"SEAL 50X60X4, DUST",2,,,,,,,,,,,,,,,,,,
6,2,,172187-72880,,ROD,1,,,,,,,,,,,,,,,,,,
7,3,,182900-53630,,BUSHING,1,,,,,,,,,,,,,,,,,,
8,3,,182900-53650,,SEAL,2,,,,,,,,,,,,,,,,,,
10,2,,172187-72770,,"SEAL SET",1,,,,,,,,,,,,,,,,,,
17,2,,172187-72780,,"SEAL SET",1,,,,,,,,,,,,,,,,,,
20,2,,172187-72760,,HEAD,1,,,,,,,,,,,,,,,,,,
21,3,,182900-34240,,BUSHING,1,,,,,,,,,,,,,,,,,,
23,2,,182900-53730,,NUT,1,,,,,,,,,,,,,,,,,,
24,2,,182900-60900,,PISTON,1,,,,,,,,,,,,,,,,,,
25,2,,172187-72510,,BOLT,1,,,,,,,,,,,,,,,,,,
26,2,,172187-72850,,"TUBE      (GREEN:97)",1,,,,,,,,,,,,,,,,,,,,
26-1,2,,172187-72850-1,,"TUBE
(YELLOW:87)",1,,,,,,S,1,XXX,M/#01236,,,,,,,,,,I
27,2,,24761-020000,,"NIPPLE PT1/8,GREASE",1,,,,,,,,,,,,,,,,,,
28,2,,24761-050000,,"NIPPLE C,GREASE",1,,,,,,,,,,,,,,,,,,
29,2,,953KM0-00222,,WASHER,1,,,,,,,,,,,,,,,,,,
```

https://truckmanualshub.com/

Y00S3631-1

Fig.41 BUCKET CYLINDER(PREVIOUS)

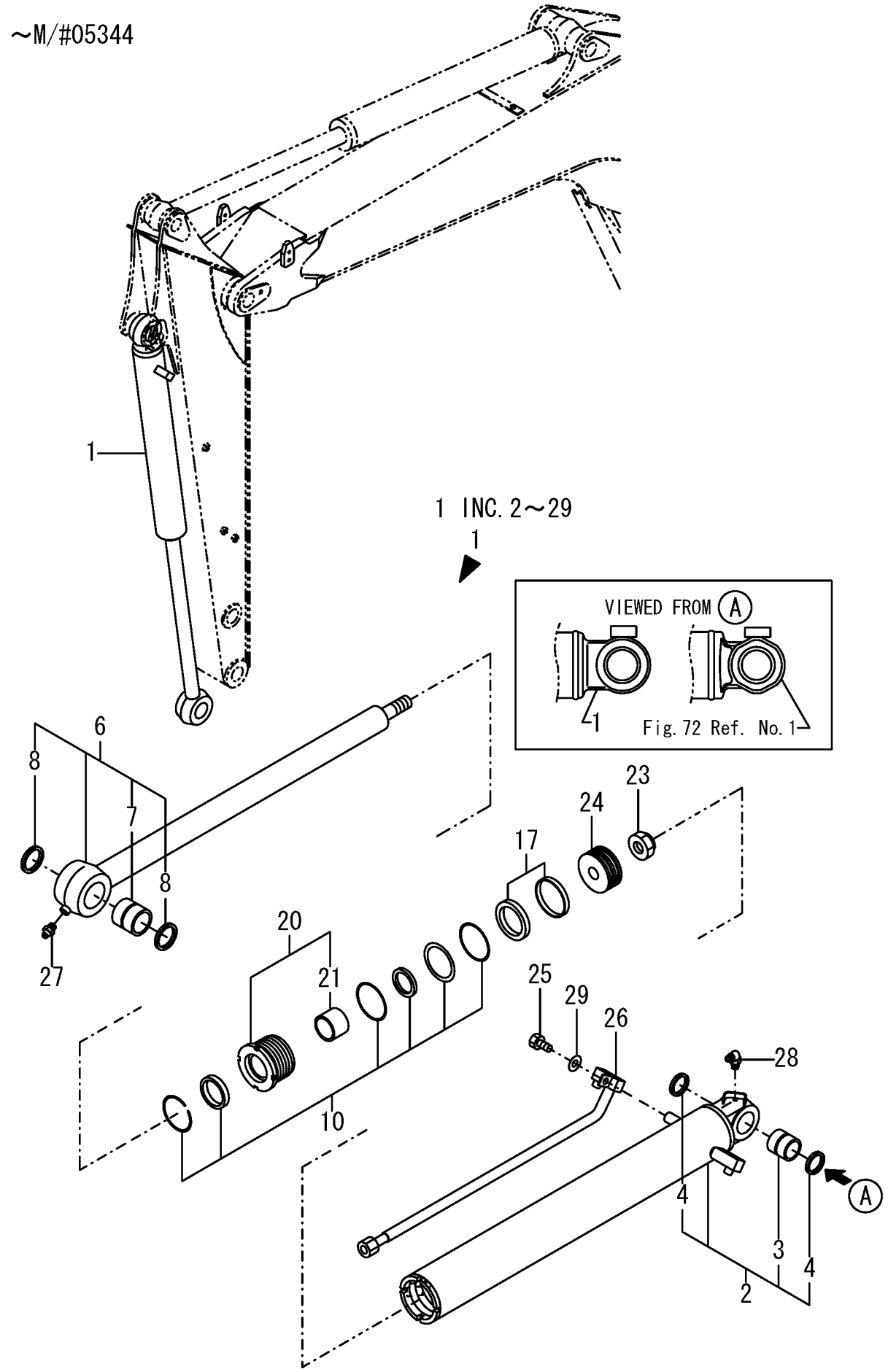

M/#05345~ IS REFER TO Fig.72

```
1,1,,172187-72301,,"CYL.CMP,SWING   (97)",1,,,,,,,,,,,,,,,,,,
1-1,1,,172187-72301-1,,"CYL CMP, SWING
(82)",1,,,,,,S,1,XXX,M/#01236,,,,,,,,,,I
1-2,1,,172187-72301-1,,"CYL CMP, SWING
(82)",1,,,,,,Z,2,72187647,M/#01680,,,,,,,,,,I
2,2,,172187-72260,,"TUBE,SWING(GREEN:97)",1,,,,,,,,,,,,,,,,,,
2-1,2,,172187-72260-
1,,"TUBE,SWING(GREEN:82)",1,,,,,,S,1,XXX,M/#01236,,,,,,,,,,I
4,3,,172187-72370,,BUSH,1,,,,,,,,,,,,,,,,,,
5,3,,182900-53650,,SEAL,2,,,,,,,,,,,,,,,,,,
6,2,,172187-72270,,"ROD CMP",1,,,,,,,,,,,,,,,,,,
8,3,,172187-72360,,BUSH,1,,,,,,,,,,,,,,,,,,
9,3,,182900-53650,,SEAL,2,,,,,,,,,,,,,,,,,,
10,2,,172187-72030,,"HEAD SEAL SET",1,,,,,,,,,,,,,,,,,,
19,2,,172187-72290,,"SEAL SET",1,,,,,,,,,,,,,,,,,,
22,2,,172187-72280,,HEAD,1,,,,,,,,,,,,,,,,,,
23,3,,182900-34250,,BUSHING,1,,,,,,,,,,,,,,,,,,
25,2,,172187-72340,,PISTON,1,,,,,,,,,,,,,,,,,,
26,2,,172187-72350,,PLUNGER,1,,,,,,,,,,,,,,,,,,
27,2,,172187-72380,,TUBE,1,,,,,,,,,,,,,,,,,,
28,2,,172187-72510,,BOLT,1,,,,,,,,,,,,,,,,,,
29,2,,172187-72650,,NUT,1,,,,,,,,,,,,,,,,,,
30,2,,24761-050000,,"NIPPLE C,GREASE",1,,,,,,,,,,,,,,,,,,
31,2,,953KM0-00222,,WASHER,1,,,,,,,,,,,,,,,,,,
```

https://truckmanualshub.com/

Y00S3631-1

Fig.42 SWING CYLINDER(PREVIOUS)

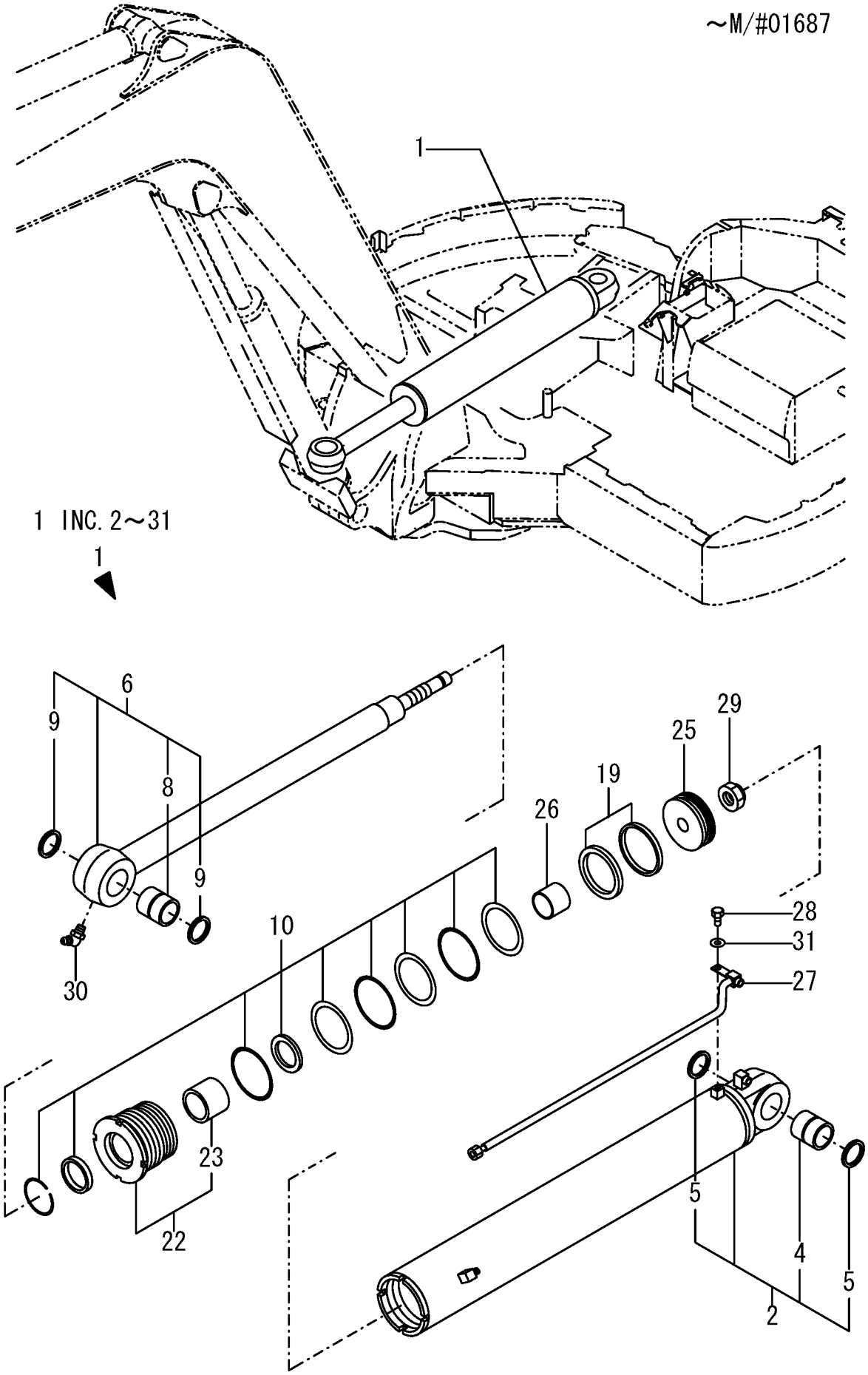

M/#01688~ IS REFER TO Fig.73

https://truckmanualshub.com/

```
1,1,,172187-72891,,"COVER,ASSY.BLADE(88)",1,,,,,,,,,,,,,,,,,,
1-1,1,,172187-72891-1,,"COVER
ASSY,BLADE(82)",1,,,,,,S,1,XXX,M/#01236,,,,,,,,,,I
2,1,,22137-100000,,"WASHER 10,POLISHED",4,,,,,,,,,,,,,,,,,,
3,1,,22217-100000,,"SPRING WASHER 10",4,,,,,,,,,,,,,,,,,,
4,1,,26116-100202,,"BOLT M10X 20 PLATED",4,,,,,,,,,,,,,,,,,,
5,1,,172187-72101,,"CYL.ASSY.BLADE  (88)",1,,,,,,,,,,,,,,,,,,
5-1,1,,172187-72101-1,,"CYLINDER
ASY,BLADE82",1,,,,,,S,1,XXX,M/#01236,,,,,,,,,,I
5-2,1,,172187-72101-1,,"CYLINDER
ASY,BLADE82",1,,,,,,Z,2,72187685,M/#05345,,,,,,,,,,I
6,2,,172187-72060,,"TUBE CMP  (GREEN:88)",1,,,,,,,,,,,,,,,,,,
6-1,2,,172187-72060-1,,"TUBE CMP
(GREEN:82)",1,,,,,,S,1,XXX,M/#01236,,,,,,,,,,I
8,3,,172187-72180,,BUSH,1,,,,,,,,,,,,,,,,,,
9,3,,182900-53650,,SEAL,2,,,,,,,,,,,,,,,,,,
10,2,,172187-72070,,ROD,1,,,,,,,,,,,,,,,,,,
12,3,,172187-72170,,BUSH,1,,,,,,,,,,,,,,,,,,
13,3,,182900-53650,,SEAL,2,,,,,,,,,,,,,,,,,,
14,2,,172187-72040,,"SEAL SET",1,,,,,,,,,,,,,,,,,,
21,2,,172187-72090,,"PISTON SEAL SET",1,,,,,,,,,,,,,,,,,,
24,2,,172187-72080,,"HEAD CMP",1,,,,,,,,,,,,,,,,,,
25,3,,182900-60960,,BUSHING,1,,,,,,,,,,,,,,,,,,
27,2,,172187-72140,,PISTON,1,,,,,,,,,,,,,,,,,,
28,2,,172187-72160,,NUT,1,,,,,,,,,,,,,,,,,,
```

https://truckmanualshub.com/

Y00S3631-1

Fig.43 BLADE CYLINDER(PREVIOUS)

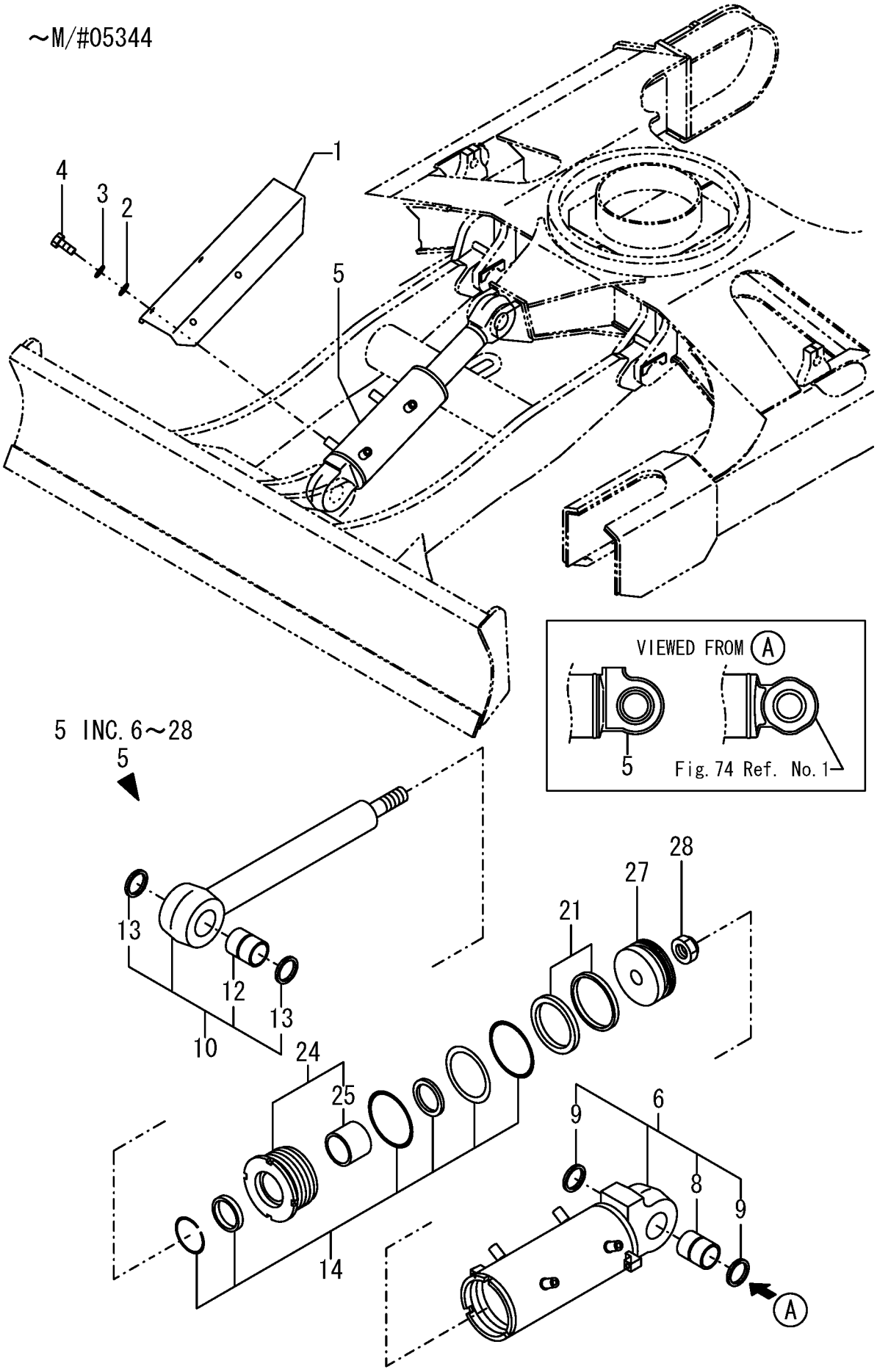

M/#05345~ IS REFER TO Fig.74

https://truckmanualshub.com/

```
1,1,,172187-73300,,"MOTOR, TRAVEL ASSY",2,,,,,,,,,,,,,,,,,
2,2,,172187-73460,,BEARING,4,,,,,,,,,,,,,,,,,
3,2,,172187-74010,,"COVER CMP",2,,,,,,,,,,,,,,,,,
8,3,,24315-000080,,"O-RING 1B P-8.0",2,,,,,,,,,,,,,,,,,
9,3,,24315-000140,,"O-RING 1B P-14.0",4,,,,,,,,,,,,,,,,,
10,2,,172187-74020,,"CARRIER CMP",2,,,,,,,,,,,,,,,,,
19,2,,172187-73510,,RING,2,,,,,,,,,,,,,,,,,
20,2,,172187-73540,,SEAL,4,,,,,,,,,,,,,,,,,
21,2,,172187-73550,,"SNAP RING",2,,,,,,,,,,,,,,,,,
22,2,,172187-74030,,"PLATE, BASE CMP",2,,,,,,,,,,,,,,,,,
34,3,,172187-74040,,"SEAL KIT, BASE PLATE",2,,,,,,,,,,,,,,,,,
35,4,,24315-000140,,"O-RING 1B P-14.0",4,,,,,,,,,,,,,,,,,,,I
36,4,,24315-000250,,"O-RING 1B P-25.0",2,,,,,,,,,,,,,,,,,
37,4,,24315-000080,,"O-RING 1B P-8.0",2,,,,,,,,,,,,,,,,,
38,4,,172187-73910,,O-RING,2,,,,,,,,,,,,,,,,,,,I
39,4,,24315-000070,,"O-RING 1B P-7.0",4,,,,,,,,,,,,,,,,,
40,4,,24311-000125,,"O-RING 1A P-12.5",2,,,,,,,,,,,,,,,,,
41,4,,24315-000110,,"O-RING 1B P-11.0",4,,,,,,,,,,,,,,,,,
42,2,,24101-063020,,"BEARING 6302C3",2,,,,,,,,,,,,,,,,,,,I
45,2,,24315-000080,,"O-RING 1B P-8.0",2,,,,,,,,,,,,,,,,,,,I
46,2,,172187-73780,,SHAFT,2,,,,,,,,,,,,,,,,,
47,2,,172187-74050,,"CYLINDER BLOCK KIT",2,,,,,,,,,,,,,,,,,
57,2,,172187-73900,,BOLT,14,,,,,,,,,,,,,,,,,
58,2,,172187-74060,,"KIT, VALVE",2,,,,,,,,,,,,,,,,,
61,3,,172187-74070,,"SEAL KIT, VALVE",2,,,,,,,,,,,,,,,,,
62,4,,24315-000120,,"O-RING 1B P-12.0",2,,,,,,,,,,,,,,,,,
63,4,,24315-000070,,"O-RING 1B P-7.0",2,,,,,,,,,,,,,,,,,,,I
64,4,,24315-000150,,"O-RING 1B P-15.0",4,,,,,,,,,,,,,,,,,,,I
65,4,,24315-000280,,"O-RING 1B P-28.0",4,,,,,,,,,,,,,,,,,,,I
66,4,,24311-000180,,"O-RING 1A P-18.0",2,,,,,,,,,,,,,,,,,
67,4,,24315-000180,,"O-RING 1B P-18.0",2,,,,,,,,,,,,,,,,,
68,2,,172187-73930,,BOLT,8,,,,,,,,,,,,,,,,,
69,2,,172187-74080,,"SEAL KIT,PISTON",2,,,,,,,,,,,,,,,,,
74,2,,24101-062064,,"BALL BEARING",2,,,,,,,,,,,,,,,,,
75,2,,172187-73770,,SEAL,2,,,,,,,,,,,,,,,,,,,I
76,2,,172187-73600,,PLUG,4,,,,,,,,,,,,,,,,,
77,2,,172187-73560,,O-RING,2,,,,,,,,,,,,,,,,,
78,1,,22217-160000,,"SPRING WASHER 16",24,,,,,,,,,,,,,,,,,
79,1,,26116-160452,,"BOLT M16X 45 PLATED",24,,,,,,,,,,,,,,,,,
```

https://truckmanualshub.com/

Fig.44 DRIVING MOTOR

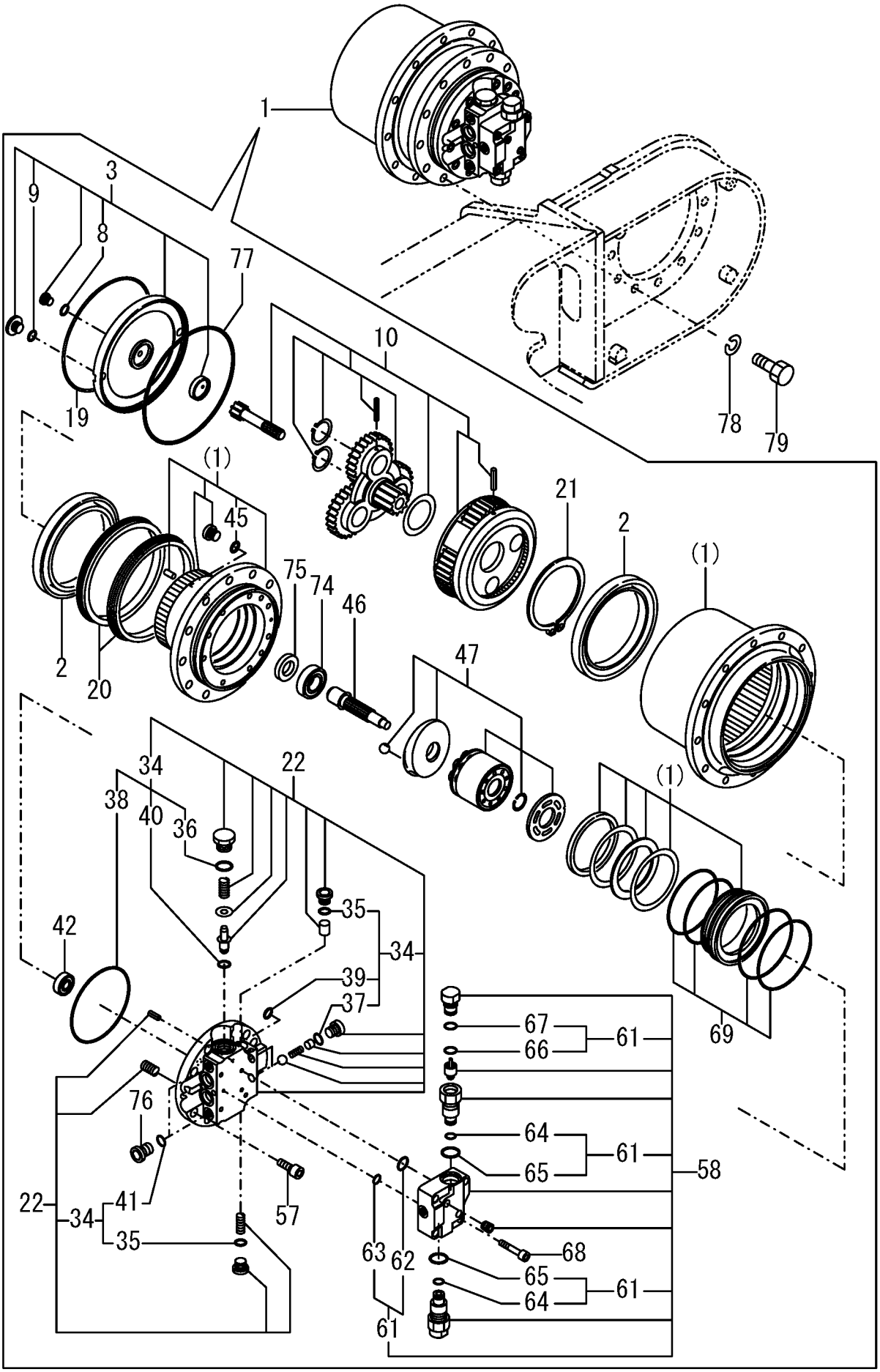

https://truckmanualshub.com/

```
1,1,,172187-73310,,"MOTOR, TURNING",1,,,,,,,,,,,,,,,,,
2,2,,172187-73370,,"REDUCTION GEAR",1,,,,,,,,,,,,,,,,,
4,3,,172162-71490,,"BEARING,TAPER ROLLER",1,,,,,,,,,,,,,,,,,,
7,3,,172162-71520,,"SEAL,OIL",1,,,,,,,,,,,,,,,,,
8,3,,172162-71530,,"BEARING,TAPER ROLLER",1,,,,,,,,,,,,,,,,,,
21,3,,172187-73380,,SHAFT,1,,,,,,,,,,,,,,,,,
23,3,,26450-120952,,"BOLT M12X95,HEX.SCKT",6,,,,,,,,,,,,,,,,,
24,2,,172187-73410,,"MOTOR, HYD.OIL",1,,,,,,,,,,,,,,,,,
25,3,,172187-74950,,MOTOR,1,,,,,,,,,,,,,,,,,
26,4,,172162-71710,,"BEARING,NEEDLE",1,,,,,,,,,,,,,,,,,
38,4,,172187-74960,,"SEAL KIT, MOTOR",1,,,,,,,,,,,,,,,,,
39,4,,172176-73370,,"TEFLON RING",2,,,,,,,1,,,,,,,,,,
40,4,,172162-71740,,O-RING,1,,,,,,,1,,,,,,,,,,
41,4,,172162-71890,,"OIL SEAL",1,,,,,,,1,,,,,,,,,,
42,4,,172162-71760,,O-RING,1,,,,,,,1,,,,,,,,,,
43,4,,172165-73450,,"TEFLON RING",4,,,,,,,1,,,,,,,,,,
44,4,,172165-73430,,BEARING,1,,,,,,,,,,,,,,,,,
49,3,,172187-74970,,"RELEAF BLOCK ASSY",1,,,,,,,,,,,,,,,,,
54,4,,172187-74980,,"SEAL KIT",1,,,,,,,,,,,,,,,,,
55,4,,24315-000140,,"O-RING 1B P-14.0",2,,,,,,,2,,,,,,,,,,
56,4,,172164-73860,,O-RING,1,,,,,,,2,,,,,,,,,,
57,4,,172162-71930,,RING,2,,,,,,,2,,,,,,,,,,
58,4,,24315-000210,,"O-RING 1B P 21",2,,,,,,,2,,,,,,,,,,
59,4,,24315-000260,,"O-RING 1B P-26.0",2,,,,,,,2,,,,,,,,,,
60,4,,172162-71950,,"RING, BACK UP",2,,,,,,,2,,,,,,,,,,
61,2,,26450-120302,,"BOLT         M12X30",4,,,,,,,,,,,,,,,,,
62,2,,172162-71880,,"GAUGE COMP.,LEVEL",1,,,,,,,,,,,,,,,,,
63,1,,172187-73340,,"FUEL PIPE",1,,,,,,,,,,,,,,,,,
64,1,,22217-160000,,"SPRING WASHER 16",8,,,,,,,,,,,,,,,,,
65,1,,23871-030000,,"PLUG PT3/8,SCREW",1,,,,,,,,,,,,,,,,,
66,1,,23871-040000,,"PLUG PT1/2,SCREW",1,,,,,,,,,,,,,,,,,
67,1,,26116-160502,,"BOLT M16X 50 PLATED",8,,,,,,,,,,,,,,,,,
68,1,,172187-73320,,CONNECTOR,1,,,,,,,,,,,,,,,,,
```

https://truckmanualshub.com/

Fig.45 TURNING MOTOR

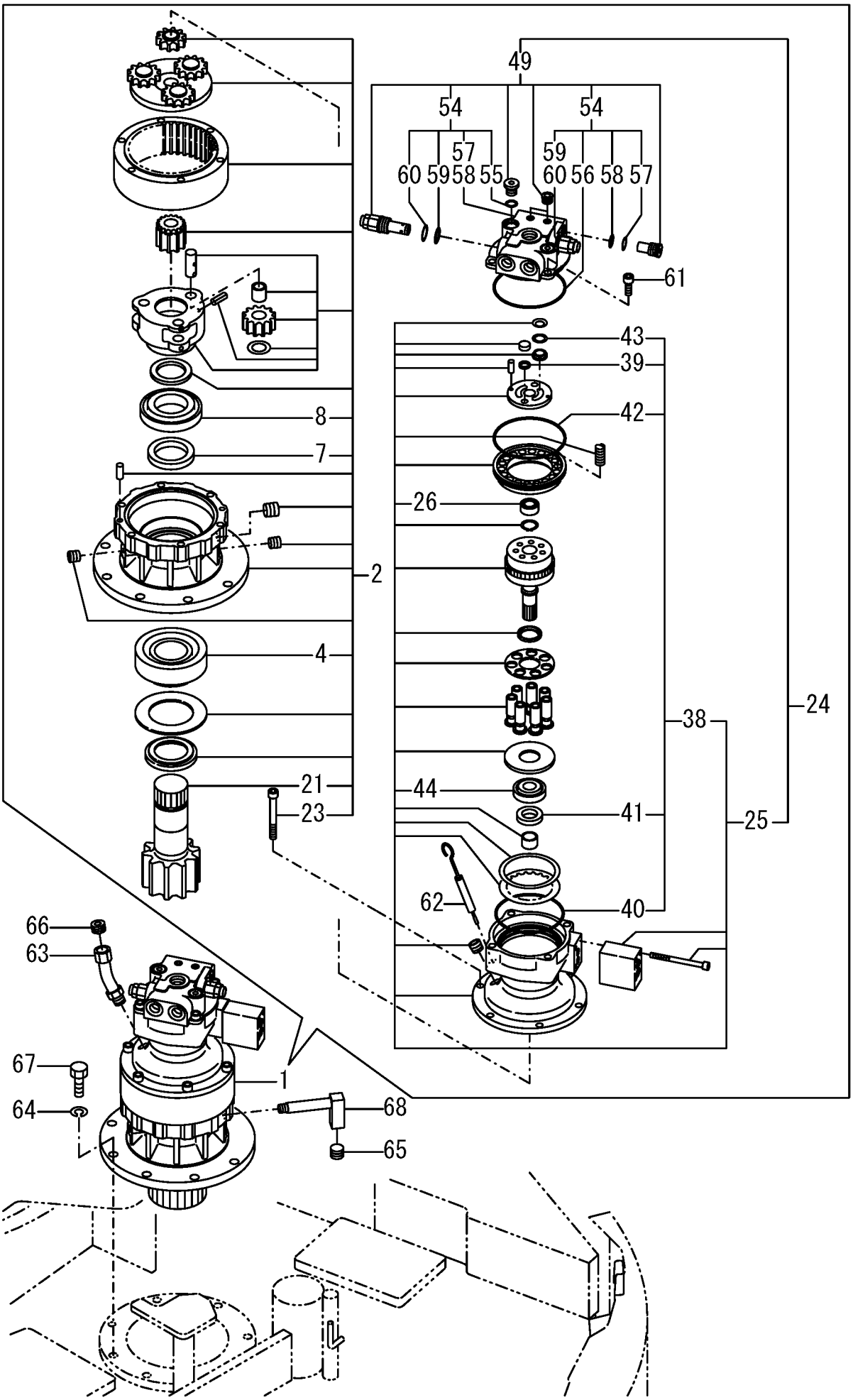

https://truckmanualshub.com/

```
1,1,,172187-73800,,"SWIVEL JOINT",1,,,,,,,,,,,,,,,,,
2,2,,172147-73810,,SHAFT,1,,,,,,,,,,,,,,,,,
3,2,,26013-100402,,"BOLT M10X 40",4,,,,,,,,,,,,,,,,,
4,2,,172147-73830,,"HUB, SWIVEL",1,,,,,,,,,,,,,,,,,
5,2,,172147-73850,,PLATE,1,,,,,,,,,,,,,,,,,
6,2,,172122-73860,,"SPACER, SWIVEL",1,,,,,,,,,,,,,,,,,,
7,2,,172122-73870,,"THRUST WASHER",1,,,,,,,,,,,,,,,,,,
8,2,,22242-000700,,"CIRCLIP   70",1,,,,,,,,,,,,,,,,,,
9,2,,23871-030000,,"PLUG PT3/8,SCREW",4,,,,,,,,,,,,,,,,,,
10,2,,172187-73820,,"SEAL KIT, SWIVEL",1,,,,,,,,,,,,,,,,,,,
11,3,,172187-73810,,"SWIVEL SEAL",8,,,,,,,,,,,,,,,,,,
12,3,,24311-000800,,"O-RING 1A P-80.0",1,,,,,,,,,,,,,,,,,,
13,3,,24311-001000,,"O-RING 1A P-100.0",1,,,,,,,,,,,,,,,,,,,
14,3,,24321-000950,,"O-RING 1A G-95.0",1,,,,,,,,,,,,,,,,,,
15,1,,22217-120000,,"SPRING WASHER",4,,,,,,,,,,,,,,,,,,
16,1,,26116-120902,,"BOLT M12X 90 PLATED",4,,,,,,,,,,,,,,,,,,,
```

https://truckmanualshub.com/

Fig.46 SWIVEL JOINT

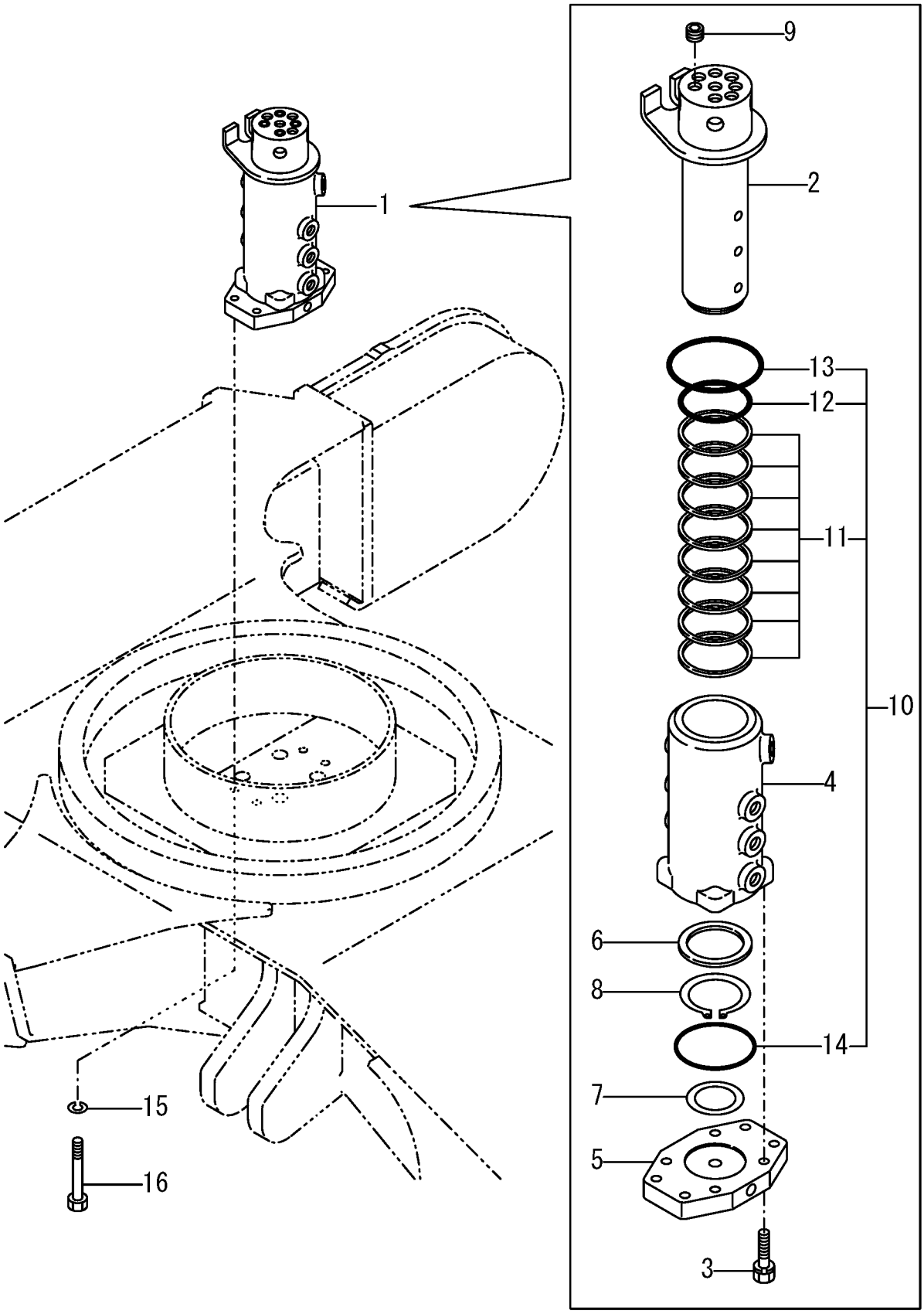

https://truckmanualshub.com/

```
1,1,,172187-45010,,"PLATE ASSY, VALVE",1,,,,,,,,,,,,,,,,,
2,1,,172187-45490,,CUSSHION,3,,,,,,,,,,,,,,,,,
3,1,,22242-000350,,"CIRCLIP   35",5,,,,,,,,,,,,,,,,,
4,1,,26106-100352,,"BOLT M10X 35 PLATED",3,,,,,,,,,,,,,,,,,
5,1,,22217-100000,,"SPRING WASHER 10",3,,,,,,,,,,,,,,,,,
6,1,,26116-100302,,"BOLT 10X30",3,,,,,,,,,,,,,,,,,
7,1,,26702-100002,,"NUT M10",1,,,,,,,,,,,,,,,,,
8,1,,172187-74100,,"VALVE CMP, CONTROL",1,,,,,,,,,,,,,,,,,
9,2,,172187-74820,,"P3 PORT ASY",1,,,,,,,,,,,,,,,,,
10,3,,172187-74120,,PLUG,1,,,,,,W,,*,M/#00501,,,,,,,,,
11,4,,24315-000110,,"O-RING 1B P-11.0",1,,,,,,,,,,,,,,,,,
12,3,,172187-74150,,"VALVE, RELIEF",1,,,,,,W,,*,M/#00501,,,,,,,,,
13,4,,172116-74150,,O-RING,1,,,,,,,,,,,,,,,,,
17,4,,24315-000120,,"O-RING 1B P-12.0",1,,,,,,,,,,,,,,,,,
18,4,,24321-000650,,"O-RING 1A G-65.0",1,,,,,,,,,,,,,,,,,
19,2,,172187-74830,,"P1 PORT ASY",1,,,,,,,,,,,,,,,,,
20,3,,172187-74160,,"VALVE, RELIEF",2,,,,,,W,,*,M/#00501,,,,,,,,,
21,4,,172116-74150,,O-RING,2,,,,,,,,,,,,,,,,,
23,4,,24321-000650,,"O-RING 1A G-65.0",2,,,,,,,,,,,,,,,,,
24,2,,172187-74400,,"SECTION, SPOOL",1,,,,,,,,,,,,,,,,,
31,3,,24321-000650,,"O-RING 1A G-65.0",1,,,,,,,,,,,,,,,,,
32,3,,933166-80520,,WIPER,2,,,,,,,,,,,,,,,,,
36,3,,933171-80610,,O-RING,2,,,,,,,,,,,,,,,,,
37,2,,172187-74840,,"SECTION,BOOM",1,,,,,,,,,,,,,,,,,
38,3,,172187-74140,,"VALVE ASSY, RELIEF",2,,,,,,W,,*,M/#00501,,,,,,,,,
39,4,,172116-74150,,O-RING,2,,,,,,,,,,,,,,,,,
47,4,,172151-74320,,O-RING,2,,,,,,,,,,,,,,,,,
61,4,,24311-000200,,"O-RING 1A P-20.0",2,,,,,,,,,,,,,,,,,
62,4,,24316-000090,,"O-RING 4D P9",1,,,,,,,,,,,,,,,,,
63,4,,24316-240100,,"O-RING 4D P-10A",2,,,,,,,,,,,,,,,,,
64,4,,24321-000650,,"O-RING 1A G-65.0",1,,,,,,,,,,,,,,,,,
65,4,,172116-74430,,O-RING,1,,,,,,,,,,,,,,,,,
66,3,,172187-74690,,PLUG,1,,,,,,W,,*,M/#00501,,,,,,,,,
67,4,,172312-74770,,O-RING,1,,,,,,,,,,,,,,,,,
68,3,,172187-74540,,PLUG,1,,,,,,W,,*,M/#00501,,,,,,,,,
69,4,,24315-000140,,"O-RING 1B P-14.0",1,,,,,,,,,,,,,,,,,
70,3,,172187-74550,,PLUG,2,,,,,,W,,*,M/#00501,,,,,,,,,
71,4,,24315-000180,,"O-RING 1B P-18.0",2,,,,,,,,,,,,,,,,,
72,2,,172187-74850,,"SECTION, BUCKET",1,,,,,,,,,,,,,,,,,
73,3,,172187-74130,,"VALVE, ANTI-VOIDE",1,,,,,,W,,*,M/#00501,,,,,,,,,
74,4,,172116-74150,,O-RING,1,,,,,,,,,,,,,,,,,
75,3,,172187-74140,,"VALVE ASSY, RELIEF",1,,,,,,W,,*,M/#00501,,,,,,,,,
76,4,,172116-74150,,O-RING,1,,,,,,,,,,,,,,,,,
85,4,,172151-74320,,O-RING,2,,,,,,,,,,,,,,,,,
90,4,,24321-000650,,"O-RING 1A G-65.0",1,,,,,,,,,,,,,,,,,
91,2,,172187-74860,,T-PORT,1,,,,,,,,,,,,,,,,,
92,3,,172187-74550,,PLUG,3,,,,,,W,,*,M/#00501,,,,,,,,,
93,4,,24315-000180,,"O-RING 1B P-18.0",3,,,,,,,,,,,,,,,,,
94,3,,172146-74720,,"VALVE ASSY, SHUT-OFF",1,,,,,,W,,*,M/#00501,,,,,,,,,
95,4,,172116-74150,,O-RING,1,,,,,,,,,,,,,,,,,
96,4,,24311-240100,,"O-RING 1A P-10A",1,,,,,,,,,,,,,,,,,
100,4,,24315-000120,,"O-RING 1B P-12.0",1,,,,,,,,,,,,,,,,,
101,2,,172187-74490,,TIE-ROD,3,,,,,,,,,,,,,,,,,
102,2,,26716-100002,,"NUT 10",6,,,,,,,,,,,,,,,,,
103,1,,172187-45060,,"CUSHION L ASSY",2,,,,,,,,,,,,,,,,,
104,1,,26106-100552,,"BOLT M10X 55 PLATED",2,,,,,,,,,,,,,,,,,
```

https://truckmanualshub.com/

Fig.47 CONTROL VALVE(1/2)

CONTROL VALVE ASSY
172187-74100
Fig.47 Ref.No.8
INC Fig.47 Ref.No.9～102
Fig.48 Ref.No.1～121

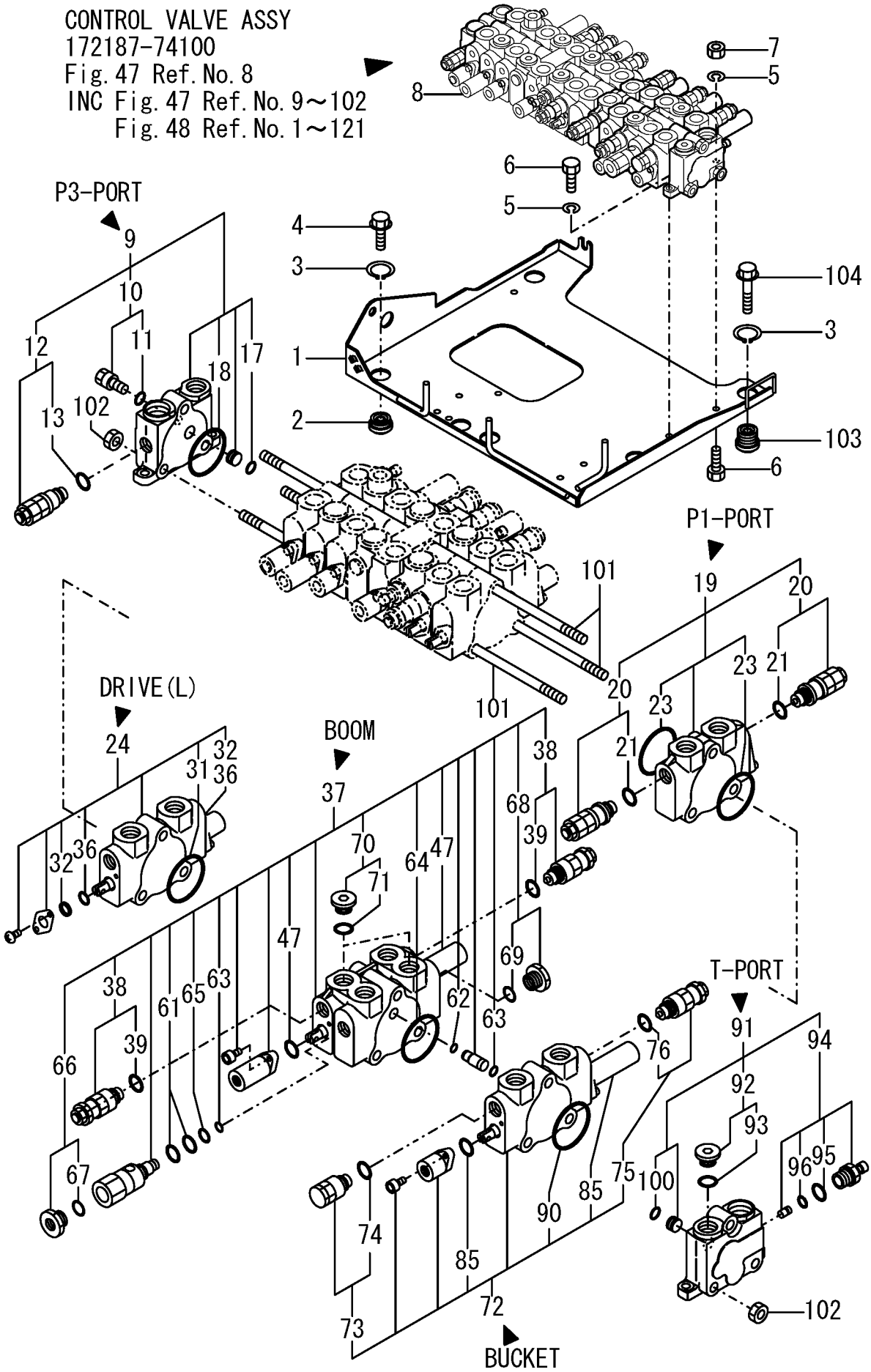

```
1,2,,172187-74870,,"SECTION, BLADE",1,,,,,,,,,,,,,,,,,,
2,3,,172146-74720,,"VALVE ASSY, SHUT-OFF",1,,,,,,W,,*,M/#00501,,,,,,,,,
3,4,,172116-74150,,O-RING,1,,,,,,,,,,,,,,,,,,
4,4,,24311-240100,,"O-RING 1A P-10A",1,,,,,,,,,,,,,,,,,,
13,4,,24321-000650,,"O-RING 1A G-65.0",1,,,,,,,,,,,,,,,,,,
14,4,,933166-80520,,WIPER,2,,,,,,,,,,,,,,,,,,
18,4,,933171-80610,,O-RING,2,,,,,,,,,,,,,,,,,,
19,2,,172187-74231,,"SECTION, SPOOL",1,,,,,,,,,,,,,,,,,,
19-1,2,,172187-74232,,"SPOOL SECTION
ASSY",1,,,,,,N,,72187593,M/#01198,,,,,,,,,,I
28,3,,172187-74300,,PLUG,1,,,,,,W,,*,M/#00501,,,,,,,,,
29,4,,24315-000180,,"O-RING 1B P-18.0",1,,,,,,,,,,,,,,,,,,
30,3,,172187-74550,,PLUG,1,,,,,,W,,*,M/#00501,,,,,,,,,
31,4,,24315-000180,,"O-RING 1B P-18.0",1,,,,,,,,,,,,,,,,,,
32,4,,24321-000650,,"O-RING 1A G-65.0",1,,,,,,,,,,,,,,,,,,
33,4,,172151-74320,,O-RING,2,,,,,,,,,,,,,,,,,,
35,2,,172187-74310,,"SECTION, SPOOL",1,,,,,,,,,,,,,,,,,,
35-1,2,,172187-74311,,"SPOOL SECTION
ASSY",1,,,,,,N,,72187593,M/#01198,,,,,,,,,,I
42,3,,172151-74320,,O-RING,2,,,,,,,,,,,,,,,,,,
47,3,,24321-000650,,"O-RING 1A G-65.0",1,,,,,,,,,,,,,,,,,,
48,2,,172187-74880,,"SECTION, ARM",1,,,,,,,,,,,,,,,,,,
49,3,,172187-74140,,"VALVE ASSY, RELIEF",2,,,,,,W,,*,M/#00501,,,,,,,,,
50,4,,172116-74150,,O-RING,2,,,,,,,,,,,,,,,,,,
59,4,,172151-74320,,O-RING,2,,,,,,,,,,,,,,,,,,
64,3,,172187-74530,,"PLUG ASSY",2,,,,,,W,,*,M/#00501,,,,,,,,,
65,4,,24315-000110,,"O-RING 1B P-11.0",2,,,,,,,,,,,,,,,,,,
66,3,,172187-74540,,PLUG,1,,,,,,W,,*,M/#00501,,,,,,,,,
67,4,,24315-000140,,"O-RING 1B P-14.0",1,,,,,,,,,,,,,,,,,,
68,3,,172187-74550,,PLUG,2,,,,,,W,,*,M/#00501,,,,,,,,,
69,4,,24315-000150,,"O-RING 1B P-15.0",2,,,,,,M,,,,,,,,,,,,I
69-1,4,,24315-000180,,"O-RING 1B P-18.0",2,,,,,,,,,,,,,,,,,,,,,I
72,4,,24316-000090,,"O-RING 4D P9",1,,,,,,,,,,,,,,,,,,
73,4,,24316-240100,,"O-RING 4D P-10A",1,,,,,,,,,,,,,,,,,,
74,2,,172187-74890,,PTO(OPTIONAL)SECTION,1,,,,,,,,,,,,,,,,,,
82,3,,24321-000650,,"O-RING 1A G-65.0",1,,,,,,,,,,,,,,,,,,
83,3,,933166-80520,,WIPER,2,,,,,,,,,,,,,,,,,,
87,4,,933171-80610,,O-RING,2,,,,,,,,,,,,,,,,,,
88,3,,172187-74550,,PLUG,3,,,,,,W,,*,M/#00501,,,,,,,,,
89,4,,24315-000180,,"O-RING 1B P-18.0",3,,,,,,,,,,,,,,,,,,
90,3,,172146-74720,,"VALVE ASSY, SHUT-OFF",2,,,,,,W,,*,M/#00501,,,,,,,,,
91,4,,172116-74150,,O-RING,2,,,,,,,,,,,,,,,,,,
92,4,,24311-240100,,"O-RING 1A P-10A",2,,,,,,,,,,,,,,,,,,
93,2,,172187-74900,,"SECTION, SWING",1,,,,,,,,,,,,,,,,,,
94,3,,172187-74140,,"VALVE ASSY, RELIEF",2,,,,,,W,,*,M/#00501,,,,,,,,,
95,4,,172116-74150,,O-RING,2,,,,,,,,,,,,,,,,,,
105,4,,24321-000650,,"O-RING 1A G-65.0",1,,,,,,,,,,,,,,,,,,
106,4,,933166-80520,,WIPER,2,,,,,,,,,,,,,,,,,,
110,4,,933171-80610,,O-RING,2,,,,,,,,,,,,,,,,,,
111,2,,172187-74380,,"SECTION, SPOOL",1,,,,,,,,,,,,,,,,,,
116,3,,24321-000650,,"O-RING 1A G-65.0",1,,,,,,,,,,,,,,,,,,
117,3,,933166-80520,,WIPER,2,,,,,,,,,,,,,,,,,,
121,3,,933171-80610,,O-RING,2,,,,,,,,,,,,,,,,,,
```

https://truckmanualshub.com/

Fig.48 CONTROL VALVE(2/2)

CONTROL VALVE ASSY
172187-74100
Fig.47 Ref.No.8
INC Fig.47 Ref.No.9～102
Fig.48 Ref.No.1～121

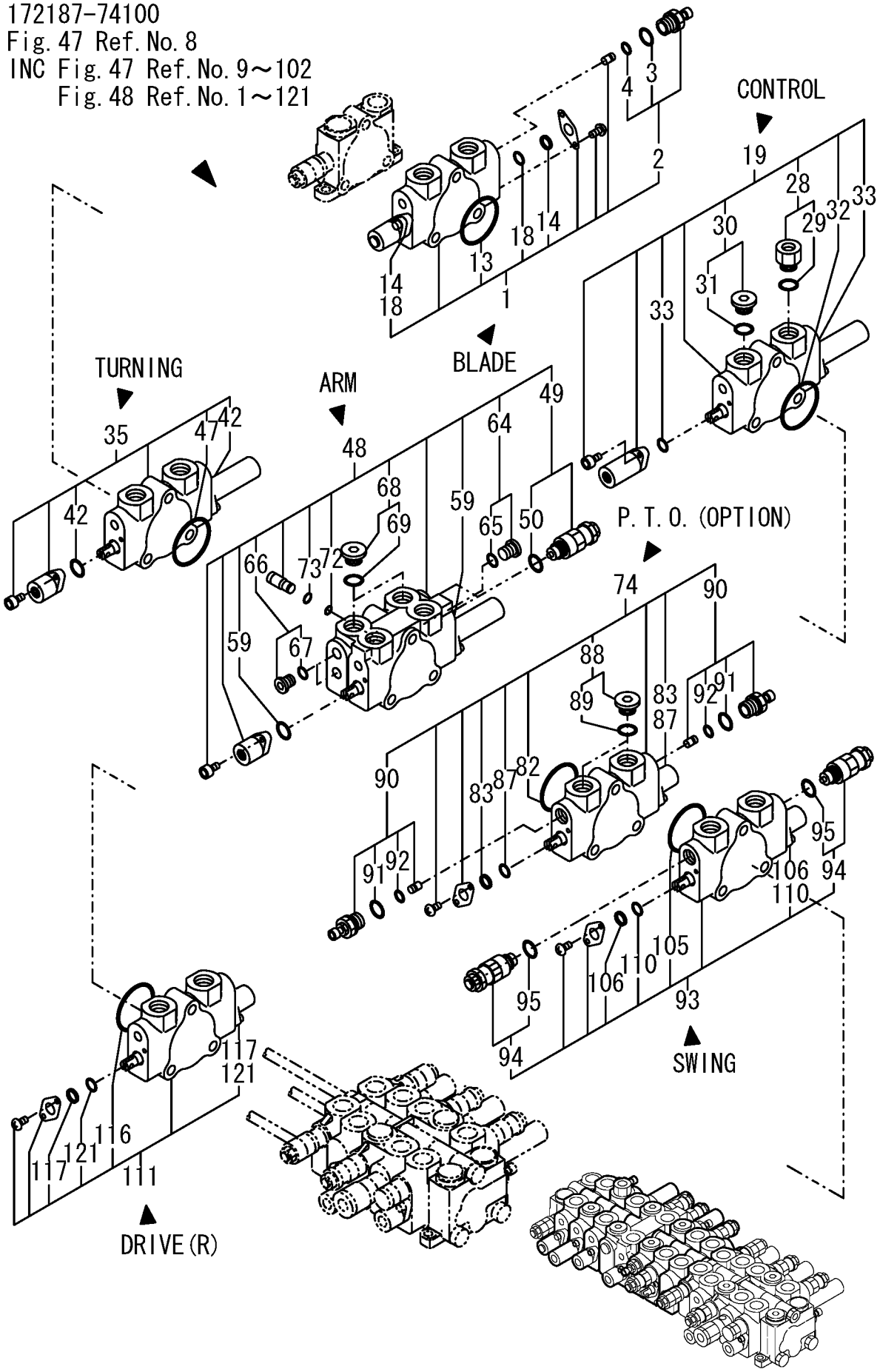

https://truckmanualshub.com/

```
1,1,,172165-74300,,"JOY-STICK L.H.",1,,,,,,1,,,,,,,,,,
1-1,1,,172187-74750,,"VALVE ASSY (L,
EP",1,,,,,F,1,72187544,M/#00995,,,,,,,,,,I
16,2,,172165-74340,,"HANDLE, SUB",1,,,,,,,,,,,,,,,,
17,3,,172151-73510,,"BAR, HANDLE",1,,,,,,,,,,,,,,,,
18,3,,172151-73520,,HANDLE,2,,,,,,,,,,,,,,,,
19,3,,172151-73530,,"HANDLE, CAP",1,,,,,,,,,,,,,,,,
20,3,,172151-73640,,CAP,1,,,,,,,,,,,,,,,,
21,3,,172151-73660,,"SCREW 4X30",1,,,,,,,,,,,,,,,,
22,3,,22137-040000,,"WASHER 4, POLISHED",2,,,,,,,,,,,,,,,,
23,3,,26553-040102,,"SCREW 4X10",2,,,,,,,,,,,,,,,,
24,3,,26553-050082,,"SCREW 5X8",2,,,,,,,,,,,,,,,,
25,3,,26716-040002,,"NUT M 4",2,,,,,,,,,,,,,,,,
26,3,,26716-040002,,"NUT M 4",1,,,,,,,,,,,,,,,,
27,2,,172151-73620,,BELLOWS,1,,,,,,,,,,,,,,,,
28,2,,172151-73630,,"SEAL KIT, SUB",1,,,,,,,,,,,,,,,,
29,3,,172151-73360,,"SEAL WASHER",2,,,,,,,,,,,,,,,,
30,3,,172151-73420,,SEAL,4,,,,,,,,,,,,,,,,
31,3,,24315-000200,,"O-RING 1B P-20.0",4,,,,,,,,,,,,,,,,
32,3,,24341-000900,,"O-RING 1A S-90.0",1,,,,,,,,,,,,,,,,
33,2,,172151-73650,,"NUT, ADJUST",1,,,,,,,,,,,,,,,,
34,2,,22351-050010,,"SPRING PIN 5X10",1,,,,,,,,,,,,,,,,
35,2,,26450-080302,,"BOLT M 8X 30",2,,,,,,,,,,,,,,,,
36,2,,26756-140002,,"LOCK NUT M14 PLATED",1,,,,,,,,,,,,,,,,
```

https://truckmanualshub.com/

Fig.49 REMOTE CONTROL VALVE(L)

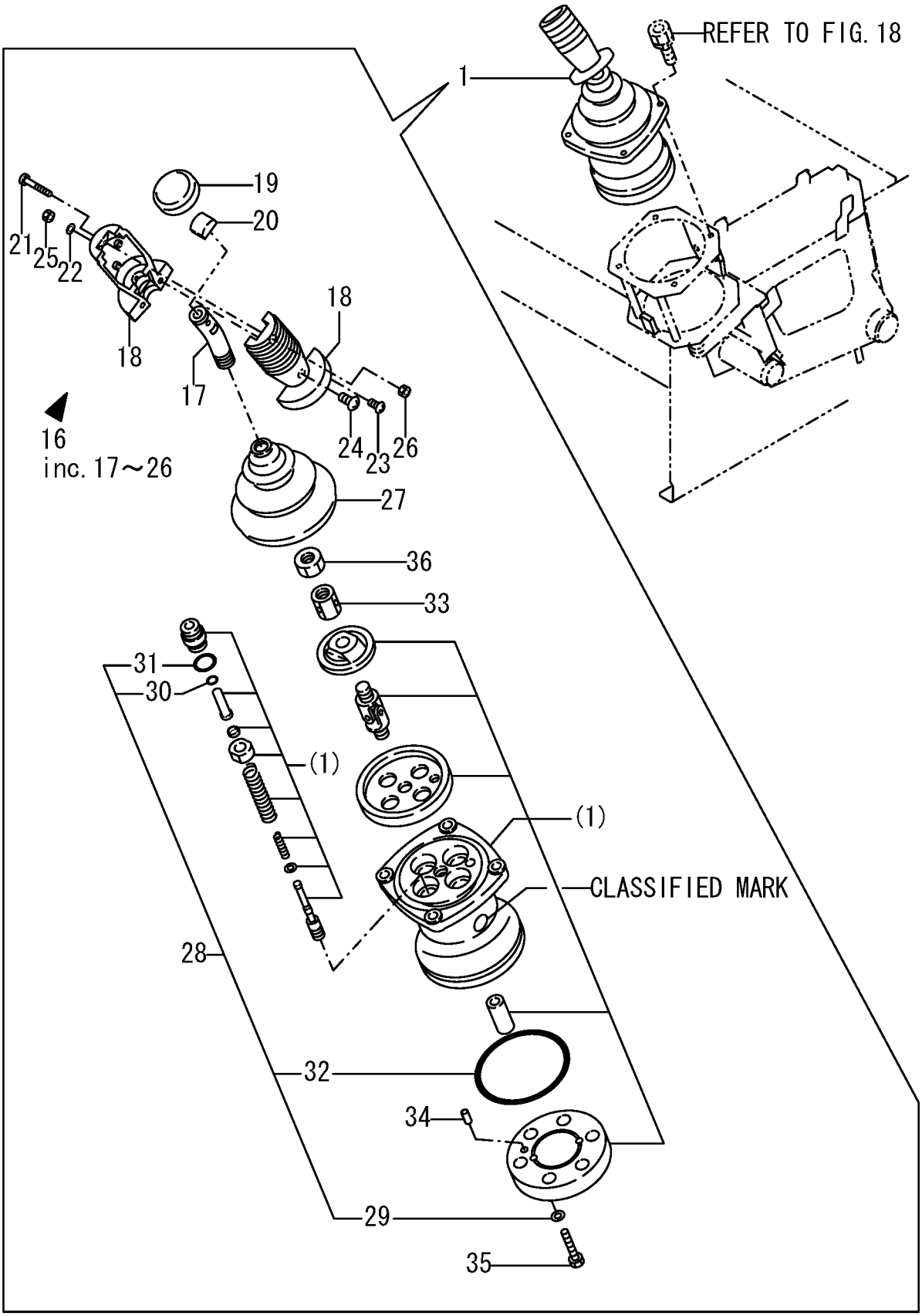

https://truckmanualshub.com/

```
1,1,,172165-74310,,"JOY-STICK R.H.",1,,,,,,1,,,,,,,,,,
1-1,1,,172187-74760,,"VALVE ASSY (R,
EP",1,,,,,N,1,72187544,M/#00995,,,,,,,,,,I
16,2,,172151-73500,,"NUT, ADJUST",1,,,,,,,,,,,,,,,,
17,2,,172165-74350,,"HANDLE, SUB",1,,,,,,,,,,,,,,,,
18,3,,172151-73510,,"BAR, HANDLE",1,,,,,,,,,,,,,,,,
19,3,,172151-73520,,HANDLE,2,,,,,,,,,,,,,,,,
20,3,,172151-73530,,"HANDLE, CAP",1,,,,,,,,,,,,,,,,
21,3,,172151-73540,,ROLLER,1,,,,,,,,,,,,,,,,
22,3,,172151-73550,,"LEVER, SWITCH",1,,,,,,,,,,,,,,,,
23,3,,172151-73560,,"SEAT, SWITCH",1,,,,,,,,,,,,,,,,
24,3,,172151-73570,,"SEAT(2), SWITCH",1,,,,,,,,,,,,,,,,
26,3,,172151-73600,,TUBE,1,,,,,,,,,,,,,,,,
27,3,,172151-73660,,"SCREW 4X30",1,,,,,,,,,,,,,,,,
28,3,,22137-040000,,"WASHER 4, POLISHED",2,,,,,,,,,,,,,,,,
29,3,,26553-040102,,"SCREW 4X10",2,,,,,,,,,,,,,,,,
30,3,,26553-050082,,"SCREW 5X8",2,,,,,,,,,,,,,,,,
31,3,,26716-040002,,"NUT M 4",2,,,,,,,,,,,,,,,,
32,3,,26716-040002,,"NUT M 4",1,,,,,,,,,,,,,,,,
33,2,,172151-73590,,BUSH,1,,,,,,,,,,,,,,,,
34,2,,172151-73610,,TERMINAL,2,,,,,,,,,,,,,,,,
35,2,,172151-73620,,BELLOWS,1,,,,,,,,,,,,,,,,
36,2,,172151-73630,,"SEAL KIT, SUB",1,,,,,,,,,,,,,,,,
37,3,,172151-73360,,"SEAL WASHER",2,,,,,,,,,,,,,,,,
38,3,,172151-73420,,SEAL,4,,,,,,,,,,,,,,,,
39,3,,24315-000200,,"O-RING 1B P-20.0",4,,,,,,,,,,,,,,,,
40,3,,24341-000900,,"O-RING 1A S-90.0",1,,,,,,,,,,,,,,,,
41,2,,22351-050010,,"SPRING PIN 5X10",1,,,,,,,,,,,,,,,,
42,2,,26450-080302,,"BOLT M 8X 30",2,,,,,,,,,,,,,,,,
43,2,,26756-140002,,"LOCK NUT M14 PLATED",1,,,,,,,,,,,,,,,,
```

https://truckmanualshub.com/

Fig.50 REMOTE CONTROL VALVE(R)

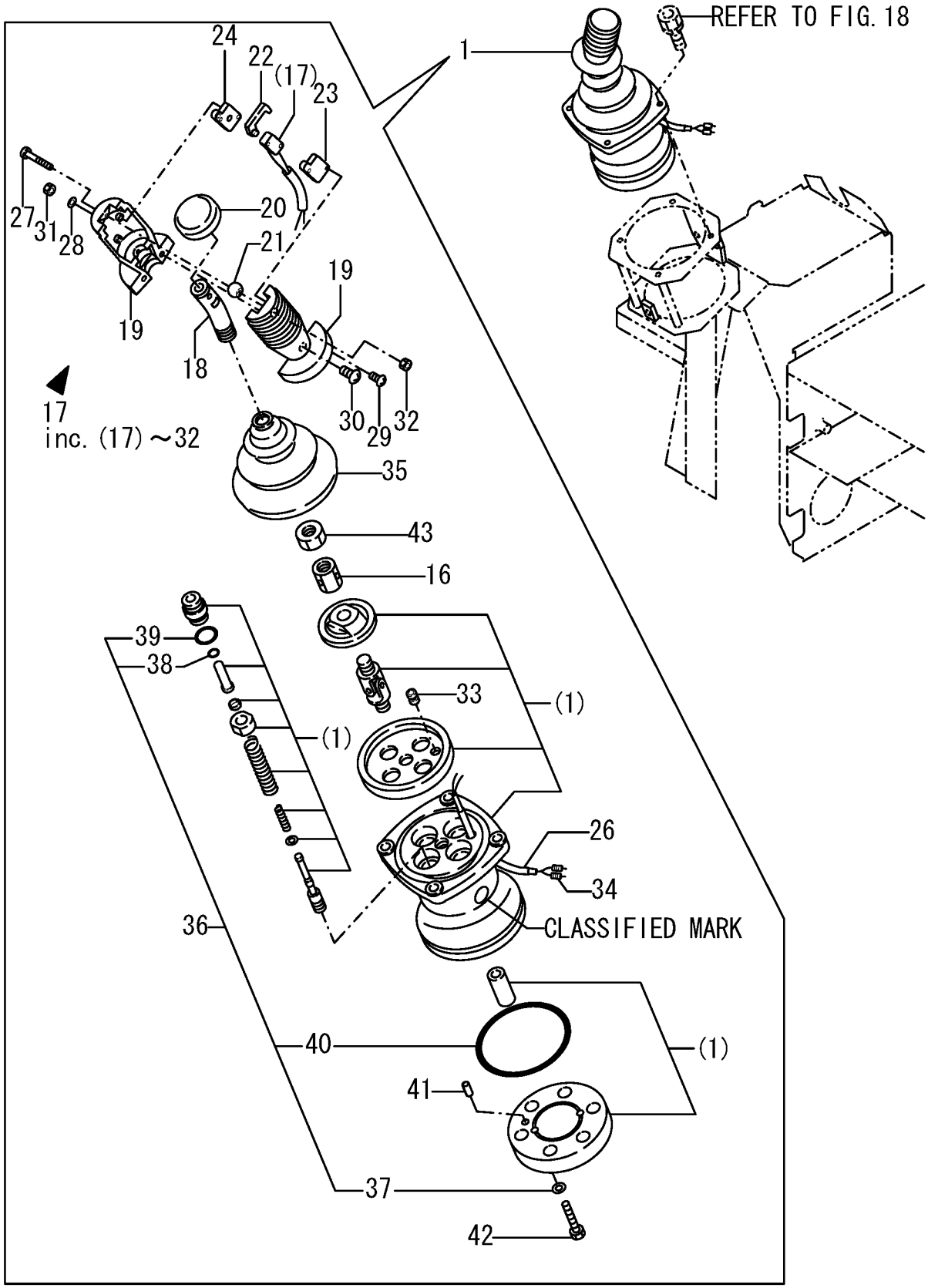

https://truckmanualshub.com/

```
1,1,,772187-75101,,RESERVOIR,1,,,,,,,,,,,,,,,,,
3,2,,172162-73700,,"STRAINER,SUCTION",1,,,,,,,,,,,,,,,,,
4,2,,172187-73050,,"FILTER ,RETURN (EP",1,,,,,,,,,,,,,,,,,,
5,3,,172187-73060,,"ELEMENT (EP",1,,,,,,,,,,,,,,,,,
6,3,,172112-74971,,"VALVE, BY-PASS",1,,,,,,,,,,,,,,,,,
7,2,,172187-73710,,"SHAFT, FILTER",1,,,,,,,,,,,,,,,,,
8,2,,172112-75770,,"SPRING, STRAINER",1,,,,,,,,,,,,,,,,,
9,2,,172112-75780,,"SPRING, STRAINER",1,,,,,,,,,,,,,,,,,
10,2,,26716-100002,,"NUT 10",1,,,,,,,,,,,,,,,,,
11,2,,124766-59050,,"CLAMP 12",1,,,,,,,,,,,,,,,,,
12,1,,172187-75270,,PIPE,1,,,,,,,,,,,,,,,,
13,2,,172187-75280,,"COVER ASSY",1,,,,,,,,,,,,,,,,
14,2,,172187-75340,,"COVER      (GRAY:73)",1,,,,,,,,,,,,,,,,,
15,2,,172187-75350,,"GAUGE, OIL",1,,,,,,,,,,,,,,,,,
16,2,,172165-75450-4,,"PLATE      (GRAY:72)",1,,,,,,,,,,,,,,,,,,
17,2,,172165-75460,,GASKET,1,,,,,,,,,,,,,,,,,
18,2,,172165-75481,,ELEMENT,1,,,,,,,,,,,,,,,,,
19,2,,172187-75500,,"PLUG 24",1,,,,,,,,,,,,,,,,,
20,2,,172187-75510,,HOSE,1,,,,,,,,,,,,,,,,,
21,2,,172116-75850-4,,"PLUG,OIL FEED   (72)",1,,,,,,,,,,,,,,,,,,
22,2,,22217-100000,,"SPRING WASHER 10",4,,,,,,,,,,,,,,,,,
23,2,,22217-100000,,"SPRING WASHER 10",4,,,,,,,,,,,,,,,,,
24,2,,24311-000380,,"O-RING 1A P-38.0",1,,,,,,,,,,,,,,,,,
25,2,,24321-001350,,"O-RING 1A G-135.0",1,,,,,,,,,,,,,,,,,
26,2,,24321-001700,,"O-RING 1A G-170.0",1,,,,,,,,,,,,,,,,,
27,2,,24341-000300,,"O-RING 1A S-30.0",1,,,,,,,,,,,,,,,,,
28,2,,26022-050102,,"SCREW M 5X 10",3,,,,,,,,,,,,,,,,,
29,2,,26116-100252,,"BOLT M10X 25 PLATED",4,,,,,,,,,,,,,,,,,
30,2,,26116-100252,,"BOLT M10X 25 PLATED",4,,,,,,,,,,,,,,,,,
31,1,,22137-160000,,"WASHER 16,POLISHED",4,,,,,,,,,,,,,,,,,
32,1,,22217-160000,,"SPRING WASHER 16",4,,,,,,,,,,,,,,,,,
33,1,,26116-160402,,"BOLT M16X 40 PLATED",4,,,,,,,,,,,,,,,,,
```

https://truckmanualshub.com/

Fig.51 HYD. OIL TANK

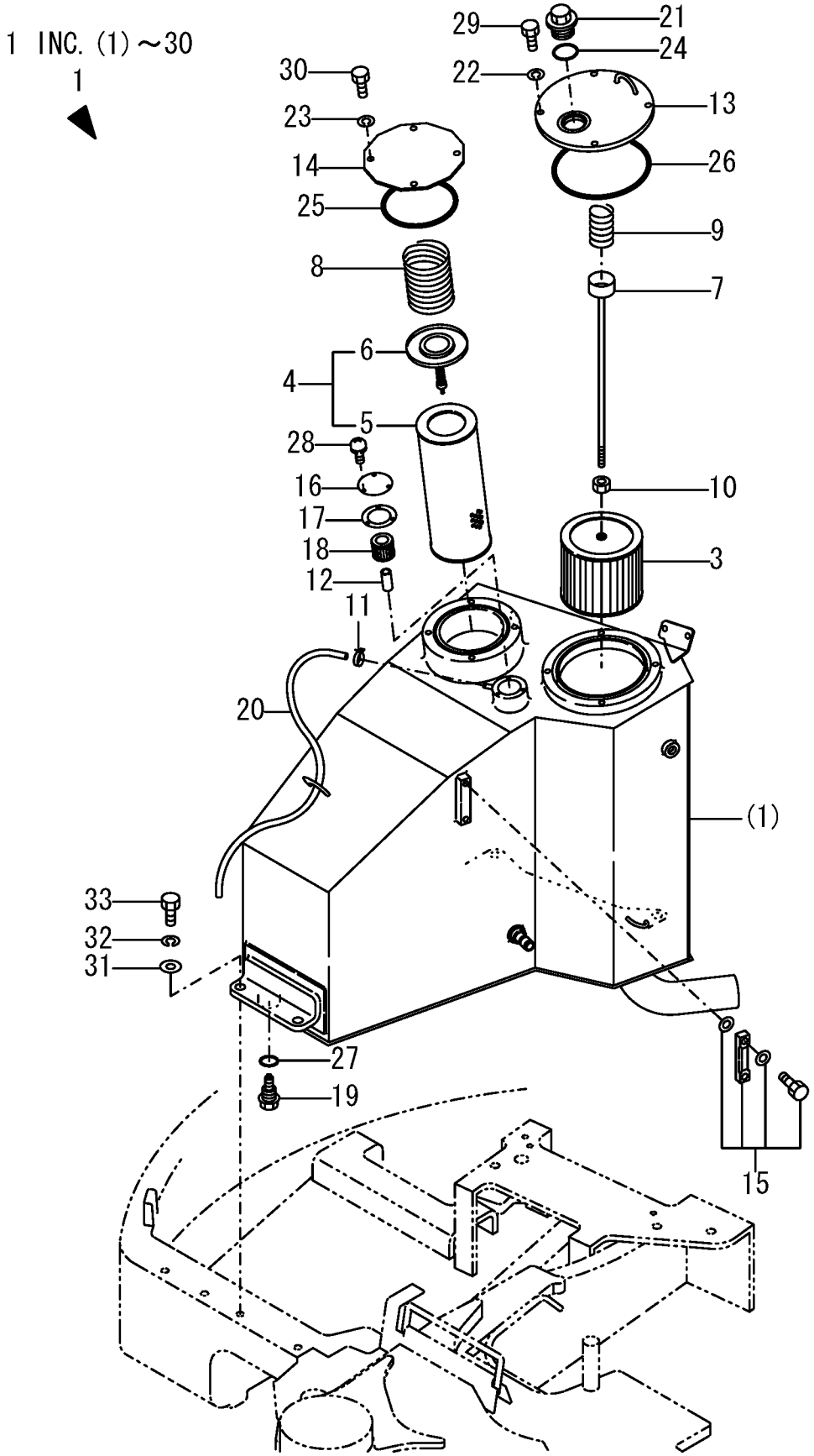

https://truckmanualshub.com/

```
1,1,,172187-74800,,"OIL COOLER",1,,,,,,,,,,,,,,,,,,
2,1,,26013-080162,,"BOLT W/WASHER M8X16",4,,,,,,,,,,,,,,,,,,
```

https://truckmanualshub.com/

Fig.52 LUB. OIL COOLER

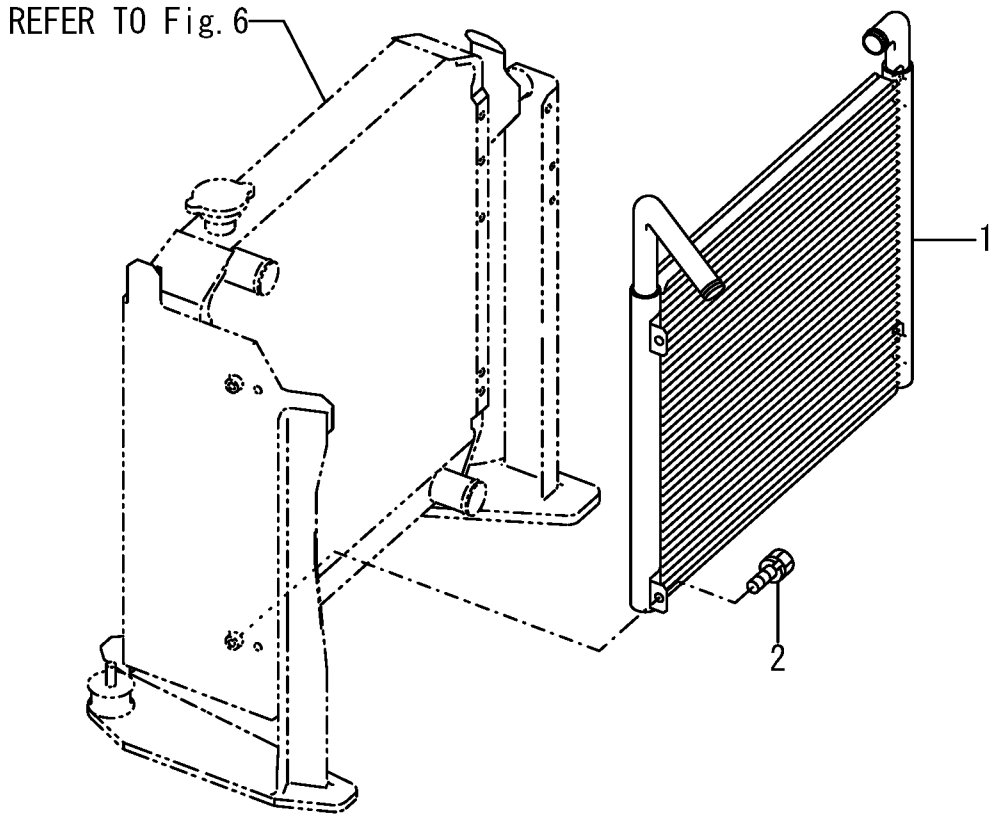

https://truckmanualshub.com/

```
1,1,,172187-76100,,FLANGE,1,,,,,,,,,,,,,,,,,,
2,1,,172151-76160,,ELBOW,2,,,,,,,,,,,,,,,,,,
3,2,,24315-000180,,"O-RING 1B P-18.0",2,,,,,,,,,,,,,,,,,,
4,1,,172187-76190,,ELBOW,3,,,,,,,,,,,,,,,,,,
5,2,,24315-000240,,"O-RING 1B P-24.0",3,,,,,,,,,,,,,,,,,,
6,1,,172187-76200,,ADAPTER,1,,,,,,,,,,,,,,,,,,
7,1,,24315-000180,,"O-RING 1B P-18.0",1,,,,,,,,,,,,,,,,,,
8,1,,24325-000650,,"O-RING 1B G-65.0",1,,,,,,,,,,,,,,,,,,
9,1,,26013-120402,,"BOLT M12X 40",4,,,,,,,,,,,,,,,,,,
10,1,,172187-78120,,HOSE,1,,,,,,,,,,,,,,,,,,
11,1,,172187-78130,,HOSE,1,,,,,,,,,,,,,,,,,,
12,1,,172187-78140,,HOSE,1,,,,,,,,,,,,,,,,,,
13,1,,172187-78150,,HOSE,1,,,,,,,,,,,,,,,,,,
14,1,,23000-090000,,"CLAMP 90",4,,,,,,,,,,,,,,,,,,
```

https://truckmanualshub.com/

Fig.53 HYD.OIL PIPING(TANK～PUMP～VALVE)

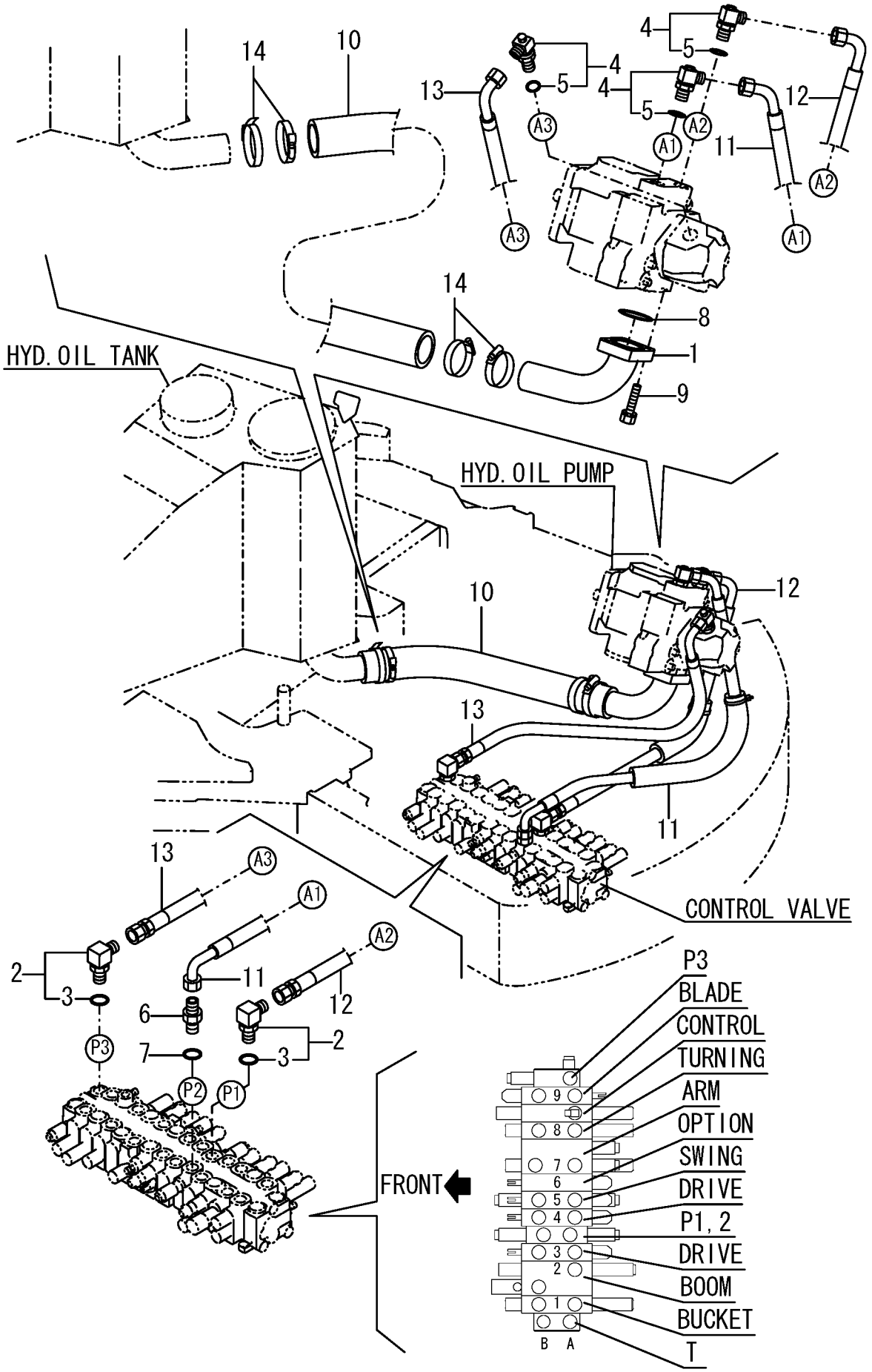

https://truckmanualshub.com/

```
1,1,,172176-76210,,"JOINT PF1/2",1,,,,,,,,,,,,,,,,,
2,1,,172147-76270,,CONNECTOR,2,,,,,,,,,,,,,,,,,
3,1,,172141-76900,,"CONNECTOR 1/2L",2,,,,,,,,,,,,,,,,,
4,2,,24315-000180,,"O-RING 1B P-18.0",2,,,,,,,,,,,,,,,,,
5,1,,172112-77360,,"CONNECTOR PF1/2PF1/2",3,,,,,,,,,,,,,,,,,,,,I
6,1,,172112-77360,,"CONNECTOR PF1/2PF1/2",2,,,,,,,,,,,,,,,,,
7,1,,24315-000180,,"O-RING 1B P-18.0",6,,,,,,,,,,,,,,,,,
8,1,,24315-000180,,"O-RING 1B P-18.0",2,,,,,,,,,,,,,,,,,
9,1,,172187-76591,,"CLAMP     (GREEN:97)",1,,,,,,,,,,,,,,,,,
9A,1,,172187-76591-1,,"CLAMP    (YELLOW:87)",1,,,,,,,,,,,,,,,,,,,,I
11,2,,172187-76650,,"RUBBER, SUPPORT",1,,,,,,,,,,,,,,,,,
12,1,,172187-76640,,"PLATE ASSY(GREEN:97)",1,,,,,,,,,,,,,,,,,
12A,1,,172187-76640-1,,"PLATE ASSY(YELLOW:87",1,,,,,,,,,,,,,,,,,,,,I
13,2,,172187-76700,,RUBBER,1,,,,,,,,,,,,,,,,,
15,1,,172187-78100,,"RUBBER A",2,,,,,,,,,,,,,,,,,
16,1,,172187-78250,,HOSE,1,,,,,,,,,,,,,,,,,
17,1,,172187-78260,,HOSE,1,,,,,,,,,,,,,,,,,
18,1,,172187-78270,,HOSE,1,,,,,,,,,,,,,,,,,
19,1,,172187-78280,,HOSE,1,,,,,,,,,,,,,,,,,
20,1,,172187-78290,,HOSE,1,,,,,,,,,,,,,,,,,
21,1,,172187-78300,,HOSE,1,,,,,,,,,,,,,,,,,
22,1,,172187-78370,,HOSE,2,,,,,,,,,,,,,,,,,
23,1,,172187-78570,,CLAMP,1,,,,,,Z,,72187598,M/#01217,,,,,,,,,,I
24,1,,172187-78570,,CLAMP,1,,,,,,Z,,72187598,M/#01217,,,,,,,,,,I
25,1,,172187-78570,,CLAMP,1,,,,,,Z,,72187598,M/#01217,,,,,,,,,,I
26,1,,172187-78570,,CLAMP,1,,,,,,Z,,72187598,M/#01217,,,,,,,,,,I
27,1,,172187-78570,,CLAMP,1,,,,,,Z,,72187598,M/#01217,,,,,,,,,,I
28,1,,172122-79930,,"CLAMP B",1,,,,,,Z,,,,,,,,,,,,,I
29,1,,172183-81160,,"TREE CLIP",2,,,,,,,,,,,,,,,,,
30,1,,26013-100202,,"BOLT W/WASHER M10X20",2,,,,,,,,,,,,,,,,,
31,1,,26013-100602,,"BOLT M10X 60",2,,,,,,,,,,,,,,,,,
```

https://truckmanualshub.com/

Fig.54 HYD. OIL PIPING (VALVE～MOTOR, BOOM)

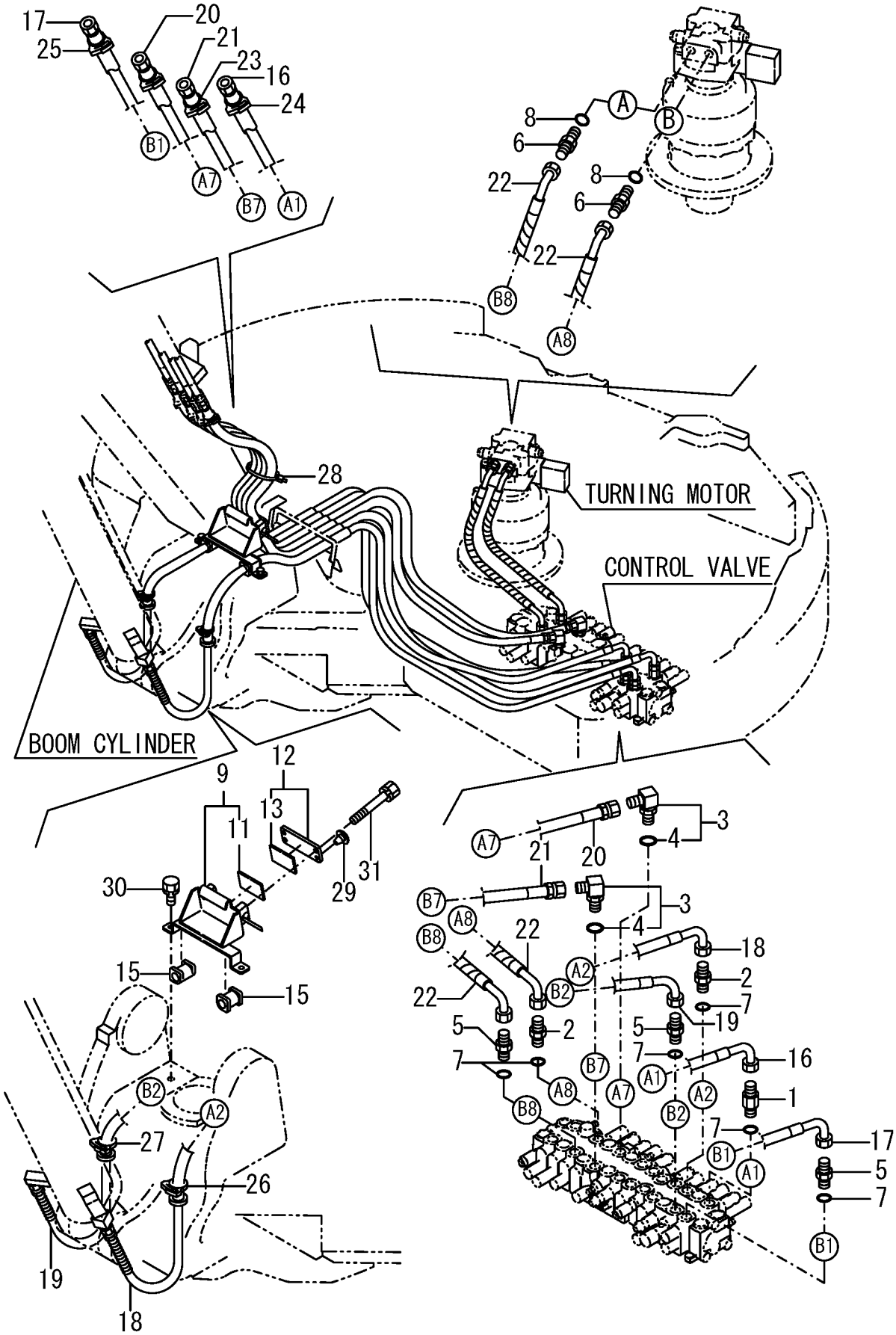

https://truckmanualshub.com/

```
1,1,,172110-76020,,CONNECTOR,2,,,,,,,,,,,,,,,,,,
2,1,,172147-76270,,CONNECTOR,1,,,,,,,,,,,,,,,,,,
3,1,,172157-76300,,"ELBOW 3/8-1/2",1,,,,,,,,,,,,,,,,,,
4,2,,24315-000180,,"O-RING 1B P-18.0",1,,,,,,,,,,,,,,,,,,
6,1,,172112-77360,,"CONNECTOR PF1/2PF1/2",3,,,,,,,,,,,,,,,,,,,
7,1,,23391-030000,,"JOINT RGI 3/8",2,,,,,,,,,,,,,,,,,,
8,1,,23394-020000,,"JOINT 45RGI1/4",1,,,,,,,,,,,,,,,,,,
9,1,,23394-040000,,"JOINT 45RGI1/2",2,,,,,,,,,,,,,,,,,,
10,1,,24315-000180,,"O-RING 1B P-18.0",7,,,,,,,,,,,,,,,,,,
11,1,,933160-01370,,"CONNECTOR PF1/2-3/8",1,,,,,,,,,,,,,,,,,,,
12,1,,172187-78310,,HOSE,1,,,,,,,,,,,,,,,,,,
13,1,,172187-78320,,HOSE,1,,,,,,,,,,,,,,,,,,
14,1,,172187-78330,,HOSE,1,,,,,,,,,,,,,,,,,,
15,1,,172187-78340,,HOSE,1,,,,,,,,,,,,,,,,,,
16,1,,172187-78350,,HOSE,1,,,,,,,,,,,,,,,,,,
17,1,,172187-78360,,HOSE,1,,,,,,,,,,,,,,,,,,
18,1,,172187-78380,,HOSE,1,,,,,,,,,,,,,,,,,,
19,1,,172187-78390,,HOSE,1,,,,,,,,,,,,,,,,,,
20,1,,172122-79930,,"CLAMP B",1,,,,,,,,,,,,,,,,,,
21,1,,172122-79930,,"CLAMP B",2,,,,,,,,,,,,,,,,,,
22,1,,23393-040000,,"JOINT 90RGI 1/2",2,,,,,,,,,,,,,,,,,,,
```

https://truckmanualshub.com/

Fig.55 HYD. OIL PIPING (VALVE～SWIVEL, SWING)

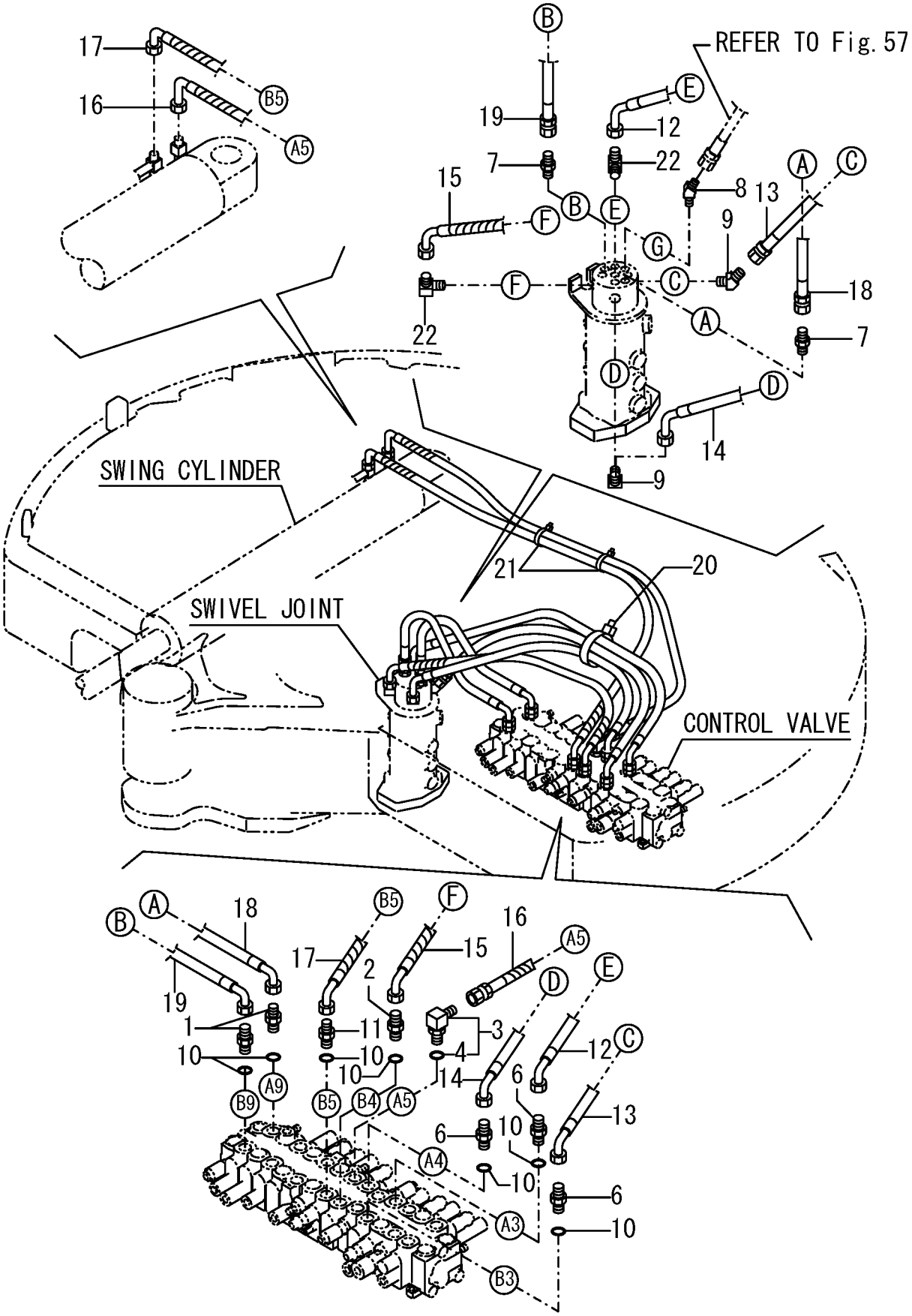

https://truckmanualshub.com/

```
1,1,,172122-74790,,"CONNECTOR PF3/8",1,,,,,,,,,,,,,,,,,
2,2,,24315-000240,,"O-RING 1B P-24.0",1,,,,,,,,,,,,,,,,,
3,1,,172187-76131,,CONNECTER(PF3/4-PT3/,1,,,,,,,,,,,,,,,,,,
4,1,,172187-76131,,CONNECTER(PF3/4-PT3/,1,,,,,,,,,,,,,,,,,,
5,1,,172187-76141,,CONNECTOR(PF1-PF3/4,1,,,,,,,,,,,,,,,,,,
6,2,,24315-000240,,"O-RING 1B P-24.0",1,,,,,,,,,,,,,,,,,
7,1,,172187-76150,,CONNECTOR,1,,,,,,,,,,,,,,,,,
8,1,,172187-76160,,JOINT,1,,,,,,,,,,,,,,,,,
9,1,,172187-76180,,"NIPPLE, HOSE",1,,,,,,,,,,,,,,,,,
10,1,,172141-76090,,"CONNECTOR 3/4L",1,,,,,,,,,,,,,,,,,
11,2,,24315-000240,,"O-RING 1B P-24.0",1,,,,,,,,,,,,,,,,,,
12,1,,172187-78161,,HOSE,1,,,,,,,,,,,,,,,,,
13,1,,172187-78171,,HOSE,1,,,,,,,,,,,,,,,,,
14,1,,172187-78920,,HOSE,1,,,,,,,,,,,,,,,,,
15,1,,172187-78180,,HOSE,1,,,,,,,,,,,,,,,,,
16,1,,172187-78190,,HOSE,1,,,,,,,,,,,,,,,,,
17,1,,172187-78400,,HOSE,1,,,,,,,,,,,,,,,,,
18,1,,172187-78540,,HOSE,1,,,,,,,,,,,,,,,,,
19,1,,23000-013000,,"CLAMP 13",3,,,,,,,,,,,,,,,,,
20,1,,23000-016000,,"CLAMP 16",1,,,,,,,,,,,,,,,,,
21,1,,23000-016000,,"CLAMP 16",3,,,,,,,,,,,,,,,,,
22,1,,23000-035000,,"CLAMP 35",2,,,,,,,,,,,,,,,,,
23,1,,172122-79890,,"CLAMP 350",1,,,,,,,M,,,,,,,,,,,,I
23-1,1,,172122-79930,,"CLAMP B",1,,,,,,,,,,,,,,,,,,,,I
25,1,,23000-041000,,"CLAMP 41",2,,,,,,,,,,,,,,,,,
26,1,,23000-041000,,"CLAMP 41",4,,,,,,,,,,,,,,,,,
27,1,,26013-100202,,"BOLT W/WASHER M10X20",2,,,,,,,,,,,,,,,,,,
```

https://truckmanualshub.com/

Fig.56 HYD. OIL PIPING(RETURN;1)

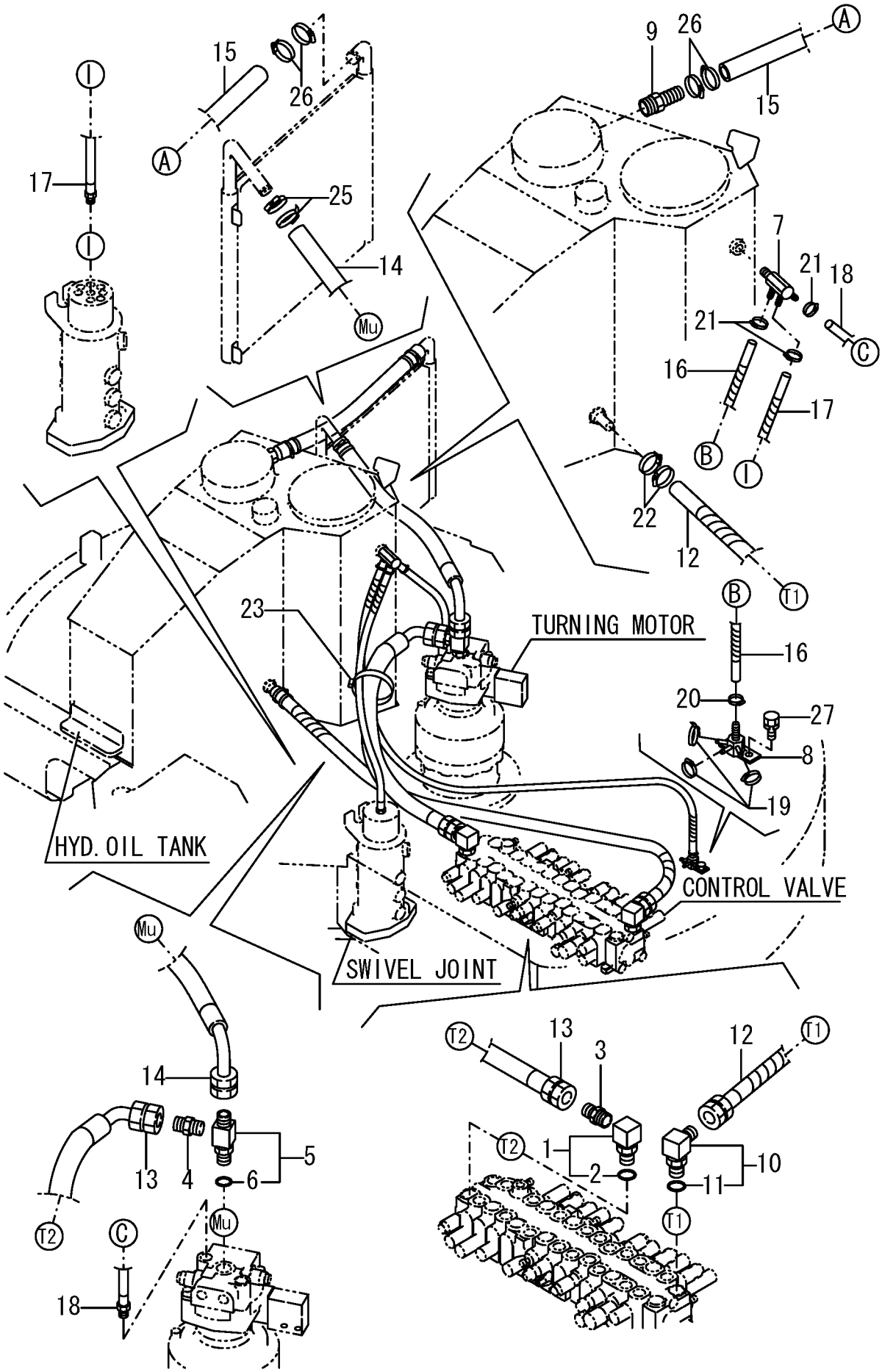

https://truckmanualshub.com/

```
1,1,,172123-76120,,"CONNECTOR PF1/4",4,,,,,,,,,,,,,,,,,
2,1,,172123-76120,,"CONNECTOR PF1/4",2,,,,,,,,,,,,,,,,,
3,1,,172123-76120,,"CONNECTOR PF1/4",5,,,,,,,,,,,,,,,,,
4,1,,172312-76150,,"NIPPLE 1/8X1/4",1,,,,,,,,,,,,,,,,,
5,1,,172187-76170,,THEETH,1,,,,,,,,,,,,,,,,,
6,2,,24315-000110,,"O-RING 1B P-11.0",1,,,,,,,,,,,,,,,,,
7,1,,172141-76180,,CONNECTOR,3,,,,,,,,,,,,,,,,,
8,2,,24315-000110,,"O-RING 1B P-11.0",3,,,,,,,,,,,,,,,,,
9,1,,172162-76180,,"JOINT 3-1/4 COMPL.",3,,,,,,,,,,,,,,,,,,
10,2,,24315-000110,,"O-RING 1B P-11.0",3,,,,,,,,,,,,,,,,,
11,1,,172164-76330,,"JOINT PF1/4-0.7",2,,,,,,,,,,,,,,,,,
12,1,,24315-000110,,"O-RING 1B P-11.0",6,,,,,,,,,,,,,,,,,
13,1,,24315-000110,,"O-RING 1B P-11.0",2,,,,,,,,,,,,,,,,,
14,1,,24315-000110,,"O-RING 1B P-11.0",5,,,,,,,,,,,,,,,,,
15,1,,172187-78450,,HOSE,1,,,,,,,,,,,,,,,,,
16,1,,172187-78460,,HOSE,1,,,,,,,,,,,,,,,,,
17,1,,172187-78470,,HOSE,1,,,,,,,,,,,,,,,,,
18,1,,172187-78480,,HOSE,1,,,,,,,,,,,,,,,,,
19,1,,172187-78490,,HOSE,1,,,,,,,,,,,,,,,,,
20,1,,172187-78500,,HOSE,1,,,,,,,,,,,,,,,,,
21,1,,172187-78510,,HOSE,1,,,,,,,,,,,,,,,,,
22,1,,172187-78520,,HOSE,1,,,,,,,,,,,,,,,,,
23,1,,172187-78530,,HOSE,1,,,,,,,,,,,,,,,,,
24,1,,172122-79930,,"CLAMP B",1,,,,,,,,,,,,,,,,,
25,1,,172141-76180,,CONNECTOR,1,,,,,,,,,,,,,,,,,,,I
25-1,1,,172187-76210,,ELBOW,1,,,,,,N,,72187476,M/#00882,,,,,,,,,,I
26,2,,24315-000110,,"O-RING 1B P-11.0",1,,,,,,,,,,,,,,,,,,,I
```

https://truckmanualshub.com/

Fig.57 HYD. OIL PIPING (RETURN; 2)

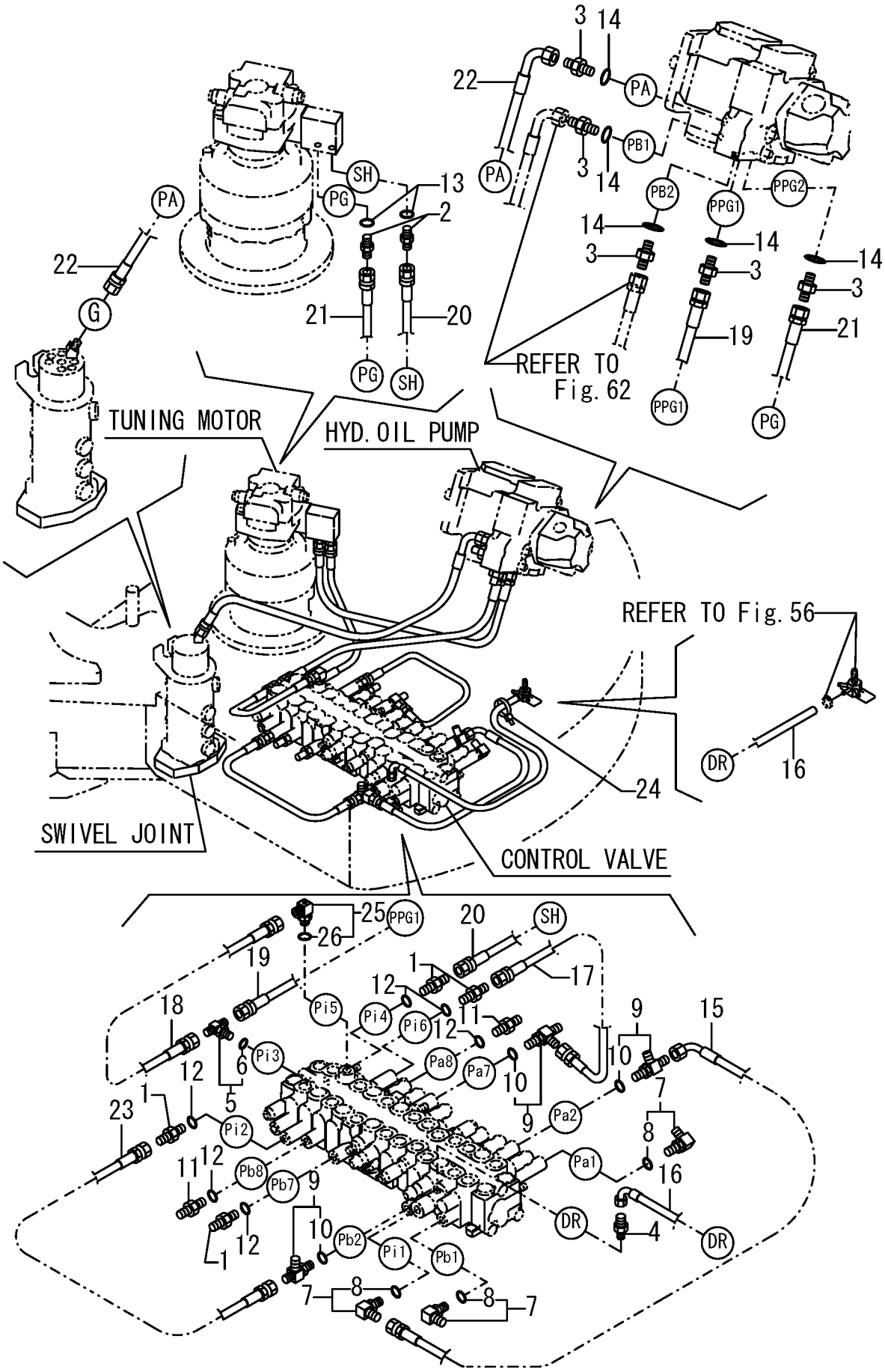

https://truckmanualshub.com/

```
1,1,,172187-61540,,"COVER,3RD (GREEN:97)",1,,,,,,,,,,,,,,,,,,
1-1,1,,172187-61541-1,,"COVER,3RD
(GREEN:86)",1,,,,,,S,1,72187537,M/#00995,,,,,,,,,,I
2,1,,172187-76200,,ADAPTER,2,,,,,,,,,,,,,,,,,,
3,1,,172187-76820,,"CONNECTOR (GREEN:97)",1,,,,,,,,,,,,,,,,,,
3-1,1,,172187-76821-1,,"CONNECTOR
(GREEN:86)",1,,,,,,N,,72187537,M/#00995,,,,,,,,,,I
4,1,,172187-79200,,HOSE,1,,,,,,,,,,,,,,,,,,
5,1,,172187-79210,,HOSE,1,,,,,,,,,,,,,,,,,,
6,1,,24315-000180,,"O-RING 1B P-18.0",2,,,,,,,,,,,,,,,,,,
7,1,,26013-080162,,"BOLT W/WASHER M8X16",2,,,,,,,,,,,,,,,,,,
8,1,,26013-100202,,"BOLT W/WASHER M10X20",3,,,,,,,,,,,,,,,,,,
```

https://truckmanualshub.com/

Fig.58 HYD. OIL PIPING (P. T. O. FRAME END)

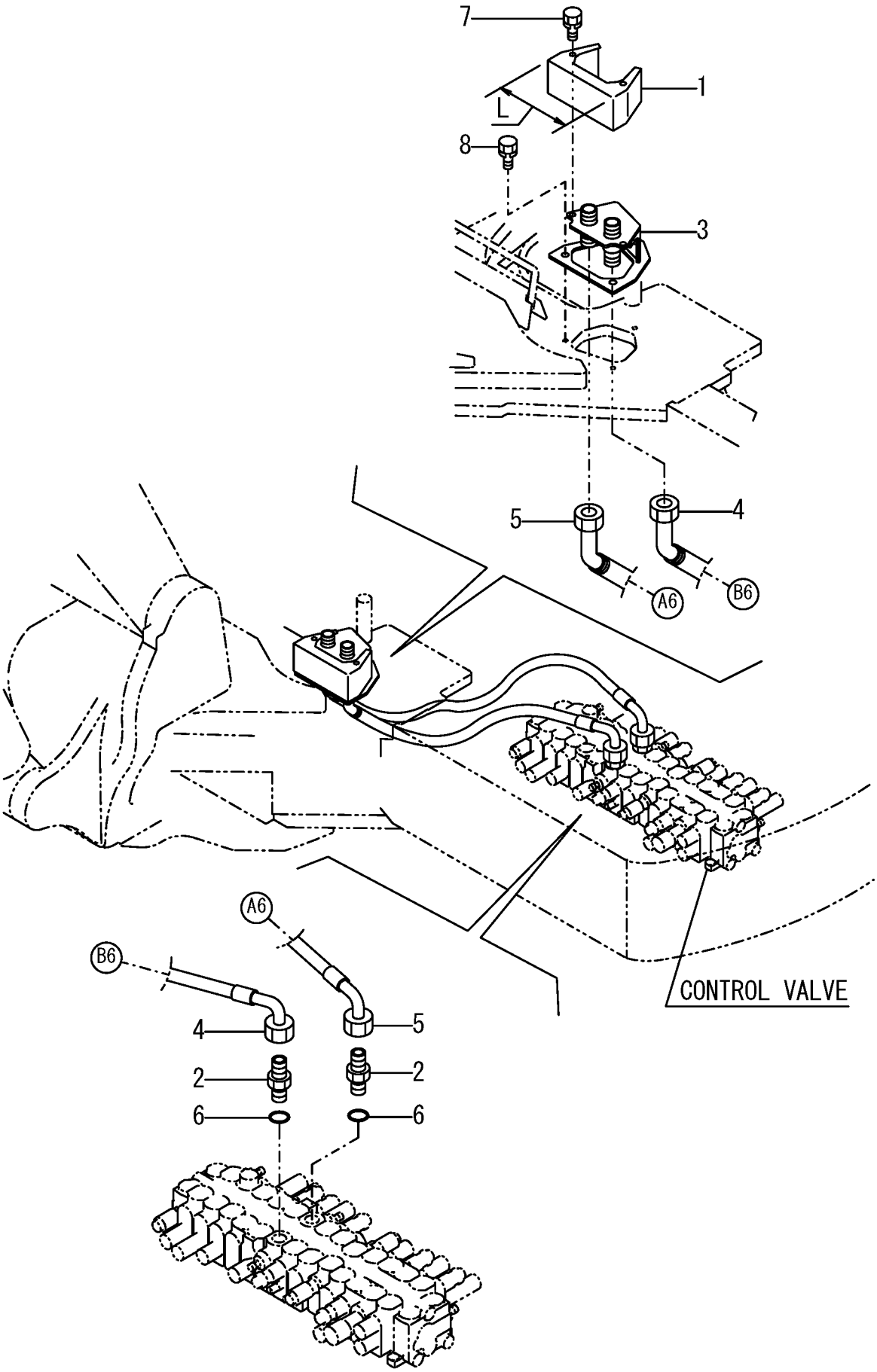

https://truckmanualshub.com/

```
1,1,,172123-76120,,"CONNECTOR PF1/4",2,,,,,,,,,,,,,,,,,
2,1,,172157-76220,,"CONNECTOR 1/4-3/8",2,,,,,,,,,,,,,,,,,,
3,1,,23391-030000,,"JOINT RGI 3/8",2,,,,,,,,,,,,,,,,,
4,1,,23391-030000,,"JOINT RGI 3/8",2,,,,,,,,,,,,,,,,,
5,1,,23394-020000,,"JOINT 45RGI1/4",2,,,,,,,,,,,,,,,,,
6,1,,23394-030000,,"JOINT 45RGI 3/8",2,,,,,,,,,,,,,,,,,
7,1,,23394-040000,,"JOINT 45RGI1/2",4,,,,,,,,,,,,,,,,,
8,1,,24315-000110,,"O-RING 1B P-11.0",4,,,,,,,,,,,,,,,,,
9,1,,24315-000180,,"O-RING 1B P-18.0",4,,,,,,,,,,,,,,,,,
10,1,,172187-78200,,"HOSE G604BB155W",2,,,,,,,,,,,,,,,,,
11,1,,172187-78210,,"HOSE G706BB145W",2,,,,,,,,,,,,,,,,,
12,1,,172187-78220,,HOSE,2,,,,,,,,,,,,,,,,,
13,1,,172187-78230,,"HOSE H108BB151W",4,,,,,,,,,,,,,,,,,
14,1,,172187-78431,,HOSE,1,,,,,,,,,,,,,,,,,
15,1,,172187-78440,,"HOSE H106BE082W",1,,,,,,,,,,,,,,,,,
16,1,,172112-77360,,"CONNECTOR PF1/2PF1/2",4,,,,,,,,,,,,,,,,,,
```

https://truckmanualshub.com/

Fig.59 HYD. OIL PIPING (TRACK FRAME)

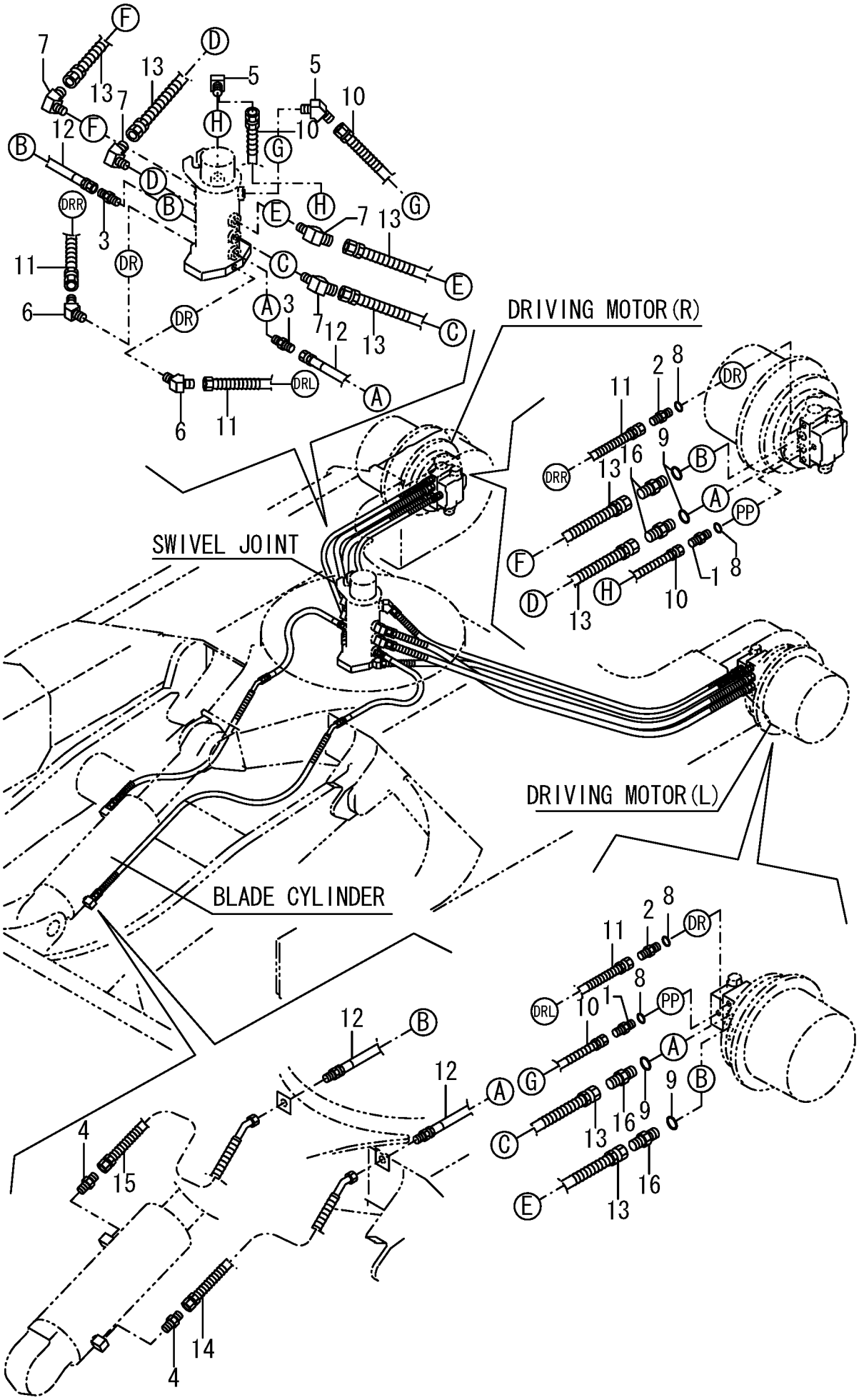

https://truckmanualshub.com/

```
1,1,,172187-78580,,CLAMP,1,,,,,,,,,,,,,,,,,,
2,1,,172187-76400,,"TUBE,ARM  (GREEN:97)",2,,,,,,,,,,,,,,,,,,
2A,1,,172187-76400-1,,"TUBE,ARM (YELLOW:87)",2,,,,,,,,,,,,,,,,,,,,,I
3,1,,172187-76420,,"TUBE A,BUCKET   (97)",1,,,,,,,,,,,,,,,,,,
3A,1,,172187-76420-1,,"TUBE A,BUCKET   (87)",1,,,,,,,,,,,,,,,,,,,,,I
4,1,,172187-76440,,"TUBE B,BUCKET   (97)",1,,,,,,,,,,,,,,,,,,
4A,1,,172187-76440-1,,"TUBE B,BUCKET   (87)",1,,,,,,,,,,,,,,,,,,,,,I
5,1,,172187-76500,,"CLAMP A,TUBE(GREEN97",2,,,,,,,,,,,,,,,,,,
5A,1,,172187-76500-1,,"CLAMP A,TUBE    (87)",2,,,,,,,,,,,,,,,,,,,,,I
6,1,,22137-100000,,"WASHER 10,POLISHED",6,,,,,,,,,,,,,,,,,,
7,1,,172187-76520,,"COLLAR, CLAMP",6,,,,,,,,,,,,,,,,,,
8,1,,172187-76530,,"CLAMP B,TUBE(GREEN97",2,,,,,,,,,,,,,,,,,,
8A,1,,172187-76530-1,,"CLAMP B,TUBE    (87)",2,,,,,,,,,,,,,,,,,,,,,I
9,1,,172187-76540,,"RUBBER B",4,,,,,,,,,,,,,,,,,,
10,1,,172142-76950-4,,"CLAMP 1/2 (GREEN:97)",2,,,,,,,,,,,,,,,,,,,,
10A,1,,172142-76950,,"CLAMP 1/2",2,,,,,,,,,,,,,,,,,,,,I
11,1,,26013-100502,,"BOLT M10X 50",6,,,,,,,,,,,,,,,,,,
12,1,,26013-120402,,"BOLT M12X 40",2,,,,,,,,,,,,,,,,,,
13,1,,172187-78240,,"HOSE H108BB065W",2,,,,,,,,,,,,,,,,,,,
14,1,,172187-78410,,"HOSE H108BB063",1,,,,,,,,,,,,,,,,,,
15,1,,172187-78420,,"HOSE H108BB185",1,,,,,,,,,,,,,,,,,,
16,1,,172122-79930,,"CLAMP B",2,,,,,,,,,,,,,,,,,,
17,1,,172183-81160,,"TREE CLIP",4,,,,,,,,,,,,,,,,,,
18,1,,172183-81170,,"TREE CLIP",2,,,,,,,,,,,,,,,,,,
```

https://truckmanualshub.com/

Fig.60 HYD. OIL PIPING (BOOM)

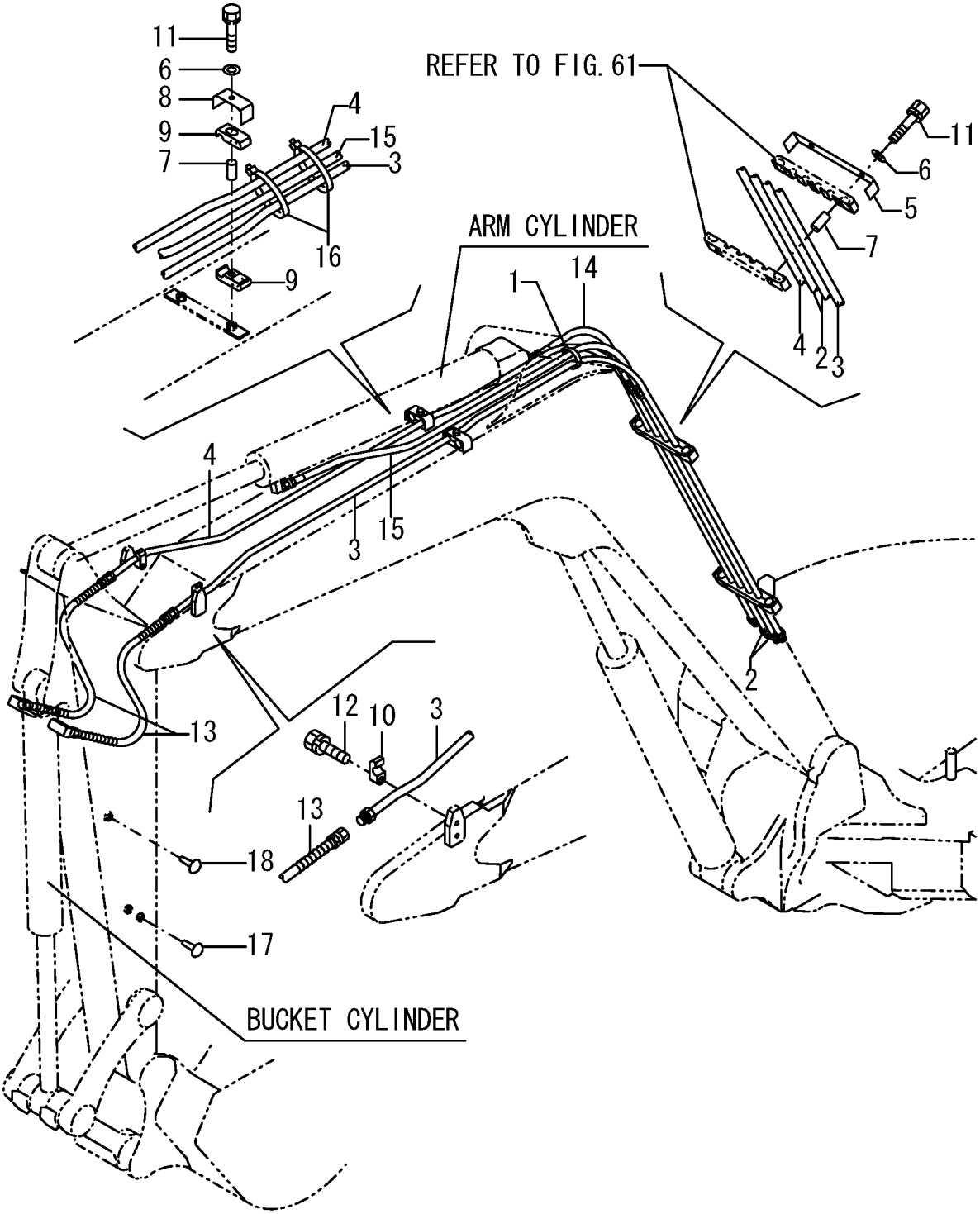

https://truckmanualshub.com/

```
1,1,,172142-76280,,"JOINT 3/4, SWIVEL",2,,,,,,,,,,,,,,,,,
2,2,,172142-77050,,"SEAL SET",2,,,,,,,,,,,,,,,,,
3,1,,172187-76480,,"TUBE B,3RD(GREEN:97)",1,,,,,,,,,,,,,,,,,
3A,1,,172187-76480-1,,"TUBE,3RD (YELLOW:87)",1,,,,,,,,,,,,,,,,,,,,,I
4,1,,172151-76600,,"ADAPTER PF3/4,BLIND",2,,,,,,,,,,,,,,,,,
5,1,,172187-76780,,"TUBE,3RD  (GREEN:97)",1,,,,,,,,,,,,,,,,,
5A,1,,172187-76780-1,,"TUBE,3RD (YELLOW:87)",1,,,,,,,,,,,,,,,,,,,,,I
6,1,,172187-76460,,"TUBE A,3RD(GREEN:97)",1,,,,,,,,,,,,,,,,,
6A,1,,172187-76460-1,,"TUBE,3RD (YELLOW:87)",1,,,,,,,,,,,,,,,,,,,,,I
7,1,,172142-76940-4,,"CLAMP 3/4 (GREEN:97)",2,,,,,,,,,,,,,,,,,
7A,1,,172142-76940,,"CLAMP 3/4(YELLOW:87)",2,,,,,,,,,,,,,,,,,,,,,I
8,1,,172187-79220,,"HOSE G112AB090",1,,,,,,,,,,,,,,,,,
9,1,,172187-79230,,"HOSE G112AB084",1,,,,,,,,,,,,,,,,,
10,1,,172187-79240,,"HOSE G112CE092",2,,,,,,,,,,,,,,,,,
11,1,,22217-120000,,"SPRING WASHER",2,,,,,,,,,,,,,,,,,
12,1,,26013-100252,,"BOLT W/WASHER M10X25",2,,,,,,,,,,,,,,,,,,
13,1,,26116-120552,,"BOLT M12X 55 PLATED",2,,,,,,,,,,,,,,,,,,
14,1,,172187-76930,,"RUBBER A",4,,,,,,,,,,,,,,,,,
15,1,,172187-76940,,"RUBBER B",4,,,,,,,,,,,,,,,,,
```

https://truckmanualshub.com/

Fig.61 HYD. OIL PIPING (P. T. O. BOOM END)

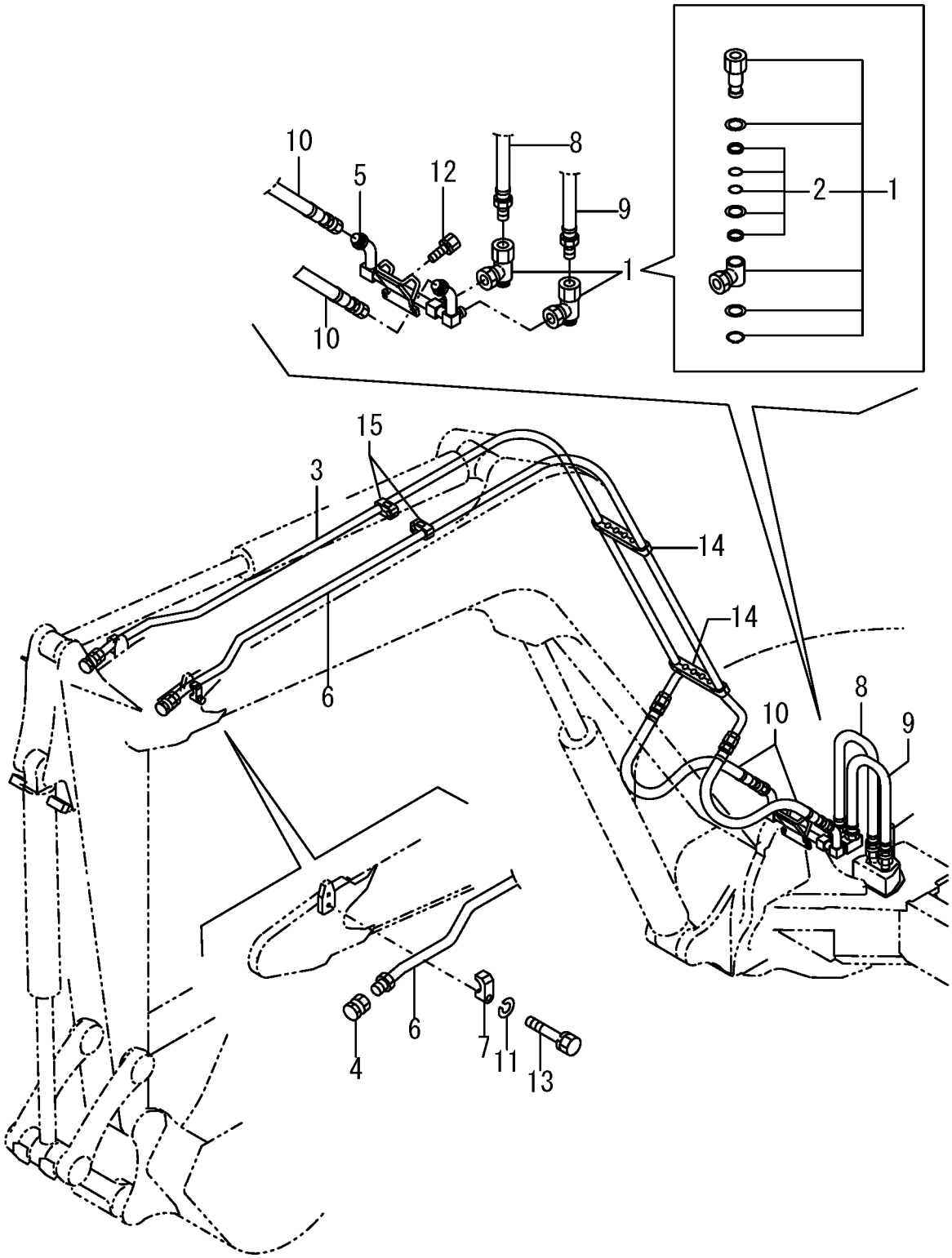

https://truckmanualshub.com/

```
1,1,,172159-76120,,"CONNECTOR PF1/4",4,,,,,,,,,,,,,,,,,
2,1,,24315-000110,,"O-RING 1B P-11.0",4,,,,,,,,,,,,,,,,,,
3,1,,172187-78940,,HOSE,1,,,,,,,,,,,,,,,,,
4,1,,172187-78950,,HOSE,1,,,,,,,,,,,,,,,,,
5,1,,172187-79000,,HOSE,1,,,,,,,,,,,,,,,,,
6,1,,172187-79010,,HOSE,1,,,,,,,,,,,,,,,,,
7,1,,23010-014000,,"CLAMP 14",2,,,,,,,,,,,,,,,,,,
7-1,1,,172126-11510,,"BAND 300",2,,,,,,,,72187598,M/#01217,,,,,,,,,,,I
```

https://truckmanualshub.com/

Fig. 62 CONTROL PIPING (PUMP～VALVE ～RETURN)

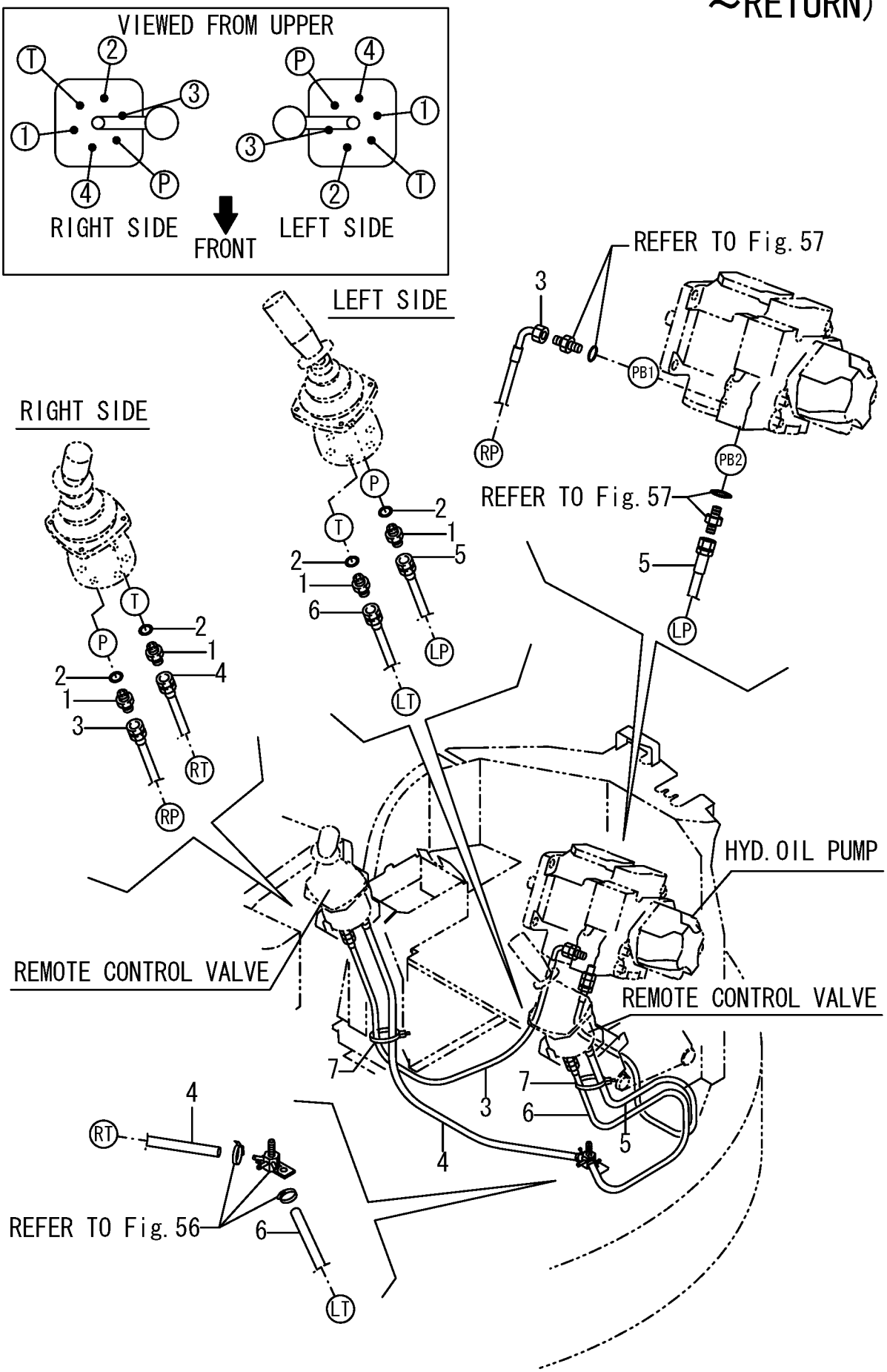

https://truckmanualshub.com/

```
1,1,,172123-76120,,"CONNECTOR PF1/4",6,,,,,,,,,,,,,,,,,,,,I
2,1,,172187-78960,,HOSE,1,,,,,,,,,,,,,,,,
3,1,,172187-78970,,HOSE,1,,,,,,,,,,,,,,,,
4,1,,172187-78980,,HOSE,1,,,,,,,,,,,,,,,,
5,1,,172187-78990,,HOSE,1,,,,,,,,,,,,,,,,
6,1,,172187-79020,,HOSE,1,,,,,,,,,,,,,,,,
7,1,,172187-79030,,HOSE,1,,,,,,,,,,,,,,,,
8,1,,172187-79040,,HOSE,1,,,,,,,,,,,,,,,,
9,1,,172187-79050,,HOSE,1,,,,,,,,,,,,,,,,
10,1,,172165-79810,,SPONGE,1,,,,,,,,,,,,,,,,
11,1,,172122-79930,,"CLAMP B",4,,,,,,,,,,,,,,,,,,,I
11-1,1,,172122-79930,,"CLAMP B",3,,,,,,K,,72187598,M/#01217,,,,,,,,,,I
12,1,,24315-000110,,"O-RING 1B P-11.0",8,,,,,,,,,,,,,,,,,
12-1,1,,24315-000110,,"O-RING 1B P-11.0",6,,,,,,K,,72187544,M/#00995,,,,,,,,,,I
13,1,,172123-76120,,"CONNECTOR PF1/4",2,,,,,,,,,,,,,,,,,,,I
13-1,1,,172964-78111,,"VALVE, CHECK",2,,,,,,S,,72187544,M/#00995,,,,,,,,,,I
14,2,,24315-000110,,"O-RING 1B P-11.0",2,,,,,,W,,72187544,M/#00995,,,,,,,,,,I
15,1,,172126-11510,,"BAND 300",2,,,,,,,,72187598,M/#01217,,,,,,,,,,I
```

https://truckmanualshub.com/

Fig. 63 CONTROL PIPING (DIRECT SPEC.)

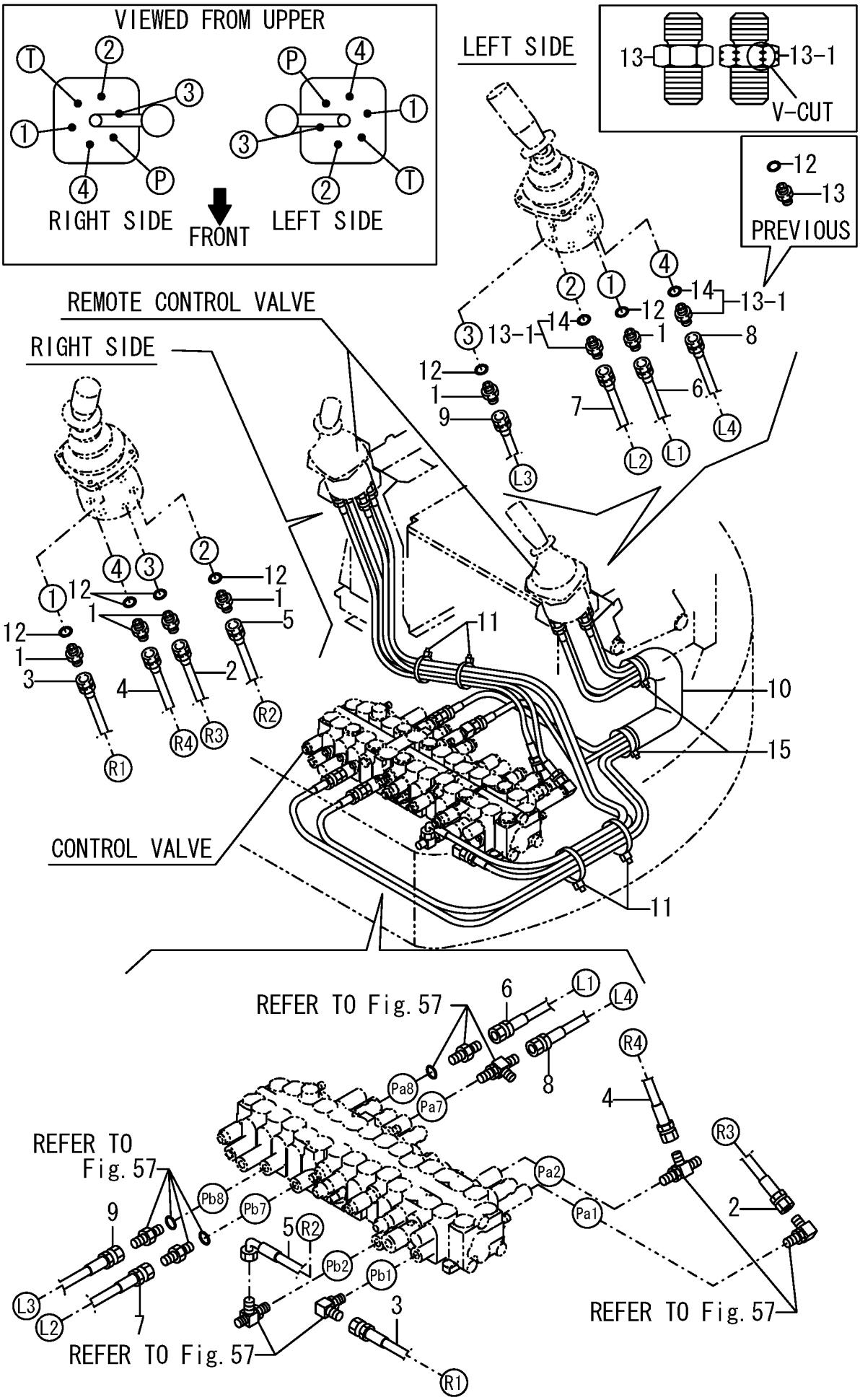

https://truckmanualshub.com/

```
1,1,,172112-77580,,"JOINT 1/8",1,,,,,,,,,,,,,,,,,
2,1,,172141-77800,,"JOINT, GREASE",4,,,,,,,,,,,,,,,,,
3,1,,172187-77800,,"HOSE P202AB185",1,,,,,,,,,,,,,,,,,
4,1,,172187-77810,,HOSE,2,,,,,,,,,,,,,,,,,
5,1,,172312-77820,,"FITTING, GREASE",1,,,,,,,,,,,,,,,,,
6,1,,24761-020000,,"NIPPLE PT1/8,GREASE",2,,,,,,,,,,,,,,,,,,
7,1,,24761-020000,,"NIPPLE PT1/8,GREASE",1,,,,,,,,,,,,,,,,,,
```

https://truckmanualshub.com/

Fig.64 GREASING

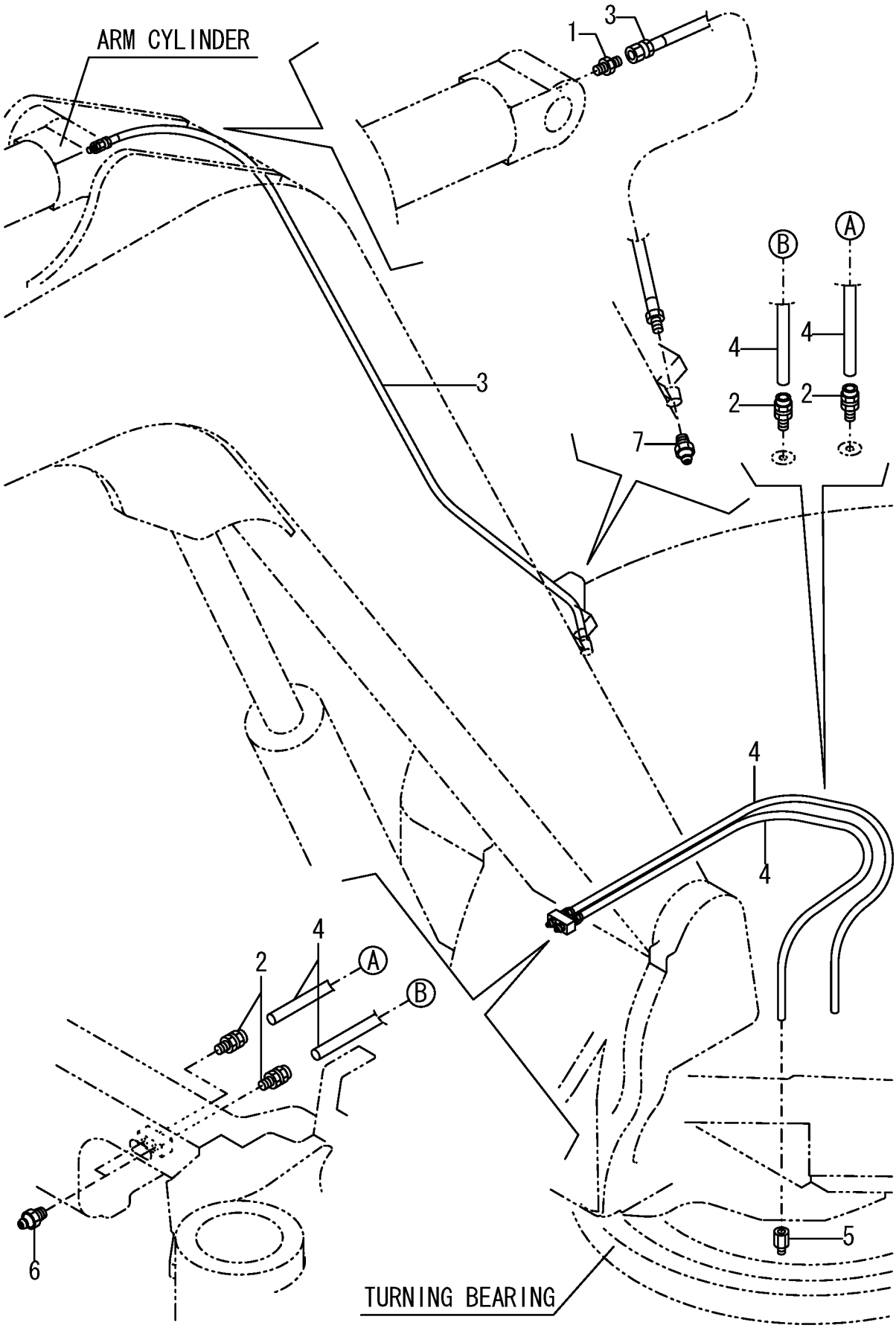

https://truckmanualshub.com/

```
1,1,,172187-81470,,"SHIM 70X130X0.5",1,,,,,,,,,,,,,,,,,,
1-1,1,,172176-81710,,SHIM,1,,,,,,N,,72187545,M/#01041,,,,,,,,,,I
2,1,,172187-81480,,"SHIM 70X130X1.2",1,,,,,,,,,,,,,,,,,,
2-1,1,,172176-81700,,SHIM,1,,,,,,N,,72187545,M/#01041,,,,,,,,,,I
3,1,,172187-81800,,"PIN 70X200",1,,,,,,,,,,,,,,,,,,
4,1,,172147-82230,,SHIM,4,,,,,,,,,,,,,,,,,,
5,1,,172147-82250,,SHIM,4,,,,,,,,,,,,,,,,,,
6,1,,172187-82300,,"BRACKET,BOOM(GREEN97",1,,,,,,,,,,,,,,,,,,
6A,1,,172187-82300-1,,"BRACKET,BOOM    (87)",1,,,,,,,,,,,,,,,,,,,,,,I
7,2,,172162-81680,,"SEAL 100X120X7,DUST",2,,,,,,,,,,,,,,,,,,
9,2,,172187-82320,,"BUSH 100X90",2,,,,,,,,,,,,,,,,,,
10,2,,24321-001000,,"O-RING 1A G-100.0",2,,,,,,,,,,,,,,,,,,
11,1,,172187-82330,,"PIN 100X487",1,,,,,,,,,,,,,,,,,,
12,1,,172187-82340,,"PIN 80X435",1,,,,,,,,,,,,,,,,,,
13,1,,172187-82370,,"PIN 60X144",1,,,,,,,,,,,,,,,,,,
14,1,,172187-82390,,"PIN 60X155",1,,,,,,,,,,,,,,,,,,
15,1,,172187-82400,,"SHIM 100X160X0.5",1,,,,,,,,,,,,,,,,,,
16,1,,172187-82410,,"SHIM 100X160X0.8",1,,,,,,,,,,,,,,,,,,
17,1,,172187-82420,,"BOLT 18X230",1,,,,,,,,,,,,,,,,,,
18,1,,172187-82430,,"WASHER 15X90X6",1,,,,,,,,,,,,,,,,,,
19,1,,172187-82450,,"SHIM 61X110X3.2",1,,,,,,,,,,,,,,,,,,
20,1,,172162-83600,,"SHIM 80X155X0.5",1,,,,,,,,,,,,,,,,,,
21,1,,172162-83610,,"SHIM 80X155X1.2",1,,,,,,,,,,,,,,,,,,
22,1,,172162-94280,,"PLATE,LOCK(GREEN:88)",1,,,,,,,,,,,,,,,,,,
23,1,,22157-140000,,"WASHER 14",1,,,,,,,,,,,,,,,,,,
24,1,,22217-140000,,"SPRING WASHER 14",3,,,,,,,,,,,,,,,,,,
25,1,,22242-001000,,"CIRCLIP  100",1,,,,,,,,,,,,,,,,,,
26,1,,24761-020000,,"NIPPLE PT1/8,GREASE",2,,,,,,,,,,,,,,,,,,
27,1,,26013-120302,,"BOLT W/WASHER M12X30",2,,,,,,,,,,,,,,,,,,
28,1,,26116-121402,,"BOLT M12X140 PLATED",1,,,,,,,,,,,,,,,,,,
29,1,,26116-140252,,"BOLT M14X 25 PLATED",1,,,,,,,,,,,,,,,,,,
30,1,,26716-120002,,"NUT 12",2,,,,,,,,,,,,,,,,,,
31,1,,26716-180002,,"NUT M18",2,,,,,,,,,,,,,,,,,,
32,1,,26116-140352,,"BOLT M14X 35 PLATED",2,,,,,,,,,,,,,,,,,,
33,1,,172187-81970,,WASHER,1,,,,,,,,,,,,,,,,,,
34,1,,172155-45790,,SPACER,2,,,,,,W,,72187598,M/#01217,,,,,,,,,,I
```

https://truckmanualshub.com/

Fig.65 BOOM BRACKET

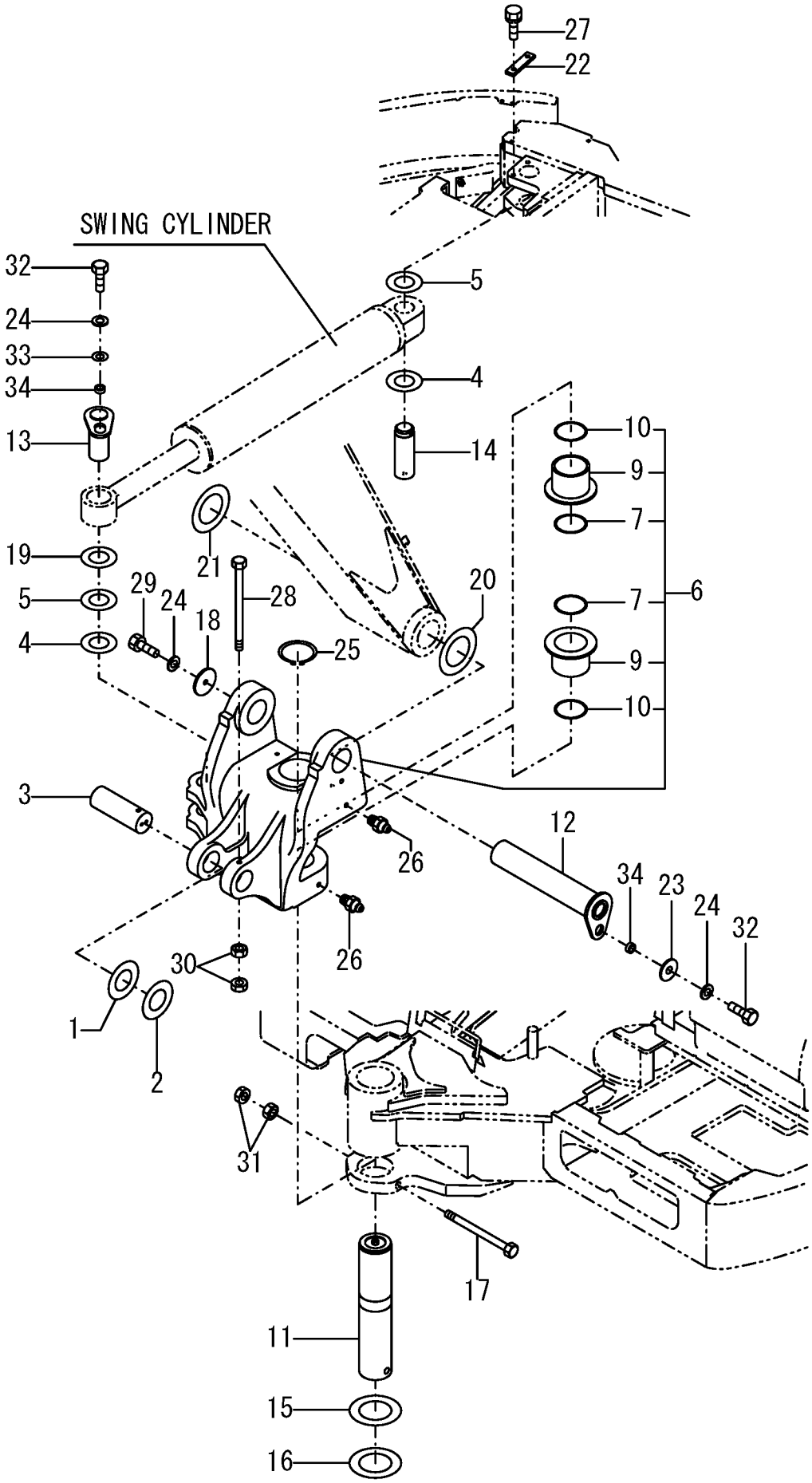

https://truckmanualshub.com/

```
1,1,,172155-45790,,SPACER,2,,,,,,,,,,,,,,,,,,
2,1,,172187-81100,,"BOOM ASSY (GREEN:97)",1,,,,,,,,,,,,,,,,,,
2A,1,,172187-81100-1,,"BOOM ASSY(YELLOW:87)",1,,,,,,,,,,,,,,,,,,,,,,I
3,2,,172162-81370,,"BUSH 80X95",2,,,,,,,,,,,,,,,,,,
4,2,,172162-81430,,"SEAL 80X95X5,DUST",2,,,,,,,,,,,,,,,,,,,
5,1,,172183-81170,,"TREE CLIP",2,,,,,,,,,,,,,,,,,,
6,1,,172176-81700,,SHIM,1,,,,,,,,,,,,,,,,,,
7,1,,172176-81710,,SHIM,1,,,,,,,,,,,,,,,,,,
8,1,,172187-81750,,"PIN 60X307",1,,,,,,,,,,,,,,,,,,
9,1,,172187-81810,,"PIN 70X252",1,,,,,,,,,,,,,,,,,,
10,1,,172187-81840,,"PIN 60X243",1,,,,,,,,,,,,,,,,,,,
11,1,,172147-82140,,WASHER,1,,,,,,,,,,,,,,,,,,
12,1,,172147-82230,,SHIM,1,,,,,,,,,,,,,,,,,,
13,1,,172147-82250,,SHIM,1,,,,,,,,,,,,,,,,,,
14,1,,172162-83560,,"SHIM 60X120X0.5",1,,,,,,,,,,,,,,,,,,
15,1,,172162-83570,,"SHIM 60X120X1.2",1,,,,,,,,,,,,,,,,,,
16,1,,22157-140000,,"WASHER 14",2,,,,,,,,,,,,,,,,,,
17,1,,22217-140000,,"SPRING WASHER 14",4,,,,,,,,,,,,,,,,,,
17-1,1,,22217-140000,,"SPRING WASHER 14",3,,,,,,K,,72187422,M/#01041,,,,,,,,,,I
18,1,,24761-040000,,"NIPPLE B,GREASE",1,,,,,,,,,,,,,,,,,,
19,1,,26013-120252,,"BOLT M12X 25",1,,,,,,,,,,,,,,,,,,
20,1,,26116-140252,,"BOLT M14X 25 PLATED",1,,,,,,,,,,,,,,,,,,
21,1,,26116-140352,,"BOLT M14X 35 PLATED",2,,,,,,,,,,,,,,,,,,
22,1,,172187-81970,,WASHER,1,,,,,,,,,,,,,,,,,,
```

https://truckmanualshub.com/

Fig.66 BOOM

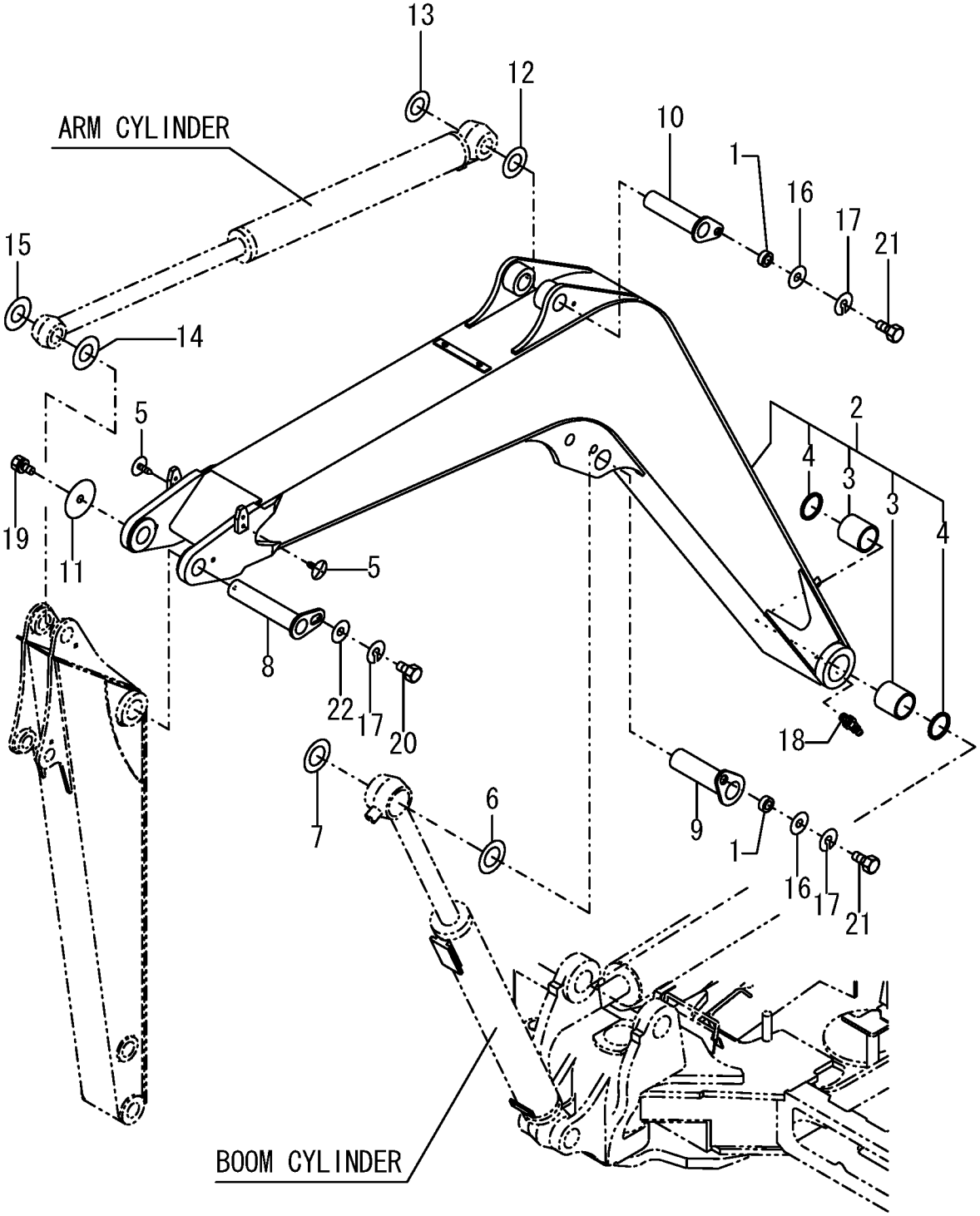

https://truckmanualshub.com/

```
1,1,,172155-45790,,SPACER,1,,,,,,,,,,,,,,,,,,
2,1,,26013-120302,,"BOLT W/WASHER M12X30",1,,,,,,,,,,,,,,,,,,
3,1,,26116-140352,,"BOLT M14X 35 PLATED",1,,,,,,,,,,,,,,,,,,
4,1,,172187-81502,,"ARM 1650  (GREEN:97)",1,,,,,,,,,,,,,,,,,,
4A,1,,172187-81502-1,,"ARM 1650 (YELLOW:87)",1,,,,,,,,,,,,,,,,,,,,,I
5,2,,172162-81050,,"SEAL 60X75X6,DUST",2,,,,,,,,,,,,,,,,,,
6,2,,172147-81400,,BUSH,2,,,,,,,,,,,,,,,,,,
7,2,,172187-81700,,"BUSH 50-60",2,,,,,,,,,,,,,,,,,,
8,2,,172187-81710,,"BUSH 50X75",2,,,,,,,,,,,,,,,,,,
9,2,,172162-82340,,"SEAL 50X60X6,DUST",4,,,,,,,,,,,,,,,,,,
10,1,,172164-81670,,SPACER,1,,,,,,,,,,,,,,,,,,
11,1,,172187-81861,,"PIN 60X155",1,,,,,,,,,,,,,,,,,,
12,1,,172187-81880,,"PIN 50X144",1,,,,,,,,,,,,,,,,,,
13,1,,172147-82230,,SHIM,1,,,,,,,,,,,,,,,,,,
14,1,,172147-82250,,SHIM,1,,,,,,,,,,,,,,,,,,
15,1,,172165-82520,,"SHIM 50X85X0.5",1,,,,,,,,,,,,,,,,,,
16,1,,172165-82530,,"SHIM 50X85X1.2",1,,,,,,,,,,,,,,,,,,
17,1,,22157-120000,,"WASHER 12",1,,,,,,,,,,,,,,,,,,
18,1,,22157-140000,,"WASHER 14",1,,,,,,,,,,,,,,,,,,
19,1,,22217-140000,,"SPRING WASHER 14",1,,,,,,,,,,,,,,,,,,
20,1,,24761-020000,,"NIPPLE PT1/8,GREASE",2,,,,,,,,,,,,,,,,,,
```

https://truckmanualshub.com/

Fig.67 ARM

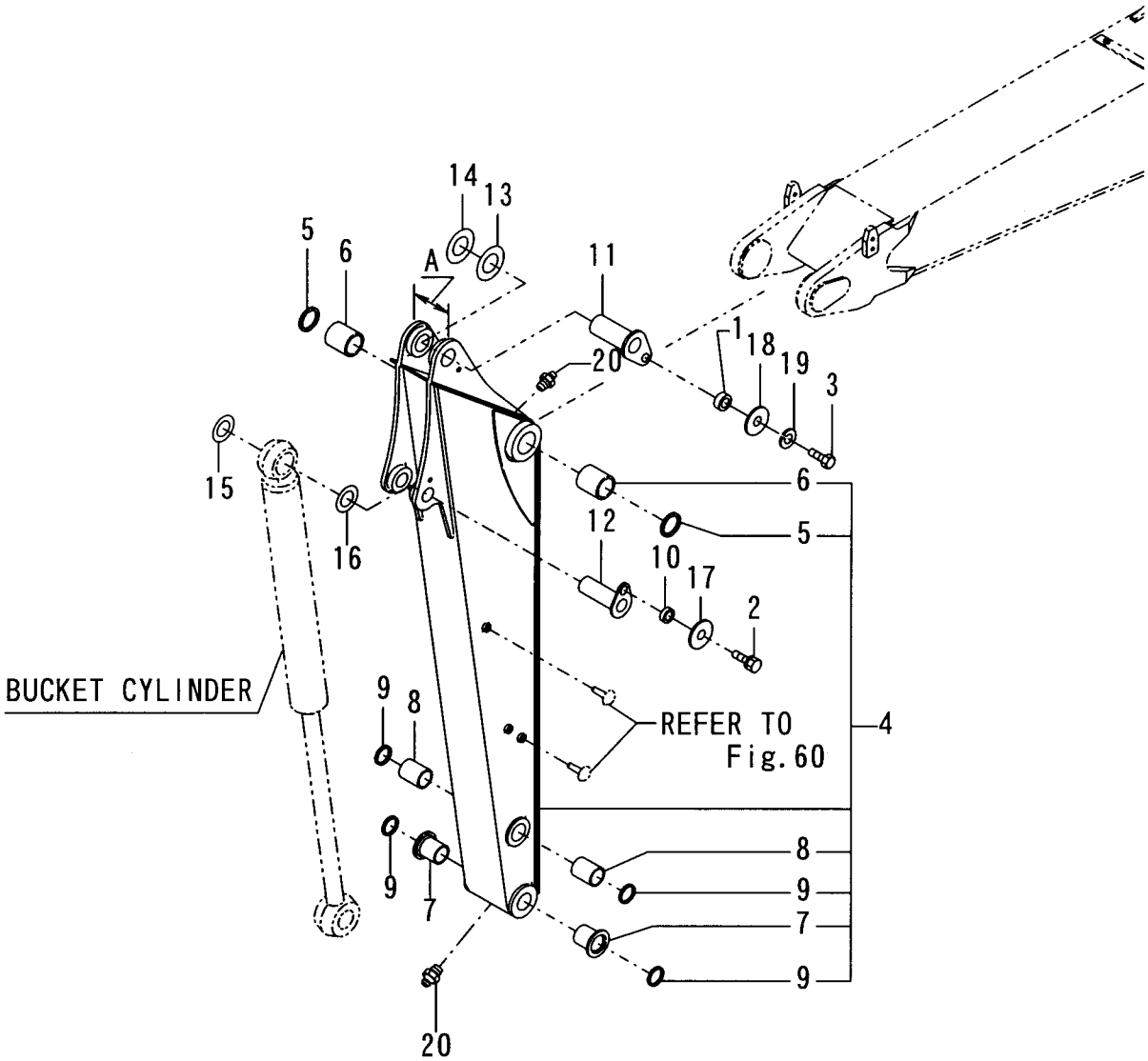

https://truckmanualshub.com/

```
1,1,,182900-55920-4,,"LINK L ASSY(GREEN:97",1,,,,,,,,,,,,,,,,,
1A,1,,182900-55920-1,,"LINK L ASSY(YELLOW87",1,,,,,,,,,,,,,,,,,,,,I
2,2,,182900-53650,,SEAL,2,,,,,,,,,,,,,,,,,
3,2,,182900-55280,,BUSHING,1,,,,,,,,,,,,,,,,,
4,2,,182900-56000,,BUSHING,1,,,,,,,,,,,,,,,,,
6,2,,172511-91320,,"SEAL 50X60X4, DUST",2,,,,,,,,,,,,,,,,,
7,2,,24761-020000,,"NIPPLE PT1/8,GREASE",1,,,,,,,,,,,,,,,,,
8,2,,24761-040000,,"NIPPLE B,GREASE",1,,,,,,,,,,,,,,,,,
9,1,,182900-55930-4,,"LINK R ASSY(GREEN:97",1,,,,,,,,,,,,,,,,,
9A,1,,182900-55930-1,,"LINK R ASSY(YELLOW87",1,,,,,,,,,,,,,,,,,,,,I
10,2,,182900-53650,,SEAL,2,,,,,,,,,,,,,,,,,
11,2,,182900-55280,,BUSHING,1,,,,,,,,,,,,,,,,,
12,2,,182900-56000,,BUSHING,1,,,,,,,,,,,,,,,,,
14,2,,172511-91320,,"SEAL 50X60X4, DUST",2,,,,,,,,,,,,,,,,,
15,2,,24761-020000,,"NIPPLE PT1/8,GREASE",1,,,,,,,,,,,,,,,,,
16,2,,24761-040000,,"NIPPLE B,GREASE",1,,,,,,,,,,,,,,,,,
17,1,,182900-55970-4,,"BUCKET ARM R(GREEN97",1,,,,,,,,,,,,,,,,,
17A,1,,182900-55970-1,,"BUCKET ARM R    (87)",1,,,,,,,,,,,,,,,,,,,,I
18,1,,182900-55980-4,,"BUCKET ARM L(GREEN97",1,,,,,,,,,,,,,,,,,
18A,1,,182900-55980-1,,"BUCKET ARM L    (87)",1,,,,,,,,,,,,,,,,,,,,I
19,1,,172187-81940,,"PIN 50X272",1,,,,,,,,,,,,,,,,,
20,1,,172187-82220,,"PIN 60X272",1,,,,,,,,,,,,,,,,,
21,1,,172147-82230,,SHIM,1,,,,,,,,,,,,,,,,,
22,1,,172147-82250,,SHIM,1,,,,,,,,,,,,,,,,,
23,1,,172165-82520,,"SHIM 50X85X0.5",1,,,,,,,,,,,,,,,,,
24,1,,172165-82530,,"SHIM 50X85X1.2",1,,,,,,,,,,,,,,,,,
25,1,,24761-020000,,"NIPPLE PT1/8,GREASE",1,,,,,,,,,,,,,,,,,
26,1,,26116-161202,,"BOLT M16X120 PLATED",2,,,,,,,,,,,,,,,,,
27,1,,26716-160002,,"NUT M16",4,,,,,,,,,,,,,,,,,
28,1,,182900-56140,,PIN,2,,,,,,,,,,,,,,,,,
29,1,,182900-56150,,RING,2,,,,,,,,,,,,,,,,,
30,1,,172187-82230,,"PIN 50X296",2,,,,,,,,,,,,,,,,,
31,1,,172162-83540,,"SHIM 50X110X0.5",2,,,,,,,,,,,,,,,,,
32,1,,172162-83550,,"SHIM 50X110X1.2",2,,,,,,,,,,,,,,,,,
33,1,,182900-54220,,O-RING,2,,,,,,W,,72187504,M/#00921,,,,,,,,,,I
```

https://truckmanualshub.com/

Fig. 68 BUCKET ARM & LINK

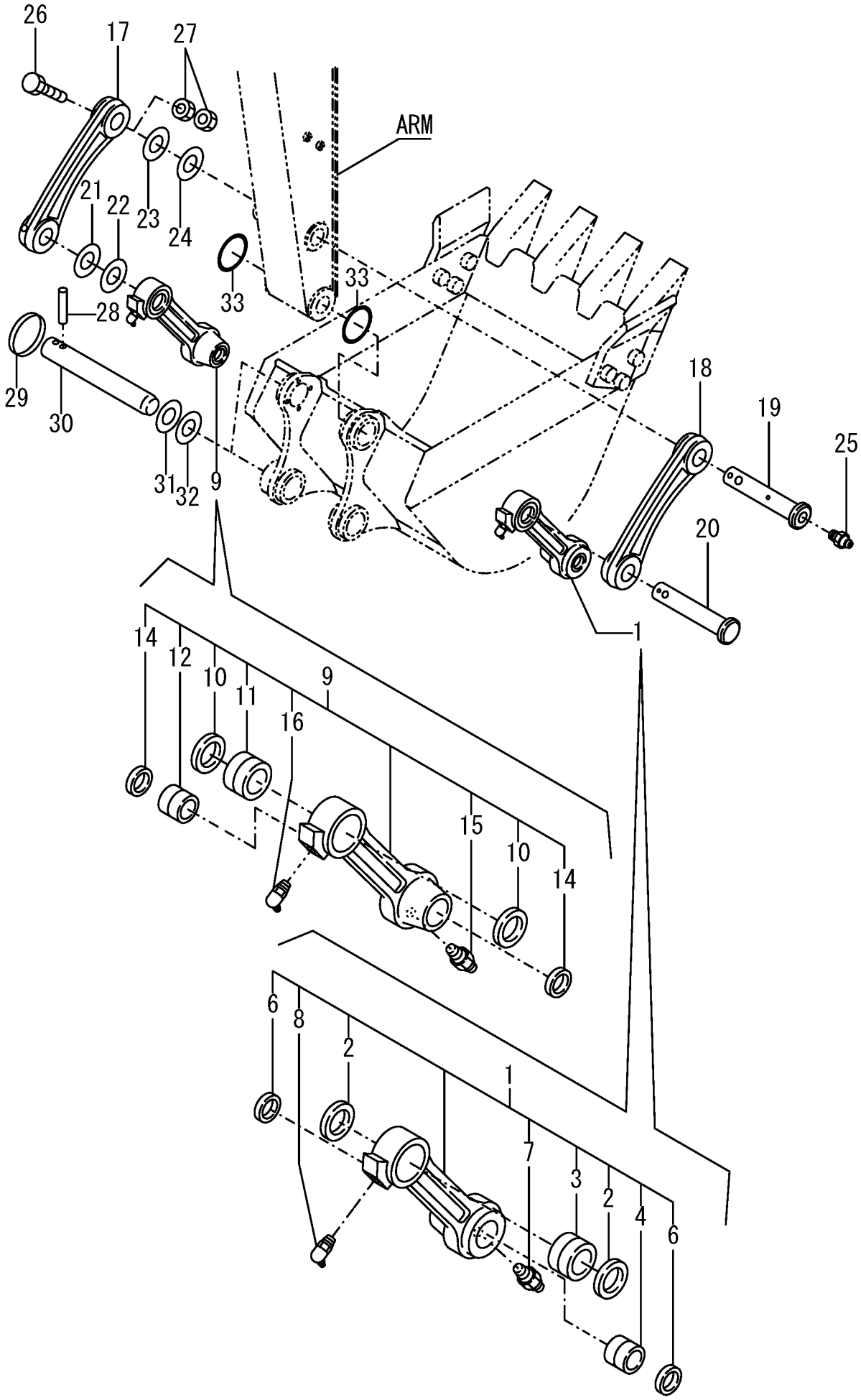

https://truckmanualshub.com/

```
1,1,,172155-45790,,SPACER,2,,,,,,,,,,,,,,,,,
2,1,,172147-82230,,SHIM,4,,,,,,,,,,,,,,,,,
3,1,,172147-82250,,SHIM,4,,,,,,,,,,,,,,,,,
4,1,,172187-94100,,"BLADE CMP (GREEN:88)",1,,,,,,,,,,,,,,,,,
4A,1,,172187-94100-1,,"BLADE CMP (GREEN:82)",1,,,,,,,,,,,,,,,,,,,,I
5,2,,172162-81050,,"SEAL 60X75X6,DUST",4,,,,,,,,,,,,,,,,,
6,2,,172162-81060,,"BUSH 60X55",2,,,,,,,,,,,,,,,,,
7,1,,172162-94270,,PIN,2,,,,,,,,,,,,,,,,,
8,1,,172162-94280,,"PLATE,LOCK(GREEN:88)",2,,,,,,,,,,,,,,,,,
9,1,,172187-94300,,"PIN 60X147",2,,,,,,,,,,,,,,,,,
10,1,,22157-140000,,"WASHER 14",2,,,,,,,,,,,,,,,,,
11,1,,22217-140000,,"SPRING WASHER 14",2,,,,,,,,,,,,,,,,,
12,1,,24761-020000,,"NIPPLE PT1/8,GREASE",2,,,,,,,,,,,,,,,,,
13,1,,24761-040000,,"NIPPLE B,GREASE",2,,,,,,,,,,,,,,,,,
14,1,,26013-120302,,"BOLT W/WASHER M12X30",4,,,,,,,,,,,,,,,,,
15,1,,26116-140352,,"BOLT M14X 35 PLATED",2,,,,,,,,,,,,,,,,,
```

https://truckmanualshub.com/

Fig.69 BLADE

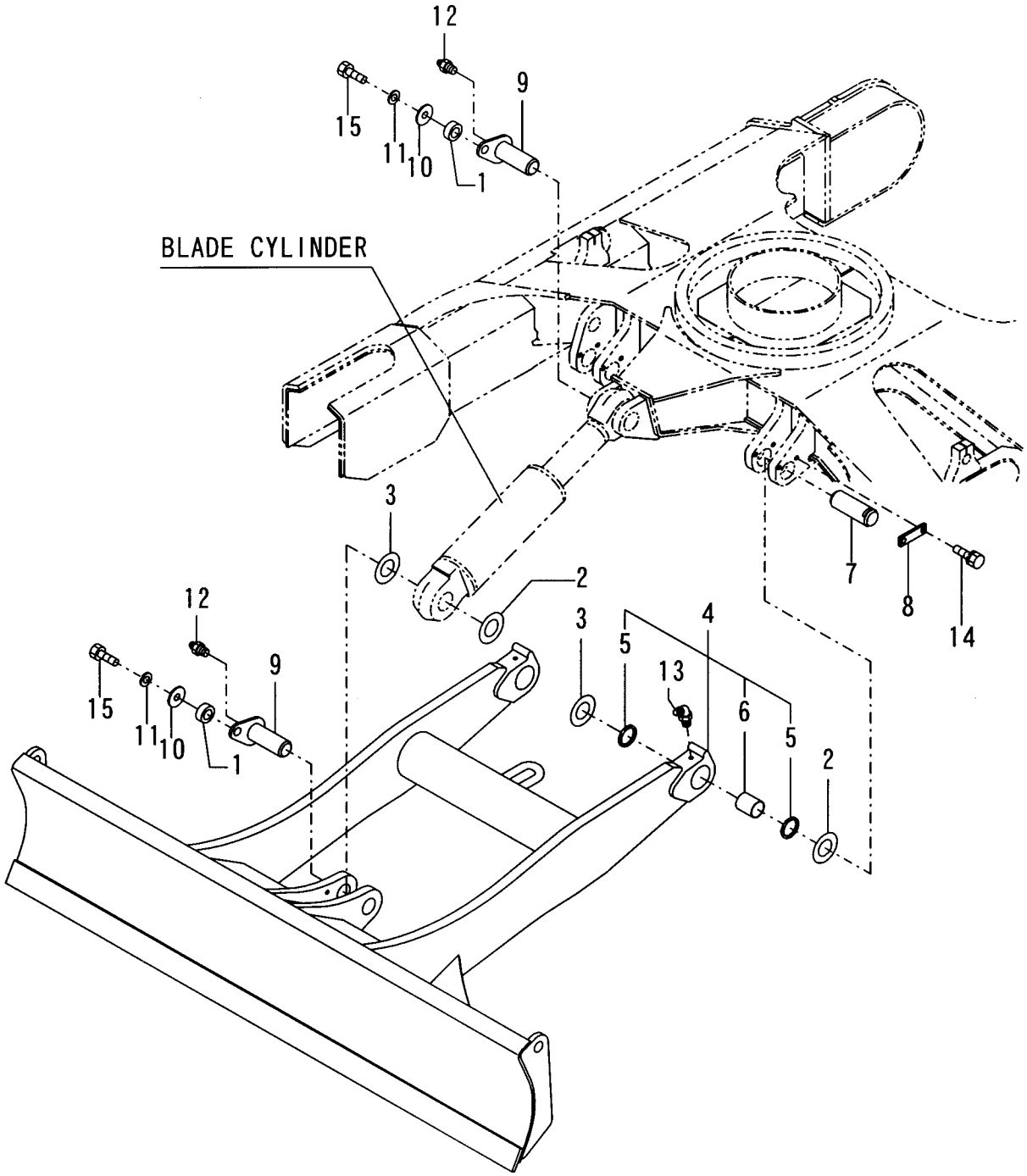

https://truckmanualshub.com/

```
1,1,,172020-10100-1,,"CYLINDER,BOOM
(87)",1,,,,,,W,,72187677,M/#05096,,,,,,,,,,I
2,2,,194145-04810,,"WASHER 10",1,,,,,,,,,,,,,,,,,,,,I
3,2,,172020-10111-1,,"TUBE,BOOM(YELLOW:87)",1,,,,,,,,,,,,,,,,,,,,I
4,3,,172020-10220,,"BUSH 70 85",1,,,,,,,,,,,,,,,,,,,,I
5,3,,172162-82350,,"SEAL 70X85X6,DUST",2,,,,,,,,,,,,,,,,,,,,I
6,2,,172020-10141-1,,"TUBE     (YELLOW:87)",1,,,,,,,,,,,,,,,,,,,,I
7,2,,172020-10230,,"HEAD 115 65",1,,,,,,,,,,,,,,,,,,,,I
9,3,,172020-10320,,"BUSH 65 40",1,,,,,,,,,,,,,,,,,,,,I
10,2,,172020-10250,,"ROD,BOOM",1,,,,,,,,,,,,,,,,,,,,I
11,3,,172020-10220,,"BUSH 70 85",1,,,,,,,,,,,,,,,,,,,,I
12,3,,172162-82350,,"SEAL 70X85X6,DUST",2,,,,,,,,,,,,,,,,,,,,I
13,2,,172020-10290,,"PISTON 115",1,,,,,,,,,,,,,,,,,,,,I
14,2,,172020-10340,,"PLUNGER 72,CUSHION",1,,,,,,,,,,,,,,,,,,,,I
15,2,,172020-10350,,"COLLAR 45 59,CUSHION",1,,,,,,,,,,,,,,,,,,,,I
16,2,,172020-10370,,"U-NUT M45X3",1,,,,,,,,,,,,,,,,,,,,I
17,2,,172020-11600,,"SEAL SET 115X65",1,,,,,,,,,,,,,,,,,,,,I
18,3,,172020-10360,,"WASHER 115,LOCK",1,,,,,,,,,,,,,,,,,,,,I
19,3,,172020-10380,,"RING 82,SPRING",1,,,,,,,,,,,,,,,,,,,,I
20,3,,172020-11610,,"SEAL SET, HEAD",1,,,,,,,,,,,,,,,,,,,,I
27,3,,172020-11620,,"SEAL SET 115,PISTON",1,,,,,,,,,,,,,,,,,,,,I
30,2,,24761-020000,,"NIPPLE PT1/8,GREASE",1,,,,,,,,,,,,,,,,,,,,I
31,2,,24761-050000,,"NIPPLE C,GREASE",1,,,,,,,,,,,,,,,,,,,,I
32,2,,26013-100252,,"BOLT W/WASHER M10X25",1,,,,,,,,,,,,,,,,,,,,I
33,1,,172162-61770,,"GUIDE,SLIDE",2,,,,,,,,,,,,,,,,,,,,I
34,1,,172187-72910-1,,"COVER,SLIDE     (87)",1,,,,,,,,,,,,,,,,,,,,I
35,1,,172187-72950-1,,"GUARD ASSY      (87)",1,,,,,,,,,,,,,,,,,,,,I
36,1,,22217-100000,,"SPRING WASHER 10",1,,,,,,,,,,,,,,,,,,,,I
37,1,,22217-100000,,"SPRING WASHER 10",2,,,,,,,,,,,,,,,,,,,,I
38,1,,26116-100162,,"BOLT M10X 16 PLATED",2,,,,,,,,,,,,,,,,,,,,I
39,1,,26116-100202,,"BOLT M10X 20 PLATED",1,,,,,,,,,,,,,,,,,,,,I
40,1,,933147-03400,,"WASHER, BRAKE ARM",1,,,,,,,,,,,,,,,,,,,,I
41,1,,933168-14170,,"SPRING 16",2,,,,,,,,,,,,,,,,,,,,I
```

https://truckmanualshub.com/

Y00S3631-1

Fig. 70 BOOM CYLINDER (NEW)

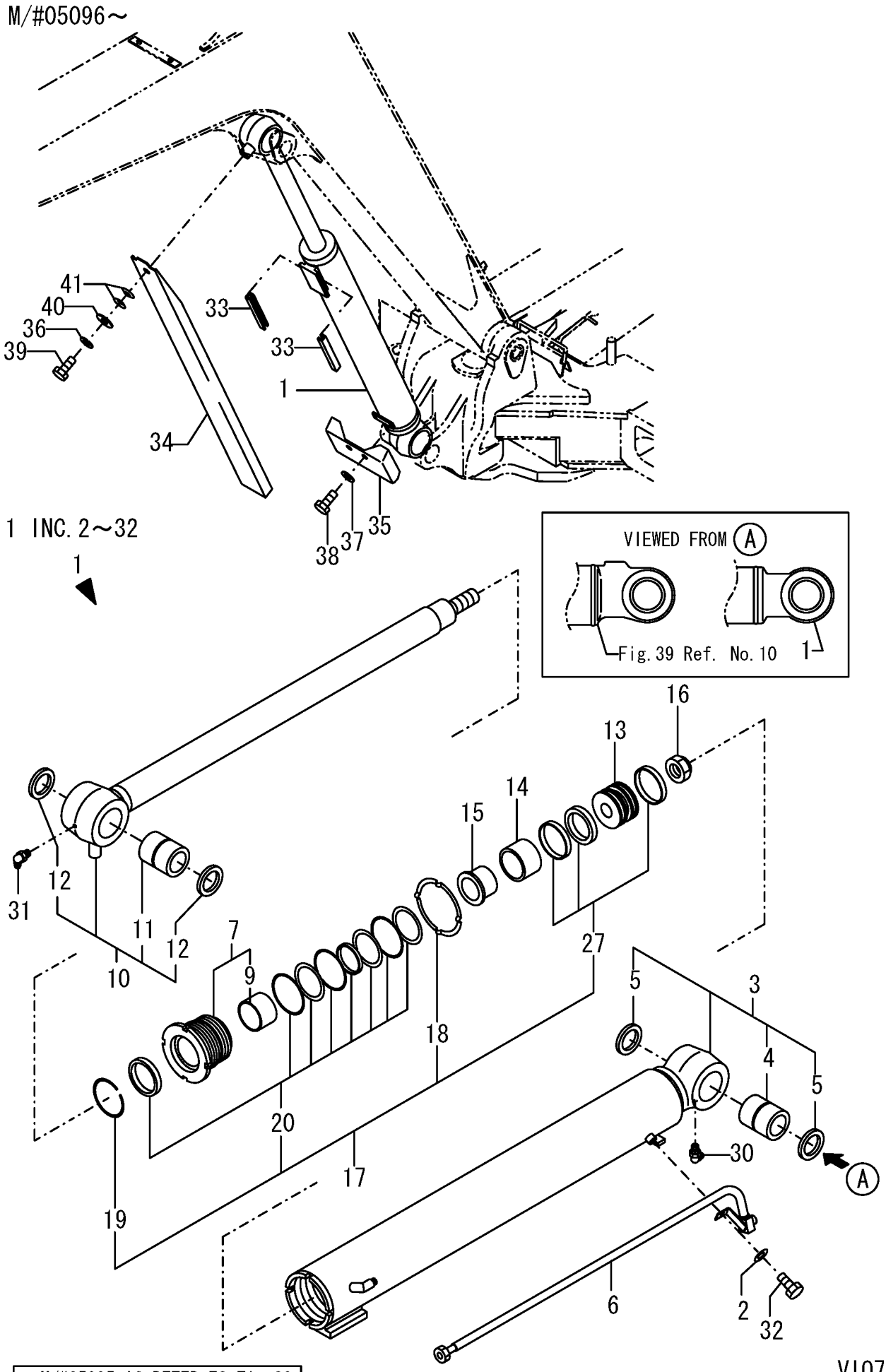

～M/#05095 IS REFER TO Fig. 39

V1070 (EP)

https://truckmanualshub.com/

```
1,1,,172020-10500-1,,"CYLINDER,ARM
(87)",1,,,,,,W,,72187687,M/#05396,,,,,,,,,,I
2,2,,172020-10510-1,,"TUBE,ARM (YELLOW:87)",1,,,,,,,,,,,,,,,,,,,,I
3,3,,172020-10610,,"BUSH 60 75 83",1,,,,,,,,,,,,,,,,,,,,I
4,3,,172020-10620,,"SEAL 60 X 75 X 5",2,,,,,,,,,,,,,,,,,,,,I
5,2,,172020-10650,,"ROD,ARM",1,,,,,,,,,,,,,,,,,,,,I
6,3,,172020-10620,,"SEAL 60 X 75 X 5",2,,,,,,,,,,,,,,,,,,,,I
7,3,,172020-10680,,"BUSH 60 75 58",1,,,,,,,,,,,,,,,,,,,,I
8,2,,172020-10700,,"HEAD 100 60",1,,,,,,,,,,,,,,,,,,,,I
10,3,,172445-72480,,"ROD BUSH 60 35",1,,,,,,,,,,,,,,,,,,,,I
11,2,,172020-10720,,"PISTON 100",1,,,,,,,,,,,,,,,,,,,,I
12,2,,172020-10730,,"PLUNGER 64A,CUSHION",1,,,,,,,,,,,,,,,,,,,,I
13,2,,172020-10750,,"PLUNGER 48,CUSHION",1,,,,,,,,,,,,,,,,,,,,I
14,2,,172020-10760,,"COLLAR, CUSHION",1,,,,,,,,,,,,,,,,,,,,I
15,2,,172020-10770,,SPACER,1,,,,,,,,,,,,,,,,,,,,I
16,2,,172020-10780,,"COVER, STOPPER",1,,,,,,,,,,,,,,,,,,,,I
17,2,,172020-10790,,STOPPER,2,,,,,,,,,,,,,,,,,,,,I
18,2,,172020-10810,,"U-NUT M42 X 3",1,,,,,,,,,,,,,,,,,,,,I
19,2,,172020-10860,,"COLLAR, CUSHION",1,,,,,,,,,,,,,,,,,,,,I
20,2,,172020-11630,,"SEAL SET 100X60,CYL.",1,,,,,,,,,,,,,,,,,,,,I
21,3,,172020-10800,,"WASHER 100,LOCK",1,,,,,,,,,,,,,,,,,,,,I
22,3,,172020-11640,,"SEAL SET 100X60,HEAD",1,,,,,,,,,,,,,,,,,,,,I
29,3,,172020-11650,,"SEAL SET, PISTON",1,,,,,,,,,,,,,,,,,,,,I
33,3,,172445-72450,,"RING 77",1,,,,,,,,,,,,,,,,,,,,I
34,2,,22242-000340,,"CIRCLIP   34",1,,,,,,,,,,,,,,,,,,,,I
35,2,,24761-040000,,"NIPPLE B,GREASE",1,,,,,,,,,,,,,,,,,,,,I
```

https://truckmanualshub.com/

Y00S3631-1

Fig. 71 ARM CYLINDER(NEW)

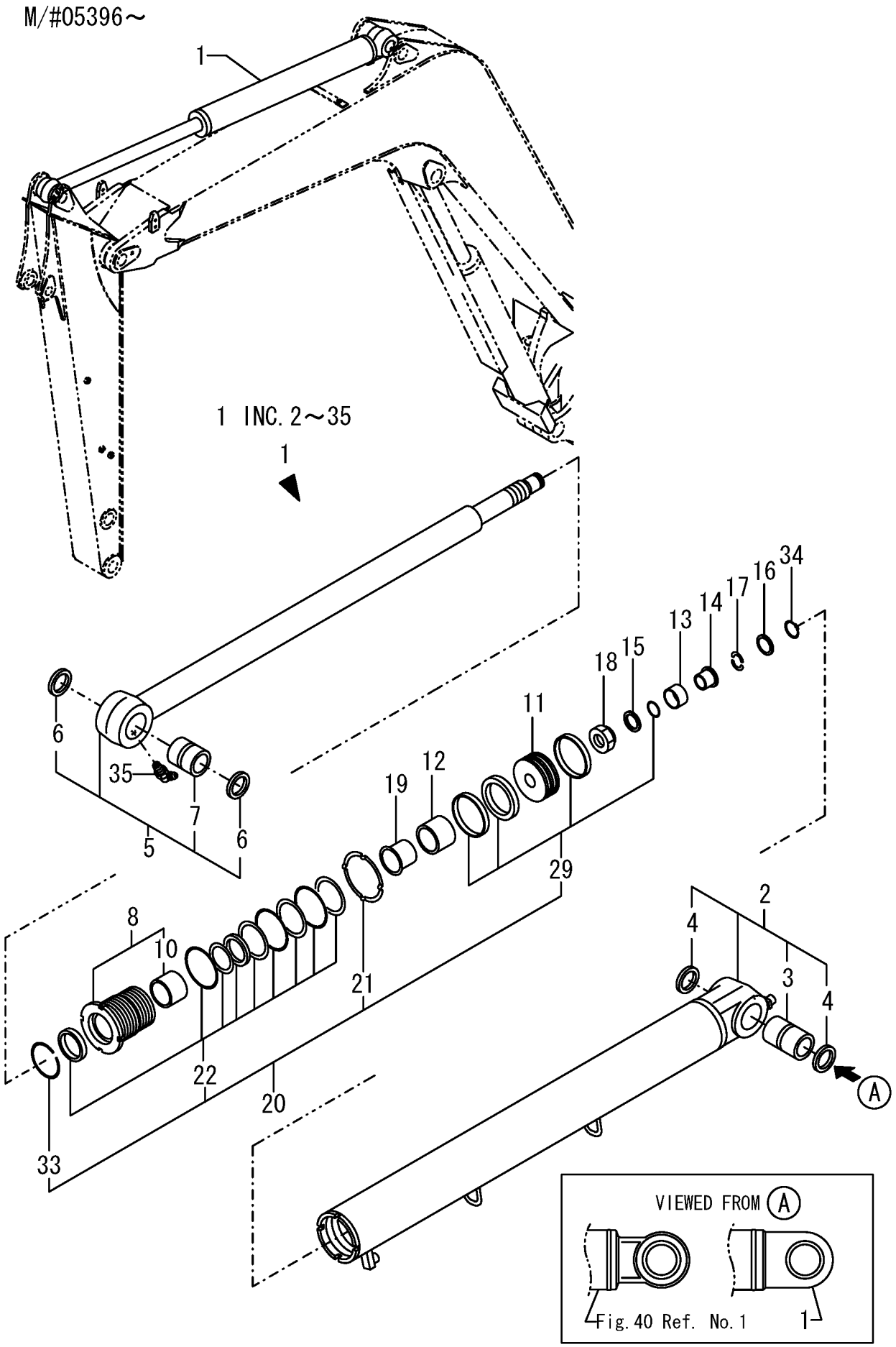

～M/#05095 IS REFER TO Fig. 40

https://truckmanualshub.com/

```
1,1,,172020-10900-1,,"CYLINDER,BUCKET
(87)",1,,,,,,W,,72187685,M/#05345,,,,,,,,,,I
2,2,,194145-04810,,"WASHER 10",1,,,,,,,,,,,,,,,,,,,,I
3,2,,172020-10910-1,,"TUBE,BUCKET(YELLOW87",1,,,,,,,,,,,,,,,,,,,,I
4,3,,172151-72591,,"BUSH 50X60",1,,,,,,,,,,,,,,,,,,,,I
5,3,,172165-81760,,"SEAL 50X60X4, DUST",2,,,,,,,,,,,,,,,,,,,,I
6,2,,172020-10940-1,,"TUBE     (YELLOW:87)",1,,,,,,,,,,,,,,,,,,,,I
7,2,,172020-11000,,"ROD,BUCKET",1,,,,,,,,,,,,,,,,,,,,I
8,3,,172020-10620,,"SEAL 60 X 75 X 5",2,,,,,,,,,,,,,,,,,,,,I
9,3,,172020-11030,,"BUSH 60 58",1,,,,,,,,,,,,,,,,,,,,I
10,2,,172020-11040,,"HEAD 90 55",1,,,,,,,,,,,,,,,,,,,,I
12,3,,172151-72240,,"BUSH 55 35, ROD",1,,,,,,,,,,,,,,,,,,,,I
13,2,,172020-11060,,"PISTON 90",1,,,,,,,,,,,,,,,,,,,,I
14,2,,172020-11660,,"SEAL SET 90X55",1,,,,,,,,,,,,,,,,,,,,I
15,3,,172020-11070,,"WASHER 90,LOCK",1,,,,,,,,,,,,,,,,,,,,I
16,3,,172020-11670,,"SEAL SET 90X55,HEAD",1,,,,,,,,,,,,,,,,,,,,I
23,3,,172020-11680,,"SEAL SET 90,PISTON",1,,,,,,,,,,,,,,,,,,,,I
26,3,,933126-00500,,"RING 72, SPRING",1,,,,,,,,,,,,,,,,,,,,I
27,2,,172151-72270,,"U-NUT M39",1,,,,,,,,,,,,,,,,,,,,I
28,2,,24761-020000,,"NIPPLE PT1/8,GREASE",1,,,,,,,,,,,,,,,,,,,,I
29,2,,24761-050000,,"NIPPLE C,GREASE",1,,,,,,,,,,,,,,,,,,,,I
30,2,,26013-100252,,"BOLT W/WASHER M10X25",1,,,,,,,,,,,,,,,,,,,,I
```

https://truckmanualshub.com/

Y00K3631-1

Fig. 72 BUCKET CYLINDER (NEW)

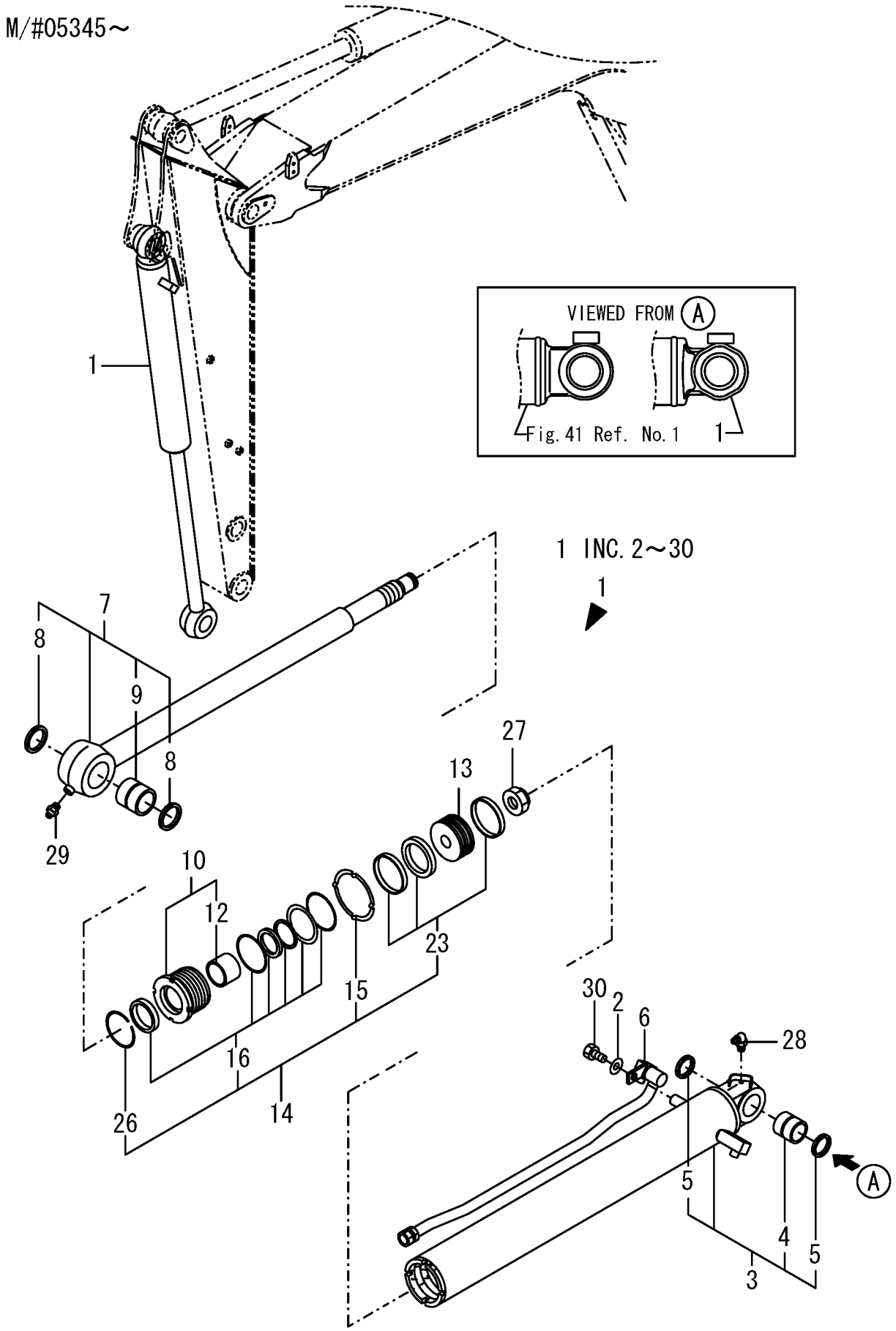

～M/#05344 IS REFER TO Fig. 41

https://truckmanualshub.com/

```
1,1,,172020-11150-1,,"CYLINDER,SWING
(82)",1,,,,,,W,,72187647,M/#01688,,,,,,,,,,I
2,2,,172020-10740,,"COLLAR 42 55",1,,,,,,,,,,,,,,,,,,,,I
3,2,,172020-10810,,"U-NUT M42 X 3",1,,,,,,,,,,,,,,,,,,,,I
4,2,,172020-11160-1,,"TUBE,SWING(GREEN:82)",1,,,,,,,,,,,,,,,,,,,,I
5,3,,172020-10620,,"SEAL 60 X 75 X 5",2,,,,,,,,,,,,,,,,,,,,I
6,3,,172020-11230,,"BUSH 60 63 A",1,,,,,,,,,,,,,,,,,,,,I
7,2,,172020-11250,,"ROD,SWING",1,,,,,,,,,,,,,,,,,,,,I
8,3,,172020-10620,,"SEAL 60 X 75 X 5",2,,,,,,,,,,,,,,,,,,,,I
9,3,,172020-11280,,"BUSH 60 60 B",1,,,,,,,,,,,,,,,,,,,,I
10,2,,172020-11300,,"HEAD CMP 120 60",1,,,,,,,,,,,,,,,,,,,,I
12,3,,172445-72480,,"ROD BUSH 60 35",1,,,,,,,,,,,,,,,,,,,,I
13,2,,172020-11320,,"PISTON 120",1,,,,,,,,,,,,,,,,,,,,I
14,2,,172020-11330,,"PLUNGER 68B",1,,,,,,,,,,,,,,,,,,,,I
15,2,,172020-11340,,"RING 44-1.6",1,,,,,,,,,,,,,,,,,,,,I
16,2,,172020-11690,,"KIT,CYL SEAL120X60",1,,,,,,,,,,,,,,,,,,,,I
17,3,,172020-11350,,"ROCK WASHER 120",1,,,,,,,,,,,,,,,,,,,,I
18,3,,172020-11700,,"SET,HEAD SEAL 120X60",1,,,,,,,,,,,,,,,,,,,,I
25,3,,172020-11710,,"SET,PISTON SEAL 120",1,,,,,,,,,,,,,,,,,,,,I
29,3,,172445-72450,,"RING 77",1,,,,,,,,,,,,,,,,,,,,I
30,2,,172423-72520,,COLLAR,1,,,,,,,,,,,,,,,,,,,,I
31,2,,172423-72530,,SPACER,1,,,,,,,,,,,,,,,,,,,,I
32,2,,172423-72540,,STOPPER,2,,,,,,,,,,,,,,,,,,,,I
33,2,,172423-72550,,"CIRCLIP 28",1,,,,,,,,,,,,,,,,,,,,I
34,2,,24761-050000,,"NIPPLE C,GREASE",1,,,,,,,,,,,,,,,,,,,,I
```

https://truckmanualshub.com/

Y00S3631-1

Fig. 73 SWING CYLINDER(NEW)

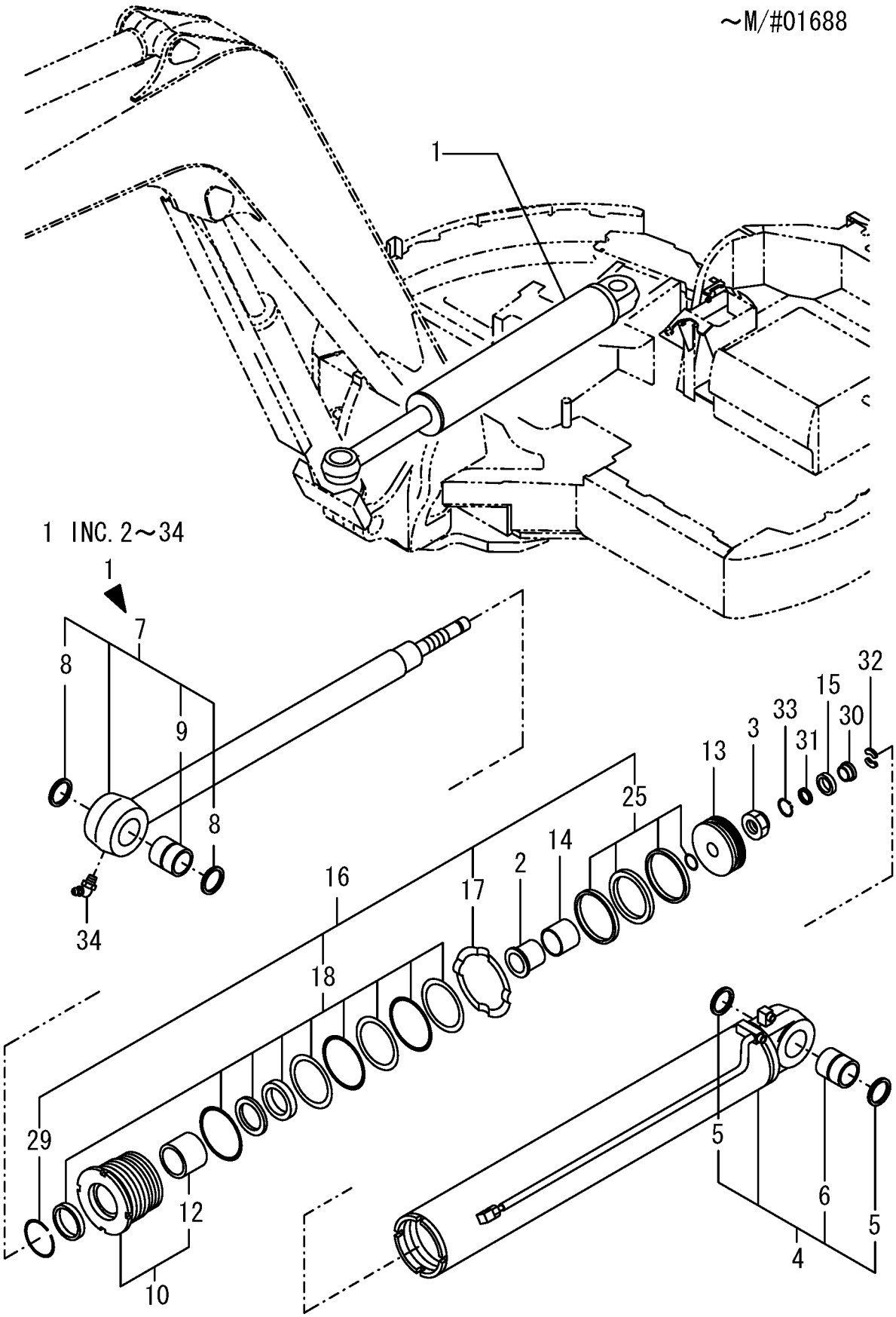

~M/#01687 IS REFER TO Fig. 42

https://truckmanualshub.com/

```
1,1,,172020-11400-1,,"CYLINDER,BLADE
(82)",1,,,,,,W,,72187685,M/#05345,,,,,,,,,,I
2,2,,172020-11410-1,,"TUBE,BLADE(GREEN:82)",1,,,,,,,,,,,,,,,,,,,,I
3,3,,172020-10620,,"SEAL 60 X 75 X 5",2,,,,,,,,,,,,,,,,,,,,I
4,3,,172020-11450,,"BUSH 60 68",1,,,,,,,,,,,,,,,,,,,,I
5,2,,172020-11470,,"ROD ASSY, BLADE",1,,,,,,,,,,,,,,,,,,,,I
6,3,,172020-10620,,"SEAL 60 X 75 X 5",2,,,,,,,,,,,,,,,,,,,,I
7,3,,172020-11450,,"BUSH 60 68",1,,,,,,,,,,,,,,,,,,,,I
8,2,,172020-11500,,"HEAD 130 65",1,,,,,,,,,,,,,,,,,,,,I
9,3,,172020-10320,,"BUSH 65 40",1,,,,,,,,,,,,,,,,,,,,I
11,2,,172020-11520,,"PISTON 130",1,,,,,,,,,,,,,,,,,,,,I
12,2,,172020-11540,,"U-NUT M48X3",1,,,,,,,,,,,,,,,,,,,,I
13,2,,172020-11720,,"SEAL SET 130X65,CYL.",1,,,,,,,,,,,,,,,,,,,,I
14,3,,172020-10380,,"RING 82,SPRING",1,,,,,,,,,,,,,,,,,,,,I
15,3,,172020-11530,,"WASHER 130,LOCK",1,,,,,,,,,,,,,,,,,,,,I
16,3,,172020-11730,,"SEAL SET 130X65,HEAD",1,,,,,,,,,,,,,,,,,,,,I
23,3,,172020-11740,,"SEAL SET 130,PISTON",1,,,,,,,,,,,,,,,,,,,,I
26,1,,172187-72891,,"COVER,ASSY.BLADE(88)",1,,,,,,,,,,,,,,,,,,,,I
27,1,,22137-100000,,"WASHER 10,POLISHED",4,,,,,,,,,,,,,,,,,,,,I
28,1,,22217-100000,,"SPRING WASHER 10",4,,,,,,,,,,,,,,,,,,,,I
29,1,,26116-100202,,"BOLT M10X 20 PLATED",4,,,,,,,,,,,,,,,,,,,,I
```

https://truckmanualshub.com/

Y00S3631-1

Fig. 74 BLADE CYLINDER (NEW)

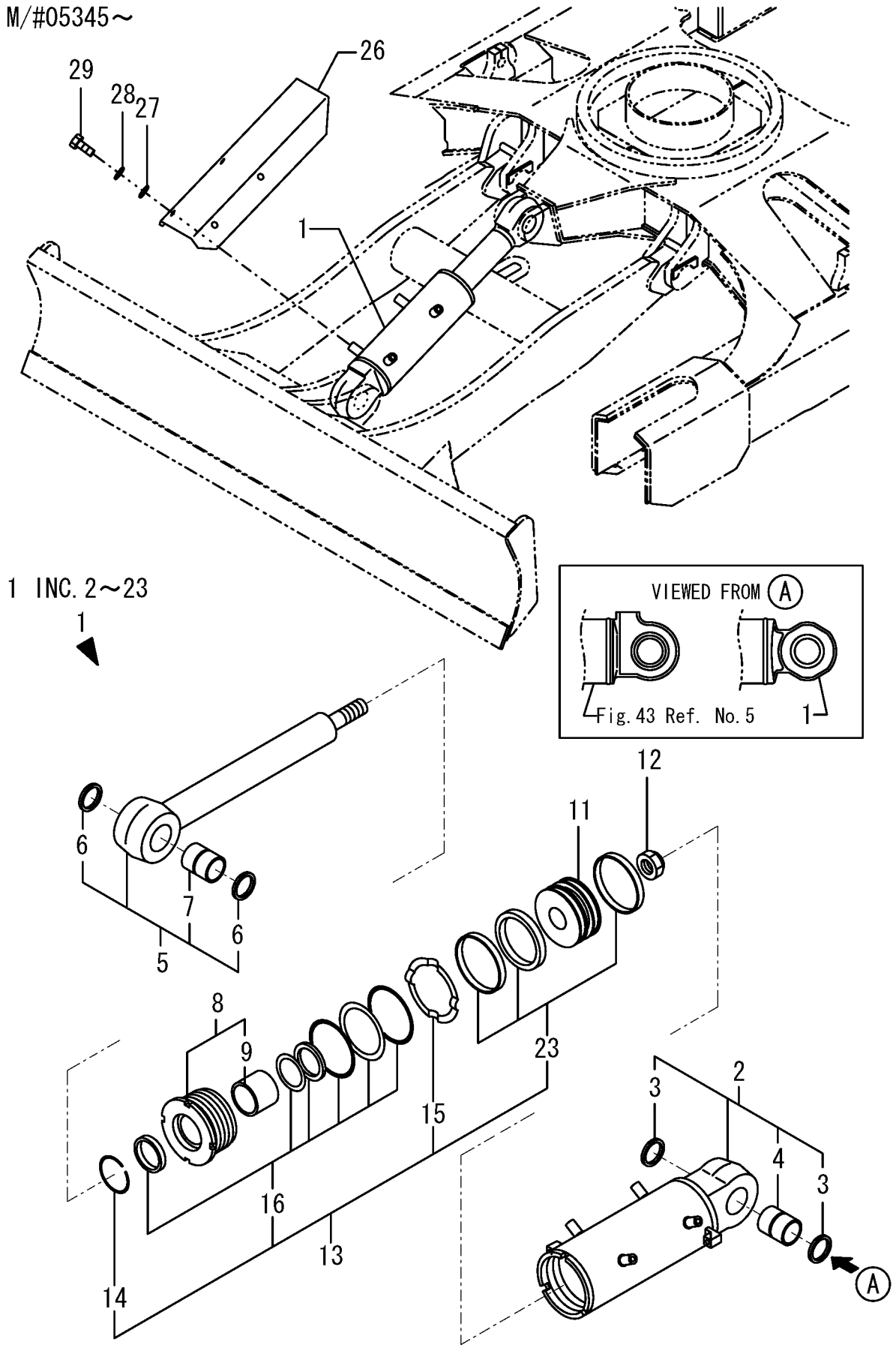

～M/#05344 IS REFER TO Fig. 43

https://truckmanualshub.com/

```
[Info]
PcNo=Y00S3631
PcName=VIO70(EP)(B5472)
JpnUse=0
JpnSec1=
JpnSec2=
JpnSec3=
JpnPreface=0
EngUse=1
EngSec1=CONSTRUCTION
EngSec2=EXCAVATOR (ViO)
EngSec3=VIO
EngPreface=1
```