https://truckmanualshub.com/

F-SERIES

Your satisfaction is our #1 goal. If you have questions or concerns with your vehicle, we suggest you follow these steps:

1. Contact your Sales Representative or Service Advisor at your selling/servicing dealership.
2. If the inquiry or concern remains unresolved, contact the Sales Manager or Service Manager at the dealership.
3. If the inquiry or concern cannot be resolved at the dealership level, please contact the Ford Customer Assistance Center.

In the United States:

Ford Motor Company
Customer Assistance Center
300 Renaissance Center
P.O. Box 43360
Detroit, MI 48243
1-800-392-3673 (FORD)
TDD for the hearing impaired: 1-800-232-5952

In Canada:

Customer Assistance Centre
Ford Motor Company of Canada, Limited
P.O. Box 2000
Oakville, Ontario L6J 5E4
1-800-565-3673 (FORD)

Outside the U.S. or Canada:

FORD MOTOR COMPANY
WORLDWIDE EXPORT OPERATIONS
1555 Fairlane Drive
Fairlane Business Park #3
Allen Park, Michigan 48101
Telephone: (313) 594-4857
Fax: (313) 390-0804

https://truckmanualshub.com/

All rights reserved. Reproduction by any means, electronic or mechanical, including photocopying, recording, or by any information storage and retrieval system or tranlation in whole or part is not permitted without written authorization from Ford Motor Company.

Copyright © 1996 Ford Motor Company

https://truckmanualshub.com/

Table of Contents

Introduction 1

Instrumentation 11

Audio 27

Controls and Features 57

Seating and Safety Restraints 95

Starting 137

Driving 145

Roadside Emergencies 223

Maintenance and Care 257

Capacities and Specifications 317

Reporting Safety Defects 333

Customer Assistance 335

Accessories 347

Quick Index..... 359

Index 367

https://truckmanualshub.com/

Introduction

Ford's Commitment to You

At Ford Motor Company, excellence is the continuous commitment to achieve the best result possible. It is dedication to learning what you want, determination to develop the right concept, and execution of that concept with care, precision, and attention to detail. In short, excellence means being the standard by which others are judged.

Our Guiding Principles

- **Quality comes first.** For your satisfaction, the quality of our products and services must be our number one priority.
- **You are the focus of everything we do.** Our work must be done with you in mind, providing better products and services than our competition.
- **Continuous improvement is essential to our success.** We must strive for excellence in everything we do: in our products — in their safety and value — and in our services, our human relations, our competitiveness, and our profitability.
- **Employee involvement is our way of life**. We are a team. We must treat one another with trust and respect.
- **Dealers and suppliers are our partners.** We must maintain mutually beneficial relationships with dealers, suppliers, and our other business associates.

https://truckmanualshub.com/

- **Integrity is never compromised.** Our conduct worldwide must be pursued in a manner that is socially responsible and commands respect for its integrity and for its positive contributions to society.

Things to Know About Using This Guide

Congratulations on the purchase of your new vehicle. This guide has information about the equipment and the options for your new vehicle. You may not have bought all of the options available to you. If you do not know which information applies to your vehicle, talk to your dealer.

This guide describes equipment and gives specifications for equipment that was in effect when this guide was approved for printing. Ford may discontinue models or change specifications or design without any notice and without incurring obligation.

NOTES and WARNINGS

NOTES give you additional information about the subject matter you are referencing.

WARNINGS remind you to be especially careful in those areas where carelessness can cause damage to your vehicle or personal injury to yourself, your passengers or other people. Please read all **WARNINGS** carefully.

⚠WARNING

https://truckmanualshub.com/

Finding Information in This Guide

After you have read this guide once, you will probably return to it when you have a specific question or need additional information. To help you find specific information quickly, you can use the table of contents or the index.

The **Quick Index** at the end of the book provides a page number following each item which indicates where detailed information can be found.

This guide has a **table of contents** at the beginning of the book to show chapter titles.

To use the **Index**, turn to the back of the book and search in the alphabetical listing for the word that best describes the information you need. If the word you chose is not listed, think of other related words and look them up. We have designed the Index so that you can find information under a technical term.

Canadian Owners — French Version

French Owner Guides can be obtained from your dealer or by writing to Ford Motor Company of Canada, Limited, Service Publications, P.O. Box 1580, Station B, Mississauga, Ontario L4Y 4G3.

Your Maintenance Schedule Booklet

The *Maintenance Schedule* booklet lists the services that are most important for keeping your vehicle in good condition. A record log is also provided to help you keep track of all services performed.

https://truckmanualshub.com/

About the Warranties

Your vehicle is covered by three types of warranties: Basic Vehicle Warranty, Extended Warranties on certain parts, and Emissions Warranties.

Read your *Warranty Information Booklet* carefully to find out about your vehicle's warranties and your basic rights and responsibilities.

If you lose your *Warranty Information Booklet*, you can get a new one free of charge. Contact any Ford or Lincoln-Mercury dealer, or refer to the addresses and phone numbers on the first page of this Owner's Guide.

Ford Extended Service Plan

More Protection for Your Vehicle

You can get more protection for your new car or light truck by purchasing a Ford Extended Service Plan (Ford ESP). Ford ESP is the only extended service program with the Ford name on it and the only service contract backed by Ford Motor Company.

Ford ESP is an optional service contract, backed and administered by Ford. It provides:

- ❑ protection against repair costs after your Bumper to Bumper Warranty expires;

  and

- ❑ other benefits during the warranty period (such as: reimbursement for rentals; coverage for certain maintenance and wear items).

https://truckmanualshub.com/

You may purchase Ford ESP from any participating Ford Motor Company dealer. There are several Ford ESP plans available in various time-and-mileage combinations. Each plan can be tailored to fit your own driving needs, including reimbursement benefits for towing and rental. (In Hawaii, rules vary. See your dealer for details.)

When you buy Ford ESP, you receive peace-of-mind protection throughout the United States and Canada, provided by a network of more than 5,100 participating Ford Motor Company dealers.

NOTE: Repairs performed outside the United States and Canada are not eligible for ESP coverage.

This information is subject to change. Ask your dealer for complete details about Ford ESP coverage.

Special Notices

NOTICE TO OWNERS OF FOUR-WHEEL DRIVE VEHICLES

As with other vehicles of this type, failure to operate this vehicle correctly may result in loss of control or an accident. Be sure to read the *Additional Special Driving Instructions for Four-Wheel Drive Vehicle Operators* in this book and the special supplement included with four-wheel drive vehicles entitled *4-Wheeling*.

https://truckmanualshub.com/

NOTICE TO OWNERS OF LIGHT TRUCK AMBULANCE CONVERSIONS

If your light truck is equipped with the **Ford Ambulance Preparation Package**, it can be utilized as an ambulance. Ford urges ambulance manufacturers to follow the recommendations of the **Ford Incomplete Vehicle Manual**, **Ford Truck Body Builder's Layout Book**, and the **QVM Guidelines** as well as pertinent supplements. For further information, please call the Light Truck Body Builders Advisory Service on 1-800-635-5560.

Use of your Ford light truck as an ambulance, without the **Ford Ambulance Preparation Package** voids the Ford New Vehicle Limited Warranty and may void the Emissions Warranties. In addition, ambulance usage without the preparation package could cause high underbody temperatures, overpressurized fuel, and a risk of spraying fuel which could lead to fires. If your light truck is equipped with the **Ford Ambulance Preparation Package** it will say so on its information decal. The decal is located on the driver's side door pillar or on the rear edge of the driver's door. You can determine whether the ambulance manufacturer followed Ford's recommendations by directly contacting that manufacturer. **NOTE: Ford Ambulance Preparation Package** is only available on certain 7.3L Diesel F-Series vehicles.

https://truckmanualshub.com/

NOTICE TO OWNERS OF DIESEL-POWERED VEHICLES

Read the *7.3L Diesel Engine Owner's Guide Supplement* for information regarding correct operation and maintenance of your diesel-powered light truck.

Your Vehicle Identification Number (VIN)

You should include your Vehicle Identification Number (VIN) any time you write to Ford Motor Company about your vehicle.

The Vehicle Identification Number is attached to your vehicle in the following places:

Complete Ford Built Vehicles

- ❑ on the metal tag attached to the top of the instrument panel on the driver's side — you can see the tag by looking through the windshield from outside your vehicle.

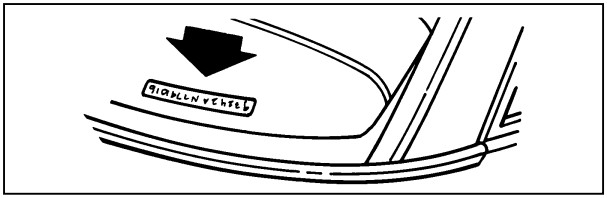

Vehicle Identification Number (VIN/Serial Number)

- ❑ on the Safety Compliance Certification Label —this label is attached to the left front door lock facing or the door latch post pillar. It is required by the National Highway Traffic Safety Administration and is made of special material. If someone tampers with it, it will be destroyed and/or a destruction pattern will appear.

https://truckmanualshub.com/

The label contains the name of the manufacturer, the month and year of manufacture, the certification statement and the Vehicle Identification Number. The label also contains Gross Vehicle Weight Rating and Gross Axle Weight Ratings, wheel and tire data and information codes for additional vehicle data. For further information about the Safety Compliance Certification Label and the information contained on it, refer to the Index.

Incomplete Vehicles

On completed derivations of incomplete vehicles, the Safety Compliance Certification Label is affixed at a location determined by a subsequent stage manufacturer of the completed vehicle. In these cases the completed vehicle is manufactured in two (or more) stages by two (or more) separate manufacturers, with the manufacture of the completed vehicle occurring at a later date than the manufacture of the incomplete vehicle. Consequently, the model year of the completed vehicle may be later than the model year of its chassis.

Federal Highway Administration Regulation

Regulations such as those issued by the Federal Highway Administration or issued pursuant to the Occupational Safety and Health Act (OSHA), and/or state and local laws and regulations may require additional equipment for the way you intend to use the vehicle. It is the responsibility of the registered owner to determine the applicability of such laws and regulations to your intended use for the vehicle, and to arrange for the installation of required equipment. Your Ford dealer has information about the availability of many items of equipment which may be ordered for your vehicle.

https://truckmanualshub.com/

Breaking Your Vehicle In

Your new vehicle goes through an adjustment or break-in period during the first 1,000 miles (1,600 km) that you drive it. During the break-in period, you need to pay careful attention to how you drive your vehicle.

- **Avoid sudden stops.** Because your vehicle has new brake linings, you should take these steps:

  — Watch traffic carefully so that you can anticipate when to stop.

  — Begin braking well in advance.

  — Apply the brakes gradually.

  The break-in period for new brake linings lasts for 100 miles (160 km) of city driving or 1,000 miles (1,600 km) of highway driving.

- Wheel lug nuts must be retightened to proper torque specifications at 500 miles/800 km of new vehicle operation. Proper torque specifications are provided in this guide. Also retighten to proper torque specifications at 500 miles/800 km after any wheel change or any other time the wheel lug nuts have been loosened.

- **Use only the type of engine oil that Ford recommends.** See *Engine oil recommendations* in the Index. Do not use special “break-in” oils.

https://truckmanualshub.com/

Instrumentation

The instrument panel (dashboard) on your vehicle is divided into several different sections. The illustrations on the following pages show the major parts of the instrument panel that are described in this chapter. Some items shown may not be on all vehicles.

Your vehicle has one of the following clusters:

- ❑ A mechanical cluster
- ❑ A mechanical cluster with tachometer

If you are not sure which cluster your vehicle has, check the diagrams on the following pages of this section.

https://truckmanualshub.com/

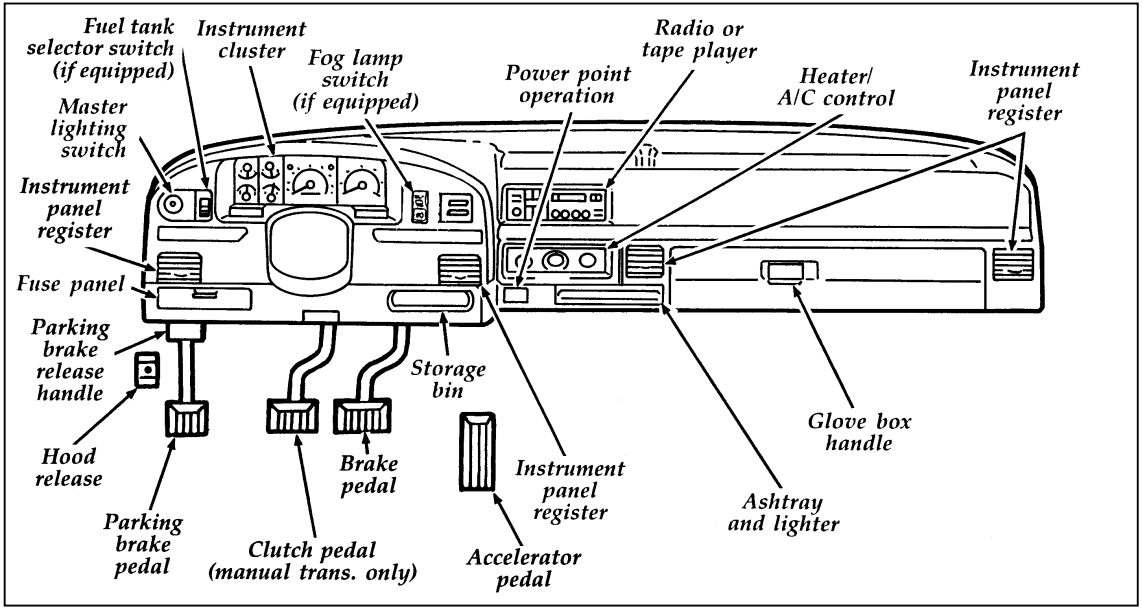

Instrument Panel, Controls and Mechanical Cluster with Tachometer

https://truckmanualshub.com/

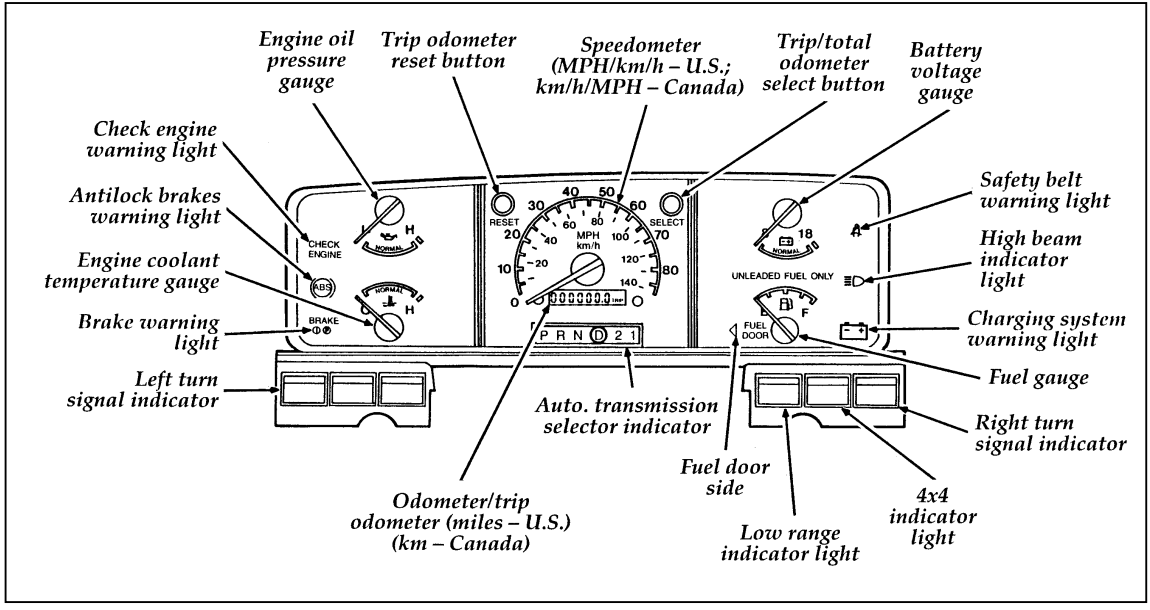

https://truckmanualshub.com/

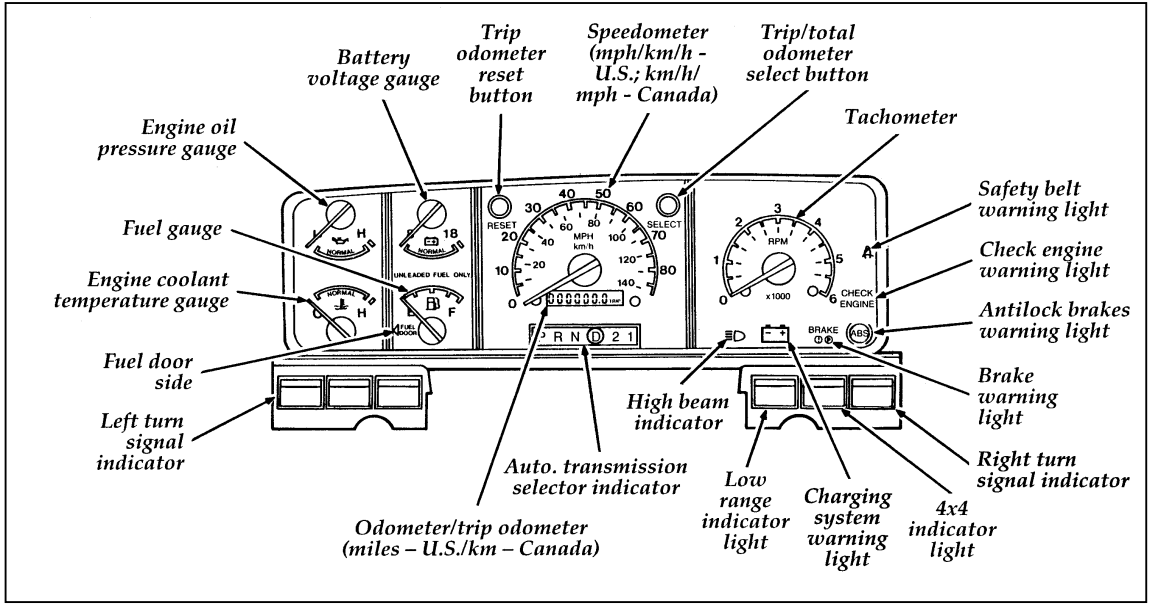

Mechanical cluster with tachometer

https://truckmanualshub.com/

The Mechanical Cluster

The following warning lights and gauges are on the mechanical cluster. All of the warning lights and gauges alert you to possible problems with your vehicle. Some of the lights listed are optional. The following sections detail what each of these indicators means.

Brake System Warning Light

The warning light for the brakes can show three things — that either the parking brake is not fully released, that the brake fluid level is low in the master cylinder reservoir or the vacuum pressure is low on diesel engine vehicles. If the fluid level is low, the brake system should be checked by a qualified service technician.

This light illuminates when you turn the ignition key to START to verify that the indicator bulb is working. If the light stays on or illuminates after you have released the parking brake fully, have the hydraulic brake system serviced.

⚠WARNING

The BRAKE light indicates that the brakes may not be working properly. Have the brakes checked immediately.

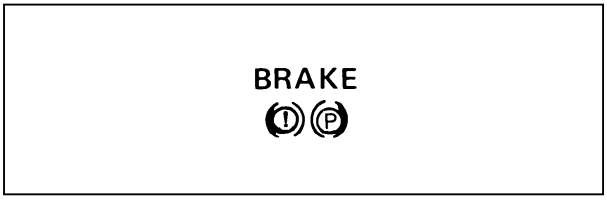

Brake warning light

https://truckmanualshub.com/

Anti-Lock Brake System Warning Light

To check the ABS brake warning light turn the ignition key to ON. The ABS brake warning light should glow momentarily.

NOTE: If it does not glow momentarily, have your vehicle's electrical system checked immediately.

NOTE: If the ABS brake warning light begins to flash in a repeatable flash sequence, check the rear anti-lock system continuous power fuse and brake lights for proper operation.

Antilock warning light

⚠WARNING

If the anti-lock brake system warning light remains on or comes on while driving, have the braking system checked by a qualified service technician as soon as possible.

NOTE: If a fault occurs in the anti-lock system, and the brake warning light is not lit, the anti-lock system is disabled but normal brake function remains operational.

https://truckmanualshub.com/

Safety Belt Warning Light and Chime

This warning light and chime remind you to fasten your safety belt. The following conditions will take place:

- If the safety belt is not buckled when the key is turned to the ON position, the light comes on for 1 to 2 minutes and the chime sounds for 4 to 8 seconds.
- If the safety belt is buckled while the light is on and the chime is sounding, both the light and chime turn off.
- If the safety belt is buckled before the ignition is turned to the ON position, neither the light nor the chime will come on.

Safety belt warning light

Check Engine Warning Light

This light illuminates when the engine's Emission Control System requires service. It will also illuminate when the ignition key is in the ON position and the engine is off.

CHECK
ENGINE

Check engine warning light

https://truckmanualshub.com/

NOTE: If your light truck is equipped with dual fuel tanks, the "CHECK ENGINE" light may come on if fuel is restricted to the engine or if the fuel flow is momentarily disrupted because of an empty fuel tank before you switched to the auxiliary fuel tank. This condition is normal and the light should go off after full fuel flow is restored.

Charging System Light

This light indicates that your battery is not being charged and that you need to have the electrical system checked.

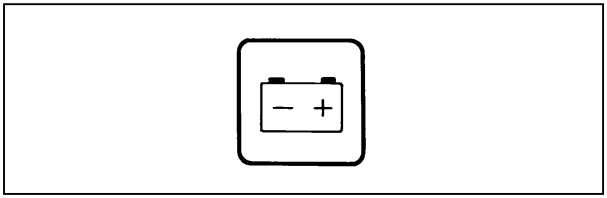

Charging system light

This light illuminates every time you turn the ignition to the ON or START position (engine off). The light should go off when the engine starts and the alternator begins to charge.

If the light stays on or illuminates when the engine is running, have the electrical system checked as soon as possible.

Battery Voltage Gauge (Voltmeter)

This gauge shows you the battery voltage when the ignition key is in the ON position.

If you are running electrical accessories (when the engine is off, or idling at a low speed), the pointer may move toward the lower end of the normal band. If it stays outside the normal band area, have your vehicle's electrical system checked as soon as it is safely possible.

https://truckmanualshub.com/

If the battery is operating under cold weather conditions, the pointer may indicate in the upper range of the NORMAL band while the battery is charging. If you are running electrical accessories with the engine off or idling at a low speed, or the battery is not fully charged, the pointer may move toward the lower end of the NORMAL band.

If it stays outside the NORMAL band, have your vehicle's electrical system checked as soon as it is safely possible.

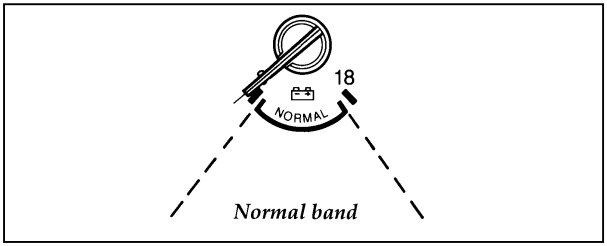

Battery voltage gauge

Engine Oil Pressure Gauge

This gauge indicates the engine's oil pressure, not the oil level. However, if your engine's oil level is low, it could affect the oil pressure. With the engine running, the pointer should move into the NORMAL band. If the pointer drops below the NORMAL band while the engine is running, you have lost oil pressure and continued operation will cause severe engine damage.

If you lose engine oil pressure:

1. Pull off the road as soon as safely possible.
2. Shut off the engine immediately or severe engine damage could result.

https://truckmanualshub.com/

3. Check the engine's oil level, following the instructions on checking and adding engine oil. Refer to *Engine oil* in the Index. If you do not follow these instructions, you or others could be injured. To assure an accurate reading, your vehicle should be on level ground.

4. If the level is low, add only as much oil as necessary before you start the engine again. Do not overfill. Do not operate the engine if the pointer is below the NORMAL band, regardless of the oil level. Contact your nearest dealer for further service actions.

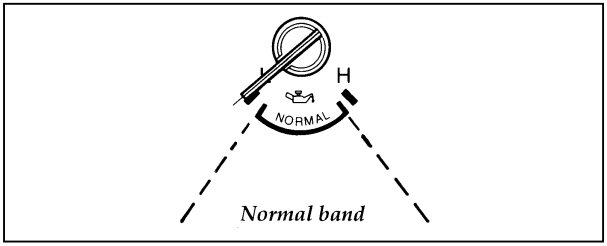

Engine oil pressure gauge

High Beam Light

This light comes on when the headlamps are turned on high beam or when you flash the lights.

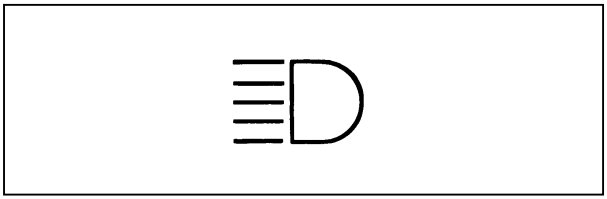

High beam indicator light

https://truckmanualshub.com/

“Headlamps On” Alert Chime

This chime will sound if you open the door while the headlamps or parklamps are on.

Fuel Gauge

The fuel gauge displays approximately how much fuel is in the fuel tank only when the ignition switch is ON.

The fuel gauge indicator may vary slightly when the vehicle is in motion.

With ignition switch OFF, the fuel gauge indicator may drift from the ignition switch ON position.

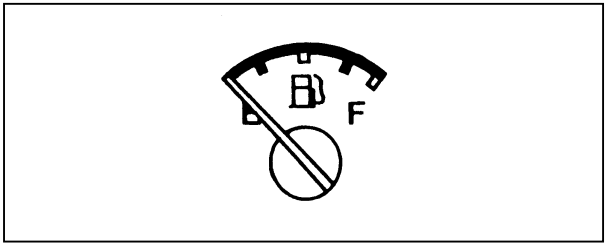

Fuel gauge

Engine Coolant Temperature Gauge

This gauge tells you the temperature of the engine coolant, not the coolant level. If the coolant is not at its proper level or mixture, the gauge indicator will not be accurate.

The pointer moves from the C (cold) mark into the Normal band as the engine coolant warms up. It is acceptable for the pointer to fluctuate within the Normal band under normal driving conditions. Under certain driving conditions, such as heavy stop and go traffic or driving up hills in hot weather, the pointer may move to the top of the Normal band.

https://truckmanualshub.com/

If, under any circumstances, the pointer moves above the NORMAL band, the engine is overheating and continued operation may cause engine damage.

If your engine overheats:

1. Pull off the road as soon as it is safely possible.
2. Turn off the engine. If you do not stop the engine as soon as safely possible, severe engine damage could result.
3. Let the engine cool. **DO NOT REMOVE COOLANT SYSTEM FILL CAP UNTIL THE ENGINE IS COOL.**
4. Check the coolant level following the instructions on checking and adding coolant to your engine, see *Engine Coolant* in the Index. If you do not follow these instructions, you or others could be injured.

For instructions on checking and adding coolant to your engine, see *Engine coolant* in the Index. If you do not follow these instructions, you or others could be injured.

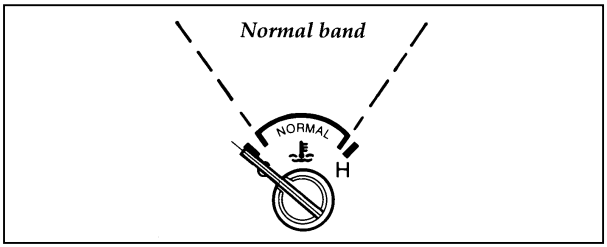

Engine coolant temperature gauge

https://truckmanualshub.com/

Speedometer

The speedometer tells you how many miles (kilometers) per hour your vehicle is moving.

Your vehicle contains a speedometer which receives its input from the Anti-Lock brake sensor. The speedometer is also used to provide a speed signal for correct operation of the vehicle's Powertrain Control Module (PCM), electronic transmission, and speed control (if so equipped). Because of this, it is very IMPORTANT to change the speedometer's internal conversion constant if the size of the tires on the vehicle is changed. Changing the conversion constant to the proper value when the tires are changed will also ensure that the speedometer retains the original factory-set accuracy.

Some vehicles are equipped with a vehicle speed (mph/km/h) limiting device that is contained within the Powertrain Control Module (PCM). The purpose of this device is to maintain peak vehicle speed below a specified limit. (Vehicle speed limits may vary based on engine displacement.)

If you are experiencing an "engine cut-out" condition at high speeds, it may be the result of this limiting device. It is a normal condition and can be avoided by reducing vehicle/engine speed.

https://truckmanualshub.com/

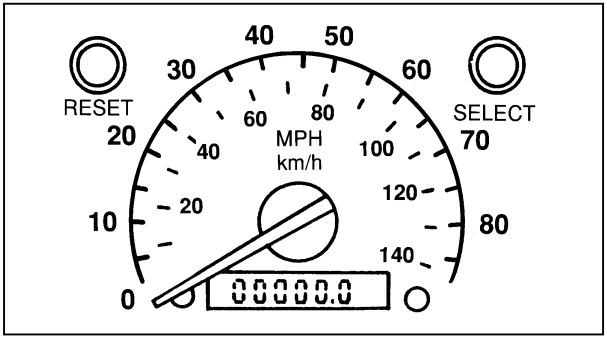

Speedometer

Odometer/Trip Odometer

The Liquid Crystal Display (LCD) odometer is a combination trip odometer and total odometer. The total odometer is normally displayed. To see the trip odometer, press and release the SELECT control on the upper right side of the speedometer. To zero out the trip odometer, press and release the RESET control on the upper left side of the speedometer while the trip odometer is displayed. If the trip odometer is displayed, press and release the SELECT control to return the display to the total odometer value.

Tachometer (If equipped)

The tachometer will show you the engine's speed measured in revolutions per minute (RPM).

The tachometer may move slightly when the key is placed in the ACC or ON position, with the engine off. This is normal and does not affect the performance of the tachometer when the engine is running.

https://truckmanualshub.com/

Some vehicles are equipped with an engine speed (RPM) limiting device contained within the powertrain control module (PCM). The purpose of this device is to maintain peak engine speed (RPM) below a specified limit. This feature is only evident on automatic transmission vehicles when shifting manually (1, 2, D) and on all manual transmission units. (Engine speed limits may vary based on engine displacement.)

If you are experiencing an “engine cut-out” condition at high speeds, it may be the result of this limiting device. It is a normal condition and can be avoided by reducing vehicle/engine speed.

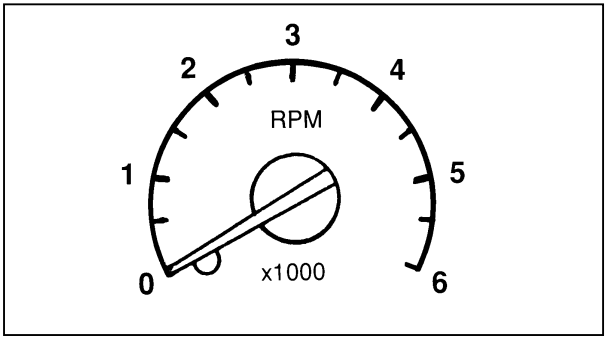

Tachometer

https://truckmanualshub.com/

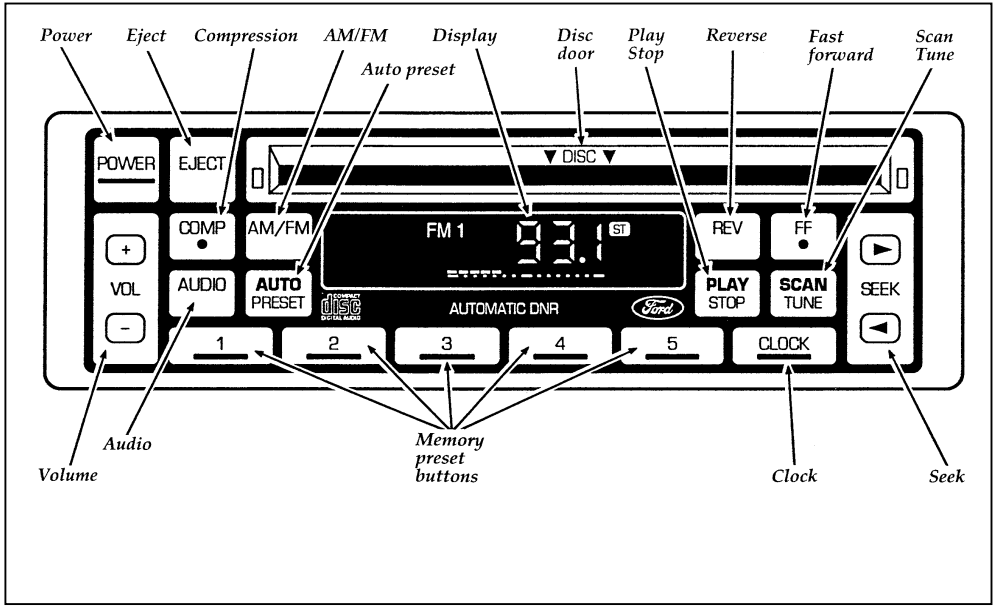

Compact Disc Radio

https://truckmanualshub.com/

Compact Disc Radio

The Compact Disc Radio combines the Electronic Stereo Radio with the Ford Compact Disc Player.

Using the Controls on Your New Radio/CD Player

Most of the features of this unit work for both radio and CD operation. Also, some of the knobs and buttons control several different functions, so be sure to read all of the operating instructions carefully.

How to turn the radio on and off

Press the "POWER" button to turn the radio on. Press it again to turn it off.

How to adjust the volume

Press the (+/−) side of the "VOL" button to increase/decrease the volume. Bars illuminate in the display to show the relative volume level.

NOTE: If the volume level is set above a certain listening level when the ignition switch is turned off, when the ignition switch is turned back on, the volume will come back to a "nominal" listening level. However, if the radio power is turned off, the volume will remain in the position it was set at when radio power was switched off.

Selecting the AM or FM frequency band

Push the "AM/FM" button to select the desired frequency band. When in the radio mode, pushing the button more than once will alternate between AM, FM1 and FM2. These functions are used with the station memory buttons described under *How to tune radio stations.*

https://truckmanualshub.com/

How to tune radio stations

There are four ways for you to tune in a particular station. You can manually locate the station using the "SCAN/TUNE" button, "SEEK" the station, "SCAN" to the station or select the station by using the memory buttons, which you can set to any desired frequency. These four methods are described below.

❑ Using the "SCAN/TUNE" button to manually tune

You can change the frequency up or down one increment at a time (FM changes in increments of 200kHz; AM changes in increments of 10kHz) by first pressing the "SCAN/TUNE" button twice (display shows "TUNE"), then — **within approximately five seconds** —pressing and releasing either the top ▶ or bottom ◀ half of the "SEEK" button. To change frequencies quickly, press and **hold down** either the top or bottom half of the "SEEK" button. While you are manually tuning, the display will show a blinking "M".

Manual tuning adjusts your radio to any allowable broadcast frequency, whether or not a station is present on that frequency. (See *All About Radio Frequencies* in this section.)

https://truckmanualshub.com/

❑ Using the “SEEK” function

This feature on your radio allows you to automatically select listenable stations up or down the frequency band. Press the top ▶ half of the “SEEK” button to select the next listenable station up the frequency band. Press the bottom ◀ half of the button to select the next listenable station down the frequency band. By pressing and holding the button, listenable stations can be passed over to reach the desired station.

❑ Using the “SCAN/TUNE” button to scan radio stations

Pressing the “SCAN/TUNE” button once enters the scan mode (display will indicate “SCN”). Pushing the top ▶ half of the “SEEK” button will begin the scan mode up the frequency band, stopping on each listenable station for approximately five seconds. Pushing the bottom ◀ half of the “SEEK” button will begin the scan mode down the frequency band, again stopping on each listenable station for approximately five seconds.

To stop the scan mode on the presently sampled station, press the “SCAN/TUNE” button again.

https://truckmanualshub.com/

❑ Setting the Station Memory Preset buttons

Your radio is equipped with 5 station memory buttons. These buttons can be used to select up to 5 preset AM stations and 10 FM stations (5 in FM1 and 5 in FM2). Follow the easy steps below to set these buttons to the desired frequencies.

1. Select a band, then select a frequency.
2. Press one of the memory preset buttons and hold the button until the sound returns. That station is now held in memory on that button.
3. Follow the two steps above for each station memory preset button you want to set.

NOTE: If the vehicle's battery is disconnected, the clock and station memory preset buttons (if programmed in auto mode) will need to be reset.

❑ Using the Automatic Memory Load feature

You can activate the **Auto Memory Load** feature by pressing and holding the "AUTO PRESET" button **for approximately three seconds**. Auto Memory Load sets all memory buttons in AM, FM1 and FM2 sequentially by seeking out the first five strong stations for the respective band and storing them in memory buttons 1-5. (FM2 will store the second set of strong stations from the FM band.)

https://truckmanualshub.com/

With Auto Memory Store, you can continually set strong stations into your memory buttons without losing your existing memory presets, which is especially helpful while traveling. Your radio will automatically set your memory buttons to the strong local stations so you don't have to continually manually tune to existing stations.

Activate Auto Memory Store by pushing the "AUTO PRESET" button once. Your radio will set the first five strong stations of the band you are in (AM, FM1 or FM2) into the memory buttons. The display will show "AUTO," then run through the frequencies, stopping momentarily on the stations being set into the memory buttons. The radio is now in the "AUTO" mode and the display will show "AUTO" each time a preset is activated.

NOTE: If there are fewer than five strong stations in the frequency band, the remaining unfilled buttons will store the last strong station detected on the band.

After all stations have been filled, the radio will begin playing the station stored on memory button 1.

To deactivate the Auto Memory Store mode and return to the manually-set memory button stations (or those stations set using Auto Memory Load), simply push the "AUTO PRESET" button. Display will show "AUTO" then "OFF." The next time Auto Memory Store is activated on that band, the radio will store the next set of five strong stations.

https://truckmanualshub.com/

Using the "AUDIO" button to adjust the tone balance and speaker output

❑ Increasing or decreasing bass response

Push the "AUDIO" button repeatedly until the display reads "BASS." Push the "+" side of the "VOL" button to increase bass (more "lows"), and push the "-" side to decrease bass (less "lows").

❑ Increasing or decreasing treble response

Push the "AUDIO" button repeatedly until the display reads "TREB." Push the "+" side of the "VOL" button to increase treble (more "highs"), and push the "-" side to decrease treble (less "highs").

❑ Adjusting speaker balance

Balance control allows you to adjust the sound distribution between the right and left speakers. Push the "AUDIO" button repeatedly until the display reads "BAL." Push the "+" side of the "VOL" button to shift the sound to the right speakers, and push the "-" side to shift the sound to the left speakers.

❑ Adjusting speaker fader

Fade control allows you to adjust the sound distribution between the front and rear speakers. Push the "AUDIO" button repeatedly until the display reads "FADE." Push the "+" side of the "VOL" button to shift the sound to the front speakers, and push the "-" side to shift the sound to the rear speakers.

https://truckmanualshub.com/

NOTE: Illuminated bars in the display show relative levels of bass and treble and positions of speaker balance and fader functions after adjustments are made, then revert to volume level set.

Clock operation

When in the radio mode, push the “CLOCK” button to switch from radio frequency to clock. Only the clock numerals will be displayed in the clock mode — there is no A.M./P.M. indication. When in the clock mode, the time will be displayed until the button is pushed again. However, if you retune the radio while it is in the clock mode, the new radio frequency will be displayed for approximately ten seconds and then change back to clock.

When in the CD mode, push the “CLOCK” button to change the display from elapsed time mode to track number mode to clock mode. If the CD track selection is changed when you are in the clock or elapsed time mode, the new track number will be displayed for approximately ten seconds and then revert back to the previous mode.

The clock can also be viewed with the ignition off. Push the “CLOCK” button and the time will be displayed momentarily.

To set the clock, simultaneously press the “CLOCK” button and either the bottom (◀) half of the “SEEK” button to set hours, or the top (▶) half of the “SEEK” button to set minutes.

https://truckmanualshub.com/

Using the Controls on Your New Compact Disc Player

Your new Ford Compact Disc Player is capable of playing 12 cm *or* 8 cm discs, without an adapter. The player operates when the power is on and a disc is inserted (**label side up**). Handle the disc by its edge only. (Be sure to read and follow all of the care and cleaning instructions under *How To Take Care of and Clean Your CD Player and Discs*.)

NOTE: If after you insert a disc, the disc is ejected and "ERROR" begins scrolling in the display, remove the disc and reinsert it right side up (label side up).

The digital display on your CD player will either show the track (selection) number or the elapsed time. (The display mode can be selected by pressing the "CLOCK" button.) Indicators for play (▶), stop (■) and compression on ("C") are also in the display. (These features are described later.)

Once a disc is inserted, operation of the CD player will override that of the radio.

NOTE: The volume, bass, treble, balance and fader controls on the radio are also used with the CD player. Refer to earlier operating instructions on these controls.

How to insert a disc and begin play

Insert one disc, **label side up** into the disc opening. When inserted, the disc automatically loads into the unit and play starts at the beginning of the first track (selection).

When the disc reaches the end, the disc player automatically returns to the beginning of the disc and resumes playing.

https://truckmanualshub.com/

NOTE: Once a disc is inserted, the disc opening is secured to prevent the accidental insertion of a second disc.

NOTE: The CD player has heat protection circuitry to protect the laser diode. If the temperature of the player reaches 167˚F (75˚C), the heat detection circuit will shut off the player and "TOO HOT" will scroll in the display for approximately five seconds (radio will resume playing). When the temperature returns to normal operating range, the CD player will again be operational.

How to stop and restart the CD player

When a disc is loaded, the unit automatically enters the play mode and the play indicator ▶ illuminates. To stop temporarily, press the "PLAY/STOP" button or the "AM/FM" button. The stop indicator ■ in the display illuminates and operation returns to the radio mode. To resume CD play, press the "PLAY/STOP" button once again.

NOTE: If the ignition key is turned OFF during play and then is set to the ON or ACCESSORY position, the CD player will resume playing in the mode it was in when ignition was turned off.

Using the "SEEK" feature

The "SEEK" feature allows you to quickly find a particular selection on the disc.

Press the bottom (◀) half of the "SEEK" button once to repeat the current playing selection. Press the top (▶) half of the "SEEK" button to advance to the next selection.

https://truckmanualshub.com/

Pressing and holding the bottom (◀) or top (▶) half of the "SEEK" button will scroll backward and forward respectively through the tracks.

How to fast forward or reverse your CD player

To quickly search for a particular point in a selection, press the "FF" button (to fast forward) or the "REV" button (to reverse). While either button is pressed, the disc goes forward or backward at two different speeds depending on how long the button is held down. (Pressing either button for more than three seconds will speed up the process.) Release the button at the desired point (found by watching the elapsed playing time in the display or by listening to the sound during fast forward or reverse). When you have reached the beginning of track 1, the CD player will begin playing.

When you have reached the end of the disc by keeping the fast forward button pressed, the display will show "END" and the player will go into pause mode. Push the "PLAY/STOP" button to begin playing the first track of the disc, press the "REV" button to back up from the end of the disc, or use the "SEEK" function to locate a desired track.

Using the "SCAN" function

Press the "SCAN/TUNE" button to enter the scan mode. Once in the scan mode, press the top (▶) or bottom (◀) half of the "SEEK" button to scan forward or reverse, respectively. The CD player will begin scanning the disc, stopping on each listenable track for approximately eight seconds. This continues until you press the "SCAN/TUNE" button a second time. While in the scan mode, the display shows the current sampled track number.

https://truckmanualshub.com/

Special features of your CD player

❑ Compression

The compression feature will bring soft and loud passages closer together for a more consistent listening level.

To turn the compression on, press the "COMP" button. When on, the compression indicator ("C") will appear in the display. Press the button again to turn off.

❑ Automatic Disc Storage

If the disc is ejected from the CD player but is not removed from the disc opening within approximately 10 seconds, the player will automatically reload the disc for storage, unless the disc is automatically ejected due to a "focus error" (disc inserted upside down). In this case, the disc will not be automatically reloaded.

How to eject the disc

Push the "EJECT" button to stop play, eject the disc and resume radio operation of your audio system.

NOTE: You can eject the disc while the radio power and/or ignition is on or off.

https://truckmanualshub.com/

How To Take Care of and Clean Your CD Player and Discs

To ensure the continued performance of your Ford Compact Disc Player, carefully read the following precautions:

- ❑ Always handle the disc by its edge. Never touch the playing surface.
- ❑ Before playing, inspect the disc for any contamination. If needed, clean the disc with an approved disc cleaner, such as the Discwasher® Compact Disc Cleaner or the Allsop 3® Compact Disc Cleaner, by wiping from the center out to the edges. **Do not use a circular motion to clean.**
- ❑ Do not clean discs with solvents such as benzine, thinner, commercially available cleaners or antistatic spray intended for analog records.
- ❑ Do not expose the disc to direct sunlight or heat sources such as defroster and floor heating ducts. Do not leave any discs in a parked car in direct sunlight where there may be a considerable rise in temperature or damage may result.
- ❑ After playing, store the disc in its case.
- ❑ If a disc has already been inserted, do not try to insert another disc. Doing so may damage the disc player.
- ❑ Do not insert anything other than a disc into the disc player.

https://truckmanualshub.com/

NOTE: The use of optical instruments with this product will increase eye hazard as the laser beam used in this compact disc player is harmful to the eyes. Do not attempt to disassemble the case. Refer servicing to qualified personnel only.

Common Operating Conditions of Your CD Player

The following information is designed to help you recognize typical situations that could be mistakenly interpreted as mechanical malfunctions of the disc player.

- ❑ A disc is already loaded.
- ❑ The disc is inserted with the label surface downward.
- ❑ The disc is dusty or defective.
- ❑ The player's internal temperature is above 140˚F (60˚C). Allow the player to cool off before operating.
- ❑ Different manufacturers of compact discs may produce discs with different dimensions or tolerances, some of which may not be within industry standards or in accordance with the CD format. Because of this, a new disc that is free of dust and scratches could be defective and may not play on your Ford Compact Disc Player.

https://truckmanualshub.com/

If play does not begin after the CD button is pushed:

- ❑ The radio is not on.
- ❑ The unit is in the stop mode.
- ❑ Moisture may have condensed on the lenses within the unit. If this occurs, remove the disc and wait approximately an hour until the moisture evaporates.

If the sound skips:

- ❑ Badly scratched discs or extremely rough roads will cause the sound to skip. Skipping will not damage the disc player or scratch the discs.

Electronic Stereo and Stereo Cassette Radios

Using the Controls on Your New Radio

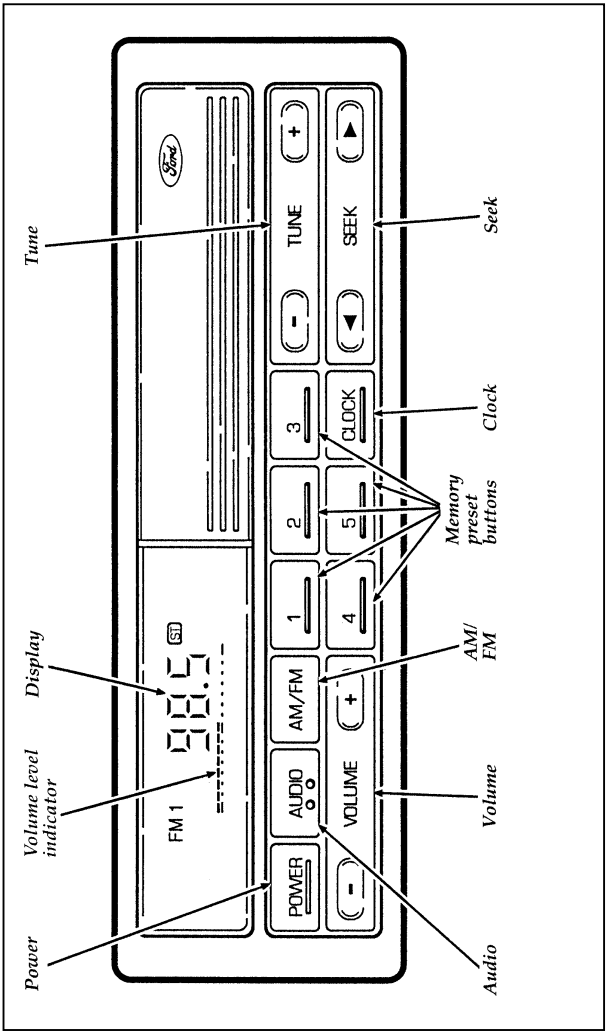

Electronic Stereo Radio

https://truckmanualshub.com/

https://truckmanualshub.com/

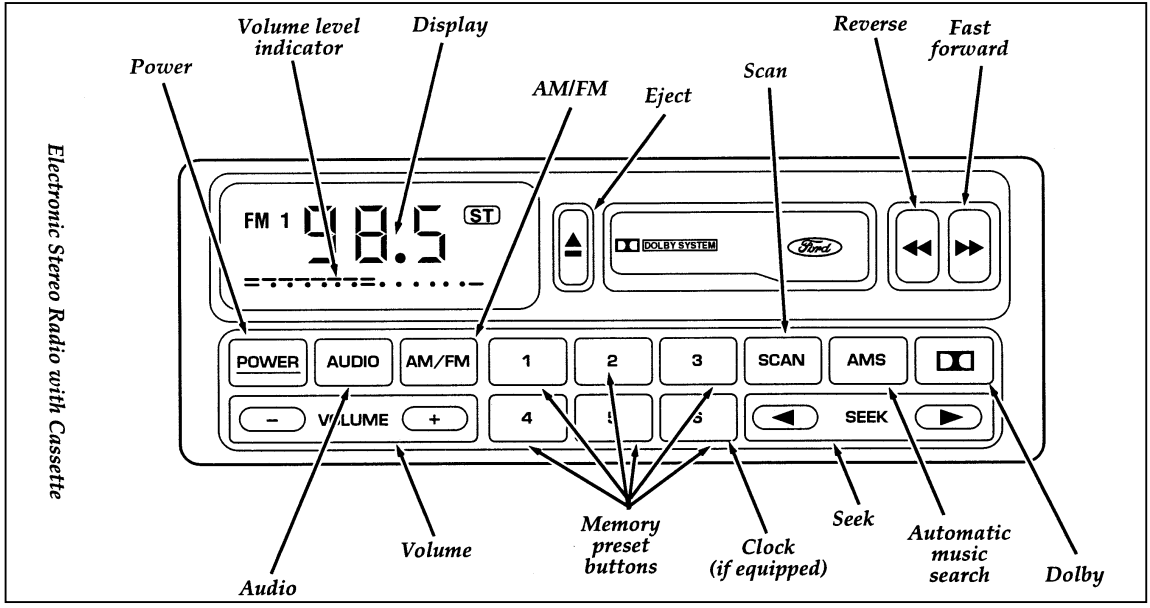

Electronic Stereo Radio with Cassette

https://truckmanualshub.com/

How to tune radio stations

There are three ways for you to tune in to a particular station. You can manually locate the station by using the “TUNE” button, “SEEK” the station or select the station by using the memory preset buttons, which you can set to any desired frequency.

How to tune radio stations (Stereo Cassette Radio)

There are four ways for you to tune in to a particular station. You can manually locate the station by using Automatic Music Search (“AMS”), “SEEK” the station, “SCAN” to the station or select the station by using the memory buttons, which you can set to any desired frequency.

❑ Using the “TUNE” function

You can change the frequency up or down one increment at a time by pressing and releasing either the right (+) or left (—) side of the “TUNE” button. To change frequencies quickly, press and hold down either the right or left side of the “TUNE” button.

Manual tuning adjusts your radio to any allowable broadcast frequency, whether or not a station is present on that frequency. (See *All About Radio Frequencies* in this section.)

https://truckmanualshub.com/

❑ Using the “AMS” function to manually tune your radio (Stereo Cassette Radio)

You can change the frequency up or down one increment at a time by first pressing the “AMS” button (display shows “TUNE”) then within approximately five seconds pressing and releasing either the right ▶ or left ◀ side of the “SEEK” button. To change frequencies quickly, press and **hold down** either the right or left side of the “SEEK” button.

❑ Using the “SEEK” function

This feature on your radio allows you to automatically select listenable stations up or down the frequency band. Press the right (▶) side of the “SEEK” button to select the next listenable station up the frequency band. Press the left (◀) side of the button to select the next listenable station down the frequency band. By holding the button down, listenable stations can be passed over to reach the desired station.

❑ Using the “SCAN” function (Stereo Cassette Radio)

Press the “SCAN” button to enter the scan mode. The radio will begin scanning up the frequency band, stopping on each listenable station for approximately a five-second sampling. This continues until you press the “SCAN” button a second time.

❑ Setting the Station Memory Preset buttons

Your radio is equipped with 5 station memory buttons. These buttons can be used to select up to 5 preset AM stations and 10 preset FM stations (5 in FM1 and 5 in FM2).

https://truckmanualshub.com/

Follow the easy steps below to set these buttons to the desired frequencies:

1. Select a band, then select a frequency.
2. Press one of the memory preset buttons and hold the button until the sound returns. That station is now held in memory on that button.
3. Follow the two steps above for each station memory preset button you want to set.

NOTE: If the vehicle's battery is disconnected, the clock and station memory preset buttons (if programmed in auto mode) will need to be reset.

Adjusting the tone balance and speaker output of your radio

Push the "AUDIO" button repeatedly until the display reads "BASS." Push the right (+) side of the "VOLUME" button to increase bass (more "lows"), and push the left (—) side to decrease bass (less "lows").

❑ Increasing or decreasing treble response

Push the "AUDIO" button repeatedly until the display reads "TREB." Push the right (+) side of the "VOLUME" button to increase the treble (more "highs"), and push the left (—) side to decrease treble (less "highs").

https://truckmanualshub.com/

Speaker features and operation

❑ Adjusting speaker balance

Balance control allows you to adjust the sound distribution between the right and left speakers. Push the "AUDIO" button repeatedly until the display reads "BAL." Push the right (+) side of the "VOLUME" button to shift the sound to the right speakers, and push the left (—) side to shift the sound to the left speakers.

❑ Adjusting speaker fader

Fade control allows you to adjust the sound distribution between the front and rear speakers. Push the "AUDIO" button repeatedly until the display reads "FADE." Push the right (+) side of the "VOLUME" button to shift the sound to the front speakers, and push the left (—) side to shift the sound to the rear speakers.

NOTE: Illuminated bars show relative levels of bass and treble and positions of speaker balance and fader functions after adjustments are made, then revert to volume level set.

Using the Controls of Your Cassette Tape Player

How to insert a tape

Insert a cassette (with the open edge to the right) firmly into the tape door opening, making sure the cassette is completely in and "seated."

NOTE: A cassette tape can be loaded with the ignition on whether or not the radio power is on.

https://truckmanualshub.com/

How to locate a desired track on the tape

❑ Using the Automatic Music Search ("AMS")

Press and hold the "AMS" button ("AMS" will appear in the display). Then, push the left ◀◀ button to rewind to the beginning of the current selection or press the right ▶▶ button to fast forward to the beginning of the next selection.

❑ How to change the side of the tape being played

The alternate track (other side) of the tape can be selected at any time by pushing both fast-wind buttons (◀◀ and ▶▶) at the same time. The number in the display will alternate between 1 and 2.

How to eject the tape

To stop the tape and eject the cassette, press the eject (⏏) button. The radio will resume playing.

Using the Dolby® B noise reduction feature

Push the DD button to activate. Push again to deactivate.

NOTE: Noise reduction system manufactured under license from Dolby Labs Licensing Corporation. "Dolby" and double-D symbol are trademarks of Dolby Laboratories Licensing Corporation.

Clock Operation

How to view the clock mode

Press the "CLOCK" button to alternate the frequency and time in the display. In the clock mode, pressing any radio function will automatically display the radio frequency for approximately ten seconds before changing back to the clock mode.

https://truckmanualshub.com/

How to set the clock

1. Turn the radio on.
2. Press and hold in the “CLOCK” button. Press the “SEEK” button left (◀) to advance the hours and right (▶) to advance the minutes.

NOTE: The clock displays 12-hour time with no AM/PM indications.

Tips on Caring for the Cassette Player and Tapes

In order to keep your cassette tape player performing the way it was meant to, read and follow these simple precautions:

- ❑ Using a Ford Cassette Cleaning Cartridge or equivalent to clean the tape player head after 10-12 hours of play will help maintain the best playback sound and proper tape operation.
- ❑ Only cassettes that are 90 minutes long or less should be used. Tapes longer than 90 minutes are thinner and subject to breakage or may jam the tape player mechanism.
- ❑ Protect cassettes from exposure to direct sunlight, high humidity and extreme heat or cold. If they are exposed to extreme conditions, allow them to reach a moderate temperature before playing.
- ❑ If a tape is loose inside the cassette, tighten it before playing by putting your finger or a pencil into one of the holes and turning the hub until the tape is tight.
- ❑ Loose labels on cassette tapes can become lodged in the mechanism. Remove any loose label material before inserting a cassette.
- ❑ Do not leave a tape in the cassette tape player when not in use. High heat in the vehicle can cause the cassette to warp.

https://truckmanualshub.com/

Electronic AM Radio

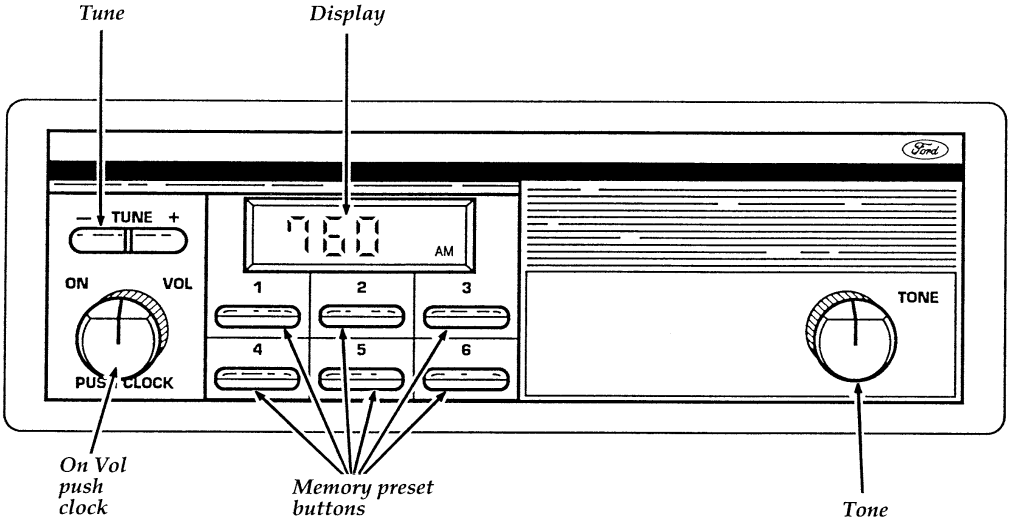

https://truckmanualshub.com/

Using the Controls on Your New Radio

How to turn the radio on and adjust the volume

Press the "ON/VOL-PUSH-CLOCK" control to turn the radio on. Press again to turn it off. Rotate the control clockwise to increase the volume.

NOTE: If your radio has a clock feature, turn the radio on by rotating the control clockwise. Pushing the control in will change the display from the radio frequency to the clock (time) or from the clock to the radio frequency.

How to tune radio stations

There are two ways for you to tune to a particular station. You can manually locate a station using the "TUNE" button or select a station using the "MEMORY PRESET" buttons, which you can set to any desired frequency.

❑ Using the "TUNE" function

You can change the frequency up or down one increment at a time by pressing and releasing either the right (+) or left (−) side of the "TUNE" button. To change frequencies quickly press and hold down either the right or left side of the "TUNE" button.

The "TUNE" control adjusts your radio to any allowable broadcast frequency regardless of whether or not a station is present on that frequency. (See *All About Radio Frequencies* in this section.)

https://truckmanualshub.com/

❑ Setting the Station Memory Preset buttons

Your radio is equipped with 6 station memory preset buttons. These buttons can be used to select up to 6 preset AM stations. Follow the easy steps below to set these buttons to the desired frequencies:

1. Tune to the desired frequency.
2. Press one of the memory preset buttons and hold the button in until the sound returns. That station is now held in memory on that button.
3. Follow the two steps above for each station memory preset you want to set.

NOTE: If the vehicle's battery is disconnected, the clock and station memory preset buttons (if programmed in auto mode) will need to be reset.

Adjusting the tone balance and speaker output of your radio

The "TONE" control on the right side of your radio controls the bass and treble balance. Rotate the control clockwise to increase the treble response (more highs) and counterclockwise to increase the bass response (more lows).

Clock Operation

How to view the clock mode

Press the "CLOCK" button to alternate the frequency and time in the display. In the clock mode, pressing any radio function will automatically display the radio frequency for approximately ten seconds before changing back to the clock mode.

https://truckmanualshub.com/

How to set the clock

1. Turn the radio on.
2. Press and hold in the ON/VOL-PUSH-CLOCK control.
3. While holding the "ON/VOL-PUSH-CLOCK" button in, press the "TUNE" button left (−) to advance the hours and right (+) to advance the minutes.

NOTE: The clock displays 12-hour time with no AM/PM indications.

Common Radio Reception Conditions

Several conditions prevent FM reception from being completely clear and noise-free, such as the following:

1. Distance/Strength

The strength of the FM signal is directly related to the distance the signal must travel. The listenable range of an average FM signal is approximately 25 miles (40 kilometers). Beyond this distance, the radio is operating in a fringe area and the signal becomes weaker.

NOTE: Always make sure your antenna (whether you have a power antenna or a manually adjustable antenna) is fully extended to its maximum length for proper reception. If your antenna is not fully extended, you may experience signal loss while traveling in fringe reception areas.

https://truckmanualshub.com/

2. Terrain

The terrain (hilly, mountainous, tall buildings) of the area over which the signal travels may prevent the FM signal from being noise-free.

If there is a building or large structure between the antenna and station, some of the signal "bends" around the building, but certain spots receive almost no signal. Moving out of the "shadow" of the structure will allow the station to return to normal.

When the radio waves are reflected off objects or structures, the reflected signal cancels the normal signal, causing the antenna to pick up noise and distortion. Cancellation effects are most prominent in metropolitan areas, but also can become quite severe in hilly terrain and depressed roadways.

To minimize these conditions, a stereo/mono blend circuit has been incorporated into this system. This feature automatically switches a weak stereo signal to a clearer monaural signal, which improves the quality of reception.

Several sources of static are normal conditions on AM frequencies. These can be caused by power lines, electric fences, traffic lights and thunderstorms.

Another reception phenomenon is **Strong Signal Capture and Overload**. This can occur when listening to a weak station and when passing another broadcast tower. The close station may capture the more distant station, although the displayed frequency does not change. While passing the tower, the station may switch back and forth a few times before returning to the original station.

https://truckmanualshub.com/

When several broadcast towers are present (common in metropolitan areas), several stations may overload the receiver, resulting in considerable station changing, mixing and distortion.

Automatic gain control circuitry for both AM and FM bands has been incorporated into this system to reduce strong signal capture and overload.

All About Radio Frequencies

The Federal Communications Commission (FCC) and the Canadian Radio Telecommunications Commission (CRTC) establish the frequencies that AM and FM radio stations may use for their broadcasts. The allowable frequencies are, AM: 530, 540...1600, 1610 kHz in 10 kHz steps; FM: 87.9, 88.1...107.7, 107.9 MHz in 0.2 MHz steps.

Not all frequencies will be assigned to a given area. This radio will tune to each of these frequencies using manual tune and no fine tuning is necessary as radio stations may not use other frequencies.

Some FM radio stations advertise a “rounded-off” frequency which is not the frequency they actually broadcast on. For example, a radio station that is assigned a frequency of 98.7 MHz may call itself “Radio 99” even though 99.0 MHz is not an allowable FM broadcast frequency.

https://truckmanualshub.com/

Important Warranty and Service Information

Warranty

Your sound system is warranted for three years or 36,000 miles (60,000 kilometers), whichever comes first. Consult your vehicle warranty booklet for further information. Ask your dealer for a copy of this limited warranty.

Service

At Ford, we stand behind our audio systems with a comprehensive service and repair program. If anything should go wrong with your Ford audio system, return to your dealer for service. There is a nationwide network of qualified Ford authorized repair centers to assist you.

https://truckmanualshub.com/

Controls and Features

NOTE: The following section does not apply to Stripped Chassis vehicles. See your Body Builder's instructions for location and operation of controls for climate control systems, lamps, radio and windshield wiper/washer.

Your vehicle has a variety of features designed for your comfort, convenience and safety. Read this chapter to find out about standard and optional features.

The Climate Control Systems

Your vehicle is equipped with a control assembly designed to handle either a combination A/C-Heater System or a Heater-Only System.

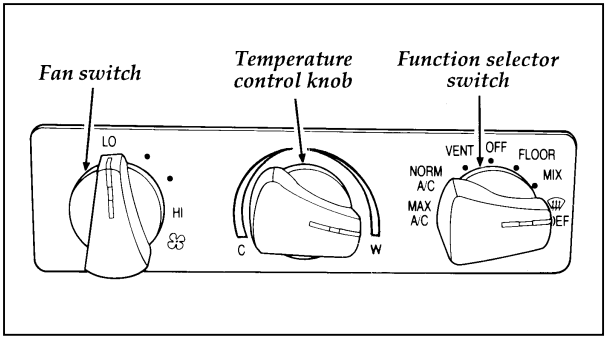

Climate control knobs (Heater A/C system)

https://truckmanualshub.com/

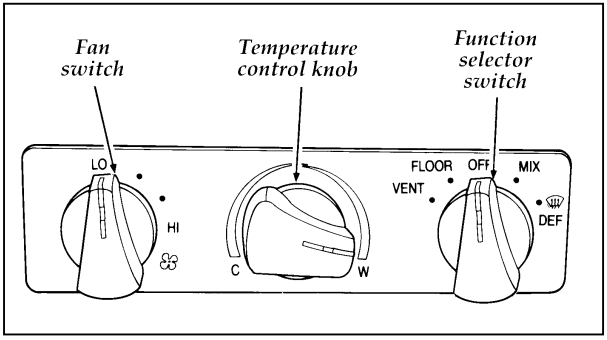

Climate control knobs (Heater only system)

Instrument Panel Registers

There are four registers in the instrument panel. Each of these registers contain a louver assembly which can be manually adjusted to direct airflow up, down, left, right, and positive shut-off. An illustration of the register locations follows.

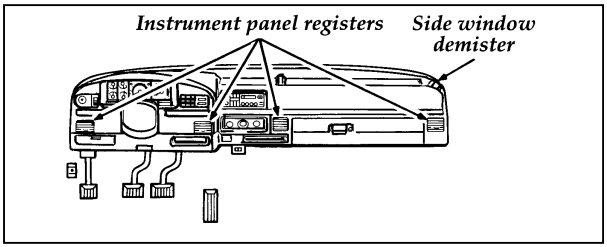

Instrument panel registers

System Operation

The control for your air conditioning and heater system is located at the center of the instrument panel below the radio and will operate only when the ignition key is turned to the ON position. Your air conditioner and heater will heat and/or cool your vehicle interior depending on the function position and temperature you select. The function selector control knob allows you to select heating or cooling and determine

https://truckmanualshub.com/

where the air will be directed. The temperature control knob setting determines the temperature of the air that flows into the vehicle.

To turn your air conditioner and heater system on, select any position except OFF. This will turn the fan on and allow airflow into the vehicle. To turn your air conditioner and heater off, select OFF. This will turn the fan off and stop airflow from coming into the vehicle.

Temperature selection

The Temperature knob is the rotating knob located at the center of the control with tapered RED and BLUE bands surrounding most of the knob. The wide RED part of the band (full right) is the heat or warmer area. The wide BLUE area (full left) is the cool or unheated temperature area. Any position selected between full right and full left will give a temperature between the two extreme temperatures. The cool temperature you select will not be cooler than the outside temperature, unless an A/C mode is selected (if equipped).

✣ *Fan speed adjustment*

The ✣ knob on the control is the fan speed knob which controls the volume of air flow. Rotate the ✣ knob to the right to increase the amount of air entering the vehicle. Four fan speed positions are available and are indicated by LO, two separate dots and HI beside the ✣ control knob. The HI position provides the most air flow.

https://truckmanualshub.com/

Airflow selections

VENT

Use **VENT** to bring outside air through the instrument panel registers. You can heat the air in this position by rotating the center knob into the RED area. The air CANNOT be cooled below the outside temperature regardless of the center knob setting. Select NORM A/C or MAX A/C to get cool air through the instrument panel registers.

NORM A/C (If equipped)

Select **NORM A/C** to get refrigerated outside air through the instrument panel registers. The A/C position is used for cooling except when it is extremely hot or fast cooling of the vehicle is needed. Then, select MAX A/C for fast cooling and return to NORM A/C when you are comfortable.

MAX A/C (If equipped)

The **MAX A/C** position produces cool air more rapidly to provide faster cooling of your vehicle. This is possible because cooler air is drawn from inside the passenger area and refrigerated again instead of using warmer outside air. Using inside air will also make the fan sound louder which is normal when using MAX A/C. The air flow will be from the instrument panel registers.

FLOOR

Air flow will be to the floor when **FLOOR** is selected. The air cannot be cooled in the FLOOR position but can be heated by rotating the center knob in the RED area.

https://truckmanualshub.com/

MIX

Select **MIX** to get air to the floor and windshield defrosters at the same time equipped on vehicles with A/C. If the outside temperature is about 50˚ (10˚C) or warmer, the air will also be dehumidified to remove moisture. This feature will help prevent fogging in humid weather. The air can be cooled or heated.

DEF

Select **DEF** to obtain maximum air flow to the windshield. Rotate the center knob into the RED area for the air temperature required to defrost. Rotate the knob on the left to increase the air flow. On vehicles equipped with A/C, when the outside air temperature is about 50˚F (9˚C) or warmer, the air will be dehumidified to remove moisture. The air can be cooled or heated.

Operating Tips

The following tips will help you to get the most satisfaction from your air conditioning (if equipped) and heater system.

- In humid weather, select **DEF**. This will help to prevent windshield fogging. After a few minutes of operation, you may select another air flow position. Rotate the control knob to obtain your desired comfort level.
- To prevent humidity buildup inside your vehicle, always drive with the Air Conditioning (if equipped) and Heater System turned on.
- Do not put objects under the front seats that will interfere with the flow of air under the seats to the back seat area of your vehicle.

https://truckmanualshub.com/

- ❑ Remove any snow, ice or leaves from the air intake area of your Air Conditioner (if equipped) and Heater System which could block the air intake. The intake area is located at the bottom of the windshield.

Dual Fuel Tank Selector Switch (If equipped)

To choose which fuel tank that you want your engine to draw fuel from (front or rear) you must use this switch. Your fuel gauge will display the amount of fuel available in the currently selected tank.

The fuse that protects the fuel tank selector circuit is labeled AUX FUEL TANK SELECTOR on your fuse panel cover.

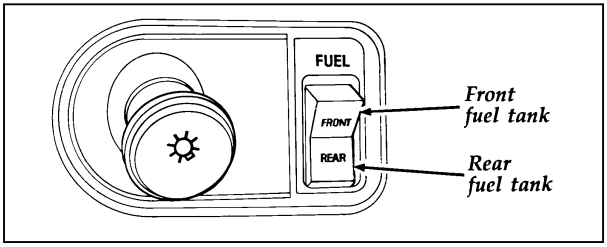

Fuel tank selector switch

The Interior and Exterior Lights

Turning On the Exterior Lights

To turn on your headlamps, parking lamps, marker lamps, license plate lamps and tail lamps, use the headlamp switch to the left of the steering column.

1. Pull the headlamp control knob toward you to the first position. Parking lamps, tail lamps, license plate lamps and marker lamps are now on.

https://truckmanualshub.com/

2. Pull the headlamp control knob toward you to the outer position. Headlamps are now on in addition to the above.
3. Rotate the knob when it is in an on position to brighten or dim the instrument panel lamps. Rotate fully counterclockwise to operate courtesy and cargo lamps.

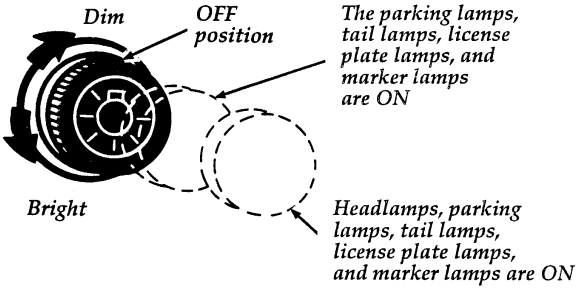

Rotate the knob when the headlamps are in one of the two "ON" positions for dimming or brightening the instrument panel lamps. Rotate fully counterclockwise to operate courtesy and cargo lamps.

Headlamp switch

Daytime Running Light System

(Canadian vehicles only)

The Daytime Running Light (DRL) system turns the high beam headlamps on, with a reduced light output, when:

- ❑ The headlamp system is in the OFF position, and
- ❑ The vehicle is running, and
- ❑ The vehicle has a fully released parking brake.

https://truckmanualshub.com/

NOTE: You may notice that the lights flicker when the vehicle is turned on or off. This is a normal condition.

⚠WARNING

The Daytime Running Light (DRL) system will not illuminate the tail lamps and parking lamps. Turn on your headlamps at dusk. Failure to do so may result in a collision.

Lighting Up the Instrument Panel and the Interior of Your Vehicle

The instrument panel lights can be turned on by pulling the headlamp switch toward you to either the first or outer position. You can brighten or dim the instrument panel lights by rotating the headlamp switch knob.

Cargo, Courtesy and Dome Lamps

The interior/courtesy lamp is automatically turned on when the driver or passenger door is opened. Turning the headlamp switch fully counterclockwise will operate the interior lamp when the doors are closed.

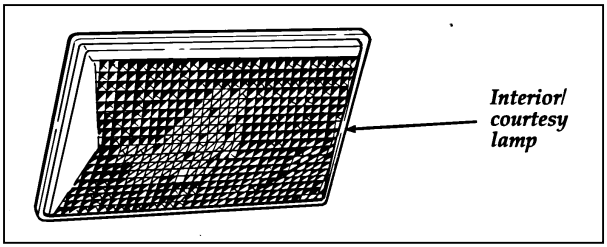

Interior/Courtesy lamp

https://truckmanualshub.com/

Combination Cargo and High-Mount Brakelamp

The combination cargo/high-mount brakelamp is located outside the vehicle, directly over the rear window. Use the headlamp control switch to turn on the cargo lamp and interior courtesy lights.

A high-mount brakelamp feed is provided in the taillamp wiring, in the event an aftermarket cap is installed on the vehicle obscuring the cargo/high-mount brakelamp on the cab. The feed is located at the left rear of the vehicle, behind the bumper and is marked with a white tag "center high-mount stop lamp."

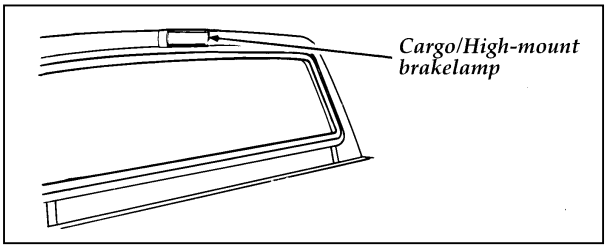

Cargo/High-mount brakelamp

⚠WARNING

Do not drive your vehicle with the cargo/courtesy light on. Showing a white light to the rear while driving on public roads is illegal in some places.

https://truckmanualshub.com/

Turning On the Dome/Map Reading Lamps (If equipped)

The map lamps are located inside the dome light assembly, on each side of the dome light. Each lamp has its own switch.

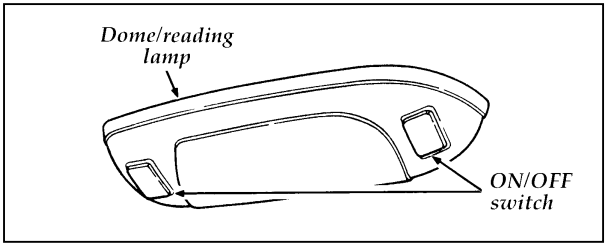

Map lamps

Power Point Electrical Outlet

The power point outlet is located on the instrument panel to the right of the shift lever. This outlet should be used in place of the cigarette lighter for optional electrical accessories.

NOTE: Do not use the cigarette lighter in place of the power point.

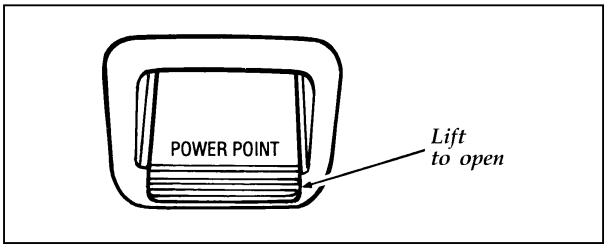

Power point electrical outlet

To access the outlet, lift up the hinged cover.

https://truckmanualshub.com/

Ignition

Understanding the Positions of the Ignition

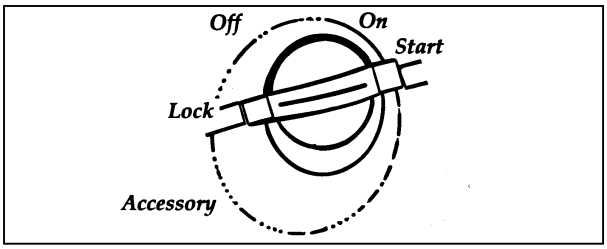

The positions of the key in the ignition lock cylinder.

ON allows you to test your vehicle's warning lights (except the brake system warning light) to make sure they work before you start the engine. The key returns to the ON position once the engine is started and remains in this position while the engine runs.

START cranks the engine. Release the key once the engine starts so that you do not damage the starter. The key should return to ON when you release it. The START position also allows you to test the brake warning light.

OFF allows you to shut off the engine and all accessories without locking the steering wheel or the automatic transmission gearshift lever.

LOCK locks the steering wheel. It also locks the gearshift if your vehicle's gearshift is on the column.

https://truckmanualshub.com/

⚠WARNING

LOCK position does not lock the gearshift on floor-mounted gearshifts. If the parking brake is not set and the gearshift is moved out of Park (automatic transmission) or out of gear (manual transmission), your vehicle may move unexpectedly.

With the transfer case in N (Neutral), the vehicle is free to move with either the automatic transmission in P (Park) or with the manual transmission in any driving gear.

⚠WARNING

Do not leave the vehicle unattended with the transfer case in the N (Neutral) position. Always set the parking brake fully and turn off the ignition when leaving the vehicle.

LOCK is the only position that allows you to remove the key. The LOCK feature helps to protect your vehicle from theft.

If the key is stuck in the LOCK position, move the steering wheel left or right until the key turns freely.

ACCESSORY allows some of your vehicle's electrical accessories such as the radio and the windshield wipers to operate while the engine is not running.

In order to turn the key from the ON or OFF position to the ACCESSORY position, you must push the key release button if your vehicle's manual transmission gearshift is mounted on the floor.

https://truckmanualshub.com/

Ignition Key Buzzer or Chime

The buzzer or chime will sound if you open the driver's door while the key is in the ignition and in the OFF, LOCK, or ACCESSORY position. Never leave your vehicle unattended with the key in the ignition.

Removing the Key From the Ignition

Procedures for removing your key from the ignition will vary, depending on the type of gearshift your vehicle has. Gearshift levers may be mounted on the steering column or on the floor or console.

If you have a manual transmission, you have a key release lever which allows you to remove your key from the ignition. The key release lever is on the upper right of the steering column, just above the key lock cylinder. The lever says PUSH.

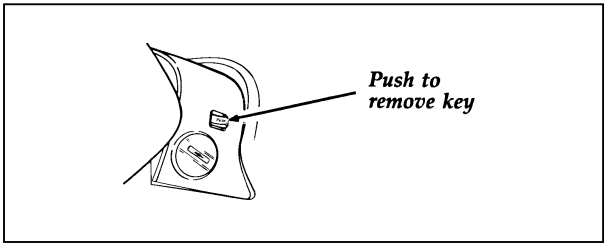

Key release lever

If your vehicle's gearshift lever is mounted on the column:

1. Put the gearshift in P (Park).
2. Set the parking brake fully before removing your foot from the service brake. (This will avoid "binding" or "loading" the park gear if you park on a grade.)
3. Turn the ignition key to LOCK.
4. Remove the key.

https://truckmanualshub.com/

If your vehicle's gearshift lever is mounted on the floor:

1. Put the gearshift in 1 (First).
2. Turn the ignition key to OFF.
3. Set the parking brake fully before removing your foot from the service brake.
4. Push and hold in the key release button.
5. Turn the key to LOCK.
6. Remove the key.

⚠WARNING

Always set the parking brake fully and make sure that the gearshift is latched in P (Park) (automatic transmission) or 1 (First) (manual transmission).

With the transfer case in N (Neutral), the vehicle is free to move with either the automatic transmission in P (Park) or with the manual transmission in any driving gear.

⚠WARNING

Do not leave the vehicle unattended with the transfer case in the N (Neutral) position. Always set the parking brake fully and turn off the ignition when leaving the vehicle.

⚠WARNING

Do not leave children, unreliable adults, or pets unattended in your vehicle.

https://truckmanualshub.com/

The Turn Signal Lever

You can use the turn signal lever on the left side of the steering column to:

- ❑ operate the turn signals and cornering lamps
- ❑ turn the high beams on/off
- ❑ flash the lamps
- ❑ turn the windshield wipers and washer on/off

Turn Signals

Move the lever up to signal a right turn. Move it down to signal a left turn. The corresponding indicator light in the instrument cluster will flash.

If the turn signal stays on after you turn, move the lever back to the center (off) position.

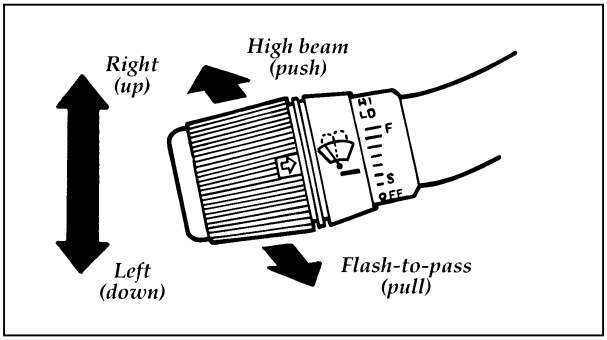

Turn signal lever and functions

If the turn indicator light in the instrument panel does not illuminate or remains on (doesn't flash) when you signal a turn, the turn signaling system is malfunctioning. Have this condition corrected as soon as possible, but make sure that you use the accepted hand signals in the meantime.

https://truckmanualshub.com/

High Beams

To turn on the high beams, turn the headlamp control knob to the headlamp ON position and push the turn signal lever away from you until it latches. When the high beams are ON, the high beam indicator light on the instrument panel comes on.

To turn off the high beams, pull the lever toward you until it latches. The high beam indicator light turns off.

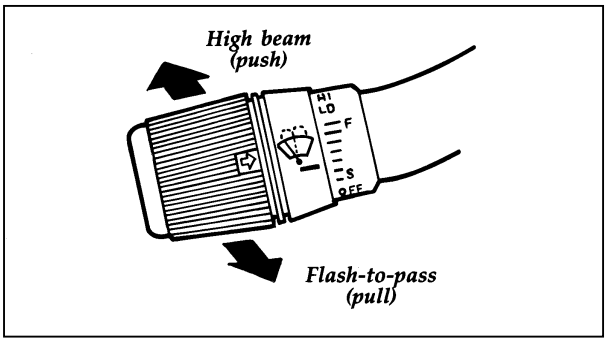

Headlamp high beam switch and turn signal lever

Flashing the Lights

To flash the headlamps, pull the lever toward you for a moment and then release it. The headlamps will flash whether the headlamp knob is in the on or off position.

Windshield Wipers and Washer

To turn on the windshield wipers, the ignition key must be turned to the ON or ACC position.

Turn the knob on the end of the turn signal lever toward the front of the vehicle. You can turn it to either the LO or HI speed position.

https://truckmanualshub.com/

Variable Interval Wipers

In addition to two speed wipers, your vehicle is equipped with wipers that you can set to operate at varying intervals. For example, you can set the interval so they wipe less often when it drizzles or more often in heavier rain.

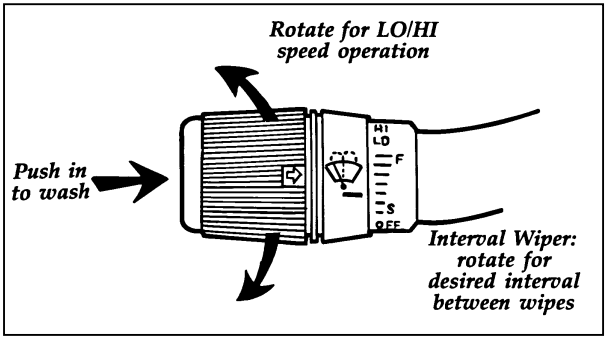

Interval wiper on turn signal lever

To set the interval wipers, rotate the knob at the end of the turn signal lever toward or away from the instrument panel to the interval operation you desire.

Windshield Washer

To clean the windshield, push in the end of the wiper knob. For a constant spray, keep the knob pushed in. After you release the knob, the wipers operate for two to three cycles before turning off (if wipers were off) or returning to the selected setting.

Do not try to clean the windshield when the washer fluid container is empty or activate the washers at any time for more than 15 seconds continuously. This could damage the washer pump system.

https://truckmanualshub.com/

The addition of shields to the front of the vehicle as used to deflect bugs, may also adversely affect the washer system from delivering fluid to the windshield. Devices such as bug shields are not recommended.

⚠WARNING
Always warm up the windshield with the defroster before you use the washer fluid. In freezing weather, the washer solution may freeze on the windshield and obscure your vision.

For information about refilling the washer fluid or replacing your windshield wiper blades, see *Windshield washer fluid and Wipers* in the Index.

Hazard Flasher

The hazard flasher is used to alert other drivers to hazardous situations.

The flashers will continue to flash with the brake pedal depressed.

The flashers work whether your vehicle is running or not. The flashers work for up to two hours when the battery is fully charged and in good condition without draining the battery excessively. If the flashers run for longer than two hours or if the battery is not fully charged, the battery can be drained.

To use the hazard flasher:

1. Push in the flasher button; it will pop out and the lamps will begin to flash.
2. To stop the flashers, push in the flasher button again.

https://truckmanualshub.com/

NOTE: The flasher button will be sticking up slightly higher when on than when off.

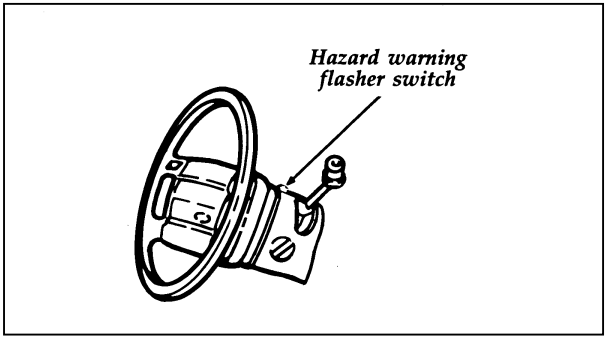

Hazard flasher

Horn

To sound the horn, press either horn pad.

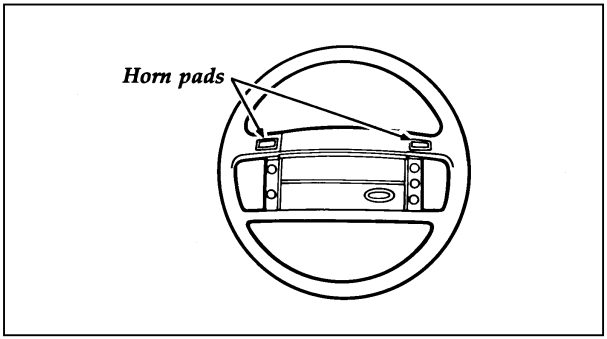

Horn location (with speed control option)

https://truckmanualshub.com/

Tilt Steering (If equipped)

⚠WARNING

Never adjust the steering wheel when the vehicle is moving.

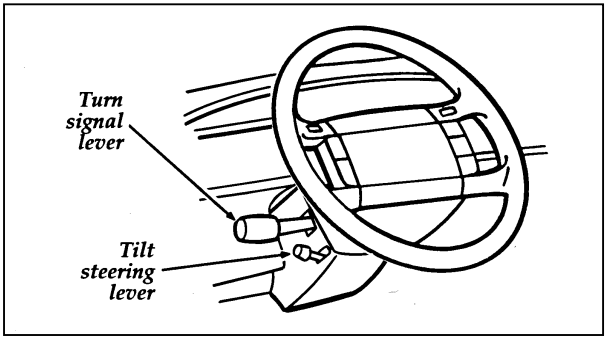

Turn signal and tilt release wheel lever

To change the position of the steering column/wheel, pull the release lever on the column toward you. Tip the steering wheel to the desired position. Release the lever to lock the steering wheel in place.

Be sure the steering wheel locks in a notch. It is not infinitely adjustable. Do not adjust the steering wheel while the vehicle is in motion.

Speed Control (If equipped)

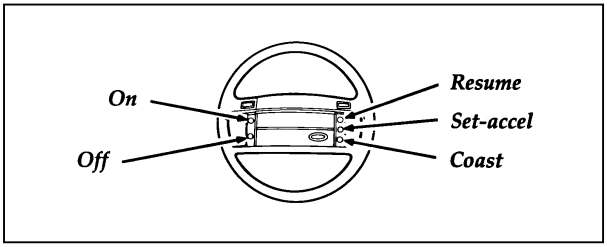

The speed control switches

https://truckmanualshub.com/

To Turn Speed Control Off

❑ Press OFF OR

❑ Turn off the vehicle ignition.

Once speed control is switched off, the previously programmed set speed will be erased.

To Turn Speed Control On

❑ Press ON

⚠WARNING
Do not shift the transmission into N (Neutral) with the speed control on.

To Set A Speed

Press SET ACCEL. For speed control to operate, the speed control must be ON and the vehicle speed must be greater than 30 mph (48 km/h).

If you drive up or down a steep hill, your vehicle speed may vary momentarily slower or faster than the set speed. This is normal.

Speed control cannot reduce the vehicle speed if it increases above the set speed on a downhill. If your vehicle speed is faster than the set speed while driving on a downhill in Overdrive, you may want to shift to the next lower gear to reduce your vehicle speed.

If your vehicle slows down more than 10 mph (16 km/h) below your set speed on an uphill, your speed control will disengage. This is normal. Pressing RES (Resume) will re-engage it.

https://truckmanualshub.com/

⚠WARNING

To keep your vehicle under control, do not use speed control in heavy traffic or on roads that are winding, slippery, or unpaved.

To Set a Higher Set Speed

- ❑ Press and hold SET ACCEL. Release the switch when the desired vehicle speed is reached. OR
- ❑ Press and release SET ACCEL. Each press will increase the set speed by 1 mph (1.6 km/h). OR
- ❑ Accelerate with your accelerator pedal, then press SET ACCEL.

You may accelerate with the accelerator pedal at any time during speed control usage. Releasing the accelerator pedal will return your vehicle speed to the previously programmed set speed.

To Set a Lower Set Speed

- ❑ Press and hold COAST. Release the switch when the desired vehicle speed is reached. OR
- ❑ Press and release COAST. Each press will decrease the set speed by 1 mph (1.6 km/h). OR
- ❑ Depress the brake pedal. When the desired vehicle speed is reached press SET ACCEL.

https://truckmanualshub.com/

To Disengage Speed Control

❑ Depress the brake pedal. **OR**

❑ Depress the clutch pedal (if equipped).

Disengaging the speed control will not erase the previously programmed set speed.

To Return to a Set Speed

❑ Press **RESUME**.

For **RESUME** to operate, the vehicle speed must be faster than 30 mph (48 km/h).

Mirrors

With the door closed and the seat adjusted for comfort and proper vehicle control, move the mirrors for best view by tilting up or down, left or right. Do not adjust the mirrors while the vehicle is in motion.

⚠WARNING
Make sure you can see clearly through the rearview mirror at all times. Do not block your vision. If you cannot see through the mirror, it could result in a collision, injuring yourself and others.

Outside Mirrors (Manual Control)

Adjust outside mirrors with the door closed and the seat adjusted for comfort and proper vehicle control. Move the mirrors for best view by tilting up or down, left or right.

On vehicles equipped with fold-away mirrors, the mirrors should be folded rearward into the body position before entering automatic car wash systems.

https://truckmanualshub.com/

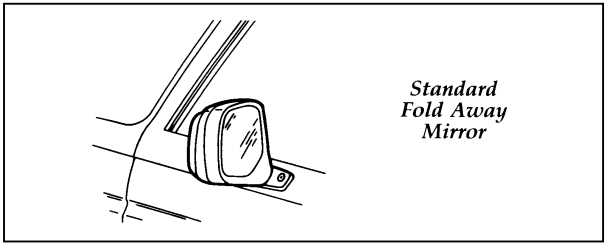

Standard fold-away mirror

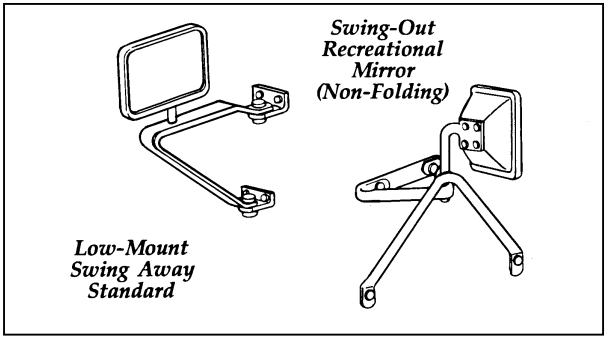

Low-mount swingaway mirror and swing-out recreational mirror

On vehicles equipped with “non” folding (swing-out recreational) mirrors, automatic car wash systems are not recommended. Use special truck wash facilities for vehicles with this type of mirror.

For vehicles equipped with the swing-out recreational mirrors, the right-hand side mirror is a flat glass mirror. All other right-hand side view mirrors used are convex. Convex mirrors have a curved surface and will show a wider view of the lane next to and behind your vehicle.

https://truckmanualshub.com/

⚠WARNING

The right side view mirror makes objects appear smaller and farther away than they actually are.

Dual Electric Remote Control Mirrors (If equipped)

To adjust the remote controlled side mirrors:

1. Find the control switch in the driver's door panel.
2. Select the right or left mirror by moving the selector switch to R or L.
3. Move the control knob in the direction you want to move the mirror.
4. Return the selector switch to the middle position to keep the mirror in place.

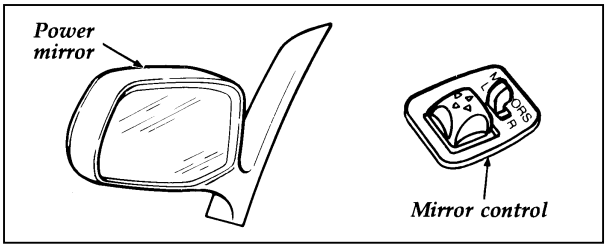

Power mirror control

Do not clean the plastic housing of any electric mirror with gasoline or other petroleum-based cleaning products.

https://truckmanualshub.com/

Doors

Anti-theft front door lock knobs

Anti-theft lock knobs are designed to preclude unlocking the door by pulling up on the bullet type lock knob. To unlock and open the front door from the inside of the vehicle, pull on the inside door handle.

Tailgate

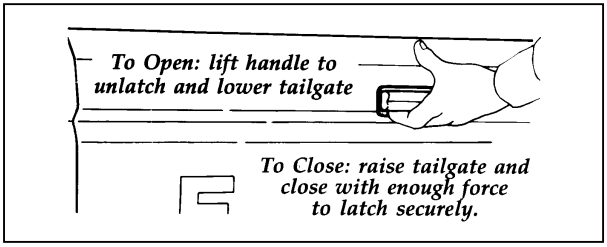

Tailgate operation

When open, the tailgate load should not exceed 500 lbs (227 kgs). If you want to load heavy items onto your vehicle, Ford recommends that you load them one at a time, directly on the bed floor to avoid damage to the tailgate or its supports.

To release the tailgate:

Open the tailgate as directed above, but support it to allow for slack in the cables at both sides. Use a coin or similar object to pry the spring clip (on each upper cable connector) past the head of the support screw. Doing so will allow you to center the wider opening in the connector over the screw head and disconnect it.

If you disconnect the upper end of each cable, you can lower the tailgate completely.

NOTE: Step bumpers or hitches may damage the tailgate if it is lowered completely.

https://truckmanualshub.com/

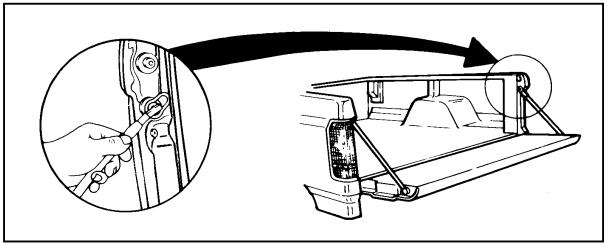

Releasing the tailgate

Tailgate removal

First release the tailgate as described above. Be sure to support the left side to prevent it from falling. Then raise the tailgate to a 45 degree angle (see the following illustration) and lift the right side of the tailgate off its hinge. You can now pull the left side of the tailgate away from the left hinge.

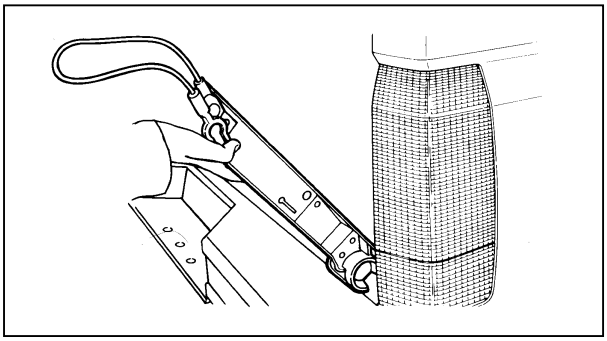

Tailgate removal

⚠WARNING
Do not drive your vehicle with the tailgate open unless there is a load holding it in place.

https://truckmanualshub.com/

Power Door Locks (If equipped)

The power door lock controls are located in the front doors. To lock all doors push the control marked L. To unlock all doors push the control marked U.

The manual door locks will override the power door lock controls.

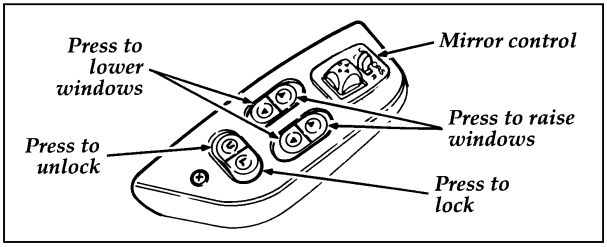

Power door lock controls

Windows

Operating Windows Manually

Cab rear sliding window (If equipped)

To open the sliding cab window, release the latch by pulling the left portion of the snap lock away from the window, then move the window to the desired position. To close, slide the windows to the center and snap the latch closed.

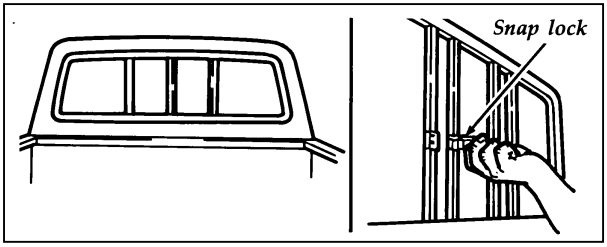

Sliding cab window

https://truckmanualshub.com/

Using the Power Windows (If equipped)

Each door has a power control that opens and closes the window on that door. The driver's door has a master control switch that operates both front door windows. You must place the ignition switch in the ON or ACC position to use your power window controls.

⚠WARNING
Do not let children play with the power windows.

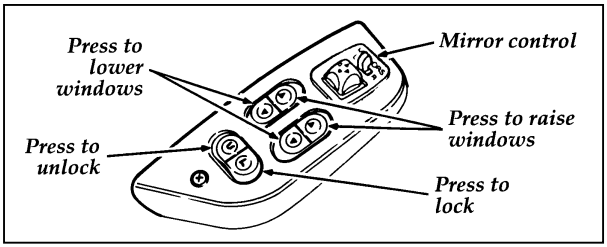

Master control switch

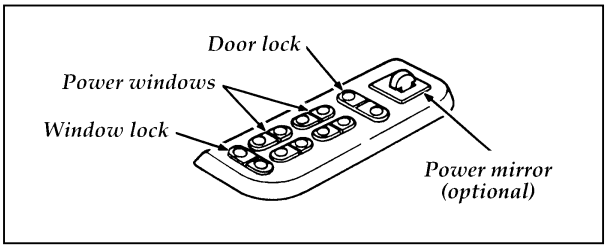

Power bezel crew cab only

https://truckmanualshub.com/

Fog Lamps (If equipped)

The fog lamps rocker switch is located on the instrument panel to the right of the steering column.

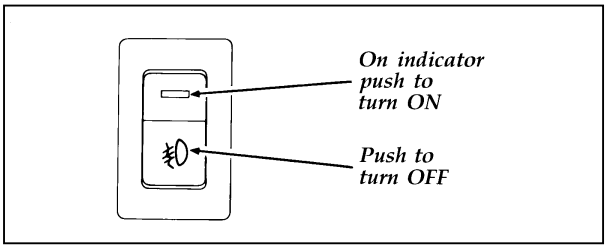

Fog lamp switch

The fog lamps act as a supplement to the low beam headlamps under limited visibility conditions such as rain, snow, dust or fog and operate only when the low beam headlamps are on.

To maximize fog lamp bulb life, it is recommended that the fog lamp switch be turned off after each use prior to turning off the headlamps.

- ❑ To turn the fog lamps on, push the ON side of the rocker switch. An indicator light will glow when the lamps are on.
- ❑ To turn off, push the OFF side of the switch.

https://truckmanualshub.com/

Console

Your vehicle may have a full console. The full console has the features shown in the illustration below.

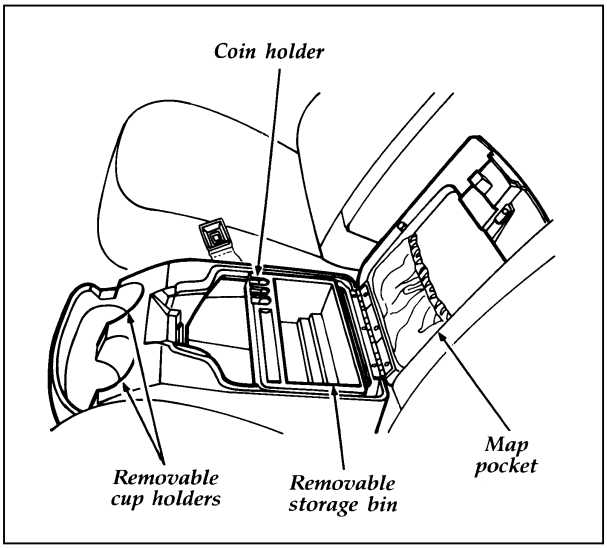

The features on the console

https://truckmanualshub.com/

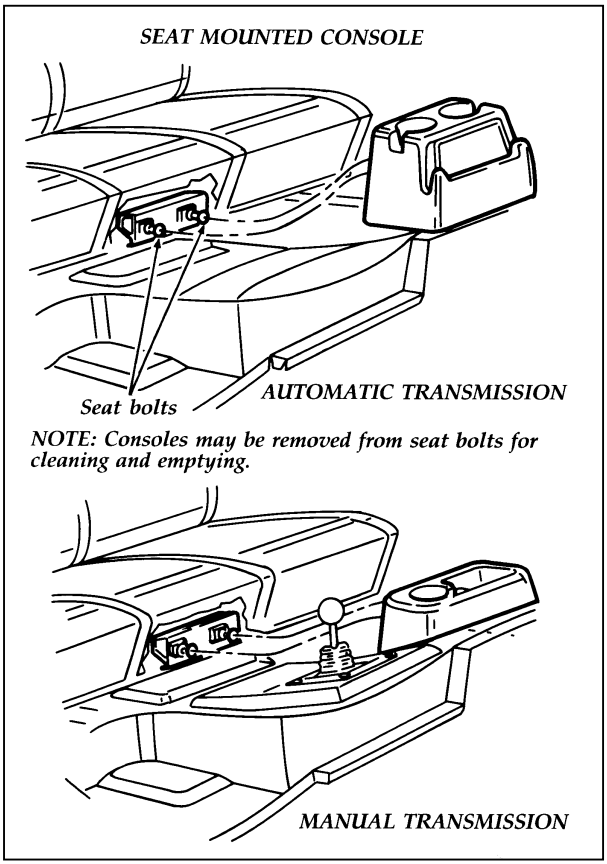

Seat mounted console

https://truckmanualshub.com/

Remote Entry System (If equipped)

If your vehicle has the remote entry system, you can lock or unlock the vehicle doors without using a key. The remote also has a personal alarm feature. The buttons for the system are located on the two hand held transmitters that came with your vehicle.

The system will work with up to four transmitters. Your vehicle came with two transmitters. Additional transmitters can be ordered from your dealer.

The remote entry features only operate with the ignition in the OFF position.

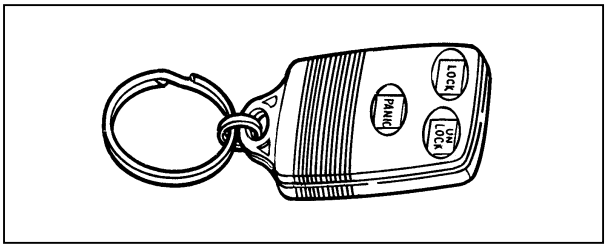

The remote entry transmitter

Unlocking the doors with the remote entry system

To unlock the driver's door, press the UNLOCK control.

To unlock the other doors, press the UNLOCK button a second time within five (5) seconds of unlocking the driver's door.

https://truckmanualshub.com/

Locking the doors with the remote entry system

To lock all the doors, press the LOCK control.

If you would like a signal that the doors are being locked, press the LOCK button again within five seconds. The door will lock again, the horn will beep, and the external lamps will flash.

Remote entry personal alarm

If you wish to activate the remote entry system personal alarm, press the PANIC button. This will honk the horn and flash the lights for approximately 2 minutes 45 seconds. You can turn it OFF by pressing the PANIC button again from the same transmitter or by turning the ignition to the ON or ACCESSORY position.

When you use the remote entry UNLOCK or PANIC buttons, the illuminated entry system turns on the vehicle's interior lights for 25 seconds. You can turn these lights off with the remote entry LOCK button or by turning the ignition to the ON or ACCESSORY position.

This device complies with Part 15 of the FCC Rules. Operation is subject to the following two conditions: (1) This device may not cause harmful interference, and (2) This device must accept any interference received, including interference that may cause undesired operation.

https://truckmanualshub.com/

Replacing the Batteries

The remote entry transmitter is powered by two coin type three-volt lithium 2016 batteries (included) that should last for several years of normal use. If you notice a significant decrease in operating range, the batteries should be replaced. Replacement batteries can be purchased at most pharmacies, watch stores or at your Ford or Lincoln-Mercury dealer.

NOTE: The operating range of the remote entry system can also be affected by weather conditions (such as very cold temperatures) or structures around the vehicle (buildings, other vehicles, radio and TV towers, etc.). Typical operating range will allow you to be up to 33 feet (10 meters) away from your vehicle.

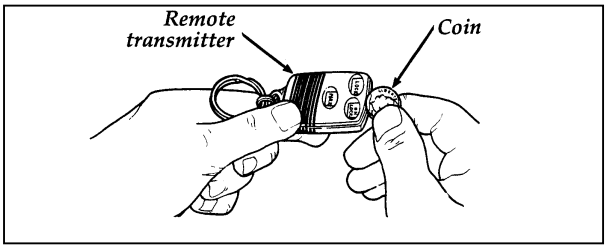

Opening the remote transmitter

The transmitter can be snapped apart to replace the batteries by twisting a thin coin between the two halves of the transmitter. DO NOT TAKE THE FRONT PART OF THE TRANSMITTER APART. When installing the new batteries, be sure to place the positive (+) side down as marked. Snap the two halves back together.

https://truckmanualshub.com/

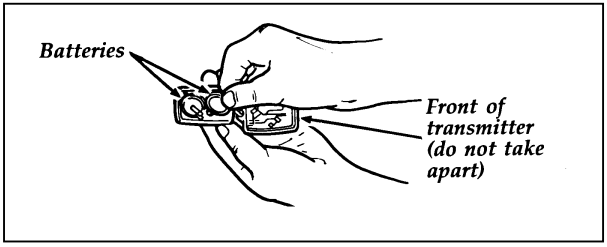

Replacing the batteries

Replacing lost transmitters

In the event a transmitter is lost, you should take all your vehicle's transmitters to your dealer to have the remote entry system deprogrammed for the lost transmitter. This is necessary to prevent further unauthorized use of the lost transmitter.

You can also purchase additional transmitters (up to 4 transmitters can be used) from your dealer. You will need to take all your transmitters to the dealer so they can program them to the remote entry system all at the same time.

Illuminated Entry System (If equipped)

This system will provide illumination of the vehicle's interior courtesy lamps when either outside front door handle is pulled or when the Remote Entry System is used to unlock the door or sound the Personal Alarm. The system will automatically turn off after approximately 25 seconds or when the ignition is turned to the START or ACCESSORY position.

NOTE: The inside lights will not turn off if you have turned them on with the dimmer knob or if any door is open.

https://truckmanualshub.com/

Battery Saver (with Remote Entry — If equipped)

When the ignition is turned off, the vehicle will turn off battery voltage to all of these lights after 45 minutes: glove box, engine compartment, overhead console, mirror, courtesy and interior (including cargo) lamps.

This will prevent draining of the battery if these lights have been left on inadvertently or if a door is not completely closed. Battery voltage to these lamps will be restored when the remote entry transmitter is used, any door is opened, or the ignition key is turned on again.

https://truckmanualshub.com/

Seating and Safety Restraints

Seats

Adjusting the Front Seat Manually

To move the front seat forward or rearward:

1. Find the adjustment lever at the lower left corner of the front seat.
2. Push the lever to the left to unlatch the seat.
3. Move the seat to the desired position.
4. Release the lever to latch the seat in its new position. Make sure the seat locks securely in place.

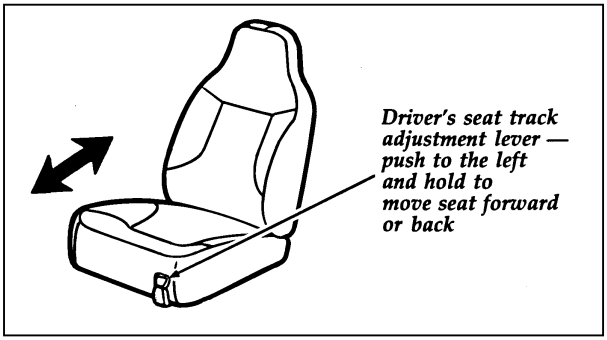

Adjusting bucket seat

https://truckmanualshub.com/

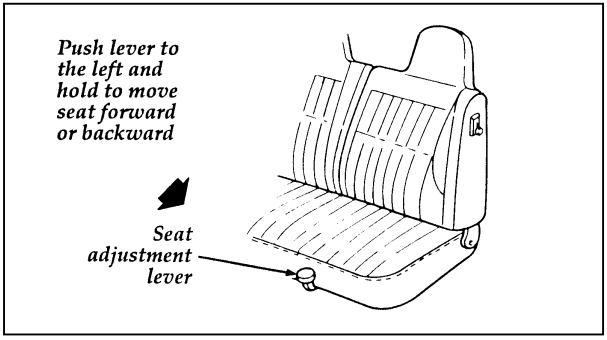

Adjusting the bench seat

⚠WARNING
Never adjust the driver's seat or seatback when the vehicle is moving.

⚠WARNING
Always drive and ride with your seatback upright and the lap belt snug and low across the hips.

⚠WARNING
Children should always ride with the seatback in the fully upright position.

https://truckmanualshub.com/

Reclining Bucket Seats

You can tilt the seat back of your bucket seats backward.

1. On the outboard side of the seat, lift the recliner handle up and hold it in place.
2. Lean against the back of the seat and adjust it to the position you want.
3. Release the handle to lock the seat back in place.
4. To return the seat back upright, lift the handle and lean forward.

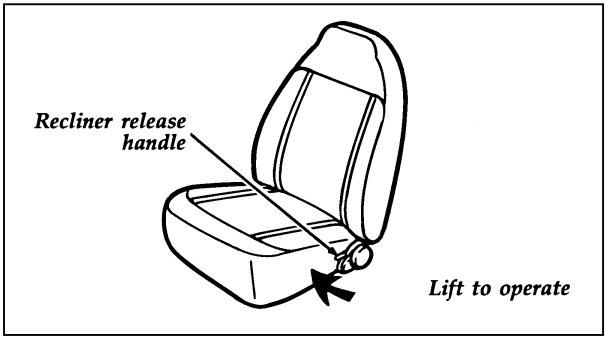

Reclining bucket seat

Lifting the seat-back adjustment lever of an unoccupied seat will allow the seat back to fold forward for access to the rear. Pushing the seat back backward with the handle released returns the seat upright.

https://truckmanualshub.com/

40/20/40 Seat

Your F-Series may have a 40/20/40 seat which consists of two bucket seats that adjust independently of each other, and a center seat that is fixed. The center seatback can be folded down into an armrest/console.

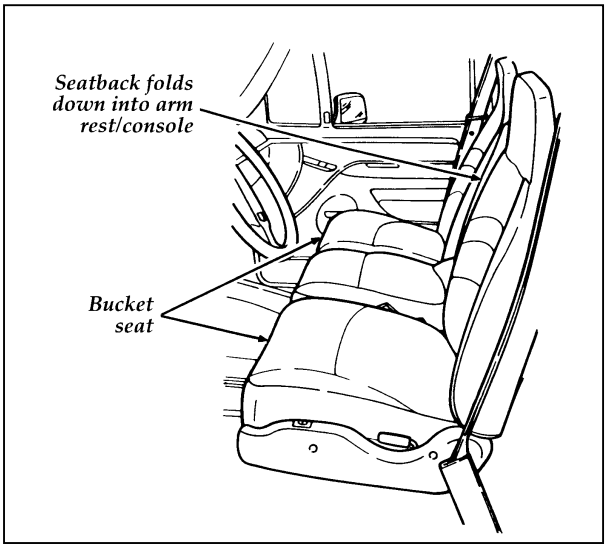

The 40/20/40 seat

Adjusting the seats:

The bucket seats may be adjusted manually as explained in *Adjusting the Front Seat Manually*. If you have a SuperCab, your driver's seat may have an optional 6 way power seat. Refer to *Using the Power Seats* later in this chapter.

Your 40/20/40 bucket seats have Power Lumbar Supports. You can inflate/deflate the lumbar support pad in the seatback to adjust for your driving comfort. Refer to *Using the Power Lumbar Supports* later in this chapter.

https://truckmanualshub.com/

The center seatback console

Your center seatback will fold down into an armrest/console. The console includes two cupholders, a removable coin holder and storage space for cassette/CD's.

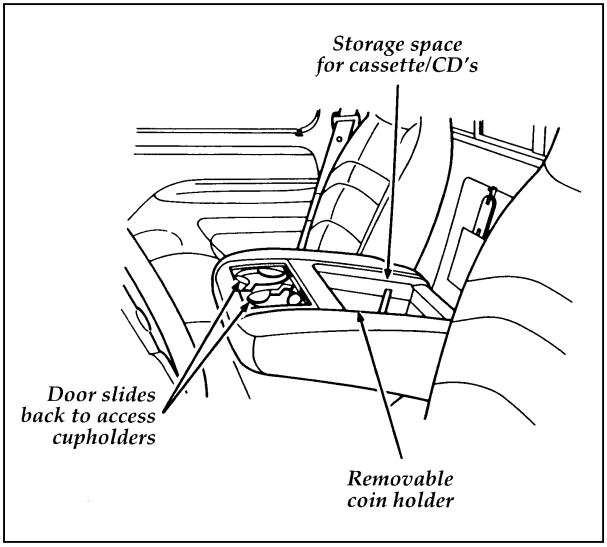

The console on the 40/20/40 seat

Seat Back Release (Bench Seat)

The front seat back for the Regular Cab and the rear seat back for the Crew Cab can be folded forward to gain access to the storage space behind. Lift the seat back latch at its lower rear corner. The seat back will lock automatically when returned to the full upright position.

The SuperCab split back bench seat can be folded forward on either side to gain access to the rear of the vehicle. To do so, push up the latch button located at the top of the seat back.

https://truckmanualshub.com/

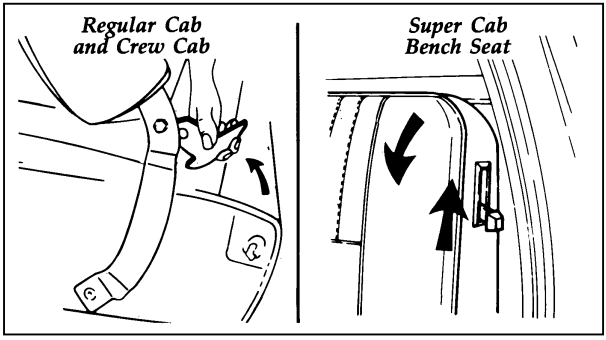

Seat back release

⚠WARNING

Check to see that the seat and seatback are latched securely in position. Keep floor area free of objects that would prevent proper seat engagement. Never attempt to adjust the seat while the vehicle is in motion.

Center Facing Jump Seat — SuperCab Only

The center facing jump seat should be kept in the stored position for easy access to the rear cab area. To open the seat:

1. Unsnap the retaining strap holding the seat in its stored position.
2. Swing the seat support away from the seat bottom while lowering the seat to a horizontal position.
3. Raise the seat back to the upright position.

⚠WARNING

Do not install a child seat in a center facing jump seat.

https://truckmanualshub.com/

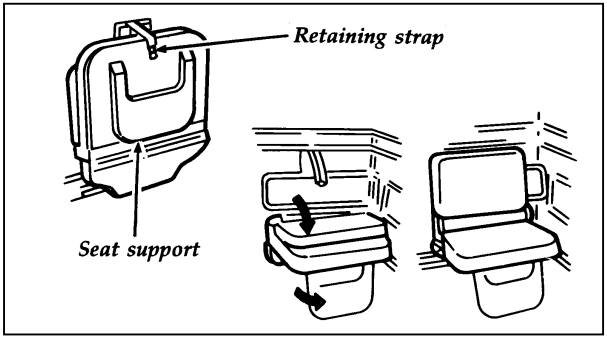

Opening the center facing jump seat

To restore the seat to a stored position:

1. Lift the cushion to upright position.
2. Snap retaining strap.
3. Clip support.

Rear Bench Seat (SuperCab Only)

The forward facing rear seat in the SuperCab forms a cargo floor when folded.

To fold the seat:

1. Move the front seat forward if necessary.
2. Pull the strap at the passenger's side of the seat bottom and pivot the seat assembly forward (180 degrees).
3. Raise the release lever at the top of the seat back on the passenger's side of the vehicle, and lower the seat back.

https://truckmanualshub.com/

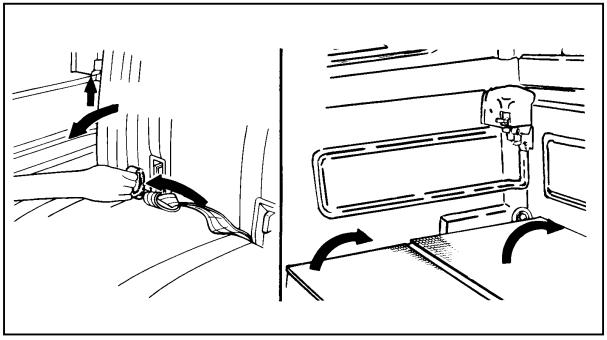

Using the rear bench seat (SuperCab only)

To return seat to normal seating position:

1. Lift the seat back until it locks in the vertical position.
2. Check to see if the seat back is securely latched by pulling forward on the top of the seat back.
3. Grasp the seat bottom and pivot rearward (180 degrees).
4. Check to see if the seat bottom is securely latched by pulling up on the rear portion of the seat bottom.

Tilt Slide Seat

With the seatback tilted forward, the tilt slide seat can be moved forward to provide additional entry space to access the rear seat compartment of the vehicle.

To operate the tilt slide seat:

1. Lift the seatback release lever on the outboard side of the seat cushion to unlock the slide mechanism and the seatback.
2. Push the seat assembly forward to provide entry space to the rear seat compartment of the vehicle.

https://truckmanualshub.com/

⚠WARNING

Check to see that the seat and seatback are latched securely in position. Keep floor area free of objects that would prevent proper seat engagement. Never attempt to adjust the seat while the vehicle is in motion.

Relocking the seat after a tilt slide operation:

3. Push the seat backrest to its upright latched position. Continue to push the seat rearward to return it to its latched position. (This can be done from inside the rear seat compartment or from outside the vehicle.)

NOTE: The seat can no longer be moved rearward when in its latched position.

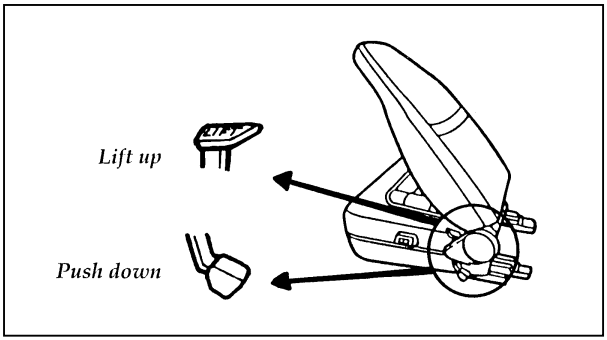

Prior to operating the vehicle, check to ensure that the seat assembly is locked by pushing or pulling the seat forward or rearward. If seat does not lock, repeat steps 2 and 3.

https://truckmanualshub.com/

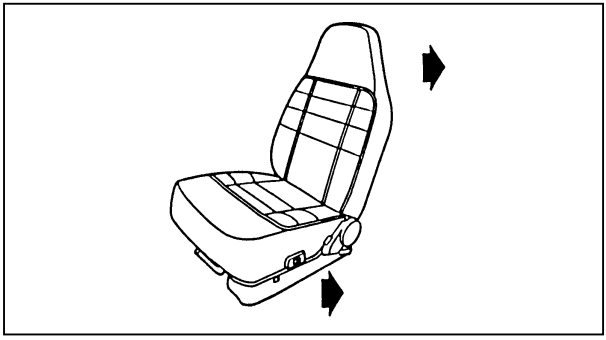

To operate the seat adjuster:

4. To adjust the seats forward or rearward, locate the release lever at the right lower front area of the seat cushion. Move the release lever to the right and hold until the desired seat position is obtained, then release the lever to relock the seat.

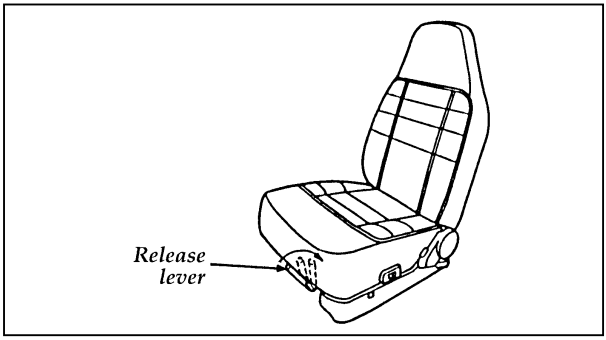

https://truckmanualshub.com/

Using the Power Seats (If equipped)

If your vehicle has the power seat option, you can adjust it in several directions. The controls are on the outboard side of the seat.

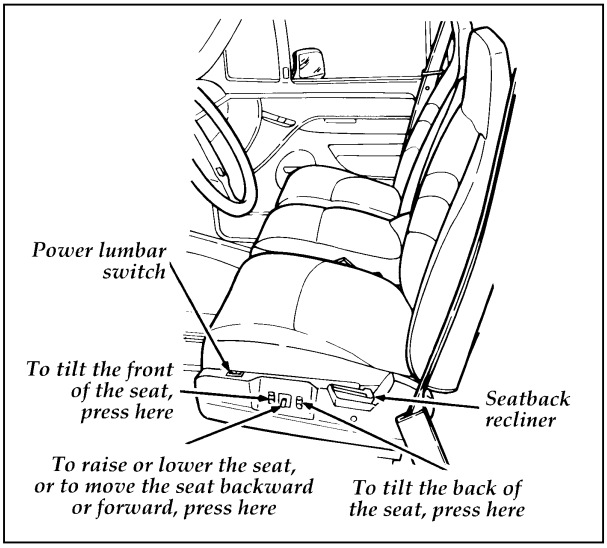

The power controls on the 40/20/40 seat — SuperCab driver's seat only

https://truckmanualshub.com/

Using the Power Lumbar Support and Side Bolsters (if equipped)

If your vehicle is equipped with this option, you can inflate a lumbar support pad in the seat back. To inflate the lumbar pad, push the (+) side of the rocker switch. To deflate push the (-) side of the switch.

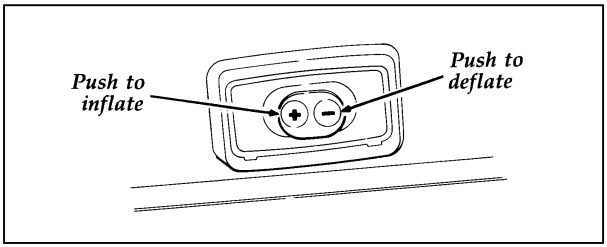

Power lumbar switch

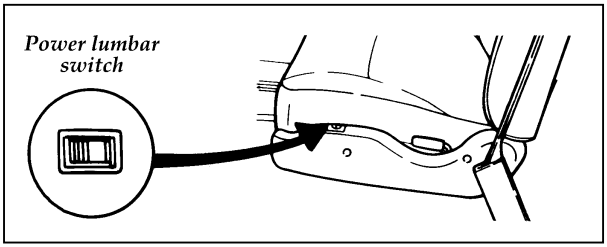

Power lumbar switch - 40/20/40 seat

Using Manual Lumbar Support (if equipped)

Rotate the control on the seat to increase or decrease the lumbar support.

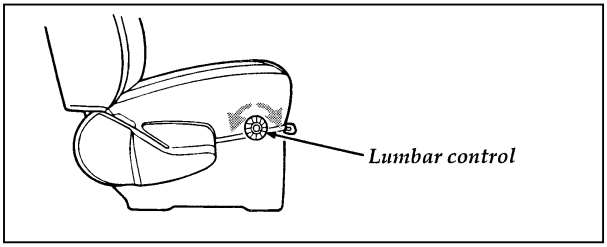

https://truckmanualshub.com/

Important Safety Belt Information

The use of safety belts helps to restrain you and your passengers in case of a collision. In most states and in Canada the law requires their use.

Safety belts provide best restraint when:

⚠WARNING
All occupants of the vehicle, including the driver, should always wear their safety belts, failure to do so may increase the risk of personal injury in the event of a collision.

- ❑ the seatback is upright
- ❑ the occupant is sitting upright (not slouched)
- ❑ the lap belt is snug and low on the hips
- ❑ the shoulder belt is snug against the chest
- ❑ the knees are straight forward

To help you remember to fasten your safety belt, a warning light may come on and a chime may sound. See *Safety Belt Warning Light and Chime* in the *Instrumentation* chapter.

See the following sections in this chapter for directions on how to properly use these safety belts. Also see *Safety Restraints for Children* in this chapter for special instructions about using safety belts for children.

https://truckmanualshub.com/

⚠WARNING

Always drive and ride with your seatback upright and the lap belt snug and low across the hips.

⚠WARNING

It is extremely dangerous to ride in a cargo area, inside or outside of a vehicle. In a collision, people riding in these areas are more likely to be seriously injured or killed. Do not allow people to ride in any area of your vehicle that is not equipped with seats and safety belts. Be sure everyone in your vehicle is in a seat and using a safety belt properly.

⚠WARNING

Cargo should always be secured to prevent it from shifting and causing damage to the vehicle or harm to passengers.

⚠WARNING

Never let a passenger hold a child on his or her lap while the vehicle is moving. The passenger cannot protect the child from injury in a collision.

⚠WARNING

Children should always ride with the seatback in the fully upright position.

https://truckmanualshub.com/

⚠WARNING

Each seating position in your vehicle has a specific safety belt assembly which is made up of one buckle and one tongue that are designed to be used as a pair. 1) Use the shoulder belt on the outside shoulder only. Never wear the shoulder belt under the arm. 2) Never swing it around your neck over the inside shoulder. 3) Never use a single belt for more than one person.

⚠WARNING

Lock the doors of your vehicle before driving to lessen the risk of the door coming open in a collision.

Dual Locking Mode Retractors

Your vehicle is equipped with a dual locking mode retractor on the shoulder belt portion of the combination lap/shoulder safety belt for front seat passenger and rear seat outboard passengers.

Vehicle Sensitive (Emergency) Locking Mode

In this operating mode, the shoulder belt retractor will allow the occupant freedom of movement, locking tight only on hard braking, hard cornering or impacts of approximately 5 mph (8 km/h) or more.

The front seat belt retractor can also be made to lock by pulling/jerking on the belt.

https://truckmanualshub.com/

Automatic Locking Mode

In this operating mode, the shoulder belt retractor will be automatically locked and remain locked when the combination lap/shoulder safety belt is buckled, and does not allow the occupant freedom of movement. This mode provides the following:

- ❑ A tight lap/shoulder belt fit on occupant
- ❑ Child seat/infant carrier installation restraint

This mode must be used when installing a child seat on the front passenger seat and rear outboard seats where dual locking retractors are provided.

To switch the retractor from the “emergency locking mode” to the “automatic locking mode,” perform the following steps:

1. Buckle the lap/shoulder combination belt.
2. Grasp the shoulder portion of the belt and pull downward until all of the belt is extracted, and when allowed to retract, a clicking sound will be heard. At this time, the belt retractor is in the “automatic locking mode” (child restraint mode).
3. A clicking sound will continue to be heard as the belt is allowed to retract. This indicates that the retractor is in the “automatic locking mode.”

https://truckmanualshub.com/

How to cancel the Automatic Locking Mode:

Disconnect the combination lap and shoulder belt and allow it to completely retract to cancel the Automatic Locking Mode and be in the Vehicle Sensitive (Emergency) Mode.

NOTE: When the combination lap/shoulder belt is unbuckled and allowed to retract completely, the retractor will switch back to the vehicle sensitive (emergency) locking mode. See the detailed instructions under *Safety Seats for Children* **in this chapter.**

Combination Lap and Shoulder Belts

While your vehicle is in motion, the combination lap and shoulder belt adjusts to your movement. However, if you brake hard, corner hard or if your truck receives an impact of 5 mph (8 km/h) or more, the combination lap/shoulder belt locks and helps reduce your forward movement. The front seat belt systems can also be made to lock by jerking on the shoulder belt.

NOTE: The rear belts cannot be made to lock up by jerking on shoulder belt.

After you get into your vehicle, close the door and lock it. Then adjust the seat to the position that suits you best.

To fasten the belt

Pull the combination lap/shoulder belt from the retractor so that the shoulder portion of the belt crosses your shoulder and chest. Be sure the belt is not twisted. If it is, remove the twist. Insert

https://truckmanualshub.com/

the belt tongue into the proper buckle until you hear a snap and feel it latch. Make sure the tongue is securely fastened to the buckle by pulling on tongue.

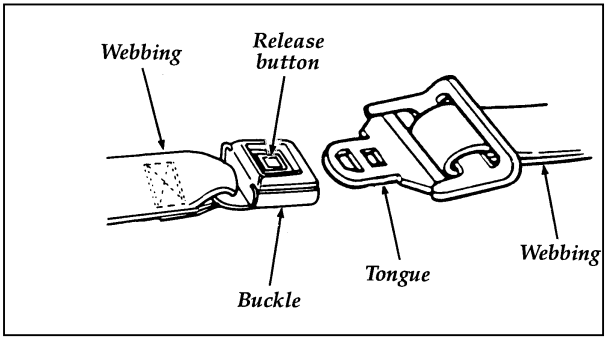

⚠WARNING

Each seating position in your vehicle has a specific safety belt assembly which is made up of one buckle and one tongue that are designed to be used as a pair. 1) Use the shoulder belt on the outside shoulder only. Never wear the shoulder belt under the arm. 2) Never swing it around your neck over the inside shoulder. 3) Never use a single belt for more than one person.

To tighten the lap portion of the belt, pull up on the shoulder belt until it fits you snugly. The belt should rest as low on your hips as possible.

Due to folding rear seats, sometimes the buckles and tongues toward the center of the vehicle may be hidden by the rear edge of the seat cushion. Pull them out so they will be accessible.

https://truckmanualshub.com/

While you are fastened in the seat belt, the combination lap and shoulder belt adjusts to your movement. However, if you brake hard, turn hard, or if your vehicle receives an impact of 5 mph (8 km/h) or more, the lap and shoulder belt will become locked and help reduce your forward movement.

Shoulder Belt Height Adjustment (If equipped)

Driver and right front passenger

The driver and right front passenger shoulder belt height is adjustable to one of five (5) positions.

To adjust the belt down, push the release button on the adjuster down and slide the adjuster down. Then release the button and make sure the adjuster is firmly in one of the positions. To adjust the belt up, slide the adjuster up. (You do not have to push the release button.) Slide it up or down until the belt rests across the middle of your shoulder.

⚠WARNING

Position the shoulder belt height adjuster so that the belt rests across the middle of your shoulder. Be sure the shoulder belt is properly positioned on your shoulder each time you use the belt. If the shoulder belt is off your shoulder, on your upper arm or neck, there is a greater risk of severe injury in a collision.

NOTE: Be sure the belt is properly positioned on your shoulder each time you use the belt.

https://truckmanualshub.com/

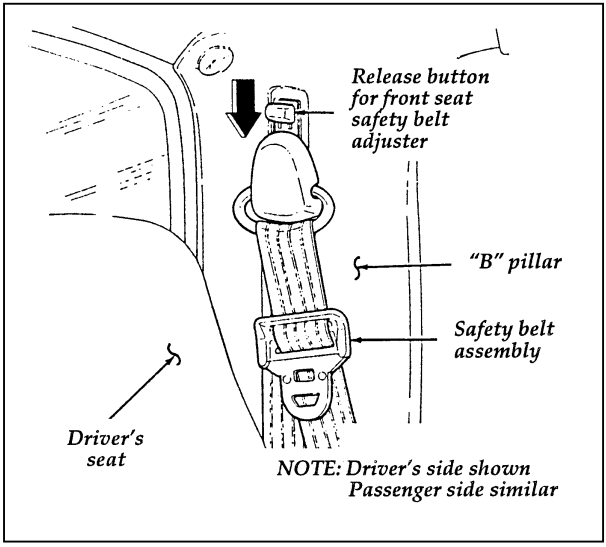

Shoulder belt height adjuster — full up position

Lap Belts

The lap belts for center seating position occupants do not have retractors, but do have a locking adjustable tongue. They should be shortened and fastened to buckle when you are not using them. To lengthen your belt, tip the belt tongue at a right angle to the belt and pull the belt over your lap until the tongue reaches the buckle.

https://truckmanualshub.com/

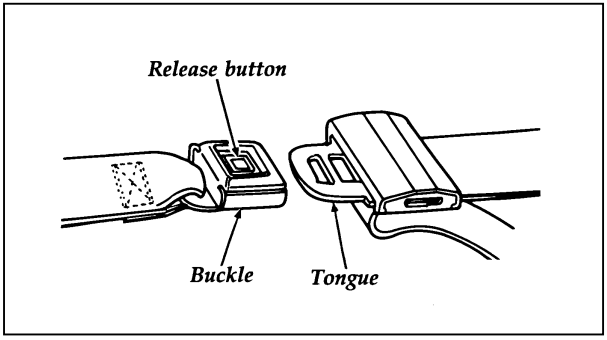

Fastening occupant safety lap belts

To fasten the belt, pull the belt across your hips and insert the tongue into the correct buckle on your seat until you hear a snap and feel it latch. Make sure the buckle is securely fastened by pulling tongue.

Adjust the belt so that it fits snugly and as low as possible around the hips:

- ❑ If you need to lengthen the belt, unfasten it and repeat the procedure above.
- ❑ If you need to shorten the belt, pull on the loose end of the webbing.

https://truckmanualshub.com/

To unfasten the belt:

1. Push the release button on the buckle. This allows the tongue to unlatch from the buckle.

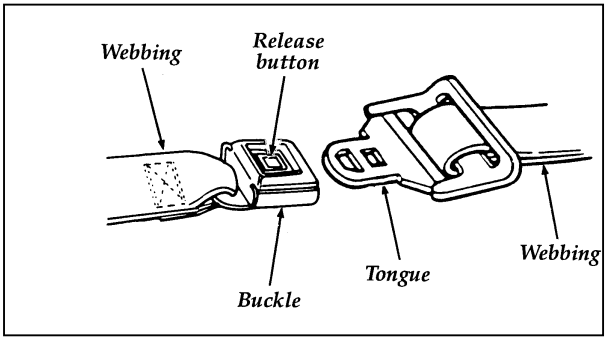

Unfastening the outboard lap/shoulder belts

2. While the belt retracts, guide the tongue to its stowed position. If you do not guide the tongue, it may strike you or part of the vehicle.

How to Untwist or Unjam a Safety Belt Retractor

If you should jam the lap belt retractor by allowing the belt to retract when it is twisted, you can free the webbing with this procedure:

1. Pull on the belt with both hands to tighten it on the retractor spool.

2. Feed the belt back into the retractor until it is completely retracted. Repeat previous step if necessary.

https://truckmanualshub.com/

3. Pull the belt out of the retractor as far as it will go and untwist the belt or remove the object that is jamming the belt. Let the belt retract.

4. Then, pull the belt out and let it retract several times to make sure that the belt works properly.

Procedure to Correct a Twisted Safety Shoulder Belt at the "D" Ring (if so equipped) Front and/or Rear Outboard Seating Positions.

NOTE: The restraint system shown in the following figures may be different than the restraint system in your vehicle. However, use these figures and this procedure to correct a twisted safety shoulder belt at any outboard seating position that has a "D" ring.

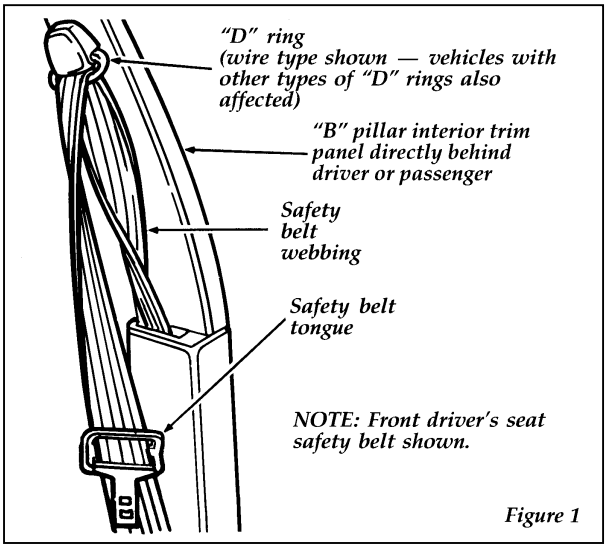

Figure 1

https://truckmanualshub.com/

1. Grasp the belt webbing at the “D” ring. See Figure 2.

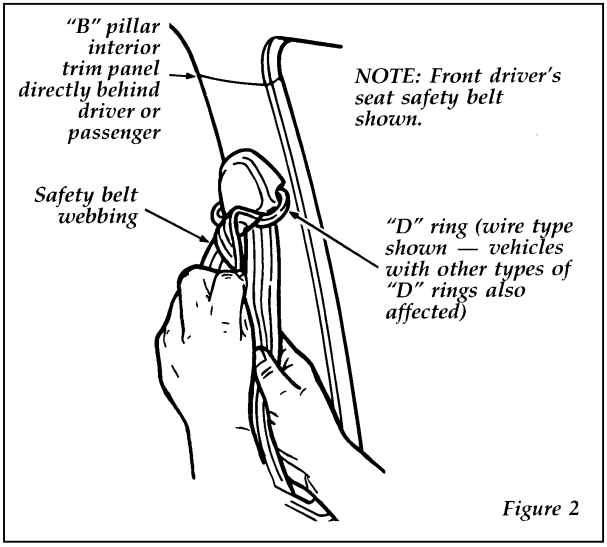

Figure 2

2. Rotate and fold the belt webbing over itself as required to remove the twist.

3. Feed the folded portion of the belt through the “D” ring.

https://truckmanualshub.com/

4. When completed, the safety belt should look like Figure 3.

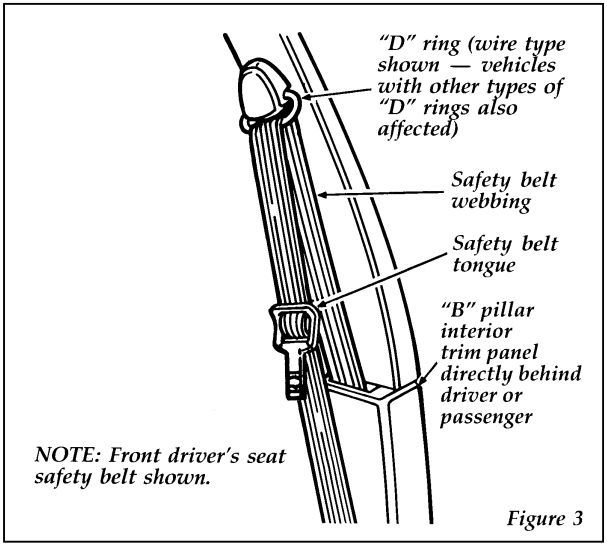

Figure 3

Safety Belt Extension Assembly

For some people, the safety belt may be too short even when it is fully extended. You can add about eight inches (20 cm) to the belt length with a safety belt extension assembly (part number 611C22). Safety belt extensions are available at no cost from your dealer.

Use only extensions manufactured by the same supplier as the safety belt. Manufacturer identification is located at the end of the webbing on the label. Also, use the safety belt extension only if the safety belt is too short for you when fully extended. Do not use extension to change the fit of the shoulder belt across the torso.

https://truckmanualshub.com/

⚠WARNING

Failure to follow these instructions will affect the performance of the safety belts and increase the risk of personal injury.

Safety Restraints for Children

In the U.S. and Canada, you are required by law to use safety restraints for children. If small children ride in your vehicle — this generally includes children who are four years old or younger and who weigh 40 pounds (18 kg) or less — you must put them in safety seats that are made specially for children. Safety belts alone do not provide maximum protection for these children. Check your local and state laws for specific requirements.

⚠WARNING

Never let a passenger hold a child on his or her lap while the vehicle is moving. The passenger cannot protect the child from injury in a collision.

⚠WARNING

Carefully follow all of the manufacturer's instructions included with the safety seat you put in your vehicle. If you do not install and use the safety seat properly, the child may be injured in a sudden stop or collision.

When possible, put children in the rear seat of your vehicle. Accident statistics suggest that children are safer when properly restrained in the rear seating positions than in the front seating positions.

https://truckmanualshub.com/

⚠WARNING

Do not install a child seat in a center facing jump seat.

⚠WARNING

Safety belts and seats can become hot in a vehicle that has been closed up in sunny weather; they could burn a small child. Check seat covers and buckles before you place a child anywhere near them.

⚠WARNING

Do not leave children, unreliable adults, or pets unattended in your vehicle.

Safety Belts for Children

Children who are too large for child safety seats should always wear safety belts. (See instructions with your child seat, or contact its manufacturer, to determine maximum size of child that will safely fit in the seat.)

⚠WARNING

If safety belts are not properly worn and adjusted as described, the risk of serious injury to the child in a collision will be much greater.

If the shoulder belt portion of one of the lap and shoulder belts can be positioned so that it does not cross or rest in front of the child's face or neck, the child should wear the lap and shoulder belt. Moving the child closer to the center of the vehicle may help provide a good shoulder belt fit.

https://truckmanualshub.com/

⚠WARNING

If the shoulder belt cannot be properly positioned, move the child to one of the seats with a lap belt only (preferably in a rear seat) and use the lap belt.

Lap belts and the lap belt portion of lap and shoulder belts should always be worn snugly and below the hips, touching the child's thighs.

⚠WARNING

Children should always ride with the seatback in the fully upright position.

Safety Seats for Children

Use a safety seat that is recommended for the size and weight of the child. Always follow the safety seat manufacturer's instructions when installing and using the safety seat.

Ford recommends the use of a child safety seat having a top tether strap. Install the child safety seat in a seating position which is capable of providing a tether anchorage. For more information on top tether straps see *Attaching Safety Seats With Tether Straps* in this chapter.

When installing a child safety seat, be sure to use the correct safety belt buckle for that seating position making sure the tongue is securely fastened in the buckle and for a shoulder/lap belt combination with a sliding tongue make sure the retractor is in the "automatic locking mode."

All child restraint systems are designed to be secured in vehicle seats by lap belts or by the lap portion of a lap-shoulder belt.

https://truckmanualshub.com/

⚠WARNING

If you do not properly secure the safety seat, the child occupying the seat may be injured during a collision or sudden stop. An unsecured safety seat could also injure other passengers.

⚠WARNING

Carefully follow all of the manufacturer's instructions included with the safety seat you put in your vehicle. If you do not install and use the safety seat properly, the child may be injured in a sudden stop or collision.

⚠WARNING

Seatbacks should be upright for use with child safety seats.

⚠WARNING

Always keep the buckle release button pointing upward and away from the child seat, with the tongue between the child seat and the release button as shown in the following illustration.

https://truckmanualshub.com/

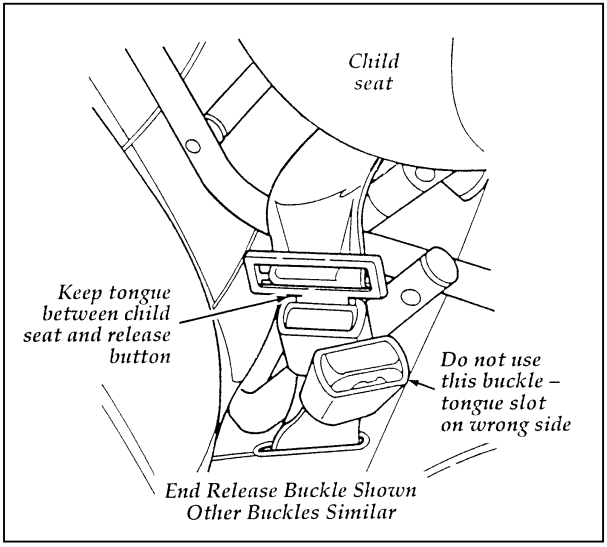

Installing Child Safety Seats

Your vehicle is equipped with a dual locking mode retractor on the shoulder belt portion of the combination lap/shoulder safety belt for the front seat passenger and a dual-locking mode retractor for rear outboard passengers.

If you choose to install a forward-facing child safety seat or infant carrier in the front seating positions, move vehicle seat as far back as possible.

https://truckmanualshub.com/

For seating positions equipped with a dual-locking mode retractor, use the following procedure:

1. Position the child seat in the center of the passenger seating position.
2. Pull down on shoulder belt, then grasp shoulder belt and lap belt together. See Figure 1.

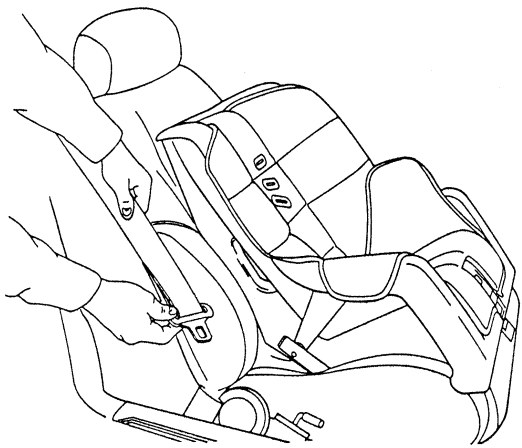

Figure 1

Pulling out belt webbing

https://truckmanualshub.com/

3. While holding the shoulder and lap belt portions together, route the tongue through the child seat according to the child seat manufacturer's instructions. See Figure 2. Be sure that the belt webbing is not twisted.

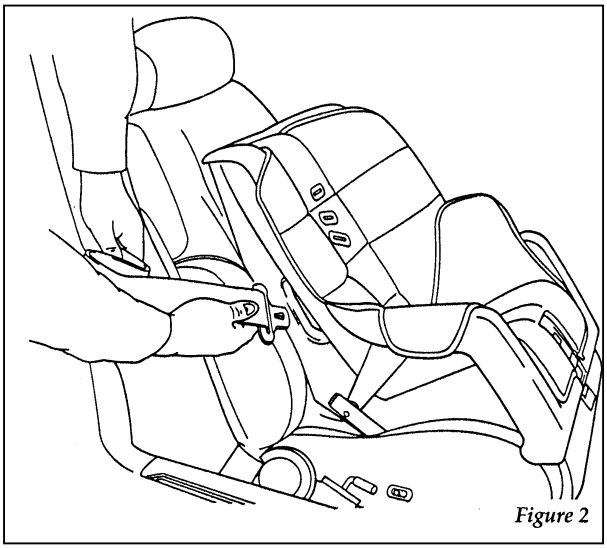

Routing the lap/shoulder belt

https://truckmanualshub.com/

4. Insert the belt tongue into the buckle for that seating position until you hear and feel the latch engage. See Figure 3. Make sure tongue is latched securely to buckle by pulling on tongue.

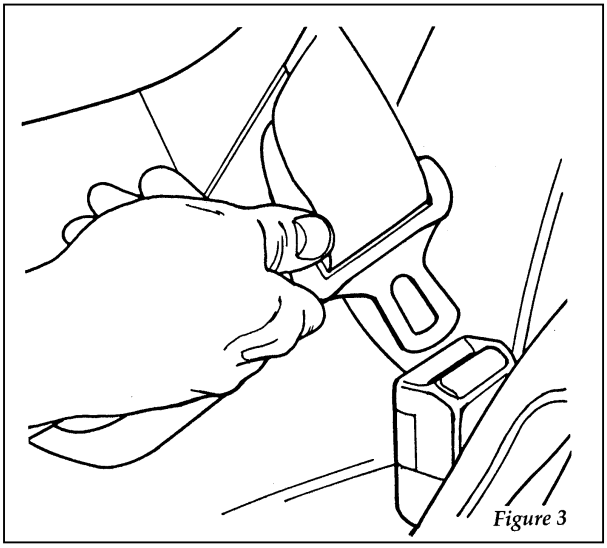

Buckling the belt

https://truckmanualshub.com/

5. Grasp the shoulder portion of the belt and pull downward until all of the belt is extracted and a click is heard. At this time, the retractor is in the automatic locking mode (child seat restraint mode). See Figure 4.

NOTE: The dual-locking mode retractor must be in the automatic locking mode to properly restrain a child.

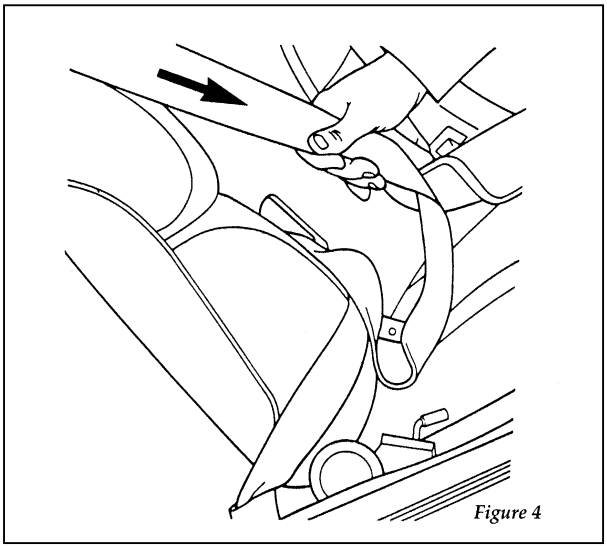

Setting the retractor to automatic locking mode

6. Allow the belt to retract. Pull up on the shoulder webbing. A clicking sound will be heard as the belt retracts. This indicates the retractor is in the automatic locking mode. Push down on the child seat while you pull up on the belt to remove any slack in the belt. See Figures 5 and 6.

https://truckmanualshub.com/

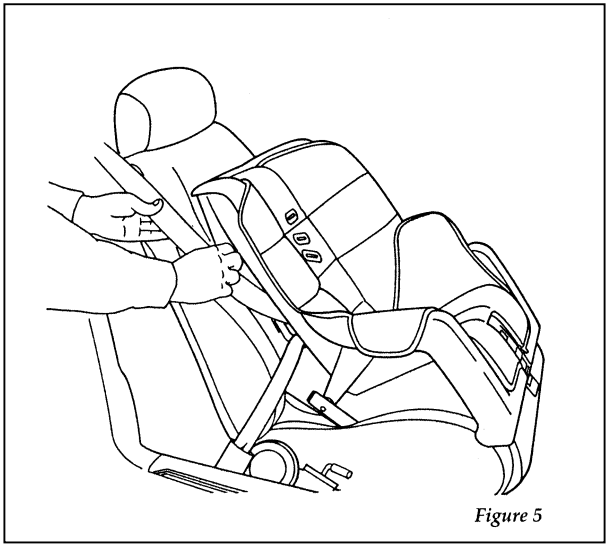

Figure 5

Allowing shoulder belt to retract

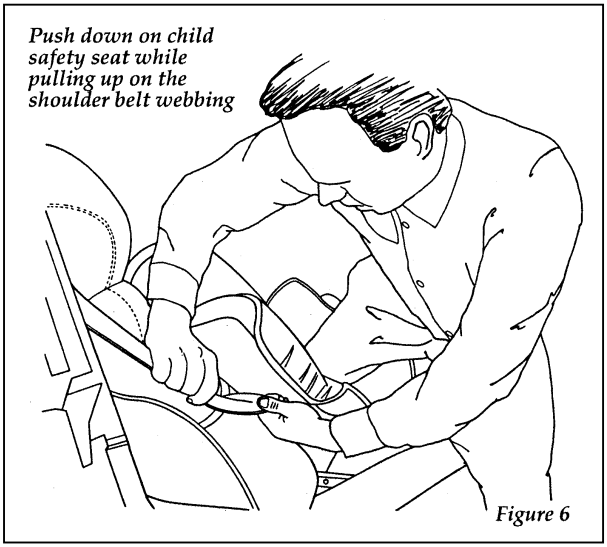

Figure 6

Removing slack from belt

https://truckmanualshub.com/

7. Before placing the child in the child seat, forcibly tilt the seat from side to side, and tug it forward to make sure that the seat is securely held in place. See Figure 7.

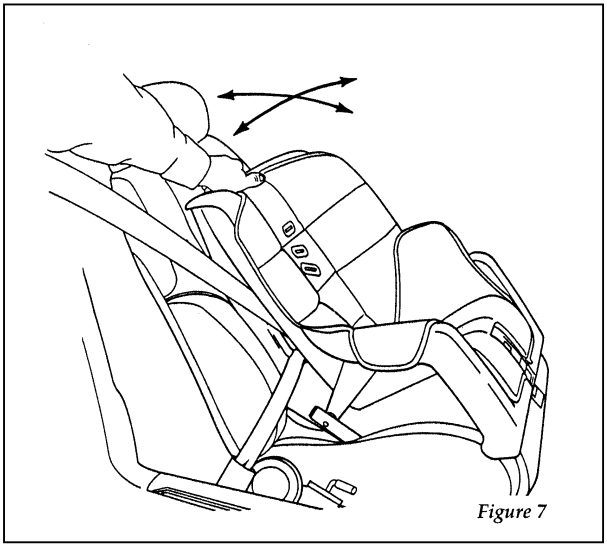

Checking that the seat is secure

https://truckmanualshub.com/

8. Double check that the retractor is in the automatic locking mode. Try to pull more belt out of the retractor. If you cannot, the belt is in the automatic locking mode. See Figure 8.

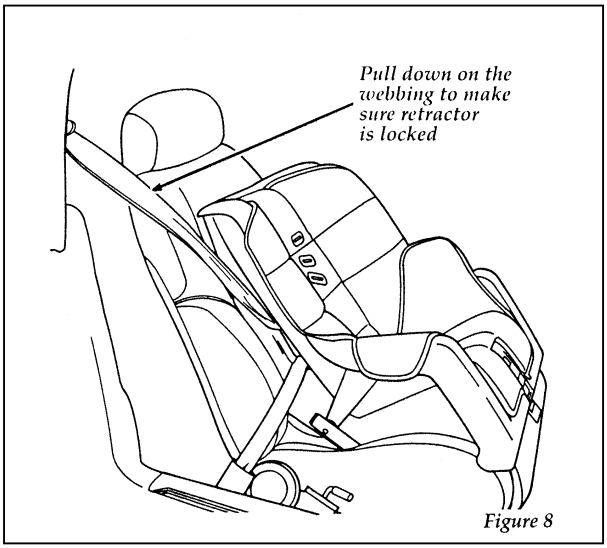

Figure 8

Checking the retractor

9. Check to make sure that the child seat is properly secured prior to each use. If the retractor is not locked, repeat steps 4 through 7.

To remove the retractor from automatic lock mode, allow webbing to retract fully to its stowed position and the retractor will automatically switch back to the vehicle sensitive locking mode for normal adult usage.

https://truckmanualshub.com/

Installing a Child Safety Seat at the Center Seating Position with Locking Adjustable Lap Belt

1. Lengthen the lap belt. To lengthen the belt, hold the tongue so that its bottom is perpendicular to the direction of webbing while sliding the tongue up the webbing.
2. Place the child safety seat in the center seating position.
3. Route the tongue and webbing through the child seat according to the child seat manufacturer's instructions.
4. Insert the belt tongue into the proper buckle for the center seating position until you hear a snap and feel it latch. Make sure the tongue is securely fastened to the buckle by pulling on tongue.
5. Push down on the child seat while pulling on the loose end of the lap belt webbing to tighten the belt.
6. Before placing the child into child seat, forcibly tilt the child seat from side-to-side and in forward directions to ensure that the seat is held securely in place. If the child seat moves excessively, repeat steps 5 through 6, or properly install the child seat in a different seating position.

https://truckmanualshub.com/

Attaching Safety Seats With Tether Straps

General Instructions

Some manufacturers make safety seats that include an upper tether strap that goes over the seatback and attaches to an anchoring point. Other manufacturers offer the tether strap as an accessory. Contact the manufacturer of your child safety seat for information about ordering a tether strap.

You can install a tether strap anchor bracket to the cab inner back panel by using a tether anchor bracket kit (613D20) available at no charge from any Ford dealer.

Read and carefully follow the instructions provided with the kit for installation of the child tether strap anchor.

Follow the child seat manufacturer's instructions to attach the tether strap to the tether bracket.

Ford recommends placement of tethered safety seats in a rear seating position (Crew Cab and Super Cab with forward facing rear seat only) with the tether strap installed to the tether anchoring point as shown in the instructions provided with the child tether strap anchor kit.

⚠WARNING
Only use the tether attachment hole locations shown in the illustrations. The tether anchor may not perform properly if the wrong mounting location is used.

https://truckmanualshub.com/

If a tethered seat is installed in the front seat, Ford recommends placement of the tethered safety seat in the center front seating position, with the tether strap secured to the center rear lap belt tongue or to the webbing of the buckled center rear lap belt behind the child safety seat.

The rear lap/shoulder safety belts should not be used to secure the tether strap of a safety seat located in the front seat.

⚠WARNING
Follow these precautions to decrease the chance of injury in an accident.

In SuperCabs equipped with Center Facing Jump Seats, the tether strap anchor bracket should be installed only at the center of the cab's back panel with the child seat in the front center seating position. Installing an anchor bracket at the right rear of the cab may increase risk of injury to an occupant of the right rear center facing jump seat in the event of a collision or sudden stop. If a tethered child seat is installed in the right front seating position, secure the tether strap to the webbing of the buckled right rear lap belt.

⚠WARNING
Do not install a child seat in a center facing jump seat.

https://truckmanualshub.com/

Safety Belt Maintenance

Check your safety belt system periodically to make sure that it works properly and isn't damaged. If the webbing shows any wear, nicks or cuts, have it examined by a qualified technician to determine if replacement is necessary. Always have your safety belt system checked after a collision by a qualified technician.

All safety belt assemblies, including retractors, buckles, front seat belt buckle support assemblies (slide bar) (if so equipped), child safety seat tether bracket assemblies (if so equipped), and attaching hardware, should be inspected after any collision. Ford recommends that all safety belt assemblies used in vehicles involved in a collision be replaced. However, if the collision was minor and a qualified technician finds that the belts do not show damage and continue to operate properly, they do not need to be replaced. Safety belt assemblies not in use during a collision should also be inspected and replaced if either damage or improper operation is noted.

https://truckmanualshub.com/

Starting

Fuel-Injected Engines

NOTE: For owners of diesel-powered vehicles, refer to the *Diesel Engine Owners Guide Supplement* for information on starting your vehicle.

When starting a fuel-injected engine, **the most important thing to remember is to avoid pressing down on the accelerator before or during starting**. Only use the accelerator when you have problems getting your vehicle started. See *Starting Your Engine* in this chapter for details about when to use the accelerator while you start your vehicle.

Because your vehicle's engine is electronically controlled by a computer, some control conditions are maintained by power from the battery. If you ever disconnect the battery, install a new battery, or experience a dead battery, you must allow the computer to "relearn" its idle conditions before your vehicle will idle at its best. To let the engine do this, apply the parking brake, put the gearshift in P (Park) (automatic transmission) or Neutral (manual transmission), turn off all the accessories, and start the vehicle. Let the engine idle for at least one minute.

If you do not let the engine relearn its idle, the idle quality of your vehicle may be adversely affected until the idle is relearned. Your vehicle will eventually relearn its idle while you drive it, but it takes much longer than if you use the previous procedure.

https://truckmanualshub.com/

Starting your vehicle

Preparing to Start Your Vehicle

⚠WARNING
Do not start your vehicle in a closed garage or in other enclosed areas. Exhaust fumes can be toxic. Always open the garage door before you start the engine.

Before you start your vehicle, do the following:

1. Make sure all occupants in the vehicle buckle their safety belts. See *Safety Restraints* in the Index for more details.
2. Make sure the headlamps and other accessories are turned off when starting.
3. **If you have an automatic transmission,** make sure that the gearshift lever is in P (Park) and the parking brake is set before you turn the key.
4. **If you have a manual transmission,** make sure that the parking brake is fully set, push the clutch pedal to the floor, and put the gearshift into Neutral before you turn the key. (Remember, the starter will operate only if the clutch pedal is pushed in all the way).

Testing the Warning Lights

Before you start your vehicle, you should test the warning lights on the instrument panel to make sure that they work. Refer to the *Instrumentation* chapter.

If your Brake Warning Light does light up with the key in the ON position, you may not have fully released the parking brake or the brake fluid may be low.

https://truckmanualshub.com/

Starting Your Engine

To start your engine:

1. Follow the steps under *Preparing to Start Your Vehicle* at the beginning of this section.
2. Turn the ignition key to the ON position.
3. DO NOT depress the accelerator pedal when starting your engine. DO NOT use the accelerator while the vehicle is parked.
4. Turn the key to the START position (cranking) until the engine starts. Allow the key to return to the ON position after the engine has started.

   If you have difficulty in turning the key, rotate the steering wheel slightly because it may be binding.

For a cold engine:

- ❑ At temperatures **10˚F (-12˚C) and below:** If the engine does not start in **fifteen (15) seconds** on the first try, turn the key to OFF, wait approximately ten (10) seconds so you do not flood the engine, then try again.
- ❑ At temperatures **above 10˚F (-12˚C):** If the engine does not start in **five (5) seconds** on the first try, turn the key to OFF, wait approximately ten (10) seconds so you do not flood the engine, then try again.
- ❑ Do not hold the key in the START position for more than **fifteen (15) seconds** at a time.

https://truckmanualshub.com/

For a warm engine:

- ❑ Do not hold the key in the START position for more than **five (5) seconds** at a time. If the engine does not start within five (5) seconds on the first try, turn the key to the OFF position. Wait a few seconds after the starter stops, then try again.

Whenever you start your vehicle, release the key as soon as the engine starts. Excessive cranking could damage the starter.

After you start the engine, let it idle for a few seconds. Keep your foot on the brake pedal and put the gearshift lever in gear. Release the parking brake. Slowly release the brake pedal and drive away in the normal manner.

NOTE: Your vehicle is equipped with a brake-shift interlock feature. This feature prevents you from shifting from P (Park) unless you have the brake pedal depressed. (The ignition must be in the ON position.) If you cannot shift from P (Park) with the brake pedal depressed:

1. Apply the parking brake.
2. Remove the key.
3. Insert the key and rotate it one position clockwise (ignition in the OFF position).
4. Apply the brake pedal and shift to N (Neutral). (If the vehicle is shifted back to P [Park], you must repeat the previous steps.)
5. Start the vehicle.

https://truckmanualshub.com/

If you need to shift out of P (Park) by using the alternate procedure described above, it is possible that a fuse has blown and that your brakelamps may also not be functional. Please refer to the chapter titled *Roadside Emergencies* in this Owner Guide for instructions on checking and replacing fuses.

⚠WARNING

DO NOT DRIVE YOUR VEHICLE UNTIL YOU VERIFY THAT THE BRAKELAMPS ARE WORKING.

For cold or warm engines:

If the engine still does not start after two attempts:

1. Turn the ignition key to the OFF position.
2. Press the accelerator all the way to the floor and hold it.
3. Turn the ignition key to the START position.
4. Release the ignition key when the engine starts.
5. Release the accelerator gradually as the engine speeds up.

If the engine still does not start, the fuel pump shut-off switch may have been activated. For directions on how to reset the switch see *Fuel Pump Shut-Off Switch* in the index.

A computer system controls the engine's idle speed. When you start your vehicle, the engine's idle speed normally runs higher than when it's warmed up. These faster engine speeds will make your vehicle move slightly faster than its

https://truckmanualshub.com/

normal idle speed. It should, however, slow down after a short time. If it does not, have the idle speed checked.

If the engine idle speed does not slow down automatically, do not allow your vehicle to idle for more than 10 minutes. Have the vehicle checked.

⚠WARNING

Extended idling at high engine speeds can produce very high temperatures in the engine and exhaust system, creating the risk of fire or other damage.

⚠WARNING

Do not park, idle, or drive your vehicle in dry grass or other dry ground cover. The emission system heats up the engine compartment and exhaust system, which can start a fire.

If you consistently start your vehicle in subzero temperatures, use an engine block heater (if your vehicle has this option).

Engine Block Heater (If equipped)

Engine block heaters are strongly recommended if you live in a region where temperatures reach -10˚F (-23˚C) or below. An engine block heater warms the engine coolant, which improves starting, warms up the engine faster, and allows the heater-defrost system to respond quickly.

⚠WARNING

To prevent electrical shock, do not use your heater with ungrounded electrical systems or two-pronged (cheater) adapters.

https://truckmanualshub.com/

For best results, plug the heater in at least three hours before you start your vehicle. Using the heater for longer than three hours will not damage the engine, so you can plug it in at night to start your vehicle the following morning.

NOTE: Be sure to disconnect the engine block heater before driving your vehicle.

Guarding Against Exhaust Fumes

Carbon monoxide, although colorless and odorless, is present in exhaust fumes. Take precautions to avoid its dangerous effects.

⚠WARNING

Do not start your vehicle in a closed garage or in other enclosed areas. Exhaust fumes can be toxic. Always open the garage door before you start the engine.

⚠WARNING

If you smell exhaust fumes inside your vehicle, have your dealer inspect your vehicle immediately. Do not drive if you smell exhaust fumes.

https://truckmanualshub.com/

Have the exhaust and body ventilation systems checked whenever:

- ❑ your vehicle is raised for service
- ❑ the sound of the exhaust system changes
- ❑ your vehicle has been damaged in a collision

Improve your ventilation by keeping all air inlet vents clear of snow, leaves, and other debris.

If the engine is idling while you are stopped in an open area for long periods of time, open the windows at least one inch (2.5 cm). Also, adjust the heating or air conditioning system to bring in outside air.

- ❑ HEATING — Set fan speed at MEDIUM or HIGH, the function selector knob on VENT, FLOOR, MIX, or the DEFROST symbol and the temperature control knob on any desired position.
- ❑ AIR CONDITIONING — Set the fan speed at MEDIUM or HIGH, the function selector knob on NORM or VENT and the temperature control knob on any desired position.

https://truckmanualshub.com/

Roadside Emergencies

If the Engine Cranks but Does Not Start or Does Not Start After a Collision

Fuel Pump Shut-Off Switch

If the engine cranks but does not start or does not start even after a small collision, the fuel pump shut-off switch may have been activated. The shut-off switch is a device intended to stop the fuel pump when your vehicle has been involved in a substantial jolt.

Once the shut-off switch is activated, you must reset the switch by hand before you can start your vehicle.

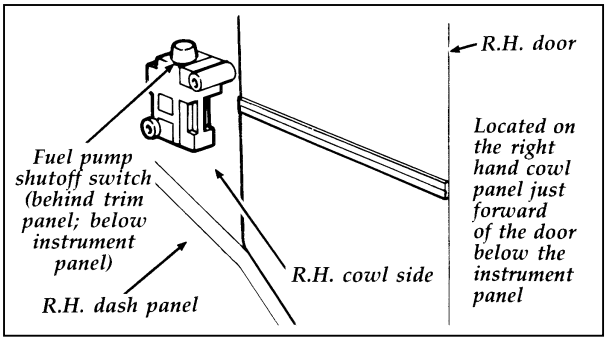

Fuel pump shut-off switch location

https://truckmanualshub.com/

Driving

Procedures for driving your vehicle will vary depending on which type of transmission your vehicle has.

- ❑ an Electronic 4-speed Automatic Transmission (E4OD)
- ❑ a manual transmission

Your vehicle is equipped with an Electronic Powertrain Control Module that limits engine and/or vehicle speeds with a cut-out mode to promote durability.

Brakes

Front Disc Brakes

F-250/350

The front disc brakes are self-adjusting. They do not require service other than periodic inspection for pad wear.

Rear Drum Brakes

The rear drum brakes are self-adjusting. Automatic adjustment occurs when the brakes are applied while "backing up." If normal operation does not include much backing, adjust the brakes when they seem "low," using the procedure under *If Brakes Do Not Grip Well or Pedal is "Low"* in this chapter.

https://truckmanualshub.com/

Rear Disc Brakes (F-Super Duty and F-Series Stripped Chassis Only)

The rear disc brakes are self-adjusting. They do not require service other than periodic lubrication of the caliper slide rails and inspection for pad wear.

Hydraulic Power Brakes

The hydraulic brake system is made up of two independent hydraulic circuits. One hydraulic circuit supplies fluid to the front disc brakes and the other hydraulic circuit supplies fluid to the rear drum brakes. These two circuits are supplied by a common hydraulic brake fluid reservoir, with a fluid level sensor.

The brake light in the instrument cluster will light for low brake fluid in the common brake fluid reservoir.

⚠WARNING
An increase in pedal travel will result in reduced braking capability. The brake system should be checked immediately.

Rear Anti-lock Brakes

Except for F-Super Duty and F-Series Commercial and Motorhome Stripped Chassis, F-Series Light Trucks are equipped with a Rear Antilock Brake System. This system prevents at least one and often both rear wheels from locking up when the brakes are applied in a panic stop, for example.

Even with the Anti-lock Brake System, you should be careful when braking. Front brake lock up on any surface, even on smooth pavement causes loss of steering control. Heavy braking on roads with loose surfaces such as

https://truckmanualshub.com/

snow or gravel, or severe pavement irregularities could also cause you to lose steering control of your vehicle.

⚠WARNING

If the anti-lock brake system warning light remains on or comes on while driving, have the braking system checked by a qualified service technician as soon as possible.

NOTE: If a fault occurs in the anti-lock system, and the brake warning light is not lit, the anti-lock system is disabled but normal brake function remains operational.

If Brakes Do Not Grip Well or Pedal is "Low" (F-250/350 Only)

If brakes do not grip well, it may indicate the rear drum brakes need adjustment. To do this, drive the vehicle in reverse at 5 mph (8 km/h) on level, dry pavement. Stop the vehicle by firmly applying the brakes. Repeat this procedure four or five times.

If during normal operation the brake pedal seems "low", it may indicate the need for a brake system inspection and/or service. You should have your brakes checked as soon as possible.

Occasional brake squeal during light to moderate stops does not affect the function of the brake system and is normal. However, if the squeal becomes annoyingly loud or increases significantly in frequency of occurrence, return the vehicle to your dealer for inspection.

https://truckmanualshub.com/

⚠WARNING
Modifications to the suspension spring rates and/or vehicle ride height may adversely affect vehicle stopping ability.

If Brakes Pull

❑ Check tire pressure.

❑ Perform the self-adjustment procedure described under *If Brakes Do Not Grip Well or Pedal is "Low."*

If pull occurs during the first 500 miles (800 km), make 10 moderately fast stops from 40 mph (65 km/h) and then perform the self-adjustment procedure above. It may be necessary to repeat this operation to properly seat new brake linings and pads.

Stopping Distances

Stopping distances vary with different loads and driving conditions. Use caution when encountering new conditions and acquaint yourself with vehicle performance. Take full advantage of engine braking power when slowing down.

Applying the Brakes

Apply the brake pedal gradually. Use the "squeeze" technique — push on the brake pedal with a steadily increasing force. This allows the wheels to continue to roll while you are slowing down, which lets you steer properly.

Do not drive with your foot resting on the brake pedal. This will increase your vehicle's stopping distance and may also cause brake damage.

https://truckmanualshub.com/

⚠WARNING

If you are driving down a long or steep hill, shift to a lower gear. Do not apply your brakes continuously, as they may overheat and become less effective.

Using the Parking Brake

The parking brake should be used whenever you park your vehicle.

The parking brake pedal is suspended just below the bottom of the instrument panel to the left of service brake and/or clutch pedals. To set the parking brake while parking your vehicle, press the brake pedal with your right foot and hold it while you push the parking brake pedal down firmly and fully with your left foot.

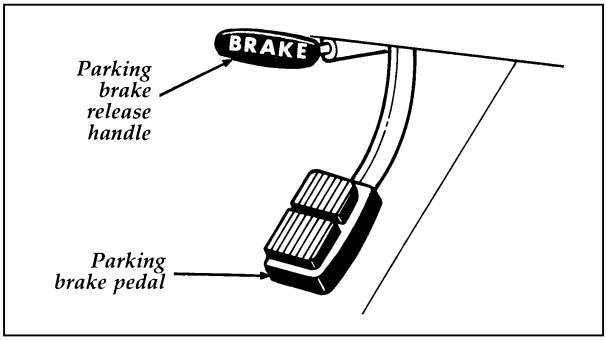

Parking Brake

⚠WARNING

Always set the parking brake fully and make sure that the gearshift is securely latched in P (Park) (automatic transmission) or in 1 (First) (manual transmission).

https://truckmanualshub.com/

When the transfer case is in the N (Neutral) position, the engine and transmission are disconnected from the rest of the driveline. Therefore, the vehicle is free to roll even if the automatic transmission is in P (Park) or the manual transmission is in gear.

⚠WARNING

Do not leave the vehicle unattended with the transfer case in the N (Neutral) position. Always set the parking brake fully and turn off the ignition when leaving the vehicle.

To release the parking brake, press the service brake pedal with your right foot and pull the parking brake release lever.

⚠WARNING

If the parking brake is fully released, but the Brake System light remains on, have the brakes checked immediately. They may not be working properly.

The parking brake is not designed to stop a moving vehicle, but you can use the parking brake to stop your vehicle in an emergency if the normal brakes fail. However, since the parking brake applies only the rear brakes, the stopping distance will increase greatly and the handling of your vehicle will be adversely affected.

https://truckmanualshub.com/

Steering Your Vehicle

Your vehicle comes with power steering. Power steering uses energy from the engine to help steer your vehicle.

If the amount of effort needed to steer your vehicle changes at a constant vehicle speed, have the power steering system checked. If the power steering system breaks down (or if the engine is turned off), you can steer the vehicle manually but it takes more effort.

Never hold the steering wheel to the extreme right or left for more than five seconds if the engine is running. This can damage the power steering pump.

NOTE: After any severe impact such as striking large potholes, sliding into curbs on icy roads, or a collision involving the front end, observe the steering wheel alignment. If the spokes of the steering wheel seem to be in a different position while going straight down the road, have the front suspension and steering checked for possible damage.

Automatic Transmission Operation (E4OD)

The E4OD transmission is an electronically controlled four speed automatic transmission with overdrive. Transmission operation is controlled by the Powertrain Control Module (PCM).

The PCM will automatically adjust transmission operation to make up for varying conditions. Several sensors located on the engine and transmission such as Throttle Position, Engine Speed, Vehicle Speed and Transmission

https://truckmanualshub.com/

Temperature are used by the PCM to shift the transmission into a higher or lower gear when required for the best performance and fuel economy. For example, you may notice that the transmission will upshift to a higher gear more quickly when the vehicle is first driven and has not reached normal operating temperature.

The PCM also controls the transmission's Torque Converter Clutch to further raise vehicle performance and fuel economy. The Torque Converter Clutch will engage when the transmission operating temperature and other conditions determined by the PCM have been met. Engagement of the clutch may be noted as a decrease in engine speed after an upshift has completed or when the driver has depressed the throttle while driving at a steady road speed.

To help in troubleshooting, the PCM continually performs self-tests on the electronic control system and if any faults are detected, will store them in memory. The Transmission Control Indicator Light (TCIL), which is located on the gearshift lever, may flash steadily if a malfunction has been detected. If the TCIL is flashing, contact your Ford dealer as soon as possible. If this condition persists, damage to the transmission could occur.

NOTE: The word "OFF" located on the end of the gearshift lever is the transmission control indicator light (TCIL).

Putting Your Vehicle in Gear

Your vehicle's gearshift is on the steering column. The Transmission Control Switch and indicator light are located on the end of the gearshift lever. You can put the gearshift in any of the several positions.

https://truckmanualshub.com/

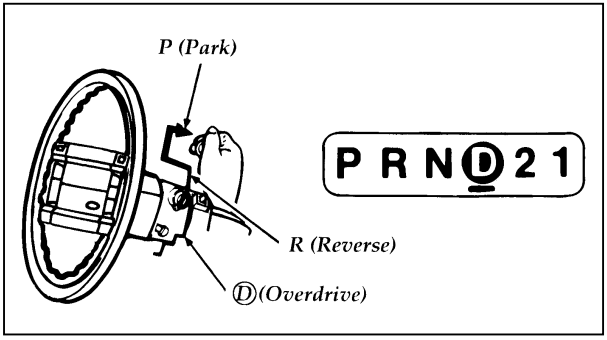

The positions of the column-mounted gearshift

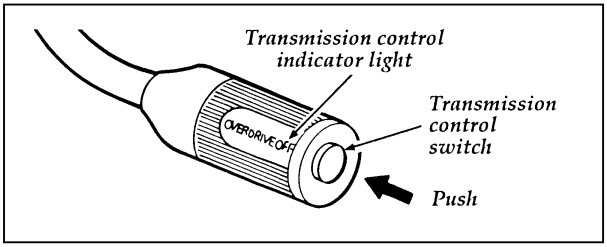

Transmission Control Switch and indicator light (located on the gearshift lever)

⚠WARNING

Hold the brake pedal down while you move the gearshift lever from position to position. If you do not hold the brake pedal down, your vehicle may move unexpectedly and injure someone.

Once you place the gearshift securely into position, gradually release the brake pedal and use the accelerator as necessary.

https://truckmanualshub.com/

NOTE: Your vehicle is equipped with a brake-shift interlock feature. This feature prevents you from shifting from P (Park) unless you have the brake pedal depressed. (The ignition must be in the ON position.) If you cannot shift from P (Park) with the brake pedal depressed:

1. Apply the parking brake.
2. Remove the key.
3. Insert the key and rotate it one position clockwise (ignition in the OFF position).
4. Apply the brake pedal and shift to N (Neutral). (If the vehicle is shifted back to P [Park], you must repeat the previous steps.)
5. Start the vehicle.

If you need to shift out of P (Park) by using the alternate procedure described above, it is possible that a fuse has blown and that your brakelamps may also not be functional. Please refer to the chapter titled *Roadside Emergencies* in this Owner Guide for instructions on checking and replacing fuses.

⚠WARNING
DO NOT DRIVE YOUR VEHICLE UNTIL YOU VERIFY THAT THE BRAKELAMPS ARE WORKING.

R (Reverse)

With the gearshift in the R (Reverse) position, the vehicle will move backward. You should always come to a complete stop before shifting into or out of R (Reverse).

https://truckmanualshub.com/

Driving

When to use Ⓓ (Overdrive)

This is the normal driving position. As the vehicle picks up speed, automatic upshifts to second, third and fourth gears will occur when Ⓓ Overdrive is chosen on the selector and the transmission control switch has not been pressed. The transmission will shift into the correct gear when the right speed is achieved, for the accelerator pedal position you have chosen.

When to use Drive

You will note that there isn't a drive position on your gearshift indicator. However, you will find a Transmission Control Switch and an indicator light labeled "Overdrive" located on the end of the gearshift lever. Press this switch and the word "OFF" will illuminate on the shift lever knob. With the word "OFF" illuminated, the transmission will operate in gears one through three. Operating in the Overdrive "OFF" mode gives more engine braking than Overdrive and is useful for descending hills or when towing.

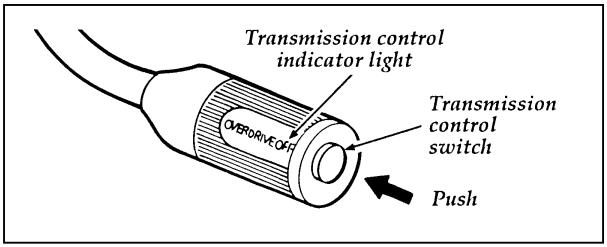

Transmission Control Switch and indicator light (located on the gearshift lever)

https://truckmanualshub.com/

To return the transmission to the normal Ⓓ Overdrive operation, press the transmission control switch again. The Transmission Control Indicator Light will not be illuminated when Overdrive operation resumes. This switch may be used to select O/D ON or O/D OFF any time the vehicle is being driven.

When starting your vehicle, the overdrive system will automatically be in the normal overdrive mode.

If the Transmission Control Indicator Light is flashing on and off steadily, a transmission system malfunction was detected. The transmission will operate in a failure management mode and may have harsh engagements, firm shift feel, or abnormal shift schedule. If this condition persists, damage to the transmission could occur. Contact your dealer as soon as possible.

When to use 2 (Second)

Use 2 (Second) to start-up on slippery roads or to provide additional engine braking on downgrades. This position provides 2 (Second) gear operation only.

When to use 1 (Low)

Use 1 (Low) to provide maximum engine braking on steep downgrades. Upshifts from 1 (Low) can be made by manually shifting to 2 (Second) or Ⓓ (Overdrive). Selection of 1 (Low) gear provides only low gear operation from start-up. Selection of 1 (Low) while at higher speeds provides a shift to second gear, and a shift to first gear will occur after the vehicle decelerates to the proper speed.

https://truckmanualshub.com/

P (Park)

Always come to a complete stop before you shift into P (Park). This position locks the transmission and prevents the rear wheels from turning. To securely latch the gearshift in the P (Park) position, pull it toward you, push it completely counterclockwise against the stop, and then push it toward the instrument panel.

The gearshift is securely latched in P (Park) if you cannot rotate it in a clockwise direction without lifting it toward you.

⚠WARNING

Always set the parking brake fully and make sure the gearshift is latched in P (Park). Turn off the ignition whenever you leave your vehicle.

When the transfer case is in the N (Neutral) position, the engine and transmission are disconnected from the rest of the driveline. Therefore, the vehicle is free to roll even if the automatic transmission is in P (Park) or the manual transmission is in gear.

⚠WARNING

Do not leave the vehicle unattended with the transfer case in the N (Neutral) position. Always set the parking brake fully and turn off the ignition when leaving the vehicle.

⚠WARNING

Never leave your vehicle unattended while it is running.

https://truckmanualshub.com/

Forced Downshifts

To gain extra acceleration in Ⓓ Overdrive or Drive (O/D OFF), push the accelerator to the floor. The transmission will automatically downshift to the appropriate gear: third, second or first.

Increasing the engine speed above idle without vehicle movement (such as holding the brake) in a forward or reverse gear causes transmission stall.

NOTE: Continued operation in the stall condition can result in transmission overheat, malfunction or fluid expulsion.

Driving with a Manual Transmission

Using the Clutch

Make sure the gearshift lever is in the N (Neutral) position and your right foot is holding down the brake pedal. Then press the clutch pedal to the floor with your left foot. Manual transmission vehicles have a starter interlock switch. The starter will not crank until the clutch pedal is fully depressed. Start the engine and allow it to idle for a few seconds. Move the gearshift into 1 (First) or R (Reverse).

To move the vehicle, release the clutch slowly and at the same time press down slowly on the accelerator so that the vehicle accelerates.

Do not drive with your foot resting on the clutch pedal and do not use the clutch to hold your vehicle at a standstill while waiting on a hill. These actions will seriously reduce clutch life.

https://truckmanualshub.com/

Driving with your foot resting on the clutch may cause the vehicle to jerk sharply when pressing or removing your other foot from the accelerator.

Shifting the Gears

The gearshift for a manual transmission is mounted on the floor. The gearshift pattern consists of seven positions: Neutral, five forward gears, and Reverse.

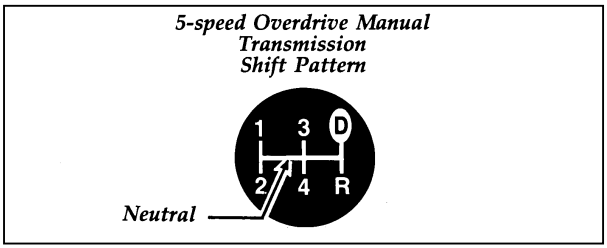

5-Speed Overdrive manual transmission shift pattern

Backing up

To shift into R (Reverse):

1. Push the clutch pedal in all the way to the floor and hold it. If you do not hold the clutch pedal in all the way, you may hear a grinding noise when you shift.

2. Bring your vehicle to a complete stop. Failure to do so may cause synchronizer teeth damage, reducing the useful life of your transmission.

https://truckmanualshub.com/

3. Put the gearshift in Neutral and wait at least 3 seconds before shifting into R (Reverse) to prevent a grinding noise. Do not release the clutch.

4. Push the gearshift all the way to the right and pull it back into Reverse.

With the 5-speed transmission you can engage R (Reverse) only by moving the gearshift from the left of 3 (Third) and 4 (Fourth) gears before you shift into R (Reverse). This is a special lockout feature that protects you from accidentally shifting into R when you downshift from 5 (Fifth) gear.

5. Once R (Reverse) is engaged, slowly release the clutch pedal from the floor.

If R (Reverse) is not engaged, continue to push the clutch pedal in while you put the gearshift back into Neutral. Then, release the clutch pedal for a moment and repeat steps 2 through 5.

Upshifting/downshifting

Upshift and Downshift at the speeds that are specified in the charts available for your engine and transmission.

https://truckmanualshub.com/

Recommended Shift Speeds

5.8L & 7.5L Engine with 5-Speed H.D. Manual Overdrive Transmission (ZF Transmission)

Upshifts When Accelerating**		
Shift from:	**Transfer Case Position:**	
	2H or 4H	**4L**
First to Second	10 mph (16 km/h)	4 mph (6 km/h)
Second to Third	15 mph (24 km/h)	6 mph (10 km/h)
Third to Fourth	25 mph (40 km/h)	10 mph (16 km/h)
Fourth to Overdrive	40 mph (64 km/h)	16 mph (26 km/h)

Maximum Downshift Speeds*		
Shift from:	**Transfer Case Position:**	
	2H or 4H	**4L**
Overdrive to Fourth	45 mph (72 km/h)	22 mph (35 km/h)
Fourth to Third	35 mph (56 km/h)	14 mph (23 km/h)
Third to Second	20 mph (32 km/h)	8 mph (13 km/h)
Second to First	5 mph (8 km/h)	0 mph (0 km/h)

*Downshift at lower speeds when driving on slippery surfaces.

**If your vehicle is equipped with an Upshift Indicator, shift at speeds indicated when engine is warmed up.

NOTE: Refer to the *Diesel Engine Owner's Guide Supplement* **for shift speed information on vehicles equipped with 7.3L diesel engines.**

When you slow down or climb a steep hill, always downshift before the engine starts to lose power. Downshifting reduces the chance of stalling and gives your vehicle better acceleration to increase speed again.

When you drive down steep hills, downshifting helps you keep a safe speed and helps prevent unnecessary wear on the brakes.

https://truckmanualshub.com/

When you come to a stop, do not downshift through each gear. Disengage the clutch and use the brake as necessary. Downshifting through the gears decreases your vehicle's fuel economy.

⚠WARNING

Continued use of a damaged or worn clutch, prolonged clutch slippage or downshifting at excessive speeds can result in a failure of the engine, transmission or clutch components.

Transmission Function

Upshift at the speeds specified in the chart available for your engine and transmission. All forward gears are synchronized allowing you to shift into them with your vehicle in motion. The clutch pedal should be fully depressed when shifting.

NOTE: Shifting during extremely low RPMs can result in a momentary audible rattle which disappears as vehicle RPMs are increased. Shifting at higher speeds will eliminate this sound.

Parking

To park your vehicle, apply the service brake pedal, and shift into N (Neutral) while still maintaining pressure on the service brake. Set the parking brake fully. Shift into first and turn off the ignition.

⚠WARNING

Do not park your vehicle in Neutral, it may move unexpectedly and injure someone. Use 1 (First) gear and set the parking brake fully.

https://truckmanualshub.com/

When the transfer case is in the N (Neutral) position, the engine and transmission are disconnected from the rest of the driveline. Therefore, the vehicle is free to roll even if the automatic transmission is in P (Park) or the manual transmission is in gear.

⚠WARNING

Do not leave the vehicle unattended with the transfer case in the N (Neutral) position. Always set the parking brake fully and turn off the ignition when leaving the vehicle.

Four-Wheel Drive (4WD) System (If equipped)

When you select the 4WD mode, your light truck uses all four wheels to power itself. This increases traction, enabling you to drive your 4x4 over terrain and road conditions two-wheel drive vehicles cannot.

Power is supplied to all four wheels through a transfer case that allows you to select four-wheel drive when necessary. Methods for engaging and disengaging 4WD and low range will depend on which system your vehicle has.

https://truckmanualshub.com/

4x4 Systems — Lever Operated

The lever operated transfer case can be placed into four positions. The 2H position is the two-wheel drive position in which power is delivered only to the rear axle. The 4H position provides four-wheel drive with power delivered to the front and rear axles for increased traction. The 4L position provides four-wheel drive with power delivered to the front and rear axles when the above average power is required at reduced speeds. In the N (neutral) position, there is no power delivered to either axle.

When the transfer case is in the N (Neutral) position, the engine and transmission are disconnected from the rest of the driveline. Therefore, the vehicle is free to roll even if the automatic transmission is in P (Park) or the manual transmission is in gear.

⚠WARNING

Do not leave the vehicle unattended with the transfer case in the N (Neutral) position. Always set the parking brake fully and turn off the ignition when leaving the vehicle.

https://truckmanualshub.com/

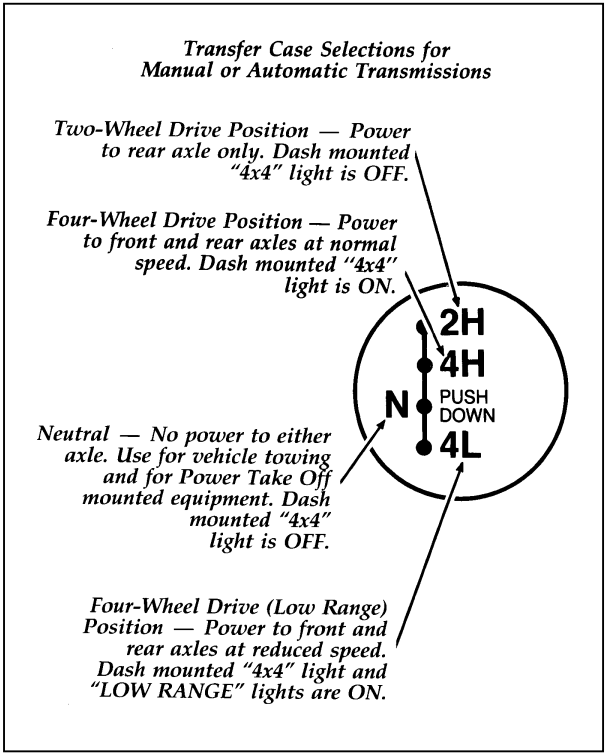

Transfer case selections

Four-wheel drive operation (4H or 4L) on dry pavement is not recommended. Operating the vehicle in four-wheel drive on dry pavement will increase tire wear, decrease fuel economy, and make four-wheel drive disengagement difficult for the transfer case.

https://truckmanualshub.com/

NOTE: All transfer cases on F-350 4x4 trucks are equipped with an opening for a power take-off (PTO). If this opening is used for a transfer case mounted PTO, additional transfer case lubricant is required. Refer to the Refill Capacities section for lubricant fill requirements. Vehicles equipped with an E4OD automatic transmission and a 7.3L diesel engine will require exhaust modification for PTO clearance. For vehicles equipped with an E4OD automatic transmission: If a transfer case mounted PTO is operated with the transfer case shift lever in neutral, a Vehicle Speed Sensor Self-test error may be set in the Powertrain Control Module (PCM) causing the transmission to function abnormally, and the Transmission Control Indicator Light (TCIL) may flash on and off repeatedly. Normal transmission function should return when the transfer case has been engaged and the vehicle is driven. If the TCIL continues to flash or the transmission continues to operate abnormally contact your Ford dealer as soon as possible.

4x4 system indicator lights

A 4x4 light and a LOW RANGE light are located at the lower right of the instrument cluster.

- ❑ 2H position — Neither the 4X4 or the LOW RANGE lights are lit.
- ❑ 4H position — Only the 4x4 light is lit.

https://truckmanualshub.com/

- ❑ N position — Neither the 4x4 or LOW RANGE lights are lit.
- ❑ 4L position — Both the 4x4 and the LOW RANGE lights are lit.

Lever Operated System With Automatic Locking Hubs

To shift from 2H to 4H:

Stop the vehicle and move the transfer case shift lever straight back to the 4H position, the automatic locking hubs will engage when the vehicle is driven. When the automatic locking hubs are engaged, shifts between 2H and 4H may take place at any speed.

- ❑ The automatic locking hubs may disengage in 2H if the vehicle's direction is momentarily reversed, or the vehicle is allowed to roll slightly in the opposite direction. If a grinding noise occurs when shifting from 2H to 4H while the vehicle is moving, one or both of the automatic locking hubs have been disengaged and the transfer case shift lever should be switched back to the 2H position. To shift back into 4H, stop the vehicle and move the transfer case shift lever straight back to the 4H position.
- ❑ When the vehicle is stopped while in 4H and the vehicle's direction is reversed from the previous direction, the automatic locking hubs momentarily disengage and then re-engage. The automatic locking hubs may click as they automatically engage in the new direction.

https://truckmanualshub.com/

To shift from 4H to 2H:

Move the transfer case shift lever straight forward to the 2H position. This can be done at any speed. To disengage the automatic locking hubs, operate the vehicle in 2H in the opposite direction for approximately 10 feet (3 meters).

For example:

> If you were driving the vehicle forward in 4H, the automatic locking hubs will disengage the next time the vehicle is driven in reverse in 2H for approximately 10 feet (3 meters).
>
> If you were driving the vehicle in reverse in 4H, the automatic locking hubs will disengage the next time the vehicle is driven forward in 2H for approximately 10 feet (3 meters).

— Operating in 2H with the hubs locked increases fuel consumption, noise, vibration, and wear. For prolonged 2H operation on dry pavement, disengage the automatic locking hubs.

To shift between 4H and 4L:

Stop the vehicle and place the automatic transmission into NEUTRAL or depress the clutch on manual transmission vehicles. Push the transfer case shift knob down (toward the ground) and at the same time pull or push the lever straight forward or rearward (depending on the desired position, 4H or 4L) in order to shift the transfer case. This shift should be in one continuous motion without pausing in the N (neutral) position. Pausing in the neutral position can result in gear clash and difficult shifting. If, while shifting between 4H and 4L, the transfer

https://truckmanualshub.com/

case gets stuck in the N (neutral) position or is difficult to shift into either 4H or 4L, it may be necessary to let the vehicle roll slightly and/or turn off the engine (particularly on vehicles equipped with automatic transmissions).

To shift into and out of N (neutral)

To shift into N (neutral), stop the vehicle and engage the parking brake. Place the automatic transmission into NEUTRAL or depress the clutch on manual transmission vehicles. From either the 4H or 4L position, push the transfer case shift knob down (toward the ground) and at the same time move the transfer case shift lever to the N (neutral) position. The N (neutral) position should only be used for vehicle towing or transfer case mounted PTO use (transfer case PTO opening available on F-350 as an option).

NOTE: Dash mounted four wheel drive indicator lights are off when your vehicle is in neutral.

To shift from N (Neutral) to either 4H or 4L, stop the vehicle and engage the parking brake. Place the automatic transmission into NEUTRAL or depress the clutch on manual transmission vehicles. Push the transfer case knob down (toward the ground) and at the same time move the transfer case shift lever to the desired position. If it is difficult to shift into either 4H or 4L, it may be necessary to let the vehicle roll slightly and/or turn off the engine (particularly on vehicles equipped with automatic transmissions).

https://truckmanualshub.com/

Lever Operated System With Manual Locking Hubs

To shift from 2H to 4H:

Stop the vehicle and engage the manual locking hubs by turning both hub lock selector knobs clockwise to the LOCK position. Move the transfer case shift lever straight back to the 4H position. After both hubs have been turned to the LOCK position, shifts between 2H and 4H (or 4H to 2H) may take place at any speed.

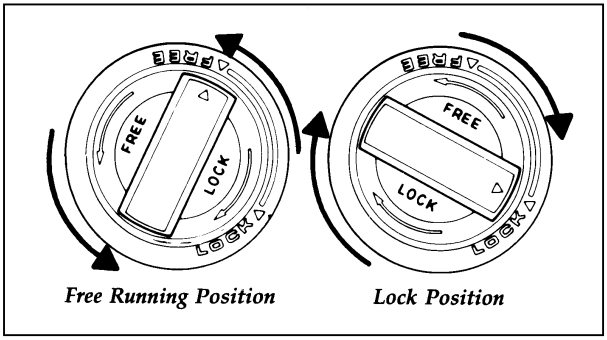

Locking hub positions

- ❑ Do not drive the vehicle in 4H or 4L with the manual locking hubs in the FREE position.
- ❑ Do not drive the vehicle with the left and right manual locking hubs set to different positions.

To shift from 4H to 2H:

Move the transfer case shift lever forward to the 2H position. This can be done at any speed. However, the front driveline will remain engaged to the front wheels until the manual locking hubs are disengaged. To disengage the manual locking hubs, stop the vehicle and rotate both hub lock selector knobs counterclockwise to the FREE position.

https://truckmanualshub.com/

Operating in 2H with the hubs in the LOCK position increases fuel consumption, noise, vibration, and wear. For prolonged 2H operation on dry pavement, set the manual locking hubs to the FREE position.

To shift between 4H and 4L:

Stop the vehicle and place the automatic transmission into NEUTRAL or depress the clutch on manual transmission vehicles. Push the transfer case shift knob down (toward the ground) and at the same time pull or push the lever straight forward or rearward (depending on the desired position 4H or 4L) in order to shift the transfer case. This shift should be with one continuous motion without pausing in the N (neutral) position. Pausing in the neutral position can result in gear clash and difficult shifting. If, while shifting between 4H and 4L, the transfer case gets stuck in the N (neutral) position or is difficult to shift into either 4H or 4L, it may be necessary to let the vehicle roll slightly and/or turn off the engine (particularly on vehicles equipped with automatic transmission).

To shift to N (neutral) from either 4H or 4L

To shift into N (neutral), stop the vehicle and engage the parking brake. Place the automatic transmission into NEUTRAL or depress the clutch on manual transmission vehicles. From either the 4H or 4L position, push the transfer case shift knob down (toward the ground) and at the same time move the transfer case shift lever to the N (neutral) position. The N (neutral) position should only be used for vehicle towing or transfer case mounted PTO use (transfer case PTO opening available on F-350 only).

https://truckmanualshub.com/

NOTE: Dash mounted four wheel drive indicator lights are off when your vehicle is in neutral.

To shift from N (Neutral) to either 4H or 4L, stop the vehicle and engage the parking brake. Place the automatic transmission into N (Neutral) or depress the clutch on manual transmission vehicles. Push the transfer case shift lever to the desired position. If it is difficult to shift into either 4H or 4L, it may be necessary to let the vehicle roll slightly and/or turn off the engine (particularly on vehicles equipped with automatic transmissions).

Driving Off Road with 4-Wheel Drive

Most vehicles with four-wheel drive are especially equipped for driving on sand, snow, mud, or rough terrain and have operating characteristics that are somewhat different from conventional vehicles, both off and on the road. The driving tips below will help you learn to use four-wheel drive.

- ❑ Do not use 4WD LOW on dry, hard-surfaced roads.
- ❑ Special maintenance procedures are necessary after operating with drive components in water.
- ❑ Manual locking hubs must be in LOCK position before shifting into four-wheel drive.

When using four-wheel drive, maintain steering wheel control at all times, especially in rough terrain. Since sudden changes in terrain can result in abrupt steering wheel motion, make sure you grip the steering wheel rim from the outside. Do not grip the spokes.

https://truckmanualshub.com/

Drive cautiously to avoid vehicle damage from concealed objects such as rocks and stumps. Know the terrain or examine maps of the area in question before driving. Map out your route beforehand. To maintain steering and braking control of your vehicle, you must have all four tires on the ground, and they must be rolling, not sliding or spinning.

Transmission upshift in 4x4 with transfer case in 4L may be quite firm due to large total gear reduction. This condition is normal.

Sand

When driving over sand, try to keep all four wheels of the vehicle on the most solid area of the trail. Do not reduce the tire pressures but shift to a lower gear and drive steadily through the terrain. Apply accelerator slowly and avoid spinning the wheels.

Mud and Water

When driving through water, determine the depth; avoid water higher than the bottom of the hubs (if possible) and proceed slowly. If the ignition system gets wet, the vehicle may stall.

Once through water, always try the brakes. Wet brakes do not stop the vehicle as effectively as dry brakes. Drying can be improved by moving your vehicle slowly, while applying light pressure on the brake pedal.

After driving through mud, clean off residue stuck to rotating driveshafts and tires. Excess mud stuck on tires and rotating driveshafts causes an imbalance which could damage drive components.

NOTE: If the transmission and transfer case is submerged in water, their fluids should be checked and changed, if necessary.

https://truckmanualshub.com/

NOTE: Change rear axle lubricant if the axle has been submerged in water.

NOTE: Refer to the Diesel Engine Owner's Guide Supplement for driving through deep water information.

Additional Special Driving Instructions for 4-Wheel Drive Vehicle Operators

Driving on Hill or Slope Terrain

When driving on a hill, avoid driving crosswise or turning on steep slopes, you could lose traction and slip sideways. Drive straight up, straight down or avoid the hill completely. Know the conditions on the other side of a hill before driving over the crest.

When climbing a steep hill, start in a lower gear, rather than finding it necessary to downshift from a higher gear after the ascent has started. This reduces strain on the engine and the possibility of stalling.

When descending a steep hill avoid sudden braking. Rapid pumping of the brake pedal will help slow the vehicle and still maintain steering control.

Driving on Snow or Ice

A four-wheel drive vehicle has advantages over two-wheel drive vehicles in snow and ice but can skid like any other vehicle. If so equipped, keep the vehicle in four-wheel drive if icy or slippery conditions exist.

Avoid sudden applications of power and quick changes of direction on snow or ice. Apply the accelerator slowly and steadily when starting from a full stop.

https://truckmanualshub.com/

All utility-type and Four-Wheel Drive vehicles have special design and equipment features to make them capable of performing in a wide variety of off-road applications. Specific design characteristics give them higher centers of gravity than ordinary passenger cars.

⚠WARNING

Utility and four-wheel drive vehicles are NOT designed for cornering at speeds as high as passenger cars any more than low-slung sports cars are designed to perform satisfactorily under off-road conditions. Avoid sharp turns or abrupt maneuvers in these vehicles.

Driving With a Heavy Load

There are limits to the amount of weight your vehicle can carry or tow. The total weight of your vehicle, plus the weight of the passengers and cargo, should never be more than the Gross Vehicle Weight Rating (GVWR). Also, the weight that your vehicle carries over the front axle and rear axle should never be more than the Gross Axle Weight Rating (GAWR) for the respective axle.

The weight limits of your vehicle's tires affect the GVWR or GAWR limitations. Usage of replacement tires with higher weight limits than originals does not increase GVWR or GAWR. Usage of lower capacity replacement tires may lower GVWR and GAWR limitations.

⚠WARNING

Do not exceed the GVWR or the GAWR specified on the Safety Compliance Certification Label.

https://truckmanualshub.com/

Heavy duty front suspension package (option)

This optional front suspension package is designed to handle the additional loads that will be imposed on the vehicle by adding aftermarket equipment, such as a snowplow. Refer to the Safety Compliance Certification Label for details.

Securing loads in cargo area

To prevent damage to the pickup box and cab, secure any movable cargo pieces using ropes or straps and the tie down holes in the stake pockets of the steel pickup box or the tie-down bars in the flareside pickup box.

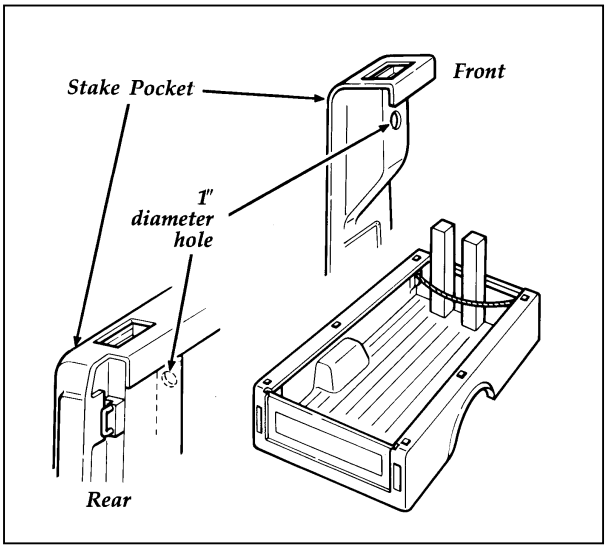

Cargo tie down holes

https://truckmanualshub.com/

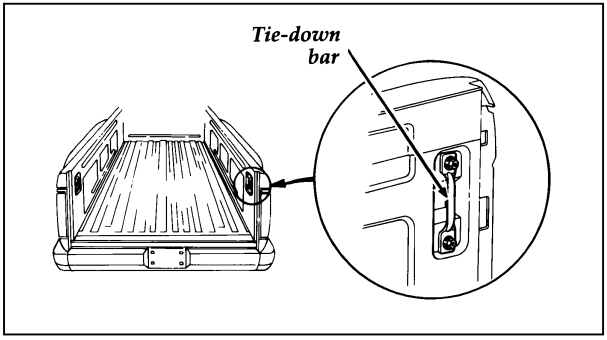

Cargo tie-down bars - Flareside pickup box

Trailer Towing

All vehicles may tow a Class I trailer provided the Gross Combined Weight (GCW) is less than or equal to the GVWR shown on the Safety Compliance Certification Label. For heavier trailer applications, refer to the towing information found later in this chapter.

Towing a trailer puts additional loads on your vehicle's engine, transmission, axle, brakes, tires and suspension. For your safety and for the good of your vehicle, use the right equipment for the type of trailer you tow.

If your trailer is equipped with electric brakes, auxiliary battery, or back-up lamps, the optional 7 wire trailer towing electrical hook-up will be required on the vehicle.

https://truckmanualshub.com/

Your trailer towing capability will vary based on the standard and optional equipment on your vehicle. Refer to the following *Vehicle Loading/Towing Information* and the Trailer Towing Tables to determine the specific towing capability of your vehicle.

- ❑ Stay within the load limits when you tow.
- ❑ Carefully and thoroughly prepare your vehicle for towing, making sure to use the right equipment and to attach it properly. (See *Preparing to Tow* in this chapter.)
- ❑ Use extra caution when driving your vehicle while you tow. (See *Driving while you tow* in this chapter.)
- ❑ Service your vehicle more frequently if you tow a trailer. (See *Servicing your vehicle if you tow* in this chapter.)

Do not tow a trailer until your vehicle has been driven at least 500 miles (800 km).

Vehicle Loading/Towing Information

Your vehicle's load capacity is designated by weight, not volume, so you cannot necessarily use all available space with large or heavy loads. Maximum safe vehicle weights as well as tire, rim sizes and inflation pressures are specified for your vehicle at the assembly plant on the Safety Compliance Certification Label. The Certification Label is located on the left front door lock facing or the door latch post pillar.

https://truckmanualshub.com/

⚠WARNING

It is extremely dangerous to ride in a cargo area, inside or outside of a vehicle. In a collision, people riding in these areas are more likely to be seriously injured or killed. Do not allow people to ride in any area of your vehicle that is not equipped with seats and safety belts. Be sure everyone in your vehicle is in a seat and using a safety belt properly.

⚠WARNING

Cargo should always be secured to prevent it from shifting and causing damage to the vehicle or harm to passengers.

Trucks, unlike passenger cars, are basically custom vehicles designed to carry a load. Most owners start with a base vehicle and add production and dealer installed and/or aftermarket components to suit their tastes and purposes. Even trucks that are purchased for personal transportation only are likely to have considerable optional equipment, such as step bumpers and light bars, for example.

Each additional item of equipment affects how much cargo a vehicle can carry. If a vehicle is overloaded, performance will suffer and service concerns may arise.

https://truckmanualshub.com/

The following is a typical example of a Safety Compliance Certification Label and an explanation of how this information should be used:

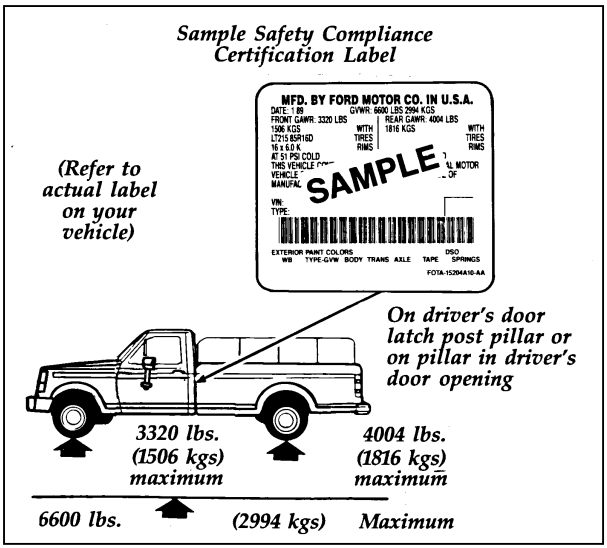

Safety Compliance Certification Label

Do not use the sample numbers on the Safety Compliance Certification Label shown. Use the actual numbers from your vehicle certification label.

Understanding Loading/Towing Information

The following terms are used to describe the ability to carry or tow a load:

- ❑ Base Curb Weight
- ❑ Payload
- ❑ GVW (Gross Vehicle Weight)
- ❑ GVWR (Gross Vehicle Weight Rating)

https://truckmanualshub.com/

- ❑ GAWR (Gross Axle Weight Rating)
- ❑ GCWR (Gross Combined Weight Rating)
- ❑ Maximum Trailer Weight Rating
- ❑ Maximum Trailer Weight
- ❑ Trailer Weight Range

Base Curb Weight

The Base Curb Weight is the weight of the vehicle including fuel, coolants, lubricants, emergency tools, spare wheel and tire. It also includes any equipment that is *standard* on that model. It does not include passengers, cargo or optional equipment installed by factory, dealer, aftermarket supplier or customer.

Payload

Payload is the combined, maximum allowable weight of cargo, occupants and optional equipment that the truck is designed to carry. It is Gross Vehicle Weight Rating minus the base curb weight.

Gross Vehicle Weight (GVW)

If you add base curb weight and the weight of a load (including passengers, cargo and optional equipment) being carried at a particular time, you get the Gross Vehicle Weight (GVW).

It is important to remember that GVW *is not a limit or a specification.* If an owner loads up a vehicle and weighs it, that's the GVW at that moment. If the owner piles on more of a load and weighs it again, that becomes the GVW.

https://truckmanualshub.com/

Gross Vehicle Weight Rating (GVWR)

To avoid overloading a vehicle, the owner should observe the manufacturer's specified Gross Vehicle Weight Rating. The GVWR is the maximum total weight of base vehicle, passengers, optional components and cargo that a particular vehicle was designed to carry.

Gross Axle Weight Rating (GAWR)

We have all seen a car or a truck that is loaded down in the rear and riding high in the front. This is a dangerous condition that usually means that the rear suspension components are under severe strain and that vehicle handling is impaired. There is more to carrying a load than just payload or GVWR.

Your Safety Compliance Certification Label not only gives the GVWR, it also gives the Gross Axle Weight Rating (GAWR) which is the carrying capacity for each axle system. For trucks, the rear axle will be designed to carry more weight than the front.

The rating is based on the carrying capacity of the *lowest rated* axle and suspension component as well as other factors. This is why it's so important to observe vehicle loading ratings. Overloading a vehicle punishes components and can lead to shortened service life or outright failure.

The capacity of the tires is included as part of the axle and suspension system, which is to be considered when determining the lowest rated component. Tires are rated to carry a specific maximum load at a specific maximum tire pressure.

https://truckmanualshub.com/

Passenger car type tires when installed on light trucks and multipurpose passenger vehicles are rated at 10% lower load carrying capacity due to the differences in vehicle usages.

The vehicle must not be loaded to both the front and rear GAWR because the GVWR will be exceeded. The GAWR of the front and rear axles exceeds the GVWR when added together to allow flexibility in fore and aft loading of cargo.

With the tires inflated to the specified pressure, the total weight of your vehicle must not exceed the GVWR and GAWR specified on the Safety Compliance Certification Label. This includes full fuel tank(s), vehicle equipment, and occupants as well as the cargo load.

GCWR (Gross Combined Weight Rating)

GCWR is the maximum combined weight of the towing vehicle (including passengers and cargo) and the loaded trailer. The GCWR is specified by the manufacturer to indicate the combined maximum loaded weight that the vehicle is designed to tow.

Maximum Trailer Weight Rating

The maximum trailer weight rating is the maximum weight of a trailer the vehicle is permitted to tow. It is specified by the manufacturer and is determined by subtracting the vehicle curb weight for each engine/transmission combination, any required option weight for trailer towing and the weight of the driver from the GCWR for the towing vehicle.

https://truckmanualshub.com/

Maximum Trailer Weight

The maximum trailer weight is the maximum weight of a trailer the loaded vehicle is permitted to tow. It is determined by subtracting the weight of the loaded towing vehicle (including passengers and cargo) from the GCWR for the towing vehicle.

Trailer Weight Range

The trailer weight range is a specified range by weight, which the trailer must fall within, ranging from zero to the maximum trailer weight rating.

Refer to the truck camper loading sheet in your vehicle glove box or to the Consumer Information dealer folder on truck camper loading for recommendations on slide-in camper carrying capability with your specific vehicle.

Calculating The Load

To know how much weight your vehicle can carry:

- ❑ Obtain ratings from your Safety Compliance Certification Label, and the Trailer towing specifications in the Owner Guide (refer to the Index)
  - — Refer to the following sample illustration to locate the various ratings on your Safety Compliance Certification Label.
  - — If you do not plan on pulling a trailer, do not include these ratings into your calculations.

https://truckmanualshub.com/

- ❑ Weigh your vehicle as you customarily operate the vehicle (without cargo).
- ❑ Subtract the total weight of passengers, driver and optional equipment added by the factory, dealer or aftermarket supplier to determine how much cargo weight you can carry.

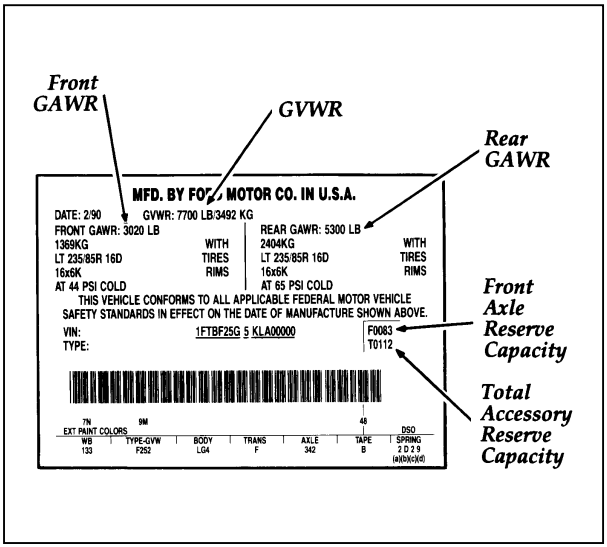

Sample label

https://truckmanualshub.com/

If you suspect that your payload is excessive, have your vehicle weighed at a highway weigh station or appropriate commercial facility. Weigh the total vehicle and trailer (if applicable), then separately weigh the vehicle at the front and rear wheels. And finally, weigh the trailer separately if applicable.

Use this chart to perform your calculations.

Actual Weights

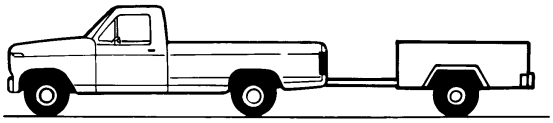

GAW Front _____

GAW Rear _____

GAW Trailer _____

GVW (GAW Front & Rear) _____

GCW (Gross Combined Weight)
(GAW Front & Rear & Trailer) _____

Refer to your owner manual charts to find the maximum GCWR for your type of engine and rear axle ratio.

Ratings	Actual	Load Capacity Available
GAWR F _____	_____	_____
R _____	_____	_____
GVWR _____	_____	_____
GCWR _____	_____	_____

Subtract the actual weights from the ratings to determine the available cargo load capacity.

https://truckmanualshub.com/

NOTE: The Truck Safety Compliance Certification Label has two weight related entries that sometimes cause confusion.

Front Axle Reserve Capacity in Pounds (kgs): If this value is given as 83 pounds (38 kgs) on the label, does this mean that you are limited to adding only 83 pounds (38 kgs) of accessories to the front end capacity? Not exactly. This says that you can load 83 pounds (38 kgs) of options on the front axle, add 150 pound (68 kgs) passengers to all seating positions, and add evenly distributed cargo in the box without exceeding the GAWR F.

It is possible to hang heavier equipment on the front as long as the vehicle owner/operator compensates. This can be accomplished, if necessary, by carrying fewer passengers, less cargo or positioning cargo more toward the rear, which has the effect of reducing the load on the front. Keep in mind that the GAWR F, GAWR R, nor the GVWR should ever be exceeded.

Total Accessory Reserve Capacity in Pounds (kgs): If, for example, this value is given as 112 pounds (51 kgs), does this mean that you are limited to adding 112 pounds (51 kgs) of accessories to your vehicle? Yes that is correct for permanently installed accessories. This is a number that is related to government crash test standards. Therefore, no more than this weight should be permanently installed on your vehicle.

In the case of both these numbers (83 and 112 pounds) (38 and 51 kgs), the important thing to remember is that for safe operation, an owner/operator should calculate the amount and the distribution of all weights (passengers, accessory equipment and cargo). These combined weights should fall below the vehicle's GVWR and GAWR.

https://truckmanualshub.com/

Camper Bodies

Many truck owners carry camper bodies during at least part of the year. A camper body is a load just like any other. It is important for the owner to match the camper body to the truck's load carrying capability. It is also important to take into account the weight of food, clothing and equipment that may be carried in the camper.

Trailers

Towing a trailer safely means having the proper weight on the tongue (usually 10% of the trailer weight). Load-equalizing hitches on large rigs may transfer weight to each of the vehicle's axles. This weight must be included in capacity calculations when determining if the vehicle is loaded within safe limits.

If your vehicle exceeds the GVWR, remove cargo from your vehicle accordingly. If your vehicle exceeds the GAWR for either axle, shift the load or remove cargo accordingly.

https://truckmanualshub.com/

⚠WARNING

Do not exceed the GVWR or the GAWR specified on the Safety Compliance Certification Label.

⚠WARNING

Towing trailers beyond the maximum recommended gross trailer weight could result in engine damage, transmission/axle damage, structural damage, loss of control, and personal injury.

Use the Safety Compliance Certification Label to find the axle code number and the engine type for your vehicle.

Use the appropriate Maximum Gross Combined Weight Rating (GCWR) chart to find the Maximum GCWR for your type engine and rear axle ratio.

Subtract your Loaded Vehicle Weight from the Maximum GCWR found in the chart. This is the maximum trailer weight your vehicle can tow and must fall below the maximum shown under Trailer Weight on the chart.

https://truckmanualshub.com/

MFD. BY FORD MOTOR CO. IN U.S.A.

DATE: GVWR:

FRONT GAWR: WITH TIRES RIMS

AT PSI COLD

REAR GAWR: WITH TIRES RIMS

AT PSI COLD

THIS VEHICLE CONFORMS TO ALL APPLICABLE FEDERAL MOTOR VEHICLE SAFETY STANDARDS IN EFFECT ON THE DATE OF MANUFACTURE SHOWN ABOVE.

VIN:
TYPE:

EXTERIOR PAINT COLORS | DSO

WB	TYPE-GVW	BODY	TRANS	AXLE	TAPE	SPRINGS

B5* ▽FOTA-15204A10-AA

*First two digits refer to Rear axle.

Rear Axle Codes

Code	Description	Capacity		Ratio
		Lbs.	Kgs	
F-250 – F-350 Conventional – F-Super Duty – F-Series Commercial Stripped Chassis				
12	Ford	3,800	1,723	2.73
17	Ford	3,800	1,723	3.31
18	Ford	3,800	1,723	3.08
19	Ford	3,800	1,723	3.55
25	Ford	5,300	2,403	4.10
29	Ford	5,300	2,403	3.55
35	Ford	6,250	2,834	4.10
39	Ford	6,250	2,834	3.55
45	Ford	7,400	3,356	4.10
49	Ford	7,400	3,356	3.55
65	Ford	8,250	3,741	4.10
68	Ford	8,250	3,741	4.88

https://truckmanualshub.com/

Rear Axle Codes (Cont'd)

Code	Description	Capacity		Ratio
		Lbs.	Kg	
F-250 – F-350 Conventional – F-Super Duty – F-Series Commercial Stripped Chassis Cont'd.				
69	Ford	8,250	3,741	3.55
72	Dana	11,000	4,989	4.63
73	Dana	11,000	4,989	5.13
F-250 – F-350 Limited Slip				
B5	Ford	5,300	2,403	4.10
B9	Ford	5,300	2,403	3.55
C5	Ford	6,250	2,834	4.10
C9	Ford	6,250	2,834	3.55
D5	Ford	7,400	3,356	4.10
F5	Ford	8,250	3,741	4.10
H4	Ford	3,800	1,723	3.54
H5	Ford	3,800	1,723	4.10
H7	Ford	3,800	1,723	3.31
H8	Ford	3,800	1,723	3.08
H9	Ford	3,800	1,723	3.55

Engine Type, Displacement, Cylinders, Fuel Type, and Manufacturer (VIN Position 8)

1 F T D F 2 5 [N] 5 P L A 0 0 0 0 1

VIN Code	Displacement		Cylinders	Fuel	Manufacturer
	Liter	CID			
R	5.8 EFI	351	V-8	Gasoline	Ford
K	5.8 EFI	351	V-8	Gasoline	Ford
M	7.3 (D)	445	V-8	Diesel	Navistar
G	7.5 EFI	460	V-8	Gasoline	Ford

https://truckmanualshub.com/

Manual Transmissions

TRAILER TOWING TABLE 4x2 MANUAL TRANSMISSION				
GCWR (Gross Combined Weight Rating)/Trailer Weights				
Engine (EFI)	Rear Axle Ratio	Maximum GCWR Lb (Kg)	Trailer Weight Range Lb (Kg) (0-Maximum)	Maximum Frontal Area of Trailer Ft^2
REGULAR CAB F-250 HD				
5.8L	3.55	11,500 (5,216)	0-6,600 (0-2,993)	60
5.8L	4.10	13,000 (5,897)	0-8,100 (0-3,673)	60
7.3L (Diesel)	3.55	16,000 (7,258)	10,500 (4,763)	60
7.3L (Diesel)	4.10	20,000 (9,072)	14,000 (6,350)	60
7.5L	3.55	12,000 (5,443)	0-6,900 (0-3,130)	60
7.5L	4.10	16,000 (7,258)	0-10,900 (0-4,944)	60
REGULAR CAB F-350 SRW				
5.8L	3.55	11,500 (5,216)	6,600 (3,012)	60
5.8L	4.10	13,000 (5,897)	8,100 (3,674)	60
7.3L (Diesel)	3.55	16,000 (7,258)	10,500 (4,763)	60
7.3L (Diesel)	4.10	20,000 (9,072)	14,000 (6,350)	60
7.5L	3.55	12,000 (5,443)	6,900 (3,130)	60
7.5L	4.10	16,000 (7,258)	10,900 (4,944)	60

https://truckmanualshub.com/

TRAILER TOWING TABLE (Cont'd) 4x2 MANUAL TRANSMISSION				
GCWR (Gross Combined Weight Rating)/Trailer Weights				
Engine (EFI)	Rear Axle Ratio	Maximum GCWR Lb (Kg)	Trailer Weight Range Lb (Kg) (0-Maximum)	Maximum Frontal Area of Trailer Ft^2
REGULAR CAB F-350 DRW				
5.8L	4.10	13,000 (5,897)	0-7,800 (0-3,538)	60
7.3L (Diesel)	4.10	20,000 (9,072)	14,000 (6,350)	60
7.5L	4.10	16,000 (7,258)	0-10,700 (0-4,854)	60
SUPERCAB F-250 HD (139" WB)				
7.3L (Diesel)	3.55	16,000 (7,258)	10,400 (6,350)	60
7.3L (Diesel)	4.10	20,000 (9,072)	14,000 (6,350)	60
7.5L	3.55	12,000 (5,443)	0-6,800 (0-3,084)	60
7.5L	4.10	16,000 (7,258)	0-10,800 (0-4,900)	60
SUPERCAB F-250 HD (155" WB)				
5.8L	3.55	11,500 (5,216)	6,300 (2,858)	60
5.8L	4.10	13,000 (5,897)	7,800 (3,538)	60
7.3L (Diesel)	3.55	16,000 (7,258)	10,200 (4,627)	60
7.3L (Diesel)	4.10	20,000 (9,072)	14,000 (6,350)	60

https://truckmanualshub.com/

TRAILER TOWING TABLE (Cont'd) 4x2 MANUAL TRANSMISSION				
GCWR (Gross Combined Weight Rating)/Trailer Weights				
Engine (EFI)	Rear Axle Ratio	Maximum GCWR Lb (Kg)	Trailer Weight Range Lb (Kg) (0-Maximum)	Maximum Frontal Area of Trailer Ft^2
SUPERCAB F-250 HD (155" WB) (Cont'd.)				
7.5L	3.55	12,000 (5,443)	6,700 (3,039)	60
7.5L	4.10	16,000 (7,258)	10,700 (4,854)	60
SUPERCAB F-350 DRW				
7.3L (Diesel)	4.10	20,000 (9,072)	14,000 (6,350)	60
7.5L	4.10	16,000 (7,258)	0-10,400 (0-4,718)	60
CREW CAB F-250 HD				
7.3L (Diesel)	3.55	16,000 (7,258)	10,100 (4,581)	60
7.3L (Diesel)	4.10	20,000 (9,072)	14,000 (6,350)	60
7.5L	3.55	12,000 (5,442)	0-6,500 (0-2,948)	60
7.5L	4.10	16,000 (7,256)	0-10,500 (4,764)	60
CREW CAB F-350 SRW				
5.8L	3.55	11,500 (5,216)	6,000 (2,722)	60
5.8L	4.10	13,000 (5,897)	0-7,500 (0-3,402)	60
7.3L (Diesel)	3.55	16,000 (7,258)	9,900 (4,491)	60

https://truckmanualshub.com/

TRAILER TOWING TABLE (Cont'd) 4x2 MANUAL TRANSMISSION				
GCWR (Gross Combined Weight Rating)/Trailer Weights				
Engine (EFI)	Rear Axle Ratio	Maximum GCWR Lb (Kg)	Trailer Weight Range Lb (Kg) (0-Maximum)	Maximum Frontal Area of Trailer Ft^2
CREW CAB F-350 SRW (Cont'd)				
7.3L (Diesel)	4.10	20,000 (9,072)	13,900 (6,305)	60
7.5L	3.55	12,000 (5,443)	0-6,400 (0-2,902)	60
7.5L	4.10	16,000 (7,258)	0-10,400 (0-4,719)	60
CREW CAB F-350 DRW				
5.8L	4.10	13,000 (5,897)	0-7,400 (0-3,356)	60
7.3L (Diesel)	4.10	20,000 (9,072)	13,800 (6,320)	60
7.5L	4.10	16,000 (7,258)	0-10,200 (0-4,628)	60
CHASSIS CAB F-350 (137" WB)				
5.8L	4.10	13,000 (5,897)	0-8,200 (0-3,720)	60
7.3L (Diesel)	4.10	20,000 (9,072)	14,000 (6,350)	60
7.5L	4.10	16,000 (7,258)	0-10,900 (0-4,916)	60
CHASSIS CAB F-350 (161" WB)				
5.8L	4.10	13,000 (5,897)	8,000 (3,629)	60
7.3L (Diesel)	4.10	20,000 (9,072)	14,000 (6,350)	60

https://truckmanualshub.com/

TRAILER TOWING TABLE (Cont'd) 4x2 MANUAL TRANSMISSION				
GCWR (Gross Combined Weight Rating)/Trailer Weights				
Engine (EFI)	Rear Axle Ratio	Maximum GCWR Lb (Kg)	Trailer Weight Range Lb (Kg) (0-Maximum)	Maximum Frontal Area of Trailer Ft^2
CHASSIS CAB F-350 (161" WB) (Cont'd)				
7.5L	4.10	16,000 (7,258)	10,800 (4,899)	60
CHASSIS CAB F-450 DRW				
7.3L (Diesel)	4.63	21,000 (9,526)	14,000 (6,350)	60
7.3L (Diesel)	5.13	21,000 (9,526)	14,000 (6,350)	60
7.5L	4.63	22,000 (9,979)	0-12,500 (0-5,670)	60
7.5L	5.13	26,000 (11,794)	0-12,500 (0-5,670)	60

https://truckmanualshub.com/

TRAILER TOWING TABLE 4x4 MANUAL TRANSMISSION				
GCWR (Gross Combined Weight Rating)/Trailer Weights				
Engine (EFI)	Rear Axle Ratio	Maximum GCWR Lb (Kg)	Trailer Weight Range Lb (Kg) (0-Maximum)	Maximum Frontal Area of Trailer Ft^2
REGULAR CAB F-250 HD				
5.8L	3.55	11,500 (5,216)	0-6,200 (0-2,812)	60
5.8L	4.10	13,000 (5,897)	0-7,700 (0-3,493)	60
7.3L (Diesel)	3.55	16,000 (7,258)	10,100 (4,581)	60
7.3L (Diesel)	4.10	20,000 (9,072)	14,000 (6,350)	60
7.5L	3.55	12,000 (5,443)	0-6,500 (0-2,949)	60
7.5L	4.10	16,000 (7,258)	0-10,500 (0-4,763)	60
REGULAR CAB F-350				
5.8L	3.55	11,500 (5,216)	0-6,100 (0-2,767)	60
5.8L	4.10	13,000 (5,897)	0-7,600 (0-3,447)	60
7.3L (Diesel)	3.55	16,000 (7,258)	10,000 (4,536)	60
7.3L (Diesel)	4.10	20,000 (9,072)	14,000 (6,350)	60
7.5L	3.55	12,000 (5,443)	0-6,400 (0-2,903)	60
7.5L	4.10	16,000 (7,258)	0-10,400 (0-4,717)	60

https://truckmanualshub.com/

TRAILER TOWING TABLE (Cont'd) 4x4 MANUAL TRANSMISSION				
GCWR (Gross Combined Weight Rating)/Trailer Weights				
Engine (EFI)	Rear Axle Ratio	Maximum GCWR Lb (Kg)	Trailer Weight Range Lb (Kg) (0-Maximum)	Maximum Frontal Area of Trailer Ft^2
SUPERCAB F-250 HD (139" WB)				
7.3L (Diesel)	3.55	16,000 (7,258)	9,900 (4,491)	60
7.3L (Diesel)	4.10	20,000 (9,072)	13,900 (6,305)	60
7.5L	3.55	12,000 (5,443)	6,400 (2,903)	60
7.5L	4.10	16,000 (7,258)	10,400 (4,717)	60
SUPERCAB F-250 HD (155" WB)				
5.8L	3.55	11,500 (5,216)	0-6,000 (0-2,722)	60
5.8L	4.10	13,000 (5,897)	0-7,500 (0-3,402)	60
7.3L (Diesel)	3.55	16,000 (7,250)	9,800 (4,445)	60
7.3L (Diesel)	4.10	20,000 (9,072)	13,800 (6,260)	60
7.5L	3.55	12,000 (5,443)	0-6,300 (0-2,858)	60
7.5L	4.10	16,000 (7,258)	0-10,300 (0-4,672)	60
CREW CAB F-250 HD				
7.3L (Diesel)	3.55	16,000 (7,258)	9,600 (4,355)	60

https://truckmanualshub.com/

TRAILER TOWING TABLE (Cont'd) 4x4 MANUAL TRANSMISSION				
GCWR (Gross Combined Weight Rating)/Trailer Weights				
Engine (EFI)	Rear Axle Ratio	Maximum GCWR Lb (Kg)	Trailer Weight Range Lb (Kg) (0-Maximum)	Maximum Frontal Area of Trailer Ft^2
CREW CAB F-250 HD (Cont'd)				
7.3L (Diesel)	4.10	20,000 (9,072)	13,600 (6,169)	60
7.5L	3.55	12,000 (5,443)	0-6,000 (0-2,722)	60
7.5L	4.10	16,000 (7,258)	0-10,000 (0-4,536)	60
CREW CAB F-350				
5.8L	3.55	11,500 (5,216)	5,600 (2,540)	60
5.8L	4.10	13,000 (5,897)	0-7,100 (0-3,221)	60
7.3L (Diesel)	3.55	16,000 (7,258)	9,400 (4,264)	60
7.3L (Diesel)	4.10	20,000 (9,072)	13,400 (6,078)	60
7.5L	3.55	12,000 (5,443)	0-5,900 (0-2,676)	60
7.5L	4.10	16,000 (7,258)	0-9,900 (0-4,491)	60
CHASSIS CAB F-350 (137" WB)				
7.3L (Diesel)	4.10	20,000 (9,072)	14,000 (6,350)	60
7.5L	4.10	16,000 (7,258)	0-10,400 (0-4,717)	60

https://truckmanualshub.com/

TRAILER TOWING TABLE (Cont'd) 4x4 MANUAL TRANSMISSION				
GCWR (Gross Combined Weight Rating)/Trailer Weights				
Engine (EFI)	Rear Axle Ratio	Maximum GCWR Lb (Kg)	Trailer Weight Range Lb (Kg) (0-Maximum)	Maximum Frontal Area of Trailer Ft^2
CHASSIS CAB F-350 (161" WB)				
7.3L (Diesel)	4.10	20,000 (9,072)	13,900 (6,305)	60
7.5L	4.10	16,000 (7,258)	10,300 (4,672)	60

NOTES:
- For high altitude operation, reduce GCW by 2% per 1,000 ft. (300 meters) elevation.
- For definition of terms used in this table see *'UNDERSTANDING LOADING/TOWING INFORMATION'* earlier in this section.
- To determine the maximum trailer weight designed for your particular vehicle as equipped, follow the section called *'CALCULATING THE LOAD'* earlier in this section.
- Maximum trailer weights shown. The combined weight of the completed towing vehicle (including hitch, passengers and cargo) and the loaded trailer must not exceed the Gross Combined Weight Rating (GCWR).

https://truckmanualshub.com/

Automatic Transmissions

TRAILER TOWING TABLE 4x2 AUTOMATIC TRANSMISSION				
GCWR (Gross Combined Weight Rating)/Trailer Weights				
Engine (EFI)	Rear Axle Ratio	Maximum GCWR Lb (Kg)	Trailer Weight Range Lb (Kg) (0-Maximum)	Maximum Frontal Area of Trailer Ft^2
REGULAR CAB F-250 HD				
5.8L	3.55	11,500 (5,216)	0-6,500 (0-2,949)	60
5.8L	4.10	13,000 (5,897)	0-8,000 (0-3,630)	60
7.3L (Diesel)	3.55	16,000 (7,258)	10,500 (4,763)	60
7.3L (Diesel)	4.10	20,000 (9,072)	14,000 (6,350)	60
7.5L	3.55	15,000 (6,804)	0-9,900 (0-4,491)	60
7.5L	4.10	18,500 (8,392)	0-12,500 (0-5,670)	60
REGULAR CAB F-350 DRW				
5.8L	4.10	13,000 (5,897)	0-7,800 (0-3,538)	60
7.3L (Diesel)	4.10	20,000 (9,072)	14,000 (6,350)	60
7.5L	4.10	18,500 (8,392)	0-12,500 (0-5,670)	60
REGULAR CAB F-350 SRW				
5.8L	3.55	11,500 (5.216)	6,600 (3,012)	60
5.8L	4.10	13,000 (5,897)	8,100 (3,674)	60

https://truckmanualshub.com/

TRAILER TOWING TABLE (Cont'd) 4x2 AUTOMATIC TRANSMISSION				
GCWR (Gross Combined Weight Rating)/Trailer Weights				
Engine (EFI)	Rear Axle Ratio	Maximum GCWR Lb (Kg)	Trailer Weight Range Lb (Kg) (0-Maximum)	Maximum Frontal Area of Trailer Ft^2
REGULAR CAB F-350 SRW (Cont'd)				
7.3L (Diesel)	3.55	16,000 (7,258)	10,500 (4,763)	60
7.3L (Diesel)	4.10	20,000 (9,072)	14,000 (6,350)	60
7.5L	3.55	15,000 (6,804)	9,900 (4,491)	60
7.5L	4.10	18,500 (8,392)	12,500 (5,670)	60
SUPERCAB F-250 HD (139" WB)				
7.3L (Diesel)	3.55	16,000 (7,258)	10,400 (6,350)	60
7.3L (Diesel)	4.10	20,000 (9,072)	14,000 (6,350)	60
7.5L	3.55	15,000 (6,804)	0-9,700 (0-4,399)	60
7.5L	4.10	18,500 (8,392)	0-12,500 (0-5,670)	60
SUPERCAB F-250 HD (155" WB)				
5.8L	3.55	11,500 (5,216)	6,300 (2,858)	60
5.8L	4.10	13,000 (5,897)	7,800 (3,538)	60
7.3L (Diesel)	3.55	16,000 (7,258)	10,200 (4,627)	60

https://truckmanualshub.com/

TRAILER TOWING TABLE (Cont'd) 4x2 AUTOMATIC TRANSMISSION				
GCWR (Gross Combined Weight Rating)/Trailer Weights				
Engine (EFI)	Rear Axle Ratio	Maximum GCWR Lb (Kg)	Trailer Weight Range Lb (Kg) (0-Maximum)	Maximum Frontal Area of Trailer Ft^2
SUPERCAB F-250 HD (155" WB) (Cont'd)				
7.3L (Diesel)	4.10	20,000 (9,072)	14,000 (6,350)	60
7.5L	3.55	15,000 (6,804)	9,600 (4,355)	60
7.5L	4.10	18,500 (8,392)	12,500 (5,670)	60
SUPERCAB F-350				
7.3L (Diesel)	4.10	20,000 (9,072)	14,000 (6,350)	60
7.5L	4.10	18,500 (8,392)	0-12,500 (0-5,670)	60
CREW CAB F-250 HD				
7.3L (Diesel)	3.55	16,000 (7,258)	10,100 (4,581)	60
7.3L (Diesel)	4.10	20,000 (9,072)	14,000 (6,350)	60
7.5L	3.55	15,000 (6,803)	0-9,400 (0-4,263)	60
7.5L	4.10	18,500 (8,392)	0-12,500 (0-5,670)	60
CREW CAB F-350 SRW				
5.8L	3.55	11,500 (5,216)	0-6,000 (0-2,722)	60
5.8L	4.10	13,000 (5,897)	0-7,500 (0-3,402)	60

https://truckmanualshub.com/

TRAILER TOWING TABLE (Cont'd) 4x2 AUTOMATIC TRANSMISSION				
GCWR (Gross Combined Weight Rating)/Trailer Weights				
Engine (EFI)	Rear Axle Ratio	Maximum GCWR Lb (Kg)	Trailer Weight Range Lb (Kg) (0-Maximum)	Maximum Frontal Area of Trailer Ft^2
CREW CAB F-350 SRW (Cont'd)				
7.3L (Diesel)	3.55	16,000 (7,258)	9,900 (4,491)	60
7.3L (Diesel)	4.10	20,000 (9,072)	13,900 (6,305)	60
7.5L	3.55	15,000 (6,804)	0-9,300 (0-4,218)	60
7.5L	4.10	18,500 (8,392)	0-12,500 (0-5,670)	60
CREW CAB F-350 DRW				
5.8L	4.10	13,000 (5,897)	0-7,300 (0-3,311)	60
7.3L (Diesel)	4.10	20,000 (9,072)	13,800 (6,320)	60
7.5L	4.10	18,500 (8,392)	0-12,500 (0-5,670)	60
CHASSIS CAB F-350 (137" WB)				
5.8L	4.10	13,000 (5,897)	0-8,100 (0-3,720)	60
7.3L (Diesel)	4.10	20,000 (9,072)	14,000 (6,350)	60
7.5L	4.10	18,500 (8,392)	0-12,500 (0-5,670)	60
CHASSIS CAB F-350 (161" WB)				
5.8L	4.10	13,000 (5.897)	8,000 (3.629)	60

https://truckmanualshub.com/

TRAILER TOWING TABLE (Cont'd) 4x2 AUTOMATIC TRANSMISSION				
GCWR (Gross Combined Weight Rating)/Trailer Weights				
Engine (EFI)	Rear Axle Ratio	Maximum GCWR Lb (Kg)	Trailer Weight Range Lb (Kg) (0-Maximum)	Maximum Frontal Area of Trailer Ft^2
CHASSIS CAB F-350 (161" WB) (Cont'd)				
7.3L (Diesel)	4.10	20,000 (9,072)	14,000 (6,350)	60
7.5L	4.10	18,500 (8,392)	12,500 (5,670)	60
CHASSIS CAB F-SUPER DUTY				
7.3L (Diesel)	4.63	22,000 (9,979)	14,000 (6,350)	60
7.3L (Diesel)	5.13	22,000 (9,979)	14,000 (6,350)	60
7.5L	4.63	22,000 (9,979)	0-12500 (0-5,670)	60
7.5L	5.13	26,000 (11,794)	0-12500 (0-5,670)	60

NOTES:
- For high altitude operation, reduce GCW by 2% per 1,000 ft. (300 meters) elevation.
- For definition of terms used in this table see *'UNDERSTANDING LOADING/TOWING INFORMATION'* earlier in this section.
- To determine the maximum trailer weight designed for your particular vehicle as equipped, follow the section called *'CALCULATING THE LOAD'* earlier in this section.
- Maximum trailer weights shown. The combined weight of the completed towing vehicle (including hitch, passengers and cargo) and the loaded trailer must not exceed the Gross Combined Weight Rating (GCWR).

https://truckmanualshub.com/

TRAILER TOWING TABLE 4x4 AUTOMATIC TRANSMISSION				
GCWR (Gross Combined Weight Rating)/Trailer Weights				
Engine (EFI)	Rear Axle Ratio	Maximum GCWR Lb (Kg)	Trailer Weight Range Lb (Kg) (0-Maximum)	Maximum Frontal Area of Trailer Ft^2
REGULAR CAB F-250 HD				
5.8L	3.55	11,500 (5,216)	0-6,100 (0-2,767)	60
5.8L	4.10	13,000 (5,897)	0-7,600 (0-3,447)	60
7.3L (Diesel)	3.55	16,000 (7,258)	10,100 (4,581)	60
7.3L (Diesel)	4.10	20,000 (9,072)	14,000 (6,350)	60
7.5L	3.55	15,000 (6,804)	0-9,500 (0-4,309)	60
7.5L	4.10	18,500 (8,392)	0-12,500 (0-5,670)	60
REGULAR CAB F-350				
5.8L	3.55	11,500 (5,216)	0-6,100 (0-2,767)	60
5.8L	4.10	13,000 (5,897)	0-7,600 (0-3,447)	60
7.3L (Diesel)	3.55	16,000 (7,258)	9,900 (4,491)	60
7.3L (Diesel)	4.10	20,000 (9,072)	13,900 (6,305)	60
7.5L	3.55	15,000 (6,804)	0-9,400 (0-4,264)	60
7.5L	4.10	18,500 (8,392)	0-12,500 (0-5,670)	60

https://truckmanualshub.com/

TRAILER TOWING TABLE (Cont'd) 4x4 AUTOMATIC TRANSMISSION				
GCWR (Gross Combined Weight Rating)/Trailer Weights				
Engine (EFI)	Rear Axle Ratio	Maximum GCWR Lb (Kg)	Trailer Weight Range Lb (Kg) (0-Maximum)	Maximum Frontal Area of Trailer Ft^2
SUPERCAB F-250 HD (139" WB)				
7.5L	3.55	15,000 (6,804)	9,400 (4,264)	60
7.5L	4.10	18,500 (8,392)	12,500 (5,670)	60
SUPERCAB F-250 HD (155" WB)				
5.8L	3.55	11,500 (5,216)	0-5,900 (0-2,676)	60
5.8L	4.10	13,000 (5,897)	0-7,400 (0-3,357)	60
7.3L (Diesel)	3.55	16,000 (7,258)	9,800 (4,445)	60
7.3L (Diesel)	4.10	20,000 (9,072)	13,800 (6,260)	60
7.5L	3.55	15,000 (6,804)	0-9,300 (0-4,218)	60
7.5L	4.10	18,500 (8,392)	0-12,500 (0-5,670)	60
CREW CAB F-250 HD				
7.3L (Diesel)	3.55	16,000 (7,258)	9,500 (4,309)	60
7.3L (Diesel)	4.10	20,000 (9,072)	13,500 (6,124)	60
7.5L	3.55	15,000 (6,804)	0-9,000 (0-4,127)	60
7.5L	4.10	18,500 (8,392)	0-12,500 (0-5,670)	60

https://truckmanualshub.com/

TRAILER TOWING TABLE (Cont'd) 4x4 AUTOMATIC TRANSMISSION				
GCWR (Gross Combined Weight Rating)/Trailer Weights				
Engine (EFI)	Rear Axle Ratio	Maximum GCWR Lb (Kg)	Trailer Weight Range Lb (Kg) (0-Maximum)	Maximum Frontal Area of Trailer Ft^2
CREW CAB F-350				
5.8L	3.55	11,500 (5,216)	0-5,500 (0-2,495)	60
5.8L	4.10	13,000 (5,897)	0-7,000 (0-3,175)	60
7.3L (Diesel)	3.55	16,000 (7,258)	9,400 (4,264)	60
7.3L (Diesel)	4.10	20,000 (9,072)	13,400 (6,078)	60
7.5L	3.55	15,000 (6,804)	0-8,900 (0-4,037)	60
7.5L	4.10	18,500 (8,392)	0-12,400 (0-5,624)	60
CHASSIS CAB F-350 (137" WB)				
7.3L (Diesel)	4.10	20,000 (9,072)	14,000 (6,350)	60
7.5L	4.10	18,500 (8,392)	0-12,500 (0-5,670)	60

https://truckmanualshub.com/

TRAILER TOWING TABLE (Cont'd) 4x4 AUTOMATIC TRANSMISSION				
GCWR (Gross Combined Weight Rating)/Trailer Weights				
Engine (EFI)	Rear Axle Ratio	Maximum GCWR Lb (Kg)	Trailer Weight Range Lb (Kg) (0-Maximum)	Maximum Frontal Area of Trailer Ft^2
CHASSIS CAB F-350 (161" WB)				
7.3L (Diesel)	4.10	20,000 (9,072)	13,900 (6,305)	60
7.5L	4.10	18,500 (8,392)	12,500 (5,670)	60

NOTES:
- For high altitude operation, reduce GCW by 2% per 1,000 ft. (300 meters) elevation.
- For definition of terms used in this table see *'UNDERSTANDING LOADING/TOWING INFORMATION'* earlier in this section.
- To determine the maximum trailer weight designed for your particular vehicle as equipped, follow the section called *'CALCULATING THE LOAD'* earlier in this section.
- Maximum trailer weights shown. The combined weight of the completed towing vehicle (including hitch, passengers and cargo) and the loaded trailer must not exceed the Gross Combined Weight Rating (GCWR).

Required equipment

- ❑ Super Cooling is required with trailers over 2,000 lb (907 kg).
- ❑ Super Cooling and Handling/Suspension Package or trailer towing package is required with trailers over 3,500 lb (1587 kg).

Preparing to Tow

For your safety and for the good of your vehicle, use the right equipment for the type of trailer you tow. Also, make sure that all towing equipment is properly attached to your vehicle. If you are not certain that you are using the right equipment in the proper manner, see your Ford or Lincoln-Mercury dealer.

https://truckmanualshub.com/

Hitches

Do not install a single or multi-clamp type bumper hitch, or a hitch which attaches to the axle. Underbody mounted hitches are acceptable if installed properly. Follow towing instructions of a reputable rental agency.

Whenever a trailer hitch and hardware are removed, make sure all mounting holes in the underbody are properly sealed to prevent noxious gases or water from entering.

Step bumper (If equipped)

The optional step bumpers have a built-in hitch and only requires a ball with a one inch shank diameter. This step bumper has a Class III capability (5000 lb/2,270 kg trailer weight and 500 lb/680 kg tongue weight).

Safety chains

Always use safety chains between your vehicle and trailer. Cross chains under the trailer tongue and allow slack for turning corners. Connect safety chains to the vehicle frame or hook retainers. **Never attach chains to the bumper.**

Trailer Brakes

Separate trailer brakes are required on most towed vehicles weighing over 1,500 lb (680 kg).

⚠WARNING

Do not connect a trailer's hydraulic brake system directly to your vehicle's brake system. Your vehicle may not have enough braking power and your chances of having a collision greatly increase.

https://truckmanualshub.com/

Trailer lamps

Make sure your trailer lamps conform to Federal and local regulations.

Your vehicle has been equipped for use with a 4-wire trailer tow electrical system (running lamps, right hand stop/turn, left hand stop/turn, and ground).

Class I and Class II Trailer Tow electrical wiring provides two circuits (right hand and left hand) to operate trailer stop/turn tail lamps. Each stop/turn circuit will operate one combination stop/turn light bulb (# 1157, 3157, 2357, or 3357) on the trailer. Never add more than one trailer light bulb to one circuit.

A wire harness (Ford part number F5TB-13A576-A) has been provided that connects to the frame wire harness at the rear of the vehicle and is compatible with most 4-wire trailer tow electrical systems.

Always check trailer and vehicle functions (i.e., stop/turn signal, and running lights) before operating your vehicle and trailer.

If your vehicle fails to function properly, do not operate your vehicle and trailer until corrections are made.

⚠WARNING

Always replace a fuse with one that has the specified amperage rating. Using a fuse with a higher amperage rating can cause severe wire damage and could start a fire.

https://truckmanualshub.com/

Driving While You Tow

Be especially careful when driving while you tow a trailer. Never drive faster than 45 mph (70 km/h) when you tow in hilly country on hot days. Also, anticipate stops so that you can brake gradually.

If you use the speed control while you are towing on very long, steep grades, the speed control may shut off.

If your vehicle is equipped with an Electronic 4-Speed Automatic (E4OD) transmission, operate in Overdrive. Refer to the automatic transmission operation earlier in this chapter.

When descending a steep grade with a trailer, operate in Drive rather than Overdrive. If additional braking is needed, shift the automatic transmission gearshift into the 2 (Second) or 1 (Low) position.

If your vehicle is equipped with a manual 5-speed transmission, operate in 4th gear. Overdrive (5th) gear should not be used when towing.

If additional braking is needed when descending a steep grade with a trailer, downshift the transmission into 3rd gear.

Launching or Retrieving a Boat

When backing down a ramp during boat launching or retrieval,

- ❑ Do not allow the static water level to rise above the bottom edge of the rear bumper, and
- ❑ Do not allow waves to break higher than 15 cm (six inches) above the bottom edge of the rear bumper.

https://truckmanualshub.com/

Exceeding these limits may allow water to enter critical vehicle components, adversely affecting driveability, emissions, and reliability.

Servicing your vehicle if you tow

If you tow a trailer for a long distance, your vehicle will need to be serviced more frequently than usual. Refer to the *Maintenance Schedule* booklet for additional information.

Trailer towing tips

Before starting on a trip, practice turning, stopping and backing in an area away from heavy traffic. Get to know the “feel” of the vehicle/trailer combination.

Practice backing up. Back up very slowly, with someone outside at the rear of your trailer to guide you. Place your hand at the bottom of the steering wheel and move it in the direction you want the rear of the trailer to swing. Slight movement of the steering wheel results in a much larger movement of the rear of the trailer.

Allow more room for stopping with a trailer attached. Trailer brakes should be applied first, whether manually or automatically controlled, when approaching a stop.

For a good handling truck-trailer combination, the trailer tongue load should be approximately 10-15% of the loaded trailer weight.

Make a thorough check of your equipment before starting out on the road. After you have traveled about 50 miles (80 km) stop in a protected area and double-check your hitch and electrical connections. Also check trailer wheel lug nuts for tightness.

https://truckmanualshub.com/

When turning, drive slightly beyond the normal turning point so the trailer wheels will clear curbs or other obstructions.

When stopped in traffic for long periods of time in hot weather, place the gearshift selector lever in P (PARK) to increase the engine idle speed. This aids in engine cooling and air conditioner efficiency. If the engine overheats, move the function selector knob to VENT to stop the compressor and increase the engine speed for a short time.

Vehicles with trailers should not be parked on a grade. However, if you must park on a grade, place wheel chocks under the trailer's wheels as follows:

- ❑ Apply the brake pedal and hold.
- ❑ Have another person place the wheel chocks under the trailer wheels.
- ❑ With the chocks in place, release the brake pedal, making sure the chocks are holding.
- ❑ For automatic transmissions — apply the parking brake by pressing the service brake pedal down firmly with your right foot while applying the parking brake pedal with your left foot.

  For manual transmissions — apply the service brake and shift into N (NEUTRAL) while still maintaining pressure on the service brake pedal. Set the parking brake fully.
- ❑ Shift an automatic transmission into Park (P). Put the gearshift of a manual transmission in Reverse. If your vehicle is equipped with four-wheel drive make sure the transfer case is not in Neutral.

https://truckmanualshub.com/

To start, after being parked on a grade:

- ❑ Apply the brake pedal and hold.
- ❑ Start the engine.
- ❑ Shift transmission into gear and release the parking brake.
- ❑ Release the brake pedal and move the vehicle uphill to free the wheel chocks.
- ❑ Apply the brake pedal and hold while another person retrieves the chocks.

Snowplowing

Commercial snow removal applications should utilize F-350 Regular Cab 4x4 vehicles which are much more conducive to the rigors of long hours of plow operation.

Snowplowing and the Heavy Duty Front Suspension Package

If you plan to use your vehicle for plowing snow, it should be equipped with the Heavy Duty Front Suspension option. After adding the snowplowing equipment, check the front-end alignment and if necessary reset to prevent uneven tire wear. If the snowplowing equipment is later removed, check the front-end alignment again.

If you add equipment to your vehicle, which will not ordinarily be removed when not in use, such as heavy-duty winches, snowplow components, brush guards, etc, then the following index cannot be exceeded.

NOTE: Diesel equipped vehicles not recommended for snow plowing.

- ❑ Front axle curb weight must not exceed 63% of the total vehicle curb weight.

https://truckmanualshub.com/

- ❑ If necessary, add weight to the rear of the vehicle or bed to obtain the above and to comply with U.S. Federal Hydraulic Brake Requirements, when aftermarket equipment is added.

- ❑ The Front Axle Accessory Reserve Capacity and the Total Accessory Reserve Capacity listed on the Safety Compliance Certification Label will help you to determine if the addition of a snowplow will overload the vehicle. The total of the weights of all permanently installed accessories including the snowplow mount, but not the snowplow or any other easily removable accessories must not exceed the Total Accessory Reserve Capacity. Additionally, the portion of these weights distributed to the front axles must not exceed the Front Axle Accessory Reserve Capacity.

- ❑ The weight of the snowplow and related equipment should be properly matched to the load capacity of your vehicle. The weight of the installed equipment must not load the vehicle beyond the GAWR and GVWR listed on the Safety Compliance Certification Label.

Equip your vehicle with lights that conform to Federal and local regulations for snowplowing. See your dealer for the correct type of wiring.

Do not plow snow until your vehicle has been driven 500 miles (800 km). Maintain the vehicle and snowplow equipment in accordance with their respective manufacturer's recommendations. Refer to the notes under Scheduled Maintenance Services when plowing snow for extended periods.

https://truckmanualshub.com/

⚠WARNING

Do not exceed the GVWR or the GAWR specified on the Safety Compliance Certification Label.

Vehicle Operation On the Road

When operating on the road, your engine may run at a temperature higher than normal because the attached snowplow blade will restrict airflow to the radiator. So if you are driving more than 15 continuous miles (24 km), at temperatures above freezing, angle the plow blade either full left or full right to provide maximum airflow to the radiator. Shorter trips of 15 miles (24 km) in cold weather may be made at speeds up to 40 mph (64 km/h) without paying special attention to plow blade position.

Vehicle Operation While Plowing

Guard against transmission and drivetrain damage. When plowing small areas or heavy snow, operate with the transfer case in 4L and a vehicle speed of 0-5 mph (8 km/h). When plowing larger areas or light snow, at higher speeds, operate with the transfer case in 4H and do not exceed 15 mph (24 km/h).

Do not shift the transmission from forward to reverse until the engine is at idle and the wheels are stopped.

https://truckmanualshub.com/

Driving Under Special Conditions

Tips for Safe Driving

As with any new vehicle, yours may drive and handle differently from your previous vehicle. Use care until you become accustomed to its various features and driving characteristics.

Operate your vehicle within reasonable limits. Sudden acceleration, deceleration, turning, or combinations of these maneuvers can cause a vehicle to behave differently than anticipated.

Wheel Spin

- ❑ Extreme acceleration can cause the rear wheels to spin, perhaps resulting in reduced steering control.

If the wheels spin during vehicle start-up, shift to a different gear:

- ❑ Electronic 4-Speed Automatic Transmission E4OD: use 2 (Second)
- ❑ Mazda R2 5-Speed Overdrive Manual: use 2 (Second)
- ❑ 4-Speed Manual: use 3 (Third)
- ❑ Heavy Duty ZF S5-47 5-Speed Manual with Overdrive (Unloaded): use 3 (Third)
- ❑ Heavy Duty ZF S5-47 5-Speed Manual with Overdrive (loaded): use 2 (Second)

Move forward slowly and evenly. If this does not work, try rocking the vehicle.

For 4x4 vehicles, engage 4WD, and try to drive away.

https://truckmanualshub.com/

High Speed Driving

Ford Motor Company recommends obeying posted speed limits.

⚠WARNING
Driving too fast for conditions creates the possibility of loss of vehicle control. Driving at very high speeds for extended periods of time may result in damage to vehicle components.

Speed limiter

All models are equipped with an Electronic Engine Control (EEC) system which limits the maximum engine speed and thus road speed in top gear. Vehicle operation is normal since the controlled maximum speed is above posted highway speeds in North America.

Driving in Bad Weather

Slippery roads

Drive cautiously on wet or snowy roads:

- ❑ Do not quickly move the steering wheel unless necessary.
- ❑ Drive slower than you normally would.
- ❑ Give your vehicle more distance to stop.
- ❑ To stop on ice, shift to N (Neutral) below 10 mph (16 km/h) and gently pump brakes (except with 4WAL).
- ❑ Consider using one of the lower gears.
- ❑ For 4x4 vehicles, engage 4WD, and try to drive slowly away.

https://truckmanualshub.com/

⚠WARNING

To avoid losing control on slippery roads, do not downshift into Low with the automatic transmission when moving faster than 20 mph (32 km/h). Do not downshift into First with the manual transmission when moving faster than 5 mph (8 km/h).

⚠WARNING

The rear antilock brake system may not prevent brake lock-up on extremely slippery surfaces. Rear brake lock-up may also occur while driving in four-wheel drive because the transfer case couples the front and rear axles together.

Traction-Lok Rear Axle (If equipped)

This axle provides added drive away traction on slippery surfaces, particularly when one or more wheels are on a surface with poor traction.

Extended use of other than matching size tires on a Traction-Lok rear axle could result in a permanent reduction in effectiveness. This loss of effectiveness does not affect normal driving and should not be noticeable to the driver.

⚠WARNING

To avoid injury, never run the engine with one wheel off the ground, such as when changing a tire.

https://truckmanualshub.com/

High water

Never attempt to cross water that is fast flowing or of unknown depth.

Do not drive through flooded areas unless you are sure that the water is below the bottom of the wheel hubs.

If you must drive through high water, drive slowly. You may have limited traction or wet brakes, so allow extra stopping distance because your vehicle will not stop as quickly as usual.

After you drive through the standing water, apply your brakes gently several times as your vehicle moves slowly. This helps to dry the brakes.

NOTE: If the transmission and transfer case is submerged in water, their fluids should be checked and changed, if necessary.

NOTE: All rear axle lube quantities must be replaced every 100,000 miles (160,000 km) or if the axle has been submerged in water. Otherwise, the lube should not be checked or changed unless a leak is suspected or repair required.

https://truckmanualshub.com/

Rocking the vehicle

For 4x4 vehicles, engage 4WD LOW, when the vehicle gets stuck and try to drive away.

If your vehicle gets stuck (for example, in mud or snow), you may rock it out of the spot. Shift in a steady rhythm between forward and reverse gears. Allow the transmission to fully engage, then press lightly on the accelerator. Do not rock the vehicle for more than a few minutes. This may overheat the engine and transmission, causing damage to both. In addition, other vehicle systems and components may also be damaged.

⚠WARNING
Do not spin the wheels at over 35 mph (55 km/h). The tires may fail and injure a passenger or bystander.

https://truckmanualshub.com/

⚠WARNING

If you see or smell fuel, do not reset the switch or try to start your vehicle. Have all the passengers get out of the vehicle and call the local fire department or a towing service.

If your engine cranks but does not start after a collision or substantial jolt:

1. Turn the ignition key to the OFF position.
2. Check under the vehicle for leaking fuel.
3. If you do not see or smell fuel, push the red reset button down. If the button is already set, you may have a different mechanical problem.
4. Turn the ignition key to the ON position for a few seconds, then turn it to the OFF position.
5. Check under the vehicle again for leaking fuel. **If you see or smell fuel, do not start your vehicle again.** If you do not see or smell fuel, you can try to start your vehicle again.
6. Check all vehicle warning lights before driving your vehicle.

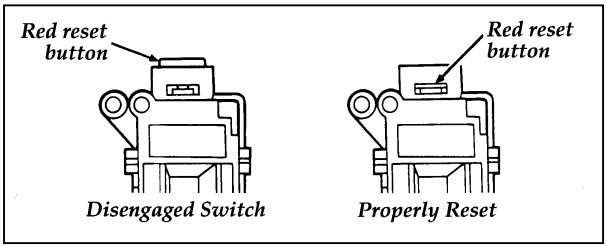

Reset button for fuel pump shut-off switch

https://truckmanualshub.com/

Fuses, Fuse Links and Circuit Breakers

Fuses, circuit breakers and fuse links protect your vehicle's electrical system from overloading. If electrical parts in your vehicle are not working, the system may have been overloaded and blown a fuse or tripped a circuit breaker. Before you replace or repair any electrical parts, check the appropriate fuses or circuit breakers.

The following charts tell you which fuses or circuit breakers protect each electrical part of your vehicle. If a fuse blows or a circuit breaker opens a circuit, all the parts of your vehicle that use that circuit will not work.

Once you have determined which fuses or circuit breakers to check, follow the procedures under *Checking and replacing fuses* or *Checking and replacing circuit breakers* later in this chapter.

https://truckmanualshub.com/

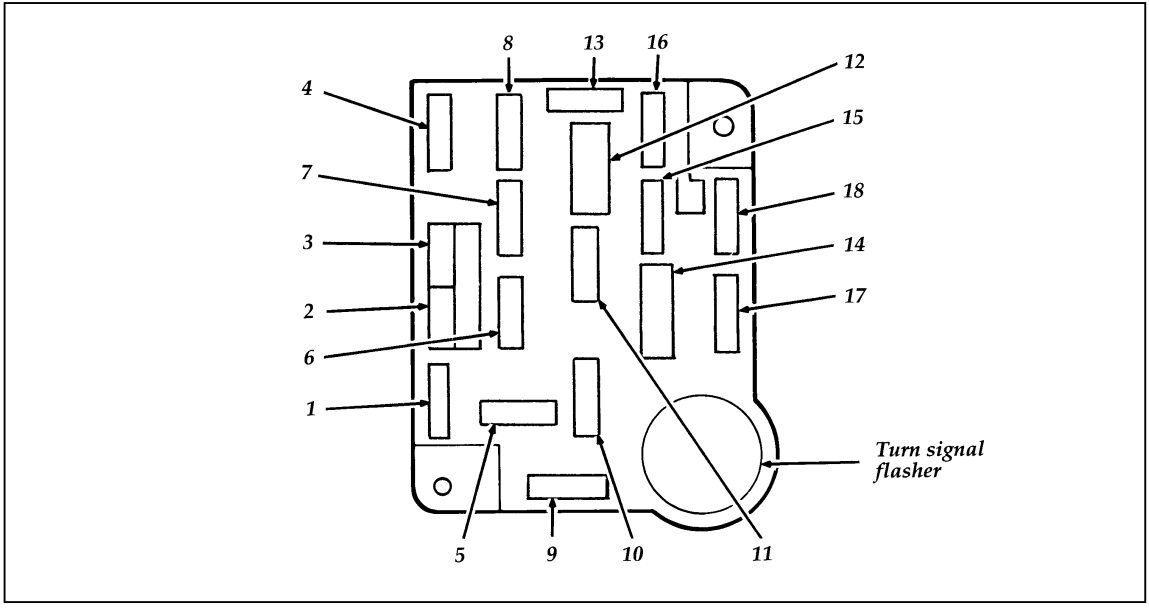

https://truckmanualshub.com/

Fuse/CB Loc.	Fuse Amp. Rating	Description
1	30 Amp	• Heater/Air conditioner blower
2	30 Amp	• Wiper/Washer
3	3 Amp	• Idle position switch (Diesel)
4	15 Amp	• Exterior lamps • Instrument illumination • Trailer exterior lamp relay • Warning buzzer/chime module
5		• Not used
6	15 Amp	• Air conditioner clutch • Diesel auxiliary fuel selector • Remote keyless entry
7	15 Amp	• Turn lamps
8	15 Amp	• Courtesy/dome/cargo lamps • Electric outside mirrors • Keyless entry • Speedometer • Warning buzzer/chime module
9	25 Amp	• Power point
10	4 Amp	• Instrument illumination
11	15 Amp	• Radio • Radio display dimmer
12	20 Amp Circuit Breaker	• Power door locks • Power driver seat • Power lumbar

https://truckmanualshub.com/

Fuse/CB Loc.	Fuse Amp. Rating	Description
13	15 Amp	• Anti-lock brakes • Brake shift interlock • Electronic engine control • Speed control • Stop/hazard lamps • Stop sense for electronic engine control
14	20 Amp C.B.	• Power windows
15	20 Amp	• Anti-lock brakes
16	15 Amp	• Cigarette lighter • Generic Scan Tool
17	10 Amp	• Diesel indicators • Electronic transmission • Gauges • Tachometer • Warning buzzer/chime module • Warning indicators
18	10 Amp	• Brake shift interlock • Speedometer • Selectable RPM control (Diesel) • Speed control (Diesel)

https://truckmanualshub.com/

Circuit Protected	Size	Location
Headlamps & High Beam Indicator	22 Amp Circ. Brkr.	Integral with Headlamp Switch
Windshield Wiper and Washer Pump	30 Amp Fuse	Fuse Panel
Electric Brakes (Trailer)	30 Amp Maxi Fuse	Power Distribution Box
Trailer Lamps (Relay Feed)	25 Amp Fuse	Power Distribution Box
Alternator, 95 Amp	12 Ga. Fuse Link	At Starting Motor Relay (Gasoline Engine)
Alternator, 130 Amp	(2) 12 Ga. Fuse Links	At Starting Motor Relay (Diesel Engine)
Powertrain Control Module	20 Amp (Diesel) 30 Amp (Gasoline)	Power Distribution Box
Fuel Pump	20 Amp Maxi Fuse	Power Distribution Box
Headlamp Switch	40 Amp Maxi Fuse	Power Distribution Box
Diesel Glow Plugs	(2) 14 Ga. Fuse Links	At Starting Motor Relay
Power Windows	20 Amp C.B.	Fuse Panel
Power Door Locks	20 Amp C.B.	Fuse Panel
Hazard Flashers	15 Amp Fuse	Fuse Panel
Trailer Battery Recharge Feed	30 Amp Maxi Fuse	Power Distribution Box

https://truckmanualshub.com/

Power Distribution Box

The high current fuses contained in the Power Distribution Box protect your vehicle's main electrical systems from overloads; these fuses provide the connection between the battery and your vehicle's electrical systems.

The high current fuses are coded as follows: 30 amp — light green, 40 amp — orange, 50 amp — red, 60 amp — blue.

⚠WARNING
Always disconnect the battery before servicing high current fuses.

Ford recommends that high current fuses be replaced by a qualified technician.

⚠WARNING
Always replace the cover to the Power Distribution Box before reconnecting the battery or refilling fluid reservoirs.

A blown high current fuse may be replaced but will continue to blow until the cause of the overload condition is corrected.

⚠WARNING
Always replace a fuse with one that has the specified amperage rating. Using a fuse with a higher amperage rating can cause severe wire damage and could start a fire.

https://truckmanualshub.com/

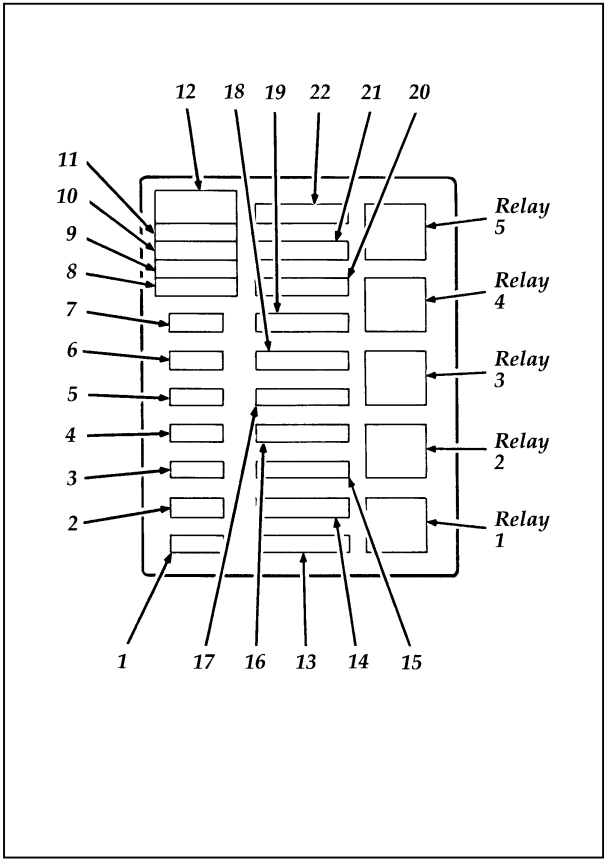

Power distribution box

https://truckmanualshub.com/

Fuse/CB/ Relay Loc.	Fuse Amp. Rating	Description
1	20 amp	• Audio power
2	15 amp	• 200 Amp alternator (Diesel ambulance only)
3	30 amp	• Daytime running lamps (Canada only) • Headlamp flash-to-pass • Horn
4	25 amp	• Trailer back-up lamps • Trailer running lamps
5	15 amp	• Back-up lamps • Daytime running lamp module (DRL) (Canada only) • Oxygen sensor heater • Trailer battery charge relay
6	10 amp	• Trailer right-hand stop/turn lamp
7	10 amp	• Trailer left-hand stop/turn lamp
8	30 amp maxi	• Injector driver module (Diesel)
9	30 amp (Gas) 20 amp (Diesel)	• Powertrain control system
10	20 amp maxi	• Instrument panel fuses: 15, 18 • Starter relay coil
11	—	Not used
12	Diode	• Powertrain control system relay coil
13	50 amp maxi	• Instrument panel fuses: 5, 9, 13
14	—	Not used
15	50 amp maxi	• Instrument panel fuses: 1, 7 • Power distribution box: fuse 5
16	20 amp maxi	• Fuel pump feed (Gas engine)

https://truckmanualshub.com/

Fuse/CB/ Relay Loc.	Fuse Amp. Rating	Description
17	50 amp maxi	• Alternator charge lamp • Idle position switch (Diesel) • Instrument panel fuses: 2, 6, 11, 14, 17 • Power distribution box: fuse 22
18	30 amp maxi	• Trailer battery charge
19	40 amp maxi	• Headlamps
20	50 amp maxi	• Instrument panel fuses: 4, 8, 12, 16
21	30 amp maxi	• Trailer brake feed
22	20 amp maxi (Gas) 30 amp (Diesel)	• Distributor pickup (Gas engine) • Fuel line heater (Diesel) • Glow plug controller (Diesel) • Ignition coil (Gas engine) • Powertrain control system relay coil • Thick film integrated (TFI) module (Gas engine)
Relay 1		• Powertrain control system
Relay 2		• Fuel pump (Gas engine) • Injector driver module (IDM relay) (Diesel)
Relay 3		• Horn
Relay 4		• Trailer tow lamps
Relay 5		Not used

https://truckmanualshub.com/

Checking and Replacing Fuses

If you need to check a fuse, follow these steps:

1. In order to find the fuse panel, you must first remove the cover from the lower edge of the instrument panel. You can do this by pulling on handle to disengage the fasteners.

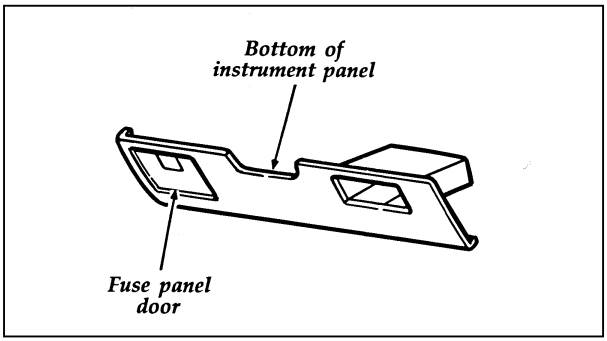

Fuse panel cover

2. On the fuse panel cover, find the number of the fuse you want to check. The diagram on the cover tells you where to locate the fuse on the panel.

   The underside of the cover also contains a fuse pulling tool in case you need to replace a blown fuse.

3. Check the fuse to see if it is blown. Look through the clear side of the fuse to see if the metal wire inside is separated. If it is, the fuse is blown and should be replaced.

https://truckmanualshub.com/

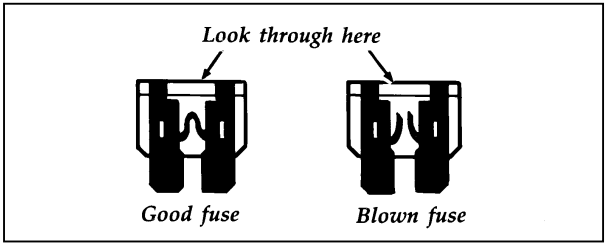

The side view of a fuse

4. Replace the fuse with one that has the right amperage rating (see previous chart).

⚠WARNING

Always replace a fuse with one that has the specified amperage rating. Using a fuse with a higher amperage rating can cause severe wire damage and could start a fire.

5. Put the fuse panel cover back on.

Even after you replace a fuse, it may continue to blow if you do not find what caused the overload. If the fuse continues to blow, have your electrical system checked.

Circuit Breakers

If you need to check a circuit breaker on the fuse panel, see *Checking and replacing fuses* to find out how to locate the fuse panel. Otherwise, locate the circuit breaker according to the instructions on the charts given earlier in this chapter.

Since you need diagnostic equipment to check whether a circuit breaker works and such equipment comes with instructions, we do not discuss how to check circuit breakers.

https://truckmanualshub.com/

However, you should know that the circuit breakers will reset themselves and allow the electrical parts to work again once the overload on the circuit is removed. If the circuit breakers continue to cut off electricity, have your vehicle's electrical system checked.

If you replace a circuit breaker, use one with the same amperage rating. To remove a circuit breaker mounted in the fuse panel, grip it with your finger and thumb and pull it straight out of its socket.

Changing a Tire

If you get a flat tire while you are driving, do not apply the brake heavily. Instead, gradually decrease the speed. Hold the steering wheel firmly and slowly move to a safe place on the side of the road. Park on a level spot, turn off the ignition, set the parking brake, and turn on the hazard flashers.

The Conventional Spare Tire

If you have the conventional spare tire, you can use it as a spare or as a regular tire. This spare tire is identical to the other tires that come with your vehicle, although the wheel may not match.

⚠WARNING
To avoid injury, never run the engine with one wheel off the ground, such as when changing a tire.

Extended use of other than matching size spare tires on a Traction-Lok axle could result in a permanent reduction in effectiveness. This loss of effectiveness does not affect normal driving and should not be noticeable to the driver.

https://truckmanualshub.com/

Spare Tire Location

The spare tire for your truck is stowed at the rear under the frame unless you have the optional in-box spare tire mounting.

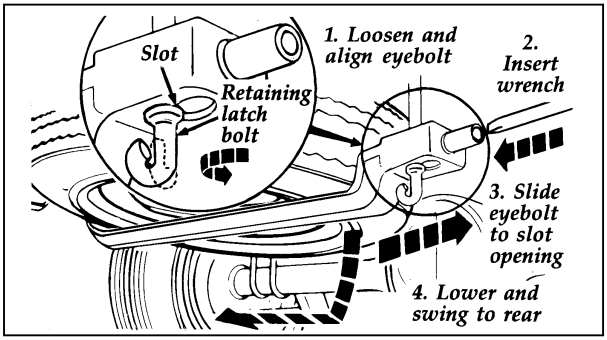

Spare tire stowage

To remove the spare tire:

1. With the tapered end of the lug nut wrench through the eyebolt eye, loosen the bolt until the bracket is loose from the upper support. Be careful you do not loosen too much and cause the spare to fall.

2. Line up the eyebolt eye with the channel slot, the eye toward the tire.

3. Hold the socket end of the wrench parallel to the ground. Put the tapered end into the channel assembly tube and lift up on the wrench. At the same time pull the eyebolt toward the tube and push on the wrench to pass the eyebolt through the channel keyhole.

4. Lower spare tire, swing the channel to the rear and remove the lug wrench from the channel tube.

https://truckmanualshub.com/

5. Remove the wheel retainer from the center bolt. If necessary, use the tapered end of the wrench inserted in the retainer for more leverage.
6. Remove the spare tire from the channel assembly.

⚠WARNING
Never allow any part of your body to extend under the channel with mounted spare tire during removal or installation.

To stow the spare tire:

1. Position the spare tire so it is balanced on the channel assembly.
2. Screw the retainer on the center bolt and tighten until the wheel is secured to the channel.
3. Put the tapered end of the lug nut wrench into the channel assembly tube and lift and line up the channel and eyebolt, so the shoulder of the eyebolt is pushed all the way into the slot.
4. Tighten the eyebolt with the tapered end of the wrench until the spare tire cannot be moved by hand pressure. Adjustment of the driver side channel ball end bolt is not required when stowing an original equipment size wheel and tire.

Position of eyebolt

After the eyebolt has been tightened it should be at a right angle to the slot. That is, it should be at 90 degrees to the center line of slot, if not, tighten it to that position. This is necessary to prevent channel separation and/or loss of the spare tire if the spare becomes loose in the channel.

https://truckmanualshub.com/

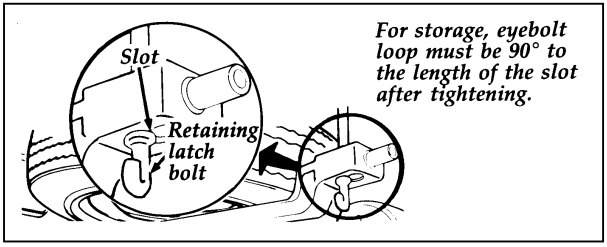

Eyebolt position

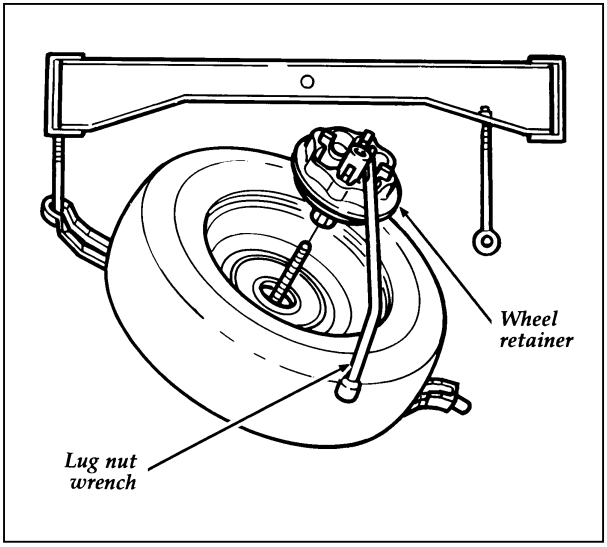

Underbody spare tire carrier

When the truck is ordered with a spare wheel only (no tire), it is stowed with a wood spacer in the usual spare tire location. Remove the wood spacer before installing the spare tire and wheel.

After the spare tire and wheel are stowed, adjust the driver side channel ball end bolt and the eyebolt as necessary until the tire cannot be moved by hand pressure.

https://truckmanualshub.com/

⚠WARNING

Make sure the spare tire and jacking equipment are stowed and secured in the proper storage location.

Preparing to Change the Tire

NOTE: To lift your vehicle by other than the front or rear jacking points, be sure to use only hoist adapters with a wide contact surface.

1. Make sure that your vehicle will not move or roll. If you have an automatic transmission, put the gearshift in Park. If you have a manual transmission, put the gearshift in Reverse. Set the parking brake and block the wheel that is diagonally opposite the tire that you are changing.

NOTE: Make sure the ignition is in the OFF position.

If you have a four-wheel drive vehicles with manual locking hubs, put transfer case lever in 2H, 4H, or 4L.

When one of the back wheels is off the ground, the transmission alone will not prevent the vehicle from moving or slipping off the jack, even if the vehicle is in P (Park) or 1 (First). To prevent the vehicle from moving when you change a tire, be sure the parking brake is set, then block the wheel (both directions) that is diagonally opposite (other side and end of the vehicle) to the tire that is being changed.

⚠WARNING

If the vehicle slips off the jack, you or someone else could be seriously injured.

https://truckmanualshub.com/

When the transfer case is in the N (Neutral) position, the engine and transmission are disconnected from the rest of the driveline. Therefore, the vehicle is free to roll even if the automatic transmission is in P (Park) or the manual transmission is in gear.

⚠WARNING
Do not leave the vehicle unattended with the transfer case in the N (Neutral) position. Always set the parking brake fully and turn off the ignition when leaving the vehicle.

On F-Super Duty vehicles, the parking brake is on the transmission. Therefore, the vehicle will not be prevented from moving when a rear wheel is lifted, even if the vehicle is in Park and the parking brake is applied. Be sure to block both directions of the wheel that is diagonally opposite to the wheel that is being lifted.

⚠WARNING
If the vehicle slips off the jack, you or someone else could be seriously injured.

2. Get out the spare tire and jack.

The jack and lug wrench are stowed under the hood on the right front fender inner panel, and the jack handle is on the radiator support.

https://truckmanualshub.com/

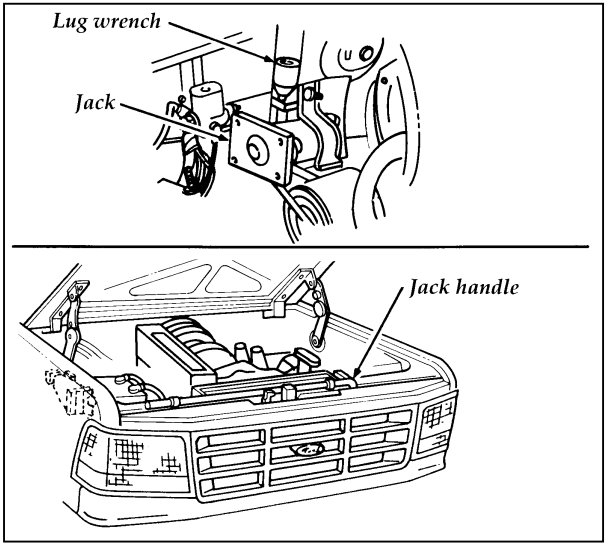

Jack and assembly location

3. Use the tapered end of the lug nut wrench to unscrew wheel ornaments attached by retaining screws. Remove any wheel trim. Insert the tapered end of the lug nut wrench behind wheel covers or hubcaps and twist off.

4. Loosen the wheel nuts by pulling up on the handle of the lug nut wrench about one-half turn (counterclockwise). Do not remove the wheel lug nuts until you raise the tire off the ground.

https://truckmanualshub.com/

Removing and Replacing the Tire

1. Insert the jack handle into the jack and use the handle to slide the jack under the vehicle.

⚠WARNING

To avoid injury, never run the engine with one wheel off the ground, such as when changing a tire.

⚠WARNING

To lessen the risk of personal injury, do not put any part of your body under the vehicle while changing a tire. Do not start the engine when your vehicle is on the jack. The jack is only meant for changing the tire.

2. Positioning the jack

   a. To raise a front or rear wheel, place the jack as shown in the illustration that applies to your vehicle.

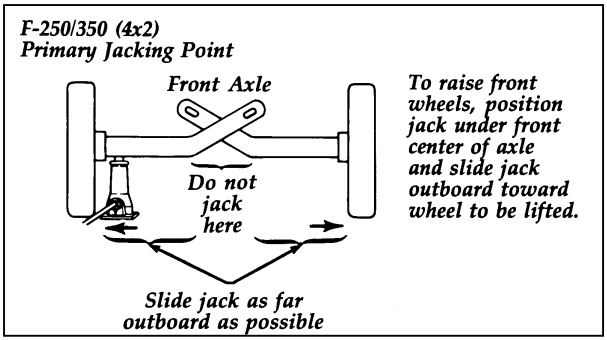

F-Series jacking points

https://truckmanualshub.com/

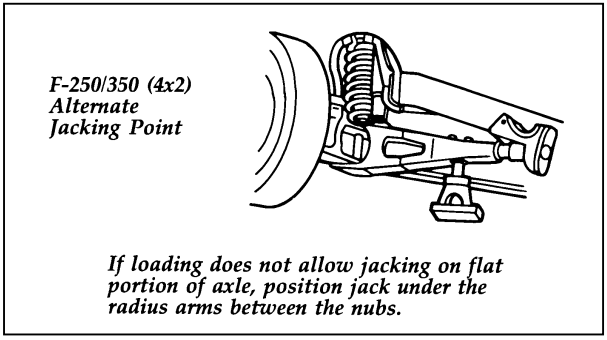

F-Series jacking points

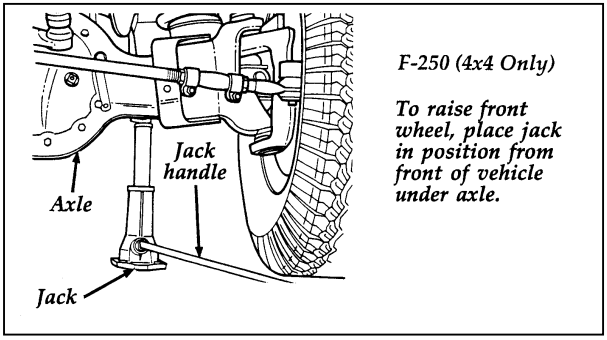

Positioning the jack

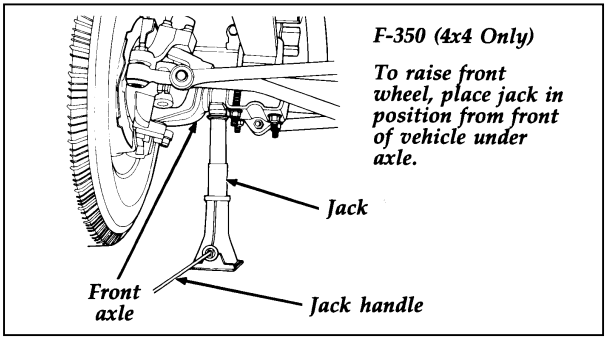

Positioning the jack

https://truckmanualshub.com/

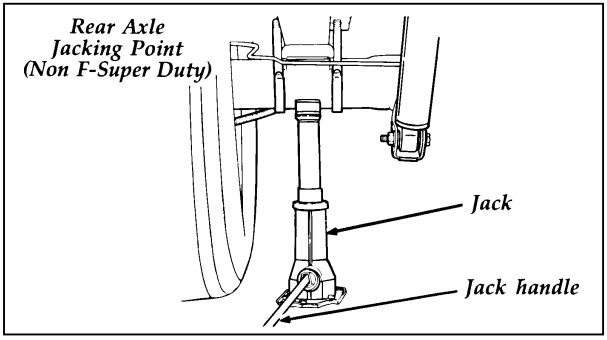

Positioning the jack

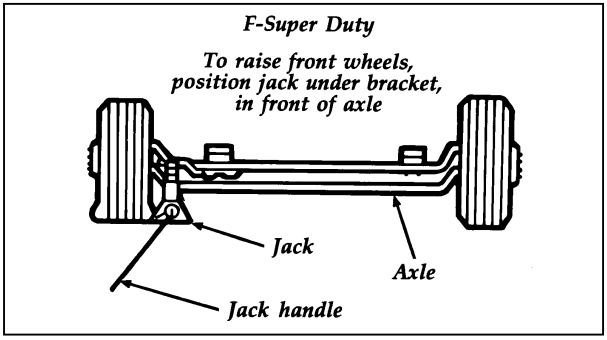

Positioning the jack

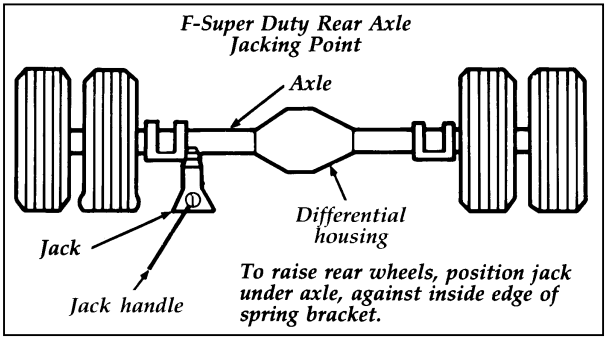

Positioning the jack

https://truckmanualshub.com/

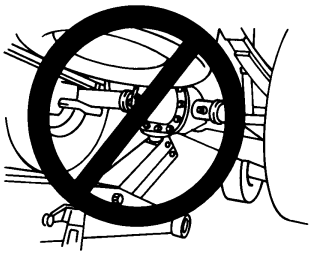

NEVER USE THE DIFFERENTIAL HOUSING AS A LIFT POINT.

b. Turn the jack handle clockwise until the wheel is completely off the ground.

3. Remove the lug nuts with the lug nut wrench.

4. Replace the flat tire with the spare tire.

If your vehicle has dual rear wheels, there are locating pins on the hubs and wheels with corresponding holes. When you put the wheel back on, make sure the pins are lined up with the proper holes.

If your vehicle has single rear wheels, thread the lug nuts on the wheel studs with the beveled face toward the wheel. Use the lug nut wrench to screw the lug nut snugly against the wheel but do not tighten.

If your vehicle has dual rear wheels, thread the two-element swiveling lug nut on the wheel studs with the flange face toward the wheel. Use the lug nut wrench to screw the lug nut snugly against the wheel but do not tighten.

https://truckmanualshub.com/

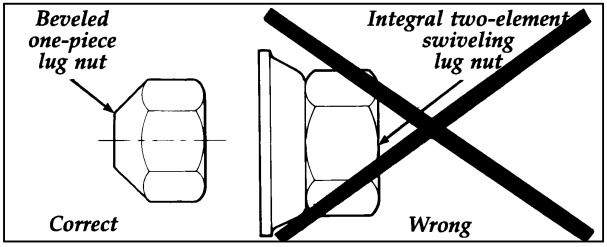

Single rear wheel nut

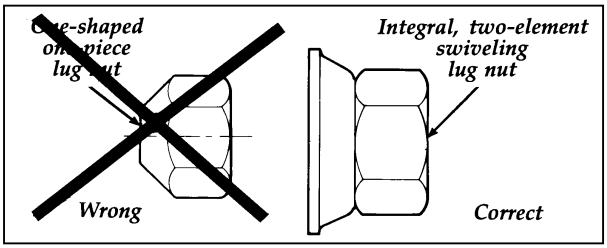

Dual rear wheel nut

5. Lower the vehicle by turning the jack handle counterclockwise.

6. Remove the jack and fully tighten the lug nuts in the order shown in the following illustration.

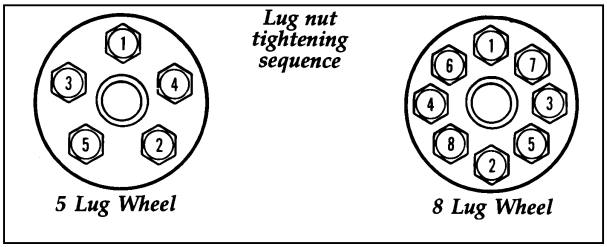

Lug nut tightening sequence

https://truckmanualshub.com/

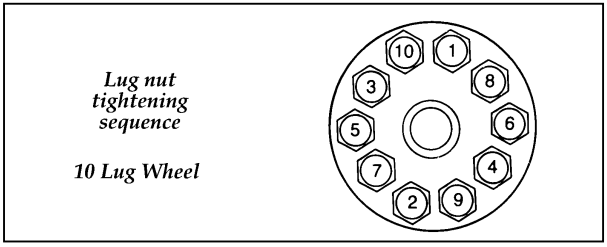

Lug nut tightening sequence

⚠WARNING

Never use wheels or lug nuts different than the original equipment as this could damage the wheel or mounting system. This damage could allow the wheels to come off while the vehicle is being driven.

7. Replace any wheel covers, ornaments, or hub caps that your vehicle has. Make sure that they are screwed or snapped into place.

8. Put the tire, jack, and wrench away. (Make sure jack is securely fastened so it doesn't rattle when you drive.) The carrier is designed to hold the temporary spare which comes with your vehicle. The stowage of a full size tire in the spare tire carrier may damage the tire or the vehicle. The flat full size tire should be stowed securely in the vehicle until it can be repaired.

9. Unblock the wheels.

On vehicles equipped with dual rear wheels retighten the wheel lug nuts to the specified torque at 100 miles (160 km), and again at 500 miles (800 km) of new vehicle operation and at the intervals specified in the *Maintenance Schedule and Record* booklet.

https://truckmanualshub.com/

Also retighten to the specified torque at 500 miles (800 km) of operation after any wheel change or any time the lug nuts are loosened.

⚠WARNING

Failure to retighten wheel lug nuts at mileages specified could allow wheels to come off while the vehicle is in motion.

Model	Bolt Size	Wheel Lug Nut Torque*	
		Ft-Lb	N•m
F-250, F-350	9/16-18	140	190
F-350, F-Super Duty and Commercial Stripped Chassis (Dual Rear Wheel Vehicles)	9/16-18	140	190

* Torque specifications are for nut and bolt threads free of dirt and rust. Do not use oil or grease on threads. Use only Ford recommended replacement fasteners.

Jump-Starting Your Vehicle

NOTE: Read the *7.3L Diesel Engine Owner's Guide Supplement* for information on jump-starting your diesel-powered light truck.

Your vehicle's battery may die if you leave the lights on or any electrical equipment on after you turn the engine off. If this happens, you may be able to jump-start your vehicle with a booster battery.

https://truckmanualshub.com/

⚠WARNING

The gases around the battery can explode if exposed to flames, sparks, or lit cigarettes. An explosion could result in injury or vehicle damage.

⚠WARNING

To protect yourself when charging a battery, always shield your face and eyes. Make sure that you can breathe fresh air.

⚠WARNING

Applying too much pressure on the ends when lifting a battery could cause acid to spill. Lift the battery with a carrier or with your hands on the opposite corners.

⚠WARNING

Batteries contain sulfuric acid which burns skin, eyes, and clothing.

If the acid touches someone's skin, eyes, or clothing, immediately flush the area with water for at least 15 minutes. If someone swallows the acid, have him or her drink lots of milk or water first, then Milk of Magnesia, a beaten egg, or vegetable oil. Call a doctor immediately.

⚠WARNING

Do not push-start your vehicle. You could damage the catalytic converter. For further information, see *Jumper Cables* in the Index.

https://truckmanualshub.com/

To avoid damaging your vehicle or your battery, and to avoid injury to yourself, follow these directions for preparing your vehicle to jump-start and connecting the jumper cables in the order they are given. If in doubt, call for road service.

Preparing Your Vehicle

1. Your vehicle has a 12-volt starting system, so you need to use a 12-volt jumper system. You will damage your starting motor, ignition system, and other electrical parts if you connect them to a 24-volt power supply (either two 12-volt batteries in series or a 24-volt generator set).

2. Do not disconnect the battery of the disabled vehicle. You could damage the vehicle's electrical system.

3. Park the booster vehicle close to the hood of the disabled vehicle. **Make sure the vehicles do not touch each other.** Set the parking brake on both vehicles and stay clear of the engine cooling fan and other moving parts.

4. Check all battery terminals and remove any excessive corrosion before you attach the jumper cables.

5. Turn on the heater fan in both vehicles. Turning on the fan helps protect the electrical system from voltage surges. Turn off all other switches and lights in both vehicles to prevent possible damage to either vehicle's electrical systems.

https://truckmanualshub.com/

Connecting the jumper cables

1. Connect one end of the first jumper cable to the positive (+) terminal of the discharged battery. (You can connect either jumper cable to the positive (+) terminal, as long as you use the same cable for both positive terminals.) Most jumper cables have a red cable and a black cable. The red cable is generally used for the positive terminals and the black for the negative ones.

2. Connect the other end of the first cable to the positive (+) terminal of the booster battery.

3. Connect one end of the second cable to the negative (−) terminal of the booster battery — NOT to the discharged battery.

4. Connect the other end of the second cable to a good metallic surface on the engine or frame of the disabled vehicle.

⚠WARNING
Do not connect the end of the second cable to the negative (−) terminal of the battery to be jumped. A spark may cause an explosion of the gases that surround the battery.

https://truckmanualshub.com/

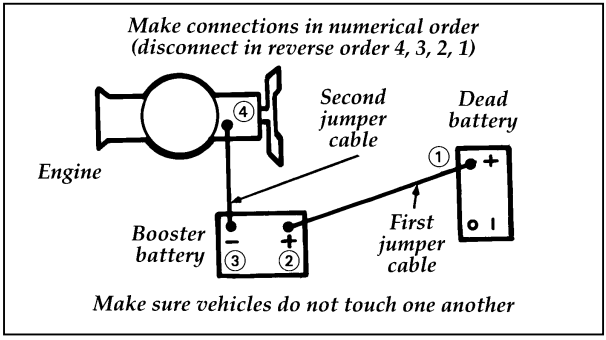

Attaching jumper cables

Jump-Starting

1. Make sure that the jumper cables are not in the way of moving engine parts, then start the booster vehicle. Run the engine at a moderate speed.

2. Let the discharged battery charge for a few minutes and then start the disabled vehicle. It may take a couple of tries before the vehicle starts. If the vehicle does not start after several attempts, there may be a different problem.

3. When both vehicles are running, let them idle for a few minutes to charge the discharged battery.

Removing jumper cables

1. **Always remove the jumper cables in the reverse order.** Remove the negative (—) end of the jumper cable from the metallic surface on the engine or frame of the disabled vehicle.

2. Remove the negative (—) cable from the booster battery.

https://truckmanualshub.com/

3. Remove the positive (+) cable from the booster battery.

4. Remove the other end of the positive (+) cable from the discharged battery.

After the vehicle is started, let it idle for a while to let the engine “relearn” its idle conditions. Drive it around for a while with all electrical accessories turned off to let the battery recharge. Driveability may be deteriorated slightly until all drive modes are “relearned.” **You may need to use a battery charger to fully recharge the battery.**

If you need to replace your battery, see *Battery* in the *Maintenance and Care* chapter.

Towing Your Vehicle

The recommended method to tow your vehicle is with flatbed or wheel lift equipment. However, slingbelt towing is acceptable. **On vehicles equipped with an air dam,** the towbar will deform the rubber air dam.

When calling for a tow truck, tell the operator what kind of vehicle you have. A towing manual is available from Ford Motor Company for all authorized tow truck operators. Have your tow truck driver refer to this manual for the proper hook-up and towing procedures for your vehicle.

⚠WARNING
Never use a tow bar that attaches to the bumper when you tow your vehicle. This could damage the bumper and cause an accident.

https://truckmanualshub.com/

Towing Two-Wheel Drive Vehicles

FRONT WHEELS OFF GROUND
Manual or Automatic Transmission

1. Transmission in neutral (N).
2. Max speed 35 mph (56 km/h).
3. Max distance 50 miles (80 km).

NOTE — If a distance of 50 miles (80 km) or speed of 35 mph (56 km/h) must be exceeded, disconnect driveshaft. (Max speed 55 mph [88 km/h] with driveshafts disconnected.)

REAR WHEELS OFF GROUND
Manual or Automatic Transmission

1. Transmission in neutral (N).
2. Lock steering wheel straight ahead.
3. Max speed 55 mph (88 km/h).

ALL FOUR WHEELS ON GROUND
Manual or Automatic Transmission

1. Transmission in neutral (N).
2. Max speed 35 mph (56 km).
3. Max distance 50 miles (80 km).

NOTE — If a distance of 50 miles (80 km) or speed of 35 mph (56 km/h) must be exceeded, disconnect driveshaft. (Max speed 55 mph [88 km/h] with driveshafts disconnected.)

Towing Four-Wheel Drive Vehicles With a Lever-Operated Transfer Case

- ❑ Place transmission gearshift (automatic or manual) in N (Neutral).
- ❑ Lock steering wheel straight ahead if vehicle is to be towed with rear wheels off the ground.
- ❑ Set manual locking hubs in FREE position or disengage the automatic locking hubs by shifting the transfer case to 2H and drive the vehicle in the opposite direction for a minimum of 10 feet (3 meters) in a straight line.

https://truckmanualshub.com/

NOTE: Confirm by observation that the front driveshaft is not rotating prior to towing with the rear wheels off the ground.

❑ Place transfer case in N (Neutral).

NOTE: The transfer case neutral setting is located between 4H and 4L. In order to place the transfer case in neutral, first place the lever in the 4H position, then push down (toward the ground) on the shift knob and at the same time pull slightly rearward until the lever is between the 4H and 4L position. With the ignition in the on position, both 4x4 and LOW RANGE indicator lights will be off when the transfer case is in neutral. These lights will also be off when the transfer case is in the 2H position.

There are no wrecker or recreational vehicle towing restrictions on method or distance if the above preparations are made.

❑ Vehicle speed should not exceed 55 mph (88 km/h). This applies with the front wheels off the ground, the rear wheels off the ground, or both front and rear wheels on the ground.

https://truckmanualshub.com/

Maintenance and Care

Service Made Easy

Ford has two goals for servicing your vehicle.

1. When we can, we design parts that do not need to be serviced.
2. We want to make servicing your vehicle as easy as possible. To help you:

- ❑ We highlight do-it-yourself items in yellow in the engine compartment so that you can find them easily.
- ❑ When possible, we design parts that can be replaced without tools.
- ❑ We give you a Maintenance Schedule that makes tracking routine service for your vehicle easy. The maintenance schedule is located in the *Maintenance Schedule* booklet.

This chapter tells you about the basic parts that you need to check and service regularly.

If your vehicle needs professional servicing, your dealership can provide the parts and service required. Check your *Warranty Information Booklet* to find out which parts and services are covered. Also see the *Customer Assistance* chapter of this Owner Guide.

Ford Motor Company recommends that the Owner Maintenance Checks listed in the *Maintenance Schedule* booklet be performed for the proper operation of your vehicle. In addition to the conditions listed in the *Owner Maintenance Checklist*, be alert for any unusual noise,

https://truckmanualshub.com/

vibration, or other indication that your vehicle may need service. If you do notice something unusual, see that your vehicle is serviced promptly.

Precautions When Servicing Your Vehicle

Be especially careful when inspecting or servicing your vehicle. Here are some general precautions for your safety:

- ❑ If you must work with the engine running, avoid wearing loose clothing or jewelry that could get caught in moving parts. Take appropriate precautions with long hair.
- ❑ Do not work on a vehicle in an enclosed space with the engine running, unless you are sure you have enough ventilation.
- ❑ Never get under a vehicle while it is supported only by a jack. If you must work under a vehicle, use safety stands.
- ❑ Keep all lit cigarettes and other smoking materials away from the battery and all fuel-related parts.

If you disconnect the battery, the engine must “relearn” its idle conditions before your vehicle will drive properly. To find out how the engine does this, see *Battery* in this chapter.

https://truckmanualshub.com/

Working with the engine off:

1. Always set the parking brake fully and make sure that the gearshift is securely latched in P (Park) (automatic transmission) or in 1 (First) (manual transmission).

2. When the transfer case is in the N (Neutral) position, the engine and transmission are disconnected from the rest of the driveline. Therefore, the vehicle is free to roll even if the automatic transmission is in P (Park) or the manual transmission is in gear. Do not leave the vehicle unattended with the transfer case in the N (Neutral) position.

3. Remove the key from the ignition after you turn the engine off.

4. Block the wheels. This will prevent your vehicle from moving unexpectedly.

Working with the engine on:

1. Always set the parking brake fully and make sure that the gearshift is securely latched in P (Park) (automatic transmission) or in 1 (First) (manual transmission).

2. When the transfer case is in the N (Neutral) position, the engine and transmission are disconnected from the rest of the driveline. Therefore, the vehicle is free to roll even if the automatic transmission is in P (Park) or the manual transmission is in gear. Do not leave the vehicle unattended with the transfer case in the N (Neutral) position.

⚠WARNING

Do not start your engine with the air cleaner removed and do not remove it while the engine is running.

https://truckmanualshub.com/

Opening the Hood

1. Pull the hood release handle, located next to the parking brake pedal.
2. While applying downward pressure on the hood, push the hood latch handle located behind the grille near the center front of the vehicle to the left.
3. As you open the hood to its fullest extent, a clock spring will assist you and "snap" into position. The clock spring lift secures the hood at its fullest height.

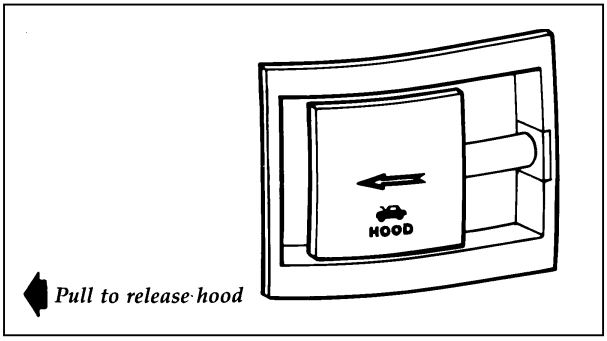

Hood release handle

https://truckmanualshub.com/

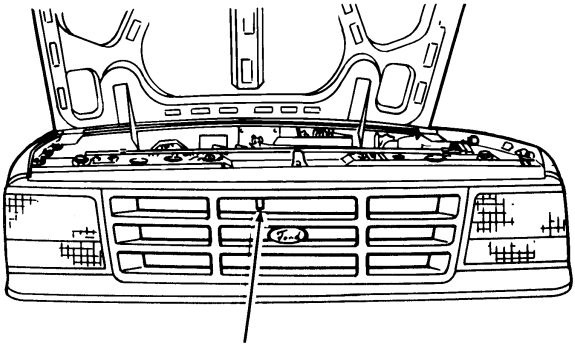

While applying downward pressure on the hood, push lever left and raise the hood. To close, slam hood shut. After closing, always make sure your hood is latched securely by trying to lift it.

Hood and support

NOTE: Be sure to oil the hood latch every six months to maintain smooth operation.

Always attempt to lift the hood after closing to be sure it is securely latched.

Engine Compartment

Your vehicle has one of the following types of engines:

- ❑ A 5.8 Liter EFI, V-8 engine, or
- ❑ A 7.5 Liter EFI, V-8 engine.

NOTE: Read the *7.3L Diesel Engine Owner Guide Supplement* for information regarding correct service points for your diesel-powered vehicle.

The following pages show diagrams of each engine type and where to find items that you should regularly service.

https://truckmanualshub.com/

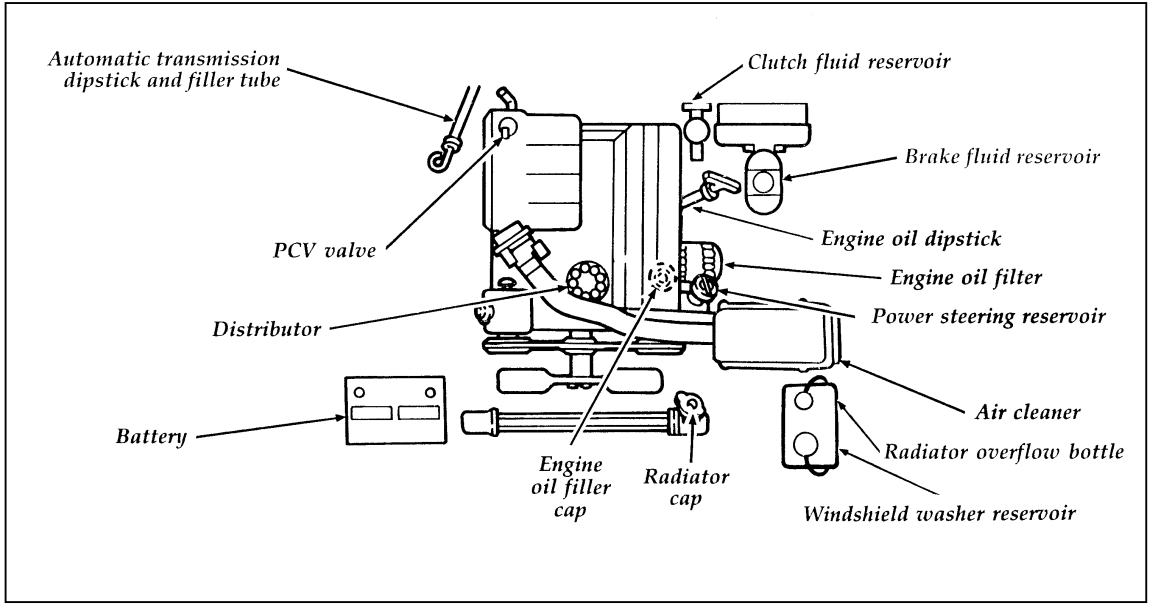

5.8L engine compartment service points

https://truckmanualshub.com/

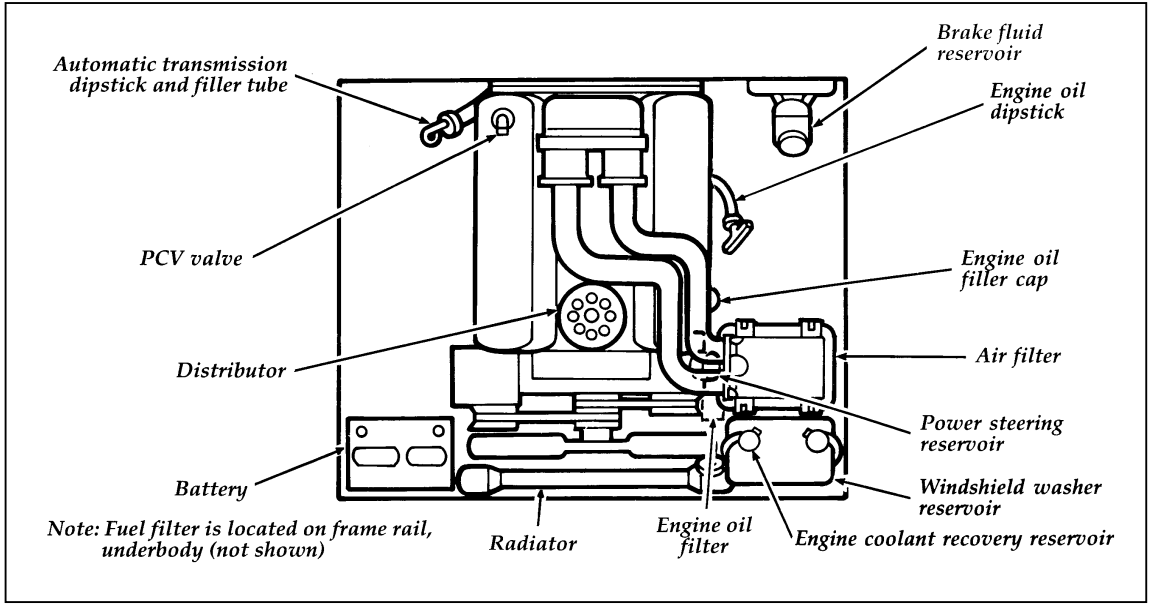

7.5 EFI engine compartment service points

https://truckmanualshub.com/

Engine Oil Recommendations

We recommend using Motorcraft oil or an equivalent oil meeting Ford Specification WSS-M2C153-F and displaying the American Petroleum Institute CERTIFICATION MARK on the front of the container.

The API Certification Mark

Never use:

- ❑ "Non-Detergent" oils
- ❑ Oils labeled API SA, SB, SC, SD, SE, SF or SG
- ❑ Additional engine oil additives, oil treatments or engine treatments

For vehicles with 5.8L engines

Engine oils with an **SAE 5W-30** viscosity are **PREFERRED** for your vehicle. They provide the best engine performance, fuel economy and engine protection for all climates down to -15˚F (-25˚C).

Synthetic engine oils which are CERTIFIED and of the preferred viscosity may be used in your engine. The engine oil and oil filter must still be changed according to the maintenance schedule.

https://truckmanualshub.com/

For vehicles with 7.5L engine

Engine oils with an **SAE 10W-30** viscosity are **PREFERRED** for your vehicle which provide the best engine protection for all climates down to −5˚F (−20˚C). SAE 5W-30 engine oils may also be used down to −15˚F (−25˚C).

Synthetic engine oils which are CERTIFIED and of the preferred viscosity may be used in your engine. The engine oil and oil filter must still be changed according to the maintenance schedule.

Checking and Adding Engine Oil

Since the proper amount of engine oil is important for safe engine operation, check the oil using the dipstick each time you put fuel in your vehicle. Remember the engine must be off, the oil must be warm and the vehicle must be parked on level ground.

Checking the engine oil level:

1. Turn the engine off after it has warmed up and allow a few minutes for the engine oil to drain back into the oil pan.

2. Set the parking brake, making sure that the gearshift is securely latched in P (Park) (automatic transmission) or 1 (First) (manual transmission).

3. Open the hood. Protect yourself from engine heat.

4. Locate the engine oil dipstick (highlighted in yellow) and carefully pull it out of the engine.

5. Wipe the dipstick clean and put it back into position, making sure it is fully seated.

https://truckmanualshub.com/

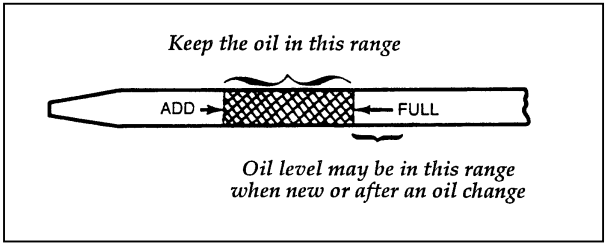

Engine oil dipstick (5.8L engine)

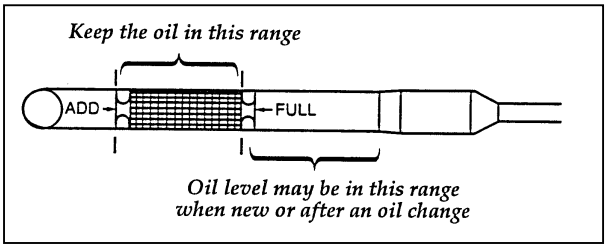

Engine oil dipstick (7.5L engine)

6. Carefully, pull the dipstick out again. If the oil level is below the "ADD 1 QT." line, add engine oil as necessary. If the oil level is beyond the letter "F" in FULL, engine damage or high oil consumption may occur and some oil must be removed from the engine.

7. Put the dipstick back in and make sure it is fully seated.

It may be necessary to add some oil between oil changes. Make sure you use a CERTIFIED engine oil of the preferred viscosity. Your vehicle's warranty coverage may not apply if engine damage is caused by the use of improper engine oil.

Add engine oil through the oil filler cap highlighted in yellow. To add oil, remove the filler cap and use a funnel to pour oil into the opening. Be careful not to overfill the engine. Recheck the oil level after you finish adding oil.

https://truckmanualshub.com/

Changing the Engine Oil and the Oil Filter

Change the engine oil and oil filter per the following, whichever occurs first.

5,000 MILES (8,000 KM) OR 6 MONTHS NORMAL SCHEDULE
3,000 MILES (5,000 KM) OR 3 MONTHS SEVERE DUTY SCHEDULE EXTENSIVE IDLING TRAILER TOWING DRIVING IN SEVERE DUST POLICE, TAXI, OR DELIVERY

Oil change intervals

NOTE: Idling the engine for extended periods will accumulate more hours of use on your vehicles than is actually indicated by the mileage odometer. Consequently, the odometer reading can be often misleading when determining the right time to change your engine oil and filter.

If you are using your Ford vehicle in a manner which allows it to remain stationary while the engine is running for long periods (door to door delivery, taxi, police, power/utility company trucks, or similar duty), then Ford recommends you increase the frequency of oil and filter changes to an interval equivalent to 200 ENGINE HOURS of use. Since most vehicles are not equipped with hourmeters, it may be necessary for you to approximate your idle time and plan oil/filter changes accordingly.

https://truckmanualshub.com/

If the above conditions do not apply, change the engine oil and oil filter every 6 months or 5,000 miles (8,000 km), whichever comes first.

Refer to the *Maintenance Schedule* booklet for additional information.

NOTE: Refer to the *Power Stroke Diesel Engine Owner's Guide Supplement* for oil viscosity, filter application and oil and filter change intervals.

NOTE: Always dispose of used automotive fluids in a responsible manner. Follow your community's standards for disposing of these types of fluids. Call your local recycling center to find out about recycling automotive fluids.

⚠WARNING
Continuous contact with USED motor oil has caused cancer in laboratory mice.

Protect your skin by washing with soap and water.

Brake Fluid

Your vehicle is equipped with a brake fluid level indicator in the master cylinder which lights the BRAKE warning light on the instrument panel when the brake fluid level is low.

Under normal circumstances, your vehicle should not use up brake fluid rapidly. However, expect the level of the brake fluid to slowly fall as you put more mileage on your vehicle and the brake lining wears.

Check the brake fluid at least once a year. You can do this by looking at the fluid level in the plastic brake fluid reservoir on the master cylinder. The fluid level should be at or near the MAX mark.

https://truckmanualshub.com/

⚠WARNING
Brake fluid is toxic.

If brake fluid contacts eyes, flush eyes with running water for 15 minutes. Get medical attention if irritation persists. If taken internally, drink water and induce vomiting. Get medical attention immediately.

If the fluid is low, carefully clean and remove the filler cap from the reservoir. Fill the reservoir to the MAX line with Ford High Performance DOT 3 Brake Fluid C6AZ-19542-AB or DOT 3 equivalent fluid meeting Ford specification ESA-M6C25-A.

NOTE: If brake fluid is spilled on painted surfaces, it must be flushed and wiped away immediately. Brake fluid may dissolve the paint finish on your vehicle.

⚠WARNING
If you use a brake fluid that is not DOT 3, you will cause permanent damage to your brakes.

Do not fill the reservoir above the MAX line.

If you find that the fluid level is excessively low — below the seam or ridge on the outside of the plastic reservoir — have the brake system inspected.

⚠WARNING
Do not let the reservoir for the master cylinder run dry. This may cause the brakes to fail.

https://truckmanualshub.com/

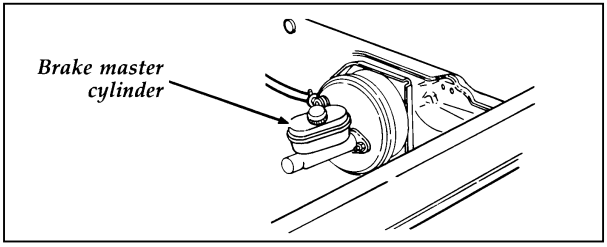

Brake master cylinder

The Clutch

The clutch on your vehicle is automatically self-adjusting and should not require any routine service.

During normal operation the fluid level in the clutch reservoir will slowly rise. If for any reason the fluid level drops, maintain the fluid level at the step in the reservoir body.

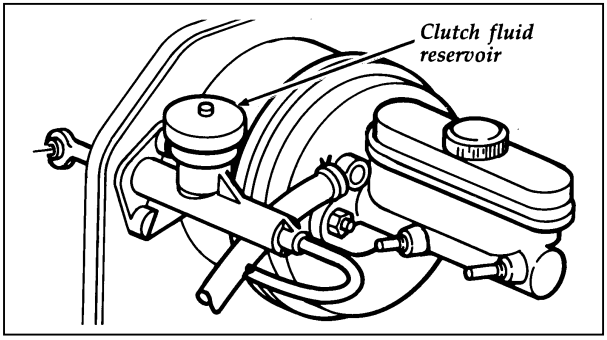

Clutch fluid reservoir

If it becomes necessary to remove the reservoir cap, thoroughly clean the reservoir cap before removing it to prevent dirt or water from entering the reservoir. Remove the internal diaphragm and then add only a DOT 3 brake fluid such as Ford High Performance DOT 3 Brake Fluid (Ford Part Number C6AZ-19542-AB) meeting Ford specification ESA-M6C25-A.

https://truckmanualshub.com/

Driveline Universal Joint and Slip Yoke

The universal joints that come standard with your vehicle do not require lubrication. If your original equipment universal joints are replaced with universal joints equipped with grease fittings, lubrication will be necessary at the intervals shown in the *Maintenance Schedule* booklet.

Your vehicle may be equipped with a constant velocity or double cardan joint at the transfer case end of the driveshaft. The front driveshaft double cardan joint may be fitted with a flush type grease fitting that requires an adapter to permit proper lubrication. Lubricate the drive joint according to the intervals shown in the *Maintenance Schedule* booklet.

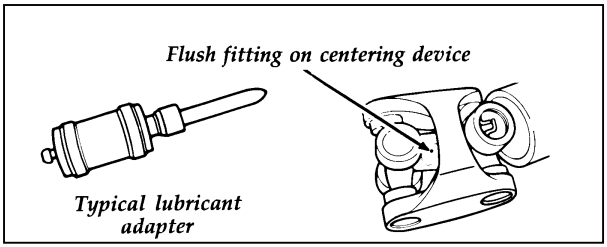

Double cardan joint

Windshield Washer Fluid

Washer Fluid

Check the level of the windshield washer fluid every time you stop for fuel. The reservoir for the windshield washer fluid is located in the engine compartment.

https://truckmanualshub.com/

Adding washer fluid

⚠WARNING

Do not put windshield washer fluid in the container for the engine coolant.

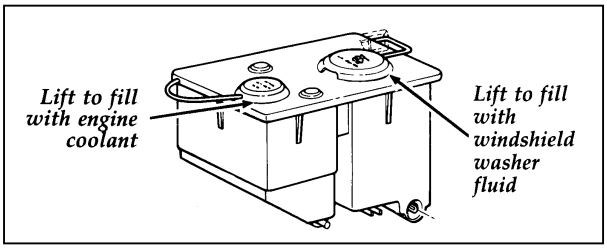

Adding windshield washer fluid

Use specially formulated windshield washer fluid rather than plain water, because specially formulated washer fluids contain additives that dissolve road grime. For safety reasons, washer fluids containing an appropriate antifreeze such as methanol should be used in freezing weather (temperatures below 32˚F [0˚C]). State or local regulations on Volatile Organic Compounds (VOCs) may restrict use of the most common antifreeze, methanol. Washer fluids containing non-methanol antifreeze agents should be used only if they provide cold weather protection without damaging the vehicle's paint finish, wiper blades, and windshield washer system.

If you choose to use a windshield washing solution that must be mixed, follow the manufacturer's mixing instructions. Improperly mixed solutions may freeze unexpectedly.

https://truckmanualshub.com/

NOTE: The addition of shields to the front of the vehicle, as used to deflect bugs, may also adversely affect the washer system from delivering fluid to the windshield. Devices such as bug shields are not recommended to be added to your new Ford product.

Wiper Blades

Check the windshield wiper blades at least twice a year. Also check them whenever they seem less effective than usual. Such substances as tree sap and some hot wax treatments used by commercial car washes reduce the effectiveness of wiper blades.

If the blades do not wipe properly, clean both the windshield and the wiper blades. Use undiluted windshield washer solution or a mild detergent. Rinse thoroughly with clear water. Do not use fuel, kerosene, paint thinner, or other solvents to clean your wiper blades. These will damage your blades.

To make reaching the wiper blades easy, simply turn the ignition switch to ACC and turn your wipers on. Wait for them to reach a vertical position and turn the ignition to OFF. Do not move the wipers manually. Moving the wipers manually may damage them.

Wiper blade replacement

If the wiper blades still do not work properly after you clean them, you may need to replace the wiper blade assembly or the blade element. When replacing the wiper blade assembly, blade refill, or wiper arm always use a Motorcraft part or equivalent.

https://truckmanualshub.com/

Engine Coolant

Checking the engine coolant

Your vehicle's engine coolant protects the engine from overheating in the summer and from freezing in the winter. Check the level of the engine coolant at least once a month, but preferably each time you stop for fuel. Simply look at the engine coolant recovery reservoir located in the engine compartment. To locate this reservoir, see the diagram of your vehicle's engine under *Engine types* in this chapter.

If the engine coolant has not been checked for a long period of time the engine coolant reservoir may eventually empty. If the engine coolant reservoir empties, check the engine coolant level in the radiator. Read the following warnings before removing the radiator cap. If it is necessary to fill the radiator, refer to the *Engine Coolant Refill Procedure* in this chapter for instructions.

Adding engine coolant

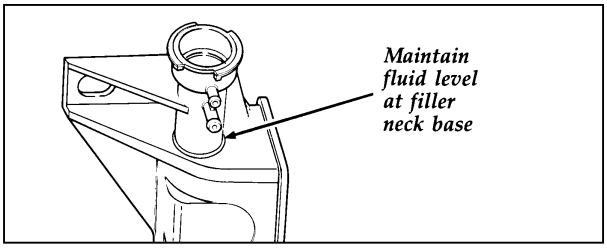

Adding engine coolant

https://truckmanualshub.com/

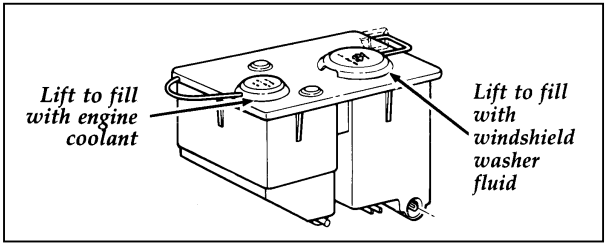

Adding engine coolant

⚠WARNING
Do not put engine coolant in the container for the windshield washer fluid.

If sprayed to clean the glass, engine coolant or antifreeze could make it difficult to see through the windshield.

⚠WARNING
Never remove the coolant recovery cap while the engine is running or hot.

⚠WARNING
Follow these steps to minimize risk of personal injury.

1. Before you remove the radiator cap, turn the engine off and let it cool. Even when the engine is cool, be careful when you remove the radiator cap.
2. When the engine is cool, wrap a thick cloth around the cap and turn it slowly counterclockwise to the first stop.
3. Step back while the pressure releases.
4. When you are sure that all the pressure has been released, use the cloth to press, turn, and remove cap.

https://truckmanualshub.com/

5. Stand away from the radiator opening. Hot steam may blow out or hot engine coolant may even splash out.

Freezing Protection

The factory-installed solution of Ford Premium Cooling System Fluid and water will protect your vehicle to −35˚F (−37˚C). Check the freeze protection rating of the engine coolant at least once a year, just before winter.

Add engine coolant only to the coolant reservoir. If the coolant level is low, add to the reservoir a 50/50 mixture of water and the type of engine coolant that Ford specifies. You may add water by itself only in an emergency, but you should replace it with a 50/50 mixture as soon as possible. Check the engine coolant again the next few times you drive your vehicle.

Ford Premium Cooling System Fluid is an optimized formula that will protect all metals and rubber elastomers used in Ford engines for four years or 50,000 miles (80,000 km). It is not necessary and not recommended to use supplemental coolant additives in your gasoline powered vehicle. These additives may harm your engine cooling system. Follow the recommended service interval for changing your engine coolant.

NOTE: When you change or add engine coolant, it is important to maintain your engine coolant concentration between 40% (-11˚F [-24˚C]) and 60% (-62˚F [-52˚C]), depending on your local climate conditions. Below 40% you will lose freeze protection and above 60% your engine may overheat on a warm day.

https://truckmanualshub.com/

NOTE: Do not use an engine coolant that does not meet all 14 requirements of Ford Specification ESE-M97B44-A. The use of an improper coolant may void your warranty for the engine cooling system. Use only a premium nationally recognized brand name engine coolant.

Ford Motor Company expressly authorizes the Ford Rotunda engine coolant recycling process and chemicals. If you choose to use recycled coolant, use only Ford Rotunda recycled engine coolant or an equivalent recycled engine coolant that is certified by the supplier to meet Ford specification ESE-M97B44-A.

NOTE: Always dispose of used automotive fluids in a responsible manner. Follow your community's standards for disposing of these types of fluids. Call your local recycling center to find out about recycling automotive fluids.

Use Ford Premium Cooling System Fluid or an equivalent engine coolant that meets Ford Specification ESE-M97B44-A. Do not use alcohol or methanol antifreeze and do not use engine coolant mixed with alcohol or methanol antifreeze. If you do not use the proper coolant, the aluminum radiator on your vehicle will corrode.

Leave the engine coolant in all year. Make sure that the coolant will not freeze at the temperature level in which you drive during winter months. Keep a mixture of engine coolant in your engine that has a protection rating of at least -34˚F (-37˚C), or whatever protection rating is appropriate for the climate in which you live.

https://truckmanualshub.com/

To find out how much engine coolant mixture your vehicle's coolant system can hold, see *Refill capacities for fluids* in the Index.

You may add water by itself only in an emergency, but you should replace it with a 50/50 or appropriate mixture as soon as possible.

Have your dealer check the engine cooling system for leaks if you have to add a quart (liter) of engine coolant more than once a month.

Checking hoses

Inspect all engine and heater system hoses for deterioration, leaks and loose clamps before adding or replacing engine coolant. Make whatever repairs or replacements that are necessary using Motorcraft parts or their equivalents.

Engine coolant drain and flush

To drain your vehicle's engine coolant:

1. Turn off the engine and let it cool. Fully depressurize the engine cooling system by covering the radiator cap with a thick cloth and turning it slowly counterclockwise to the first stop. Step back while the pressure releases.
2. Remove the cap.
3. Attach a small hose to the drain tube at the bottom of the radiator.

https://truckmanualshub.com/

4. Let the engine coolant drain into a suitable container. Disconnect the lower radiator hose at the radiator connector and drain any remaining engine coolant into a container.

5. Reconnect the lower radiator hose and close the radiator drain cock.

Proper procedures for flushing the cooling system can be found in the *Truck Service Manual.*

Engine coolant refill procedure

After you have drained the engine cooling system:

1. Fill the radiator with a 50/50 mixture of the specified engine coolant concentrate and water. Allow several minutes for trapped air to escape (bubble out) and for engine coolant to flow through the radiator.

2. Replace the radiator cap to its fully installed position, then back off to the first stop. This will prevent high pressure from building up in the cooling system during this part of the fill procedure.

3. Start and idle the engine until the thermostat opens and the radiator upper hose becomes warm.

4. Shut off the engine and allow the engine to cool. Cover the radiator cap with a thick cloth and cautiously remove it. Step back while the pressure releases.

5. Finally, check the radiator and add more engine coolant if needed, following the procedures noted above. Reinstall the radiator cap securely, when finished.

6. If more engine coolant is necessary, fill the overflow reservoir to the appropriate level marked on the bottle.

https://truckmanualshub.com/

Power Steering Fluid

Check the level of the power steering fluid at least twice a year (i.e., every Spring and Fall).

To check the level of your power steering fluid:

1. Start the engine and let it run until the power steering fluid reaches normal operating temperature. The power steering fluid will be at the right temperature when the engine coolant temperature gauge in the instrument cluster is near the center of the NORMAL operating temperature range.
2. While the engine idles, turn the steering wheel back and forth several times. Make sure that the cap assembly is installed at this time.
3. Turn the engine off.
4. Check the fluid level on the dipstick (which is highlighted in yellow in your vehicle). The fluid level should be between the arrows in the FULL HOT range, which is marked on the side of the dipstick, opposite the side marked FULL COLD. Do not add fluid if the level is within the FULL HOT range.

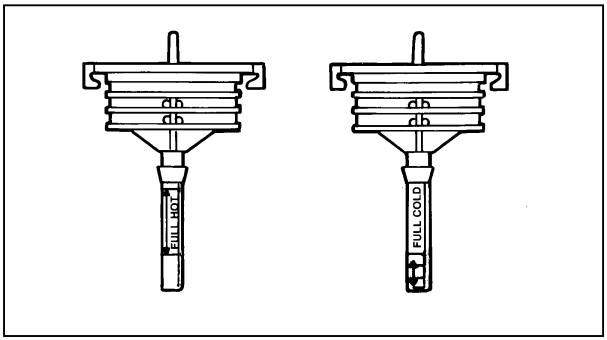

Power steering dipstick

https://truckmanualshub.com/

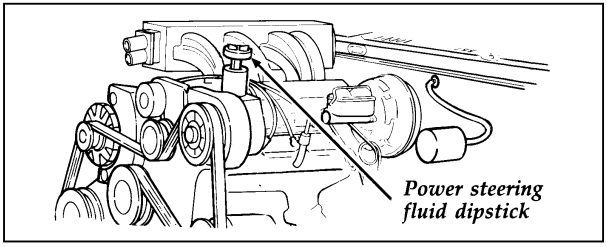

Power steering reservoir

5. If the power steering fluid is low, add fluid in small amounts, continuously checking the level, until you reach the FULL HOT range. Do not overfill.

6. When you are finished, put the dipstick back in and make sure that it fits snugly.

If you check the power steering fluid when it is cold, make sure that the fluid reaches the FULL COLD range on the dipstick. The reading will only be accurate if the fluid temperature is approximately 50 to 85˚F (10 to 30˚C).

Use only MERCON® Automatic Transmission Fluid.

If the power steering fluid is low, do not drive your vehicle for a long period of time before adding fluid. This can damage the power steering pump.

NOTE: Do not turn the steering wheel of your vehicle with the engine off. It could force power steering fluid out from the reservoir cap or in extreme cases, it could unseat the cap.

https://truckmanualshub.com/

Automatic Transmission Fluid

Your vehicle does not use up transmisison fluid. However it is recommended that you check the transmission fluid at least twice a year. If the transmission is not working properly — for instance, the transmission may slip or shift slowly, or if you notice some sign of fluid leakage — the fluid level should be checked.

NOTE: For E4OD transmissions, there is no 30,000 mile (48,000 km) sheduled transmission fluid change requirement.

Severe Operating Conditions

Transmission fluid, filter and seal assembly should be changed every 21,000 miles (34,000 km) only under any of the following conditions.

- ❑ Extended periods of high speed driving during hot weather at/or above +90˚F (+30˚C).
- ❑ Towing a trailer for distances over 1,000 miles (1,600 km) per trip.
- ❑ Accumulating 5,000 miles (8,000 km) or more per month.
- ❑ Continuous operation and/or extensive idling (a delivery service as an example).
- ❑ Operating in severe dust conditions.

NOTE: Use of a transmission fluid other than specified could result in transmission malfunction and/or failure. Refer to "Adding automatic transmission fluid", "Refill capacities" and "lubricant specifications" for further information.

https://truckmanualshub.com/

Checking the Automatic Transmission Fluid

Transmission fluid should be checked at least twice a year.

It is preferable to check the transmission fluid level at normal operating temperature 150˚F-170˚F (66˚C-77˚C), after approximately 20 miles (30 km) of driving. However, if necessary, you can check the fluid level without having to drive 20 miles (30 km) to obtain a normal operating temperature if outside temperatures are above 50˚F (10˚C).

NOTE: If the vehicle has been operated for an extended period at high speeds or in city traffic during hot weather, or pulling a trailer, the vehicle should be turned off for about 30 minutes to allow the fluid to cool before checking.

With the vehicle on a level surface, start the engine and move the transmission gearshift through all of the gear ranges allowing sufficient time for each position to engage. Securely latch the transmission gearshift in the P (Park) position, fully set the parking brake and leave the engine running.

NOTE: Vehicles equipped with the 4x4 option must have the 4x4 shift selector in any position other than neutral.

⚠WARNING
Your vehicle should not be driven if the fluid level is below the bottom hole on the dipstick and outside temperatures are above 50˚F (10˚C).

https://truckmanualshub.com/

Wipe off the dipstick cap, pull the dipstick out and wipe the indicator end clean. Put the dipstick back into the filler tube and make sure it is fully seated. Pull the dipstick out and read the fluid level.

When checking fluid at normal operating temperature, the fluid level should be within the crosshatched area on the dipstick. When the vehicle has not been driven, and outside temperature is above 50˚F (10˚C), the fluid level should be between the holes on the dipstick.

Adding Automatic Transmission Fluid

The fluid type is stamped on the dipstick. **Before adding any fluid, be sure that the correct type will be used.**

Add fluid in 1/2 pint (.25L) increments through the filler tube to bring the level to the correct area on the dipstick. If an overfill occurs, excess fluid should be removed by a qualified technician.

NOTE: Always dispose of used automotive fluids in a responsible manner. Follow your community's standards for disposing of these types of fluids. Call your local recycling center to find out about recycling automotive fluids.

https://truckmanualshub.com/

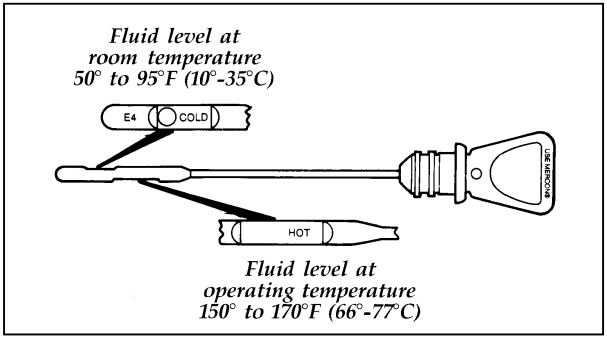

Automatic transmission dipstick

Manual Transmission and Transfer Case Fluid

Checking the fluid

Clean the filler plug on the side of the case. Remove the filler plug. The fluid level should be up to the bottom of the filler plug hole.

If additional fluid is required:

1. Add enough fluid through the filler plug hole to bring the level up to the bottom of the hole. Use only fluid certified to meet Ford Motor Company lubricant specification as listed under *A Quick Reference for Refill Capacities and Motorcraft Parts*, later in this section.

2. Replace the filler plug in its original position, making sure it is fully seated.

Battery

Your vehicle may have a Motorcraft maintenance-free battery. When the original equipment battery is replaced under warranty, it may be replaced by a Motorcraft Low-Maintenance Battery.

https://truckmanualshub.com/

The Low-Maintenance Battery has removable vent caps for checking the electrolyte level and for adding water, if necessary. The electrolyte level should be checked at least every 24 months or 24,000 miles (40,000 km) in temperatures up to 90˚F (32˚C) and more often in temperatures above 90˚F (32˚C). Keep the electrolyte level in each cell up to the level indicator. Do not overfill.

If the level gets low, you can add tap water to the battery, provided the water isn't hard or doesn't have a high mineral or alkali content. However, if possible you should refill the battery with distilled water. If the battery needs water quite often, have the charging system checked for a possible malfunction.

Help Us Protect Our Environment

Ford Motor Company strongly recommends that used lead-acid batteries be returned to an authorized recycling facility for disposal.

Battery recycling symbol

⚠WARNING

Batteries normally produce explosive gases which can cause personal injury. Do not allow flames, sparks or lit tobacco to come near the battery. Always cover your face and protect your eyes and also provide ventilation.

https://truckmanualshub.com/

⚠WARNING

Batteries contain sulfuric acid which burns skin, eyes, and clothing.

If the acid touches someone's skin, eyes, or clothing, immediately flush the area with water for at least 15 minutes. If someone swallows the acid, have him or her drink lots of milk or water first, then Milk of Magnesia, a beaten egg, or vegetable oil. Call a doctor immediately.

⚠WARNING

Applying too much pressure on the ends when lifting a battery could cause acid to spill. Lift the battery with a carrier or with your hands on the opposite corners.

Tires

Checking Tire Pressure

- ❑ Use an accurate tire pressure gauge.
- ❑ Check the tire pressure when tires are cold, after the vehicle has been parked for at least one hour or has been driven less than 3 miles (5 km).
- ❑ Adjust tire pressure to recommended specifications found on the Safety Compliance Certification Label.

⚠WARNING

Improperly inflated tires can affect vehicle handling and can fail suddenly, possibly resulting in loss of vehicle control.

https://truckmanualshub.com/

Tire Rotation

Because your vehicle's front and rear tires perform different jobs, they often wear differently. To make sure your tires wear evenly and last longer, rotate them as indicated in the following diagram.

For tire rotation intervals, see the *Maintenance Schedule*. If you notice that the tires wear unevenly, have them checked.

NOTE: Do not rotate the dual rear tires.

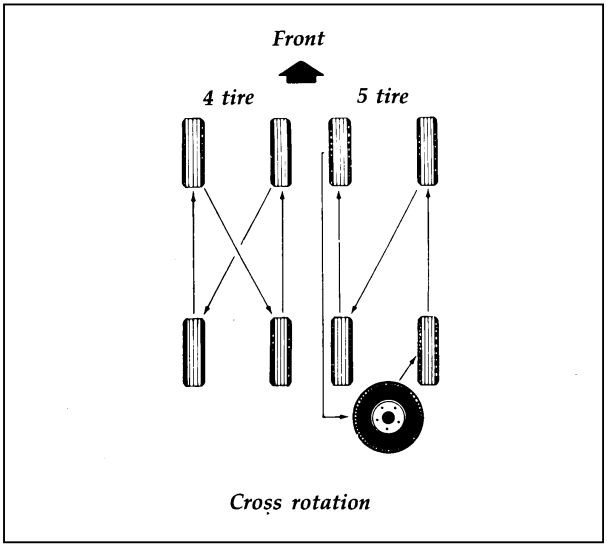

Tire rotation pattern

https://truckmanualshub.com/

Replacing the Tires

Replace any tires that show wear bands. When your tire shows a wear band, it has only 1/16 inch (2 mm) of tread left.

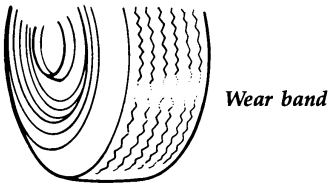

Wear band

Because your vehicle's tires may wear unevenly, you may need to replace them before a wear band appears across the entire tread.

⚠WARNING

When replacing full size tires, never mix radial, bias-belted, or bias-type tires. Use only the tire sizes that are listed on the tire pressure decal. Make sure that all tires are the same size, speed rating, and load-carrying capacity. Use only the tire combinations recommended on the decal. If you do not follow these precautions, your vehicle may not drive properly and safely.

Tires that are larger or smaller than your vehicle's original tires may also affect the accuracy of your speedometer.

https://truckmanualshub.com/

Information About Tire Quality Grades

New vehicles are fitted with tires that have their Tire Quality Grade (described below) molded into the tire's sidewall. These Tire Quality Grades are determined by standards that the United States Department of Transportation has set.

Tire Quality Grades apply to new pneumatic tires for use on passenger cars. They do not apply to deep tread, winter-type snow tires, space-saver or temporary use spare tires, tires with nominal rim diameters of 10 to 12 inches or limited production tires as defined in Title 49 Code of Federal Regulations Part 575.104(c)(2).

U.S. Department of Transportation — Tire quality grades: The U.S. Department of transportation requires Ford to give you the following information about tire grades exactly as the government has written it.

Treadwear

The treadwear grade is a comparative rating based on the wear rate of the tire when tested under controlled conditions on a specified government test course. For example, a tire graded 150 would wear one and one-half (1 1/2) times as well on the government course as a tire graded 100. The relative performance of tires depends upon the actual conditions of their use, however, and may depart significantly from the norm due to variations in driving habits, service practices and differences in road characteristics and climate.

https://truckmanualshub.com/

Traction A B C

The traction grades, from highest to lowest, are A, B, and C, and they represent the tire's ability to stop on wet pavement as measured under controlled conditions on specified government test surfaces of asphalt and concrete. A tire marked C may have poor traction performance. Warning: The traction grade assigned to this tire is based on braking (straight ahead) traction tests and does not include cornering (turning) traction.

Temperature A B C

The temperature grades are A (the highest), B, and C, representing the tire's resistance to the generation of heat and its ability to dissipate heat when tested under controlled conditions on a specified indoor laboratory test wheel. Sustained high temperature can cause the material of the tire to degenerate and reduce tire life, and excessive temperature can lead to sudden tire failure. The grade C corresponds to a level of performance which all passenger car tires must meet under the Federal Motor Vehicle Safety Standard No. 109. Grades B and A represent higher levels of performance on the laboratory test wheel than the minimum required by law. Warning: The temperature grade for this is established for a tire that is properly inflated and not overloaded. Excessive speed, underinflation, or excessive loading, either separately or in combination, can cause heat buildup and possible tire failure.

https://truckmanualshub.com/

⚠WARNING

Driving too fast for conditions creates the possibility of loss of vehicle control. Driving at very high speeds for extended periods of time may result in damage to vehicle components.

Snow Tires and Chains

The tires on your vehicle have all-weather treads that provide traction in rain or snow. However, during the winter months in some climates, you may need to use snow tires and occasionally chains for your tires.

⚠WARNING

Snow tires must be the same size and grade as the tires you currently have on your vehicle.

Use chains on the tires only in an emergency or if the law requires them where you live. If you choose to use chains on your vehicle's tires, be aware of the following:

- ❑ Make sure the chains are the right size for your tires. Use only SAE Class "S" chains. Other types may damage your vehicle.
- ❑ Put the chains on tightly with the ends held down securely. Verify that no chain touches any wiring, brake lines, or fuel lines. Follow the chain manufacturer's instructions.
- ❑ Drive slowly. If you can hear the chains rub or bang against your vehicle, stop the vehicle and tighten the chains. If you continue to hear the chains rub or bang against your vehicle, remove the chains to prevent damage to your vehicle.

https://truckmanualshub.com/

- ❑ Avoid fully loading your vehicle if possible.
- ❑ Remove tire chains at the first opportunity after using them on snow and ice. Do not use the chains on dry roads.
- ❑ Make sure your suspension insulation and bumpers are not missing or worn to avoid damage to your vehicle.

Filling the Fuel Tank

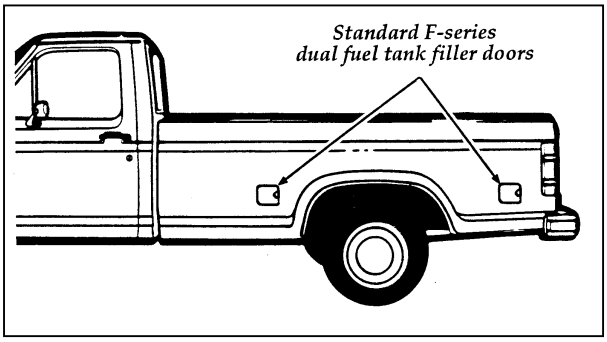

Fuel filler door

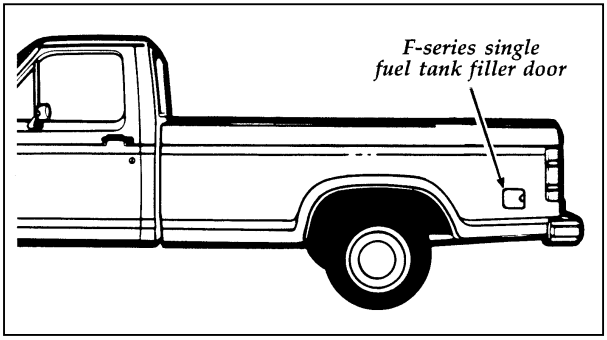

Fuel filler door

https://truckmanualshub.com/

Opening the Fuel Filler Door

To open the fuel filler door of your vehicle, just insert your finger in the divot and pull the door open all the way.

Removing the fuel cap

The proper instructions for removing the fuel cap are as follows:

- ❑ Unscrew the fuel cap by exerting pressure on the plastic lock bar and rotating the fuel cap counterclockwise.
- ❑ Turn the fuel cap 1/2 to 3/4 of a turn until a hissing sound is heard. When the hissing sound stops, continue rotating counterclockwise to remove the fuel cap.
- ❑ Make sure that you follow the above fuel cap removal instructions and use caution. Such caution will minimize the possibility of fuel spraying during removal of the fuel cap.

To replace and secure the fuel cap, place it in position and rotate it clockwise until it clicks (ratchets). Doing so will not damage or break the fuel cap. The ratcheting mechanism allows the fuel cap to be sealed without overtightening.

If you lose the fuel cap, replace it with an authorized Motorcraft or equivalent part.

⚠WARNING
If you do not use the proper fuel cap, the pressure in the fuel tank can damage the fuel system or cause it to work improperly in a collision.

https://truckmanualshub.com/

NOTE: If you replace your fuel cap with an aftermarket fuel filler cap, the customer warranty may be void for any damage to the fuel tank and/or fuel system.

⚠WARNING
The fuel system may be under pressure. If the fuel cap is venting vapor or if you hear a hissing sound, wait until it stops before completely removing the cap.

A venting fuel tank is not an abnormal condition. It may be caused by:

- ❑ Too volatile a fuel for the weather conditions. The service stations sometimes sell winter grade fuel in the summer.
- ❑ Pulling a heavy load on hot days, or at high altitudes.
- ❑ Extended periods of idling with the engine RPM increased above the normal idle range.
- ❑ Parking vehicle in full sunlight for extended periods on extremely hot days.

Choosing the Right Fuel

NOTE: Read the *7.3L Diesel Engine Owner Guide Supplement* for information regarding correct fuel requirements for your diesel-powered vehicle.

Use only UNLEADED FUEL. Using leaded fuel is prohibited by federal law and could damage your vehicle. The damage may not be covered by your warranty.

Your vehicle was not designed to use fuel containing manganese-based additives such as MMT. Additionally, vehicles certified to California emission standards (indicated on the

https://truckmanualshub.com/

underhood Vehicle Emissions Control Information label) are designed to operate on California reformulated gasolines. If California reformulated gasoline is not available when you refuel, your vehicle can be operated on non-California fuels. However, even though your engine will perform adequately on other gasolines, the performance of the emission control devices and systems may be adversely affected. Repair of damage caused by using a fuel that your vehicle was not designed for may not be covered by your warranty.

Octane recommendation

Your vehicle is designed to use regular unleaded gasoline with an (R+M)/2 octane rating of 87. We do not recommend gasolines labeled "regular" in high altitude areas that are sold with octane ratings of 86 or even less.

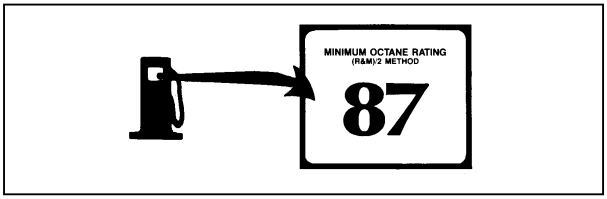

Typical octane rating label

Do not be concerned if your vehicle sometimes knocks lightly. However, if it knocks heavily under most driving conditions on the recommended octane rated fuel, see your dealer or a qualified service technician to prevent any engine damage.

Fuel quality

If you are experiencing starting, rough idle or hesitation problems, try a different brand of fuel. If the condition persists, see your dealer or a qualified service technician.

https://truckmanualshub.com/

The American Automobile Manufacturers Association (AAMA) issued a gasoline specification to provide information on high quality fuels that optimize the performance of your vehicle. We recommend the use of gasolines that meet the AAMA specification if they are available.

It should not be necessary to add any aftermarket products to your fuel tank if you continue to use a high-quality fuel.

Gasolines for clean air

Ford approves the use of gasolines to improve air quality, including reformulated gasolines, that contain oxygenates such as a maximum of 10% ethanol or 15% MTBE. There should be no more than 5% methanol with co-solvents and additives to protect the fuel system.

Safety Information Relating to Automotive Fuels

⚠WARNING
Automotive fuels can cause serious injury or death if misused or mishandled.

Gasoline and other automotive fuels are extremely flammable. Turn your vehicle off and do not smoke while refueling your vehicle. Keep sparks and other sources of ignition away from fuels.

Automotive fuels can be harmful or fatal if swallowed. Further, gasoline may be blended with methanol. Even small amounts of methanol can cause blindness and possibly death when swallowed. Therefore, never attempt to siphon any fuel by mouth.

https://truckmanualshub.com/

If any fuel is swallowed, call a physician or poison control center immediately. Do not delay calling a physician merely because no adverse effects are noticed at first; the toxic effects of a gasoline-methanol blend, including blindness, may not become apparent for many hours**. If gasoline is swallowed, do not induce vomiting. If a gasoline-methanol blend is swallowed, induce vomiting under the direction of a physician or poison control center.**

Gasoline and gasoline-methanol blends may contain small amounts of carcinogens, such as benzene. Long-term exposure to unleaded gasoline vapors has caused cancer in laboratory animals. Further, excessive inhalation of fuel vapors can cause headache, dizziness, nausea, loss of coordination, and other symptoms which could interfere with your ability to safely operate your vehicle. To the extent possible, avoid breathing vapors while refueling. If fuel vapors are inhaled in excessive quantities, move the victim to fresh air and seek medical attention.

Fuels can also be harmful if absorbed through the skin. When refueling, be careful not to splash fuel on yourself or your clothing. If fuel is splashed on the skin, promptly remove contaminated clothing and wash the skin thoroughly with soap and water.

Fuels can cause severe eye irritation and possibly eye damage. If fuel is splashed in the eyes, remove contact lenses (if worn), flush with large amounts of water for 15 minutes, and seek medical attention.

https://truckmanualshub.com/

If you are taking the medication “Antabuse” or other forms of disulfiram for the treatment of alcoholism, vapor or skin contact with a gasoline-methanol blend may cause the same kind of adverse reaction as drinking an alcoholic beverage. In sensitive individuals, serious personal injury or sickness could result. Consult a physician promptly if you experience an adverse reaction.

Filling the fuel tank

⚠WARNING
Do not overfill the fuel tank. The pressure in an overfilled tank may cause leakage and lead to fuel spray and fire.

To fill the fuel tank properly:

NOTE: Extinguish all lit cigarettes, other smoking materials, and any open flames before fueling your vehicle.

1. Remove the fuel cap by following the instructions above under *Removing the Fuel Cap* in this chapter. Proceed to add fuel to the tank only if your vehicle is on level ground.

2. Make sure that you pump unleaded fuel and put the nozzle all the way inside the fuel filler pipe.

NOTE: If you spill any fuel on the body of your vehicle, clean it off immediately. The fuel may dull or soften the paint if you do not wash it off.

3. Replace the fuel cap completely when you are finished. Turn it clockwise 1/4 turn until it is tight. It will click when it is fully tightened.

https://truckmanualshub.com/

Running Out of Fuel

If your vehicle runs out of fuel, try to stop on level ground away from traffic. Add at least two gallons (8 liters) of fuel to start your vehicle again. If your vehicle is not on level ground, you may need as much as five gallons (20 liters) of fuel to start it.

You may need to crank the engine several times before the fuel system starts to pump fuel from the tank to the engine.

Fuel Economy

Fuel economy is an estimate of the efficiency of your vehicle and can be calculated as Miles Per Gallon (MPG) or Liters Per 100 Kilometers (L/100K).

Do not calculate fuel economy during your vehicle's break-in period. This would not be an accurate estimate of how much fuel your vehicle will normally use.

To calculate fuel economy:

1. Fill the tank completely and record the initial odometer reading.
2. Every time you buy fuel record the amount (in gallons or liters) purchased.
3. After at least three to five tankfuls, fill the fuel tank and record the final odometer reading.
4. Use these equations to calculate your fuel economy.

- ❑ English: MPG = (total miles)/(gallons used).
- ❑ Metric: L/100K = (liters used) x 100/(total kilometers)

https://truckmanualshub.com/

Comparisons With Environmental Protection Agency (EPA) and Transport Canada (TC) Fuel Economy Estimates

NOTE: There are no EPA fuel economy estimates for vehicles over 8500 lbs. (3,855 kg) GVW.

Improving Fuel Economy

Fuel economy is affected by a number of variables which can reduce efficiency. You can improve fuel economy by understanding these variables and minimizing their effect.

The following decrease fuel economy:

- ❑ Lack of regular, scheduled maintenance
- ❑ Driving with your foot on the brake
- ❑ Sudden stops
- ❑ Excessive speed
- ❑ Extended engine idling
- ❑ Heavy loads
- ❑ Underinflated tires
- ❑ Extended use of the A/C, defroster, rear window defroster and other accessories
- ❑ Aftermarket add-ons such as bike, ski or luggage racks, bug deflectors, etc.

https://truckmanualshub.com/

Emission Control System

Your vehicle is equipped with a catalytic converter which enables your vehicle to comply with applicable exhaust emission requirements.

⚠WARNING

Exhaust leaks may result in the entry of harmful and potentially lethal fumes into the passenger compartment. Under extreme conditions excessive exhaust temperatures could damage the fuel system, the interior floor covering, or other vehicle components, possibly causing a fire.

To make sure that the catalytic converter and the other emission control parts continue to work properly:

- ❑ Avoid running out of fuel.
- ❑ Do not turn off the ignition while your vehicle is moving, especially at high speeds.
- ❑ Have the services listed in the *Maintenance Schedule* booklet performed according to the specified schedule. The scheduled maintenance services are required because they are considered essential to the life and performance of your vehicle and to its emissions system.

In general, maintenance, replacement, or service of the emissions control devices or systems in your new Ford Motor Company vehicle or engine may be performed at your expense by any automotive repair establishment or individual using automotive parts equivalent to those which your vehicle or engine was originally equipped.

https://truckmanualshub.com/

⚠WARNING

Do not park, idle, or drive your vehicle in dry grass or other dry ground cover. The emission system heats up the engine compartment and exhaust system, which can start a fire.

⚠WARNING

On vehicles without original equipment floor covering or insulation, do not let passengers ride in your truck in a manner that allows contact between skin and the metal floor.

If other than Ford or Motorcraft or Ford authorized remanufactured parts are used for maintenance, replacement, or for the service of components affecting emissions control, the owner should be assured that such parts are warranted by their manufacturer to be equivalent to genuine Ford Motor Company parts in performance and durability. Please consult your warranty information booklet for complete warranty information.

Watch for fluid leaks, strange odors, smoke, loss of oil pressure, the charge warning light, the check engine light, or the temperature warning light. These sometimes indicate that the emission system is not working properly.

Do not make any unauthorized changes to your vehicle or engine. Changes that cause more unburned fuel to reach the exhaust system can increase the temperature of the engine or exhaust system.

https://truckmanualshub.com/

By law, anyone who manufactures, repairs, services, sells, leases, trades vehicles, or supervises a fleet of vehicles is not permitted to intentionally remove an emission control device or prevent it from working. In some of the United States and in Canada, vehicle owners may be liable if their emission control device is removed or is prevented from working.

Do not drive your vehicle if it does not operate properly. See your dealer if the engine runs on for more than five seconds after you shut it off or if it misfires, surges, stalls, or backfires.

Information about your vehicle's emission control system is on the Vehicle Emission Control Information decal located on or near the engine. This decal identifies engine displacement and gives some tune-up specifications.

NOTE: All current model year vehicles are certified to the same year emissions standards except certain vehicles equipped with engines built prior to January 1 of the model year which may be certified to prior year emissions standards. In either case, the maintenance schedules contained in the back of this Owner Guide must be used to maintain your engine.

Noise emissions warranty, prohibited tampering acts

On January 1, 1978, Federal regulations became effective governing the noise emissions on trucks with a GVWR of over 10,000 lbs (4,536 kgs). The following statements concerning prohibited tampering acts and the noise warranty are found in the *Warranty Information Booklet*, and are applicable to completed F-Series chassis cabs whose GVWR is over 10,000 lbs (4,536 kgs).

https://truckmanualshub.com/

Do not tamper with the noise control system

Federal law prohibits the following acts:

1. The removal or dismantlement, (by any person unless for maintenance, repair or replacement purposes) of any device or design element incorporated into any new vehicle to control noise output, prior to its sale or delivery to the consumer, or while it is being used, or

2. Using your vehicle after a device or design element has been removed or dismantled, by any person.

The following are some of the acts that are considered tampering:

- ❑ Removing the hood blanket, fender apron absorbers, fender apron barriers, underbody noise shields or material constructed to absorb noise output.

- ❑ Removing or dismantling the engine speed governor, so that the engine's speed exceeds the manufacturer's specifications.

- ❑ Removing the air duct, air intake choke or silencer, air cleaner and/or air cleaner element.

- ❑ Removing or dismantling any of the exhaust system components including the catalyst inlet pipe, muffler, outlet pipe, resonator or diffuser.

- ❑ Removing the fan shroud. Removing or dismantling the fan clutch so that it no longer functions properly.

https://truckmanualshub.com/

Maintenance

Instructions for maintenance and service of the noise control system have been included in the *Maintenance Schedule and Record* booklet and in the "General Maintenance Checklist." To aid the noise control system throughout the life of the vehicle, Ford Motor Company recommends that this vehicle should be operated according to the Owner's Guide. When installing replacement parts, use caution not to violate the tampering act as described above. Use the Maintenance Record Log to list any inspections and services performed on the vehicle.

How to Prepare Your Vehicle for Inspection/Maintenance (I/M) Testing

In some localities it may become a legal requirement to pass an Inspection/Maintenance (I/M) test of the On-Board Diagnostic (OBD) II system. If the vehicle's powertrain system or its battery has just been serviced, the OBD II system is reset to a not ready for I/M testing condition. To prepare for I/M testing, the law specifies that additional city and highway driving is necessary to complete the check of the OBD II system.

The driving modes required to reach the ready condition consist of a minimum of 30 minutes city and highway driving as described below:

At least 20 minutes driving in stop and go, city type traffic with at least four idle periods.

At least 10 minutes of driving on an expressway or highway.

Before completing the above driving modes, the engine must be warmed up and at operating temperature. Once started, the vehicle must not be turned off during these driving modes.

https://truckmanualshub.com/

Lights and Bulb Replacement

It is a good idea to check the operation of the following lights frequently:

- ❑ headlamps
- ❑ tail lamps
- ❑ brakelamps
- ❑ high-mount brakelamp
- ❑ hazard flasher
- ❑ turn signals
- ❑ license plate lamps

The alignment of your headlamps should be checked if:

- ❑ oncoming motorists frequently signal you to turn off your vehicle's high beams when you do not have the high beams on
- ❑ the headlamps do not seem to give you enough light to see clearly at night
- ❑ the headlamp beams are pointed substantially away from a position slightly down and to the right

https://truckmanualshub.com/

Headlamp Bulb

The headlamps on your vehicle use replaceable bulbs. When the lamp burns out, simply replace the bulb, rather than the whole lamp.

⚠WARNING

Handle a halogen headlamp bulb carefully and keep out of children's reach. Grasp the bulb only by its plastic base and do not touch the glass. The oil from your hand could cause the bulb to break the next time the headlamps are operated.

NOTE: If the bulb is accidently touched, it should be cleaned with rubbing alcohol before being used.

Do not remove the burned-out bulb unless you can immediately replace it with a new one. If a bulb is removed for an extended period of time, contaminants may enter the headlamp housing and affect its performance.

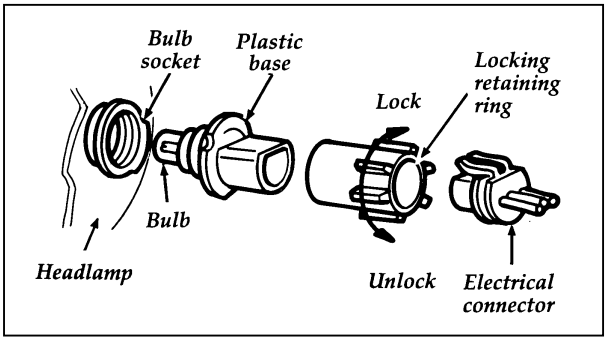

Parts of a headlamp

https://truckmanualshub.com/

Removing the headlamp bulb

1. Make sure that the headlamp switch on the instrument panel is in the OFF position.

2. Lift the hood and behind the headlamp remove the electrical connector by grasping the wires and pulling rearward.

3. Remove the bulb retaining ring by turning it 1/8 of a turn to free it from the socket. Then slide the ring off the plastic base. Keep the ring. **You must use it again to hold the new bulb in place.**

4. Carefully remove the bulb assembly from its socket by gently pulling it rearward without turning.

Installing the headlamp bulb

1. With the flat side of the bulb's plastic base facing upward, insert the glass end of the bulb into the socket. You may need to turn the bulb left or right to line up the grooves in the plastic base with the tabs in the socket. When the grooves are aligned, push the bulb into the socket until the plastic base contacts the rear of the socket.

2. Slip the bulb retaining ring over the plastic base until it contacts the rear of the socket. Lock the ring into the socket by rotating it clockwise until you feel a "stop."

3. Push the electrical connector into the rear of the plastic base until it snaps, locking it into position.

4. Turn the headlamps on and make sure that they work properly. If the headlamp was correctly aligned before you changed the bulb, you should not need to align it again.

https://truckmanualshub.com/

High-Mount Brakelamp Bulbs

To remove the brakelamp:

1. Remove the two screws from the surface of the lens.
2. After removing the screws, remove the lamp assembly.
3. Remove the socket by rotating it 45˚ and pulling it out of the lamp that contains the burned-out bulb and replace the bulb.

To install **the high-mount brakelamp**:

1. Push the bulb socket into the lamp assembly and rotate 45˚.
2. Position the lamp assembly on vehicle.
3. Secure with two screws.

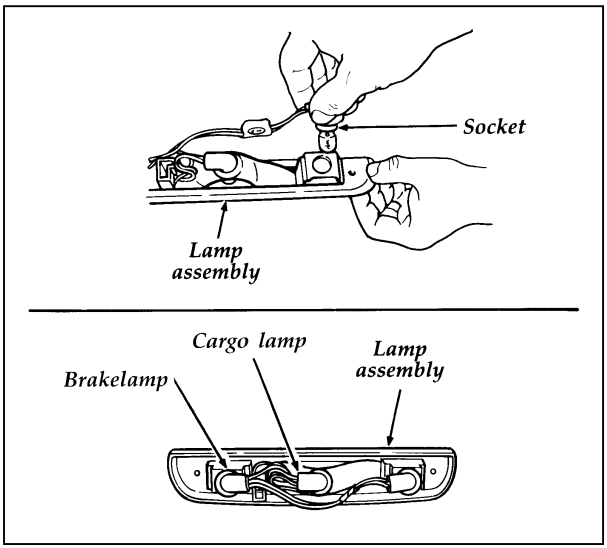

Replacing the high-mount brakelamp or cargo lamp bulb

https://truckmanualshub.com/

Bulb Specifications

Description	No. of Lamps Req'd	Trade Number
Front Lamps – Exterior	–	–
• Clearance Front	2	194
• Front Turn Lamp	2	3157K
• Headlamp Lamps	2	9007
• Identification Front	3	194
• Fog Lamp Lamps	2	H3
• Underhood Lamp (Optional)	1	912
• Roof Marker Lamps	5	194
• Front Parking Lamp	2	916
• Front Side Marker Lamp	2	916NA
Rear Lamps – Exterior	–	–
• Cargo Lamp	2	906
• Clearance Fender (Styleside w/Dual Rear Wheels)	4	②
• Identification Rear (Styleside w/Dual Rear Wheels)	3	194
• Highmount Stoplamp	1	921
• License Plate Lamp – w/o Bumper	1	97
• License Plate Lamp – w/Bumper	2	194
• Rear Tail/Brake/Turn/Side Marker Lamp	2	3157K
• Backup Lamp	2	3156
Interior Courtesy Lamps	–	–
• Dome Lamp	1	912
• Instrument Panel Gauge Illumination	5	194
• Instrument Panel Courtesy Lamp	2	89
• Map/Dome Lamp (Optional)		
Dome	1	561
Map	2	105
Radio Illumination	①	①
Instrument Panel	–	–
• Ashtray Lamp	1	161
• Glove Compartment Lamp	1	161

①Refer bulb replacement to Ford authorized radio service center.
②Replace entire lamp assembly. Bulb is not serviceable.
K – Krypton-filled bulb
NA – Natural amber

https://truckmanualshub.com/

Description	No. of Lamps Req'd	Trade Number
Instrument Cluster	—	—
• Brake Warning Light/RABS	2	194
• Hi-Beam Indicator	1	194
• Transfer Case Lock Indicator Light	1	194
• Cluster Warning Lamps	4	194
• Gauge Illumination	4	194
• 4x4 Indicator	1	194
• 4x4 Low Range	1	194
• Check Engine	1	194
• Turn Signal Indicator Light	2	194
Instrument Panel Switch Nomenclature	—	—
• A/C Control Illumination (Optional)	1	161
• Headlamp Switch Illumination	1	161
• Heater Control Illumination	1	161
• Fog Lamp Switch	1	8605

Cleaning Your Vehicle

Pollen, bird droppings and tree sap can damage the paint, especially in hot weather. Wash your vehicle as often as necessary to keep it clean.

Take similar precautions if your vehicle is exposed to chemical industrial fallout.

Paint damage resulting from fallout is not related to a defect in paint materials or workmanship and therefore is not covered by warranty. Ford, however, believes that continual improvement in customer satisfaction is a high priority. For this reason, Ford has authorized its dealers to repair, at no charge to the owner, the surfaces of new vehicles damaged by environmental fallout within 12 months or 12,000 miles (20,000 km) of purchase, whichever comes first. Customers may be required to bring their vehicle in for inspection by a Ford representative.

https://truckmanualshub.com/

Washing and Polishing Your Vehicle

Wash the outside of your vehicle, including the underside, with a mild detergent.

DO NOT:

- ❑ Wash your vehicle with hot water
- ❑ Wash your vehicle while it sits in direct sunlight
- ❑ Wash your vehicle while the body is hot

Polish your vehicle to remove harmful deposits and protect the finish.

Cleaning Chrome and Aluminum Parts

Wash chrome and aluminum parts with the same detergent you use to wash the vehicle body, such as Ford Premium Car Wash Concentrate. You can use Ford Extra Strength Tar and Road Oil Remover or equivalent to clean grease, oil, and tar from chrome-plated parts, including wheelcovers, aluminum wheels, bumpers, or anodized aluminum parts.

Cleaning Plastic Parts

Some of your vehicle's exterior trim parts are plastic. Clean with a tar and road oil remover if necessary. Use a vinyl cleaner for routine cleaning.

Do not clean plastic parts with thinners, solvents or petroleum-based cleaners.

If you have your vehicle rustproofed, remove oversprayed rustproofing with a tar and road oil remover. If rustproofing is not removed from plastic and rubber parts, it can cause deterioration.

https://truckmanualshub.com/

Cleaning the Safety Belts

Clean the safety belts with any mild soap solution that is recommended for cleaning upholstery or carpets. Do not bleach or dye the belt webbing because this may weaken it.

Cleaning the Exterior Lamps

Do not use dry paper towel, chemical solvents or abrasive cleaners to clean the lamps, as these may cause scratches or crack the lamps.

Cleaning the Instrument Panel Lens

Clean the instrument panel lens with a soft cloth and a glass cleaner, such as Ford Ultra-Clear Spray Glass Cleaner, or equivalent. Do not use paper towel or an abrasive cleaner to clean the lens as these may cause scratches.

Cleaning the Interior Lamps

Your interior dome lamps and map lamps are plastic and should be cleaned with a mild detergent diluted in water. Rinse them with clear water.

Cleaning the Seats

Leather and vinyl

For routine cleaning, wipe the surface with a soft, damp cloth. For more thorough cleaning, wipe the surface with a leather and vinyl cleaner or a mild soap.

Wipe the surface with a damp, soft cloth, then dry and buff with a dry, soft cloth.

Fabric

Remove dust and loose dirt with a whisk broom or a vacuum cleaner. Remove fresh spots immediately. Follow the directions that come with the cleaner.

https://truckmanualshub.com/

NOTE: Before using any cleaner, test it on a small, hidden area of fabric. If the fabric's color or texture is adversely affected by a particular cleaner, do not use it.

Cleaning the Engine

A clean engine is more efficient because a buildup of grease and dirt acts as an insulator, keeping the engine warmer than usual.

- ❑ Extreme care must be used if a power washer is used to clean the engine. The high pressure fluid could penetrate sealed parts and assemblies causing damage or malfunctions.
- ❑ In order to avoid possible cracking of the engine block or fuel injection pump, do not spray a hot engine or injection pump with cold water.
- ❑ The alternator, distributor and air intake must be covered. Covering these components will help prevent water damage.
- ❑ Never wash or rinse the engine while it is running. Water getting into the engine may cause internal damage.

Cleaning the Wheels

Wash the wheels with the same detergent you use to wash your vehicle's body. Do not use acid-based wheel cleaners, steel wool, abrasives, fuel, or strong detergents. These substances will damage protective coatings. Use tar and road oil remover to remove grease and tar.

NOTE: Before going to a car wash, find out if the brushes are abrasive.

https://truckmanualshub.com/

Cleaning F-350 Aluminum Dual Rear Wheels

If you have factory-installed Forged Aluminum Wheels on your F-350, you may use the cleaning instructions below to help provide optimum appearance season after season.

1. Keep your F-350 Forged Aluminum Wheels looking great with simple care. Wash the wheels with steam or high pressure water from a hose, and a mild detergent, such as Ford's Premium Car Wash Concentrate, or equivalent. Do not use harsh alkaline cleaners.
2. You can brighten the wheels, even after years of use, with readily-available buffing compounds, such as Ford Custom Bright Metal Cleaner or equivalent. Follow the buffing instructions that come with the compound.
3. When tires are removed, the entire wheel must be cleaned and inspected. Remove any soil or oxidation products from the tire side of the rim with a wire brush.
4. Aluminum alloys resist corrosion. This is why your Forged F-350 Aluminum Wheels never need sanding or painting. However, certain environments can lead to corrosion: salt, chloride compounds used for snow removal and highly alkaline materials. Wash corrosives elements off the wheel before they have time to react.

https://truckmanualshub.com/

Capacities and Specifications

Refill Capacities, Motorcraft Parts, and Lubricant Specifications

Motorcraft Parts

Engine	5.8L EFI	7.5L EFI
Battery –		
Standard	BXT-65-650	BXT-65-650
Optional	BXT-65-850	BXT-65-850
Spark Plug ①	ASF-32P ④	ASF-42P
Air Filter	FA-1046	FA-1046
Fuel Filter	FG-872	FG-872
Oil Filter	FL-820	FL-1A ②
Crankc. Em. Filter	FA-1603 ⑤	FA-1603 ③
P.C.V. Valve	EV-68	EV-218

① Refer to Vehicle Emission Control Information Decal for spark plug and gap specifications.
② Use FL-HP for off-road or severe duty.
③ F-250/350 (49 states) and F-Super Duty (All).
④ ASF-32C (49 states).
⑤ 49 states.

https://truckmanualshub.com/

Fluid Specifications and Capacities

NOTE: Refer to the Diesel Engine Owner's Guide Supplement for refill capacities on diesel engines.

Component	Capacities	
	U.S. Measure	Liters
Engine Crankcase ③	(Quarts)	
5.8L EFI (351 CID)	5.0	4.7
7.5L EFI (460 CID)	5.0	4.7
Transmission and Transfer Case		
5-Speed Overdrive (Mazda R2)	3.8	3.6
5-Speed Overdrive ② (ZF S5-47)	3.4	3.2
Elect. 4-Speed Automatic (E4OD) (4x2) ①	15.9	15.0
Elect. 4-Speed Automatic (E4OD) (4x4) ①	16.4	15.5
Transfer Case – Borg Warner 1356 ④	2.0	1.9
Parking Brake Assembly (Super Duty only)	(Ounces) 3.8	–

① Always use automatic transmission fluid dipstick to determine exact fluid quantity requirement.
② Transmission fluid must be replaced every 60,000 miles (100,000 km). Refer to the maintenance schedule.
③ Add 1 quart (or equivalent in liters) for filter replacement.
④ Add an additional 4.1 quarts (3.9 liters) if a transfer case mounted PTO is used (F-350 only).

https://truckmanualshub.com/

Component		Capacities	
		U.S. Measure	Liters
Axle (Rear)	**Truck Type**	(Pints)	
Ford Conventional and Traction-Lok Differential, Semi and Full Float, both with 10-1/4" Ring Gear ①	F-250, 350	7.5	3.5
Dana 80 ② 11.25" Ring Gear	F-Super Duty & Stripped Chassis	8.3	3.9
Axle (Front) 4x4 Only Front Dana 50IFS	F-250 Heavy Duty	3.8	1.8
Front Dana 60 Monobeam	F-350 4x4	5.8	2.7

① Service refill capacities are determined by filling the rear axle to the bottom of filler hole.
② Fill Dana rear axle to 1/4"-3/4" below bottom of fill hole.

NOTE: All rear axle lube quantities must be replaced every 100,000 miles (160,000 km) or if the axle has been submerged in water. **Otherwise, the lube should not be checked or changed unless a leak is suspected or repair required.** Refer to the maintenance schedule at the back of this guide.

https://truckmanualshub.com/

Model	Wheelbase In./mm	Mounting Front/ Rear	Capacity	
			U.S. Gal.	Liters
F-250 Regular Cab				
4x2	133/3378	F R	19.0 ① 18.2	72 69
4x4	133/3378	F R	19.0 ② 18.2	72 69
F-250 SuperCab and F-250 Crew Cab				
4x2 (SWB)	138.8/3526 and 152/3860	F R	16.5 18.2	62 69
4x4 (SWB)	138.8/3526 and 152/3860	F R	16.5 18.2	62 69
F-250 SuperCab and F-350 Crew Cab				
4x2 (LWB)	155/3937 and 168/4278	F R	19.0 18.2	72 69
4x4 (LWB)	155/3937 and 168/4278	F R	19.0 18.2	72 69
F-350 SuperCab				
4x2 (LWB)	155/3937	F R	19.0 18.2	72 69

Footnotes located at end of Fuel Tank Refill Capacities Charts.

https://truckmanualshub.com/

Model		Wheelbase In./mm	Mounting Front/ Rear	Capacity	
				U.S. Gal.	Liters
F-350 Pickup/ Chassis Cab	4 x 2	133/3378	F R	19.0 ① 18.2	72 69
	4 x 4	133/3378	F R	19.0 ② 18.2	72 69
F-350 SRW Chassis Cab	4 x 2	136.8/3475	F R	19.0 19.0	72 72
	4 x 2	160.8/4085	F R	19.0 ① 19.0	72 72
F-350 DRW Chassis Cab	4 x 4	136.8/3474.7	F R	19.0 ① 19.0	72 72
	4 x 2	160.8/4085	F R	19.0 ① 19.0 ①	72 72

Footnotes located at end of Fuel Tank Refill Capacities Charts.

https://truckmanualshub.com/

Model		Wheelbase In./mm	Mounting Front/ Rear	Capacity	
				U.S. Gal.	Liters
F-Super Duty Chassis Cab	4 x 2	136.8/3475	F R	19.0 ① 19.0	72 72
	4 x 2	160.8/4085	F R	19.0 ① 19.0	72 72
	4 x 2	184.8/4694	F R	19.0 ① 19.0	72 72

① With Diesel Engine 20.0 gallons (76 liters).
② With E4OD transmission Diesel Engine 22.0 gallons (18.3 imp. gals., 83 liters) and all other EFI Engines 16.5 gallons (62 liters).

https://truckmanualshub.com/

Cooling system capacity

Engine	Truck	Equipment	Capacities	
			U.S. Qts.	Liters
5.8L EFI (351 CID) V-8	F-250/ 350	Manual Transmission With Standard Cool	15.7	14.9
		Auto Transmission With Standard Cool	16.4	15.5
		Manual and Auto Transmission With Air Conditioning	16.4	15.5
		Manual and Auto Transmission With Super Cool or Super Cool and Air Conditioning	18	17.0
7.5L EFI (460 CID) V-8	F-250/ 350	All	19.8	18.7

https://truckmanualshub.com/

Item	Ford Part Name	Ford Part Number	Ford Specification
Windshield Washer Reservoir	Ultra-Clear Wind. Wash. Concentrate	C9AZ-19550-AB or BB	ESR-M17P5-A
Body Hinges, Latches, Door Striker Plates and Rotors, Seat Tracks, Door Checks and Tracks, and Hood Latch and Auxiliary Latch	Multi-Purpose Grease	D7AZ-19584-AA and D0AZ-19584-AA	ESR-M1C159-A and ESB-M1C93-B
Lock Cylinders, Spare Tire Padlock	Penetrating Lubricant	E8AZ-19A501-B	—
Distributor Bushing Oil Cup	Engine Oil SAE-10W		ESE-M2C153-E
Steering Column U-Joints, Clutch Linkage Pivots, Parking Brake Linkage Pivots and Clevises, Kickdown Linkage Pivots/Ball Studs	Premium Long Life Grease	XG-1-C or K	ESA-M1C75-B
Hydraulic Clutch Master Cylinder – Brake Master Cylinder	High Performance DOT 3 Brake Fluid	C6AZ-19542-AA	ESA-M6C25-A

https://truckmanualshub.com/

Item	Ford Part Name	Ford Part Number	Ford Specification
Engine Oil – Gasoline Engines	Motorcraft Motor Oil 5W30 Super Premium	XO-5W30-QSP	WSS-M2C153-F with API Certification Mark
	10W30 Super Premium	XO-10W30-QSP	
Engine Oil – Diesel Engines	Consult Separate Diesel Engine Owner's Guide Supplement		
Front Drive Axle Free Running Hubs on 4x4	Premium Long Life Grease	XG-1-C or K	ESA-M1C75-B

https://truckmanualshub.com/

Item	Ford Part Name	Ford Part Number	Ford Specification
Door Weatherstrips	Silicone Lubricant	C0AZ-19553-AA and D7AZ-19553-AA	ESR-M13P4-A
Automatic Transmission Shift Linkage, Automatic Transmission Throttle Valve Lever and/or Ball Stud	Premium Long Life Grease	XG-1-C or K	ESA-M1C75-B
Disc Brake Caliper Rails	Disc Brake Caliper Slide Grease	D7AZ-19590-A	ESA-M1C172-A
4x2 Front Wheel Bearings, Brake and Clutch Pedal Shaft	Premium Long Life Grease	XG-1-C or K	ESA-M1C75-B
Electronic 4-Speed Automatic (E4OD) Transmission	Motorcraft MERCON® Automatic Transmission Fluid	XT-2-QDX	MERCON®

https://truckmanualshub.com/

Item	Ford Part Name	Ford Part Number	Ford Specification
Power Steering Reservoir	Premium Power Steering Fluid	XT-2-QDX	MERCON®
Parking Brake Cable	Speedometer Cable Lubricant	E6TZ-19581-A	ESF-M1C160-A
Engine Oil Filter –			
– 5.8L Engine	Motorcraft Long Life Oil Filter	(FL-820) F1AZ-6731-A	ES-F1AE-6714-AB
– 7.5L (except 7.5L Off Road/Severe Duty)	Motorcraft Long Life Oil Filter	(FL-1A) D9AZ-6731-A	ES-E1ZE-6714-AA
– 7.5L Off Road/Severe Duty	Motorcraft Long Life Oil Filter	(FL-1HP) E7TZ-6731-A	ES-E1ZE-6714-AA (modified)
Accelerator Throttle Lever and Transmission Kickdown Lever Ball Studs	Premium Long Life Grease	XG-1-C or K	ESA-M1C75-B
Steering Linkage, Spindle Pins – Lubricate only where Equipped with Grease Fittings	Premium Long Life Grease	XG-1-C or K	ESA-M1C75-B
Front Wheel Free Running Automatic Hublock Brake Band	Automatic Hublock Grease	E1TZ-19590-A	ESL-M1C193-A
4x4 Front Wheel Bearings, 4x4 Spindle Needle Bearings, Spindle Thrust Bearings and Front Drive Axle U-joints and Slip Spline	High Temperature 4x4 Front Axle and Wheel Bearing Grease	E8TZ-19590-A	ESA-M1C198-A

https://truckmanualshub.com/

Item	Ford Part Name	Ford Part Number	Ford Specification
Front 4x4 Axles ① (F-250)	4x4 Gear Oil	F1TZ-19580-A	WSL-M2C191-A
Front 4x4 Axles ① (F-350)	Rear Axle Lubricant	FSTZ-19580	WSP-M2C197-A
Ford Conventional & Traction-Lok Axles (F-250, F-350) ②	Motorcraft SAE 80W90 Thermally Stable Rear Axle Lubricant	XY-80W90-QL	WSP-M2C197-A
F-Super Duty Rear Axle, Dana 80	Rear Axle Lubricant	XY-80W90-QL	WSP-M2C197-A
F-Super Duty Parking Brake Assy.	Motorcraft MERCON® Automatic Transmission Fluid	XT-2-QDX	MERCON®
Transfer Case – Four-Wheel Drive	Motorcraft MERCON® Automatic Transmission Fluid	XT-2-QDX	MERCON®

① Add 2 oz. of friction modifier Part No. C8AZ-19B546-A (meeting Ford specifications EST-M2C118-A) for complete refill of Traction-Lok front axles.
② For F-250, F-350 with 10.25 inch ring gear Traction-Lok rear axles add 8 oz. of friction modifier Part Number C8AZ-19B546-A (meeting Ford specifications EST-M2C118-A) for a complete refill.

https://truckmanualshub.com/

Item	Ford Part Name	Ford Part Number	Ford Specification
Exhaust Control Valve	Rust Penetrant and Inhibitor	F2AZ-19A501-A	ESR-M99C56-A
5-Speed Overdrive Transmission (ZF S5-47) (Mazda-R2)	Motorcraft – MERCON® Automatic Transmission Fluid	XT-2-QDX	MERCON®
5-Speed Overdrive Transmission 7.3L DI Diesel (ZF S5-47)	Motorcraft Synthetic MERCON®	E6AZ-19582-B	ESR-M2C163-A2
Driveshaft, Universal Joints (if equipped with fitting) and Slip Spline	Premium Long Life Grease	XG-1-C or K	ESA-M1C75-B
Engine Coolant	Premium Cooling System Fluid	E2FZ-19549-AA or B	ESE-M97B44-A

https://truckmanualshub.com/

Vehicle Storage

Maintenance Tips

If you plan on storing your vehicle for an extended period of time (60 days or more), refer to the following maintenance recommendations to ensure your vehicle stays in good operating condition.

General

- ❑ Store all vehicles in a dry, ventilated place.
- ❑ Protect from sunlight, if possible.
- ❑ If vehicles are stored outside, they require regular maintenance to protect against rust and damage.

Body

- ❑ Wash vehicle thoroughly to remove dirt, grease, oil, tar or mud from exterior surfaces, rear wheel housing and underside of front fenders.
- ❑ Periodically wash vehicles stored in exposed locations.
- ❑ Touch-up raw or primed metal to prevent rust.
- ❑ Cover chrome and stainless steel parts with a thick coat of auto wax to prevent discoloration. Re-wax as necessary when the vehicle is washed.
- ❑ Lubricate all hood, door and trunk lid hinges and latches with a light grade oil.
- ❑ Cover interior soft trim to prevent fading.
- ❑ Keep all rubber parts free from oil and solvents.

https://truckmanualshub.com/

Engine

- ❑ Start engine every 15 days. Run at fast idle until it reaches normal operating temperature.
- ❑ With your foot on the brake, shift through all the gears while the engine is running.

Fuel system

- ❑ Fill fuel tank with high-quality unleaded fuel until the first automatic shutoff of the fuel pump nozzle.

NOTE: During extended periods of vehicle storage (60 days or more), fuel may deteriorate due to oxidation. This can damage rubber and other polymers in the fuel system and may also clog small orifices.

Ford Gas Stabilizer should be added whenever actual or expected storage periods exceed 60 days. Follow the instructions on the label. The vehicle should then be operated at idle speed to circulate the additive throughout the fuel system.

NOTE: Read the *7.3L Diesel Engine Owner Guide Supplement* for information regarding vehicle storage for your diesel-powered vehicle.

A volatile corrosion inhibitor added to the fuel system will protect the fuel system's inner surfaces from corrosion. Follow the instructions packaged with the product.

Cooling system

- ❑ Protect against freezing temperatures.

https://truckmanualshub.com/

Battery

- ❑ Check and recharge as necessary.
- ❑ Keep connections clean and covered with a light coat of grease.

Brakes

- ❑ Make sure brakes and parking brake are fully released.

Tires

- ❑ Maintain recommended air pressures.

Miscellaneous

- ❑ Make sure all linkages, cables, levers and clevis pins under vehicle are covered with grease to prevent rust.
- ❑ Move vehicles at least 25 feet (10 m) every 15 days to lubricate working parts to prevent corrosion.

https://truckmanualshub.com/

Customer Assistance

Roadside Assistance

Ford Motor Company has set up a 24-hour, seven-day-a-week hotline with trained operators who put you in touch with the help you need if you experience a problem with your vehicle. This complimentary service is provided to you throughout your warranty period of 3 years or 36,000 miles (60,000 km), whichever comes first. To purchase Roadside Assistance coverages beyond this period (available through Ford Auto Club in the United States or Ford and Lincoln-Mercury dealers in Canada), contact your Ford or Lincoln-Mercury dealer. Additional Roadside Assistance coverage is unavailable in Puerto Rico and the Virgin Islands.

Roadside Assistance will cover the following:

- ❑ Mount your spare if you have a flat tire.
- ❑ Jump-start your battery if it is dead.
- ❑ Unlock your vehicle if you are locked out.
- ❑ Bring you fuel if you run out.
- ❑ Tow your vehicle if you are stranded. Even non-warranty related tows, like accidents or getting stuck in mud or snow, are covered (some exclusions apply, such as impound towing and repossession).

https://truckmanualshub.com/

How to use Roadside Assistance

Your Roadside Assistance identification card can be found in the Owner Guide portfolio in your glove compartment. Complete the card and place it in your wallet for quick reference.

To receive roadside assistance in the United States call 1-800-241-FORD (in Canada call 1-800-665-2006).

Should you need to arrange for roadside assistance yourself, Ford Motor Company will reimburse the reasonable cost. To obtain information about reimbursement call 1-800-241-FORD (in Canada call 1-800-665-2006).

If You Have a Service Problem

Ford Motor Company has authorized Ford and Lincoln-Mercury dealerships that can service your vehicle for you. This chapter tells you how to get service or maintenance for your vehicle.

Service/Maintenance Concerns (U.S. or Canada)

Ford recommends taking your vehicle to your selling dealer who wants to ensure your continued satisfaction. You may, however, take your vehicle to any authorized Ford or Lincoln-Mercury dealer. In most cases, your dealer will be able to resolve your concern.

If you are not satisfied with the service you received from your dealership's service department, talk to the service manager at the dealership. If you still are not satisfied, talk to the owner or general manager of the dealership. In most cases, you will have your concern resolved at this level.

https://truckmanualshub.com/

If you are away from home when your vehicle needs to be serviced, or if you need more help than the dealer gave you, contact the Ford Customer Assistance Center to find an authorized dealership that may be able to help.

In the U.S., contact:

Ford Motor Company
Customer Assistance Center
300 Renaissance Center
P.O. Box 43360
Detroit, Michigan 48243
1-800-392-3673 (FORD)
TDD for the hearing impaired: 1-800-232-5952

If you live in Canada and have any questions or concerns that the dealership cannot answer, contact the Customer Assistance Centre.

Customer Assistance Centre
Ford Motor Company of Canada, Limited
P.O. Box 2000
Oakville, Ontario L6J 5E4
1-800-565-3673 (FORD)

Please have the following information available when contacting Ford Customer Assistance:

- ❑ your telephone number (both business and home)
- ❑ the name of the dealer and the city where the dealership is located
- ❑ the year and make of your vehicle
- ❑ the date purchased
- ❑ the current mileage on your vehicle
- ❑ your Vehicle Identification Number (VIN) (listed on your owner card)

https://truckmanualshub.com/

If you still have a complaint involving a warranty dispute, you may wish to contact the Dispute Settlement Board (U.S. only) or the Canadian Motor Vehicle Arbitration Plan (CAMVAP) in Canada.

A warranty dispute must be submitted to the Dispute Settlement Board before taking action under the Magnuson-Moss Warranty Act, or to the extent allowed by state law, before pursuing replacement or repurchase remedies provided by certain state laws. This dispute handling procedure is not required prior to enforcing state created rights or other rights which are independent of the Magnuson-Moss Warranty Act or state replacement or repurchase laws.

The Dispute Settlement Board (U.S. Only)

The Dispute Settlement Board is:

- ❑ An independent, third party arbitration program for warranty disputes
- ❑ Available free to owners and lessees of qualifying Ford Motor Company vehicles.

The Dispute Settlement Board may not be available in all states. Ford Motor Company reserves the right to change eligibility limitations, modify procedures and/or to discontinue this service without notice and without incurring obligations.

https://truckmanualshub.com/

What Kind of Cases Does the Board Review?

The Board reviews all warranty performance complaints on Ford, Mercury and Lincoln cars and Ford and Mercury light trucks under the new vehicle limited warranty that have not been resolved by either a dealer or Ford Motor Company, except those involving:

- ❑ a non-Ford product
- ❑ a non-Ford dealership
- ❑ a vehicle sales transaction
- ❑ request for reimbursement of consequential expenses. Expenses incidental to the warranty complaint being reviewed are eligible for consideration.
- ❑ items not covered by the new vehicle limited warranty
- ❑ alleged liability claims
- ❑ property damage where the damage is significant when compared to the economic loss alleged under the warranty dispute
- ❑ cases currently in litigation
- ❑ vehicles not used primarily for family, personal, or household purposes (except in states where the Dispute Settlement Board is required to review commercial vehicles)

Complaints involving vehicles in which applicable new vehicle limited warranties have expired at receipt of your application are not eligible. Eligibility may differ according to state law. For example, see the unique brochures for California and Wisconsin purchasers/lessees.

https://truckmanualshub.com/

How does the Board Work?

The Board consists of:

- ❑ three consumer representatives
- ❑ a Ford or Lincoln/Mercury dealer

Consumer candidates for Board membership are recruited and trained by an independent consulting firm. Dealers are chosen because of their business leadership qualities.

What the Board Needs

To have your case reviewed you must complete the application in the DSB brochure and mail it to the address provided on the application form.

Your application is reviewed and, if it is determined to be eligible, you will receive an acknowledgment indicating:

- ❑ The file number assigned to your application
- ❑ The toll-free phone number of the DSB's independent administrator

Your dealership and a Ford Motor Company representative are asked to submit statements at this time.

To review your case properly, the Board needs the following information:

- ❑ legible copies of all documents and maintenance or repair orders relevant to the case
- ❑ the year, make, model, and Vehicle Identification Number (VIN) listed on your vehicle ownership license
- ❑ the date of repair(s) and mileage at the time of occurrence(s)
- ❑ the current mileage

https://truckmanualshub.com/

- ❑ the name of the dealer who sold or serviced the vehicle
- ❑ a brief description of your unresolved concern
- ❑ a brief summary of the action taken with the dealer and Ford Motor Company
- ❑ the names (if known) of all the people you contacted at the dealership
- ❑ a description of the action you expect to resolve your concern

Should your case NOT qualify for review, a letter of explanation will be mailed to you.

Oral presentations

If the involved vehicle is within 36 months and 36,000 miles of the warranty start date, you have the right to make an oral presentation before the Board. Indicate your choice to do so on the application. Oral presentations may also be requested by the Board.

Making a decision

Board members will review all available information related to the complaint, including oral presentations, if necessary. They then arrive at a fair and impartial decision, decided by a simple majority vote.

Because the Board usually meets only once a month, some cases may take longer than 30 days to be reviewed. The Board makes every effort to resolve each case within 40 days of receiving the consumer application form.

After a case is reviewed, the Board mails you a decision letter. The Board also provides a form on which to accept or reject the Board's decision. The decisions of the Board are binding on the dealer and Ford, but not on consumers who may

https://truckmanualshub.com/

elect to pursue other remedies available to them under state and federal law. Decisions of the Board may be presented as evidence by any party in subsequent legal proceedings that may be initiated, where allowed by law.

To Request a DSB Brochure/Application

For a brochure/application, speak to your dealer or write to the Board at the following address:

Dispute Settlement Board
PO Box 5120
Southfield, MI 48086-5120

Ford of Canada does not have a Dispute Settlement Board. If you have a problem that cannot be resolved by an agreement among you, Ford of Canada, and the Ford dealer, contact the Canadian Motor Vehicle Arbitration Plan (CAMVAP). In many areas of Canada, CAMVAP will help resolve the problem and, if necessary, will arrange for the matter to be arbitrated.

To contact NHTSA, you may either call the Auto Safety Hotline toll-free at 1-800-424-9393 (or 366-0123 in the Washington, D.C. area) or write to: NHTSA, U.S. Department of Transportation, 400 Seventh Street, Washington D.C. 20590. You can also obtain other information about motor vehicle safety from the Hotline.

Getting Help Outside the U.S. and Canada

Before you export your vehicle to a foreign country, contact the appropriate foreign embassy or consulate to make sure local regulations do not prevent you from registering your vehicle. Officials at the embassy can also help you decide whether you should import your vehicle to that country.

https://truckmanualshub.com/

Officials at the embassy or consulate can tell you where to get unleaded fuel. If you cannot get unleaded fuel or can get only fuel with an anti-knock index that is lower than your vehicle needs, contact a district or owner relations office before you leave the U.S. or Canada.

Use of leaded fuel in your vehicle without a proper conversion may damage the effectiveness of your emissions control system and may cause engine knocking or serious engine damage. Ford Motor Company is not responsible for any damage that is caused by use of improper fuel.

You may also have difficulty importing your vehicle back into the U.S. if you use leaded fuel.

If your vehicle must be serviced while you are traveling or living in Central or South America, the Caribbean, or the Middle East, contact the nearest Ford dealership. If the dealership cannot help you, write to:

FORD MOTOR COMPANY
WORLDWIDE EXPORT OPERATIONS
1555 Fairlane Drive
Fairlane Business Park #3
Allen Park, Michigan 48101 U.S.A.
Telephone: (313) 594-4857
Fax: (313) 390-0804

If you are in other foreign countries, contact the nearest Ford dealership. If the dealership cannot help you, they can direct you to the appropriate Ford affiliate office.

If you buy your vehicle in North America and then relocate outside of the U.S. or Canada, register your Vehicle Identification Number and new address with Ford Motor Company Export Operations.

https://truckmanualshub.com/

Ford of Canada Customer Assistance

Ford Motor Company of Canada, Limited

If you live in Canada and have any questions or concerns that the dealership cannot answer, contact the Customer Assistance Centre.

Customer Assistance Centre
Ford Motor Company of Canada, Limited
P.O. Box 2000
Oakville, Ontario L6J 5E4
1-800-565-3673 (FORD)

Mediation/Arbitration Program (Canada only)

In those cases where you continue to feel that the efforts by Ford and the dealer to resolve a factory-related vehicle service concern have been unsatisfactory, Ford of Canada participates in an impartial third party mediation/arbitration program administered by the Canadian Motor Vehicle Arbitration Plan (CAMVAP).

The CAMVAP program is a straight-forward and relatively speedy alternative to resolve a disagreement when all other efforts to produce a settlement have failed. This procedure is without cost to you and is designed to eliminate the need for lengthy and expensive legal proceedings.

https://truckmanualshub.com/

In the CAMVAP program, impartial third-party Arbitrators conduct hearings at mutually convenient times and places in an informal environment. These impartial Arbitrators review the positions of the parties, make decisions and, where appropriate, render awards to resolve disputes. CAMVAP decisions are fast, fair and final as the arbitrator's award is binding on both you and Ford of Canada.

CAMVAP services are available in all territories and provinces, except Quebec. For more information, without charge or obligation, call your CAMVAP Provincial Administrator directly at 1-800-207-0685.

https://truckmanualshub.com/

Accessories

Ford Accessories for Your Vehicle

A wide selection of accessories is available through your local authorized dealer. These fine accessories have been engineered specifically to fulfill your automotive needs. They are custom designed to complement the style and aerodynamic appearance of your Ford-built vehicle. In addition, each accessory is made from high quality materials and meets or exceeds Ford's rigid engineering and safety specifications. That is why Ford brand accessories are warranted for up to 12 months or 12,000 miles (20,000 km), whichever comes first. See your dealer for complete warranty information and accessory availability.

https://truckmanualshub.com/

Safety, Comfort, and Convenience

Comfort and Convenience

Air Conditioner
Engine Block Heater
Sliding Rear Window

Protection and Appearance Equipment

Bumper Guards
Step/Sill Plates
Door Edge Guards
Bed Liner
Bed Mat
Bikini Hood Cover
Box Rails (Black or Bright)
Bumper, Rear Step
Cleaners
Floor Mats, Carpeted, Molded Vinyl
Front End Cover
Hood Deflector
Lubricants
Running Boards
Super Seal Fabric Protector (U.S. only)
Tailgate Protector
Touch-Up Paints
Polishes
Wheel Splash Guards (Flat Front only)
Tubular Rear Bumper
Side Window Deflectors

https://truckmanualshub.com/

Safety Equipment

Vehicle Security System
Remote Keyless Entry
Styled Wheel Protector Locks (Alum. Wheels only)
Tailgate Lock

Travel Equipment

Cargo Retention Net
Heavy Duty Battery
Retractable Truck Bed Hooks and Loops
Speed Control
Trailer Hitch, Class III/VI
Multi-Sport Removable Rack and Adaptors

Visibility Equipment

Fog Lights
Gooseneck Recreational Mirror

NOTE: **When adding accessories, equipment, passengers, and luggage to your vehicle, do not exceed the total weight capacity of the vehicle or of the front or rear axle (GVWR, GAWR as shown on the Safety Compliance Certification Label). Consult your dealer for specific weight information.**

NOTE: **The Federal Communications Commission (FCC) or the Canadian Radio Telecommunications Commission (CRTC) regulates the use of mobile communications systems — such as two-way radios, telephones, and theft alarms — that are equipped with radio transmitters. Any such equipment installed in your vehicle should comply with FCC or CRTC regulations and should be installed only by a qualified technician.**

https://truckmanualshub.com/

NOTE: Mobile communications systems may harm the operation of your vehicle, particularly if they are not properly designed for automotive use or are not properly installed. For example, when operated, such systems may cause the engine to stumble or stall. In addition, such systems may themselves be damaged or their operation affected by operating your vehicle. (Citizens band [CB] transceivers, garage door openers, and other transmitters whose power output is 5 watts or less will not ordinarily affect your vehicle's operation.)

NOTE: Because we have no control over the installation, design, or manufacture of such systems, Ford cannot assume responsibility for any adverse effects or damage that may result if you use this equipment.

FLEET OWNERS SERVICE TECHNICIANS:

To purchase available technical Service Information, Component Service Manuals, Video Tape Training and Text Training Manuals, request Service Training Materials Catalog 0000-006SPD from:
FORD SERVICE PUBLICATIONS
POST OFFICE BOX 07150
DETROIT, MICH 48207
or call: 313/865-5000 Extension: 264

https://truckmanualshub.com/

FOR INFORMATION ON ORDERING SERVICE PUBLICATIONS, CONTACT:

U.S RESIDENTS CALL

HELM, INCORPORATED

1-800-782-4356

Monday – Friday 8:00 A.M. – 6:30 P.M. EST
For Credit Card Holder Orders Only

CANADIAN RESIDENTS CALL

FORD MOTOR COMPANY OF CANADA, LTD.

1-800-387-4966

Monday – Friday 8:00 A.M. – 6:30 P.M. EST
For Credit Card Holder Orders Only

All rights reserved. Reproduction by any means, electronic or mechanical including photocopying, recording or by any information storage and retrieval system or translation in whole or part is not permitted without written authorization from Ford Motor Company.

Copyright © 1996 Ford Motor Company

https://truckmanualshub.com/

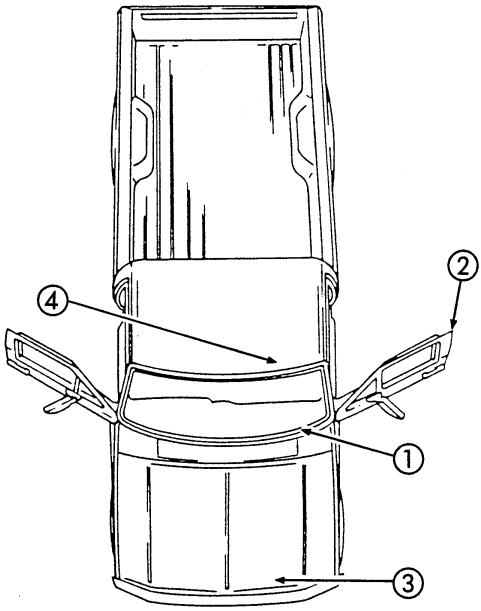

No.	Description	Refer to this label for information regarding:
1	Vehicle Identification Number (VIN) Label	Service or warranty information specific to your vehicle
2	Safety Compliance Certification Label	Name and date of manufacturer, GVWR*, GAWR**, wheel and tire information
3	Fuel Pump Shut-Off Label	Fuel pump shut-off location
4	4 x 4 Operation Label	4 x 4 operating instructions and precautions

*Gross Vehicle Weight Rating **Gross Axle Weight Rating

Warning label locations

https://truckmanualshub.com/

Front exterior view

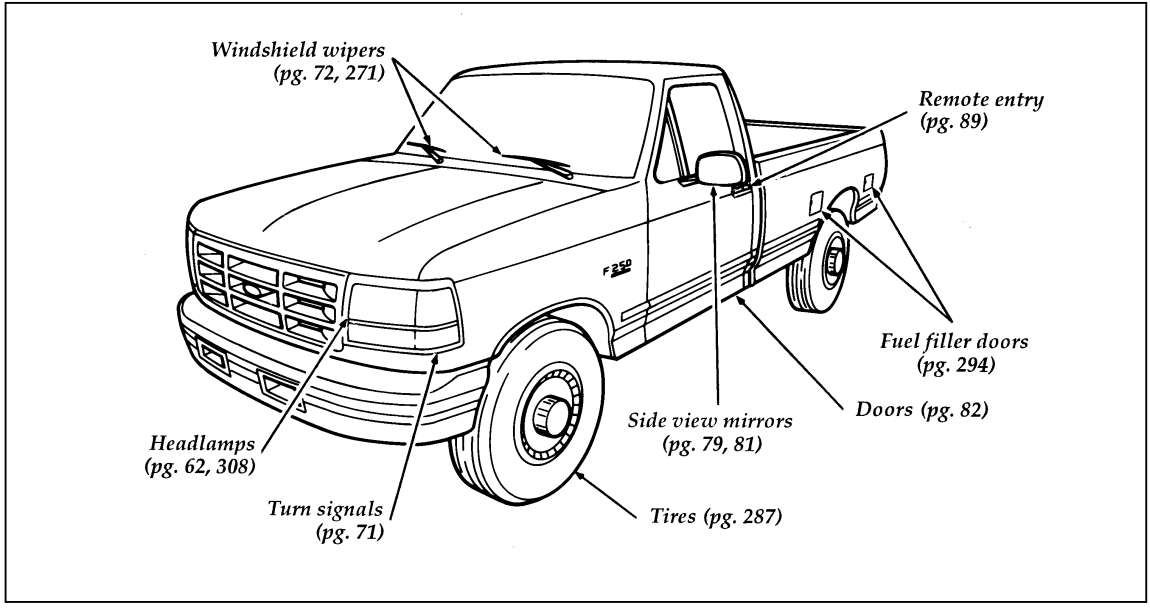

https://truckmanualshub.com/

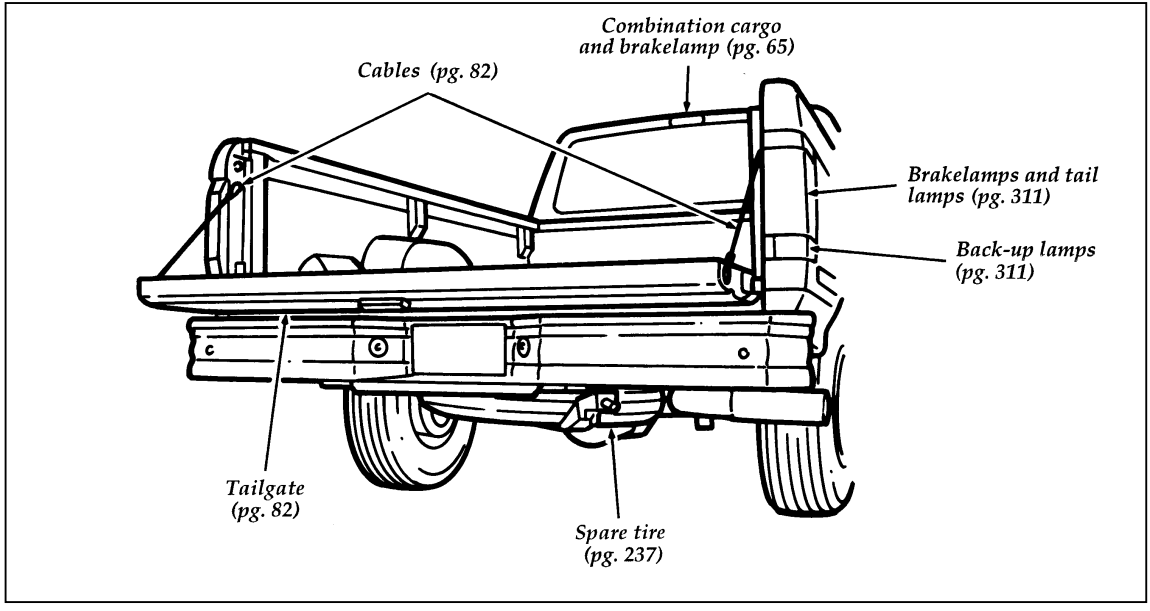

Rear exterior view

https://truckmanualshub.com/

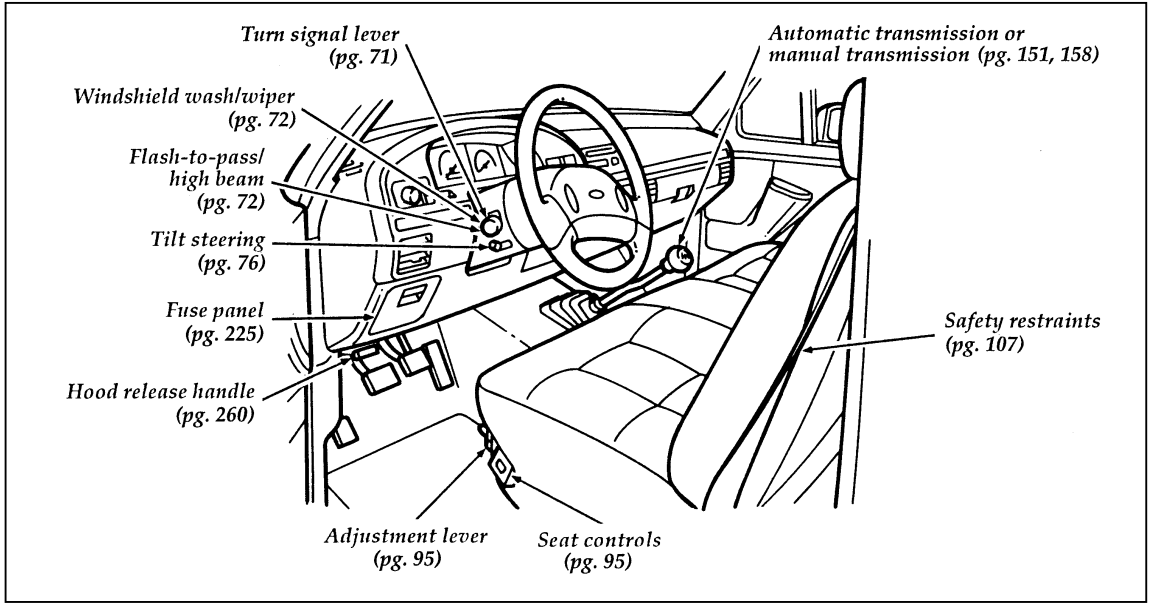

https://truckmanualshub.com/

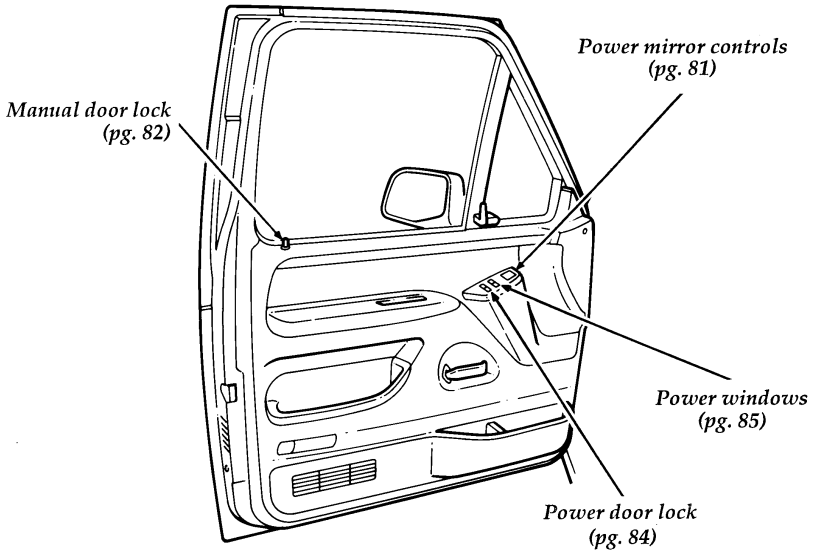

https://truckmanualshub.com/

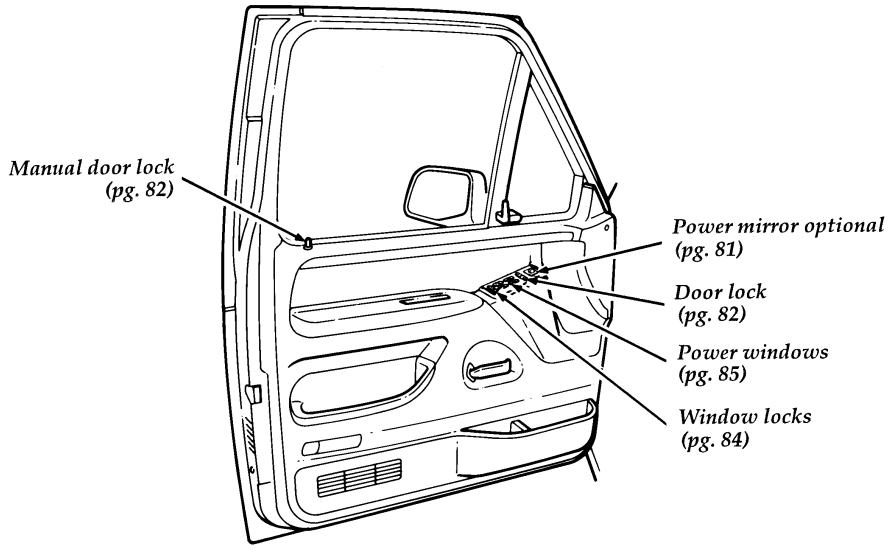

https://truckmanualshub.com/

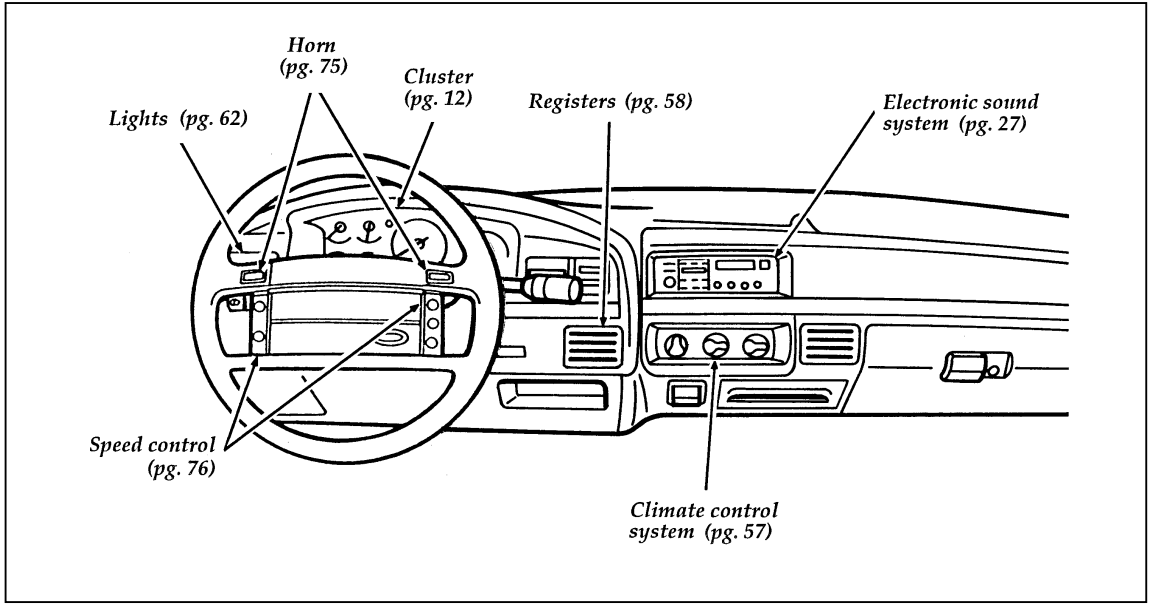

https://truckmanualshub.com/

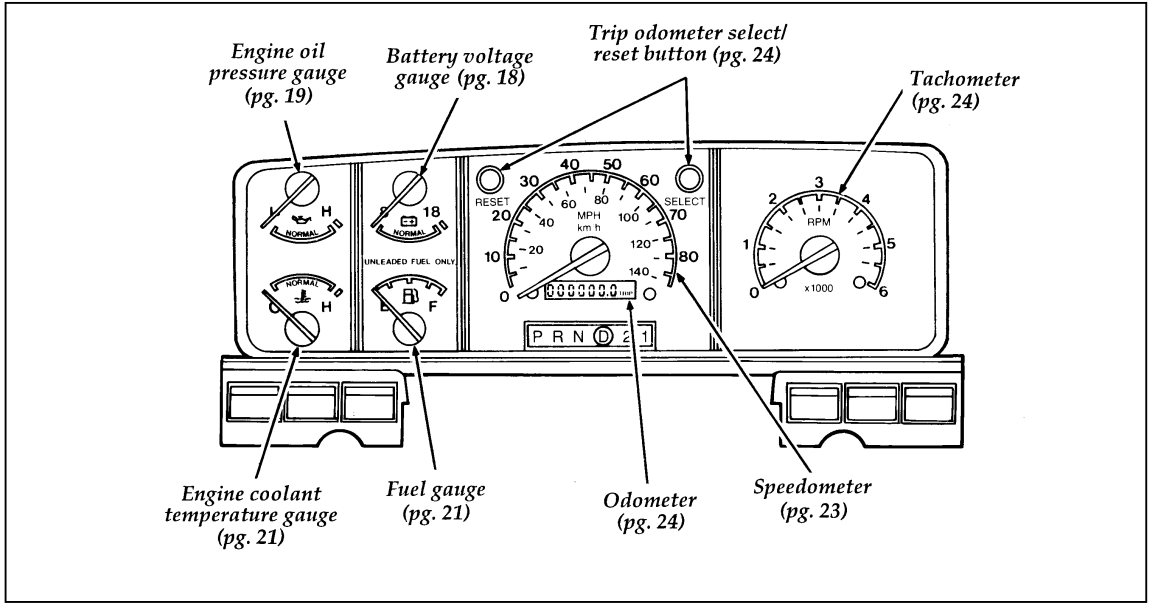

https://truckmanualshub.com/

Index

A

ABS warning light
(see Anti-lock brake system) 16
Accessory position on the ignition . . . 67–68
Accessory power source, power
point outlet 66
Additives, engine oil 264
Air bag supplemental restraint system,
and child safety seats 122
Air cleaner filter
location 261
specifications 317
Alarm, activating remote personal 90
Alcohol, in fuel 297
Antenna, radio (see Electronic
sound system) 27
Antifreeze (see Engine coolant) 274
Anti-lock brake system (ABS)
description 145
see also Brake 145
warning light. 16
warninig light 15
Appeals (see Dispute settlement board) . . 338
Assistance (see Customer assistance) . . . 335
Audio system (see Electronic
sound system) 27
Autolamp system (see Headlamps) 63
Automatic transmission
driving an automatic overdrive . . 151, 155
fluid, adding 284
fluid, checking 283
fluid, refill capacities 318
fluid, specification 324

https://truckmanualshub.com/

Axle
lubricant specifications 324
refill capacities 318
traction lok 220

B

Backing up 154
Basic vehicle warranty 4
Battery 285
acid, treating emergencies . . . 250, 286–287
battery saver 93
charging system warning light 18
disconnecting 253
how to service 285
jumping a disabled battery 249
maintenance-free 285
proper disposal, recycling 286
replacement, specifications 317
servicing 285
voltage gauge 18
when storing your vehicle 332
Brake fluid 268
brake warning light 15
checking and adding 268
description 268
specifications 269, 324
Brakelamp 310
bulb replacement 310
high-mount brakelamp 310
Brakes 145
adjustment 145
anti-lock 145
anti-lock brake system (ABS)
warning light 16
applying the brakes 148
brake warning light 15
fluid, checking and adding 268

https://truckmanualshub.com/

Brakes (continued)
fluid, refill capacities 268, 318
fluid, specifications 269, 324
front disc 145
if brakes do not grip well 147–148
master cylinder 268
new brake linings. 9
noise 145
parking 149
power braking 145
rear anti-lock 146
servicing 268
stopping distances 148, 218
when storing your vehicle 332
Brake-shift interlock 140, 154
Break-in period 9
Brights (high beams) 20
Bulbs, replacing 307
halogen 308
headlamps 308
high-mount brakelamp 310

C

Canada, customer assistance 344
Canada, warranty information 4
Capacities for refilling fluids 318
Carbon monoxide in exhaust 143
Car seats for children
(see Child safety seats) 122
Cassette tape player (see Electronic
sound system) 42, 47
Catalytic converter 302
CD player (see Electronic sound system) . . 35
Chains, tires 292
Changing a tire 236
Charging system gauge 18
Charging system warning light 18

https://truckmanualshub.com/

Child safety restraints 120
child safety belts 121
child safety seats 122
Child safety seats 122
and air bags 122
attaching with tether straps 133
automatic locking mode (retractor) . . . 122
in front seat 122
in rear outboard seat 122
in rear seat 122
tether anchorage hardware 133
Chime
headlamps on. 21
key in ignition 69
safety belt 17
Circuit breakers
checking and replacing 235
see also fuses 225
Cleaning your vehicle 312
CD player and discs. 39
chrome and aluminum parts 313
engine compartment. 315
exterior 312–313
exterior lamps 314
fabric 314
headlamps 314
instrument panel 313
instrument panel lens 314
interior. 314
interior lamps. 314
mirrors. 81
plastic parts 313
polishing 313
rustproofing 313
safety belts 314
tail lamps 314

https://truckmanualshub.com/

Cleaning your vehicle (continued)
upholstery and interior trim 314
washing 312–313
waxing 313
wheels. 315
Climate control system 57
Clock 34, 48, 52
Clutch 158
adjusting. 270
fluid. 270
fluid reservoir 268, 270
operation while driving 158
recommended shift speeds. 161
shifting the gears 159
specifications 324
Cold engine starting. 139
Combination lap and shoulder belts . 107, 111
Compact disc player (see Electronic
sound system) 28, 35
Compact disc radio (see Electronic
sound system) 28
Console, description 87
Controls
mirrors 79, 81
power seat 105
Convenience kit in cargo area 237
Coolant (see Engine coolant) 274
checking and adding 274
preparing for storage 331
proper solution 276
refill capacities 318
specifications 277, 324
temperature gauge 21
warnings. 274
Cooling fan. 258
Crankcase emission filter. 317

https://truckmanualshub.com/

Customer Assistance Center, Ford (U.S.) . . 337
Customer Assistance Centre,
Ford of Canada 337, 344

D

Daytime running light system 63
Defects, reporting 333
Dipstick 265
automatic transmission fluid 282, 284
engine oil 265
power steering fluid 280
Disabled vehicle (see Towing) 254
Dispute Settlement Board 338
Doors 82
lubricant specifications 324
Driveline universal joint and slip yoke . . 271
Driving under special conditions 218
bad weather 219
heavy load 175
high speed 219
high water 221
slippery roads 219
tips for safe driving 218
Dual fuel tank selector switch 62

E

Electrical system
circuit breakers 235
fuses 225, 234
operating when the engine is off 68
power point outlet 66
Electronic AM radio (see Electronic
sound system) 50
Electronic radio with cassette
(see Electronic sound system) 42
Electronic sound system
accessory delay 68
tuning the radio 29, 44, 51
warranty and service information 56

https://truckmanualshub.com/

Electronic stereo cassette radio
(see Electronic sound system) 42
Emergencies, roadside
battery acid spills 250, 287
fuel 297
jump-starting 249
towing 254
Emergency brake (parking brake) 149
Emission control system 302
catalytic converter 302
emissions warranty 4, 302, 304
Engine
check engine warning light 17
diesel 7
does not start 223
fuel injected engine, starting 137, 139
fuel pump shut-off switch 223
preparing to start 137–138
refill capacities 318
service points 261
starting 139
starting after a collision 223
storing your vehicle 330–331
Engine block heater 142
Engine coolant 274
checking and adding 274
disposal 268, 277, 284
preparing for storage 331
proper solution 268, 276–277, 284
recovery reservoir 261, 275
refill capacities 318
specifications 277, 324
temperature gauge 21
Engine coolant temperature gauge 21
description 21
mechanical 21

https://truckmanualshub.com/

Engine fan 258
Engine knocking. 296
Engine oil 264
changing oil and oil filter 265, 267
checking and adding 265
dipstick 265
disposal 268, 277, 284
engine oil pressure gauge 19
filter, specifications 317
refill capacities 318
specifications 264, 324
synthetic oil 264–265
“break-in” oils 9
viscosity 264
Entry system
illuminated 92
remote 89
Exhaust fumes 143
Extended Service Plan, Ford 4

F

Fan, engine fan, avoiding injury 258
Federal Communications Commission 55
Federal Highway Administration
Regulation 8
Flashers, hazard 74
Flashing the lights 72
Flat tire. 236
Fluid refill capacities. 318
Foglamps 86
Ford Customer Assistance Center 337
Ford Dispute Settlement Board 338
Ford Extended Service Plan 4
Ford Motor Company of Canada 344

https://truckmanualshub.com/

Ford of Canada Customer
Assistance Centre 344
Foreign registration 342
Four-Wheel Drive vehicles
description 163
driving off road 172
indicator light 166
lever operated 164
special driving instructions 174
special notice 5
towing 255
Four-wheeling with Ford supplement 5
French owner guides, how to obtain 3
Fuel 293
calculating fuel economy 300
capacity 318
choosing the right fuel 295
comparisons with EPA fuel
economy estimates 301
filling your vehicle with fuel 293
filter, specifications 317
fuel filler door release lever 293–294
fuel gauge 21
improving fuel economy 301
octane rating 295–296
quality 295–296
running out of fuel 300
safety information relating to
automotive fuels 297
selector switch, dual tank 62
storing your vehicle 331
treating emergencies 297
Fuel cap 293
removing 293–294
replacing 293–294, 299

https://truckmanualshub.com/

Fuel filler door 293–294
override, manual 294
remote release 293
Fuel filter, specifications 317
Fuel gauge 21
Fuel pump shut-off switch
engine does not start 223
starting after a collision 223
Fuel tank selector switch, dual tanks 62
Fuse panels, instrument panel 226, 234
Fuses
charts 234
checking and replacing 225, 234
circuit breakers 235

G

Gas cap (see Fuel cap) 293
Gas mileage (see Fuel economy) . . . 295, 300
Gasohol 297
Gasoline (see Fuel). 293
Gauges, Mechanical
battery voltage gauge 18
charging system gauge 18
engine coolant temperature gauge 21
engine oil pressure gauge 19
fuel gauge 21
odometer. 24
speedometer 23
tachometer 24
trip odometer. 24

https://truckmanualshub.com/

GAWR (Gross Axle Weight Rating)
calculating 184
definition 175, 182
driving with a heavy load 175
location 182
Gearshift
automatic operation 152
column-mounted 152
floor-mounted 159
gearshift override 140, 154
locking the gearshift 67
manual operation 158
positions 152, 159
shifting the gears 152, 159
shift-lock 140, 154
GVWR (Gross Vehicle Weight Rating). . . 175
calculating 184
definition 175, 182
driving with a heavy load 175
location 182

H

Hazard flashers 74
Headlamps
aiming 307
checking alignment 307
cleaning 314
daytime running lights 63
flashing 72
high beam 72
replacing bulbs 307–308
turning on and off 62
warning chime 21
Heavy duty front suspension package. . . 215
High beams
indicator light 20
operation 62, 72

https://truckmanualshub.com/

High-mount brakelamp 310
description 310
replacing the bulb. 310
Hitch. 210
Hood. 260
latch location 260
lubrication specifications 324
release lever 260
working under the hood. 258
Horn 75

I

Identification Number, Vehicle (VIN) 7
Idle, relearning 137, 253, 258
Ignition
chime 69
positions of the ignition 67
removing the key 69
Indicator lights and chimes (see Lights) . . . 12
Infant seats (see Safety seats) 120, 122
Instrument cluster, mechanical 15
Instrument panel
cleaning 314
lighting up panel and interior 64
registers 58
Interval wipers 72–73

J

Jack 237
operation. 240, 243
positioning 240, 243
storage. 237
Jump-starting your vehicle
attaching cables 252
disconnecting cables 253

https://truckmanualshub.com/

K

Keys
key in ignition chime 69
positions of the ignition 67
removing from the ignition 69
stuck in lock position 67–68

L

Lamps
cargo lamps 64
checking 307
combination cargo and brakelamp 65
courtesy lamps 64
daytime running light system 63
dome lamps 64
flashing the lamps 72
fog lamps 86
hazard flashers 74
headlamps 62
high beams 72
high-mount brakelamp 310
illuminated entry system 92
instrument panel, dimming 64
interior lamps 62, 64
map lamps 66
replacing bulbs 307
Lane change indicator (see Turn signal) . . . 71
Lap belts 114
Lights, warning and indicator
anti-lock brakes (ABS). 16
brake 15
charging system 18
check engine 17
engine oil pressure 19
four-wheel drive 166

https://truckmanualshub.com/

Lights, warning and indicator (continued)
hazard warning light 74
high beam 20
oil pressure. 19
overdrive off 153
rear ABS 16
safety belt 17
service engine soon 17
testing the warning lights 138
turn signal indicator. 71
Load limits 175
GAWR. 175
GVWR 175
trailer towing. 178
Locking hubs
lever operated with automatic 167
lever operated with manual 170
Lubricant specifications 324
Lug nuts 240
standard 243
tightening sequence 240, 247–248
Lumbar support, seats 106
Lumbar support pad. 106

M

Maintenance schedule and record
(see separate Maintenance Schedule
and Record booklet). 3
Maintenance (see Servicing) 257
Manual transmission
clutch 158, 270
driving. 158
fluid, checking and adding. 285
fluid capacities 318
lubricant specifications. 324
shifting gears 159
shift speeds. 161

https://truckmanualshub.com/

Master cylinder, brakes 268
Methanol in fuel 297
Mileage, calculating fuel economy 300
Mirrors. 79
dual electric remote control 81
rearview 79
side view mirrors. 79
side view mirrors (manual) 79
side view mirrors (power). 81
Motorcraft parts. 317

N

National Highway Traffic Safety
Administration 333
New vehicle break-in 9

O

Octane rating 295–296
Odometer 24
description 24
trip odometer 24
Off road driving, 4-wheel drive 172
Oil filter 267, 317
Oil (see Engine oil) 264
Oil viscosity 264
On-board diagnostic (OBD II) system . . . 306
Order forms, service information 31
Overdrive 155
Overseas offices. 342

P

Panic alarm feature, remote entry system . . 90
Parking brake
operation 149
warning light. 15
Parts (see Motorcraft Parts) 317
PCV valve, specifications 317
Power door locks 84

https://truckmanualshub.com/

Power features
door locks 84
lumbar support 106
mirrors. 79, 81
seats 105
windows 84–85
Power point electrical outlet 66
Power steering
dipstick 280
driving with power steering 151
fluid, checking and adding. 280
fluid, refill capacity 318
fluid, specifications 324
servicing 151
Prop rod, hood 260

R

Radio (see Electronic sound systems) 27
Rear anti-lock brakes. 146
description 146
Rear axle
lubricant specification 324
refill capacity 318
traction lok 220
Rear window 84
washer reservoir 271
Refill capacities for fluids 318
Regulations, National Highway Traffic Safety
Administration 333
Remote entry system. 89
illuminated entry 92
locking/unlocking doors. 89
panic alarm. 90
replacement/additional transmitters. . . . 92
replacing the batteries 91

https://truckmanualshub.com/

Reporting safety defects 333
Restraints, safety (see Safety restraints)
adult 95, 107
child. 120
infant 120, 122
Roadside emergencies 223
Rotating the tires 288

S

Safe driving tips 218
Safety belts (see Safety restraints). 107
Safety Compliance Certification Label 7
Safety defects, reporting 333
Safety information relating to
automotive fuels 297
Safety restraints
adjusting the safety belts 111
automatic locking mode (retractor) . . . 110
center front lap belt. 114
center rear lap belt 114
cleaning the safety belts 314
dual locking mode retractors. 109
extension assembly 119
for adults 107
for children 120
for infants 120, 122
for pregnant women 96, 107
lap and shoulder belts 107, 111
lap belt 114
maintenance 135
proper use 107
replacement 135
untwisting or unjamming the safety belt 116
warning light and chime 17

https://truckmanualshub.com/

Safety seats for children 122
and air bags 122
attaching with tether straps 133
automatic locking mode (retractor) . . . 122
in front seat 122
in rear outboard 122
in rear seat 122
tether anchorage hardware 133
Seat belts (see Safety restraints) 107
Seats 95
adjusting the seat, manual 95
adjusting the seats, power 105
child safety seats 122
cleaning upholstery 314
lumbar support 106
reclining the seat 95
seatback release 95, 99
Serial number (VIN) 7
Service concerns 336
Servicing your vehicle 257
precautions when servicing 258
servicing when you tow 254
Shift-lock system 140, 154
Shift positions (see Gearshift) 152, 159
Shoulder and lap belts
(see Safety restraints) 107, 111
Shoulder belts (see Safety restraints). . . . 111
Side mirrors 79
adjusting 81
Snowplowing 215
Snow tires and chains 292
Spare tire
changing the tire 236, 240
conventional spare 236–237
finding the spare 237
removing the spare tire 237
storing the flat tire 237, 243

https://truckmanualshub.com/

Spark plugs, specifications 317
Special driving conditions 218
Special notice
  ambulance conversions 6
  diesel-powered vehicles 7
  four wheel drive vehicles 5
Special Notice:four-wheel drive vehicles . . 174
Specification chart, lubricants. 324
Speed control
  turning off 77
  when towing a trailer 212
Speedometer 23
Starting your vehicle
  preparing to start your vehicle. 138
  starting a cold engine 139
  starting after a collision 223
  starting a warm engine 140
  starting your vehicle if the battery
    is disabled. 249
Steering, power 151
Steering wheel
  horn. 75
  locking 67
  tilting 76
Storage compartments, center console 87
Storing your vehicle. 330

T

Tailgate 82
Tail lamps
  bulb replacement 307
  cleaning 314
Temperature control (see Climate control) . . 57
Testing the warning lights 138
Tether anchor installation
  (see Child restraints) 133

https://truckmanualshub.com/

Tilt steering wheel 76
Tires 287
  changing 236
  checking the pressure 287
  cleaning 315
  inspection and maintenance 287
  replacing 289
  rotating 288
  snow tires and chains 292
  spare tire 236–237
  storing your vehicle 332
  tire grades 289–290
  treadwear 289–290
  wear bands 289
Towing your vehicle 254
  using wheel dollies 254
  with a tow truck 254
Traction control 220
Traction-lok rear axle 220
Trailer towing
  calculating maximum trailer weight . . . 184
  tips 212
Transfer case
  fluid checking 285
  lever operated 164
Transmission
  automatic operation 152
  fluid, checking and adding (automatic) . 283
  fluid, checking and adding (manual) . . 285
  fluid, refill capacities 318
  lubricant specifications 324
  manual operation 158

https://truckmanualshub.com/

Transmission control switch 155
Transmitter (see Remote entry) 89
Trip odometer 24
Tune-up specifications (VECI) 304
Turn signal 71
  indicator lights 71
  lever 71

U

Used engine oil, disposal 268, 277, 284

V

Variable interval wipers 72–73
VECI (Vehicle Emission Control Information)
  decal 304
Vehicle Identification Number (VIN) 7
Vehicle loading 178
  calculating the load 184
  understanding loading information . . . 175
Vehicle storage 330
Ventilating your vehicle
  (see Climate control) 57, 60
Viscosity (see Engine oil) 264
Voltmeter (see Battery voltage gauge) 18

W

Warm engine, starting 140
Warning chimes
  headlamps on 21
  key in ignition 69
  safety belt 17
Warning lights, testing. 138
Warning lights (see Lights). 12

https://truckmanualshub.com/

Warranties 4
basic 4
Canada. 4
radio. 56
Warranty Information Booklet 4
Washer fluid 72
rear window reservoir 271
reservoir 271
windshield 271
Weight limits (GAWR, GVWR) 175
Wheel bearings, lubricant specifications . . 324
Wheel dollies (see Towing) 254
Wheels
cleaning 315
covers 240, 243
inspection and maintenance 287
lug nuts 240
Windows 84
manual windows, operating 84
one-touch down. 85
power windows, operating 84–85
Windshield, washing. 72
Windshield washer fluid and wipers 72
checking and adding fluid 271
checking and replacing wiper blades . . 273
liftgate reservoir 271
operation 72
reservoir 271
specifications 272, 324
variable interval wipers 72–73
Windshield wipers and washer 72
Wrecker towing 254