https://truckmanualshub.com/

RT40

Operator’s Manual

CMW®

Issue 1.3

054- 130

https://truckmanualshub.com/

Overview

Chapter Contents

Serial Number Location 2

Intended Use 3

Unit Components 4

Operator Orientation. 5

About This Manual 5

- Bulleted Lists. 5
- Numbered Lists. 5
- "Continued" Indicators. 5

https://truckmanualshub.com/

Serial Number Location

Record serial numbers and date of purchase in spaces provided. RT40 (2) and engine (1) serial numbers are located as shown.

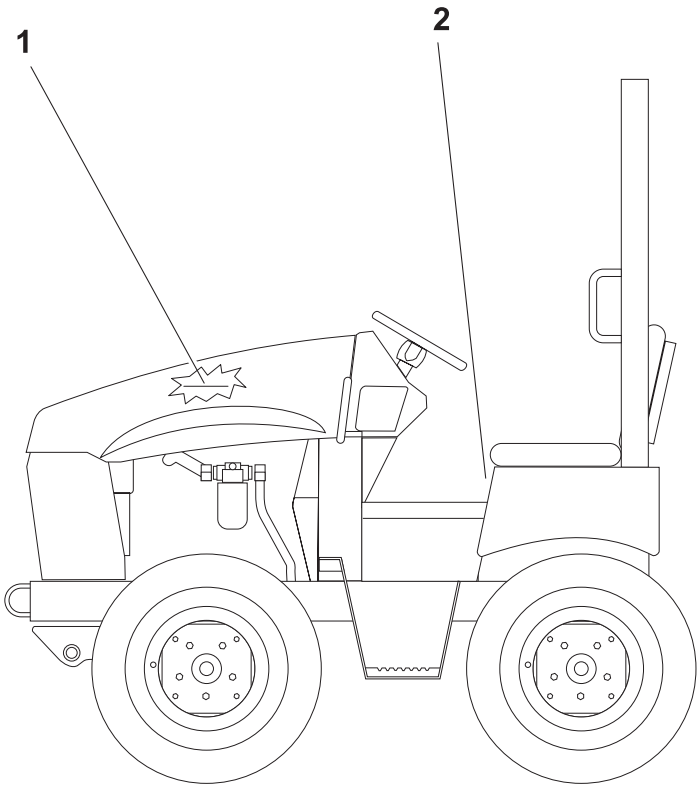

t14om001h.eps

Date of manufacture	
Date of purchase	
RT40 serial number	
Engine serial number	
Front attachment serial number	
Rear attachment serial number	
Trailer serial number	

https://truckmanualshub.com/

Intended Use

The RT40 is a riding trencher designed to install buried service lines of various sizes using a variety of Ditch Witch attachments.

Attachment		Max. width/diameter	Max. depth
H313 trencher		12 in (305 mm)	63 in (1.6 m)
H314 trencher, center		12 in (305 mm)	52 in (1.3 m)
H314 trencher, offset		8 in (200 mm)	52 in (1.3 m)
H331 plow		3 in (76 mm)	24 in (610 mm)
H350 combo			
	trencher	8 in (200 mm)	42 in (1.1 m)
	plow	3 in (76 mm)	24 in (610 mm)
H341 saw		5 in (130 mm)	18 in (455 mm)
A322 backhoe		18 in (460 mm)	93.2 in (2.4 m)

The unit is designed for operation in temperatures typically experienced in earth moving and construction work environments. Provisions may be required to operate in extreme temperatures. Contact your Ditch Witch dealer. Use in any other way is considered contrary to the intended use.

The RT40 should be used with genuine Ditch Witch chain, teeth, and sprockets. It should be operated, serviced, and repaired only by persons familiar with its particular characteristics and acquainted with the relevant safety procedures.

https://truckmanualshub.com/

Unit Components

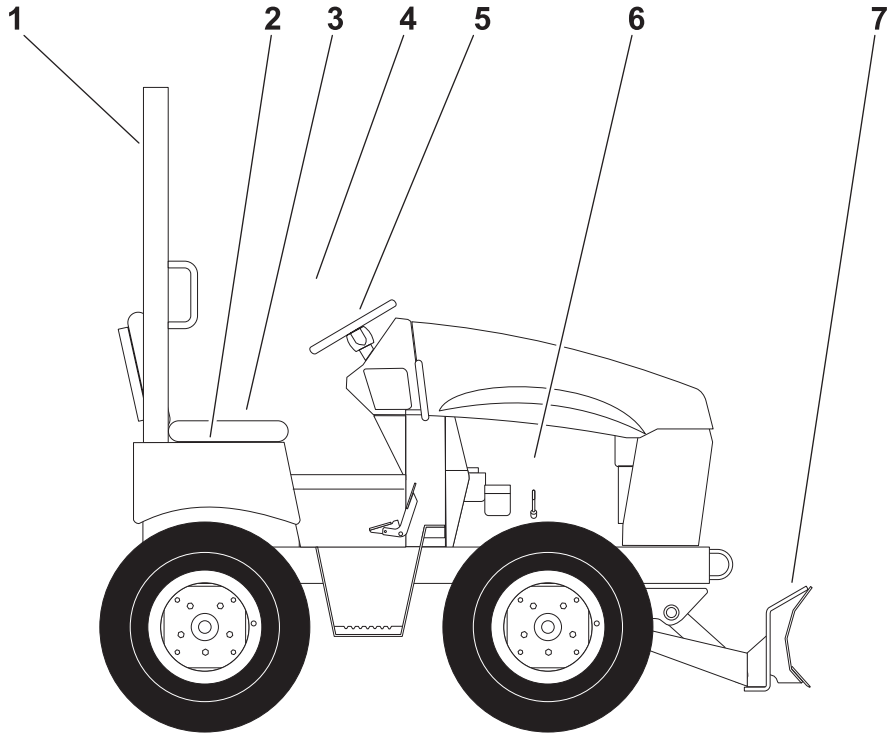

t14om002h.eps

1. Rollover Protective Structure (ROPS)
2. Right console
3. Left console
4. Operator's station
5. Center console
6. Engine compartment
7. Backfill blade

https://truckmanualshub.com/

Operator Orientation

1. Front of unit
2. Right of unit
3. Rear of unit
4. Left of unit

Right and left sides of machine are determined by facing front of unit while seated at the controls.

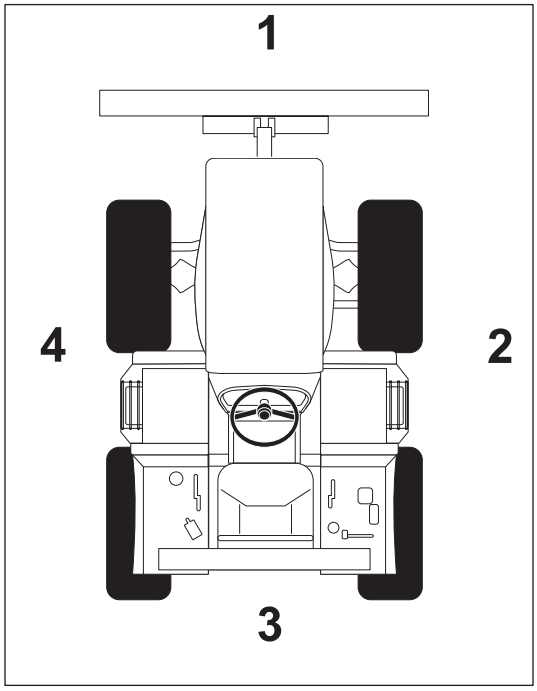

t14om003h.eps

About This Manual

This manual contains information for the proper use of this machine. See **Operation Overview** for basic operating procedures. Cross references such as "See page 50" will direct you to detailed procedures.

Bulleted Lists

Bulleted lists provide helpful or important information or contain procedures that do not have to be performed in a specific order.

Numbered Lists

Numbered lists contain illustration callouts or list steps that must be performed in order.

"Continued" Indicators

indicates that a procedure is continued on the next page.

https://truckmanualshub.com/

https://truckmanualshub.com/

Foreword

This manual is an important part of your equipment. It provides safety information and operation instructions to help you use and maintain your Ditch Witch equipment.

Read this manual before using your equipment. Keep it with the equipment at all times for future reference. If you sell your equipment, be sure to give this manual to the new owner.

If you need a replacement copy, contact your Ditch Witch dealer. If you need assistance in locating a dealer, visit our website at **www.ditchwitch.com** or write to the following address:

The Charles Machine Works, Inc.
Attn: Marketing Department
PO Box 66
Perry, OK 73077-0066
USA

The descriptions and specifications in this manual are subject to change without notice. The Charles Machine Works, Inc. reserves the right to improve equipment. Some product improvements may have taken place after this manual was published. For the latest information on Ditch Witch equipment, see your Ditch Witch dealer.

Thank you for buying and using Ditch Witch equipment.

https://truckmanualshub.com/

RT40
Operator's Manual

Issue number 1.3/OM-7/06
Part number 054-130

Copyright 2004, 2005, 2006
by The Charles Machine Works, Inc.

Ditch Witch®, Ditch Witch, CMW, AutoCrowd, Modularmatic, Jet Trac, Roto Witch, Subsite, Fluid Miser, Perma-Soil, Power Pipe, Super Witch, Super Witch II, Pierce Airrow, The Underground, and The Underground Authority Worldwide are registered trademarks of The Charles Machine Works, Inc.

https://truckmanualshub.com/

Contents

Overview 1
machine serial number, information about the type of work this machine is designed to perform, basic machine components, and how to use this manual

Foreword 7
part number, revision level, and publication date of this manual, and factory contact information

Safety 11
machine safety alerts and emergency procedures

Controls 21
machine controls, gauges, and indicators and how to use them

Operation Overview 47
an overview for completing a job with this machine: planning, setting up, installing product, and restoring the jobsite; with cross references to detailed procedures

Prepare 51
procedures for inspecting and classifying the jobsite, planning the installation path, and preparing the jobsite for work

Drive 57
procedures for startup, cold start, driving, and shutdown

Transport 61
procedures for lifting, hauling, and towing

Trench 71
procedures for trenching

Plow 77
procedures for plowing

Saw 83
procedures for sawing

Backhoe 89
procedures for digging with backhoe

https://truckmanualshub.com/

Drill 95
procedures for drilling

Systems and Equipment 101
chain, teeth, sprockets, and optional equipment

Complete the Job 105
procedures for backfilling and restoring the jobsite and rinsing and storing equipment

Service 107
service intervals and instructions for this machine including lubrication, replacement of wear items, and basic maintenance

Specifications 143
machine specifications including weights, measurements, power ratings, and fluid capacities

Support 159
the warranty policy for this machine, and procedures for obtaining warranty consideration and training

Service Record 163
a record of major service performed on the machine

https://truckmanualshub.com/

Safety

Chapter Contents

Guidelines 12

Safety Alert Classifications 13

Safety Alerts 14

Emergency Procedures 17

- Electric Strike Description 17
- If an Electric Line is Damaged 18
- If a Gas Line is Damaged 19
- If a Fiber Optic Cable is Damaged 19
- If Machine Catches on Fire 19

https://truckmanualshub.com/

Guidelines

Follow these guidelines before operating any jobsite equipment:

- Complete proper training and read operator’s manual before using equipment.
- Contact One-Call (888-258-0808) and any utility companies which do not subscribe to One-Call. Have all underground pipes and cables located and marked before operating equipment. If you damage a utility, contact utility company.
- Classify jobsite based on its hazards and use correct tools and machinery, safety equipment, and work methods for jobsite.
- Mark jobsite clearly and keep spectators away.
- Wear personal protective equipment.
- Review jobsite hazards, safety and emergency procedures, and individual responsibilities with all personnel before work begins. Safety videos are available from your Ditch Witch dealer.
- Replace missing or damaged safety shields and safety signs.
- Use equipment carefully. Stop operation and investigate anything that does not look or feel right.
- Do not operate unit where flammable gas is present.
- Contact your Ditch Witch dealer if you have any question about operation, maintenance, or equipment use.

https://truckmanualshub.com/

Safety Alert Classifications

These classifications and the icons defined on the following pages work together to alert you to situations which could be harmful to you, jobsite bystanders or your equipment. When you see these words and icons in the book or on the machine, carefully read and follow all instructions. YOUR SAFETY IS AT STAKE.

Watch for the three safety alert levels: **DANGER**, **WARNING** and **CAUTION**. Learn what each level means.

DANGER indicates an imminently hazardous situation which, if not avoided, will result in death or serious injury.

WARNING indicates a potentially hazardous situation which, if not avoided, could result in death or serious injury.

CAUTION indicates a potentially hazardous situation which, if not avoided, may result in minor or moderate injury.

Watch for two other words: **NOTICE** and **IMPORTANT**.

NOTICE can keep you from doing something that might damage the machine or someone's property. It can also alert you against unsafe practices.

IMPORTANT can help you do a better job or make your job easier in some way.

https://truckmanualshub.com/

Safety Alerts

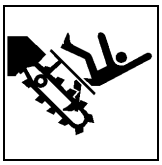

DANGER Moving digging teeth will kill you or cut off arm or leg. Stay away.

DANGER Turning shaft will kill you or crush arm or leg. Stay away.

DANGER Electric shock. Contacting electric lines will cause death or serious injury. Know location of lines and stay away.

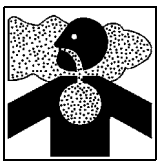

DANGER Deadly gases. Lack of oxygen or presence of gas will cause sickness or death. Provide ventilation.

WARNING Jobsite hazards could cause death or serious injury. Use correct equipment and work methods. Use and maintain proper safety equipment.

WARNING Crushing weight could cause death or serious injury. Use proper procedures and equipment or stay away.

WARNING Moving parts could cut off hand or foot. Stay away.

https://truckmanualshub.com/

WARNING Explosion possible. Serious injury or equipment damage could occur. Follow directions carefully.

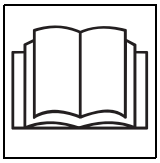

WARNING Incorrect procedures could result in death, injury, or property damage. Learn to use equipment correctly.

WARNING Fall possible. Riders can fall from machine and be injured or killed. Only operator is allowed on machine.

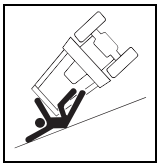

WARNING Rollover possible. If machine rolls over, you could be thrown from seat and killed or crushed. Wear seat belt.

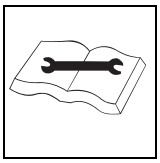

WARNING Improper control function could cause death or serious injury. If control does not work as described in instructions, stop machine and have it serviced.

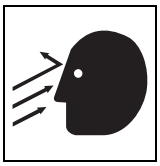

WARNING Looking into fiber optic cable could result in permanent vision damage. Do not look into ends of fiber optic or unidentified cable.

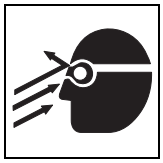

WARNING Pressurized fluid or air could pierce skin and cause injury or death. Stay away.

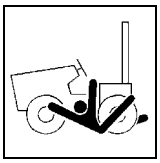

WARNING Runaway possible. Machine could run over you or others. Learn how to use all controls. Start and operate only from operator's position.

WARNING Fire or explosion possible. Fumes could ignite and cause burns. No smoking, no flame, no spark.

https://truckmanualshub.com/

WARNING Moving traffic - hazardous situation. Death or serious injury could result. Avoid moving vehicles, wear high visibility clothing, post appropriate warning signs.

WARNING Hot pressurized cooling system fluid could cause serious burns. Allow to cool before servicing.

CAUTION Flying objects may cause injury. Wear hard hat and safety glasses.

CAUTION Hot parts may cause burns. Do not touch until cool.

CAUTION Exposure to high noise levels may cause hearing loss. Wear hearing protection.

CAUTION Fall possible. Slips or trips may result in injury. Keep area clean.

CAUTION Battery acid may cause burns. Avoid contact.

CAUTION Improper handling or use of chemicals may result in illness, injury, or equipment damage. Follow instructions on labels and in material safety data sheets (MSDS).

https://truckmanualshub.com/

Emergency Procedures

Before operating any equipment, review emergency procedures and check that all safety precautions have been taken.

EMERGENCY SHUTDOWN - Turn ignition switch to stop position or push remote engine stop button (if equipped).

Electric Strike Description

When working near electric cables, remember the following:

- Electricity follows all paths to ground, not just path of least resistance.
- Pipes, hoses, and cables will conduct electricity back to all equipment.
- Low voltage current can injure or kill. Almost one-third of work-related electrocutions result from contact with less than 440 volts.

Most electric strikes are not noticeable, but indications of a strike include:

- power outage
- smoke
- explosion
- popping noises
- arcing electricity

If any of these occur, assume an electric strike has occurred.

https://truckmanualshub.com/

If an Electric Line is Damaged

If you suspect an electric line has been damaged and you are **on tractor**, DO NOT MOVE. Remain on tractor and take the following actions. The order and degree of action will depend upon the situation.

- Warn people nearby that an electric strike has occurred. Instruct them to leave the area and contact utility.
- Raise attachments and drive from immediate area.
- Contact utility company to shut off power.
- Do not return to jobsite or allow anyone into area until given permission by utility company.

If you suspect an electric line has been damaged and you are **off tractor**, DO NOT TOUCH TRACTOR. Take the following actions. The order and degree of action will depend upon the situation.

- LEAVE AREA. The ground surface may be electrified, so take small steps with feet close together to reduce the hazard of being shocked from one foot to the other. For more information, contact your Ditch Witch dealer.
- Contact utility company to shut off power.
- Do not return to jobsite or allow anyone into area until given permission by utility company.

https://truckmanualshub.com/

If a Gas Line is Damaged

If you suspect a gas line has been damaged, take the following actions. The order and degree of action will depend on the situation.

- Immediately shut off engine(s), if this can be done safely and quickly.
- Remove any ignition source(s), if this can be done safely and quickly.
- Warn others that a gas line has been cut and that they should leave the area.
- Leave jobsite as quickly as possible.
- Immediately call your local emergency phone number and utility company.
- If jobsite is along street, stop traffic from driving near jobsite.
- Do not return to jobsite until given permission by emergency personnel and utility company.

If a Fiber Optic Cable is Damaged

Do not look into cut ends of fiber optic or unidentified cable. Vision damage can occur.

If Machine Catches on Fire

Perform emergency shutdown procedure and then take the following actions. The order and degree of action will depend on the situation.

- Immediately move battery disconnect switch (if equipped) to disconnect position.
- If fire is small and fire extinguisher is available, attempt to extinguish fire.
- If fire cannot be extinguished, leave area as quickly as possible and contact emergency personnel.

https://truckmanualshub.com/

https://truckmanualshub.com/

Controls

Chapter Contents

Center Console 22

- Gauges 22
- Indicators 24
- Controls 26

Right Fender 28

- Tractor Controls 28
- Trencher Controls 31
- Plow Controls 33
- Combo Controls 35
- Saw Controls 37

Left Fender 39

Seat 41

Backhoe Console 42

Engine 45

https://truckmanualshub.com/

Center Console

Gauges

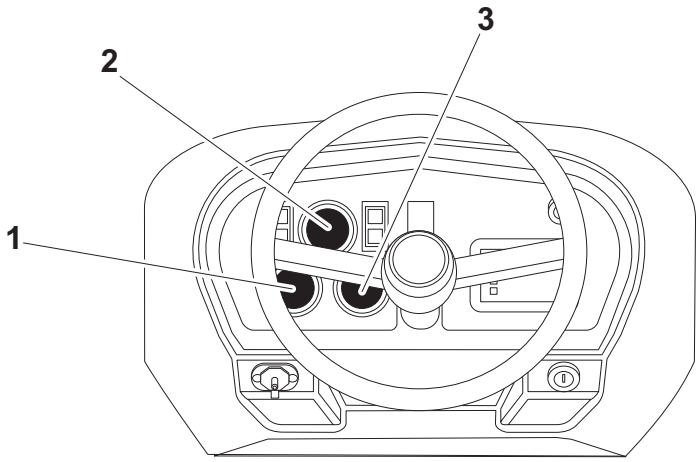

t14om004h.eps

1. Fuel gauge
2. Voltmeter
3. Hourmeter

Item	Description	Notes
1. Fuel gauge 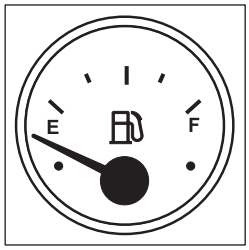 c00ic065c.eps	Displays fuel level in tank.	Use #2 diesel fuel. Fuel tank holds 13 gal (49 L).
2. Voltmeter 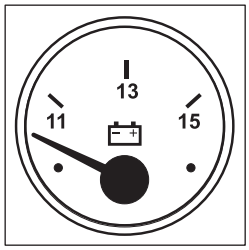 c00ic064c.eps	Displays system voltage.	Should show 12-14V with engine running.

https://truckmanualshub.com/

Item	Description	Notes
3. Hourmeter 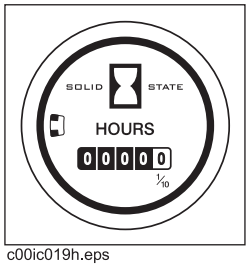 c00ic019h.eps	Records engine operating time.	Use engine operating times to schedule service.

https://truckmanualshub.com/

Indicators

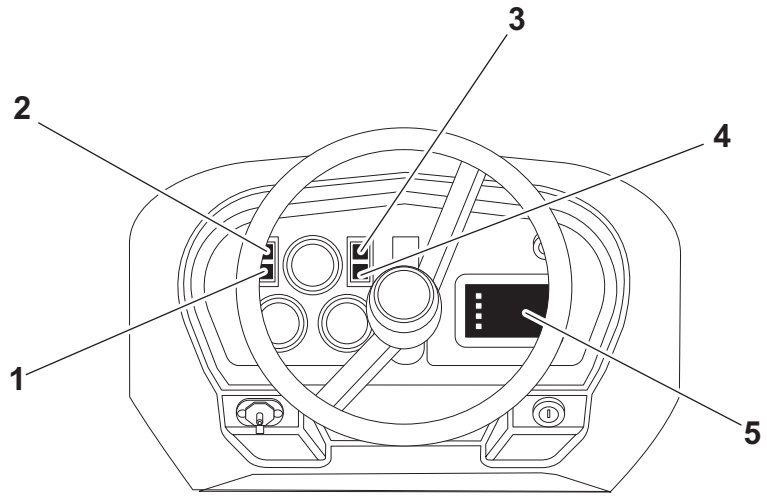

t14om005h.eps

1. Engine oil pressure indicator
2. Engine oil temperature indicator
3. Cold start wait indicator *
4. Hydraulic fluid temperature indicator
5. Start interlock

* optional

Item	Description	Notes
1. Engine oil pressure indicator 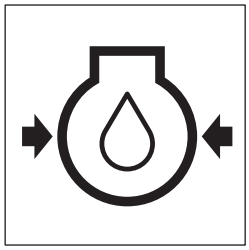 c00ic049c.eps	Lights when oil pressure falls below 8-12 psi (.5-.8 bar). Light will come on briefly when engine is started.	If light remains on: • Turn off engine. • Check oil level. • If pressure is still low, consult engine manual.
2. Engine oil temperature indicator 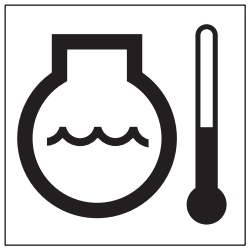 c00ic059c.eps	Lights and engine shuts down if engine oil temperature rises above 275° F (135° C). Light will come on briefly when engine is started.	If light remains on: • Turn off engine and let it cool. • Check fan belt tension. • Check for low engine oil level. • Check cooling fins for dirt and debris.

https://truckmanualshub.com/

Item	Description	Notes
3. Cold start wait indicator 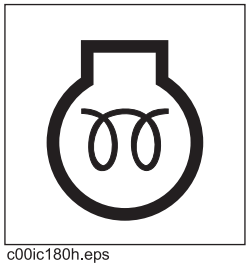 c00ic180h.eps	Lights when intake air pre-heater is operating. Wait until light goes off before starting engine.	See page 58 for more information.
4. Hydraulic fluid temperature indicator 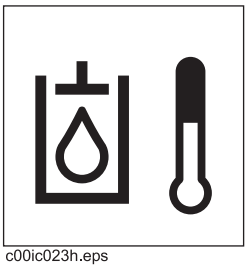 c00ic023h.eps	Lights if hydraulic fluid overheats. Light will come on briefly when engine is started.	If light remains on: • Check that engine fan is turning when engine is running. • Turn off engine and let it cool. • Check hydraulic fluid level. • Check front of hydraulic fluid cooler for debris.
5. Start Interlock 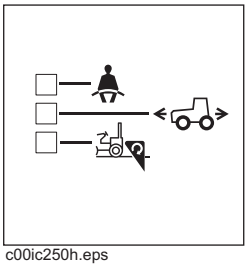 c00ic250h.eps	Lights when conditions necessary to start unit are met. • Operator is in seat. • Ground drive speed/ direction control and foot pedal are in neutral. • Attachment speed/ direction control is in neutral.	**IMPORTANT:** All three start interlock indicators must be on to start engine.

https://truckmanualshub.com/

Controls

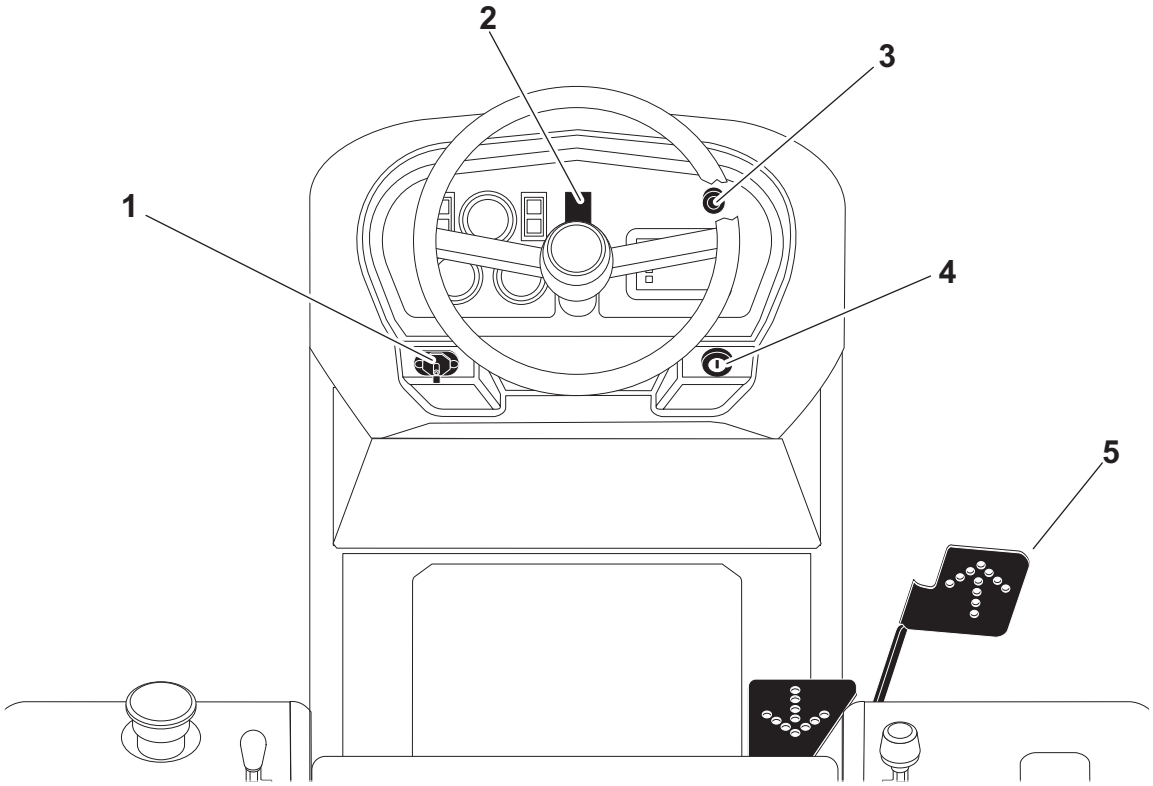

t14om006h.eps

1. Auxiliary outlet
2. Drilling attachment control*
3. Horn
4. Ignition switch
5. Ground drive foot control

*optional

Item	Description	Notes
1. Auxiliary outlet 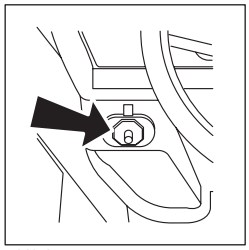 c00ic075c.eps	Provides power for other equipment.	Power output is 12V, 5A.

https://truckmanualshub.com/

Item	Description	Notes
2. Drilling attachment control 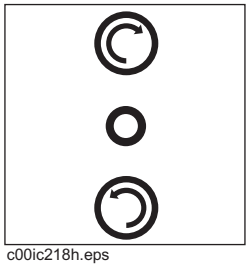 c00ic218h.eps	To rotate clockwise, press top. To rotate counterclockwise, press bottom.	**IMPORTANT:** Always rotate clockwise during drilling and backreaming. Rotate counterclockwise only to dislodge a dry bore bit or reamer that has siezed in the bore hole. For more information about drilling attachment, see page 95.
3. Horn 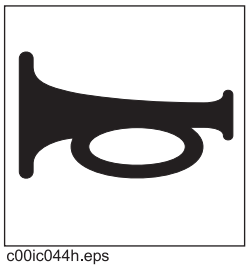 c00ic044h.eps	To sound horn, press.	
4. Ignition switch 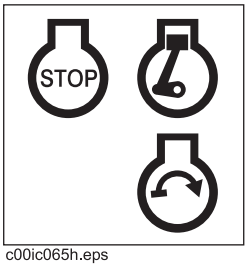 c00ic065h.eps	To start engine, insert key and turn clockwise. To stop engine, turn counterclockwise.	**IMPORTANT:** If engine does not start on first attempt, check that all interlock requirements have been met, return switch to STOP, and try again.
5. Ground drive foot control	To move tractor forward, push top of pedal. To move tractor backward, push bottom of pedal. To increase speed in either direction, push pedal farther from center. To stop, release pedal.	

https://truckmanualshub.com/

Right Fender

Tractor Controls

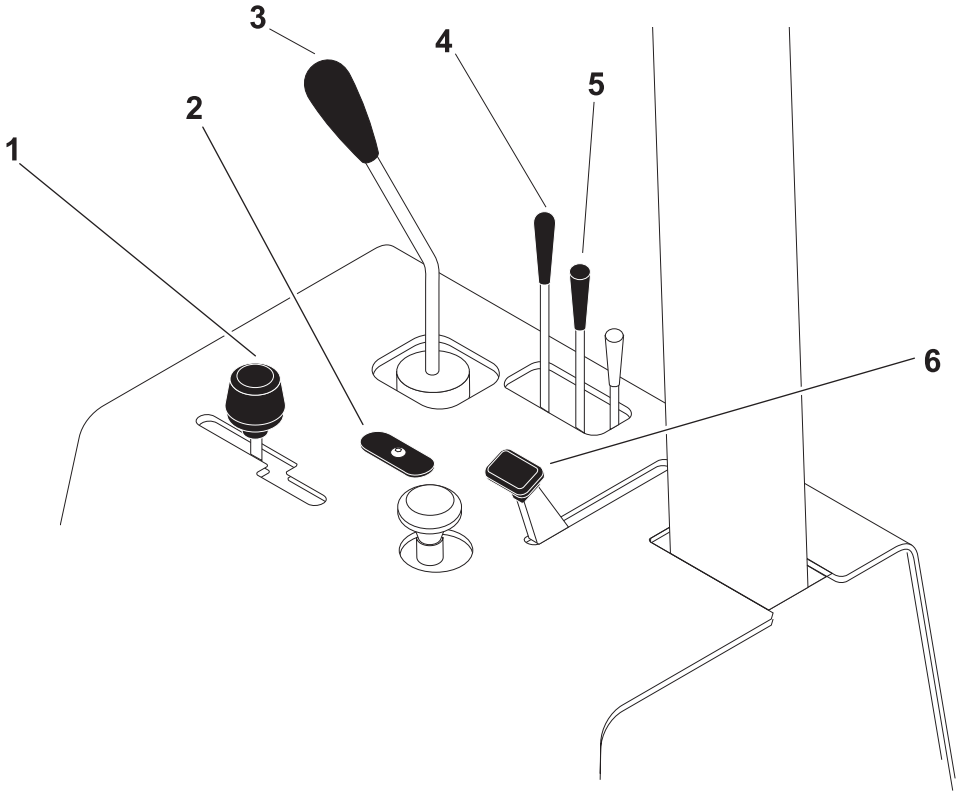

t14om046h.eps

1. Ground drive speed/direction control
2. Rear steer indicator*
3. Backfill blade control
4. Backfill blade tilt control *
5. Rear steer control*
6. Throttle

*optional

https://truckmanualshub.com/

Item	Description	Notes
1. Ground drive speed/ direction control 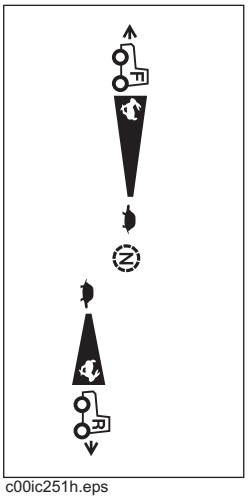 c00ic251h.eps	To go forward, push. To go backward, pull. To go faster in either direction, move farther from center. To stop, move to neutral.	
2. Rear steer indicator 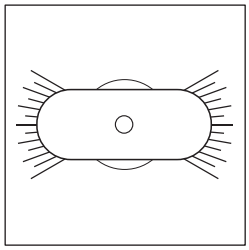 c00ic082c.eps	Displays position of rear wheels.	
3. Backfill blade control 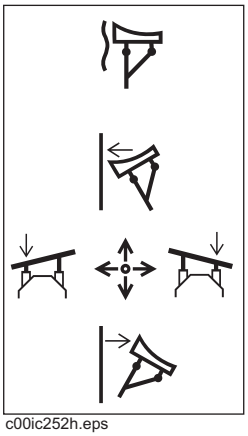 c00ic252h.eps	To lower blade, push. To put blade in float, push fully forward. To raise blade, pull. To swing blade to right, move right. To swing blade to left , move left.	

https://truckmanualshub.com/

Item	Description	Notes
4. Backfill blade tilt control 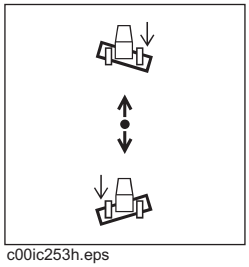 c00ic253h.eps	To tilt right side of blade down, push. To tilt left side of blade down, pull.	
5. Rear steer control 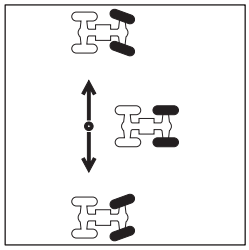 c00ic080c.eps	To turn rear wheels right, push until wheels reach desired position, then release. To turn rear wheels left, pull until wheels reach desired position, then release.	
6. Throttle 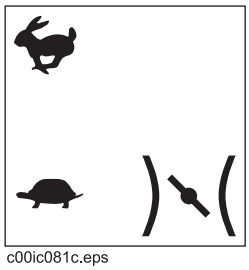 c00ic081c.eps	To increase engine speed, push. To decrease engine speed, pull.	

https://truckmanualshub.com/

Trencher Controls

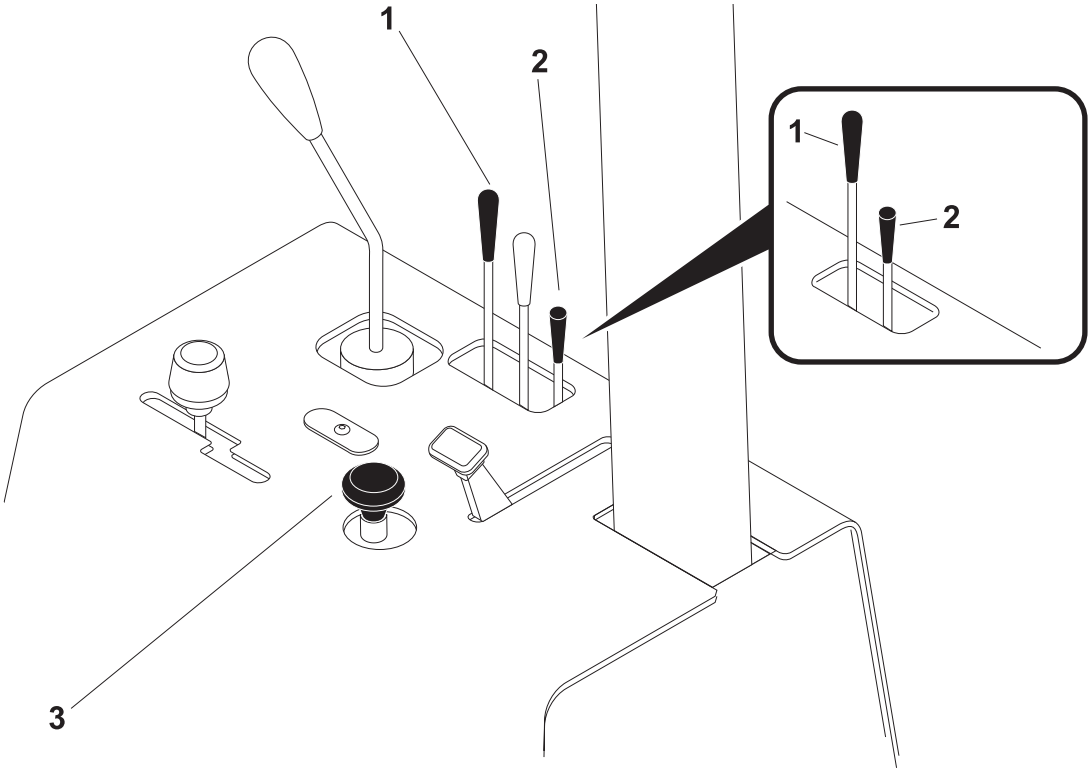

Note: Control configuration with rear steer option is shown in main illustration. Control configuration without rear steer is shown in balloon.

t14om069h.eps

1. Trencher slide control
2. Boom lift control*
3. Backfill blade tilt/trencher slide selector*

*H314 only

Item	Description	Notes
1. Trencher slide control 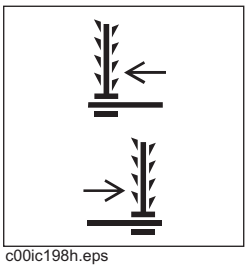 c00ic198h.eps	To slide trencher right, push. To slide trencher left, pull.	

https://truckmanualshub.com/

Item	Description	Notes
2. Boom lift control 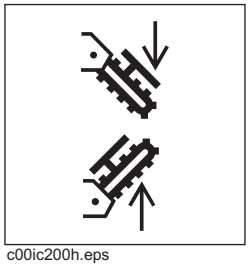 c00ic200h.eps	To lower, push. To raise, pull.	
3. Backfill blade tilt/ trencher slide selector 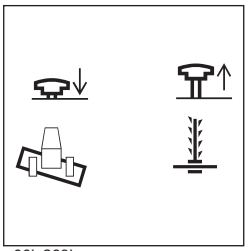 c00ic263h.eps	To control backfill blade tilt, push. To control trencher slide, pull.	

https://truckmanualshub.com/

Plow Controls

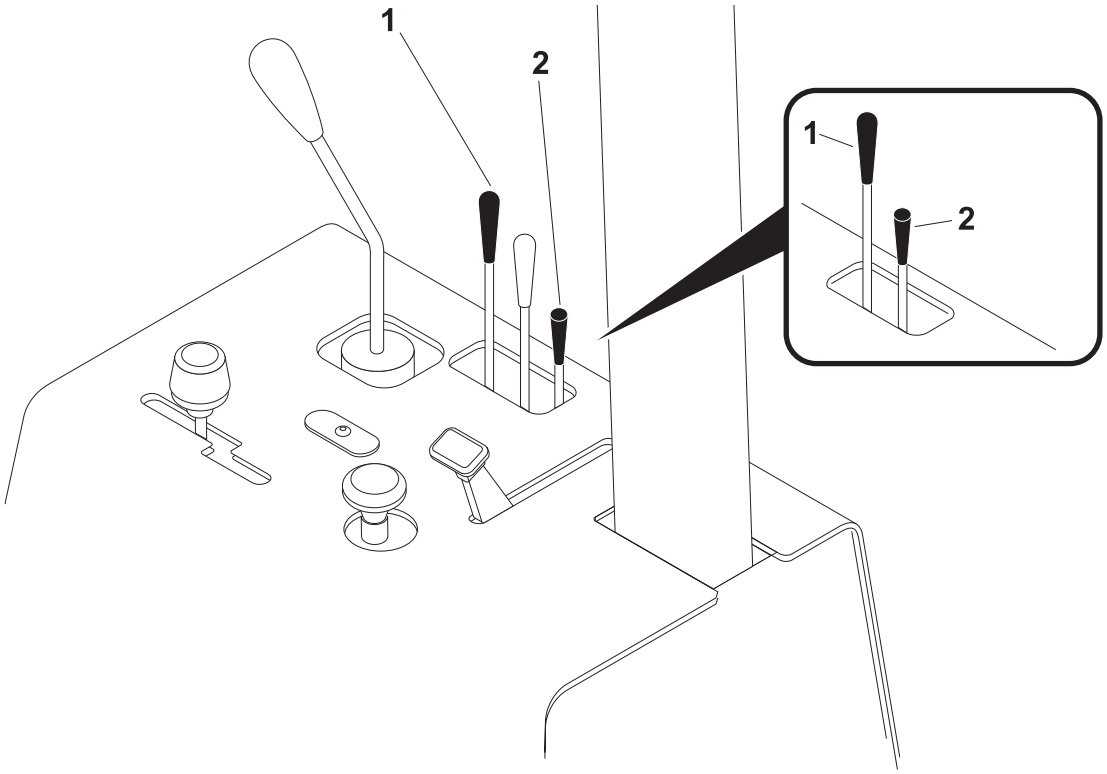

Note: Control configuration with rear steer option is shown in main illustration. Control configuration without rear steer is shown in balloon.

t14om070h.eps

1. Plow swing control
2. Plow lift control
3. Backfill blade tilt/plow swing selector

Item	Description	Notes
1. Plow swing control 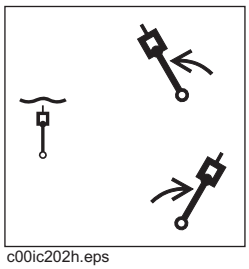 c00ic202h.eps	To swing left, pull. To swing right, push. To float, push to end.	**NOTICE:** • If soil conditions allow, operate in float position. • Lower plow into ground before moving control to float position. • Do not raise plow with control in float position.

https://truckmanualshub.com/

Item	Description	Notes
2. Plow lift control c00ic204h.eps	To raise, pull. To lower, push. To float, push to end.	**NOTICE:** • If soil conditions allow, operate in float position. • Lower plow into ground before moving control to float position.
3. Backfill blade tilt/plow swing selector 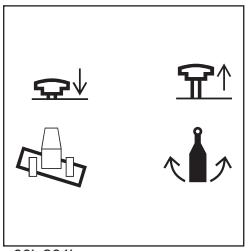 c00ic264h.eps	To control backfill blade tilt, push. To control plow swing, pull.	

https://truckmanualshub.com/

Combo Controls

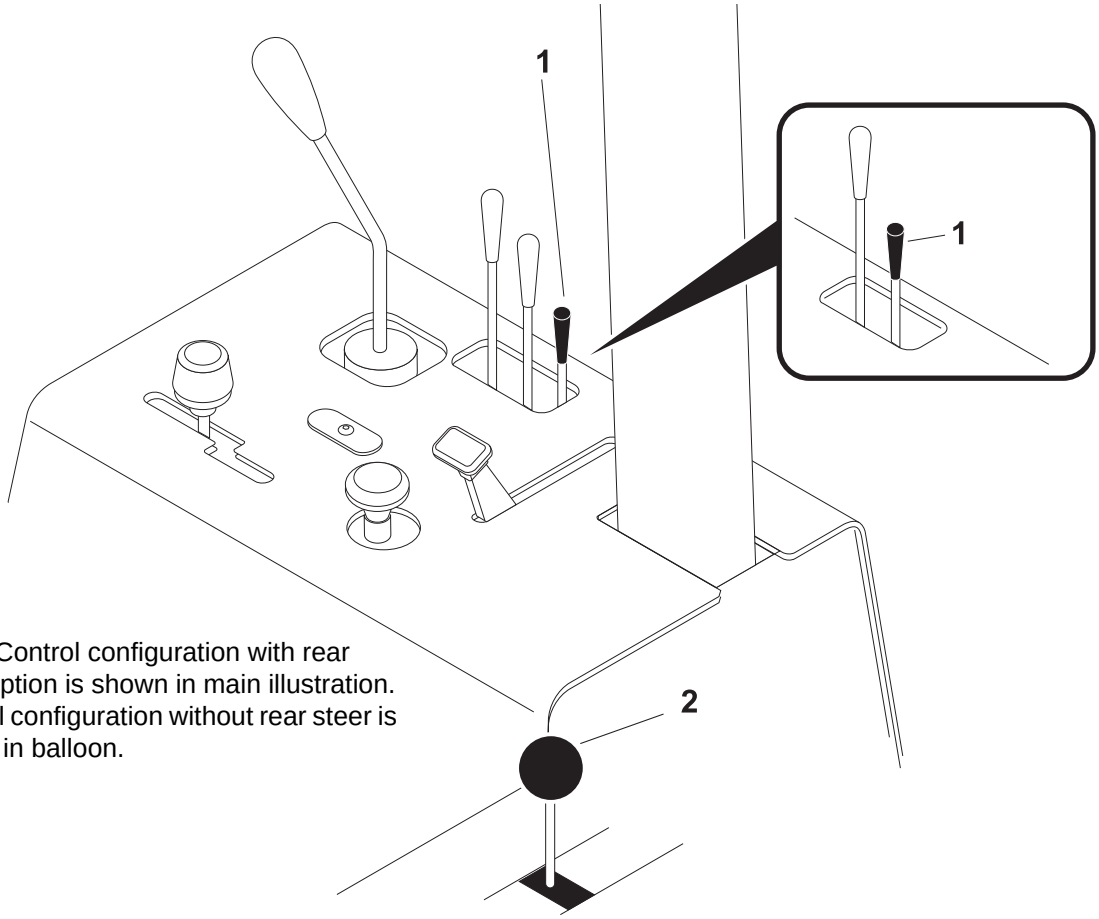

Note: Control configuration with rear steer option is shown in main illustration. Control configuration without rear steer is shown in balloon.

t14om071h.eps

1. Trencher/Plow lift control
2. Trencher/plow select control

Item	Description	Notes
1. Trencher/Plow lift control 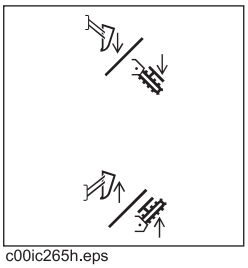 c00ic265h.eps	To raise selected attachment, pull. To lower selected attachment, push.	

https://truckmanualshub.com/

Item	Description	Notes
2. Trencher/plow select control 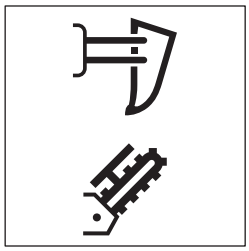 c00ic090c.eps	To select plow, push. To select trencher, pull.	

https://truckmanualshub.com/

Saw Controls

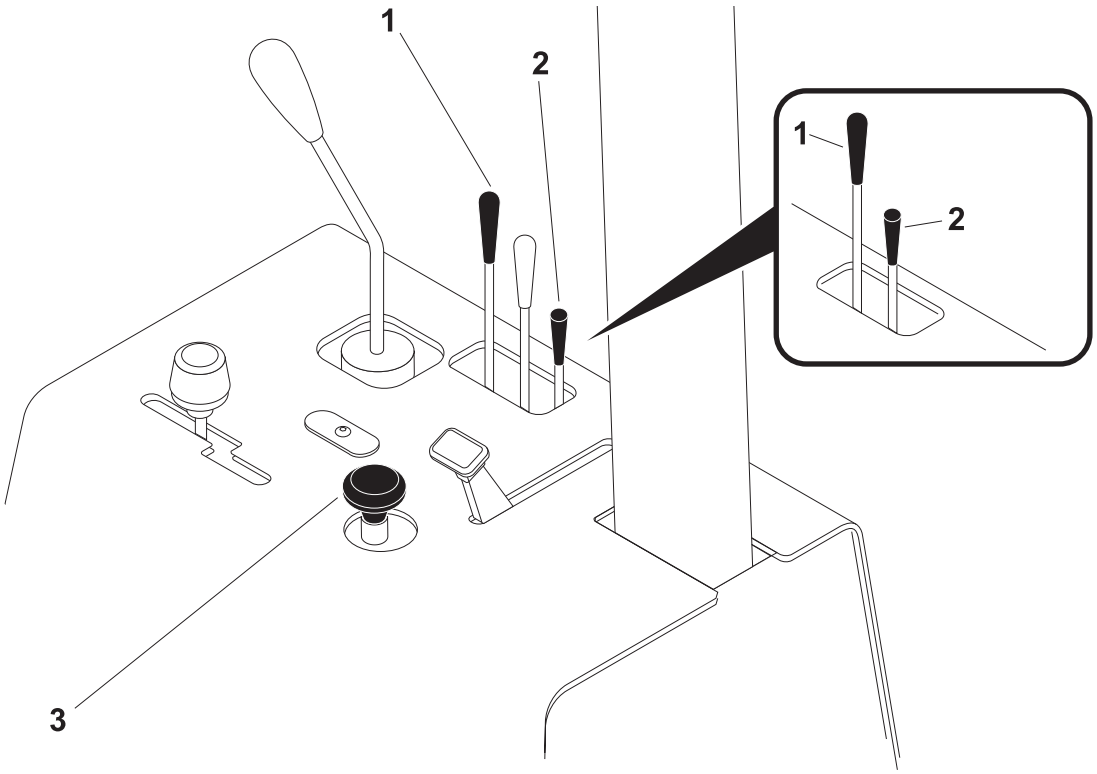

Note: Control configuration with rear steer option is shown in main illustration. Control configuration without rear steer is shown in balloon.

t14om072h.eps

1. Saw swing control
2. Saw lift control
3. Backfill blade tilt/saw swing selector

Item	Description	Notes
1. Saw swing control 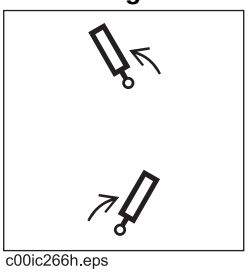 c00ic266h.eps	To swing saw to left, pull. To swing saw to right, push.	

https://truckmanualshub.com/

Item	Description	Notes
2. Saw lift control 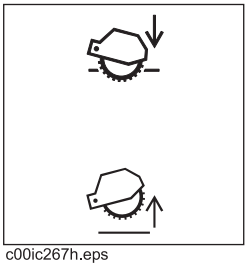 c00ic267h.eps	To lower, push. To raise, pull.	
3. Backfill blade tilt/saw swing selector 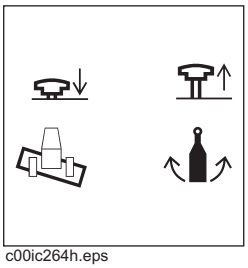 c00ic264h.eps	To control backfill blade tilt, push. To control saw swing, pull.	

https://truckmanualshub.com/

Left Fender

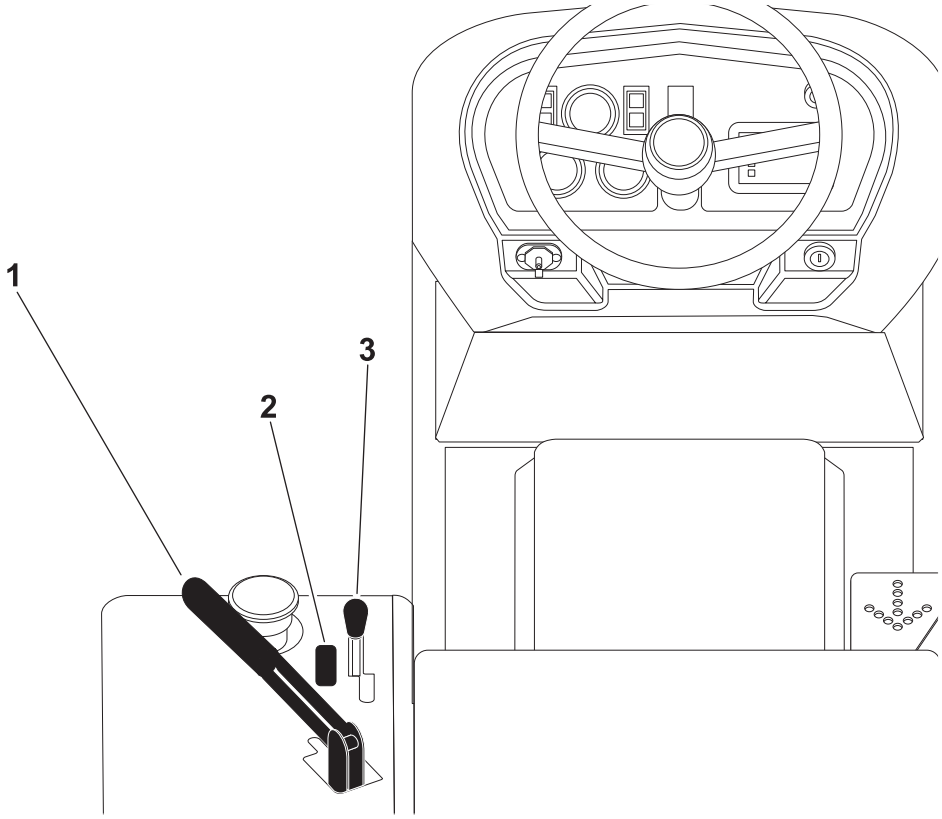

t14om045h.eps

1. Parking brake
2. Work light switch*
3. Attachment speed/direction control

* optional

Item	Description	Notes
1. Parking brake 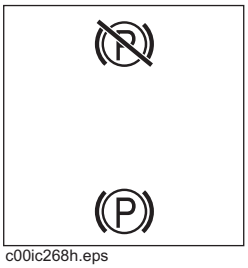 c00ic268h.eps	To set, pull. To release, push.	

https://truckmanualshub.com/

Item	Description	Notes
2. Work light switch 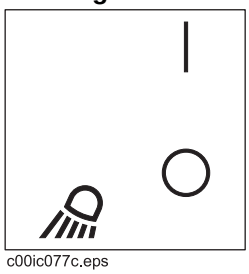 c00ic077c.eps	To turn on, press top. To turn off, press bottom.	
3. Attachment speed/ direction control 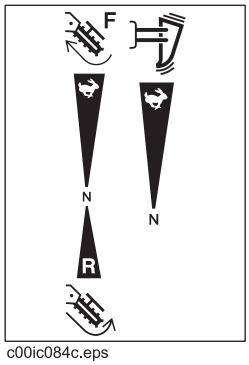 c00ic084c.eps	To rotate attachment forward or to start plow vibrator box, push. To rotate attachment backward, pull. To go faster in either direction, move farther from center. To stop attachment rotation or plow vibrator box, move to neutral.	**NOTICE:** When operating plow, do not pull control to reverse.

https://truckmanualshub.com/

Seat

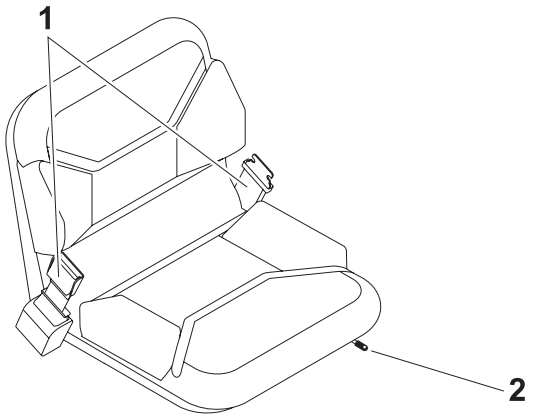

t14om053h.eps

1. Seat belt
2. Seat slide control

Item	Description	Notes
1. Seat belt	To fasten, insert latch into buckle. Adjust until seat belt is low and tight. To release, lift top of buckle.	
2. Seat slide control	To slide seat forward or backward, pull or push left, then adjust seat. To lock seat in place, release.	

https://truckmanualshub.com/

Backhoe Console

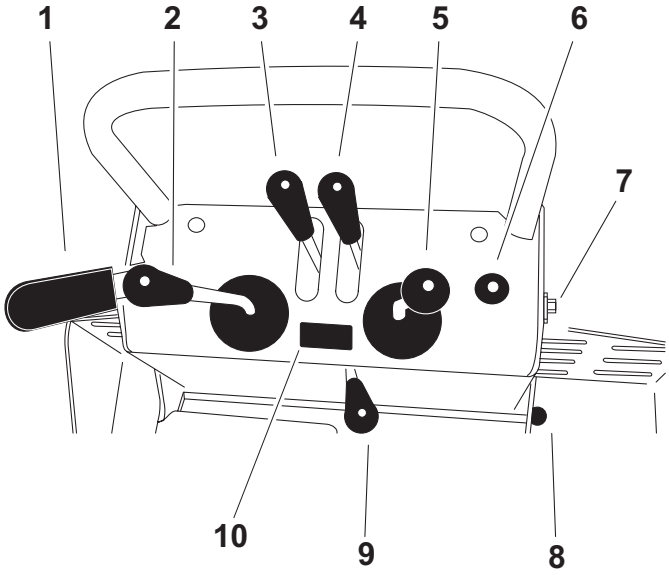

t14om073h.eps

1. Remote throttle
2. Boom/Swing control
3. Left stabilizer control
4. Right stabilizer control
5. Bucket/Dipper control
6. Remote engine stop switch
7. Seat latch
8. Neutral switch
9. Mechanical stow lock control
10. Work light switch*

*optional

Item	Description	Notes
1. Remote throttle 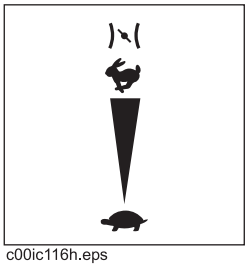 c00ic116h.eps	To increase engine speed, push. To decrease engine speed, pull.	

https://truckmanualshub.com/

Item	Description	Notes
2. Boom/Swing control 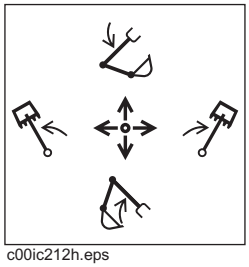 c00ic212h.eps	To swing boom left, move left. To swing boom right, move right. To raise boom, pull. To lower boom, push.	Control can perform more than one action at a time. By "feathering" the control, operator can combine backhoe operations. **NOTICE:** Do not operate with backhoe in the stowed (upright) position. Component failure could occur.
3. Left stabilizer control 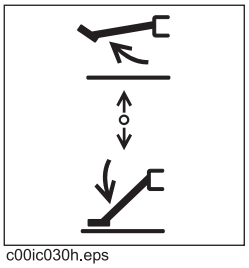 c00ic030h.eps	To lower, pull. To raise, push.	
4. Right stabilizer control 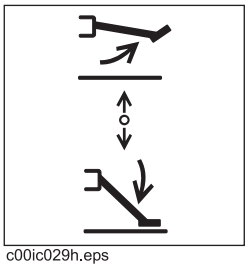 c00ic029h.eps	To lower, pull. To raise, push.	
5. Bucket/Dipper control 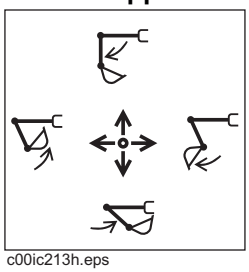 c00ic213h.eps	To open bucket, move right. To close bucket, move left. To move dipper in, pull. To move dipper out, push.	Control can perform more than one action at a time. By "feathering" the control, operator can combine backhoe operations.
6. Remote engine stop switch c00ic085c.eps	Stops engine immediately.	**IMPORTANT:** • Except in an emergency, move throttle to idle before using stop switch. • For normal engine shutdown, use ignition switch.

https://truckmanualshub.com/

Item	Description	Notes
7. Seat latch	To release backhoe seat, disengage lock by moving hole in latch clear of bolt.	**IMPORTANT:** Ensure seat is latched before driving unit. See "Backhoe" on page 89 for more information.
8. Neutral switch	To move tractor, press switch, use bucket/dipper control to move tractor, and release switch.	
9. Mechanical stow lock control 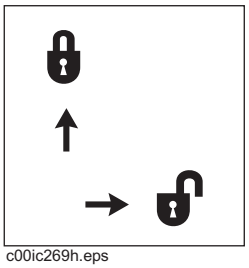 c00ic269h.eps	To lock, push stow lock handle. To unlock, move stow lock handle to right.	Use this control to lock boom in the stowed position. **NOTICE:** Always lock boom during transport.
10. Work light switch 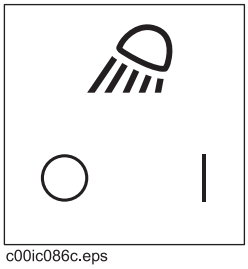 c00ic086c.eps	To turn on, press right. To turn off, press left.	

https://truckmanualshub.com/

Engine

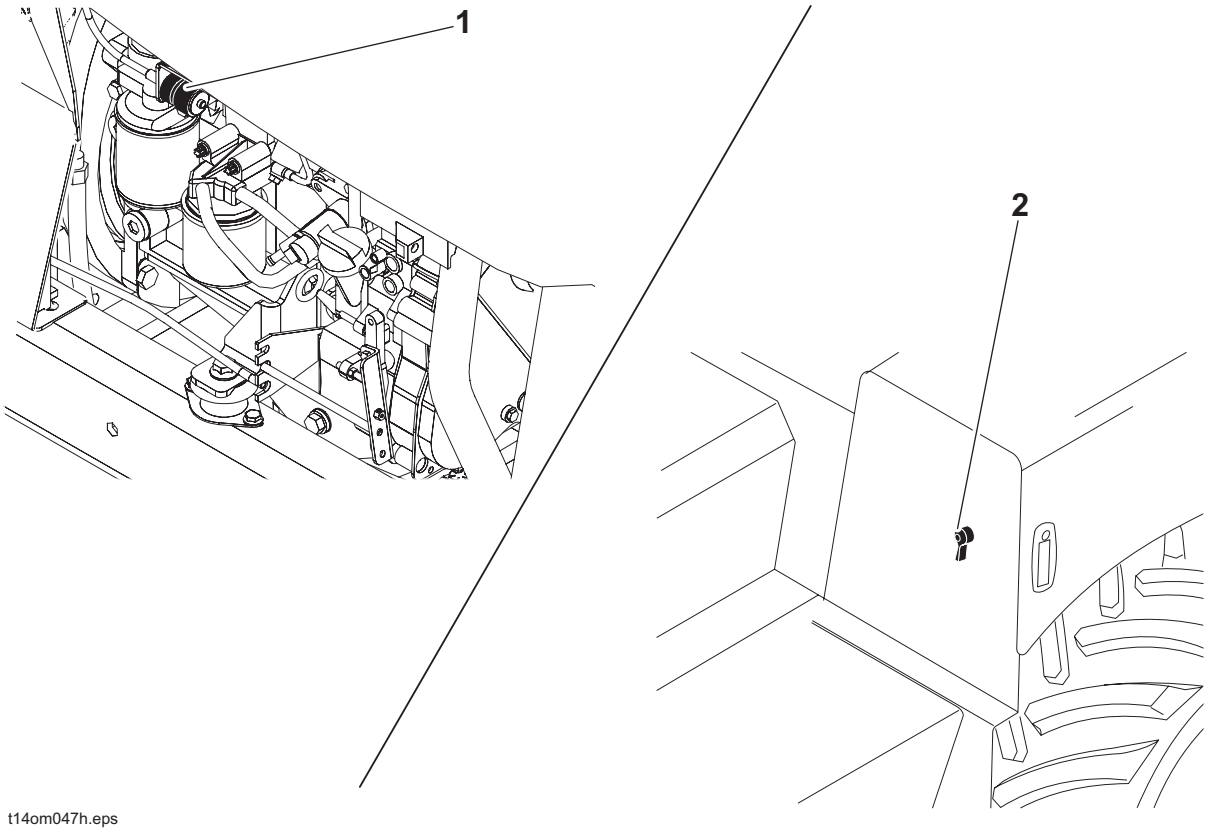

1. Air filter restriction indicator
2. Battery disconnect switch

Item	Description	Notes
1. Air filter restriction indicator 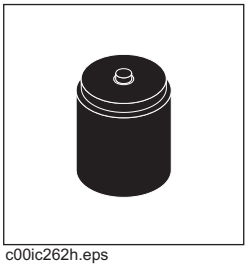 c00ic262h.eps	When red band is visible, change air filter. Reset after replacing air filter.	For more information, see page 136.

https://truckmanualshub.com/

Item	Description	Notes
2. Battery disconnect switch 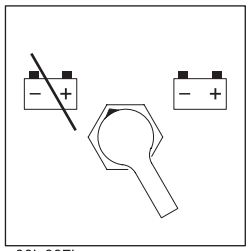 c00ic097h.eps	To disconnect, move switch so that indicator points left. To connect, move switch so that indicator points right.	

https://truckmanualshub.com/

Operation Overview

Chapter Contents

Planning 48

Trenching 48

Plowing 48

Sawing 49

Drilling 49

Digging with Backhoe 50

Leaving Jobsite 50

https://truckmanualshub.com/

Planning

1. Gather information about jobsite. See page 52.
2. Inspect jobsite. See page 53.
3. Classify jobsite. See page 54.
4. Select chain and teeth to match your soil type, if necessary. See page 102.
5. Check supplies and prepare equipment. See page 56.
6. Haul equipment to jobsite. See page 66.

Trenching

1. Start unit. See page 58.
2. Position tractor and controls. See page 72.
3. Begin trenching. See page 73.
4. Complete the installation. See page 73.
5. Backfill the trench. See page 106.
6. Shut down tractor. See page 60.

Plowing

1. Start unit. See page 58.
2. Position tractor and controls. See page 78.
3. Attach product. See page 78.
4. Begin plowing. See page 80.
5. Complete the installation. See page 80.
6. Shut down tractor. See page 60.

https://truckmanualshub.com/

Sawing

1. Start unit. See page 58.
2. Position tractor and controls. See page 84.
3. Begin sawing. See page 86.
4. Complete the installation. See page 86.
5. Backfill the trench. See page 106.
6. Shut down tractor. See page 60.

Drilling

1. Start unit. See page 58.
2. Dig approach trench and target trench. See page 97.
3. Assemble drill string and position tractor. See page 97.
4. Begin drilling. See page 98.
5. Use drill string guide as needed. See page 98.
6. Add rod. See page 99.
7. Backream. See page 99.
8. Shut down tractor. See page 60.
9. Disassemble joints. See page 100.

https://truckmanualshub.com/

Digging with Backhoe

1. Start unit. See page 58.
2. Set stabilizers and unstow backhoe. See page 90.
3. Excavate. See page 91.
4. Stow backhoe properly. See page 92.
5. Shut down tractor. See page 60.

Leaving Jobsite

1. Backfill if necessary. See page 106.
2. Rinse equipment. See page 106.
3. Stow tools. See page 106.
4. Haul equipment away from jobsite. See page 66.

https://truckmanualshub.com/

Prepare

Chapter Contents

Gather Information 52

- Review Job Plan 52
- Notify One-Call Services 52
- Arrange for Traffic Control 52
- Plan for Emergency Services 52

Inspect Site 53

- Identify Hazards 53

Classify Jobsite. 54

- Inspect Jobsite 54
- Select a Classification 54
- Apply Precautions 55

Check Supplies and Prepare Equipment 56

- Supplies 56
- Fluid Levels 56
- Condition and Function 56
- Accessories 56

https://truckmanualshub.com/

Gather Information

A successful job begins before you dig. The first step in planning is reviewing information already available about the job and jobsite.

Review Job Plan

Review blueprints or other plans. Check for information about existing or planned structures, elevations, or proposed work that may be taking place at the same time.

Notify One-Call Services

Call area One-Call or similar services and have existing lines located and marked. Call any utilities in your area that do not subscribe to One-Call.

Arrange for Traffic Control

If working near a road or other traffic area, contact local authorities about safety procedures and regulations.

Plan for Emergency Services

Have the telephone numbers for local emergency and medical facilities on hand. Check that you will have access to a telephone.

https://truckmanualshub.com/

Inspect Site

Inspect jobsite before transporting equipment. Check for the following:

- changes in elevation such as hills or other open trenches
- obstacles such as buildings, railroad crossings, or streams
- signs of utilities (See "Inspect Jobsite" on page 54.)
- traffic
- access
- soil type and condition

Identify Hazards

Identify safety hazards and classify jobsite. See "Classify Jobsite" on page 54.

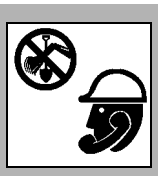

WARNING Jobsite hazards could cause death or serious injury. Use correct equipment and work methods. Use and maintain proper safety equipment.

NOTICE:

- Wear personal protective equipment including hard hat, safety eye wear, and hearing protection.
- Do not wear jewelry or loose clothing.
- Notify One-Call and companies which do not subscribe to One-Call.
- Comply with all utility notification regulations before digging or drilling.
- Verify location of previously marked underground hazards.
- Mark jobsite clearly and keep spectators away.

Remember, jobsite is classified by hazards in place -- not by line being installed.

https://truckmanualshub.com/

Classify Jobsite

Inspect Jobsite

- Follow U.S. Department of Labor regulations on excavating and trenching (Part 1926, Subpart P) and other similar regulations.
- Contact One-Call (888-258-0808) and any utility companies which do not subscribe to One-Call.
- Inspect jobsite and perimeter for evidence of underground hazards, such as:
  - "buried utility" notices
  - utility facilities without overhead lines
  - gas or water meters
  - junction boxes
  - drop boxes
  - light poles
  - manhole covers
  - sunken ground
- Have an experienced locating equipment operator sweep area within 20' (6 m) to each side of trench path. Verify previously marked line and cable locations.
- Mark location of all buried utilities and obstructions.
- Classify jobsite.

Select a Classification

Jobsites are classified according to underground hazards present.

If working . . .	then classify jobsite as . . .
within 10' (3 m) of a buried electric line	electric
within 10' (3 m) of a natural gas line	natural gas
in sand, granite, or concrete which is capable of producing crystalline silica (quartz) dust	crystalline silica (quartz) dust
within 10' (3 m) of any other hazard	other

NOTICE: If you have any doubt about jobsite classification, or if jobsite might contain unmarked hazards, take steps outlined previously to identify hazards and classify jobsite before working.

https://truckmanualshub.com/

Apply Precautions

Once classified, precautions appropriate for jobsite must be taken.

Electric Jobsite Precautions

Use one or both of these methods.

- Expose line by careful hand digging or soft excavation.
- Have service shut down while work is in progress. Have electric company test lines before returning them to service.

Natural Gas Jobsite Precautions

In addition to positioning equipment upwind from gas lines, use one or both of these methods.

- Expose lines by careful hand digging or soft excavation.
- Have gas shut off while work is in progress. Have gas company test lines before returning them to service.

Crystalline Silica (Quartz) Dust Precautions

Follow OSHA or other guidelines for exposure to crystalline silica when trenching, sawing or drilling through material that might produce dust containing crystalline silica (quartz).

Other Jobsite Precautions

You may need to use different methods to safely avoid other underground hazards. Talk with those knowledgeable about hazards present at each site to determine which precautions should be taken or if job should be attempted.

https://truckmanualshub.com/

Check Supplies and Prepare Equipment

Supplies

- fuel
- keys
- personal protective equipment, such as hard hat and safety glasses

Fluid Levels

- fuel
- hydraulic fluid
- battery charge
- engine oil

Condition and Function

- digging chain and teeth
- fan belts
- light bulbs
- filters (air, oil, hydraulic)
- tires
- pumps and motors
- hoses and valves
- signs, guards, and shields

Accessories

Fire Extinguisher

If required, mount a fire extinguisher near the power unit but away from possible points of ignition. The fire extinguisher should always be classified for both oil and electric fires. It should meet legal and regulatory requirements.

https://truckmanualshub.com/

Drive

Chapter Contents

Start Unit 58

Drive 60

Shut Down 60

https://truckmanualshub.com/

Start Unit

Before operating tractor, read engine manufacturer's starting and operating instructions. Follow instructions for new engine break-in.

WARNING Runaway possible. Machine could run over you or others. Learn how to use all controls. Start and operate only from operator's position.

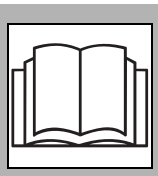

WARNING Incorrect procedures could result in death, injury, or property damage. Learn to use equipment correctly.

NOTICE:

- Read operator's manual before operating equipment. Follow instructions carefully. Contact Ditch Witch dealership for operation information or demonstration.
- Wear hard hat, safety glasses, and other protective equipment required by job. Do not wear jewelry or loose clothing that can catch on controls.

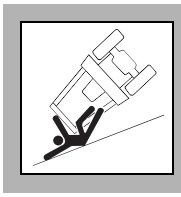

WARNING Rollover possible. If machine rolls over, you could be thrown from seat and killed or crushed. Wear seat belt.

https://truckmanualshub.com/

1. Fasten and adjust seat belt.
2. Check that ground drive control and attachment speed/direction control are in neutral.
3. Move throttle to idle.
4. Verify that parking brake is engaged.
5. Turn ignition switch to the run position (key on, engine off). Cold start wait indicator will light.
6. When cold start wait indicator goes off, turn ignition switch all the way clockwise to start tractor. Warning alarm will sound. Indicators will light.
   - If engine does not crank, check start interlock display. See page 25 for start interlock information.
   - If engine turns but does not start within 10 seconds, allow starter to cool before trying to start again.

WARNING Improper control function could cause death or serious injury. If control does not work as described in instructions, stop machine and have it serviced.

NOTICE: Machine will not start if start interlock requirements are not met. See page 25 for start interlock information.

7. Run engine at half-throttle or less for five minutes before operating tractor. During warmup, check that all controls work properly.

https://truckmanualshub.com/

Drive

EMERGENCY SHUTDOWN: Turn ignition switch to STOP.

1. Turn on lights as needed.
2. Raise backfill blade and all attachments.
3. Release parking brake.
4. Adjust throttle.
5. Move ground drive control to forward or reverse or press upper or lower part of foot pedal.

WARNING Moving traffic – hazardous situation. Death or serious injury could result. Avoid moving vehicles, wear high visibility clothing, post appropriate warning signs.

NOTICE:

- Drive carefully in congested areas. Know machine's clearance and turning radius.
- Keep attachments low when operating on slope. Drive slowly and cautiously.

IMPORTANT: Speed and direction are controlled by both the speed/direction control hand lever and the foot pedal. Be careful when operating tractor that both controls are not used at the same time. If controls are moved in opposite directions at the same time, tractor will not move.

Shut Down

1. When job is complete, move ground drive control to neutral.
2. Engage parking brake.
3. Lower all attachments to ground.
4. Move throttle to idle for 3 minutes to cool.
5. Turn ignition switch to STOP. If leaving machine unattended, remove key.
6. For maintenance or long-term storage, turn battery disconnect switch, if equipped, to the disconnect position.

https://truckmanualshub.com/

Transport

Chapter Contents

Lift 62

- Points 62
- Procedure 62

Tie Down 65

- Points 65
- Procedure 65

Haul 66

- Procedure 66

Tow 69

- Procedure 69

https://truckmanualshub.com/

Lift

WARNING Crushing weight. If load falls or moves it could kill or crush you. Use proper procedures and equipment or stay away.

WARNING Incorrect procedures could result in death, injury, or property damage. Learn to use equipment correctly.

Points

Lifting points are identified by lifting decals. Lifting at other points is unsafe and can damage machinery.

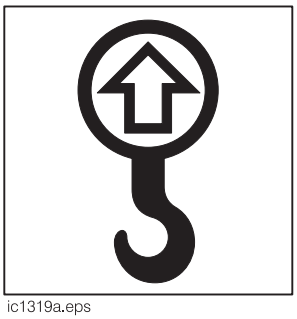

ic1319a.eps

Procedure

Tractor

Use a crane capable of supporting the equipment's size and weight. See "Specifications" on page 143. Use indicated lift points. Do not attempt to lift tractor with attachments installed.

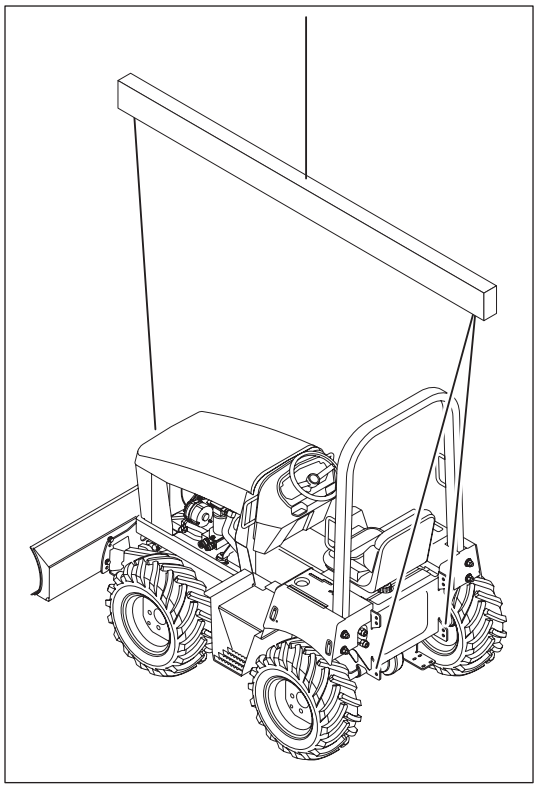

t14om008h.eps

https://truckmanualshub.com/

H313/H314 Trenchers

Use crane capable of supporting the equipment's size and weight. See page 143 or measure and weigh equipment before lifting.

NOTICE: Do not lift tractor with installed attachment.

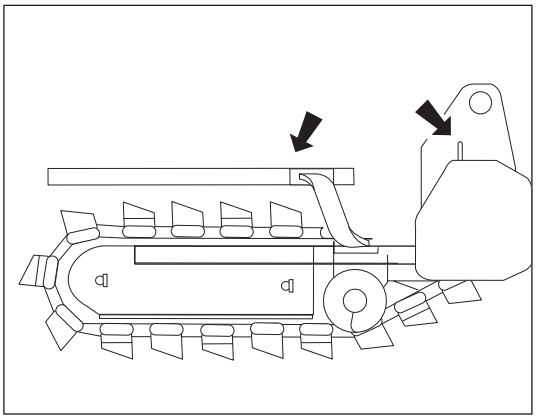

t14om056h.eps

H331 Plow

Use crane capable of supporting the equipment's size and weight. See page 150 or measure and weigh equipment before lifting.

NOTICE: Do not lift tractor with installed attachment.

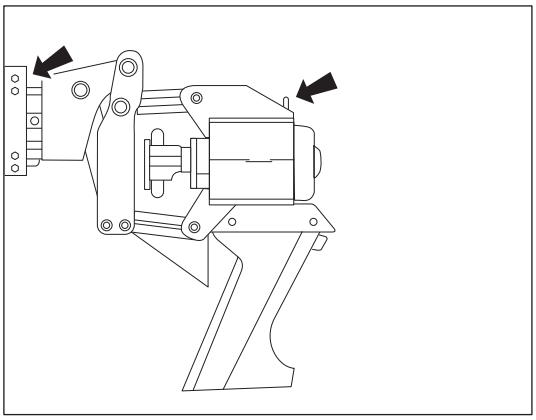

t14om058h.eps

H350 Combo

Use crane capable of supporting the equipment's size and weight. See page 152 or measure and weigh equipment before lifting.

NOTICE: Do not lift tractor with installed attachment.

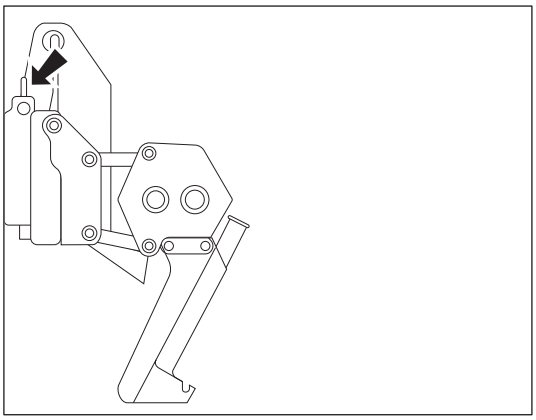

t14om057h.eps

https://truckmanualshub.com/

Reel Carrier

Use crane capable of supporting the equipment's size and weight. See page 150 or measure and weigh equipment before lifting.

NOTICE: Do not lift tractor with installed attachment.

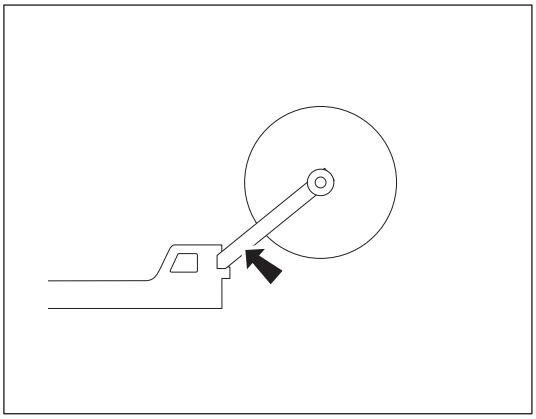

t14om055h.eps

H341 Saw

Use crane capable of supporting the equipment's size and weight. See page 154 or measure and weigh equipment before lifting.

NOTICE: Do not lift tractor with installed attachment.

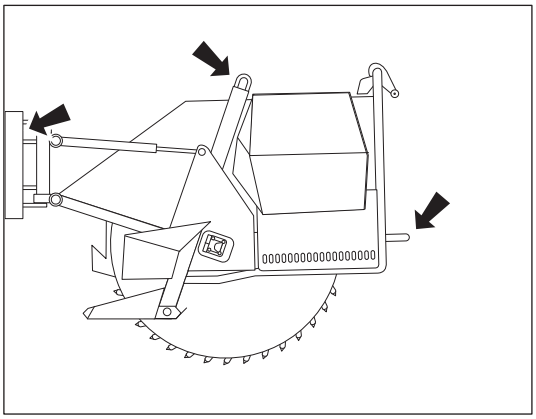

t14om059h.eps

https://truckmanualshub.com/

Tie Down

WARNING Incorrect procedures could result in death, injury, or property damage. Learn to use equipment correctly.

Points

Tiedown points are identified by tiedown decals. Securing to trailer at other points is unsafe and can damage machinery.

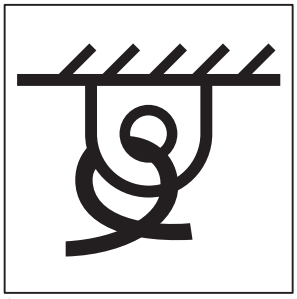

ic1320a.eps

Procedure

Tractor

Attach chains at front and rear tiedown points. Make sure chains are tight before transporting unit.

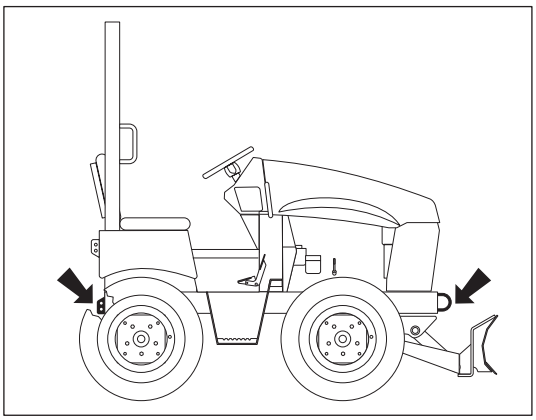

t14om009h.eps

H341 Saw

Lower attachment to trailer deck and chain at the wheel. Make sure chains are tight before transporting.

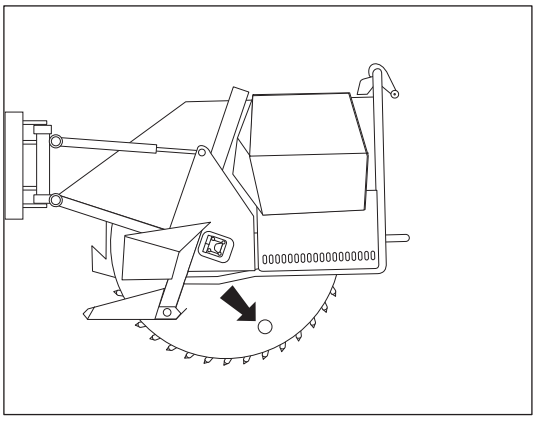

t14om064h.eps

https://truckmanualshub.com/

Haul

WARNING Incorrect procedures could result in death, injury, or property damage. Learn to use equipment correctly.

NOTICE:

- Read trailer operator's manual before loading or transporting your machine. Incorrectly loaded machine can slip or cause trailer sway.
- Attach trailer to tow vehicle before loading or unloading.
- Park, load, and unload trailer on level ground.
- Check that unit and trailer do not exceed size or weight regulations.
- Ensure that tow vehicle has proper tow capacity rating.
- Ten to fifteen percent of total vehicle weight (equipment plus trailer) must be on tongue to help prevent trailer sway.
- Connect safety chains to tow vehicle. Attach left chain to right side of tow vehicle and vice versa to cradle hitch. Do not connect to pintle hook or hitch ball.
- Connect breakaway switch cable to tow vehicle. Do not connect to pintle hook or hitch ball.

Procedure

Inspect Trailer

1. Check hitch for wear and cracks. Lubricate if needed.
2. Check battery for 12V charge.
3. Inspect lights for cleanliness and correct operation. Inspect reflectors and replace if needed.
4. Check tire pressure. Check lug nut torque with a torque wrench. Adjust if needed.
5. Ensure trailer brakes are adjusted to come on in synchronization with tow vehicle brakes.
6. Check ramps and trailer bed for cracks.

https://truckmanualshub.com/

Load

WARNING Crushing weight. If load falls or moves it could kill or crush you. Use proper procedures and equipment or stay away.

NOTICE:

- Attach trailer to tow vehicle before loading or unloading.
- Load and unload trailer on level ground.
- Put manual transmission into first or reverse gear or automatic transmission into park. Turn off ignition. Set parking brake.
- Block trailer wheels.
- Incorrect loading can cause trailer swaying.

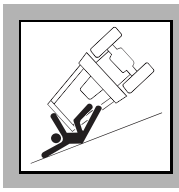

WARNING Rollover possible. If machine rolls over, you could be thrown from seat and killed or crushed. Wear seat belt.

1. Fasten and adjust seat belt.
2. Start tractor. See page 58 for proper start-up procedures.
3. Raise attachments, but keep them low.
4. Move attachments to center position and check that they are not in float.
5. Release parking brake.
6. Slowly drive tractor onto trailer.
7. Position tractor on trailer deck for proper weight distribution.
8. Engage parking brake.
9. Lower attachments to trailer bed and turn tractor off. See page 60 for proper shutdown procedures.
10. Attach chains to tractor and attachments where tiedown decals are located. See page 65.

https://truckmanualshub.com/

Unload

WARNING Crushing weight. If load falls or moves it could kill or crush you. Use proper procedures and equipment or stay away.

NOTICE:

- Attach trailer to tow vehicle before loading or unloading.
- Load and unload trailer on level ground.
- Put manual transmission into first or reverse gear or automatic transmission into park. Turn off ignition. Set parking brake.
- Block trailer wheels.
- Incorrect loading can cause trailer swaying.

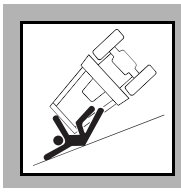

WARNING Rollover possible. If machine rolls over, you could be thrown from seat and killed or crushed. Wear seat belt.

1. Lower trailer or ramps.
2. Remove chains from tiedowns.
3. Fasten and adjust seat belt.
4. Start tractor. See page 58 for proper start-up procedures.
5. Raise attachments, but keep them low and centered.
6. Disengage parking brake.
7. Slowly back unit down trailer or ramps.

https://truckmanualshub.com/

Tow

WARNING Incorrect procedures could result in death, injury, or property damage. Learn to use equipment correctly.

Under normal conditions, tractor should not be towed. If tractor becomes disabled and towing is necessary:

- Do not tow for more than 200 yd (180 m).
- Tow at less than 1 mph (1.6 km/h).
- Use maximum towing force of 1.5 times unit weight.

Procedure

WARNING Incorrect procedures could result in death, injury, or property damage. Learn to use equipment correctly.

1. Attach tow line to all available tiedown points facing towing vehicle.
2. Bypass hydraulic system.

   Remove tunnel cover and loosen bypass valve two turns. Valve is on left rear of front pump.
3. Fasten seat belt.
4. Disengage parking brake.
5. Check that ground drive and attachment speed/ direction controls are in neutral position.

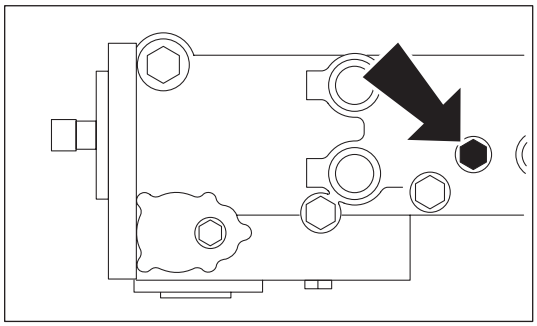

t14om051h.eps

https://truckmanualshub.com/

https://truckmanualshub.com/

Trench

Chapter Contents

Setup 72

Operation 73

Operating Tips 75

https://truckmanualshub.com/

Setup

EMERGENCY SHUTDOWN - Turn ignition switch to STOP.

WARNING Crushing weight could cause death or serious injury. Use proper procedures and equipment or stay away.

NOTICE: Use attachments or counterweights to make front and rear loads balance when all attachments are raised. Contact your Ditch Witch dealer about counterweighting for your equipment.

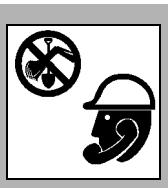

WARNING Jobsite hazards could cause death or serious injury. Use correct equipment and work methods. Use and maintain proper safety equipment.

NOTICE: Comply with all utility notification regulations before digging or drilling.

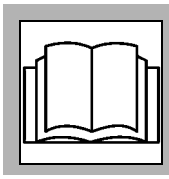

WARNING Incorrect procedures can result in death, injury, or property damage. Learn to use equipment correctly.

1. Fasten and adjust seat belt.
2. Start tractor. See page 58 for start-up procedures.
3. Drive to starting point. Move in line with planned trench. See page 60 for operating procedures.
4. Lower backfill blade.
5. Engage parking brake.
6. Lower boom to just above ground.
7. Check that attachment speed/direction control and ground drive controls are in neutral.
8. If equipped with combo, move selector valve to trenching position.
9. Check that boom is in line with planned trench.

https://truckmanualshub.com/

Operation

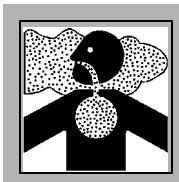

WARNING Jobsite hazards could cause death or serious injury. Use correct equipment and work methods. Use and maintain proper safety equipment.

NOTICE: Cutting or drilling concrete containing sand or rock containing quartz may result in exposure to silica dust. Use respirator, water spray or other means to control dust. Silica dust can cause lung disease and is known to the State of California to cause cancer.

DANGER Electrical shock. Contacting electrical lines will cause death or serious injury. Know location of lines and stay away.

NOTICE: Cutting high voltage cable can cause electrocution. Expose lines by hand before digging.

WARNING Incorrect procedures could result in death, injury, or property damage. Learn to use equipment correctly.

NOTICE:

- Comply with all utility notification regulations before digging or drilling.
- Notify companies that do not subscribe to One-Call.

CAUTION Flying objects thrown by machine may strike people. Wear hard hat and safety glasses.

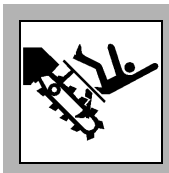

DANGER Moving digging teeth will cause death or serious injury. Stay away.

NOTICE:

- Ensure parking brake is engaged and parking brake indicator is on.
- Machine might jerk when digging starts. Allow 3' (1 m) between digging teeth and obstacle.
- Keep everyone at least 6' (2 m) from machine, attachments, and their range of movement.

https://truckmanualshub.com/

1. Lower backfill blade to reduce shock when trenching begins.
2. If necessary, adjust throttle to low idle.
3. Move attachment speed/direction control to desired speed. DIGGING CHAIN WILL MOVE.
4. Increase engine speed to full throttle.
5. Slowly lower digging boom to depth.
6. Raise backfill blade and release parking brake.
7. Move ground drive control to desired speed.
8. If using optional trench cleaner:
   - Stop tractor and turn ignition switch to STOP.
   - Manually lower trench cleaner.
   - Restart tractor, fasten seat belt, and continue trenching.

NOTICE:

- Do not have trench cleaner in working position when starting a trench.
- Do not back up with trench cleaner in working position.
- Do not use trench cleaner in conditions where large rocks can get between chain and cleaner.

9. Lower boom to trench depth and push ground drive control forward to trenching speed.
10. When trench is complete, move ground drive control to neutral.
11. Adjust throttle to low idle.
12. Raise boom.
13. As boom clears top of trench, move attachment speed/direction control to neutral.
14. Drive a short distance away from work site.
15. Shut down tractor. See page 60 for proper shutdown procedures.
16. Return optional trench cleaner to the stowed position.

https://truckmanualshub.com/

Operating Tips

- Operate engine at full throttle.
- Sight along center of hood to a stake driven beyond end of trench line for straight trench.
- Use correct length boom. See your Ditch Witch dealer for more information.
- Do not make sharp turns. Lower boom to full depth when turning.
- If an object becomes lodged in chain, move attachment speed/direction control to neutral and raise boom slightly. Reverse chain direction. If object must be removed manually, turn engine off and engage parking brake.
- When cutting asphalt, start trench in soil at edge of road and use shortest possible boom at full depth.
- Always start trenching with attachment speed set at low. If soil conditions permit optimum digging at higher speeds, select high.
- For optimal spoils delivery, adjust the auger positions forward or backward to accommodate terrain and digging depth.
- Before operating booms equipped with rock chains, check bits for free rotation. Tap bits lightly with a hammer and turn by hand. If bits are stuck, remove and clean packed soil from bit block.
- Carbide bits are recommended for cutting abrasive material, such as sandstone or frozen sands or gravels.

https://truckmanualshub.com/

https://truckmanualshub.com/

Plow

Chapter Contents

Setup 78

- Position Tractor 79
- Attach Product. 79

Operation 80

Operating Tips 82

https://truckmanualshub.com/

Setup

EMERGENCY SHUTDOWN - Turn ignition switch to STOP.

WARNING Crushing weight could cause death or serious injury. Use proper procedures and equipment or stay away.

NOTICE:

- Plow will swing freely in float.
- Keep everyone at least 6' (2 m) from machine, attachments, and their range of movement.

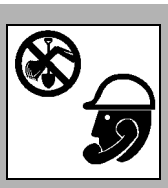

WARNING Jobsite hazards could cause death or serious injury. Use correct equipment and work methods. Use and maintain proper safety equipment.

NOTICE: Comply with all utility notification regulations before digging or drilling.

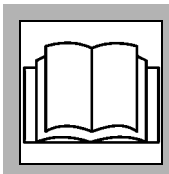

WARNING Incorrect procedures can result in death, injury, or property damage. Learn to use equipment correctly.

NOTICE:

- Use attachments or counterweights to make front and rear loads balance when all attachments are raised. Contact your Ditch Witch dealer about counterweighting for your equipment.
- Do not operate vibrator unless plow is in the ground.

https://truckmanualshub.com/

Position Tractor

1. Fasten and adjust seat belt.
2. Start tractor. See page 58 for start-up procedures.
3. Drive to starting point. Move in line with planned trench. See page 60 for operating procedures.
4. Lower backfill blade.
5. Engage parking brake.
6. Lower plow to starting point of trench.
7. Turn ignition switch to STOP.

Attach Product

To Pull Product

1. Insert material into pulling grip.
2. Tape grip with duct tape.

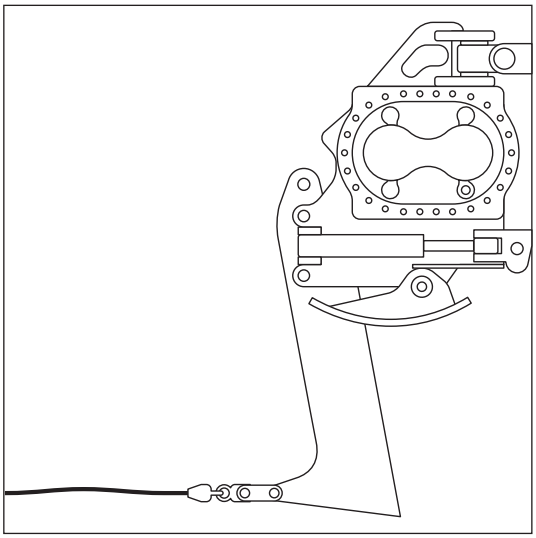

om912c.eps

To Feed Product

1. Remove cable guide.
2. Feed cable through tube from top to bottom.
3. Replace cable guide and tighten fasteners.
4. Secure cable.

NOTICE: Keep everyone away from material being installed.

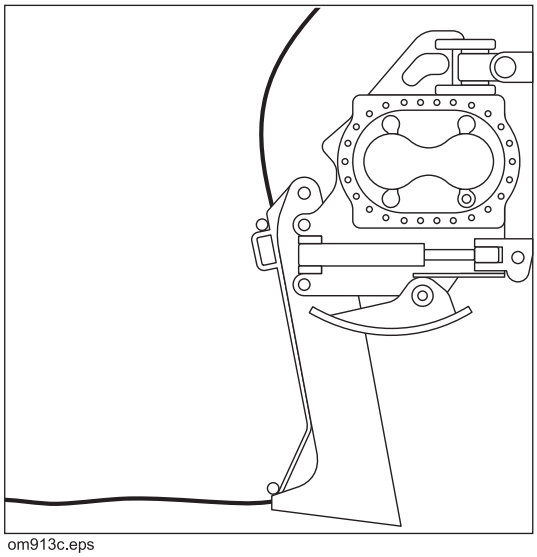

om913c.eps

https://truckmanualshub.com/

Operation

WARNING Crushing weight could cause death or serious injury. Use proper procedures and equipment or stay away.

DANGER Electrical shock. Contacting electrical lines will cause death or serious injury. Know location of lines and stay away.

NOTICE: Cutting high voltage cable can cause electrocution. Expose lines by hand before digging.

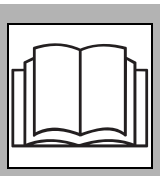

WARNING Incorrect procedures could result in death, injury, or property damage. Learn to use equipment correctly.

NOTICE:

- Comply with all utility notification regulations before digging or drilling.
- Notify companies that do not subscribe to One-Call.
- Do not drive backward with plow in the ground.

https://truckmanualshub.com/

1. Fasten and adjust seat belt.
2. Start tractor.
3. Adjust throttle to low idle.
4. Check that ground drive control is in neutral.
5. If equipped with combo, move selector valve to plow position. If equipped with backfill blade tilt/ attachment swing valve and control, move selector to swing position.
6. Raise backfill blade.
7. Move ground drive control forward to plowing speed and lower plow blade into ground.

NOTICE:

- Lower plow into ground before moving plow lift control or plow swing control to float.
- Do NOT move ground drive to reverse with plow blade in the ground.

8. Move plow lift control to float.
9. Move plow swing control to float.
10. Increase engine speed to full throttle.

https://truckmanualshub.com/

11. Move attachment speed/direction control to full speed forward. PLOW WILL VIBRATE.
12. Reduce attachment speed to a point with the least tractor vibration and the highest ground drive speed possible without tire slippage.
13. When installation is complete, move plow swing to neutral.
14. With vibrator running, lower throttle speed and raise plow to ground level.

NOTICE: Do not operate vibrator when plow is out of the ground. This will cause excessive vibration resulting in rapid wear, and possible damage to the unit and product being installed.

15. Move attachment speed/direction control to neutral.
16. Engage parking brake.
17. Lower backfill blade.
18. Turn ignition switch to STOP and remove product from plow.
19. Start tractor, raise backfill blade and drive a short distance away from work site.
20. Shut down tractor. See page 60 for proper shutdown procedures.

Operating Tips

- If material must be at a constant depth, dig starting and target trenches.
- Check cable for damage during plowing. Run continuity checks on electric cable and check pipe pressure. Damage can result from improper operation, incorrect blade choice, striking underground obstructions, or other conditions.
- Keep sod cutter edge sharp when plowing in areas with heavy grass cover or surface clutter.

https://truckmanualshub.com/

Saw

Chapter Contents

Setup 84

- Before First Use and After Replacing Bits. 85
- Normal Use 85

Operation 86

Operating Tips 88

https://truckmanualshub.com/

Setup

EMERGENCY SHUTDOWN - Turn ignition switch to STOP.

WARNING Crushing weight could cause death or serious injury. Use proper procedures and equipment or stay away.

NOTICE: Use attachments or counterweights to make front and rear loads balance when all attachments are raised. Contact your Ditch Witch dealer about counterweighting for your equipment.

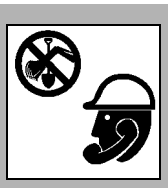

WARNING Jobsite hazards could cause death or serious injury. Use correct equipment and work methods. Use and maintain proper safety equipment.

NOTICE: Comply with all utility notification regulations before digging or drilling.

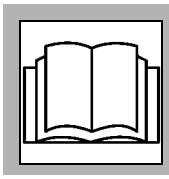

WARNING Incorrect procedures can result in death, injury, or property damage. Learn to use equipment correctly.

https://truckmanualshub.com/

Before First Use and After Replacing Bits

NOTICE: Unless otherwise instructed, all service should be performed with tractor off.

Check Bit Clearance

1. Check that all bits are properly secured.
2. Check that all bit retaining rings are secure.
3. Spin wheel by hand and listen for bits hitting diverters.
4. If bits hit diverters, repeat steps 1-3 to make sure bits are in the proper location and secured at proper depth.
5. If bits do not hit diverters:
   - Set parking brake.
   - Fasten and adjust seat belt.
   - Start tractor and adjust throttle.
   - Raise saw slightly.
   - Use attachment speed/direction control to rotate saw slowly. As it rotates, listen for clicking sounds. If clicking is present, repeat steps 1-4.

Normal Use

1. Fasten and adjust seat belt.
2. Start tractor. See page 58 for start-up procedures.
3. Raise saw and drive to starting point. Move in line with planned trench. See page 60 for correct operating procedures.
4. Lower backfill blade.
5. Engage parking brake.
6. Lower saw to just above ground.
7. Hold skid shoe and remove pins from one stabilizer.
8. Lower skid until distance from bottom of skid shoe to bottom of saw bits equals desired trench depth.
9. Reinsert pins.
10. Repeat process on other stabilizer. Be sure stabilizers are set at the same depth.
11. Support wheel guard with handle. Lift and pull stow lock and lower wheel guard into operating position.
12. Check that saw is in line with planned trench and that tires are pointing straight ahead.

https://truckmanualshub.com/

Operation

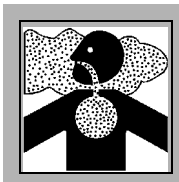

WARNING Jobsite hazards could cause death or serious injury. Use correct equipment and work methods. Use and maintain proper safety equipment.

NOTICE: Cutting or drilling concrete containing sand or rock containing quartz may result in exposure to silica dust. Use respirator, water spray or other means to control dust. Silica dust can cause lung disease and is known to the State of California to cause cancer.

DANGER Electrical shock. Contacting electrical lines will cause death or serious injury. Know location of lines and stay away.

NOTICE: Cutting high voltage cable can cause electrocution. Expose lines by hand before digging.

WARNING Incorrect procedures could result in death, injury, or property damage. Learn to use equipment correctly.

NOTICE: Use attachments or counterweights to make front and rear loads balance when all attachments are raised. Contact your Ditch Witch dealer about counterweighting for your equipment.

CAUTION Flying objects thrown by machine may strike people. Wear hard hat and safety glasses.

DANGER Moving digging teeth will kill you or cut off arm or leg. Stay away.

NOTICE:

- Machine might jerk when digging starts. Allow 3' (1 m) between digging teeth and obstacle.
- Keep everyone at least 6' (2 m) from machine, attachments, and their range of movement.

https://truckmanualshub.com/

1. Adjust throttle to low idle.
2. Move attachment speed/direction control to desired speed. SAW WILL TURN.
3. Increase engine speed to full throttle.
4. Slowly lower saw to trench depth.

WARNING Incorrect procedures could result in death, injury, or property damage. Learn to use equipment correctly.

NOTICE: Ensure that stabilizers are in contact with the ground while sawing. Failure to use stabilizers correctly will damage equipment.

5. Raise backfill blade.
6. Release parking brake.
7. Push ground drive control forward to trenching speed.
8. When trench is complete, move ground drive control to neutral and adjust throttle to low idle.
9. Raise saw and stabilizers.
10. As saw clears top of trench, move attachment speed/direction control to neutral.
11. Drive a short distance away from work site.
12. Shut down tractor. See page 60 for correct shutdown procedures.

https://truckmanualshub.com/

Operating Tips

- Work slowly and carefully.
- Wash bits and mounting blocks with high pressure water before parking unit overnight.
- Before operating saw, check bits for free rotation. Tap bits lightly with a hammer and turn by hand. If bits are stuck, remove and clean packed soil from bit block.
- For best results, use retaining clip loading and removing tool and a knock-out bar included with saw to remove and reinsert bits.
- Carbide bits are recommended for cutting abrasive material, such as sandstone or frozen sands or gravels.
- Saw use is not recommended for soft, wet, or sticky soil conditions.
- Lower saw into softer material then move into harder or abrasive material. For example, lower saw into dirt at shoulder before cutting across road.
- If a curved trench must be cut, make a series of straight cuts.

https://truckmanualshub.com/

Backhoe

Chapter Contents

Setup 90

Operation 91

Stowing 92

https://truckmanualshub.com/

Setup

1. Move attachment speed/direction control to neutral position.
2. Move ground drive control to neutral position.
3. Engage parking brake if not on level ground.
4. Lower rear attachment to 6" (150 mm) above ground.
5. Check that backfill blade is straight and lower it to ground.
6. Decrease engine speed to low throttle.
7. Move to backhoe operator's station.
8. Release seat lock (shown) and move seat into operating position.
9. Lower stabilizers enough to lift front tires.
10. Disengage stow lock.
11. Adjust engine speed to 1/2 to 3/4 throttle for digging.

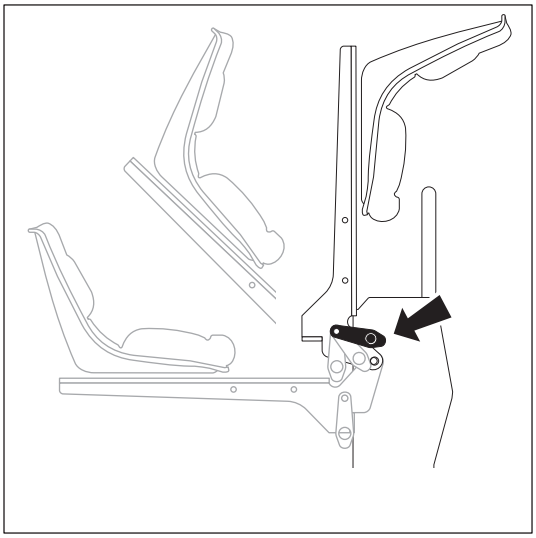

t14om084h.eps

NOTICE: Engine speed affects speed of backhoe operation.

https://truckmanualshub.com/

Operation

Use boom/swing control and bucket/dipper control to dig hole or trench.

IMPORTANT: For more information about backhoe controls, see "Backhoe Console" on page 42.

- Keep dipper and boom at right angles as much as possible for maximum power.
- Keep bucket in line with dipper as much as possible.

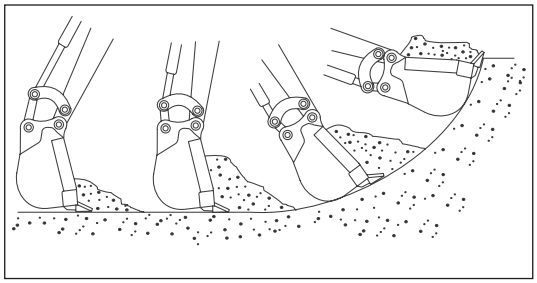

om907c.eps

- Position bucket so teeth cut soil. As soil is cut, curl bucket under dipper.
- Move dipper and bucket together. Increasing engine speed will not increase backhoe force.

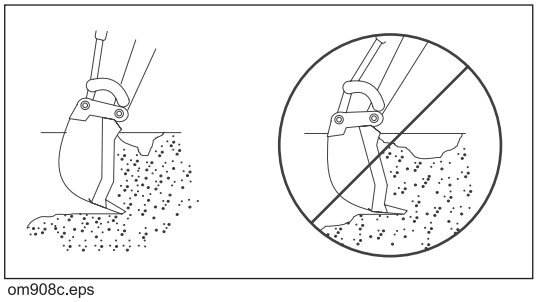

om908c.eps

https://truckmanualshub.com/

Stowing

NOTICE: Before returning to tractor operator station, raise stabilizers, return remote throttle to low idle, and stow and lock boom.

1. When hole or trench is complete, lift boom while keeping dipper pointed at ground.

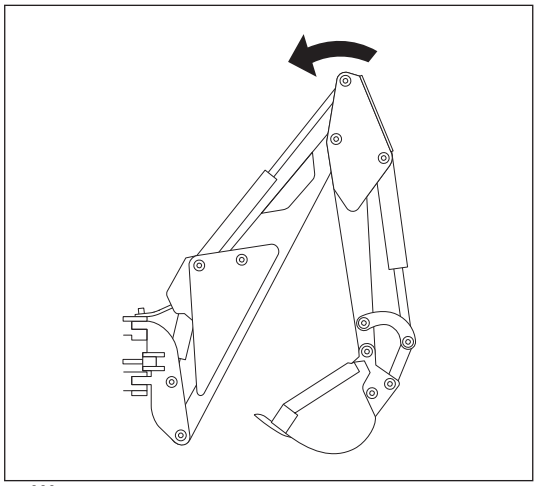

om909c.eps

2. Curl bucket closed and move dipper fully toward boom.
3. Lift boom to highest position and engage stow lock.

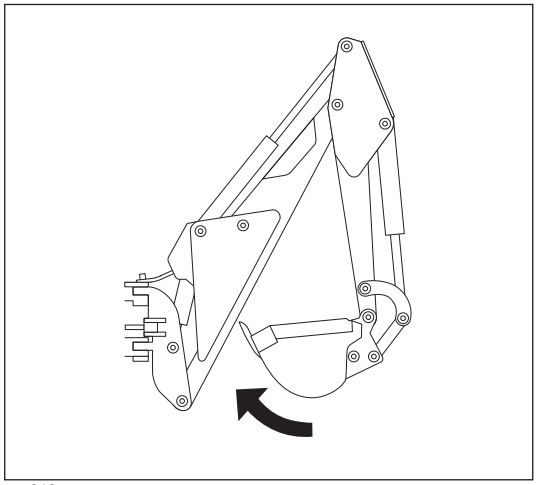

om910c.eps

https://truckmanualshub.com/

4. Raise stabilizers.
5. Return remote throttle to low idle.

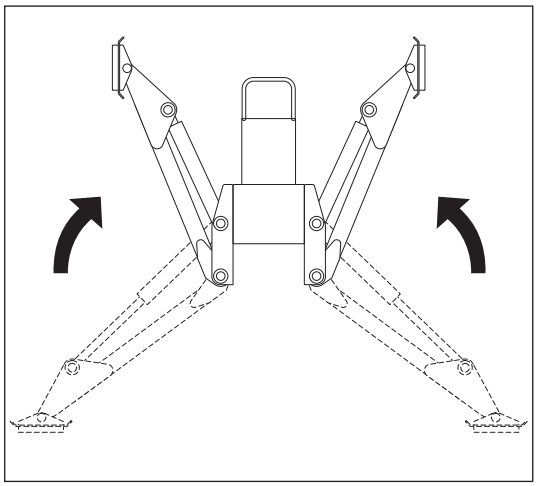

om911c.eps

6. Rotate seat into stowed position and engage seat lock (shown).

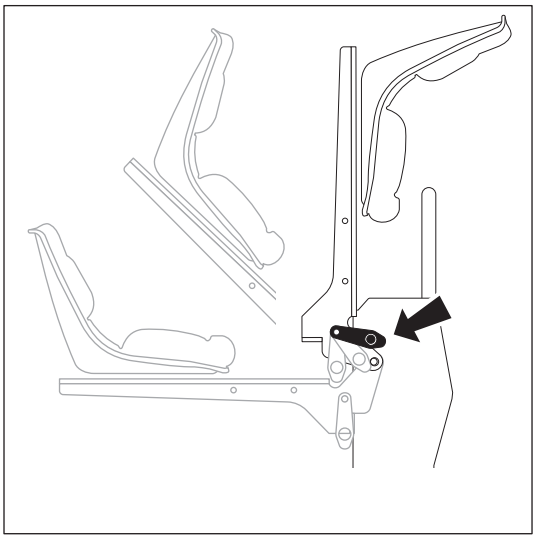

t14om084h.eps

https://truckmanualshub.com/

https://truckmanualshub.com/

Drill

Chapter Contents

Prepare Jobsite and Equipment 97

- Approach Trench. 97
- Target Trench 97
- Drill Rod and Equipment 97

Drill 98

- Using Drill String Guide 98

Add Rod 99

Backream 99

Disassemble Joints. 100

https://truckmanualshub.com/

DANGER Turning shaft will kill you or crush arm or leg. Stay away.

NOTICE: Keep everybody at least 10' (3 m) away from drill pipe during operation. Do not straddle trench or drill pipe while drilling.

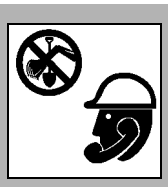

WARNING Jobsite hazards could cause death or serious injury. Use correct equipment and work methods. Use and maintain proper safety equipment.

NOTICE: Set up warning barriers and keep people away from equipment and jobsite while drilling.

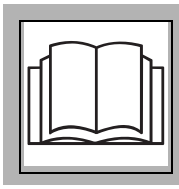

WARNING Incorrect procedures could result in death, injury, or property damage. Learn to use equipment correctly.

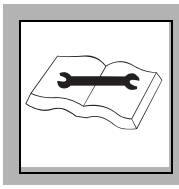

WARNING Improper control function could cause death or serious injury. If control does not work as described in instructions, stop machine and have it serviced.

NOTICE: Do not tape or tie down switch or lever.

https://truckmanualshub.com/

Prepare Jobsite and Equipment

Approach Trench (1)

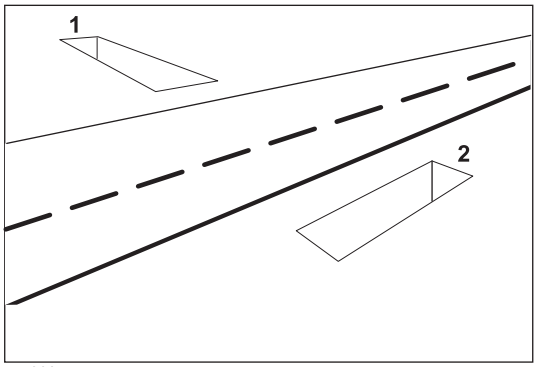

om902c.eps

1. Mark path where you intend to drill.
2. Dig an approach trench (1) along the intended bore path.

> **IMPORTANT:** The approach trench should be at least:
>
> - deep enough for pipe to lay flat and enter soil at correct angle
> - 20' (6 m) long
> - 4" (100 mm) wide

Target Trench (2)

1. Select a completion point for the drilling project.
2. Dig a target trench (2) **across** the anticipated completion point.

> **IMPORTANT:** The actual length of the target trench depends on soil conditions and length of pipe sections. Make it deep enough for drill bit to enter slightly above the trench floor.

Drill Rod and Equipment

1. Assemble at least 20' (6 m), but not more than 30' (9 m), of drill rod.

> **NOTICE:** More than 10-15' (3-4.5 m) of drill rod out of the trench increases the tendency of drill rod to bend.

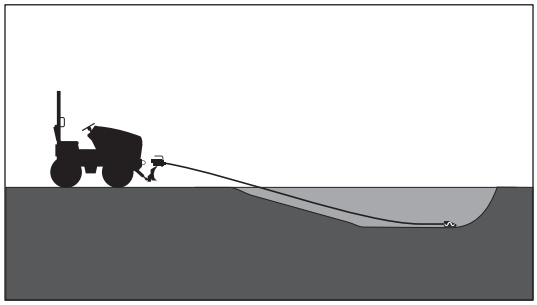
t14om010h.eps

2. Install drill bit to the cutting end of the drill string.
3. Put drill string in approach trench.
4. Move tractor to the approach trench and align the drilling attachment with the intended bore path.
5. Turn off engine.
6. Attach drill string to drilling attachment.

https://truckmanualshub.com/

Drill

IMPORTANT: For location and description of drilling control see "Drilling attachment control" on page 27.

EMERGENCY SHUTDOWN: Release drilling control and turn ignition switch to STOP.

1. Start tractor's engine and begin clockwise (forward) rotation.
2. Slowly advance tractor while maintaining clockwise rotation.

NOTICE:

- Drilling too quickly causes bit to drift off course and may bend drill rod. After bore path is established, speed may be slightly increased.
- If drill rod starts to bend, stop forward movement of unit and back the unit slightly until rod straightens. Do not drill with bent rod.
- If drill rod hits an obstruction, rotate drill string counterclockwise to back up slightly.

Using Drill String Guide

DANGER Turning shaft will kill you or crush arm or leg. Stay away.

NOTICE: Keep everybody at least 10' (3 m) away from drill rod during operation. Do not straddle trench or drill rod while drilling.

Use drill string guide to align drill string as it enters the soil. When using drill string guide, follow these guidelines:

- Use only approved Ditch Witch drill string guide (p/n 179-737).
- Stand only on the **left** side of the approach trench.
- Keep drill string guide at least 3' (1 m) behind bit.
- Use drill string guide to control only the first 5' (1.5 m) of the bore path.
- After drilling 5' (1.5 m), stop unit and remove drill string guide.
- **Do not** use drill string guide during backreaming or any time the drill string is being pulled back.

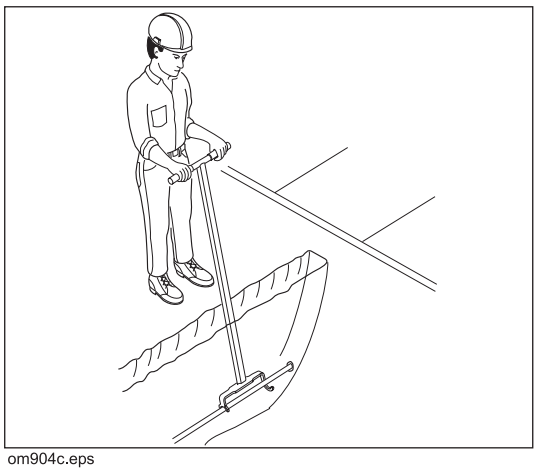

om904c.eps

https://truckmanualshub.com/

Add Rod

1. Stop drilling attachment.
2. Back up tractor 6" (150 mm) to loosen drill rod in ground.
3. Disconnect drill rod from drilling attachment.
4. Move tractor away from bore.
5. Add one drill rod to continue bore.

Backream

After drill bit enters target trench, the bore hole may be enlarged by changing the drill bit to a backreamer and drawing it back through the initial bore.

1. Turn tractor ignition switch to STOP.
2. Replace drill bit with backreamer.
3. Start tractor engine and begin clockwise rotation.

IMPORTANT: Always rotate clockwise during backreaming. Rotate counterclockwise only to dislodge a dry bore bit or reamer that has siezed in the bore hole.

4. Slowly back up tractor while maintaining rotation.
5. When backreamer exits the bore hole, stop rotation immediately.

IMPORTANT:

- Do not try to increase hole size too much in one pass. Several passes using successively larger reamers will save wear on machine.
- During backreaming, keep drill string straight. Sharp bends in the drill rod at the motor coupling can cause rod failure.

https://truckmanualshub.com/

Disassemble Joints

1. Press tab through hole in female side of joint using special tool or screwdriver.
2. Pull rods apart.

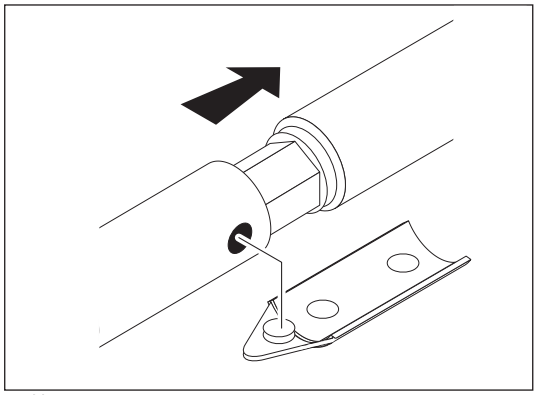

om905c.eps

https://truckmanualshub.com/

Systems and Equipment

Chapter Contents

Chain, Teeth, and Sprockets 102

- Chain and Tooth Maintenance 102
- Chain Types 102
- Chain Selection. 103

Optional Equipment 104

- RT40 Tractor 104
- H313/H314 Trencher. 104
- H331 Plow. 104
- H341 Saw . . . . . .

https://truckmanualshub.com/

Chain, Teeth, and Sprockets

Chain and Tooth Maintenance

- Always replace sprockets at the same time you replace the digging chain. Sprockets and chain are designed to work together. Replacing one without the other will cause premature wear of the new part.
- Keep digging teeth sharp. Using dull, worn teeth will decrease production and increase shock load to other trencher components. It can also cause chain stretch, which leads to premature chain wear and failure.
- Maintain the proper amount of tension on the digging chain. Overtightening will cause chain stretch and loss of machine performance. For correct tightening procedure, see page 120.
- Use the tooth pattern most appropriate for your digging conditions. If you move to a different soil type, contact your Ditch Witch dealer for information about the most effective chain type and tooth pattern.

Chain Types

Chain type	Features
4-pitch	standard chain
2-pitch	more teeth for smoother cutting
alternating side bar	prevents spoil compaction on chain
bolt-on adapters	allow easy configuration changes
Shark Chain II	versatile, virtually maintenance-free
combination	provides pick and shovel effect

https://truckmanualshub.com/

Chain Selection

These charts are meant as a guideline only. No one chain type works well in all conditions. See your Ditch Witch dealer for soil conditions and chain recommendations for your area. Ask for the latest Chain, Teeth, and Sprockets Parts Catalog.

- 1 = best
- 2 = better
- 3 = good
- 4 = not recommended

Chain	Sandy Soil	Soft Soil	Medium Soil	Hard Soil	Rocky Soil	Sticky Soil
4-pitch cup tooth	3	1	2	3	4	1
2-pitch cup tooth	2	3	1	1	3	4
bolt-on adaptor, 2-pitch	4	4	3	2	1	4
bolt-on adaptor/cup tooth combo	4	3	2	1	2	4
Shark Chain II	4	3	2	1	1	4
alternating side bar	4	4	4	4	4	1

Soil	Description
sandy soil	sugar sand, blow sand, or other soils where sand is the predominant component
soft soil	sandy loam
medium soil	loams, loamy clays
hard soil	packed clays, gumbo, all compacted soils
rocky soil	chunk rock, glacial till, cobble, rip rap, gravel
sticky soil	gumbo, sticky clays

https://truckmanualshub.com/

Optional Equipment

See your Ditch Witch dealer for more information about the following optional equipment.

RT40 Tractor

Equipment	Description
light kits	mount to 2-post ROPS
tires	26" or 29" are available
cold start kit	aids starting in cold weather
rear steer	provides greater maneuverability while working
rear counterweight	required for some backhoe and reel carrier applications
European compliance kit	includes lockable fuel cap

H313/H314 Trencher

Equipment	Description
booms	provide depth options of 3' (1 m) or 4' (1.2 m) or 5' (1.5 m)
mechanical trench cleaner	removes spoils from the trench floor

H331 Plow

Equipment	Description
blades	provide depth options of 12" (305 mm), 18" (457 mm), and 24" (610 mm)
reel carrier	designed to fit your Ditch Witch equipment and speed cable installation
toe	stabilize the plow for more constant depth
bullet	allow a larger cavity for the material being installed

H341 Saw

Equipment	Description
bits and bit holders	replace as needed to increase efficiency and keep from damaging machine
block repair jigs	use to repair worn or damaged blocks or plates housing the bit holder; use block repair jig available from your Ditch Witch dealer and an E7018 or equivalent

https://truckmanualshub.com/

Complete the Job

Chapter Contents

Restore Jobsite 106

- Backfilling 106

Rinse Equipment 106

Stow Tools 106

https://truckmanualshub.com/

Restore Jobsite

After product is installed, return spoils to the trench with backfill blade.

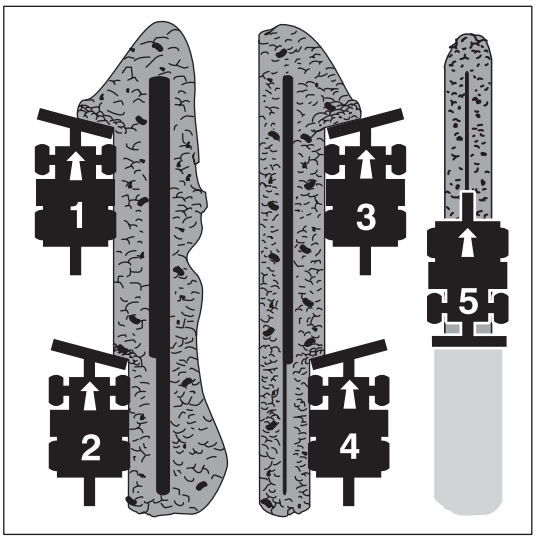

t14om086h.eps

Backfilling

1. Position unit at end of trench, several feet from spoils. Aim tractor at outer edge of spoils.
2. Adjust backfill blade to fit land contour.
3. Move outer edge of spoils toward trench. Take two or more passes at spoils rather than moving all spoils at once.
4. Repeat on other side of trench, if necessary.
5. Engage float and make final pass in reverse over trench.

Rinse Equipment

Spray water onto equipment to remove dirt and mud.

NOTICE: Do not spray water onto operator's console. Electrical components could be damaged. Wipe down instead.

Stow Tools

Make sure all tools and accessories are loaded on trailer.

https://truckmanualshub.com/

Service

Chapter Contents

Service Precautions 108

Lubrication Overview 109

Recommended Lubricants/Service Key 110

- Engine Oil Selection Chart 111

10 Hour 112

50 Hour 125

250 Hour 128

500 Hour 129

1000 Hour 133

As Needed 135

https://truckmanualshub.com/

Service Precautions

WARNING Incorrect procedures could result in death, injury, or property damage. Learn to use equipment correctly.

NOTICES:

- Unless otherwise instructed, all service should be performed with engine off.
- Refer to engine manufacturer's manual for engine maintenance instructions.
- Before servicing equipment, lower unstowed attachments to ground.

Welding Precaution

NOTICE: Welding can damage electronics.

- Disconnect battery at battery disconnect switch before welding to prevent damage to battery. Do not turn off battery disconnect switch with engine running or alternator and other electronic devices may be damaged.
- Connect welder ground clamp close to welding point and make sure no electronic components are in the ground path.
- Always disconnect the ECU ground connection from the frame, harness connections to the ECU, and other electronic components prior to welding on machine or attachments.

Cleaning Precaution

NOTICE: When cleaning equipment, do not spray electrical components with water.

https://truckmanualshub.com/

Lubrication Overview

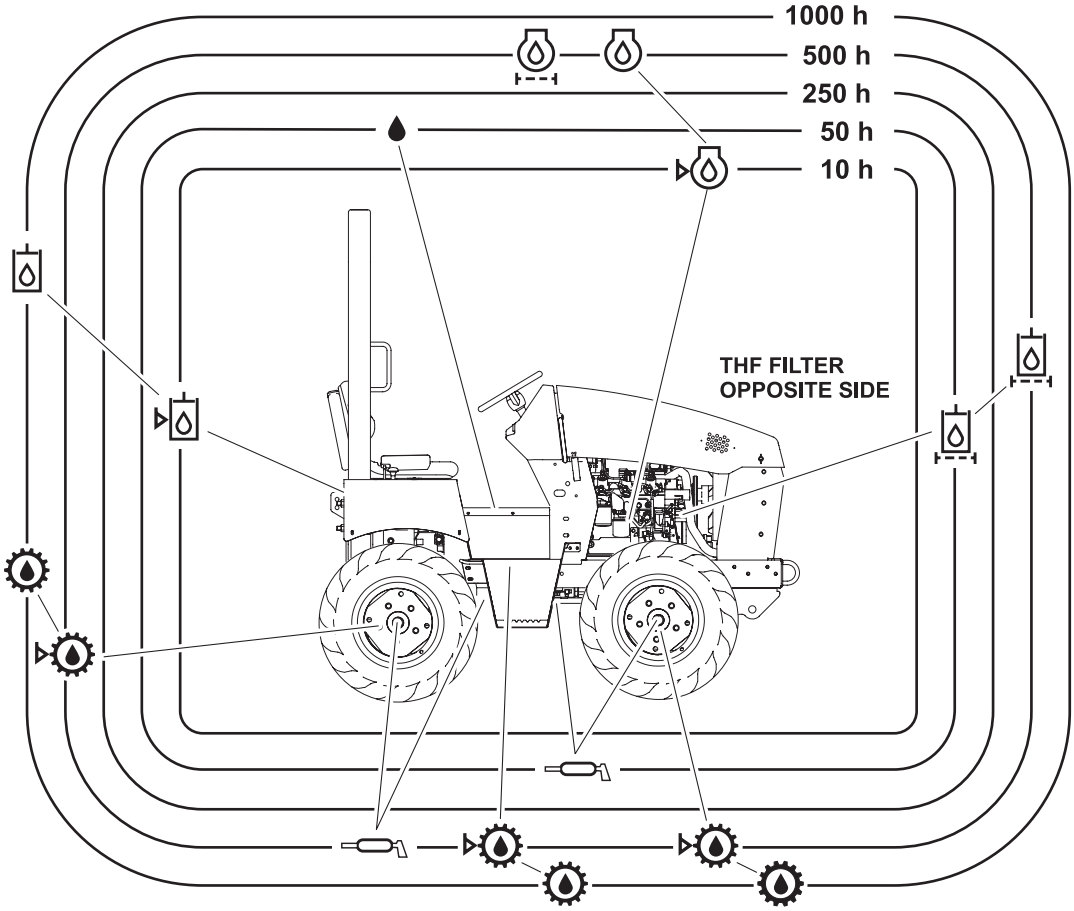

t14om052h.eps

https://truckmanualshub.com/

Recommended Lubricants/Service Key

Item	Description
DEO	Diesel engine oil meeting API service classification CF-4 or E1-96 and SAE viscosity recommended by engine manufacturer (SAE 15W40)
MPG	Multipurpose grease meeting ASTM D217 and NLGI 5
MPL	Multipurpose gear oil meeting API service classification GL-5 (SAE 80W90)
THF	Tractor hydraulic fluid, similar to Phillips 66 HG, Mobilfluid 423, Chevron Tractor Hydraulic Fluid, Texaco TDH Oil, or equivalent
	Check level of fluid or lubricant
	Check condition
	Filter
	Change, replace, adjust, service, or test

Proper lubrication and maintenance protects Ditch Witch equipment from damage and failure. Service intervals listed are for minimum requirements. In extreme conditions, service machine more frequently. Use only recommended lubricants. Fill to capacities listed in "Specifications" on page 143.

For more information on engine lubrication and maintenance, see your Deutz® engine manual.

NOTICE:

- Use only genuine Ditch Witch parts, filters, approved lubricants, TJC, and approved coolants to maintain warranty.
- Use the "Service Record" on page 163 to record all required service to your machine.

https://truckmanualshub.com/

Engine Oil Selection Chart

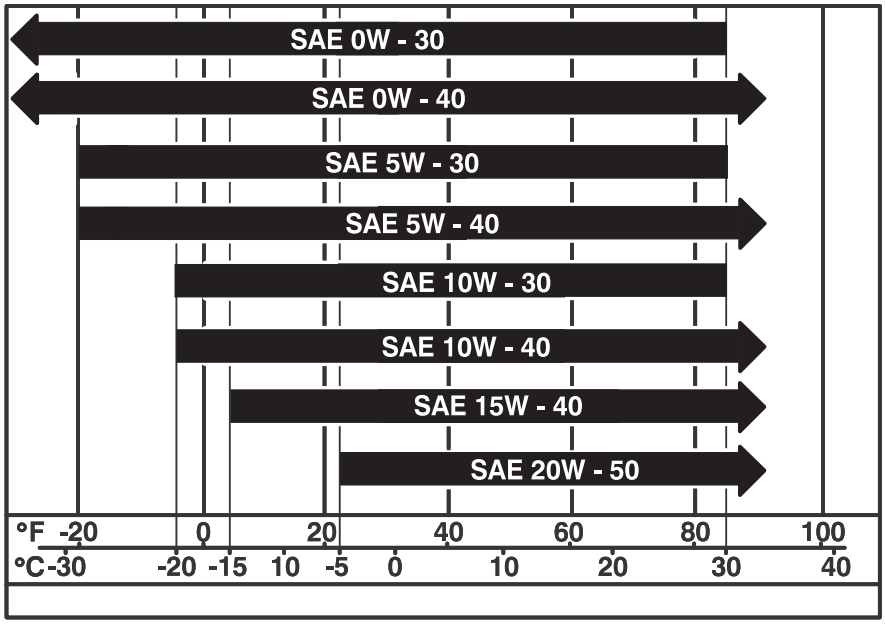

t11om076c.eps

Select oil based on ambient temperature range expected before next oil change.

WARNING Incorrect procedures could result in death, injury, or property damage. Learn to use equipment correctly.

NOTICE:

- Unless otherwise instructed, all service should be performed with engine off.
- Refer to engine manufacturer's manual for engine maintenance instructions.
- Before servicing equipment, lower unstowed attachments to ground.

https://truckmanualshub.com/

10 Hour

Location	Task	Notes
TRACTOR	Check engine oil level	DEO
	Check hydraulic fluid level and reservoir breather cap	THF
	Check radiator/oil cooler	
	Check hydraulic hoses	
	Check tire pressure and lugnuts	20-30 psi (1.4-2.1 bar) 95 ft•lb (129 N•m)
	Check air filter restriction indicator	
TRENCHER	Lube trencher tail roller	MPG
	Lube trencher pivot	MPG
	Lube trencher pivot stub	MPG
	Lube trencher auger bearings	MPG
	Lube auger sleeve	MPG
	Check attachment mounting bolts	200 ft•lb (271 N•m)
	Check digging chain	
	Check digging chain tension	1.5-2.0" (40-50 mm)
PLOW	Clean feed tube	
	Check plow arm pins and bushings	
	Check attachment mounting bolts	200 ft•lb (271 N•m)
	Check plow vibrator oil	MPL
COMBO	Complete all service items for trencher and plow	
SAW	Clean saw	
	Check attachment mounting bolts	200 ft•lb (271 N•m)
	Check bits	

https://truckmanualshub.com/

Tractor

Check Engine Oil Level

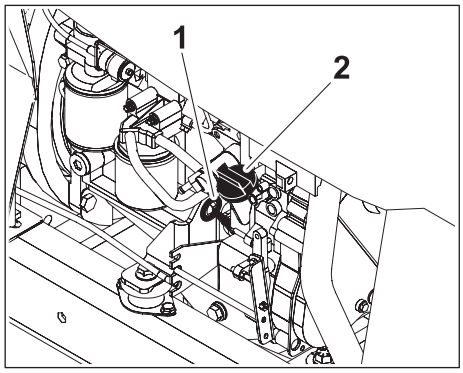

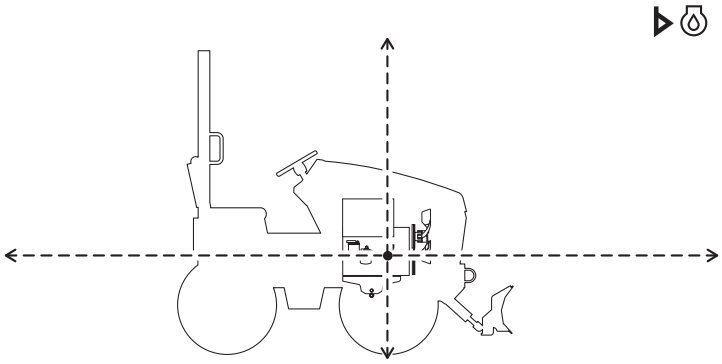

While engine oil is warm, check oil level at dipstick (1) every 10 hours. Add DEO at fill (2) as necessary to keep oil level at highest line on dipstick.

IMPORTANT: See page 110 for DEO specifications.

Check Hydraulic Fluid Level and Reservoir Breather Cap

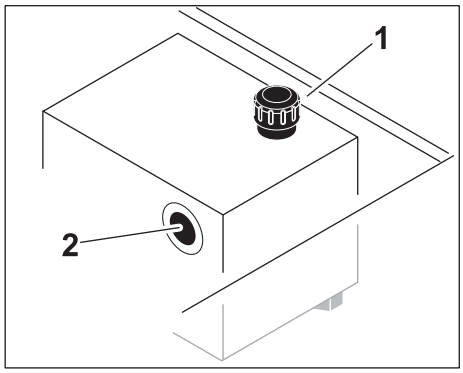

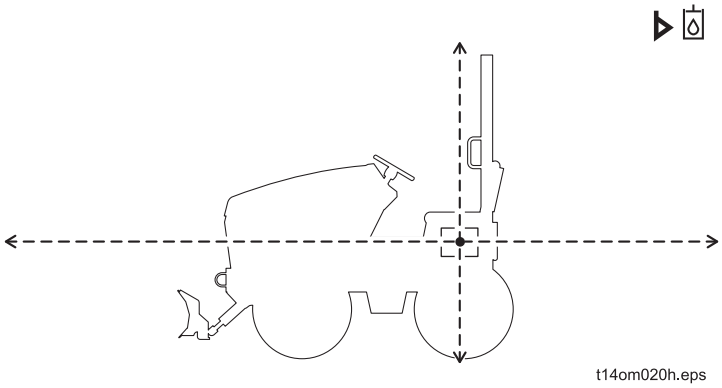

With tractor level, raise seat and check fluid at sight glass (2) every 10 hours. Fluid should be halfway up sight glass. Add THF at fill (1) as necessary.

Check hydraulic reservoir breather cap (1) every 10 hours. Clean as needed.

https://truckmanualshub.com/

Check Radiator/Oil Cooler

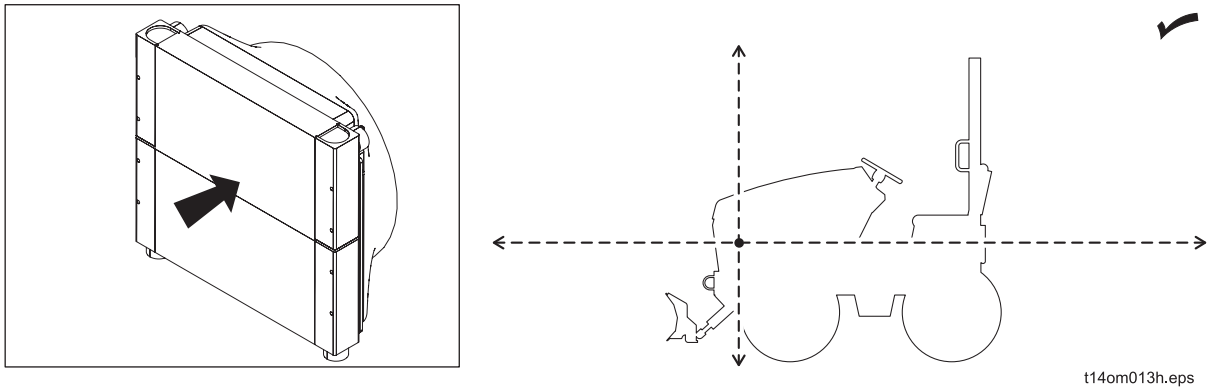

Check radiator/oil cooler for dirt and debris. Clean with compressed air or spray wash as needed. See "Clean Radiator/Oil Cooler" on page 125.

https://truckmanualshub.com/

Check Hydraulic Hoses

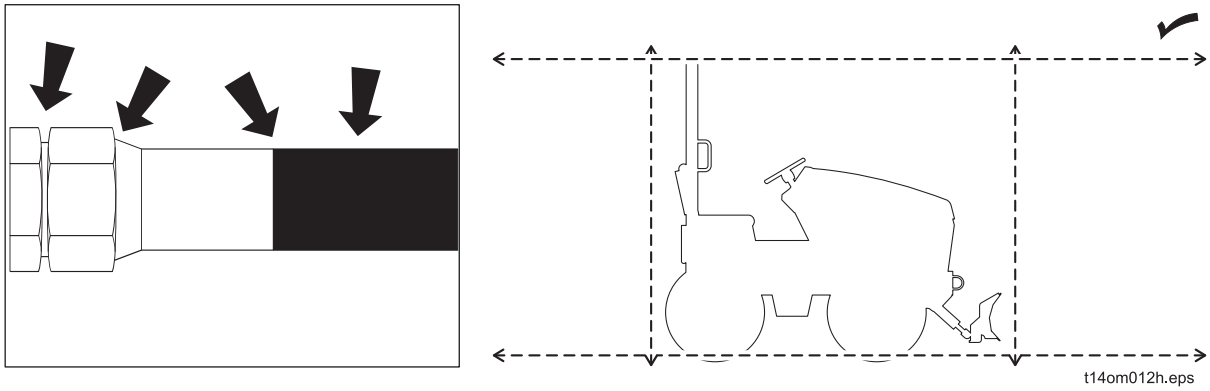

Check all hydraulic hoses every 10 hours.

WARNING Fluid or air pressure could pierce skin and cause injury or death. Stay away.

NOTICE: Escaping pressurized fluid can cause injury or pierce skin and poison.

- Before disconnecting a hydraulic line, turn engine off and operate all controls to relieve pressure. Lower, block, or support any raised component with a hoist. Cover connection with heavy cloth and loosen connector nut slightly to relieve residual pressure. Catch all fluid in a container.
- Before using system, check that all connections are tight and all lines are undamaged.
- Fluid leaks can be hard to detect. Use a piece of cardboard or wood, rather than hands, to search for leaks.
- Wear protective clothing, including gloves and eye protection.

If you are injured, seek immediate medical attention from a doctor familiar with this type of injury.

https://truckmanualshub.com/

Check Tires

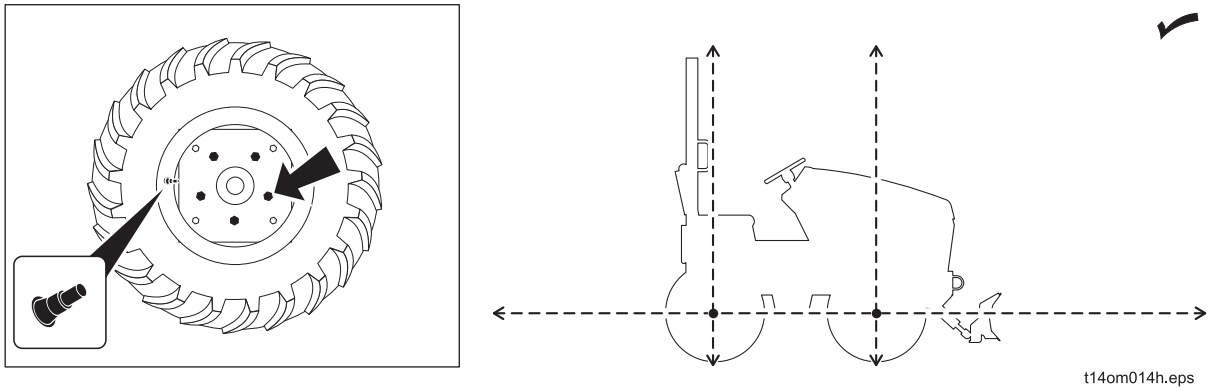

Check tire pressure every 10 hours. Use water-rinsable air gauge if tire ballast is used.Use water-rinsable air gauge if tire ballast is used.

Tire option	Maximum pressure
26 x 12.00-12 4-ply bar lug	20 psi (1.4 bar)
29 x 12.50-15 4-ply bar lug	30 psi (2.1 bar)

Tighten lugnuts to 95 ft•lb (129 N•m).

Check Air Filter Restriction Indicator

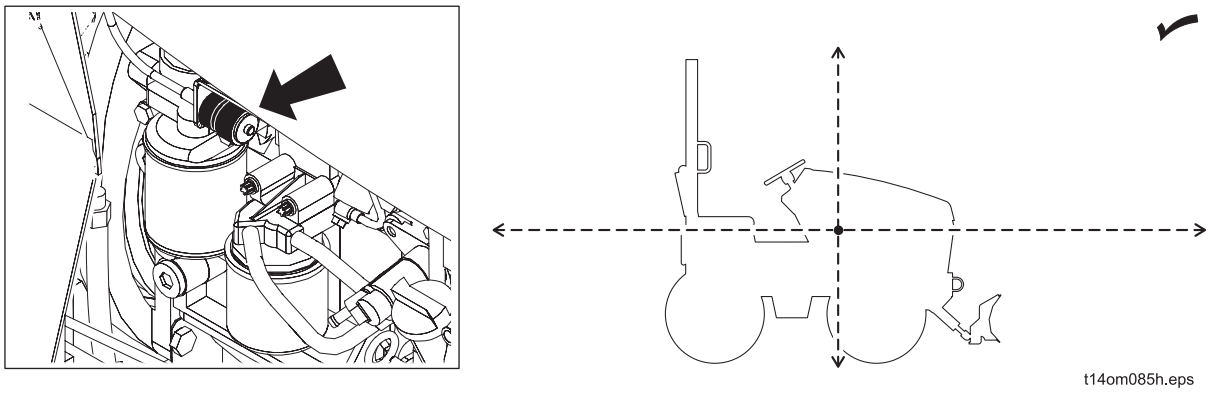

Check air filter restriction indicator every 10 hours. Change air filter as indicated. See"Change Air Filter" on page 136.

https://truckmanualshub.com/

Trencher

Lube Trencher Tail Roller

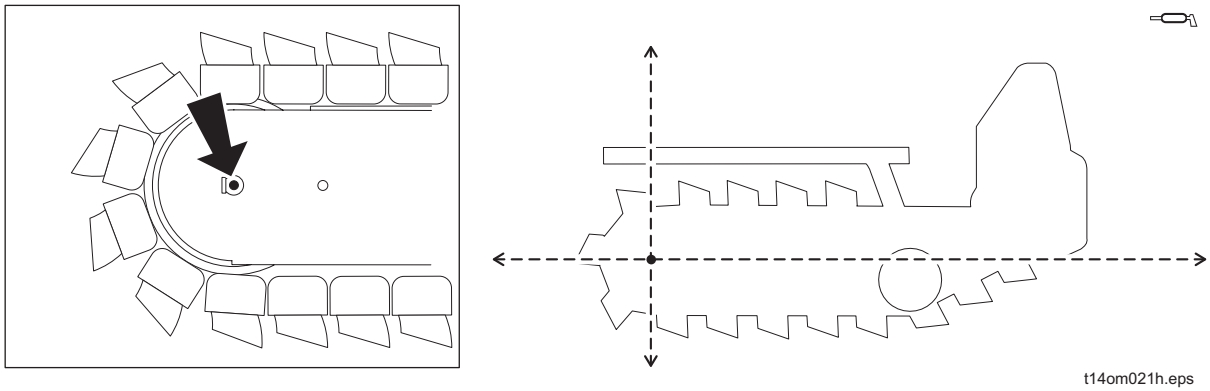

Remove plug, wipe zerk clean and lube every 10 hours with MPG.

Lube Trencher Pivot

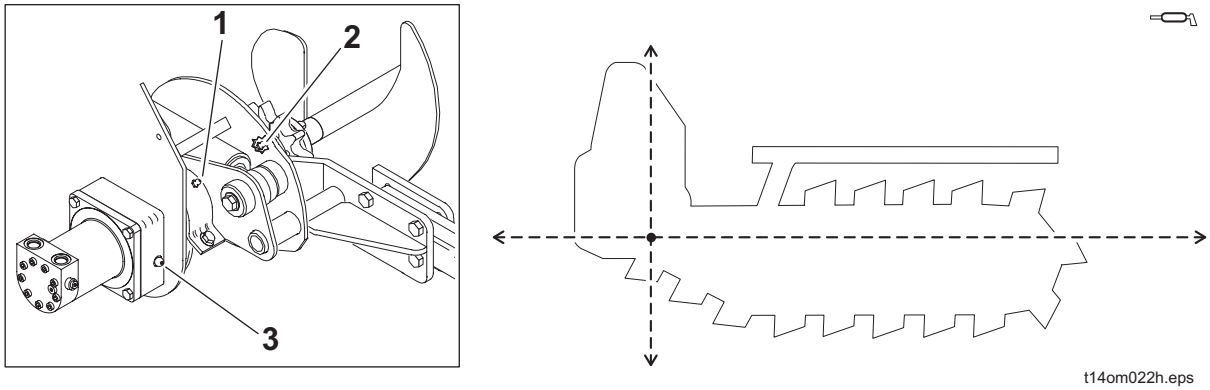

Wipe three zerks clean and lube every 10 hours with MPG.

- Lube zerk (3) until grease appears at headshaft hub.
- Lube zerks (1, 2) with 8-10 pumps of MPG.

https://truckmanualshub.com/

Lube Trencher Pivot Stub

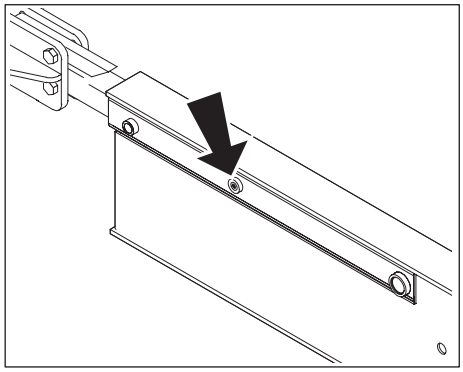

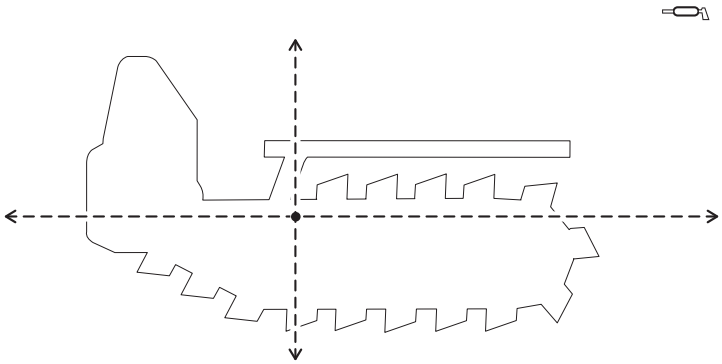

t14om023h.eps

Wipe zerk clean and lube every 10 hours with MPG.

Lube Trencher Auger Bearings and Sleeve

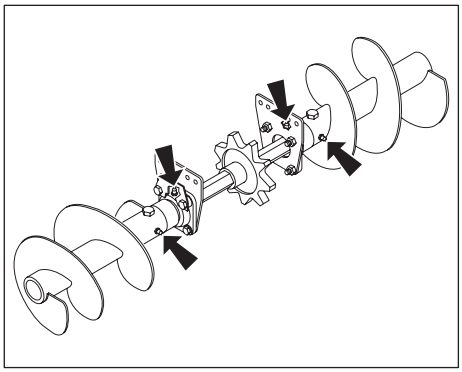

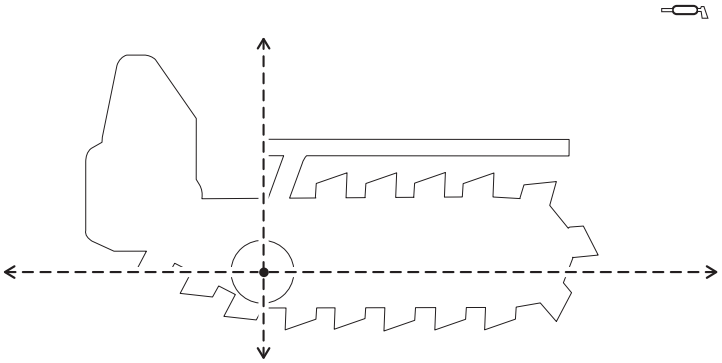

t14om024h.eps

Wipe four zerks clean and lube every 10 hours with MPG every 10 hours.

Check Trencher Mounting Bolts

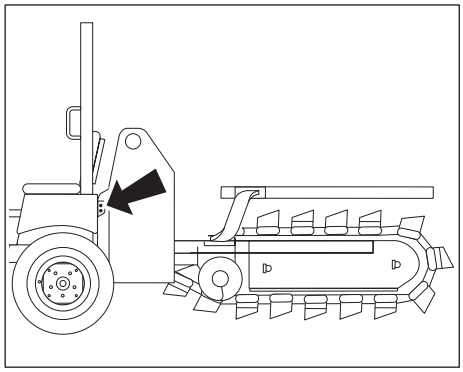

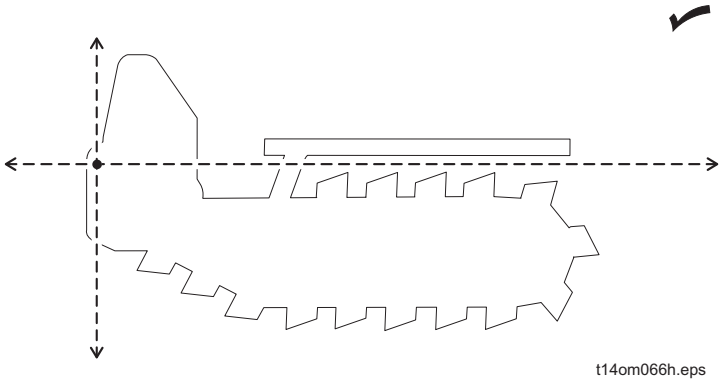

t14om066h.eps

Check bolts every 10 hours. Tighten to 200 ft•lb (271 N•m).

https://truckmanualshub.com/

Check Digging Chain

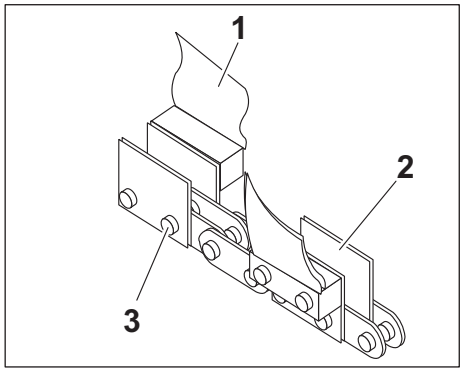

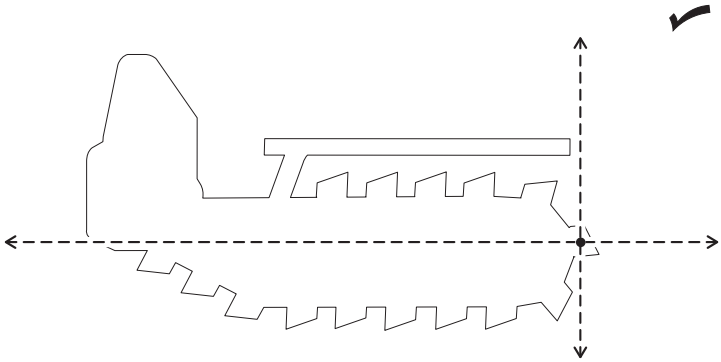

t14om030h.eps

Check teeth (1) for wear every 10 hours. Replace worn teeth, using Ditch Witch replacement parts and maintaining original tooth pattern.

Check chain every 10 hours. Replace worn or broken chains. If sidebars (2) are bent or loose on chain pins (3), chain spacers should be used to join sidebars.

For more efficient digging, contact your Ditch Witch dealer for information about the tooth pattern best suited to your jobsite, or see page 102.

IMPORTANT: If using rock chain bits, check that bits rotate freely. Clean chain and check bits after each use. Replace bit when carbide cap or insert is worn or adapter can be damaged.

https://truckmanualshub.com/

Check Digging Chain Tension

Check digging chain tension every 10 hours.

Sprocket Boom

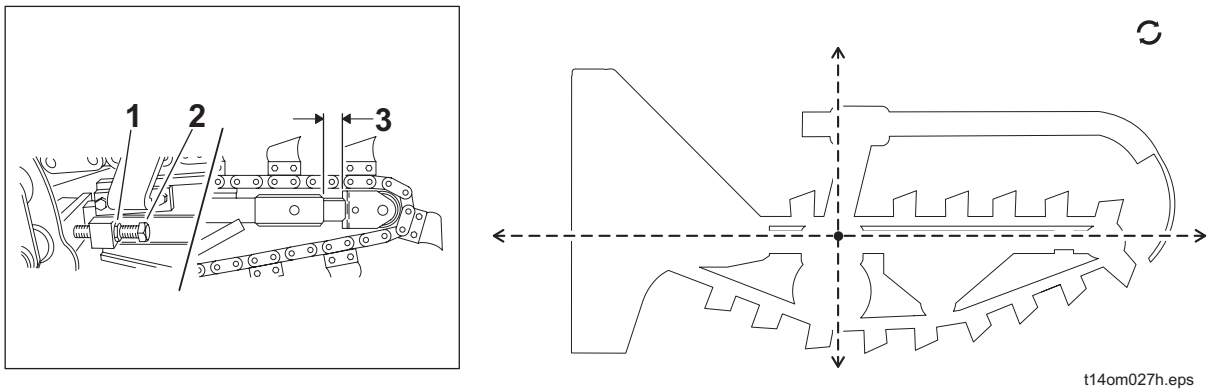

Tension is correct when 2" (50 mm) of slide and stop (3) are exposed. Adjust tension with boom horizontal by tightening or loosening adjustment screws (2) and jam nuts (1).

Roller Boom with Adjusting Screw

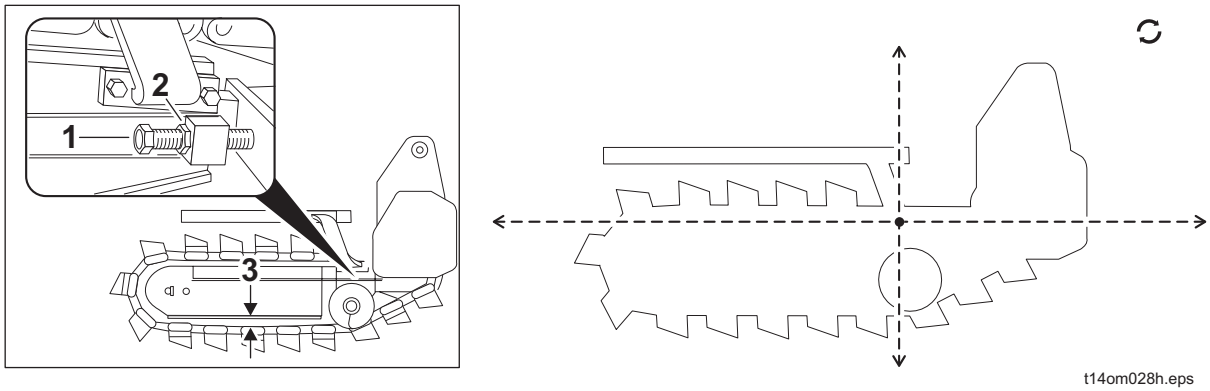

With boom horizontal, measure distance from bottom of boom to chain (3). When properly adjusted, distance should be 1.5-2" (40-50 mm). Adjust tension by tightening or loosening adjustment screw (1) and jam nut (2).

https://truckmanualshub.com/

Roller Boom with Grease Cylinder

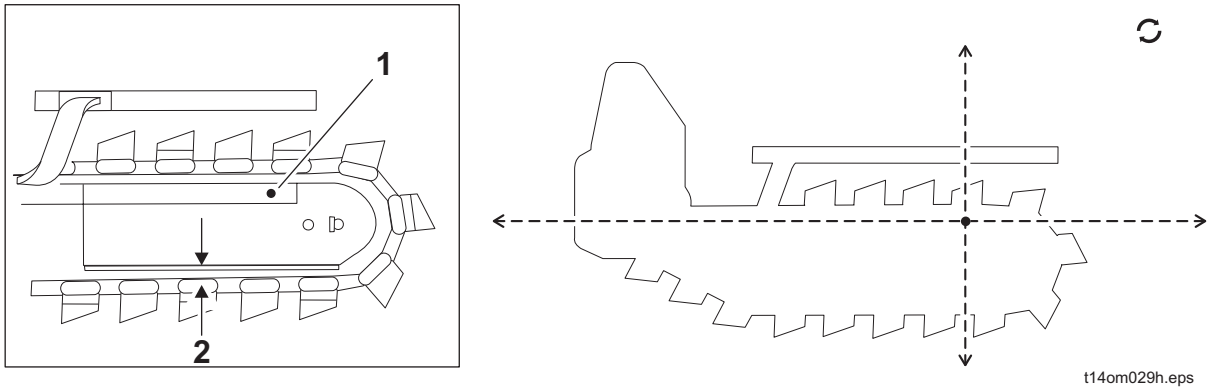

With boom horizontal, measure distance from bottom of boom to chain (2). When properly adjusted, distance should be 1.5-2.0" (40-50 mm).

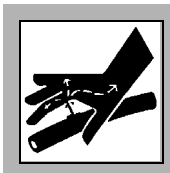

WARNING Fluid pressure could pierce skin and cause injury or death. Stay away.

NOTICE: Service digging boom grease cylinder only while standing on opposite side of boom. Wear gloves and safety glasses, and cover fitting with cloth when relieving pressure in cylinder.

To tighten chain, remove plug and pump MPG into cylinder (1). To relieve chain tension, loosen plug on grease cylinder.

Plow

Clean Feed Tube

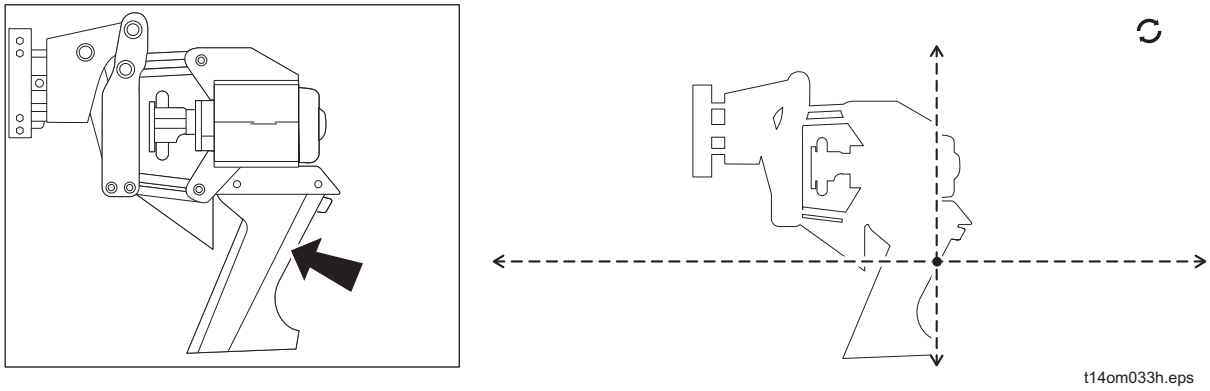

Clean feed tube every 10 hours. Oil if necessary.

https://truckmanualshub.com/

Check Plow Arm Pins and Bushings

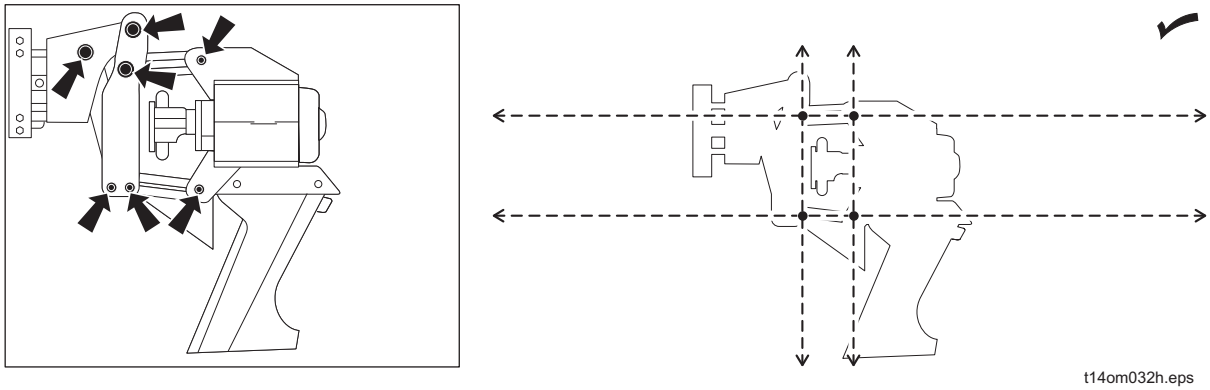

Check plow arm pins and bushings every 10 hours. Replace bushings at first sign of wear.

Check Plow Mounting Bolts

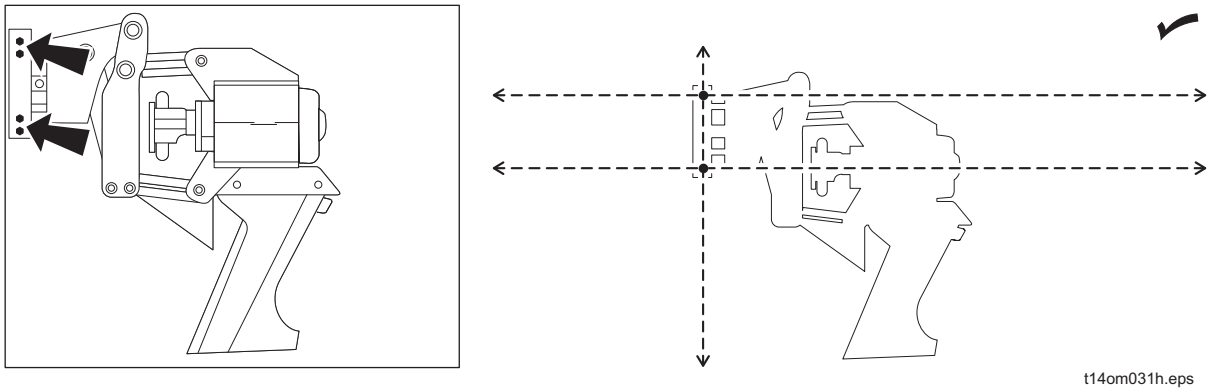

Check bolts every 10 hours. Tighten to 200 ft•lb (271 N•m). Check floating cable feed bolts for looseness or wear.

https://truckmanualshub.com/

Check Plow Vibrator Oil Level

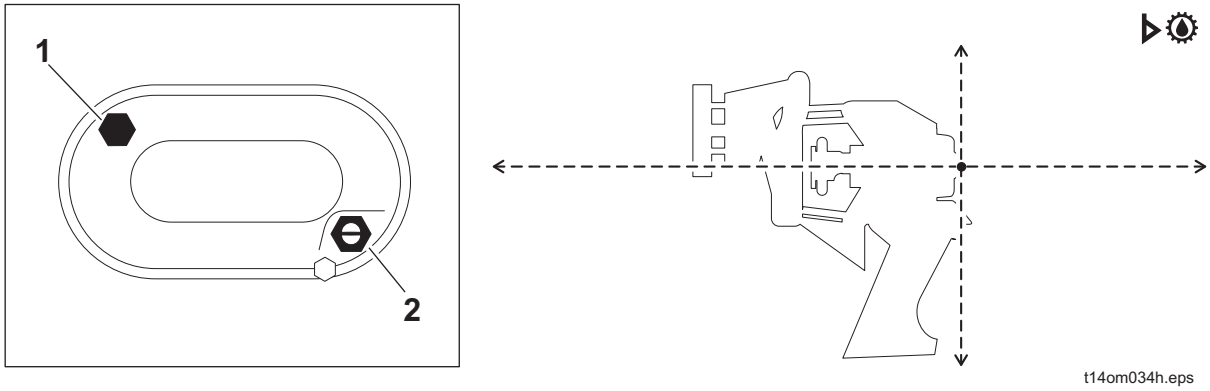

Check plow vibrator oil level every 10 hours. With vibrator horizontal, oil should be halfway up sight glass (2). Add MPL as needed at fill (1).

IMPORTANT: Do not add oil to plow vibrator when hot. Let plow vibrator cool before removing fill plug.

Saw

Clean Saw

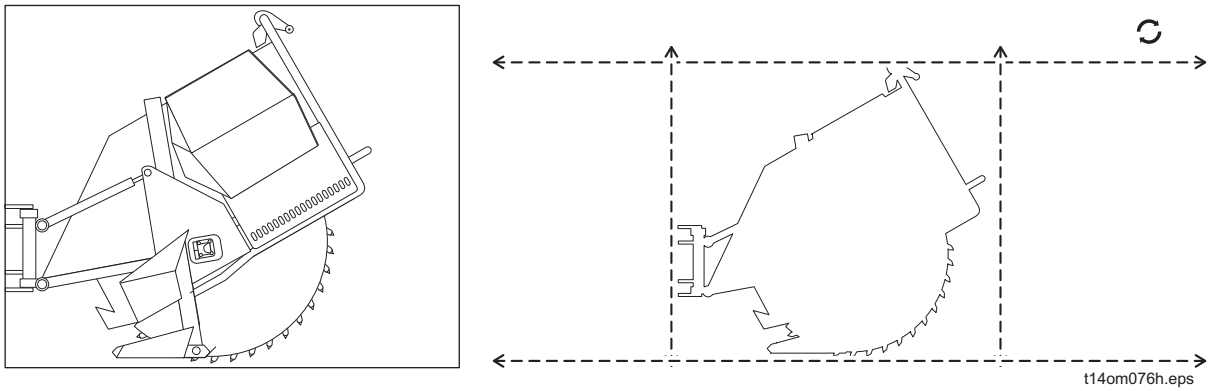

Clean saw every 10 hours. Wash bolts and mounting blocks with high-pressure water.

https://truckmanualshub.com/

Check Bits

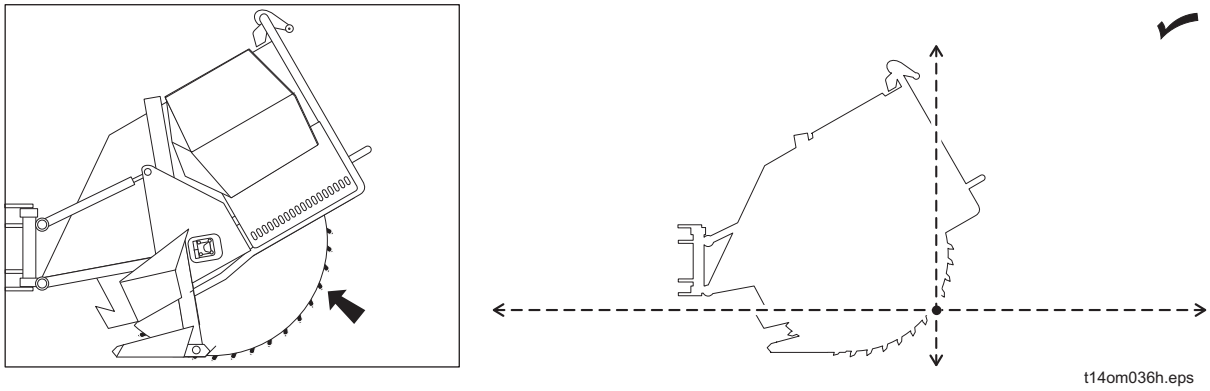

Check bits every 10 hours. Clean and check bits for free rotation. If bits are stuck, remove and clean packed soil from retaining ring. Replace bit when tungsten cap or insert is worn.

Check Saw Mounting Bolts

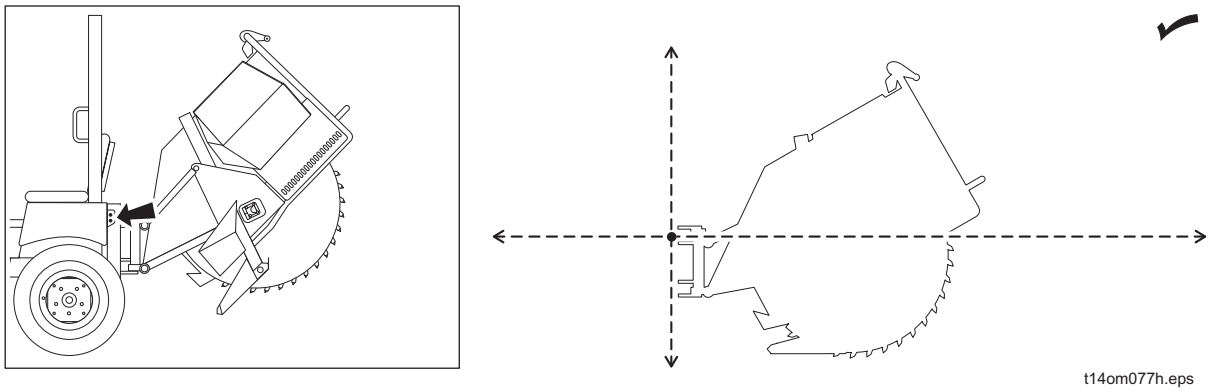

Check attachment mounting bolts every 10 hours. Tighten to 200 ft•lb (271 N•m).

https://truckmanualshub.com/

50 Hour

Location	Task	Notes
TRACTOR	Clean radiator	
	Check belt tension	27-30 ft•lb (36-40 N•m)
	Lube backfill blade swing	MPG
TRENCHER/ COMBO	Lube frame slide	MPG
SAW	Lube lift cylinders	MPG

Clean Radiator/Oil Cooler

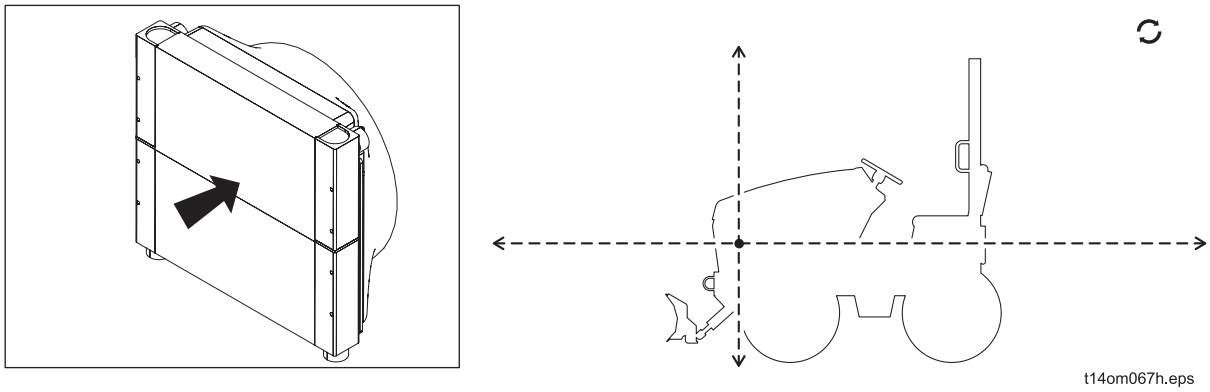

Clean radiator/oil cooler with compressed air or spray wash every 50 hours of operation. Clean more often if operating in dusty or grassy conditions. Be careful not to damage fins with high-pressure air or water.

To clean:

1. Clean fins with compressed air or spray wash.
2. Remove grill and spray through radiator away from engine.
3. If grease and oil are present on radiator, spray with solvent and allow to soak overnight.

https://truckmanualshub.com/

Check Belt Tension

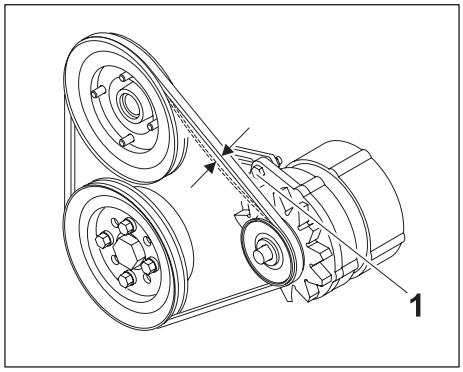

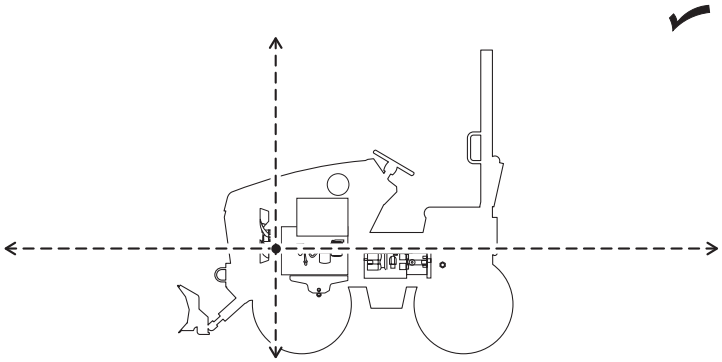

t14om015h.eps

Check belt tension every 50 hours. Belt is properly tensioned when it moves about 3/8" (10 mm) when pushed. If belt is loose, loosen alternator bolts (1) and adjust alternator. Retighten bolts.

Lube Backfill Blade Swing

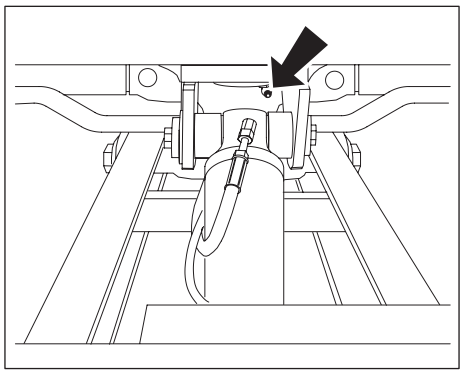

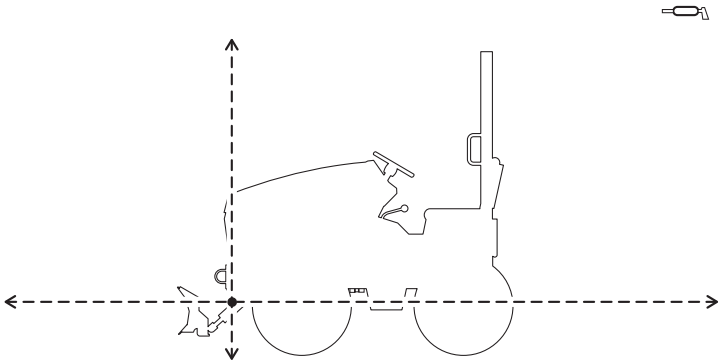

t14om078h.eps

Lube zerk with 2-3 shots of MPG every 50 hours.

https://truckmanualshub.com/

Trencher

Lube Frame Slide

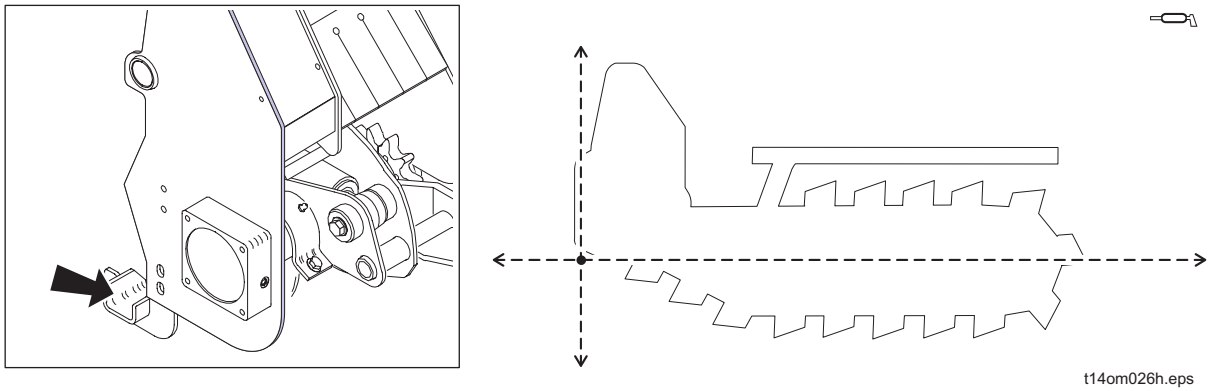

Lube frame slide with MPG every 50 hours.

Saw

Lube Lift Cylinders

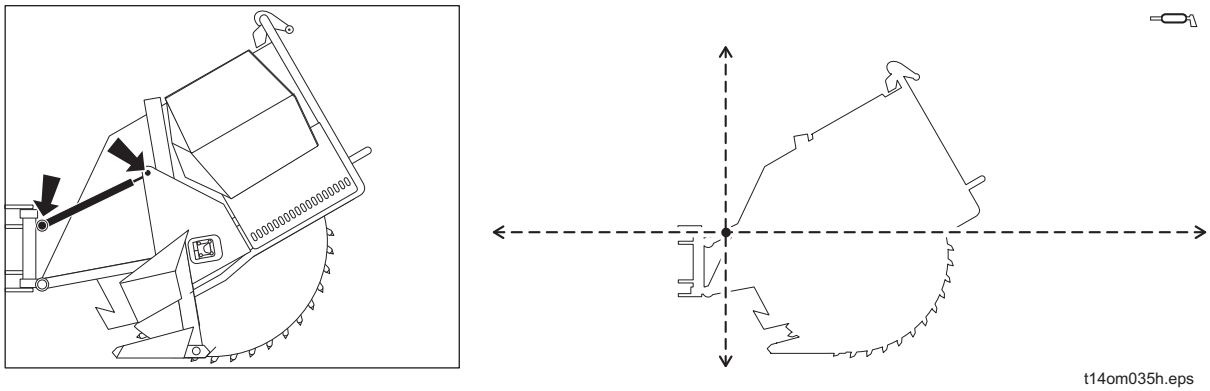

Lube lift cylinders with MPG every 50 hours. Lube rod and barrel end of each cylinder.

https://truckmanualshub.com/

250 Hour

Change Inline Fuel Filter

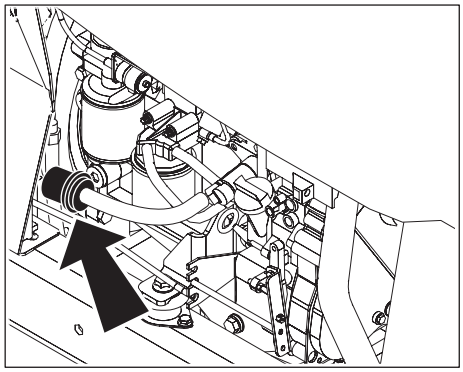

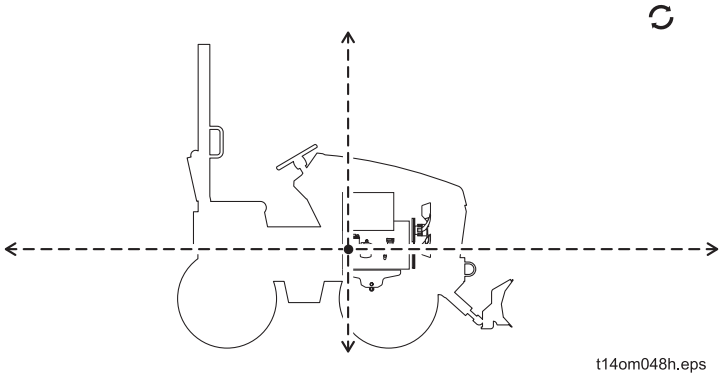

Change inline fuel filter every 250 hours.

https://truckmanualshub.com/

500 Hour

Location	Task	Notes
TRACTOR	Change engine oil and filter	DEO
	Change primary fuel filter	
	Change hydraulic filter	
	Check differential oil	MPL
	Check gearbox oil	MPL
	Lube cross and bearings	MPG
	Lube universal joints	MPG
PLOW/ COMBO	Change plow vibrator oil	MPL

Tractor

Change Engine Oil and Filter

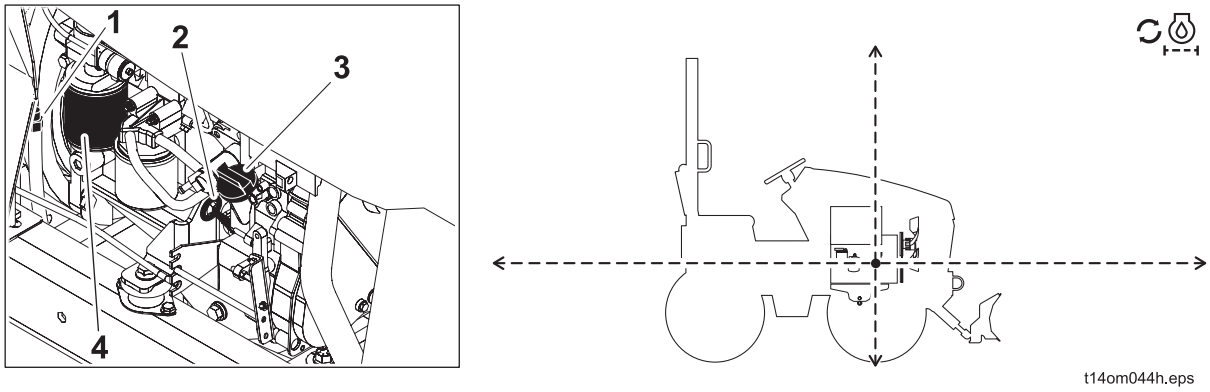

Change engine oil and filter every 500 hours.

To change:

1. Drain crankcase (1) while oil is warm.
2. Replace filter (4) each time oil is changed.
3. Add DEO at fill neck (3) until oil level is at highest line on dipstick (2). Capacity is 6 qt (5.5 L).

https://truckmanualshub.com/

Change Primary Fuel Filter

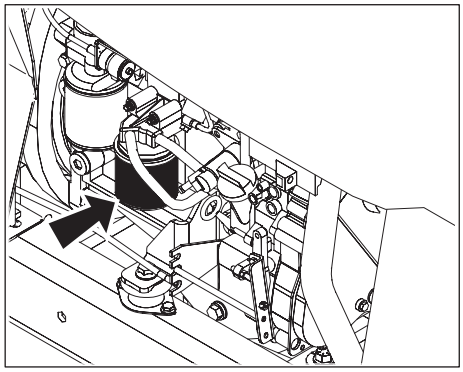

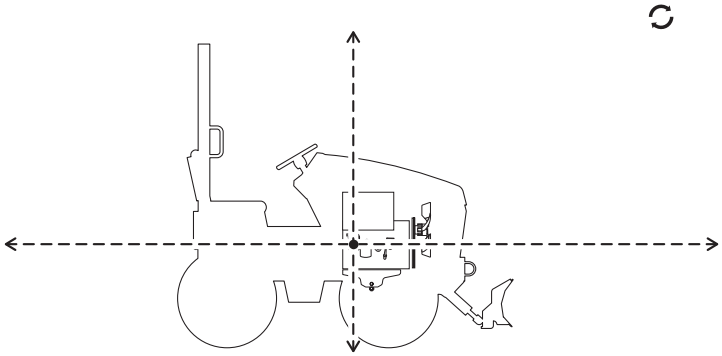

t14om016h.eps

Change primary fuel filter every 500 hours.

Change Hydraulic Filter

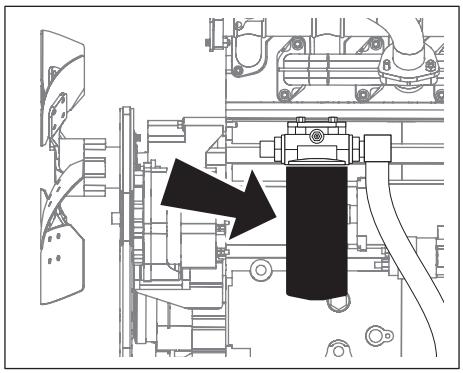

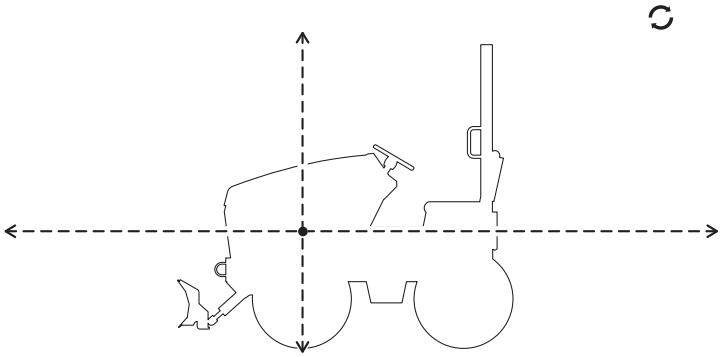

t14om043h.eps

Change hydraulic filter every 500 hours.

Check Differential Oil Level

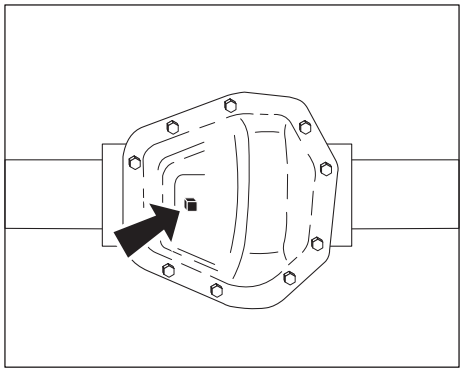

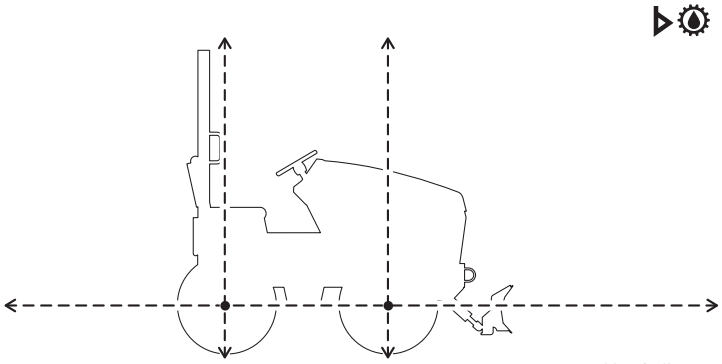

t14om074h.eps

Check oil level at fill plug every 500 hours. Add MPL as needed.

https://truckmanualshub.com/

Check Gearbox Oil Level

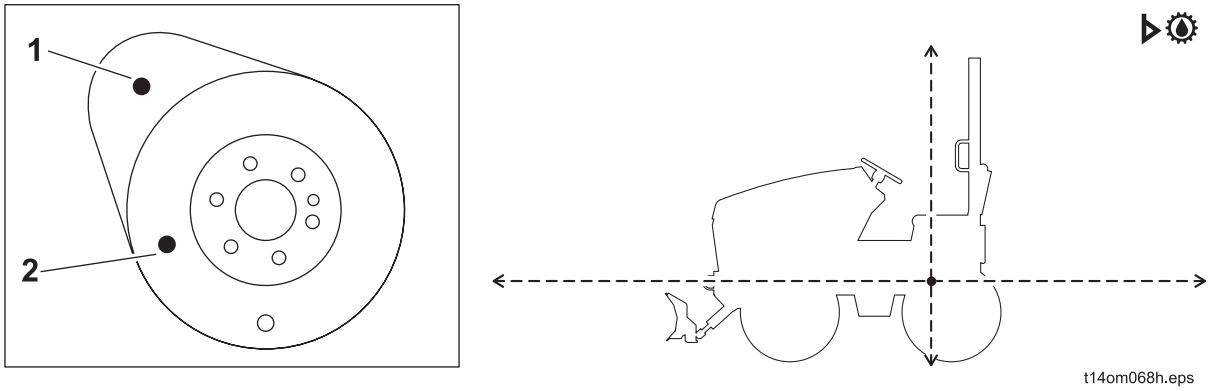

Check oil level at check plug (2) every 500 hours. Add MPL at fill (1) as needed.

Lube Cross and Bearings

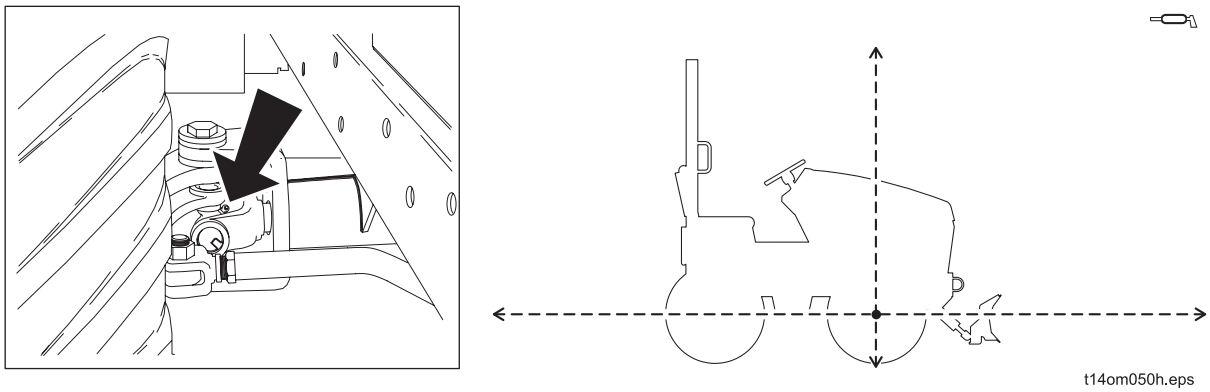

Lube zerks with 2-3 shots of MPG every 500 hours.

Lube Universal Joints

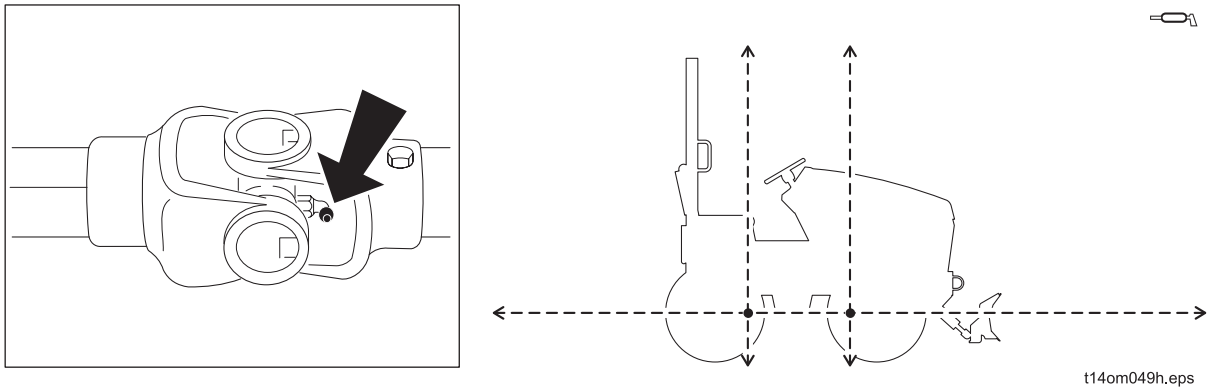

Lube zerks with MPG every 500 hours.

https://truckmanualshub.com/

Plow

Change Plow Vibrator Oil

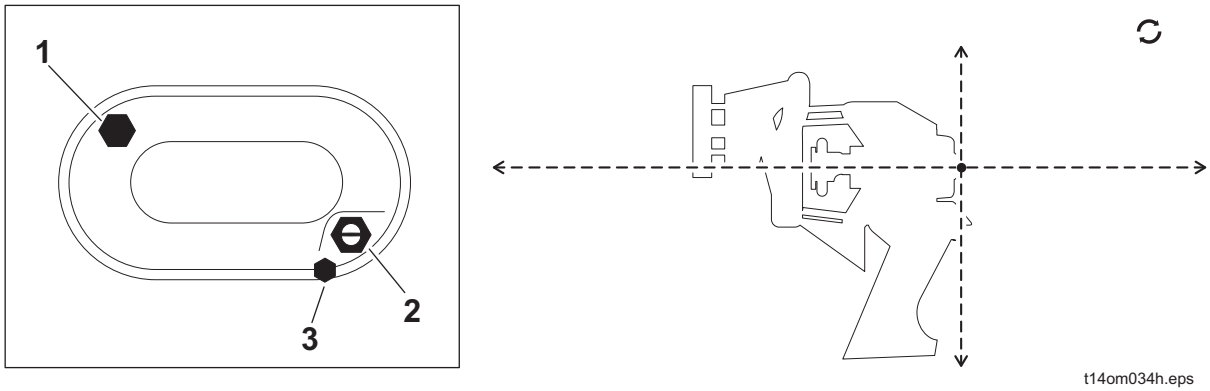

Change plow vibrator oil every 500 hours.

To change:

1. Open fill (1) to vent vibrator.
2. Drain oil at drain plug (3).
3. Replace plug and move plow vibrator to horizontal position.
4. Add MPL at fill (1) until oil is halfway up sight glass (2).

IMPORTANT: Do not drain oil from plow vibrator when hot. Let vibrator cool before removing drain plug.

https://truckmanualshub.com/

1000 Hour

Location	Task	Notes
TRACTOR	Change differential oil	MPL
	Change hydraulic fluid and filter	THF
	Change ground drive gearbox oil	MPL

Change Differential Oil

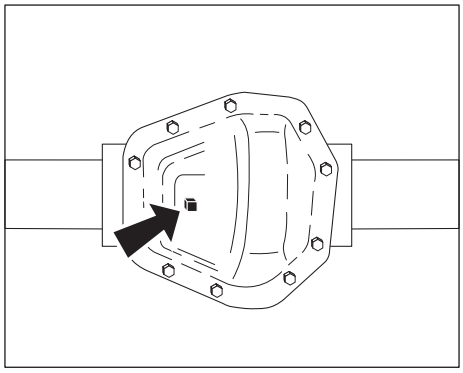

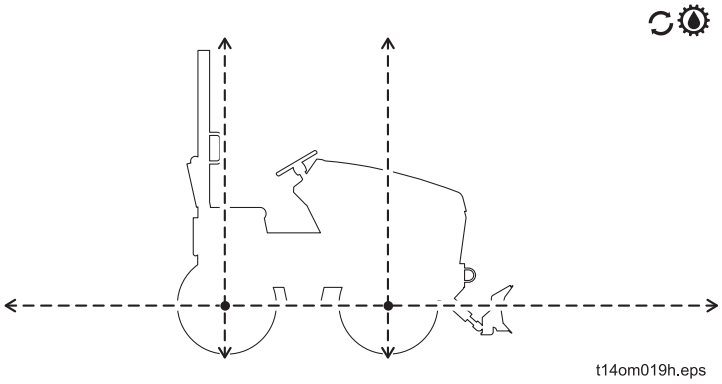

Change differential oil every 1000 hours.

To change:

1. Remove cover and drain oil.
2. Replace cover.
3. Add MPL at fill plug until oil is visible at plug.
   - For model 44 differentials, capacity is 5 pt (2.3 L) for front and 5.5 pt (2.6 L) for rear.
   - For model 60 differentials, capacity is 5.9 pt (2.8 L) for front and rear.

https://truckmanualshub.com/

Change Hydraulic Oil and Filter

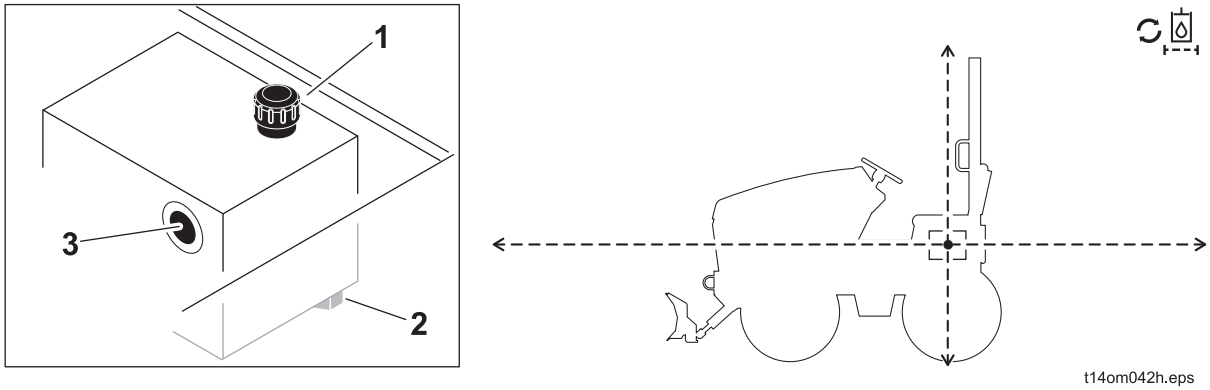

Change hydraulic oil and filter every 1000 hours.

To change:

1. Remove drain plug (2).
2. Drain fluid and replace plug.
3. Change filter (see page 130).
4. Add THF at fill (1). until fluid is at halfway point on sight glass (3). Hydraulic reservoir capacity is 9.5 gal (36 L). Hydraulic system capacity is 13 gal (49 L).

Change Ground Drive Gearbox Oil

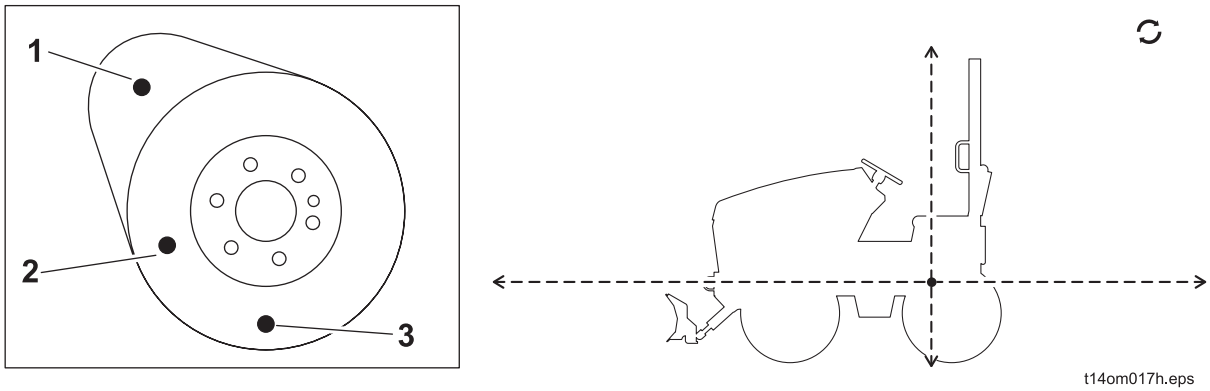

Change ground drive gearbox oil every 1000 hours.

To change:

1. Remove drain plug (2).
2. Drain oil and replace plug.
3. Add MPL at fill (1) until oil comes out at check plug (2). Capacity is 2 pt (0.96 L).

https://truckmanualshub.com/

As Needed

Location	Task	Notes
TRACTOR	Adjust parking brake	
	Change air filter	
TRENCHER	Replace digging chain and teeth	
PLOW	Replace sod cutter and blade	
	Replace plow blade pins and bushings	
COMBO	Complete all service items for trencher and plow	
BACKHOE	Replace backhoe pins and bushings	

Tractor

Adjust Parking Brake

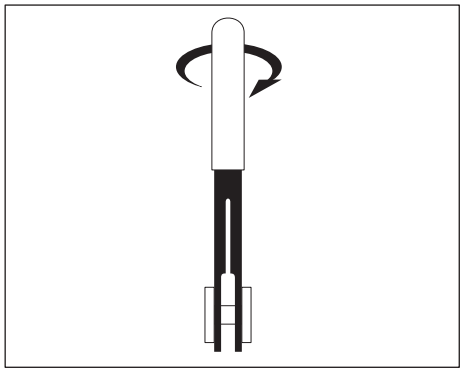

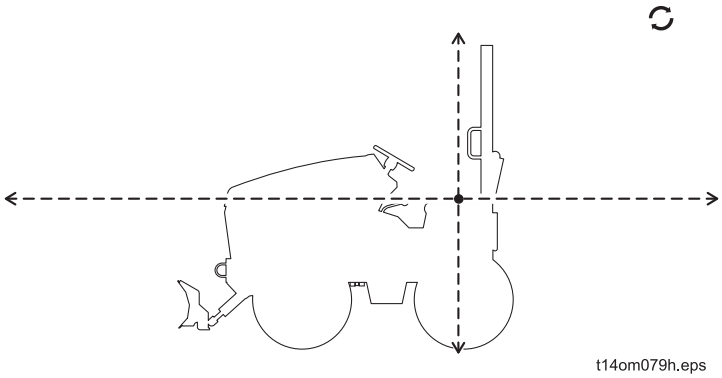

Adjust parking brake as needed.

To tighten:

1. Disengage parking brake.
2. Remove orange sleeve.
3. Twist lever clockwise. Engage parking brake to test tension.
4. Repeat 1-3 until parking brake is properly adjusted.
5. Replace orange sleeve.

https://truckmanualshub.com/

Change Air Filter

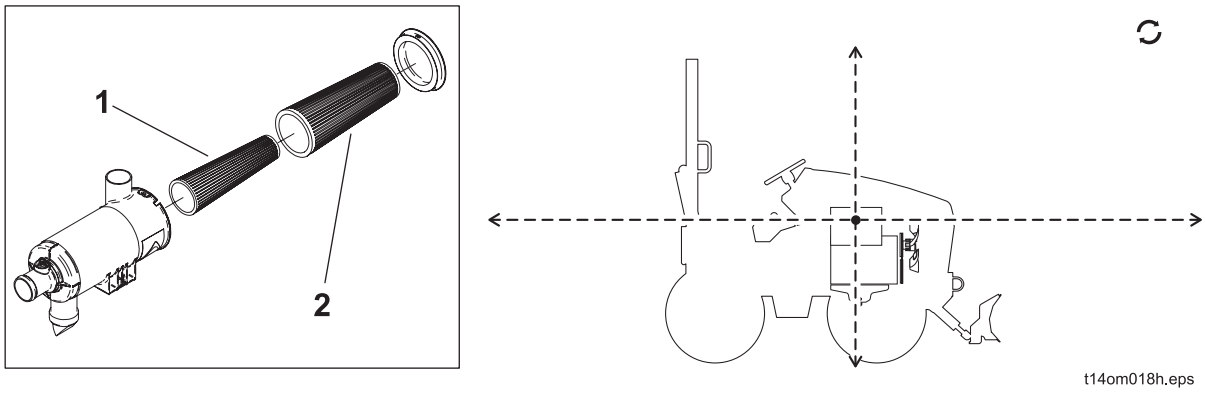

Change air filter when red band is visible on air filter service indicator.

To change:

1. Remove air filter cover and remove primary (2) and safety (1) elements.
2. Wipe inside of housing and wash cover.
3. Insert new safety element (1) and seat it correctly.
4. Insert new primary element (2) and rotate it clockwise until it locks into place. Pull gently on element to ensure it is locked.
5. Replace cover. Ensure arrow on cover points down. If cover does not fit, element is not properly locked into housing. Remove cover and primary element and repeat step 4.

NOTICE: Improperly installed primary element can lead to premature engine failure.

6. Reset air filter service indicator.

https://truckmanualshub.com/

Trencher

Replace Digging Chain

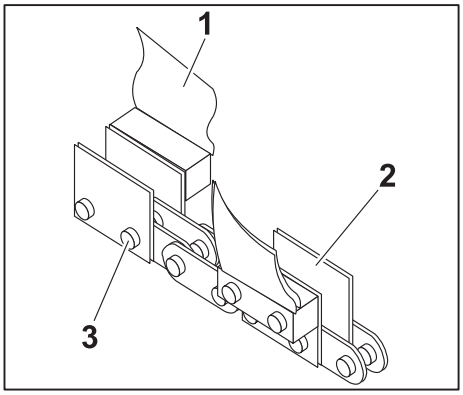

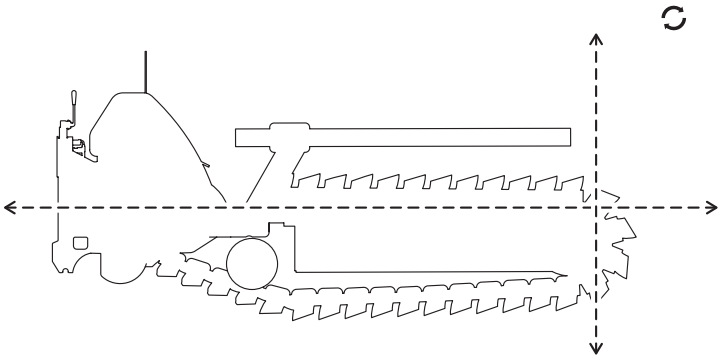

t11om058c.eps

Visually check digging chains for wear on rollers and sidebars (2). Check pins (3) and bushing wear by measuring distance between chain pins and comparing it with a new chain. Also check digging teeth (1).

IMPORTANT: Replace sprockets when a new chain is installed.

To remove chain:

1. Fasten and adjust seat belt.
2. Start tractor. See page 62 for proper start-up procedures.
3. Move attachment direction/speed control until digging chain connector pin is on top of boom.
4. Lower boom to ground.
5. Engage parking brake.
6. Turn ignition switch to STOP.
7. Roller booms: Secure chain by clamping links on either side of connector pin with chain jaws (shown). Squeeze jaws to reduce pressure on connector pin.

   Sprocket booms: Lock rear idler sprocket.

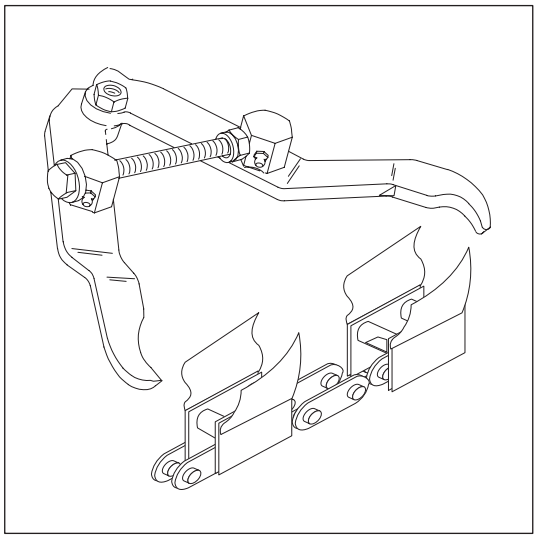

t12om089h.eps

https://truckmanualshub.com/

8. Loop cable through links nearest connector pin.

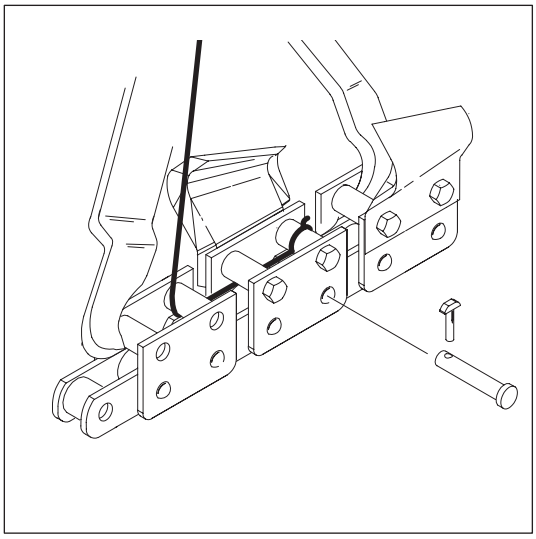

t12om090h.eps

WARNING Fluid pressure could pierce skin and cause injury or death. Stay away.

NOTICE: Service digging boom grease cylinder only while standing on opposite side of boom. Wear gloves and safety glasses, and cover fitting with cloth when relieving pressure in cylinder.

9. Loosen plug on grease cylinder or turn tension bolts counterclockwise to relieve chain tension.
10. Stand clear of chain and remove lock key from connector pin. Drive connector pin out of link.

WARNING Crushing weight could cause death or serious injury. Use proper procedures and equipment or stay away.

11. Unclamp links. Slowly release cable and lower chain to ground.
12. Lay chain on ground with teeth down.

https://truckmanualshub.com/

To install chain:

1. Lay chain on ground with teeth down and pointed toward unit. Loop cable through end links.
2. Fasten and adjust seatbelt.
3. Start tractor. See page 58 for start-up procedures.
4. Disenage parking brake.
5. Move ground drive control to reverse.
6. Back unit up until chain extends past head shaft about 1' (305 mm).
7. Move ground drive control to neutral.
8. Lower backfill blade to ground.
9. Lower boom to horizontal position.
10. Engage parking brake.
11. Turn ignition switch to STOP.
12. Pull rear end of chain over tail roller or sprocket.
13. Pull until chain is in place on boom.
14. Move chain down boom until chain connector pin and lock key can be installed. Install connector pin and lock key.
15. Tighten chain by pumping EPG into grease cylinder.

Time Augers

Ensure that augers are balanced, as shown. If auger timing is off, unit will bounce from side to side even in normal digging conditions.

To adjust timing:

1. Remove bolts holding augers to auger shaft and rotate either auger as needed until augers are balanced.
2. Reinstall bolts and tighten securely.

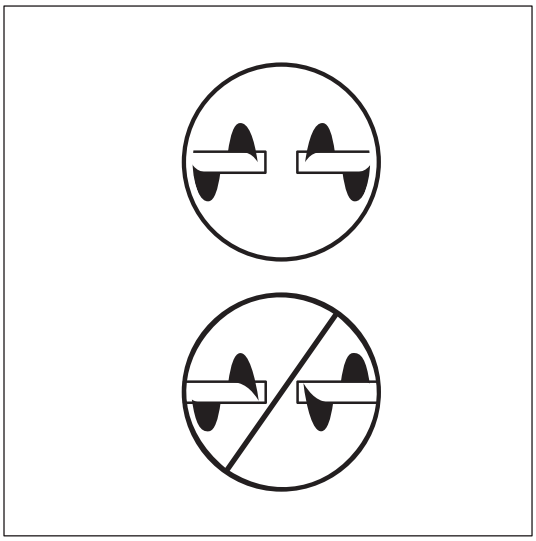

t12om081h.eps

https://truckmanualshub.com/

Plow

Replace Sod Cutter and Blade

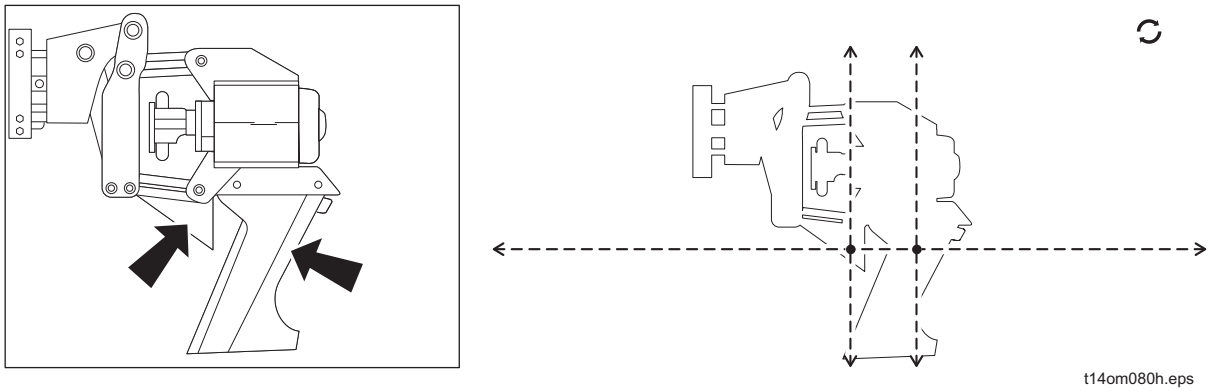

Replace worn sod cutter and plow blade as needed.

Replace Plow Blade Pins and Bushings

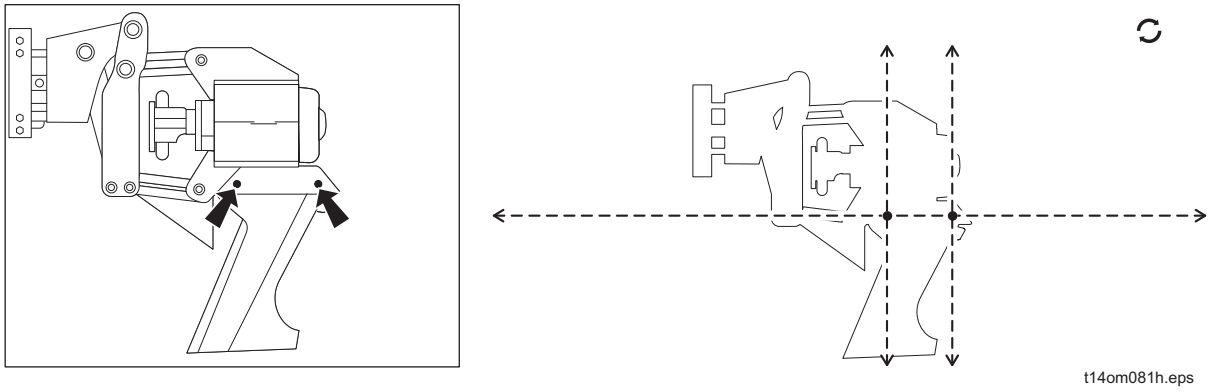

Check plow blade pins and bushings for wear and replace as needed.

NOTICE: Operating plow with worn or missing bushings will damage equipment.

https://truckmanualshub.com/

Backhoe

Replace Pins and Bushings

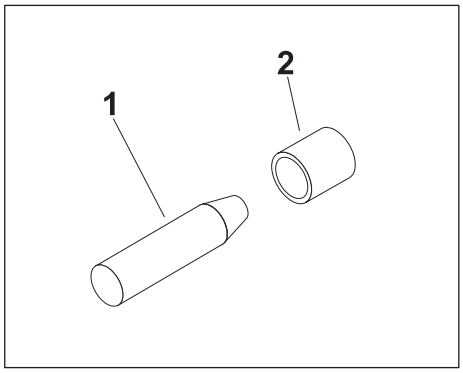

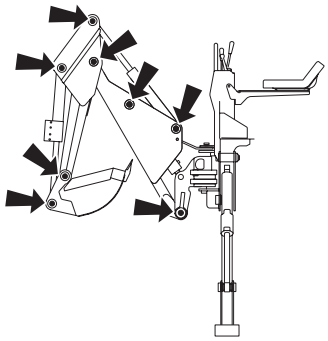

t14om082h.eps

Replace pins (1) and bushings (2) when worn or damaged.

https://truckmanualshub.com/

https://truckmanualshub.com/

Specifications

RT40 Tractor with H313 Trencher

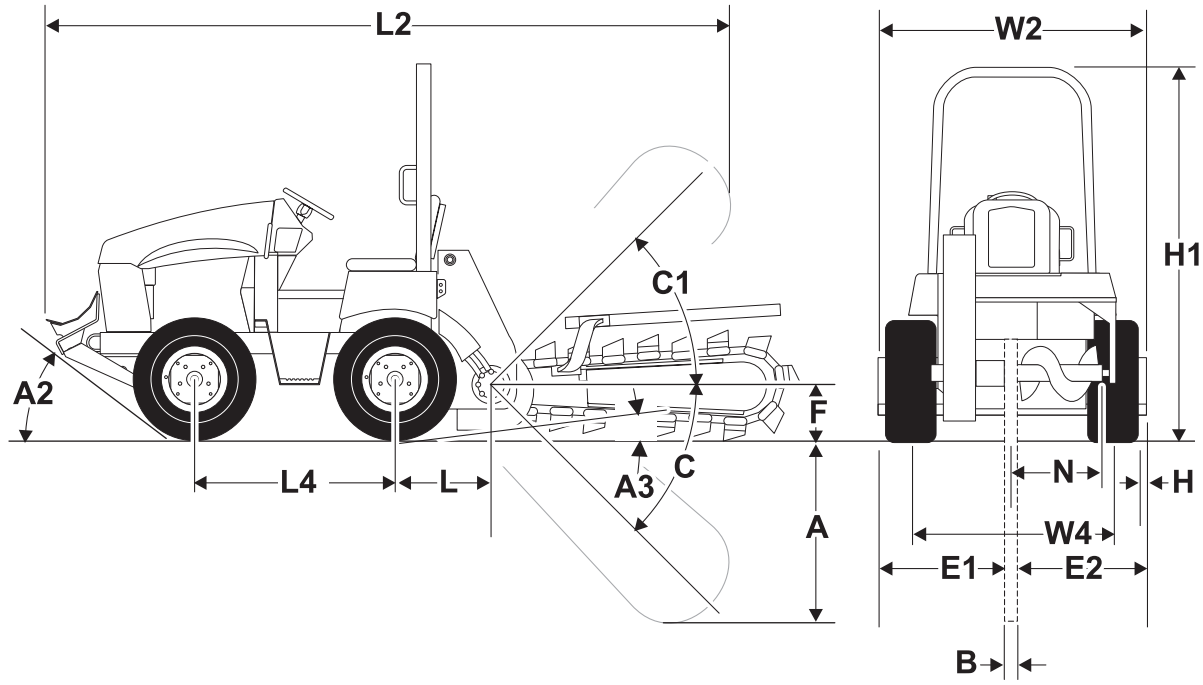

Dimensions *		U.S.	Metric
A	Trench depth, maximum	63 in	1.6 m
A2	Angle of approach	20°	20°
A3	Angle of departure	17°	17°
B	Trench width, minimum to maximum	6-12 in	150-300 mm
C	Boom travel down	58°	58°
C1	Boom travel up	50°	50°
E1	Centerline trench to outside edge of unit, left	35 in	890 mm
E2	Centerline trench to outside edge of unit, right	29 in	740 mm
F	Headshaft height, digging chain	17 in	430 mm
H	Overhang beyond tire	3.5 in	90 mm
H1	Height	86 in	2.2 m
L	Headshaft overhang	24.5 in	620 mm
L2	Length, transport	155 in	3.9 m

https://truckmanualshub.com/

L4	Wheelbase	48 in	1.2 m
N	Spoil discharge reach, minimum to maximum	17-20 in	430-510 mm
W2	Width, transport	64 in	1.6 m
W4	Tread	46 in	1.2 m
	Ground clearance with standard tire, minimum	7 in	180 mm
	Ground clearance with optional tire, minimum	8.5 in	215 mm

* Dimensions are based on H311 attachment and shortest roller boom length, 26 X 12.00-12 standard tire and wheel, and 12" (300-mm) pivot (except references A and B).

General
Ditch Witch model RT40 tractor, 4-wheel drive, rigid frame, hydrostatic ground drive through rubber tires, conventional 2-wheel power steering, hydrostatic attachment drive, riding tractor

Operation		U.S.	Metric
Forward speed, maximum		4.3 mph	6.9 km/h
Reverse speed, maximum		2.7 mph	4.4 km/h
Digging chain speed @2300 rpm engine speed, maximum		420 fpm	128 m/min
Vehicle clearance circle (SAE) wall to wall with backfill blade			
	With front steering only	28 ft	8.5 m
	With rear steering	20 ft	6.1 m
Operating weight *		4200 lb	1910 kg
Headshaft speed @2300 rpm engine speed, maximum		210 rpm	210 rpm
Auger: single, tapered, with outboard support bearing			
	Diameter, maximum	24 in	610 mm
	Diameter, minimum	18 in	460 mm
	Length	13 in	330 mm

* Operating weight based on H311 attachment with shortest boom, 6" (150-mm) wide chain, and 175-lb (79-kg) operator.

https://truckmanualshub.com/

Backfill Blade	U.S.	Metric
Blade width	64 in	1.6 m
Blade height	14 in	355 mm
Lift height above ground	12 in	300 mm
Blade drop below ground	8 in	200 mm
Maximum swing angle (left/right)	28°	28°
Tilt angle (up/down)	11°	11°

Power		U.S.	Metric
Engine: Deutz F3M2011, diesel			
Cooling medium: oil			
Injection: direct			
Aspiration: natural			
Number of cylinders: 3			
Displacement		142 in^3	2.3 L
Bore		3.7 in	94 mm
Stroke		4.4 in	112 mm
Engine manufacturer's gross power rating (SAE J1995)		42.2 hp	31.5 kW
Estimated net power rating (SAE J1349)		39 hp	29 kW
Rated speed		2300 rpm	2300 rpm
Maximum engine tilt angles*			
	Longitudinal	30°	30°
	Lateral	30°	30°
*Exceeding these operating angles will cause engine damage. This DOES NOT IMPLY machine is stable to maximum angle of safe engine operation.			

https://truckmanualshub.com/

Power Train			
Ground drive transmission: hydrostatic drive infinitely variable from zero to maximum, foot pedal and hand lever operated speed/direction control			
Differentials: Dana model 44 (Dana model 60 optional)			
Service brake: ground drive speed/direction control brakes machine hydraulically when moved to neutral position			
Parking brake: disc, hand-operated			
Tires: Load rating at 10 mph (16 km/h)			
	standard 26 x 12.00-12 4-ply bar lug inflated to 20 psi (1.4 bar)	1780 lb	807 kg
	optional 29 x 12.50-15 4-ply bar lug; inflated to 30 psi (2.1 bar)	2255 lb	1022 kg
Attachment drive transmission: hydrostatic, lever-operated speed infinitely variable from zero to maximum forward with limited stroke reverse			

Hydraulic System		**U.S.**	**Metric**
Ground drive pump capacity @ 2300 rpm		29.3 gpm	111 L/min
Ground drive pump relief pressure		3750 psi	258 bar
Attachment pump capacity @ 2300 rpm		29.3 gpm	111 L/min
Attachment pump relief pressure			
	trencher	5000 psi	345 bar
	plow, saw	3750 psi	258 bar
Auxiliary pump capacity @ 2300 rpm		10.2 gpm	39 L/min
Auxiliary pump relief pressure		2500 psi	172 bar
Filtration: return/charge full flow; 15 psi (1 bar) bypass, 10 micron nominal			

https://truckmanualshub.com/

Fluid Capacities		U.S.	Metric
Fuel tank		13 gal	49 L
Engine oil			
	Initial	8 qt	7.5 L
	Refill	6 qt	5.5 L
Hydraulic reservoir		9.5 gal	36 L
Hydraulic system		13 gal	49 L

Battery
Group 26/26R/70, SAE reserve capacity 80 min., SAE cold crank @ 0° F (-18° C), 525 amp

Noise Levels
Operator 90 dBA sound pressure per ISO 6394
Exterior 103 dBA sound power per ISO 6393.

Unless otherwise specified, all figures are for standard equipment only.

Specifications are called out according to SAE recommended procedures. Specifications are general and subject to change without notice. If exact measurements are required, equipment should be weighed and measured. Due to selected options, delivered equipment may not necessarily match that described.

https://truckmanualshub.com/

H314 Trencher

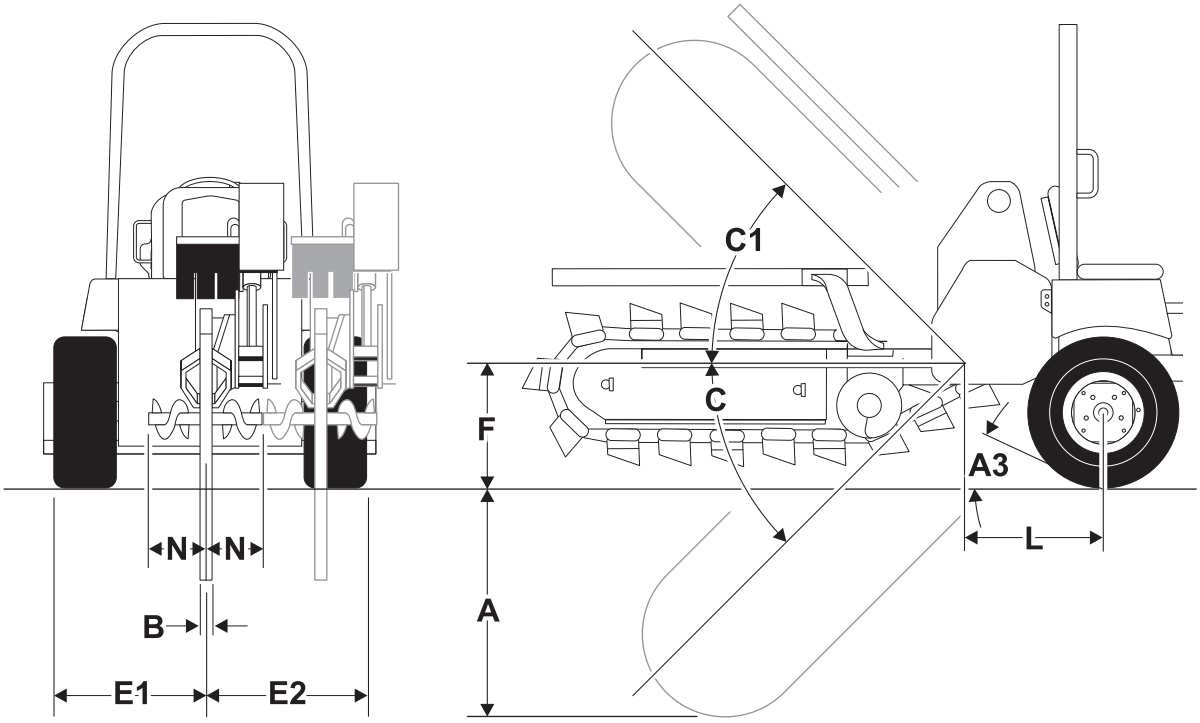

t14om037h.eps

Dimensions *		U.S.	Metric
A	Trench depth, maximum	52 in	1.3 m
A3	Angle of departure	35°	35°
B	Trench width, minimum to maximum		
	Center	6-12 in	125-305 mm
	Offset	6-8 in	125-200 mm
C	Boom travel down	55°	55°
C1	Boom travel up	51°	51°
E1	Centerline of trench to outside edge, left **		
	Center	30.7 in	780 mm
	Offset	52 in	1.3 m
E2	Centerline of trench to outside edge, right **		
	Center	24.3 in	620 mm
	Offset	3 in	75 mm
F	Headshaft height, digging chain	23.3 in	590 mm
	Overhang beyond tire	4.5 in	115 mm

https://truckmanualshub.com/

	Transport height	86 in	2.2 m
L	Headshaft overhang	24.9 in	630 mm
	Soil discharge reach		
	short auger	17 in	430 mm
	long auger	30 in	760 mm

* Dimensions are based on shortest roller boom, 26 X 12.00-12 standard tire and wheel, and 12" (300-mm) pivot (except reference A).
** With 6" (150-mm) chain, right side of trench will be inline with right outside edge of tires.

https://truckmanualshub.com/

H331 Plow

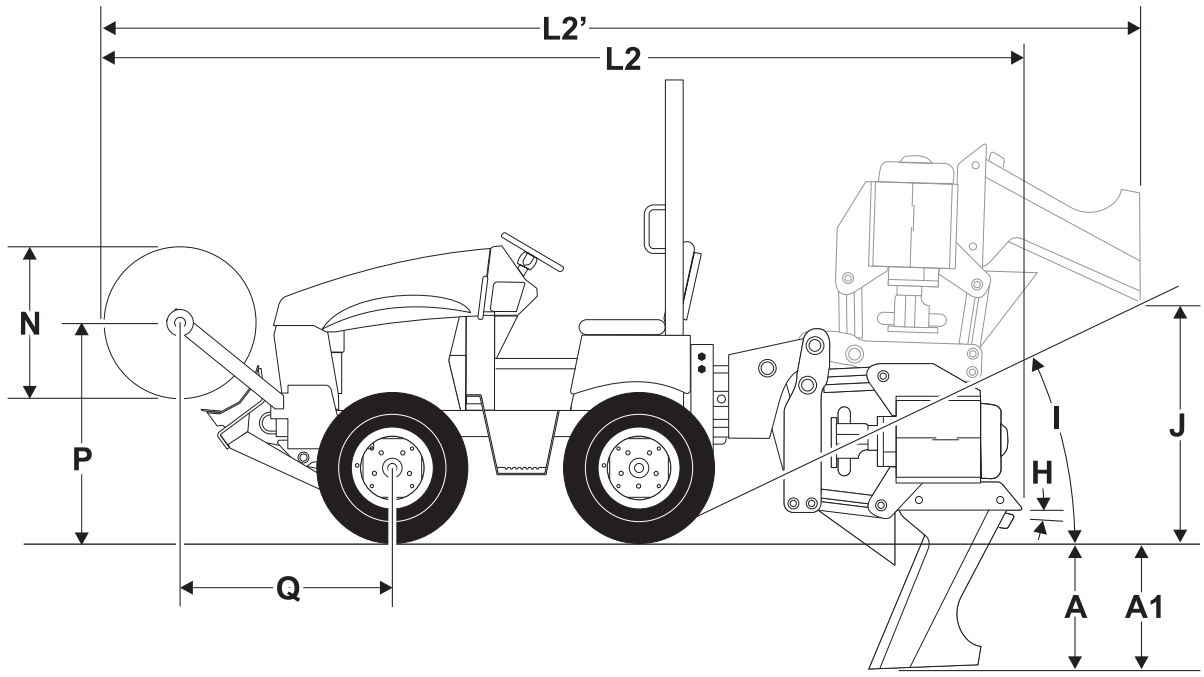

t14om088h.eps

Dimensions		U.S.	Metric
A	Cover depth, feed blade, maximum	24 in	610 mm
	Feed tube inside width, maximum	1 in	25 mm
	Feed tube bend ratio	4:1 or 10:1	4:1 or 10:1
A1	Pull blade depth, maximum	24 in	610 mm
	Pull blade width, maximum	1 in	25 mm
	Pull blade bullet diameter, maximum	3 in	75 mm
	Blade steer angle	15°	15°
H	Angle of depression	3°	3°
I	Angle of departure	22°	22°
J	Blade ground clearance	28.5 in	725 mm
L2	Operating length, plow with blade	145 in	3.9 m
	With A322 backhoe	180 in	4.6 m
	With reel carrier	154 in	3.9 m
	With reel carrier and maximum diameter reel	169 in	4.3 m

https://truckmanualshub.com/

L2'	Transport length, plow with blade	169 in	4.3 m
	With A322 backhoe	203 in	5.2 m
	With reel carrier	177 in	4.5 m
	With reel carrier and maximum diameter reel	192 in	4.9 m

Reel Carrier		U.S.	Metric
	Internal width	25 in	635 mm
N	Reel diameter, maximum	36 in	915 mm
P	Spindle height	39 in	985 mm
Q	Spindle overhang from front axle	42 in	1 m
	Reel capacity, maximum	200 lb	90 kg
	Operating weight, with blade	4200 lb	1910 kg

Plow Blades

Plow blades are available in 12" (305-mm), 18" (460-mm), and 24" (610-mm) blade depths. Select correct blade for the job: blades with feed tubes or pull blades. Feed tube blades are provided with 4:1 or 10:1 bend ratios. Check with your Ditch Witch dealer for special blade requirements.

https://truckmanualshub.com/

H350 Combo

Trencher

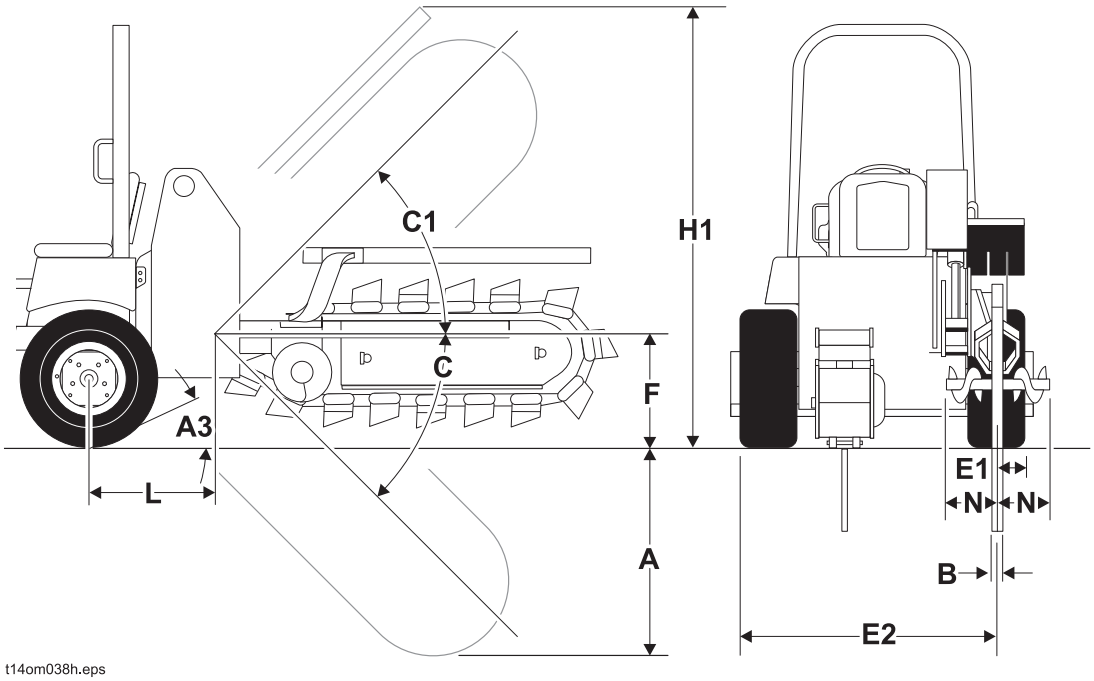

Dimensions *		U.S.	Metric
A	Trench depth, maximum	42 in	1.1 m
A3	Angle of departure	33°	33°
B	Trench width, minimum to maximum	6-8 in	125-200 mm
C	Boom travel down	55°	55°
C1	Boom travel up	51°	51°
E1	Centerline of trench to outside edge, left	52 in	1.3 m
E2	Centerline of trench to outside edge, right **	3 in	80 mm
F	Headshaft height, digging chain	23 in	590 mm
	Overhang beyond tire	4.5 in	115 mm
H1	Transport height	86 in	2.2 m
L	Headshaft overhang	25 in	630 mm
N	Soil discharge reach	17 in	430 mm

* Dimensions are based on shortest roller boom, 26 X 12.00-12 standard tire and wheel.
** With 6" (150-mm) chain, right side of trench will be inline with right outside edge of tires.

https://truckmanualshub.com/

Plow

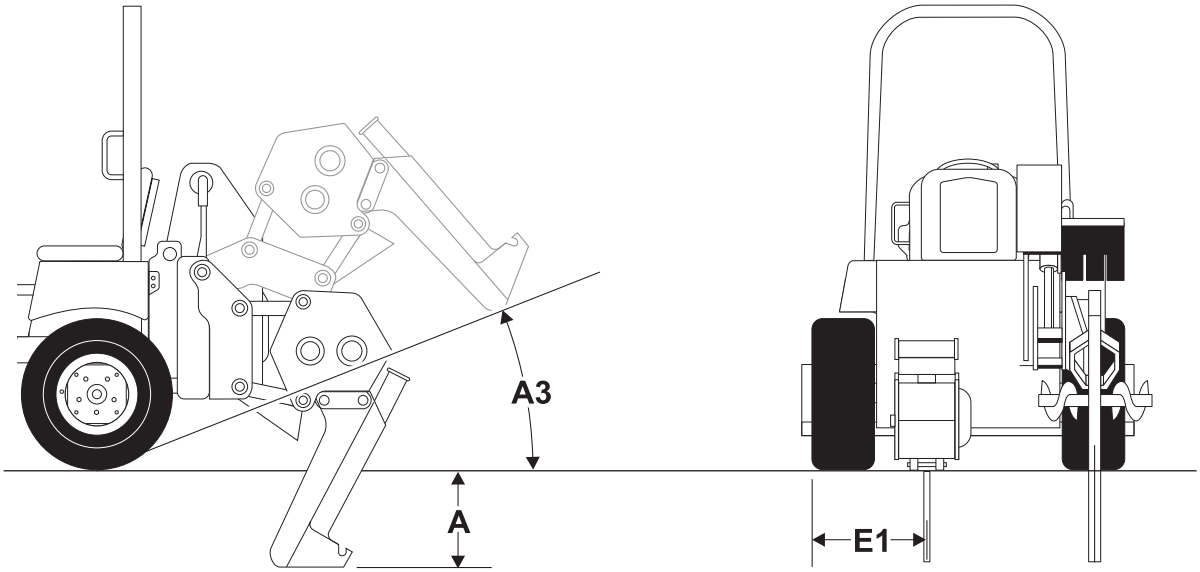

t14om039h.eps

Dimensions		U.S.	Metric
A3	Angle of departure, transport, 18" (457-mm) blade	26°	26°
A	Cover depth, maximum*	24 in	610 mm
	Plow swing angle, left	30°	30°
	Plow swing angle, right	20°	20°
E1	Center of plow to outside edge of unit	20 in	510 mm

*Suggested maximum. Plow blade used will be determined by job requirements and soil conditions.

Operation	U.S.	Metric
Material diameter, pull-in, maximum	2.5 in	65 mm
Material diameter, feed chute, maximum	1.5 in	40 mm

H350 General	U.S.	Metric
Operating weight, without augers, boom, chain, and plow blade	1500 lb	680 kg
Counterweight required, minimum	1100 lb	500 kg
With front-mounted weight rack and A322 backhoe, no rear counterweighting is required.		

https://truckmanualshub.com/

H341 Saw

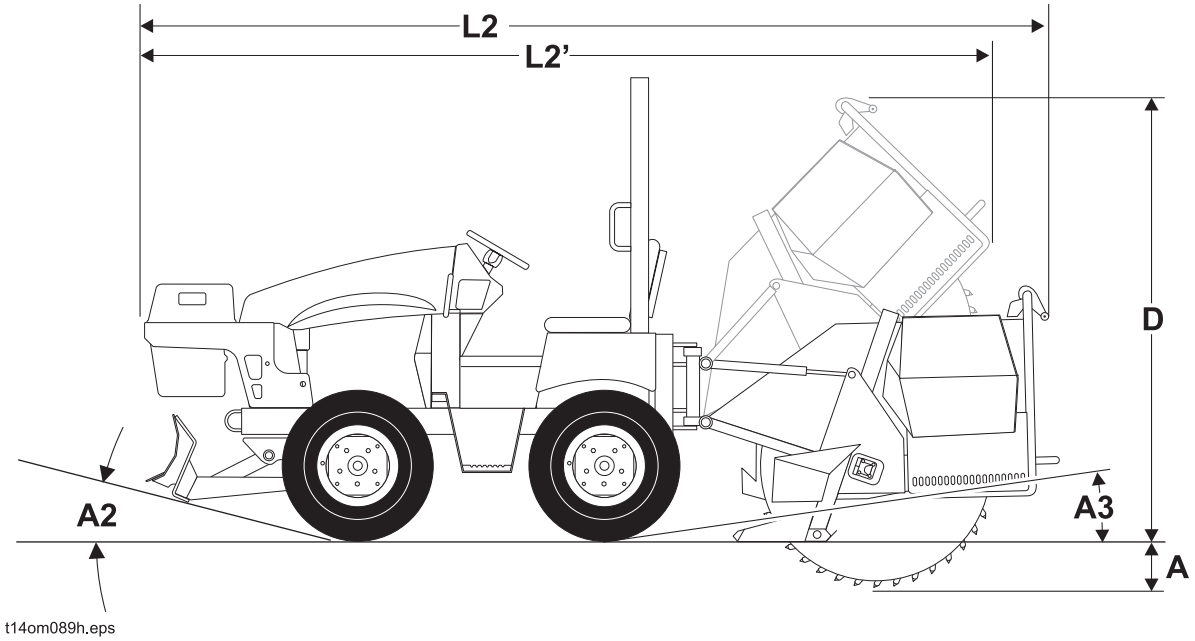

Dimensions		U.S.	Metric
A	Trench depth, maximum	18 in	455 mm
A2	Angle of approach	18°	18°
A3	Angle of departure	14°	14°
D	Transport height, attachment	79 in	2.0 m
L2	Overall length, full depth	177 in	4.5 m
L2'	Overall length, transport	162 in	4.1 m

Operation	U.S.	Metric
Breakover angle at full depth, maximum	38°	38°
Wheelshaft height, full depth	16 in	410 mm
Wheelshaft overhang from rear axle, full depth	54 in	1.4 m
Attachment height, full depth	54 in	1.4 m
Operating height, power unit	86 in	2.2 m

https://truckmanualshub.com/

Not Shown		U.S.	Metric
Ground clearance at wheel, maximum		11.8 in	300 mm
Centerline trench to outside edge of unit			
	Left	32 in	815 mm
	Right	32 in	815 mm
Attachment width		23 in	580 mm
Number of teeth on saw wheel		36	36
Attachment weight			
	2.5" (65-mm) segments	1550 lb	700 kg
	3.5" (90-mm) segments	1610 lb	730 kg
	5.0" (130-mm) segments	1660 lb	755 kg
Counterweight required		800 lb	360 kg
Wheel speed, variable		0-160 rpm	0-160 rpm

https://truckmanualshub.com/

A322 Backhoe

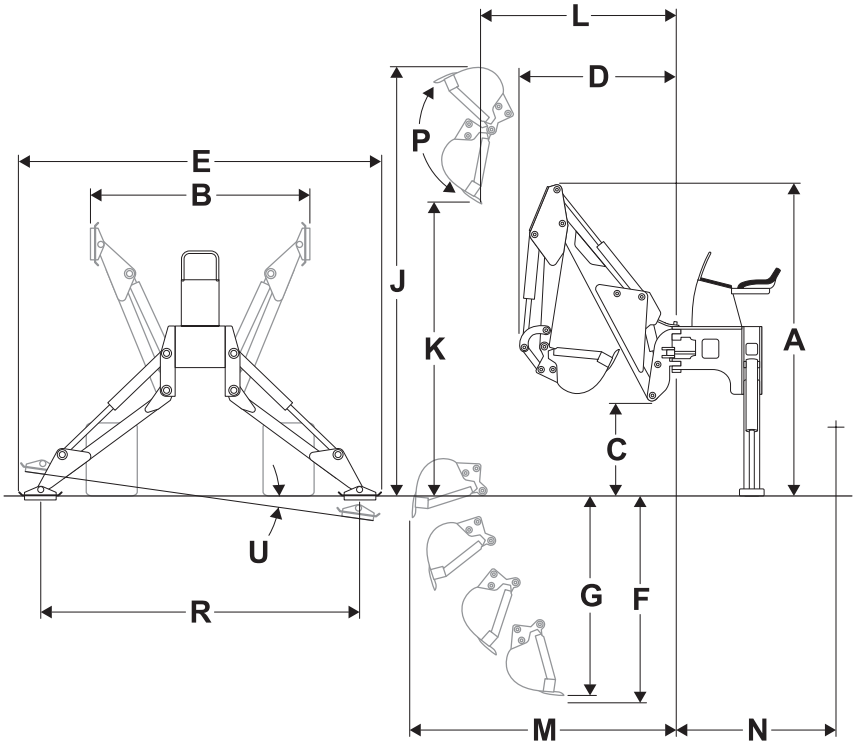

Dimensions		U.S.	Metric
A	Transport height	80.5 in	2.0 m
C	Ground clearance	23 in	584 mm
D	Backhoe length, stowed	60 in	1.5 m
F	Digging depth, maximum	72 in	1.8 m
G	Digging depth, 2' (0.6-m) flat bottom	66 in	1.7 m
J	Operating height, fully raised	97 in	2.5 m
K	Loading height	46 in	1.2 m
L	Loading reach	55 in	1.4 m
M	Reach from swing pivot	102 in	2.6 m
N	Swing pivot to centerline axle	32 in	813 mm
P	Bucket rotation	132°	132°
B	Stabilizer spread, transport	64 in	1.6 m
E	Backhoe or basic unit width	57 in	1.5 m
R	Stabilizer spread, operating	104 in	2.6 m
U	Leveling angle	10°	10°

https://truckmanualshub.com/

General		U.S.	Metric
Bucket			
	Width	12 in	305 mm
	Capacity	1.1 ft^3	0.03 m^3
Backhoe weight with bucket		1125 lb	511 kg
Lift capacity, boom over end and swing arc, SAE*			
	@ 48" (1.2 m)	957 lb	434 kg
	@ ground level	1044 lb	474 kg
	@ 72" (1.8 m)	783 lb	355 kg
Lift capacity, dipperstick over end and swing arc, SAE*			
	@ 48" (1.2 m)	1784 lb	809 kg
	@ 72" (1.8 m)	1500 lb	681 kg
Swing arc		160°	160°
Digging force			
	Using bucket cylinder	5340 lb	23.8 kN
	Using dipperstick cylinder	4050 lb	18 kN

*Lift capacities are for a stationary machine supported by stabilizers.

https://truckmanualshub.com/

https://truckmanualshub.com/

Support

Procedure

Notify your dealer immediately of any malfunction or failure of Ditch Witch equipment.

Always give model, serial number, and approximate date of your equipment purchase. This information should be recorded and placed on file by the owner at the time of purchase.

Return damaged parts to dealer for inspection and warranty consideration if in warranty time frame.

Order genuine Ditch Witch replacement or repair parts from your authorized Ditch Witch dealer. Use of another manufacturer's parts may void warranty consideration.

Resources

Publications

Contact your Ditch Witch dealer for publications and videos covering safety, operation, service, and repair of your equipment.

Ditch Witch Training

For information about on-site, individualized training, contact your Ditch Witch dealer.

https://truckmanualshub.com/

Warranty

Ditch Witch Equipment and Parts
Limited Warranty Policy

Subject to the limitations and exclusions herein, free replacement parts will be provided at any authorized Ditch Witch dealership for any Ditch Witch equipment or parts manufactured by The Charles Machine Works, Inc. (CMW) that fail due to a defect in material or workmanship within one (1) year of first commercial use (Exception: 2 years for all SK attachments). Free labor will be provided at any authorized Ditch Witch dealership for installation of parts under this warranty during the first year following initial commercial use of the serial-numbered Ditch Witch equipment on which it is installed.

Exclusions from Product Warranty

- Wear-related failure of parts subject to ground contact including, but not limited to, digging teeth, digging chains, sprockets, backhoe buckets, plow blades, drill pipe, drill bits, backreamers, and swivels.
- All incidental or consequential damages.
- All defects, damages, or injuries caused by misuse, abuse, improper installation, alteration, neglect, or uses other than those for which products were intended.
- All defects, damages, or injuries caused by improper training, operation, or servicing of products in a manner inconsistent with manufacturer's recommendations.
- All engines and engine accessories (these are covered by original manufacturer's warranty).
- Tires, belts, and other parts which may be subject to another manufacturer's warranty (such warranty will be available to purchaser).
- All implied warranties not expressly stated herein, including any warranty of fitness for a particular purpose and merchantability.

IF THE PRODUCTS ARE PURCHASED FOR COMMERCIAL PURPOSES AS DEFINED BY THE UNIFORM COMMERCIAL CODE, THEN THERE ARE NO WARRANTIES WHICH EXTEND BEYOND THE FACE HEREOF AND THERE ARE NO IMPLIED WARRANTIES OF ANY KIND WHICH EXTEND TO A COMMERCIAL BUYER. ALL OTHER PROVISIONS OF THIS LIMITED WARRANTY APPLY INCLUDING THE DUTIES IMPOSED.

Ditch Witch products have been tested to deliver acceptable performance in most conditions. This does not imply they will deliver acceptable performance in all conditions. Therefore, to assure suitability, products should be operated under anticipated working conditions prior to purchase.

Defects will be determined by an inspection within thirty (30) days of the date of failure of the product or part by CMW or its authorized dealer. CMW will provide the location of its inspection facilities or its nearest authorized dealer upon inquiry. CMW reserves the right to supply remanufactured replacements parts under this warranty as it deems appropriate.

Extended warranties are available upon request from your local Ditch Witch dealer or CMW.

Some states do not allow exclusion or limitation of incidental or consequential damages, so above limitation of exclusion may not apply. Further, some states do not allow exclusion of or limitation of how long an implied warranty lasts, so the above limitation may not apply. This limited warranty gives product owner specific legal rights and the product owner may also have other rights which vary from state to state.

For information regarding this limited warranty, contact CMW's Product Support department, P.O. Box 66, Perry, OK 73077-0066, or contact your local Ditch Witch dealer.

First version: 1/91; Latest version: 1/03

A Note To Ditch Witch Equipment Owners:

If your equipment was purchased through a Ditch Witch dealer, there is no need to read further.

However, if you purchased from any other source, please fill out the form on the reverse side and return it to us.

This will enable you to receive updates on this equipment as well as information on new products of interest.

Thanks for using Ditch Witch equipment.

(Please Fold Along This Line And Seal At Bottom With Tape)

NO POSTAGE NECESSARY IF MAILED IN THE UNITED STATES

BUSINESS REPLY MAIL

FIRST CLASS PERMIT NO 23 PERRY OKLAHOMA

POSTAGE WILL BE PAID BY

The Charles Machine Works, Inc.
P.O. Box 66
Perry, Oklahoma 73077-9989

A Note To Ditch Witch Equipment Owners:

If your equipment was purchased through a Ditch Witch dealer, there is no need to read further.

However, if you purchased from any other source, please fill out the form on the reverse side and return it to us.

This will enable you to receive updates on this equipment as well as information on new products of interest.

Thanks for using Ditch Witch equipment.

(Please Fold Along This Line And Seal At Bottom With Tape)

NO POSTAGE NECESSARY IF MAILED IN THE UNITED STATES

BUSINESS REPLY MAIL

FIRST CLASS PERMIT NO 23 PERRY OKLAHOMA

POSTAGE WILL BE PAID BY

The Charles Machine Works, Inc.
P.O. Box 66
Perry, Oklahoma 73077-9989

https://truckmanualshub.com/

Ditch Witch® Registration Card

Please Type or Print All Information

Purchaser's Company Name

Attention

Street Address or P.O. Box

City County

State Zip Nation

( )

Phone Number With Area Code

Model Serial Number

Attachments/Accessories Serial Numbers

Attachments/Accessories Serial Numbers

Attachments/Accessories Serial Numbers

Name of Ditch Witch Dealership

Your Signature

Ditch Witch® Registration Card

Please Type or Print All Information

Purchaser's Company Name

Attention

Street Address or P.O. Box

City County

State Zip Nation

( )

Phone Number With Area Code

Model Serial Number

Attachments/Accessories Serial Numbers

Attachments/Accessories Serial Numbers

Attachments/Accessories Serial Numbers

Name of Ditch Witch Dealership

Your Signature

https://truckmanualshub.com/

https://truckmanualshub.com/

Service Record

Service Performed	Date	Hours

https://truckmanualshub.com/

Service Performed	Date	Hours