https://truckmanualshub.com/

Service Manual

Fuller Automated Transmissions TRSM0062

October 2007

FO-6406A-ASW
FO-6406A-ASX
FO-8406A-ASW
FO-8406A-ASX
RT-14910B-AS2
RTLO-14918A-AS2
RTLO-16918A-AS2
RTLO-18918A-AS2
RTLO-20918A-AS2
RTLO-22918A-AS2
RTO-10710B-AS2
RTO-10910B-AS2
RTO-10910B-DM2
RTO-12710B-AS2
RTO-12910B-AS2
RTO-12910B-DM2
RTO-14710B-AS2
RTO-14710C-AS2
RTO-14910B-AS2
RTO-14910B-DM2
RTO-14910C-AS2
RTO-16710C-AS2
RTO-16910B-AS2
RTO-16910B-DM2
RTO-16910C-AS2
RTO-18910B-AS2

EATON
Powering Business Worldwide

BACKED BY
Roadranger
SUPPORT

Cautions, and Warnings

⚠ WARNING

Follow the specified procedures in the indicated order to avoid personal injury.

⚠ CAUTION

Follow the specified procedures in the indicated order to avoid equipment malfunction or damage

Note: Additional relevant information not covered in the service procedure.

⚠ IMPORTANT

For additional information and assistance, call the Roadranger Help Desk at 1-800-826-HELP (4357). Mexico: 01-800-826-HELP (4357). You may also find more information at www.Roadranger.com.

Operational Warnings

Before starting a vehicle:

1. Sit in the driver's seat.
2. Place the Shift Lever in neutral.
3. Set the parking brake.
4. Disengage the clutch.

Before working on the vehicle or leaving the cab with the engine running:

5. Place the shift lever in neutral.
6. Set the parking brake.
7. Block the wheels.

Do not release the parking brake or attempt to select a gear until the air pressure is at the correct level.

When parking the vehicle or leaving the cab:

8. Place the shift lever in neutral.
9. Set the parking brake.

Do not operate the vehicle if the alternator lamp is lit or if the gauges indicate low voltage.

Repair Warnings

When disassembling various assemblies, lay all parts on a clean bench in the same sequence as removed to simplify and reduce the possibility of losing parts.

Disconnect the vehicle's battery before removing or installing electronic parts.

Since the cost of a new part is generally a small fraction of the cost of downtime and labor, avoid reusing a questionable part that could lead to additional repairs and expense.

Use of other than recommended tools, parts, and instructions listed in this manual may place the safety of the service technician or vehicle driver in jeopardy.

The location of some components may vary with each OEM.

The removal and installation procedure described for each component may vary for your vehicle.

Always use genuine Eaton replacement parts. For a complete list of approved and reputable dealers, write to:

Eaton Corporation
Truck Component Marketing Headquarters
P.O. Box 4013
Kalamazoo, MI 49003

Every effort has been made to ensure the accuracy of the information contained in this manual. However, Eaton Corporation makes no warranty, expressed or implied, based on the information provided.

General Information

Preventive Maintenance

Service Procedures

Cautions, and Warnings i
How to Use This Manual 1
Dry Clutch Models Only 3
UltraShift™ HP Models 9
Lubricant Filter (UltraShift HP Models Only) – Remove 15
Lubricant Filter (UltraShift HP Models Only) – Install 17
Rail Select Sensor – Remove 19
Rail Select Sensor – Install 21
Gear Select Sensor – Remove 23
Gear Select Sensor – Install 25
Input Shaft Speed Sensor – Remove 27
Input Shaft Speed Sensor – Install 29
Main Shaft Speed Sensor – Remove 31
Main Shaft Speed Sensor – Install 33
Output Shaft Speed Sensor – Remove 35
Output Shaft Speed Sensor – Install 37
Range Valve – Remove 39
Range Valve – Install 41
Splitter Valve – Remove 43
Splitter Valve – Install 45
Air Filter/Regulator – Remove 47
Air Filter/Regulator – Install 49
Inertia Brake (6-Speed) – Remove 51
Inertia Brake (6-Speed)– Install 53
Inertia Brake (7, 10, and 18-Speed) – Remove 55
Inertia Brake (7, 10, and 18 Speed) – Install 57
Inertia Brake Relocation Instructions 8 to 6 Bolt PTO Opening--Remove 59
Inertia Brake Relocation Instructions 8 to 6-Bolt PTO opening--Install 61
Electric Shifter – Remove 63
Electric Shifter – Install 65
Transmission Controller – Remove 67
Transmission Controller – Install 69
Transmission Harness – Remove 71
Transmission Harness – Install 73
Gear Display – Remove 75
Gear Display – Install 77
Shift Control– Remove 79
Shift Control – Install 81
Transmission – Remove 83
Transmission – Install 84
Change Control Log 85

How to Use This Manual

This manual is designed to provide detailed information necessary to service and repair the Automation portion of the following Fuller transmissions:

1. 6-Speed (Fx-x406x-ASX, Fx-x406x-ASW)
2. 7-Speed (TO-xx607x-ASX)
3. 10-Speed (RTO-xxx10x-AS2, RTO-xxx10x-DM2)
4. 18-Speed (RTLO-xx918x-AS2)

The service procedures in this manual are for transmission automation components only. To locate the information you need, simply locate the procedure in the index, turn to the page specified, and follow the procedure.

To service the mechanical portion of the transmission system, refer to the specific transmission service manual.

Serial Tag Information and Model Nomenclature

Transmission model designation and other transmission identification information are stamped on the serial tag. To identify the transmission model and serial number, locate the tag on the transmission and then locate the numbers as shown.

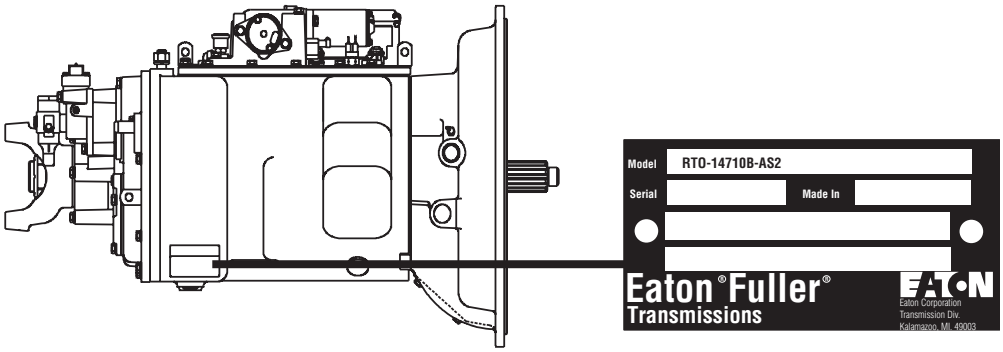

https://truckmanualshub.com/

For parts or service call us
Pro Gear & Transmission, Inc.

1 (877) 776-4600

(407) 872-1901

parts@eprogear.com

906 W. Gore St.

Orlando, FL 32805

Model Number

The model number gives basic information about the transmission and is explained below. Use this number when calling for service assistance or replacement parts.

6-Speed

F O - 8 4 0 6 A - A S X

- Fuller
- Overdrive
- Torque x 100
- Design Level
- Forward Speeds
- Gear Ratio
- AutoShift
- W-WetClutch / X-Inertia Brake

7-Speed

T O - 1 1 6 0 7 B - A S X

- Twin Countershaft
- Overdrive
- Torque x 100
- Design Level
- Forward Speeds
- Gear Ratio
- AutoShift
- X - Inertia Brake

10-Speed

R T O - 1 4 7 1 0 B - A S 2

- Roadranger
- Twin Countershaft
- Overdrive
- Torque x 100
- Design Level
- Forward Speeds
- Gear Ratio
- AutoShift / DM-Data Mechanical Clutch
- 2 - AutoShift II (Second Generation)

18-Speed

R T L O - 1 8 9 1 8 A - A S 2

- Roadranger
- Twin Countershaft
- Low Inertia
- Overdrive
- Torque x 100
- Design Level
- Forward Speeds
- Gear Ratio
- AutoShift
- 2 - AutoShift II (Second Generation)

PREFIX KEY
F = Fuller L = Low Inertia O = Overdrive R = Roadranger T = Twin Countershaft

SUFFIX KEY	
AS = AutoShift X = Inertia Brake 2 = AutoShift II (Second Generation)	W=WetClutch DM=Data Mechanical Clutch

Serial Number

The serial number is the sequential identification number of the transmission. Have the serial number available when calling for service assistance.

Bill of Material or Customer Number

This number may be located below the model and serial numbers. It is a reference number that is used by Eaton.

Dry Clutch Models Only

Preventive Maintenance Overview

To keep the vehicle running properly, it is important to perform preventive maintenance on vehicle components. This ensures the vehicle and its subassemblies will operate properly throughout their useful life. To cover preventative maintenance completely, you must review the following subjects in detail:

1. Recommended Lubricants
2. Maintenance/Lubricant Change Interval
3. Inspecting the Transmission
4. Changing the Fluid
5. Vehicle System Effects

Recommended Lubricants

Where transmissions are concerned, lubricant is possibly the most important part of keeping a vehicle operating.

Lubricants which meet the Eaton E500 (PS-164) specification are required in the AutoShift transmission. Lubricant must be approved by Eaton Corporation to qualify for the 5/750,000 warranty. For a list of Eaton Roadranger approved lubricants, order publication TCMT-0021.

Maintenance/Lubricant Change Intervals

⚠ IMPORTANT

Transmission filters should be changed durning regular lube intervals. Inspection of the transmission filter should be conducted during preventative maintenance checks for damage or corrosion. Replace as necessary.

Transmission inspections and lubricant changes depend on the type of lubricant used and whether the vehicle is used On or Off-highway.

On-highway Lubricant- Vehicles operated on paved roads, interstate highways, and turnpikes are designated as on-highway vehicles. Lubricant change and inspection intervals are the most generous for on-highway vehicles using synthetic lubricants.

Off-highway Lubricant- Vehicles operated in off-highway applications such as coal trucks or mining vehicles, it is more important to use time rather than mileage to keep the transmission within its proper preventative maintenance schedule. Off-highway applications are divided into two categories, severe and normal. “Severe off-highway” is the designation used when there is excessive dust and dirt. “Normal off-highway” is for applications where dust and dirt are minimal.

Table 1: Lubricant Change and Inspection (On-highway)

Change Interval	Description
Every 2500 miles	Inspect lubricant level. Perform Transmission Inspection
Every 250,000	Change transmission lubricant and filter. (if equipped)
***The first lube change may be extended to 500,000 miles (800,000 km) when a transmission has been factory filled with a lube that is Eaton approved for 500,000 miles (800,000 km) (E-500, PS-164)**	

Table 2: Lubricant Change and Inspection (Off-highway)

Change Interval	Description
Every 40 hours	Inspect lubricant level. Perform Transmission Inspection
Every 1000 hours	Change Transmission lubricant and filter (if equipped) where severe dirt conditions exist
Every 2500 hours	Change Transmission lubricant and filter (if equipped) (Normal off-highway use.)

Transmission Inspection

When performing preventive maintenance (PM) inspections, several items must be checked. It is important to perform every step to ensure the transmission will meet its life expectancy. Proper PM consists of the following steps:

1. Check Lubricant Level
2. Inspect for Loose/Missing Bolts
3. Check for Air Leaks
4. Check for Lubricant Leaks

Check Lubricant Level

When checking the transmission lubricant there are two important points to know: where to check the lubricant and what the proper lubricant level is. Always be cautious when checking the transmission lubricant as it may be hot.

Checking Location- Checking the lubricant at the lubricant fill plug located on the left side of the main transmission case.

Proper Lubricant Level- The lubricant is at the proper level when it is even with the bottom of the fill hole. When you remove the plug to check the lubricant level, lubricant should seep out. Do not use your finger to feel for the lubricant. Even if you can touch the lubricant, it may not be at the proper level. In a transmission, one inch of lubricant level equals about one gallon of lubricant.

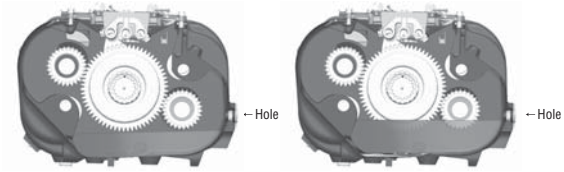

Improper Oil Level Proper Oil Level

Inspect for Loose/Missing Bolts

While you are under the vehicle checking the lubricant, make a quick check for loose or missing bolts. Check all bolts on the back box, PTO covers, shift bar housing, clutch housing, and transmission controller. Replace any missing or broken bolt with the proper bolt as specified in the Illustrated Parts Listing. Follow the procedure defined in the transmission Service Manual when tightening any bolts.

Check for Air Leaks

Two steps are required when checking for an air leak: inspection and repair.

Audible Inspection for Leaks- To find air leaks, make sure the vehicle air system has at least 90 PSI air pressure. Then, listen for leaks, making sure a vehicle leak is not mistaken for a transmission air leak.

Refer to Troubleshooting Procedures- Once you find an air leak, use the Troubleshooting Guide to isolate the air leak to the faulty component.

Check for Lubricant Leaks

A lubricant leak could cause a catastrophic transmission failure. Check for leaks first at the gasket surfaces, then the input shaft, the rear seal, and the transmission cooler.

Gaskets- Visually check each gasket to insure that no leak is present. Typically a moist spot is acceptable; however drips or larger wet areas are not. Check for leaks at the rear housing, PTO, shift bar housing, shift tower, and clutch housing gasket surfaces. It is also important to ensure that the leak is indeed coming from the transmission. Make sure the oil is not being blown back from the engine or another vehicle component.

Input Shaft- Check for leaks around the input shaft. Leaks in this area could be caused by a faulty gasket, input shaft, or pressurization of the main transmission case by the air system. If you find a leak at the input shaft, make sure the air system is not leaking into the case before looking for leaking gaskets.

Rear Seal- The rear seal is very important in maintaining lubricant in the transmission. If the seal is improperly installed or has failed, the transmission may experience a catastrophic failure. Check the rear seal by performing the following steps:

Visual Check for Leak- Visually inspect the rear seal for a leak. If a rear seal leak is suspected, proper isolation is necessary.

Verify the Leak Path- Other leaks may give the impression the rear seal is leaking. One possible cause is the vehicle speed sensor. Any lubricant leak above and in front of the rear seal could cause lubricant to collect around the seal. Wipe the seal with a clean rag, operate the vehicle, and recheck to verify the leak path. More information can be found in the Seal Maintenance Guide (TCSM-0912).

Transmission Cooler Leaks- If the vehicle is equipped with a transmission cooler, make sure there are no leaks at the lubricant cooler, hoses, and fittings of the cooler circuit.

Changing Lubricant

When it is time to change the transmission lubricant, there are only a few steps to follow: Draining and filling the transmission, draining and filling the cooler (if equipped), and changing the lubricant filter (if equipped). Remember to be careful when changing the transmission lubricant, as it may be hot.

Drain the Transmission

1. Locate the drain plug on the bottom of the transmission case.
2. Place a drain pan under the drain plug.
3. Remove the drain plug and allow the lubricant to drain completely.
4. Once drained, reinstall the drain plug and tighten to 45-55 lbs.ft. (61.0-74.6 N•m). Sealant is not required on the drain plug threads.

Drain the Cooler (if equipped)

1. Remove both cooler lines at the transmission.
2. Pressurize one line with 30 PSI of air pressure to force the lubricant out of the cooler.
3. Once drained, reconnect the coolant lines to the transmission. Make sure the lines are not crossed.

Fill the Transmission

1. Remove the transmission fill plug and fill the transmission with approved lubricant.
2. The transmission is full when the lubricant starts to flow out of the fill hole.
3. Replace the fill plug and tighten to 60-70 lbs.ft. (81.3-94.9 N•m).

Fill the Cooler (if equipped)

1. Place the transmission in neutral and start the vehicle.
2. Release the clutch to rotate the input shaft of the transmission, allowing the pump to fill the cooler.
3. Run the vehicle for one minute.
4. Shut off the vehicle, recheck the transmission lubricant level and add lubricant as required.

Change the “Spin-on” Filter (if equipped)

1. Remove the filter from the “spin-on” casting.
2. Catch any lubricant that seeps from the filter.
3. Clean the casting surface.
4. Install a new filter and hand tighten.

Vehicle System Effects

Some vehicle systems can affect the transmission operation and possibly cause a failure. The air system is a major system that can affect the transmission components.

Air System- If the air system is not given recommended preventive maintenance, it can cause problems for the transmission system. Although the transmission has an Air Filter/Regulator, it can only protect the transmission from contaminants for so long. This is why it is important to follow OEM recommendations for air system preventive maintenance. It is important to regularly drain air tanks and ensure lubricant is not being pumped into the system. It can cause corrosion or, in cold climates, it could freeze and prevent the shift mechanisms from operating. If lubricant is allowed into the system, it could fill the air system components and cause them to lose valuable air volume, slowing or preventing movement.

UltraShift™ HP Models

Preventive Maintenance Overview

To keep a vehicle running properly, it is very important to perform preventive maintenance on the vehicle components. This ensures the vehicle and its subassemblies will operate properly. To cover preventive maintenance completely, you must review the following subjects in detail.

1. Specified Lubricants
2. Maintenance/Lubricant Change Intervals
3. Inspecting the Transmission
4. Changing the Fluid
5. Clutch Calibration

Specified Lubricants

Where transmissions are concerned, lubrication is possibly the most important part of keeping a vehicle operating.

Synthetic Dexron III

Synthetic Dexron III must be used in the WetClutch portion of the transmission.

CD-50

CD-50 must be used in the gearbox portion of the transmission.

Maintenance/Lubricant Change Intervals

Transmission inspections and lubricant changes are outlined below.

For a list of Eaton Roadranger approved lubricants, order publication TCMT-0020.

Table 1: Lubricant Inspection and Change Interval (On-highway)

Interval	Description
Every 2,500 miles	Inspect lubricant level. Perform Transmission Inspection.
Every 5 years or 500,000 miles, whichever occurs first	Change transmission lubricants and filters.

For additional lubricant information, see TCMT-0021.

Transmission Inspections

When performing preventive maintenance, several items must be checked. It is important to perform every step to ensure the transmission will meet its life expectancy. Proper preventative maintenance consists of the following steps:

1. Check WetClutch Lubricant Level
2. Check Gearbox Lubricant Level
3. Inspect for Loose/Missing Bolts
4. Check for Lubricant Leaks

Check Lubricant Level

When checking the WetClutch model, there are three important things to know: where to check the lubricants, what is the proper lubricant level, and what is the proper lubricant type. Always be cautious when checking the transmission fluid since it may be hot.

Checking WetClutch Lubricant

The WetClutch portion is checked using a dipstick located in the engine compartment.

Proper WetClutch Lubricant Level

WetClutch lubricant level should be checked when idling in neutral, with the transmission temperature between 60° F and 120° F (15.5° C and 48.8° C) and when the vehicle has been idling in neutral for at least two (2) minutes. Proper lubricant level is obtained when the lubricant is between the cold ADD mark and the cold FULL marks on the dipstick. Due to thermal expansion of the lubricant, it is not recommended to check the level when the transmission is above 120° F (48.8° C).

Checking Gearbox Lubricant

The gearbox portion is checked at the lubricant fill plug located on the right side of the gear case.

Proper Gearbox Lubricant Level

The gearbox lubricant is at the proper level when it is even with bottom of the fill hole. When you remove the plug to check the lubricant level, lubricant should seep out. Do not use your finger to feel for the lubricant. Even if you can touch the lubricant, it may not be at the proper level. In a transmission, one inch of lubricant level equals about one gallon of lubricant.

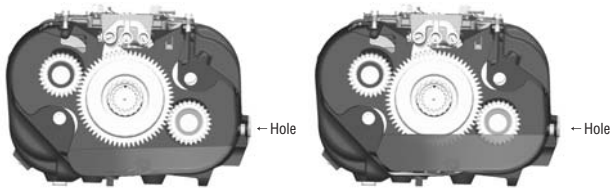

Improper Oil Level Proper Oil Level

Inspect for Loose/Missing Bolts

While you are under the vehicle checking the lubricant, make a quick check for loose or missing bolts. Check all bolts on the PTO cover, inertia brake, shift bar housing, clutch housing oil pan, output flange, and transmission controller. Replace any missing or broken bolt with the proper bolts as called out in the illustrated parts listing. Follow the procedure defined in the transmission service manual when tightening any bolts.

Check for Lubricant Leaks

A lubricant leak could cause a catastrophic transmission failure. Check for leaks at the gasket surfaces, lubricant lines, flywheel housing, rear seal, and the cooler.

Gaskets

Visually check each gasket to ensure that no leak is present. Typically, a moist spot is acceptable, however, drips or larger wet areas are not. Check for leaks at the rear housing, PTO cover, shift bar housing, clutch housing to main case, inertia brake, and clutch oil pan. It is also important to ensure that the leak indeed is coming from the transmission. Make sure the lubricant is not being blown back from the engine or another vehicle component.

Lubricant Lines

There are three external lines for lubricant on the UltraShift HP transmission. One lubricates the inertia brake and the other two are for the oil cooler. Check the lines to ensure they are not leaking.

Flywheel Housing/Clutch Housing

Check for leaks around the flywheel housing/clutch housing mating surface. A faulty seal or loose fittings could cause leaks in the area. The UltraShift HP transmission has what is called a “wet housing” which means that the clutch housing is used as a sump for the WetClutch lubricant. Any leaks here could cause a transmission failure.

Transmission Cooler Leaks

Ensure there are no leaks at the lubricant cooler, hoses, and fittings of the cooler circuit.

Changing the Lubricant

When it is time to change the transmission lubricant, there are only a few steps to follow:

- Draining and Filling the WetClutch portion
- Draining and Filling the Gearbox portion,
- Draining and Filling the Cooler,
- Changing the Lubricant Filters

WARNING

Remember to be careful when changing the transmission lubricant, as it may be hot.

Drain the Transmission Gearbox and WetClutch Housing

1. Locate the drain plugs at the bottom of the transmission gear case and on the clutch housing oil pan.
2. Place a drain pan under each drain plug.
3. Remove both drain plugs and allow the lubricants to drain completely.
4. Disconnect both cooler lines at the WetClutch housing.
5. Pressurize one line with 20 PSI until all lubricant is forced out of the cooler.
6. Reconnect both cooler lines.

Change WetClutch Filters

Change the lubricant filters when the transmission lubricant is changed. Detailed information can be found on removal and replacement of the oil filters in this service manual.

Fill the Transmission

1. Install the transmission gearbox drain plug and tighten to 45-55 lbs.ft. (61.0-74 N•m). Sealant is not required on the drain plug threads.
2. Install the clutch housing oil pan drain plug and torque to 34-48 lbs.ft. (46-65N•m). Sealant is not required on the drain plug thread.
3. Fill the transmission gearbox with the recommended lubricant until the lubricant seeps out of the fill hole.
4. Install the fill plug and torque to 25-35 lbs.ft. (34-47 N•m).
5. Slowly fill the clutch through the dipstick tube with a maximum of 18 pints (8.5 liters) of the recommended lubricant.
6. Place the transmission in neutral position and apply the parking brakes. Start the engine and let idle for five (5) minutes, (this allows oil to fill the WetClutch system and cooling system), add oil as needed to obtain a level at the proper temperature range. Total oil quantity should be approximately 24 pints: this varies depending on the cooling system capacity.
7. Increase the engine idle slowly to 1500 RPM for two (2) minutes. Next, recheck the oil level at normal idle speed in neutral, again adding oil to obtain a level at the proper temperature range.
8. Replace the dipstick and tighten securely.

Clutch Calibration

The UltraShift HP system automatically provides for clutch wear. The system will initiate a clutch calibration once per vehicle power up, when certain vehicle conditions are right. Of these conditions, the most important ones include: when the engine is running at idle speed, during normal operating temperature, when the vehicle is stopped, and when neutral is selected on the Shift Control. During the calibration, the clutch is partially engaged until the engine begins to slightly lug down. It will then disengage the clutch and repeat this process several times. The calibration process usually takes as little as thirty seconds but can take as long as two (2) minutes. The calibration will be aborted when any position other than neutral is selected on the Shift Control.

If it appears that the vehicle is not engaging smoothly from a stop, it is possible that the clutch needs to be re-calibrated. If it has not been previously calibrated during the current power up, stop the vehicle with the engine idling at its normal operating temperature and place the Shift Control in neutral and wait two (2) minutes. If the calibration is being performed you should hear the engine slightly lug down and then return to its no load condition several times.

If calibration does not occur a Power Down/Power Up will initiate a calibration.

Oil Leak Inspection Process

Inspect for Oil Leak

Determine if it is a Weep or a Leak

Weep: Stained, damp, no drips, light oil film, dirt adhered to the contaminated area.

Leak: Extremely wet or dripping of oil in the contaminated area.

Gasket

1. Clean suspected oil weep area with a clean dry cloth or mild soluble degreaser.

2. Ensure lube is to proper level.

3. Notify the customer that it is only a weep and it is not considered to be detrimental to the life of the transmission.

4. Repair is complete.

Rear Seal

1. Do not repair: Rear seal is designed to allow minimal seepage (refer to Roadranger TCSM-0912 Seal Maintance Guide).

2. Ensure lube is to proper level.

Leak

Step 1

1. Determine the origin of the leak path.
2. If origin of leak is obvious skip to Step 3.
3. If the origin of the oil leak is not obvious then use either of the two following steps to determine the oil leak:

Note: Do not use a high pressure spray washer to clean the area. Use of a high pressure spray may force contamination into the area of concern and temporarily disrupt the leak path.

i. Clean area with a clean dry cloth or mild soluble degreaser and fill the transmission to the proper lube level.

OR

ii. Clean the area as noted above and insert tracer dye into the transmission lube and fill transmission to proper lube level.

Step 2

Operate vehicle to normal transmission operating temperature and inspect the area for oil leak(s) visually or if tracer dye was introduced use an UVL (Ultraviolet Light) to detect the tracer dye's point of origin.
Note: When inspecting for the origin of the leak(s) make sure the assumed leak area is not being contaminated by a source either forward or above the identified area such as the engine, shift tower, shift bar housing, top mounted oil cooler, etc...

Step 3

Once the origin of the leak is identified, repair the oil leak using proper repair procedures from the designated model service manual.

Step 4

After the repair is completed, verify the leak is repaired and operate the vehicle to normal transmission operating temperature.
Inspect repaired area to ensure oil leak has been eliminated. If the leak(s) still occurs, repeat steps or contact the Roadranger Call Center at 1-800-826-4357.

Lubricant Filter (UltraShift HP Models Only) – Remove

Special Instructions

None

Required Tools

- Basic Hand Tools

Removal

1. Remove the drain plug and drain the fluid from the WetClutch portion of the transmission.

CAUTION

Fluid may be hot.

2. Using a 15mm wrench, remove the oil pan mounting bolts. Record location of the long and short bolts.

3. Remove the WetClutch oil pan and gasket.

4. Remove the two (2) WetClutch filters. Make sure filter seals are removed.

   Note: The filters will contain fluid when they are removed.

IMPORTANT

Transmission filters should be changed during regular lube intervals. Inspection of the transmission filter should be conducted during preventative maintenance checks for damage or corrosion. Replace as necessary.

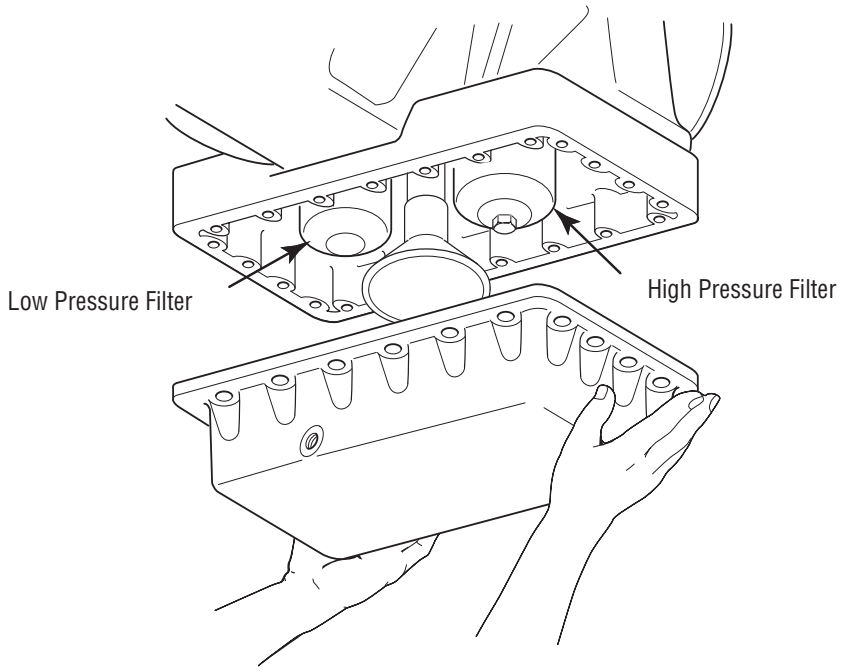

Filter Location

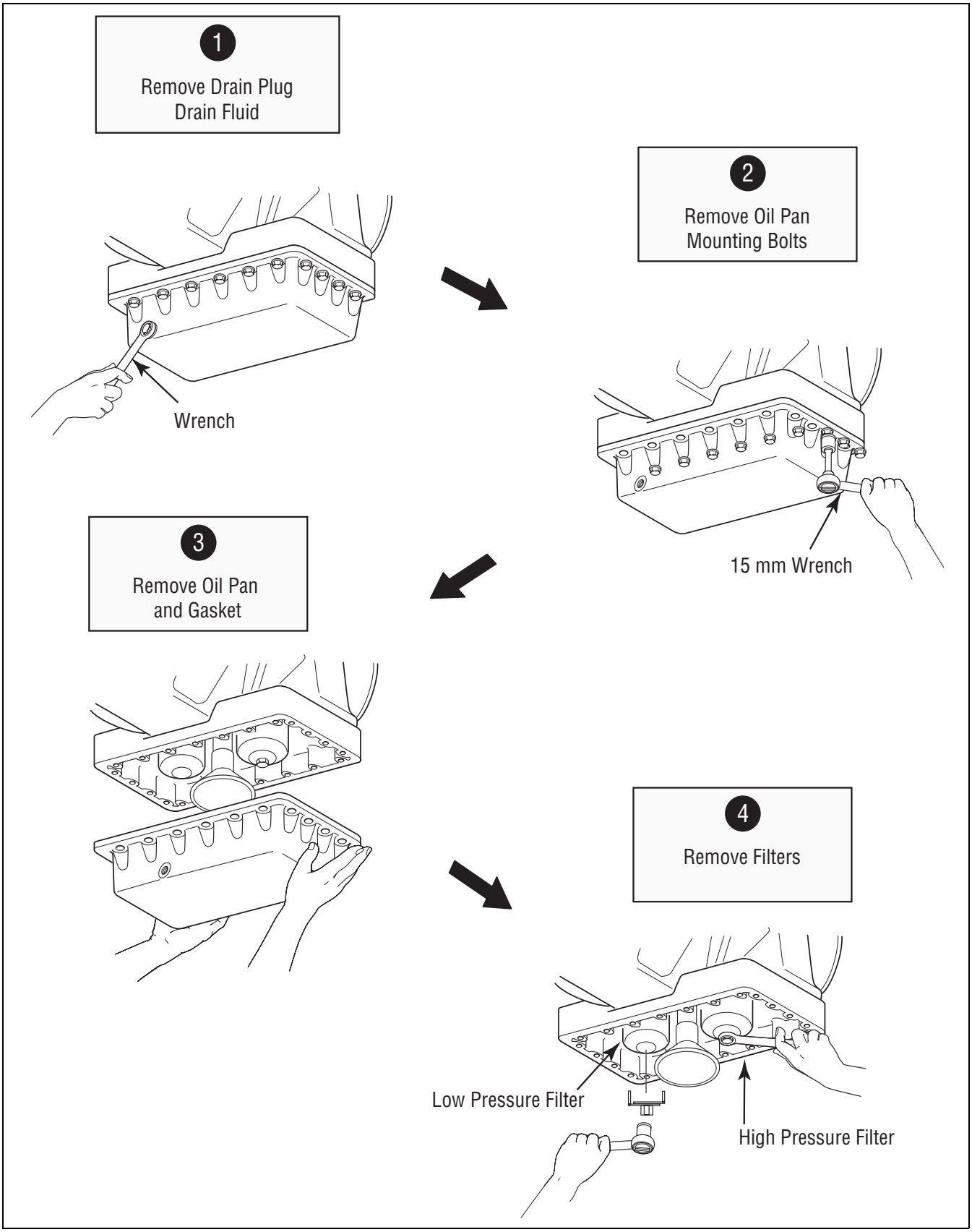

Lubricant Filter Removal

Lubricant Filter (UltraShift HP Models Only) – Install

Special Instructions

Install each filter in its correct location.

Clean filter seal mating surfaces on the transmission.

Clean and remove all old gasket material from the mating surfaces of the clutch housing and the oil pan.

Required Tools

Basic Hand Tools

Installation

1. Lubricate each filter seal ring with synthetic Dexron III prior to installation.

2. Install the low-pressure filter and turn until seal touches. Then tighten 3/4 to 1 full turn.

3. Install the high-pressure filter and tighten to 25-30 lbs.ft. (34-41 N•m).

4. Install a new gasket and the WetClutch oil pan.

5. Using a 15mm wrench install the mounting bolts and tighten to 30-35 lbs.ft. (41-47 N•m) using a cross pattern.

   Note: Put the long and short bolts back in their proper location.

6. Install the oil pan drain plug and tighten to 34-48 lbs.ft. (46-65 N•m).

   Note: Fill the WetClutch portion with the proper fluid.

Final Check

Make sure the bolts are properly tightened.

Make sure the WetClutch portion is properly filled with the specified fluid.

Check for fluid leaks during and after operating the vehicle.

⚠ IMPORTANT

Transmission filters should be changed during regular lube intervals. Inspection of the transmission filter should be conducted during preventative maintenance checks for damage or corrosion. Replace as necessary.

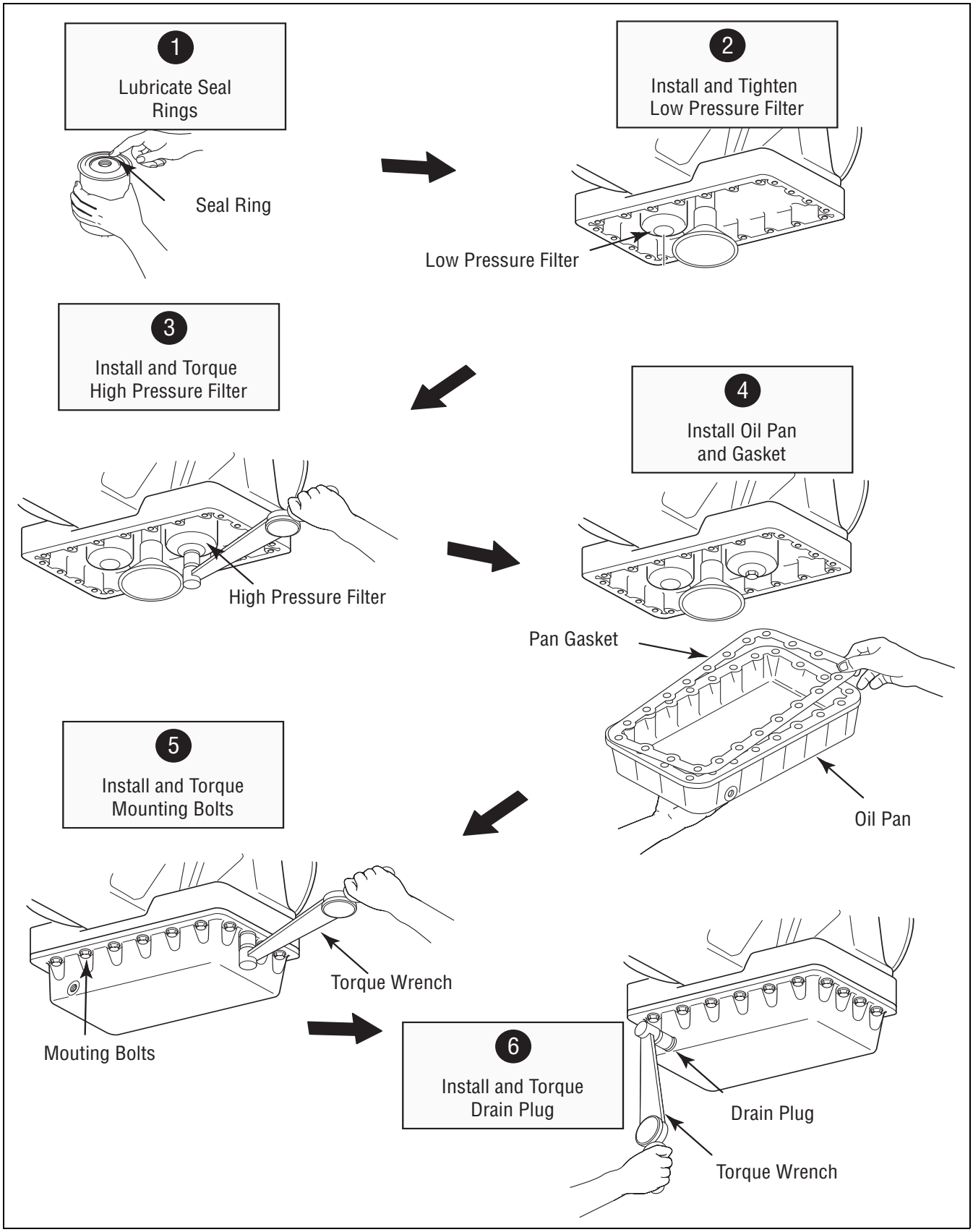

Lubricant Filter Installation

Rail Select Sensor – Remove

Special Instructions

While removing the hex key mounting screws, hold the sensor in place. Do not allow it to snap out of position.

Required Tools

- Basic Hand Tools

Removal

1. Disconnect the Transmission Harness from the Rail Select Sensor.
2. Using a 5/32” hex key wrench, remove the two (2) sensor hex key mounting screws.

   Note: Carefully allow the sensor to rotate (not snap) to a relaxed position or the sensor can snap when the hex key mounting screws are removed.

3. Remove the sensor and gasket from the housing.

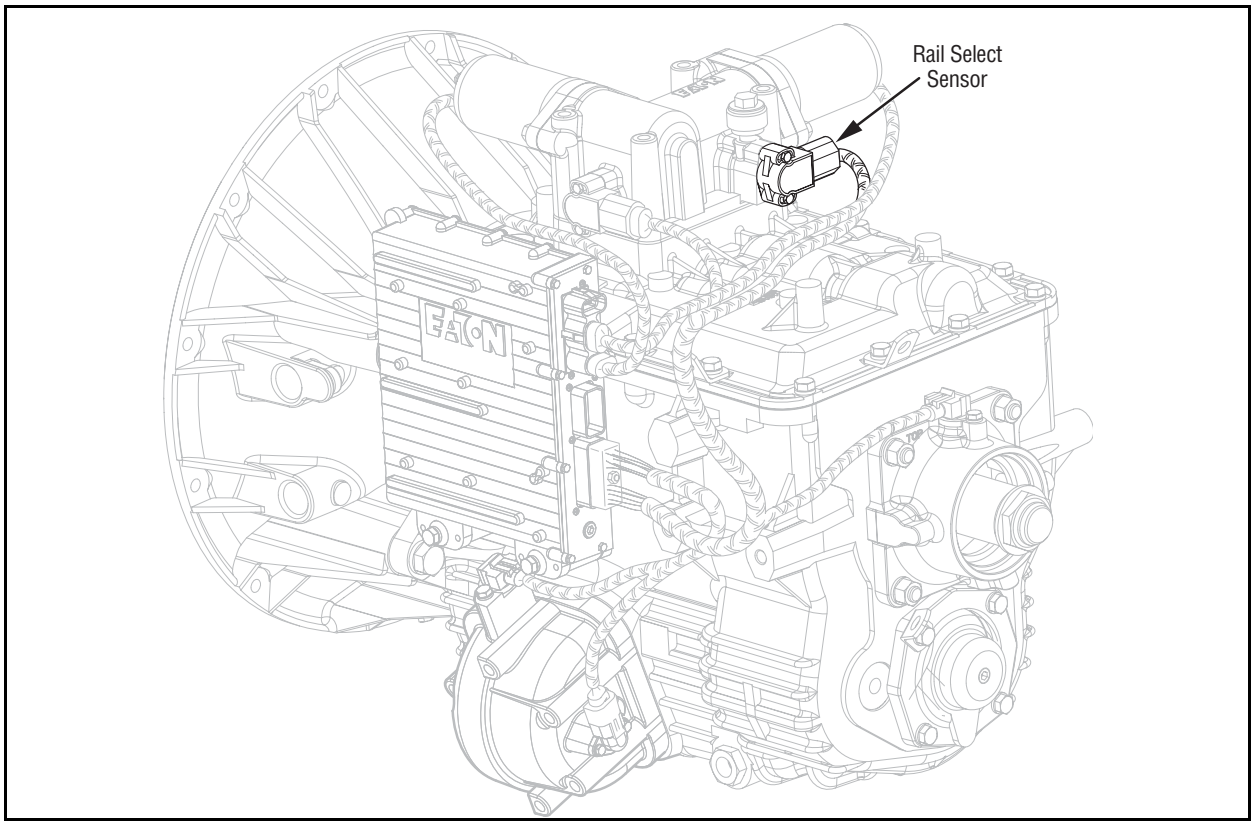

Rail Select Sensor Location

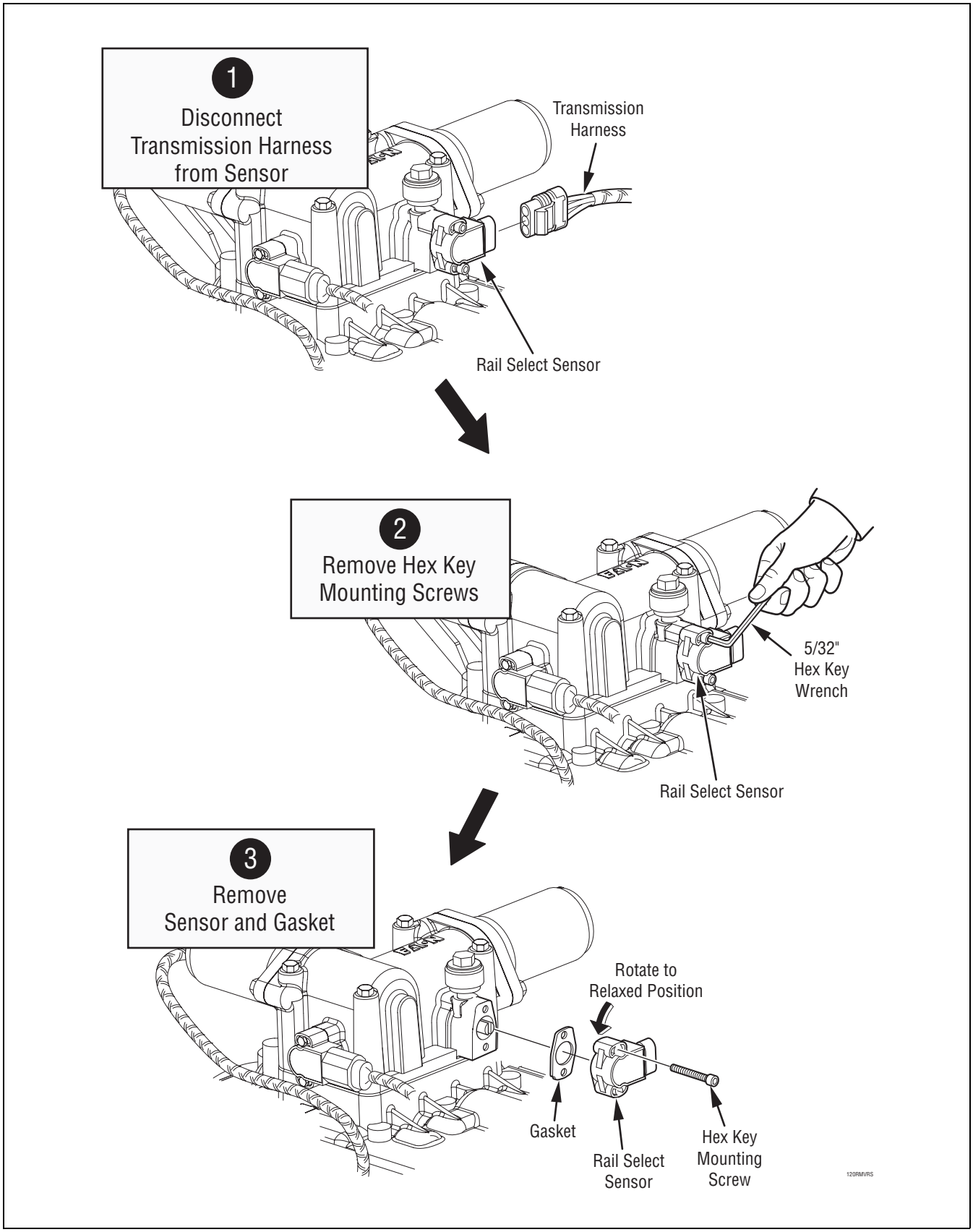

Rail Select Sensor Removal

Rail Select Sensor – Install

Special Instructions

While installing the hex key mounting screws, hold the Rail Select Sensor in place. Do not allow it to snap out of position.

Torques given below are in pound-inches. Use care not to overtighten.

Required Tools

Basic Hand Tools

Installation

1. Align the sensor's tab with the slot in the shifter housing. Then insert the Rail Select Sensor, with gasket, into its mounting location.

   Note: Install the sensor so the connector opening faces the right side of the transmission.

2. Using a 5/32" hex key wrench, install the hex key mounting screws and tighten to 21-27 lbs.in. (2.4-3.1 N•m).

   Note: Carefully hold the sensor in position while installing the hex key mounting screws or the sensor can snap.

3. Reconnect the Transmission Harness to the Rail Select Sensor.

Final Check

Make sure the gasket is installed between the sensor and the shifter housing.

Make sure the screws are tightened to specification.

Make sure all connections are tight.

Make sure the Transmission Harness is properly connected to the Gear Select Sensor.

Be sure to perform the Electric Shifter calibration procedure before operating the transmission.

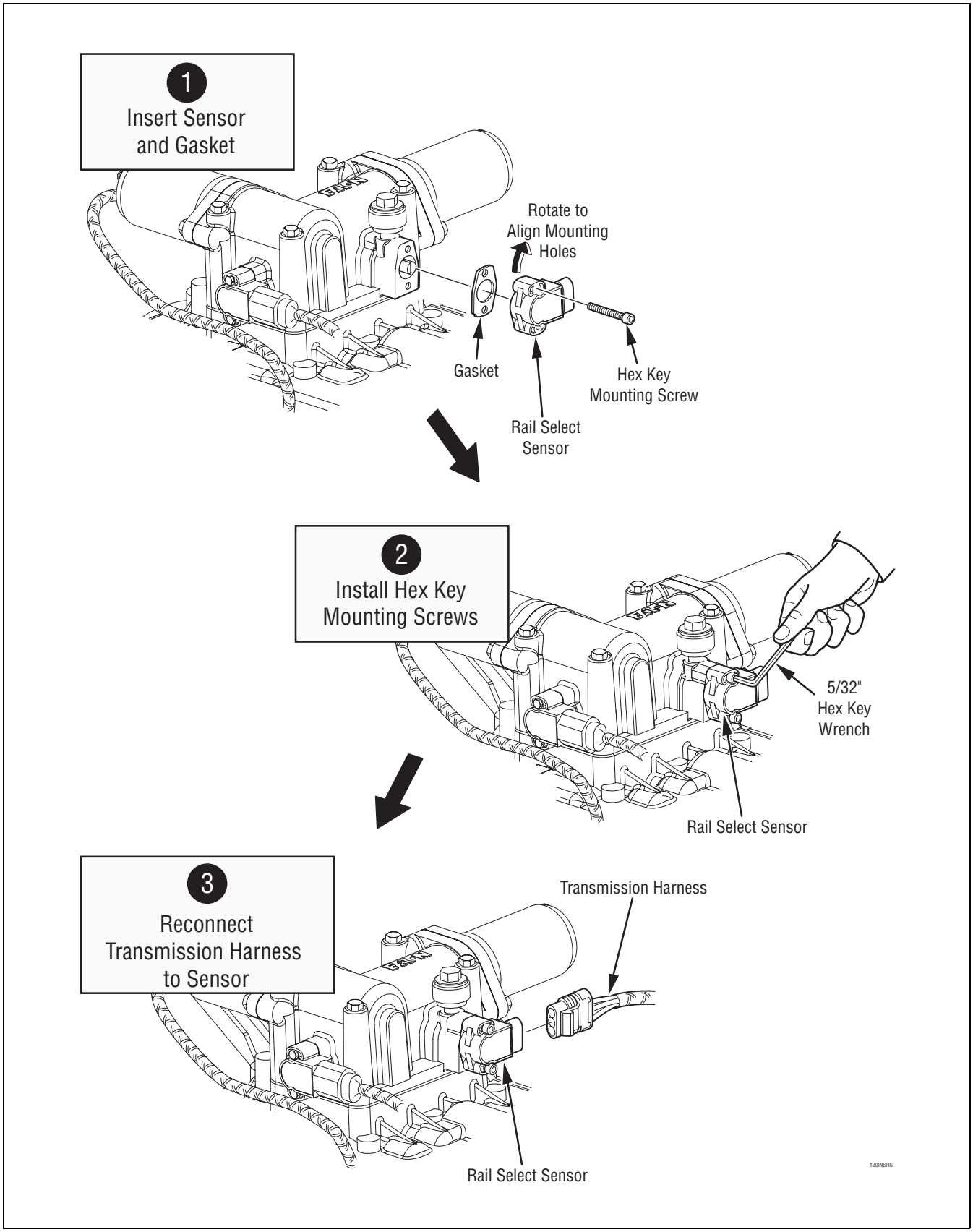

Rail Select Sensor Installation

Gear Select Sensor – Remove

Special Instructions

While removing the hex key mounting screws, hold the sensor in place. Do not allow it to snap out of position.

Required Tools

Basic Hand Tools

Removal

1. Disconnect the Transmission Harness from the Gear Select Sensor.
2. Using a 5/32” hex key wrench, remove the two (2) sensor hex key mounting screws.

   Note: Carefully allow the sensor to rotate to a relaxed position, or the sensor can snap when the hex key mounting screws are removed.

3. Remove the sensor and gasket from the housing.

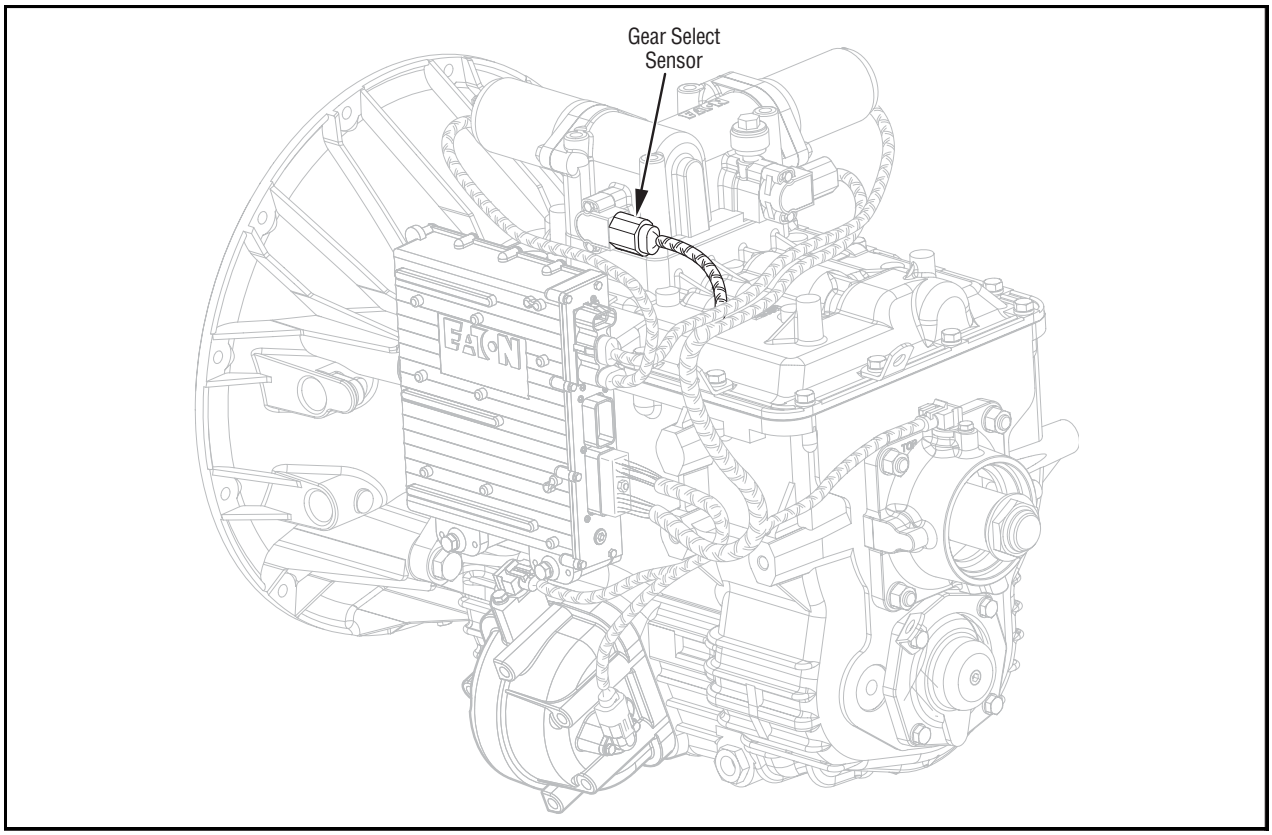

Gear Select Sensor Location

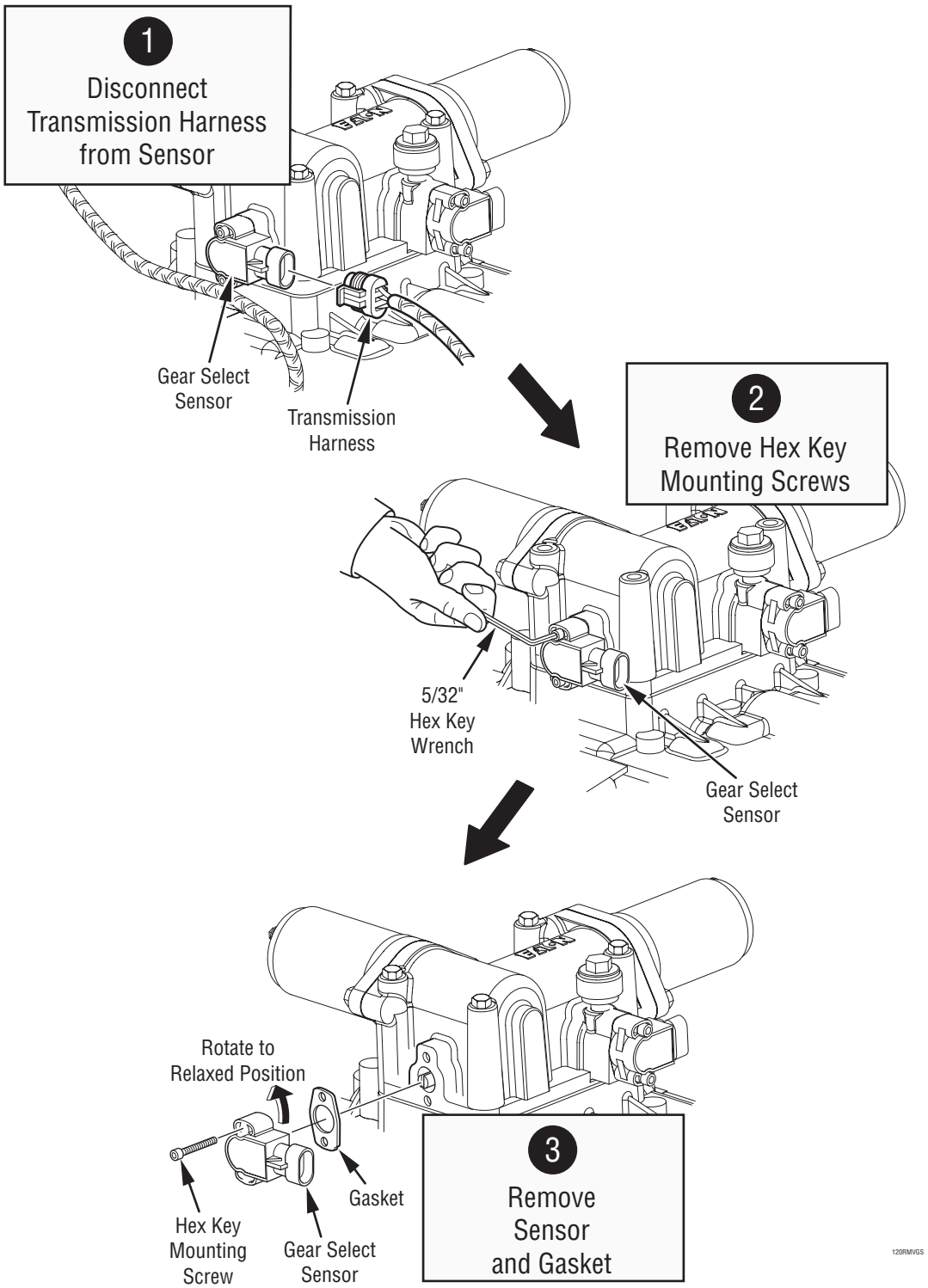

Gear Select Sensor Removal

Gear Select Sensor – Install

Special Instructions

While installing the hex key mounting screws, hold the Gear Select Sensor in place. Do not allow it to snap out of position.

Torques given below are in pound-inches. Use care not to overtighten.

Install the sensor, so the connector opening faces the back of the transmission.

Required Tools

Basic Hand Tools

Installation

1. Align the sensor's tab with the slot in the shifter housing. Then insert the Gear Select Sensor with gasket into its mounting location.
2. Using a 5/32" hex key wrench, install the two (2) hex key mounting screws and tighten to 21-27 lbs.in. (2.4-3.1 N•m).

   Note: Carefully hold the sensor in position while installing the hex key mounting screws, or the sensor can snap.

3. Reconnect the Transmission Harness to the Gear Select Sensor.

Final Check

Make sure the gasket is installed between the sensor and the shifter housing.

Make sure the screws are tightened to specification.

Make sure all connections are tight.

Make sure the Transmission Harness is properly connected to the Gear Select Sensor.

Be sure to perform the Electric Shifter calibration procedure before operating the transmission.

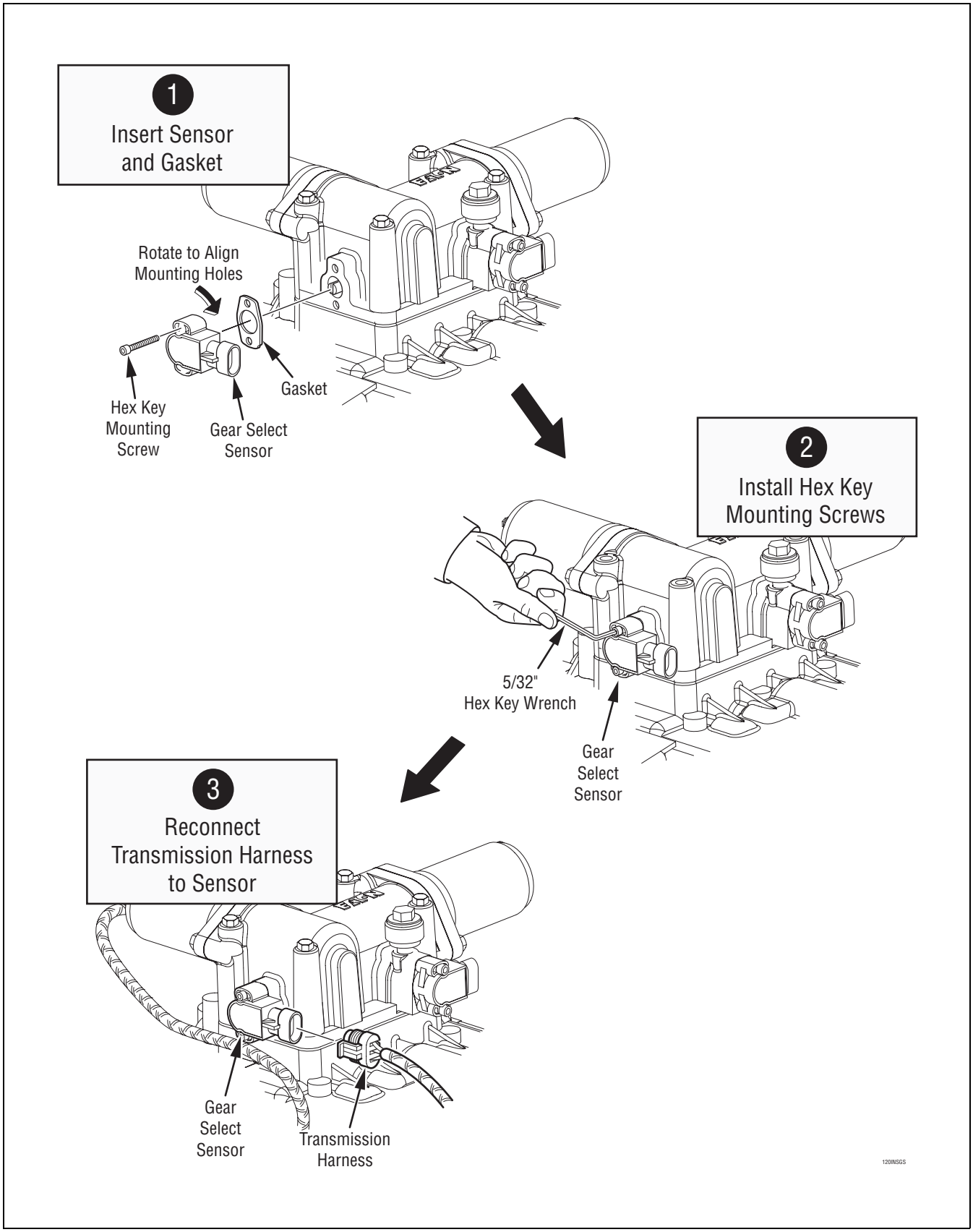

Gear Select Sensor Installation

Input Shaft Speed Sensor – Remove

Special Instructions

Drain the transmission lubricant on 6-Speed transmissions before removing the Input Shaft Speed Sensor.

Input Shaft Speed Sensor location varies as follows:

- 6-Speed- Top or side of Inertia Brake
- 7, 10 and 18-Speed- Right front of Shift Bar Housing.

Required Tools

- Basic Hand Tools

Removal

1. Disconnect the Transmission Harness from the Input Shaft Speed Sensor.
2. Using a 3/8" wrench, remove the sensor retaining bolt.

   Note: On 6-Speed transmissions, drain the lubricant before removing the sensor.

3. Remove the Input Shaft Speed Sensor, with O-ring, from the transmission housing.

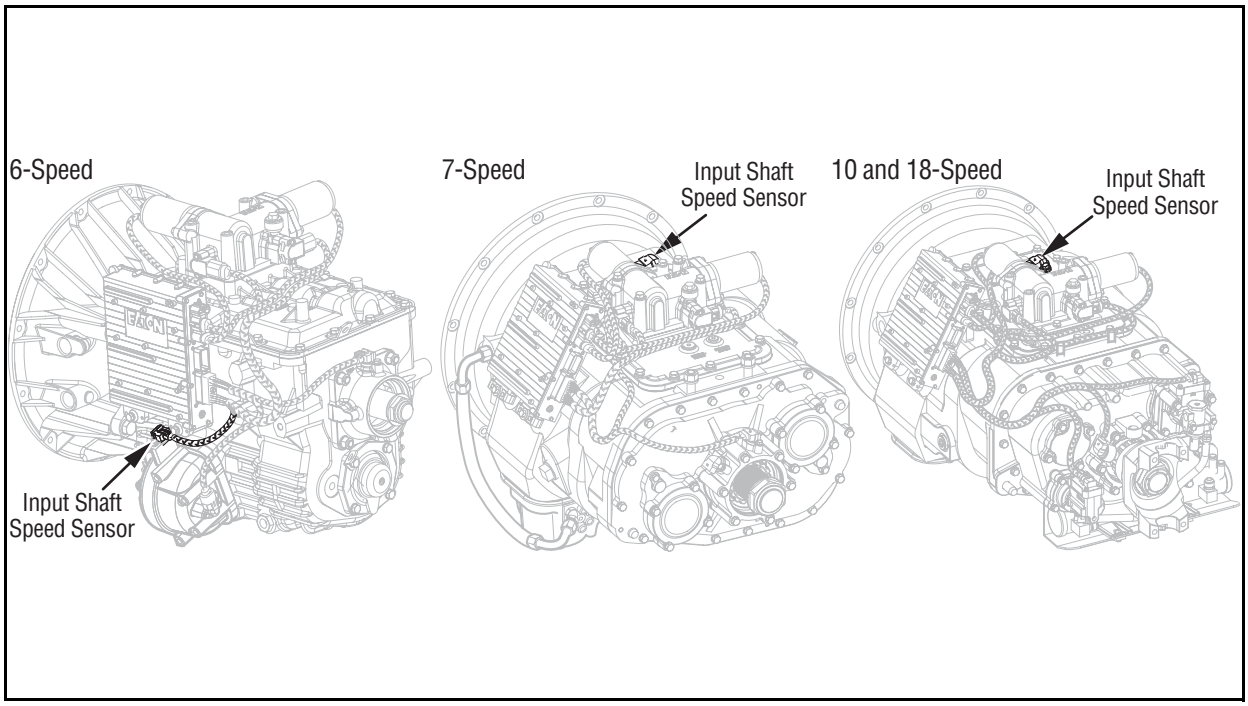

Input Shaft Speed Sensor Location

6-Speed

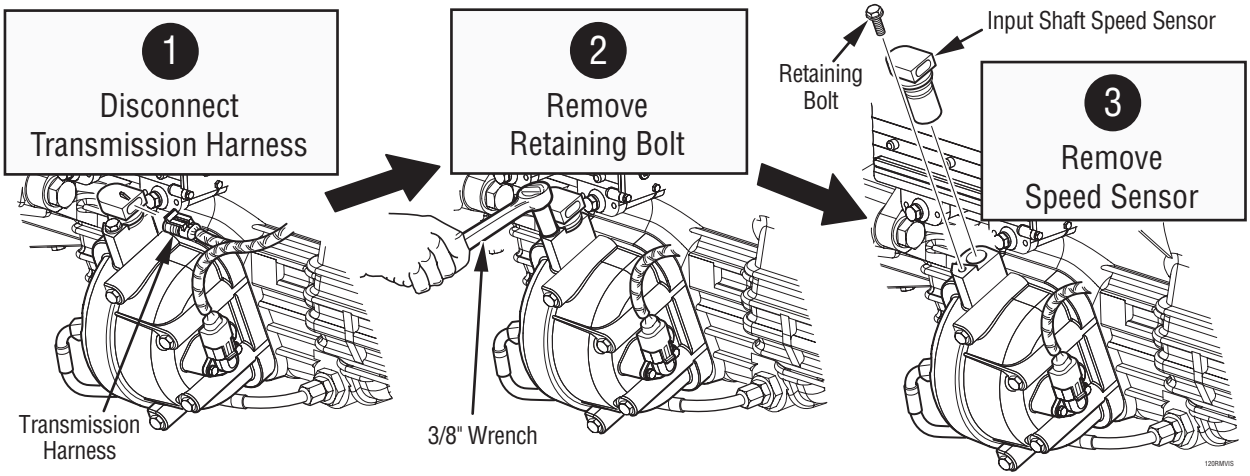

7, 10 and 18-Speed

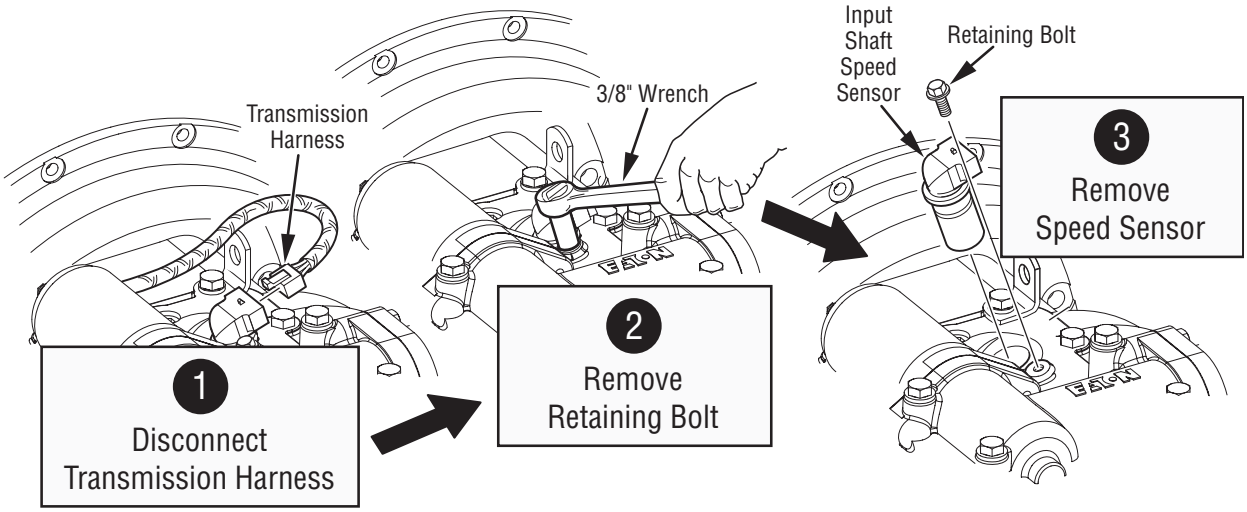

Input Shaft Speed Sensor – Install

Special Instructions

Clean the mounting surface on the housing and remove any burrs or sharp edges.

Lubricate the O-ring with Eaton Fuller silicone #71214 or equivalent.

Input Shaft Speed Sensor location varies as follows:

- 6-Speed- Top or side of Inertia Brake
- 7, 10 and 18-Speed- Right front of Shift Bar Housing.

Required Tools

- Basic Hand Tools

Installation

1. Using a smooth, twisting motion, fully insert the sensor in the transmission housing opening.
2. Using a 3/8" wrench, install the retaining bolt and tighten to 8-10 lbs.ft. (10.8-13.6 N•m).
3. Reconnect the Transmission Harness to the Input Shaft Speed Sensor.

   Note: Fill the transmission with lubricant.

Final Check

Make sure the transmission is properly filled with lubricant.

Make sure the retaining bolt is properly tightened.

Make sure the Transmission Harness is properly connected to the Input Shaft Speed Sensor.

6-Speed

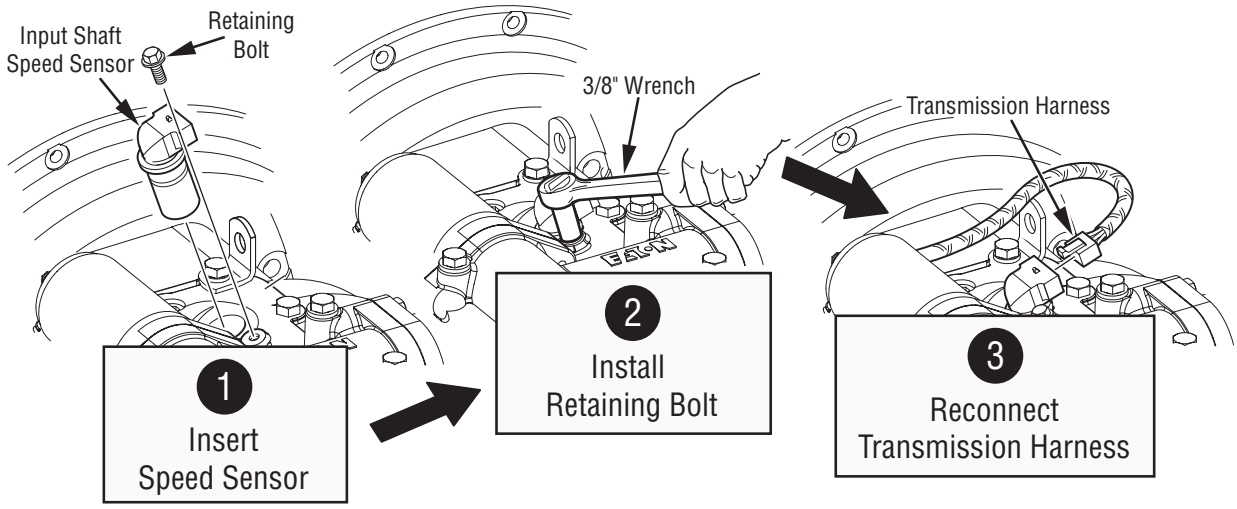

7, 10 and 18-Speed

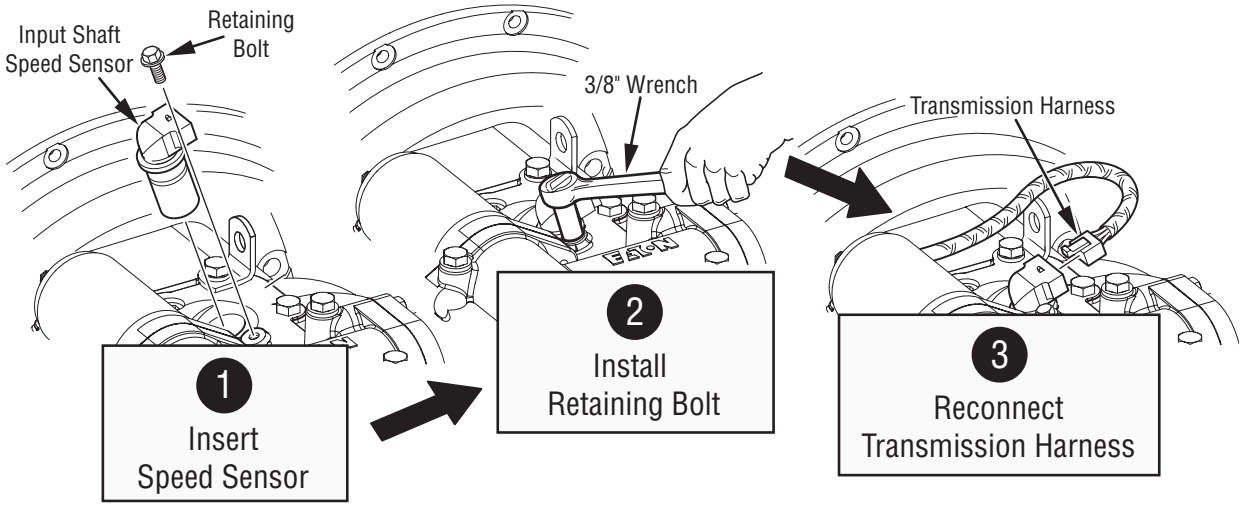

Main Shaft Speed Sensor – Remove

Special Instructions

None

Required Tools

Basic Hand Tools

Removal

1. Disconnect the Transmission Harness from the Main Shaft Speed Sensor.
2. Using a 3/8” wrench, remove the sensor retaining bolt.
3. Remove the sensor, with O-ring, from the transmission housing.

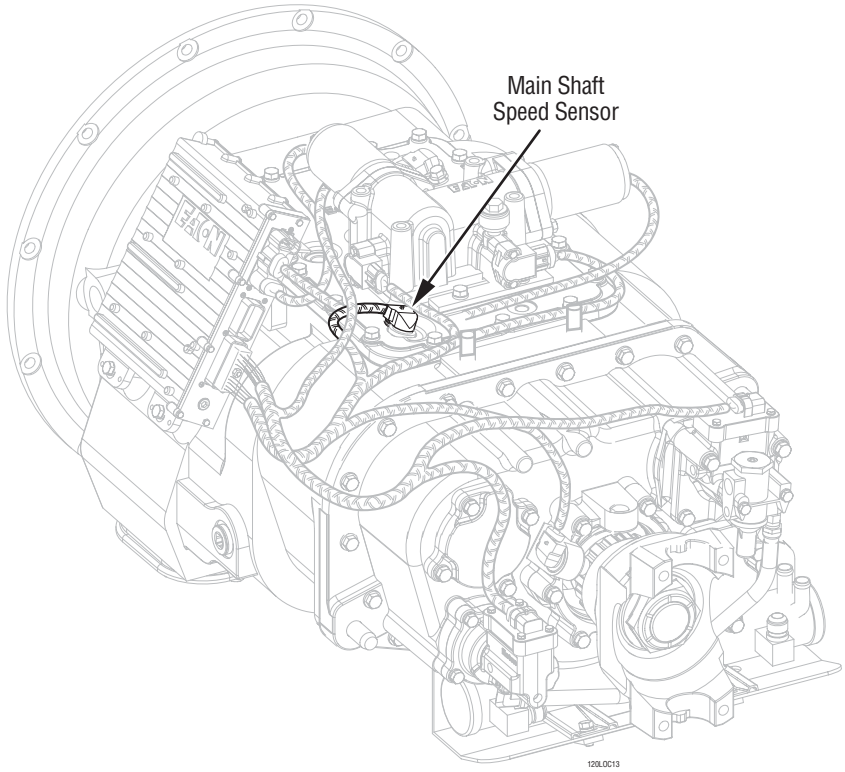

Main Shaft Speed Sensor Location

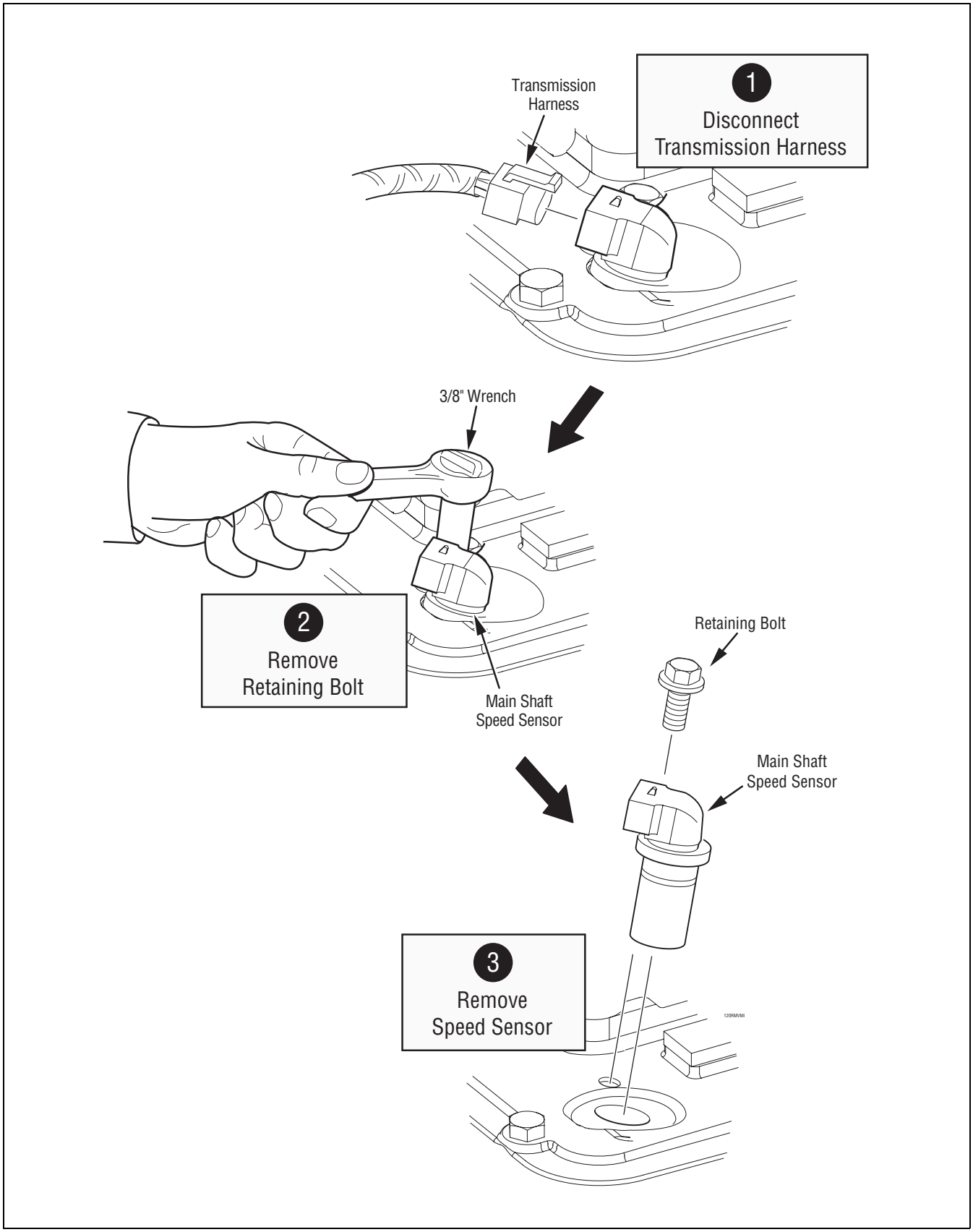

Main Shaft Speed Sensor Location

Main Shaft Speed Sensor – Install

Special Instructions

Clean the mounting surface on the housing and remove any burrs or sharp edges.

Lubricate the O-ring with Eaton Fuller silicone #71214 or equivalent.

Required Tools

Basic Hand Tools

Installation

1. Using a smooth, twisting motion, fully insert the Main Shift Speed Sensor in the transmission housing opening.
2. Using a 3/8” wrench, install the retaining bolt and tighten to 8-10 lbs.ft. (10.8-13.6 N•m).
3. Reconnect the Transmission Harness to the Sensor.

Final Check

Make sure the retaining bolts are properly tightened.

Make sure the Transmission Harness is properly connected to the Main Shaft Speed Sensor.

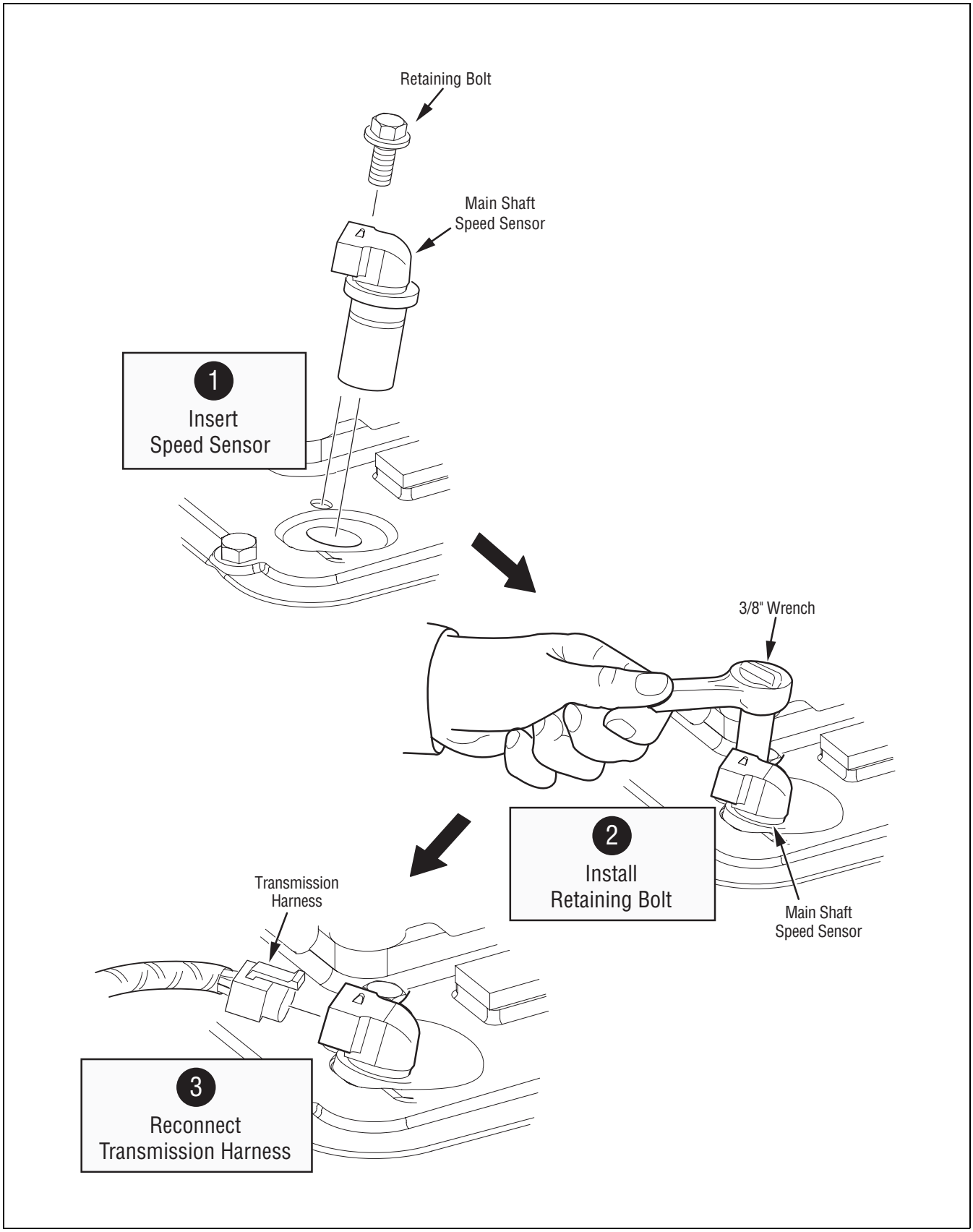

Main Shaft Speed Sensor Installation

Output Shaft Speed Sensor – Remove

Special Instructions

The Output Shaft Speed Sensor location may vary depending on OEM design specifications. The sensor may be located at the 12 o'clock (shown in Figure 13), 10 o'clock, or 6 o'clock position on the Output Shaft Housing.

The 10 and 18-Speed transmissions have an exposed tone ring on the output shaft. However, the service procedure for the Output Shaft Speed Sensor is the same for all models.

Required Tools

Basic Hand Tools

Removal

1. Disconnect the Transmission Harness from the Output Shaft Speed Sensor.
2. Using a wrench, remove the sensor retaining bolt. Retaining bolt size varies as follows:
   a. 6 and 7-Speed - Use a 3/8" wrench
   b. 10 and 18-Speed - Use a 13mm wrench.
3. Remove the sensor, with O-ring, from the transmission housing.

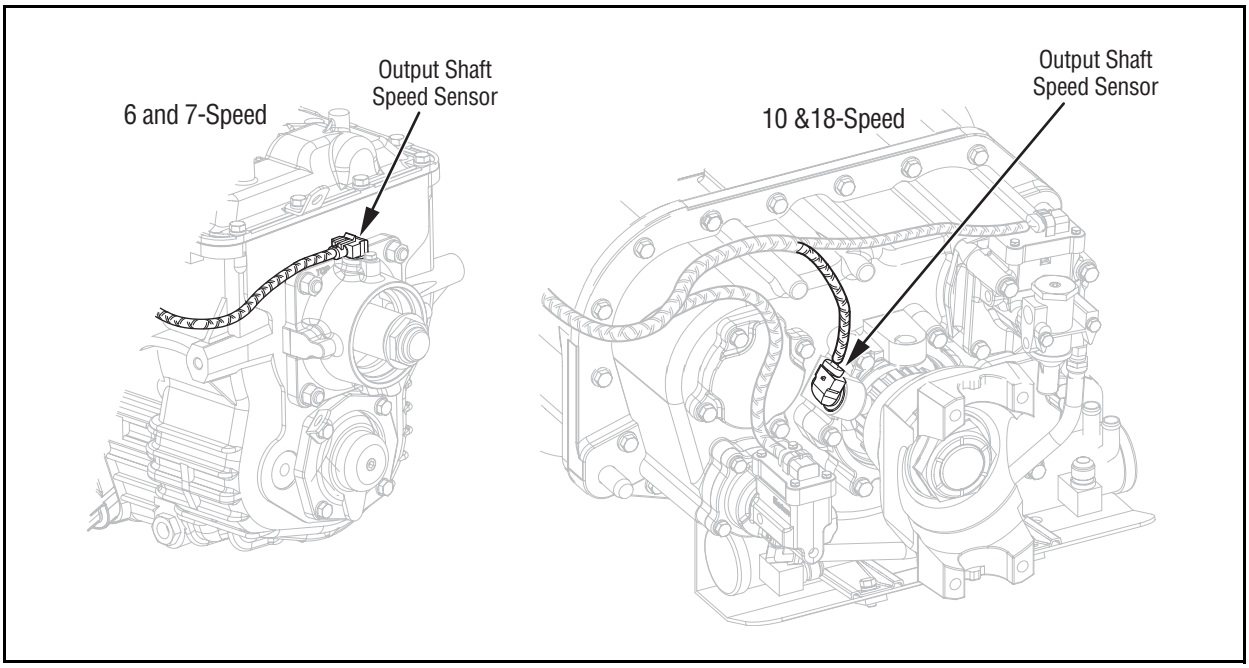

Output Shaft Speed Sensor Location

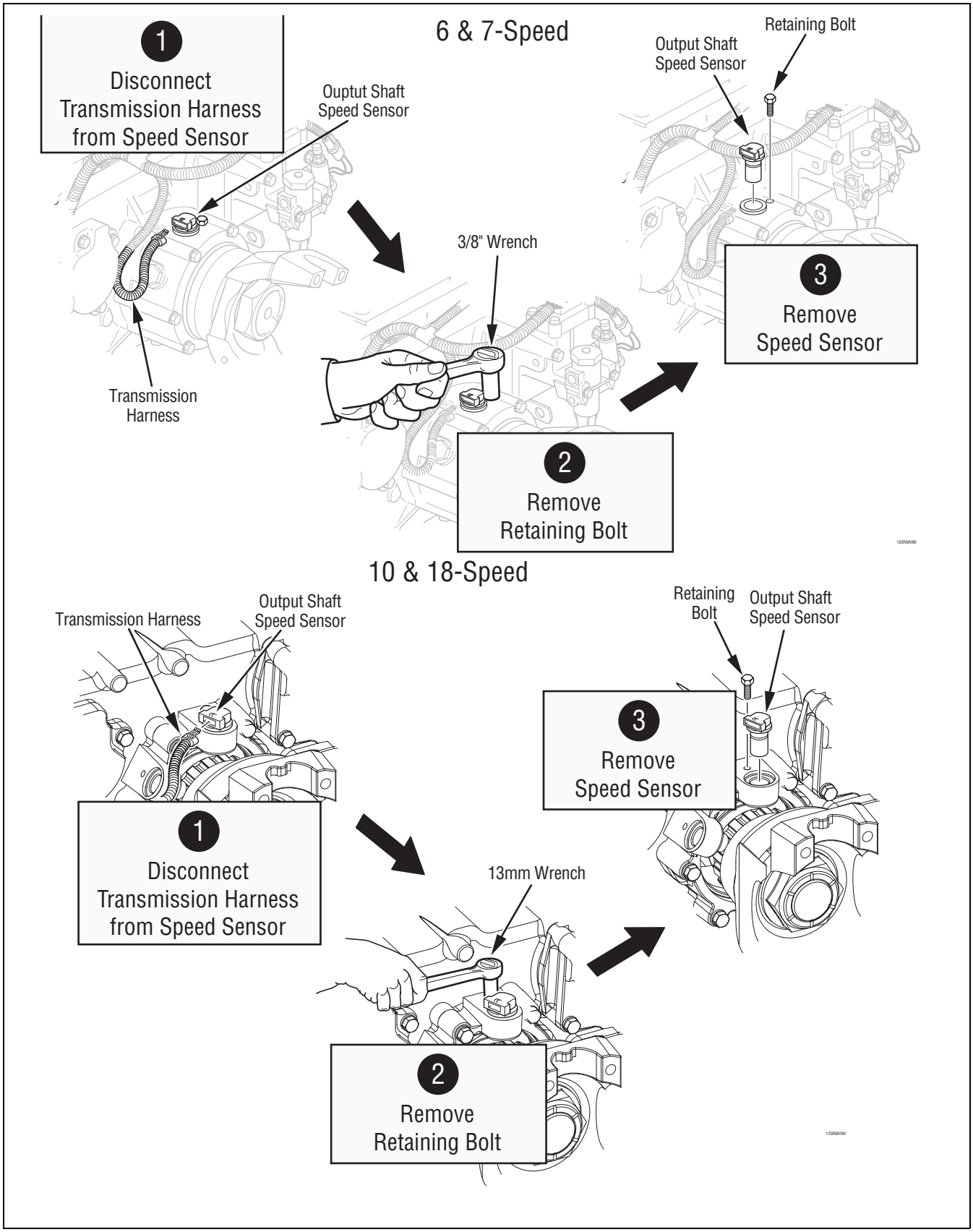

Output Shaft Speed Sensor Removal

Output Shaft Speed Sensor – Install

Special Instructions

Clean the mounting surface on the housing and remove any burs or sharp edges.

Required Tools

Basic Hand Tools

Installation

1. Using a smooth, twisting motion, fully insert the Output Shaft Speed Sensor in the transmission housing opening.

   Note: Lubricate the O-ring with Eaton Fuller silicon #71214 or equivalent.

2. Using a wrench, install the retaining bolt and tighten as follows:
   a. 6 and 7-Speed- Use a 3/8” wrench and tighten to 8-10 lbs.ft. (10.8-13.6 N•m).
   b. 10 and18-Speed- Use a 13mm wrench and tighten to 15-19 lbs.ft. (20.3-25.8 N•m).

3. Reconnect the Transmission Harness to the Output Shaft Speed Sensor.

Final Check

Make sure the retaining bolts are properly tightened.

Make sure the Transmission Harness is properly connected to the Main Shaft Speed Sensor.

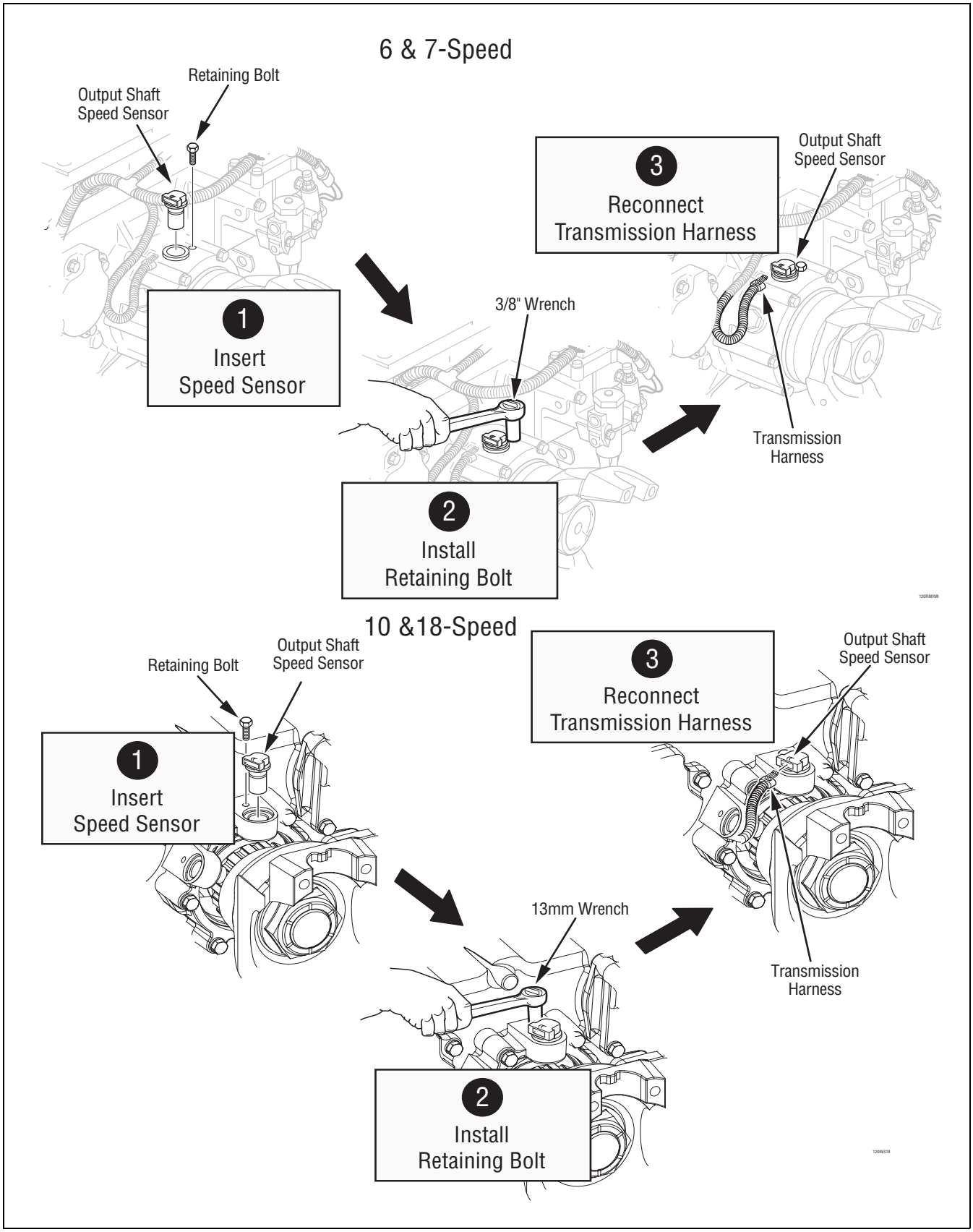

Output Shaft Speed Sensor Installation

Range Valve – Remove

Special Instructions

The Range Valve may be difficult to remove from the housing because of the O-rings.

Do not use a hammer to loosen the Range Valve in the housing.

Required Tools

Basic Hand Tools

Removal

1. Relieve system air pressure by draining the air tanks on the vehicle. When air pressure is relieved disconnect the Transmission Harness from the Range Valve assembly.

2. Using a 5/16” wrench, remove the four (4) mounting capscrews.

3. Lift and remove the Range Valve from the housing.

   Note: The Range Valve may be difficult to remove from the housing.

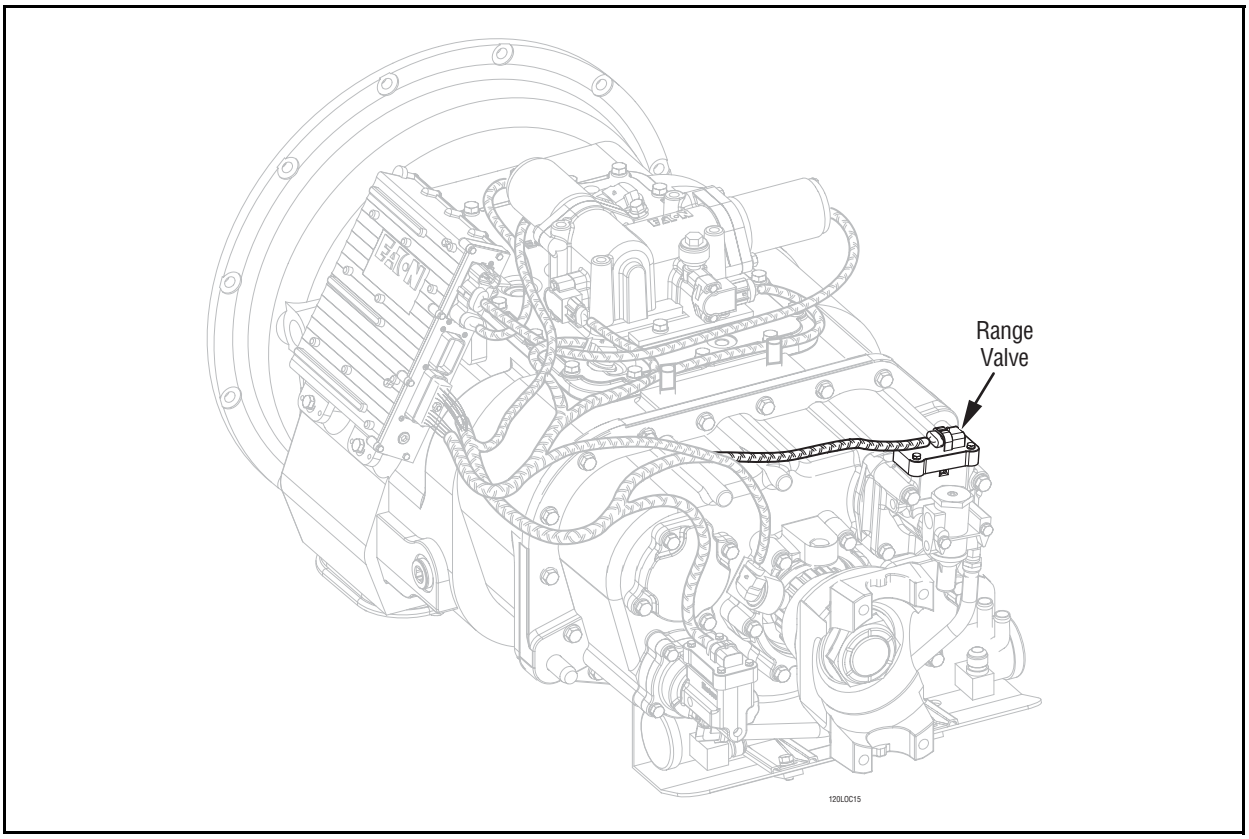

Range Valve Location

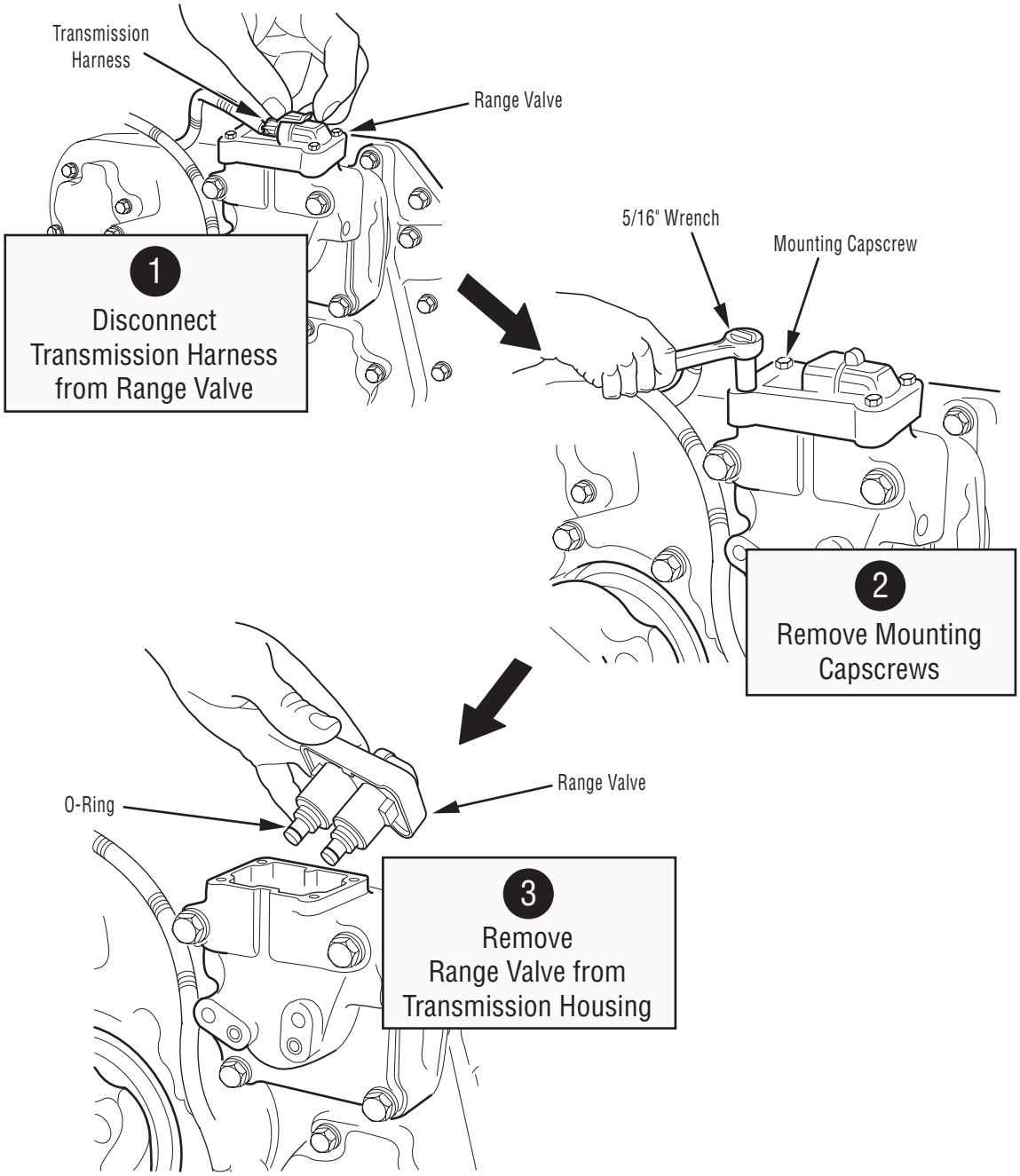
Transmission Harness
Range Valve
1
Disconnect Transmission Harness from Range Valve
5/16" Wrench
Mounting Capscrew
2
Remove Mounting Capscrews
O-Ring
Range Valve
3
Remove Range Valve from Transmission Housing

Range Valve – Install

Special Instructions

Torques given below are in pound-inches. Use care not to overtighten.

Use care when installing O-rings

Required Tools

Basic Hand Tools

Installation

1. Install and push the Range Valve down into the housing.

   Note: Lubricate O-ring with Eaton Fuller silicone #71214 or equivalent.

   Note: The valve is keyed to fit its mounting location. Take care to align the key in the valve with the notch in the housing.

2. Using a 5/16” wrench, install the four (4) mounting capscrews and tighten to 21-27 lbs.in. (2.4-3.1 N•m) using a cross pattern.

3. Reconnect the Transmission Harness to the Range Valve and close all air tank drains.

Final Check

Make sure the mounting bolts are properly tightened.

Make sure the Transmission Harness is connected and locked.

Make sure all air tank drains are closed.

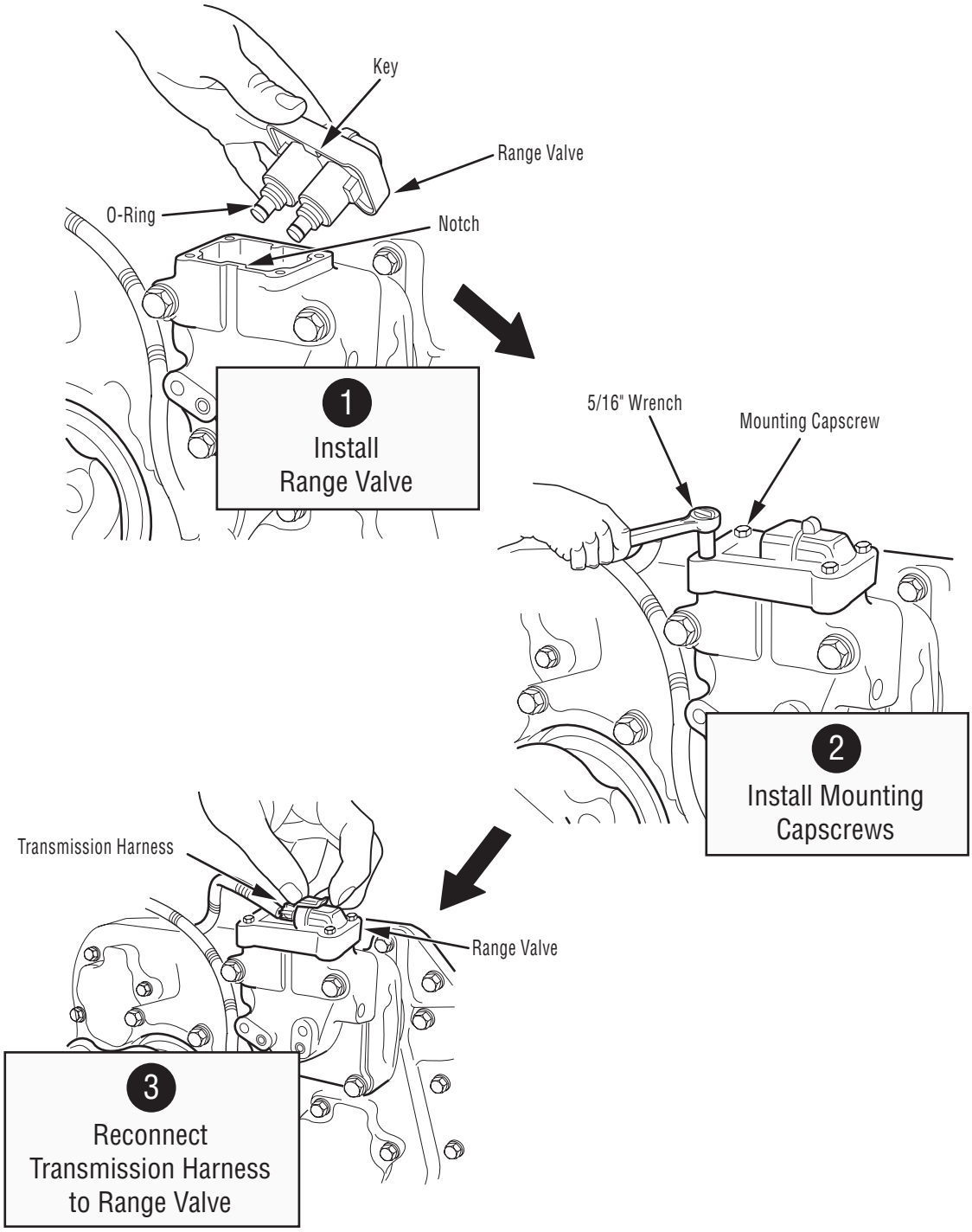

Range Valve Installation

Splitter Valve – Remove

Special Instructions

The Splitter Valve may be difficult to remove from the transmission housing because of the O-ring seals.

Do not use a hammer to loosen the Splitter Valve in the housing.

Required Tools

Basic Hand Tools

Removal

1. Relieve system air pressure by draining air tanks on the vehicle. When air pressure has been relieved, disconnect the Transmission Harness from the Splitter Valve.

2. Using a 5/16” wrench, remove the four (4) mounting capscrews.

3. Lift and remove the Splitter Valve from the housing.

   Note: The Splitter Valve may be difficult to remove from the housing.

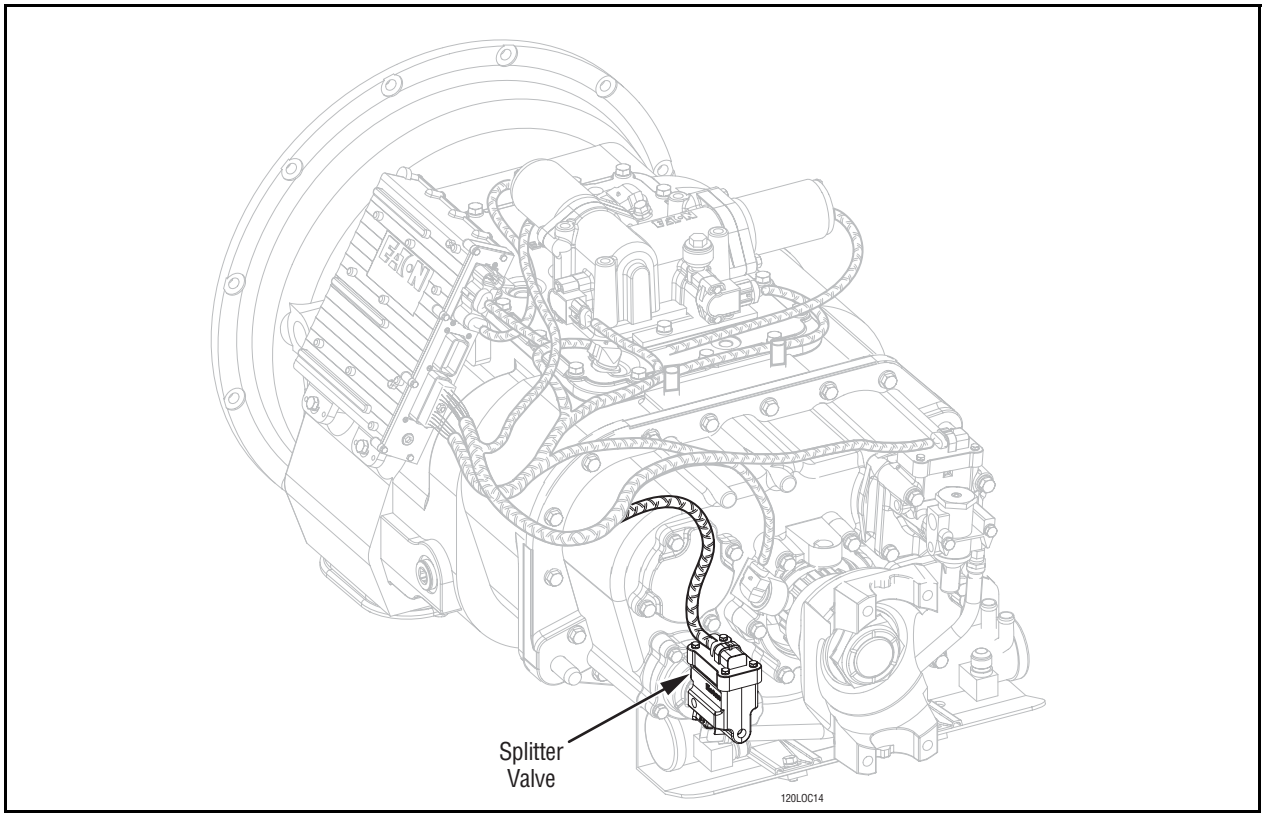

Splitter Valve Location

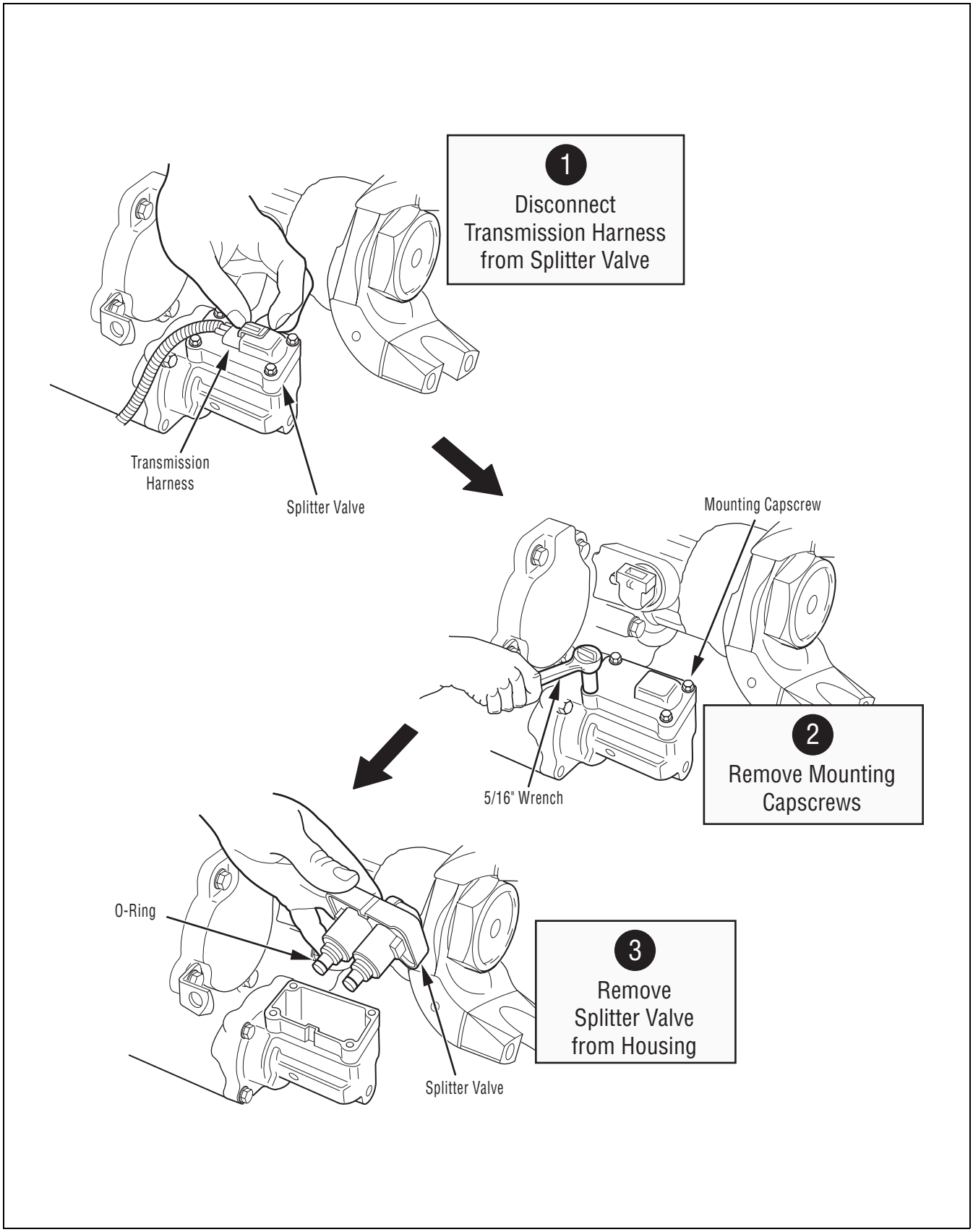

Splitter Valve Removal

Splitter Valve – Install

Special Instructions

Torques given below are in pound-inches. Use care not to overtighten.

Required Tools

Basic Hand Tools

Installation

1. Install and push the Splitter valve down into the housing.

   Note: Lubricate O-rings with Eaton Fuller silicone #71214 or equivalent.

   Note: The valve is keyed to fit its mounting location. Take care to align the key in the valve with the notch in the housing.

2. Using a 5/16” wrench, install the (4) mounting capscrews and tighten to 21-27 lbs.in. (2.4-3.1 N•m) using a cross pattern.

3. Reconnect the Transmission Harness to the Splitter Valve and close all air tank drains.

Final Check

Make sure the mounting capscrews are properly tightened.

Make sure the Transmission Harness is connected and locked.

Make sure all air tank drains are closed.

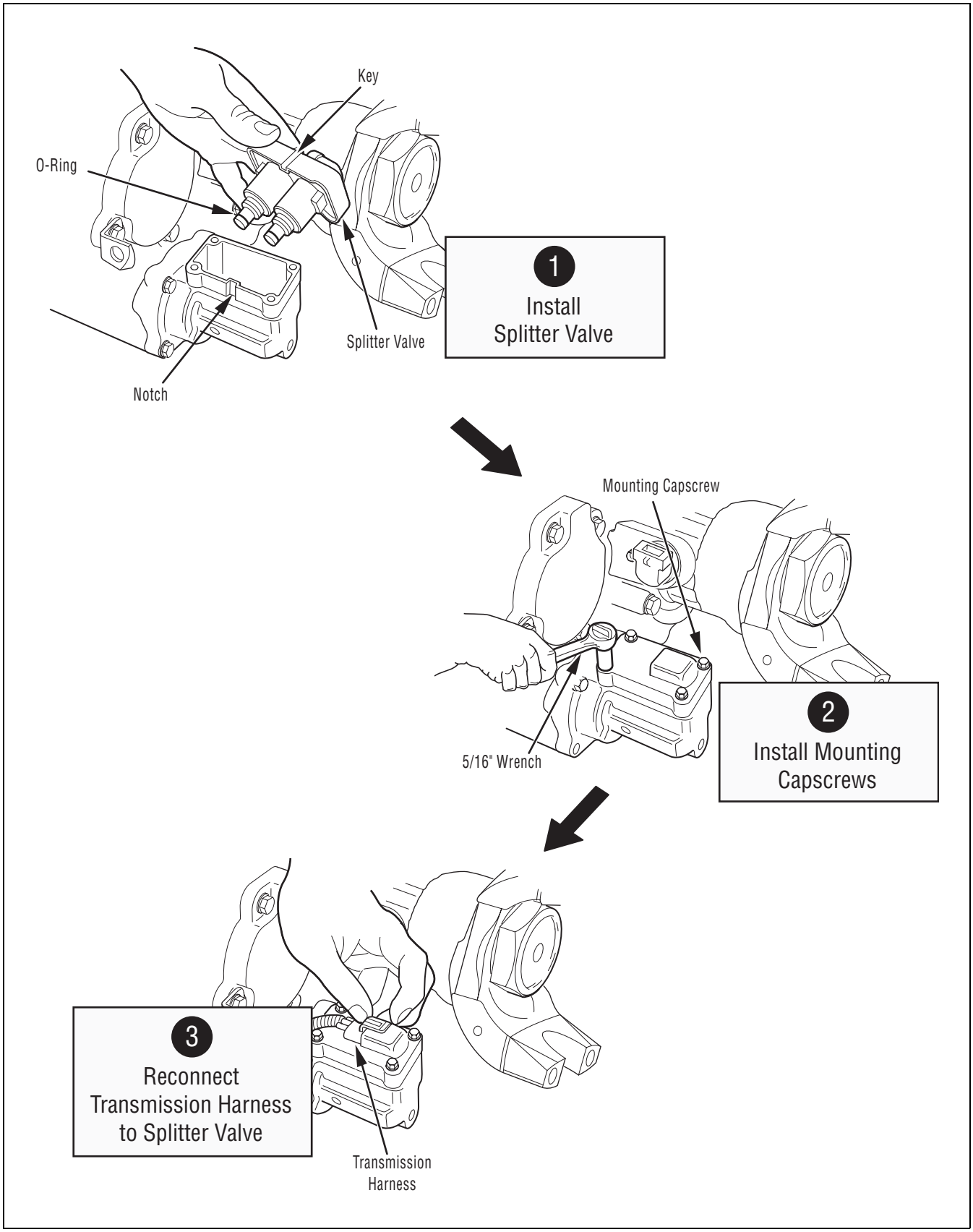

Splitter Valve Installation

Air Filter/Regulator – Remove

Special Instructions

The Air Filter/Regulator has two (2) O-rings located between the Air Filter/Regulator and the Range Cylinder Cover.

Required Tools

Basic Hand Tools

Removal

1. Relieve system air pressure by draining all air tanks on the vehicle. Then, using a 7/16” wrench, remove the two (2) mounting capscrews.

2. Remove the Air Filter/Regulator assembly and two (2) O-rings located in the recesses of the Range Cylinder Cover.

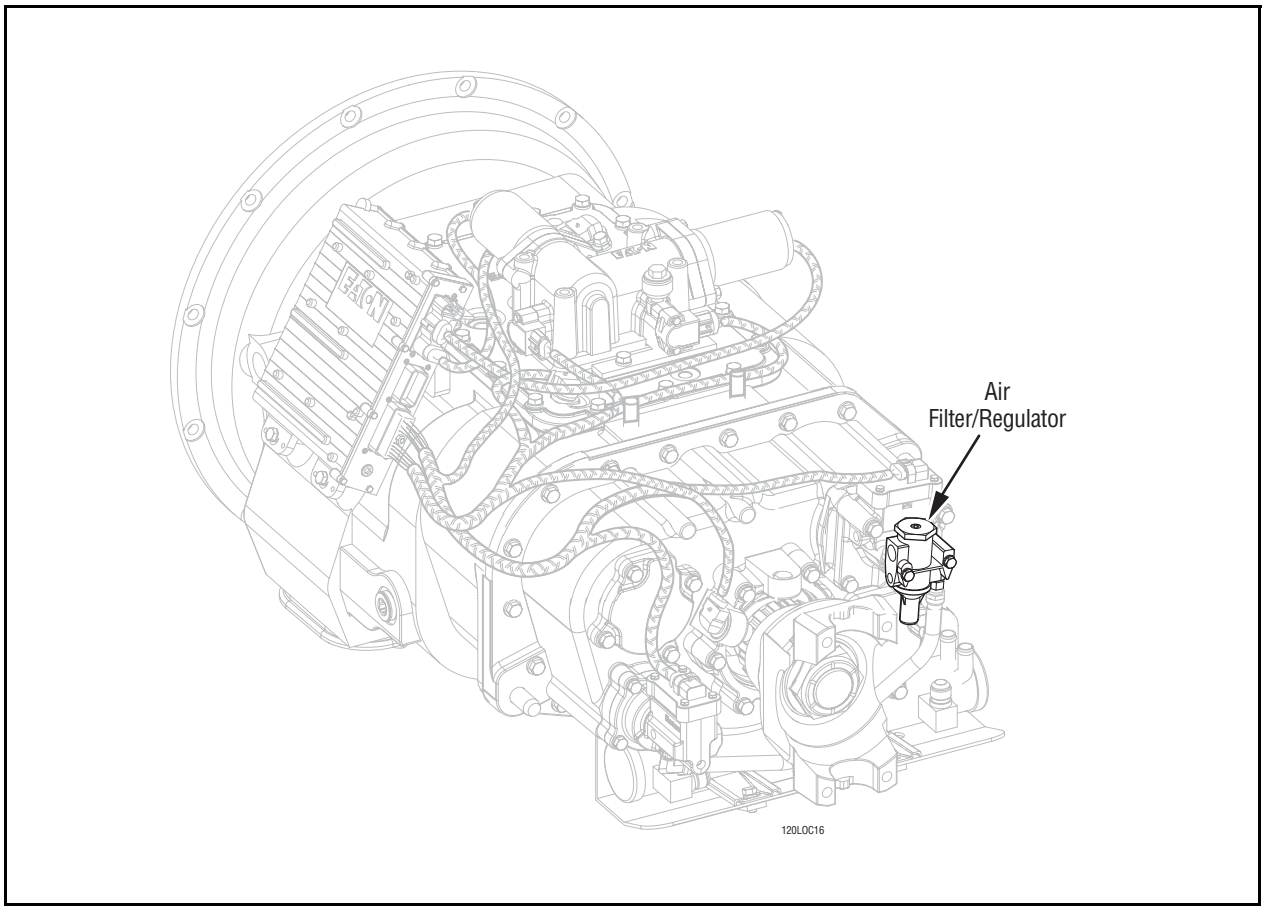

Air Filter/Regulator Location

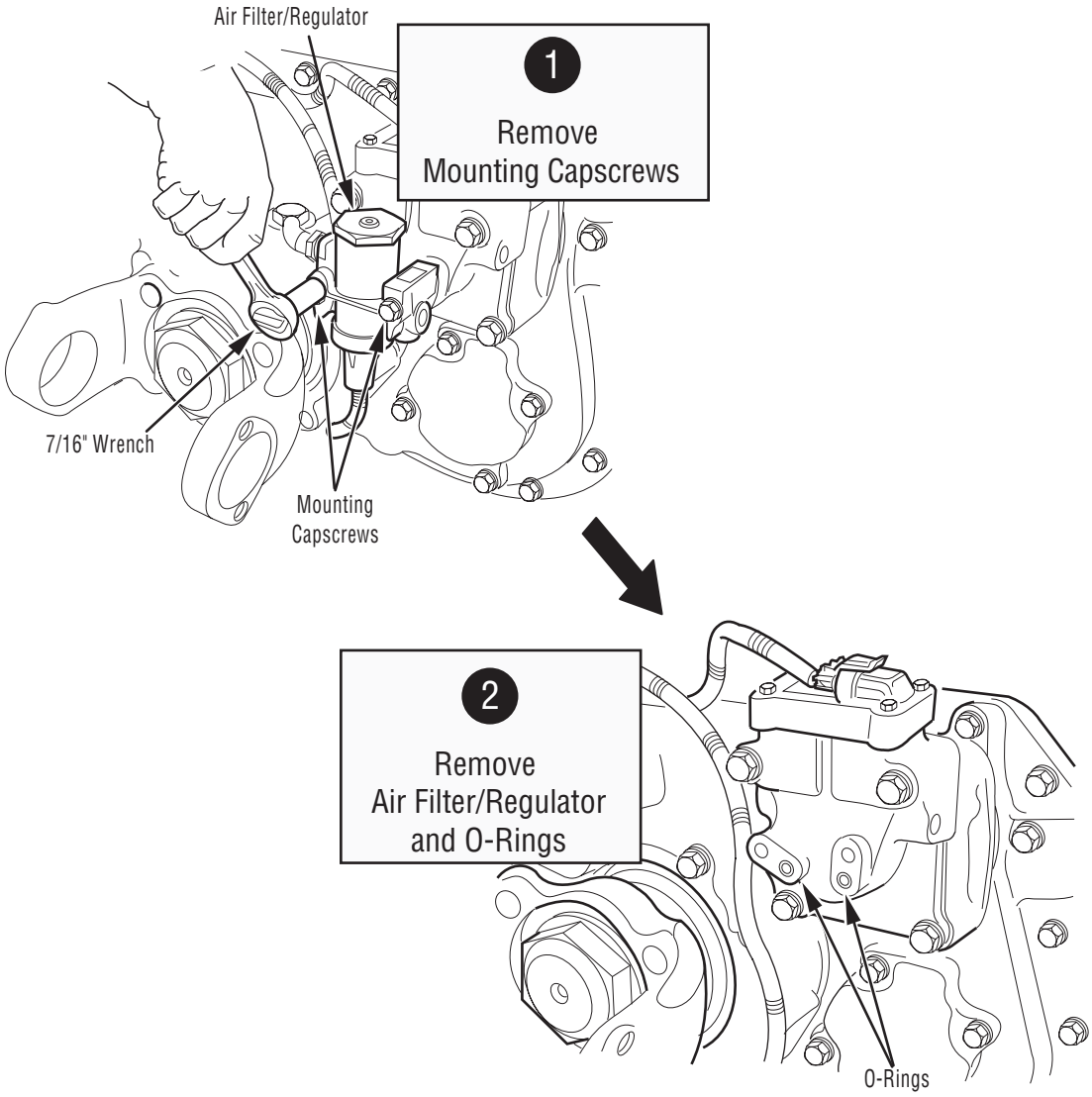
Air Filter/Regulator
1
Remove
Mounting Capscrews
7/16" Wrench
Mounting
Capscrews
2
Remove
Air Filter/Regulator
and O-Rings
O-Rings

Air Filter/Regulator – Install

Special Instructions

The Air Filter/Regulator has (2) O-rings located between the Air Filter/Regulator and the Range Cylinder Cover.

Required Tools

Basic Hand Tools

Installation

1. Press the O-rings into the recesses in the Range Cylinder Cover.

   Note: Lubricate O-rings with Eaton Fuller silicone #71214 or Equivalent.

2. Install the Air Filter/Regulator:
   a. Apply Eaton Fuller sealant #71205 or equivalent to the two (2) mounting capscrews.
   b. Position the Air Filter/Regulator over the O-rings.
   c. Insert the capscrews into the Air Filter/Regulator mounting holes.
   d. Using a 7/16” wrench, install the two (2) mounting capscrews and tighten to 8-12 lbs.ft. (10.8-16.3 N•m).

Final Check

Make sure the mounting capscrews are properly tightened.

Make sure all air supply fittings are tight.

Make sure all air tank drains are closed.

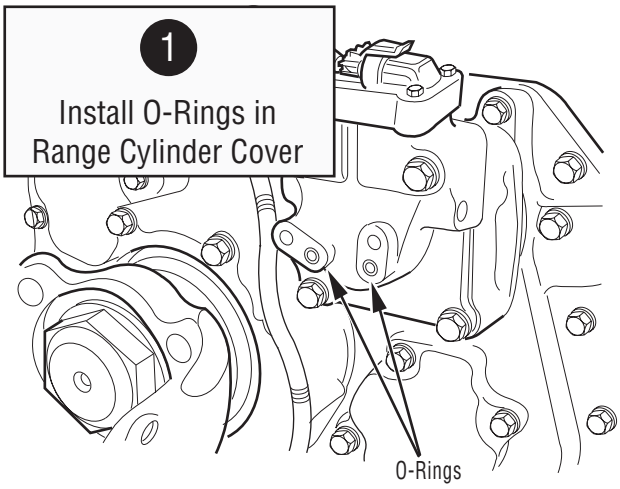
1
Install O-Rings in
Range Cylinder Cover
O-Rings

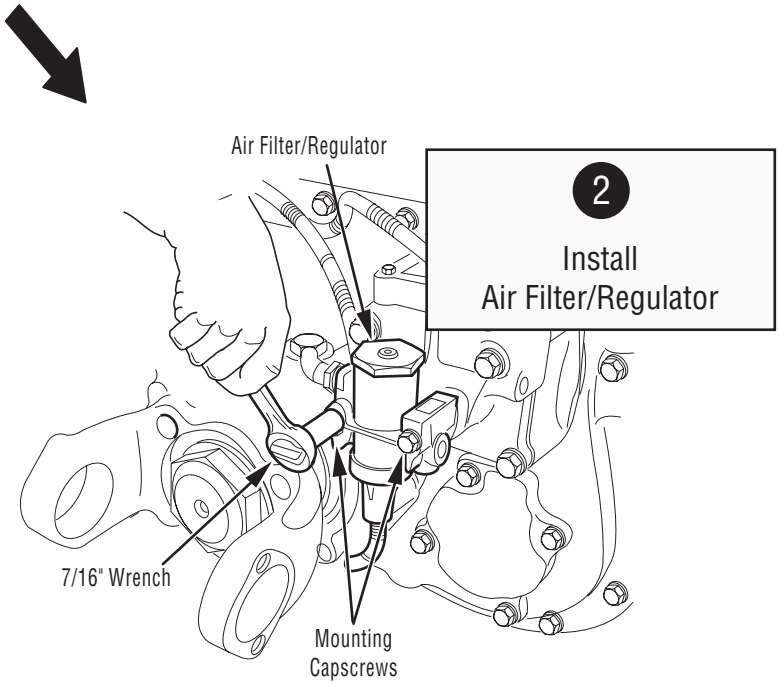
Air Filter/Regulator
2
Install
Air Filter/Regulator
7/16" Wrench
Mounting
Capscrews

Inertia Brake (6-Speed) – Remove

Special Instructions

None

Required Tools

Basic Hand Tools

Removal

1. Drain the lubrication from the transmission and disconnect the Transmission Harness from the Input Shaft Speed Sensor and the Inertia Brake coil.

2. Using a 3/8” wrench, remove the Input Shaft Speed Sensor.

3. Using a 7/8” wrench, remove the lubricant supply line from the Inertia Brake.

⚠ CAUTION

The Inertia Brake is heavy. Be prepared to handle the weight of the Inertia Brake when the mounting bolts are removed.

4. Using a 9/16” wrench, remove the (6) mounting bolts from the Inertia Brake.

5. Remove the Inertia Brake, spacer, and gaskets from the transmission.

   Note: The Inertia Brake will contain some lubricant.

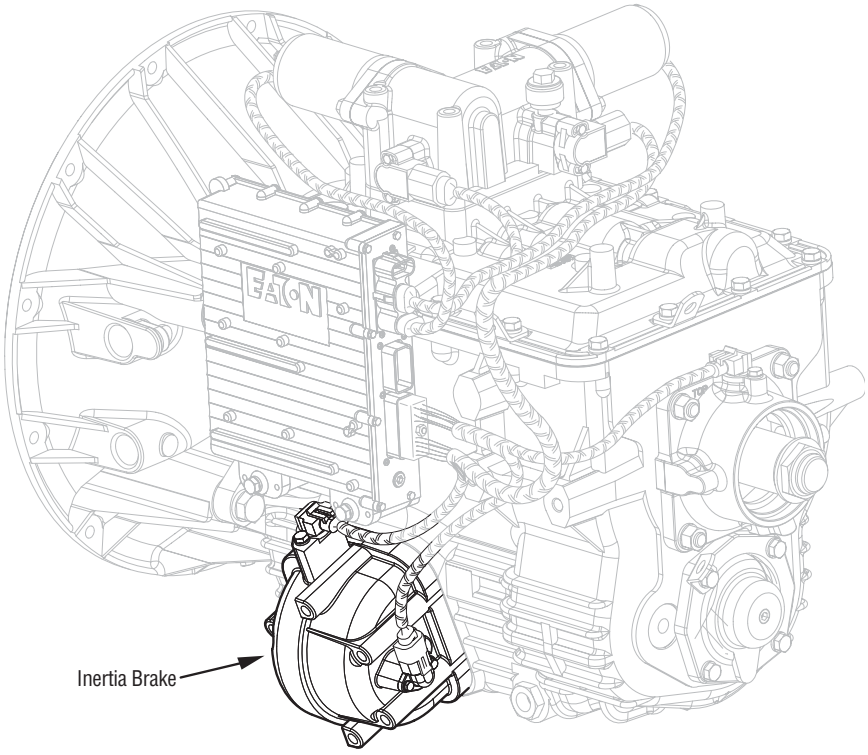

6-Speed Inertia Brake Location

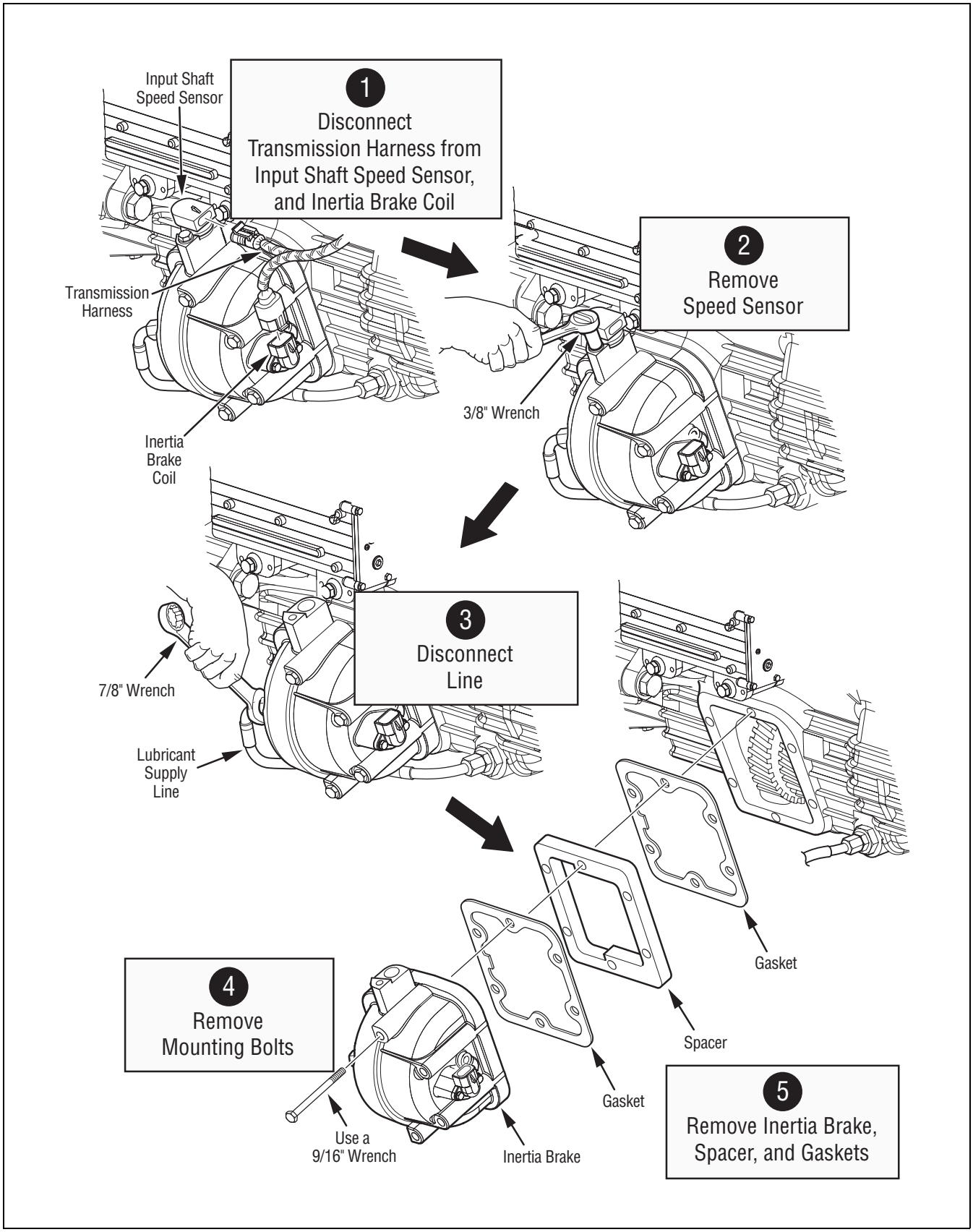

6-Speed Inertia Brake Removal

Inertia Brake (6-Speed)– Install

Special Instructions

Clean and remove all old gasket material from the mating surfaces of the Inertia Brake spacer and transmission.

⚠ CAUTION

The Inertia Brake is heavy. Be prepared to handle the weight of the Inertia Brake until the mounting bolts are installed.

Required Tools

Basic Hand Tools

Installation

1. Install the Inertia Brake, spacer, and gasket being careful to align the Inertia Brake gear with the drive gear.

2. Using a 9/16” wrench, install the (6) mounting bolts. Tighten mounting bolts to 35-45 lbs.ft. (47.5-61.0 N•m) using a cross pattern.

3. Using a 7/8” wrench, reconnect the lubricant supply line to the Inertia Brake and tighten to 20-22 lbs.ft. (27-30 N•m).

4. Using a 3/8” wrench, install the Input Shaft Speed Sensor and tighten to 8-12 lbs.ft. (11-16 N•m).

5. Reconnect the Transmission Harness to the Input Shaft Speed Sensor and the Inertia Brake Coil.

   Note: Fill the transmission with lubricant.

Final Check

Make sure the mounting bolts are properly tightened.

Make sure the lubricant supply line fitting is properly tightened.

Make sure the transmission is properly filled with lubricant.

Make sure the Transmission Harness is connected and locked.

Check for lubricant leaks after operating the vehicle.

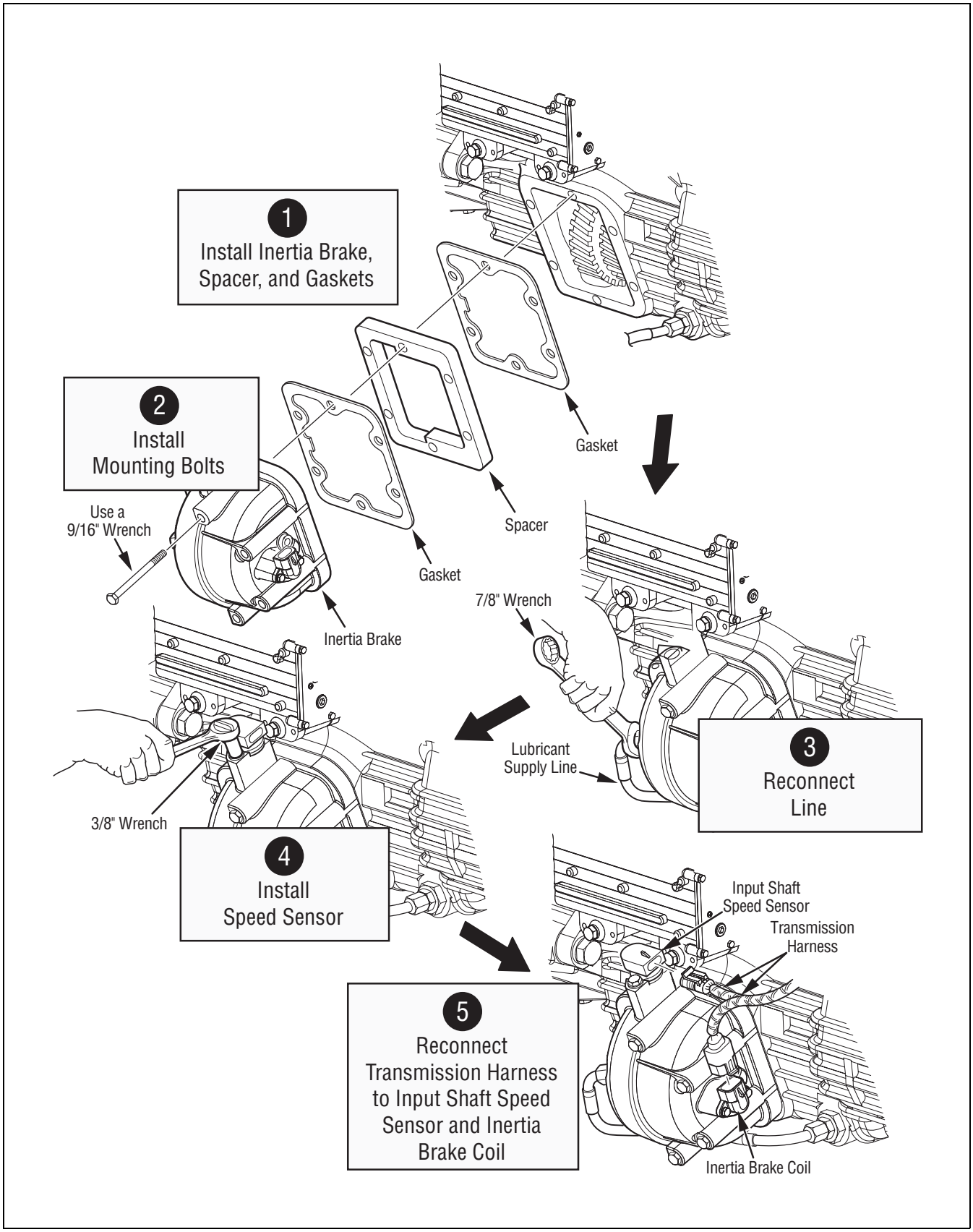

Inertia Brake Installation

Inertia Brake (7, 10, and 18-Speed) – Remove

Special Instructions

Drain the lubricant from the transmission. The Inertia Brake will still contain some lubricant.

Required Tools

Basic Hand Tools

Removal

1. Disconnect the Transmission Harness from the Inertia Brake Coil.

2. Using a 7/8” wrench, disconnect the lubricant supply line from the Inertia Brake.

⚠ CAUTION

The Inertia Brake is heavy. Be prepared to handle the weight of the Inertia Brake when the mounting bolts are removed.

3. Using a 9/16” wrench, remove the six (6) mounting bolts from the Inertia Brake.

4. Remove the Inertia Brake and gasket from the transmission.

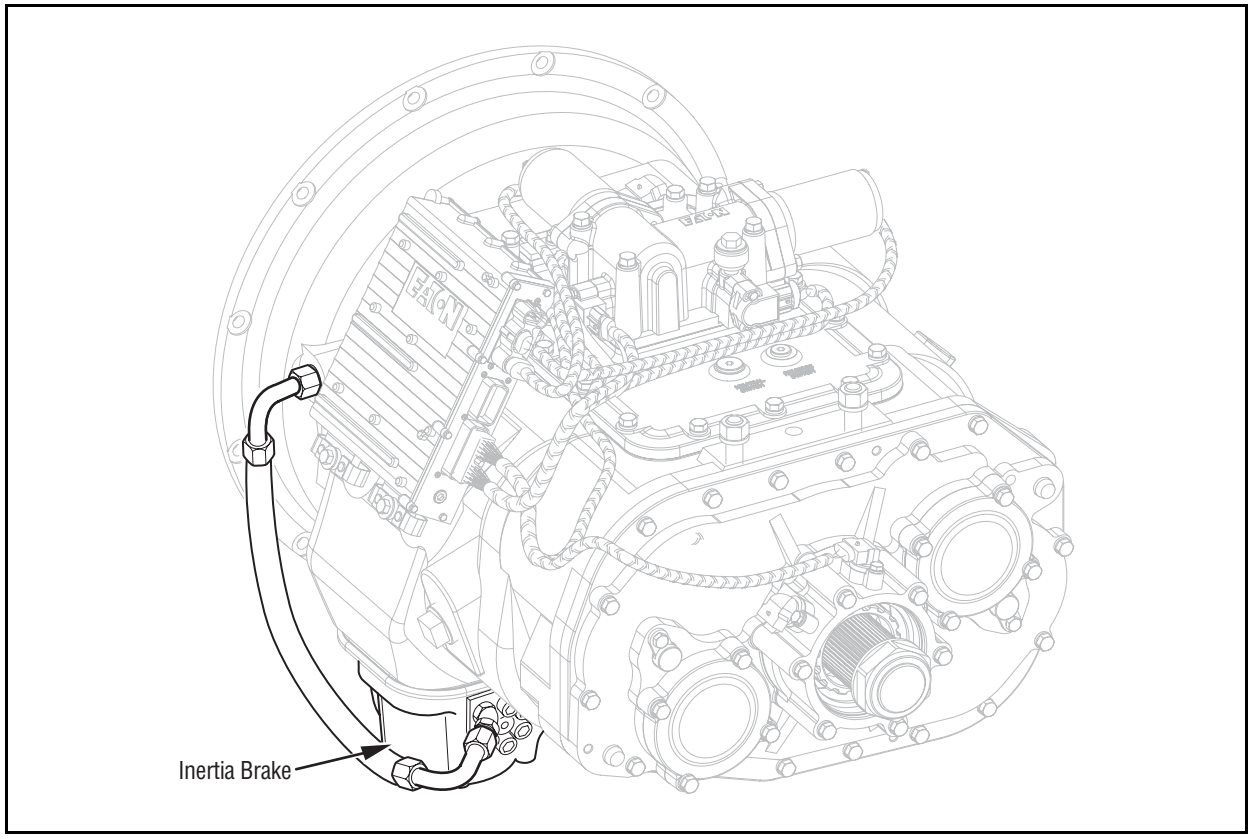

7, 10, and 18-Speed Inertia Brake Location

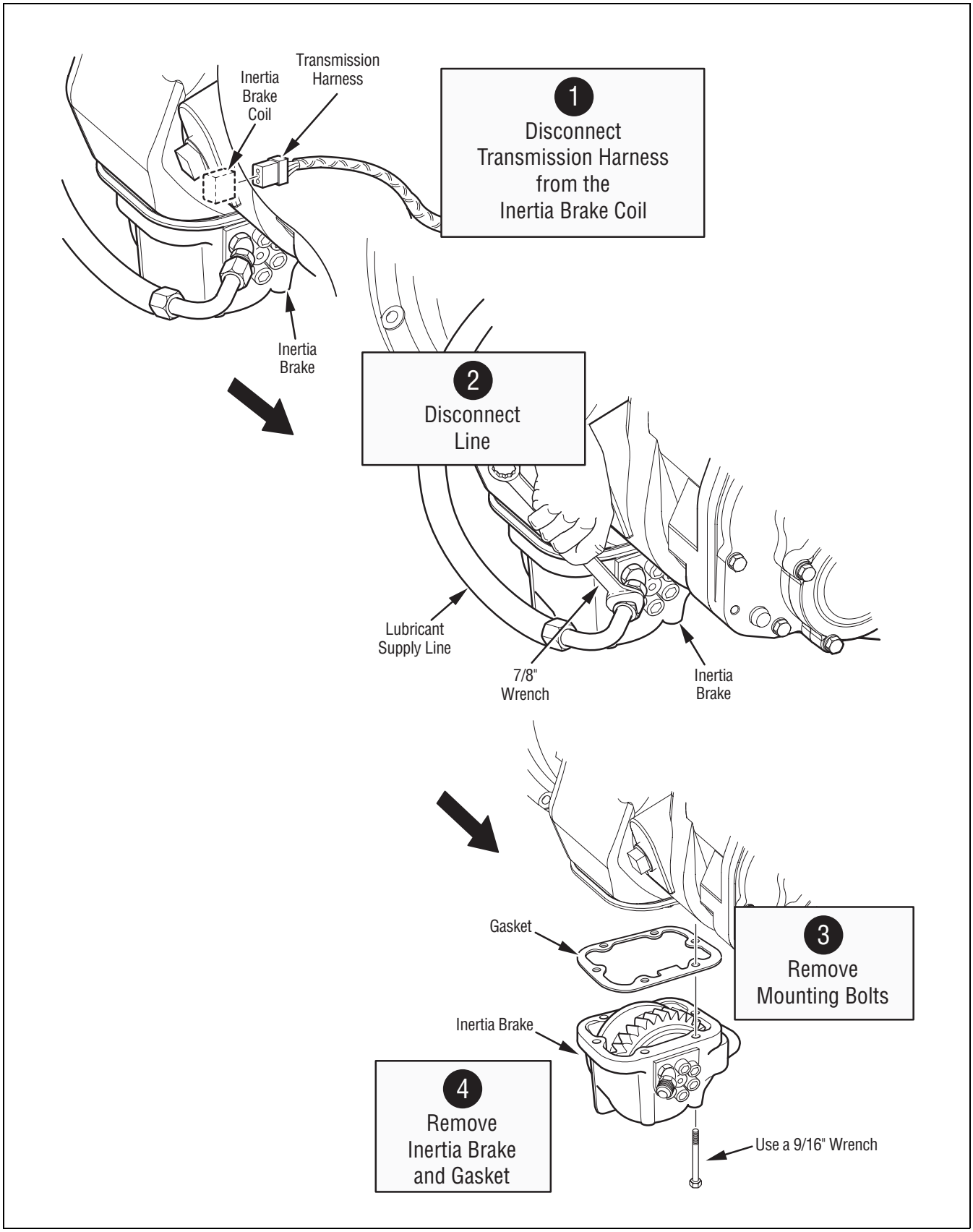
Transmission Harness
Inertia Brake Coil
1
Disconnect Transmission Harness from the Inertia Brake Coil
Inertia Brake
2
Disconnect Line
Lubricant Supply Line
7/8" Wrench
Inertia Brake
Gasket
3
Remove Mounting Bolts
Inertia Brake
4
Remove Inertia Brake and Gasket
Use a 9/16" Wrench

Inertia Brake (7, 10, and 18 Speed) – Install

Special Instructions

None

Required Tools

Basic Hand Tools

Installation

1. Install the Inertia Brake and gasket, being careful to align the Inertia Brake gear with the drive gear.

   Note: Clean and remove all old gasket material from the mating surfaces of the Inertia Brake and transmission.

   ⚠ CAUTION

   The Inertia Brake is heavy. Be prepared to handle the weight of the Inertia Brake until the mounting bolts are installed.

2. Using a 9/16” wrench, install the six (6) mounting bolts. Tighten mounting bolts to 35-45 lbs.ft. (47.5-30 N•m) using a cross pattern.

3. Using a 7/8” wrench, reconnect the lubricant supply line to the Inertia Brake and tighten to 20-22 lbs.ft. (27-30 N•m).

4. Reconnect the Transmission Harness to the Inertia Brake Coil.

   Note: Fill the transmission with lubricant.

Final Check

Make sure the mounting bolts are properly tightened.

Make sure the lubricant supply line is properly tightened.

Make sure the transmission is properly filled with lubricant.

Make sure the Transmission Harness is connected and locked.

Check for lubricant leaks after operating the vehicle.

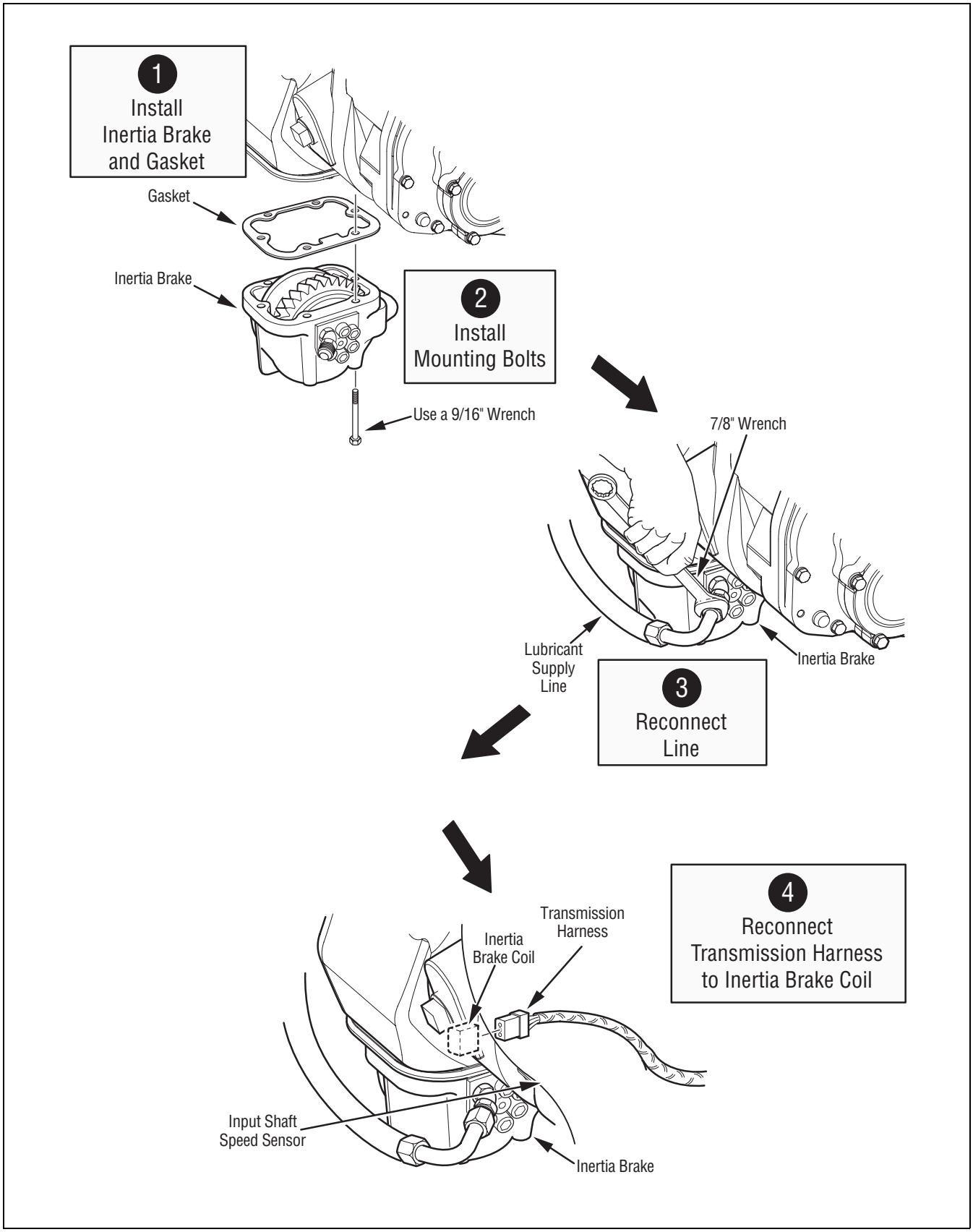
1
Install
Inertia Brake
and Gasket
Gasket
Inertia Brake
2
Install
Mounting Bolts
Use a 9/16" Wrench
7/8" Wrench
Lubricant
Supply
Line
Inertia Brake
3
Reconnect
Line
4
Reconnect
Transmission Harness
to Inertia Brake Coil
Transmission
Harness
Inertia
Brake Coil
Input Shaft
Speed Sensor
Inertia Brake

Inertia Brake Relocation Instructions 8 to 6 Bolt PTO Opening--Remove

Special Instructions

None

Required Tools

- Basic Hand Tools

Removal

1. Disconnect the Transmission Harness from the Inertia Brake Coil and remove the tie straps restraining this harness branch.

CAUTION

Oil may be hot.

Note: Drain the lubricate front he transmission. Drain the lubricant from the Inertia Brake. On older product the Inertia Brake will still remain full of lubricant (no drain plug).

Note: Use care not to damage the harness.

2. Disconnect the lubricant supply line from the Inertia Brake.

CAUTION

The Inertia Brake is heavy. Be prepared to handle the weight of the Inertia Brake when the mounting bolts are removed.

3. Remove the six (6) mounting bolts from the Inertia Brake.
4. Remove the Inertia Brake and gasket from the adapter plate.
5. Remove the eight (8) mounting bolts from the adapter plate.
6. Remove and discard the adapter plate and gasket from the transmission.
7. Remove the six (6) mounting bolts from the 6-bolt PTO cover.
8. Remove and discard the 6-bolt PTO cover and gasket from the transmission.

Note: Clean and remove all old gasket material from the mating surfaces of the Inertia Brake and transmission PTO coverings. Locate the harness push-in anchor point for reference during re-installation to 6-bolt opening.

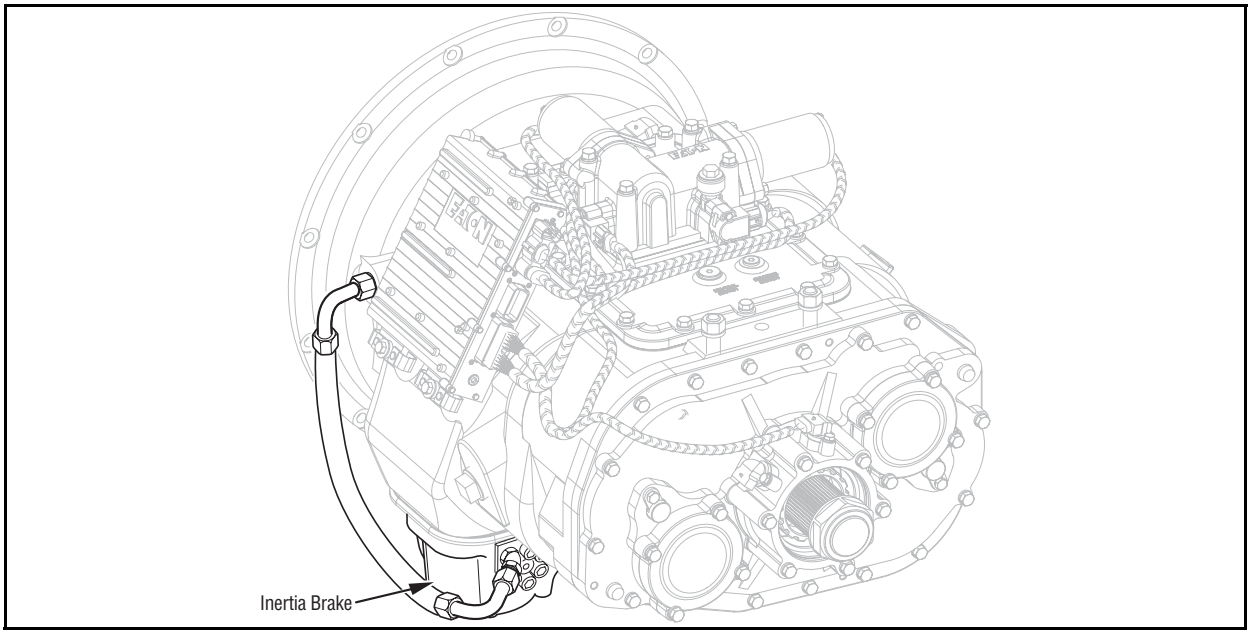

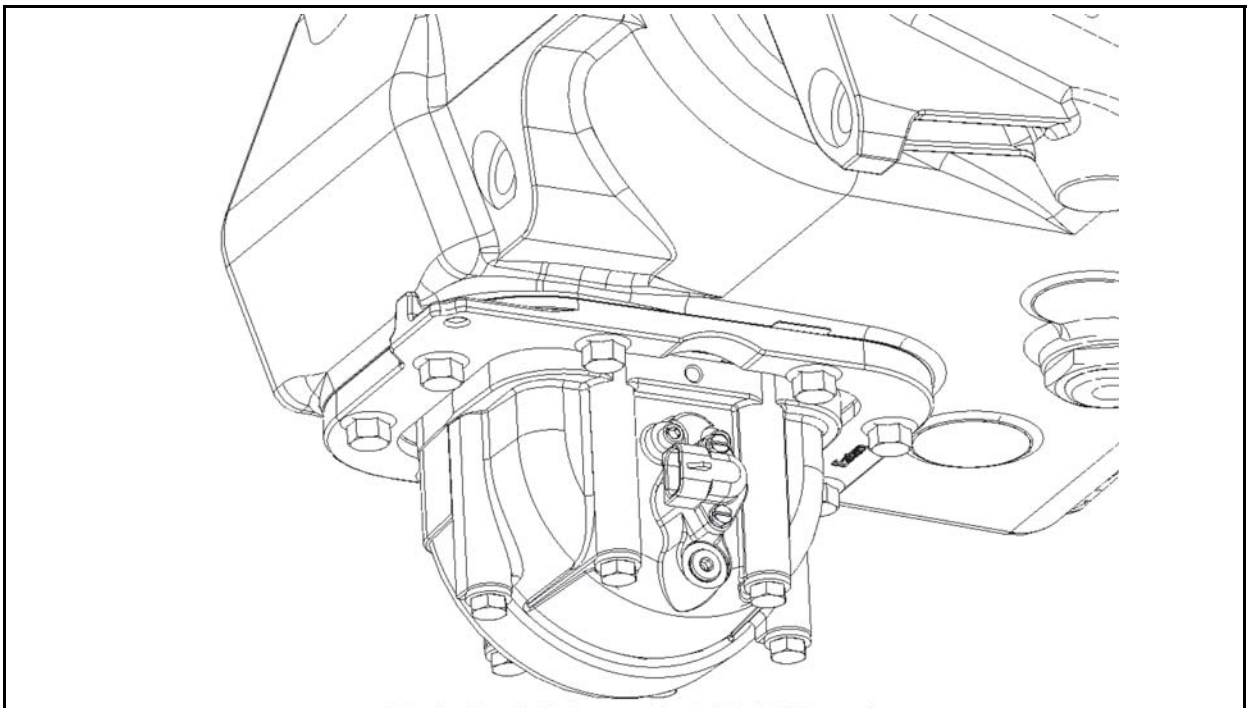

Standard Inertia Brake mounting to 8 bolt PTO opening
as viewed from rear of transmission

Inertia Brake Relocation Instructions 8 to 6-Bolt PTO opening--Install

Special Instructions

None

Required Tools

Basic Hand Tools

Installation

1. Clean and thoroughly dry all mating surfaces (including the gasket) prior to assembly.

   Note: The transmission Inertia Brake may be mounted to the 6-bolt PTO opening directly, or mounted utilizing a 6-bolt PTO Angle Adapter to assist in aiding chassis clearance.

2. If a 6-bolt PTO Angle Adapter is required, install the Angle Adapter to the 6-bolt PTO opening following the manufacturer's instructions.

3. Inertia Brakes installed with the Angle Adapter require a new lubrication hose.

4. Using the six (6) 3/8 mounting bolts, install the Inertia Brake and gasket, being careful to align the Inertia Brake gear with the drive gear. Tighten mounting bolts to 40-45 lbs. ft. (54-61 N•m) using a cross pattern.

   Note: When mounted directly, orient the Inertia Brake housing with hose connection forward/ electrical connection rearward, same orientation as 8-bolt. When mounted to a 6-bolt PTO Angle Adapter, orient the Inertia Brake housing with hose connection rearward / electrical connection forward. Ensure gasket, Inertia Brake, and mating mounting faces are assembled dry (no lubricant or grease).

⚠ CAUTION

The Inertia Brake is heavy. Be prepared to handle the weight of the Inertia Brake until the mounting bolts are installed.

5. Reconnect the lubricant supply line to the Inertia Brake and tighten to 20-22 lbs. ft. (27-30 N•m).

6. Reroute and reconnect the transmission harness to the Inertia Brake Coil. Dress the harness along the transmission case from the Inertia Brake up to the top of the transmission. Install the harness push-in anchor to the threaded-hole anchor point in the Inertia Brake housing. Install tie wraps every 6-10 inches. The harness should not have sharp bends or be under tension.

7. Install the PTO to the 8-bolt PTO opening following the manufacture's instructions.

   Note: Fill the transmission with lubricant.

Final Check

- Make sure the mounting bolts are properly tightened.
- Make sure the lubricant supply line is properly tightened.
- Make sure the transmission is properly filled with lubricant.
- Make sure the transmission harness is connected and locked.
- Check for lubricant leaks after operating the vehicle.
- Check that the Inertia Brake has sufficient clearance to prevent contacting tanks, brackets, frame rails, exhaust, or any other part of the vehicle. Contacting anything when stationary or moving will cause damage to Inertia Brake, Angle Adapter, or other vehicle equipment.

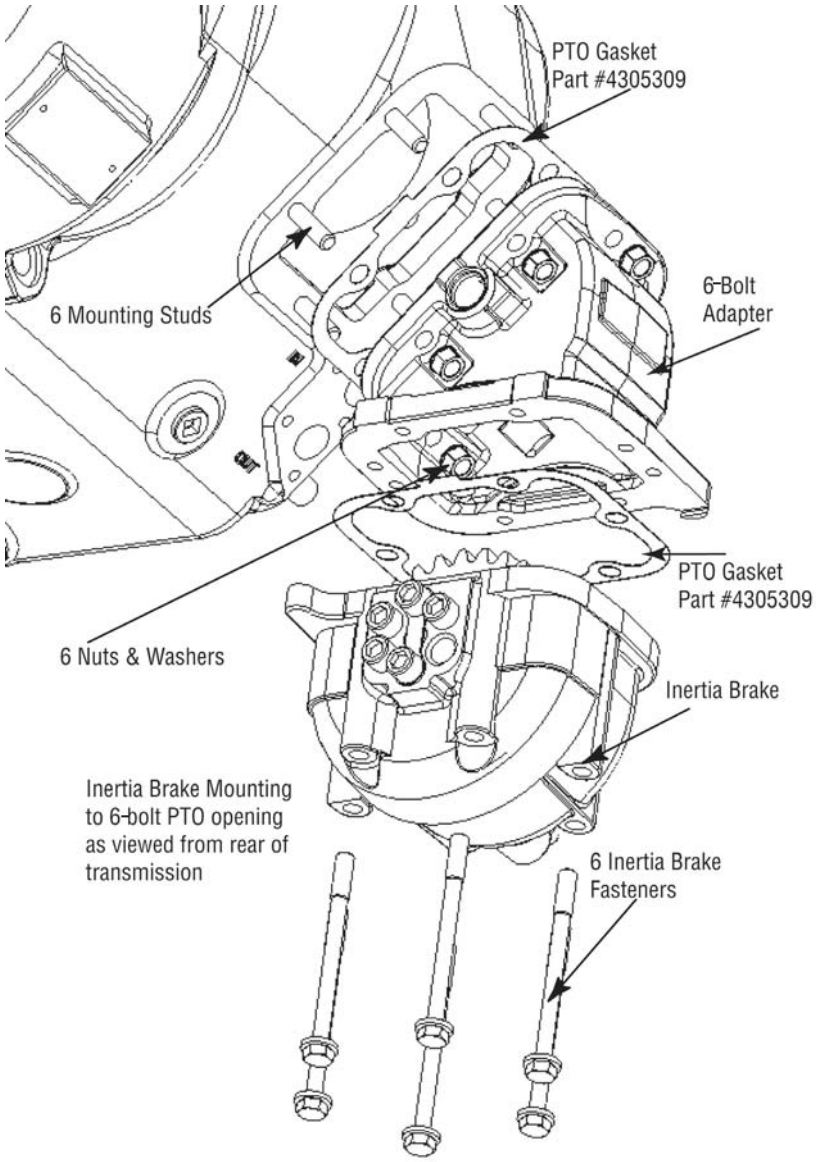
PTO Gasket
Part #4305309
6 Mounting Studs
6-Bolt
Adapter
PTO Gasket
Part #4305309
6 Nuts & Washers
Inertia Brake
Inertia Brake Mounting
to 6-bolt PTO opening
as viewed from rear of
transmission
6 Inertia Brake
Fasteners

Electric Shifter – Remove

Special Instructions

None

Required Tools

Basic Hand Tools

Removal

1. Remove nylon cable ties from the motor wires. Disconnect the Transmission Harness from the Rail Select Sensor and the Gear Select Sensor.
2. Disconnect the Rail Select and Gear Select Motors from the Transmission Controller.
3. Using a 9/16” wrench, remove the four (4) mounting capscrews.
4. Remove the Electric Shifter and gasket.

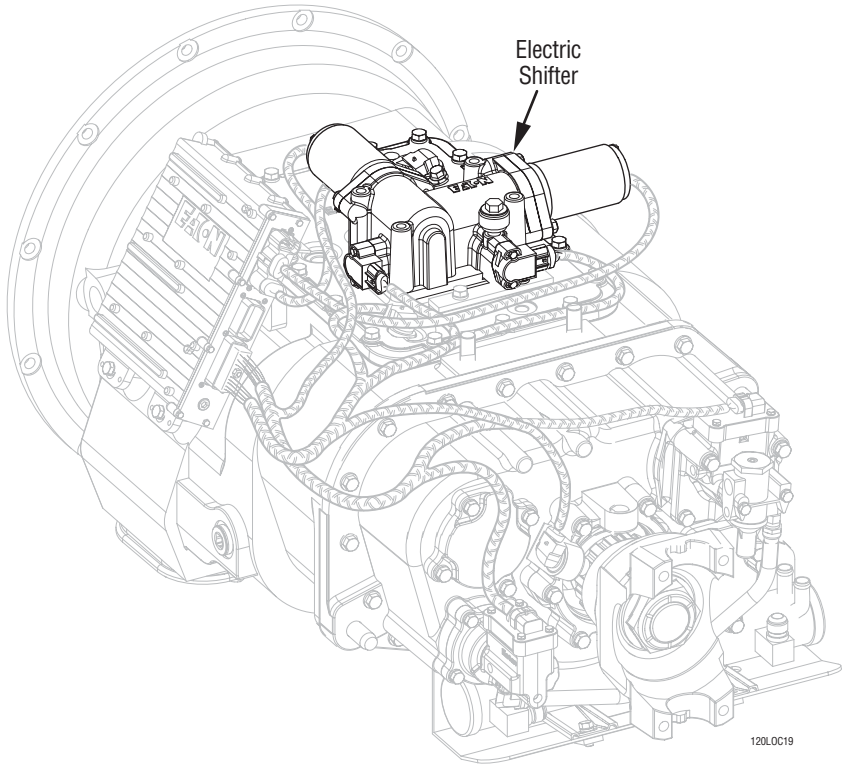

Electric Shifter Location

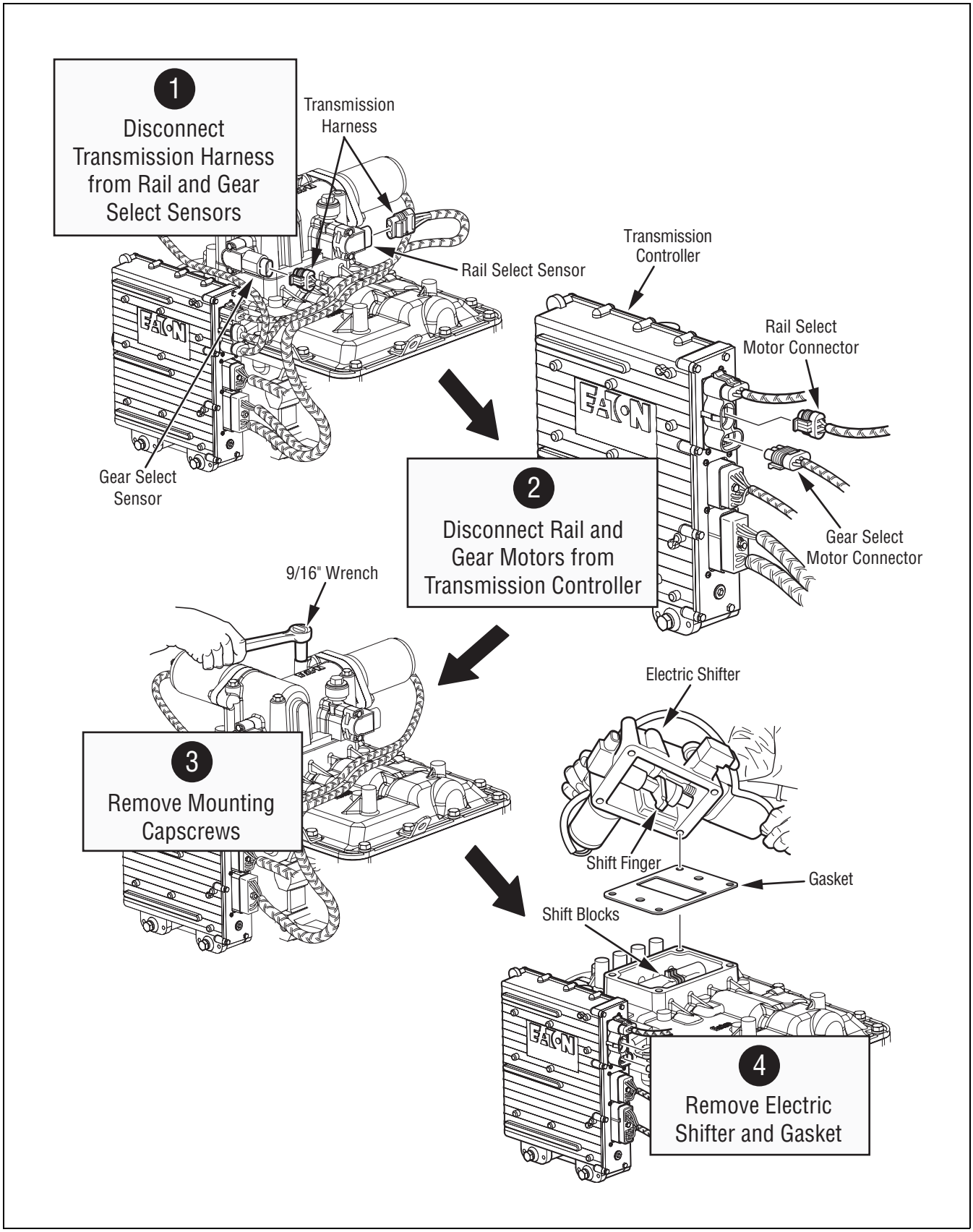
1
Disconnect Transmission Harness from Rail and Gear Select Sensors
Transmission Harness
Rail Select Sensor
Gear Select Sensor
Transmission Controller
Rail Select Motor Connector
Gear Select Motor Connector
2
Disconnect Rail and Gear Motors from Transmission Controller
9/16" Wrench
3
Remove Mounting Capscrews
Electric Shifter
Shift Finger
Gasket
Shift Blocks
4
Remove Electric Shifter and Gasket

Electric Shifter – Install

Special Instructions

Make sure the three (3) sets of detent balls and springs are installed properly in the Shift Bar Housing.

Required Tools

Basic Hand Tools

Installation

1. Clean and remove old gasket material from the Shift Bar Housing. Position a new gasket at the Electric Shifter location.

WARNING

Possible Pinch Point - Make sure battery is disconnected before removal of XY shifter.

2. Check to ensure the shift blocks are in the neutral position, then move the shift finger to the center (neutral) location.

   Note: If the shift finger is not properly aligned, the Electric Shifter will not fit properly at its mounting location.

   Note: Apply Eaton sealant #71205 or equivalent to the mounting capscrews before installing.

3. Position the Electric Shifter on the Shift Bar Housing. Then using a 9/16” wrench, install the mounting capscrews and tighten in a cross pattern as follows:

   a. 6-Speed (Aluminum Housing)- Tighten to 20-25 lbs.ft.(28-35 N•m).

   b. 7, 10, and 18-Speed (Cast Iron Housing) Tighten to 34-45 lbs.ft. (48-61 N•m).

4. Reconnect the Rail Select and Gear Select Motors to the Transmission Controller.

5. Reconnect the Transmission Harness to the Rail Select and Gear Select Sensors. Using nylon ties, secure the motor wires to the transmission in their previous position.

Calibration

To operate properly, the system must be calibrated as follows:

1. Turn the ignition switch on and allow the transmission to power up.

2. Turn the ignition switch to off and wait two minutes.

IMPORTANT

The Electric Shifter must be calibrated before the vehicle is placed into operation.

Final Check

Make sure the mounting capscrews are tightened to the correct specification.

Make sure all Electric Shifter connectors are securely attached.

Make sure the Transmission Harness is connected and locked.

Be sure to perform the calibration procedure before operating the transmission.

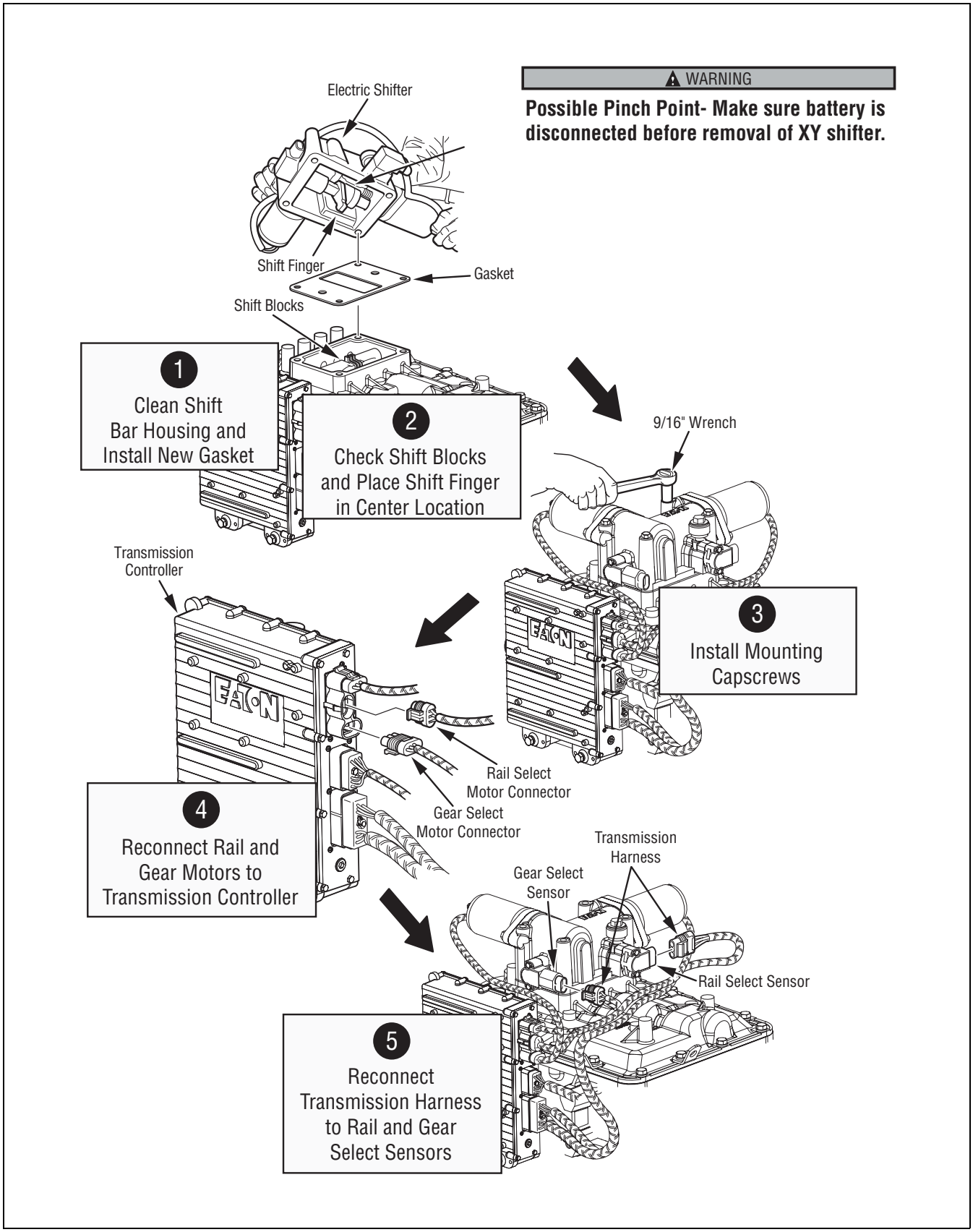
WARNING
Possible Pinch Point- Make sure battery is disconnected before removal of XY shifter.
Electric Shifter
Shift Finger
Gasket
Shift Blocks
1
Clean Shift Bar Housing and Install New Gasket
2
Check Shift Blocks and Place Shift Finger in Center Location
9/16" Wrench
3
Install Mounting Capscrews
Transmission Controller
Rail Select Motor Connector
Gear Select Motor Connector
4
Reconnect Rail and Gear Motors to Transmission Controller
Transmission Harness
Gear Select Sensor
Rail Select Sensor
5
Reconnect Transmission Harness to Rail and Gear Select Sensors

Transmission Controller – Remove

Special Instructions

When removing the Transmission Controller, take care not to bend the Transmission Controller locating bracket.

Required Tools

Basic Hand Tools

Removal

1. Disconnect the following connectors:
   a. Disconnect the negative battery cable.
   b. Disconnect the main power connector from the Transmission Controller.
   c. Disconnect the Rail Select and Gear Select Motors from the Transmission Controller.
   d. Using a 1/4” wrench, unscrew and disconnect the Transmission Harness 30-way connector and vehicle interface 18-way connector.
2. Using a 1/2” wrench, remove the two (2) mounting bolts.
3. Remove the Transmission Controller assembly from the locating studs.

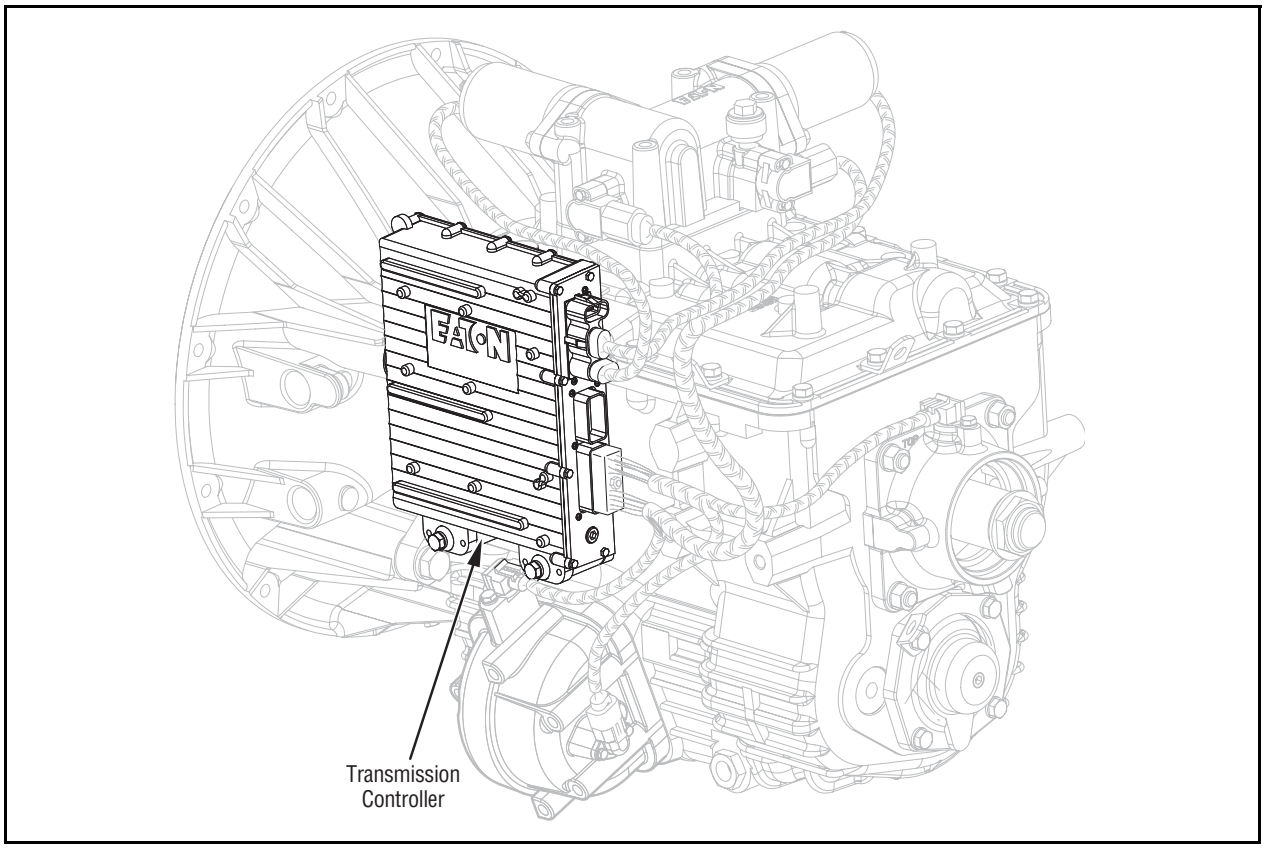

Transmission Controller Location

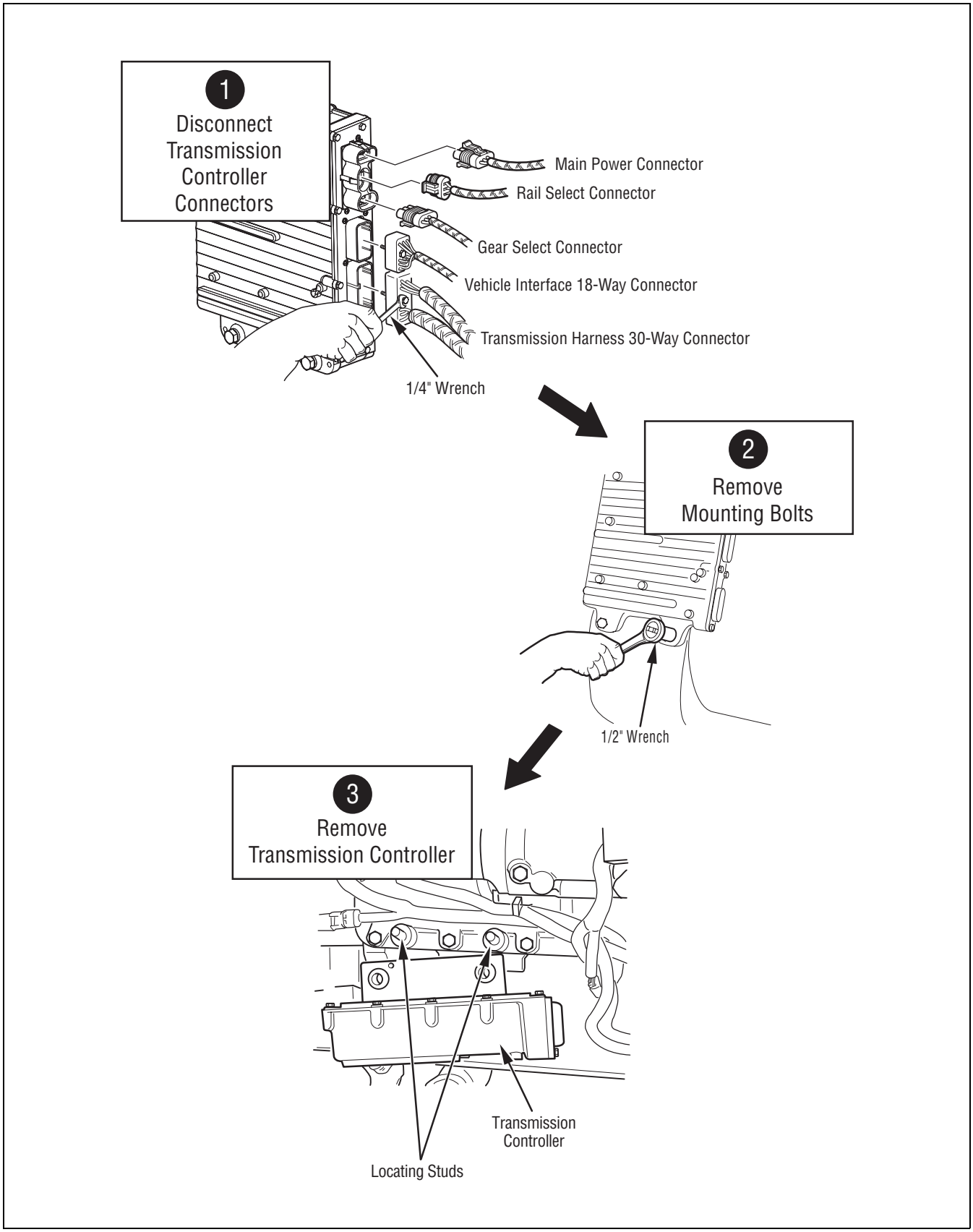
1
Disconnect Transmission Controller Connectors
Main Power Connector
Rail Select Connector
Gear Select Connector
Vehicle Interface 18-Way Connector
Transmission Harness 30-Way Connector
1/4" Wrench
2
Remove Mounting Bolts
1/2" Wrench
3
Remove Transmission Controller
Transmission Controller
Locating Studs

Transmission Controller – Install

Special Instructions

Torques given below are in pound-inches. Use care not to overtighten.

Apply lubricant to the Transmission Controller mounting bracket locating studs on the main case top.

Required Tools

Basic Hand Tools

Installation

1. Position the Transmission Controller on the locating studs.

CAUTION

When attaching the Transmission Controller, take care not to bend the Transmission Controller locating bracket.

2. Using a 1/2” wrench, install the two (2) Transmission Controller mounting bolts and tighten to 20-25 lbs.ft. (27.1-33.9 N•m).

3. Reconnect the following connectors:
   a. Using a 1/4” wrench, reconnect the Transmission Harness 30-way connector and tighten to 7-13 lbs.in. (0.8-1.5 N•m).
   b. Using a 1/4” wrench, reconnect the vehicle interface 18-way connector and tighten to 7-13 lbs.in. (0.8-1.5 N•m)
   c. Reconnect the Gear Select Motor to the Transmission Controller.
   d. Reconnect the Rail Select Motor to the Transmission Controller.
   e. Reconnect the main power connector.
   f. Reconnect the negative battery cable.

Calibration

To operate properly, the system must be calibrated as follows:

1. Turn the ignition switch on and allow the transmission to power up.

2. Turn the ignition off and wait two minutes.

Important: The Electric Shifter must be calibrated before the vehicle is placed in operation.

UltraShift HP- Perform clutch calibration: See UltraShift HP Models in this manual for details.

Final Check

Make sure the mounting bolts are properly tightened.

Make sure all Transmission Controller connectors are properly connected and locked or tightened.

Make sure the Electric Shifter Harness connectors are properly connected.

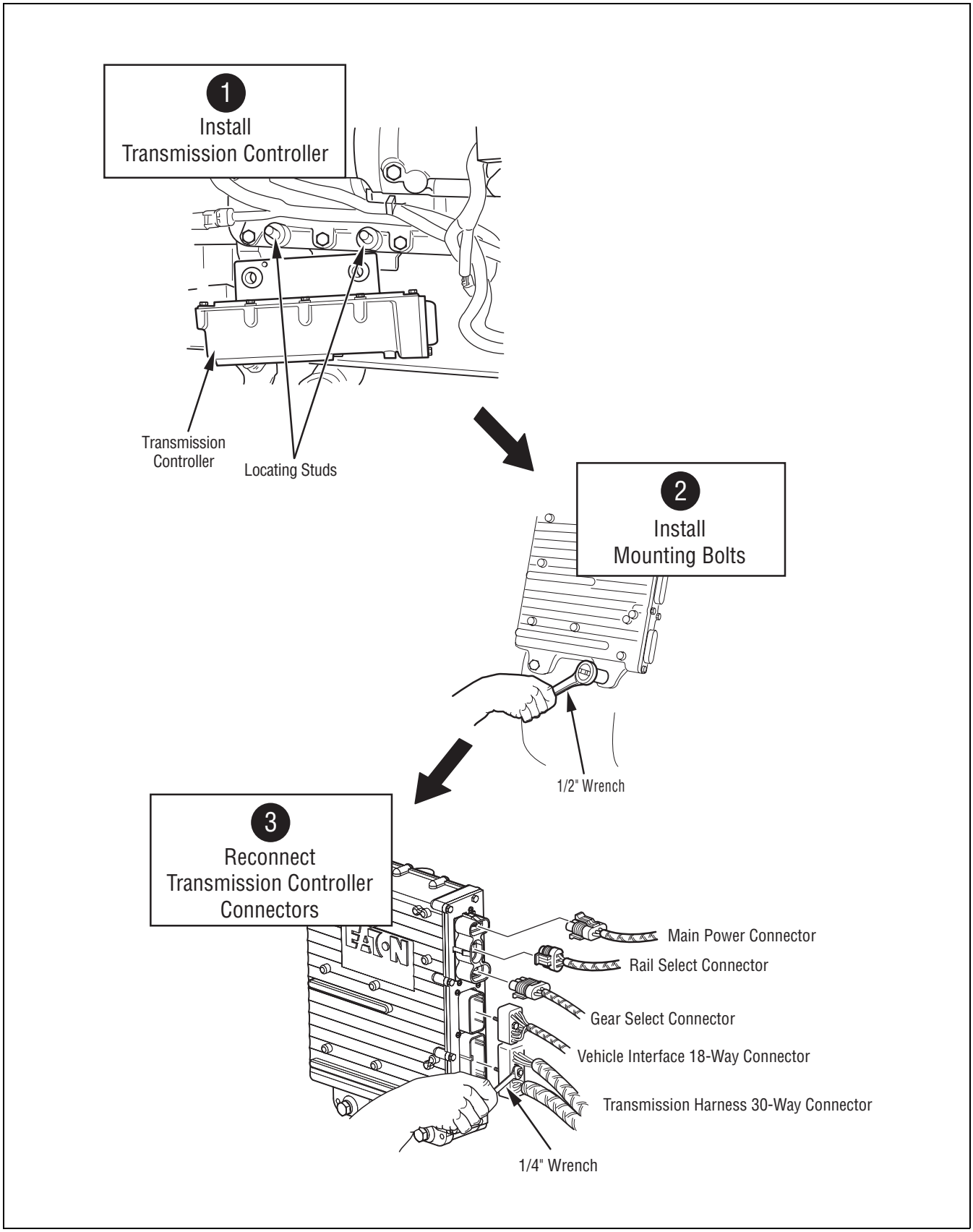
1
Install
Transmission Controller
Transmission Controller
Locating Studs
2
Install
Mounting Bolts
1/2" Wrench
3
Reconnect
Transmission Controller
Connectors
Main Power Connector
Rail Select Connector
Gear Select Connector
Vehicle Interface 18-Way Connector
Transmission Harness 30-Way Connector
1/4" Wrench

Transmission Harness – Remove

Special Instructions

None

Required Tools

Basic Hand Tools

Removal

1. Using a 1/4” wrench, disconnect the Transmission Harness 30-way connector.
2. Disconnect the following harness connectors:
   a. Inertia Brake Coil (if equipped).
   b. Input Shaft Speed Sensor (location may vary).
   c. Main Shaft Speed Sensor (10 and 18-Speed only).
   d. Gear Select Sensor and Rail Select Sensor.
   e. WetClutch solenoid (if equipped).
3. Disconnect the Output Shaft Speed sensor (location may vary).

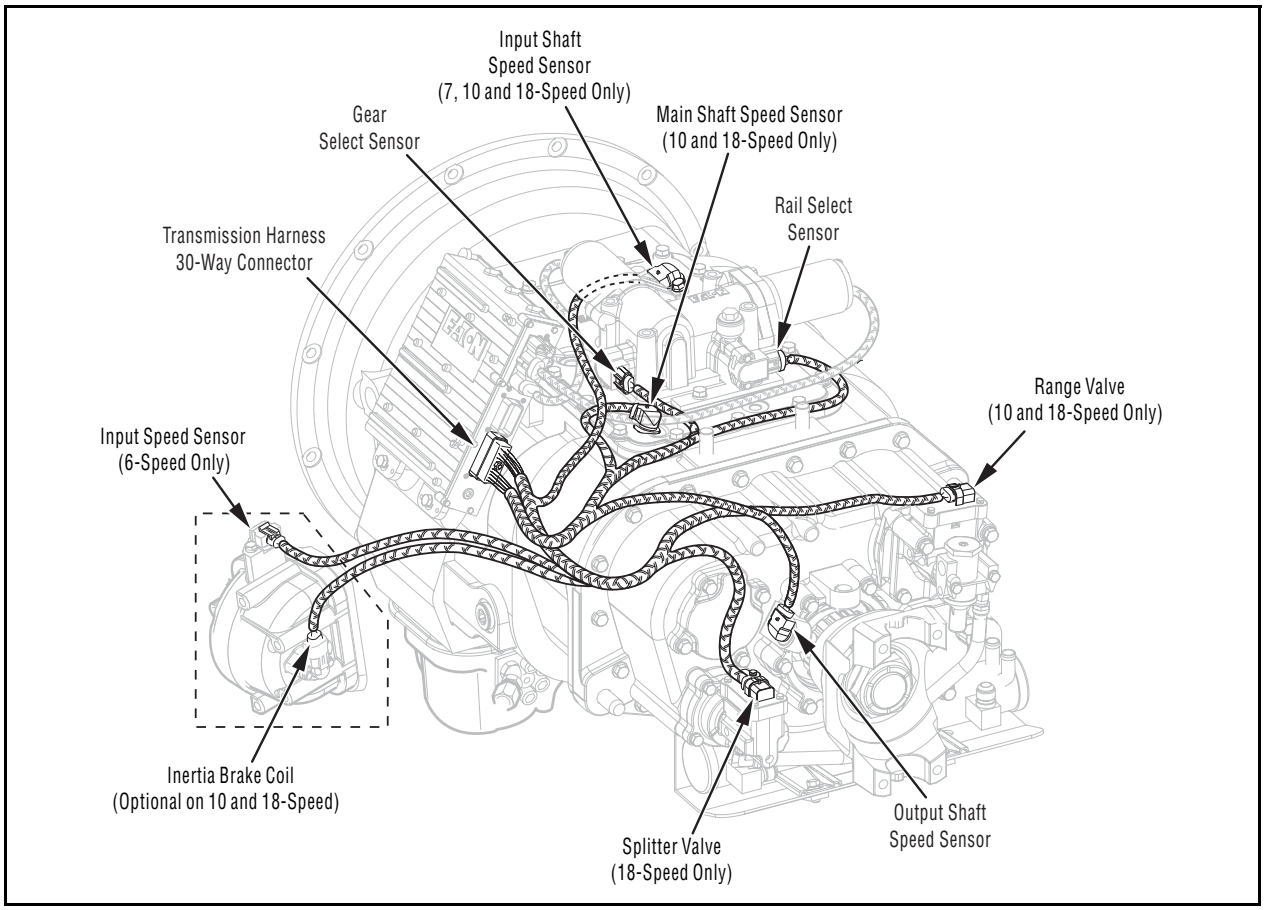

Transmission Harness Location

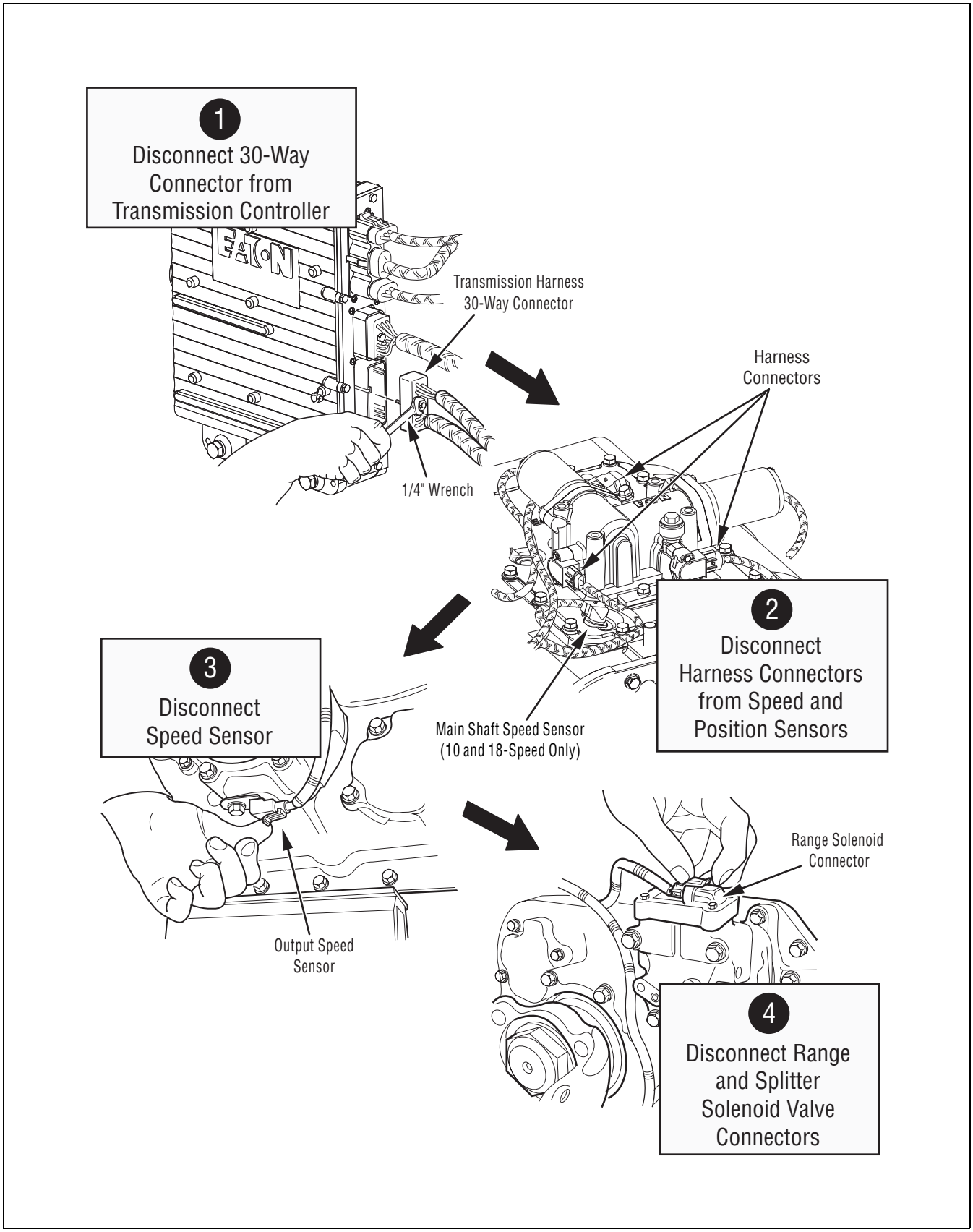
1
Disconnect 30-Way Connector from Transmission Controller
Transmission Harness 30-Way Connector
1/4" Wrench
Harness Connectors
2
Disconnect Harness Connectors from Speed and Position Sensors
Main Shaft Speed Sensor (10 and 18-Speed Only)
3
Disconnect Speed Sensor
Output Speed Sensor
Range Solenoid Connector
4
Disconnect Range and Splitter Solenoid Valve Connectors

Transmission Harness – Install

Special Instructions

None

Required Tools

Basic Hand Tools

Installation

1. If required, reconnect the Range and Splitter Solenoids.
2. Reconnect the Output Shaft Speed Sensor.
3. Reconnect the following harness connectors:
   a. Gear Select and Rail Select Sensor.
   b. Main Shaft Speed Sensor (10 and 18-Speed only).
   c. Input Shaft Speed Sensor (Location may vary).
   d. Inertia Brake Coil (if equipped).
   e. WetClutch solenoid (if equipped).
4. Using a 1/4” wrench, reconnect the Transmission Harness 30-way connector and tighten to 7-13 lbs.in. (0.8-1.5 N•m).

Final Check

Check all connections to make sure they are secure.

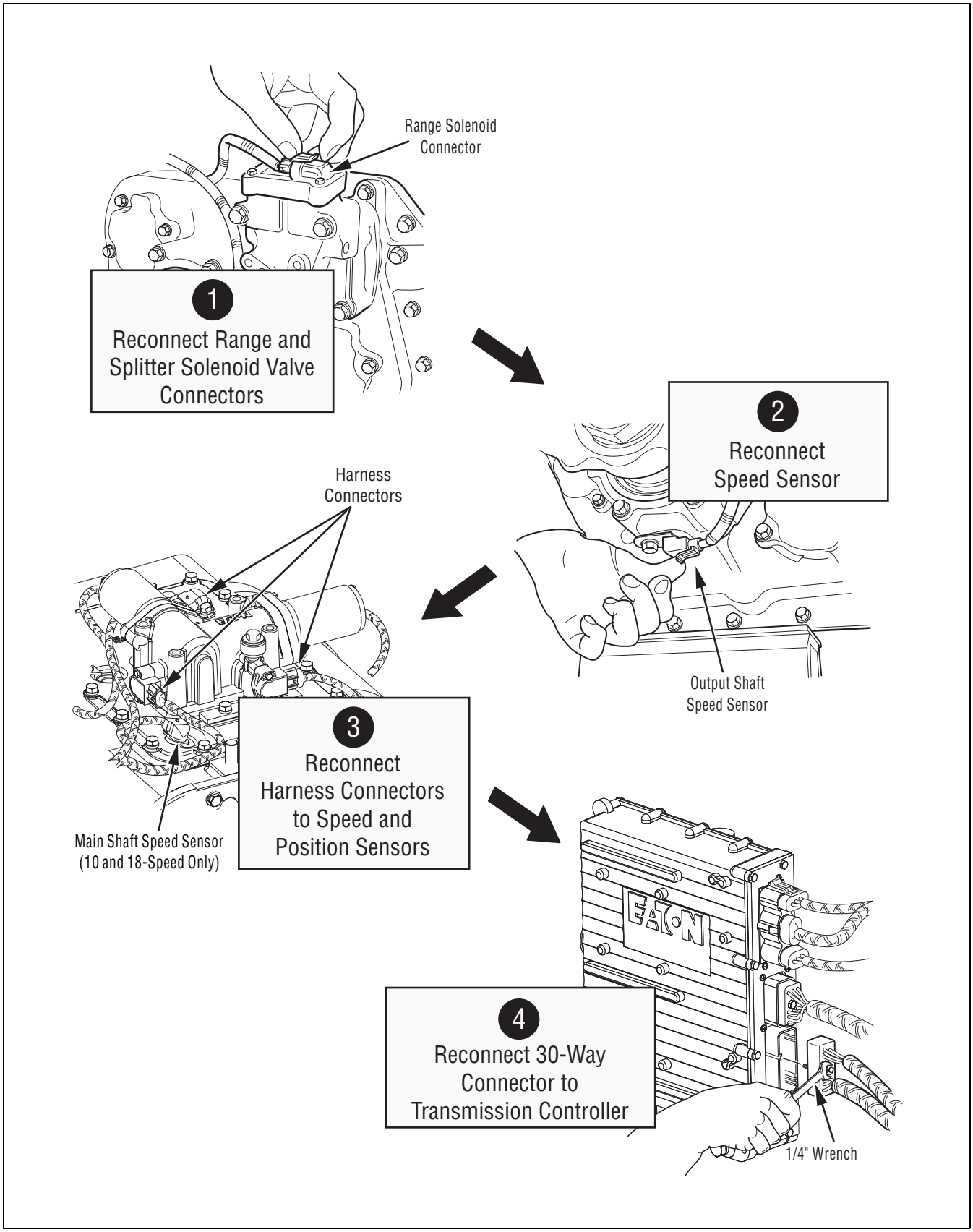
Range Solenoid Connector
1
Reconnect Range and Splitter Solenoid Valve Connectors
2
Reconnect Speed Sensor
Output Shaft Speed Sensor
Harness Connectors
3
Reconnect Harness Connectors to Speed and Position Sensors
Main Shaft Speed Sensor (10 and 18-Speed Only)
4
Reconnect 30-Way Connector to Transmission Controller
1/4" Wrench

Gear Display – Remove

Special Instructions

The exact location varies depending on vehicle manufacturer.

Required Tools

Basic Hand Tools

Removal

1. Follow the recommended OEM procedure to remove the dash panel that holds the Gear Display Unit.
2. Disconnect the dash harness from the Gear Display Unit.
3. Use a small flat bladed screwdriver to depress the tabs that hold the Gear Display Unit in the dash.

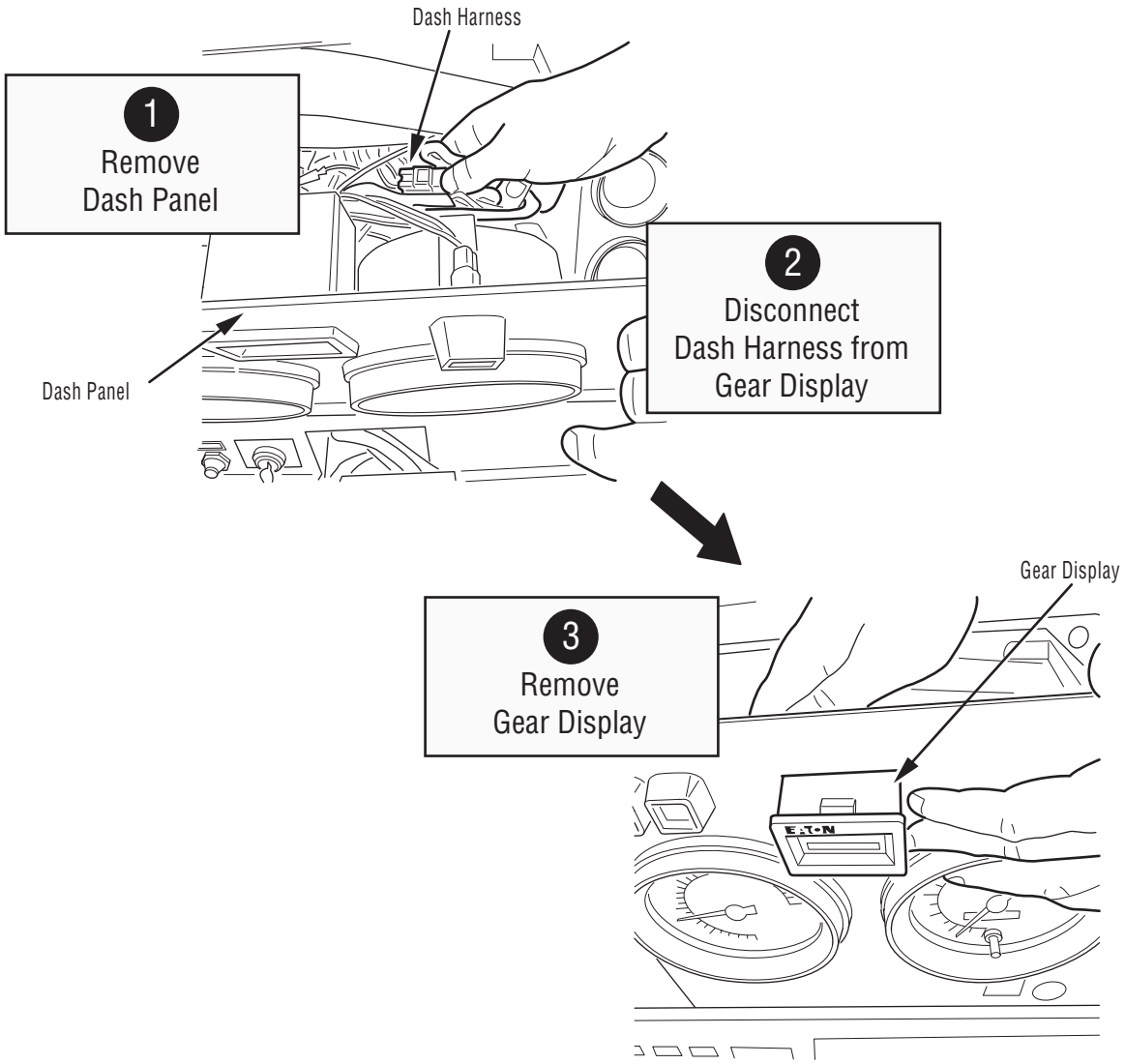

Gear Display Removal

Gear Display – Install

Special Instructions

None.

Required Tools

Basic Hand Tools

Installation

1. Install the Gear Display Unit in the dash panel.
2. Reconnect the dash harness to the Gear Display Unit.
3. Follow the recommended OEM procedure to install the dash panel that holds the Gear Display Unit.

Final Check

Make sure the OEM Dash Harness is properly connected.

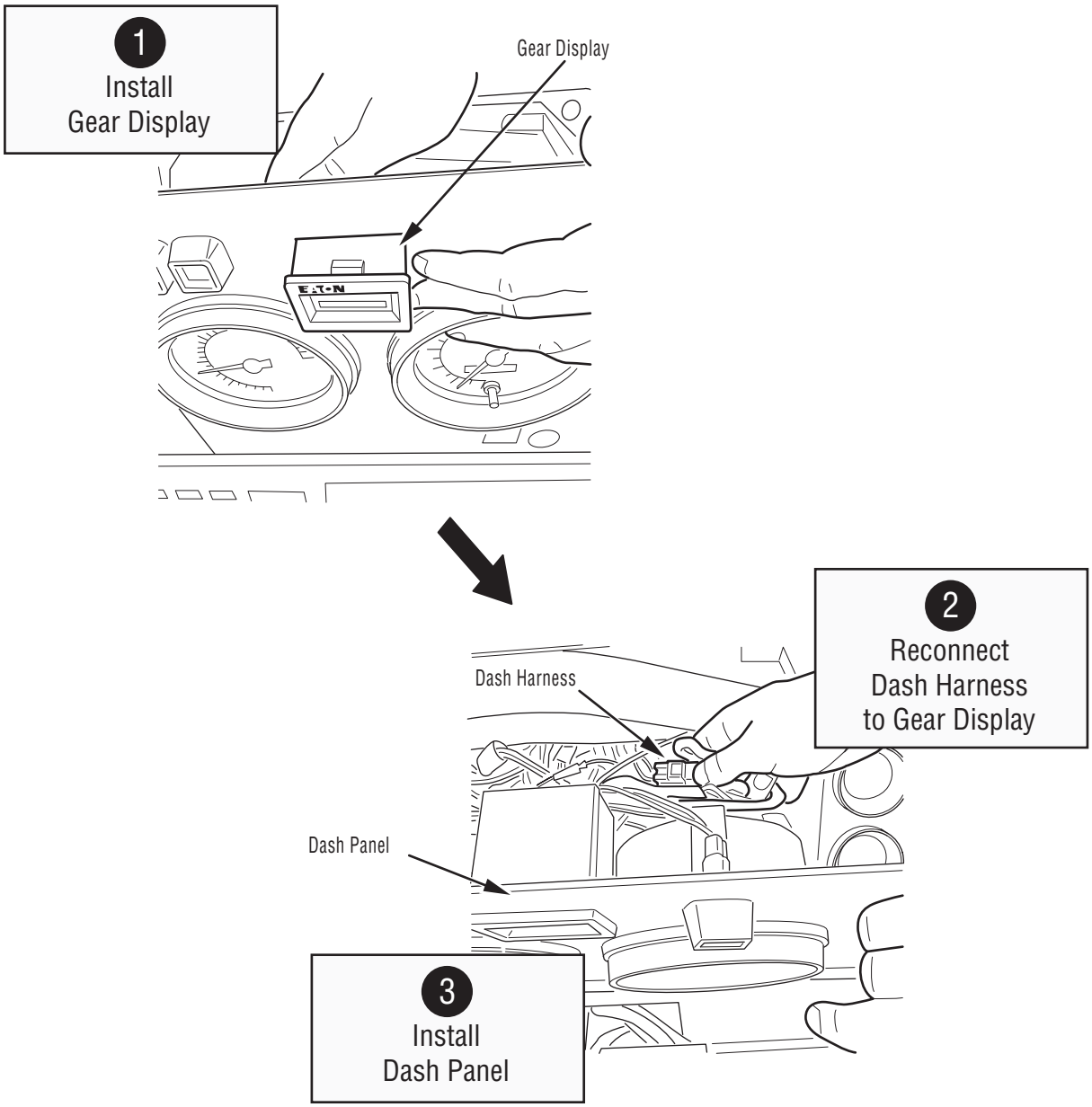

Gear Display Installation

Shift Control– Remove

Special Instructions

The exact location varies depending on vehicle manufacturer.

Required Tools

Basic Hand Tools

Removal

1. Using a 1/4” wrench, loosen the retaining bolt and disconnect the 30-way connector from the back of the Shift Control.
2. Using a 11/32” wrench, remove the two (2) nuts and lock washers from the back of the Shift Control.

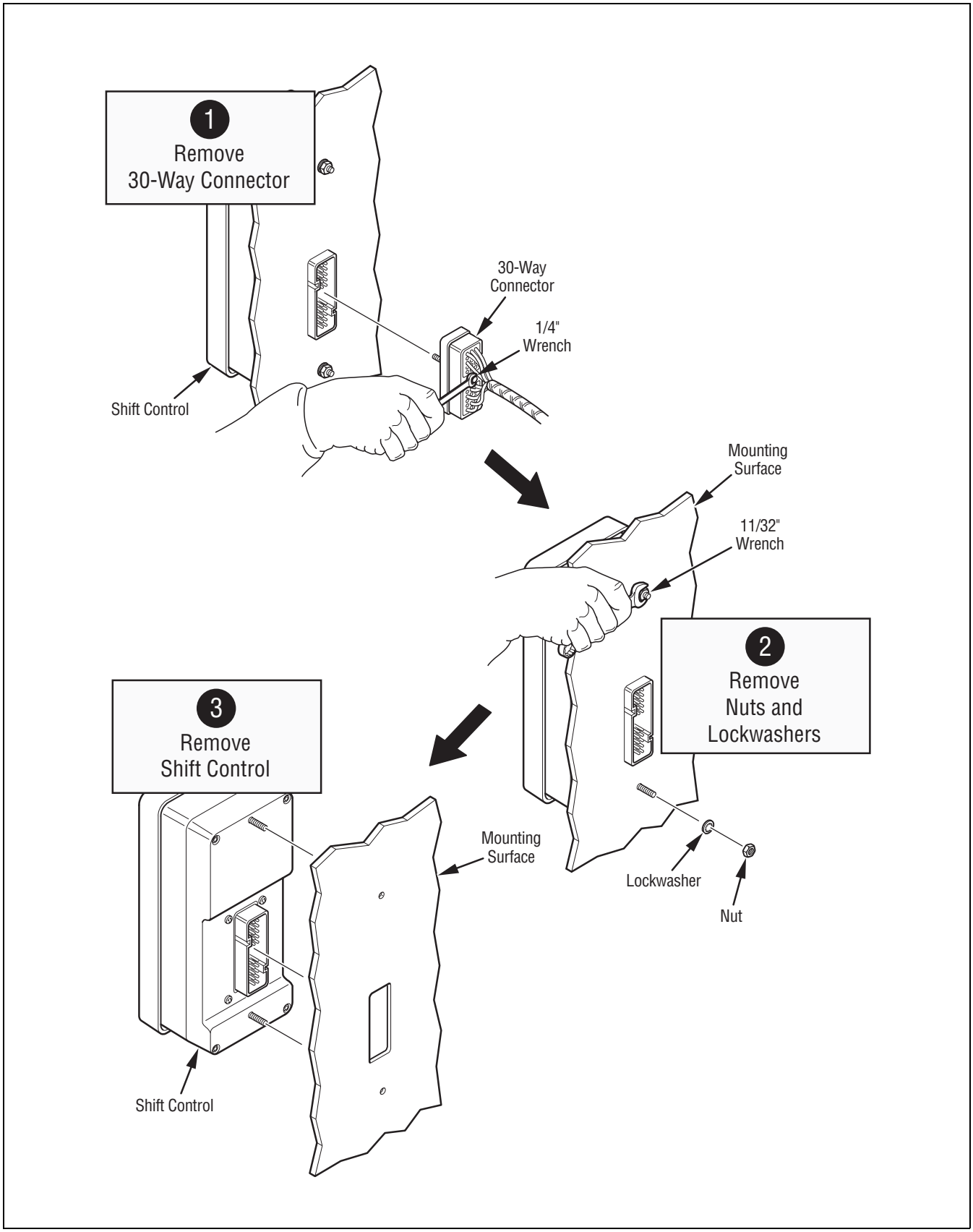

Shift Control Removal

Shift Control – Install

Special Instructions

Torques given below are in pound-inches. Be careful not to over tighten the mounting hardware.

Required Tools

Basic Hand Tools

Installation

1. Install the Shift Control in its mounting location.
2. Using a 11/32” wrench, install the two (2) lock washers and nuts and tighten to 14-16 lbs.in. (1.6-1.8 N•m).
3. Using a 1/4” wrench, reconnect the 30-way connector to the back of the Shift Control and tighten to 20-30 lbs.in. (2.3-3.4 N•m).

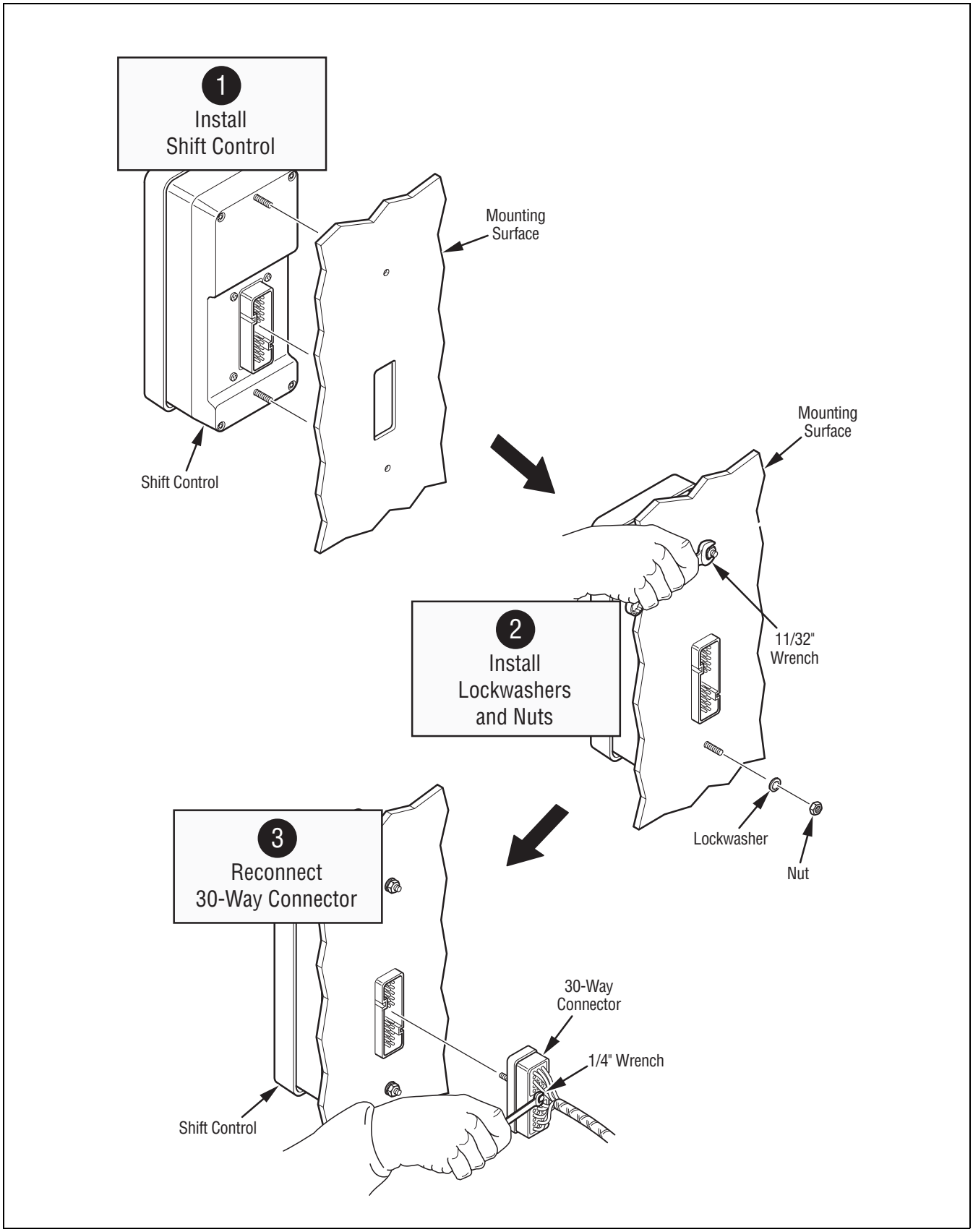

Shift Control Installation

Transmission – Remove

Special Instructions

The exact procedure varies depending on vehicle manufacturer.

Required Tools

Basic Hand Tools

Removal

1. Follow the recommended OEM procedure to remove the transmission.

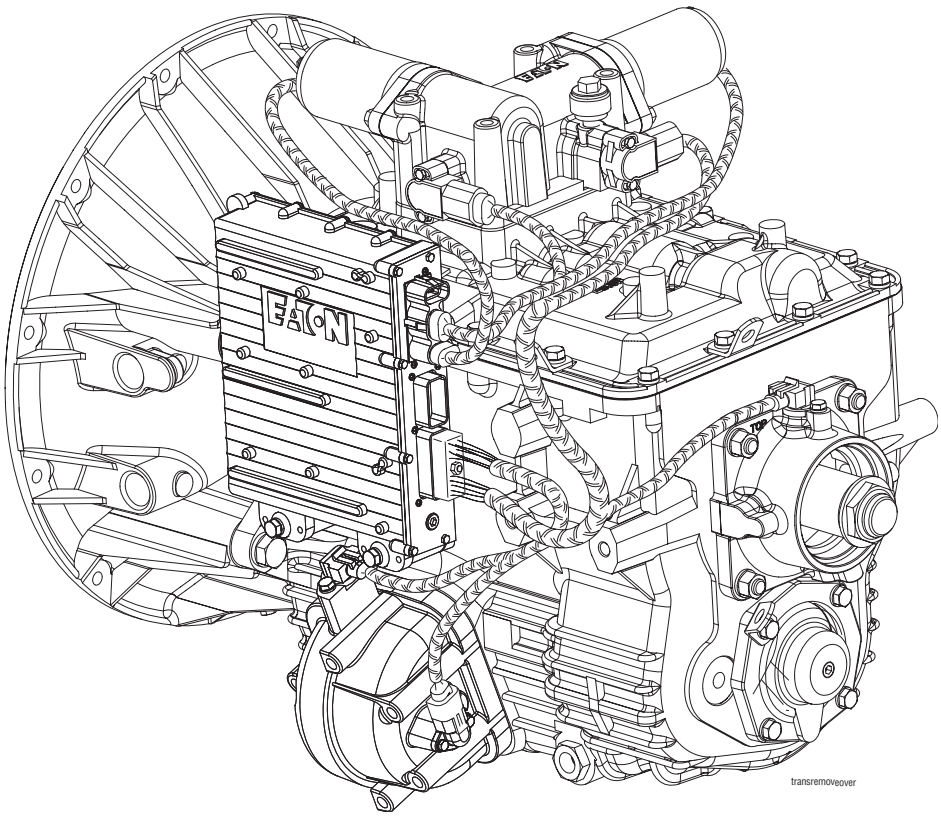

Transmission Removal

Transmission – Install

Special Instructions

Adjust clutch as needed

UltraShift HP- Perform clutch calibration as needed.

Required Tools

Basic Hand Tools

Procedure

1. Follow the recommended OEM procedure to install the transmission.

Final Check

Make sure that the capscrews are tightened to specification.

Make sure that all connections are tight.

UltraShift HP transmissions- Be sure to perform the clutch calibration procedure before operating the transmission. See UltraShift HP Models in this manual for details.

https://truckmanualshub.com/

Change Control Log

Last Revised Date	Description of Clarifications and Updates
4-24-06	Changed the 3 year/ 150,000 mile lube requirements to 5 year/ 500,000 miles

https://truckmanualshub.com/

This page intentionally left blank.

https://truckmanualshub.com/

Copyright Eaton Corporation, 2012. Eaton hereby grant their customers, vendors, or distributors permission to freely copy, reproduce and/or distribute this document in printed format. It may be copied only in its entirety without any changes or modifications. THIS INFORMATION IS NOT INTENDED FOR SALE OR RESALE, AND THIS NOTICE MUST REMAIN ON ALL COPIES.

Note: Features and specifications listed in this document are subject to change without notice and represent the maximum capabilities of the software and products with all options installed. Although every attempt has been made to ensure the accuracy of information contained within, Eaton makes no representation about the completeness, correctness or accuracy and assumes no responsibility for any errors or omissions. Features and functionality may vary depending on selected options.

For spec'ing or service assistance, call 1-800-826-HELP (4357) or visit www.eaton.com/roadranger. In Mexico, call 001-800-826-4357.

Roadranger: Eaton and trusted partners providing the best products and services in the industry, ensuring more time on the road.

Eaton Corporation
Vehicle Group
P.O. Box 4013
Kalamazoo, MI 49003 USA
800-826-HELP (4357)
www.eaton.com/roadranger

Printed in USA

Powering Business Worldwide

BACKED BY
Roadranger
SUPPORT

https://truckmanualshub.com/

For parts or service call us
Pro Gear & Transmission, Inc.

1 (877) 776-4600

(407) 872-1901

parts@eprogear.com

906 W. Gore St.

Orlando, FL 32805