https://truckmanualshub.com/

Service Manual

Fuller Mid Range Transmissions TRSM4106

October 2007

Powering Business Worldwide

BACKED BY Roadranger SUPPORT

https://truckmanualshub.com/

For parts or service call us
Pro Gear & Transmission, Inc.

1 (877) 776-4600

(407) 872-1901

parts@eprogear.com

906 W. Gore St.

Orlando, FL 32805

https://truckmanualshub.com/

https://truckmanualshub.com/

Eaton 6-Speed Synchromesh Transmission

Truck Components Operations Europe
PO Box 11 Worsley
Manchester M28 5GJ
England

Service Manual

(4106 / 5206)

https://truckmanualshub.com/

Section 1 General

1/1 Letter and Model Designation
1/2 Technical Data
1/3 Lubrication
1/4 Recommended Lubricants
1/5 Torque Tightening Recommendations
1/7 Disassembly Precautions and Inspection of Expendable Parts
1/9 Reassembly Precautions
1/10 Gear End Floats
1/11 Special Tools
1/14 Locally Made Tools

Section 2 General Discription

2/1 Features
2/2 Gear Change Pattern
2/2 Power Flow Diagrams

Section 3 Shifting Controls

3/2 Remote Control - Exploded View
3/3 Remote Control Disassembly
3/4 Remote Control Reassembly
3/7 Direct Control - Exploded View
3/8 Direct Control Disassembly
3/9 Direct Control Reassembly

Section 4 Transmission Overhaul

4/2 Transmission Case - Exploded View
4/3 Transmission Case Disassembly
4/9 Layshaft Disassembly
4/10 Layshaft Reassembly
4/11 Synchroniser Flange Removal / Fitment
4/12 Maninshaft Disassembly (New Type)
4/13 Maninshaft Reassembly (New Type)
4/17 Mainshaft Assembly - Exploded View (NewType)
4/31 Mainshaft Disassembly (Old Type)
4/32 Mainshaft Assembly - Exploded View (Old Type)
4/35 Mainshaft Reassembly (Old Type)
4/41 Selector Shaft Disassembly
4/42 Selector Shaft Reassembly
4/44 Transmission Case Reassembly

https://truckmanualshub.com/

Section 2 General

https://truckmanualshub.com/

Model Designation

Example: FSO-4106A

FS	Standard prefix
O	Overdrive
4	Nominal torque in 00 lbs ft
1	Series 1
06	Number of forward gears
A	Standard ratio set
B, C	Alternative ratio sets

Transmission Identification

All transmissions are fitted with an identification plate on the left hand side of the front case showing

1. Transmission serial number.
2. Transmission model.
3. Manufacturing data code.
4. Transmission specification number.

The transmission specification number is unique to each customer and gives precise details of the transmission design level. This number must be quoted when ordering replacement parts.

There are currently two design levels of the 4106 transmission. Each level is identified by the specification number.

Y 0400
Y 04100

The middle digit denotes the design level.

General

https://truckmanualshub.com/

Technical Data

Models	**FS-4106A, FS-4106B, FS-5206A, FS(O)-5206B**
Nominal Input Torque FS-4106A FS-4106B FS-5206A FS(O)-5206B	 640 Nm 650 Nm 700 Nm 700 Nm
Weight 1)	115 kg
Length 2)	520 mm
Oil capacity Vertical Horizontal	 7,5 lit 6,5 lit
Clutch Housing	SAE Standard
Power Take-off Openings	Left side (vertical installation), bottom right (horizontal installation): 2 SAE 6 bolt facings plus extended layshaft for Eaton PTO

PTO Drive Gears 3)		Rotation to Engine
driven from the reverse idler gear at:	engine speed x	
FS-4106A, FS-5206A	0,226	Same
FS-4106B, FS-5206B	0,271	
FS-4106B, FS(O)-5206B	0,336	
driven from layshaft front gear at:	engine speed x	
FS-4106A, FS-5206A	0,434	Opposite
FS-4106B, FS-5206B	0,519	
FS-4106B, FS(O)-5206B	0,644	

Gear	FS-4106A FS-5206A	% Step	FS-4106B FS-5206B	% Step	FS(O)-4106B FS(O)-5206B	% Step
6	1.00		1.00		1.00	
	__	38	__	26	__	26
5	1.38		1.29		1.37	
	__	45	__	43	__	37
4	2.00		1.86		2.12	
	__	55	__	50	__	55
3	3.10		2.80		3.56	
	__	69	__	57	__	69
2	5.25		4.38		6.08	
	__	72	__	72	__	72
1	9.03		7.54		9.03	
	__		__		__	
Reverse	8.07		6.74		5.43	

1) including output coupling, low remote control; less clutch housing
2) front face of transmission case to rear face of output flange
3) recommended backlash is from 0.15 to 0.25mm.

General
Lubrication

https://truckmanualshub.com/

Proper Oil Level

Before checking the oil level or refilling, vehicle should be on level ground.
Make sure that the oil is level with the filler opening.

Draining Oil

Drain transmission while oil is warn. To drain oil remove the drain plug at the bottom if case. Clean the drain plug before re-installing.

Refilling

Clean area round filler plug.
Fill transmission to the level of the filler opening.

The exact amount of oil depends on the transmission inclination. In every instance, fill to the level of the filler opening. Do not overfill this causes oil to be forced out of the case past the mainshaft and input shaft seals.

Adding Oil

It is recommended that different types and brands of oil are not intermixed because of possible incompatibility.

Operating Temprature

It is important that the transmission operating temperature does not exceed 120¡C (250¡F) for an extended period of time. Operating temperatures above 120¡C (250¡F) cause breakdown of the oil and shorten transmission life.

The following conditions in any combination can cause operating temperatures of over 120¡C (250¡F):

1. Operating consistently at road speeds under 32 km/h (20m.p.h.)
2. High engine RPM
3. High ambient temperature
4. Restricted air flow around transmission
5. Exhaust system too close to transmission
6. High horsepower, over-drive operation
7. High power PTO operation for extensive periods while stationary

High operating temperatures may require more frequent oil change.

Towing

When towing the vehicle, the propeller shaft between the axle and transmission must be disconnected.

General

https://truckmanualshub.com/

Recommended Lubricants

Only use recommended lubricants to ensure smooth running.

Models	Grade	Temprature Range
Mild EP Gear Oil to Specification MIL-L-2105 or API-GL-4	SAE 80 W SAE 90 W SAE 80 W/90	-26¡C to 21¡C -12¡C to 37¡C -26¡C to 38¡C
Heavy Duty Engine Oil to Specification MIL-L-2104C or MIL-L-46152 or API-CD	SAE 50 SAE 40 SAE 30	above -12¡C above -12¡C below -12¡C

DO NOT use oil additives, friction modifiers or synthetic lubricants.

Service Intervals

Lubrication Change and Inspection	
Highway Use	
First 5000 to 8000 km (3000 to 5000 miles)	Change transmission oil on new units
Every 16000 km (10000 miles)*	Inspect oil level. Check for leaks
Every 80000 km (50000 miles)+	Change transmission oil
Off Highway	
First 30 hours	Change transmission oil on new units
Every 40 hours *	Inspect oil level. Check for leaks
Every 500 hours	Change transmission oil when severe dirt conditions exist
Every 1000 hours +	Change transmission oil (normal off- highway use)

Remove and clean oil strainer at each oil change.
Transmissions fitted with an oil cooler may additionally be fitted with a filter in the cooler line, Renew the filter at every oil change.

* Or 2 months, whichever occurs first.

\+ Or 12 months, whichever occurs first.

General

https://truckmanualshub.com/

Torque Tightening Recommedations

Screws and Nuts

1. Clutch Housing
12 Studs M12 Thread 59 Nm (43 lbs ft) minimum. Installed with Loctite 242.

2. Clutch Housing
12 Nuts M12 Thread 69 to 78 Nm (51 to 58 lbs ft). With Plain Washers and Spring Lockwashers.

3. Clutch Housing
12 Capscrews M12 Thread 69 to 78 Nm (51 to 58 lbs ft). With Plain Washers and Spring ockwashers.

4. Front P.T.O. Cover
6 Capscrews M10 Thread 35 to 39 Nm (25 to 29 lbs ft).

5. Selector Block Tapered Lockscrew
1 Lockscrew M10 Thread 35 to 39 Nm (25 to 29 lbs ft). Patchlock or Thread coated with Loctite 270.

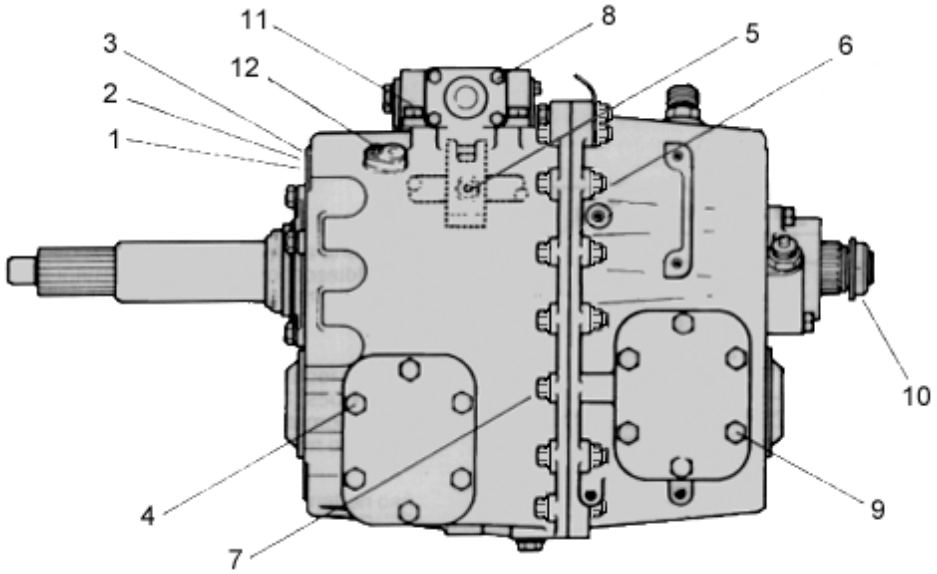

6. Main Casing Halves
15 Capscrews with Plain Nuts M10 Thread 51 to 58 Nm (38 to 43 lbs ft). With Plain Washers under Capscrews and Nuts.
15 Flange headed screws and Nuts M10 Thread 45 to 55 Nm.

7. Main Casing Halves
3 Capscrews M10 Thread 51 to 58 Nm (38 to 43 lbs ft). Plain Washers.
3 Flange headed screws M10 Thread 30 to 40 Nm.

8. Remote Control Housing End Cover
4 Capscrews M8 Thread 20 to 24 Nm (15 to 18 lbs ft). Spring Lockwashers.

9. P.T.O./Reverse Idler Gear Cover
6 Capscrews M10 Thread - 35 to 39 Nm (25 to 29 lbs ft).

10. Output Shaft
Locknut M33 Thread 490 to 588 Nm (362 to 434 lbs ft). With Nylon Locking Insert.

11. Remote Control Housing
4/6/8 Capscrews M10 Thread 35 to 39 Nm (25 to 29 lbs ft). Plain Washers and Spring Lockwashers.

12. Overdrive Selector fork Pivots
2 Capscrews M8 Thread (with lockwashers) 20 to 24 Nm (15 to 18 lbs ft).

https://truckmanualshub.com/

Torque Tightening Recommedations (continued)

Screws and Nuts

1. **Remote Control Shaft Lever**
   1 Capscrew and Nut M10 Thread 35 to 39 Nm (25 to 29 lbs ft). With Spring Lockwasher.

2. **Selector shaft Detent Cover**
   2 Capscrews M8 Thread 20 to 24 Nm (15 to 18 lbs ft). Spring Lockwashers.

3. **Oil Filler Plug**
   M24 Thread 32 to 37 Nm (24 to 27 lbs ft).

4. **Layshaft Front Bearing Cover**
   4 Capscrews M12 Thread 69 to 78 Nm (51 to 58 lbs ft). Spring Lockwashers.

5. **Input Shaft Front Bearing Cover**
   5 Capscrews M10 Thread 35 to 39 Nm (25 to 29 lbs ft). Spring Lockwashers.

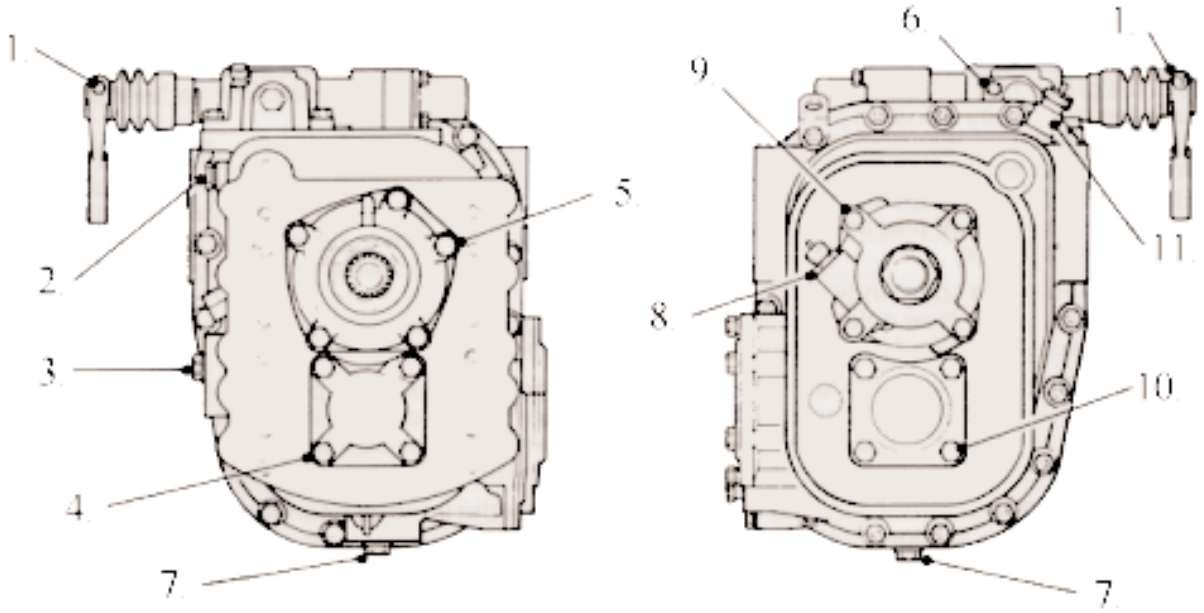

6. **Remote Control Housing Detent Cover**
   2 Capscrews M8 Thread 20 to 24 Nm (15 to 18 lbs ft). Lockwashers.

7. **Oil Drain Plug (Magnetic)**
   M24 Thread 32 to 37 Nm (24 to 27 lbs ft).

8. **Speedo Pinion Adaptor**
   M22 Thread 20 to 27 Nm (15 to 20 lbs ft). Copper Washer.

9. **Speedometer Housing**
   4 Capscrews M10 Thread 35 to 39 Nm (25 to 29 lbs ft). Plain Washers and Spring Lockwashers.

10. **Layshaft Rear Bearing Cover (Rear P.T.O.)**
    4 Capscrews M12 Thread 69 to 78 Nm (51 to 58 lbs ft). Spring Lockwashers.

11. **Reverse Lamp Switch**
    M16 Thread 16 to 22 Nm (12 to 17 lbs ft).

General

https://truckmanualshub.com/

Disassembly Precautions

It is assumed in the detailed disassembly instructions that the lubricant has been drained and the necessary linkage and air lines (if fitted) have been removed from the chassis.
Removal of the gear shift remote control housing assembly is included in the detailed instructions; however, this assembly may also be removed from the transmission before removing unit from vehicle.

Follow each procedure closely in each section, making use of both the text and the pictures.

1. Bearings Carefully wash and relubricate all bearings as removed and protectively wrap until ready for use. Remove bearings with pullers designed for this purpose.

2. Assemblies When disassembling the various assemblies, such as the mainshaft, layshaft and remote control housing, lay all parts on a clean bench in the same sequence as removed. This procedure will simplify reassembly and reduce the possibility of losing parts. When pulling off synchroniser hubs follow the procedures detailed in Disassembly using a suitable puller of adequate capacity. Failure to adhere to the recommended procedures may cause irreparable damage.

3. Snap rings Remove snap rings with pliers designed for this purpose. New selective fit snap rings must be fitted as specified in Reassembly .

4. Cleanliness Provide a clean place to work. It is important that no dirt or foreign material enters the unit during repairs. The outside of the unit should be carefully cleaned before starting the disassembly. Dirt is abrasive and can damage bearings.

5. When Pressing Apply force to shafts, housings etc. with restraint. Movement of some parts is restricted. Do not apply force after the part being driven stops solidly. Use soft hammers for all disassembly work.
Do not use pry bars or chisels to separate casing halves and housings or irreparable damage may be caused.

Inspection of Expendable

Before reassembling the transmission, the individual parts should be carefully checked to eliminate those damaged. They should be renewed. This inspection procedure should be carefully followed to ensure the maximum wear life from the rebuilt unit.
The cost of a new part is generally a small fraction of the total cost of downtime and labour, should the use of a questionable part make additional repairs necessary before the next regularly scheduled overhaul.
Recommended inspection procedures are set forth in the following check list.

A. Bearings

1. Wash all bearings in clean solvent. Check rollers and races for pits and spalled areas. Renew damaged bearings.

2. Lubricate undamaged bearings and check for axial and radial clearances. Renew bearings with excessive clearances.

3. Check fits of bearings in housing bores. If outer races turn too freely in the bores, the housing should be renewed. Check housing bores for signs of wear prior to taking this action. Only replace housing if wear is seen as a result of bearing spin.

B. Gears

1. Check gear teeth for pitting of the tooth faces. Gears with pitted teeth should be renewed. Check the reverse gear dog engagement teeth for freedom from damage.

2. Check the internal bearing surfaces for wear of the effects of overheating.

3. Check axial clearances of gears. Where excessive clearance is found, check gear and hub for excessive wear.
Maintain the specified axial clearance on mainshaft forward gears.

C. Bearing Sleeve Mainshaft

1. Sleeves with groove formation, pits or which have either been overheated or worn out must be renewed.

D. Synchroniser Assemblies

1. Check to ensure all splines are free from excessive wear.

2. Check that the engagement dog teeth on the sliding sleeves, synchroniser rings are free from chipping and burring.

3. Check that the synchroniser ring cones are not excessively worn or showing the effects of overheating. Check the clearance between the synchroniser ring and the synchroniser flange is between 1.9 mm maximum and 0.5 mm minimum.

4. Renew the springs, plungers and rollers.

E. Splines

1. Check splines on all shafts for wear. If synchroniser hubs, output drive flange or clutch hub have worn into the sides of the splines, the shafts in this condition must be renewed.

F. Thrust Washers

1. Check surfaces of all thrust washers. Washers scored or reduced in thickness should be renewed.

G. Reverse Idler Gear

1. Check bearings and shaft for wear from action of roller bearings.

H. Clutch Release Parts

1. Check clutch release parts, yokes and bearing carrier. Check pedal shafts. Renew worn shafts and bearings.

I. Gear Selector Shaft Assembly

1. Check forks and keys for wear at contact points. Renew worn parts.

2. Check forks for excessive and uneven wear, renew worn forks.

3. Check lockscrew in selector block. A lockscrew with worn taper must be renewed.

4. Check condition and fit of selector key and interlock key in shift shaft. Worn or damaged keys must be renewed.

J. Gear Shift Remove Control

1. Check spring tension on cross shaft. Renew tension springs if shaft moves too freely.

2. If housing is dismantled, check cross shaft and inner lever and the bearing bushes for wear. Renew worn parts.

3. Check all seals and locating journals. Renew worn parts.

K. Bearing Covers

1. Check covers for wear from thrust. Renew covers worn or grooved from thrust of bearing outer race.

2. Check bores of covers for wear. Renew those worn oversize.

L. Oil Return Threads and Seals

1. Check oil seal in front bearing cover for damage and wear, renew if necessary.

2. Check oil seal in speedometer housing for damage or wear, renew if necessary. Renew grit shield if worn or loose on flange.

3. Check oil seal journals for wear and renew if worn or grooved.

M. O-Rings

1. Renew all O-rings.

https://truckmanualshub.com/

Reassembly Precautions

Make sure that interiors of all housings are clean. It is important that dirt be kept out of transmission during reassembly. Dirt is abrasive and can damage polished surfaces of bearings and washers. Use certain precautions, as listed below, during reassembly.

1. Gaskets Use new gaskets where detailed only (neutral detent cover and remote control housing covers). All other locations ensure mating faces are clean and undamaged and apply a continuous bead of Loctite 518 Flange Sealant to one face only. Do not apply excessive sealant or allow it to penetrate into the bearings.

2. Capscrews Use thread sealant (Loctite 641) on all capscrews. The corresponding torque ratings are to be found in Torque Recommendations for Screws and Nuts .

3. O Rings Lubricate all O rings lightly with silicone lubricant.

4. Initial Lubrication Lubricate bearings with gearbox oil during reassembly.

5. Axial Clearances Maintain the end float of mainshaft gears as detailed in the chart on the following page.

6. Bearings Use of flange-end bearing drivers is recommended for the installation of bearings. These drivers apply equal force to both races of the bearing, preventing damage to balls and races and maintaining correct bearing alignment with shaft and bore. A tubular type driver, if used, will apply force only to the inner race. Heating the bearing inner tracks will aid installation.

7. Output Shaft Drive Flange Tighten the nut to the correct torque.

8. Synchroniser Hubs All synchroniser hubs are an interference fit on the mainshaft splines and must be heated to approximately 85¡C (180¡F) before installation.

9. Layshaft The layshaft gears are a shrink and press fit on the layshaft body. The gears must be heated to 150¡C (300¡F) before assembly.

10. Prior to fitting a flange (or yoke) ensure that the seal track is not grooved, scored or pitted. If in doubt, it must be replaced.

11. All synchroniser flanges are now loctited to the gears. It is recommended that this is carried out before reassembly commences to allow sufficient time for the Loctite to cure.

https://truckmanualshub.com/

Gear End Floats All dimensions in mm

Gear	5th (o,d. 6th)	4th	3rd	2nd	1st	Reverse
Low Limit	0,31	0,35	0,35	0,35	0,40	Sliding
High Limit	0,53	0,48	0,48	0,48	0,57	Gear
Tolerance	0,22	0,13	0,13	0,13	0,17	

General
Special Tools

https://truckmanualshub.com/

Some illustrations show the use of specialised tools. These tools are recommended for disassembly and reassembly of the transmission. They make repair easier, faster and prevent damage.

The following tools are available from SPX UK (Ltd) Tel : +44 (0)1327 704461

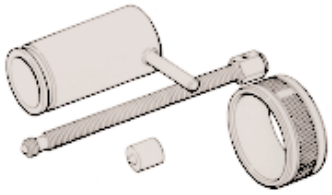

LC 105A Bearing remover.

E 109 Driver.

E 105-4 Countershaft bearing remover.

E 109-5 Selector control seal and bush installer.
Use with E 109.

E 108 Driver.

E 109-6 Countershaft bearing cup installer adaptor.
Use with E 109.

E 108-5 Replacer adaptor for auxiliary countershaft bearing and input bearing.
Use with E 108.

E 109-7 Input shaft seal installer adaptor.

E 108-6 Mainshaft rear seal replacer adaptor.

E 109-8 Selector shaft bush installer adaptor.
Use with E 109.

https://truckmanualshub.com/

Special Tools (continued)

E 109-9 Selector shaft plug installer adaptor.
Use with E 109.

E 109-10 Driver extension.
Use with E 109.

E 109-11 Countershaft bearing cone installer.
Use with E 109.

E 114 Rear mainshaft bearing pilot.

E 115 Flange holding adaptor plate

E 116A Gear assembly lifting fixture.

E 116-2 Adaptor gear assembly lifting fixture.
Use with E 116A.

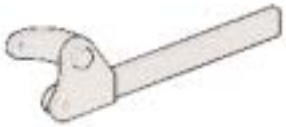

LC 113A Flange holding wrench.

MS 284 Slide hammer.

E 117 Reverse idler shaft retaining pin installer.

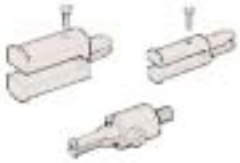

MS 284-1 Extractor set - bearing/bush.

The following general purpose pullers are available from Sykes-Pickavant Ltd., or through their Dealers.

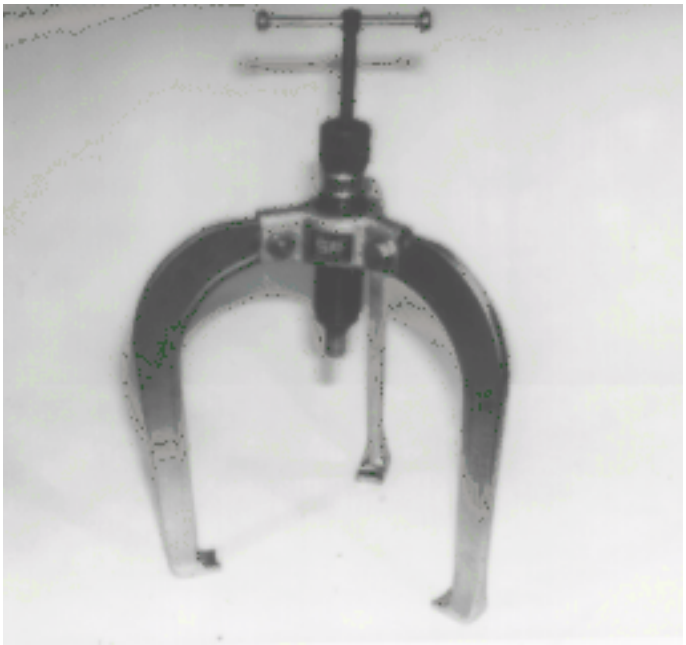

Three Legged Puller - Series 1500 with Hydraulic Ram

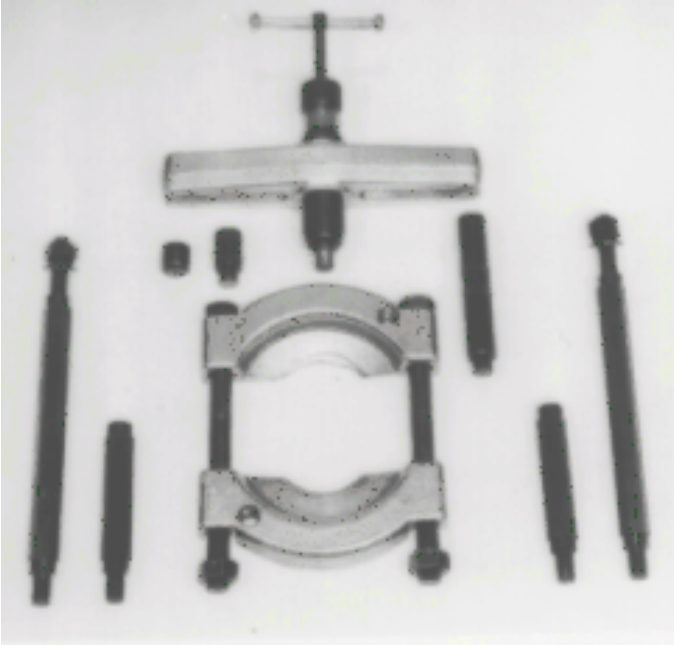

Puller Kit - Series 1500 with Hydraulic Ram

Locally Made Tools

The following illustration shows a suitable cradle which can be used to stand the transmission 'on end' during 'Disassembly' and 'Reassembly'. The thickness of the block has been calculated to lift the mainshaft the required distance during removal and installation of the layshaft. If the height of the cradle is increasing, the thickness of the block should be increased by the same amount.

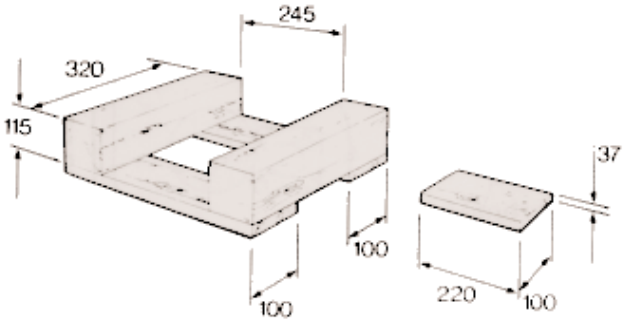

All dimensions in mm.

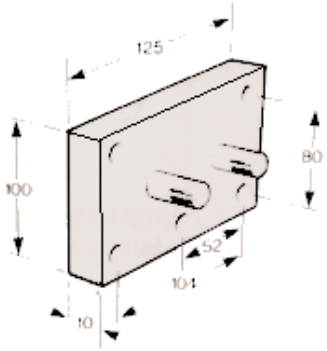

Mounting Plates - 2 off.

https://truckmanualshub.com/

Locally made tools

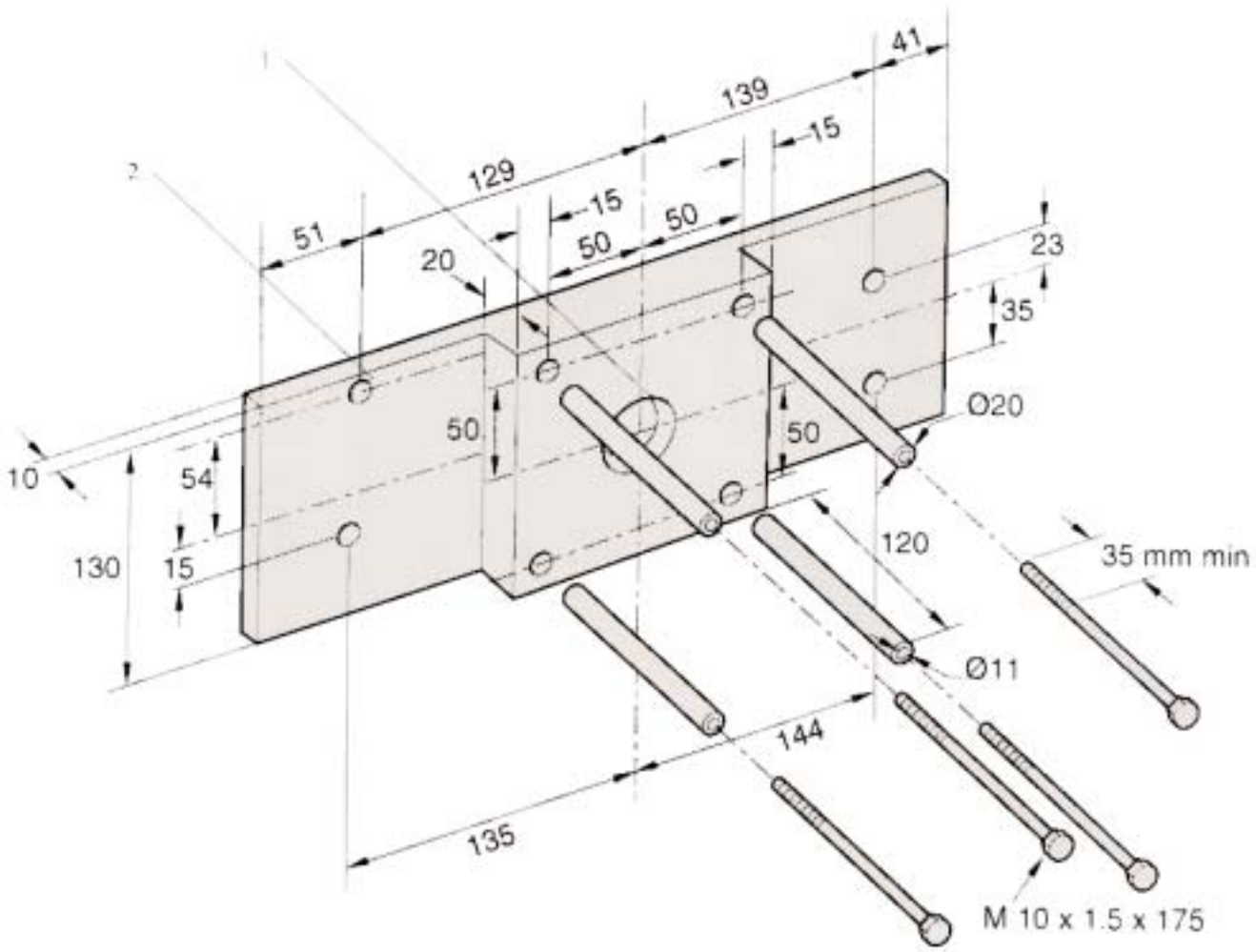

1. 1 off hole 1.5 inches diameter 16 threads per inch Whitworth form to suit Sykes Picavant hydraulic ram No 150 000.

2. 8 holes 11 mm diameter.

Tool for 4 point ball bearing removal.

https://truckmanualshub.com/

General

Special Tools for United States

Eaton 4106/5206		
SPX #	**NEW UK #**	**Description**
J-45895	LC 105A	Bearing Remover
J-45896	E 105-4	Countershaft bearing remover
J-45902	E 108	Driver
J-45897	E 108-5	Replacer adaptor for auxiliary countershaft bearing and input bearing
J 39588	E 108-6	Mainshaft real seal replacer adaptor
J-8092	E 109	Driver
J 39592-1&2	E 109-5	Selector control seal and bush installer. Use with E109
J-39587	E 109-6	Countershaft bearing cup installer adaptor. Use with E109
J-39589	E 109-7	Input shaft seal installer adaptor
J-39585-2	E 109-8	Selector shaft bush installer adaptor. Use with E109
J-39585-1	E 109-9	Selector shaft plug installer adaptor. Use with E109
J-21465-13	E 109-10	Driver extension
J-39586	E 109-11	Countershaft bearing cone installer. Use with E109
J-39590	E 114	Rear mainshaft bearing pilot
J-45899	E 115	Flange holding adaptor plate
J-39584	E 116A	Gear assembly lifting fixture
J-39584	E 116-2	Adaptor gear assembly lifting fixture. Use with E116A
J-45898	LC 113A	Flange holding wrench
MS284	MS 284	Slide hammer
J-39591	E 117	Reverse idler shaft retaining pin installer
J-45901	MS 284-1	Extractor set - bearing/bush

https://truckmanualshub.com/

Section 2 General Description

General Description
https://truckmanualshub.com/
Features

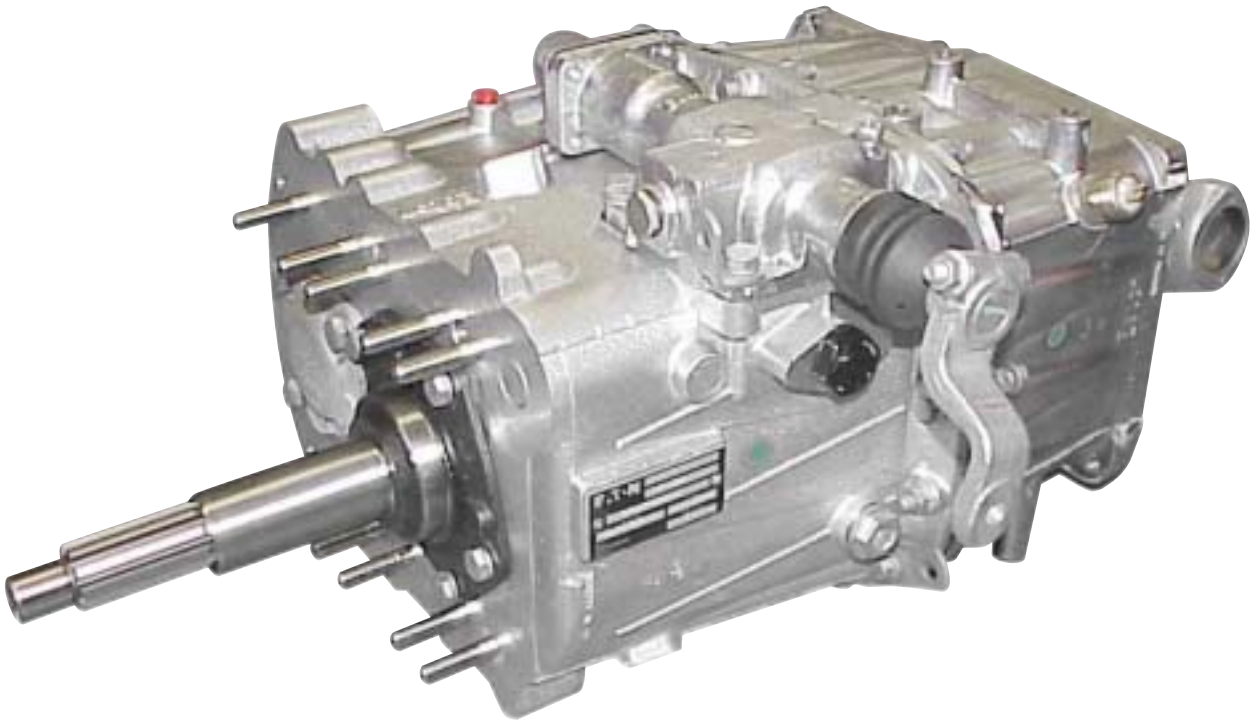

The Eaton six-speed transmissions have six forward speeds and are part of a family of synchromesh transmissions. They have a simple shift pattern using a unique single rail selector mechanism.

The transmissions may be mounted vertically or horizontally and in both positions the gear change remote control may be to the right or the left.

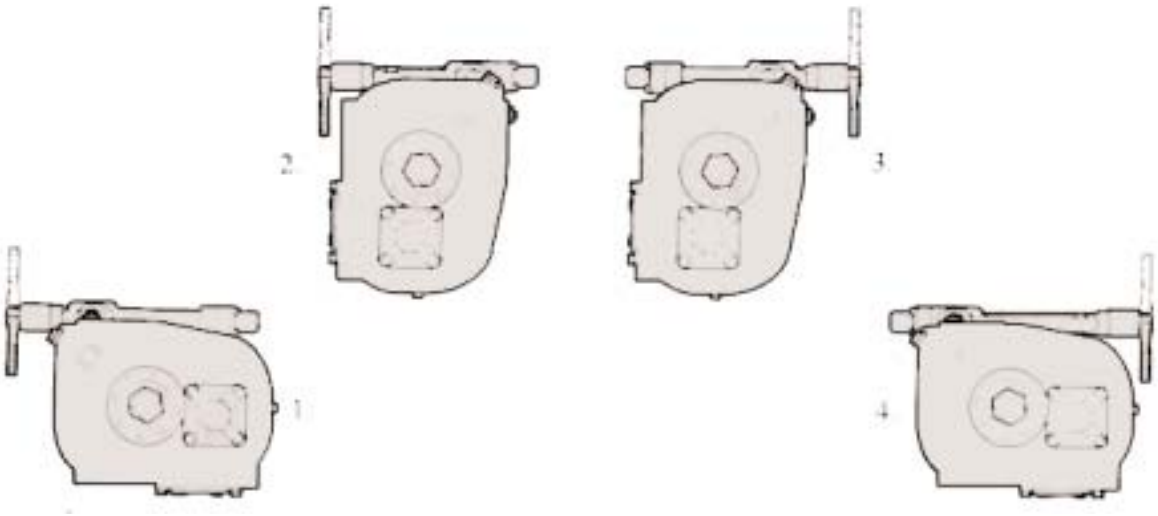

1. Left-Hand Horizontal
2. Left-Hand Vertical
3. Right-Hand Vertical
4. Right-Hand Horizontal

The synchroniser assemblies are of the baulk ring type with the gear ring cones manufactured separately from the gears. This allows the synchroniser rings and flanges to be renewed without the need to renew the gears themselves. Reverse gear is engaged by sliding the reverse gear on the mainshaft into mesh with a dog clutch ring splined to the mainshaft.

General Description

https://truckmanualshub.com/

Gear Change Pattern

Simple shift pattern with the mechanism biased in neutral between 3rd and 4th gears.

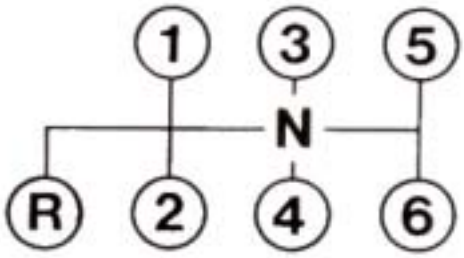

1

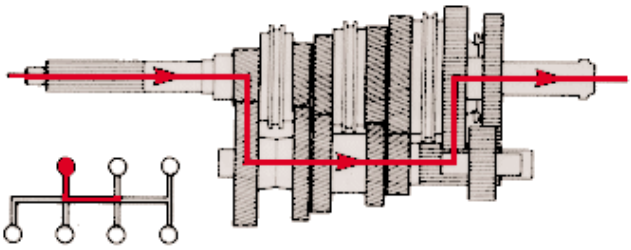

2

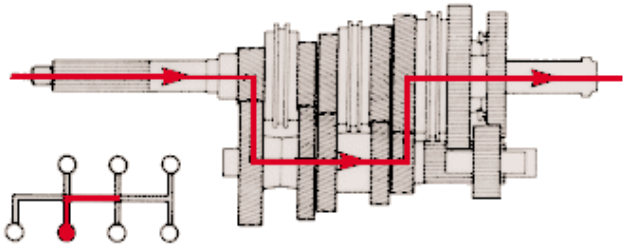

3

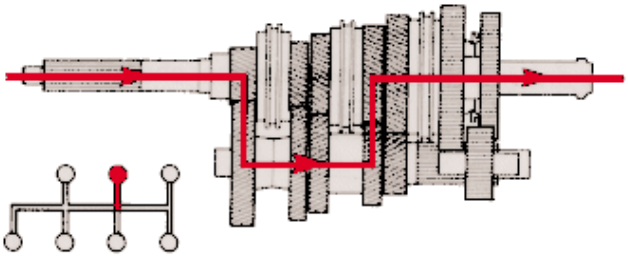

4

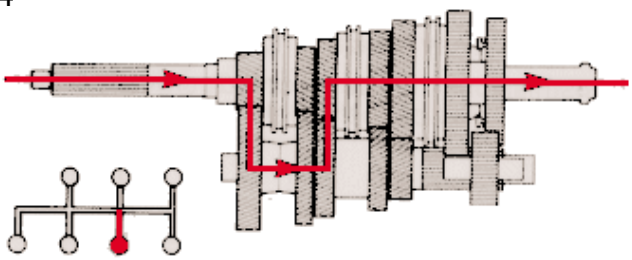

5

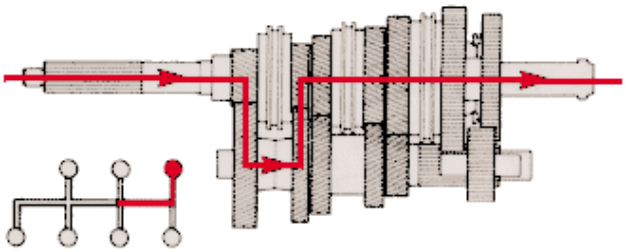

6

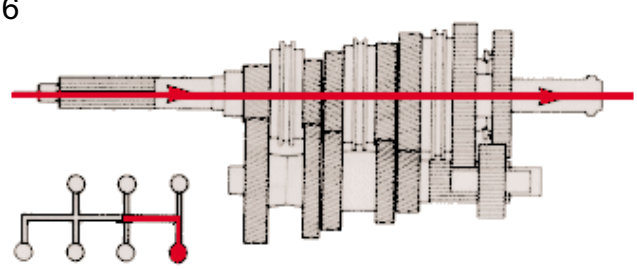

R

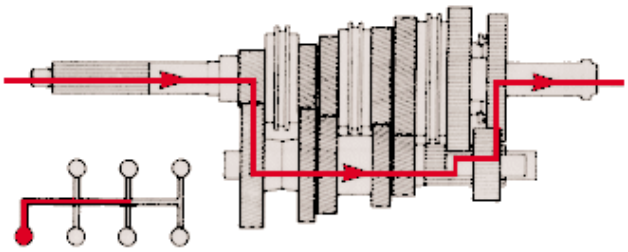

Power Flow in the Gears - Direct Drive Top Gear Version

https://truckmanualshub.com/

Section 3 Shifting Controls

6 Speed MK.4

Shifting Controls

https://truckmanualshub.com/

Remote Control - Exploded View

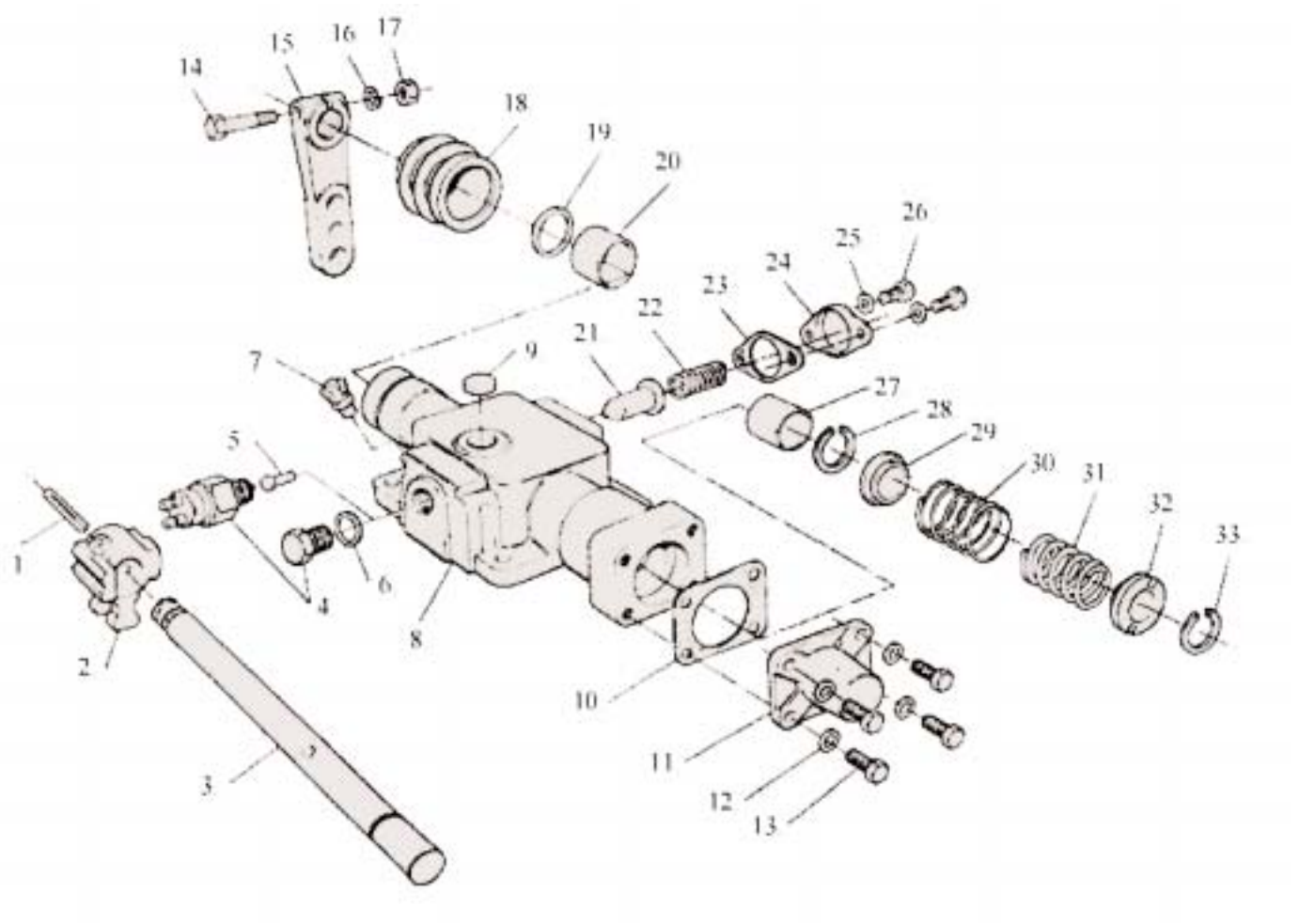

1. Grooved pin
2. Inner striking lever
3. Cross shaft
4. Plug or Neutral switch
5. Pin
6. Washer
7. Breather
8. Housing
9. Plug
10. Gasket
11. End cover
12. Spring washer M8
13. Screw M8
14. Bolt M10 x 50
15. Outer lever
16. Washer
17. Nut M10
18. Boot
19. Oil Seal
20. Bush
21. Reverse plunger
22. Reverse detent spring
23. Detent cover gasket
24. Detent cover
25. Spring washer M8
26. Screw M8
27. Bush
28. Circlip
29. Spring retainer
30. Spring
31. Spring (LH only)
32. Spring retainer
33. Circlip

1. Ensure neutral is selected and remove the control assembly from the transmission.

4. Remove the four separate capscrews and lift off the end cover.

2. Remove the outer shift lever and rubber boot. Remove the neutral switch and pin (if fitted).
Note: The position of the lever is marked on the shaft. Check before removal.

5. Remove the circlip from the shaft and remove the spring retainer.

3. Remove the reverse detent cover and pull out the spring and plunger.

6. Withdraw the booster spring, bias, spring inner retainer and circlip.

https://truckmanualshub.com/

Remote Control Reassembly

7. Invert the housing and carefully drift out the expansion plug.

1. If necessary renew the bearing bushes in the housing using the special tool. The new bushes are prefinished to the correct size.

8. Invert the housing, align the grooved pin in the lever with the expansion plug hole.

2. If necessary renew the oil seal.

9. Drift out the pin. Remove the shaft and inner lever.

3. Install the inner lever, long plain groove toward the front of the housing.

https://truckmanualshub.com/

4. Install the shaft from the right hand side of the housing.

7. Insert the springs and outer retainer.
Note: right hand drive units use a large retainer: left hand drive units use one large (outer) and one small (inner).

5. Align the inner lever on the shaft and install a new grooved pin.
Note: Inner lever should be supported whilst driving pin to prevent damage to bushes.

8. Fit the outer circlip onto the shaft.

6. Fit the inner circlip onto the shaft. Install the smaller spring retainer.

9. Fit a new gasket and secure the end cover to the housing. Tighten to correct torque (20 to 24 Nm).
Note: The word Top has been cast into the cover to identify correct positioning.

https://truckmanualshub.com/

10. Install the reverse detent plunger and spring and fit the cover using a new gasket. Tighten the capscrews to the correct torque (20 to 24 Nm).

13. Apply Loctite 5900 sealant.
Fit control assembly to the transmission housing.

11. Fit the rubber boot onto the housing. Align the outer lever with the timing mark on the shaft. Fit the pinch bolt and tighten to 35 to 39 Nm.

12. Fit the breather. Install the pin and neutral switch (15 to 22 Nm). Apply sealant and install a new blanking plug.

Shifting Controls

https://truckmanualshub.com/

Direct Control - Exploded View

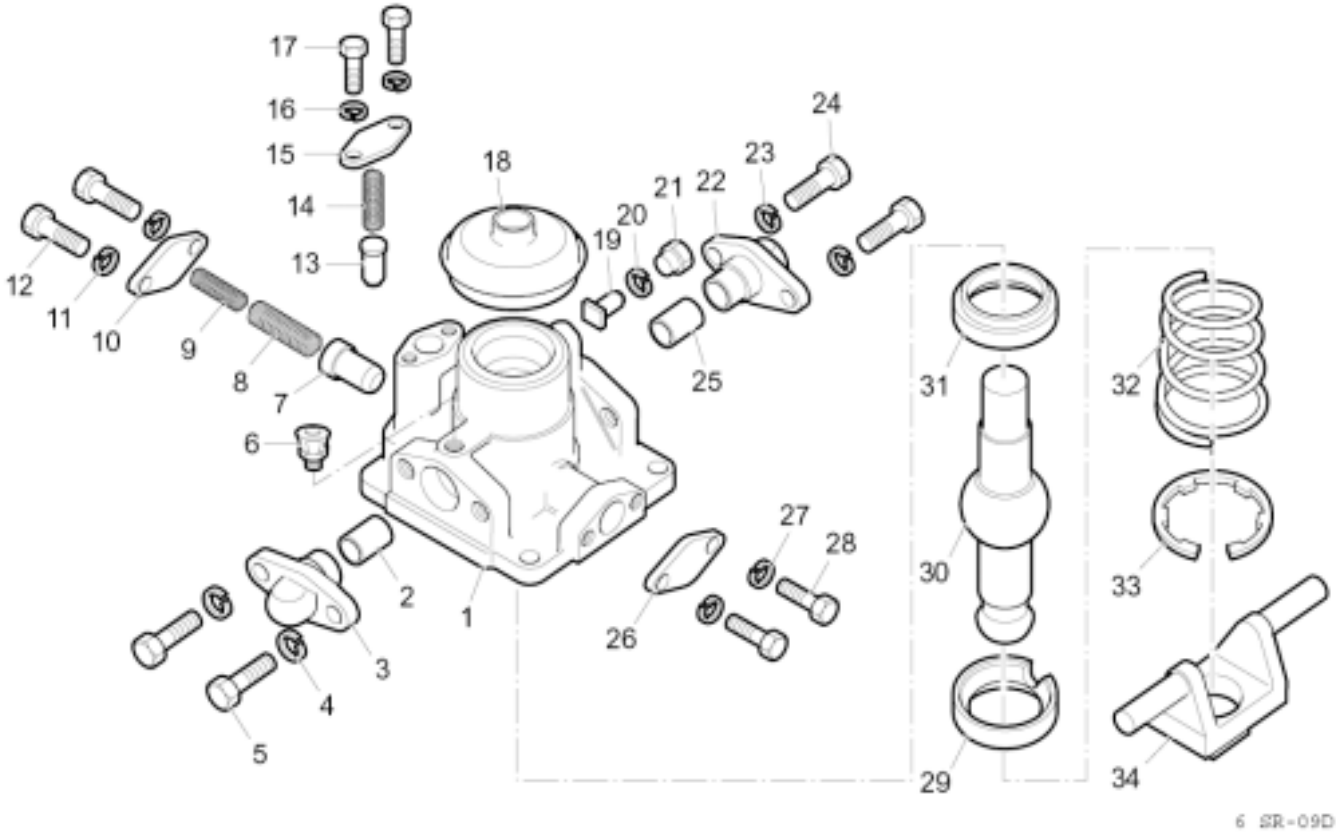

Item	
01	Housing
02	Bush
03	End cap
04	Spring washer
05	Screw
06	Breather
07	Plunger
08	Spring compression
09	Spring compression
10	Cover
11	Spring washer
12	Screw
13	Plunger
14	Spring
15	Cover

Item	
16	Spring washer
17	Screw
18	Gaiter
19	Pin
20	Washer
21	Plug
22	End cap
23	Spring washer
24	Screw
25	Bush
29	Seating
30	Gear lever
31	Seating
32	Spring
33	Spring
34	Yoke

Disassembly

https://truckmanualshub.com/

1. Remove the rubber gaiter and breather.

4. Remove the screws, washers and end covers from both sides of the housing.

2. Remove the screws, washers, detent cover plate, spring and plunger.

5. If necessary the bushes in the end covers can be replaced.

3. Remove the screws, washers, detent cover plate, spring(s) and plunger.

6. Invert the housing and withdraw the yoke.

Assembly

7. Remove the Circlip and spring.

8. Remove the seat and selector shaft.

9. Remove the pin and seat.

1. Clean all joint faces. Fit the seat ensuring that the slot aligns with the hole in the housing for the pin.

2. Apply grease to the seat and then fit the pin.

3. Apply a coating of grease to the Selector shaft and then, ensuring that the slot in the selector shaft aligns with the pin in the housing, fit the selector shaft.

https://truckmanualshub.com/

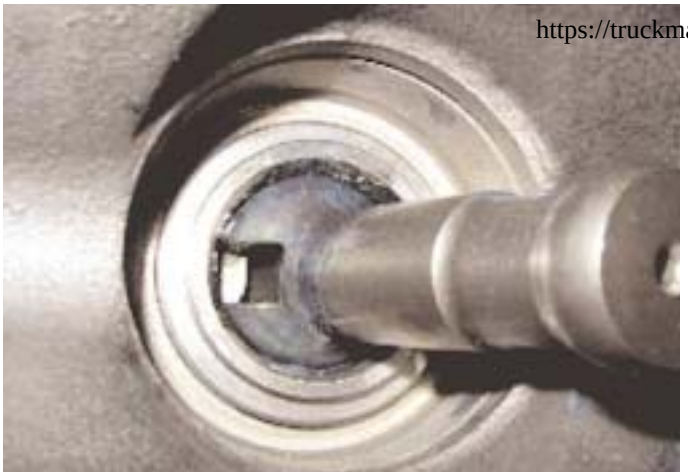

4. Fit the seat ensuring that the slot in the seat locates onto the pin and into the bore of the housing.

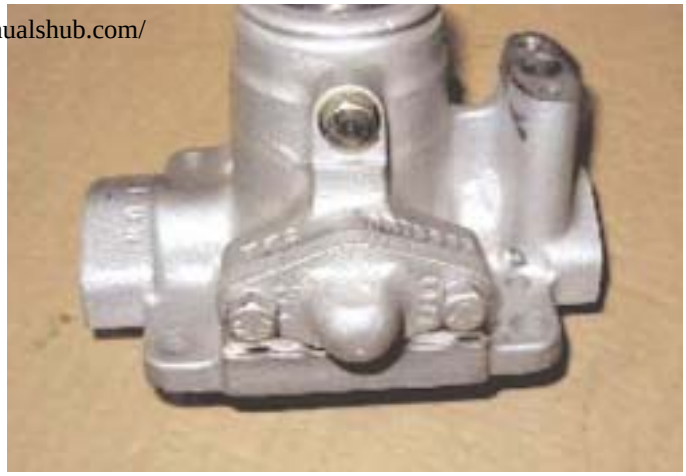

7. Apply a light coating of grease to the bushes in the end covers. Apply Loctite 5900 to the joint faces. Fit the end caps, screws and washers. Torque screws to 20 to 24 Nm.

5. Ensuring that the smaller diameter of the spring sits against the seat refit the spring and retaining Circlip.

8. Refit the plunger, spring(s), end cover (apply Loctite 5900 to the joint faces), screws and washers. Torque screws to 20 to 24Nm.

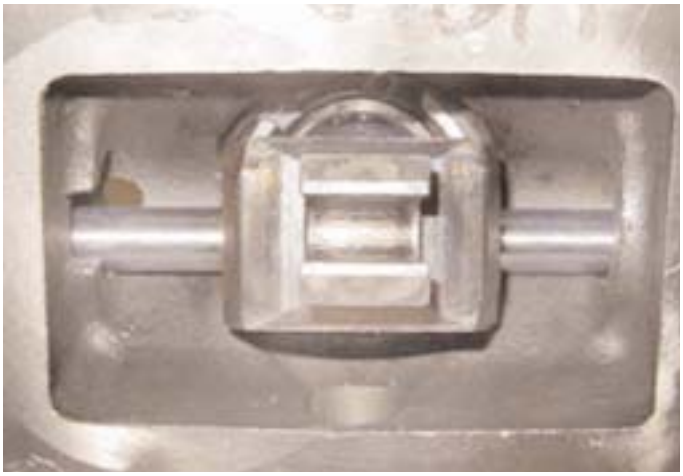

6. Install the yoke into the housing.

9. Refit the plunger, spring, detent cover (apply a coating of Loctite 5900), screws and washers. Torque screws to 20 to 24 Nm.

https://truckmanualshub.com/

10. Refit the rubber gaiter and breather.

https://truckmanualshub.com/

Section 4 Transmission Overhaul

Transmission Case
https://truckmanualshub.com/
Exploded View

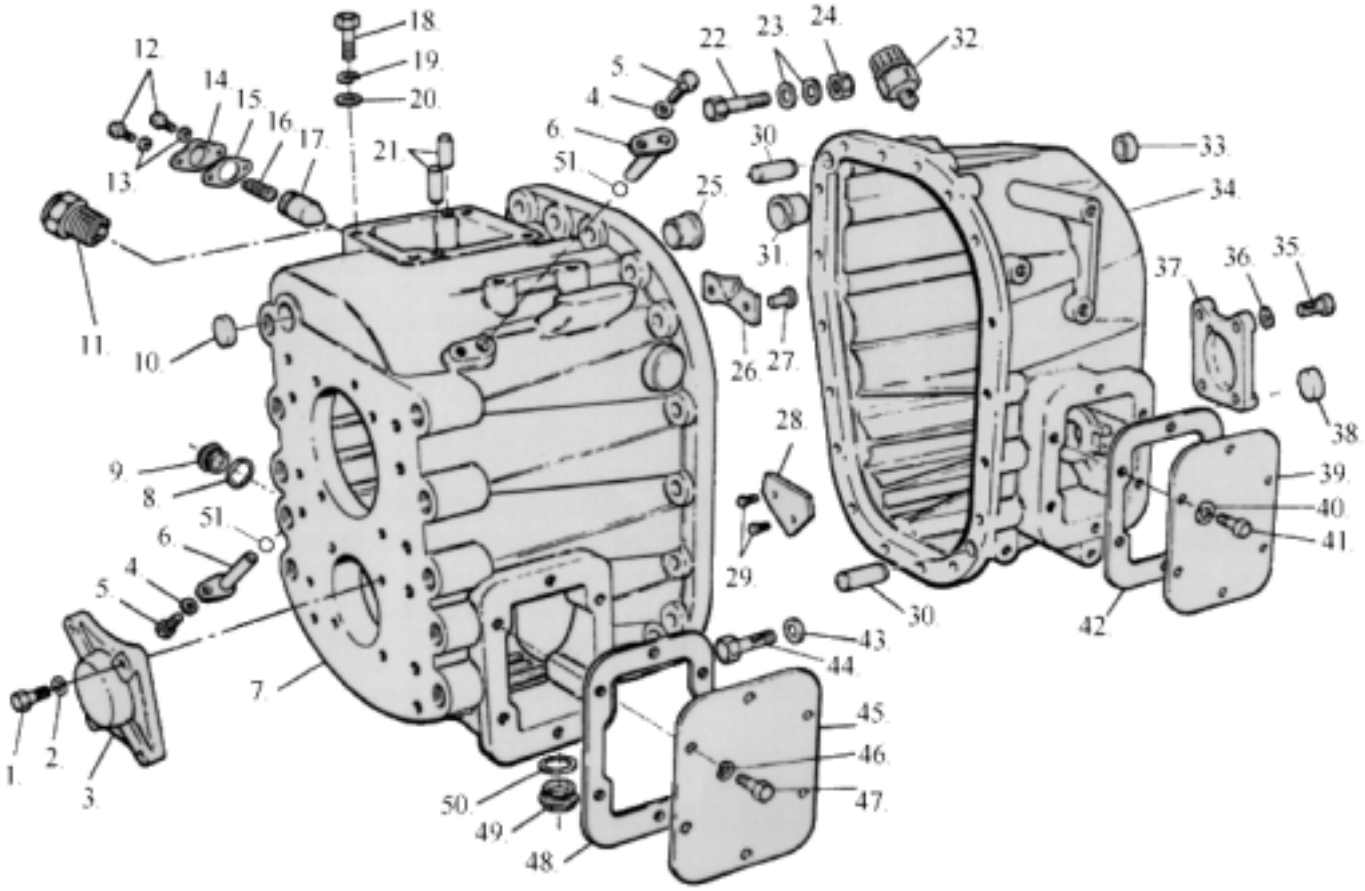

1. Screw M12
2. Washer M12
3. Cover
4. Washer
5. Screw M8
6. Rotation pins, overdrive
7. Front casing
8. Washer
9. Oil filler plug
10. Core plug
11. Neutral detent assembly
12. Screw
13. Spring washer
14. Cover
15. Gasket
16. Detent spring
17. Neutral detent plunger
18. Screw
19. Spring washer
20. Washer
21. Dowel
22. Bolt M10
23. Washer M10
24. Nut M10
25. Bushing
26. Oil trough
27. Hammer drive screw
28. Oil trough
29. Hammer drive screw
30. Dowel
31. Bushing
32. Reverse light switch or plug
33. Core plug
34. Rear casing
35. Screw M12
36. Spring washer M12
37. Cover
38. Cup plug
39. Cover
40. Spring washer
41. Screw M10
42. Gasket
43. Washer M10
44. Screw M10
45. Cover
46. Washer M10
47. Screw M10
48. Gasket
49. Magnetic drain plug
50. Washer
51. O ring

Disassembly of Transmission Case

https://truckmanualshub.com/

Caution: Drain gear oil from the transmission and clean and refit the drain and filler plugs.

Note: The transmission illustrated in this section is a standard ratio horizontally installed unit. The procedure is the same for all transmissions but the physical size and number of teeth on some of the gears will vary from those illustrated on overdrive and alternative ratio models.
Horizontally installed units have the remote control on the side of the transmission and alternative filler and drain plug positions.

1. Secure the adaptor plates to the transmission case rear mounting flanges.
Note: This may be a 4-hole square pattern on early models.

2. Raise the transmission on a hoist and install the unit onto the stand

3. Remove the speedometer pinion and adaptor or electronic sender unit.

4. Remove the reverse lamp switch.

5. Using a flange/yoke holding wrench remove the output drive flange/yoke retaining nut.

6. Remove the output drive flange/yoke, using a suitable puller if necessary. Do not use a hammer or the flange/yoke may be damaged.

https://truckmanualshub.com/

7. Ensure neutral is engaged and remove the remote control housing bolts. Use a soft faced mallet to separate the housing from the transmission.

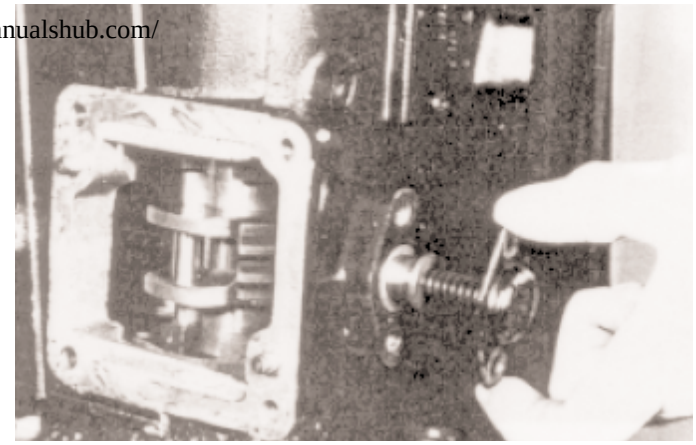

10 Position the transmission forward end uppermost on the stand or wooden cradle and remove the detent spring cover plate, spring and plunger as above or detent assembly (see below).

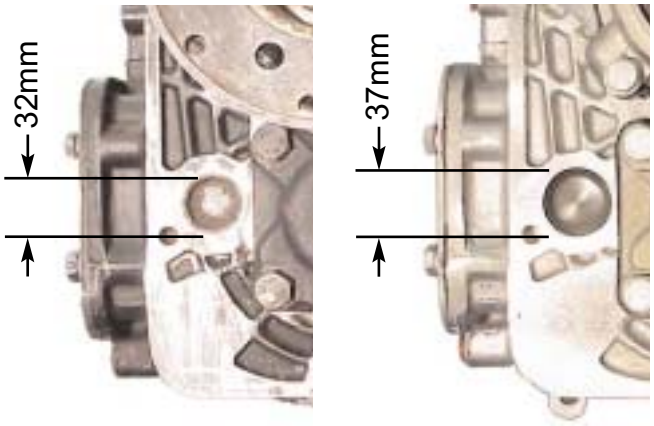

8. Measure the diameter of the core plug as shown. If the diameter is 32mm then the retaining pin must be removed as explained below. If the core plug diameter is 37mm then a retaining pin is not fitted therefore the following procedure can be missed

11.

9. Remove the rear PTO cover. Using the special tool or an 8 mm punch, drive the reverse idler shaft grooved pin INWARDS until the end is approximately 12 mm below the face of the hole. Do not allow the pin to 'bottom' against the shaft bore.

https://truckmanualshub.com/

12. Rotate the gear selector shaft to the left (vertically mounted) or right (horizontally mounted) so that the case will not foul the selector block on removal.

13. On overdrive models, remove the capscrews retaining the two overdrive fork pivot pins and remove the pins.

14. Remove the half case flange capscrews and nuts. Note the position of the shorter capscrews threaded into the case.

15. Remove the capscrews securing the input shaft cover and remove the cover.

16. Remove the outer circlip from the input shaft bearing.

17. Remove the spacer and bearing thrust washer.

https://truckmanualshub.com/

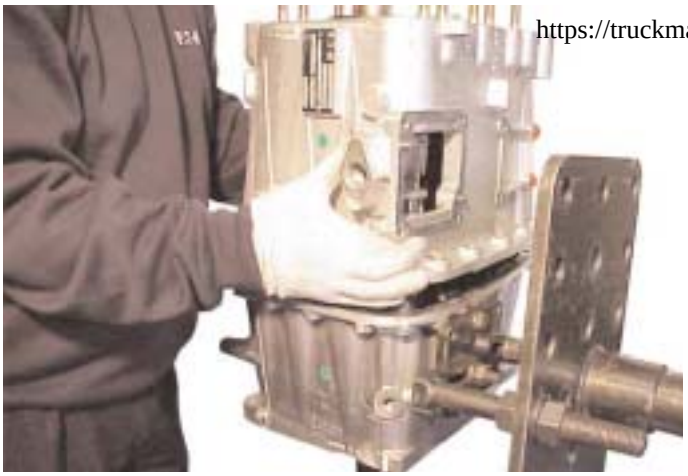

18. Using a soft face mallet break the seal and separate the front case from the rear case. DO NOT USE PRY BARS OR CHISELS. Lift off the front case, leaving the input shaft and bearing in place.

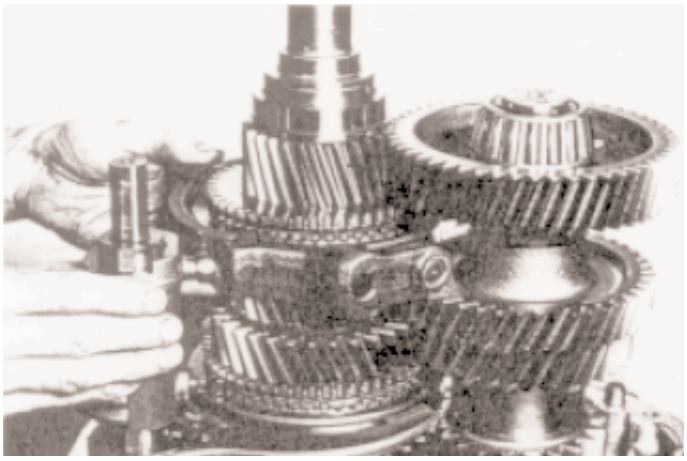

19. On overdrive models disengage and remove the overdrive fork and pads.

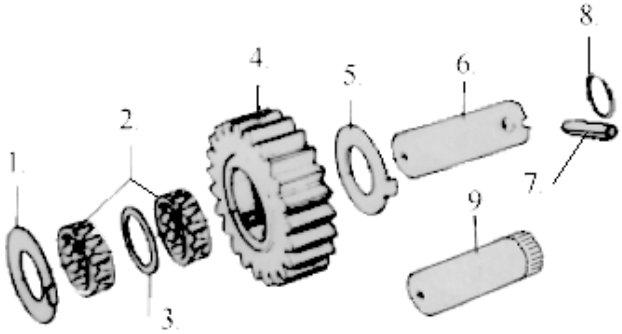

1. Thrust washer
2. Needle roller bearing
3. Spacer
4. Reverse idler gear
5. Thrust washer
6. Reverse idler shaft - old design
7. Pin
8. 'O' ring
9. Reverse idler shaft - new design

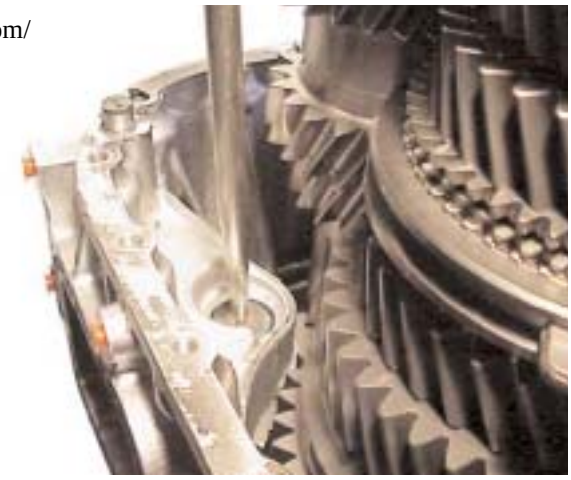

20. Using a suitable long drift drive out the reverse idler shaft and expansion plug from the case.

21. Remove the reverse idler gear and the thrust washers. Remove the bearings and spacer from the gear and the 'O' ring from the reverse idler shaft (old design).

22. Assemble the special lifting tool to the mainshaft under the 5th/6th synchroniser. Raise the shaft by approximately 20 mm. This allows the layshaft to lift clear.

https://truckmanualshub.com/

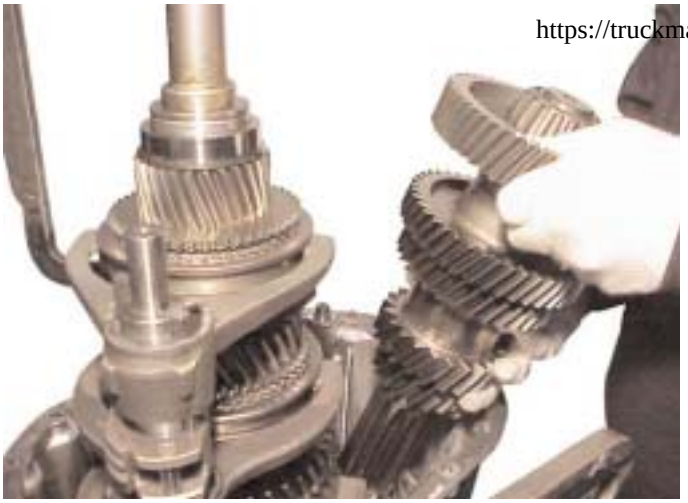

23. Lift out the layshaft

24. Lift off the input shaft with 6th gear flange. Remove the 6th gear synchroniser ring.

25. Raise the hoist and lift out the mainshaft and selector shaft and forks as an assembly. Carefully lower on to a clean bench and remove the special tool. Separate the selector shaft and forks from the mainshaft.

26. Invert the rear case on the stand and remove the capscrews securing the speedometer housing. Note the positions of the different length capscrews. Remove the housing. If necessary drift out the oil seal.

27. Remove the speedometer drive gear or tachograph rotor and the bearing spacer from the rear case half.

28. Invert the casing on the stand and using the special tool drift out the mainshaft rear bearing. Do not allow the bearing to fall to the floor.

https://truckmanualshub.com/

29. Invert the casing on the stand and remove the layshaft rear bearing cover and bearing spacer.

32. Drift out the layshaft front bearing cup using the special tool. Remove the input shaft bearing using the special tool.

30. Drift out the layshaft rear bearing outer cup using the special tool.

33. If necessary, to renew the selector shaft bushes, drive the selector shaft expamsion plugs outwards from the case halves.

31. Remove the layshaft front bearing retaining plate and graded spacer from the front case.

34. Invert the case halves and using the special tool or a suitable (25mm diameter) mandrel drive the selector shaft bushes out of the cases.

https://truckmanualshub.com/

1. Support the shaft assembly and remove the graded circlip retaining the front taper roller bearing.

3. Invert the shaft and remove the rear taper roller bearing.

2. Using the special tool remove the bearing cone and roller assembly.

1. Countershaft assembly
2. Taper roller bearing
3. Distance piece
4. Taper roller bearing
5. Circlip
6. Shim
7. Spacer

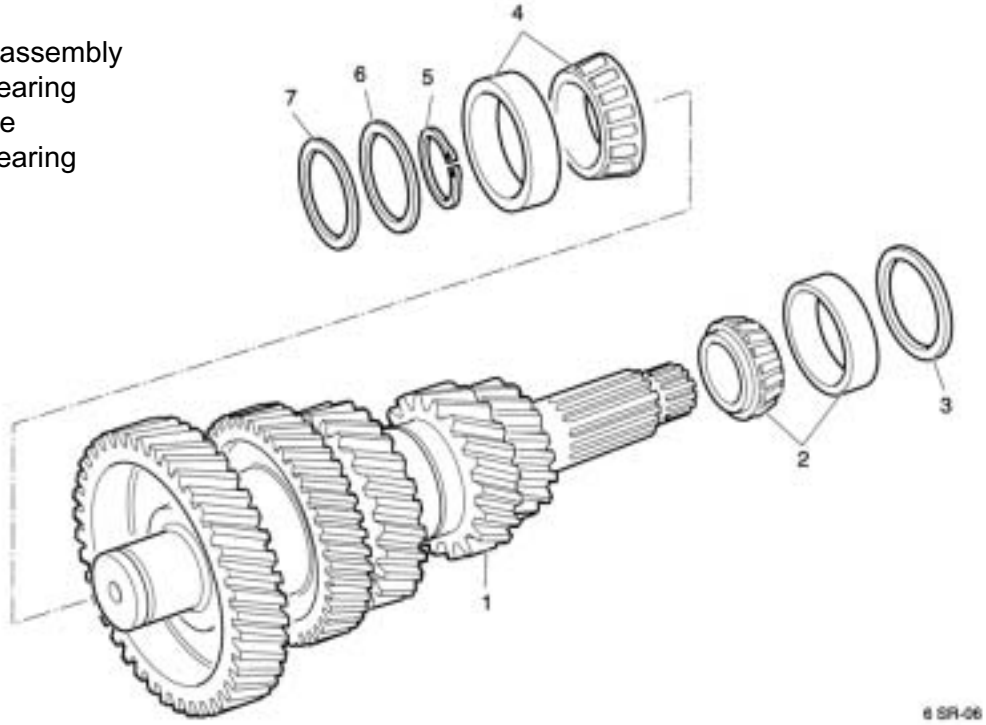

Layshaft Assembly

https://truckmanualshub.com/

1. Heat the layshaft taper roller bearing inner races to 85¡¡C (180¡F). Support the shaft assembly forward end uppermost and place the heated inner cone and roller assembly onto the shaft. Use a suitable mandrel to make sure bearing is fully home.

3. Fit the circlip using circlip pliers.

2. From the range of graded fit circlips, select the circlip which fits into the groove with the minimum free play.

4. Invert the layshaft assembly and fit the heated rear taper roller bearing inner race onto the shaft. Make sure the bearing is fully home using a suitable mandrel.

Circlips are available in the following sizes and Part Numbers.

Part No.	Thickness (mm)
8870370	2,12
8870371	2,07
8870372	2,02
8871536	1,97
8871537	1,92
8871538	1,87
8871539	1,82
8871540	1,77

Synchroniser Flange Removal / Fitment

https://truckmanualshub.com/

Disassembly

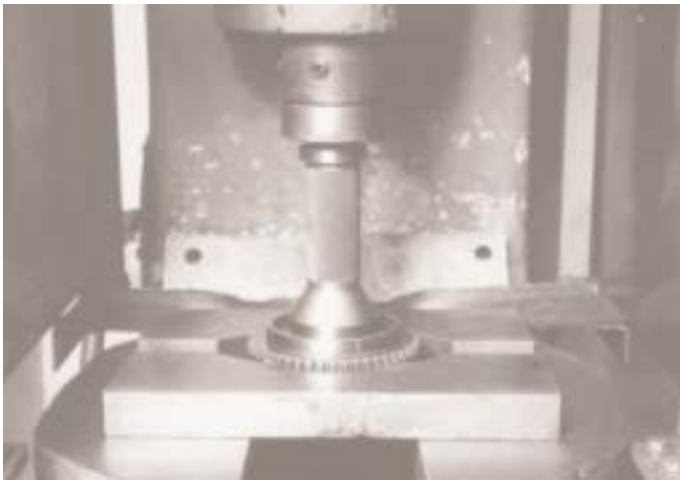

1. Heat the gear and flange assembly to 80¡C to deactiveate the Loctite. Using a suitable press or puller, remove the flange from the gear.

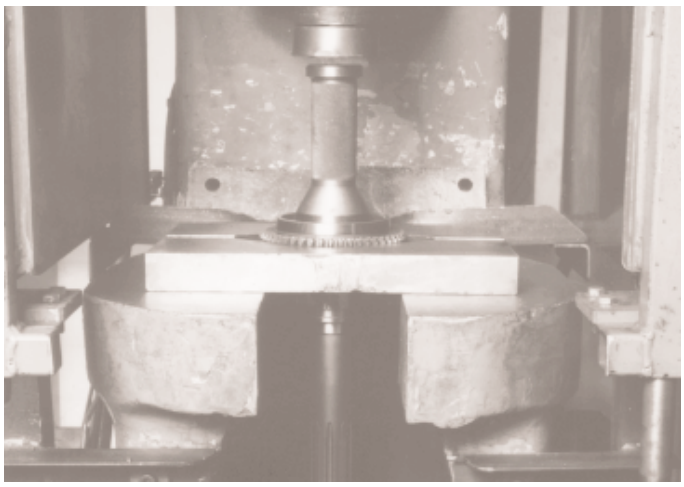

Note: This also applies to the 6th gear flange on the input shaft.

Assembly

1. Using a suitable solvent ensure that both parts are clean and free from oil.

2. Apply a thin bead of Loctite 648 to the spine teeth of the gear. Press on the synchroniser flange ensure the flange is fully home. Wipe off any excess.

3. Allow the parts to cure for a minimum of two hours.
Note: If the flange does not seat squarely, the procedure should be repeated.

Mainshaft Assembly

https://truckmanualshub.com/

Eaton have recently introduced a new design of mainshaft assembly. As both designs are currently in use strip and rebuid procedures for both are included in this manual

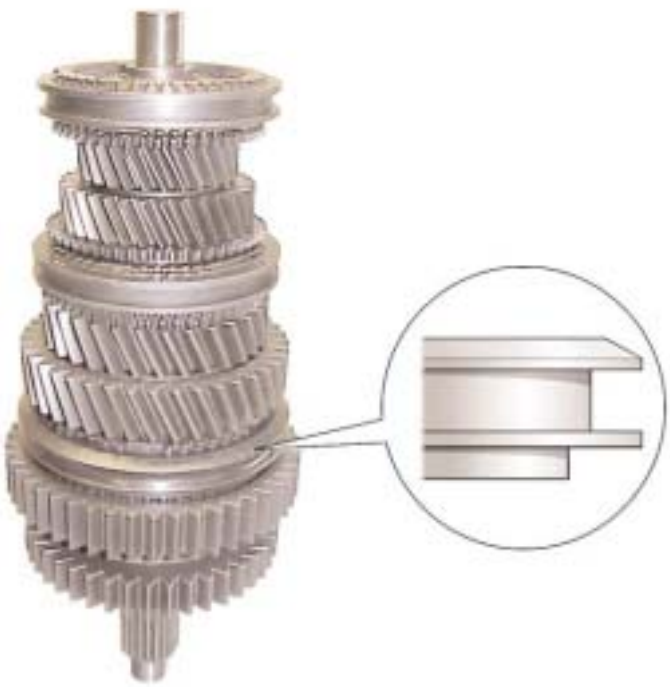

Refer to picture above:
if the profile of the 1st/2nd gear synchroniser sleeve is as shown above then the following procedure should be followed(new design).

Where the old design mainshaft is fitted refer to the procedure from page 4/31 onwards.

Mainshaft Disassembly

Note: All snap rings and circlips on the mainshaft are graded for selective fit. Take care not to score the bearing surfaces of the mainshaft when removing or fitting the snap rings or circlips.

Note: The end float of the gears on the mainshaft is established in manufacture by machining the components to fine tolerances. Before disassembly of the mainshaft the end floats should be checked to ascertain whether they are within the recommended limits.

Where end float is found to be excessive it is necessary to check the gears, mainshaft, synchroniser hubs and bearing sleeve for wear.
See **Inspection of expendable parts** and renew where necessary.

End float check

1. End float may be checked with the mainshaft assembled by using a dial gauge, as shown, or feeler gauges. Mount the mainshaft assembly on a suitable stand. Locate the dial gauge on the gear and zero the gauge. Raise the gear and record the reading.

Gear	FS-5th FSO-6th	4th	3rd	2nd	1st
Minimum	0,31	0,35	0,35	0,35	0,40
Maximum	0,53	0,48	0,48	0,48	0,57
Tolerance	0,22	0,13	0,13	0,13	0,17

All dimensions in mm.

Note: Reverse gear is a sliding gear.

https://truckmanualshub.com/

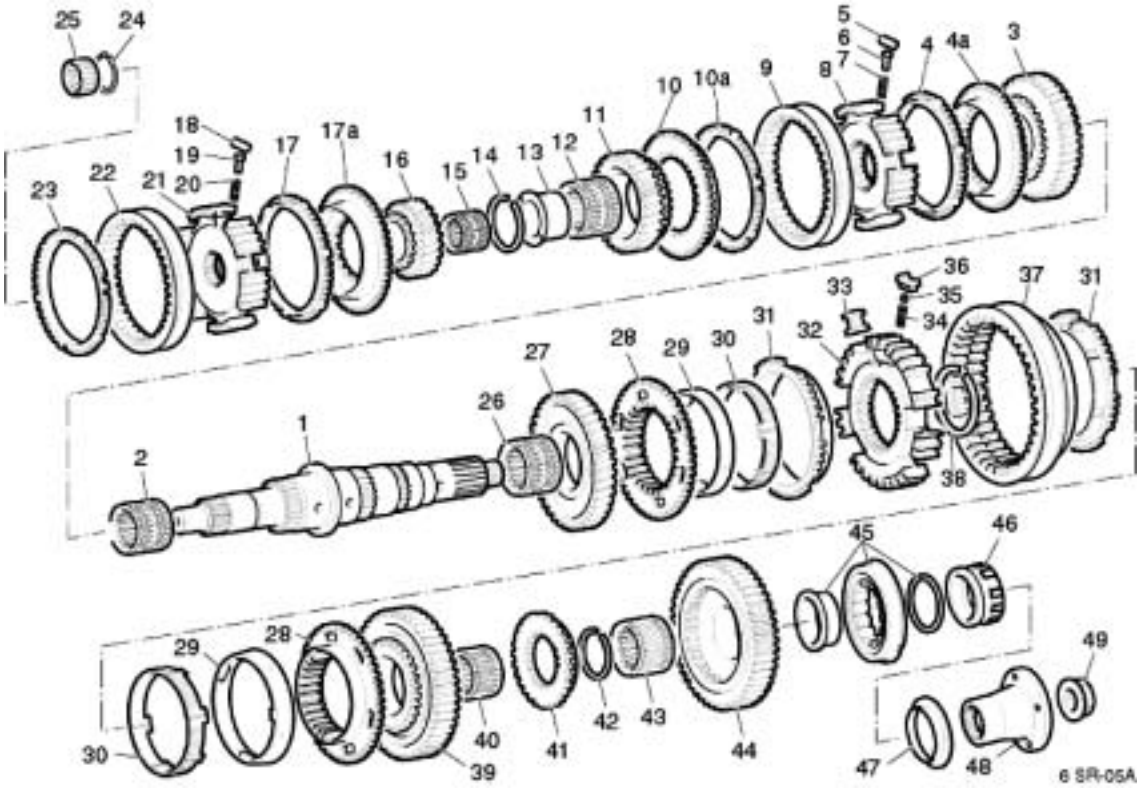

1. Mainshaft.
2. 3rd gear needle roller bearing.
3. 3rd speed gear.
4. 3rd gear synchroniser ring.
4a. 3rd gear synchroniser flange
5. Roller.
6. Plunger
7. Spring
8. 3rd/4th speed synchroniser hub
9. 3rd/4th speed synchroniser sleeve
10. 4th gear synchroniser flange
10a. 4th gear synchroniser ring
11. 4th gear
12. 4th gear needle roller bearing
13. 4th gear sleeve
14. Snap ring
15. 5th gear needle roller bearing (FS)
    6th gear needle roller bearing (FSO)
16. 5th speed gear (FS)
    6th speed gear (FSO)
17. 5th gear synchroniser ring (FS)
    6th gear synchroniser ring (FSO)
17a. 5th gear synchroniser flange (FS)
    6th gear synchroniser flange (FSO)
18. Roller
19. Plunger
20. Spring
21. 5th/6th gear synchroniser hub
22. 5th/6th gear synchroniser sleeve
    5th gear synchroniser ring (FSO)
24. Circlip
25. 6th gear needle roller bearing (FS)
    5th gear needle roller bearing (FSO)
26. 2nd gear needle roller bearing
27. 2nd gear
28. Synchroniser flange
29. Synchroniser inner ring
30. Synchroniser friction ring
31. Synchroniser ring
32. 1st/2nd gear synchroniser hub
33. Retainer
34. Spring
35. Ball
36. Detent poppet
37. 1st/2nd speed synchroniser sleeve
38. Circlip
39. 1st speed gear
40. 1st gear needle roller bearing
41. Reverse gear hub
42. Snap ring
43. Reverse gear needle roller bearing
44. Reverse gear
45. Mainshaft bearing
46. Tachograph
47. Dust shield
48. Coupling flange
49. Nut

https://truckmanualshub.com/

1. Mount the mainshaft assembly, plain end uppermost, in a soft jawed vice. Remove the synchroniser ring. Carefully slide the 5th/6th synchroniser sleeve upwards until the three rollers are clear of the groove in the synchroniser sleeve. Remove the three rollers, the synchroniser sleeve, the three plungers and three springs from the synchroniser hub.

2. Remove the 5th/6th-gear synchroniser hub retaining Circlip.

3. Invert the mainshaft assembly. Using a press or suitable puller remove the mainshaft bearing inner, reverse gear and reverse gear needle roller bearing.

4. Remove the reverse gear fixed hub retaining snap ring.

5. Using a press or suitable puller remove the reverse gear fixed hub and 1st speed gear.

https://truckmanualshub.com/

6. Remove the 1st speed gear needle roller bearing.

7. Remove the synchroniser assembly retaining Circlip.

8. To prevent the synchroniser assembly from separating during removal fit the retaining tool. The tool fits onto the mainshaft, boss down, with the three retainers located underneath 2nd speed gear. Adjust the retainers so that there is no free play between 2nd speed gear and synchroniser assembly.
Note: Should the synchroniser separate then refer to the relevant section for assembly instructions.

9. Using a press or suitable tool remove the synchroniser assembly and 2nd speed gear. Remove the needle roller bearing.

10. Carefully remove the retaining tool and then place the synchroniser assembly and 2nd speed gear onto a suitable work surface. Remove 2nd speed gear.

11. Invert the mainshaft. As the 5th /6th -gear synchroniser hub is not symmetrical identify its orientation. Using a press, or suitable puller, remove the 5th /6th -gear synchroniser hub, synchroniser ring and 5th speed gear assembly. **Note:** Care must be taken to ensure that damage to the teeth on the synchroniser flange does not occur. (On an overdrive transmission it may be necessary to engage the press/puller also over the gear).

https://truckmanualshub.com/

12. Remove the 5th gear needle roller bearing. (On overdrive transmissions this will be 6th gear).

13. Carefully remove the 4th gear-bearing sleeve retaining snap ring.

14. Using a suitable press or puller support the mainshaft assembly underneath 3rd speed gear. Note: It is imperative that the flange, which is part of the mainshaft, does not foul the press or puller legs as this may result in damage to the mainshaft. Press or pull the 4th speed gear bearing sleeve, 4th speed needle roller bearing, 4th speed gear assembly, 3rd /4th -speed synchroniser assembly and 3rd speed gear assembly off. Remove the 3rd speed gear needle roller bearing from the mainshaft.

15. Place the assembly on to a suitable work surface, 4th speed gear, uppermost. Remove the bearing sleeve, needle roller bearing and 4th gear assembly

16. Dismantle the 3rd /4th -speed synchroniser assembly as previously described in paragraph one.

17. Lift off the synchroniser hub and synchroniser ring.

Mainshaft Reassembly

https://truckmanualshub.com/

Before assembling the synchroniser assemblies on to the mainshaft, check the fit of each synchroniser ring to the relevant synchroniser flange.

Procedure for 3rd , 4th , 5th and 6th speed synchronisers.

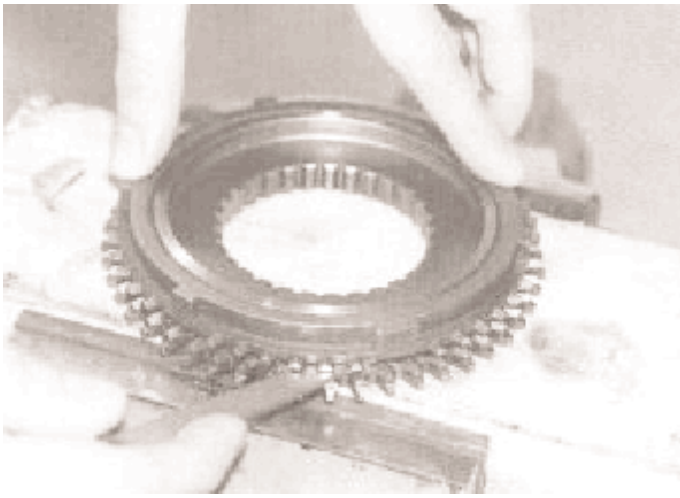

Place the synchroniser ring to the relevant flange and while holding the two parts firmly together, measure the clearance between the two component parts using feeler gauges at several points around the circumference as shown. The clearance should be between 0,5 and 1,9 mm. Renew both parts if the measurement is not within the specified limits. Retain the synchroniser rings and flanges in their respective pairs for assembly in the same relative position.

Procedure for 1st and 2nd speed Synchronisers

Note: The synchroniser flanges, apart from those fitted to the 1st and 2nd speed gears, must be loctited to the gears.

a) Stand the synchroniser assembly on to a flat surface (Either way up)

b) Remove the synchroniser flange.

c) Place the synchroniser flange, spigot uppermost onto the bench.

https://truckmanualshub.com/

d) Remove the synchroniser inner ring.

e) Fit the synchroniser inner ring, tangs uppermost, on to the synchroniser flange.

f) Remove the synchroniser friction ring.

g) Fit the synchroniser friction ring on to the synchroniser flange ensuring that the tabs on the synchroniser friction ring locate into the slots on the synchroniser flange.

h) Remove the synchroniser ring.

i) Fit the synchroniser ring onto the assembly.

https://truckmanualshub.com/

Reassembly

j) While holding the parts firmly together, measure the clearance between the synchroniser ring and synchroniser flange using feeler gauges at several points around the circumference as shown. The clearance should be between 0,5 and 1,9 mm. If the measured dimension is outside these tolerances then the synchroniser assembly must be changed.

k) Refer to paragraphs twelve to fifteen of the assembly procedure in the section 1st /2nd speed synchroniser assembly .

l) Invert the synchroniser assembly and repeat the process.

Note: The synchroniser flanges, apart from those fitted to the 1st and 2nd speed gears, must be loctited to the gears.

1. Place the retaining tool, boss uppermost, on to a suitable surface.

2. Place the 1st /2nd speed synchroniser assembly onto the retaining tool ensuring that the chamfer on the synchroniser sleeve is uppermost.

3. Heat the assembly to 85¡ Centigrade and then place the retaining tool and synchroniser assembly onto the press table.

https://truckmanualshub.com/

4. Fit the 2nd speed gear to the synchroniser assembly ensuring that the splines on the gear engage into the splines on the synchroniser assembly. Fit and lubricate the needle roller bearing.

5. Fit the mainshaft, plain end uppermost, into the 2nd speed gear and synchroniser assembly ensuring that the splines on the mainshaft engage into the splines of the synchroniser assembly. Press the mainshaft into the synchroniser assembly.

6. To prevent the synchroniser assembly separating the retainers should be used. Adjust the retainers so that there is no free play between 2nd speed gear and the synchroniser assembly.

7. Lubricate and install the 3rd gear needle roller bearing and 3rd gear assembly.

https://truckmanualshub.com/

8. Lubricate the 3rd gear synchroniser flange and then fit the synchroniser ring.

9. Heat the 3rd /4th -gear synchroniser hub to 85¡ Centigrade. Fit the synchroniser hub over the splines on the mainshaft ensuring that the large slots in the synchroniser hub align with the large shoulders on the synchroniser ring. Press the synchroniser fully home.

10. Check that the 3rd gear end float is within the tolerance stated in the chart.

11. Assemble the three springs and plungers into the synchroniser hub. Place the synchroniser sleeve over the synchroniser hub and support it with the internal groove just above the synchroniser hub. Position the three rollers as shown, resting on the heads of the plungers, and press downward on the synchroniser sleeve. This compress the springs allowing the synchroniser sleeve to centralise in the neutral position.

12. Place the 4th gear synchroniser ring onto the synchroniser assembly ensuring that the shoulders on the synchroniser ring locate into the slots of the synchroniser hub. Lubricate the synchroniser ring.

13. Fit the 4th speed gear assembly. Lubricate the needle roller bearing and then install it into the gear.

https://truckmanualshub.com/

14. Heat the 4th speed gear-bearing sleeve to 85¡ Centigrade and locate it onto the mainshaft and inside the needle roller bearing. Press the bearing sleeve into position.

15. Fit a new snap ring into the mainshaft groove taking care not to damage the mainshaft-bearing surface.

16. Check that the 4th gear end float is within the tolerance stated in the chart.

17. Fit the 5th speed gear assembly. Lubricate the needle roller bearing and then install it into the gear.

18. Lubricate the 5th gear synchroniser flange. Fit the synchroniser ring.

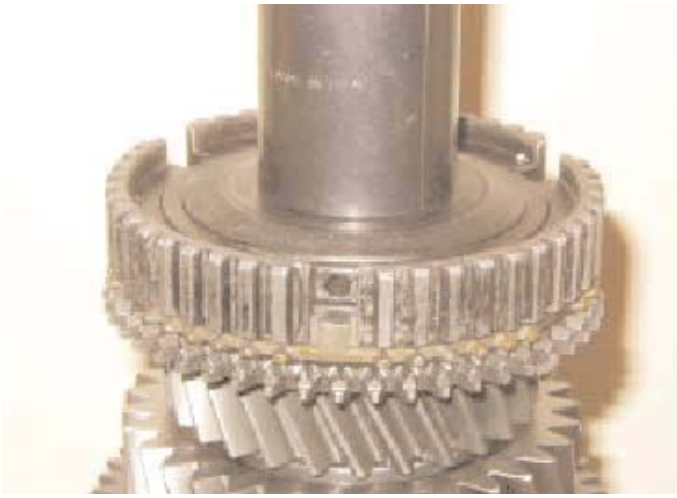

19. Heat the 5th /6th -speed synchroniser hub to 85¡ Centigrade and then install it, boss downwards, onto the mainshaft. Ensure that the large slots on the synchroniser hub align with the large shoulders on the synchroniser ring. Press the synchroniser hub until it is fully seated.

https://truckmanualshub.com/

20. From the range of graded circlips select the one which fits into the mainshaft groove with the least amount of free play. Fit the Circlip into the groove.

21. Using feeler gauges check that the 5th gear end float is within the tolerance stated in the chart.

22. Invert the mainshaft and then remove the retaining tool.

23. Install the Circlip into the groove of the mainshaft. Take care not to damage the mainshaft bearing surface.

https://truckmanualshub.com/

24. Check that the 2nd speed gear end float is within the tolerances stated in the chart.

25. Fit and lubricate the needle roller bearing. Fit the 1st speed gear ensuring that the splines on the 1st speed gear engage into the splines of the synchroniser flange.

26. Heat the reverse gear hub to 85¡ Centigrade and then, with the boss uppermost, fit it onto the splines of the mainshaft. Press the reverse gear hub until it is fully seated.

27. From the range of graded circlips select the one which fits into the mainshaft groove with the least amount of free play. Fit the Circlip into the groove taking care not to damage the mainshaft needle roller bearing surface.

28. Check that the 1st speed gear is within the specified tolerance stated in the chart.

29. Fit the reverse gear needle roller bearing. Lubricate the bearing and then fit the reverse gear, boss down, onto the mainshaft.

https://truckmanualshub.com/

30. Heat the mainshaft bearing inner to 85¡ Centigrade and then fit it, shoulder down, onto the mainshaft. Use a press, if necessary, to ensure that the bearing is fully home against the shoulder.

31. Invert the mainshaft. Assemble the three springs and plungers into the synchroniser hub and then install the synchroniser sleeve and rollers as described in paragraph eleven.

32. Fit the synchroniser ring ensuring that the three bosses on the synchroniser ring locate into the three slots on the synchroniser hub. Lubricate the synchroniser ring.

1st /2nd speed Synchroniser assembly.

Note: The synchroniser is supplied as an assembly. Parts that are used to make the complete assembly are not available separately.

1. Stand the synchroniser assembly on a flat surface with the spigot of the synchroniser sleeve uppermost.

2. Push the synchroniser sleeve downwards.

3. Remove the synchroniser flange.

https://truckmanualshub.com/

4. Remove the synchroniser inner ring.

7. Remove the three retainers.

5. Remove the synchroniser friction ring.

8. Taking care not to lose the balls or springs lift the detent poppets to release the balls. Once the balls have been removed it is possible to remove the detent poppets and springs.

6. Remove the synchroniser ring.

9. Remove the synchroniser sleeve.

https://truckmanualshub.com/

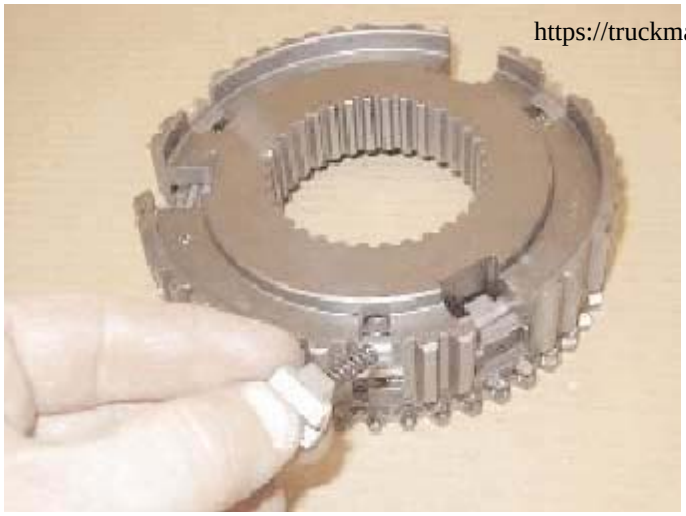

10. If not already removed at step eight remove the detent poppets and springs.

11. Remove the synchroniser hub.

12. Remove the synchroniser ring.

13. Remove the synchroniser friction ring.

14. Remove the synchroniser inner ring.

https://truckmanualshub.com/

1. Place the synchroniser flange, spigot uppermost onto the bench.

2. Fit the synchroniser inner ring, tangs uppermost, on to the synchroniser flange.

3. Lubricate all surfaces of the synchroniser friction ring. Fit the synchroniser friction ring ensuring that the tabs locate in to the slots of the synchroniser flange.

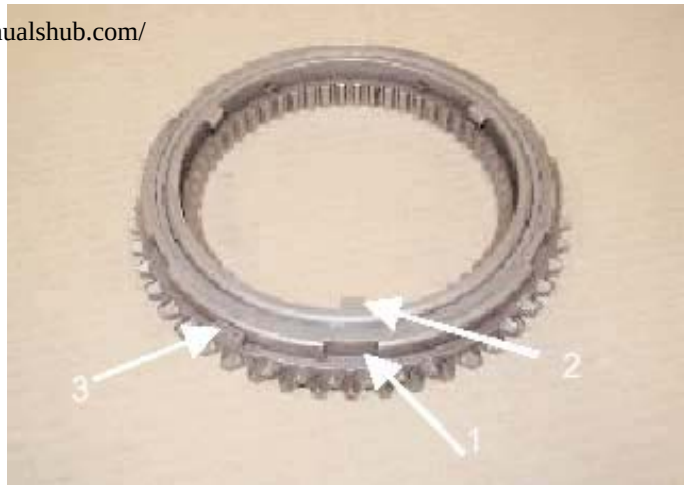

4. Fit the synchroniser ring ensuring that the undercuts (1) line up with the tabs (2) of the synchroniser inner ring and that bosses (3) of the synchroniser ring are to the left hand side of tabs (2) of the synchroniser inner ring as shown.

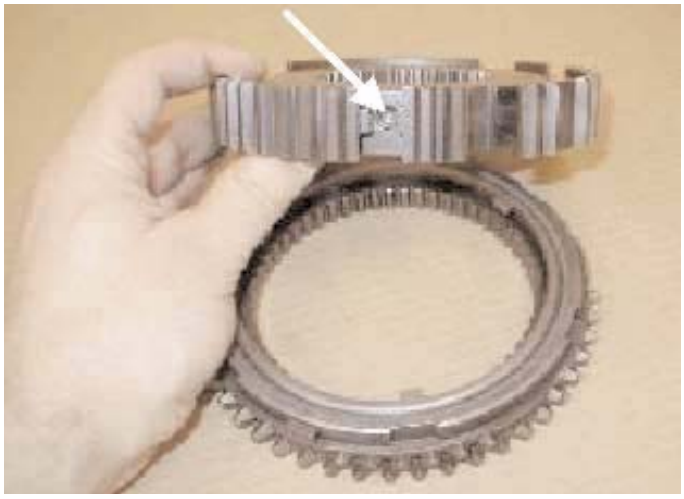

5. With the holes in the synchroniser hub uppermost.

6. Fit the synchroniser hub ensuring that the narrow slots are in line with the bosses of the synchroniser ring.

https://truckmanualshub.com/

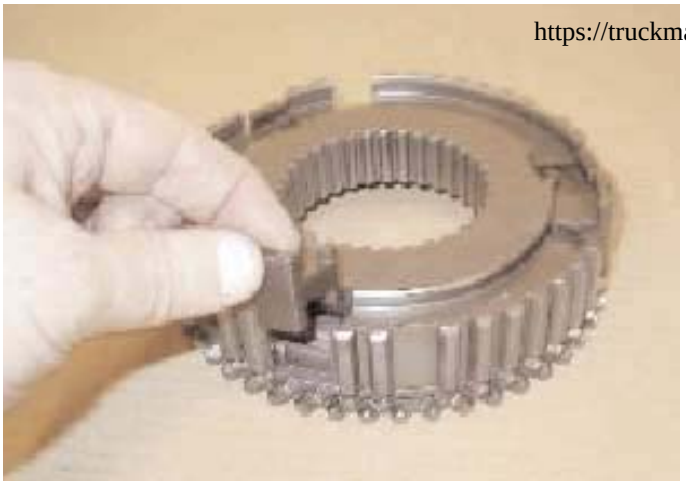

7. Place the three retainers in the large recesses of the synchroniser hub so that the legs of the blocks engage with the tabs of the synchroniser inner ring and the undercuts of the synchroniser ring.

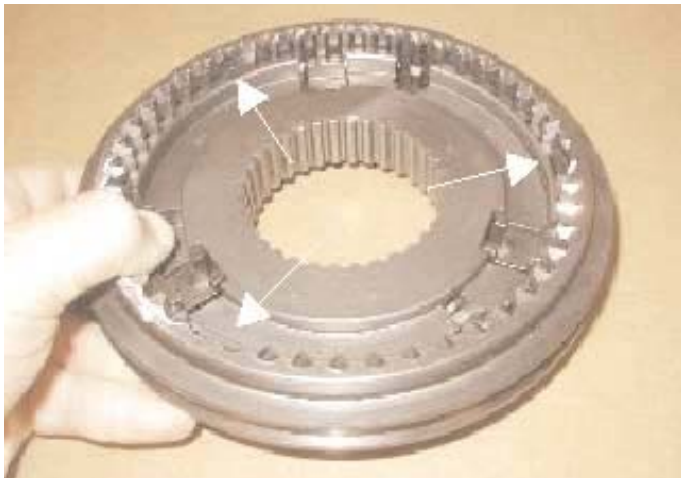

8. Take the synchroniser sliding sleeve, stepped side uppermost, and fit it on to the synchroniser hub ensuring that the three internal bosses of the synchroniser sleeve locate in the slots of the synchroniser hub.

9. Place the detent poppets and springs into the holes of the synchroniser hub.

10. Place the detent ball onto the spring and then using a suitable tool push against the detent ball to compress the spring.

11. Whilst the spring is compressed push the detent poppet downwards into the synchroniser hub until the ball engages with the annular groove of the sleeve. Fit the remaining detent springs, balls and plungers into position.

12. Place the synchroniser ring on to the synchroniser hub so that the three bosses engage with the three narrow slots on the synchroniser hub.

https://truckmanualshub.com/

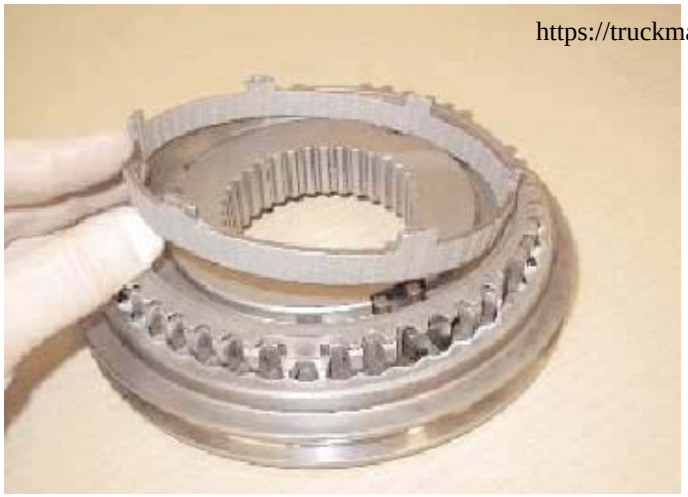

13. Lubricate all surfaces of the synchroniser friction ring. Place the synchroniser friction ring, tabs uppermost, on to the synchroniser hub.

16. Hold the synchroniser assembly down against the bench and at the same time lift the synchroniser sleeve upwards to engage the neutral position.

14. Place the synchroniser inner ring in to position ensuring that the three tabs align with the legs of the blocks.

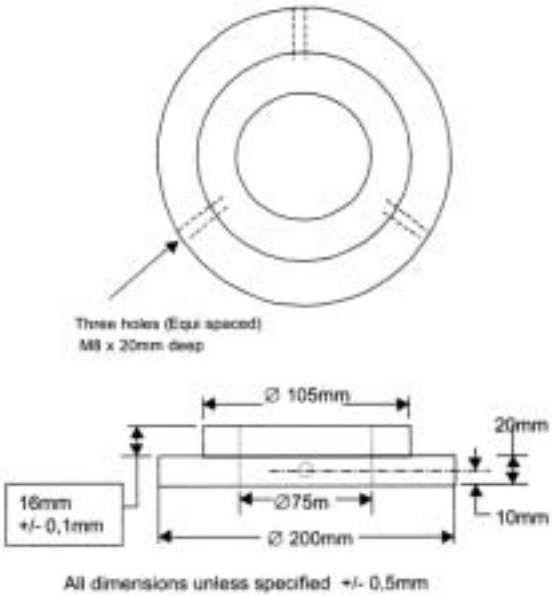

15. Place the synchroniser flange in to position ensuring that the slots of the synchroniser flange align with the tabs of the synchroniser friction ring.

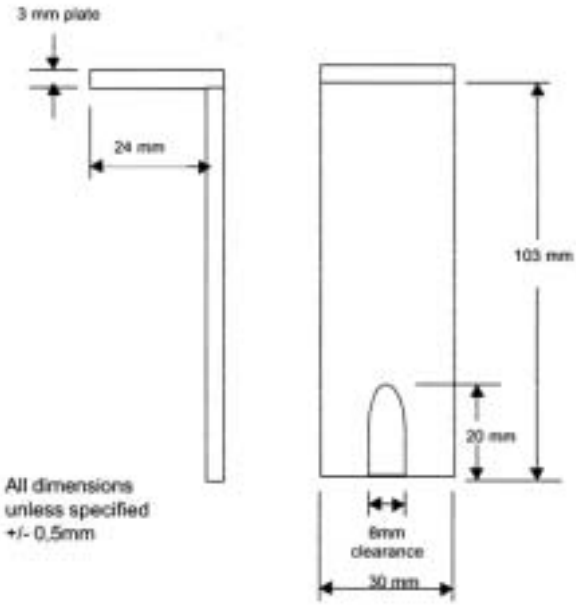

https://truckmanualshub.com/

Mainshaft Disassembly

Note: All snap rings and circlips on the mainshaft are graded for selective fit. Take care not to score the bearing surfaces of the mainshaft when removing or fitting the snap rings or circlips.

Note: The end float of the gears on the mainshaft is established in manufacture by machining the components to fine tolerances. Before disassembly of the mainshaft the end floats should be checked to ascertain whether they are within the recommended limits.

Where end float is found to be excessive it is necessary to check the gears, mainshaft, synchroniser hubs and bearing sleeve for wear. See 'Inspection of Expendable Parts' and renew where necessary.

End Float Check

End float may be checked with the shaft assembled by using a dial gauge as shown.

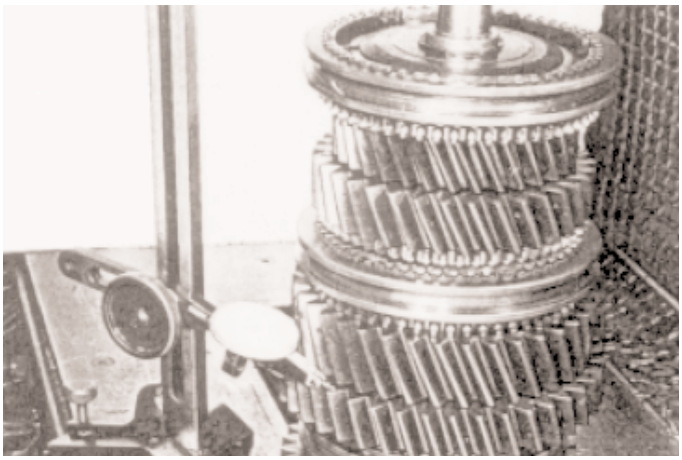

1. End float may be checked with the mainshaft assembled by using a dial gauge, as shown, or feeler gauges. Mount the mainshaft assembly on a suitable stand. Locate the dial gauge on the gear and zero the gauge. Raise the gear and record the reading.

Gear	5th (o.d. 6th)	4th	3rd	2nd	1st
Low Limit	0,31	0,35	0,35	0,35	0,40
High Limit	0,53	0,48	0,48	0,48	0,57
Range	0,22	0,13	0,13	0,13	0,17

All dimensions in mm.

Note: Reverse gear is a sliding gear.

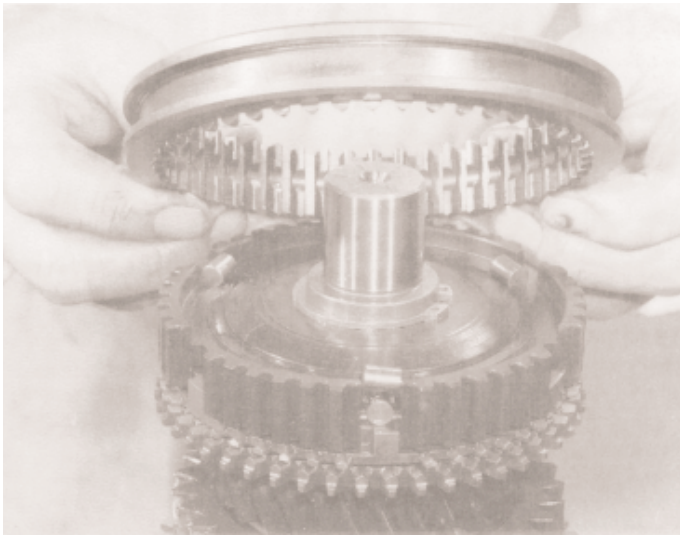

1. Mount the mainshaft assembly, plain end uppermost, in a soft jawed vice. Remove the synchroniser ring. Carefully slide the 5th/6th synchroniser sleeve upwards until the three rollers are clear of the groove in the synchroniser sleeve. Remove the three rollers, the synchroniser sleeve, the three plungers and three springs from the synchroniser hub.

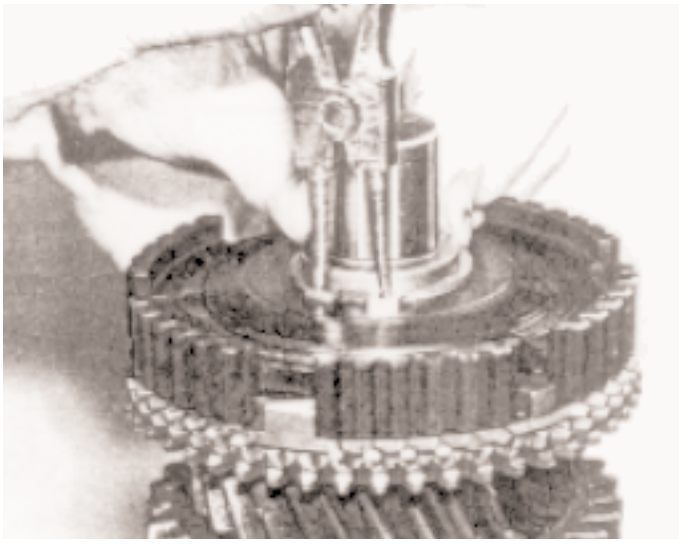

2. Remove the 5th/6th-gear synchroniser hub retaining Circlip.

https://truckmanualshub.com/

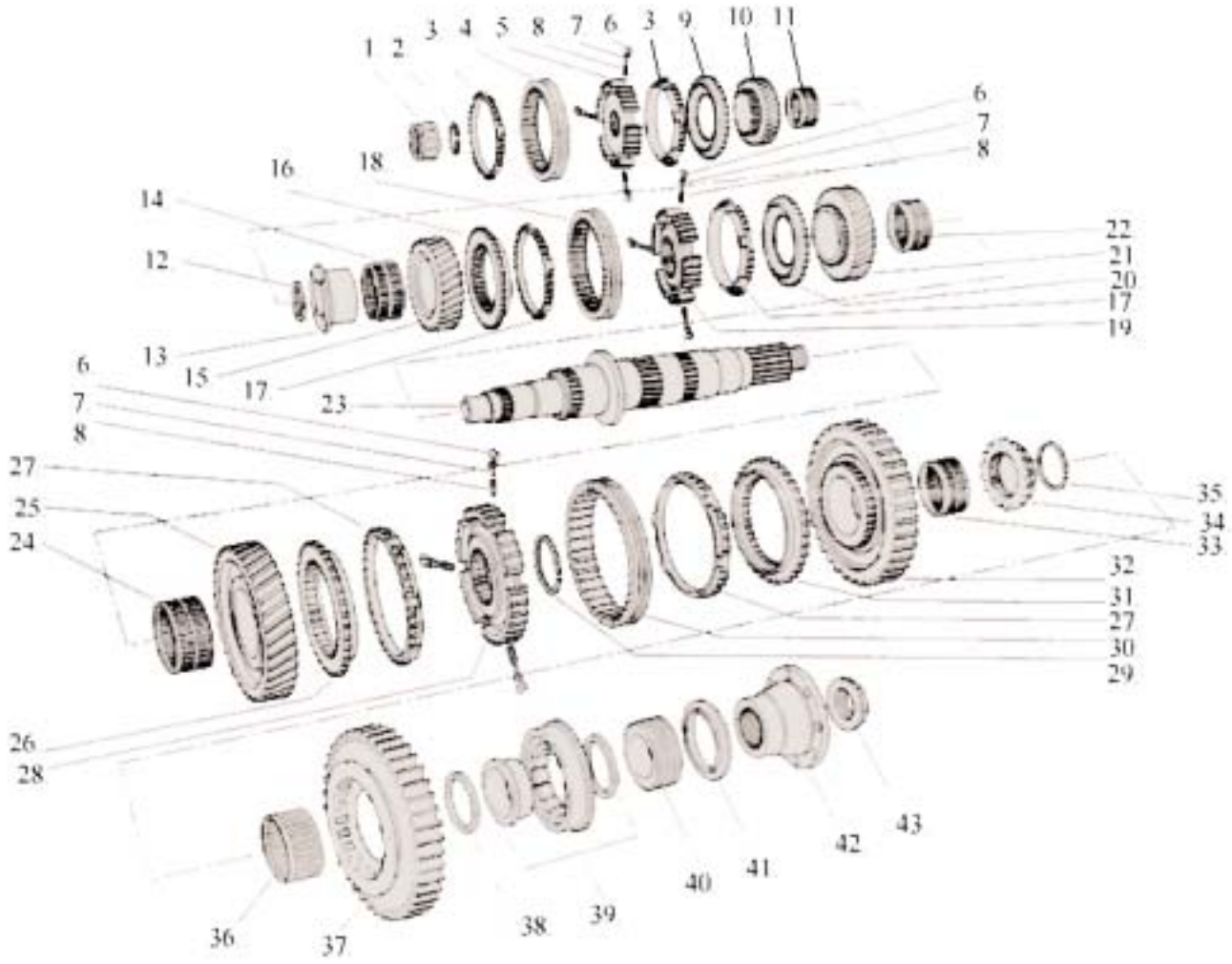

1. Needle roller bearing
2. Circlip
3. Synchro ring
4. Sliding sleeve
5. Fixed hub
6. Roller
7. Plunger
8. Synchro spring
9. Synchro flange
10. Mainshaft gear 5th or Overdrive
11. Needle roller bearing
12. Circlip 2,00 mm
13. Mainshaft bearing sleeve - 4th
14. Needle roller bearing
15. Mainshaft gear 4th
16. Synchro flange
17. Synchro ring
18. Sliding sleeve
19. Fixed hub
20. Synchro flange
21. Mainshaft gear 3rd.
22. Needle roller bearing
23. Mainshaft
24. Needle roller bearing
25. Gear 2nd.
26. Synchro flange
27. Synchro ring
28. Fixed hub
29. 4,00 mm graded circlip pack
30. Sliding Sleeve 1st.
31. Synchro flange
32. Gear, Mainshaft 1st.
33. Needle roller bearing
34. Fixed hub, reverse
35. Circlip 2,00/2,05/2,10
36. Needle roller bearing
37. Mainshaft gear, reverse
38. Spacer
39. Roller bearing
40. Speedo drive gear
41. Grit shield
42. Coupling flange
43. Nyloc nut M33

https://truckmanualshub.com/

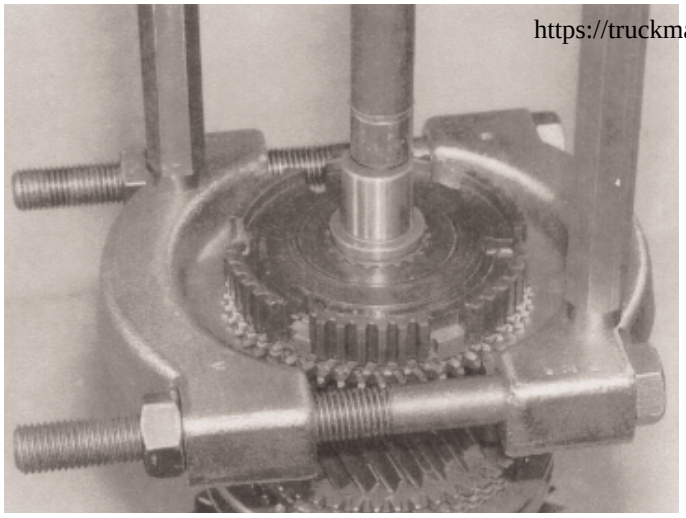

3. Assemble the puller over the 5th/6th gear synchroniser hub and the 5th gear synchroniser ring, taking care not to damage the teeth of the latter. Pull off the hub, cone and ring.
(On an overdrive transmission it may be necessary to engage the puller over 6th gear also.)

4. Lift off the 5th gear and 5th gear needle roller bearing. (On overdrive transmissions this will be 6th gear.)

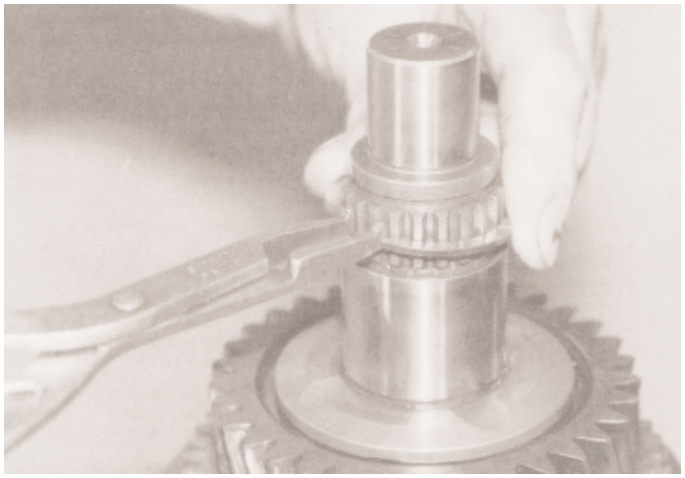

5. Carefully remove the 4th gear bearing sleeve retaining snap ring.

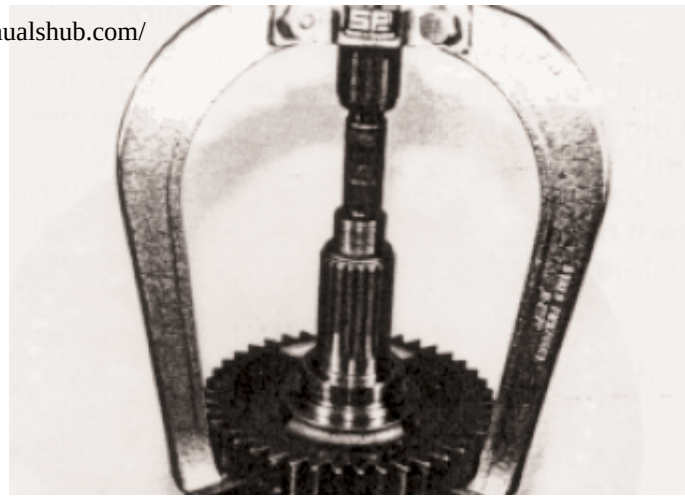

6. Invert the shaft assembly and using a suitable puller under the reverse gear remove the gear, thrust washer and bearing track. Remove the reverse gear needle roller bearing.

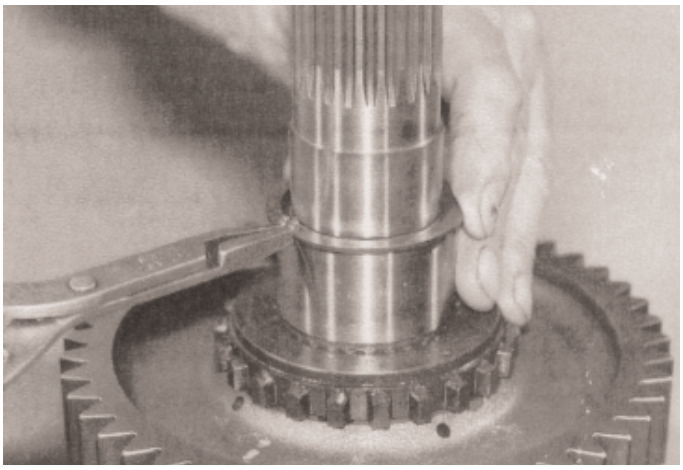

7. Remove the reverse gear fixed hub retaining snap ring.

8. Using a press of suitable puller, pull off 1st gear assembly and the reverse gear fixed gear hub.

https://truckmanualshub.com/

9. Lift off the steel cage bearing, 1st gear synchroniser ring.

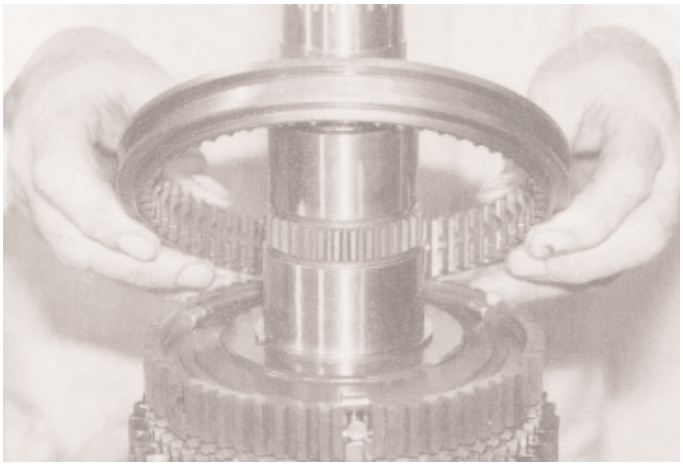

10. Slide the 1st/2nd gear synchroniser sleeve carefully rearwards until the three rollers are clear of the groove in the sleeve. Remove the rollers, the sleeve and the three plungers and springs from the synchroniser hub.

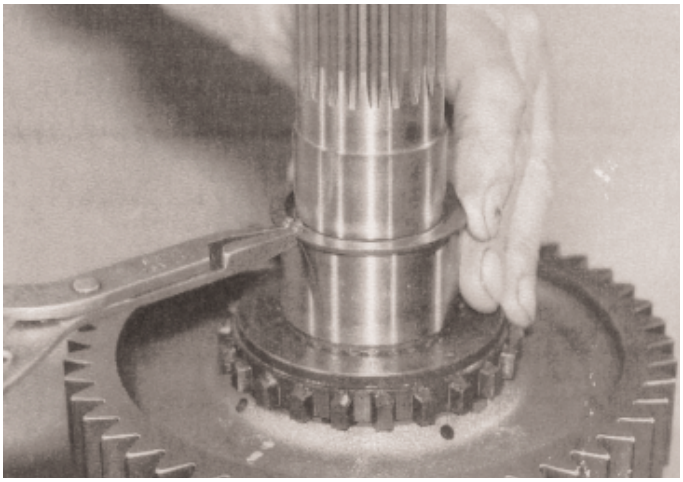

11. Remove the 1st/2nd synchroniser hub retaining snap ring.

12. Assemble the puller over the 2nd gear and pull off 2nd gear, 2nd gear synchroniser ring and flange the 1st/2nd gear synchroniser hub and the bearing.

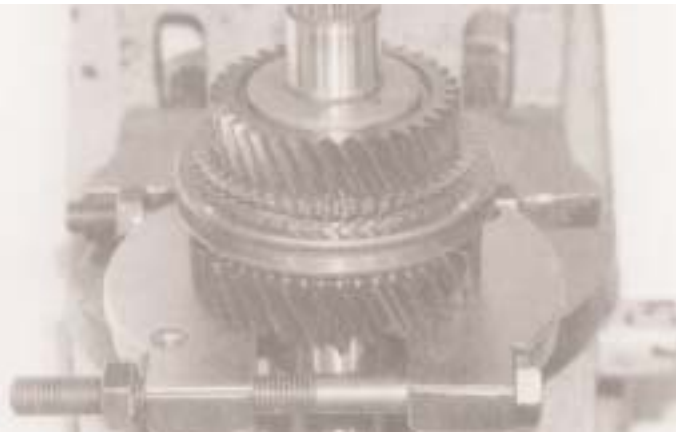

13. Support the shaft on the press under 3rd gear. Note: It is imperative that 3rd gear is supported and that the flange on the shaft does not foul the supporting blocks or press bed when the shaft is being pressed through.
Press or pull the shaft through 3rd gear, 3rd/4th gear synchroniser hub and 4th gear bearing sleeve.

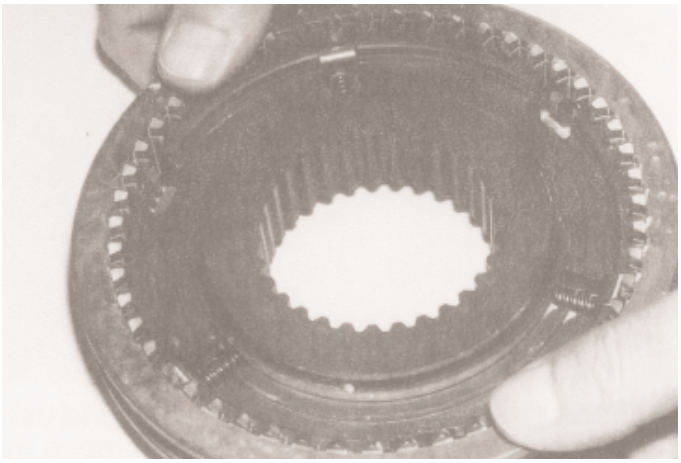

14. Dismantle the 3rd/4th gear synchroniser hub as previously described in sub operation

Mainshaft Reassembly

https://truckmanualshub.com/

Note: The following parts must be heated to the temperatures recommended prior to assembly. Place the parts on a hotplate or in a temperature controlled oven for not less than 30 minutes to make sure they are thoroughly heated before placing them in position. Once fitted and cooled the parts will shrink to an interference fit.

Refer to drawing	**Item No.**
4th gear bearing sleeve	13
Reverse fixed hub	34
Mainshaft rear bearing inner track	39
Synchroniser hubs (3 off)	5
	19
	28
Recommended Temperature	85¡C

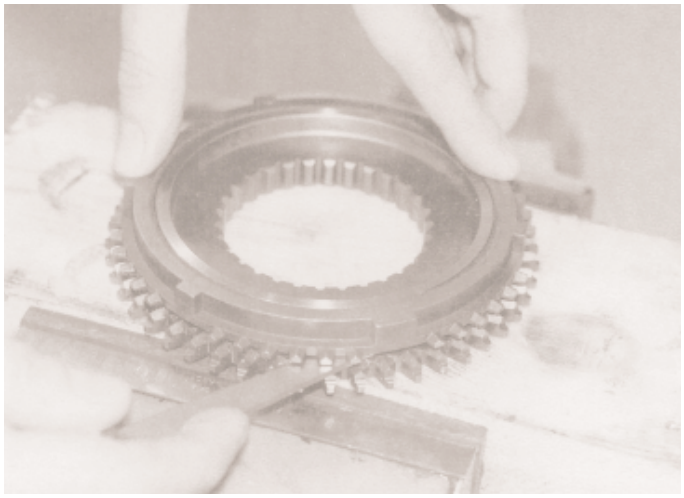

1. Before assembling the synchroniser assemblies on the mainshaft, check the fit of each synchroniser ring onto its synchroniser flange. Place the synchroniser ring on its mating flange and while holding the two parts firmly together, measure the clearance between the two rings using feeler gauges at several points around the circumference as shown. The clearance should be between 0,5 and 1,9mm. Renew both parts if the measurement is not within the specified limits. Retain the synchroniser rings and flanges in their respective pairs for assembly in the same relative positions.

The synchroniser flanges must be loctited to the gears.

The gears and flange are then treated as one assembly.

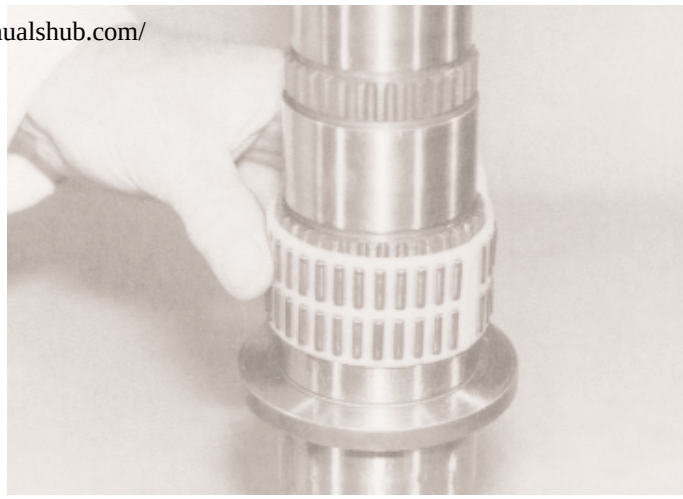

2. Support the mainshaft rear end uppermost. Fit the 2nd gear bearing.

3. Lubricate the bearing with clean gear oil and fit the 2nd gear over the bearing.

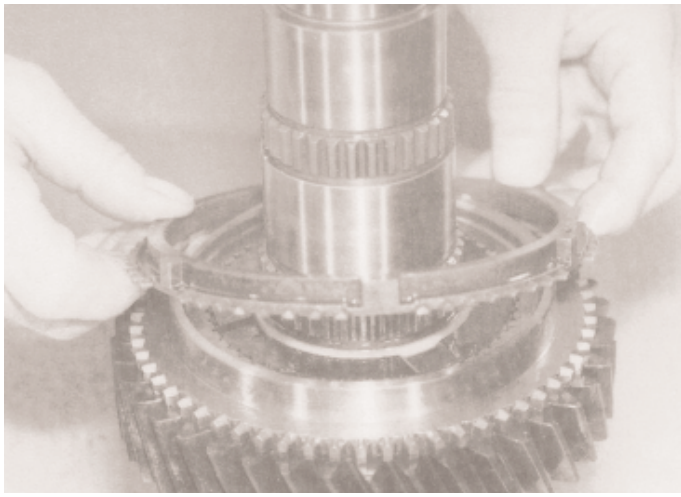

4. Fit the 2nd gear assembly. Then fit the synchroniser ring.

https://truckmanualshub.com/

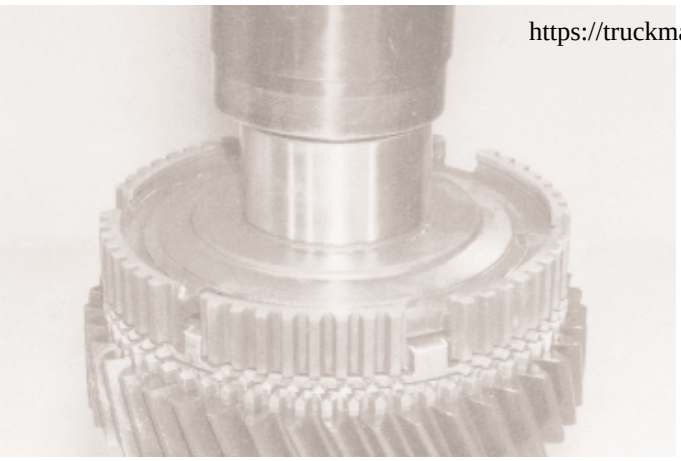

5. Take the heated 1st/2nd gear synchroniser hub and place it over the spines on the mainshaft ensuring that the large slots in the hub align with the large shoulders on the synchroniser ring. Use a soft drift or flange driver to ensure the hub is fully home after cooling for 4/5 minutes. Use special tool.

6. From the range of graded snap rings select the thickest one which fits into the groove with the minimum free play.

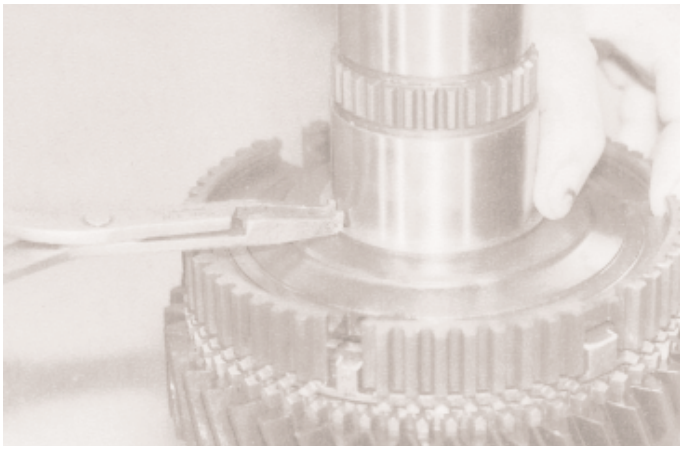

7. Install the snap ring in the groove taking care not to damage the mainshaft bearing surfaces.

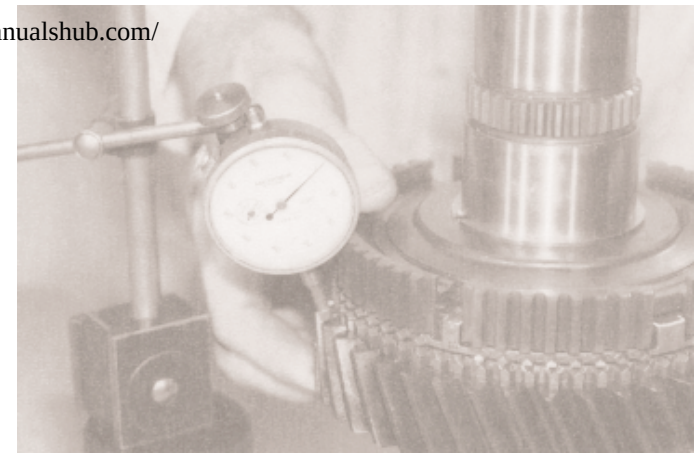

8. Check that the gear end float is within the tolerances stated in the chart.

9. Assemble the three springs and plungers into the synchroniser hub. Place the synchroniser sleeve over the hub and support it with the internal annular groove just above the hub. Position the three rollers as shown, resting the on the heads of the plungers, and press downward on the sleeve. This compresses the springs allowing the sleeve to centralise in the neutral position.

10. Assemble the 1st gear synchroniser ring onto the synchroniser hub assembly.

https://truckmanualshub.com/

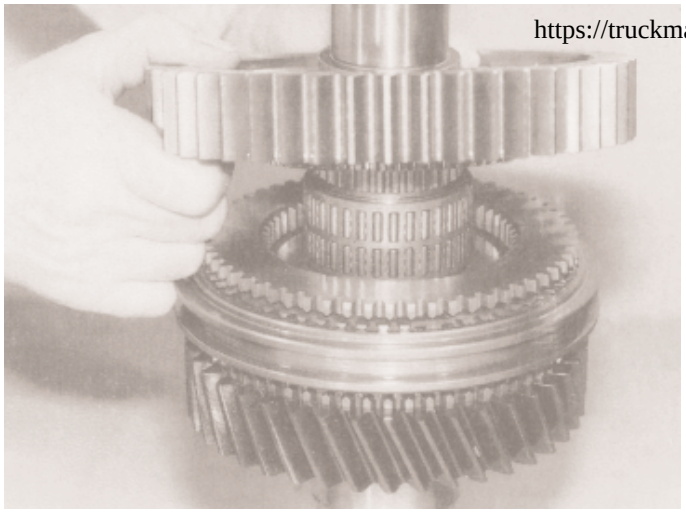

11. Lubricate 1st gear bearing and install the steel cage bearing into the gear. Place the gear assembly and bearing onto the shaft and into the synchroniser ring.

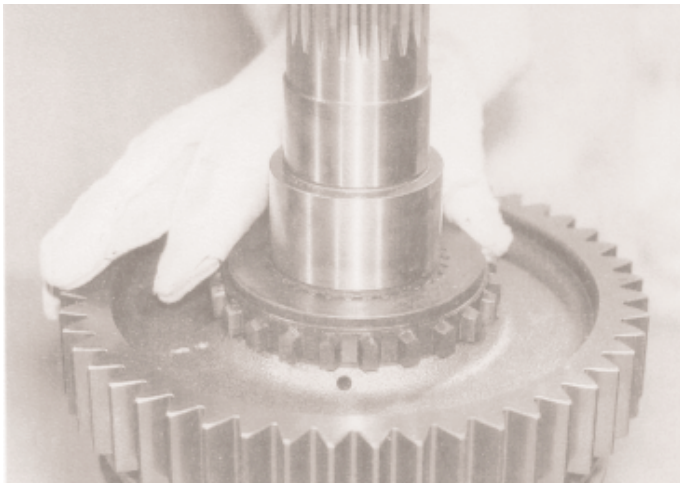

12. Take the heated reverse gear fixed hub and fit it over the splines, boss uppermost, onto the mainshaft.

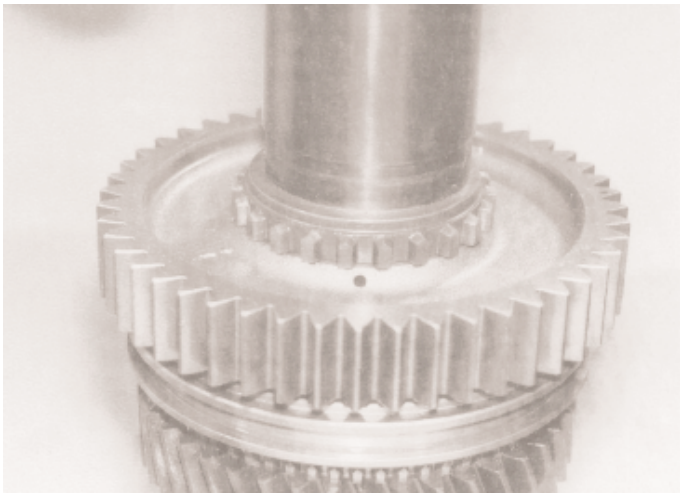

13. Use a soft drift or suitable flange driver if necessary, to ensure the hub is fully home against the shoulder.

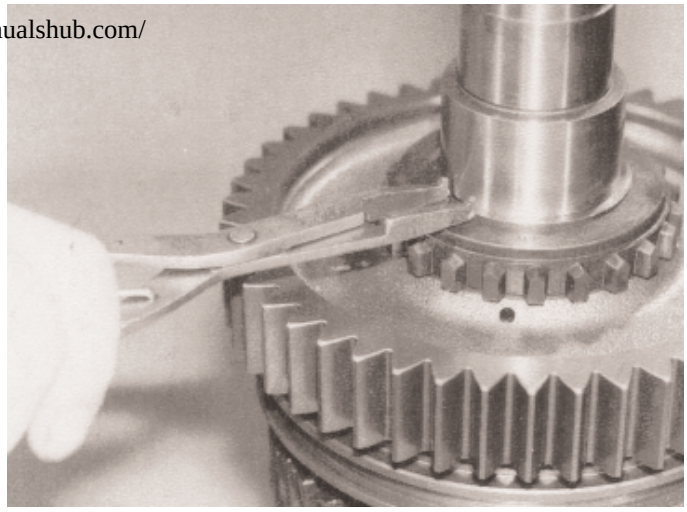

14. From the range of graded snap rings, carefully install the thickest one which will fit into the groove with the minimum free play taking care not to damage the mainshaft bearing surface.

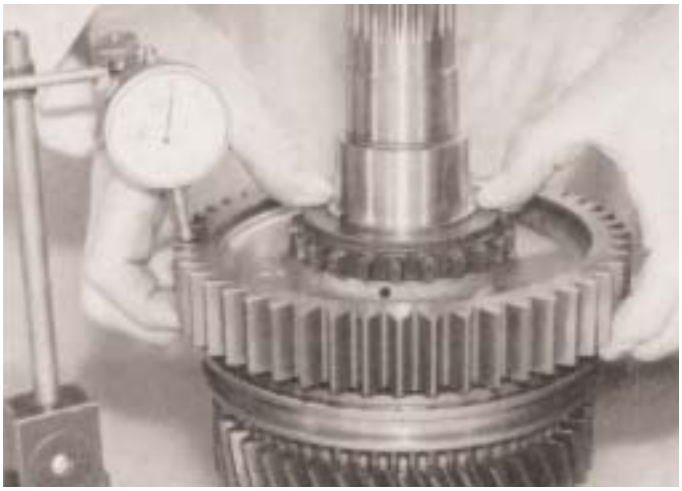

15. Check the gear end float is within the tolerances stated in the chart.

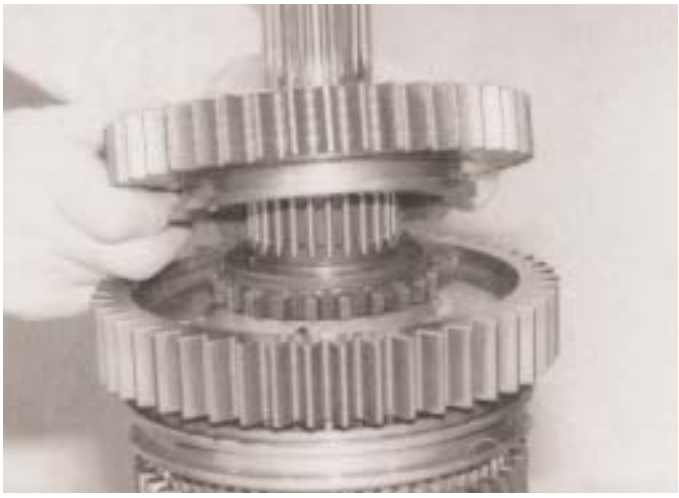

16. Lubricate the reverse gear bearing and install the bearing and reverse gear onto the shaft.

https://truckmanualshub.com/

17. Fit the spacer on the standard cylindrical roller or 4 point ball bearing. If integral spacer bearing is fitted the spacer is part of the bearing inner race.

18. Take the heated inner track of the mainshaft rear bearing and fit it over the shaft, flange innermost against the spacer. Use a soft drift or flanged driver if necessary to ensure that the bearing is fully home against the shoulder.
Note: When cooled, the bearing track should be sufficiently tight on the shaft to retain the reverse gear on the shaft.

19. Invert the shaft in the vice. Lubricate and install the 3rd bearing and 3rd gear assembly.

20. Install the 3rd gear synchroniser ring over the flange.

21. Take the heated 3rd/4th gear synchroniser hub and fit it over the splines on the shaft ensuring that the large slots in the hub align with the large shoulders on the synchroniser ring. Use a soft drift or flanged driver if necessary to ensure the hub is fully home. Recheck that the shoulders are in the correct slots

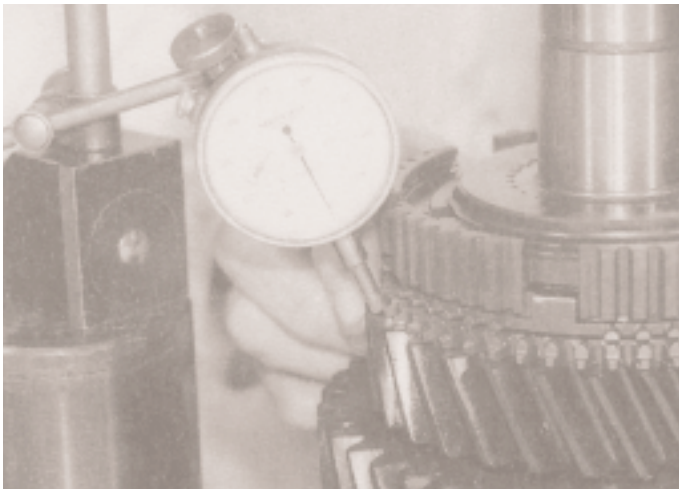

22. Check that the gear end float is within the tolerance stated in the chart.

https://truckmanualshub.com/

23. Assemble the three springs and plungers into the hub and install the synchroniser sleeve and rollers as described in sub operation 9.

24. Place the 4th gear synchroniser ring onto the synchroniser hub assembly

25. Lubricate the 4th gear and bearing and position the gear into the synchroniser ring and the bearing into the gear

Note: If a smear of petroleum jelly is applied to the outer edge of the bearing, this will support the bearing to stand proud of the gear and ease the procedure of aligning the bearing sleeve in the next operation.

26. Take the heated 4th gear bearing sleeve and locate it inside the bearing and over the shaft. Use a soft drift or flanged driver if necessary, to ensure the sleeve is firmly home against the synchroniser hub.

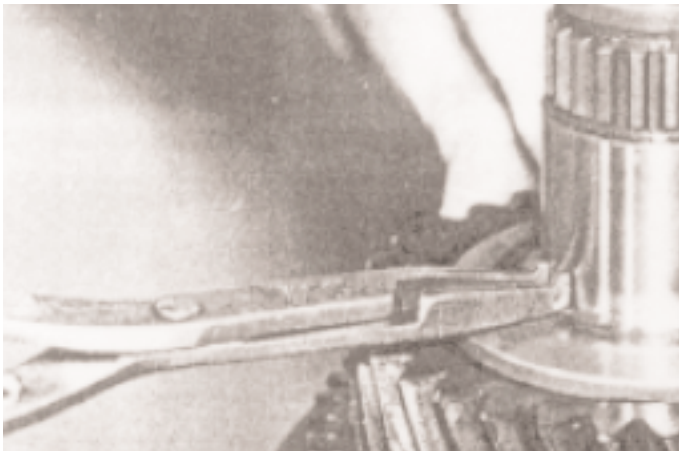

27. Fit a new snap ring into the groove taking care not to damage the mainshaft bearing surface.

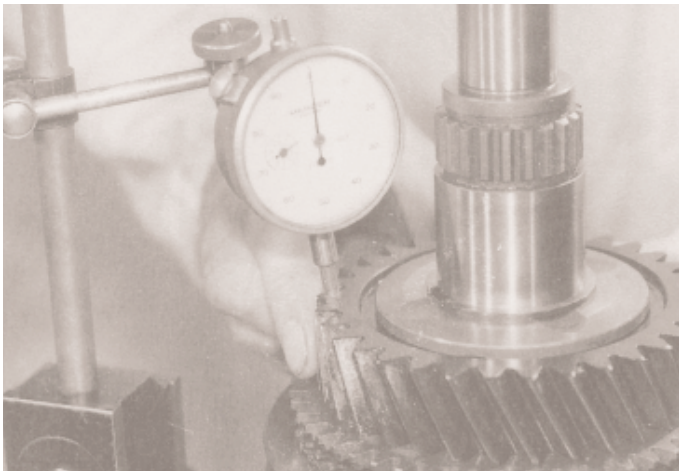

28. Check that the gear end float is within the tolerances stated in the chart.

https://truckmanualshub.com/

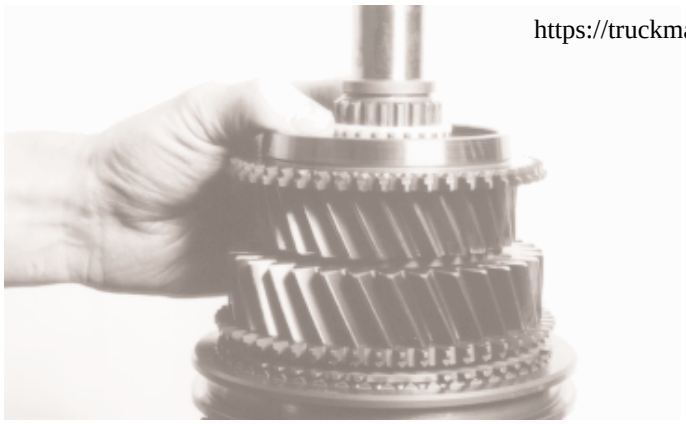

29. Lubricate the 5th gear bearing and install the bearing and 5th gear assembly onto the shaft.

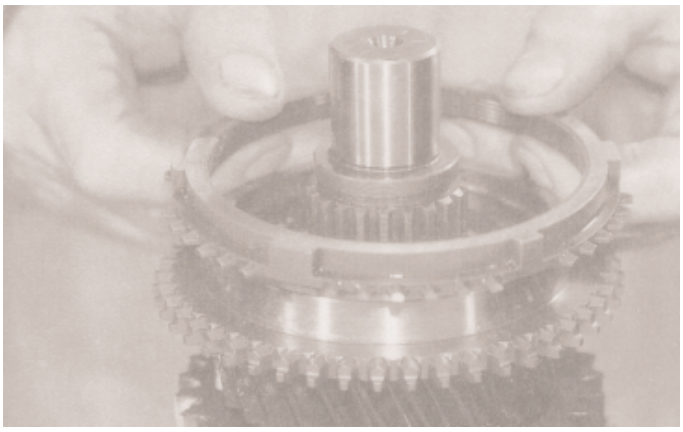

30. Position the 5th gear synchroniser ring onto the synchroniser flange of 5th gear.
Caution: Ensure that when fitting the synchroniser flange to the 5th gear, the correct flange is used. On overdrive transmission it is possible to fit the overdrive flange to the 5th gear

31. Take the heated 5th/6th gear synchroniser hub and install it, boss side downwards onto the shaft. Ensure that the large slots in the hub align with the large shoulders on the synchroniser ring. Use a soft drift or flanged driver, if necessary, to ensure the hub is fully home against the shoulder.
Recheck that the shoulders are in the correct slots.

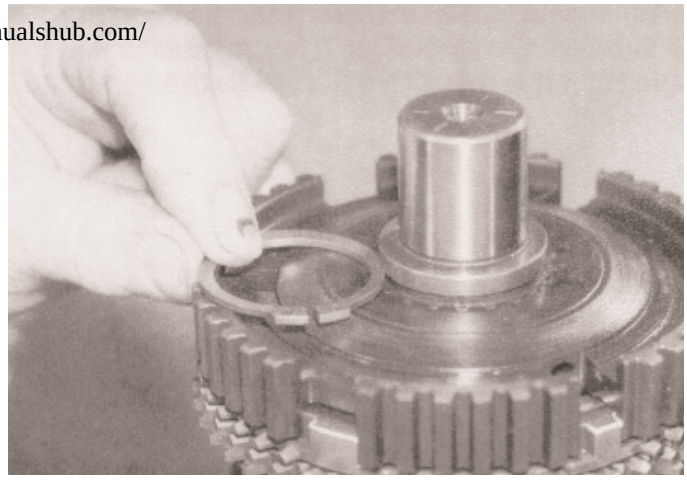

32. From the range of graded circlips select the thickest one which fits into the groove with the minimum free play.

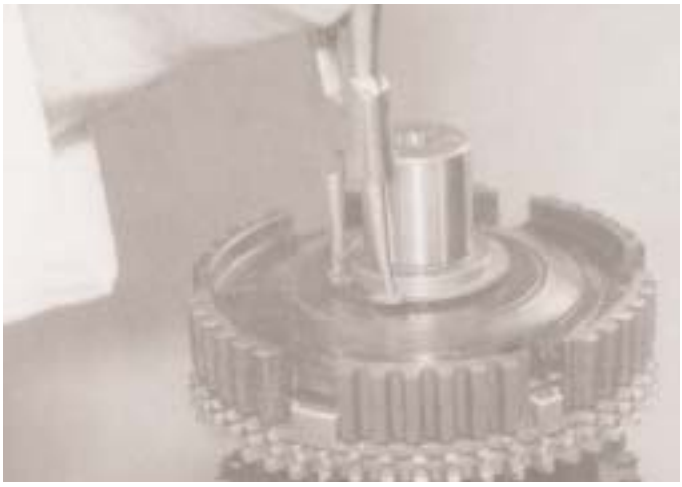

33. Fit the circlip into the groove in the mainshaft.

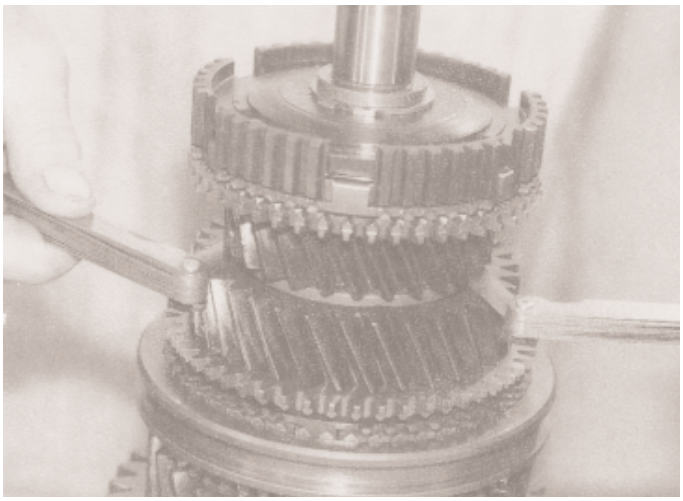

34. Check the gear end float using feeler gauges.

https://truckmanualshub.com/

35. Assemble the three springs and plungers into the hub and install the synchroniser sleeve and rollers as described in sub operation 9.
Selector Shaft Disassembly

Selector Shaft Disassembly

Note: Tapered capscrew fitted on opposite side on horizontal unit.

1. Place selector assembly on bench with the selector block to the left. Mark the front of the shaft and keys to aid reassembly

2. Hold the assembly by the selector block and withdraw the interlock key from the rear.

3. Remove the selector forks from the shaft.

https://truckmanualshub.com/

4. Remove the capscrew from the selector block and slide the block off the shaft.

Selector Shaft - Reassembly

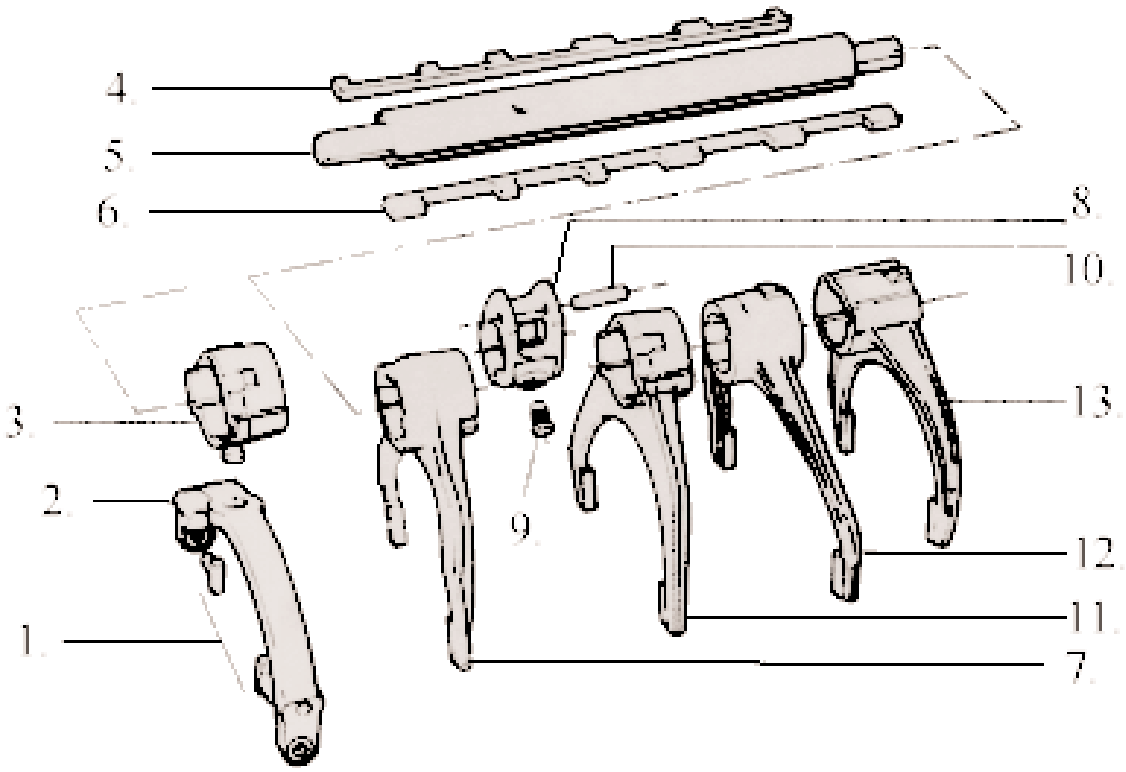

1. Overdrive shift pad
2. Overdrive fork
3. Overdrive selector
4. Selector keys
5. Selector shaft
6. Interlock key
7. Shift fork 5th/6th
8. Selector block
9. Set screw
10. Pin
11. Shift fork 3rd/4th
12. Shift fork 1st/2nd
13. Shift fork-reverse

Selector Shaft Assembly (Vertically mounted unit)

https://truckmanualshub.com/

1. Place selector key into slot on the selector shaft with the three small lugs to the front.

4. Support the selector shaft and slide in the interlock key from the rear.

2. Put the selector block onto the shaft and tighten the capscrew to 35 to 39 Nm.
Note: If reusing the screw apply Loctite 270 to the threads before fitting.

5. On overdrive units the 5th/6th fork is replaced by a selector. Check the fit of the selector before assembling the transmission.

3. Place the forks in their respective positions on the selector shaft.

Transmission Case - Reassembly

https://truckmanualshub.com/

Note: Before reassembling the transmission case ensure that each half case and covers are clean and that all gaskets and joining/sealing materials are cleaned from the mating faces. When reusing patch lock bolts or fitting capscrews to through holes apply the recommended threadlock or sealant to the threads (Loctite: 641).

2. If removed apply Loctite 518 sealant and install new selector shaft expansion plugs, dished side facing inwards into the cases from the inside.

3. Using the special tool install the selector shaft bushes into the cases. Drive in until fully home.

4. Install the layshaft front bearing outer cup into the front case until approximately 5mm below the face of the case.

5. Using the special tool install the layshaft rear bearing cup into the rear case, drive in until just below the rear face of the case.

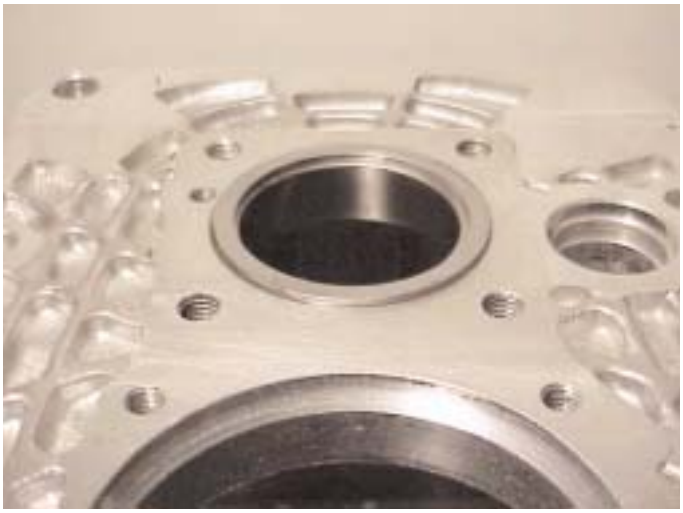

6. Place the spacer on the bearing cup, making sure it is protruding above the case.

https://truckmanualshub.com/

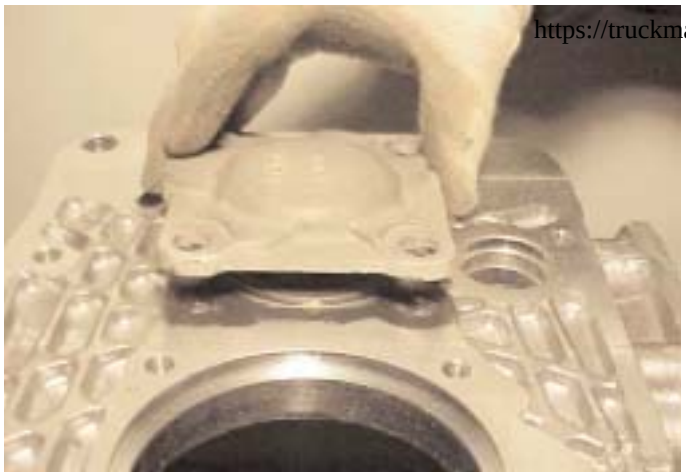

7. Apply Loctite 5900 to the housing, install the layshaft rear bearing cover to the case. Tighten the capscrews evenly to the correct torque (69 to 78Nm) making sure that the bearing cup is pressed into the case.

8. Install the mainshaft rear bearing outer track and roller assembly, snap ring groove outermost, into the case. Temporarily install the speedo housing with two or three capscrews.

9. Fit the special guide sleeve over the mainshaft.

10. Locate the selector shaft assembly to the mainshaft. Support the mainshaft using the special tool and hoist and lower the assembly into the case making sure the selector shaft enters the rear bush. Support the mainshaft and selectors approximately 20mm above the fully installed position.

11. Lubricate and install the spigot bearing on the mainshaft. Fit the synchroniser ring and install the input shaft assembly.

12. Locate the layshaft into mesh with the mainshaft.

https://truckmanualshub.com/

13. Lower the hoist to allow the mainshaft, layshaft and selector shaft to seat into their respective bearings or bushes. Remove the special tool. Ensure the selector block is positioned so it does not foul the front case.

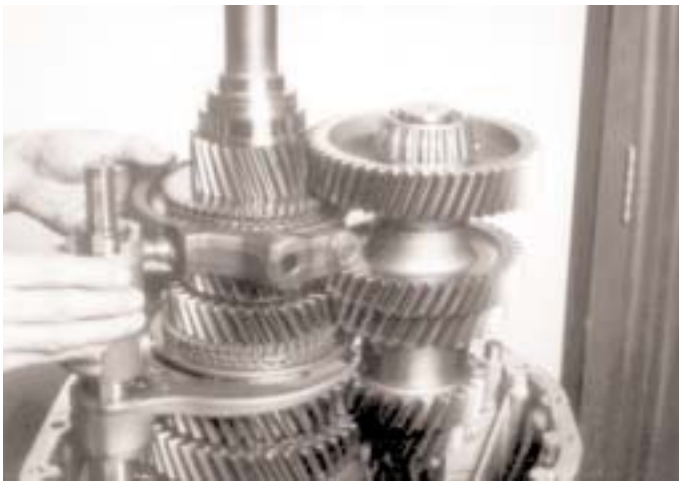

14. On overdrive transmissions, install the fork pads into the 5th/6th overdrive selector fork. Engage the fork and pads into the synchroniser sleeve.

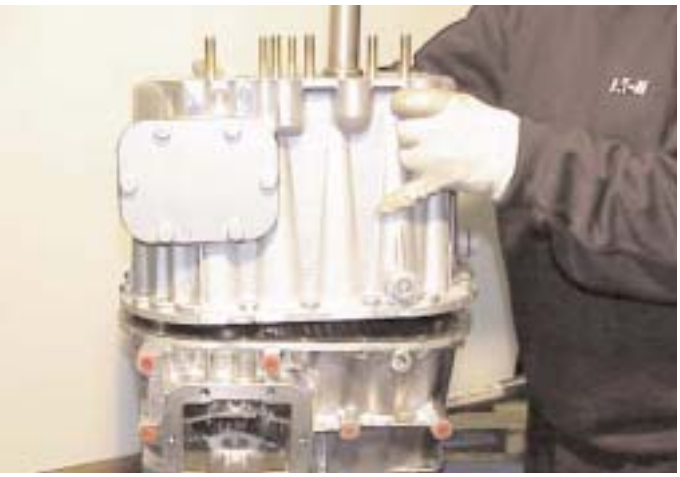

15. Apply Loctite 5900 sealant to the mating flange on the rear case and install the front case. Install the capscrews and nuts.

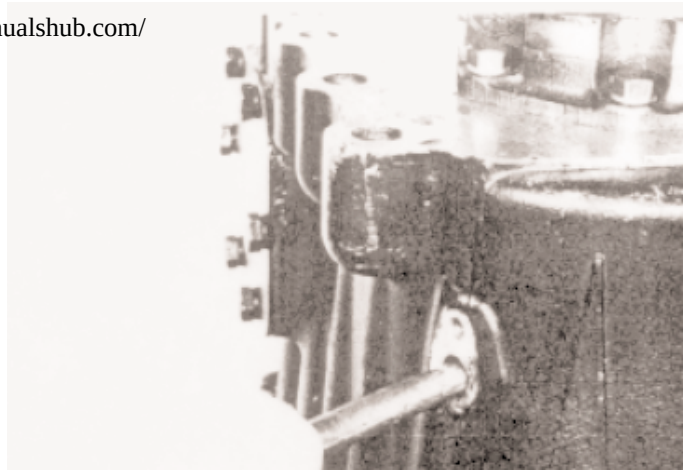

16. On overdrive transmissions, using a suitable probe as illustrated, align the pivot pins with the holes in the case. Apply sealer (Loctite 518) to the pivot pin flange and install the pins.

17. When aligning the right hand pin, use a screwdriver and lift the selector through the remote control aperture. Tighten the capscrews to the correct torque (20 to 40Nm).

18. Fit the input shaft bearing ensuring oil feed hole is kept clear.

https://truckmanualshub.com/

19. Fit bearing thrust washer. Place the original spacer against the bearing and check that the snap ring will fit into its groove without free play. Check at several places around the diameter of the shaft. If there is free play, or the snap ring will not fit into the groove, a new thicker or thinner spacer respectively will be required in place of the original. Graded spacers are available in the following six thicknesses, marked with part number indicated in the table,

Part No.	Thickness (mm)
8872484	3,70
8872485	3,75
8874486	3,80
8872487	3,85
8872488	3,90
8872489	3,95

When the correct thickness spacer has been selected and fitted, fit the new snap ring.

20. If removed, install a new oil seal into the input shaft bearing front cover using the special tool. Press the seal firmly down to the shoulder ensuring the seal is not damaged.

21. Lubricate the shaft seal surface and apply Loctite 5900 sealant to the mating face of the front cover. Install the front cover and tighten the capscrews to the correct torque (35 to 39Nm).

22. Select a shim pack and place it against the layshift bearing cup. Place the spacer on top of the shim.
Note: The shim pack must stand proud of the front face of the case when the bearing cup is fully seated against the bearing cone and roller assembly. Shims are available in the following thicknesses.

Part No.	Thickness (mm)
F88891	0,051
F88892	0,127
F88893	0,254
F88894	0,508
Spacer 8875879	2,40

https://truckmanualshub.com/

23. Install the layshaft front bearing cover (without sealer). Fit the capscrews without spring washers. Carefully and evenly tighten the capscrews while rotating the input shaft backwards and forwards to settle the bearings. Continue to tighten the capscrews until some resistance can be felt on the input shaft.

24. Back off the four capscrews to zero torque then retighten just sufficiently to nip the bearing cover plate. Using feeler gauges, measure the clearance between the cover plate and the case at several points.
From the range of graded spacers select the thickness which give the required preload to the layshaft bearings of 0,075 to 0,125 mm with new bearings or 0,00 to 0,05 with used bearings.

Example

Spacer thickness	2,40mm
add shim	0,508
	2,908
subtract clearance	0,30
	2,608
add preload	0,05
	2,658
subtract spacer	2,40
	0,258
Shim required	0,254

25. Lubricate the layshaft bearing, install the graded spacer of the selected thickness, apply Loctite 5900 sealer and install the cover plate. Apply sealant and tighten the capscrews to the correct torque (69 to 78 Nm).

26. Turn the transmission to the horizontal position and remove the speedo housing and the mainshaft guide sleeve.

27. Install the bearing thrust spacer onto the mainshaft, over the shoulder against the rear bearing. Ensure that the oil groove is against the rollers.

https://truckmanualshub.com/

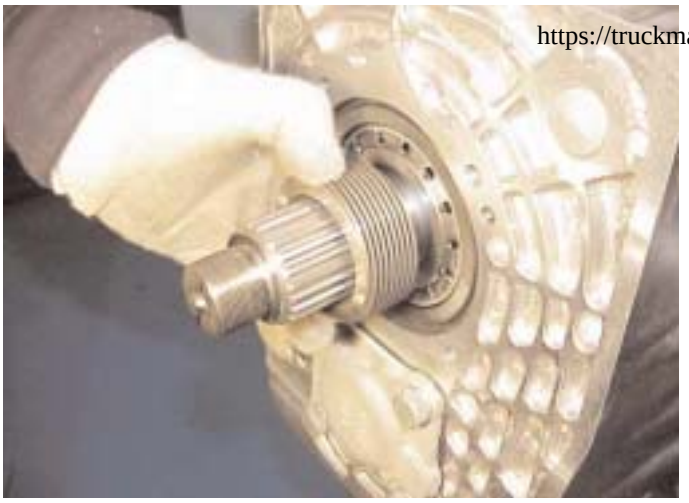

28. Install the speedo drive gear or rotor onto the mainshaft against the spacer.

29. If removed, install a new oil seal to correct depth into the speedo housing using the special tool. Press the seal firmly down to the shoulder ensuring the seal is not damaged.

30. Apply flange sealer Loctite 5900 and install the speedo housing. Note the position of the longer capscrews. Tighten the capscrew to the correct torque (35 to 39 Nm).
Caution: It may be necessary to install the speedo pinion into the housing prior to this stage.

31. Apply a light grease to the oil seal lips and install the drive flange. Do not hammer the flange/yoke onto the shaft or the bearing spacer may be dislodged from its location on the shaft. This could cause damage to the spacer, bearing or shaft and/or seriously affect mainshaft end float.

32. Fit and tighten the flange/yoke retaining locknut to the correct torque using a flange/yoke holding wrench. (Torque: 490 to 588 Nm.)

33. If not already installed install the sender unit or speedo drive pinion and housing using a new sealing washer. Tighten to the correct torque (20 to 27 Nm).

https://truckmanualshub.com/

34. Apply petroleum jelly to the reverse idler gear thrust washer and locate it into position in the transmission case.
Note: Ensure tab of thrust washer locates into recess of case.

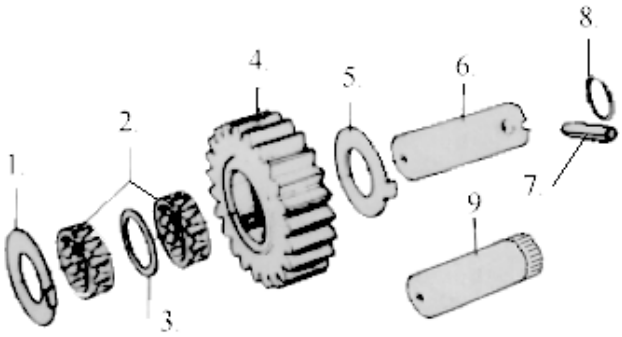

1. Thrust washer
2. Needle roller bearing
3. Spacer
4. Reverse idler gear
5. Thrust washer
6. Reverse idler shaft (old design)
7. Pin
8. 'O' ring
9. Reverse idler shaft (new design)

Reverse Idler Gear Assembly

35. Install the bearings and bearing spacer into the reverse idler gear and locate the assembled gear between the thrust washers and into mesh with the layshaft and the mainshaft reverse gear.
Note: Ensure tab of thrust washer locates into recess of case.

Reverse Idler - Old Design

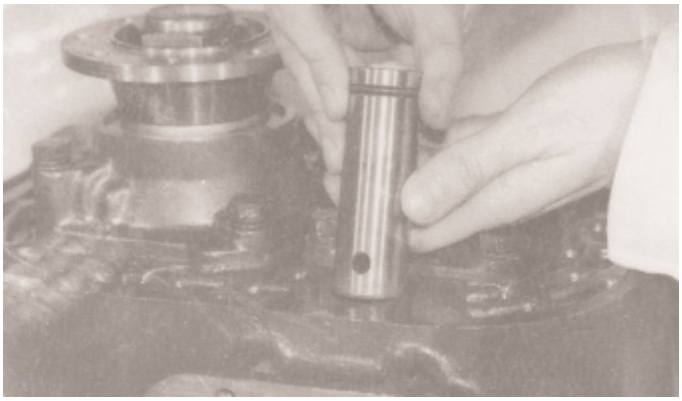

36. Ensure the thrust washers and the gear are correctly positioned and that the parallel groove pin holes are in alignment and install the reverse idler gear shaft, with a new 'O' ring into the case. Take care to ensure that the components are not dislodged as the shaft is driven home with a soft mallet.

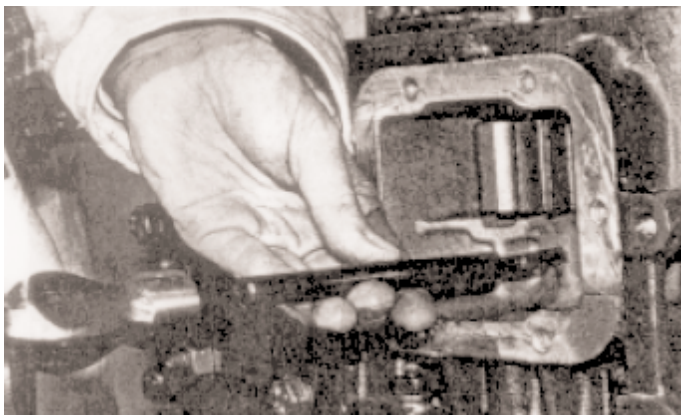

37. Align the pin holes and install a new parallel groove pin. Drive in until flush.

https://truckmanualshub.com/

38. Install the reverse idler gear/PTO cover plate. Tighten the capscrews to the correct torque (35 to 35 Nm). Apply sealant to the expansion plug in the reverse idler bore. Fit the expansion plug.

Reverse Idler - New Design

39. Ensure that the thrust washers and the gear are correctly positioned. Drive the shaft into position ensuring that the end of the shaft is just below the surface of the case.

40. Apply the specified sealant and install a new expansion plug in the reverse idler shaft bore.

41. Install the reverse idler gear/PTO cover plate. Tighten the capscrews to the correct torque (35 to 39 Nm).

42. Turn the transmission to the horizontal position. Rotate the selector block to position the pin uppermost.

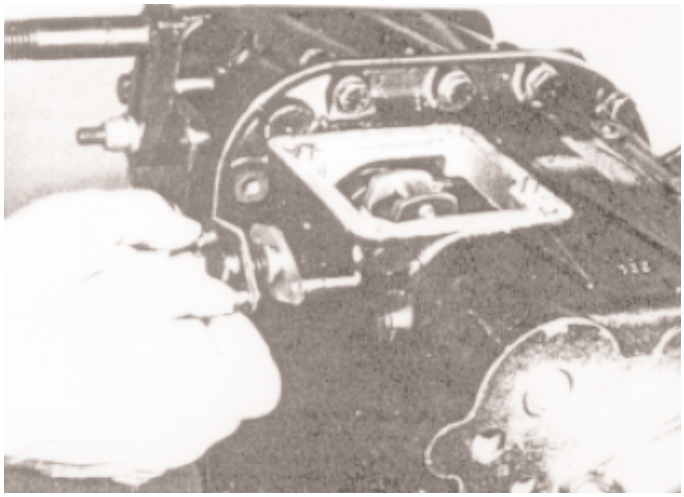

43. Install the selector detent plunger and spring, fit the cover plate with a new gasket and tighten the capscrews to the correct torque (20 to 24 Nm) or install neutral detent assembly (32 to 37 Nm).
Or install neutral detent assembly (32 to 37 Nm).

https://truckmanualshub.com/

44. Apply flange sealer and install the remote control making sure that the inner lever locates over the selector block.

45. Tighten the capscrews to the correct torque (35 to 39 Nm).

46. Apply sealant and install the reverse lamp switch, tighten to the correct torque (16 to 22 Nm).

47. Check manually using the shift lever that all gears can be engaged. It may be necessary to rotate the input shaft to obtain full gear engagement.

https://truckmanualshub.com/

https://truckmanualshub.com/

Copyright Eaton Corporation, 2012. Eaton hereby grant their customers, vendors, or distributors permission to freely copy, reproduce and/or distribute this document in printed format. It may be copied only in its entirety without any changes or modifications. THIS INFORMATION IS NOT INTENDED FOR SALE OR RESALE, AND THIS NOTICE MUST REMAIN ON ALL COPIES.

Note: Features and specifications listed in this document are subject to change without notice and represent the maximum capabilities of the software and products with all options installed. Although every attempt has been made to ensure the accuracy of information contained within, Eaton makes no representation about the completeness, correctness or accuracy and assumes no responsibility for any errors or omissions. Features and functionality may vary depending on selected options.

For spec'ing or service assistance, call 1-800-826-HELP (4357) or visit www.eaton.com/roadranger. In Mexico, call 001-800-826-4357.

Roadranger: Eaton and trusted partners providing the best products and services in the industry, ensuring more time on the road.

Eaton Corporation
Vehicle Group
P.O. Box 4013
Kalamazoo, MI 49003 USA
800-826-HELP (4357)
www.eaton.com/roadranger

Printed in USA

Powering Business Worldwide

BACKED BY
Roadranger
SUPPORT

https://truckmanualshub.com/

For parts or service call us
Pro Gear & Transmission, Inc.

1 (877) 776-4600

(407) 872-1901

parts@eprogear.com

906 W. Gore St.

Orlando, FL 32805