Haulotte GROUP

HA32PX - HA100JRT - HA41PX-NT - HA130JRT-NT

Operator's manual

HA32PX - HA100JRT

HA41PX-NT - HA130JRT-NT

4000328850 E 12 14 USA / GB

Downloaded from www.Manualslib.com manuals search engine

https://truckmanualshub.com/

Downloaded from www.Manualslib.com manuals search engine

CONTENTS

A

FOREWORD

1 - User responsibility 9

1.1 - Owner's responsibility 9
1.2 - Employer's responsibility 9
1.3 - Trainer's responsibility 9
1.4 - Operator's responsibility 10

2 - Safety 11

2.1 - Safety instructions 11
2.1.1 - Misuse Hazards 11
2.1.2 - Falling Hazards 11
2.1.3 - Overturning / Tip-over Hazards 12
2.1.4 - Electrocution Hazards 14
2.1.5 - Explosion / Fire Hazards 15
2.1.6 - Crushing / Collision Hazards 16
2.1.7 - Uncontrolled movement Hazards 17

3 - Safety inquiries 18

4 - Incident notification 18

5 - Compliance 19

5.1 - Product information 19
5.1.1 - Change of Ownership Notification 19
5.1.2 - Owner information update form 20
5.2 - Product specifications 21

B

FAMILIARIZATION

1 - General safety 23

1.1 - Intended use 23
1.2 - Decal "content" 24
1.3 - Symbols and colors 25
1.4 - Level of severity 25
1.5 - Symbols legend and definitions 26

2 - Models description 27

3 - Primary machine components 28

3.1 - Layout 28
3.2 - Ground control box 30
3.2.1 - Layout 30
3.2.2 - LEDs Display Panel (LED'S 1 - 10) 32
3.3 - Platform control box 34
3.3.1 - Layout 34
3.3.2 - LEDs Display Panel (LED'S 101 - 117) 36
3.4 - Axle extension control box 37
3.4.1 - Layout 37

4 - Performance Specifications 38

4.1 - Technical characteristics 38
4.2 - Working area / Range of motion 40

5 - Decals and markings locations 42

Downloaded from www.Manualslib.com manuals search engine

C

PRE-OPERATION INSPECTION

1 - Recommendations 57

2 - Working area assessment 57

3 - Inspection and Functional test 58

3.1 - Daily inspection 58

4 - Safety functional checks 62

4.1 - E-Stop button check 62
4.2 - Activation of controls 63
4.3 - Fault detector 63
4.3.1 - Indicators/LED's test 63
4.3.2 - Buzzers test 64
4.4 - Automatic engine cut-out 64
4.5 - Overload sensing system (if fitted) 64
4.6 - Oscillating axles (If equipped) 64
4.7 - Slope warning device 65
4.8 - Travel speed limitation 65
4.9 - Movement speed 66
4.10 - On-board electronics 66
4.11 - Operating temperature (For Russia and the Ukraine only) 66
4.12 - Radius limitation 67
4.13 - Axle extension 67
4.14 - Drive buzzer 67
4.15 - Boom control system 67

Downloaded from www.Manualslib.com manuals search engine

D

OPERATION INSTRUCTIONS

CONTENTS

1 - Operation 69

1.1 - Major description 69
1.2 - Operation from the ground control box 69
1.3 - Operation from the platform control box 71
1.4 - Operation of overriding system from ground control box 72

2 - Ground control box 73

2.1 - To start the machine from the ground control box 73
2.2 - Boom and arm controls 74
2.3 - Additional controls from the ground control box 75

3 - Platform control box 76

3.1 - Start and stop the machine 76
3.2 - Drive and steer control 76
3.3 - Boom and arm controls 77
3.4 - Additional controls 78

4 - Axle extension control box 79

4.1 - Prepare the machine 79
4.2 - Axle extension operation 81
4.2.1 - For rear axle extension 81
4.2.2 - For front axle extension 82
4.3 - Axle retraction operation 83
4.3.1 - For front axle retraction 83
4.3.2 - For rear axle retraction 84

5 - Link piece position check 85

6 - Radius limitation 86

6.1 - Principle 86
6.2 - Procedure 86
6.2.1 - Front radius limitation 86
6.2.2 - Rear radius limit 86

7 - Emergency procedure 87

7.1 - In case of engine power failure 87
7.2 - To rescue operator from platform 87
7.3 - No power available 88

8 - Transportation 89

8.1 - Putting in transport position 89
8.2 - Machine layout 90
8.3 - Unloading 92
8.4 - Towing 92
8.4.1 - Disengaging the drive hubs 92
8.4.2 - Re-engaging the drive hubs 93
8.5 - Storage 93
8.6 - Lifting operation 94
8.6.1 - Safety precautions 94
8.6.2 - Necessary equipment 94
8.6.3 - Preliminary procedures 95
8.6.4 - Procedure for the use of slings 96

9 - Cold Weather Recommendations 98

9.1 - Engine oil 98
9.2 - Hydraulic oil 99
9.3 - Preheating operation 99

Downloaded from www.Manualslib.com manuals search engine

E

GENERAL SPECIFICATIONS

1 - Machine dimensions 102

2 - Major component masses 105

3 - Acoustics and vibrations 105

4 - Wheel/Tire assembly 106

4.1 - Technical specifications 106
4.2 - Inspection and maintenance 106

5 - Options 108

5.1 - Activ' Shield Bar - SECONDARY GUARDING SYSTEM 108
5.1.1 - Principle 108
5.1.2 - Safety precautions 108
5.1.3 - Description 109
5.1.4 - Pre-operation inspection 110
5.1.5 - Operation 112

F

MAINTENANCE

1 - General 113

2 - Maintenance Schedule 114

3 - Inspection program 115

3.1 - General program 115
3.2 - Daily inspection 116
3.3 - Periodic inspection 116
3.4 - Reinforced inspection 116
3.5 - Major inspection 116

4 - Repairs and adjustments 117

G

OTHER INFORMATION

1 - Warranty disclosure 119

1.1 - After Sales Service 119
1.2 - Manufacturer's warranty 119
1.2.1 - Warranty acceptance 119
1.2.2 - Warranty period 119
1.2.3 - Procedure conditions 119
1.2.4 - Conditions of warranty 120

2 - Subsidiary contact information 121

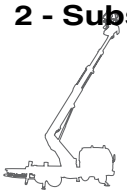

Downloaded from www.Manualslib.com manuals search engine

https://truckmanualshub.com/

A- Foreword

You have just purchased a HAULOTTE® product and we would like to thank you for your business.

The Aerial Work Platform is a mechanical device primarily designed and manufactured with the intent to position people with the necessary tools and material to overhead elevated temporary workplaces. All other uses or alterations/modifications to the aerial work platform must be approved by HAULOTTE®.

This manual shall be considered a permanent component of the machine and shall be kept with the aerial work platform in the designated Manual Holder, at all times.

Safe operation of this product can only be assured if you follow the operating instructions contained in this manual. To ensure proper and safe use of this equipment, it is strongly recommended that only trained and authorized personnel operate and maintain the aerial work platform.

We would particularly like to draw your attention to 2 essential points :

- Comply with safety instructions.
- Use the equipment within the specified/published performance limits.

With regard to the designation of our equipment, we stress that this is purely for commercial purposes and not to be confused with the technical specifications. Only the specifications in this manual should be used to study the suitability of the equipment for the intended use.

This operator's manual is specific to the HAULOTTE® products listed on the cover page of this manual.

Original language and version :

Manuals in English and French are the original instructions. Manuals in other languages are translations of the original instructions.

The operator's manual does not replace the basic training required for equipment operators. HAULOTTE® has compiled this manual to assist in safe and efficient operation of the products covered in the manual.

The manual must be available to all operators and must be kept in a legible condition. Additional copies can be ordered from HAULOTTE Services®.

Stay Safe and keep working with HAULOTTE® !

Downloaded from www.Manualslib.com manuals search engine

https://truckmanualshub.com/

Notes

Downloaded from www.Manualslib.com manuals search engine

https://truckmanualshub.com/

1 - User responsibility

1.1 - OWNER'S RESPONSIBILITY

The owner (or hirer) has the obligation :

- To inform operators of the instructions contained in the Operator's Manual.
- For applying the local regulations regarding operation of the machine.
- To replace all manuals or decals that are either missing or not legible. Additional copies can be ordered from HAULOTTE Services®.
- To establish a preventive maintenance program in accordance with the manufacturer's recommendations, taking into account the environment and severity of use of the machine.
- To perform periodic inspections in accordance with HAULOTTE® recommendations and local regulations.

All malfunctions and problems identified during the inspection shall be corrected before the aerial work platform is returned to service.

1.2 - EMPLOYER'S RESPONSIBILITY

The employer has the obligation :

- To authorize the operator to use the machine.
- To inform and familiarize the operator with the local regulations.

Forbid anyone from operating the machine if :

- Under the influence of drugs, alcohol, etc.
- Subject to fits, loss of motor skills, dizziness, etc.

1.3 - TRAINER'S RESPONSIBILITY

The trainer must be qualified to provide training to operators in accordance with applicable local regulations. The training must be given in an obstacle-free area until the trainee is considered competent as defined by the training program undertaken.

Downloaded from www.Manualslib.com manuals search engine

https://truckmanualshub.com/

1.4 - OPERATOR'S RESPONSIBILITY

The operator has the obligation to :

- Read and understand the contents of this manual and familiarize himself with the decals affixed on the machine.
- To inspect the machine before use according to HAULOTTE®'s recommendations..
- To inform the owner (or hirer) if the manual or any decals are missing or are not legible.
- To inform of any malfunctioning of the machine.

The operator shall ensure that frequent inspections were conducted by the owners and the operator may only operate the machine for the purpose intended by the manufacturer.

Only authorized and qualified operators may operate HAULOTTE® machines.

All operators must become familiar with and fully understand the emergency controls and be able to operate the machine in an emergency.

The operator has the obligation to stop using the machine in the event of malfunction or safety problems on the machine or in the work area and report the problem immediately to his/her supervisor.

Downloaded from www.Manualslib.com manuals search engine

https://truckmanualshub.com/

2 - Safety

2.1 - SAFETY INSTRUCTIONS

2.1.1 - Misuse Hazards

- Do not use the machine for any other purpose than to position people, their tools and material to the overhead/elevated temporary work places.
- Do not use the machine as a crane, material lift or elevator. Only use the machine as it was intended.
- Do not attach overhanging loads when raising or lowering the platform.
- Do not tie the boom or platform to an adjacent fixed or mobile structure.
- Do not use/operate the machine when alone. Survey person or immediate Supervisor must be present at ground in case of emergency.
- Do not use a faulty or poorly maintained machine. Remove defective/damaged machine from service.
- Do not climb onto the compartment covers of the machine.
- Do not replace items critical to machine stability with items of different weight or specification.
- Do not replace factory-installed tires/tyres with tires of different specification or ply rating.
- Do not alter or disable machine components that in any way affect safety and stability.
- Do not disable the safety devices.

2.1.2 - Falling Hazards

To enter or exit from the platform :

- The machine must be completely stowed.
- Face the machine to access the entry opening to the platform.
- Keep 3 points of contact (both hands and a foot) on the steps and the guardrail.

Before commencing operation :

- Ensure that guard rails are correctly installed and secured.
- Ensure that gate or sliding bar is in it's proper closed position.
- Remove oil or grease from the steps, floor, handrail and the guardrails.
- Clear the platform floor free of debris.

When in the platform :

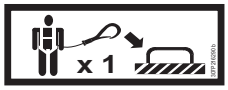

- Occupants must wear harness in accordance with governmental regulations.
- The correct use of the harness requires the lanyard to be connected to an anchorage point designated by the decals. Refer to this decal located on the platform.
- Hold on securely to the guardrails.

Downloaded from www.Manualslib.com manuals search engine

https://truckmanualshub.com/

- Always keep your feet firmly on the floor of the platform.
- Do not sit, stand, or climb on the platform guard rails.
- Work only within the platform guardrails area and do not lean over guardrails to perform work.
- Do not exit the platform until it is in the completely stowed position.
- Do not use the guardrail as a means of access to climb in or out of the platform.

2.1.3 - Overturning / Tip-over Hazards

Before positioning and operating the machine :

- Ensure that the surface is capable of supporting the machine weight including the rated capacity.
- Do not exceed the maximum rated capacity that includes the weight of both material and allowed number of occupants. Do not exceed the allowable number of occupants.
- Place the loads uniformly distributed on the platform floor.
- Do not increase the working height (using extensions, ladder, etc.).
- Do not place ladders or scaffolds in the platform or against any part of this machine.
- Do not use the machine in winds exceeding the permissible limit.
- Do not increase the surface area of the platform exposed to wind. This includes adding panels, mesh, banners. Be aware when working with materials with a large surface area. This will add to the wind load on the machine.
- Do not raise the platform or drive with platform elevated on an incline exceeding the rated slope for the machine.
- Do not drive the machine on slopes or grades exceeding the specified limits.
- Do not replace components critical to stability with components of different weight or specification.
- Do not use the machine with material or objects hanging from the guardrail or the boom.
- Do not pull or push towards any object outside of the platform. Do not exceed the maximum allowable side force stated in the performance specifications.
- Do not use the machine to support any external structure.
- Do not use the machine to tow other machines or to drag materials.

Downloaded from www.Manualslib.com manuals search engine

https://truckmanualshub.com/

Using a machine on a slope

Do not exceed the slope limit for each operation. **Section B 4.1Technical specifications.**

Gradeability :

- Driving in stowed position UP or DOWN a slope.

Rated slope :

- Operating with platform elevated.

- If the tilt alarm sounds with the platform uphill : First lower the boom and then retract the boom.
- If the tilt alarm sounds with the platform facing downhill : First retract the boom and then lower the boom.
- While driving, always place the boom above the rear axle, in the direction of movement.
- While driving on a slope:
  - Always orientate the machine in the direction of the slope.
  - Always place the boom and the arms in fully retracted and in stowed position.
  - Do not travel down slopes in high speed.
  - Do not drive fast in narrow or cluttered areas. Keep speed under control while making turns or sharp bends.

WIND : The aerial work platform can operate up to a maximum wind speed as indicated in the specifications. To identify the local wind speed, use the Beaufort scale below, use a wind gauge or an anemometer.

Downloaded from www.Manualslib.com manuals search engine

https://truckmanualshub.com/

N.B.-:-THE BEAUFORT SCALE OF WIND FORCE IS ACCEPTED INTERNATIONALLY AND IS USED WHEN COMMUNICATING WEATHER CONDITIONS. A WIND SPEED RANGE AT 10 M (32 FT 9 IN) ABOVE FLAT, CLEAR LAND IS ASSOCIATED WITH EACH DEGREE.

Beaufort scale

Force	Meteorological description	Observed effects	m/s	km/h	mph
0	Calm	Smoke rises vertically.	0 - 0,2	0 - 1	0 - 0,62
1	Very light breeze	Smoke indicates the wind direction.	0,3 - 1,5	1 - 5	0,62 - 3,11
2	Light breeze	Wind felt on the face. Leaves rustle. Weather vanes turn.	1,6 - 3,3	6 - 11	3,72 - 6,84
3	Slight breeze	Leaves and small twigs in constant motion. Flags move slightly.	3,4 - 5,4	12 - 19	7,46 - 11,8
4	Nice breeze	Raised dust and loose papers. Small branches are moved.	5,5 - 7,9	20 - 28	12,43 - 17,4
5	Nice breeze	Small trees in leaf to sway. Crested wavelets form on inland waterways.	8,0 - 10,7	29 - 38	18,02 - 23,6
6	Cool wind	Large branches in motion. Power lines and chimneys 'sing'. Umbrellas used with difficulty.	10,8 - 13,8	39 - 49	24,23 - 30,45
7	Near gale	Whole trees in motion. Inconvenience felt when walking against wind.	13,9 - 17,1	50 - 61	31 - 37,9
8	Squall	Some branches break. Generally we cannot walk against the wind.	17,2 - 20,7	62 - 74	38,53 - 45,98
9	Strong squall	The wind causes slight damage to buildings. Tiles and chimney stacks are blown off.	20,8 - 24,4	75 - 88	46,60 - 54,68

2.1.4 - Electrocution Hazards

The machine is not electrically insulated and does not provide protection from contact or proximity to electrically charged conductors.

Always position the lift at a safe distance from electrically charged conductors to ensure that no part of the machine is within an unsafe area.

Respect the local rules and the minimum safety distance from power lines.

Minimum safe approach distances

Electric voltage	Minimum safety distance	
	Mètre	Feet
0 - 300 V	Avoid contact	
300 V - 50 kV	3	10
50 - 200 kV	5	15
200 - 350 kV	6	20
350 - 500 kV	8	25
500 - 750 kV	11	35
750 - 1000 kV	14	45

N.B.-:-USE THIS TABLE EXCEPT WHERE LOCAL REGULATIONS INDICATE OTHERWISE.

Downloaded from www.Manualslib.com manuals search engine

https://truckmanualshub.com/

- Do not operate the machine when close to live power lines, consider the movement of the machine and the sway of the electric power lines particularly in windy conditions.
- Do not operate the machine during lightning, thunderstorms, snow/ice or any weather condition that could compromise operator safety.
- Do not use machine as a ground for welding.
- Do not weld on the machine without first disconnecting the battery terminals.
- Always disconnect ground cable first.
- The machine must not be used while charging the batteries.
- When using the platform AC power line, ensure it is protected with a circuit breaker.

Keep away from the machine if it contacts energized power lines. Personnel on the ground or in the platform must not touch or operate the machine until energized power lines are shut off.

2.1.5 - Explosion / Fire Hazards

Always wear protective clothing and eye wear when working with batteries and power sources/systems.

N.B.-:-ACID IS NEUTRALIZED WITH SODIUM BICARBONATE AND WATER.

- Do not start the engine if you smell or detect liquid petroleum gas (LPG), gasoline, diesel fuel or other explosive substances.
- Do not work on or operate a machine in an explosive or flammable atmosphere / environment.
- Do not touch hot components.
- Do not bridge the battery terminals with metallic objects.
- Do not service the battery in proximity of spark, open flame, glowing/burning cigarette.
- Do not fill up the fuel tank, when the engine is running and/or near a flame.

Downloaded from www.Manualslib.com manuals search engine

https://truckmanualshub.com/

2.1.6 - Crushing / Collision Hazards

When in the platform :

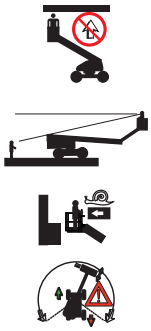

- Check the work area for overhead clearance, for any obstacles besides and below the platform when raising/lowering the platform and or before driving.
- During movement, keep all the parts of the body inside the platform.
- To position machine close to a building/structure, it is recommended using the upper boom and or arms movement control functions to position, rather than driving machine closer to structure.
- Always cordon off the area around the base of the machine to keep personnel and other equipment away from the machine while in use.
- Warn personnel not to work, stand, or walk under a raised boom/platform.
- Do not drive in reverse direction (opposite the field of vision).
- Be aware of the boom position and tail swing when rotating the turret (turntable).
- Always ensure that the chassis is never driven any closer than 1 m (3 ft 3 in) to holes, bumps, slopes, obstructions, debris and ground coverings that may hide holes and other dangers.
- Keep non-operating personnel at least 5 m (16 ft 5 in) away from the machine when driving and slewing.
- Be aware of driving direction.
  - When turret is slewed/rotated 180°, the platform is now facing the rear of the machine.
  - Check the driving direction with the help of the red or green arrow on the chassis relative to the red and green arrows on the platform control box.
  - Also note that when changing the driving direction (Forward <> Reverse) the joysticks or switches must return to the neutral position before reversing the drive direction and for movement to occur.
- When driving, position the platform so as to provide the best possible visibility and to avoid any blind spots.
- Hold on securely to the guardrails.
- Occupants must wear harness in accordance with governmental regulations.
- Lanyard must be attached to the designated anchorage point.
- Avoid contact with fixed or mobile obstacles (other machines).
- Other machines (crane, aerial work platform, etc.) operating in the work area increase the risk of crushing or collision. Restrict the operation of machines moving within the aerial work platform work area.
- Take into consideration the stopping distance, reduced visibility and blind spots of the machine.
- Limit travel speed to suit the ground surface condition, slope (incline), and people in the vicinity.

Downloaded from www.Manualslib.com manuals search engine

https://truckmanualshub.com/

2.1.7 - Uncontrolled movement Hazards

Do not use a damaged or malfunctioning machine.

Be aware of uncontrolled movement and always respect the following :

- Maintain clearance from high voltage lines.
- Maintain clearance from generators, radar, electromagnetic fields.
- Never expose the batteries or electrical components to water (high pressure washer, rain).
- Never tow the machine over extended distances.
- In case of a machine breakdown, it is possible to tow short distance to load it onto a trailer.
- Never leave the hydraulic cylinders fully extended before switching off the machine, or when stationary for an extended period of time.
- Retract the boom and lower the arms to the stowed position.
- Rotate the turntable so that the boom is between the non-steering wheels.
- Select a safe parking location, on a firm level surface, clear of obstruction and traffic.
- Ensure all compartments are closed and secured.
- Chock the wheels.

Downloaded from www.Manualslib.com manuals search engine

https://truckmanualshub.com/

3 - Safety inquiries

Inquiries relating to design criteria/specifications of a product, standards compliance, or overall machine safety should be sent to the HAULOTTE® PRODUCT SAFETY department.

Each inquiry or request should include all relevant information; including contact name, telephone number, mailing address, email address, plus the machine model and serial number.

The HAULOTTE® Product Safety department will evaluate each request/inquiry and will provide a written response.

4 - Incident notification

Notify HAULOTTE® immediately when a HAULOTTE® product has been involved in an incident/ accident leading to personal injury or death, or when there is a major property damage.

HAULOTTE Group - EUROPE Product Safety Department Address : La Péronnière - BP 9 - 42152 L'Horme - France Tel : +33 (0)4 77 29 24 24 Email : ProductSafety@haulotte.com	HAULOTTE Group - Australia, India and Asia Product Safety Department Address : 46 Green Road - VIC 3175 - Dandenong - Australia Tel : +61 3 9792 1000 Email : ProductSafety@haulotte.com	HAULOTTE Group - North & South America Product Safety Department Address : 125 Taylor Parkway, Archbold, OH 43502 - United States Tel : +1 419 445 8915 Email : ProductSafety@haulotte.com

Downloaded from www.Manualslib.com manuals search engine

https://truckmanualshub.com/

5 - Compliance

5.1 - PRODUCT INFORMATION

Without the written permission from Haulotte, modifying a HAULOTTE® product is a Safety concern. Any modification may violate Haulotte design parameters, government regulations and industry standards.

If you desire a modification to the product, submit in writing a request to HAULOTTE®.

With the utmost care to ensure enhanced reliability and greater safety of the HAULOTTE® products, it is pertinent that when a "Service or Safety Bulletin" is issued, action is taken immediately. Once the bulletin has been addressed, make sure that the completed form is submitted to HAULOTTE®.

Do not hesitate to contact HAULOTTE Services®, should you have any questions relating to the issued bulletin(s) or with questions on the policy itself.

5.1.1 - Change of Ownership Notification

It is important and necessary to keep HAULOTTE Services® updated with current ownership of the machine. This way, HAULOTTE® will be able to provide the necessary support for the product. If you have sold or transferred this machine(s); it is your responsibility to notify HAULOTTE Services®. It is not required to include Lessees/Renters of Leased/Rented machines on this form.

Use the HAULOTTE® Product Status Notification form to report scrapped, stolen, missing or recovered machine(s).

Downloaded from www.Manualslib.com manuals search engine

https://truckmanualshub.com/

5.1.2 - Owner information update form

Owner information update form	
Complete this form and mail or fax it to :	
HAULOTTE® subsidiary Name :	Address :
Fax :	Address :
e.mail address :	Address :
Product information :	
Model :	Machine serial number :
Owner / Servicing information : Do not include leased or rented units in this form	
Current product owner :	Current product owner :
Name :	Name :
Company :	Company :
Address :	Address :
Address :	Address :
Country :	Country :
Phone :	Phone :
Date of ownership :	Signature :
Signature :	Date :
Date :	Company stamp is mandatory :
Tick here if the machine has been permanently removed from service (scrapped). The manufacturer's nameplate must be removed and returned to HAULOTTE Group when the unit is removed from service.	
Reason for removal :	

Downloaded from www.Manualslib.com manuals search engine

https://truckmanualshub.com/

5.2 - PRODUCT SPECIFICATIONS

HAULOTTE® cannot be held liable for any changes to the technical specifications contained in this manual. HAULOTTE® has a continuous improvement policy in place for its product range; given this policy, the Company reserves the right to modify their products technical characteristics / specifications without notice.

Certain options can modify the machine's operating characteristics and its' associated safety. If your machine was originally delivered with options fitted, replacing a safety component associated with a particular option does not require any particular precaution other than those associated with the installation itself (static test)

Otherwise, it is essential to follow the manufacturer's recommendations as stated below :

- Installation by authorised HAULOTTE® personnel only.
- Update the manufacturer's identification plate.
- Have stability tests carried out by a certified agency/competent person.
- Ensure decals are updated.

Downloaded from www.Manualslib.com manuals search engine

https://truckmanualshub.com/

Notes

Downloaded from www.Manualslib.com manuals search engine

https://truckmanualshub.com/

1 - General safety

1.1 - INTENDED USE

To ensure the safe use of an Aerial Work Platform, support personnel must always be available on the ground. If necessary, support personnel will be required to operate the emergency functions of the machine and in rescuing the operator.

Do not operate the product in the following situations :

- On soft, unstable or cluttered ground.
- With wind blowing faster than the permissible limit.
  - Check the allowable wind speed specified in the performace specifications tabulation.
  - Consult the Beaufort scale.
- Close to power lines. Keep a safe distance.
- Outside of the temperature range -20°C / + 50°C (-4°F / +122°F).
- In an explosive atmosphere / environment.
- During storms.
- In the presence of strong electromagnetic fields.

N.B.-:-USE THE MACHINE UNDER "NORMAL" CLIMATIC CONDITIONS. IF YOU NEED TO USE THE MACHINE IN CLIMATIC CONDITIONS LIKELY TO CAUSE DETERIORATION (EXTREME : HUMIDITY, TEMPERATURES, SALINITY, CORROSIVENESS, ATMOSPHERIC PRESSURE), CONTACT HAULOTTE SERVICES®. REDUCE INTERVALS BETWEEN SERVICING.

N.B.-:-WHILE THE MACHINE IS NOT IN USE, CARE MUST BE TAKEN TO BRING THE MACHINE TO THE FULLY STOWED POSITION. ENSURE THAT THE MACHINE IS LOCKED IN A SECURE LOCATION, AND THE CONTROL KEY IS REMOVED TO PREVENT UNAUTHORISED USE OF THE MACHINE.

Downloaded from www.Manualslib.com manuals search engine

https://truckmanualshub.com/

1.2 - DECAL "CONTENT"

Decals are provided to alert the user of hazards inherent with the Aerial Work Platforms.

Decals provide the following information :

- The level of severity.
- The specific hazard.
- A method to avoid, suppress or reduce the hazard.
- Descriptive text (where required).

Familiarize yourself with the decals and the hazard severity levels.

C E / A S

A N S I / C S A

Marking	Description
1	Hazard symbol
2	Level of severity
3	Avoidance symbol pictorial
4	Avoidance text

Decals must be kept in good legible condition.

Familiarize yourself with the decals and their respective color codes.

Additional decals can be ordered from HAULOTTE Services®.

Downloaded from www.Manualslib.com manuals search engine

https://truckmanualshub.com/

1.3 - SYMBOLS AND COLORS

Symbols and colors are used to alert the operator of safety precautions and/or to highlight important safety information.

The following safety symbols are used throughout this manual to indicate specific hazards and the hazard severity level when operating or maintaining the Aerial Work Platform.

Symbol	Description
	Danger : Risk of injury or death
	Caution : Risk of material damage
	Prohibited action
	Reminder to use good practice or follow pre-operation checks
	Cross-reference to another part of the manual
	Cross-reference to another manual
	Cross-reference to repair (contact HAULOTTE Services®)
N.B. :	Additional technical information

1.4 - LEVEL OF SEVERITY

Color	Title	Description
	DANGER	Danger : Indicates a hazardous situation which if not avoided, WILL result in death or serious injury.
	WARNING	Warning : Indicates a hazardous situation which if not avoided, COULD result in death or serious injury.
	CAUTION	Caution : Failure to comply could result in minor or moderate injury.
	NOTICE	Notice : Indicates recommended practices if not followed, may result in a malfunction or damage the machine or its components.
	PROCEDURE	Procedure : Indicates a maintenance operation.

Downloaded from www.Manualslib.com manuals search engine

https://truckmanualshub.com/

1.5 - SYMBOLS LEGEND AND DEFINITIONS

Symbols are used throughout this manual to depict hazards, avoidance measures and indicate when information is required.

Refer to the following table to familiarize yourself with these symbols.

Symbol	Description	Symbol	Description	Symbol	Description
			Foot crushing hazard		High pressure fluid ejection hazard
	Body crushing hazard		Hand crushing hazard		Entanglement hazard
			Health/safety hazards related to chemicals		Health-damaging effects from hot work environment
	Electrical contact or lightning strike		Burns and scalds from contact with flames, explosion or radiation from heat sources		Injury from Electric arcs - Energy supply disconnecting devices - Batteries fire, emissions, etc
	Risk of operator's falling		Tip over due to excessive loading / wind load and excessive ground slope		Relate and coordinate directional arrows on the chassis with those on the control box
	Do not put foot in this area		Do not put your hand in this area		Keep away from product working area
	Never expose batteries and electrical component to high pressure washer		Ensure entry drop rail is down		
	Flames prohibited		Maintain safe clearance from high voltage electrically charged conductors as described in manual - Do not use in thunderstorms		Overload
	Refer to operator manual		Safety belt		Use appropriate lanyard attached to dedicated anchor point.
	Wheel pressure		Enable switch		Use safety prop before attempting any maintenance work
	Tow point		Tie down point		Lift point
	Keep away from hot surfaces		Wear protective equipment		

Downloaded from www.Manualslib.com manuals search engine

https://truckmanualshub.com/

2 - Models description

Regulation	Models
ANSI / CSA	HA100JRT
	HA130JRT-NT
CE / AS	HA32PX
	HA41PX-NT

Downloaded from www.Manualslib.com manuals search engine

https://truckmanualshub.com/

3 - Primary machine components

3.1 - LAYOUT

HA32PX - HA100JRT - HA41PX-NT - HA130JRT-NT

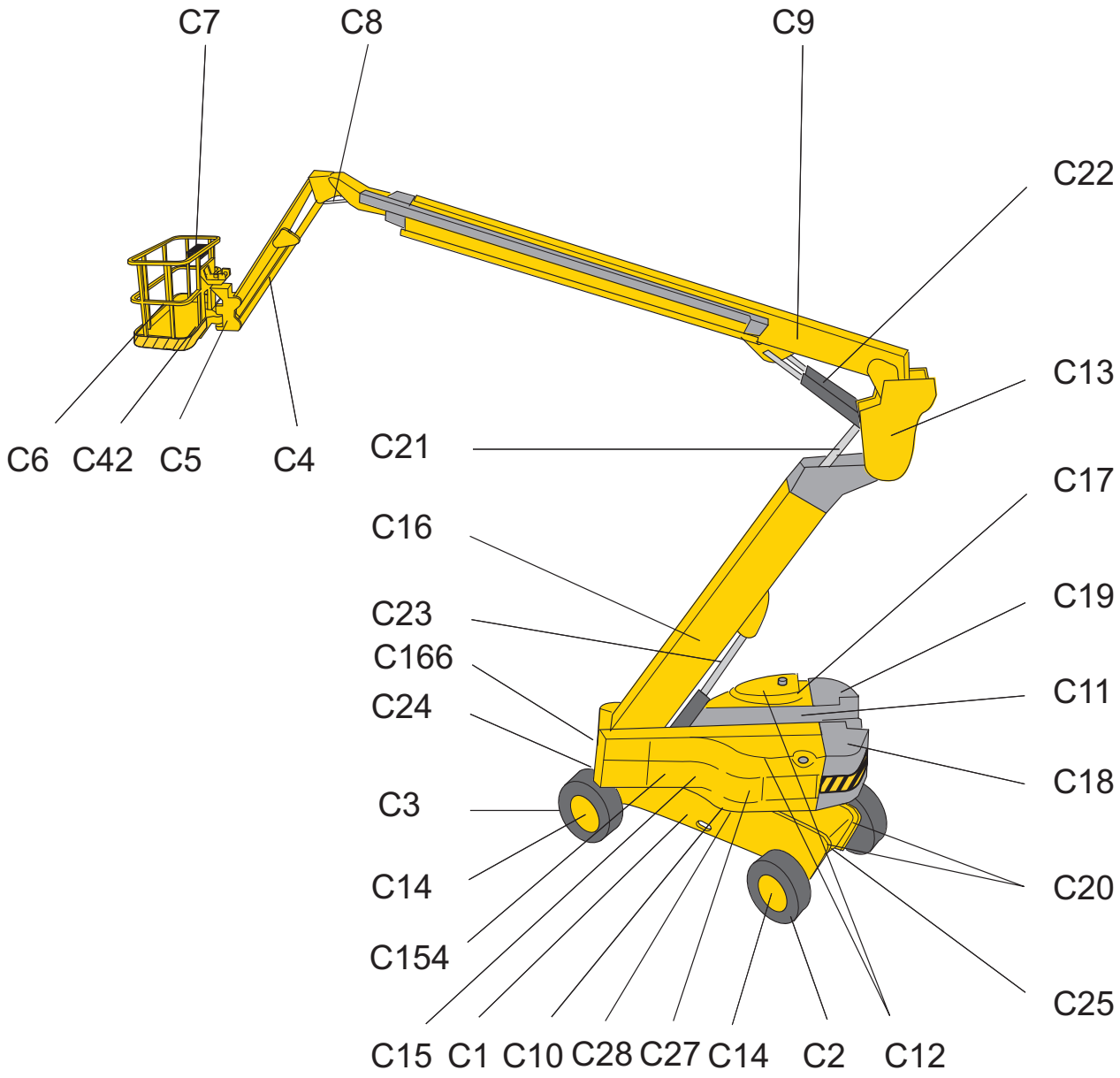

Downloaded from www.Manualslib.com manuals search engine

https://truckmanualshub.com/

B - Familiarization

Marking	Description	Marking	Description
C1	Chassis	C17	Left side cover (engine, pump and starter battery)
C2	Front driven steering axle	C18	Right counterweight
C3	Rear drive and/or steer wheel	C19	Left counterweight
C4	Jib	C20	Tie-down (and/or lifting) points
C6	Platform	C21	Link piece compensation cylinder
C7	Platform control box	C22	Boom lift cylinder
C8	Level compensation cylinder	C23	Arm lifting cylinder
C9	Upper boom	C24	Extendable fixed axle
C10	Slew ring	C25	Extendable swing axle
C11	Turntable assembly	C27	Ground control box
C12	Side cover	C28	Tilt sensor switch
C13	Arm/Boom link piece	C29	Platform rotation cylinder
C14	Hydraulic drive motor and reducer	C42	'Enable Switch' pedal
C15	Right side compartment(hydraulic oil tank and fuel tank)	C154	For Russia and the Ukraine only : Temperature probe relays
C16	Lower arm	C166	Axle extension control box

Downloaded from www.Manualslib.com manuals search engine

https://truckmanualshub.com/

3.2 - GROUND CONTROL BOX

3.2.1 - Layout

General view

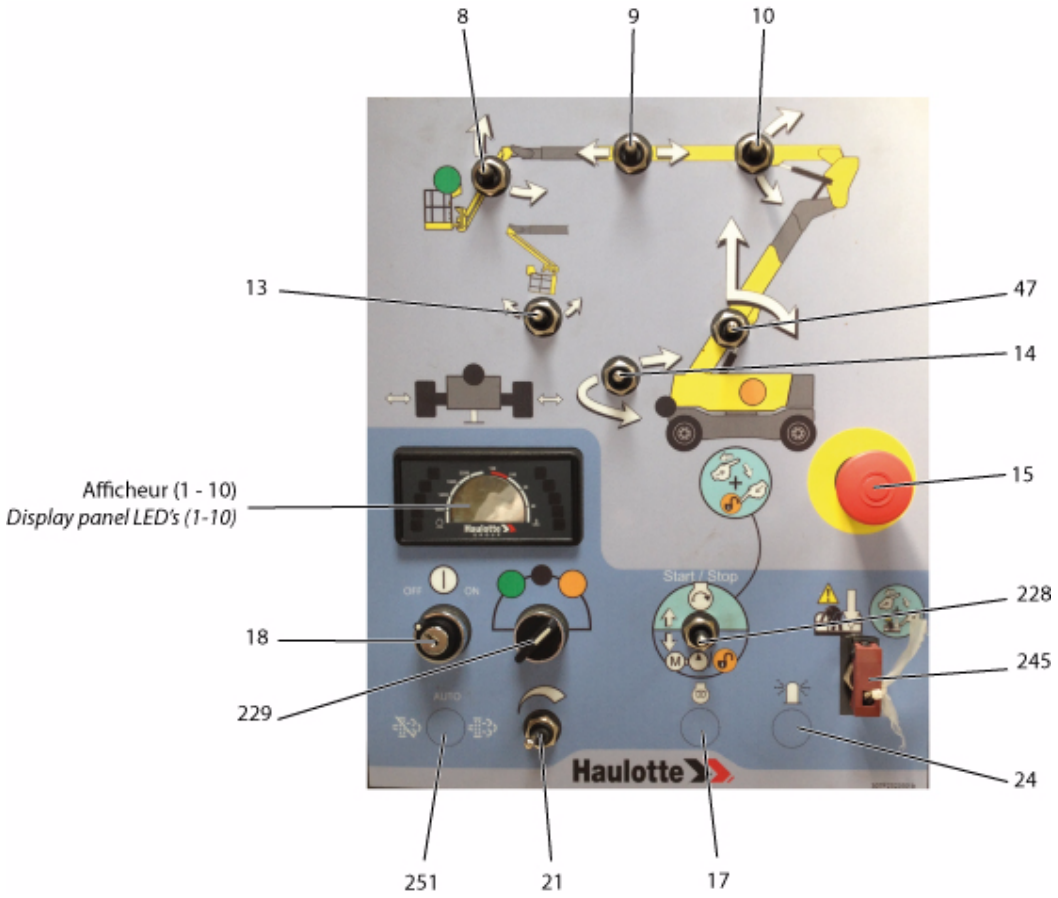

Downloaded from www.Manualslib.com manuals search engine

https://truckmanualshub.com/

Controls and indicators

Marking	Description	Function
8	Jib lifting / lowering switch	Move upwards : Jib lifting
		Move downwards : Jib lowering
9	Boom telescoping switch	Move to the left : Boom extension
		Move to the right : Boom retraction
10	Boom raising switch	Move upwards : Boom raising
		Move downwards : Boom lowering
13	Platform levelling	Move to the right : Platform leveling lowered or placed in transport position
		Move to the left : Platform leveling lifted or placed in operating position
14	Turntable rotation switch	Move to the left : Counter clockwise (CCW) rotation
		Move to the right : Clockwise (CW) rotation
15	E-stop button	Pulled out (activated) : Emergency stop activated
		Pushed in (deactivated) : Emergency stop deactivated
17	Engine pre-heating selector[1]	Move downwards : Engine pre-heating
18	ON/OFF selector	ON : Power turned ON
		OFF : Power turned OFF
21	Engine revs selector	Move to the right : Engine speed increases
		Move to the left : Engine idle speed
24	Beacon light on/off [2]	Move to the right : Beacon light on
		Move to the left : Beacon light off
47	Arm telescoping or lifting selector	Move upwards : Telescope extension or arm lifting
		Move downwards : Telescope retraction or arm lowering
228	'Enable Switch' selector / Back-up unit selector	Move upwards : Engine start
		Move downwards : Enable switch. If the engine is switched off, the emergency electropump is engaged automatically.
229	Control box energizing selector	Left : Platform control box activation
		Center : Axle extension box activation
		Right : Ground control box activation
245	"Overriding system" switch under sealed cover	Emergency lowering system enabled when seal is broken and cover is lifted. This must be used ONLY when normal operation from the ground panel is unavailable - use in emergencies ONLY.
251	DPF[3]	Not used

1. For machines fitted with
2. For machines fitted with
3. For machines fitted with

Downloaded from www.Manualslib.com manuals search engine

https://truckmanualshub.com/

3.2.2 - LEDs Display Panel (LED'S 1 - 10)

Indicators / Cluster

Marking	Description
LED 1	**Overriding system :** • Permanently lighted while the overriding switch is being used
LED 2	**Fault :** • Rapid flashing if a fault is active (current defect) • Flashing if the service counter is at zero
LED 3[1]	**Radius limitation** • Flashing : Calibration fault or automatic reach limitation • Permanently lighted : Movement disabled by the reach limitation system
LED 4	**Overload (For CE standard only) :** • Rapid flashing : Faulty weighing system • Illuminated in case of overload
LED 5	**Combustion engine pre-heating** • Illuminated while engine is pre-heating • Off if engine started and if post-heating
LED 6	**Engine warning** • Flashing : 5 flashes when ignition is switched on if service counter is less than 20 hours • Constantly on : If the service counter is at zero
LED 7	**Engine shutdown :** • Lighted in case of major engine fault (e.g. engine overheating, oil pressure, alternator fault, etc.) • Lighted in case of faults managed by the engine ECU
LED 8[2]	**DPF regeneration inhibited (DPF : Diesel Particulate Filter)**
LED 9[3]	**DPF regeneration required :** • Permanently lighted if the particle filter requires regeneration with a high clogging level (DPF : Diesel Particulate Filter)
LED 10[4]	**DPF regeneration in progress, high temperature in the exhaust system (HEST) (HEST : High Exhaust System Temperature)**

1. If machine equipped with dual load

Downloaded from www.Manualslib.com manuals search engine

https://truckmanualshub.com/

2. If engine quipped with Particulate Filter Regeneration
3. If engine quipped with Particulate Filter Regeneration
4. If engine quipped with Particulate Filter Regeneration

Symbol	Description
	Illuminated when service counter is displayed
	• Illuminated when engine is not running or when hour meter is displayed
	Low fuel level
	Illuminated when engine is not running, or if the engine is running and there is an alternator fault
	Display of service counter for 3 s when the machine is switched on, then display of the hour meter for 3 s. Then : 1. Display of one or more faults, if present, with scrolling of faults every 2 s 2. Display of service counter if it is at zero 3. Display of hour meter
	Indicates the engine speed
	• Indicates engine temperature, if available on the engine • All the bars flash if engine overheating

Downloaded from www.Manualslib.com manuals search engine

https://truckmanualshub.com/

3.3 - PLATFORM CONTROL BOX

3.3.1 - Layout

General view

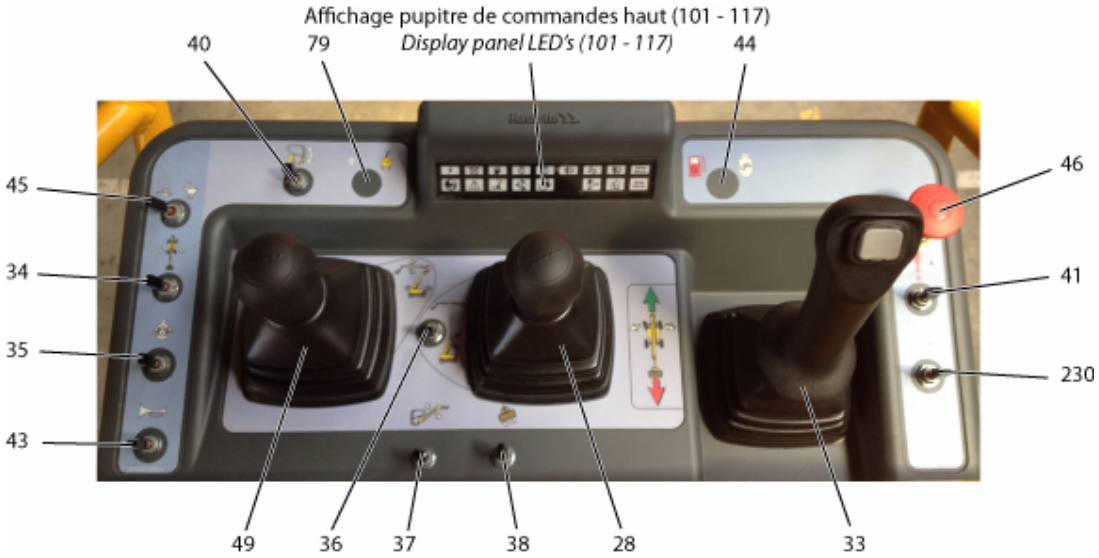

Downloaded from www.Manualslib.com manuals search engine

https://truckmanualshub.com/

Controls and indicators

Marking	Description	Function
28	Boom telescope or arm lifting/lowering joystick	Move forward : Boom retraction or arm lowering / Arm telescope extension
		Move backwards : Boom extension or arm lifting / Arm telescope retraction
33	Drive joystick	Move forward : Forwards drive
		Move backwards : Reverse drive
	Front axle steering selector	Press right side of button : Right-hand steering
		Press left side of button : Left-hand steering
34	Rear axle steering selector	Move to the right : Right-hand steering
		Move to the left : Left-hand steering
35	Differential lock selector	Toggle and hold (activated) : Maximum drive torque (on difficult or sloping ground)
		Release (deactivated) : Standard torque
36	Boom or arm position selector	Move upwards : Boom selection
		Move downwards : Arm selection
37	Jib switch	Move upwards : Jib lifting
		Move downwards : Jib lowering
38	Platform rotation switch	Move to the right : Counter clockwise (CCW) rotation
		Move to the left : Clockwise (CW) rotation
40	Platform leveling switch	Move forward : Raise platform
		Move backwards : Lower platform
41	Auxiliary power switch	Toggle and hold : Back-up unit activated
		Release : Back-up unit deactivated
43	Horn button	Horn
44	Fuel selector[1]	LPG : Propane Gas supply
		G : Petrol/Gasoline or diesel supply
45	Drive speed selector	High-speed driving
		Low-speed driving
46	E-stop button	Pulled out (activated) : Platform control box activation
		Pressed in : De-energizes control system (Engine stopped)
49	Turntable rotation joystick	Move to the right : Counter clockwise (CCW) rotation
		Move to the left : Clockwise (CW) rotation
	Boom lift joystick	Move forward : Boom up
		Move backwards : Lower boom
79	Generator selector[2]	Move to the left : Generator deactivated
		Move to the right : Generator activated
230	Engine start-up / stop selector	Start or stop the engine (depending on the machine's operating status) by moving the toggle switch

1. For machines fitted with
2. For machines fitted with

Downloaded from www.Manualslib.com manuals search engine

https://truckmanualshub.com/

3.3.2 - LEDs Display Panel (LED'S 101 - 117)

Platform control box display

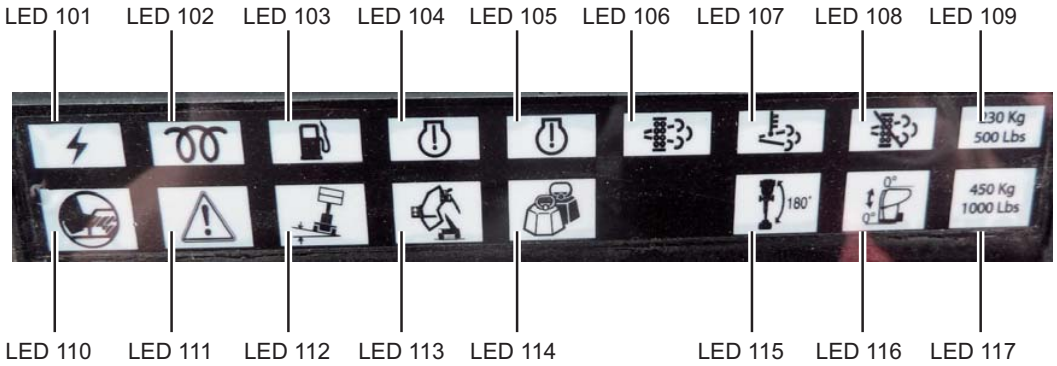

Marking	Symbol	Function	Marking	Symbol	Function
LED 101		Power ON	LED 110		Foot pedal switch
LED 102		Combustion engine pre-heating	LED 111		Fault
LED 103		Low fuel level	LED 112		Tilt
LED 104		Engine warning	LED 113		Not used
LED 105		Engine shutdown	LED 114		Overload
LED 106		DPF disable	LED 115	180°	Turret at 180°
LED 107		DPF disable	LED 116	0° 0°	Cage compensation
LED 108		DPF disable	LED 117[1]	450 kg 1000 lbs	Not used
LED 109[2]	230 kg 500 lbs	Not used			

1. If machine equipped with dual load
2. If machine equipped with dual load

Downloaded from www.Manualslib.com manuals search engine

https://truckmanualshub.com/

3.4 - AXLE EXTENSION CONTROL BOX

3.4.1 - Layout

General view

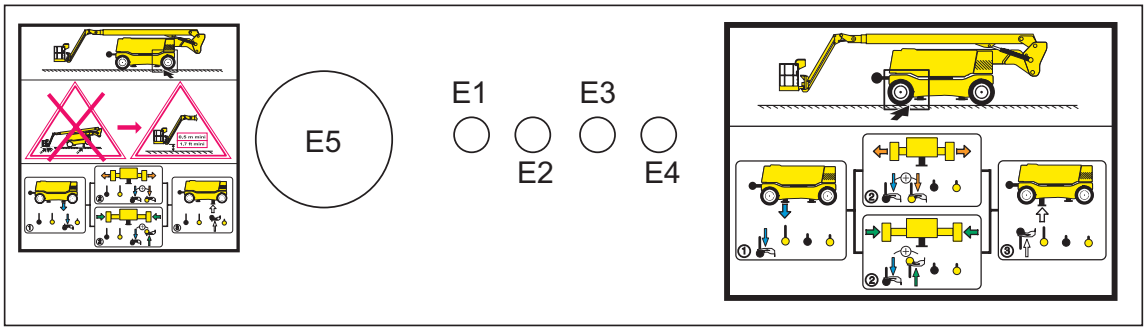

Controls and indicators

Marking	Function
E1	Outrigger cylinder lifting/lowering (chassis is lowered/raised) (Rear fixed axle)
E2	Fixed axle extension/retraction (Rear)
E3	Outrigger cylinder lifting/lowering (chassis is lowered/raised) (Front swing axle)
E4	Oscillating axle extension/retraction (Front)
E5	E-stop button

Downloaded from www.Manualslib.com manuals search engine

https://truckmanualshub.com/

4 - Performance Specifications

4.1 - TECHNICAL CHARACTERISTICS

Use the table to select the right Haulotte machine for the job.

CE and AS standards

Machine	HA32PX		HA41PX-NT	
Characteristics - Dimensions	**SI**	**Imp.**	**SI**	**Imp.**
Maximum working height	31,80 m	104 ft 4 in	41,50 m	136 ft 2 in
Maximum platform height	29,80 m	97 ft 9 in	39,50 m	129 ft 7 in
Maximum horizontal reach	21,30 m	69 ft 11 in	19,80 m	64 ft 11 in
Maximum outreach above the ground	20,80 m	68 ft 2 in	19,30 m	63 ft 3 in
Maximum platform height before driving speed restriction	2,02 m	7 ft 3in	2,50 m	8 ft 3 in
Maximum boom articulation point height	11,40 m	37 ft 3 in	17,50 m	57 ft 5 in
Turret rotation	360 °			
Platform rotation	174° (+87°/-87°)			
Jib working range	140° (+70°/-70°)			
Boom rotation angle	+70° / -40°			
Total weight	20100 kg	44,321 lb	23100 kg	50,936 lb
Maximum platform capacity	250 kg	551 lb	230 kg	500 lb
Maximum number of person allowed	2			
Maximum wind speed allowed	60 km/h	37 mph	45 km/h	28 mph
Manual force - CE - AS	400 N - 90 lbf			
Gradeability - Forwards drive	40 %			
Gradeability - Reverse drive	40 %			
Maximum rated slope allowed (slope) - CE - AS	5°		4°	
Maximum load on wheel	10260 kg	22,619 lbs	11450 kg	25,243 lbs
Maximum ground pressure of wheel on paved ground	10,8 daN/cm²	22.529 lb/ft²	12,5 daN/cm²	26.011 lb/ft²
Drive speed :				
• Unfolded machine maximum speed - Micro-speed	0,5 km/h	0.3 m/h	0,5 km/h	0.3 m/h
• Folded machine maximum speed - High speed	5 km/h	3.1 m/h	5 km/h	3.1 m/h
Maximum freewheel speed during towed operation	5 km/h	3.1 m/h	5 km/h	3.1 m/h

Downloaded from www.Manualslib.com manuals search engine

https://truckmanualshub.com/

ANSI and CSA standards

Machine	HA100JRT		HA130JRT-NT	
Characteristics - Dimensions	**SI**	**Imp.**	**SI**	**Imp.**
Maximum working height	31,80 m	104 ft 4 in	41,50 m	136 ft 2 in
Maximum platform height	29,80 m	97 ft 9 in	39,50 m	129 ft 7 in
Maximum horizontal reach	21,30 m	69 ft 11 in	19,80 m	64 ft 11 in
Maximum outreach above the ground	20,80 m	68 ft 2 in	19,30 m	63 ft 3 in
Maximum platform height before driving speed restriction	2,20 m	7 ft 3in	2,50 m	8 ft 3 in
Maximum boom articulation point height	11,40 m	37 ft 3 in	17,50 m	57 ft 5 in
Maximum platform height before driving speed restriction	22 m	72 ft 2 in	25,10 m	82 ft 4 in
Maximum boom articulation point height	11,35 m	37 ft 3 in	17,50 m	57 ft 5 in
Turret rotation	360 °			
Platform rotation	174° (+87°/-87°)			
Jib working range	140° (+70°/-70°)			
Boom rotation angle	+70° / -40°			
Total weight	20100 kg	44,321 lbs	23100 kg	50,936 lb
Maximum platform capacity	250 kg	551 lb	230 kg	500 lb
Maximum number of person allowed	2			
Maximum wind speed allowed	60 km/h	37 mph	45 km/h	28 mph
Manual force - ANSI - CSA	666 N - 150 lbf			
Gradeability - Forwards drive	40 %			
Gradeability - Reverse drive	40 %			
Maximum rated slope allowed (slope) - ANSI - CSA	0°			
Maximum load on wheel	10260 kg	22,619 lbs	11450 kg	25,243 lbs
Maximum ground pressure of wheel on paved ground	10,8 daN/cm²	22.529 lb/ft²	12,5 daN/cm²	26.011 lb/ft²
Drive speed :				
• Unfolded machine maximum speed - Micro-speed	0,5 km/h	0.3 m/h	0,5 km/h	0.3 m/h
• Folded machine maximum speed - High speed	5 km/h	3.1 m/h	5 km/h	3.1 m/h
Maximum freewheel speed during towed operation	5 km/h	3.1 m/h	5 km/h	3.1 m/h

Downloaded from www.Manualslib.com manuals search engine

https://truckmanualshub.com/

4.2 - WORKING AREA / RANGE OF MOTION

HA32PX - HA100JRT

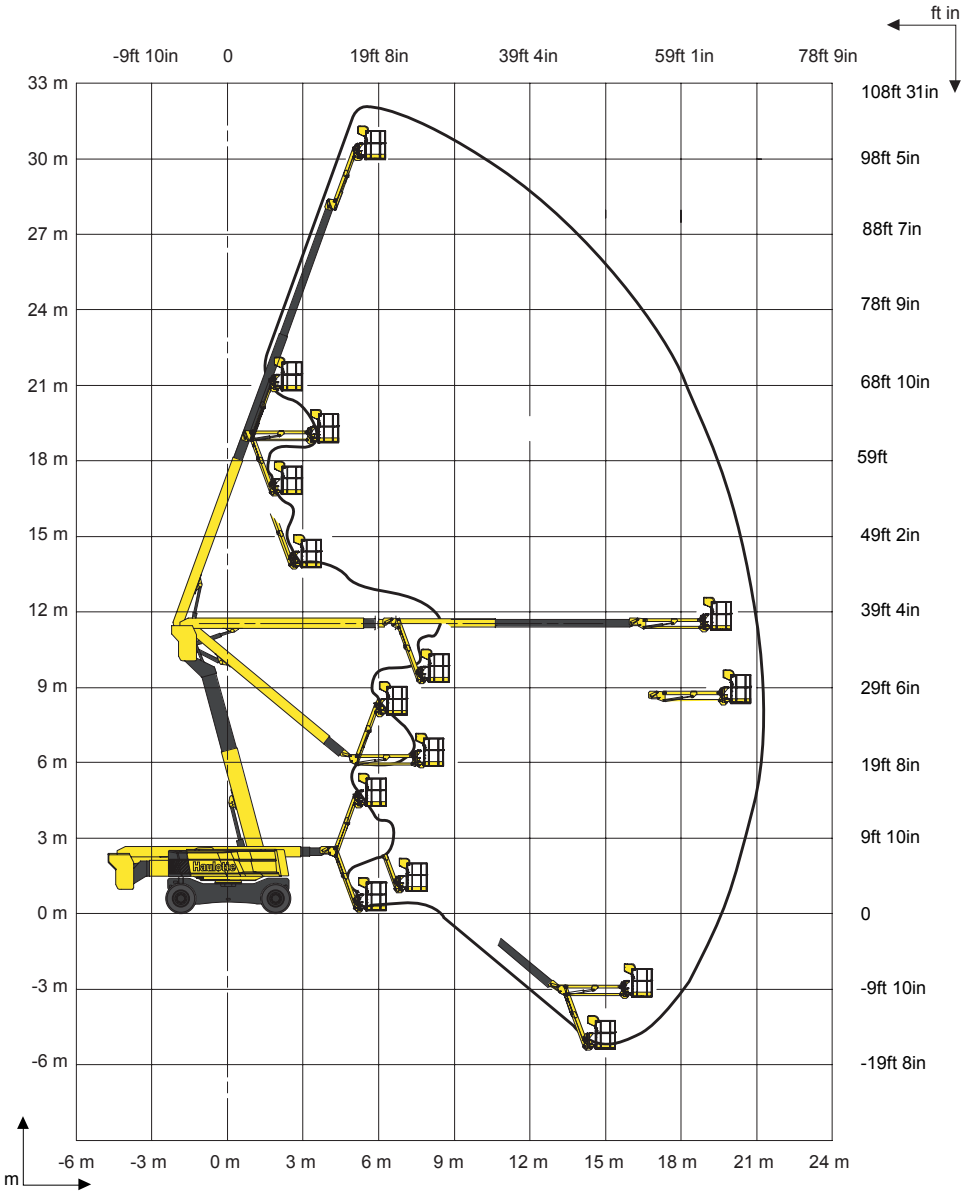

Downloaded from www.Manualslib.com manuals search engine

https://truckmanualshub.com/

HA41PX-NT - HA130JRT-NT

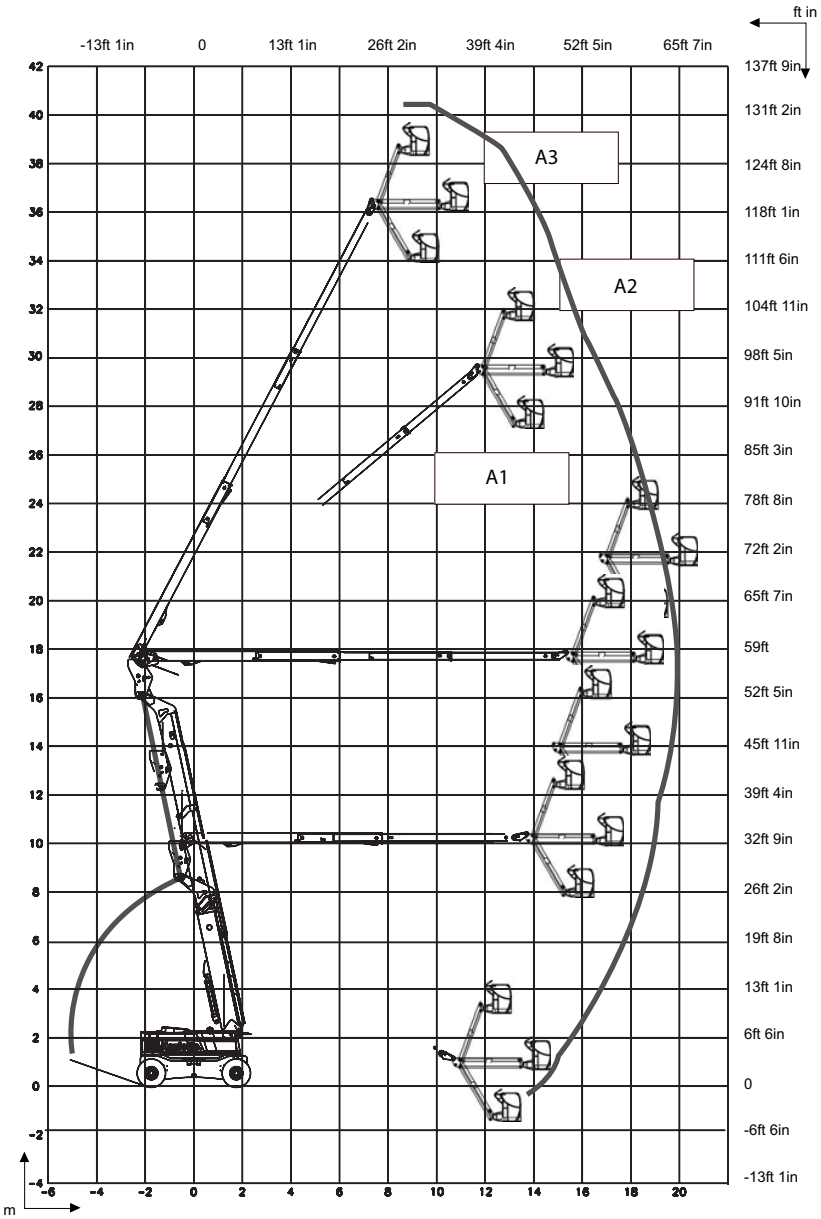

Downloaded from www.Manualslib.com manuals search engine

https://truckmanualshub.com/

5 - Decals and markings locations

CE standard - HA32PX

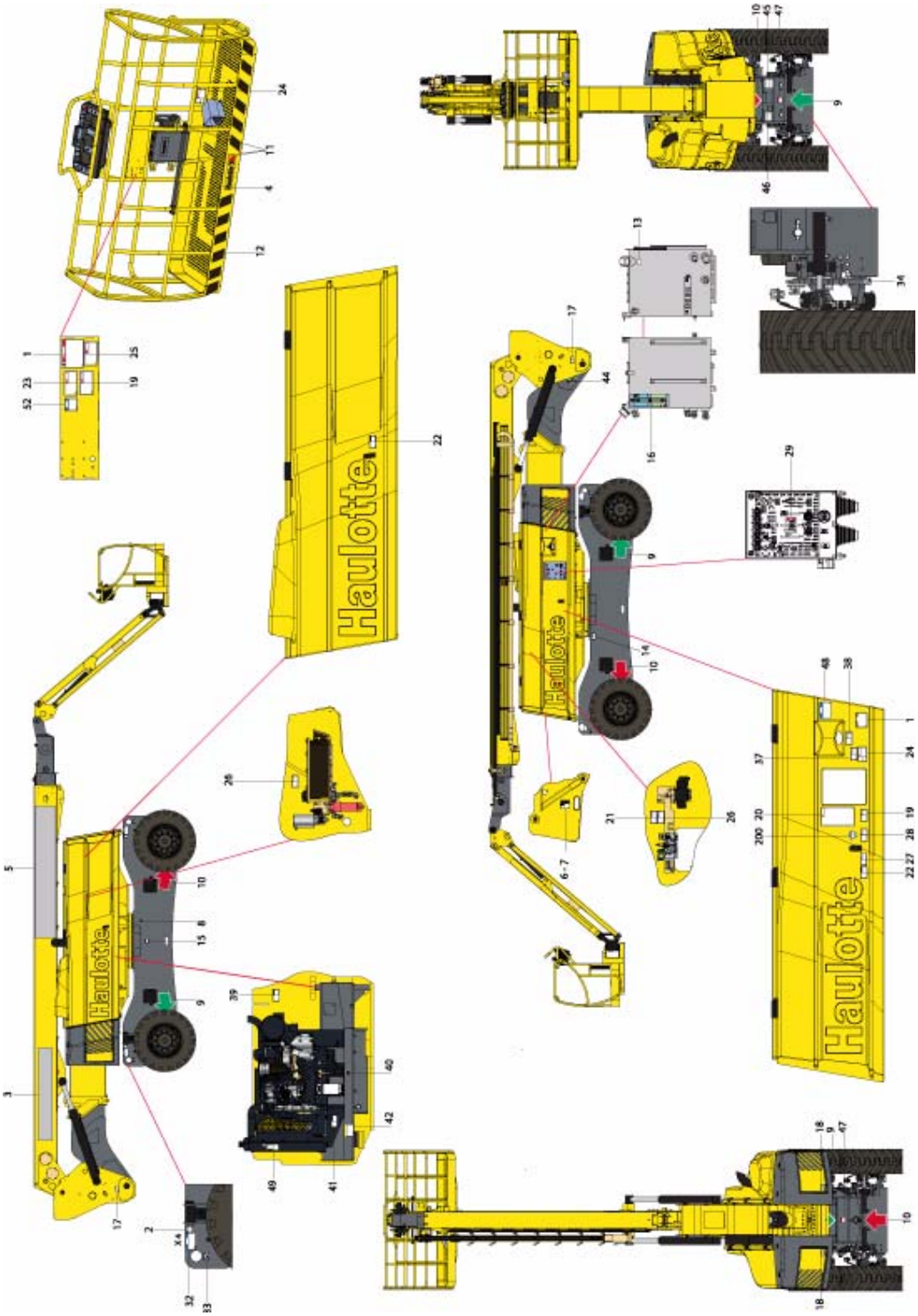

Downloaded from www.Manualslib.com manuals search engine

https://truckmanualshub.com/

B - Familiarization

CE standard - HA41PX-NT

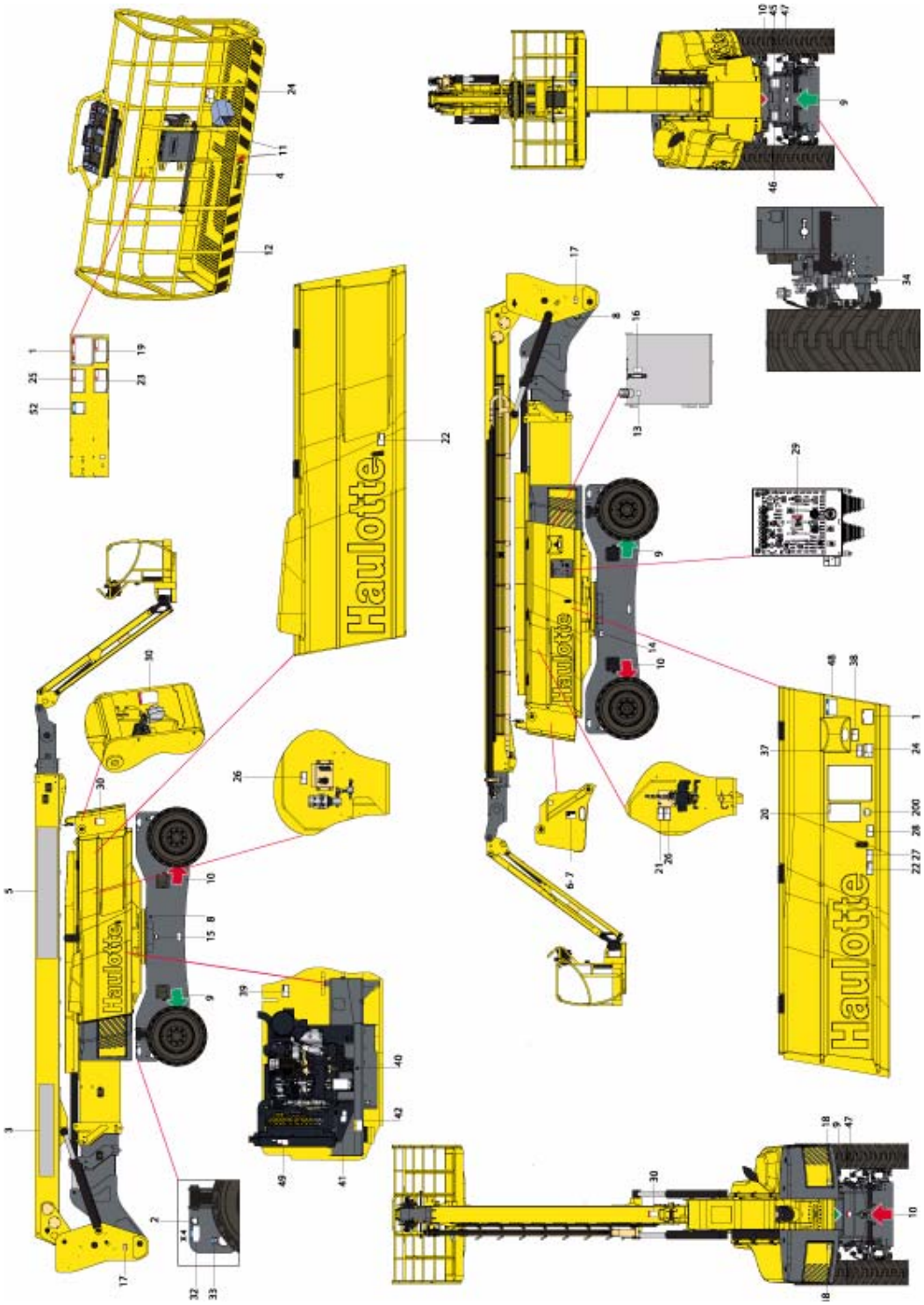

Downloaded from www.Manualslib.com manuals search engine

https://truckmanualshub.com/

CE standard

Marking	Color	Description	Quantity	HA32PX	HA41PX-NT
1	Red	Height of the floor and load	2	4000204060	4000137570
2	Blue	Maximum Pressure per Tire - Floor Loading	4	4000204080	4000137580
3	Other	Commercial name	1	3078149180	307P228380
4	Other	Small format HAULOTTE® logo	1	307P217080	
5	Other	Large format HAULOTTE® logo	1	307P217220	
6	Other	Identification plate	1	307p218070	
8	Other	Noise emission level	1	3078148740	
9	Other	Control of movements - GREEN directional arrow	4	3078143930	
10	Other	Control of movements - RED directional arrow	4	3078143940	
11	Other	Harness anchorage point	3	307P216290	
12	Other	Material risk - Yellow and black adhesive tape	1	2421808660	
13	Other	Hydraulic oil	1	307P221080	
14	Red	Remove the blocking pin before rotating	1	4000027080	
15	Green	Greasing the turntable rotation gear	1	4000025160	
16	Other	Upper and lower oil level	1	4000044210	307P221060
17	Red	Risk of crushing	2	4000024800	
18	Orange	Hand crushing hazard - Risk of crushed hands	2	4000024890	
19	Red	Operation instructions	2	4000025140	
20	Red	Operation instructions	1	In english : 4000243670 In french : 4000243680 In spanish : 4000243690	
21	Red	Prohibited use of the PVG	1	4000027070	
22	Orange	Wound foot - Do not place foot	2	4000027090	
23	Red	Risk of crushing - Driving direction	1	4000024690	
24	Red	Danger of electrocution	2	: 4000025070	
25	Red	Risk of crushing - Closing drop rail	1	4000025080	
26	Red	Danger of electrocution - Ground for welding	2	4000027100	
27	Red	Risk of crushing - Do not park	1	4000024800	
28	Red	Verification of tilt operation	1	4000027110	
29	Red	Do not interchange	1	3078145180	
30	Red	Calibration after dismantling	3		307P216930
32	Blue	Brake release	4	4000134960	
33	Blue	Anchorage point - Traction	4	4000027310	
34	Blue	Anchorage point - Elevation	4	4000027330	
37	Red	Risk of crushing - Platform	1	4000027460	
38	Red	Explosion hazard	1	4000027370	
39	Orange	Hand crushing hazard - Heat burns	1	4000027450	
40	Other	Oil CJ 4 (if fitted)	1	4000019700	
41	Orange	Hand crushing hazard - Fan	1	4000027430	
42	Yellow	Revolving cradle	1	3078151730	
44	Red	Arm compensation	1	307P223210	
45	Other	Oscillating axle extension/ retraction	1	307P215120	
46	Other	Fixed axle extension/retraction	1	3078153600	

Downloaded from www.Manualslib.com manuals search engine

https://truckmanualshub.com/

Marking	Color	Description	Quantity	HA32PX	HA41PX-NT
47	Red	Maximum effort on the stabilizers	2	307P219880	
48	Blue	Information - Explanation - LOW SULFUR	1	307P232480	
49	Orange	Risk of ejection - Fluid under pressure	1	4000027470	
52	Yellow	Socket - 240 V	1	4000027120	
200	Other	"Made in Europe"	1	4000137690	

Downloaded from www.Manualslib.com manuals search engine

https://truckmanualshub.com/

B - Familiarization

AS standard - HA32PX

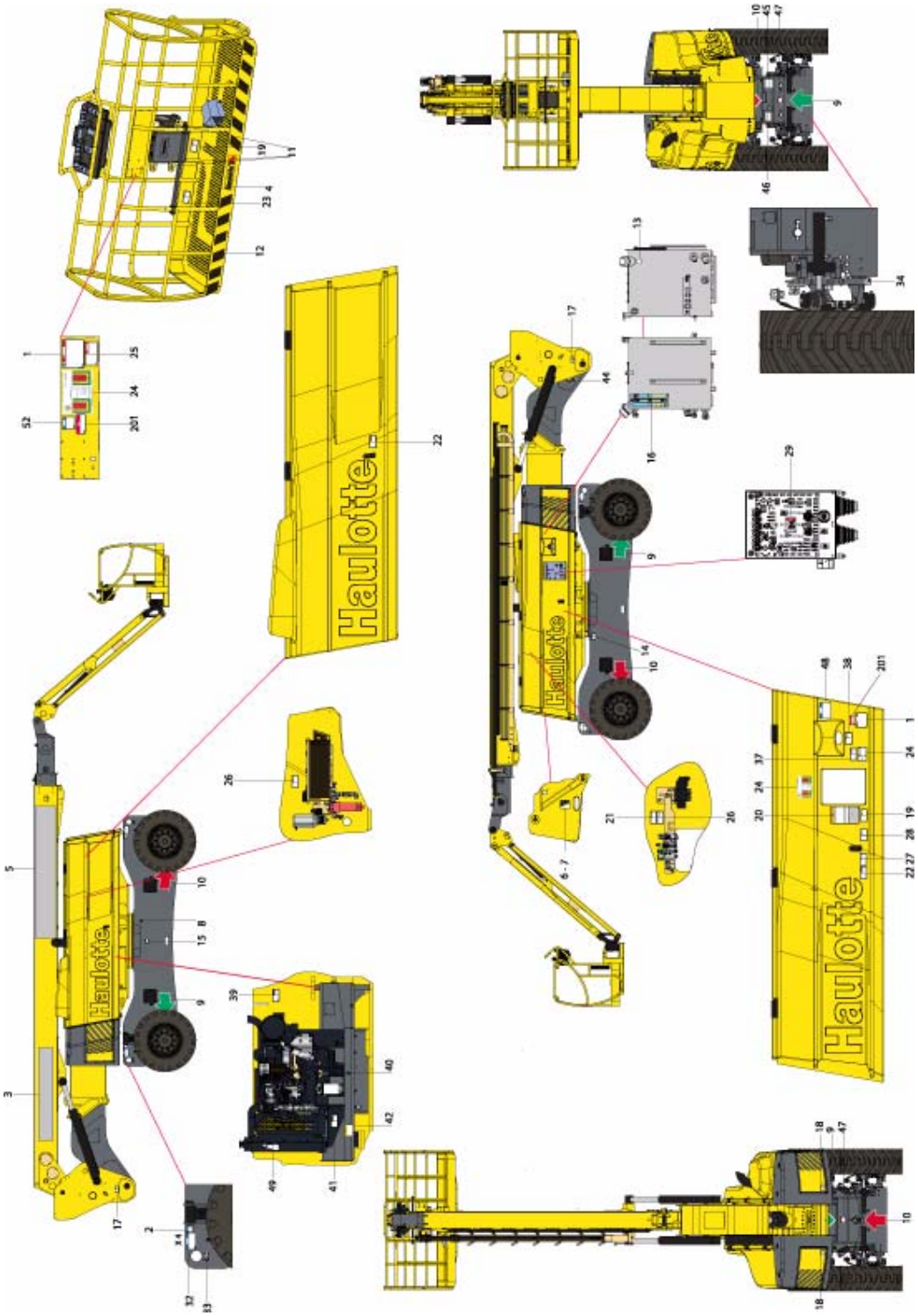

Downloaded from www.Manualslib.com manuals search engine

https://truckmanualshub.com/

B - Familiarization

AS standard - HA41PX-NT

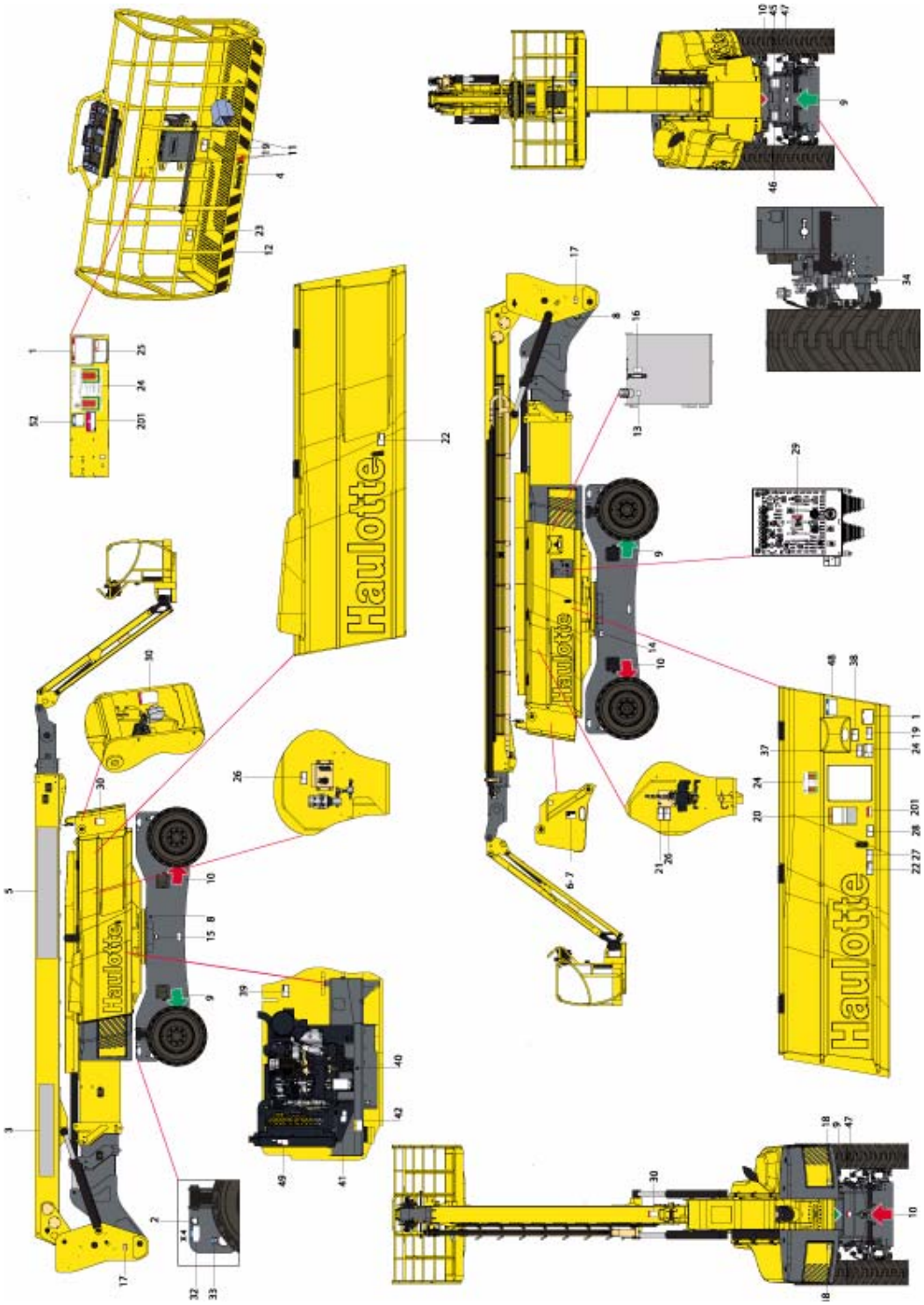

Downloaded from www.Manualslib.com manuals search engine

https://truckmanualshub.com/

B - Familiarization

AS standard

Marking	Color	Description	Quantity	HA32PX	HA41PX-NT
1	Red	Height of the floor and load	2	4000204060	4000137570
2	Blue	Maximum Pressure per Tire - Floor Loading	4	4000204080	4000137580
3	Other	Commercial name	1	3078149180	307P228380
4	Other	Small format HAULOTTE® logo	1	307P217080	
5	Other	Large format HAULOTTE® logo	1	307P217220	
6	Other	Identification plate	1	307P218070	
8	Other	Noise emission level	1	3078148740	
9	Other	Control of movements - GREEN directional arrow	4	3078143930	
10	Other	Control of movements - RED directional arrow	4	3078143940	
11	Other	Harness anchorage point	3	307P216290	
12	Other	Material risk - Yellow and black adhesive tape	1	2421808660	
13	Other	Hydraulic oil	1	307P221080	
14	Red	Remove the blocking pin before rotating	1	4000027080	
15	Green	Greasing the turntable rotation gear	1	4000025160	
16	Other	Upper and lower oil level	1	4000044210	307P221060
17	Red	Risk of crushing	2	4000024800	
18	Orange	Hand crushing hazard - Risk of crushed hands	2	4000024890	
19	Red	Operation instructions	2	4000025140	
20	Red	Operation instructions	1	3078144560	
21	Red	Prohibited use of the PVG	1	4000027070	
22	Orange	Wound foot - Do not place foot	2	4000027090	
23	Red	Risk of crushing - Driving direction	1	4000024690	
24	Red	Danger of electrocution	2	: 4000025070	
25	Red	Risk of crushing - Closing drop rail	1	4000025080	
26	Red	Danger of electrocution - Ground for welding	2	4000027100	
27	Red	Risk of crushing - Do not park	1	4000024800	
28	Red	Verification of tilt operation	1	4000027110	
29	Red	Do not interchange	1	3078145180	
30	Red	Calibration after dismantling	3		307P216930
32	Blue	Brake release	4	4000134960	
33	Blue	Anchorage point - Traction	4	4000027310	
34	Blue	Anchorage point - Elevation	4	4000027330	
37	Red	Risk of crushing - Platform	1	4000027460	
38	Red	Explosion hazard	1	4000027370	
39	Orange	Hand crushing hazard - Heat burns	1	4000027450	
40	Other	Oil CJ 4 (if fitted)	1	4000019700	
41	Orange	Hand crushing hazard - Fan	1	4000027430	
42	Yellow	Revolving cradle	1	3078151730	
44	Red	Arm compensation	1	307P223210	
45	Other	Oscillating axle extension/retraction	1	307P215120	
46	Other	Fixed axle extension/retraction	1	3078153600	
47	Red	Maximum effort on the stabilizers	2	307P219880	
48	Blue	Information - Explanation - LOW SULFUR	1	307P232480	
49	Orange	Risk of ejection - Fluid under pressure	1	4000027470	
52	Yellow	Socket - 240 V	1	4000027120	
201	Red	Wearing of a safety harness is essential	2	3078144520	

Downloaded from www.Manualslib.com manuals search engine

https://truckmanualshub.com/

B - Familiarization

Russia and the Ukraine version - HA32PX

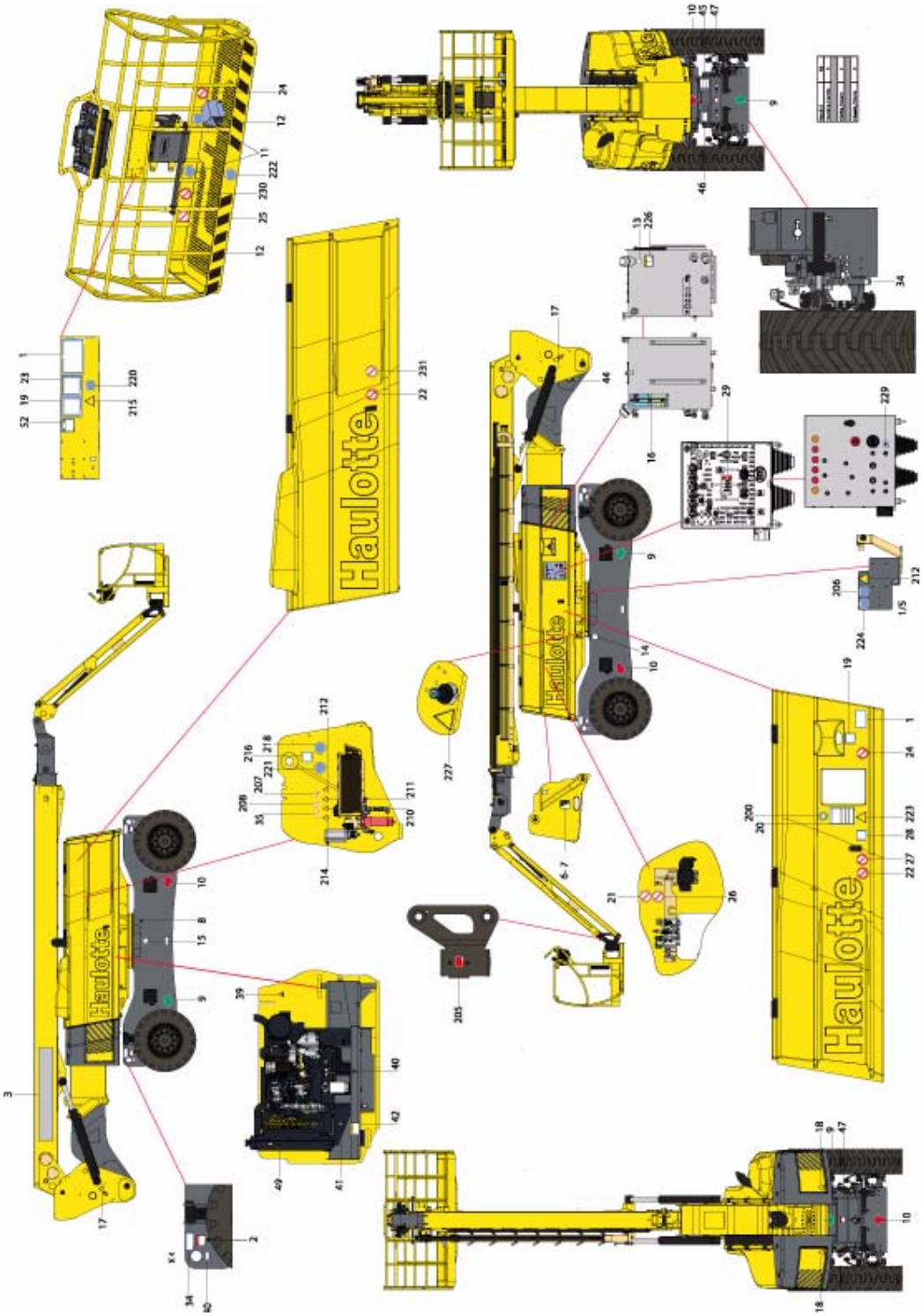

Downloaded from www.Manualslib.com manuals search engine

https://truckmanualshub.com/

B - Familiarization

Russia and the Ukraine version - HA41PX-NT

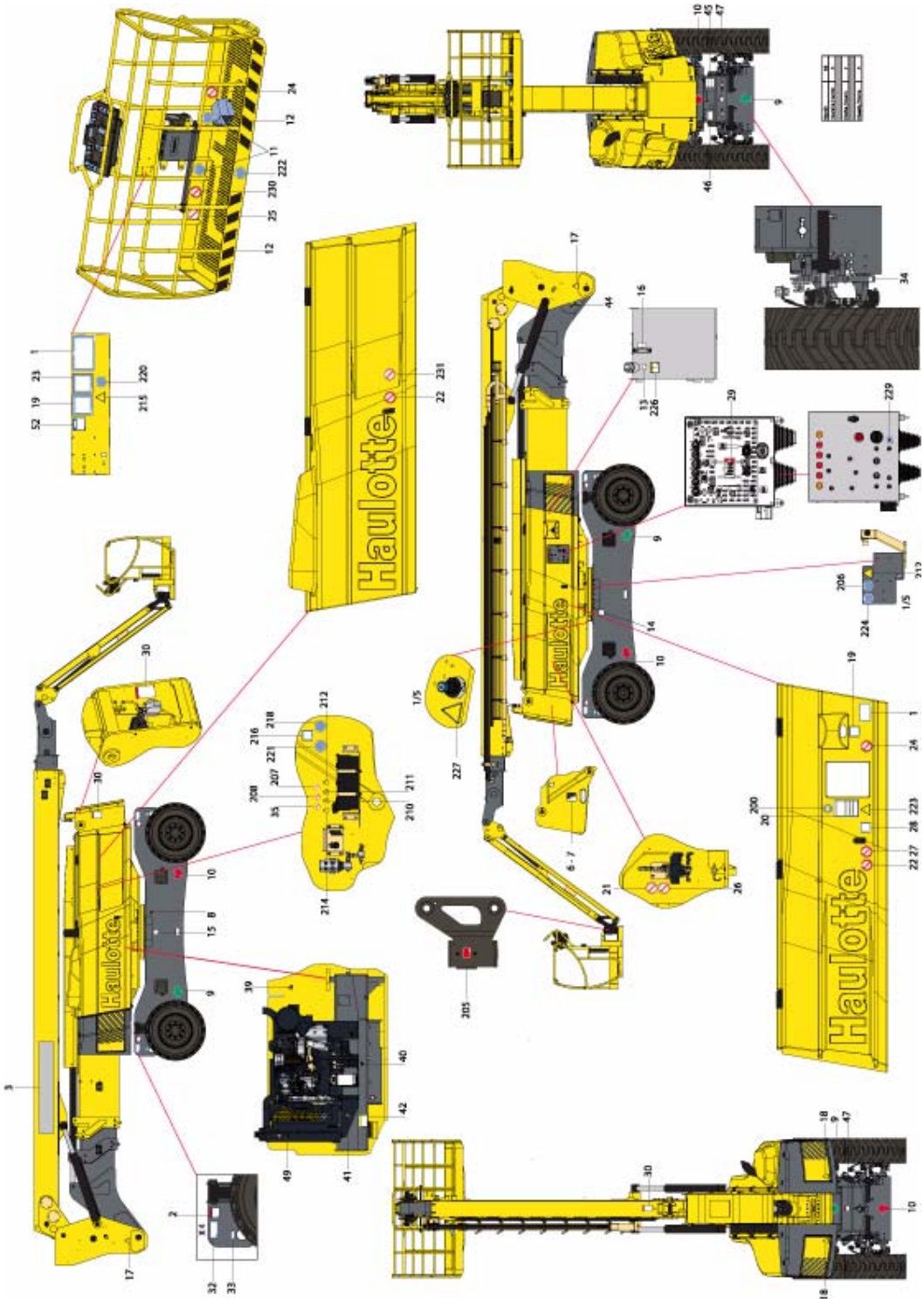

Downloaded from www.Manualslib.com manuals search engine

https://truckmanualshub.com/

Russia and the Ukraine version

Marking	Color	Description	Quantity	HA32PX	HA41PX-NT
1	Red	Height of the floor and load	2	4000011950	4000011990
2	Blue	Maximum Pressure per Tire - Floor Loading	4	307P218850	307P219490
3	Other	Commercial name	1	3078149180	307P228380
1	Red	Height of the floor and load	2	4000204060	4000137570
2	Blue	Maximum Pressure per Tire - Floor Loading	4	4000204080	4000137580
3	Other	Commercial name	1	3078149180	307P228380
6	Other	Identification plate	1	For Russia : 307P227820 For Ukraine : 307P227830	
8	Other	Noise emission level	1	3078148740	
9	Other	Control of movements - GREEN directional arrow	4	3078143930	
10	Other	Control of movements - RED directional arrow	4	3078143940	
11	Blue	Harness anchorage point	3	307P227500	
12	Other	Material risk - Yellow and black adhesive tape	1	2421808660	
13	Other	Hydraulic oil	1	307P221080	
14	Red	Remove the blocking pin before rotating	1	307P227810	
15	Green	Greasing the turntable rotation gear	1	307P227020	
16	Other	Upper and lower oil level	1	4000044210	307P221060
17	Yellow	Risk of crushing	2	307P227670	
18	Yellow	Hand crushing hazard - Risk of crushed hands	2	307P227660	
19	Blue	Operation instructions	2	For Russia : 307P227190 For Ukraine : 307P227840	
20	Red	Operation instructions	1	For Russia : 307P225160 For Ukraine : 307P227850	
21	Red	Prohibited use of the PVG	1	4000079680	
22	Red	Wound foot - Do not place foot	2	307P227010	
23	Blue	Risk of crushing - Driving direction	1	307P227040	
24	Red	Danger of electrocution	2	307P226960	
25	Red	Risk of crushing - Closing drop rail	1	307P226950	
26	Red	Danger of electrocution - Ground for welding	2	307P226970	
27	Red	Risk of crushing - Do not park	1	307P227000	
28	Blue	Verification of tilt operation	1	For Russia : 307P227060 For Ukraine : 307P227870	
29	Red	Do not interchange	1	3078145180	
30	Red	Calibration after dismantling	3		307P216930
32	Blue	Brake release	4	4000135980	
33	Blue	Anchorage point - Traction	4	4000135970	
34	Blue	Anchorage point - Elevation	4	4000135960	
35	Red	Electrocution Hazard - Water projection	1	4000025130	
37	Yellow	Risk of crushing - Platform	1	4000014290	
39	Yellow	Hand crushing hazard - Heat burns	1	4000200810	
40	Other	Oil CJ 4 (if fitted)	1	4000019700	
41	Yellow	Hand crushing hazard - Fan	1	307P226940	
42	Yellow	Revolving cradle	1	307P215290	

Downloaded from www.Manualslib.com manuals search engine

https://truckmanualshub.com/

Marking	Color	Description	Quantity	HA32PX	HA41PX-NT
44	Red	Arm compensation	1	307P223210	
45	Other	Oscillating axle extension/ retraction	1	307P215370	
46	Other	Fixed axle extension/retraction	1	307P215380	
47	Red	Maximum effort on the stabilizers	2	307P219880	
48	Blue	Information - Explanation - LOW SULFUR	1	307P232480	
49	Yellow	Risk of ejection - Fluid under pressure	1	4000277330	
52	Yellow	Socket - 240 V	1	4000027120	
200	Blue	"Made in Europe"	1	4000137690	
205	Red	Lubrication point	1	307P219370	
206	Blue	Caution disconnection compulsory	1	307P226690	
207	Red	Flames prohibited	1	307P226750	
208	Red	Smoking forbidden	1	307P226760	
210	Yellow	Battery danger	1	307P226790	
211	Yellow	Fire Hazard	1	307P226800	
212	Yellow	Electrical danger	1	307P226810	
213	Yellow	Risk of burns	1	307P226830	
214	Yellow	Corrosion hazard	1	307P226830	
215	Yellow	Danger unstable side	1	307P226930	
216	Blue	Battery maintenance	1	For Russia : 307P227180 For Ukraine : 307P227860	
217	Other	Tamper-proof	15	307P227450	
218	Blue	Caution glasses	1	307P227460	
219	Blue	Caution helmet compulsory	1	307P226680	
220	Blue	Caution helmet compulsory	1	307P227470	
221	Blue	hand protection compulsory	1	307P227490	
222	Blue	Obligatory routing	1	307P227510	
223	Yellow	Danger unstable side	1	307P227680	
224	Blue	Plug12 V	1	307P227700	
225	Blue	Plug12 V	1	307P227710	
226	Yellow	Winter grade hydraulic oil	1	307P223700	
227	Yellow	Tilt verification	1	4000011690	
228	Blue	Pre-heating and horn	1	4000014840	
229	Blue	Horn	1	4000014830	
230	Red	Do not travel down slopes in high speed	1	307P226990	
231	Red	No admittance to unauthorized persons	1	307P227560	

Downloaded from www.Manualslib.com manuals search engine

https://truckmanualshub.com/

ANSI and CSA standards - HA100JRT

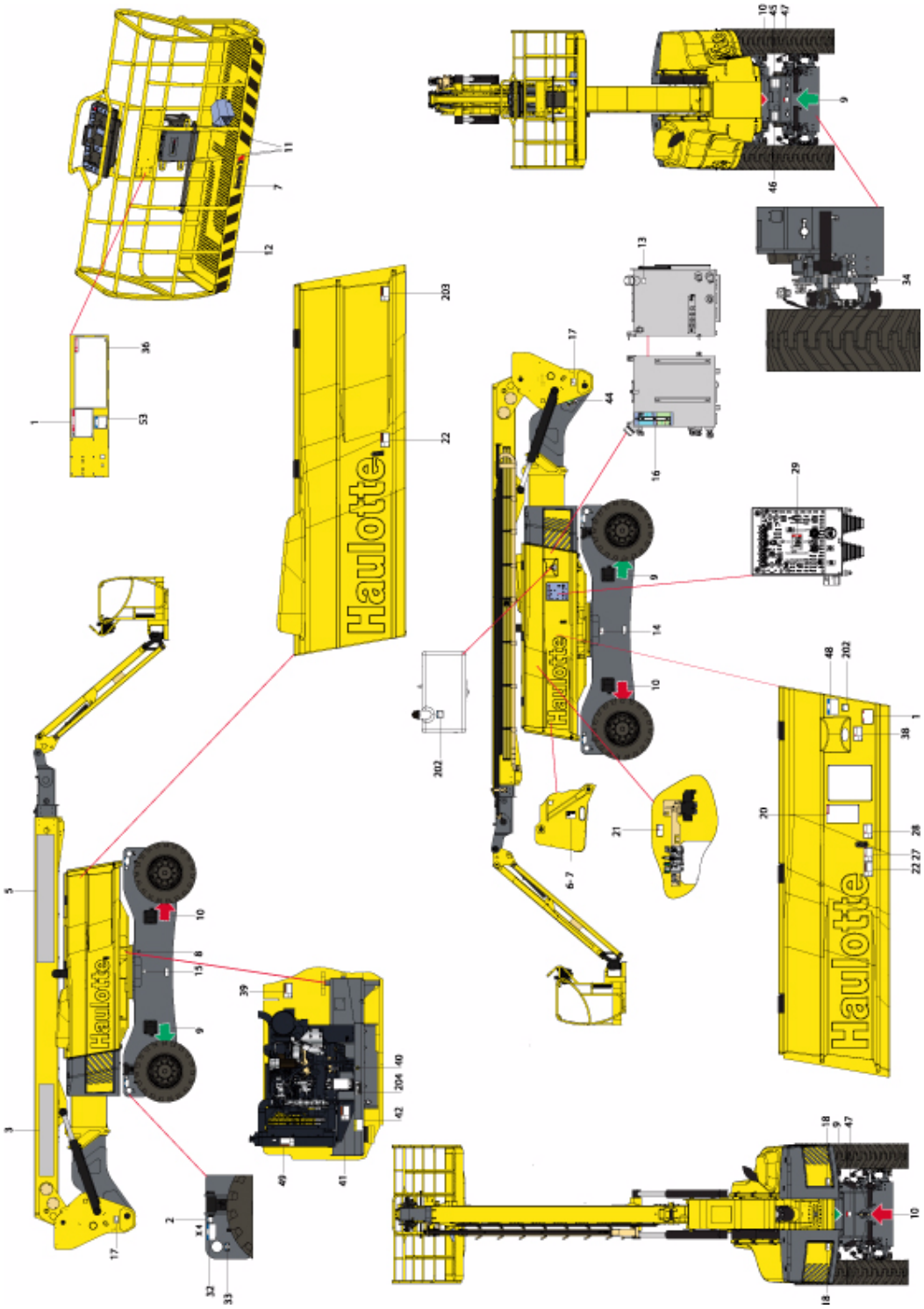

Downloaded from www.Manualslib.com manuals search engine

https://truckmanualshub.com/

ANSI and CSA standards - HA130JRT-NT

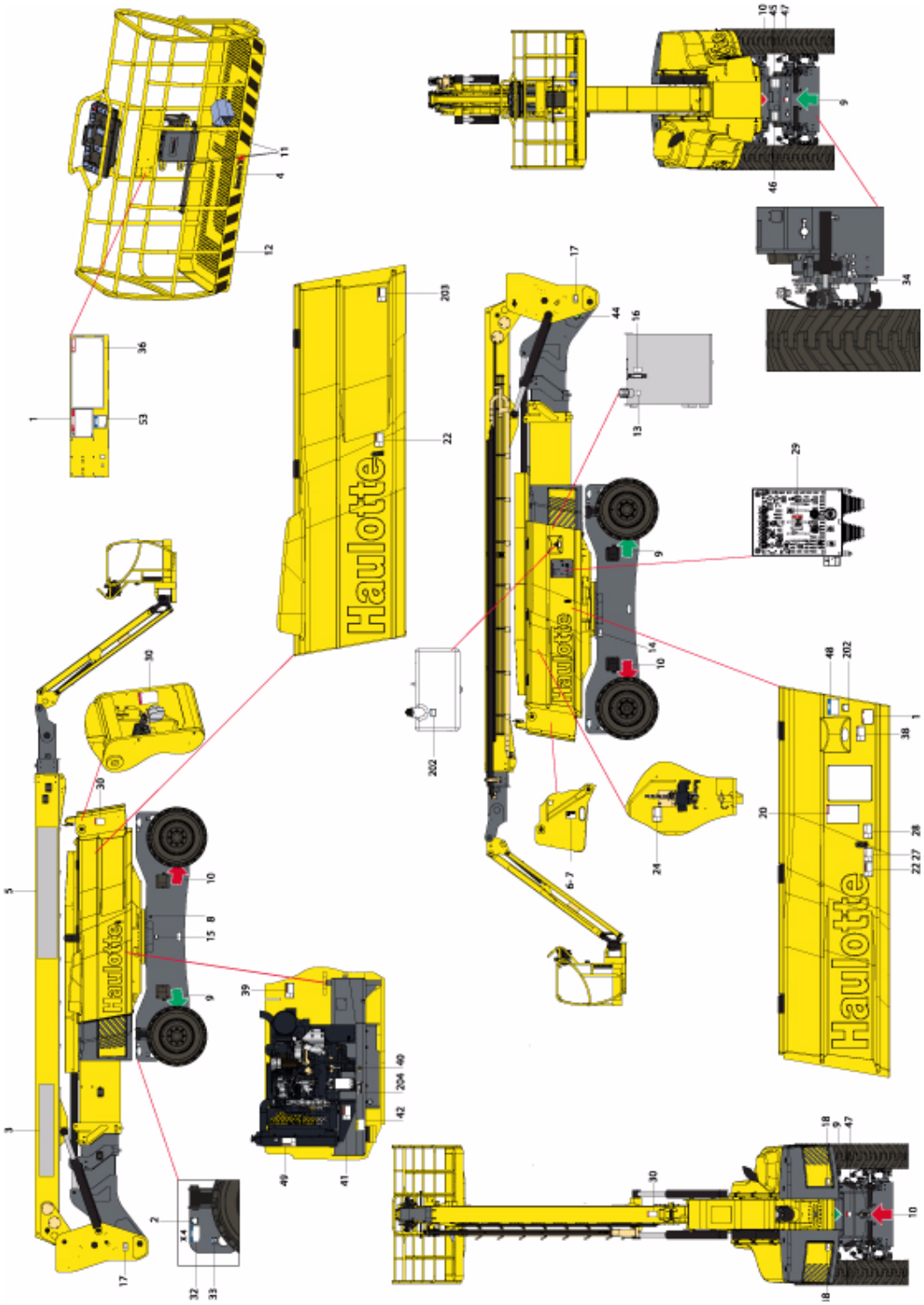

Downloaded from www.Manualslib.com manuals search engine

https://truckmanualshub.com/

ANSI and CSA standards

Marking	Color	Description	Quantity	HA100JRT	HA130JRT-NT
1	Red	Height of the floor and load - Single load machine	2	In english : 4000204110 In french : 4000204120 In spanish : 4000204130	In english : 4000137590 In french : 4000137600 In spanish : 4000137610
2	Blue	Maximum Pressure per Tire - Floor Loading	4	4000204100	4000137620
3	Other	Commercial name	1	307P227290	307P219510
4	Other	Small format HAULOTTE® logo	1	307P217080	
5	Other	Large format HAULOTTE® logo	1	307P217220	
6	Other	Identification plate	1	In english : 307P218170 In french : 307P218170 + 4000088480 In spanish : 307P218170 + 4000088490	
8	Other	Noise emission level	1	307P226480	
9	Other	Control of movements - GREEN directional arrow	4	3078143930	
10	Other	Control of movements - RED directional arrow	4	3078143940	
11	Other	Harness anchorage point	3	307P216290	
12	Other	Material risk - Yellow and black adhesive tape	1	2421808660	
13	Other	Hydraulic oil	1	307P221080	
14	Red	Remove the blocking pin before rotating	1	In english : 4000024830 In french : 4000068080 In spanish : 4000086510	
15	Green	Greasing the turntable rotation gear	1	4000025160	
16	Other	Upper and lower oil level	1	4000044210	307P221060
17	Red	Risk of crushing	2	In english : 4000024640 In french : 4000067680 In spanish : 4000086460	
18	Orange	Hand crushing hazard - Risk of crushed hands	2	In english : 4000024770 In french : 4000067710 In spanish : 4000086490	
20	Red	Operation instructions	1	In english : 4000027570 In french : 4000068880 In spanish : 4000086640	
21	Red	Prohibited use of the PVG	1	In english : 4000024820 In french : 400006790 In spanish : 4000086470	
22	Orange	Wound foot - Do not place foot	2	In english : 4000024840 In french : 4000068180 In spanish : 4000086610	
27	Red	Risk of crushing - Do not park	1	In english : 4000024640 In french : 4000067680 In spanish : 4000086460	
28	Red	Verification of tilt operation	1	In english : 4000024860 In french : 4000068090 In spanish : 4000086520	
29	Red	Do not interchange	1	3078145180	
30	Red	Calibration after dismantling	3		307P216930
32	Blue	Brake release	4	4000134960	
33	Blue	Anchorage point - Traction	4	4000027310	
34	Blue	Anchorage point - Elevation	4	4000027330	

Downloaded from www.Manualslib.com manuals search engine

https://truckmanualshub.com/

B - Familiarization

Marking	Color	Description	Quantity	HA100JRT	HA130JRT-NT
36	Red	Operation instructions	1	In english : 4000027580 In french : 4000083200 In spanish : 4000086650	
38	Red	Explosion hazard	1	In english : 4000025010 In french : 4000068130 In spanish : 4000086560	
39	Orange	Hand crushing hazard - Heat burns	1	In english : 4000025040 In french : 4000068110 In spanish : 4000086540	
40	Other	Oil CJ 4 (if fitted)	1	4000019700	
41	Orange	Hand crushing hazard - Fan	1	In english : 4000025020 In french : 4000068100 In spanish : 4000086530	
42	Yellow	Revolving cradle	1	3078151730	
44	Red	Arm compensation	1	307P223210	
45	Other	Oscillating axle extension/ retraction	1	307P215120	
46	Other	Fixed axle extension/retraction	1	3078153600	
47	Red	Maximum effort on the stabilizers	2	307P219890	
48	Blue	Information - Explanation - LOW SULFUR	1	307P232480	
49	Yellow	Risk of ejection - Fluid under pressure	1	In english : 4000024730 In french : 4000068140 In spanish : 4000086570	
53	Blue	Socket - 110 V	1	4000027590	
202	Blue	Diesel Fuel Only	2	4000201430	
203	Orange	Protective clothing required	1	In english : 4000025030 In french : 4000068120 In spanish : 4000086550	
204	Other	Internal combustion engine	1	4000097490	

Downloaded from www.Manualslib.com manuals search engine

https://truckmanualshub.com/

C - Pre-operation inspection

1 - Recommendations

The owner, the site manager, the supervisor and the operator are all responsible to ensure the machine is fit for the work it is to perform; i.e. that the machine is suitable to carry out the work in complete safety and in compliance with this Operator's Manual. All managers who are responsible for persons operating the machine must be familiar with the local regulations currently applicable in the country of use and ensure that they are adhered to.

Before using the machine, read the previous chapters in this manual. Ensure that you have understood the following points :

- Safety precautions.
- Operator's responsibilities.
- Conditions and the operating principles of the machine.

2 - Working area assessment

To ensure safety during operation, the following should be considered :

- Segregate other site traffic (delivery vehicles, dumpers, etc) from the work area.
- Check the work area for localised features, e.g. manholes, service ducts, potholes, etc.
- Check ground covers (temporary and permanent) are strong enough to withstand the applied pressure
- Check ground covers are secured and monitor them. Take similar action for permanent covers.
- Establish the load bearing capacity (distributed load and point loading, e.g. outriggers) when working inside a building or on a structure.
- Provide supervision to ensure safe systems of work are appropriate and being used.
- Check for overhead crushing and contact hazards.
- Check weather conditions have not altered ground conditions (e.g. heavy or prolonged rain).
- Establish limits for safe operation (e.g. maximum wind speed). Remember conditions can change internally (e.g. if roller doors are opened).
- Comply with permit to work systems where sites have them (e.g. chemical plants).
- Provide a rescue plan for all risks, including falls and crush hazards. Ensure personnel understand and are appropriately trained in the rescuing procedures. Site based personnel trained in operation of functions and in the emergency lowering systems from the ground control box should be present.
- Assess other alternative work methods or equipment before operating near a steep slope. If the machine must be placed near an edge or steep slope, ensure barriers are available to support the weight of the machine. Take into consideration the machine's stopping distance. If this is not possible, evaluate and establish the placement of machine and sequence of operations so that the aerial work platform can operate in a safe manner (e.g. machine is in line with the edge rather than towards the edge).

Extra care must be taken if aerial work platforms are used to manoeuvre up through several levels of steelwork. There is a risk of the operator being trapped should the boom or basket strike the steelwork.

This risk increases with the number of steelwork levels and if material is piled up on lower level reducing the spacing between levels.

Downloaded from www.Manualslib.com manuals search engine

https://truckmanualshub.com/

3 - Inspection and Functional test

3.1 - DAILY INSPECTION

Each day before the beginning of a new work session and with each change of operator, the machine must be subjected to a visual inspection and a complete functional test.

- **Never use a defective or a malfunctioning aerial work platform.**
- **If any item on the check list is marked "No" during the inspection; machine must be tagged and placed out of service.**
- **Do not operate the machine until all identified items are corrected and it has been declared safe for operation.**

In case of loose fasteners, refer to torque table value in maintenance book.

In case of leaks, replace the damaged part before use.

In case of structural part deformation, cracks, broken weld, paint chips, replace the part before use.

Sample of broken welds

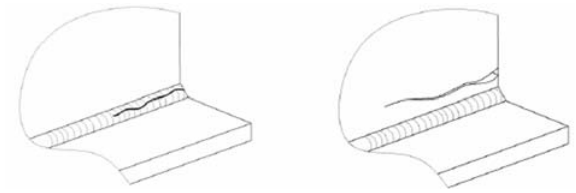

Inspection Forms are provided to assist your inspection process.

We recommend these forms to be completed daily and stored to assist with your maintenance schedule.

Each action is depicted in the daily inspection sheet using the following symbols.

	Visual inspection without disassembly		Lubrication-Grease		Functional adjustments
	Drain		Test and validate		Tighten
	Check levels		Systematic replacement		
	Visual inspection with small disassembly or movement needed to reach the part. Replacement is necessary.		Proof tests. Need HAULOTTE Services® authorization. For countries where machines are not subject to controlled periodic maintenance.		

Downloaded from www.Manualslib.com manuals search engine

https://truckmanualshub.com/

C - Pre-operation inspection

Haulotte GROUP	Daily inspection				
	Visual inspection without disassembly		Check level		
			To check by test		
		Yes	No	Corrected	Not applicable
Manuals and displays. Clean or replace if necessary.					
Presence, cleanliness and visibility of the dataplate					
Presence, cleanliness and legibility of operator's and maintenance manuals					
Presence and cleanliness of load chart of the machine					
Control box (Ground and Platform)					
Presence and cleanliness of the control box					
No visible damage					
All decals at the control boxes are clean and legible					
Operation of start / stop device					
Operation of E-stop button device					
Operation of enable switch					
Operation of horn from platform control box					
Operation of movement from platform control box					
Test warning alarm lights and buzzer					
Overriding indicators turn off after 1 sec					
Overriding switch at ground control box is sealed					
No abnormal noise and jerk on movement from platform control box					
Joysticks and movement switches return to neutral					
Work Platform. Floor, guardrails, access and extensions					
No cracks, broken weld, paint chips					
No deterioration and visible damage					
Harness anchor points are not cracked or damaged, with the decal attached and legible					
No screws or missing / loose parts					
Entry bar/gate closes automatically and is not prevented from closing.					
Folding guard-rail (if fitted) is fixed securely in position					
Lift assembly (jib, boom, mast, arm, turret)					

Downloaded from www.Manualslib.com manuals search engine

https://truckmanualshub.com/

C - Pre-operation inspection

No cracks, broken weld, paint chips					
No deterioration and visible damage					
No screws or missing / loose parts					
No foreign body in joints or slides					
Presence of securely fitted maintenance devices (safety prop)					
Canopy opens and locks properly					
Frame, axle, steering system, stabilizers arms ...					
No cracks, broken weld, paint chips					
No deterioration and visible damage					
No screws or missing / loose parts					
No foreign body in joints or slides					
State of tires/tyres (wear, cutting, damage ...)					
Wheel reducer is undamaged and operates smoothly					
Canopy opens and locks properly					
Rotation system : orientation turret, basket and jib					
No cracks, broken weld, paint chips					
No deterioration and visible damage					
No screws or missing / loose parts					
No foreign body in joints or slides					
Exterior gear wheel greasing					
Pin, pin stop, bearing ...					
Presence of the turret pin and its locking device					
No bent, cracked or broken pins, pin stops, bushes or bearings					
Pulleys, chains and wire rope					
No cracked or broken chains, links and fittings					
Pulleys and clamps are not worn, rusted or damaged					
Cylinder and hydraulic component : pumps, filters, manifold					
No leaks on the pump, tank or fittings					
No deformation, visible damage, broken weld or leaks on hydraulic cylinder					
No screws or missing / loose parts					
Presence and operation of hydraulic filter (no clogged)					
Hydraulic oil level					
Energy storage and motorisation: tanks, batteries and engine					

Downloaded from www.Manualslib.com manuals search engine

https://truckmanualshub.com/

C - Pre-operation inspection

Engine oil level (add in stowed position)					
Fuel level (add in stowed position)					
No screws or missing / loose parts					
Presence and good condition of hydraulic hose					
Presence and good condition of engine components					
Presence and good condition of the batteries: terminations and clamps, fluid level ...					
Electric cables					
No torn or split wire sheaths					
No evidence of chemical damage or corrosion on all cables					
No oxidation or corrosion on terminals					
Sensors and safety device					
Stabilizers operate correctly and lock securely in position					
Slope limiting device operate properly					
Axle locking device operate properly					
Pothole safety device operate properly (if equipped)					
Test of load sensing system (visual warning at control box)					

Serial number :	Model :
Hours of operation :	
HAULOTTE Services® contract reference :	
Intervention record number :	Signature :
Date :	
Name :	

Downloaded from www.Manualslib.com manuals search engine

https://truckmanualshub.com/

4 - Safety functional checks

To protect the user and the machine, safety systems prevent the movement of the machine beyond its operating limits. These safety systems when activated immobilize the machine and prevent further movement.

The operator must be familiar with this technology and understand that is not a malfunction but an indication that the machine has reached an operation limit.

Aerial Work platforms are equipped with two control boxes which allow operators to safely use the machine. "An auxiliary device (overriding system) is available on ground control box when primary power source fails. Each control box is equipped with an E-Stop button, which cuts all movements when pushed in.

The following checks describe the operation of the machine and the specific controls required.

For the location and description of these controls : refer to section B 3.2 and D 2 Platform panel and B 3.3 and D 3 Ground panel.

4.1 - E-STOP BUTTON CHECK

Ground control box E-stop button

Step	Action
1	Pull both E-Stop buttons (15) at ground panel and (46) at platform panel.
2	Set the ON/OFF key switch (18) at ground panel to the ON position.
3	Turn the selector switch (229) knob to the right to energize the ground control box. LED's (1 - 10) on the display will light up.
4	Start the engine by moving the enable/auxiliary power switch (228) upwards.
5	Push the E-stop button (15).
6	Check that the engine stops running.
7	No movements are functional.

Platform control box E-stop button

Step	Action
1	Pull out the E-Stop button (15) at ground panel.
2	Set the ON/OFF key switch (18) at ground panel to the ON position.
3	Turn the selector switch knob (229) at ground panel to the left to energize platform box.
4	Pull out the E-Stop button (46) at platform panel.
5	Start the engine from platform using Start/Stop switch (230).
6	Push in E-Stop button (46) at platform.
7	Check that the engine stops running.
8	No movements are functional.

Downloaded from www.Manualslib.com manuals search engine

https://truckmanualshub.com/

Axle extension control box E-Stop button

Step	Action
1	Pull the E-stop buttons(15, 46, E5).
2	Set the ON/OFF key switch (18) to ON position.
3	Turn the control box activation selector switch (229) to the centre to activate the axle control box. The indicators light up.
4	Push the E-stop button (E5). The indicator goes out.

4.2 - ACTIVATION OF CONTROLS

The enable switch must be active to allow all movements.

The "Enable Switch" system depends on the machine configuration and will consist of one of the following :

- Joystick trigger at platform panel (if fitted).
- Foot pedal switch in the basket.
- Enable switch at ground panel.

4.3 - FAULT DETECTOR

The machine is equipped with an on-board fault detection system, which indicates the type of fault to the operator.

The fault is identified by a default code.

The default code is dispalyed at the ground control box.

According to the type of fault, the machine MAY switch into DOWNGRADEMODE and certain movements are prevented to maintain Operator's safety.

Do not use the machine until the fault has been corrected.

4.3.1 - Indicators/LED's test

From the ground control box

Step	Action
1	Pull both the E-Stop buttons (46) at platform panel and (15) at ground panel.
2	Set the ON/OFF key switch (18) to ON position.
3	Check that the LED's (1 - 10) light up on the display panel.
4	Check that the LED's on the display are all turned off after 1 sec.

From the platform control box

Step	Action
1	Pull E-Stop button (15) at ground panel.
2	Turn the ON/OFF key switch (18) at ground panel to ON position.
3	Turn the energizing selector switch (229) to the left to energize platform control box.
4	First push in the E-Stop button (46) at platform panel, then pull out.
5	Check that the LED's (101 - 117) light up on the platform display panel.
6	Check that the LED's (101 - 117) on the display are all turned off after 1 sec.

Downloaded from www.Manualslib.com manuals search engine

https://truckmanualshub.com/

4.3.2 - Buzzers test

From the ground control box

Step	Action
1	Pull both E-Stop buttons (15) at ground panel and (46) at platform panel.
2	Set the ON/OFF key switch (18) to ON position.
3	Buzzers at ground and platform will beep.

4.4 - AUTOMATIC ENGINE CUT-OUT

The engine automatically cuts out in the following conditions :

- The alternator is not functioning.
- Engine temperature is too high.
- Oil pressure is too low.
- E-Stop(s) are pushed in.
- The machine is switched off.
- E-stop(s) pushed in.

4.5 - OVERLOAD SENSING SYSTEM (IF FITTED)

If the platform load exceeds the maximum allowed load, no movement is possible from the 2 control boxes.

At ground and platform control boxes a buzzer sounds and an indicator light warns the operator

To return the machine to normal operation remove weight from the platform until the load is below the maximum allowed load.

Daily check that the LED's illuminate when the machine is switched on :

- Verify that the Overload system is active : Refer to Indicators (6) at ground panel and (30) at platform panel.
- Verify that the buzzers are functioning : Refer to Buzzers test

A periodic inspection of these devices must be performed according to the recommendation in Maintenance Schedule.

4.6 - OSCILLATING AXLES (IF EQUIPPED)

To improve the driving capability on rough terrain, the front axle is equipped with an oscillating mechanism. When the extending structure is retracted and is in the stowed position, oscillating mechanism is unlocked to adapt itself to the features of ground operation. When the extending structure is out of the stowed position, a safety device locks the oscillating mechanism to reduce overturning hazard.

A visual inspection must be performed each day to ensure the absence of leaks from the oscillating cylinder and associated plumbing connections including the hydraulic hoses.

A periodic inspection of this device must be conducted according to the recommendation in the maintenance schedule.

Downloaded from www.Manualslib.com manuals search engine

https://truckmanualshub.com/

4.7 - SLOPE WARNING DEVICE

From each control boxes, a buzzer alerts the operator that the machine is not folded and is positioned on a slope exceeding the slope allowed.

On slope, as long as the extendable structure is out of the stowed position, the drive is forbidden (CE and AS standards).

All movements are allowed.

In this case, fully lower the platform and reposition the machine on level ground before raising the platform again.

To restore the drive function, perform the sequences of following movements :

1. Completely retract the boom.
2. Lower the boom.
3. Lower the arm.

To check the tilt sensor at ground control box

Step	Action
1	Open the right hand compartment cover (component location diagrams) and locate the tilt sensor (C28) on the left side of the ground control box.
2	Pull both E-Stop buttons; (15) at ground panel and (46) at platform panel.
3	Set the ON/OFF key (18) switch to ON position.
4	Turn the selector switch (229) knob to the right to energize ground control box.
5	Start the engine by moving the enable/auxiliary power switch (228) upwards.
6	Stow the telescoping boom by actuating the boom raise/lower switch (10), boom telescope switch (9) and arm lifting switch (47).
7	While manually tilting the sensor (C28), move it towards the front and hold.
8	Raise the boom to more than 10 degrees above horizontal using the raise/lower switch (10).
9	Check that the audible beep sounds and the movement is slowed.

4.8 - TRAVEL SPEED LIMITATION

The machine has a selector of 2 driving speeds - low and high.

All driving speeds are enabled when the machine is not elevated. Adjust position of Jib (if equipped) to enhance field of vision during driving.

When the machine is elevated, drive speed is automatically reduced, regardless of the drive speed chosen.

Daily check that the speed is limited to less than 1 km/h (0.6 mph) when :

- The boom is raised by more than 10° above horizontal.
- The boom is telescoped/extended more than 400 mm (16 in.).
- The arm is raised by more than 2 m (6 ft 7 in) above horizontal.

Downloaded from www.Manualslib.com manuals search engine

https://truckmanualshub.com/

4.9 - MOVEMENT SPEED

The movement speed of the following elements is regulated by the movement speed selector switch :

- Jib lifting/rotation.
- Platform rotation/compensation.

The movement speed depends on the user's choices and the environment.

N.B.-:-JOYSTICK PROPORTIONALITY MUST BE USED TO ADJUST THE SPEED OF THE OTHER MOVEMENTS.

4.10 - ON-BOARD ELECTRONICS

The machine is equipped with a specific calculator configured for this machine's functionalities.

Do not interchange the Calculator (calibration restoration) between machines..

4.11 - OPERATING TEMPERATURE (FOR RUSSIA AND THE UKRAINE ONLY)

Hydraulic energy to perform machine movements is provided by an electric motor driven hydraulic pump.The operating speed of the pump is governed by a speed regulator. If the temperature limits are reached, an audible alarm alerts the operator. All movements are cut off except getting back to transport position.

Temperature limits :

- Electric machines : from 0° C / 32° F to + 40° C / 104° F
- Fuel-powered machines : from - 20° C / - 4° F to + 40° C / 104° F

Location of operating temperature thermostat

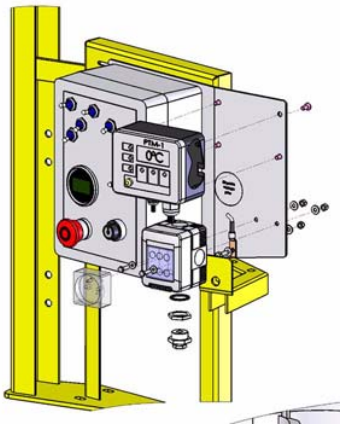

Downloaded from www.Manualslib.com manuals search engine

https://truckmanualshub.com/

4.12 - RADIUS LIMITATION

N.B.-:-THE PRESENCE OF THIS DEVICE DEPENDS ON THE MACHINE CONFIGURATION.

The radius limit indicator flashes to indicate that a controlled movement has occured to maintain the machine within the stability limit.

Movement is slowed down.

Driving and other additional movements are forbidden.

The radius limit indicator is ON constantly if the operator requests a movement that causes the machine to exceed the radius limit.

For machines over 40 m(131 ft2 in), the red markers located on the telescope are a visual means of checking that the radius limit function is working properly.

4.13 - AXLE EXTENSION

Axle extension improves machine stability.

If the axles are retracted, the machine's capacities are reduced.

Only the following movements are possible :

- Turntable rotation if the boom is in horizontal position.
- Boom raising if the turntable is aligned with the axis.

If the axles are extended, all movements are possible.

Axle extension is possible if the machine is completely stowed, the jib below horizontal position and the turntable aligned with the axis.

4.14 - DRIVE BUZZER

For Russia and the Ukraine only :

Each travel or lifting movement activates a buzzer (horn).

4.15 - BOOM CONTROL SYSTEM

For HA41PX-NT (HA130JRT-NT) only

Machine stowed, extend the telescope from the platform control box.

Telescope extension must stop as soon as the 1 red stop on the right side of the telescope is visible.

If telescope extension continues once the 1 red stop is visible, stop telescope extension immediately.

Contact HAULOTTE Services® to repair the system.

Place barriers around the perimeter of the work area.
Never use a faulty machine

Downloaded from www.Manualslib.com manuals search engine

https://truckmanualshub.com/

Notes

Downloaded from www.Manualslib.com manuals search engine

https://truckmanualshub.com/

1 - Operation

1.1 - MAJOR DESCRIPTION

Aerial Work platforms are equipped with two control boxes which allow operators to safely use the machine.

An auxiliary device (overriding system) is available on ground control box to assist in the rescue of people in emergency.

Each control box is equipped with an E-Stop button, which allows operators to stop all movements, if necessary.

Only trained and authorized personnel shall be permitted to operate this aerial work platform.

Prior to operation :

- Read, understand and obey all instructions and safety precautions in this manual and attached to the aerial work platform.
- Read, understand and obey all Federal, State and local codes and regulations.
- Become familiar with the proper use of all controls.

1.2 - OPERATION FROM THE GROUND CONTROL BOX

- Turning ON and OFF of the machine is performed with selector key switch (18).
- Activation of a desired control box is achieved by turning the control box energizing selector switch (229) to the desired position.
- The ground control box is energized and is active ONLY when :
  - The E-stop buttons on both ground and platform control boxes are not pressed in (deactivated) (Deactivated).
  - The machine is switched on.
  - Ground control box is selected.
- An E-Stop button at each control panel stops all movements when pressed in; including shutting off an engine (if equipped).

N.B.-:-AN E-STOP BUTTON PRESSED IN DOES NOT TURN OFF THE MAIN POWER SUPPLY TO THE MACHINE.

- An enable switch (228) provided must be activated and maintained to authorize one or more function movements. If enable switch (228) is kept engaged without selecting a function movement for more than 8 s; enable switch is automatically de-activated.
- The release of "Enable switch" (228) while performing a movement stops all the movements. The stop of movements is progressive. If the "Enable switch" system is re-pressed, the movement doesn't restart. It could restart only when the selected function switch/joystick is released to neutral position.
- All switches and joystick operating a movement, return automatically to neutral when released.
- At power up, a switch in it's neutral position will be taken into account to authorize movement.
- "Enable switch" selector / Emergency pump
  - Engine running, the switch acts as an "enable switch" only.
  - Engine stopped, the switch acts as the "enable switch" and operate the emergency pump control.

Downloaded from www.Manualslib.com manuals search engine

https://truckmanualshub.com/

- Overriding system : The ground control box is designed for maintenance and emergency rescue operations only. Refer to Section D 4.2 To rescue operator from platform.
- The status of the switches is tested automatically when the machine is switched on, and checked at every starting. A switch will be active only after it has been detected to be in neutral position. The following switches are not controlled :
  - Accelerator: engine rpm
  - Beacon light (if fitted)
- A switch provides the start and stop of the engine.
- Engine speed (If fitted) : This switch increases the engine rpm to the maximum speed.
- A buzzer beeps in the following configurations :
  - Check when power is switched on.
  - Overload (if fitted).
  - Slope if machine is out of stowed position.
  - Hydraulic oil overheating.
  - Movements option.
  - Driving option.
- Indicators / Cluster : All indicators are checked after powering on the machine.

Downloaded from www.Manualslib.com manuals search engine

https://truckmanualshub.com/

1.3 - OPERATION FROM THE PLATFORM CONTROL BOX

- The platform control box can only be used if :
  - The E-stop buttons on both ground and platform control boxes are not pressed in (deactivated).
  - Machine switched on at ground control box.
  - Platform control box selected from ground control box.
  - Overriding system not activated.
- A faulty joystick is not taken into account to control a movement. If this fault disappears, the movement is authorised again.
- An E-stop button is present at each control box, it stops all movement and the engine (if equipped). The E-stop button doesn't have function to turn off the power supply of the machine.
- An "enable switch" (228) (foot pedal switch in the basket) is present and should be activated to authorize one or more function movements. If the enable switch is kept active for more than 8 seconds without selecting a function movement, then movement is disallowed. The enable switch must be released (reset) before movement can occur.
- The release of "Enable switch" (228) while performing a movement stops all the movements. The stop of movements is progressive. If the "Enable switch" is pressed again quickly within 0,5 s the movement restarts. If the "Enable switch" is not pressed again quickly enough within + 0,5 s the movement will not restart. It could restart only when the selected function switch/joystick is released to neutral position.
- All switches and joystick operating a movement, return automatically to neutral when released.
- At power up, a switch in it's neutral position will be taken into account to authorize movement.
- The status of the switches and joysticks is checked when the machine is switched on. A switch or joystick is only considered validated after it is detected in neutral.
- A buzzer beeps in the following configurations :
  - Check when power is switched on.
  - Overload (if fitted).
  - Slope if boom is out of the stowed position.
- Emergency pump : See dedicated paragraph
- Indicators - All the indicators are tested
  - When the machine is switched on.
  - When the combustion engine is started from the platform control box.

Downloaded from www.Manualslib.com manuals search engine

https://truckmanualshub.com/

Symbol	Description
	Machine switched on : • Rapid flashing : When the platform control box has not been selected or the upper or ground emergency stop is pressed (machine switched on but control box inactive) • Constantly on : When the machine is switched on
	Foot pedal switch : • Constantly on : "Enable switch" pedal activated and validated
	Faults : • Rapid flashing : If a fault is active (current fault)
	Overload (If machine equipped with weighing system) : • Rapid flashing : Faulty weighing / overload system • Illuminated in case of overload
	Dumping / Tilt (if fitted) : • Permanently on in case of tilting, machine folded or unfolded
	Radius limitation • Flashing : Calibration fault or automatic reach limitation • Permanently lighted : Movement disabled by the reach limitation system
230 kg 500 lbs	• Constantly on : Valid load selection • Flashing : If the machine leaves the 450 kg zone with the selector on 450 kg[1]
450 kg 1000 lbs	• Constantly on : Valid load selection • Flashing : If the load selection is changed to 450 kg in the 230 kg zone[2]
0° 0°	**Cage compensation +/- 10° :** • Permanently lighted if the angle of the platform reaches +/- 10° in relation to the horizontal and movement control
	Low fuel level
	Combustion engine pre-heating : • Illuminated while engine is pre-heating • Off if engine started and if post-heating
	Engine warning : • Lighted in case of minor engine fault (e;g. water in the diesel, clogged air filter, etc.) • Lighted or flashing in case of fault managed by the engine ECU
	Engine shutdown : • Lighted in case of major engine fault (e.g. engine overheating, oil pressure, alternator fault, etc.) • Lighted in case of faults managed by the engine ECU
	DPF regeneration required : • Permanently lighted if the particle filter requires regeneration with a high clogging level[3]
	DPF regeneration in progress, high temperature in the exhaust system (HEST)[4]
	DPF regeneration inhibited[5]

1. If machine equipped with dual load
2. If machine equipped with dual load
3. If engine quipped with Particulate Filter Regeneration
4. If engine quipped with Particulate Filter Regeneration
5. If engine quipped with Particulate Filter Regeneration

1.4 - OPERATION OF OVERRIDING SYSTEM FROM GROUND CONTROL BOX

Please refer to paragraph D.4.2 To rescue operator from platform.

Downloaded from www.Manualslib.com manuals search engine

https://truckmanualshub.com/

2 - Ground control box

2.1 - TO START THE MACHINE FROM THE GROUND CONTROL BOX

- At the ground control box, check that the E-stop button (15) is not pressed.
- Turn ON / OFF key switch (18) to the right to turn ON. The LED display panel comes on.
- Turn the control box selector (229) to the right to select ground control box.
- Push the starter selector (228) upwards. During pre-heating, the indicator (LED 5) comes on, preheating is carried out. The engine starts. The indicator goes out.
- Let the engine heat up.

N.B.-:-THE DURATION OF PREHEATING DEPENDS ON THE TEMPERATURE OF THE ENGINE.

To shut-down the machine from the ground control box :

- Push the starter selector (228) upwards. The engine stops.
- Turn the key switch (18) to the OFF position.
- The machine is now switched off. .

N.B.-:-THIS OPERATION TURNS OFF THE MACHINE AND IS IMPERATIVE TO PREVENT BATTERY DISCHARGE.

Downloaded from www.Manualslib.com manuals search engine

https://truckmanualshub.com/

2.2 - BOOM AND ARM CONTROLS

Platform leveling is possible regardless of the work height. Even at low movement speeds, use the controls with caution.

N.B.-:-RELEASING THE ENABLE SWITCH (FOOTPEDAL)WILL CAUSE ALL MOVEMENTS TO STOP.

Ground box controls (emergency station)

Control		Action
Lifting/lowering of arm	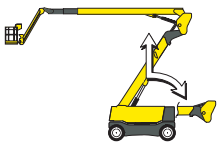	Push the arm lift/lower selector (47) upwards to raise the arm. Push the arm lift/lower selector (47) downwards to lower the arm.
Lifting / lowering of boom	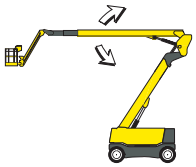	Push the boom raising switch (10) upwards to lift the boom. Push the boom raising switch (10) downwards to lower the boom.
Arm telescope extension/ retraction	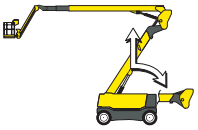	Push the arm telescoping selector (47) upwards to extend the telescope. Push the arm telescoping selector (47) downwards to retract the telescope.
Boom telescope out/in	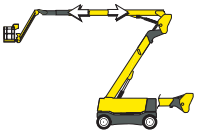	Push the boom telescoping switch (9) to the left to extend the boom. Push the boom telescoping switch (9) to the right to retract the boom.
Jib lifting/lowering	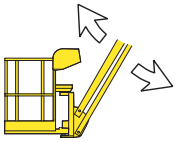	Push the jib switch (8) upwards to lift the jib. Push the jib switch (8) downwards to lower the jib.
Turntable rotation	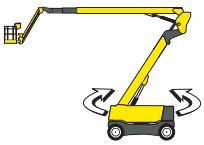	Push the turntable rotation selector switch (14) to the left for a clockwise (CW) rotation. Push the turntable rotation switch (14) to the right for a counter clockwise (CCW) rotation.

Downloaded from www.Manualslib.com manuals search engine

https://truckmanualshub.com/

Control		Action
		Move the platform leveling switch (13) to the right to raise the platform.
Platform leveling	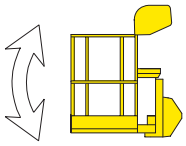	Move the platform leveling switch (13) to the left to lower the platform.

2.3 - ADDITIONAL CONTROLS FROM THE GROUND CONTROL BOX

For the machines equipped with beacon light :

- Push the beacon light selector switch (24) to the right to switch on the beacon light.
- Push the beacon light selector switch (24) to the left to switch off the beacon light.

Downloaded from www.Manualslib.com manuals search engine

https://truckmanualshub.com/

3 - Platform control box

3.1 - START AND STOP THE MACHINE

To start the machine :

At the ground control box :

- Check that the E-stop button (15) is not pressed in.
- Turn ON/OFF key switch (18) to the right to turn ON.
- LED (101) at platform display lights up.
- Turn the control box energizing selector switch (229) to the left to energize platform panel.

At the platform control box :

- Check that the E-stop button (46) is not pressed in.
- Push the starter selector switch (230) upwards. During pre-heating LED (102) at platform display panel and LED (5) at ground panel display will light up. Pre-heating begins and the engine starts.
- Allow the engine to heat up and initialize.

To stop the engine :

- Push engine start switch (230) upwards.

3.2 - DRIVE AND STEER CONTROL

To operate driving and steering functions, simultaneously operate the drive joystick (33) and the "Foot pedal / enable switch".

Before driving, locate the green / red orientation arrows on the chassis and platform control box. Move the drive controls in a direction matching the directional arrows.

N.B.-:-ON UNEVEN TERRAIN, LOWER THE BOOM TO IMPROVE THE DRIVE PERFORMANCE.

Control		Action
Steering		Press thumb/rocker switch on joystick (33) to the right to steer right.
		Press thumb/rocker switch on joystick (33) to the left to steer left.
Drive speed		Position the drive speed selector switch (45) on for high-speed driving.
		Position the driving speed selector (45) on for low-speed driving (short distance, final approach, unloading from lorries/trucks).

Downloaded from www.Manualslib.com manuals search engine

https://truckmanualshub.com/

3.3 - BOOM AND ARM CONTROLS

Activate the desired control and the enable switch (foot pedal switch) simultaneously to perform that selected function.

Foot pedal switch

Control		Action
Lifting/lowering of arm	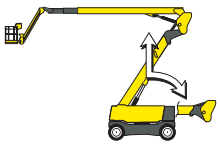	Push the boom or arm position selector (36) downwards. Push the arm lift/lower joystick (28) forwards to raise the arm. Push the arm lift/lower joystick (28) backwards to lower the arm.
Lifting / lowering of boom	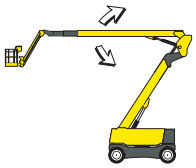	Push the boom or arm position selector (36) upwards. Push the boom raising joystick (49) forwards to lift the boom. Push the boom raising joystick (49) backwards to lower the boom.
Jib lifting/lowering	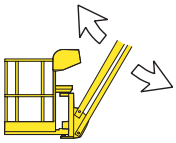	Push the jib switch (37) upwards to lift the jib. Push the jib switch (37) downwards to lower the jib.
Turntable rotation	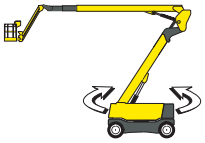	Push the turntable rotation switch (49) to the left for an clockwise rotation. Push the turntable rotation switch (49) to the right for an anti-clockwise rotation.

Downloaded from www.Manualslib.com manuals search engine

https://truckmanualshub.com/

Control		Action
Platform rotation	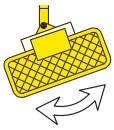	Move the platform rotation selector (38) to the right for a counter clockwise (CCW) rotation. Move the platform rotation selector (38) to the left for a clockwise (CW) rotation.
Platform leveling	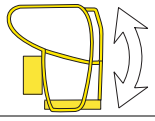	Push the platform levelling switch (40) forwards to lift the platform. Push the platform levelling switch (40) backwards to lower the platform.
Arm telescope extension/ retraction	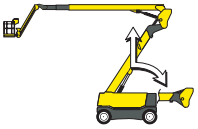	Push the boom or arm position selector (36) downwards. Push the arm telescoping joystick (28) forwards to extend the telescope. Push the arm telescoping joystick (28) backwards to retract the telescope.
Boom telescope out/in	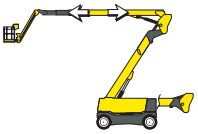	Push the boom or arm position selector (36) upwards. Push the boom telescope joystick (28) forwards to extend the telescope. Push the boom telescope joystick (28) backwards to retract the telescope

3.4 - ADDITIONAL CONTROLS

- Horn : Push the horn selector (43) to the right to sound the horn. The horn stops when the selector switch is released.
- Differential lock : Press the differential blocking touch pads (35).

Downloaded from www.Manualslib.com manuals search engine

https://truckmanualshub.com/

4 - Axle extension control box

4.1 - PREPARE THE MACHINE

Prepare the machine before any axle extension or retraction operation.

1. Locate the 3 control boxes on the machine as illustrated below :

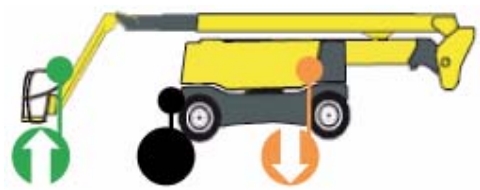	Platform control box	
	Ground control box	
	Axle extension control box (Back of the machine)	

Check that the emergency stop button on each has been deactivated.	

2. Go to the ground control box and start the machine.

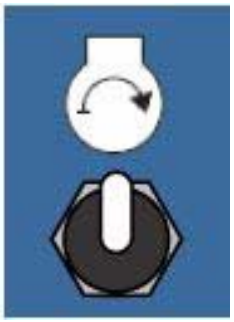

Downloaded from www.Manualslib.com manuals search engine

https://truckmanualshub.com/

3. Raise the jib approximately 1m (3 ft 3 in).

4. Set the control box energizer selector switch (229) to the center position to activate the axle control box.

N.B.-:-THE PLATFORM AND GROUND BOXES CONTROLS ARE DE-ACTIVATED IN THIS POSITION.

5. Go to the back of the machine to access axle extension control box.

Downloaded from www.Manualslib.com manuals search engine

https://truckmanualshub.com/

4.2 - AXLE EXTENSION OPERATION

4.2.1 - For rear axle extension

Use E1 and E2 levers (Refer to figure a).

- **If the two outrigger cylinders are extended, the axle extension controls are de-activated.**
- **Always extend the axles before using the machine.**

1. Lower lever (E1).
   - The outrigger cylinder is lowered (extended).
   - The chassis is lifted.
   - The wheels no longer touch the ground.
2. Keeping lever (E1) lowered and lowering lever (E2) will extend the rear axle.

While the axle is being extended, the buzzer sounds and driving is deactivated. The buzzer stops when the axle is totally extended and the outrigger cylinder is completely raised (retracted).

Once the rear axle is fully extended :

3. 1 to 2 s after the buzzer stops, release lever (E2).
4. Lift lever (E1).
   - The outrigger cylinder is raised (retracted).
   - The chassis is lowered.
   - The wheels touch the ground.

If the buzzer sounds during the movement, the axles are either not fully extended or not fully retracted.

Figure a

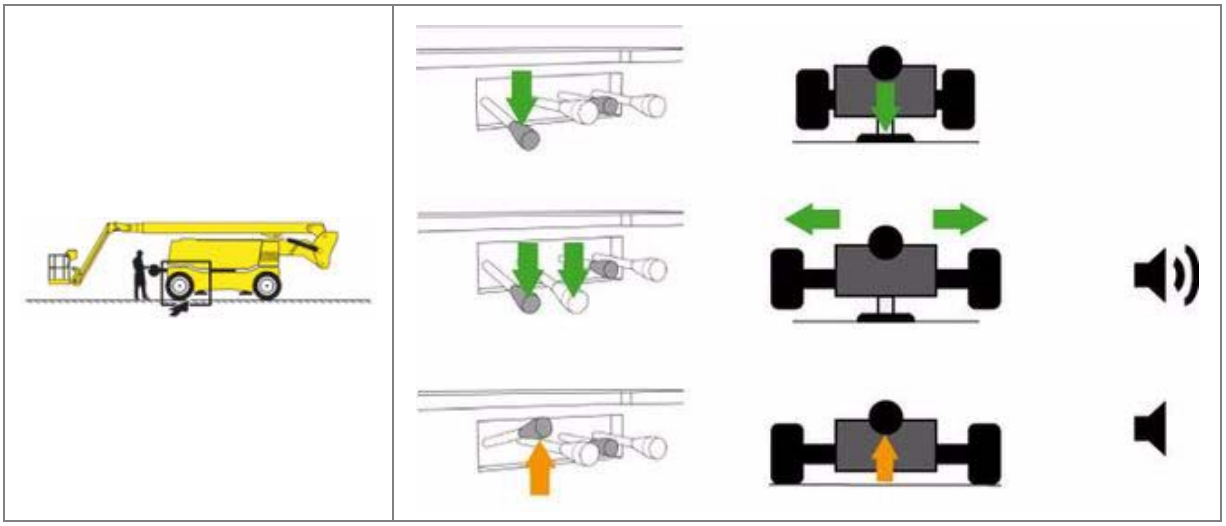

Downloaded from www.Manualslib.com manuals search engine

https://truckmanualshub.com/

4.2.2 - For front axle extension

Use E3 and E4 levers (Refer to figure b).

- **If the two outrigger cylinders are extended, the axle extension controls are de-activated.**
- **Always extend the axles before using the machine.**

1. Lower lever (E3).
   - The outrigger cylinder is lowered (extended).
   - The chassis is lifted.
   - The wheels no longer touch the ground.
2. Keeping lever (E3) lowered and lowering lever (E4) will extend the rear axle.

While the axle is being extended, the buzzer sounds and driving is deactivated. The buzzer stops when the axle is totally extended and the outrigger cylinder is completely raised (retracted).

Once the rear axle is fully extended :

3. 1 to 2 s after the buzzer stops, release lever (E4).
4. Lift lever (E3).
   - The outrigger cylinder is raised (retracted).
   - The chassis is lowered.
   - The wheels touch the ground.

If the buzzer sounds during the movement, the axles are either not fully extended or not fully retracted.

Figure b

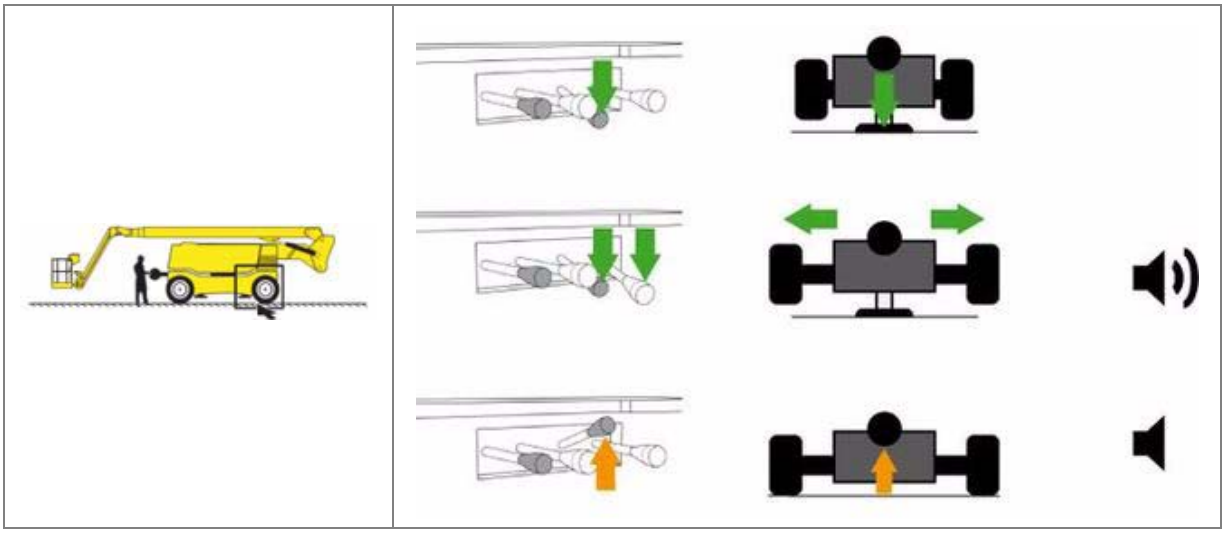

Downloaded from www.Manualslib.com manuals search engine

https://truckmanualshub.com/

4.3 - AXLE RETRACTION OPERATION

4.3.1 - For front axle retraction

Use E3 and E4 levers (Refer to figure c).

If the two outrigger cylinders are extended, the axle retraction controls are de-activated.

1. Lower lever (E3).
   - The outrigger cylinder is lowered (extended).
   - The chassis is lifted.
   - The wheels no longer touch the ground.
2. Keep lever (E3) lowered and lift lever (E4) to retract the front axle.

While the axle is being retracted, the buzzer sounds and driving is deactivated. The buzzer stops when the axle is totally retracted and the outrigger cylinder is completely lowered (extended).

Once the front axle is totally retracted :

3. 1 to 2 s after the buzzer stops, release lever (E4).
4. Lift lever (E3).
   - The cylinder is raised (retracted).
   - The chassis is lowered.
   - The wheels touch the ground.

If the buzzer sounds during the movement, the axles are either not fully extended or not fully retracted.

Figure c

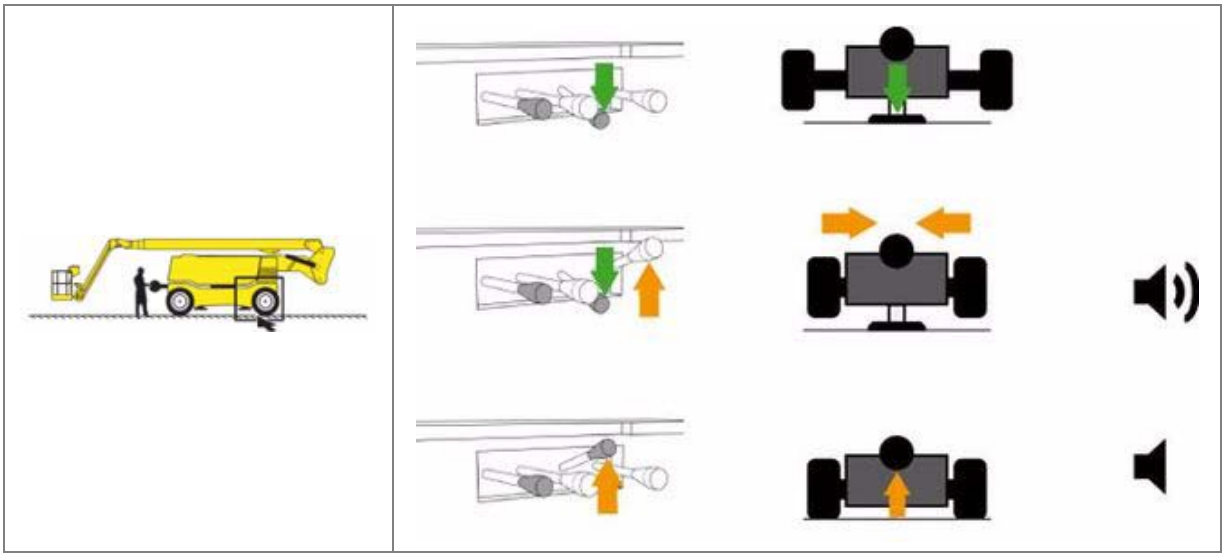

Downloaded from www.Manualslib.com manuals search engine

https://truckmanualshub.com/

4.3.2 - For rear axle retraction

Use E1 and E2 levers (Refer to figure d).

If the two outrigger cylinders are extended, the axle retraction controls are de-activated.

1. Lower lever (E1).
   - The outrigger cylinder is lowered (extended).
   - The chassis is lifted.
   - The wheels no longer touch the ground.
2. Keep lever (E1) lowered and lift lever (E2) to retract the front axle.

While the axle is being retracted, the buzzer sounds and driving is deactivated. The buzzer stops when the axle is totally retracted and the outrigger cylinder is completely lowered (extended).

Once the front axle is totally retracted :

3. 1 to 2 s after the buzzer stops, release lever (E2).
4. Lift lever (E1).
   - The cylinder is raised (retracted).
   - The chassis is lowered.
   - The wheels touch the ground.

If the buzzer sounds during the movement, the axles are either not fully extended or not fully retracted.

Figure d

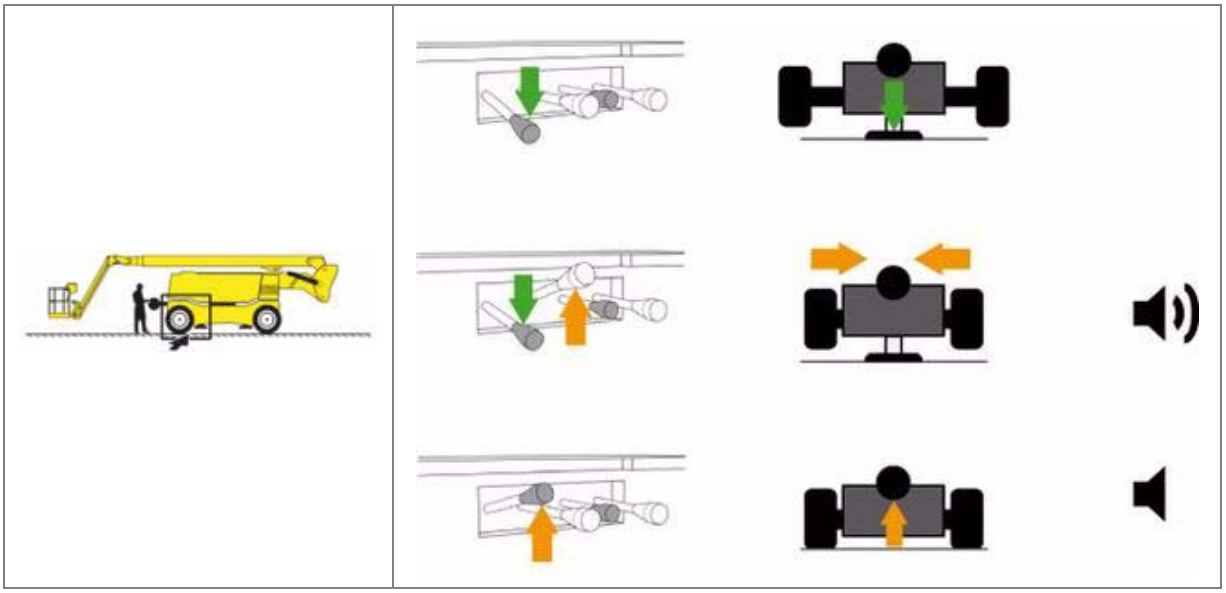

Downloaded from www.Manualslib.com manuals search engine

https://truckmanualshub.com/

5 - Link piece position check

Ensure that nothing is in the way before starting any manoeuvres.

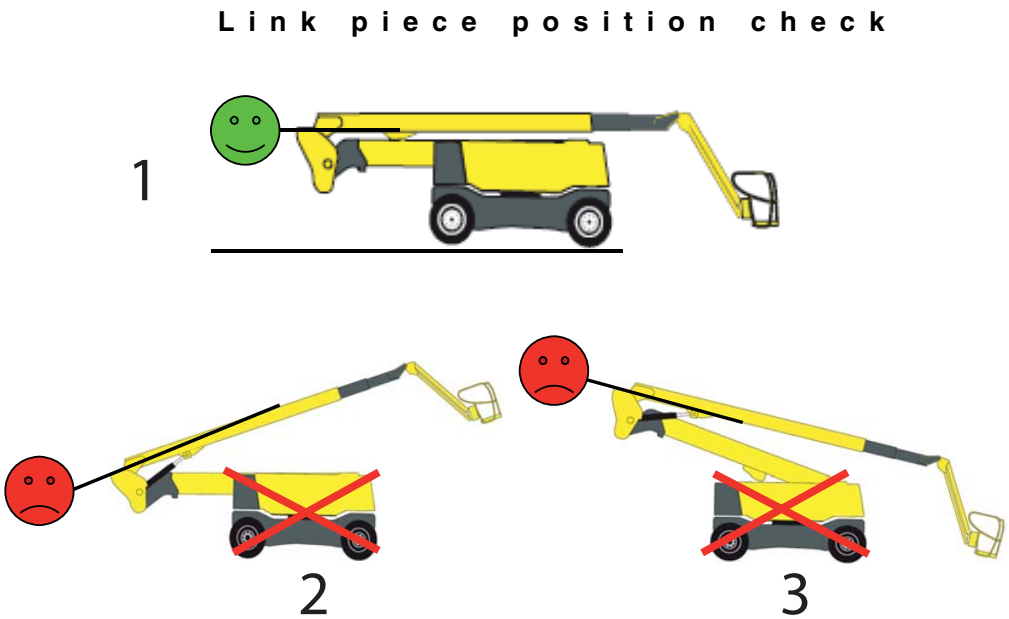

Marking	Description
1	If the link piece is not in the correct position, the machine must not be used until this has been corrected
2	Link piece to the front
3	Link piece to the rear

The link piece position reset is automatic when the arm reaches the end of its descent.

After each work shift, ensure that the arm is fully lowered and rests on the turntable.

To check that the link piece is positioned correctly, the arm must be at the lowest stop point and the machine on level ground. The upper edge of the link piece must then be horizontal.

The sticker (44) placed on the link piece is a second source used in checks. 5

If it is impossible to reposition the link piece, DO NOT use the machine and call the HAULOTTE Services® After Sales Service

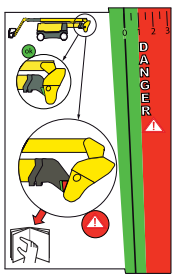

Downloaded from www.Manualslib.com manuals search engine

https://truckmanualshub.com/

6 - Radius limitation

For HA41PX-NT (HA130JRT-NT) only

6.1 - PRINCIPLE

When the machine is at the radius limit before driving is disabled, the (LED 113) indicator comes on. The telescope must be retracted to re-activate driving. If the rear radius limit is reached, the boom must be lowered slightly to re-activate driving.

6.2 - PROCEDURE

6.2.1 - Front radius limitation

Boom extension is limited in zone A1 as long as the second arm telescope has not started to extend(boom length is limited to 14,2 m(46 ft7 in) maximum, i.e. 2,40 m(7 ft10 in) of the telescope). Boom movement is automatically stopped(the radius limit indicator is fixed).

As soon as the second telescope is partially extended, boom telescope extension is limited in zone(boom length is limited to 16,1 m(52 ft10 in) maximum, i.e. 3,37 m(11 ft1 in) of the telescope). Boom movement is automatically stopped(the radius limit indicator is fixed).

When the arm telescope is fully extended, the boom telescope extension is limited in zone(Section G 3-Working area / Range of motion). Boom movement is automatically stopped(the radius limit indicator is fixed). In zone A3, when a boom lowering movement control is activated, the system automatically retracts the boom telescope to keep the user within the stable zone.

When an arm lowering control is activated from the platform control box, the boom telescope is automatically retracted to keep the user within the stable zone(the radius limit indicator flashes). The operator must retract the boom telescope to re-activate the arm lowering function.

6.2.2 - Rear radius limit

Boom raised : Lifting is automatically stopped when the radius limit is reached(the radius limit indicator is fixed).

Downloaded from www.Manualslib.com manuals search engine

https://truckmanualshub.com/

7 - Emergency procedure

7.1 - In case of engine power failure

In case of loss of the main power source, the secondary power unit, powered by the starting battery, allows movements to be controlled from both the ground and platform control boxes.

As the electric pump has limited power, it is advisable to reach the ground in the most direct manner possible.

The use of the electric pump is exclusively reserved for lowering the boom in emergency situations only. It is recommended to first retract the boom before lowering the boom. Performing other operations can lead to the deterioration of the electric pump.

N.B.-:-Test once a month the operation of emergency system. Refer to the Maintenance manual

Depending on the control box in use, push and hold the back-up/auxiliary power switch (228) at ground panel or switch (41) at platform panel. Retract the boom and lower it by using switches (9) and (10) at ground panel or switch (28) and joystick (49) at platform panel.

In an emergency, if the operator has to exit the platform while it is elevated, the transfer of the operator must respect the following recommendations. :

- Exit onto a sturdy safe structure.
- The occupant(s) must ensure that 2 lanyards are used for security/safety. One must be attached to the designated anchorage point on platform the occupant(s) is in and the other attached to the structure intended to get on.
- Occupant(s) must exit the current platform through the normal access.

N.B.-:-Do not detach the lanyard from the current platform if the transfer to the new structure poses any danger or until the transfer is safely completed. Do Not attempt to climb down the boom. Instead wait for assistance for a safe exit.

7.2 - To rescue operator from platform

In a situation where an operator located in the platform needs to be rescued (for example in case of illness, injury or trapped against a structure making the control box inaccessible), the assigned rescue person/supervisor at ground level needs to obtain rapid and direct access to operating functions.

HAULOTTE® provides a ground control emergency system that should be used to safely bring the operator into such a position that appropriate medical attention could be provided.

Unlike the ground control box used in lowering the boom, the overriding system allows trapped occupant(s) be lowered to the ground level, even if an E-Stop is engaged or if an overload is detected.

In this situation, supervisor(s) at ground level must turn the control box activation selector (229) to the "right" to energize the ground control box. To safely activate movements from the ground control box, the enable switch (228) must be held activated/depressed.

Procedure :

- Turn the control box selector (229) to the "right" to energize the ground control box.
- The platform box controls are now de-energized.
- Check that the E-Stop button (15) at ground is not pressed in.
- To lower the platform, hold enable switch (228) downwards and simultaneously push the desired function switch.

Downloaded from www.Manualslib.com manuals search engine

https://truckmanualshub.com/

- If the E-stop button (15) or a safety device do not allow normal movement from the ground control box, the overriding system is operated as follows :
  - Break the seal.
  - Lift the cover on switch (245).
  - Hold switch upwards to by-pass the safety device.
  - Simultaneously, maintain overriding switch (245) in addition to desired function switch to obtain movement of the extending structure.

ONLY in these conditions, activate the "overriding system" switch (245) located under the sealed cover and simultaneously press the platform lowering button until the safety mechanisms are deactivated (alarms stop) and therefore normal movements are possible again, or until the operator can be rescued.

"Overriding system" switch under sealed cover

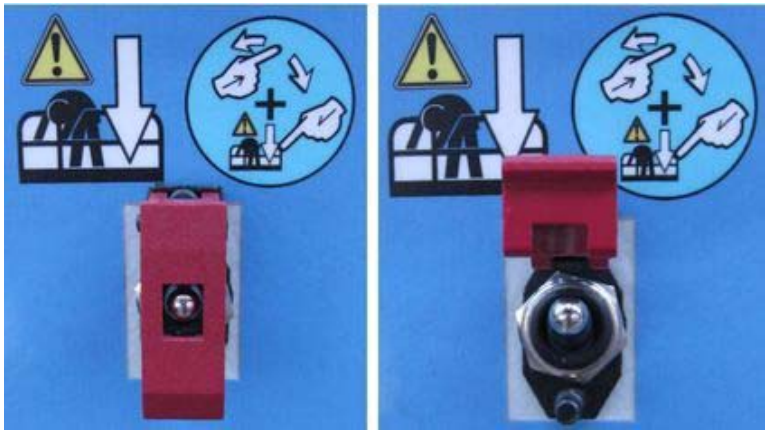

Once rescue operations are complete, report the incident and put a new seal. IMPORTANT : if the seal is missing, this is considered to be abnormal use of the machine.

7.3 - NO POWER AVAILABLE

In case of loss of the main power source and the secondary power unit, do not attempt to perform movement using hydraulic manifold without having been trained by HAULOTTE Services®. All safety functions are shut down and several hazards can occur. Improper use of the equipment will result in death or serious injuries.

If the operator cannot be lowered by any of the above mentioned methods, contact HAULOTTE Services® immediately.

Downloaded from www.Manualslib.com manuals search engine

https://truckmanualshub.com/

8 - Transportation

8.1 - PUTTING IN TRANSPORT POSITION

To avoid any risk of machine movement during loading, ensure that :

- The loading ramp can support the machine weight.
- The loading ramp is correctly attached to transport vehicle.
- The loading ramp has sufficient grip surface.
- The transport vehicle must be parked on a level surface and must be secured to prevent rolling away while machine is being loaded or unloaded.

To climb the slope, select low driving speed.

If the slope is too steep, use a winch in addition to the low speed drive.

Do not place yourself below or too close to the machine during loading.

A wrong move can lead to machine tipping over and may cause serious injuries and material damage.

The machine must be completely in the stowed configuration :

- Check the platform is completely empty.
- Lower the boom and drive onto the truck bed.
- Secure the machine to the tie down points provided (See picture).
- Lock the turntable with the rotation stop pin located under the turntable before transporting.
- The platform/basket must be chocked and the boom strapped to prevent bouncing up and down, thus preventing possible material damage during transporting.
- Do not use excessive downward force when securing boom section.

Downloaded from www.Manualslib.com manuals search engine

https://truckmanualshub.com/

8.2 - MACHINE LAYOUT

HA32PX - HA100JRT

Turret rotation enabled

Turret rotation disabled

Downloaded from www.Manualslib.com manuals search engine

https://truckmanualshub.com/

HA41PX-NT - HA130JRT-NT

Turret rotation enabled

Turret rotation disabled

Machine stowing

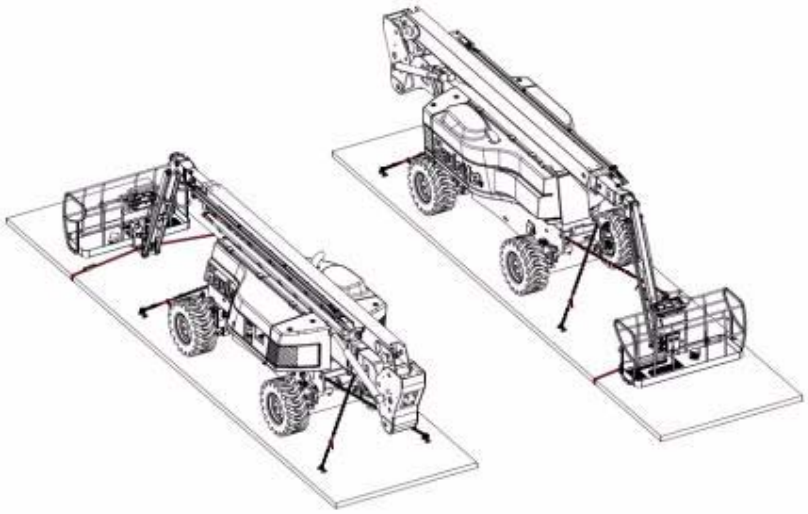

N.B.-:-SECURE TURNTABLE WITH THE TURNTABLE LOCKING PIN BEFORE TRAVELING LONG DISTANCES OR HAULING MACHINE ON A TRUCK.

Downloaded from www.Manualslib.com manuals search engine

https://truckmanualshub.com/

8.3 - UNLOADING

Before unloading, check that the machine is in good condition.

- Remove the turntable rotation locking pin.
- Remove the tie downs.
- Select low drive speed at the platform control box.
- Start the machine.

Warning : Upon starting a machine that has been secured and transported, the safety system may detect a false overload preventing all movement from the platform control box.

To reinstate the system, lift the jib a few centimetres (inches) using the ground control box.

8.4 - TOWING

In the event of a machine breakdown, the machine can be towed a short distance to load it onto a transport vehicle :

- Ensure that no one is in the platform during towing.
- Ensure boom is in the stowed position and the turntable is locked, prior to towing.
- The platform must be empty.

To tow a broken-down machine, disconnect the wheel drive hubs.

Perform this operation on flat ground with wheels chocked.

In the towing configuration, the machine braking system is inactive. Use a drawbar to avoid any risk of accident :

- Do not exceed the maximum speed machine unfolded (Refer to Section B 4 Technical specifications).
- Do not exceed a grade of 25%.

8.4.1 - Disengaging the drive hubs

1. Loosen and remove the 2 fastening screws (1).
2. Remove the clutch stop (2).
3. Turn the clutch stop so that its domed part is towards the interior of the wheel gears.
4. Attach the clutch stop.

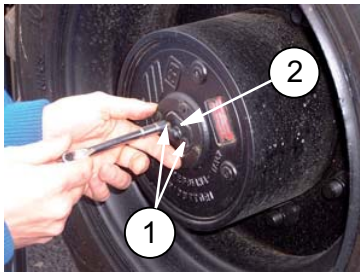

When drive hubs are disengaged, the machine is in free wheel mode and the brake system no longer functions.

Downloaded from www.Manualslib.com manuals search engine

https://truckmanualshub.com/

8.4.2 - Re-engaging the drive hubs

After repairing the machine, re-engage the wheel drive hubs.

1. Loosen and remove the 2 fastening screws (1).
2. Remove the clutch stop (2).
3. Turn the clutch stop so that its domed part is towards the exterior of the wheel gears.
4. Attach the clutch stop.
5. Check the wheel gear oil level.

8.5 - STORAGE

When the machine is in elevated position, it is necessary to regularly switch the power ON to ensure that the security systems are active.

Machine must be parked in a protected/designated area with the boom in a stowed configuration, however the boom can be raised but must not be extended. Make sure there is no load in the platform.

It is recommended that the machine is not stored or immobilized unfolded; to avoid jeopardizing the safety of people and property.

Ensure all access panels and doors/covers are shut and secured.

"Turn the energizing key selector switch (18) at the ground control box to the ""left"" to shut OFF the power".

Ensure that the turntable rotation locking pin is removed and stored properly.

Remove the key switch to prevent unauthorized operation of the machine.

Storing the machine in stowed position with an obstacle under the boom is forbidden.

Downloaded from www.Manualslib.com manuals search engine

https://truckmanualshub.com/

8.6 - LIFTING OPERATION

Before any crane operation, it is necessary to take into account the following points :

ONLY trained and authorized personnel should attempt to lift the machine.

Do not operate machine unless you have :
- been fully trained and are qualified in proper operation.
- read and understood the information in the Operator's manual of the machine.

8.6.1 - Safety precautions

It is the responsibility of the Operator to ensure there are no personnel or obstructions to safely perform the operation. :
- Engine exhaust contain some chemicals that are harmful. Always run an engine in a well-ventilated aera.
- If machine is operated inside a closed building, ensure that exhaust is properly routed to the outside of the structure.

8.6.2 - Necessary equipment

- PPE (Personal Protective Equipment: glove, safety shoe, glasses, etc…)
- Standard tool kit
- 2 spreaders 3 m (13 ft 1 in) 25 T
- 12 shackles 12 T
- 4 slings 4 m (13 ft 1 in) 8 T
- 4 slings or chains 4 m (13 ft 1 in) 12 T
- 2 slings or chains 6 m (19 ft 8 in) 12 T
- for HA32PX (HA100JRT) : 2 slings or chains 5,40 m (17 ft 9 in) 12 T
- for HA41PX (HA130JRT) : 2 slings or chains 5,20 m (17 ft 1 in) 12 T

Technical specifications

Machine type	Maximum weight
HA32PX - HA100JRT	20100 kg (44,321 lb)
HA41PX-NT - HA130JRT-NT	23100 kg (50,936 lb)

Downloaded from www.Manualslib.com manuals search engine

https://truckmanualshub.com/

8.6.3 - Preliminary procedures

- Inspect the surrounding area and position the machine at a safe distance from electrically charged conductors to ensure that no part of the machine is within an unsafe area. Always stay clear of overhead obstructions.
- Respect the local rules and the minimum safe distance from power lines.
- Turn off the engine.
- Remove the ignition key.
- Ensure that the main power is disconnected.
- Place a "DO NOT USE" label/tag near the start/stop switches to inform personnel that machine is not operational during the lifting process.
- Cordon off the area surrounding the machine to keep personnel, vehicles and moving equipment away from the machine.
- Remove all loose items from the machine.
- Ensure that vehicle capacity and loading equipment - hoists, chains, straps, etc. are of sufficient strength to withstand maximum machine weight.
- Attach the rigging ONLY to the designated lifting points on the machine.

Downloaded from www.Manualslib.com manuals search engine

https://truckmanualshub.com/

8.6.4 - Procedure for the use of slings

The machine must be completely stowed, with the axles extended and the turntable at 90 ° in relation to the axis of the chassis. Designated lifting points are marked/labeled with the following symbol .

1. Position the spreaders line up with the chassis.
2. Fold up the 4 slings 4 m (13 ft 1 in) 4 T over the axles with protective sheathing positioned appropriately. Adjust properly to prevent any damage to the machine.

Make sure that the steering rods and associated hoses are not captured by the slings over the axle.

Pay particular attention to avoid slings over sharp edged surfaces as they may be severed/damaged.

3. Attach the slings using shackles

Properly adjust rigging to keep the machine level and to minimize the risk of damage to the machine.

- **Lifting procedure must be handled very carefully.**
- **All movements of the machine must be performed slowly and deliberately to minimize swaying of the machine being lifted.**
- **Always keep machine as close as possible to the ground level.**

Downloaded from www.Manualslib.com manuals search engine

https://truckmanualshub.com/

HA32PX (HA100JRT)

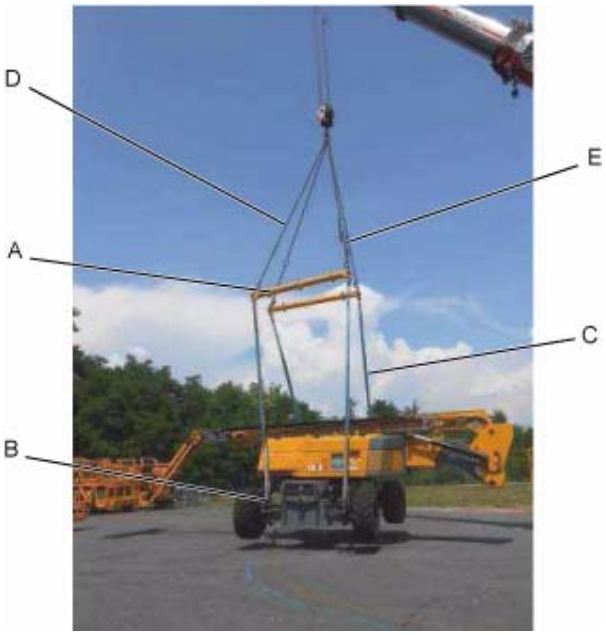

HA41PX (HA130JRT)

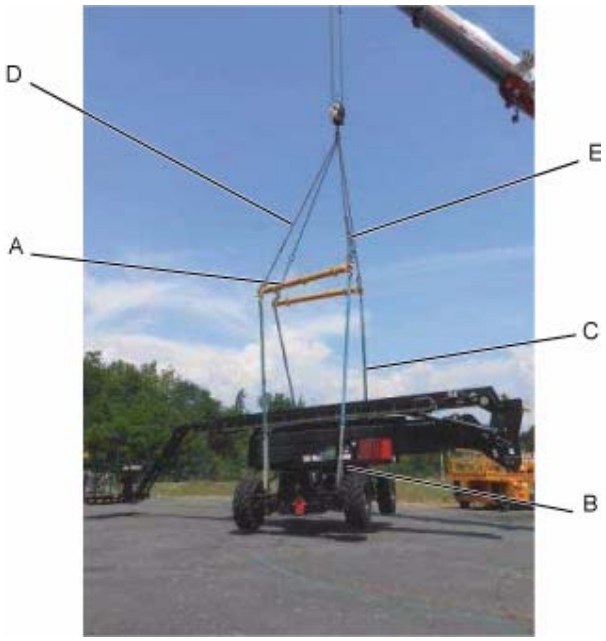

Marking	Description
A	2 spreaders 3 m (9 ft 10 in) 25 T at 90 ° to the axis of the chassis
B	4 slings 4 m (13 ft 1 in) 8 T to attach the machine
C	4 slings 4 m (13 ft 1 in) 12 T and 8 shackles 12 T between the attachment straps and the spreaders
D	2 slings 6 m (19 ft 8 in) 12 T and 2 shackles 12 T between the attachment straps and the spreaders
E	for HA32PX (HA100JRT) : 2 slings or chains 5,40 m (17 ft 9 in) 12 Tfor HA41PX (HA130JRT) : 2 slings or chains 5,20 m (17 ft 1 in) 12 T

Downloaded from www.Manualslib.com manuals search engine

https://truckmanualshub.com/

9 - Cold Weather Recommendations

In cold weather conditions, allow engine to run for at least 5 min and warm up ; before operating any function thereby preventing any damage to the hydraulic system.

In extreme cold conditions, machines should be equipped with optional cold start kits.

Attempting to start engine when temperature is in the negative range, may require the use of a booster battery.

If engine fails to start, do not crank for an extended time. Allow starter to "cool off" for a few minutes before attempting again. If engine fails after several attempts, refer to the engine maintenance manual.

N.B.-:-INITIAL STARTING SHOULD ALWAYS BE PERFORMED FROM THE GROUND CONTROL BOX.

9.1 - ENGINE OIL

The correct SAE viscosity grade of oil is determined by the minimum ambient temperature during cold engine start-up, and the maximum ambient temperature during engine operation.

Generally, use the highest viscosity oil that is available to meet the requirement for the temperature at start-up.

Engine oil viscosity		
EMA LGR-1 / API CH-4 Viscosity grade	Ambient temperature	
	Minimum	Maximum
SAE 0W20	-40°C (-40°F)	10°C (50°F)
SAE 0W30	-40°C (-40°F)	30°C (86°F)
SAE 0W40	-40°C (-40°F)	40°C (104°F)
SAE 5W30	-30°C (-22°F)	30°C (86°F)
SAE 5W40	-30°C (-22°F)	40°C (104°F)
SAE 10W30	-20°C (-4°F)	40°C (104°F)
SAE 15W40	-10°C (14°F)	50°C (122°F)

N.B.-:-FOR ADDITIONAL ENGINE RECOMMENDATION, REFER TO THE ENGINE MANUAL PROVIDED WITH THE MACHINE.

Downloaded from www.Manualslib.com manuals search engine

https://truckmanualshub.com/

9.2 - HYDRAULIC OIL

External environmental conditions can reduce performance of the machine if the hydraulic oil temperature does not reach its optimum range.

It is recommended to use the hydraulic oil according to weather condition. Refer to the table below.

Environmental conditions	SAE Viscosity grade
Ambient temperature between - 15°C (5°F) and + 40°C (+ 104°F)	HV 46
Ambient temperature between - 35°C (- 31°F) and + 35°C (+ 95°F)	HV 32
Ambient temperature between 0°C (+ 32°F) and + 45°C (+ 113°F)	HV 68

N.B.-:-IT IS RECOMMENDED TO REPLACE LOW TEMPERATURE OIL AS THE AMBIENT TEMPERATURE REACHES + 15°C (59°F). IT IS NOT ADVISABLE TO MIX OILS OF DIFFERENT BRANDS OR TYPES.

9.3 - PREHEATING OPERATION

When power is switched ON, the orange LED (5) 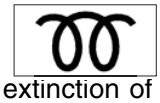 (at the ground display) flashes, the motor is in automatic pre-heating. Upon the extinction of this light (just seconds) at the ground display, starting of the machine is possible.

Downloaded from www.Manualslib.com manuals search engine

https://truckmanualshub.com/

Notes

Downloaded from www.Manualslib.com manuals search engine

https://truckmanualshub.com/

Notes

Downloaded from www.Manualslib.com manuals search engine

https://truckmanualshub.com/

E - General Specifications

1 - Machine dimensions

Stowed / Transport position : Configuration that takes the minimum floor space necessary for storage and / or delivery of the machine - Access position.

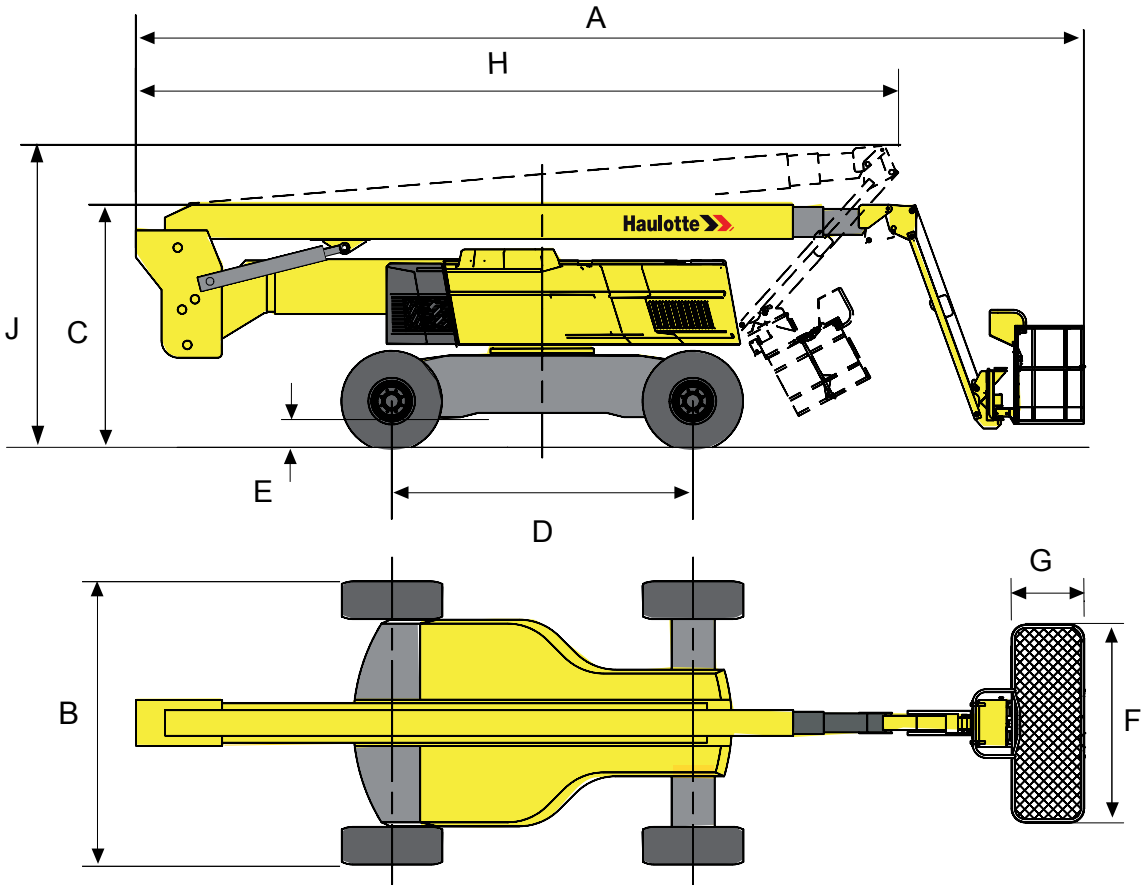

Downloaded from www.Manualslib.com manuals search engine

https://truckmanualshub.com/

E - General Specifications

CE and AS standards

Machine		HA32PX		HA41PX-NT	
Marking	**Specifications - Dimensions**	**SI**	**Imp.**	**SI**	**Imp.**
A	Overall length of machine	11,40 m	37 ft 5 in	12,80 m	42 ft 0 in
B	Overall width of machine	2,53 m	8 ft 3 in	2,53 m	8 ft 3 in
C	Overall height of machine	2,80 m	9 ft 2 in	2,99 m	9 ft 9 in
D	Wheel base	3,50 m	11 ft 5 in	3,50 m	11 ft 5 in
E	Ground clearance	38 cm	15 in	38 cm	15 in
F X G	Platform dimensions	2,44 x 0,8 m	8 ft 0 in x 2 ft 7 in	2,44 x 0,8 m	8 ft 0 in x 2 ft 7 in
H	Storage length	8,90 m	29 ft 2 in	11 m	36 ft 1 in
J	Storage height	3,35 m	11 ft 0 in	3,70 m	12 ft 2 in
	Outer turning radius (without retracted axle adjustment)	5,07 m (16 ft 8 in)			
	Inner turning radius (with axles retracted)	2,75 m (9 ft 0 in)			
	Engine				
	Diesel engine	Perkins 1104D-44 Turbo - 62 kW - 84 Hp			
	CO emission	0,89 g/kWh			
	Particles emission	0,26 g/kWh			
	Av fuel consumption : • BSFC/CSE • 70% power usage • Maximum power	 230 g/kWh 10,7 L/h 55 kW			
	Specifications - Performance				
Operating temperature		- 15° C/ + 35° C (- 59° F / + 95° F)			
Storage temperature		- 30° C / + 45° C (-22° F / + 113° F)			
	Energy storage				
Type of battery		12 V 135 Ah			
Battery amperage		900 A			
Battery voltage		12 V			
Battery capacity		155 Ah			
Hydraulic tank capacity		240 L (63 gal US)			
Fuel tank capacity		140 L (37 gal US)			

Downloaded from www.Manualslib.com manuals search engine

https://truckmanualshub.com/

E - General Specifications

ANSI and CSA standards

Machine		HA100JRT		HA130JRT-NT	
Marking	**Specifications - Dimensions**	**SI**	**Imp.**	**SI**	**Imp.**
A	Overall length of machine	11,40 m	37 ft 5 in	12,80 m	42 ft 0 in
B	Overall width of machine	2,53 m	8 ft 3 in	2,53 m	8 ft 3 in
C	Overall height of machine	2,80 m	9 ft 2 in	2,99 m	9 ft 9 in
D	Wheel base	3,50 m	11 ft 5 in	3,50 m	11 ft 5 in
E	Ground clearance	38 cm	15 in	38 cm	15 in
F X G	Platform dimensions	2,44 x 0,8 m	8 ft 0 in x 2 ft 7 in	2,44 x 0,8 m	8 ft 0 in x 2 ft 7 in
H	Storage length	8,90 m	29 ft 2 in	11 m	36 ft 1 in
J	Storage height	3,35 m	11 ft 0 in	3,70 m	12 ft 2 in
	Outer turning radius (without retracted axle adjustment)	5,07 m (16 ft 8 in)			
	Inner turning radius (with axles retracted)	2,75 m (9 ft 0 in)			
	Engine				
	Diesel engine	Perkins 1104D-44 Turbo - 62 kW - 84 Hp			
	CO emission	0,89 g/kWh			
	Particles emission	0,26 g/kWh			
	Av fuel consumption : • BSFC/CSE • 70% power usage • Maximum power	 230 g/kWh 10,7 L/h 55 kW			
	Specifications - Performance				
Operating temperature		- 15° C/ + 35° C (- 59° F / + 95° F)			
Storage temperature		- 30° C / + 45° C (-22° F / + 113° F)			
	Energy storage				
Type of battery		12 V 135 Ah			
Battery amperage		900 A			
Battery voltage		12 V			
Battery capacity		155 Ah			
Hydraulic tank capacity		240 L (63 gal US)			
Fuel tank capacity		140 L (37 gal US)			

Downloaded from www.Manualslib.com manuals search engine

https://truckmanualshub.com/

2 - Major component masses

N.B.-:-Masses measured with empty tanks.

Component	HA32PX - HA100JRT	HA41PX-NT - HA130JRT-NT
Frame assembly mass	**7190 kg - 15851 lb**	
• Wheel mass of each	**410 kg - 904 lb**	
Turret assembly mass	**3115 kg - 6867 lb**	**3460 kg - 7628 lb**
• Counterweight mass - Turntable	**2 x 1450 kg - 2 x 3195 lb**	
• Engine mass + engine compartment	**PERKINS engine : 554 kg + 100 kg - 1222 lb + 220 lb**	
• Battery mass	**45 kg - 99 lb**	
Arm assembly mass	**2600 kg - 5730 lb**	**4520 kg - 9960 lb**
Boom assembly mass	**2130 kg - 4695 lb**	**2585 kg - 5700 lb**
Jib assembly mass	**168 kg - 370 lb**	**170 kg - 375 lb**
Platform assembly mass	**164 kg - 360 lb**	

3 - Acoustics and vibrations

The acoustics and vibrations specifications are based upon the following conditions :

- The airborne noise emissions at workstation are determined per European Directive 2006/42/CE.
- The guaranteed sound power level LWA (displayed on the product) is determined per European Directive 2000/14/CE.
- The vibrations transmitted by the machinery to the hand/arm system and to the whole body are determined per European Directive 2006/42/CE.

Specifications	
Sound pressure level at workstation	< 74 dBA
Guaranteed sound power level	108 dBA
Vibrations hand/arm	<2,5 m/s²(98,4 in/s²)
Vibrations whole body	<0,5 m/s²(19,6 in/s²)

Downloaded from www.Manualslib.com manuals search engine

https://truckmanualshub.com/

4 - Wheel/Tire assembly

4.1 - TECHNICAL SPECIFICATIONS

Component	Standard wheel
Reference number	OTR 445/65-22.5 18 plys
Type	Foam-filled
Size	Diameter : 1100 mm +/- 80 mm (44 in +/- 4 in)Width : 438 mm +/- 20 mm (18in +/- 1 in)
Torque	650 Nm (479 ft lb)

4.2 - INSPECTION AND MAINTENANCE

Replace the wheels and the tires/tyres if any of the following conditions exist :

- Presence of cracks, damage, deformation or other faults on the hub
- Damage to the tire :
- Cut or hole > 3 cm (2 in) in the rubber side wall.
- Blister or pronounced lump on the external and lateral wall.
- Damaged wheel stud.
- Damage or wear on the side wall to the extent that the reinforcing wire is visible.
- Consistent wear of the ground contact surface greater than 25%

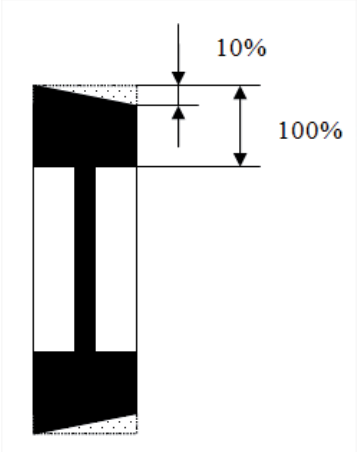

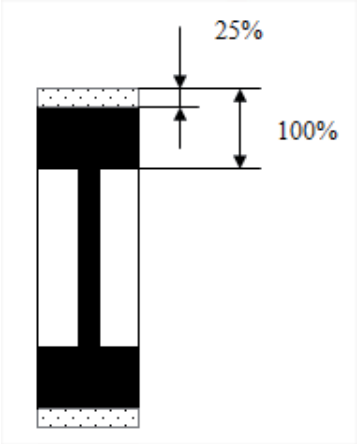

Tires (Tyres) and rims are significant components for the stability of the machine. For safety reasons :

- **Use only HAULOTTE® spare parts according to the technical characteristics of the machine. Refer to the spare parts catalog.**
- **Do not replace factory-installed tires/tyres with tires of different specification or ply rating.**
- **Never replace foam filled tire with a pneumatic (air filled) tire.**

Downloaded from www.Manualslib.com manuals search engine

https://truckmanualshub.com/

Procedure of replacement :

- Loosen the wheel nuts on the wheel to be removed.
- Raise the machine using a jack or a hoist.
- Remove the wheel nuts.
- Remove the wheel.
- Install the new wheel.
- Lower the machine to the ground.
- Tighten the wheel nuts to the recommended torque Refer to maintenance and repair manuals.

Downloaded from www.Manualslib.com manuals search engine

https://truckmanualshub.com/

5 - Options

5.1 - ACTIV' SHIELD BAR - SECONDARY GUARDING SYSTEM

5.1.1 - Principle

Activ' Shield Bar is a secondary guarding device.

It should be noted that this device doesn't release the operator from the responsibilities of learning and practicing the principles of safe machine operations provided by the manufacturer's instructions, employer's safety rules and worksite regulations.

5.1.2 - Safety precautions

- Check the work area for overhead clearances, obstructions or other possible hazards.

- When driving, position the platform so as to provide the best visibility possible and avoid any blind spots.

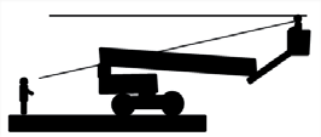

- Always ensure that the chassis is never driven any closer than 1 m (3 ft3 in) from holes, bumps, tilts, obstructions, debris and ground coverings that may hide dangers.
- During operation, keep all the parts of the body inside the platform.
- To position the machine close to obstacles, it is recommended to use boom movements (arm, boom, etc.) instead of the drive movements.
- Do not drive fast in narrow or cluttered areas. Keep speed under control while making turns or sharp bends.

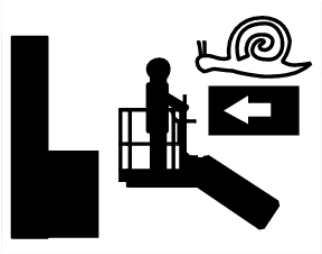

- Do not use the Activ' Shield Bar as a handhold. To prevent unintentional activation of the system.

Downloaded from www.Manualslib.com manuals search engine

https://truckmanualshub.com/

5.1.3 - Description

Marking	Description
1	Activation bar
2	Electrical box
3	RESET push-button
4	Green indicator, the system is switched on
5	Blue flashing indicator, indicates activation bar operates

Downloaded from www.Manualslib.com manuals search engine

https://truckmanualshub.com/

5.1.4 - Pre-operation inspection

- **If any item on the checklist is marked NO during the inspection; machine must be tagged and locked out and placed out of service.**
- **DO NOT operate the machine until all identified items are corrected and it has been declared safe for operation.**

Description	Yes	No
Perform all specified machine functional tests		
• All machine functional tests result positive		
Start the machine from platform control box		
Switch OFF all emergency push button		
• Check absence of warning signal		
• Check that the green indicator of the electrical box is switched on		
Performs the secondary guarding system tests for each movement specified in the table hereinbelow		
• Push the switch bar while operating the specified movement		
• Check what movement are authorized and complete the table		
• Check that visual and audible warning are activated		
• Check that the reset button of the electrical box is illuminated		
• Push the reset button		
• Check that normal operation is restored		

Downloaded from www.Manualslib.com manuals search engine

https://truckmanualshub.com/

E - General Specifications

		Operated movement when the bar is triggered																	
		Driving						Rotation						Lifting or telescope extension			Other movement		
		Move forward			Move backwards			Left			Right								
			Yes	No		Yes	No		Yes	No		Yes	No		Yes	No		Yes	No
Platform control box	Forwards drive																		
	Reverse drive																		
	Turntable left																		
	Turntable right																		
	Lifting or telescope extension																		
	Boom descent and retraction telescope																		
	Other movement																		
Ground control box	All																		

	Authorized
	Prohibited
	Authorized if all switches / joysticks of the Platform control box are in neutral position or, if the Enable switch has been released

Downloaded from www.Manualslib.com manuals search engine

https://truckmanualshub.com/

5.1.5 - Operation

When the switch bar is triggered, the currently active function movement is stopped. Alarm and flashing light are activated. Only safeguard functional movements (lowering, retracting or reverse movement of the function that created the situation) are available from the platform control box.

Normal operation is restored when the "Reset" button on the right hand side of the basket is pressed in or until the power supply is switched off.

Visual and audible warnings will alert personal at ground if rescue is necessary.

To operate safeguard movement from platform control box :

- Joystick and/or switch must be reset to neutral position (function inactive).
- Enable switch must be activated.
- Operate safeguard movement using joystick or switch to move away from the hazard that triggered the device.
- Press the yellow Reset button to restore normal operation of the machine
- All movements can be operated from the ground control box even if the secondary guarding bar is triggered.

N.B.-:-ANY MODIFICATION MADE TO THE FACTORY SETTINGS (E.G. INCREASING MOVEMENT SPEED AND/OR RAMPS) VIA THE CONSOLE WILL INCREASE STOPPING DISTANCES AFTER SYSTEM ACTIVATION AND THEREBY REDUCES LEVEL OF SECURITY.

Downloaded from www.Manualslib.com manuals search engine

https://truckmanualshub.com/

1 - General

As an owner and/or operator of Haulotte equipment, your Safety is of utmost importance to HAULOTTE® , which is why HAULOTTE® places such a high priority on product safety.

INSPECTIONS are not only required by HAULOTTE®, but may also be required by industry standards and/or governmental regulations.

To ensure that your equipment continues to perform to the factory set performance levels, it is important that you regularly maintain your equipment and avoid making any modifications that are not approved by HAULOTTE®. Regular and timely inspections will reduce equipment down time as well as prevent possible injury.

N.B.-:-DO NOT OPERATE UNLESS YOU ARE FAMILIAR AND TRAINED IN THE PRINCIPLES OF SAFE MACHINE OPERATION.

Overview :

- Walk-around inspections take only a few minutes at the beginning and end of each shift – one of the best ways to prevent mechanical problems and safety hazards.

What to Do :

- Use your senses: sight, smell, hearing and touch.

Frequency :

- Check your machine periodically during your entire workday.
- Make sure to do your inspection the same way every time.
- Complete one of these inspections at the start of each shift and end of your shift.

N.B.-:-IF DAMAGE OR UNAUTHORIZED MODIFICATIONS ARE DISCOVERED, THE MACHINE MUST BE REMOVED FROM SERVICE UNTIL REPAIRS ARE MADE BY A QUALIFIED SERVICE TECHNICIAN.

It is the on-site maintenance technician's duty to carry out the regular maintenance work recommended by HAULOTTE Services®.

If regular maintenance is not carried out, this may :

- Void the warranty.
- Cause machine malfunction.
- Reduce machine reliability and shorten its service life.
- Jeopardize operator safety.

HAULOTTE Services® technicians are specially trained to carry out extensive repairs, interventions or adjustments on the safety systems or elements of HAULOTTE® machines. They carry genuine HAULOTTE spare parts and tools as required, and also provide fully documented reports on all work completed.

The inspection and maintenance table, identifies the role and the responsibilities of each party in periodical machine maintenance. Section C 4Inspection and Functional test.

Downloaded from www.Manualslib.com manuals search engine

https://truckmanualshub.com/

2 - Maintenance Schedule

This section provides the necessary information needed to place the machine in safe operation. For maximum service life and safe operation, ensure that all the necessary inspections and maintenance have been completed. There are a number of factors which can affect the design life including but not limited to, severity of operating conditions/routine maintenance which should be carried out in accordance with this manual.

Severity of operating conditions may require a reduction in time between maintenance periods. These factors are amongst a number, which may extend or shorten the estimated Design Life of the product.

Maintenance must be carried out by a competent company or person whose selection is under the responsibility of the manager (Company employee or other).

Maintenance operations performed must be recorded in a register / log book of the machine.

Downloaded from www.Manualslib.com manuals search engine

https://truckmanualshub.com/

3 - Inspection program

3.1 - GENERAL PROGRAM

The machine must be inspected on a regular basis at intervals in accordance with the requirements set forth in the Country of use but no less than once per year. The purpose of the inspection is to detect any defect which could lead to an accident during routine use of the machine.

HAULOTTE® requires Reinforced and Major Inspections to be carried out on the product to extend its service life.

Inspections must be carried out by a competent company or person whose selection is under the responsibility of the manager.

The inspection results must be recorded in the safety register or machine log book controlled and overseen by the company manager. This register or machine log book and the list of competent repair persons must be made available to the Government Work Inspector and company safety committee at any time.

When	Responsible	Stakeholder	What
Before sale	Owner (or renter)	Technician on area or qualified technician HAULOTTE Services®	Periodic inspection
Before rent	Owner (or renter)	Technician on area or qualified technician HAULOTTE Services®	Daily inspection
Before used or every change of users	User	User	
6 month or 1 years (*)	Owner (or renter)	Technician on area or qualified technician HAULOTTE Services®	Periodic inspection
5 years	Owner (or renter)	Qualified technician HAULOTTE Services®	Reinforced inspection
10 years	Owner (or renter)	Qualified technician HAULOTTE Services®	Major inspection

(*) : According to applicable regulatory requirements. If there are no local requirements, then inspection must be performed at least once a year.

Downloaded from www.Manualslib.com manuals search engine

https://truckmanualshub.com/

3.2 - DAILY INSPECTION

The daily inspection must be conducted by operator(s) before using the machine, it includes a visual inspection plus functional and safety testing.

This inspection is the responsibility of the user.

Each day and before the beginning of a new work period and on each change of operator, the machine must be subjected to a visual inspection and a complete functional test.

3.3 - PERIODIC INSPECTION

The Periodic inspection is a thorough inspection of the operation and safety features of the machine. It must be conducted before the sale / resale of the machine and at a minimum frequency of 1 every year according to regulations. Local regulations may have specific requirements on frequency, and content of inspections.

Harsh operating conditions will require an increased frequency of inspections.

This inspection is the responsibility of the owner, and must be conducted by a competent technician.

This inspection is in addition to the daily inspection.

This inspection should also be conducted after :

- Extensive dismantling and reassembly of major components.
- Repairs involving the machine's essential components.
- Any accident causing stress to the machine.

3.4 - REINFORCED INSPECTION

Reinforced periodic inspection is a thorough evaluation of the machine's structural components, to ensure continuing functionality of the machine. This evaluation must occur at a frequency of 5 hours or 5000 years. This inspection is under the responsibility of the owner, and it must be conducted by a Haulotte Service technician or qualified/authorized person.

This inspection should include the daily inspection and periodic inspection, refer to the manual for details.

3.5 - MAJOR INSPECTION

The Major inspection determines the integrity and proper functioning of the machine after a standard working life of 10 years.

This evaluation must take place after 10 years of operation and then repeated every 5 years.

Harsh operating conditions will require an increased frequency of inspections.

This inspection is the responsibility of the owner, and it must be conducted by a HAULOTTE Services® technician.

This inspection should include the daily inspection, periodic inspection and the enhanced inspection. Refer to manual for details.

Downloaded from www.Manualslib.com manuals search engine

https://truckmanualshub.com/

4 - Repairs and adjustments

Extensive repairs, interventions or adjustments on the safety systems or components must be performed by a HAULOTTE Services® technician. Use original spare parts only.

HAULOTTE Services® technicians are specially trained to carry out extensive repairs, interventions or adjustments on the safety systems or components of HAULOTTE® machines, and carry genuine HAULOTTE® spare parts and tools as required, and also provide fully documented reports on all work completed.

HAULOTTE Services® will not take responsibility for any consequential outcomes resulting from inferior services/repairs carried out by other unauthorised personnel.

HAULOTTE® reminds that NO modifications SHALL be carried out without the written permission of HAULOTTE®. Any unauthorised repairs/modifications will void HAULOTTE® warranty.

With the utmost care to ensure enhanced reliability and greater safety of the HAULOTTE® products, it is pertinent that when a "Service or Safety Bulletin" is issued, action is taken immediately. Once the bulletin has been addressed, make sure that the completed form is submitted to HAULOTTE Services®.

Downloaded from www.Manualslib.com manuals search engine

https://truckmanualshub.com/

Notes

Downloaded from www.Manualslib.com manuals search engine

https://truckmanualshub.com/

1 - Warranty disclosure

1.1 - After Sales Service

Our HAULOTTE Services® After Sales Service is at your disposal throughout your machine's service life to ensure the optimum use of your HAULOTTE product :

- When contacting our After Sales Service, ensure that you provide the machine model and serial number.
- When ordering any consumables or spare parts, please use this manual and the HAULOTTE® Essential catalogue to receive your genuine HAULOTTE® spare parts, your only guarantee of parts interchangeability and correct machine operation.
- If there is an equipment malfunction involving a HAULOTTE® product, then contact HAULOTTE Services® immediately even if the malfunction does not involve material and/or bodily damage.

1.2 - Manufacturer's warranty

1.2.1 - Warranty acceptance

On reception of his machine, the owner or rental company must check the machine's condition and fill out the machine reception slip provided.

1.2.2 - Warranty period

The present warranty is valid for a period of 12 months or up to a maximum of 1000 operating hours for lifting and handling equipment and 2000 operating hours for public works machinery, starting from delivery and terminating when the first limit is reached.

Spare parts are covered by a 6 month warranty.

1.2.3 - Procedure conditions

To benefit from the warranty, the owner or rental company must inform the nearest HAULOTTE® subsidiary or the subsidiary that delivered the machine (the only dealer authorised to carry out an intervention under the manufacturer's warranty agreement) of the defect in writing as quickly as possible.

The subsidiary will decide whether to repair or replace the part that proves to be faulty.

The owner or rental company must present the duly completed maintenance book supplied with the machine as proof that the maintenance operations recommended by the manufacturer have been carried out.

The owner or rental company must ensure that the defect covered by the HAULOTTE® warranty is reported to and acknowledged by the HAULOTTE® subsidiary as rapidly as possible or must report the defect in writing.

Work carried out under the HAULOTTE® warranty will be performed by the subsidiary which delivered the machine, wherever possible.

Downloaded from www.Manualslib.com manuals search engine

https://truckmanualshub.com/

1.2.4 - Conditions of warranty

HAULOTTE® guarantees its products against defects, faults or manufacturing defects when the owner or rental company has informed HAULOTTE® of the defect.

The warranty does not cover the consequences of normal wear, nor any defects, failure or damage resulting from poor maintenance or abnormal usage, in particular overloading, impact by an external source, faulty installation or any modification made to products marketed by HAULOTTE® and performed by the owner or rental company.

In the event of operation or use which does not comply with the instructions or recommendations in the maintenance book, warranty claims will not be accepted.

The machine utilisation period must be recorded by reading the engine hour meter whenever an intervention is made. The engine hour meter must be maintained in good working order to guarantee maximum working life and to justify maintenance at the recommended time.

Warranty obligations for the time period stated above will cease immediately in situations where the defect is due to the following reasons :

- Use of spare parts that are not HAULOTTE® originals.
- If elements or products other than those recommended by the manufacturer are used.
- If the HAULOTTE® name, serial numbers or identification marks are removed or altered.
- After an unreasonably long delay before reporting a manufacturing problem.
- If the owner or rental company continues to use the machine despite problems.
- If damage is caused by modifications that do not comply with HAULOTTE® specifications.
- If lubricants, hydraulic oils or fuels that do not comply with HAULOTTE® recommendations are used.
- If the machine is incorrectly repaired or used by the customer.
- In case of an accident caused by a third party.

If no particular agreement has been made, any claims made after the previously established warranty period has expired will be refused.

The present warranty does not cover damage that may result directly or indirectly from any flaws or defects covered by the latter :

- Consumables : No claims will be accepted for objects or parts replaced in the context of normal machine usage.
- Settings : Adjustments of all sorts may become necessary at any time. Therefore adjustments are considered a part of normal machine usage conditions and are not covered by the warranty.
- Hydraulic and fuel circuit contamination : Every possible precaution is taken to ensure that fuel and hydraulic liquid delivered is clean. HAULOTTE® will not accept any claims concerning cleaning of the fuel circuit, filter, injection pump or any other equipment in direct contact with fuel or lubricants.
- Wearing parts (pads, bearings, tires/tyres, connections, etc.) : These parts are, by definition, subject to deterioration during the period of operation. Wearing parts will therefore not be covered by the warranty agreement.

Downloaded from www.Manualslib.com manuals search engine

https://truckmanualshub.com/

2 - Subsidiary contact information

	HAULOTTE FRANCE PARC DES LUMIERES 601 RUE NICEPHORE NIEPCE 69800 SAINT-PRIEST **TECHNICAL Department:** **+33 (0)820 200 089** **SPARE PARTS : +33 (0)820 205 344** FAX : +33 (0)4 72 88 01 43 E-mail : haulottefrance@haulotte.com www.haulotte.fr		HAULOTTE ITALIA VIA LOMBARDIA 15 20098 SAN GIULIANO MILANESE (MI) **TEL: +39 02 98 97 01** FAX: +39 02 9897 01 25 E-mail : haulotteitalia@haulotte.com www.haulotte.it		HAULOTTE INDIA Unit No. 1205, 12th foor,Bhumiraj Costarica, Plot No. 1&2, Sector 18, Palm Beach Road, Sanpada, Navi Mumbai- 400 705 Maharashtra, INDIA Tel. : +91 22 66739531 to 35 E-mail : sray@haulotte.com www.haulotte.in
	HAULOTTE HUBARBEITSBÜHNEN GmbH AN DER MÖHLINHALLE 1 D-79189 BAD KROZINGEN-HAUSEN **TEL : +49 (0) 7633 806 92-0** FAX : +49 (0) 7633 806 92-18 E.mail : haulotte@de.haulotte.com www.haulotte.de		HAULOTTE VOSTOK 35, SVOBODY STREET Bldg. 19 125362 MOSCOW RUSSIA **TEL/FAX : +7 495 221 53 02 / 03** E.mail : info@haulottevostok.ru www.haulotte-international.com		HAULOTTE DO BRASIL AV. Tucunaré, 790 CEP: 06460-020 – TAMBORE BARUERI – SAO PAULO – BRASIL **TEL : +55 11 4196 4300** FAX : +55 11 4196 4316 E.mail : haulotte@haulotte.com.br www.haulotte.com.br
	HAULOTTE IBERICA C/ARGENTINA N° 13 - P.I. LA GARENA 28806 ALCALA DE HENARES MADRID **TEL : +34 902 886 455** TEL SAT : +34 902 886 444 FAX : +34 911 341 844 E.mail : iberica@haulotte.com www.haulotte.es		HAULOTTE POLSKA Sp. Z.o.o. UL. GRANICZNA 22 05-090 RASZYN - JANKI **TEL : +48 22 720 08 80** FAX : +48 22 720 35 06 E-mail : haulottepolska@haulotte.com www.haulotte.pl		HAULOTTE MÉXICO, Sa de Cv Calle 9 Este, Lote 18, Civac, Jiutepec, Morelos CP 62500 Cuernavaca México **TEL : +52 77 7321 7923** FAX : +52 77 7516 8234 E-mail : haulotte.mexico@haulotte.com www.haulotte-international.com
	HAULOTTE PORTUGAL ESTRADA NACIONAL NUM. 10 KM. 140 - LETRA K 2695 - 066 BOBADELA LRS **TEL : + 351 21 995 98 10** FAX : + 351 21 995 98 19 E.mail : haulotteportugal@haulotte.com www.haulotte.es		HAULOTTE SINGAPORE Pte Ltd. No.26 CHANGI NORTH WAY, SINGAPORE 498812 **Parts and service Hotline:** **+65 6546 6150** FAX : +65 6536 3969 E-mail: haulotteasia@haulotte.com www.haulotte.sg		HAULOTTE MIDDLE EAST FZE PO BOX 293881 Dubaï Airport Free Zone DUBAÏ United Arab Emirates **TEL : +971 (0)4 299 77 35** FAX : +971 (0) 4 299 60 28 E-mail : haulottemiddle-east@haulotte.com www.haulotte-international.com
	HAULOTTE SCANDINAVIA AB Taljegårdsgatan 12 431 53 Mölndal SWEDEN **TEL : +46 31 744 32 90** **FAX : +46 31 744 32 99** E-mail : info@se.haulotte.com spares@se.haulotte.com www.haulotte.se		HAULOTTE TRADING (SHANGHAI) Co. Ltd. #7 WORKSHOP No 191 HUA JIN ROAD MIN HANG DISTRICT SHANGHAI 201108 CHINA **TEL : +86 21 6442 6610** FAX : +86 21 6442 6619 E-mail : haulotteshanghai@haulotte.com www.haulotte.cn		HAULOTTE ARGENTINA Ruta Panamericana Km. 34,300 (Ramal A Escobar) 1615 Gran Bourg (Provincia de Buenos Aires) Argentina **TEL.: +54 33 27 445991** FAX. +54 33 27 452191 E-mail : haulotteargentina@haulotte.com www.haulotte-international.com
	HAULOTTE UK Ltd STAFFORD PARK 6 TELFORD - SHROPSHIRE TF3 3AT **TEL : +44 (0)1952 292753** FAX : + 44 (0)1952 292758 E.mail : salesuk@haulotte.com www.haulotte.co.uk		HAULOTTE GROUP / BILJAX 125 TAYLOR PARKWAY ARCHBOLD, OH 43502 – USA **TEL : +1 419 445 8915** FAX :+1 419 445 0367 Toll free : +1 800 537 0540 E.mail : sales@us.haulotte.com www.haulotte-usa.com		HAULOTTE GROUP 1301 E PATRICK STREET FREDERICK, MD 21701 – USA **TEL : +1 301 663 0852** FAX :+1 301 663 0572 Toll free : +1 800 537 0540 E.mail : sales@us.haulotte.com www.haulotte-usa.com
	HAULOTTE NETHERLANDS BV Koopvaardijweg 26 4906 CV OOSTERHOUT - Nederland **TEL : +31 (0) 162 670 707** FAX : +31 (0) 162 670 710 E.mail info@haulotte.nl		HAULOTTE AUSTRALIA PTY Ltd 46 GREENS ROAD DANDENONG – VIC – 3175 **TEL : 1 300 207 683** FAX : +61 (0)3 9792 1011 E.mail : sales@haulotte.com.au		HAULOTTE CHILE El Arroyo 840 Lampa (9380000) Santiago (RM) **TEL : + 562 2 3727630** E.mail : haulotte-chile@haulotte.com www.haulotte-chile.com

Downloaded from www.Manualslib.com manuals search engine

https://truckmanualshub.com/

For the engine powered machines destined to the US market (Standards ANSI and CSA)

CALIFORNIA

Proposition 65 Warning

Diesel engine exhaust and some of its constituents are known to the state of California to cause cancer, birth defects, and other reproductive harm

Downloaded from www.Manualslib.com manuals search engine