https://truckmanualshub.com/

OPERATION & MAINTENANCE

Paver Finisher
F1000W T4i

Edit.2 Mar.2016 D717410129(A4);4812247566(A5)

EN Keep for later use in document compartment

Valid for:

_____-_____

_____-_____

Sustainable Productivity

Atlas Copco

https://truckmanualshub.com/

Atlas Copco

www.atlascopco.com

https://truckmanualshub.com/

Table of contents

V Preface 1

1 General safety instructions 3
1.1 Acts, directives, accident prevention regulations 3
1.2 Warning instructions 3
1.3 Prohibitive signs 6
1.4 Protective gear 7
1.5 Environmental protection 8
1.6 Fire prevention 8
1.7 Further instructions 9

A Correct use and application 1

B Vehicle description 1

1 Application 1
2 Description of assemblies and functions 2
2.1 Vehicle 3
Construction 3
3 Danger Zones 6
4 Technical data, standard configuration 7
4.1 Dimensions (all dimensions in inches) 7
4.2 Allowed angle of rise and slope 8
4.3 Permissible approach angle 8
4.4 Turning circle 8
4.5 Weights, F1000W 9
4.6 Performance data 9
4.7 Traction drive/chassis 10
4.8 Engine 10
4.9 Hydraulic systemOperator stations 10
4.10 Electrical system 10
4.11 Operator stations 11
4.12 Material compartment (hopper) 11
4.13 Conveyor 11
4.14 Augerr 11
4.15 Permissible temperature ranges 11
5 Location of instruction labels and identification plates 12
6 EN standards 17
6.1 Continuous sound pressure level on the F1000W Wheeled Paver, Cummins QSB-6.70 Tier III Engine. 17
6.2 Operating conditions during measurement 17
6.3 Measuring point configuration 18

C1.1 Transport 1

1 Safety regulations for transportation 1
2 Transportation on low-bed trailers 3
2.1 Preparations 3
2.2 Driving onto the low-bed trailer 6
2.3 Secure the paver finisher to the low-bed trailer: 6
2.4 After transportation 7

https://truckmanualshub.com/

3 Transportation 8
3.1 Preparations 8
3.2 Driving mode 11
4 Loading by crane 13
5 Towing 15
6 Safely parking the vehicle 16

D1.1 Operation 1

1 Safety regulations 1
2 Controls 2
2.1 Operating panel 2
3 Auxiliary functions 25
4 Left / right remote controls and handsets 27
Left / right remote control 28
Left / right handset 37

D2.0 Operation 1

1 Operation of the graphical terminal 1
1.1 Navigation using Soft Keys 2
Brightness/Contrast Adjustment 3
Main Menu - Start Menu 3
Main Menu - Basic Setup 4
Main Menu - Basic Setup -Time / Date 5
Main Menu - Basic Setup -Language 5
Main Menu - Basic Setup -Units 6
Main Menu - Diagnostics 7
Main Menu - Diagnostics -System Info 8
Main Menu - Diagnostics -Fault Log 8
Main Menu - Diagnostics -Fault Log Active and Previous Faults 9
Main Menu - Diagnostics -Fault Pop-Up Alarms 10
Main Menu - Diagnostics -Device List 11
Main Menu - Diagnostics -Quick Data 12
Start Display 13
Display 01 14
Display menu 14
Display 02 14
Display menu 14
Active Faults Display 15
Fault Sources and Codes 15
Warnings Display 17

https://truckmanualshub.com/

1.2 Engine Error messages 18
1.3 FMI-codes 23

D3.0 Operation 1

1 Operating elements on the paver 1
Operator's platform 1
Seat console 1
Operating panel 1
Driver's seat 2
Batteries 2
Battery main switch 3
Transport safeguards for the hopper 4
Mechanical screed transport safeguard (to the left and the right beneath the driver's seat) 4
Paving thickness indicator 5
Release Agent System 6
On/Off switch of working lights (1) 7
On/Off switch hazard flasher (2): 7
Warning Beacon 7
Conveyor limit sensors 8
Ultrasonic auger limit sensors (left and right) 8
Sockets 24V 8

D4.0 Operation 1

1 Preparation of operation 1
Required equipment and tools 1
Before starting work (in the morning or when starting paving) 2
Checklist for the machine operator 2
1.1 Starting the paver 5
Before starting the paver 5
"Normal" starting 5
Jump starting 7
After starting 9
1.2 Transport Operation 11
Lifting and securing the screed 11
Driving and stopping the paver 11
Switching off and securing the paver 11
1.3 Preparations for paving 12
Releasing agent 12
Screed heater 12
Direction marks 12
Loading/distributing material 14
1.4 Starting for paving 16
1.5 Check during paving 17
Paver function 17
Quality of the layer 17
1.6 Interrupting/terminating operation 19
During breaks (i.e. the material supply truck is late) 19
During extended interruptions (i.e. lunch break) 19

https://truckmanualshub.com/

When work is finished ... 21
2 Malfunctions ... 22
2.1 Problems during paving ... 22
2.2 Malfunctions on the paver or screed ... 24

E1.0 Set-up and modification ... 1

1 Special notes on safety ... 1
2 Auger ... 2
2.1 Height adjustment ... 2
2.2 Auger crossbeam - hydraulic height adjustment ... 2
2.3 Auger extension ... 3
2.4 Mounting extension parts ... 4
2.5 Mounting support tube extensions ... 5
2.6 Installing tunnel plates ... 6
2.7 Installing additional braces ... 7
3 Screed ... 8
4 Electrical connections ... 8
4.1 Remotes from screed to paver ... 8
4.2 Right hand conveyor sensor control ... 8
4.3 Right hand auger sensor control ... 8
4.4 Left hand conveyor sensor control ... 9
4.5 Left hand auger sensor control ... 9
4.6 Auger Chart ... 10

F1.0 Maintenance ... 1

1 Notes regarding safety ... 1

F2.1 Maintenance Overview ... 1

1 Maintenance overview ... 1

F3.0 Maintenance - Conveyor ... 1

1 Maintenance - Conveyor ... 1
1.1 Maintenance intervals ... 2
1.2 Points of maintenance ... 3
Chain tension of the conveyor (1) ... 3
Conveyor tensioning sprocket bearings (2) ... 5
Conveyor bearing (3) ... 5
Conveyor drive - (5) drive chains ... 6
Conveyor drive - (6) planetary drive (left/right) ... 7
Conveyor chain guards / conveyor plates (7) ... 8

F4.0 Maintenance - Auger ... 1

1 Maintenance - Auger sub-unit I ... 1
1.1 Maintenance intervals ... 2
1.2 Points of maintenance ... 3
Auger - outer bearing (1) ... 3
Auger middle bearing (2) ... 3
Auger - drive gear neck bearing (3) ... 4

https://truckmanualshub.com/

Auger bevel gear (on the RH and LH sides) (4) 5
Auger blade (5) 6

F5.0 Maintenance - Engine 1

1 Maintenance - engine sub-unit 1
1.1 Maintenance intervals 2
1.2 Points of maintenance 4
Engine fuel tank (1) 4
Engine lube-oil system (2) 5
Engine fuel system (3) 7
Engine air cleaner (4) 9
Engine Coolant system (5) 11
Engine drive belt (6) 13

F6.0 Maintenance - Hydraulic System 1

1 Maintenance - hydraulic system 1
1.1 Maintenance intervals 2
1.2 Hydraulic System 3
1.3 Points of maintenance 4
Hydraulic oil tank (1) 4
Suction/return flow hydraulic filter (2) 6
Venting the filter: 7
High pressure filter (3) 8
Pump distribution gear (4) 9
Hydraulic hoses (5) 11

F7.1 Maintenance - Travel Drive, Steering 1

1 Maintenance - travel drive, steering 1
1.1 Maintenance intervals 2
1.2 Points of maintenance 3
Wheel mounting nuts (1) 3
Rear wheels 3
Front wheels (with front wheel drive) 3
Planetary gear (2) 4
Air pressure (driving wheels) (3) 6
Places of lubrication (4) 7

F8.1 Maintenance - Electronic System 1

1 Maintenance - Electronic system 1
1.1 Maintenance intervals 2
1.2 Points of maintenance 3
Batteries (1) 3
Electric fuses / relays (3) 4
Fuses in terminal box (B) 5
Relays in terminal box (C) 7

F9.0 Maintenance - Lubricating Points 1

1 Maintenance - Lubricating points 1

https://truckmanualshub.com/

1.1 Maintenance intervals 2
1.2 Points of maintenance 3
Bearing points (1) 3

F10.0 Checks, Decommissioning 1

1 Tests, check-up, cleaning, stopping 1
1.1 Maintenance intervals 2
2 General observation 3
3 Check performed by a specialist 3
4 Cleaning 4
5 Preservation for storage of paver 5
5.1 Downtime up to 6 months 5
5.2 Downtime between 6 months and 1 year. 5
5.3 Re-commissioning: 5
6 Environmental protection, disposal 6
6.1 Environmental protection 6
6.2 Disposal 6

F11.0 Lubricants and Operating Substances 1

1 Lubricants and operating substances 1
1.1 Capacities 2

https://truckmanualshub.com/

V Preface

Safe operation of the machine requires specific knowledge that is in these operating instructions. The information is provided in a concise, clearly structured form. The individual chapters are arranged in alphabetical order and every chapter starts with page 1. The individual pages are identified by the chapter letter and the page number.
Example: Page B 2 is the second page of chapter B.

These operating instructions cover various machine options. Make sure that during operation and maintenance work the description appropriate to the machine option is used.

Safety instructions and important notes are identified by the following:

⚠ DANGER

Danger is used ot indicate the presence of a hazard which ***will*** cause ***severe*** personal injury, death, or substantial property damage if the warning is ignored.

⚠ WARNING

Warning is used to indicate the presence of a hazard which can cause severe personal injury, death, or extensive property damage if the warning is ignored.

⚠ CAUTION

Caution is used to indicate the presence of a hazard which will or can cause minor personel injury or property damage if the warning is ignored.

NOTICE

Notifies people of installation, operation or maintenance information which is important but not hazard-related. Hazard warnings should never be included under the Notice indicator.

NOTE:

Note is used for supplementary information not directly effecting safety or damage to the equipment. Note can also refer to special information on the efficient use of the equipment.

In the interest of continued development, the manufacturer reserves the right to make changes to the machine (which will not, however, change the essential features of the type of machine described) without updating the present operating instructions at the same time.

https://truckmanualshub.com/

Dynapac (China) Compaction & Paving Equipment Co., Ltd.
No.38, Quanwang Road,
Wuqing High Tech Industrial Park,301700,
Tianjin, China
www.dynapac.com

https://truckmanualshub.com/

1 General safety instructions

1.1 Acts, directives, accident prevention regulations

NOTICE

The locally applicable acts, directives and accident prevention regulations shall be observed, even if the attention is not specifically directed to these.
The operator himself shall be responsible for the observation and performance of the related regulations and actions!

NOTICE

The following alerts, prohibitions and instructions refer to the risks to which people, machinery and environment are exposed.

NOTICE

Ignoring these instructions, bans and commands may lead to fatal injuries!

NOTICE

Furthermore, the Dynapac publication "Directives for the correct and specified application of pavers" shall also be observed.

1.2 Warning instructions

A paving machine has many components and implements that are controlled by a hydraulic system, either directly or indirectly. Before working on or inspecting any part of a paving machine, it is important that the individual knows how the components move and are controlled by the hydraulic system components including the respective control circuits.

Before working on or inspecting any component, it must be physically constrained from any movement that chould cause injury to the worker. The worker must be alert to not placing any part of his/her body where movement of a component could cause injury, unless that component is physically constrained from movement, if the hydraulic system fails, is disconnected, or is asignaled to cause movement.

It must also be recognized that there are occasions where component and or vehicle movement may react to the release of potential energy. Where applicable it must be confirmed that all measures are employed to ensure that any and all sources of potential energy are released and/ or physically restrained.

It is also the responsibility of those involved to insure that all local, state and federal safety regulations are followed, prior to, and during any work or inspection.

https://truckmanualshub.com/

⚠ WARNING

Warning: areas of hazard or danger!
Not observing the warning instructions may lead to injuries or death!

⚠ WARNING

Warning: rotating parts!

Rotating parts or transport parts can cause severe injury or death!
Perform each operation only with equipment switched off!

⚠ CAUTION

Attention: electric voltage!

All maintenance and repair work on the screed's electrical system must always be carried out by an electrician!

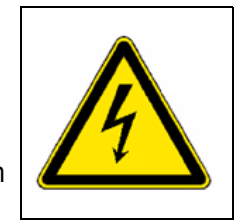

⚠ CAUTION

Attention: suspended load!

Never stand under suspended loads!

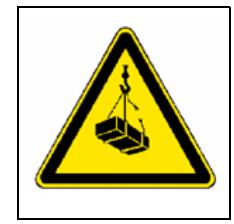

⚠ WARNING

Warning: risk of crushing!

Operation of certain parts or functions and moving the machine can produce a risk of crushing.
Always make sure that no one is in the areas exposed to risk!

⚠ CAUTION

Caution: risk of hand injury!

⚠ CAUTION

Caution: hot surfaces or hot liquids!

https://truckmanualshub.com/

WARNING

Warning, risk of falling off!

Falling can cause severe injury or death!

CAUTION

Caution: hazardous batteries!

Combustible gas can cause severe burns, blindness or death!

Keep sparks and open flame away from batteries.

CAUTION

Caution: materials harmful to health and irritating substances!

CAUTION

Caution: flammable materials!

CAUTION

Caution: gas bottles!

https://truckmanualshub.com/

1.3 Prohibitive signs

It is prohibited to open / step on / reach into / perform / adjust during operation or when the paver engine is running!

Do not start the engine/drive!
Maintenance and repair can be carried out only with the Diesel engine turned off!

Do not spray with water!

Do not extinguish with water!

Unskilled maintenance is prohibited!
Maintenance can be performed by skilled professionals only!

NOTICE

Contact the Dynapac service for maintenance assistance!

Danger of fire: do not use open flame and no smoking!

Do not turn on!

https://truckmanualshub.com/

1.4 Protective gear

NOTICE

The applicable local regulations may define the use of different protective gear!
Observe these specifications!

Protect your eyes with goggles!

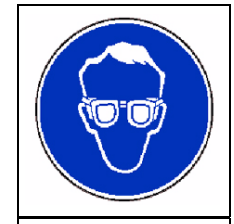

Wear appropriate head protection!

Protect your hearing with appropriate ear mufflers!

Protect your feet with safety footwear!

Always wear tight, conforming working coveralls!
Wear visibility vest for good visibility!

In case of polluted air, wear respiratory mask!

https://truckmanualshub.com/

1.5 Environmental protection

NOTICE

The locally applicable acts, directives and waste disposal regulations shall be observed, even if the attention is not specifically directed to these.
During cleaning, maintenance and repair operations, pollutants such as:

- lubricants (oils, grease)
- hydraulic oil
- gas oil
- coolant
- detergents

may not enter the soil or the sewer system!

These materials shall be collected, stored, transported in the correct containers until professional disposal!

Material harmful for the environment!

1.6 Fire prevention

NOTICE

The applicable local regulations may specify that appropriate fire extinguishers be mounted!
Observe these specifications!

Fire fighting device
(optional equipment)

https://truckmanualshub.com/

1.7 Further instructions

NOTICE

Observe the manufacturer's and other instructions!

(i.e. the maintenance instructions from the engine manufacturer)

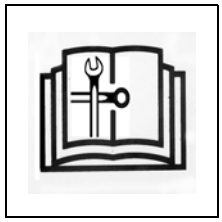

⚠ WARNING

Indicates a bottled gas heated design!

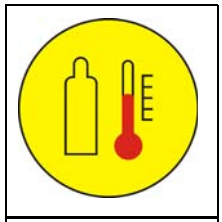

⚠ WARNING

indicates an electrically heated design!

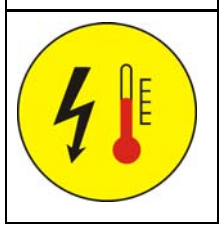

https://truckmanualshub.com/

https://truckmanualshub.com/

A Correct use and application

NOTICE

The “Guidelines for the Correct Use and Application of Paver” compiled by Dynapac are included in the scope of delivery for the present machine. The guidelines are part of the present operating instructions and must always be followed. Federal, state and local regulations are fully applicable.

The road construction machine described in these operating instructions is a paver that is suited for laying mixed materials, roll-down concrete or lean-mixed concrete, track-laying ballast and unbound mineral aggregates for paving foundations.
This machine shall be used, operated and maintained for the purpose of the intended work as included in the operation manual. Any other use is regarded as improper use and can cause injury to persons or damage to the paver or other equipment or property.

Any use going beyond the range of applications described above is regarded as improper use and is expressly forbidden! Especially in those cases where the paver is to be operated on inclines or where it is to be used for special purposes (i.e. construction of dumps, dams), it is absolutely necessary to contact the manufacturer.

Duties of the user: A “user” within the meaning of the present operating instructions is defined as any natural or legal person who either uses the paver himself, or on whose behalf it is used. In special cases (i.e. leasing or renting), the user is considered the person who, in accordance with existing contractual agreements between the owner and the user of the paver , is charged with the observation of the operating duties.
The user must ensure that the paver is only used in the stipulated manner and that all danger to life and limb of the operator, or third parties, is avoided. In addition to this, it must be ensured that the relevant accident prevention regulations and other safety-related provisions as well as the operating, servicing and maintenance guidelines are observed. The user must also ensure that all persons operating the equipment have read and understood the present operating instructions.

Mounting attachments: The paver must only be operated in conjunction with screeds that have been approved by the manufacturer. Mounting or installation of any attachments that will interfere with or supplement the functions of the paver is permitted only after written approval by the manufacturer has been obtained. If necessary, the approval of local authorities has to be obtained.
Any approval obtained from local authorities does not, however, make the approval by the manufacturer unnecessary.

https://truckmanualshub.com/

https://truckmanualshub.com/

B Vehicle description

1 Application

The Dynapac F1000W is a rubber tire fitted paver finisher that is used for laying bituminous mixed material, roll-down or lean-mixed concrete, track-laying ballast and unbound mineral aggregates for paving foundations.

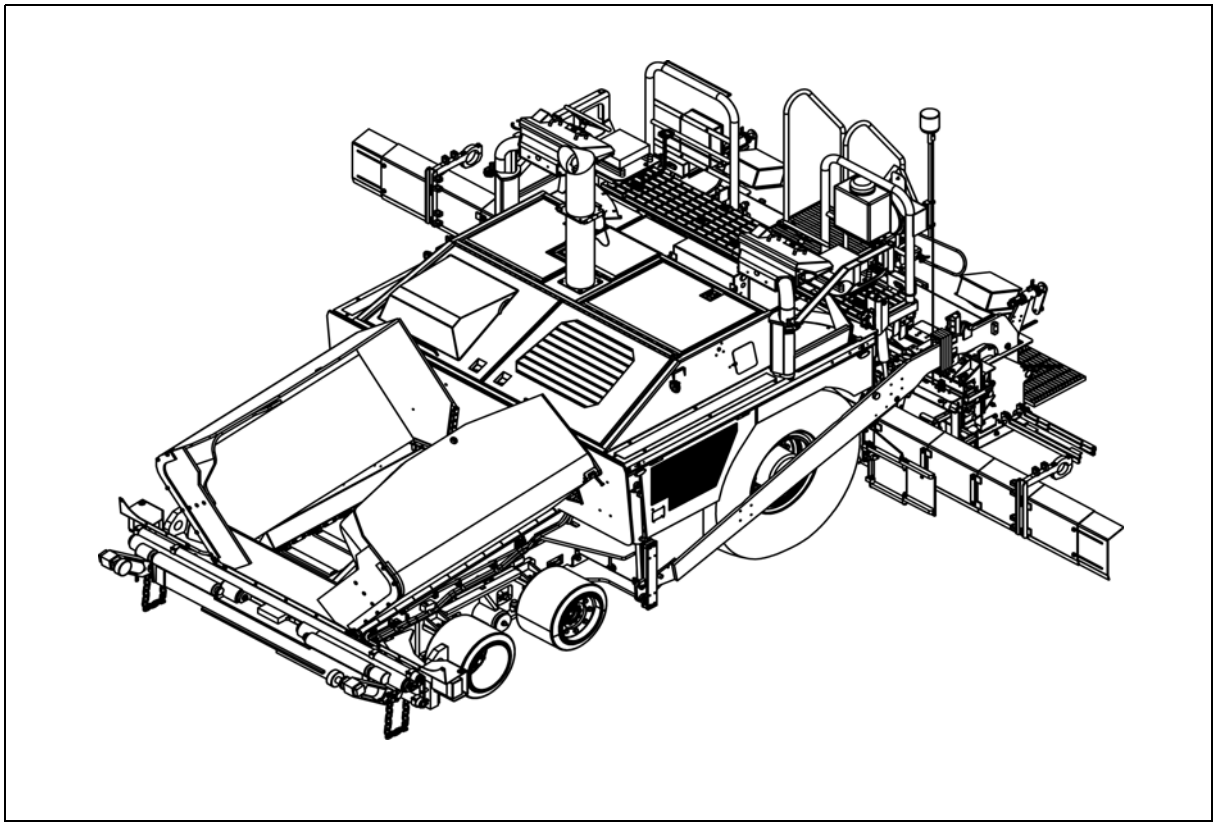

https://truckmanualshub.com/

2 Description of assemblies and functions

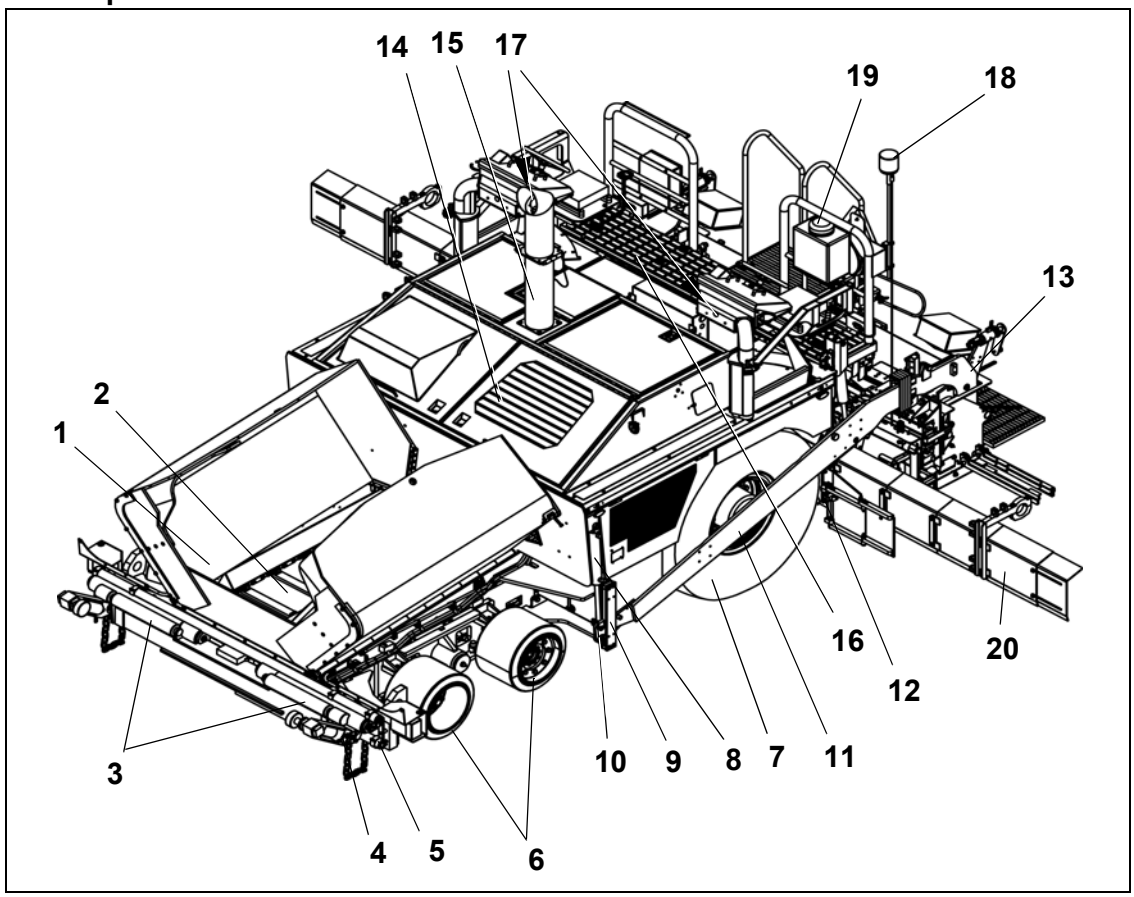

Item	Standard or Optional	Designation
1	**Standard**	Material hopper
2	**Standard**	Conveyor
3	**Standard**	Truck push rollers
4	**Option**	Truck hitch
5	**Standard**	Mounting tube for alignment indicator
6	**Standard**	Front tandem axle
7	**Standard**	Rear wheels
8	**Standard**	Levelling cylinder (for paving thickness)
9	**Standard**	Traction arm guide
10	**Standard**	Traction roller
11	**Standard**	Screed lifing arm
12	**Standard**	Auger
13	**Standard**	Screed
14	**Standard**	Power pack enclosure
15	**Standard**	Engine exhaust
16	**Standard**	Operator’s platform
17	**Standard**	Operator’s panels
18	**Optional**	Warning beacon
19	**Optional**	Washer/sprayer
20	**Optional**	Tunnel Extensions

https://truckmanualshub.com/

2.1 Vehicle

Construction

The Dynapac F1000W is a rubber tire propelled paver built with a welded steel frame on which the power pack, augers, conveyors, hopper and operator positons are mounted.

The large drive wheels together with the front tandem shaft jointly compensate the irregularities of the soil and as a result of the screed's suspension, they guarantee a particularly high paving precision.
The continuously adjustable hydrostatic traction drive allows the speed of the paver to be matched to all work conditions.

The operation of the paver includes the automatic material handling system, the independent travel drives and the clearly structured operating components and controls.

The following options are available:

Grade Control
- Control System
- Averaging Ski
- Non-Contacting Averaging Ski

Truck Hitch
Front Wheel Assist
Washdown System and Hose Reel
Auger Extensions
Frame Extensions
Steering Guide (Truck Hitch)
Umbrella
Auxillary Power Panel (220/110V)
Road Lights (Tail Lights)
Warning Beacon
Up Time Kit
Screed
- Berm
- Screed Corded Controls
- Screed Extensions

Further equipment and upgrade options on request

https://truckmanualshub.com/

Engine: The paver is powered by a 6-cylinder, water cooled diesel engine with direct injection and a turbo charger. Electric starting and belt driven alternator battery charrging is standard. The engine power / rpm is controlled by the engine speed control on either of the consoles. The engine is shut down either by removing the key “ON/OFF” switch or he emergency stop switch. For further details, see the technical data in the engine’s instruction manual.

Running gear: The paver is rear wheel, hydraulically driven and uses the hydraulics on the second front wheels to assist with the steering. The steering wheel sends the signal to the front tandem pivoting axle to turn. Once the front tandem pivoting axle starts to turn, a signal is sent to the rear wheels requiring one wheel to use more flow that the other to turn the machine. So as the front wheels receive the signal to turn left, a signal is sent to the right rear wheel to use more power to turn that wheel faster than the wheel on the left and the second front wheels assists hydraulically with the turn . As the front wheels receive the signal to turn right, a signal is sent to the left rear wheel to use more power to turn the wheel faster than the wheel on the right and the second front wheels assist hydraulically with the turn.
As a result of this, the steering capability and the load capacity are improved, especially on soft ground. The paver is mounted with flexible solid tires on the front wheels and large-size, tubeless, air filled tires on the rear wheels.

Hydraulic system: The diesel engine has the distribution gear box attached to it. This drives the hydraulic pumps for all of the main and auxilary paver functions. The hydraulic system also drives the generator needed to heat materials to prevent the material from sticking to the screed plate. All power on the paver comes from hydraulics.

Propel drive: The closed-loop propel drive system includes two speed track drive motors that are connected to the drive pumps by means of high pressure hydraulic hoses. The hydraulic motors are mounted to the rear drive wheels which move the paver. Forward and reverse movement is controlled by directional control joysticks on the consoles while the variable speed, independent drive wheels are controlled by a steering wheel on either of the operator consoles.

Steering system/operator’s platform: The independent hydrostatic travel drives allow the paver to be turned in a small radius. The eletronic synchronization, controlled from the operating panel, ensures that the paver runs straight ahead. The operating panel can be secured in a position on the left-hand or the right-hand side of the paver by means of a latch assembly.
Steering is accomplished by using the tandem steering axel in front of the machine. The steering axel is controlled by the steering wheel at the opertor’s console. Rotate the steering wheel clockwise to turn the machine right. Ratate the steering wheel counter-clockwise to turn the machine left.

Push roller crossbar: The push rollers for material trucks are connected to a crossbar that pivots at its center. This crossbar allows for differences in distances to the rear wheels on a variety of material trucks. This permits the paver to deviate less from its course and makes paving curves easier.

Material compartment (hopper): The hopper inlet is equipped with a conveyor system that empties the hopper and transfers the material to the auger. The hopper can hold approximately 30,000 lbs. (13608 kg). To facilitate the emptying and to improve material transfer, each of the lateral covers of the hopper are hydraulically moved.

https://truckmanualshub.com/

Conveyors (Material transfer): The paver is equipped with two conveyors driven separately with pressure from a single pump. The system consists of a single, pressure compensated, load sense style, variable displacement, open loop pump driving two fixed volume hydraulic motors. This pump supplies hydraulic power for both conveyors of the machine and provides power for the cylinders on the machine.
These conveyors transfer the material from the hopper to the augers. By using sensors to monitor the filling height during the paving proceedure, the transfer amount or speed regulation is completely automatic.

Augers: The augers are driven and controlled independently from the conveyors. The auger hydraulics consist of two high pressure, variable displacement, closed loop pumps driving two fixed volume motors. The left-hand and the right-hand half of the auger can be controlled separately.
The conveying direction can be changed towards the center or the outside ensuring that there is always a sufficient supply of material even if an excessive amount of material is required at one side. The auger speed is controlled by sensors that monitor the material flow leaving the conveyor.

Height adjustment and extension of augers: Height adjustment and extension of augers ensure an optimum variety of a wide range of paving thicknesses and widths. Auger height is regulated at the operating panel and moved by means of hydraulic cylinders.
Auger segments of different lengths can be attached to easily adapt to the different paving widths.

Levelling/slope control system (option): The slope control system allows the paving thickness to be regulated at the left-hand or the right-hand side with a defined difference to the opposite side.
To determine the actual value, the two screed lifting arms are linked with a slope control rod.

The slope control system always operates in conjunction with the screed height adjustment of the opposite side.

By adjusting the height of the screed lifing arms, the paving thickness of the material or the laying height of the screed can be controlled.
Activation occurs electro-hydraulically on both sides and can be controlled manually by means of toggle switches or automatically by means of an electronic grade control system.

Screed lifting arms: The screed lifting arms are used to lift the screed during transportation. Lifting occurs electro-hydraulically on both sides by actuating the hydraulic cylinders on the screed lifting arms and is controlled by means of toggle switches on the operating panel.

Truck hitch (option): The truck hitch holds the transport vehicle for paving material in contact with the paver. They are located on the front of the hopper.

https://truckmanualshub.com/

3 Danger Zones

WARNING

In the working areas around the machine (marked in red), there may be a risk of pulling in or crushing during normal operation caused by rotating and conveying elements, or by components in motion. The Danger Zones for the paver are illustrated in the following drawing. Always be aware of Danger Zones.

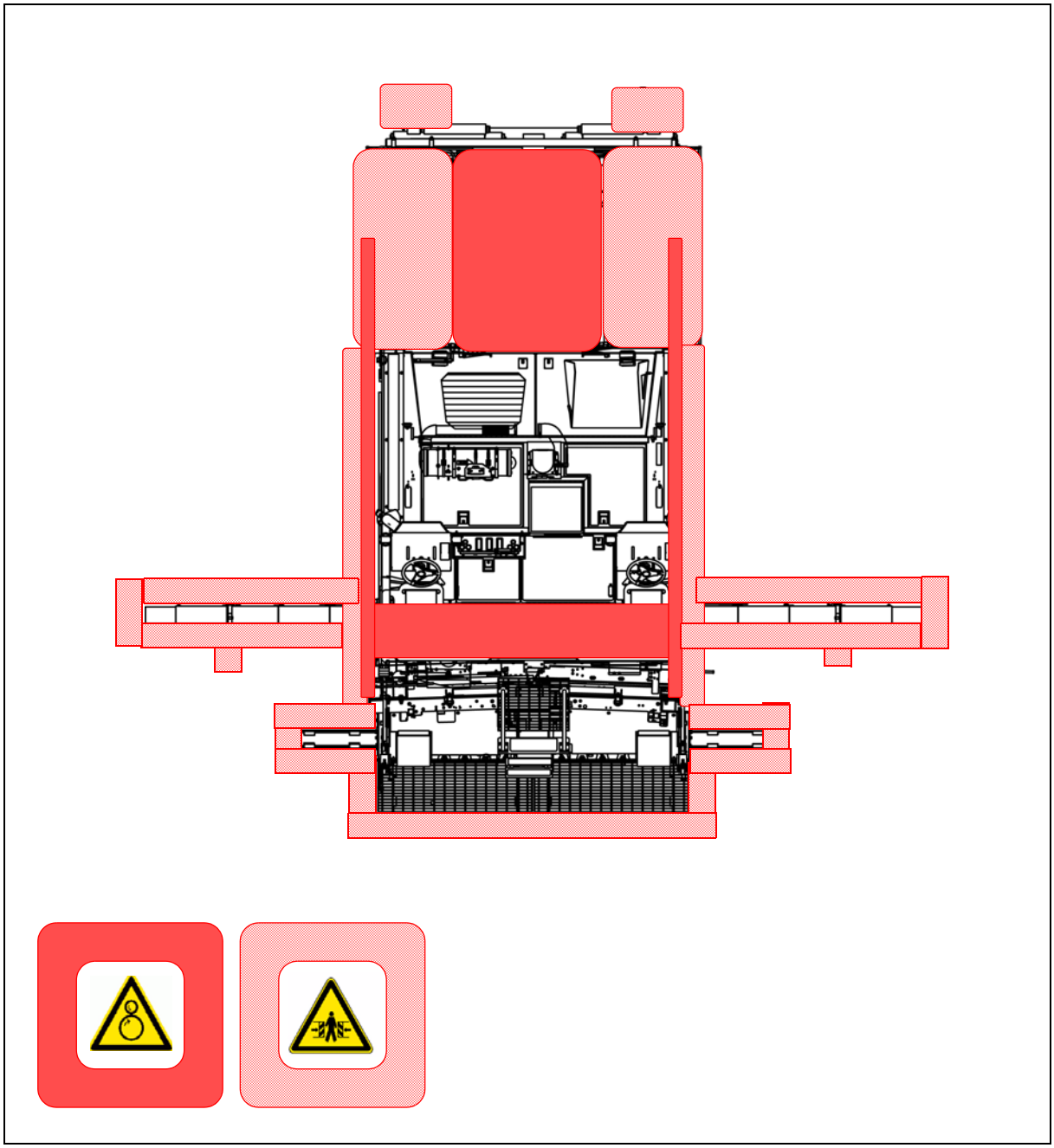

https://truckmanualshub.com/

4 Technical data, standard configuration

4.1 Dimensions (all dimensions in inches)

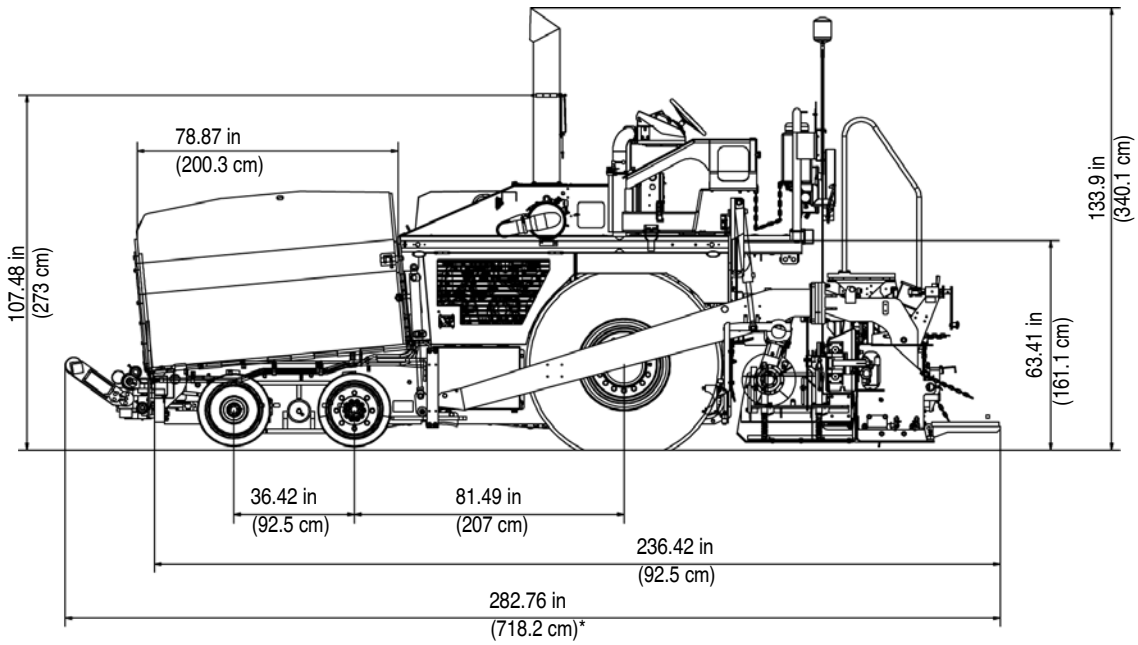

* WITH TRUCK HITCH

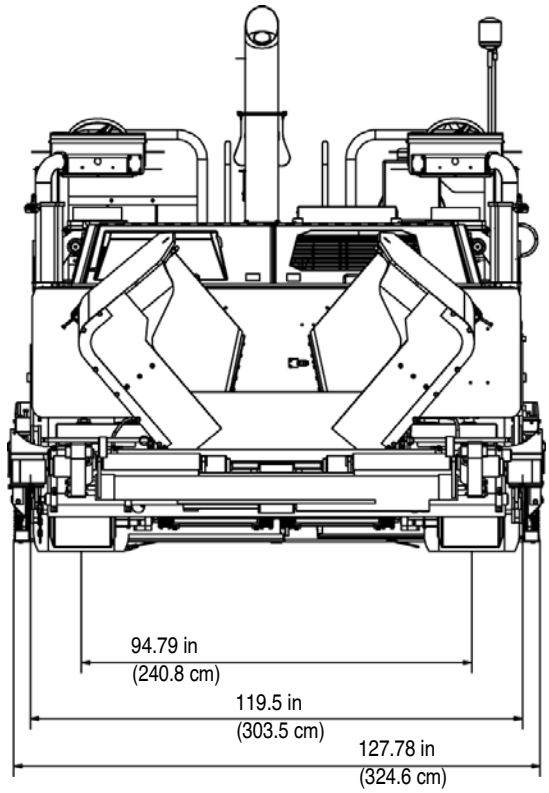

*Carlson EZ IV

https://truckmanualshub.com/

NOTICE

For screed technical data, refer to the screed operating instructions.

4.2 Allowed angle of rise and slope

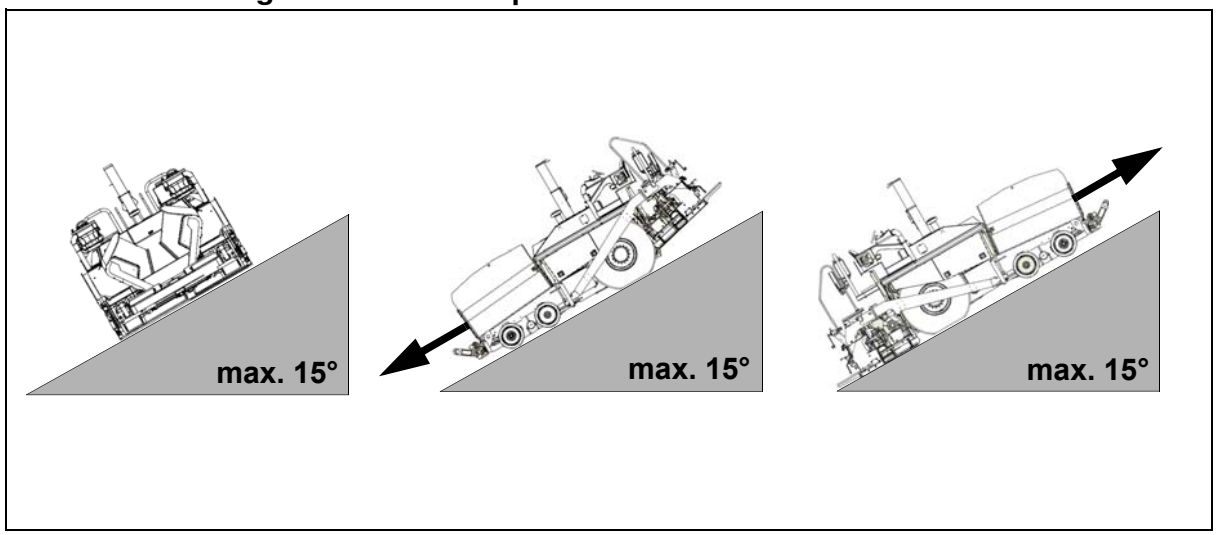

NOTICE

Before operating your machine in an inclined position (gradient, slope, lateral inclination) which is above the specified limit value, please consult the customer service department for your machine!

4.3 Permissible approach angle

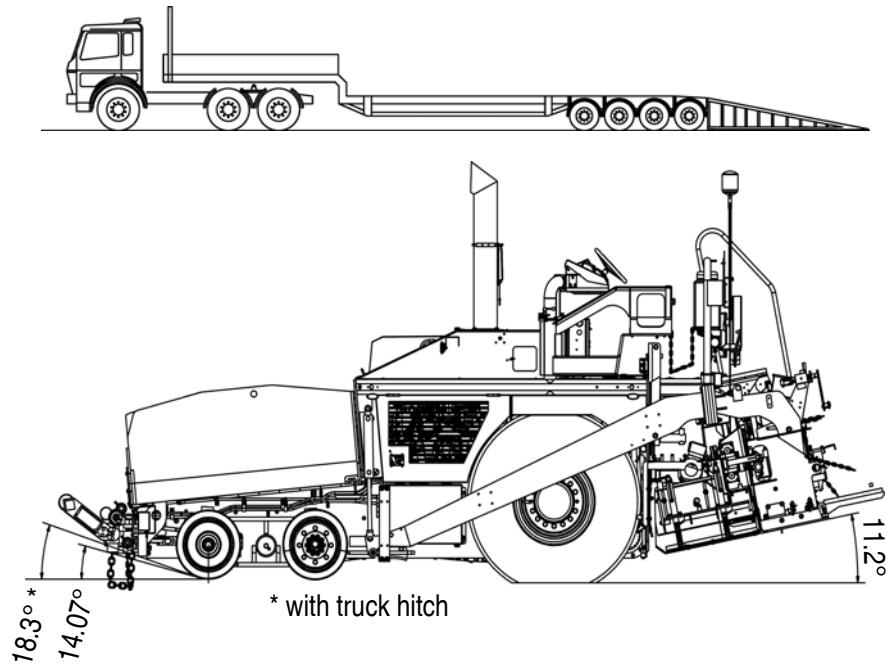

4.4 Turning circle

Turning radius - 1st, 2nd, 3rd gears	16 ft. (14.87 m)
Turning radius - Pivot steer mode	5 ft (1.52 m)

https://truckmanualshub.com/

4.5 Weights, F1000W

Paver finisher without screed	approx. 33400 lbs. (14969 kg)
Paver finisher with screed: - Carlson EZ IV 1019 (7000 lbs.) - Carlson EZ III 10 (6000 lbs.) - Carlson EZR 10 (8250 lbs.)	 approx. 40400 lbs. (18144 kg) approx. 39400 lbs. (17690 kg) approx. 41650 lbs. (18710 kg)
With filled hopper, include an Additional maximum of:	approx. 30400 lbs. (13608 kg)

4.6 Performance data

Screed used	Basic width (without cut-off shoes)	Minimum paving width (with cut-off shoe)	Continuously hydraulically adjustable up to	Maximum working widths (with extension parts)	
Carlson EZ IV 1019	10 3.05	10 3.05	19 5.79	25 7.62	ft m
Carlson EZ III 10	10 3.05	10 3.05	17 5.18	24 7.3	ft m
Carlson EZR 10	10 3.05	10 3.05	19.5 5.94	26 7.92	ft m

Maximum transport speed	12 19.3	mph km/hr
Maximum paving speed	285 86.9	fpm m/min
Paving thickness	12 30.5	in cm
Theoretical paving performance	1600	t/h

https://truckmanualshub.com/

4.7 Traction drive/chassis

Drive	Continuously variable hydrostatic drive, with pump and engine
Transmission	Planetary gear
Speeds	(see above)
Drive wheels	18 - 25TH, Rim Width 10” (air filled tires)
Steering wheels	16”w - 22”h (solid rubber tires)
Front wheel drive	2 / 4 wheel hub hydro-motor, freely selected, variable drive performance, Anti-spin control (○)
Brakes	Running gear brake, hydraulic brake

4.8 Engine

Make/type	Cummins QSB-6.7 Tier IV Interim
Version	6-cylinder diesel engine (water-cooled)
Performance	230 hp @ 1800rpm 220 hp @ 2000rpm
Fuel tank capacity	2 tanks, 49 Gal (185 lt) each.

4.9 Hydraulic systemOperator stations

Hydraulic pressure supply source	Hydraulic pumps via distribution gear (directly flanged to the engine)
Pressure distribution	Hydraulic circuits for: - Propel system - Auger drive system - Works system (conveyor, hydraulic cylinders) - Generator system - Vibration system - Fan Drive - Front wheel system (including the FWA, or Front Wheel Assist, and the steering
Hydraulic oil tank capacity	50 Gal (189 lt)
Hydraulic oil filling volume	80 Gal (303 lt)

4.10 Electrical system

On-board voltage	24 VDC
Batteries	2 x 12 V, 32F 1050, RC 195
Alternator	24V, 70A
Generator	110/220, 34kw, 60Hz

https://truckmanualshub.com/

4.11 Operator stations

Control consoles	Dual swing out operation stations

4.12 Material compartment (hopper)

Volume	approx. 207ft^3 (5.86m^3)
Minimum inlet height, center	38.5 in (978mm)

4.13 Conveyor

Conveyor type	Dual independent slat conveyor
Conveyor control	Proportional speed control, both side driven independently

4.14 Augerr

Auger control	Dual independent proportional augers

4.15 Permissible temperature ranges

Maximum Ambient Operating Temperature	+120°F (+48.9°C)

NOTICE

For the filling volumes of the various lubricants and operating substances, see chapter F.

https://truckmanualshub.com/

5 Location of instruction labels and identification plates

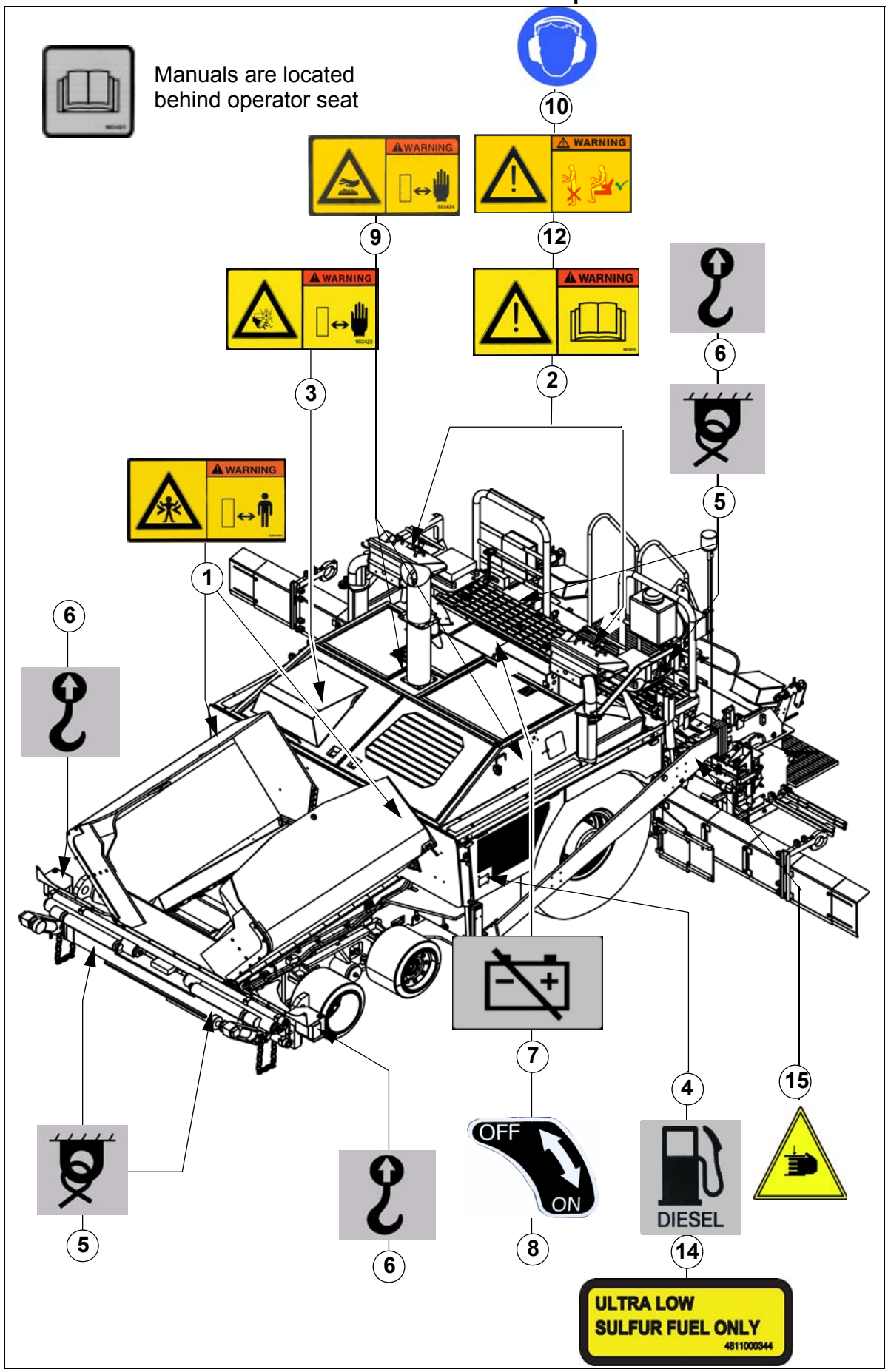

B_F1000W_US.fm 12-18

https://truckmanualshub.com/

Item	Decal	Description
1		Warning! Crush area! Keep a safe distance when machine is running or moving. Do not work in this area when the machine turns or machine parts move! Crushing can cause severe injury or death!
2	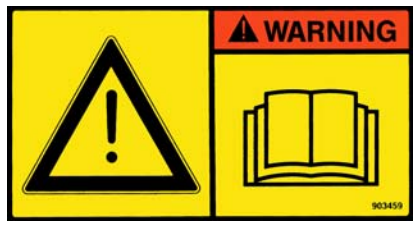	Warning! Do not work on this machine unless you have read and fully understand the warnings and instructions in the Operation/Maintenance and Safety Manual! Failure to follow the instructions or heed the warnings could result in injury or death. Contact your Dynapac dealer for replacement of manuals. Proper care is your personal responsibility!
3		Warning! Keep a safe distance from rotating fans! Do not work around or on the fan when fan is in operation! Rotating fan blades can cause severe injury or death!
4		Filler neck for diesel fuel! (Located on both sides of machine)
5	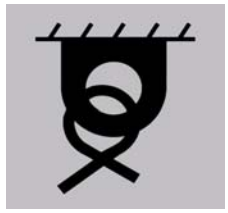	Tie-down points on machine! (Located on both sides and front and back of the machine)
6	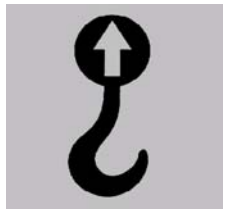	Lifting point on machine! (Located on both sides and front and back of the machine)

https://truckmanualshub.com/

Item	Decal	Description
7	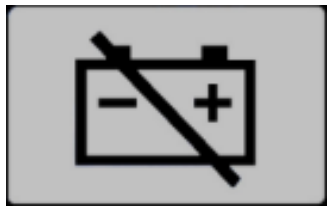	Main battery switch location! NOTE: Follow instructions for using battery main switch!
8		ON/OFF positions for battery main switch. ON - battery connected OFF - battery disconnected
9		Warning! Hot parts or components can cause burns! Keep a safe distance! Hot surfaces can cause burns or personal injury. Do not come into contact with hot parts or components. Wear protective clothing or protective equipment!
10		Wear ear protection when using the machine! Hearing damage could result from high noise level when ear protection is not used!
12		Warning! Do not drive the machine while standing! Severe injury or death from an unseated position could occur! Always use seat and seatbelt when driving machine in transport gear!
13	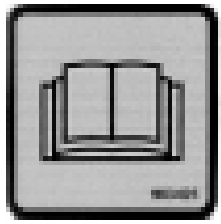	Location of technical manuals on the machine!

https://truckmanualshub.com/

Item	Decal	Description
14		Ultra-low sulphur diesel fuel only.
15		Warning! Crush area! Keep a safe distance when machine is running or moving. Do not work in this area when the machine turns or machine parts move! Crushing can cause severe injury or death!

Identification label for the paver

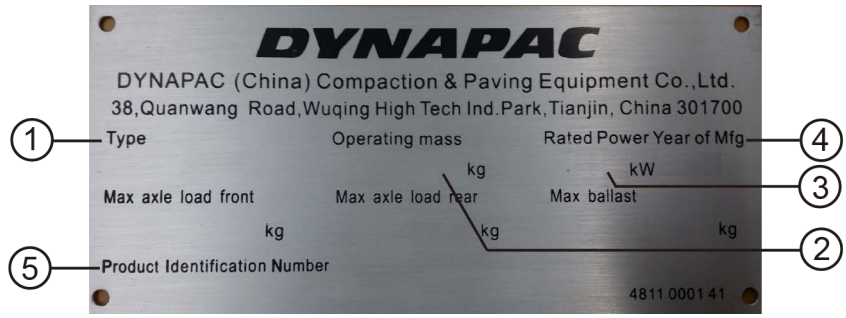

Item	Designation
1	Paver type
2	Operating Mass
3	Rated performance in kW
4	Year of Manufacture
5	Product identification number (PIN)

https://truckmanualshub.com/

Identification plate for the paver finisher (valid from Year 2016/2017)

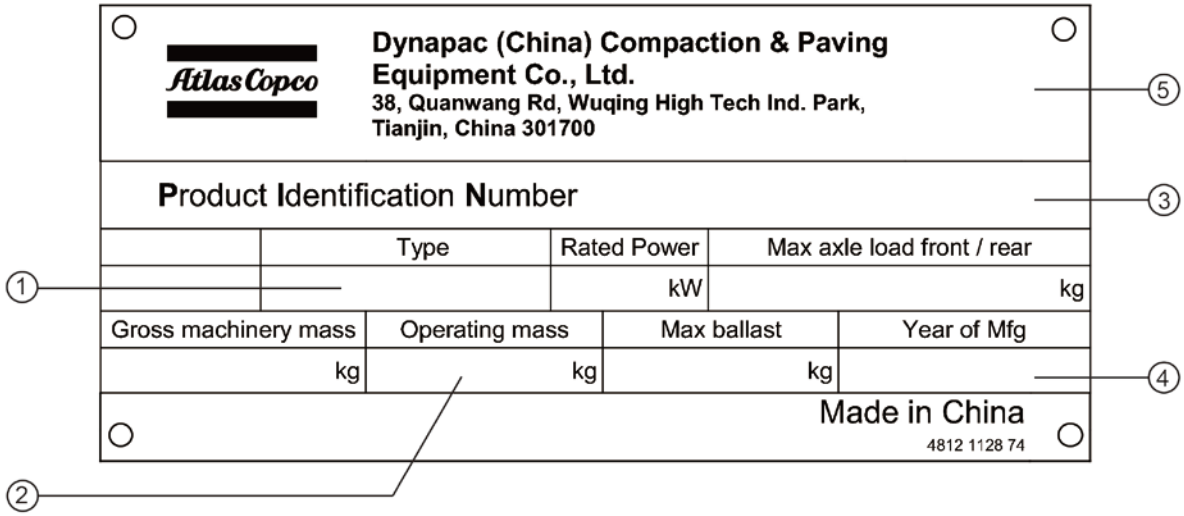

Item	Designation
1	Paver finisher type
2	Max. permissible operating weight, incl. all extension parts, in kg
3	Serial number of the paver finisher series
4	Year of construction
5	Manufacturer

The Identification Label is located at the rear of the machine mounted onto the frame near the lifting point. The paver type and the serial number can be found on this plate as well as the operating mass, rated power and the year of manufacture.

NOTICE

The stamped vehicle identification number on the paver must match the product identification number.

https://truckmanualshub.com/

6 EN standards

6.1 Continuous sound pressure level on the F1000W Wheeled Paver, Cummins QSB-6.70 Tier IV Engine.

NOTICE

The operator always must use ear protection. The emission value at the ear of the driver varies depending on the materials used for paving and may even rise above 85 dB(A). If no ear protection devices are used, hearing can be impaired.
The noise emission level of the paver finisher was measured under free-field conditions according to the EN 500-6 draft dated March 1997, and ISO 4872.

Sound pressure level at the operator's position (at the height of the head):

	LH Console	RH Console
L_{AF} =	84.4 dB(A)	85.9 dB(A)

Sound capacity level: L_{WA} = 106.2 dB(A)

Sound pressure level at the machine

Measuring point	2	4	6	8	10	12
Sound pressure level L_{AFeq} (dB(A))	72.9	75.2	73.3	70.5	73.5	72.3

6.2 Operating conditions during measurement

The diesel engine was running at 1800 rpm. The screed was in working position, lowered to a rubber mat. Vibration unit was operated at min. 50%, while the augers were operated at a minimum of 50% and the conveyors were operated at a minimum of 10% of their maximum speed.

https://truckmanualshub.com/

6.3 Measuring point configuration

Hemispherical measuring surface with a radius of 16 m. The machine was at the centre. The measuring points had been assigned the following coordinates:

	Measuring points 2, 4, 6, 8			Measuring points 10, 12		
Co-ordinates	X	Y	Z	X	Y	Z
	±0.7	±0.7	1.5	- 0.27 +0.27	+0.65 -0.65	11.36 11.36

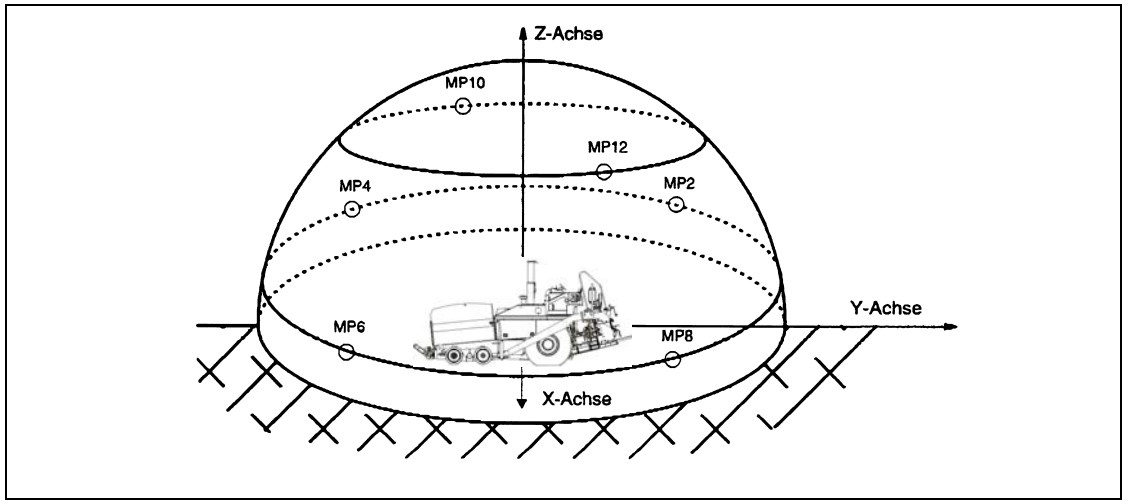

https://truckmanualshub.com/

C 1.1 Transport

1 Safety regulations for transportation

⚠ WARNING

Accidents can happen when the paver and the screed are not properly prepared for transportation or when transportation is carried out improperly!

⚠ WARNING

Reduce both the paver and the screed to their basic widths. Remove all protruding parts (such as the automatic levelling system, auger limit switches, aprons, etc.). When transporting under a special permit, secure these parts!

⚠ WARNING

Close the hopper lids and engage the hopper transport safeguards. Lift the screed and engage the screed transport safeguards. Convert the protective roof (if equipped) and engage the latch.

⚠ WARNING

Check that the clamping device for the auger crossbeam is fastened and that the telescopic tube cannot slide out (see chapter E, section 2.5).

⚠ WARNING

Pack all parts that are not permanently fixed to the paver finisher and the screed into the appropriate boxes and into the hopper.
Close all coverings and check that they are securely seated.

⚠ DANGER

When loading using ramps, there is a risk that the machine will slip, tilt or overturn.
Drive carefully! Keep people away from the danger area!

Additional stipulations for transportation on public roads:

⚠ WARNING

Depending on local regulations tracked pavers must not be driven as self-propelling vehicles on public roads.
Note the different state and local regulations.

⚠ WARNING

The operator must be in the possession of a valid permit for vehicles of this type.

https://truckmanualshub.com/

⚠ WARNING

The operating panel must be moved to the side of the oncoming traffic and secured in this position.
The driving lights must be properly adjusted.

⚠ WARNING

Only attachments and extension parts may be transported in the hopper, no material!

⚠ WARNING

If necessary, the operator must be assisted by a second person when driving on public roads – especially at road crossings and intersections.

https://truckmanualshub.com/

2 Transportation on low-bed trailers

⚠ WARNING

Reduce the paver and the screed to their basic widths; also remove any attached side plates.
The maximum approach angle is indicated in the section entitled “Technical Data“!

⚠ WARNING

Check the fill level of the operating fluids so that these do not escape when driving on an incline.

⚠ WARNING

Attachment and loading equipment must meet the federal, state and local safety regulations!

⚠ WARNING

The weight of the paver finisher must be taken into consideration when selecting the attachment and loading equipment!

2.1 Preparations

- Prepare the paver for transportation (see chapter D).
- Remove all overlaying or loose parts from paver finisher and screed (see also Operating instructions for the screed). Store these parts in a safe place.
- Move the paver to the uppermost position if necessary.

https://truckmanualshub.com/

Transport on Low Bed Trailers

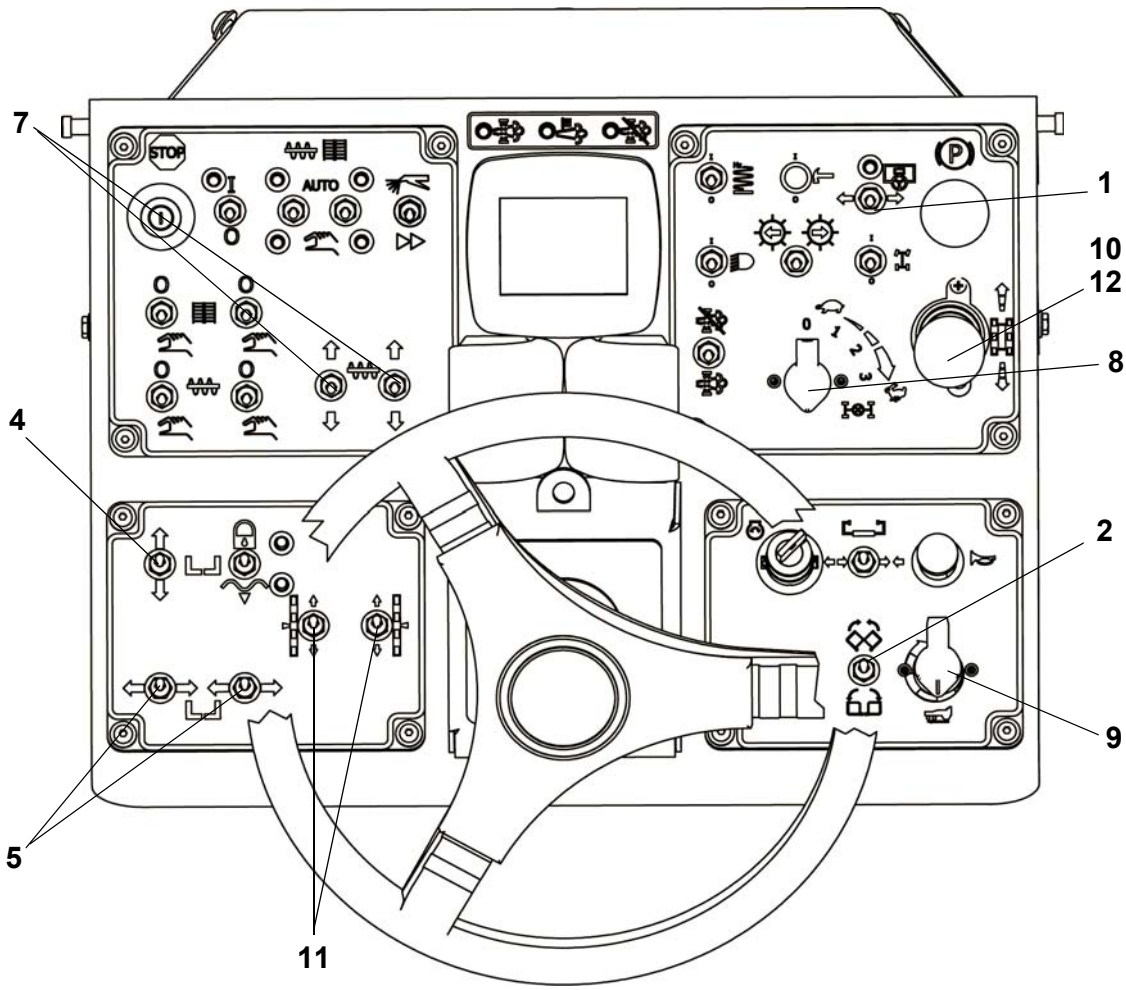

C_1.1_01_US.fm 4-16

https://truckmanualshub.com/

Item	Operation	
1	- Select the master console.	
2	- Close the hopper lids.	
3	- Engage both hopper transport safeguards.	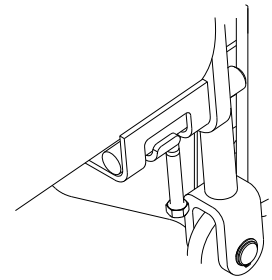
4	- Lift the screed.	
5	- Retract the screed to the basic width of the paver.	
6	- Engage both screed transport safeguards.	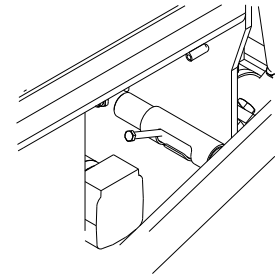
7	- Lift the auger.	
8	- Turn the range shift selector to zero.	
9	- Turn the travel speed preselecting regulator to zero.	
10	- Move the drive lever forward.	
11	- Extend levelling cylinders completely.	
12	- Set the drive lever to the center position.	

https://truckmanualshub.com/

2.2 Driving onto the low-bed trailer

⚠ DANGER

Make sure that there are no persons in the danger area during loading.

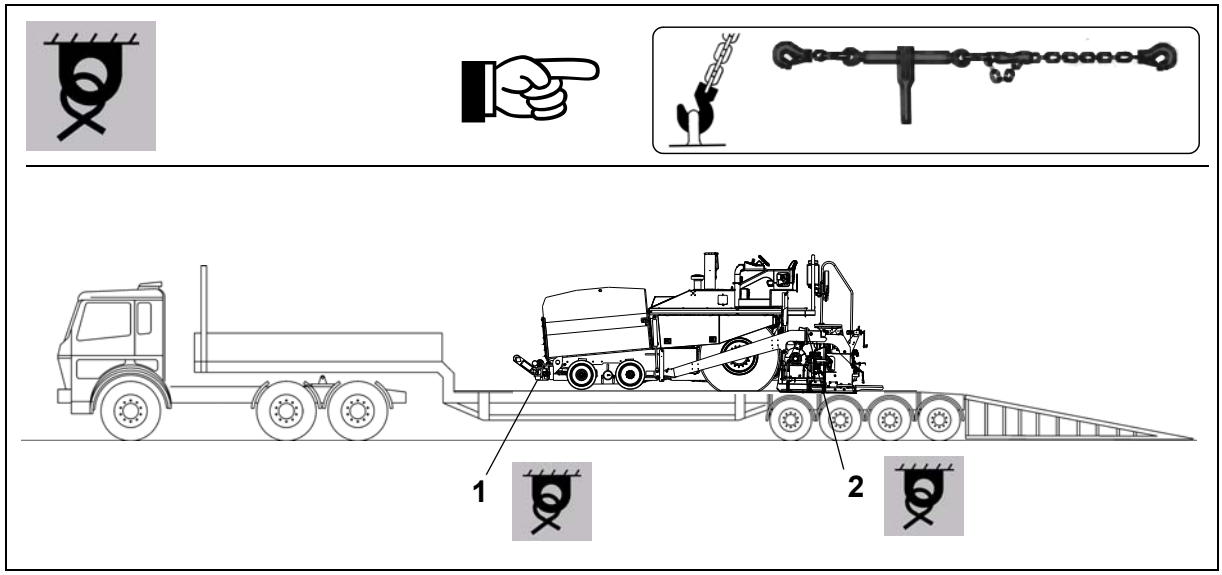

- Use the work gear and low engine speeds to drive onto the low-bed trailer.
- Lower the screed onto wooden blocks on the low-bed trailer.
- Turn the switch off.
- Attach and secure the protective hood to protect the operating panel.

2.3 Secure the paver finisher to the low-bed trailer:

- Use only proper and permitted load fastening devices.
- Use the four tie-down points provided (1, 2). These points have a capacity of 10,000 lbs. (3545 kg) each.
- Wait until the exhaust extension pipe has cooled down; then swing and secure it.

https://truckmanualshub.com/

2.4 After transportation

- Remove the chains, hooks and all other transport tie-down tools.
- Swing the exhaust extension pipe up and secure it.
- Lift the screed to the transport position.
- Start the engine and drive from the trailer at a low speed.
- Park the paver in a secure spot, lower the screed and switch off the engine.
- Remove the key and cover the operating panel with the protective hood, then secure it.

https://truckmanualshub.com/

3 Transportation

⚠ WARNING

Reduce the paver and the screed to their basic widths; also remove any attached side plates.

3.1 Preparations

- Prepare the paver for transportation (see chapter D).
- Remove all overlaying or loose parts from paver and screed (see also Operating instructions for the screed). Store these parts in a safe place.

https://truckmanualshub.com/

Transport Preparation

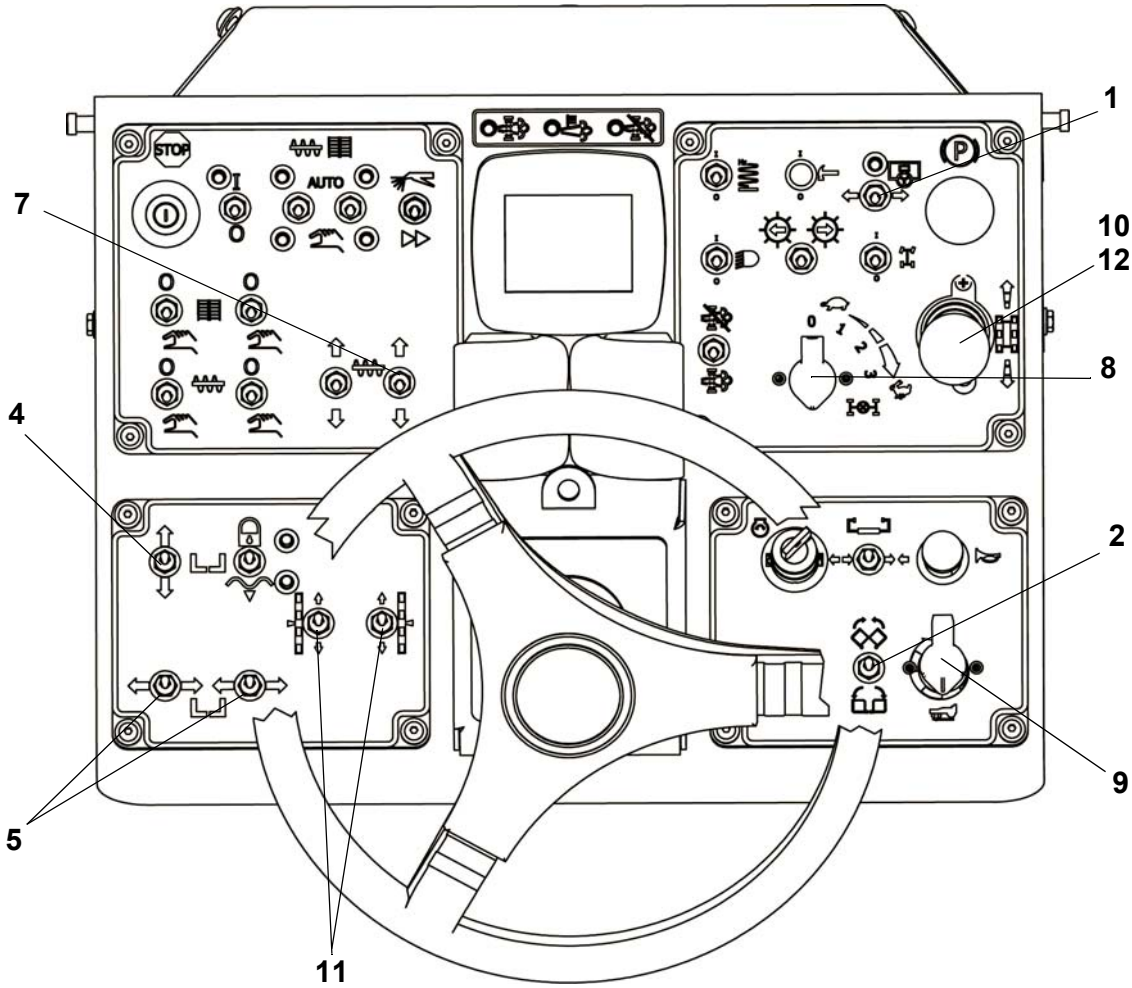

https://truckmanualshub.com/

Item	Operation	
1	- Select the master console.	
2	- Close the hopper lids.	
3	- Engage both hopper transport safeguards.	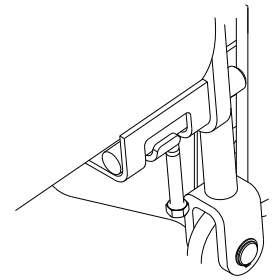
4	- Lift the screed.	
5	- Retract the screed to the basic width of the paver finisher.	
6	- Engage both screed transport safeguards.	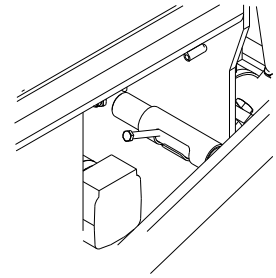
7	- Lift the auger.	
8	- Turn the range shift selector to zero.	
9	- Turn the travel speed preselecting regulator to zero.	
10	- Move the drive lever forward.	
11	- Extend levelling cylinders completely.	
12	- Set the drive lever to the center position.	

https://truckmanualshub.com/

3.2 Driving mode

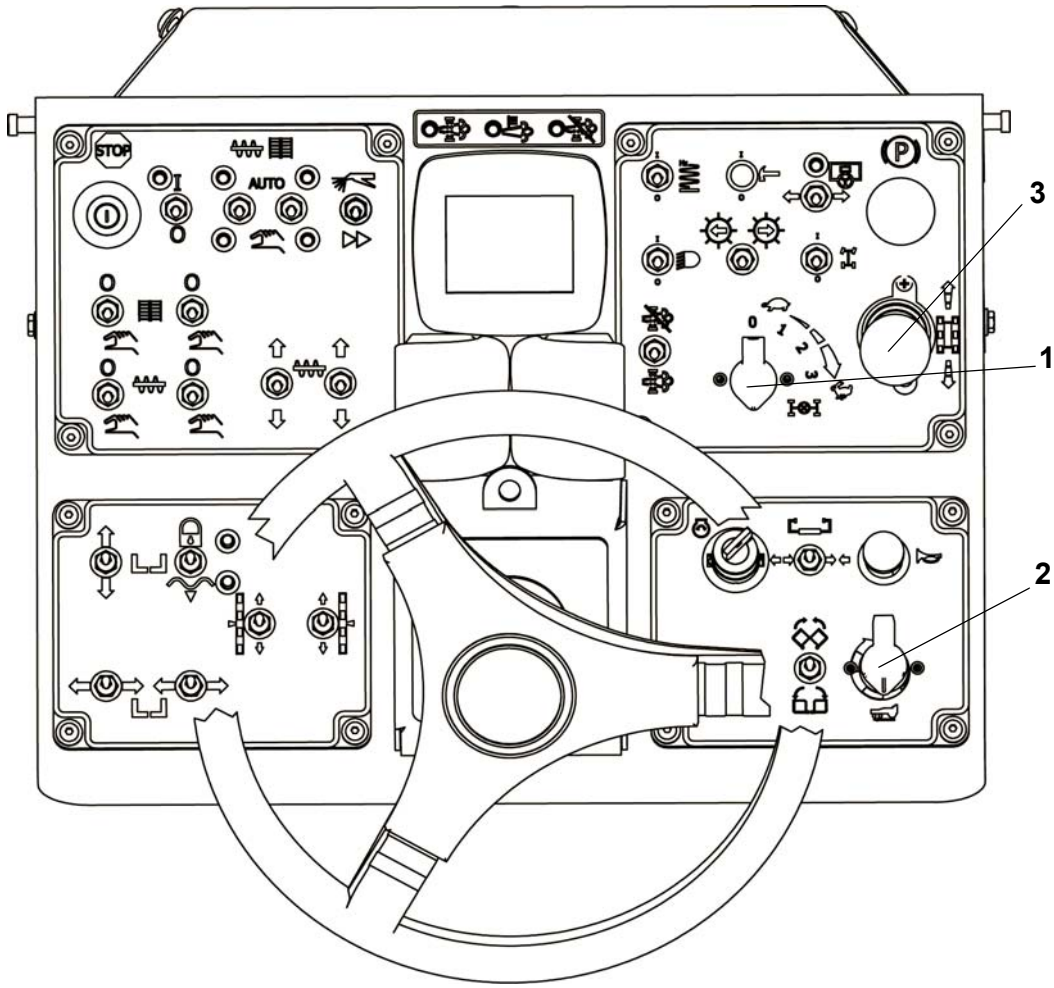

https://truckmanualshub.com/

Item	Operation	
1	- Turn the selector to position 3.	
2	- Turn the preselecting regulator to its maximum point.	
3	- Use the drive lever to regulate the speed.	

⚠ DANGER

Press the emergency stop button when a dangerous situation arises!

https://truckmanualshub.com/

4 Loading by crane

WARNING

Use only lifting gear that can bear the load.
(See chapter B for weights and dimensions).

WARNING

Attachment and loading equipment must meet the conditions of the applicable accident prevention regulations!

WARNING

The vehicle's center of gravity is dependent on the mounted screed.

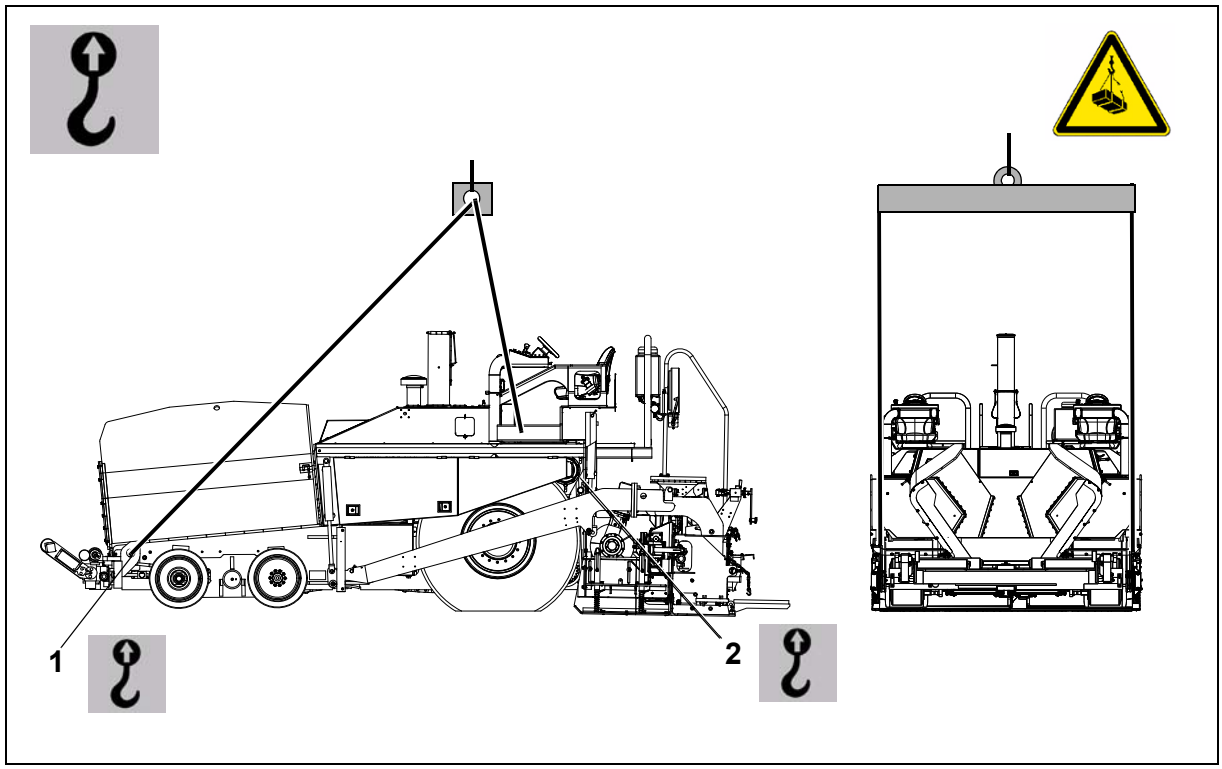

NOTICE

Four lifting eyes (1, 2) are provided for loading the vehicle with a crane.

NOTICE

Depending on the type of screed used, the paver's center of gravity, with the screed mounted, is located in the area of the drive unit's rear reversing roller.

- Secure vehicle wherever it is parked.
- Engage the transport safeguards.

https://truckmanualshub.com/

- Remove any attachments and extension parts from the paver and the screed until the basic width has been attained.
- Remove all protruding or loose parts(see chapters E and D).
- Attach lifting gear to the four attachment points (1, 2).

⚠ WARNING

The max. permissible attachment point load is
Attachment point (1): 20,000 lbs. (9071.9 kg) each for a total of 40,000 lbs. (18144 kg)
Attachment point (2): 20,000 lbs. (9071.9 kg) each for a total of 40,000 lbs. (18144 kg)

⚠ WARNING

Make sure that the paver is secured in a horizontal position during transport!

https://truckmanualshub.com/

5 Towing

CAUTION

Follow all regulations and apply all safety measures applicable for towing heavy construction machines.

WARNING

The towing vehicle must be capable of securing the paver, even on slopes.

Use only approved tow bars!

If necessary, remove any attachments and accessories from the paver finisher and the screed until the basic width has been attained.

A hand pump is located in the engine compartment (left side) that must be activated to be able to tow the machine.
Pressure for releasing the brakes is built up with the hand pump.

WARNING

Do not release the track drive system brakes until the machine is sufficiently secured against accidental rolling or is already properly connected to the towing vehicle.

- Attach the towing device to the tie-down points located in the bumper under the hopper.
- Push down and turn the Pump Pressure Lock and Release Handle (2) to the DOWN position.
- Pump the Handle (3) of the hand pump up and down until sufficient pressure has been built up for the track drive system brakes to release.

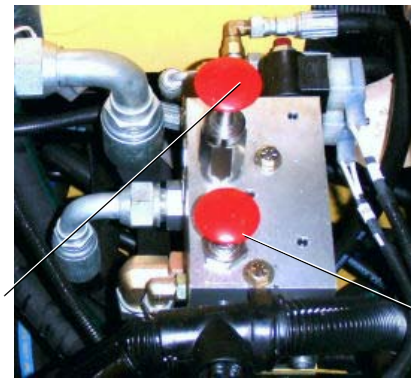

NOTICE

Now carefully and slowly tow the paver out of the construction area. The maximum towing speed is 2 mph (3.2 kph).

WARNING

Always tow the machine the shortest distance to the means of transport or the next parking opportunity.

After towing, return the Pump Pressure Lock and Release Handle (2) to the UP position. This will release pressure in the Hand Pump and will allow the braking system to engage.

The track drive system brakes are now reactivated and the machine is secured against rolling.

https://truckmanualshub.com/

6 Safely parking the vehicle

⚠ WARNING

When the paver is parked at a location accessible to the public, it must be secured in such a way that unauthorized persons or playing children cannot damage the vehicle.

Remove the ignition key and the main switch (1) and take it with you – do not hide them somewhere on the machine.

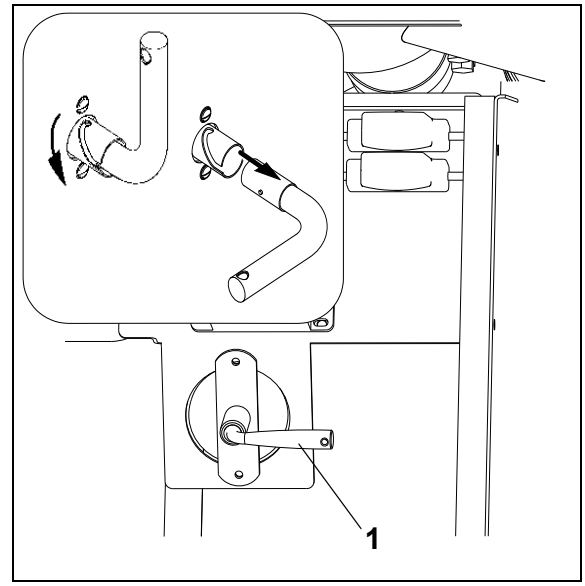

- Protect the operating panel with the dust cover and lock it.
- Store loose parts and accessories in a safe place.

⚠ CAUTION

Do not turn the main switch off until 30 seconds after the ignition has been turned off!

The engine electronics require this length of time to back up data, and such device can prevent the engine's electronic control module (ECM) from sustaining damage and battery discharging.

https://truckmanualshub.com/

D 1.1 Operation

1 Safety regulations

⚠ WARNING

Starting the engine, the traction drive, the conveyor, the auger, the screed or the lifting devices can cause injuries or even the death of persons.
Make sure before starting any of these devices that no-one is working on, in or beneath the paver finisher or within its danger area!

- Do not start the engine or actuate any controls if this is expressly forbidden!
  Unless otherwise specified, the controls may only be actuated when the engine is running!

⚠ DANGER

Never crawl into the auger tunnel or step into the hopper or onto the conveyor. Danger to life and limb!

- Always make sure during operation that no-one is endangered by the machine!
- Ensure that all protective covers and hoods are fitted and secured accordingly!
- When damage is detected, eliminate it immediately! Operation must not be continued when the machine is defective!
- Do not let any persons ride on the paver finisher or the screed!
- Remove obstacles from the road and the work area!
- Always try to choose a driver position which is opposite to the flow of traffic! Lock the operating panel and the driver's seat.
- Maintain sufficient safety clearance from overhanging objects, other machines and points of danger!
- Be careful when traveling on rough terrain to keep the paver finisher from slipping, tipping or turning over.

⚠ CAUTION

Always maintain control of the machine; never try to use it beyond its capabilities!

https://truckmanualshub.com/

2 Controls

2.1 Operating panel

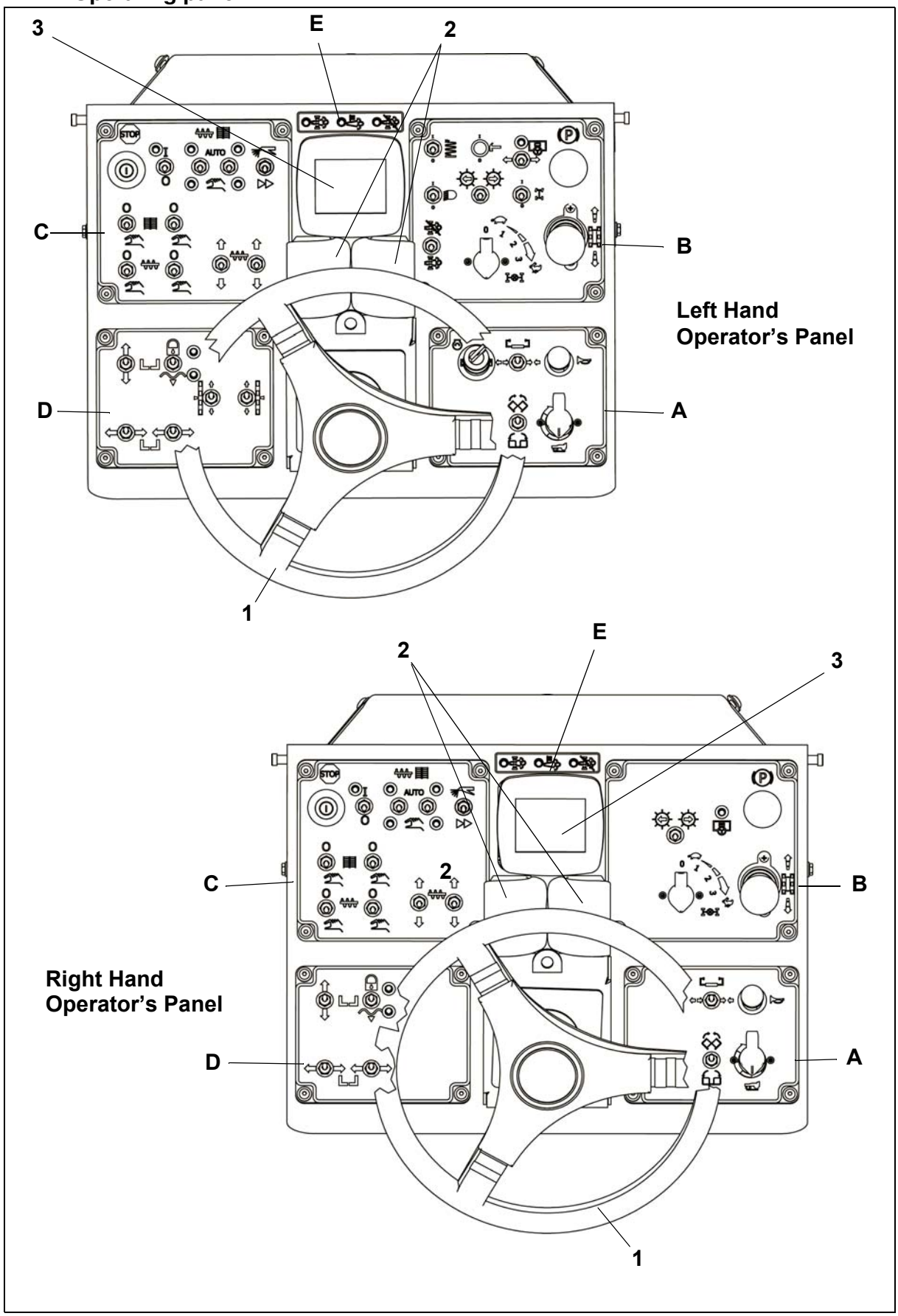

D_1.1_01_US.fm 2-44

https://truckmanualshub.com/

Item	Designation	Brief description
1	Steering wheel	- Steering is regulated by the speed of the two drive units. NOTE: -Use the turn signals when turning! -For precise adjustment, see "Straight-ahead travel trimming".
2	Console lights	Illuminates the instrument panels when the work lights are switched on.
3	EIC Engine Informa- tion Center	- Display for engine information, diagnostic information and configuration.

https://truckmanualshub.com/

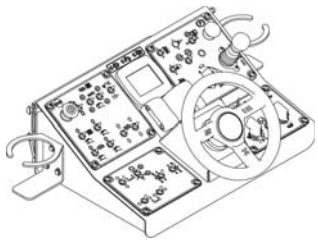

PANEL A

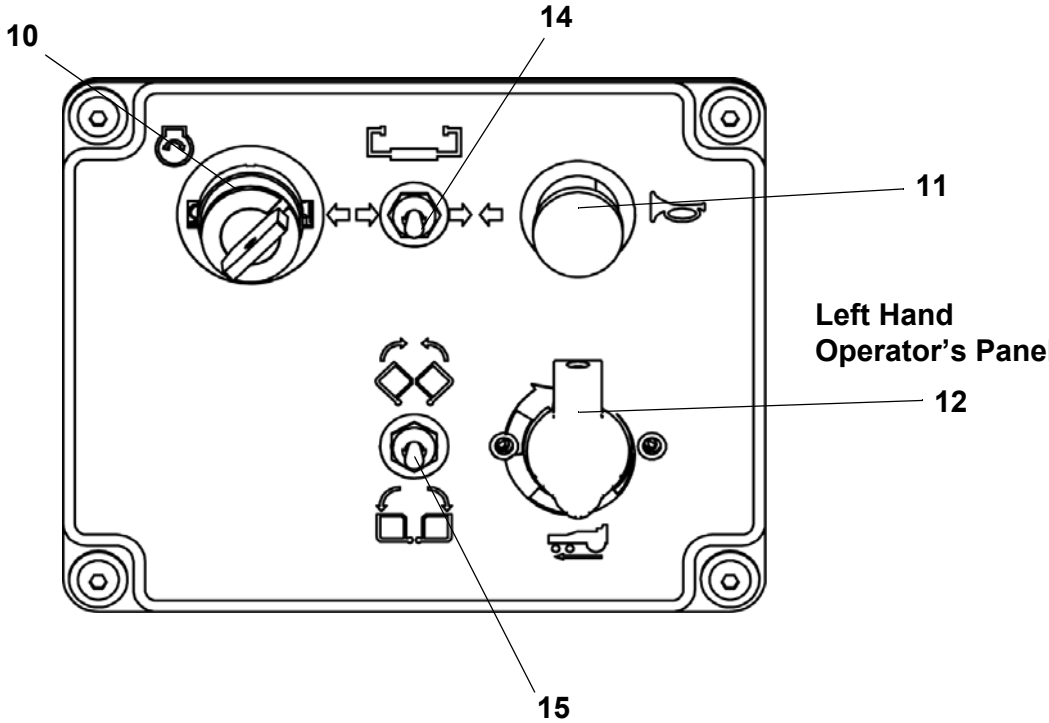

Left Hand
Operator's Panel

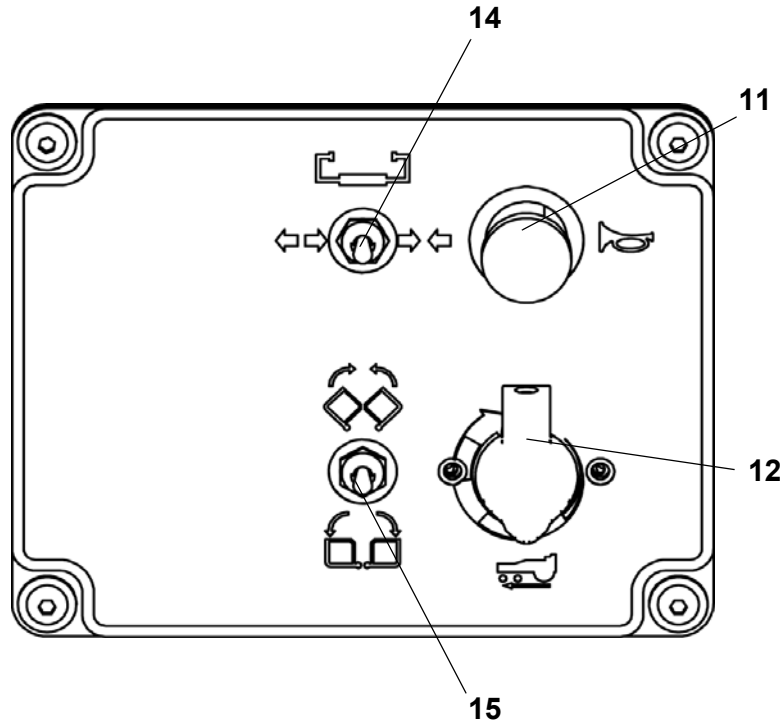

Right Hand
Operator's Panel

D_1.1_01_US.fm 4-44

https://truckmanualshub.com/

Item	Designation	Brief description
10	Ignition lock	Key positions: - 1: Ignition OFF - 2: Ignition ON - 3: Starter function NOTE: The key can only be removed in position 1.
11	Horn	Press in case of emergencies and to indicate when the machine starts to move! NOTE: The horn can also be used to communicate acoustically with the truck driver for material loading!
12	Travel drive prese-lector	Setting the maximum speed that can be performed when the drive lever is at its stop. NOTE: The speed level is preset with the "Travel drive/engine pre-selector switch".
14	Truck hitch	Opening and closing the truck hitch device at the front of the paver. Toggle switch function: - Toggle the switch left: Open truck hitch. - Toggle the switch right: Close truck hitch. ⚠ DANGER Do move or tow the paver until all persons and equipment are out of the Danger Zone!
15	Open/close hopper	To open/close both halves of the hopper. Toggle switch function: - Toggle the switch forward (away from the operator): Close hop-pers. - Toggle the switch back (toward the operator): Open hoppers. ⚠ DANGER Do not open or close the hopper until all equipment and persons are out of the Danger Zone!

https://truckmanualshub.com/

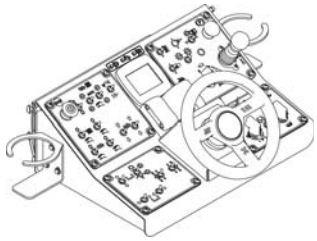

PANEL B

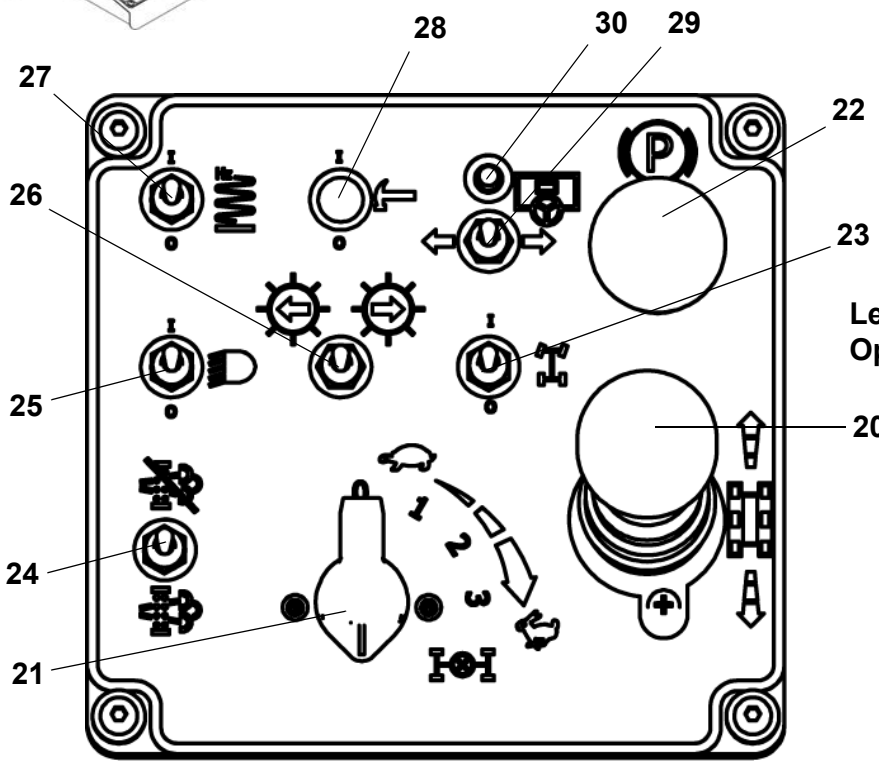

Left Hand
Operator's Panel

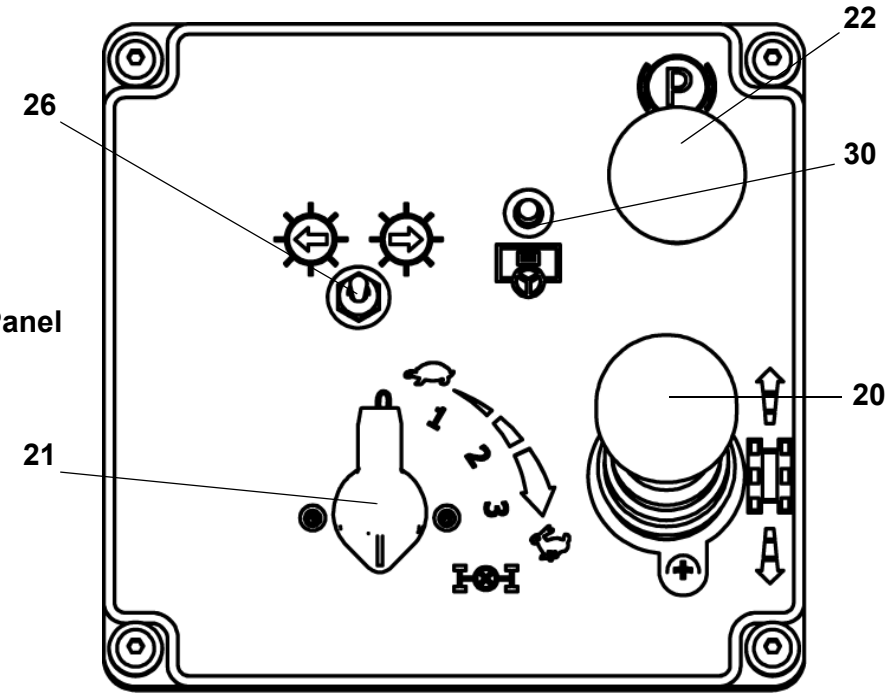

Right Hand
Operator's Panel

D_1.1_01_US.fm 6-44

https://truckmanualshub.com/

Item	Designation	Brief description
20	Drive lever (traction)	For switching on the paver finisher functions and for continuously regulating the road speed – forward or reverse. Zero position: starting is possible; engine at idling speed; no traction; protection against inadvertent start. To move the lever, lift the ring (20a). Depending on the position of the drive lever, the following functions can be activated: - 1st position: Engine runs at preselected speed (see "Travel drive/engine preselector switch"). - 2nd position: Conveyor and auger on. - 3rd position: Travel drive (propel) is on; increase speed by turning the speed control until it stops (maximum speed). **NOTICE** The maximum speed is set with the travel drive/engine preselector switch and with the travel drive preselector. **NOTICE** The auger conveyor clean mode only operates when the drive lever is in the neutral position. The auger conveyor automatic function only operates when the drive lever is out of neutral and in the forward position.
21	Preselector switch travel drive/engine fast/slow	To preselect the desired speed level. - Switch setting 0: Preselected vehicle speed "0" - Switch setting 1: Vehicle speed – for paving with low operating speed. - Switch setting 2: Vehicle speed – for paving with higher operating speed. - Switch setting 3: Transport speed – for transportation.
22	Pushbutton parking brake	Use the pushbutton to activate the parking brake. The parking brake must be activated anytime the vehicle is stationary. - Parking brake activated – push button illuminated - Parking brake de-actived – push button not illuminated
23	Front wheel drive On/Off	In the upper position the supplementary front-wheel drive is engaged when the paver is moving forward. - Switch On: Paver gear selection in idle position, drive assist is on. - Switch On: Paver gear selection in 1st position, drive assist is on. - Switch On: Paver gear selection in 2nd position, drive assist is on. - Switch On: Paver gear selection in 3rd position, drive assist is off. - Switch Off: Paver gear selection in any position, drive assist is off.

https://truckmanualshub.com/

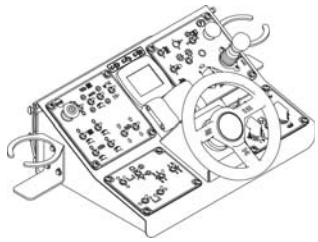

PANEL B

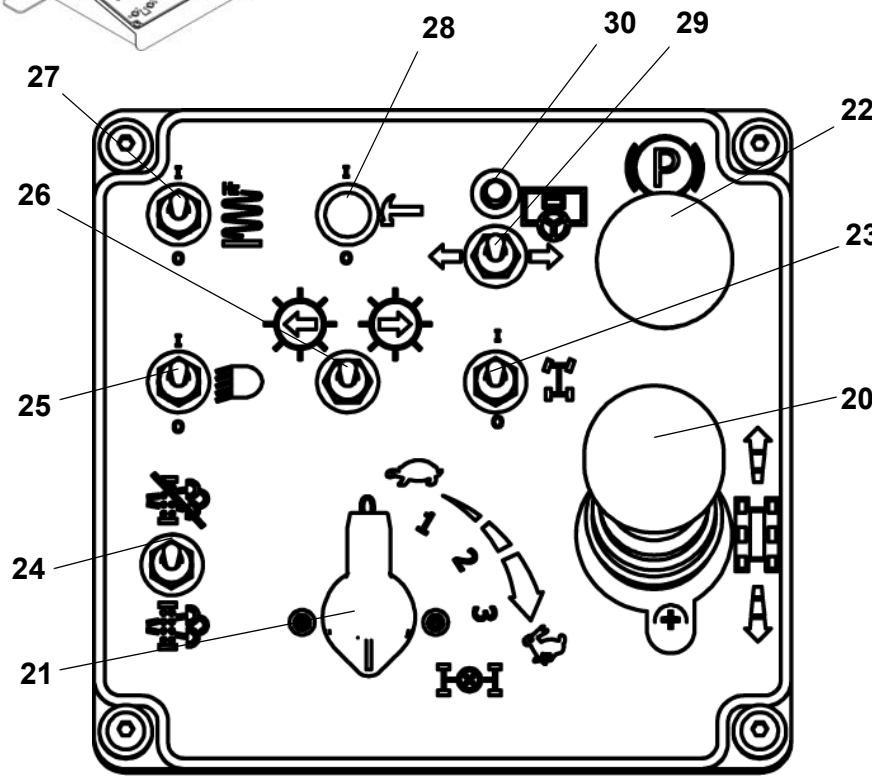

Left Hand
Operator's Panel

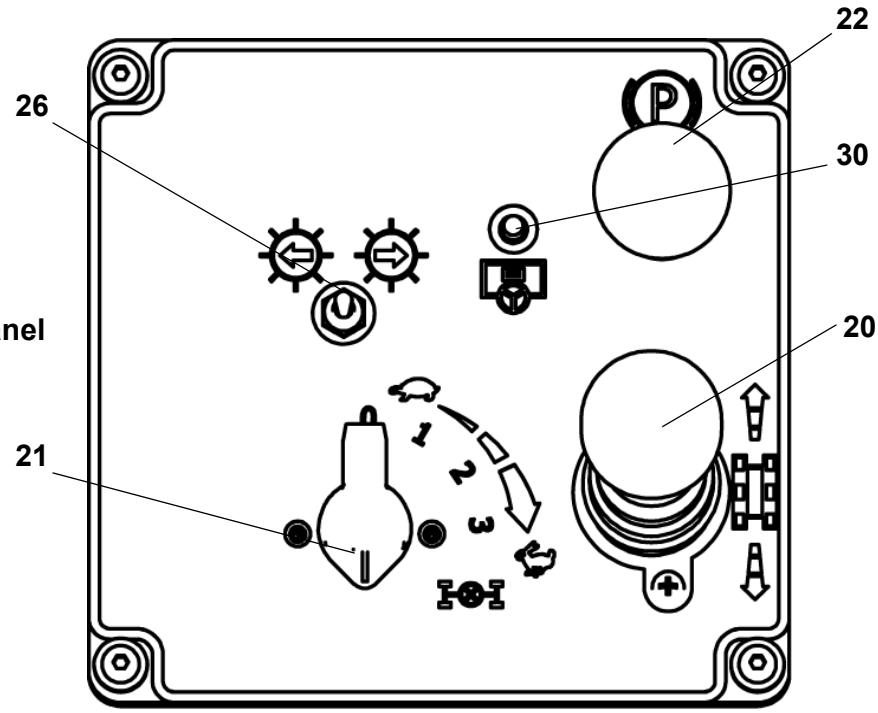

Right Hand
Operator's Panel

D_1.1_01_US.fm 8-44

https://truckmanualshub.com/

Item	Designation	Brief description
24	Regeneration inhibit / manual regeneration	Switches the regeneration function on and off. Toggle switch function: - Toggle the switch up: Regeneration OFF. Neither manual or automatic regeneration of the diesel particulate filter will be allowed. **DANGER** This function should only be enabled if a combustible material is nearby. Regeneration is an extremely hot pocess and could easily ignite combustible materials. **CAUTION** The diesel particulate filter may require servicing with prolonged use of this function. - Toggle the switch down: Manual regeneration ON. Regeneration will be activated if the diesel particulate filter soot levels are high enough to allow regeneration. The diesel particulate filter LED located on Panel E will be lit, either static or blinking, throughout the regeneration process. Refer to Item 56 for more information regarding the LED function. **WARNING** Close attention to the diesel particulate filter LED located on Panel E is required to activate this switch as needed.
25	Working lights ON / OFF	Switches the working lights on and off. Toggle switch function: - Toggle the switch to setting 0: Working lights OFF. - Toggle the switch to setting 1: Working lights ON. **CAUTION** Avoid using hi-beam lights with on coming traffic. Hi-beam lights can cause temporary blindness to on coming drivers!
26	Turn signal indicator ("flasher")	The turn signal indicates the direction the paver is turning. Detent switch function: - Left switch position: Left-hand flasher. - Right switch position: Right-hand flasher.

https://truckmanualshub.com/

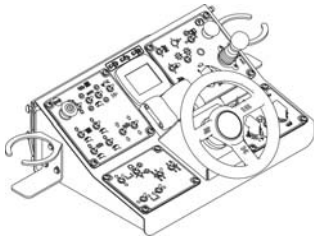

PANEL B

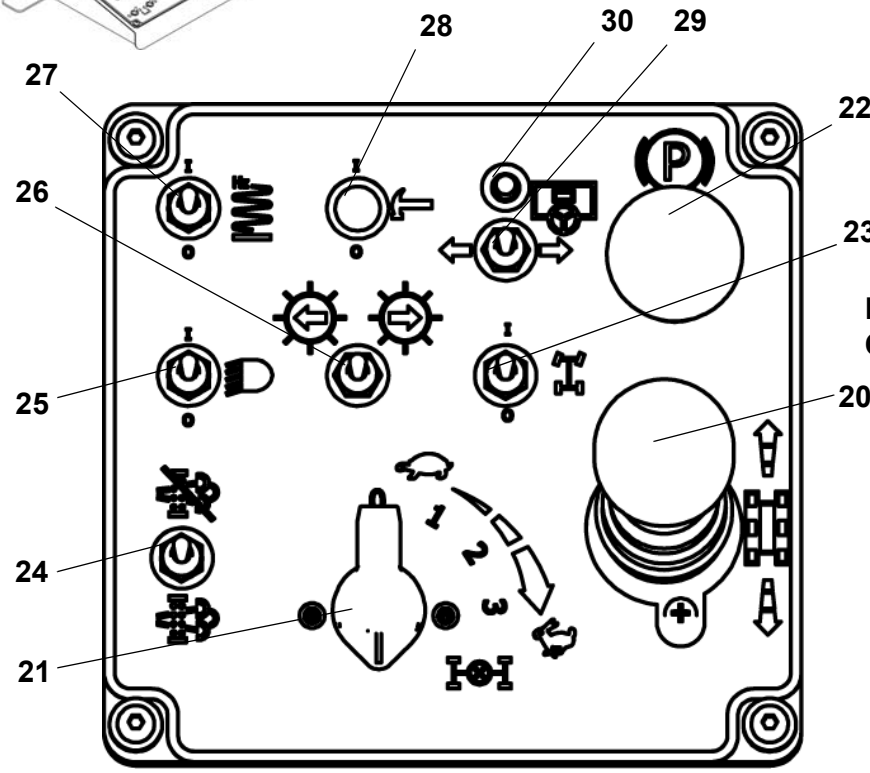

Left Hand
Operator's Panel

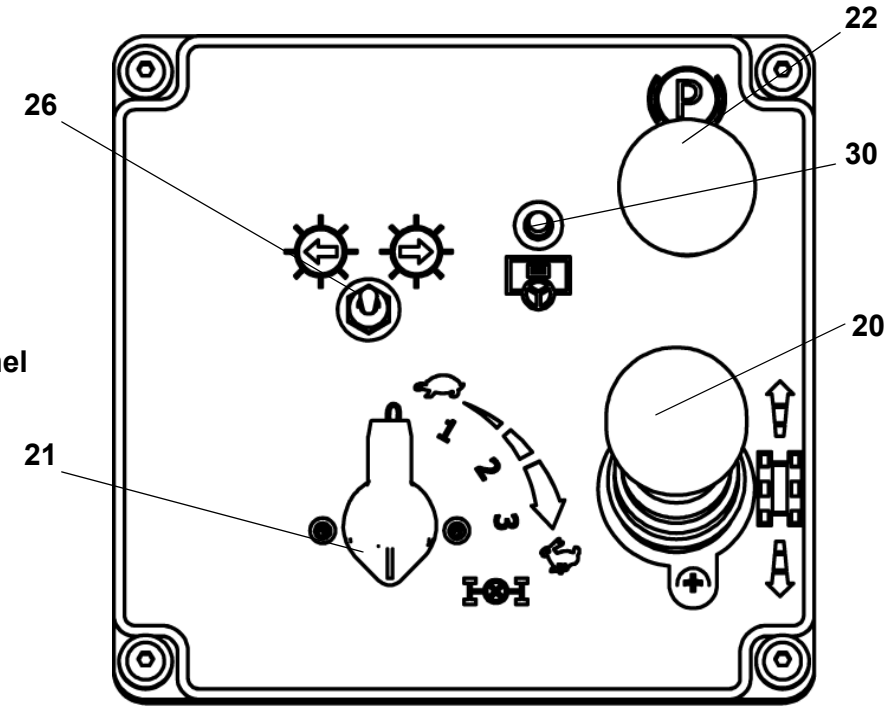

Right Hand
Operator's Panel

D_1.1_01_US.fm 10-44

https://truckmanualshub.com/

Item	Designation	Brief description
27	Vibration ON / OFF	Switches screed vibration on and off. Toggle function: - Toggle the switch to setting 0: Vibration OFF. - Toggle the switch to setting 1: Vibration ON. NOTE: Speed control (see "Operating instructions for the screed")
28 (○)	Tamper ON / OFF	Switches the screed tamper function on and off. Toggle switch function: - Toggle the switch to setting 0: Tamper OFF. - Toggle the switch to setting 1: Tamper ON. NOTE: Speed control (see "Operating instructions for the screed")
29 30	Selector switch left / right operating panel (19) + active panel LED (20)	To select the primary activated operating panel. Toggle switch function: **NOTICE** To avoid operator errors, only one operating panel –left or right- can be activated at any one time. - Toggle the switch left: Left operating panel active. - Toggle the switch right: Right operating panel active. **NOTICE** The active panel LED indicates whether the relevant operating panel is activated or deactivated by switch (19). - LED "ON": Operating panel active. - LED "OFF": Operating panel inactive. **NOTICE** The modification of multifunction display pages is only possible from the active console.

https://truckmanualshub.com/

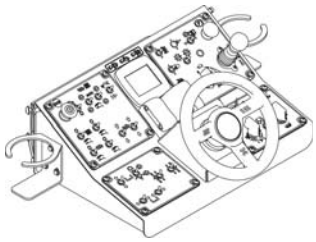

PANEL C

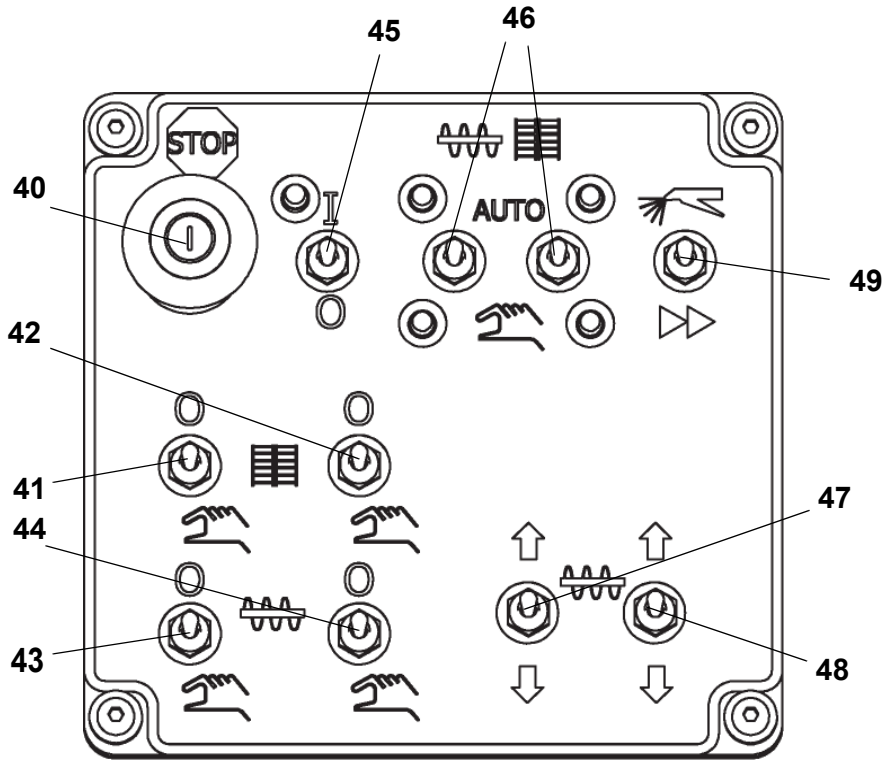

https://truckmanualshub.com/

Item	Designation	Brief description
40	Emergency Stop button	In the case of an emergency (danger to persons, possible collision, etc.), press the Emergency Stop button! - Pressing the Emergency Stop button switches the engine, the drives and the steering system off. **⚠ WARNING** Paving, lifting the screed or other functions are no longer possible! Do not reset the Emergency Stop Button until the danger is no longer present! - To restart the engine, the button must be pulled out again.
41	Left conveyor OFF / max. output	Overrides the conveyor function in automatic mode. Toggle switch function: - Toggle the switch forward (away from the operator): Conveyor OFF. - Toggle the switch back (toward the operator): Conveyor is at 100% feed capacity.
42	Right conveyor OFF / max. output	Overrides the conveyor function in automatic mode. Toggle switch function: - Toggle the switch forward (away from the operator): Conveyor OFF. - Toggle the switch back (toward the operator): Conveyor is at 100% feed capacity.
43	Left auger OFF / max. output	Overrides the auger function in automatic mode. Toggle switch function: - Toggle the switch forward (away from the operator): Auger OFF. - Toggle the switch back (toward the operator): Auger is at 100% feed capacity.
44	Right auger OFF / max. output	Overrides the auger function in automatic mode. Toggle switch function: - Toggle the switch forward (away from the operator): Auger OFF. - Toggle the switch back (toward the operator): Auger is at 100% feed capacity.

https://truckmanualshub.com/

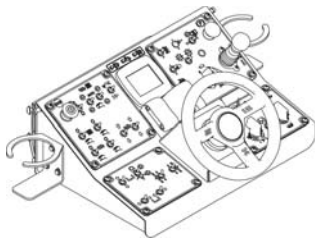

PANEL C

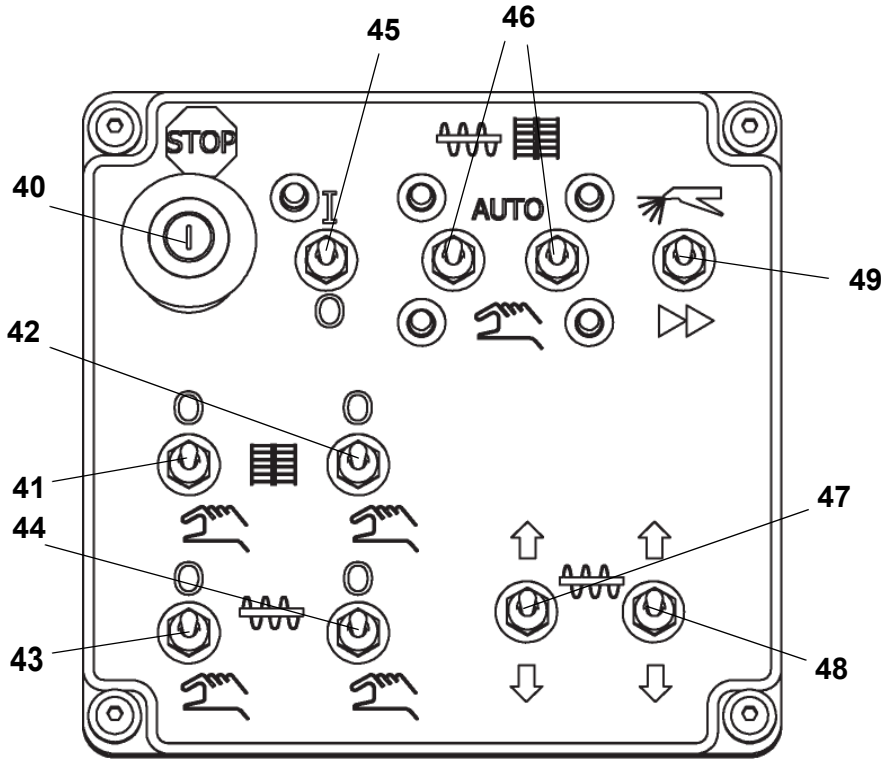

https://truckmanualshub.com/

Item	Designation	Brief description
45	Conveyor + auger ON + activation LED / OFF	Toggles the conveyor and auger (automatic or manual mode) on and off. Toggle switch function: - Toggle the switch forward (away from the operator): Auger + conveyor are ready for operation (LED ON). - Toggle the switch back (toward the operator): Auger + conveyor OFF. **NOTICE** If the vehicle must be restarted, this function is automatically switched OFF.
46	Operating mode conveyor + auger AUTO + activation LED / MANUAL + activation LED	Toggles between AUTOMATIC and MANUAL operating modes for the conveyor + auger. The left switch operates the left auger and conveyor, while the right switch oprates the right auger and conveyor. Toggle switch function: - Toggle the switch forward (away from the operator): Operating mode "AUTO" (LED ON). **NOTICE** The auger + conveyor are switched on by moving the drive (propel) lever from the center position and are controlled by the relevant material limit switches. - Toggle the switch back (toward the operator): Operating mode "MANUAL" (LED ON). **NOTICE** The auger + conveyor are permanently switched on (without material control thru the relevant limit switches). **NOTICE** If the vehicle must be restarted, this function is automatically switched OFF.

https://truckmanualshub.com/

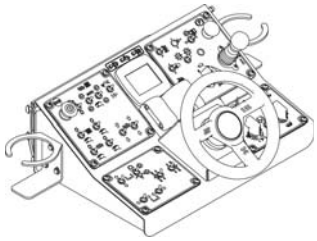

PANEL C

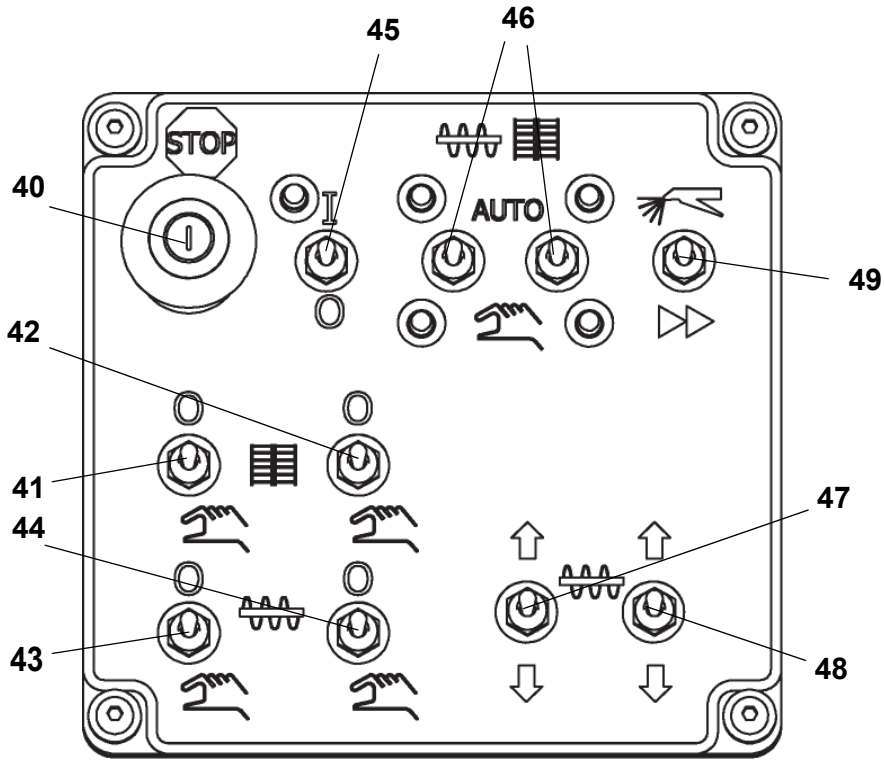

D_1.1_01_US.fm 16-44

https://truckmanualshub.com/

Item	Designation	Brief description
47	Raise / lower left auger	Hydraulically adjusts the height of the left auger. Toggle switch function: - Toggle the switch forward (away from the operator): Raise auger. - Toggle the switch back (toward the operator): Lower auger. **NOTICE** Toggle both switches (raise / lower left + right auger) at the same time to keep the auger crossbeam level! **⚠ DANGER** Do not raise or lower the auger until all equipement and persons are clear of the machine
48	Raise / lower right auger	Hydraulically adjusts the height of the right auger. Toggle switch function: - Toggle the switch forward (away from the operator): Raise auger. - Toggle the switch back (toward the operator): Lower auger. **NOTICE** Toggle both switches (raise / lower left + right auger) at the same time to keep the auger crossbeam level! **⚠ DANGER** Do not raise or lower the auger until all equipement and persons are clear of the machine
49	Auger / conveyor clean mode / one fill	Toggles between a slow cleaning mode and a fast fill speed for the auger and conveyor. Toggle switch function: - Toggle the switch forward (away from the operator): Slows the auger / conveyor speed for cleaning. - Toggle the swtich back (toward the operator): Runs the auger and conveyor at full speed for a fast fill. **NOTICE** The clean mode only works when the paver is not moving. **⚠ DANGER** Before using the clean mode, ensure all equipment and personnel are clear of the paver.

https://truckmanualshub.com/

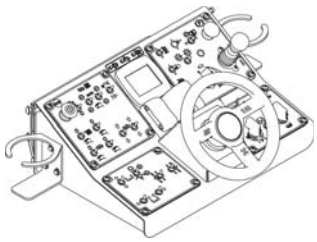

PANEL D

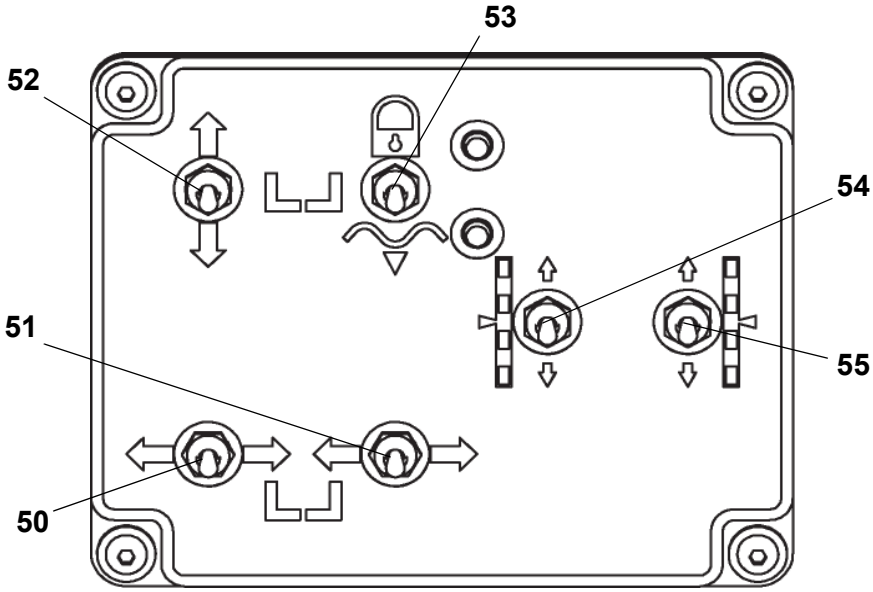

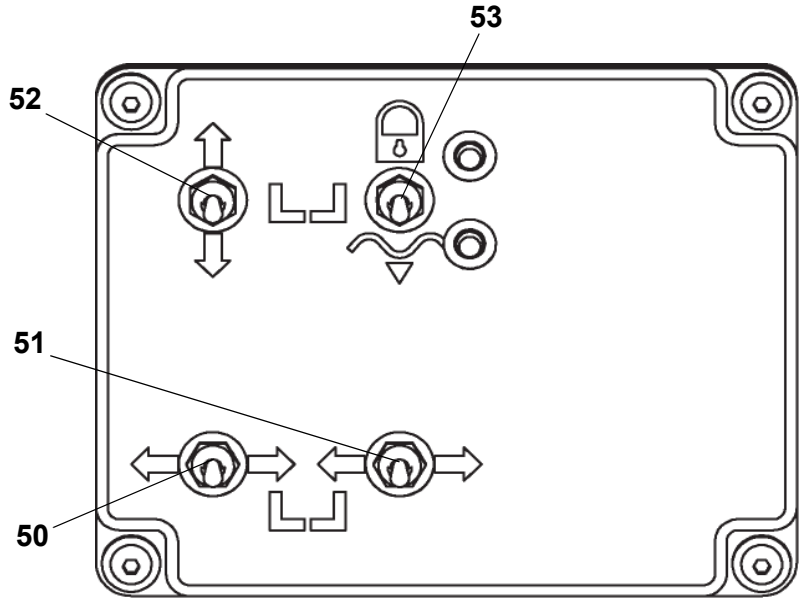

https://truckmanualshub.com/

Item	Designation	Brief description
50	Extend / retract left screed extension	Hydraulically retracts and extends the left extendable part of the screed. Toggle switch function: - Toggle the switch left: Extend screed extension. - Toggle the switch right: Retract screed extension. **⚠ DANGER** Do not extend or retract the screed until all equipement and persons are away from the machine
51	Extend / retract right screed extension	Hydraulically retracted and extended the right extendable part of the screed. Toggle switch function: - Toggle the switch left: Retract screed extension. - Toggle the switch right: Extend screed extension. **⚠ DANGER** Do not extend or retract the screed until all equipement and persons are away from the machine
52	Raise / lower screed	Hydraulically raises and lowers the screed. Push button function: - Toggle the switch up: Raise screed. - Toggle the switch down: Lower screed. **⚠ DANGER** Do not raise or lower the screed until all equipement and persons are away from the machine

https://truckmanualshub.com/

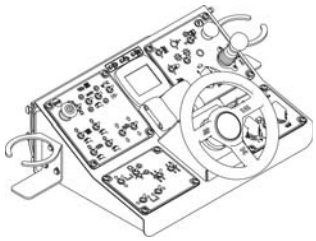

PANEL D

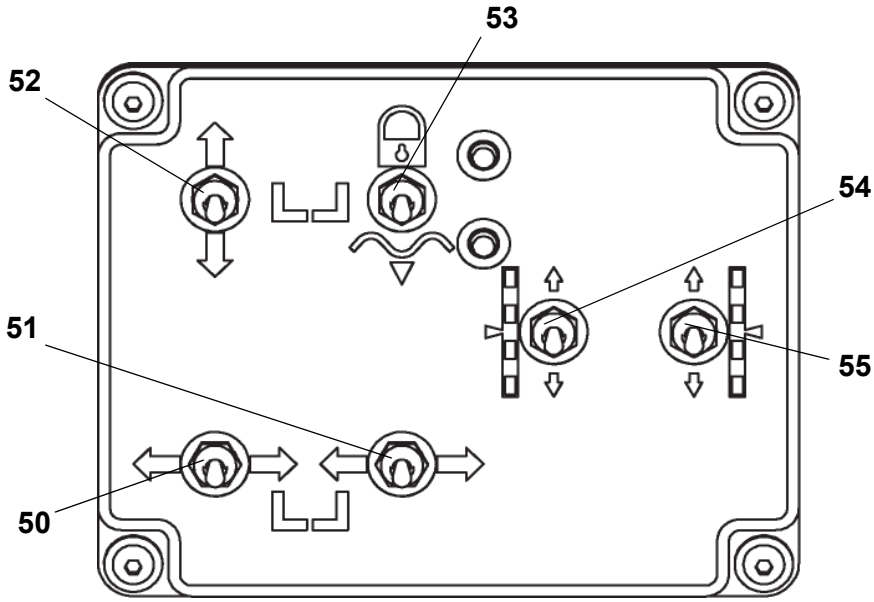

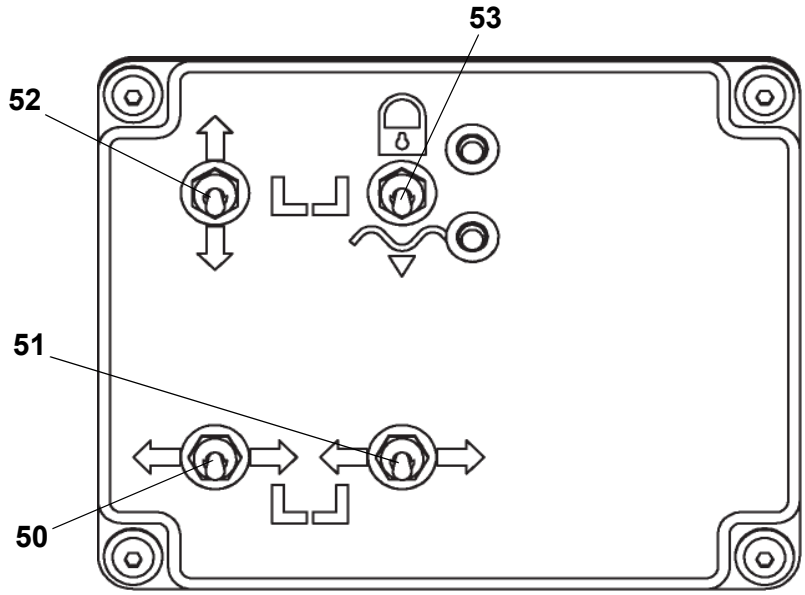

https://truckmanualshub.com/

Item	Designation	Brief description
53	Screed floating position + activation LED / screed stop + activation LED	Switches between floating screed functions and screed stop. Toggle switch function: - Toggle the switch forward (away from the operator): Screed stop. - "Screed stop" is used to lock the screed hydraulics to prevent the screed from sinking into the paved material when the paver is stationary (intermediate stop). **WARNING** "Screed stop" is not sufficient as a safeguard during transport or maintenance work! Insert the mechanical screed transport safeguard! - Toggle the switch back (toward the operator): Lower the screed and switch to "floating position". - During paving, the screed must always be in its floating position. This also applies to intermediate stops and truck changes. **NOTICE** As soon as the floating position function has been activated and the screed is lowered, the screed lifting cylinder pressure is reduced. **NOTICE** The raise / lower screed function can be carried out while the screed is switched to the floating position. Following adjustment, the screed is automatically switched back to the floating position. **NOTICE** The floating position function is only active when the drive lever is moved from its central position! If the drive lever is moved to the central position, the paver automatically switches to screed stop (or locked position). The activation LED for screed stop is then activated.

https://truckmanualshub.com/

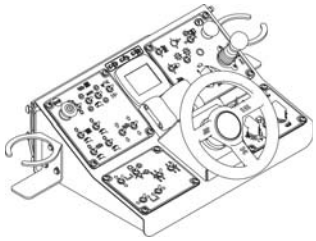

PANEL D

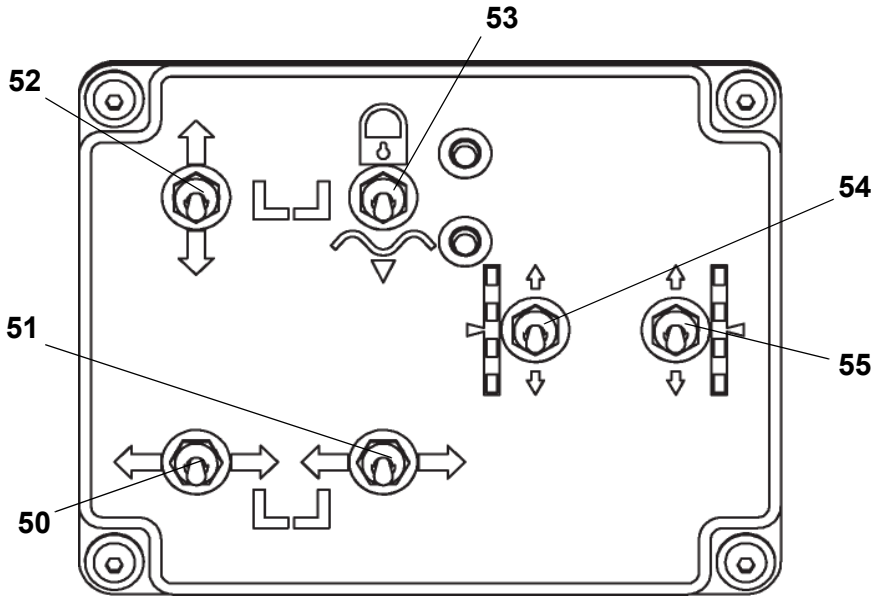

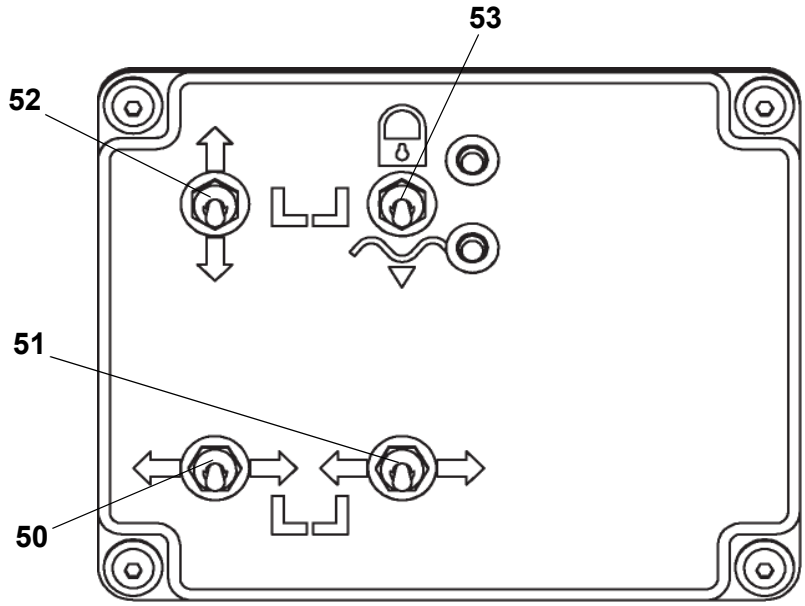

https://truckmanualshub.com/

Item	Designation	Brief description
54	Left leveling cylinder	Manually extends and retracts the leveling cylinder when the vehicle is being operated without the automatic leveling system. Toggle switch function: - Toggle the switch forward (away from the operator): Retract or raise leveling cylinder. - Toggle the switch back (toward the operator): Extend or lower leveling cylinder. **⚠ DANGER** Do not raise or lower the leveling cylinder until all equipment and persons are clear of the machine!
55	Right leveling cylinder	To manually extend and retract the leveling cylinder when the vehicle is being operated without the automatic leveling system. Toggle switch function: - Toggle the switch forward (away from the operator): Retract or raise leveling cylinder. - Toggle the switch back (toward the operator): Extend or lower leveling cylinder. **⚠ DANGER** Do not raise or lower the leveling cylinder until all equipment and persons are clear of the machine!

https://truckmanualshub.com/

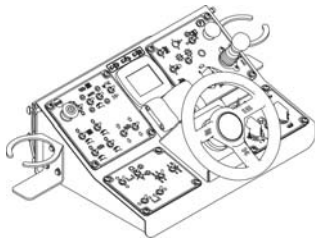

PANEL E

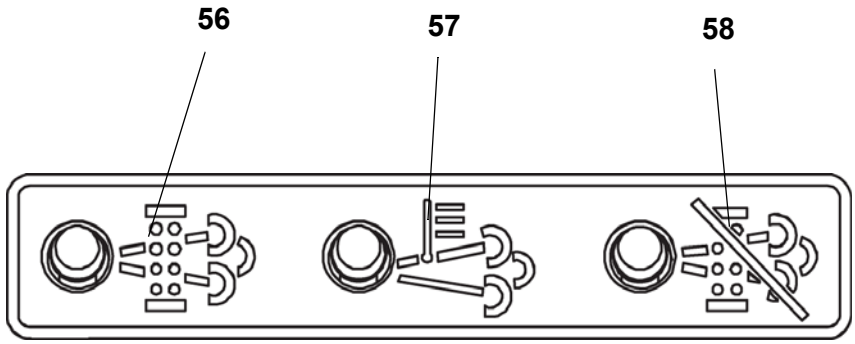

https://truckmanualshub.com/

Item	Designation	Brief description
56	Active regeneration	Lit LED indicates that the diesel particulate filter is becoming filled and a regeneration is needed. The operator could either increase the engine speed and allow the engine to operate until an automatic regeneration is complete or the operator could initiate a manual regeneration. **⚠ WARNING** Regeneration is an extremely hot process. Care should be taken to avoid contact with potentially hot surfaces. The following describes the alerts presented as the need for regeneration escalates: - A steady-on LED indicates that regeneration is needed. The regeneration inhibit switch should only be used if combustible materials are nearby. **⚠ DANGER** The regeneration inhibit function should only be enabled if a combustible material is nearby. Regeneration is an extremely hot pocess and could easily ignite combustible materials. **⚠ CAUTION** The diesel particulate filter may require servicing with prolonged use of the regeneration inhibit function. - If regeneration isn't completed and the filter continues to fill, the LED will flash. A manual regeneration should be started soon if the engine speed is not increased. The regeneration inhibit switch should only be used if combustible materials are nearby. - If regeneration isn't completed after the LED begins flashing, the check engine warning will be present on the digital display. A manual regeneration must be started. - If regeneration isn't completed after the check engine warning is presnted, the active regeneration lamp will turn off and the check-engine warning will remain. The filter can no longer regenerate and will need to be serviced. The active regeneration LED will turn off after successful regeneration. The LED will stay on if regeneration was unsuccessful. NOTE: Regeneration will take approximately 45 minutes.

https://truckmanualshub.com/

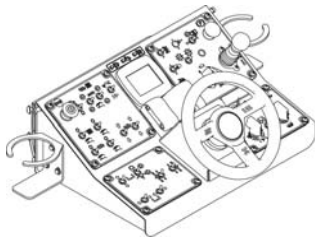

PANEL E

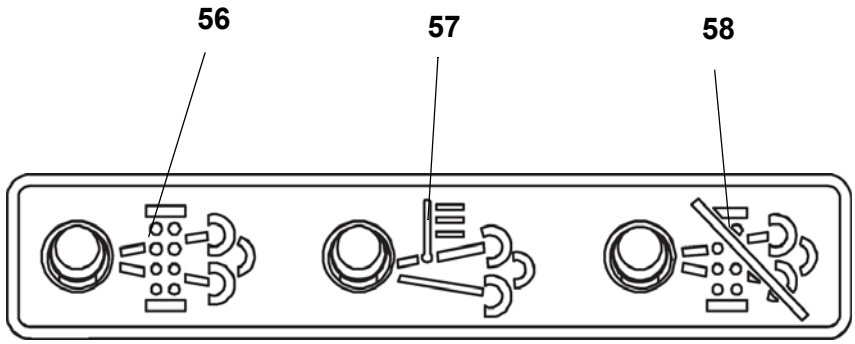

https://truckmanualshub.com/

Item	Designation	Brief description
57	Regeneration system temperature	Lit LED indicates that the regeneration system temperature is elevated. During a manual regeneration, the LED turns on during automatic regeneration or when the filter temperature reaches 1247°F. The LED stays on during the regeneration and will then turn off when the temperature falls below 1157°F. **⚠ WARNING** Regeneration is an extremely hot process. Care should be taken to avoid contact with potentially hot surfaces.
58	Regeneration inhibited	Lit LED indicates that the regeneration system is inhibited by the activation of the regeneration inhibit switch. Neither automatic nor manual regeneration can occur if this LED is lit. Refer to Item 24 for more information on regeneration inhibit. **⚠ DANGER** This function should only be enabled if a combustible material is nearby. Regeneration is an extremely hot pocess and could easily ignite combustible materials. **⚠ CAUTION** The diesel particulate filter may require servicing with prolonged use of this function.

https://truckmanualshub.com/

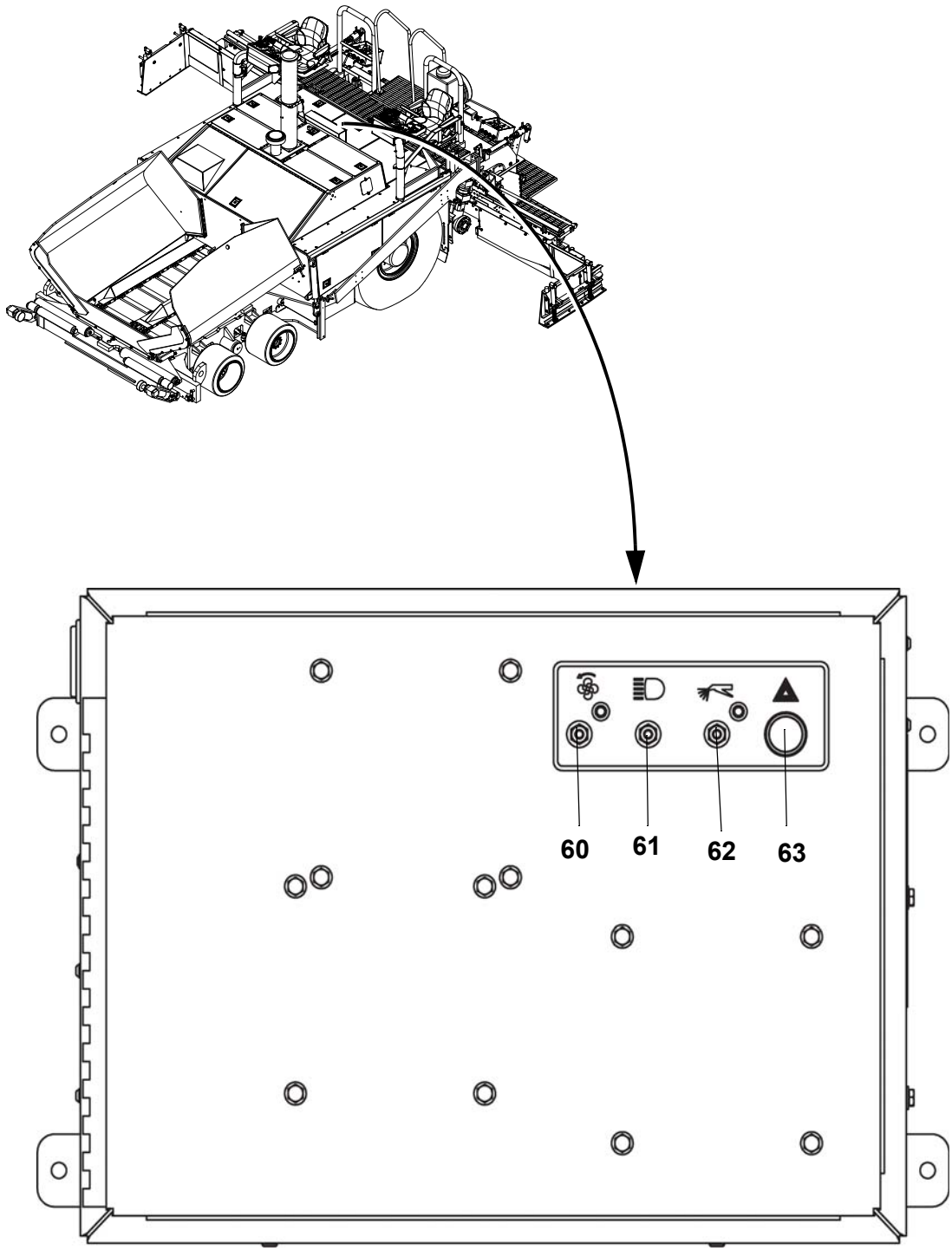

https://truckmanualshub.com/

Item	Designation	Brief description
60	Cooling fan reverse	Press and release to reverse the direction of the cooling fan for 15 seconds. Fan automatically returns to the normal direction after 15 seconds.
61	Headlights ON / OFF	Controls the working lights. - Toggle the switch up: Turns on the lights. - Toggle the switch down: Turns off the lights. **NOTICE** To prevent the battery from being drained, switch the headlights “ON” only when the diesel engine is running!
62	Release Agent fluid spray system ON/OFF	Activates the Release Agent fluid spraying system. - Toggle the switch up: Turns on the sprayer. - Toggle the switch down: Turns off the sprayer. **NOTICE** To prevent the battery from being drained, switch the sprayer “ON” only when the diesel engine is running!
63	Hazard warning flasher	Push button to turn the Hazard Warning Flasher “ON”. Hazard Warning Flasher must be turned “ON” on roads and in the construction site area. NOTE: The Hazard Warning Flasher button is also for activating the rotary beacon when attached.

https://truckmanualshub.com/

4 Left / right remote controls and handsets

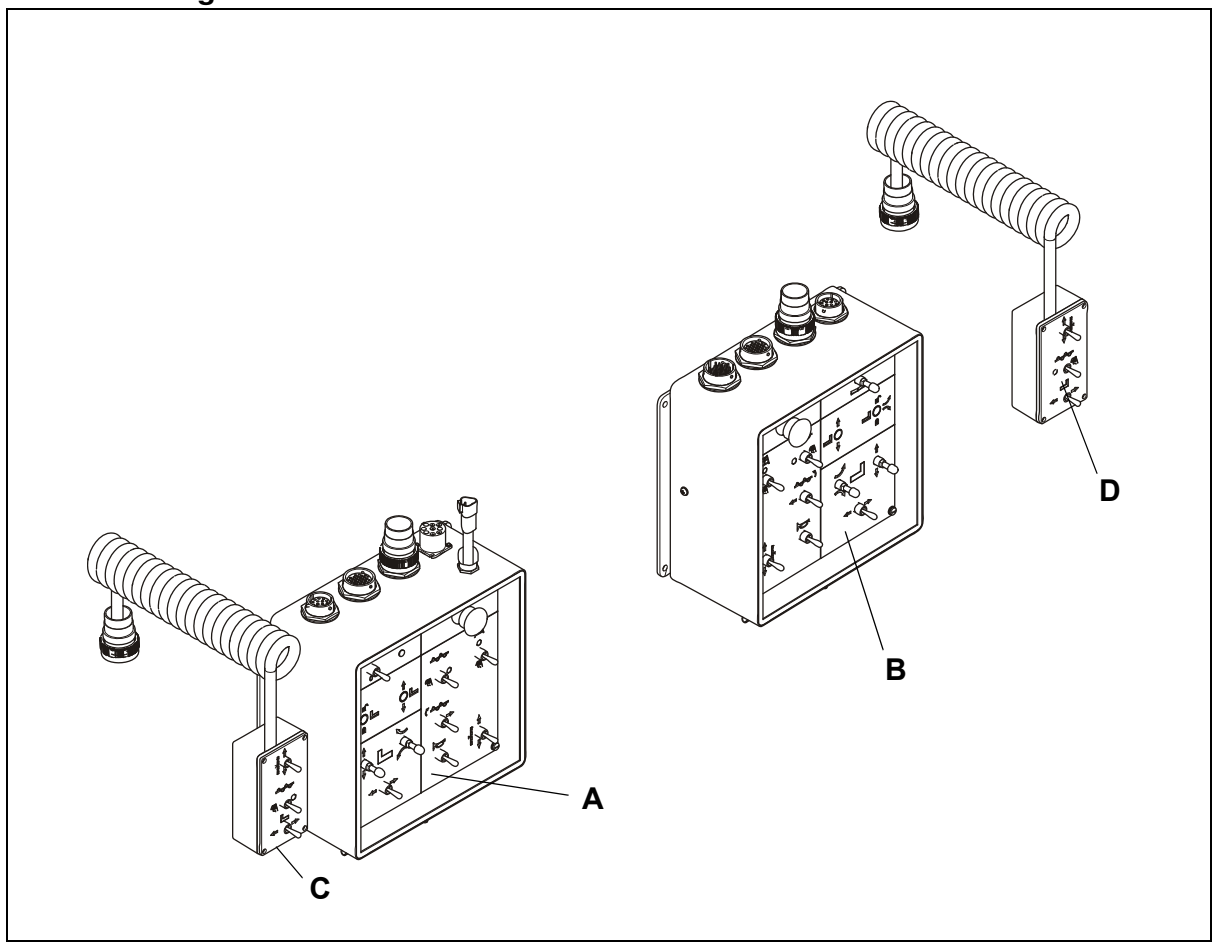

Item	Designation	Brief description
A	LEFT remote control	- Controls certain functions on the left-hand side of the vehicle and various overall functions.
B	RIGHT remote control	- Controls certain functions on the right-hand side of the vehicle and various overall functions.
C	LEFT handset	- Removable handset for controlling certain functions on the left-hand side of the vehicle.
D	RIGHT handset	- Removable handset for controlling certain functions on the right-hand side of the vehicle.

https://truckmanualshub.com/

Left / right remote control

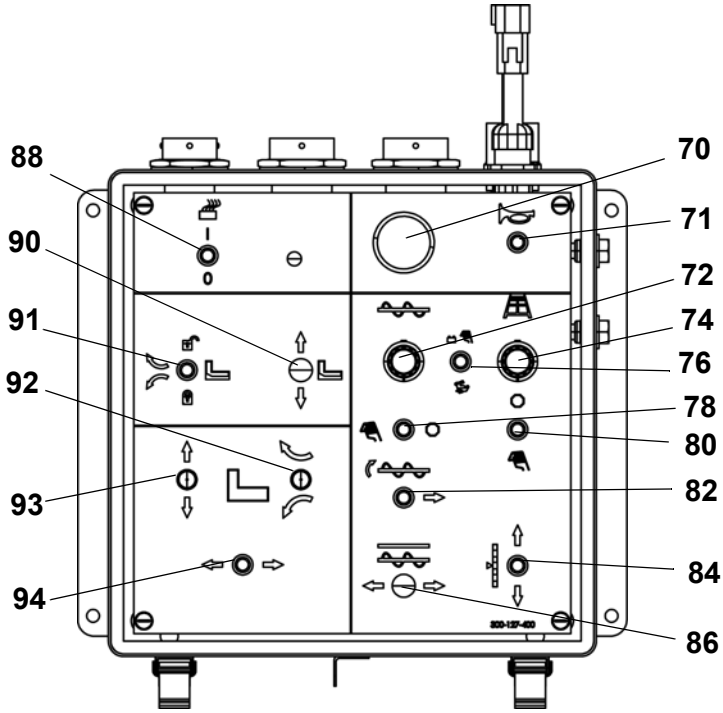

The left remote controls the left auger and conveyor

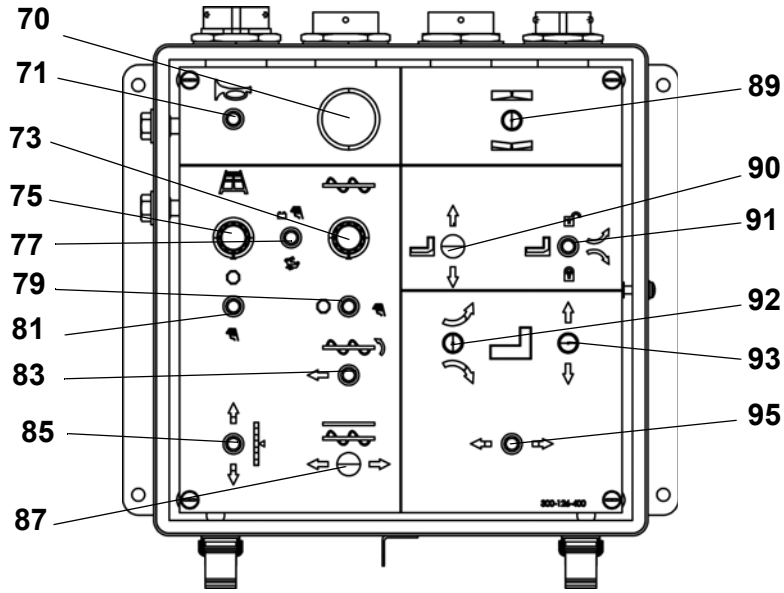

The right remote controls the right auger and conveyor

https://truckmanualshub.com/

Item	Designation	Brief description
70	Emergency stop button	In case of an emergency (danger to persons, possible collision, etc.), press the Emergency Stop button! - Pressing the Emergency Stop button switches the engine, the drives and the steering system off. **⚠ WARNING** Paving, lifting the screed or other functions are no longer possible! Do not reset the Emergency Stop Button until the danger is no longer present! - To restart the engine, the button must be pulled out again.
71	Horn	Sound the horn to warn of danger! NOTE: The horn can also be used to communicate with the vehicle driver!
72	Left auger pile height	Manually adjusts the percentage of maximum speed in auto mode. If 10% is selected, then the maximum speed when no material is sensed is 10% of its highest possible speed. Knob function: - Turn the knob clockwise to raise the speed. - Turn the knob counter-clockwise to lower the speed.
73	Right auger pile height	Manually adjusts the percentage of maximum speed in auto mode. If 10% is selected, then the maximum speed when no material is sensed is 10% of its highest possible speed. Knob function: - Turn the knob clockwise to raise the speed. - Turn the knob counter-clockwise to lower the speed.
74	Left conveyor pile height	Manually adjusts the percentage of maximum speed in auto mode. If 10% is selected, then the maximum speed when no material is sensed is 10% of its highest possible speed. Knob function: - Turn the knob clockwise to raise the speed. - Turn the knob counter-clockwise to lower the speed.
75	Right conveyor pile height	Manually adjusts the percentage of maximum speed in auto mode. If 10% is selected, then the maximum speed when no material is sensed is 10% of its highest possible speed. Knob function: - Turn the knob clockwise to raise the speed. - Turn the knob counter-clockwise to lower the speed.
76	Left speed manual / max. output	Overrides the auger and conveyor function automatic mode. Toggle switch function: - Toggle the switch away from the operator (upward) to run the auger and conveyor only using the pile height knobs. The material sensor will not be used. - Toggle the switch in the center position to run the auger and conveyor in auto mode. - Momentarily toggle the switch towards the operator (downward) to run the auger and conveyor at full speed.

https://truckmanualshub.com/

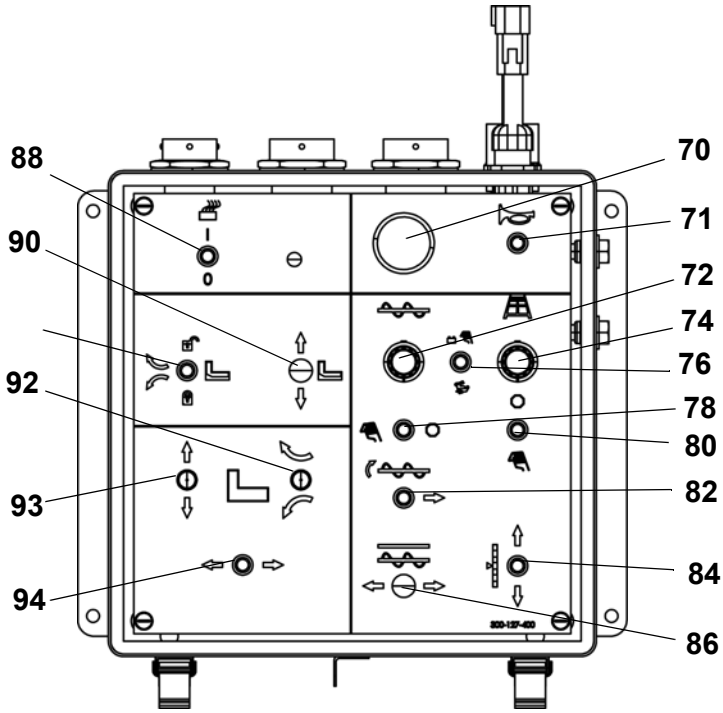

The left remote controls the left auger and conveyor

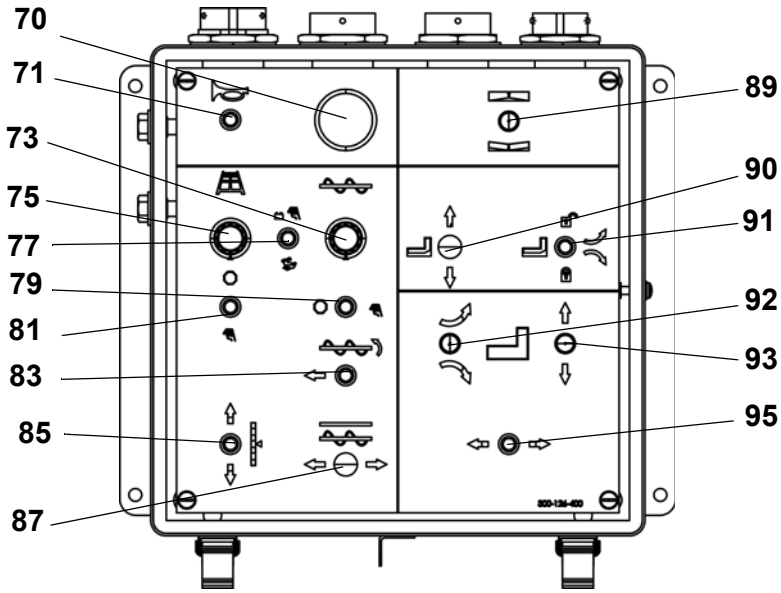

The right remote controls the right auger and conveyor

https://truckmanualshub.com/

Item	Designation	Brief description
77	Right speed manual / max. output	Overrides the auger and conveyor function automatic mode. Toggle switch function: - Toggle the switch away from the operator (upward) to run the auger and conveyor only using the pile height knobs. The material sensor will not be used. - Toggle the switch in the center position to run the auger and conveyor in auto mode. - Momentarily toggle the switch towards the operator (downward) to run the auger and conveyor at full speed.
78	Left auger OFF / max. output	Overrides the conveyor function in automatic and manual mode. Toggle switch function: - Toggle the switch right: Auger OFF. - Toggle the switch left: Auger 100% feed capacity.
79	Right auger OFF / max. output	Overrides the auger function in automatic and manual mode. Toggle switch function: - Toggle the switch left: Auger OFF. - Toggle the switch right: Auger 100% feed capacity.
80	Left conveyor OFF / max. output	Overrides the conveyor function in automatic mode. Toggle switch function: - Toggle the switch forward (away from the operator): Conveyor OFF. - Toggle the switch back (toward the operator): Conveyor 100% feed capacity.
81	Right conveyor OFF / max. output	Overrides the conveyor function in automatic mode. Toggle switch function: - Toggle the switch forward (away from the operator): Conveyor OFF. - Toggle the switch back (toward the operator): Conveyor 100% feed capacity.
82	Left auger reversing switch	The conveying direction of the left half of the auger can be reversed in order to slightly reverse a material supply which may be too high. **NOTICE** The switch can be activated as often as needed to allow the conveyor to run further in the reverse direction.
83	Right auger reversing switch	The conveying direction of the right half of the auger can be reversed in order to slightly reverse a material supply which may be too high. **NOTICE** The switch can be activated as often as needed to allow the conveyor to run further in the reverse direction.

https://truckmanualshub.com/

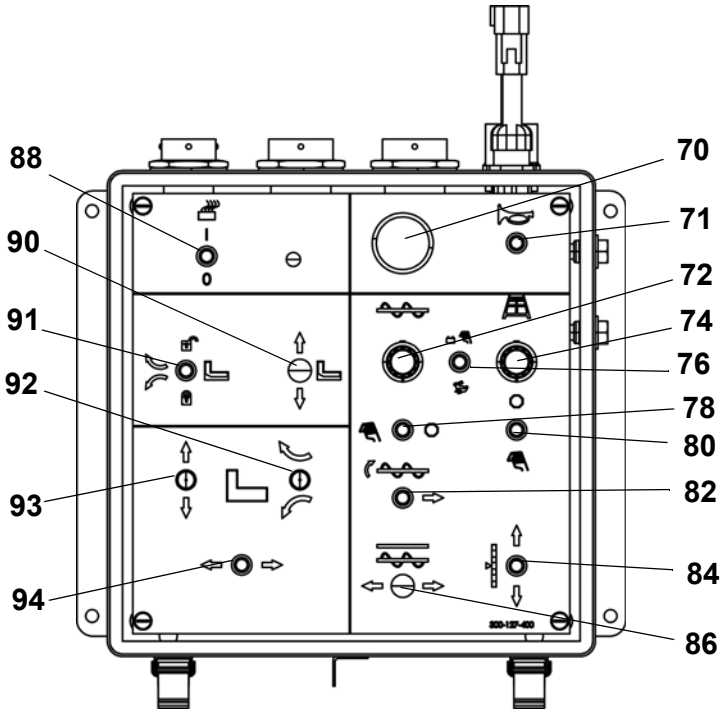

The left remote controls the left auger and conveyor

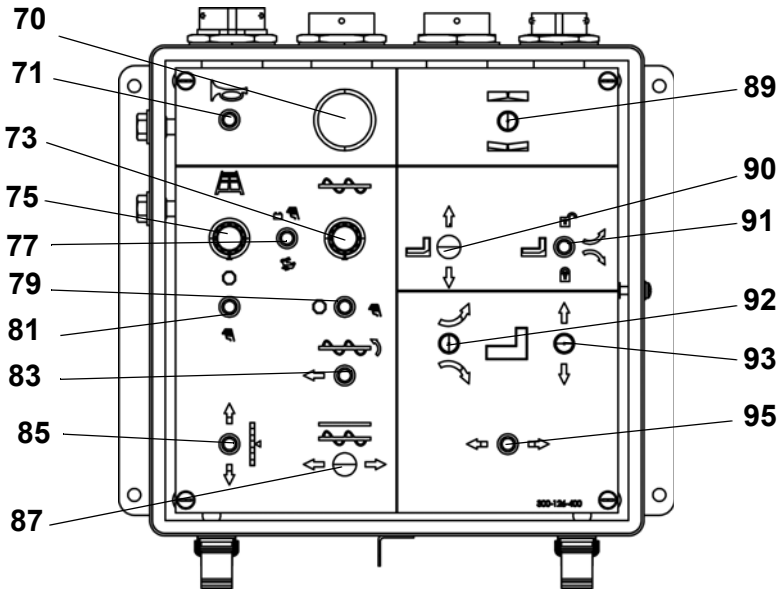

The right remote controls the right auger and conveyor

https://truckmanualshub.com/

Item	Designation	Brief description
84	Left leveling cylinder	Manually extends and retracts the leveling cylinder when the vehicle is being operated without the automatic leveling system. Toggle switch function: - Toggle the switch forward (away from the screed): Retract or raise the leveling cylinder to raise the screed. - Toggle the switch back (toward the screed): Extend or lower the the leveling cylinder to lower the screed. **⚠ WARNING** Before operating the toggle switch, ensure that equipment and persons are clear of the machine!
85	Right leveling cylinder	Manually extends and retracts the leveling cylinder when the vehicle is being operated without the automatic leveling system. Toggle switch function: - Toggle the switch forward (away from the screed): Retract or raise the leveling cylinder to raise the screed. - Toggle the switch back (toward the screed): Extend or lower the leveling cylinder to lower the screed. **⚠ WARNING** Before operating the toggle switch, ensure that equipment and persons are clear of the machine!
86	Left hydraulic tunnel extention / retract (option)	Controls the tunnel extension. Toggle swtich function: - Toggle the switch outward (away from the screed): Extends tunnel extension. - Toggle the switch inward (toward the center of the screed): Retracts tunnel extension.
87	Right hydraulic tunnel extention / retract (option)	Controls the tunnel extension. Toggle swtich function: - Toggle the switch outward (away from the screed): Extends tunnel extension. - Toggle the switch inward (toward the center of the screed): Retracts tunnel extension.
88	Screed heater system ON / OFF + activation LED	Jointly switches all of the screed heater system's heating sections on and off. Toggle switch function: - Toggle the switch forward (away from the operator): Screed heater system ON and indicator (LED) light ON. - Toggle the switch back (toward the operator): Screed heater system OFF.
89	Crowning Adjustment	The screed is equipped with adjustable crowning; adjusting this enables the required crowning to be set. Toggle switch function: - Toggle the switch forward (away from the operator): Increases Crowning. - Toggle the switch back (toward the operator): Decreases Crowning.

https://truckmanualshub.com/

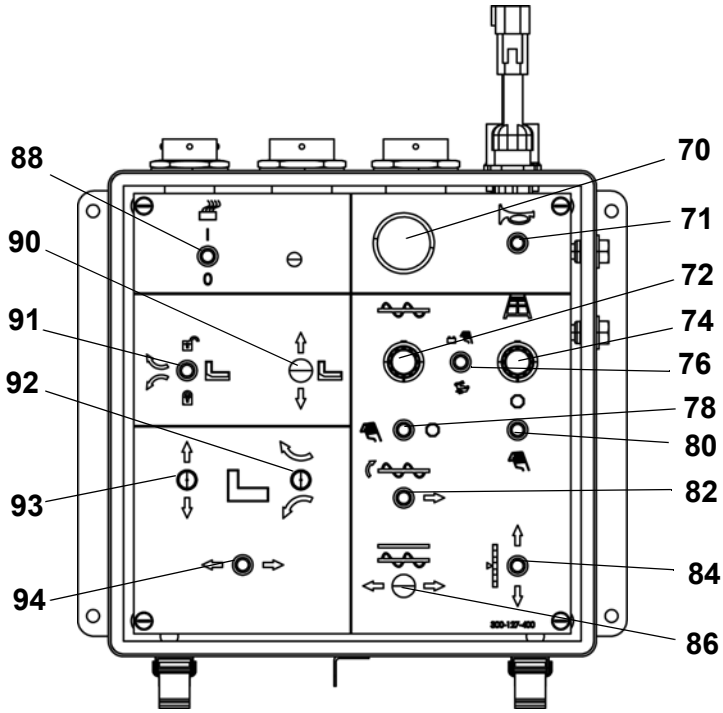

The left remote controls the left auger and conveyor

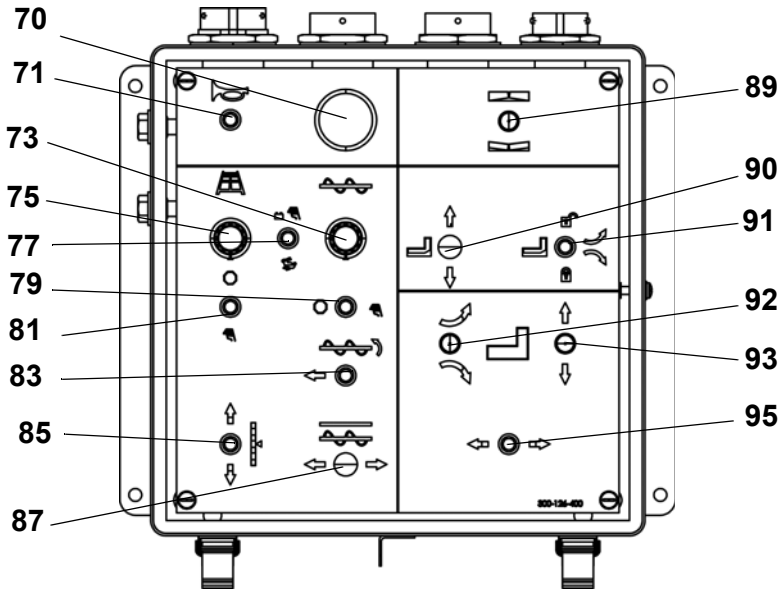

The right remote controls the right auger and conveyor

https://truckmanualshub.com/

Item	Designation	Brief description
90	Berm raise / lower (Option)	Hydraulically raises or lowers the Berm. Toggle switch function: - Toggle the switch forward (away from the operator): Raises Berm. - Toggle the switch back (toward the operator): Lowers Berm. **⚠ WARNING** Before operating the toggle switch, ensure that equipment and persons are clear of the machine!
91	Berm lock / unlock (Option)	Locks and unlocks the Berm. Toggle switch function: - Toggle the switch forward (away from the operator): Unlocks the Berm. - Toggle the switch back (toward the operator): Locks the berm. **⚠ WARNING** Before operating the toggle switch, ensure that equipment and persons are clear of the machine!
92	Raise / lower extension scope	Hydraulically raises and lowers the extension slope. Toggle switch function: - Toggle the switch forward (away from the operator): Raise extension slope. - Toggle the switch back (toward the operator): Lower extension slope. **⚠ WARNING** Before operating the toggle switch, ensure that equipment and persons are clear of the machine!
93	Raise / lower extendable screed part	Hydraulically raises and lowers the extendable screed part. Toggle switch function: - Toggle the switch forward (away from the operator): Raise extendable part. - Toggle the switch back (toward the operator): Lower extendable part. **⚠ WARNING** Before operating the toggle switch, ensure that equipment and persons are clear of the machine!

https://truckmanualshub.com/

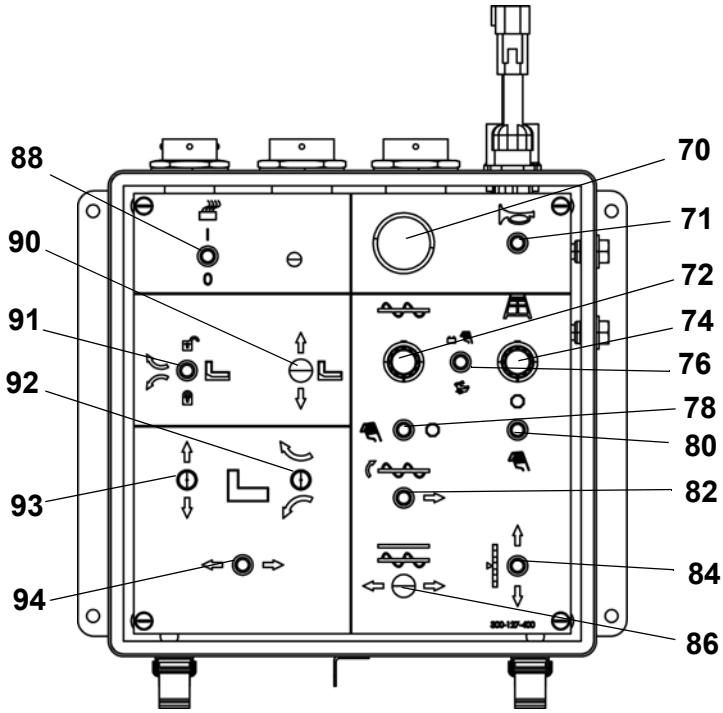

The left remote controls the left auger and conveyor

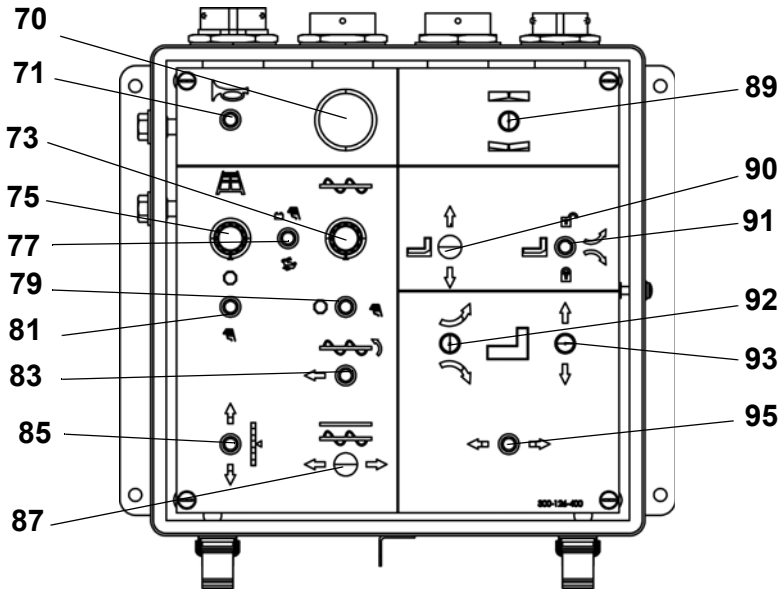

The right remote controls the right auger and conveyor

https://truckmanualshub.com/

Item	Designation	Brief description
94	Extend / retract left screed extension	Hydraulically retracts and extends the left extendable part of the screed. Toggle switch function: - Toggle the switch left: Extend screed extension. - Toggle the switch right: Retract screed extension. **⚠ WARNING** Before operating the toggle switch, ensure that equipment and persons are clear of the machine!
95	Extend / retract right screed extension	To hydraulically retract and extend the right extendable part of the screed. Toggle switch function: - Toggle the switch left: Retract screed extension. - Toggle the switch right: Extend screed extension. **⚠ WARNING** Before operating the toggle switch, ensure that equipment and persons are clear of the machine!

https://truckmanualshub.com/

Left / right handset

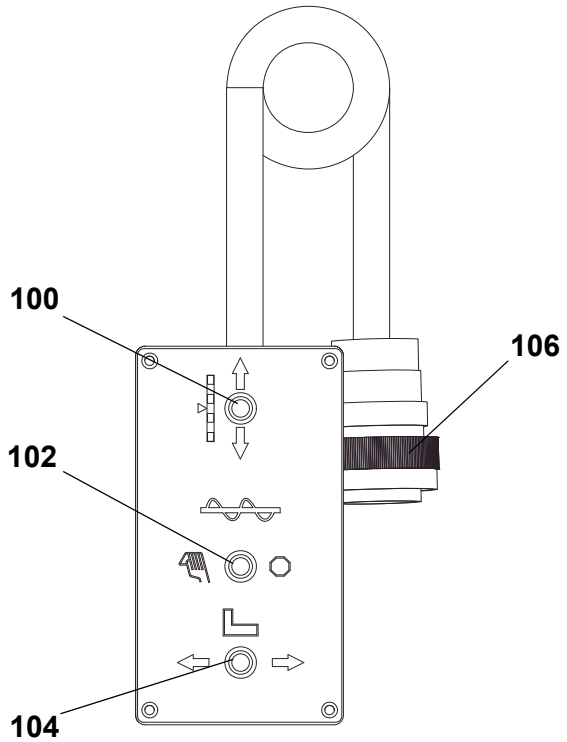

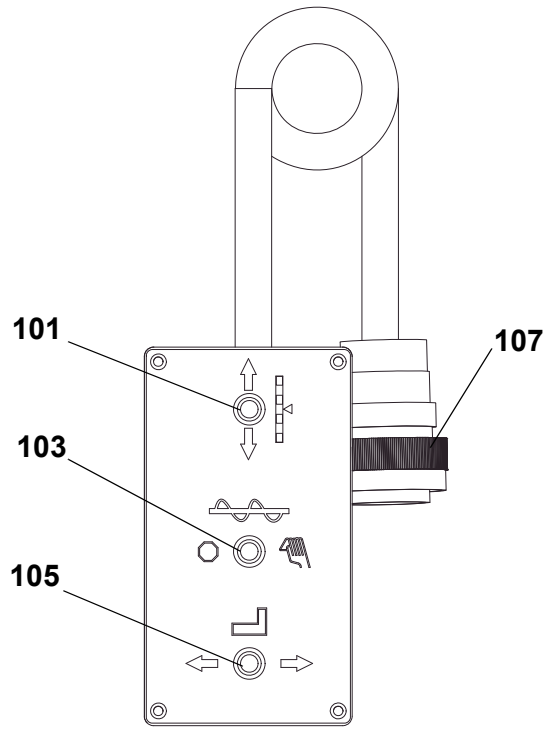

https://truckmanualshub.com/

Item	Designation	Brief description
100	Left leveling cylinder	Manually extends and retracts the leveling cylinder when the vehicle is being operated without the automatic leveling system. Toggle switch function: - Toggle the switch forward (away from the operator): Raises the left screed side arm. - Toggle the switch back (toward the operator): Lowers the screed side arm. **⚠ WARNING** Before operating the toggle switch, ensure that eqipment and persons are clear of the machine!
101	Right leveling cylinder	Manually extends and retracts the leveling cylinder when the vehicle is being operated without the automatic leveling system. Toggle switch function: - Toggle the switch forward (away from the operator): Raises the right screed side arm. - Toggle the switch back (toward the operator): Lowers the screed side arm. **⚠ WARNING** Before operating the toggle switch, ensure that eqipment and persons are clear of the machine!
102	Left auger OFF / max. output	Overrides the auger function in automatic mode. Toggle switch function: - Toggle the switch right: Auger OFF. - Toggle the switch left: Auger 100% feed capacity.
103	Right auger OFF / max. output	TOverrides the auger function in automatic mode. Toggle switch function: - Toggle the switch left: Auger OFF. - Toggle the switch right: Auger 100% feed capacity.
104	Extend / retract left screed	Hydraulically retracts and extends the left extendable part of the screed. Toggle switch function: - Toggle switch left: Extend screed. - Toggle switch right: Retract screed. **⚠ WARNING** Before operating the toggle switch, ensure that eqipment and persons are clear of the machine!

https://truckmanualshub.com/

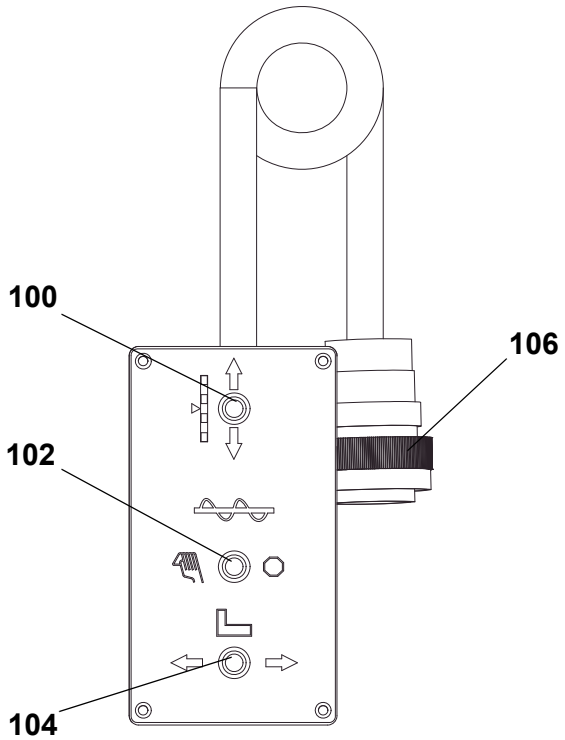

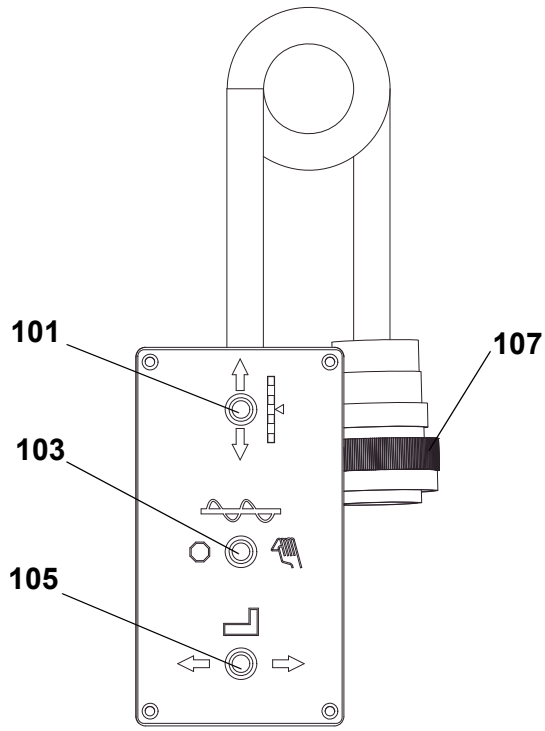

https://truckmanualshub.com/

Item	Designation	Brief description
105	Extend / retract right screed	Hydraulically retracts and extends the right extendable part of the screed. Push button function: - Toggle switch left: Retract screed. - Toggle switch right: Extend screed. **⚠ WARNING** Before operating the toggle switch, ensure that eqipment and persons are clear of the machine!
106	Handset connection cable	- Connects to the left remote control.
107	Handset connection cable	- Connects to the right remote control.

https://truckmanualshub.com/

D 2.0 Operation

1 Operation of the graphical terminal

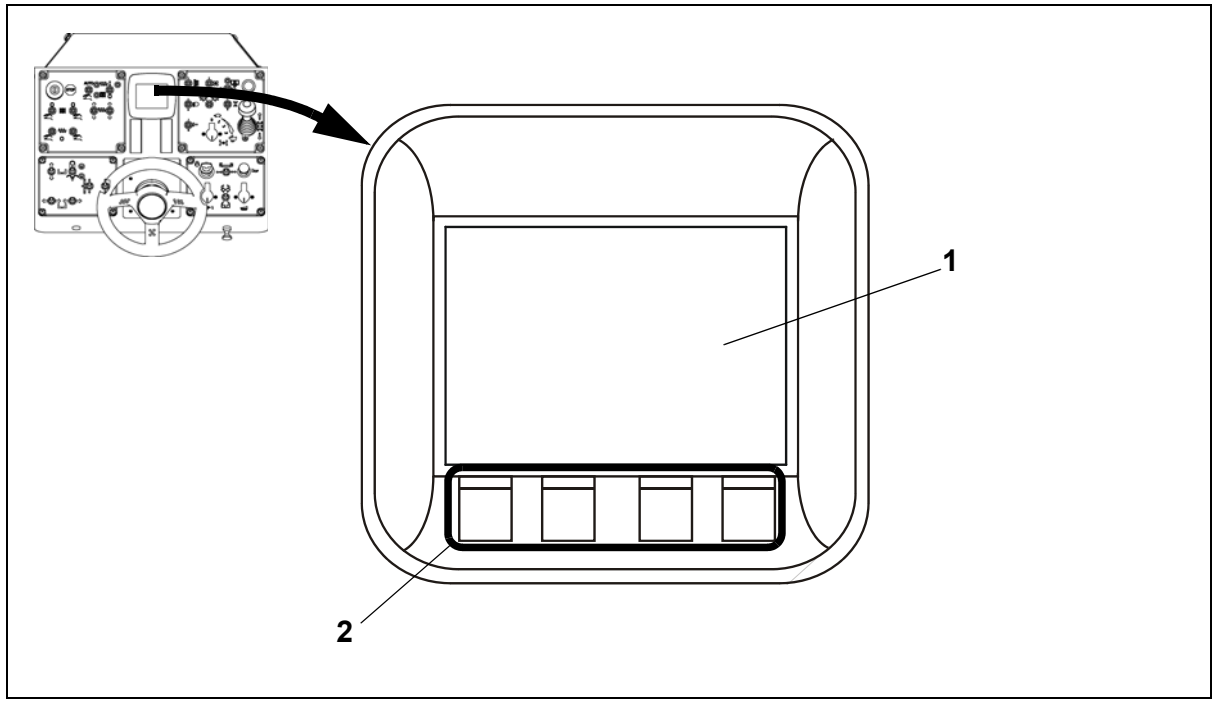

Item	Designation	Brief description
1	Display	- Display for engine information, diagnostic information and configuration.
2	Softkeys	- Terminal is controlled by navigation through a set of four soft keys.The keys are context dependent. Soft key selection options are displayed above each key and are dependent on the current navigation location within the engine monitor software program.

https://truckmanualshub.com/

1.1 Navigation using Soft Keys

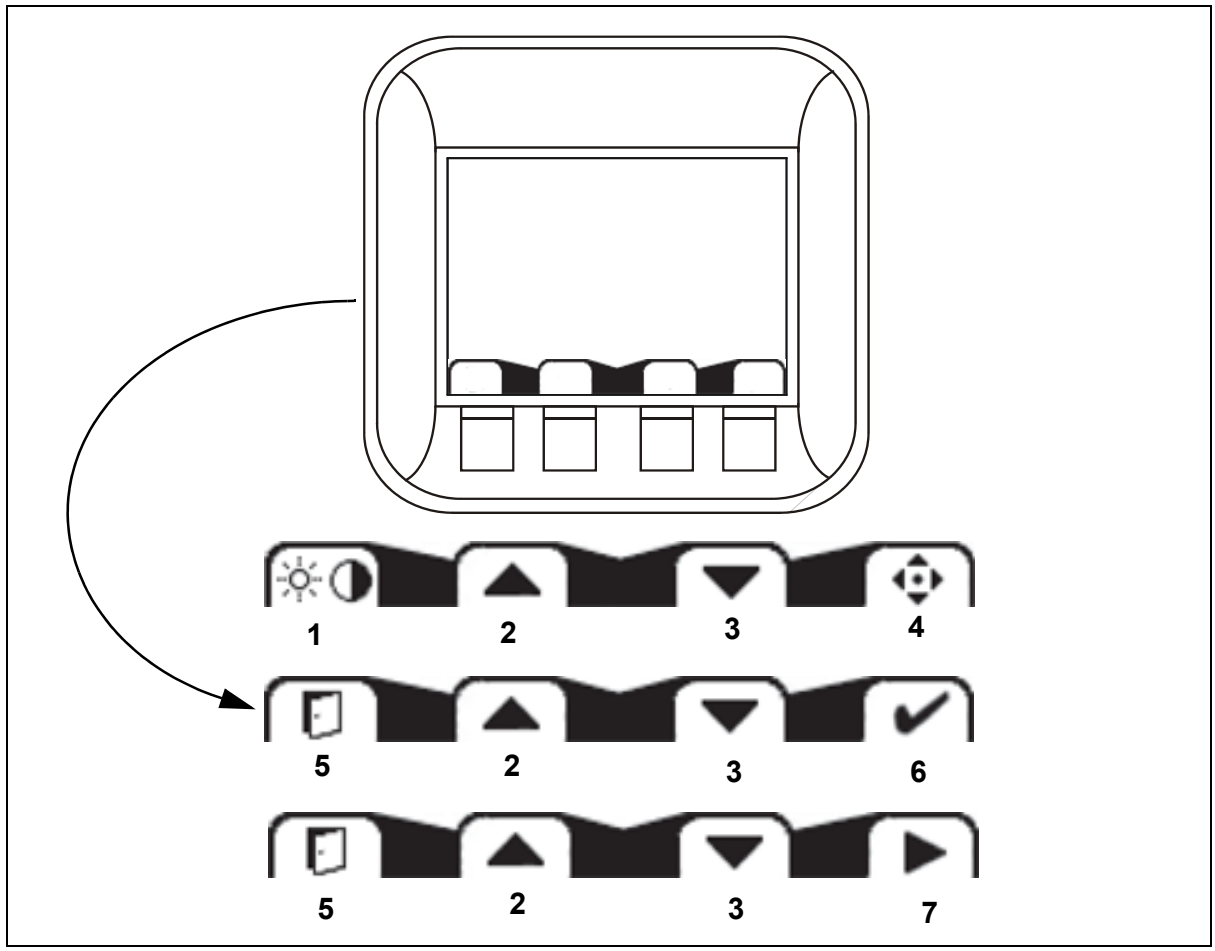

Item	Designation	Brief description
1	Brightness/Contrast	- Press to access brightness and contrast settings.
2	Navigate Up	- Press up to move up through menu items.
3	Navigate Down	- Press up to move down through menu items.
4	Main Menu	- Press to go to Main Menu screen.
5	Exit/back one screen	- Press to go back one screen.
6	Select	- Press to make selection.
7	Next	- Press to navigate to next digit or screen element.

NOTICE

As a general rule, the far right soft key is the selector button and the far left soft key is the step back one screen key. To engage full screen use, the on-screen selections are not displayed when not in use. Press any soft key to display current selection options. The selection options will be displayed for three seconds.

https://truckmanualshub.com/

Brightness/Contrast Adjustment

- Adjust brightness and contrast levels by pressing the far left soft key. This will display the brightness and contrast soft key bar.

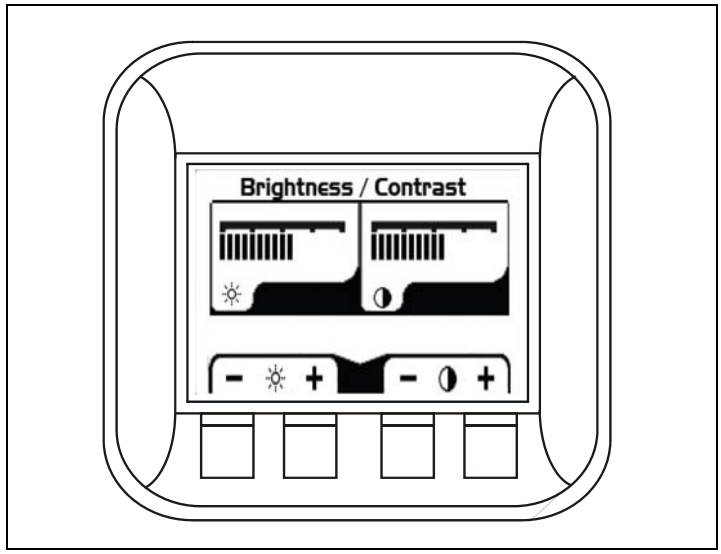

NOTICE

The bar will disappear after 3 seconds of inactivity.

Main Menu - Start Menu

The Main Menu screen is the starting point for configuring the terminal.

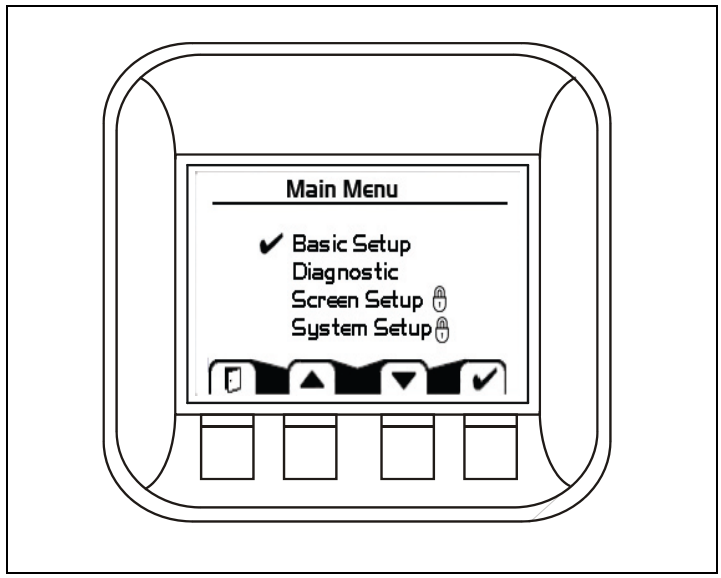

Basic Setup	-	Use to set time/date, language and units.
Diagnostics	-	Use to set system info, info fault log and J1939 lists.
Screen Setup	-	(PIN protected)
System Setup	-	(PIN protected)

https://truckmanualshub.com/

Main Menu - Basic Setup

Use the Basic setup screen to set time, language and display units for the terminal.

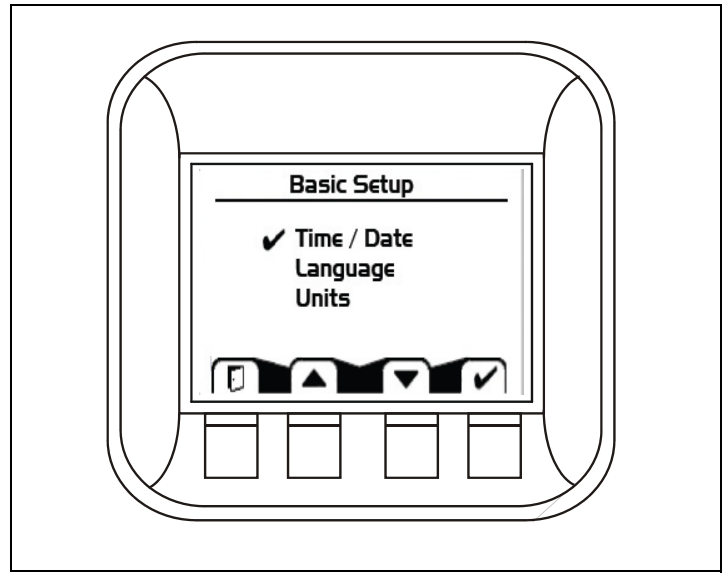

Time/Date	-	Use Time/Date set date and display style for time and date information.
Language	-	Use Language to set the system language.
Units	-	Use Units to set speed, distance, pressure, volume, temperature and fuel rates and economy settings.

https://truckmanualshub.com/

Main Menu - Basic Setup -Time / Date

Use Time/Date screen to set Time, Date, calendar style and time style. Use up, down select and next soft keys to navigate.

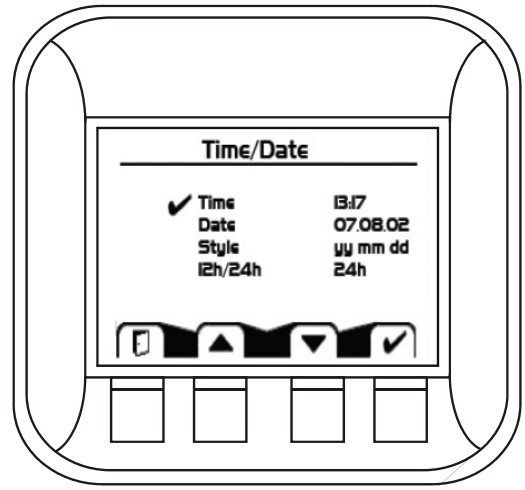

Main Menu - Basic Setup -Language

Use Language screen to select program language. Languages available, English, French, German, Italian, Swedish and Spanish.
The default language setting is English.

https://truckmanualshub.com/

Main Menu - Basic Setup -Units

Use the up, down, select and next soft keys to define unit measurements.

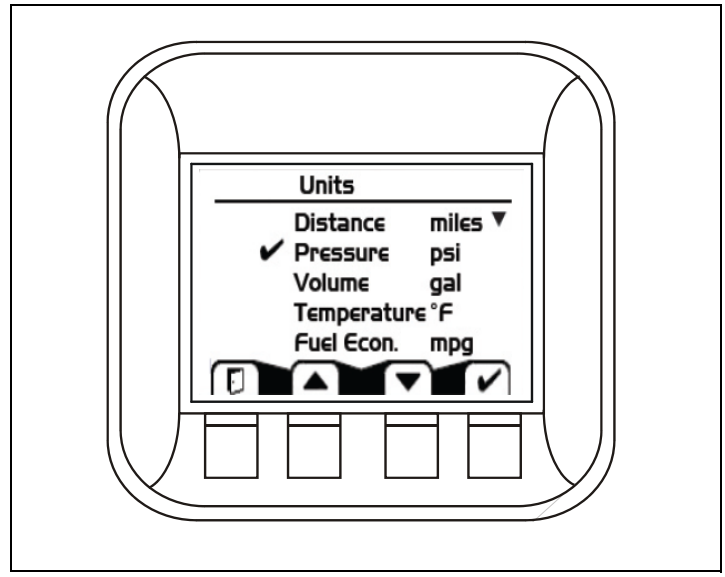

Speed	-	km/h, mph
Distance	-	km, mi
Pressure	-	kPa, bar, lbs/ sq in
Volume	-	l, gal, imp gal
Temperature	-	°C, °F
Fuel Economy	-	1/100km, mpg, mpig
Fuel Rate	-	l/h, g/h, ig/h

https://truckmanualshub.com/

Main Menu - Diagnostics

Use the Diagnostics screen to display current system information, view and monitor fault logs and display all J1939 devices connected to the graphical terminal.

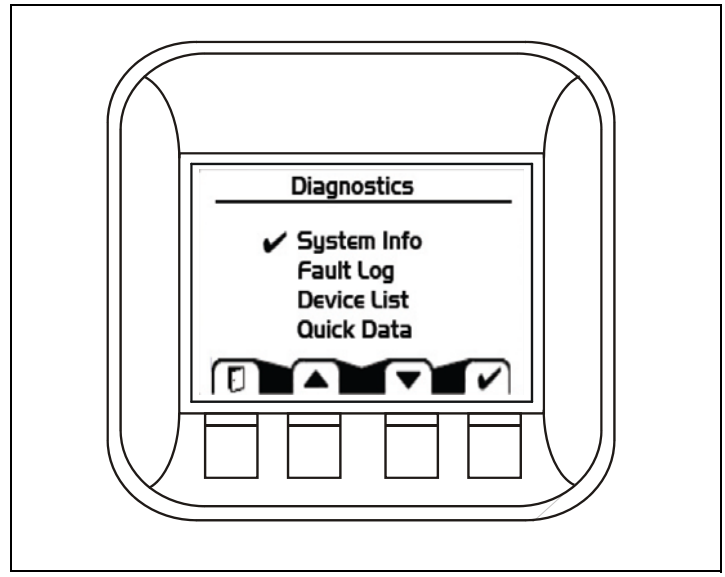

https://truckmanualshub.com/

Main Menu - Diagnostics -System Info

The system info screen displays the hardware system serial number, current software version, current system version and node number. Only information is displayed in the System Info window. No changes can be made.

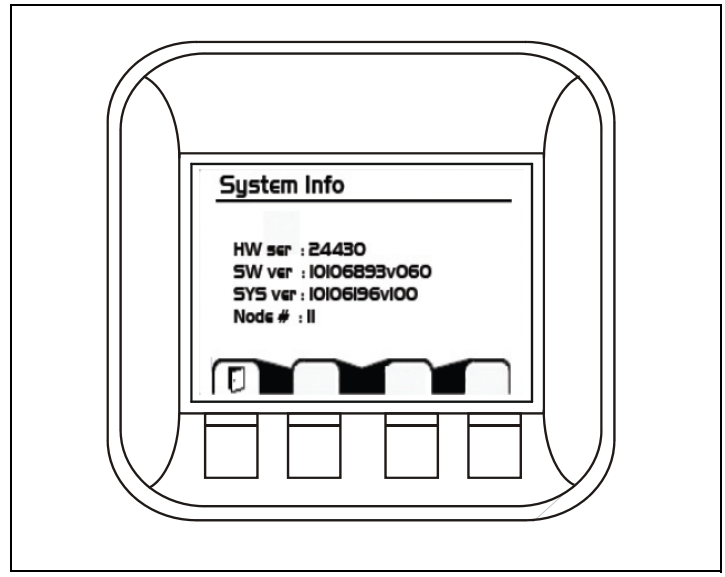

Main Menu - Diagnostics -Fault Log

Fault information is saved and stored to the fault log. Select either Active or Previous Faults to monitor fault activity. Select specific faults to list more information.

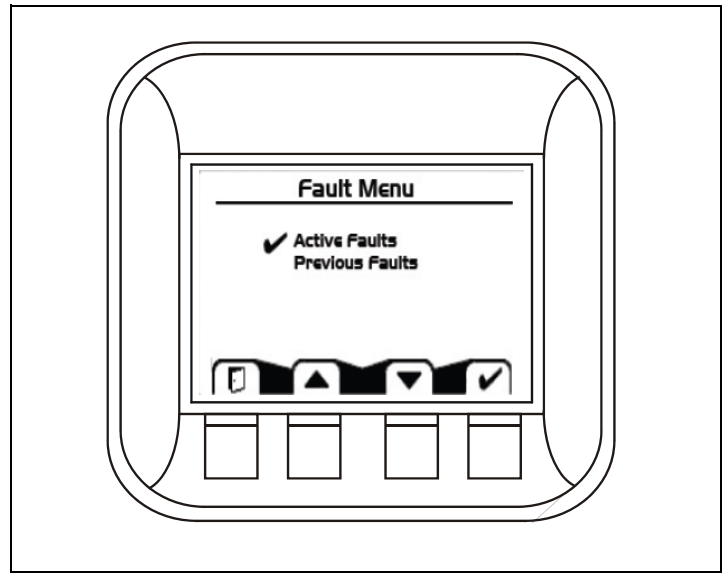

https://truckmanualshub.com/

Main Menu - Diagnostics -Fault Log Active and Previous Faults

Selecting Active Faults in the Fault Menu will display all active faults on the CAN network.

Selecting Previous Faults in the Fault Menu will display all previously active faults on the CAN network.

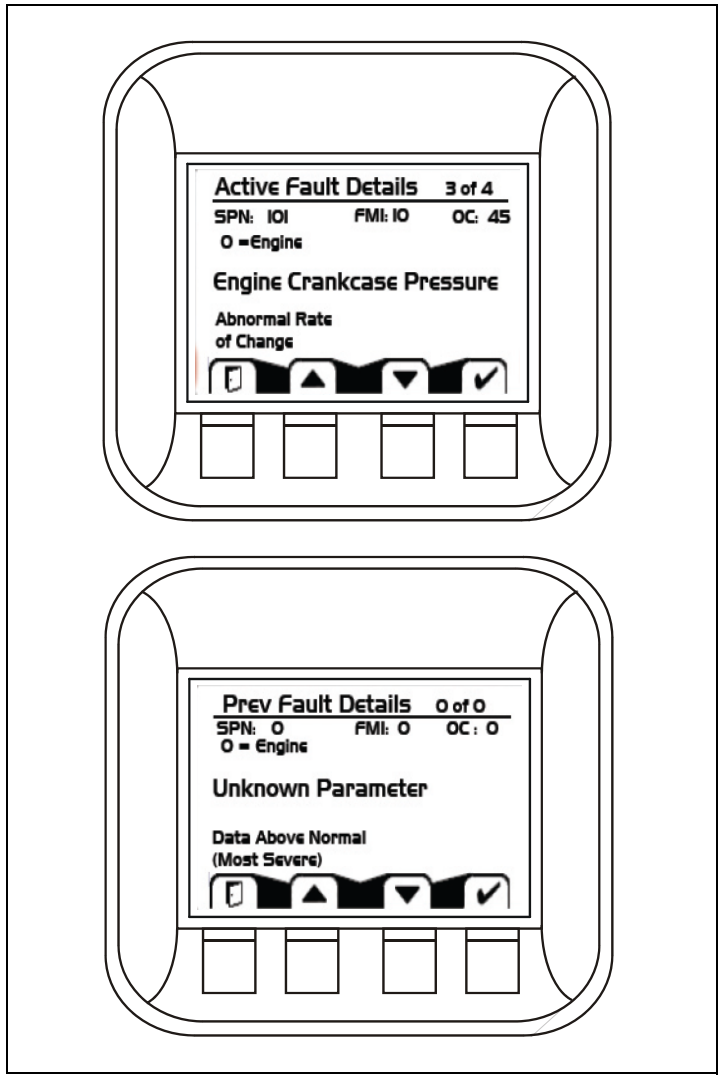

https://truckmanualshub.com/

Main Menu - Diagnostics -Fault Pop-Up Alarms

When a fault is detected on the CAN network, a flashing red warning alarm will be activated and a fault information pop-up window will be displayed listing current fault information.
Warning lights will flash when a popup alarm occurs and will stay flashing until acknowledged.
Warning lights will remain lit until the fault is no longer on the CAN network.

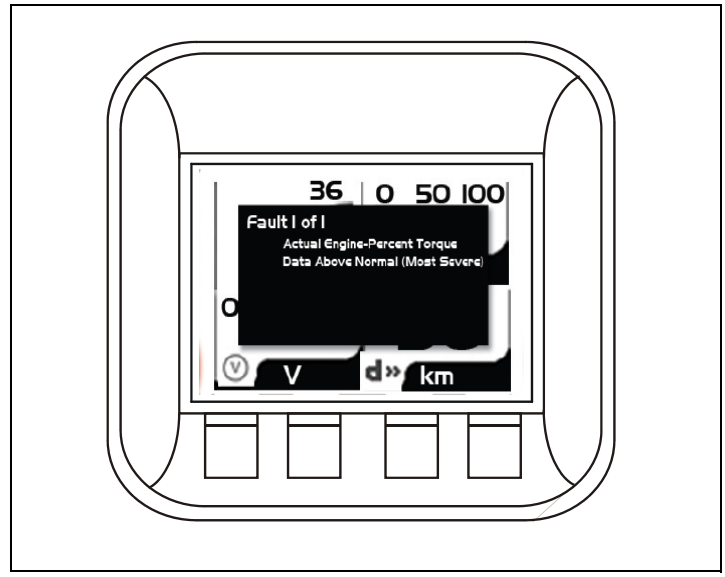

Fault pop-up softkey actions:

	- Select to clear pop up and return directly to previous screens
	- Scroll between screens and within screens.
	- Scroll between screens and within screens.
	- Confirm any selections or acknowledge any fault/ warning and to go back to normal screen.

NOTICE

Fault Pop-Up Alarms

- Faults no longer active will also be displayed in the Previous Faults log.
- Faults that have been acknowledged and are no longer active will be shown in the Currently Active Faults log in italics.
- Pop-up fault alarms can be disabled by setting the Fault Pop-Up to off in the CAN section of the System.

https://truckmanualshub.com/

Main Menu - Diagnostics -Device List

The Device list page will list all J1939 devices and addresses that are currently being monitored on the network.

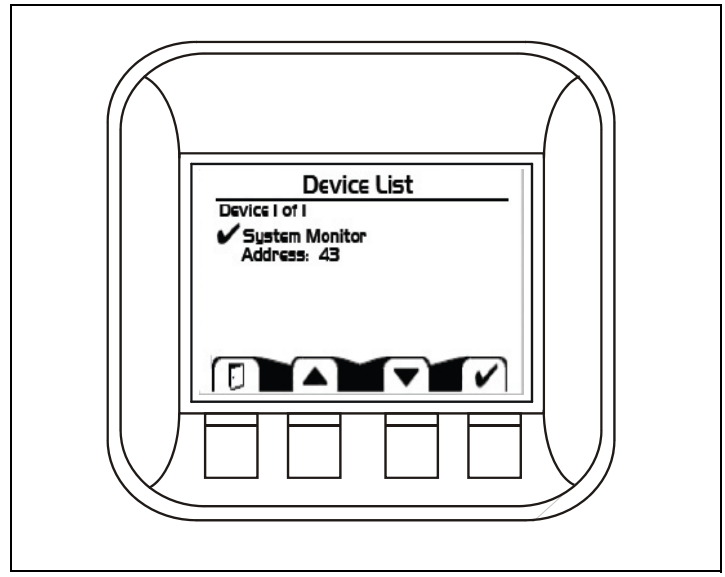

https://truckmanualshub.com/

Main Menu - Diagnostics -Quick Data

The Quick Data function allows selected signals to be monitored in a scrollable single view display.
To select signals for display, press the far right soft key.

Quick Data softkey

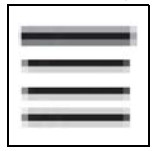

Scroll through signal list using the up and down arrow soft keys and select/de-select signals for Quick View monitoring by pressing the far right (check mark) soft key. Signals selected for display will show an asterisks to the left of the signal name.

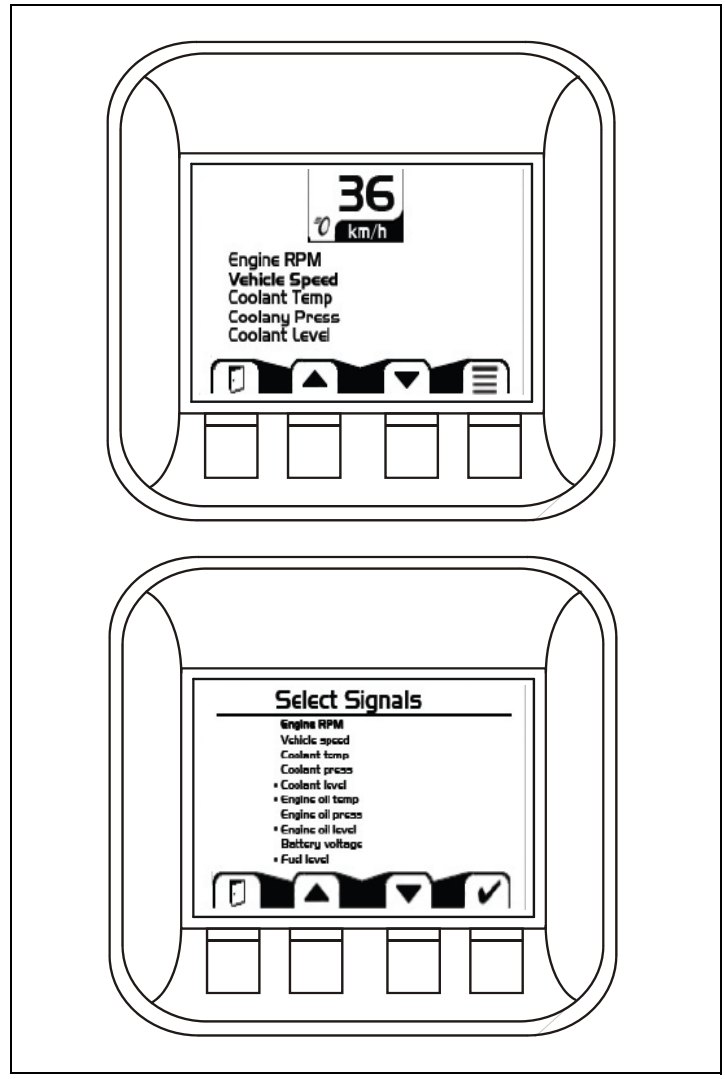

https://truckmanualshub.com/

Start Display

Appears at system start.

Model Select

Use the scroll buttons to select the appropriate paver movel. Once the check mark is on the correct model, press “OK”.

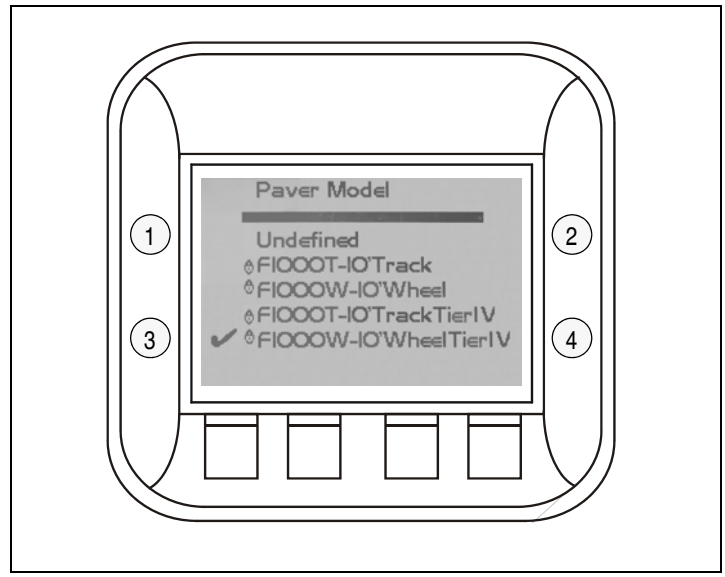

https://truckmanualshub.com/

Display 01

Display menu

- Vehicle Speed (1)
  in fpm.
- Engine RPM (2)
  in rpm - with bar chart.
- Diesel tank filling (3)
  in % - with bar chart.
- Engine Coolant Temperature(4)
  in °F.

Display 02

Display menu

- Hydraulic Oil Tempersature (1)
  in °F.
- Engine Operation Hours (2)
  in hours.
- Engine Coolant Level (3) in % - with bar chart.
- Actual Engine Torque (4)
  in % - with bar chart.

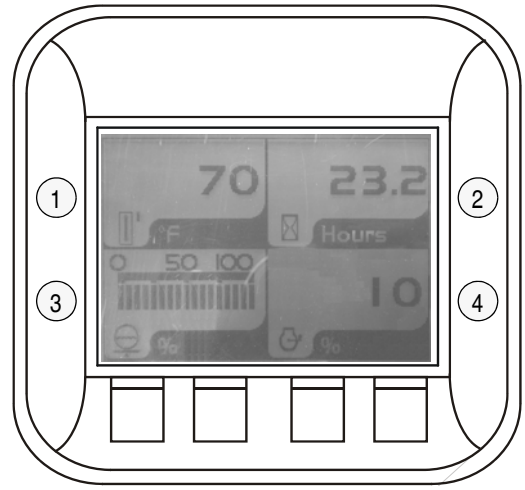

https://truckmanualshub.com/

Active Faults Display

Appears when a fault occurs.

- To see a list with active faults, first use button 2 or 3 from the current screen and go to Active Fault Screen, then press button 4 to get into the Active Fault Screen.
- After entering the Active Fault Screen, Scroll thru the faults by using buttons 2 or 3.
- To leave the Active Fault Screen, press button 1

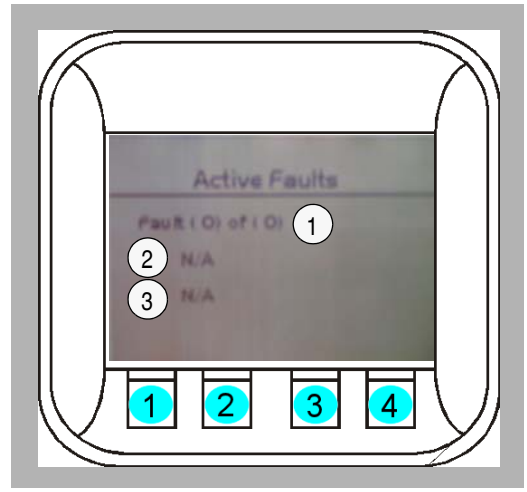

Fault Sources and Codes

Nr.	Source	Nr.	Source
1	Sensor Power	2	Battery
3	Left Joystick	4	Right Joystick
5	Left Steer Wheel / Position Sensor	6	Right Steer Wheel / Position Sensor
7	Left Trim Steer POT	8	Right Trim Steer POT
9	Left Max Speed POT	10	Right Max Speed POT
11	Left Pump	12	Right Pump
13	Generator Pump	14	Left PPU
15	Right PPU	16	Generator PPU
17	Fan Motor	18	Left Conveyor POT
19	Right Conveyor POT	20	Left Auger POT
21	Right Auger POT		

Nr.	Cause of Issue
10	Open circuit
11	Input at 0V
12	Short circuit
13	Input at 5V
20	Too low
21	Too high
30	No response
40	Invalid calibration
41	Invalid configuration

https://truckmanualshub.com/

Warnings Display

Appears due to faulty machine operation.

- Line (1): Actual displayed Warning of (x) active Warnings. Code number is displayed
  - Scroll between the active warnings by using buttons 2 or 3.
- Leave Warning display by using button 1

Warning Codes

Situation	Code	Display Message
Propel Selector in Position 4, while joystick is stroked backward	1	Counter Rotate: stroke joystick forward
Propel Selector in Position 4, while joystick is in neutral for long (e.g. more than 10 seconds)	2	Counter Rotate: stroke joystick forward
Change Propel selector switch while machine in moving	3	Change propel selector when machine is stopped
Change Propel selector switch while joystick is not neutral	4	Change propel selector when joystick is in neutral
Joystick not in neutral when machine is powered up	5	Return Joystick to neutral
Brake is applied, try to stroke joystick	6	Release the brake before driving
Change console selector switch while machine in moving	7	Change active console when machine is stopped
Change console selector switch while joystick is not in neutral	8	Change active console when joystick is in neutral
Propel Selector in Position 4, Joystick is moved forward with no steering command for more than 5 seconds	9	
Slope detection beyond the allowable limit	11	Beyond allowable slope. Bring the gear down.
If the Generator frequency goes beyond the allowable limits	12	Generator is not within allowable limit
High hydraulic oil temperature	15	HydOilTemp_ToHigh
Low hydraulic oil level	17	HydOilLevel_Low
LH conveyor ultrasonic sensor open/short	Open: 19 Short: 18	UltrasConvLH_Open, UltrasConvLH_Short
RH conveyor ultrasonic sensor open/short	Open: 21 Short: 20	UltrasConvRH_Open, UltrasConvRH_Short
LH auger ultrasonic sensor open/short	Open: 23 Short: 22	UltrasAugerLH_Open, UltrasAugerLH_Short

https://truckmanualshub.com/

Situation	Code	Display Message
RH auger ultrasonic sensor open/short	Open: 25 Short: 24	UltrasAugerRH_Open, UltrasAugerRH_Short
LH conveyor potentiometer open/short	Open: 27 Short: 26	Conv_PotLH_Open, Conv_PotLH_Short
RH conveyor potentiometer open/short	Open: 29 Short: 30	Conv_PotRH_Open, Conv_PotRH_Short
LH auger potentiometer open/short	Open: 31 Short: 30	AugerPotLH_Open, AugerPotLH_Short
RH auger potentiometer open/short	Open:33 Short: 32	AugerPotRH_Open, AugerPotRH_Short
Fan Motor Open/Short	Open: 35 Short: 34	FanDriveMotor_Open, FanDriveMotor_Short

https://truckmanualshub.com/

SPN	Component / Location	Description (Error location)	Defined for DCR	Defined for DMV	Error code SERDIA	ID	Blink code	FMI	Self-curing[1]
29	Hand throttle	Cable break or short circuit, signal implausible compared to signal of idle sensor	●	●	138	HdThrt	1-2-6	2, 3, 4, 11	
84	Vehicle speed signal	Speed above target range, signal missing or implausible	●	●	232	VSSCD1	5-2-1	0, 8, 12, 14	●
91	Accelerator pedal	Cable break or short circuit, signal implausible compared to signal of idle sensor (analog pedal)	●	●	12	APP1	2-2-6	2, 3, 4, 11	
91	Accelerator pedal	Cable break or short circuit, bad PWM signal range or frequency (digital pedal)	●	●	14	APPPwm	2-2-2	2, 8	●
91	Accelerator pedal	Bad PWM pulse-width repetition rate (digital pedal)	●	●	15	APPPwmPer	2-2-2	8, 11	●
94	Fuel low pressure sensor	Cable break or short circuit	●	●	90	FlPSCD	2-1-6	3, 4, 11	●
94	Fuel low pressure	Below target range with system reaction	●	●	91	FlPSCDSysReac	2-1-6	2, 11	●
97	Fuel filter water level sensor	Cable break or short circuit	●	●	87	FlFCD	2-2-8	3, 4, 11	●
97	Water level in fuel filter	Above target range	●	●	89	FlFCD_WtLvl	2-2-8	11, 12	
100	Oil pressure sensor	Cable break or short circuit	●	●	196	OPSCD	2-2-4	0, 2, 3, 4	●
100	Oil pressure sensor	Pressure value implausible low	●	●	197	OPSCD1	2-3-1	1, 11	●
100	Oil pressure	Above target range	●	●	198	OPSCDSysReacHi	2-3-1	0, 11	●
100	Oil pressure	Below target range	●	●	199	OPSCDSysReacLo	2-3-1	1, 11	●
102	Charge air pressure sensor	Cable break or short circuit	●	●	32	BPSCD	2-2-3	2, 3, 4	●
102	Charge air pressure	Outside target range with system reaction	●	●	33	BPSCDSysReac	2-2-3	2, 11	●
105	Charge air temperature sensor	Cable break or short circuit	●	●	149	IATSCD	1-2-8	2, 3, 4, 11	●
105	Charge air temperature	Above target range with system reaction	●	●	150	IATSCDSysReac	2-3-3	0, 11	●
107	Air filter condition	Pressure loss above target range with system reaction	●	●	11	AirFltSysReac	1-3-6	0, 11	●
108	ECU internal error	Ambient pressure sensor defective	●	●	16	APSCD	2-9-2	2, 3, 4, 11	●
110	Coolant temperature sensor	Cable break or short circuit	●	●	55	CTSCD	2-2-5	2, 3, 4	●
110	Coolant temperature	Outside target range with system reaction	●	●	56	CTSCDSysReac	2-3-2	0, 11	●
111	Coolant level	Outside target range with system reaction	●	●	37	CLSCDSysReac	2-3-5	1, 11	
157	Rail pressure sensor	Cable break or short circuit	●		209	RailCD	1-4-7	3, 4, 11	
157	Rail pressure sensor	Deviation of signal during start or after-run above target range	●		210	RailCDOfsTst	1-4-7	0, 1, 11	●
158	Terminal 15	Ignition ON not detected	●	●	226	T15CD	5-1-4	11, 12	
168	Battery	Voltage below target range	●	●	22	BattCD	3-1-8	0, 1, 11	●
168	Battery voltage	Above target range with system reaction	●	●	23	BattCDSysReac	3-1-8	2, 11	●
174	Fuel temperature sensor	Fuel temp. sensor: cable break or short circuit	●	●	133	FTSCD	2-2-7	3, 4, 11	●
174	Fuel temperature	Above target range with system reaction	●	●	134	FTSCDSysReac	2-3-7	0, 11	●
175	Oil temperature sensor	Cable break or short circuit	●	●	201	OTSCD	1-4-4	2, 3, 4	●
175	Oil temperature	Below target range with system reaction	●	●	203	OTSCDSysReac	1-4-4	0, 11	●
190	Engine speed sensor	Engine running with cam-shaft speed signal only	●	●	75	EngMBackUp	2-1-2	11, 12	●

SPN	Component / Location	Description (Error location)	Defined for DCR	Defined for DMV	Error code SERDIA	ID	Blink code	FMI	Self-curing[1]
190	Engine speed sensor	Speed signal from cam-shaft bad or missing	●	●	76	EngMCaS1	2-1-2	8, 11, 12	●
190	Engine speed sensor	Speed signal from crank-shaft bad or missing	●	●	77	EngMCrS1	2-1-2	8, 11, 12	●
190	Engine speed sensor	Speed signals of crank-shaft and cam-shaft are phase-shifted	●	●	78	EngMOfsCaSCrS	2-1-3	2, 11	
190	Overspeed	Engine overspeed with system reaction	●	●	79	EngPrtSysReacFOC	2-1-4	0, 11	
190	Overrun conditions	Overrun conditions with system reaction	●	●	80	EngPrtSysReacORC	2-1-4	11, 14	●
520	CAN message	Missing (message "TSC1-TR")	●	●	126	FrmMngTOTSC1TR	1-1-9	11, 12	
563	Main relay	Short circuit to ground or emergency shut-off (relay 3)	●	●	187	MRlyCDMnRly2	2-6-1	7, 11, 12	
624	Diagnostic lamp	Cable break or short circuit, disabled by ECU	●	●	225	SysLamp	5-1-3	2, 3, 4, 5	
630	ECU internal error	EEPROM memory access	●	●	142	HWEMonEEPROM	2-8-1	11, 12	
639	CAN bus off-state	Cable break or short circuit, off-state (CAN bus A)	●	●	192	NetMngCANAOff	2-7-1	11, 14	●
651	Single injector	Short circuit (injector 1)	●	●	159	InjVlvCyl1A	1-5-4	3, 4, 11, 13	●
651	Single injector	Cable break (injector 1)	●	●	160	InjVlvCyl1B	1-5-4	5, 13	●
652	Single injector	Short circuit (injector 2)	●	●	161	InjVlvCyl2A	1-5-5	3, 4, 11, 13	●
652	Single injector	Cable break (injector 2)	●	●	162	InjVlvCyl2B	1-5-5	5, 13	●
653	Single injector	Short circuit (injector 3)	●	●	163	InjVlvCyl3A	1-5-6	3, 4, 11, 13	●
653	Single injector	Cable break (injector 3)	●	●	164	InjVlvCyl3B	1-5-6	5, 13	●
654	Single injector	Short circuit (injector 4)	●	●	165	InjVlvCyl4A	1-6-1	3, 4, 11, 13	●
654	Single injector	Cable break (injector 4)	●	●	166	InjVlvCyl4B	1-6-1	5, 13	●
655	Single injector	Short circuit (injector 5)	●	●	167	InjVlvCyl5A	1-6-2	3, 4, 11, 13	●
655	Single injector	Cable break (injector 5)	●	●	168	InjVlvCyl5B	1-6-2	5, 13	●
656	Single injector	Short circuit (injector 6)	●	●	169	InjVlvCyl6A	1-6-3	3, 4, 11, 13	●
656	Single injector	Cable break (injector 6)	●	●	170	InjVlvCyl6B	1-6-3	5, 13	●
657	Single injector	Short circuit (injector 7)		●	171	InjVlvCyl7A	1-6-4	3, 4, 11, 13	●
657	Single injector	Cable break (injector 7)		●	172	InjVlvCyl7B	1-6-4	5, 13	●
658	Single injector	Short circuit (injector 8)		●	173	InjVlvCyl8A	1-6-5	3, 4, 11, 13	●
658	Single injector	Cable break (injector 8)		●	174	InjVlvCyl8B	1-6-5	5, 13	●
676	Air heater relay	Cable break or wrong connection	●	●	19	ArHtCD_NoLd	2-6-3	4, 11	
676	Air heater relay	Inoperable during shut-off	●	●	20	ArHtCD_RlyErr	2-6-3	2, 5, 11	
677	Start relay	Start relay (high side): short circuit	●	●	223	StrtCDHS	5-1-2	3, 4, 11	
677	Start relay	Start relay (low side): cable break or short circuit, disabled by ECU	●	●	224	StrtCDLS	5-1-2	3, 4, 5, 11	
701	Reserve output	Short circuit to Ubatt (output 1)	●	●	57	Dummy1CD_Max	-	11	
701	Reserve output	Short circuit to ground (output 1)	●	●	58	Dummy1CD_Min	-	11	
701	Reserve output	Cable break or ECU internal error (output 1)	●	●	59	Dummy1CD_SigNpl	-	11	
702	Reserve output	Short circuit to Ubatt (output 2)	●	●	60	Dummy2CD_Max	-	11	

https://truckmanualshub.com/

SPN	Component / Location	Description (Error location)	Defined for DCR	Defined for DMV	Error code SERDIA	ID	Blink code	FMI	Self-curing[1]
702	Reserve output	Short circuit to ground (output 2)	●	●	61	Dummy2CD_Min	-	11	
702	Reserve output	Cable break or ECU internal error (output 2)	●	●	62	Dummy2CD_SigNpl	-	11	
703	Engine operating signal lamp	Cable break or ECU internal error	●	●	81	ESLpCD	1-4-2	2, 3, 4, 5	
704	Coolant temperature warning lamp	Cable break or short circuit	●	●	54	CTLpCD	1-2-3	11	
705	Oil pressure warning lamp	Cable break or short circuit	●	●	195	OPLpCD	1-3-5	2, 3, 4, 5	
729	Air heater relay	Cable break or short circuit	●	●	17	ArHt1	2-6-3	3, 4, 5, 11	●
730	Air heater magnetic valve	Cable break or short circuit	●	●	18	ArHt2	2-6-3	3, 4, 5, 11	●
898	CAN message	Missing (message "TSC1-TE")	●	●	125	FrmMngTOTSC1TE	1-1-8	11, 12	
923	Engine power output	Engine Power output: cable break or short circuit	●	●	74	EngCDTrqCalcOut	5-5-5	2, 3, 4, 5	
975	Fan actuator	Fan actuator: cable break or short circuit	●	●	83	FanCD	2-3-8	2, 3, 4, 5	
1072	Engine brake (internal)	Internal engine brake: cable break or short circuit	●	●	52	CRERCD	5-2-8	3, 4, 5, 11	
1074	Engine brake flap actuator	Engine brake flap actuator: cable break or short circuit	●	●	82	ExFICD	2-1-9	3, 4, 5, 11	
1079	ECU internal error	Wrong voltage of internal 5V reference source 1	●	●	219	SSpMon1	2-8-2	3, 4, 11	●
1080	ECU internal error	Wrong voltage of internal 5V reference source 2	●	●	221	SSpMon2	2-8-2	3, 4, 11	●
1081	Preheating signal lamp	Cable break or short circuit	●	●	53	CSLpCD	3-2-8	2, 3, 4, 5	
1109	Shut-off request	Shut-off request ignored by operator	●	●	48	CoEngShOffDemIgr	3-4-1	2, 11	
1231	CAN bus off-state	Cable break or short circuit, off-state (CAN bus B)	●	●	193	NetMngCANBOff	2-7-1	11, 14	●
1235	CAN bus off-state	Cable break or short circuit, off-state (CAN bus C)	●	●	194	NetMngCANCOff	2-7-1	11, 14	●
1237	Override switch	Switch hangs	●	●	200	OSwCD	1-4-5	2, 11	●
1322	Multiple cylinders	Misfire detected	●	●	46	CmbChbMisfireMul	2-4-1	11, 12	
1323	Single cylinder	Misfire detected (cylinder 1)	●	●	38	CmbChbMisfire1	2-4-1	11, 12	
1324	Single cylinder	Misfire detected (cylinder 2)	●	●	39	CmbChbMisfire2	2-4-1	11, 12	
1325	Single cylinder	Misfire detected (cylinder 3)	●	●	40	CmbChbMisfire3	2-4-1	11, 12	
1326	Single cylinder	Misfire detected (cylinder 4)	●	●	41	CmbChbMisfire4	2-4-1	11, 12	
1327	Single cylinder	Misfire detected (cylinder 5)	●	●	42	CmbChbMisfire5	2-4-1	11, 12	
1328	Single cylinder	Misfire detected (cylinder 6)	●	●	43	CmbChbMisfire6	2-4-1	11, 12	
1346	Misfire	Misfire detected with system reaction	●		47	CmbChbSysReac	2-4-1	0, 11	
1450	Single cylinder	Misfire detected (cylinder 7)		●	44	CmbChbMisfire7	2-4-1	11, 12	
1451	Single cylinder	Misfire detected (cylinder 8)		●	45	CmbChbMisfire8	2-4-1	11, 12	
1638	Customer-specific sensor	Cable break or short circuit (sensor 2)	●	●	139	HOTSCD	3-1-4	3, 4, 11, 12	●
1638	Customer-specific temperature	Outside target range with system reaction (temperature 2)	●	●	140	HOTSCDSysReac	3-1-4	2, 11	●
2634	Main relay	Short circuit to Ubatt (relay 1)	●	●	182	MnRly1_SCB	1-3-7	3, 11	
2634	Main relay	Short circuit to ground (relay 1)	●	●	183	MnRly1_SCG	1-3-8	4, 11	
2634	Main relay	Short circuit to ground or emergency shut-off (relay 2)	●	●	186	MRlyCD	2-6-1	7, 11, 12	

https://truckmanualshub.com/

SPN	Component / Location	Description (Error location)	Defined for DCR	Defined for DMV	Error code SERDIA	ID	Blink code	FMI	Self-curing[1]
2634	Main relay	Short circuit to ground or emergency shut-off (relay 3)	●	●	188	MRlyCDMnRly3	2-6-1	7, 11, 12	
2791	EGR actuator (external)	Short circuit to Ubatt	●	●	69	EGRCD_Max	4-1-4	3, 11	
2791	EGR actuator (external)	Short circuit to ground	●	●	70	EGRCD_Min	4-1-4	4, 11	
2791	EGR actuator (external)	Cable break or ECU internal error	●	●	71	EGRCD_SigNpl	4-1-5	2, 5, 11	
2791	EGR actuator (external)	Cable break or short circuit	●	●	72	EGRCDIntEGR	4-1-6	2, 3, 4, 5	
523212	CAN message	Missing (message "EngPrt" = engine protection)	●	●	106	FrmMngTOEngPrt	3-3-3	11, 12	●
523216	CAN message	Missing (message "PrHtEnCmd" = preheat and engine command)	●	●	110	FrmMngTOPrHtEnCmd	3-3-7	11, 12	●
523218	CAN message	Missing (message "RxCCVS" = cruise control)	●	●	112	FrmMngTORxCCVS	1-1-1	11, 12	●
523222	CAN message	Missing (message "TCO1" = speedo signal)	●	●	118	FrmMngTOTCO1	1-1-6	11, 12	●
523238	CAN message	Missing (message "SwtOut" = switch outputs)	●	●	117	FrmMngTOSwtOut	1-1-5	11, 12	●
523239	CAN message	Missing or value above target range (message "DecV1" = pseudo pedal)	●	●	94	FrmMngDecV1	5-2-6	2, 12	●
523240	CAN message	Missing (message "FunModCtl" = function mode control)	●	●	95	FrmMngFunModCtl	5-2-7	11, 12	●
523350	Multiple injectors	Short circuit (cylinder bank 1)	●	●	153	InjVlvBnk1A	1-5-1	3, 4, 11, 13	●
523351	Multiple injectors	Cable break (cylinder bank 1)	●	●	154	InjVlvBnk1B	1-5-1	5, 13	●
523352	Multiple injectors	Short circuit (cylinder bank 2)	●	●	155	InjVlvBnk2A	1-5-2	3, 4, 11, 13	●
523353	Multiple injectors	Cable break (cylinder bank 2)	●	●	156	InjVlvBnk2B	1-5-2	5, 13	●
523354	ECU internal error	Injector power stage A	●	●	157	InjVlvChipA	1-5-3	2, 3, 12, 14	
523355	ECU internal error	Injector power stage B	●	●	158	InjVlvChipB	1-5-3	12	
523370	Rail pressure	Compression test active: rail-pressure monitoring is going to be disabled	●	●	175	InjVlvErrDet	5-5-5	11, 14	
523420	ECU internal error	Watchdog counter exceeds maximum	●	●	184	Montr	1-3-9	11, 14	
523450	Multi state switch	Cable break or short circuit, input voltage outside target range (switch 1)	●	●	189	MSSCD1	1-4-3	2, 3, 4, 11	●
523451	Multi state switch	Cable break or short circuit, input voltage outside target range (switch 2)	●	●	190	MSSCD2	1-4-3	2, 3, 4, 11	●
523452	Multi state switch	Cable break or short circuit, input voltage outside target range (switch 3)	●	●	191	MSSCD3	1-4-3	2, 3, 4, 11	●
523470	Rail pressure limiting valve	Opening failure	●		208	PRVMon	1-4-6	2, 11, 12, 14	
523470	Rail pressure limiting valve	Opening failure with system reaction	●		236	PRVMonSysReac	1-4-6	11, 12	
523490	ECU internal error	Redundant shut-off conditions detected	●	●	218	SOPTst	1-4-9	3, 4, 11, 12	
523500	CAN message	Time-out of at least one sended message	●	●	131	FrmMngTxTO	2-7-1	11, 12	●
523550	Terminal 50	Engine start switch hangs	●	●	227	T50CD	5-1-5	11, 12	
523550	ECU internal error	Time processing unit (TPU) defective	●	●	228	TPUMon	5-5-5	2, 11	
523561	Begin of injection period	Outside target range or missing (cylinder 1)		●	24	BIPCyl1	5-3-1	2	●
523562	Begin of injection period	Outside target range or missing (cylinder 2)		●	25	BIPCyl2	5-3-2	2	●
523563	Begin of injection period	Outside target range or missing (cylinder 3)		●	26	BIPCyl3	5-3-3	2	●
523564	Begin of injection period	Outside target range or missing (cylinder 4)		●	27	BIPCyl4	5-3-4	2	●
523565	Begin of injection period	Outside target range or missing (cylinder 5)		●	28	BIPCyl5	5-3-5	2	●

https://truckmanualshub.com/

SPN	Component / Location	Description (Error location)	Defined for DCR	Defined for DMV	Error code SERDIA	ID	Blink code	FMI	Self-curing[1]
523566	Begin of injection period	Outside target range or missing (cylinder 6)		●	29	BIPCyl6	5-3-6	2	●
523567	Begin of injection period	Outside target range or missing (cylinder 7)		●	30	BIPCyl7	5-3-7	2	●
523568	Begin of injection period	Outside target range or missing (cylinder 8)		●	31	BIPCyl8	5-3-8	2	●
523600	ECU internal error	Serial communication interface defective	●	●	235	WdCom	5-5-5	11, 12	
523601	ECU internal error	Wrong voltage of internal 5V reference source 3	●	●	222	SSpMon3	2-8-2	3, 4, 11	●
523602	Fan speed	Above target range with system reaction	●	●	86	FanCDSysReac	2-3-8	2, 11	●
523604	CAN message	Missing (message "RxEngTemp" = engine temperature)	●	●	113	FrmMngTORxEngTemp	1-1-2	11, 12	●
523605	CAN message	Missing (message "TSC1-AE")	●	●	120	FrmMngTOTSC1AE	1-1-8	11, 12	
523606	CAN message	Missing (message "TSC1-AR")	●	●	121	FrmMngTOTSC1AR	1-1-9	11, 12	
523607	CAN message	Missing (message "TSC1-DE")	●	●	122	FrmMngTOTSC1DE	1-1-8	11, 12	
523608	CAN message	Missing (message "TSC1-DR")	●	●	123	FrmMngTOTSC1DR	1-1-9	11, 12	
523609	CAN message	Missing (message "TSC1-PE")	●	●	124	FrmMngTOTSC1PE	1-1-8	11, 12	
523610	CAN message	Missing (message "TSC1-VE")	●	●	127	FrmMngTOTSC1VE	1-1-8	11, 12	
523611	CAN message	Missing (message "TSC1-VR")	●	●	128	FrmMngTOTSC1VR	1-1-9	11, 12	
523612	ECU internal hardware monitoring	A recovery occurred which is stored as protected	●	●	143	HWEMonRcyLocked	5-5-5	11, 14	
523612	ECU internal hardware monitoring	A recovery occurred which is not stored	●	●	144	HWEMonRcySuppres-sed	5-5-5	11, 14	
523612	ECU internal hardware monitoring	A recovery occurred which is visible in the error memory	●	●	145	HWEMonRcyVisible	5-5-5	11, 14	
523612	ECU internal hardware monitoring	Overvoltage	●	●	146	HWEMonUMaxSupply	5-5-5	3, 11	
523612	ECU internal hardware monitoring	Undervoltage	●	●	147	HWEMonUMinSupply	5-5-5	4, 11	
523613	Rail pressure	Positive deviation (speed dependent) outside target range	●		211	RailMeUn0	1-3-4	0, 11	●
523613	Rail pressure	Positive deviation (flow dependent) outside target range (⇨ leakage!)	●		212	RailMeUn1	1-3-4	0, 11	●
523613	Rail pressure	Negative deviation (flow dependent) outside target range	●		213	RailMeUn2	1-3-4	0, 11	●
523613	Rail pressure	Negative deviation (speed dependent) outside target range	●		214	RailMeUn3	1-3-4	1, 11	●
523613	Rail pressure	Pressure above target range	●		215	RailMeUn4	1-3-4	0, 11	●
523613	Rail pressure	Implausible (leakage, injector needle blocked in open position)	●		216	RailMeUn7	1-3-4	2, 11	●
523615	Metering unit valve	Flow rate outside target range	●		176	MeUnCD_ADC	1-3-5	3, 4, 11	
523615	Metering unit valve	Not connected or output disabled	●		177	MeUnCDNoLoad	1-3-5	5, 11, 12	
523615	Metering unit valve	Short circuit to Ubatt	●		178	MeUnCDSCBat	1-3-5	11, 12	
523615	Metering unit valve	Short circuit to ground	●		179	MeUnCDSCGnd	1-3-5	11, 12	
523617	ECU internal error	Communication with chip CJ 940 disturbed	●	●	141	HWEMonCom	5-5-5	11, 12	
-	Customer-specific sensor	Cable break or short circuit (sensor 1)	●	●	136	GOTSCD	1-3-3	2, 3, 4, 11	●
-	Customer-specific temperature	Outside target range with system reaction (temperature 1)	●	●	137	GOTSCDSysReac	1-3-3	2, 11	●

https://truckmanualshub.com/

https://truckmanualshub.com/

1.3 FMI-codes

FMI	Description
0	Data valid but above normal operational range
1	Data valid but below normal operational range
2	Data erratic, intermittent, or incorrect
3	Voltage above normal or shorted high
4	Voltage below normal or shorted low
5	Current below normal or open circuit
6	Current above normal or grounded circuit
7	Mechanical system not responding properly

FMI	Description
8	Abnormal frequency, pulse width,or period
9	Abnormal update rated
10	Abnormal rate of change
11	Failure mode not identifiable
12	Bad intelligent device or component
13	Out of Calibration
14	Special Instructions
15	Reserved

https://truckmanualshub.com/

https://truckmanualshub.com/

D 3.0 Operation

1 Operating elements on the paver

Operator's platform

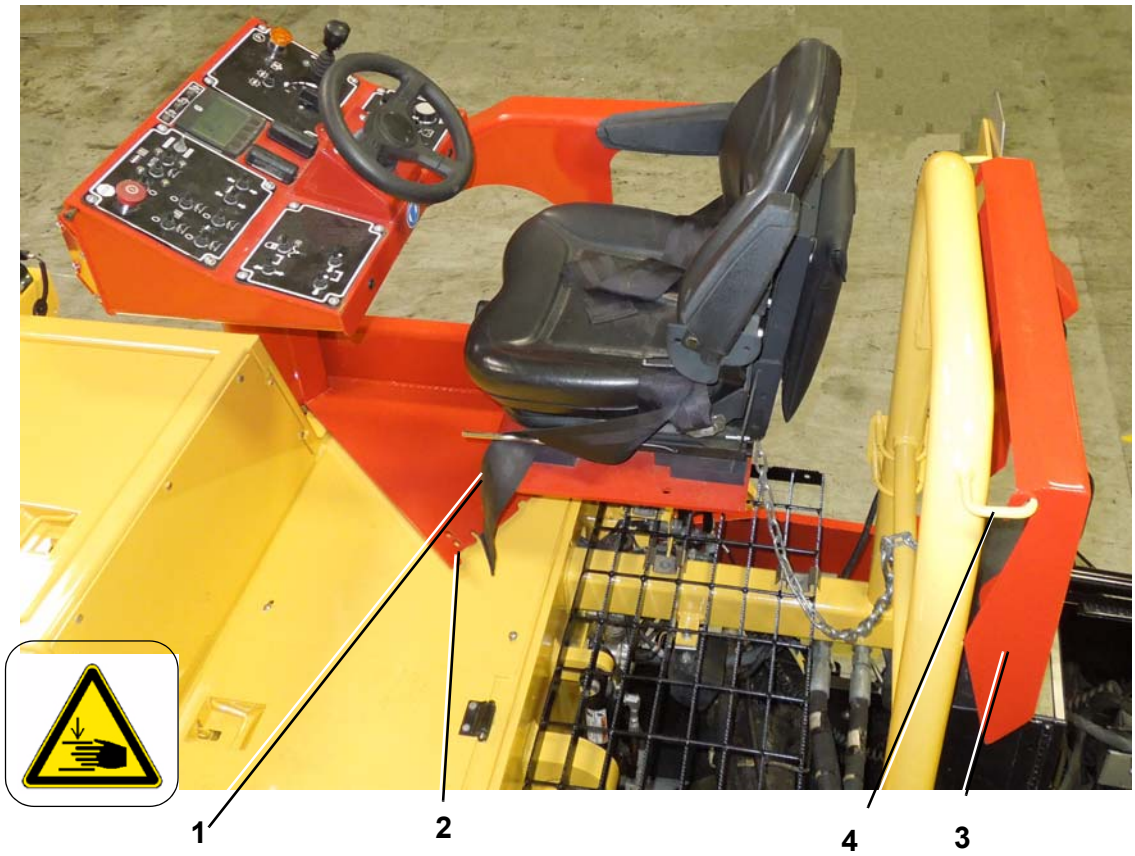

Seat console

The seat console can pivot beyond the outer edge of the vehicle, providing the driver with a better view of the paving area in this position.

- Release the platform lock (1).
- Swing the seat console to the desired position.
- Engage the lock into one of the fixed positions (2).

⚠ CAUTION

After locking the seat console, check it to ensure it will not move into another position!

Dust cover

The dust cover (3) can be stored on the bar (4) behind the seat .

https://truckmanualshub.com/

Driver's seat

CAUTION

To avoid injury, the individual seat settings should be checked and adjusted before starting the vehicle.

CAUTION

After the adjustments are set, check the seat to ensure it does not move out of adjustment.

- **Seat forward and back adjustment (1):** The seat can be moved forward or it can be moved back. to adjust the seat, raise the lever on the lower left side of the seat to release the lock. Once the seat is in the desired position, release the lever and the seat will lock into place
- **Seat back rest adjustment (2):** The back rest can be adjusted to lean forward or lean back. To adjust the back rest, turn the knob on the lower front part of the seat. Turn the knob clockwise to lean the back rest forward; turn the knob counter-clockwise to lean the back rest back.
- **Armrest positions (3):** The armrest can be lowered to support the arm or it can be raised to be stowed out of the way.

Batteries

The batteries are located under the right hand side (from operator platform) maintenance door.

There are two 12 V batteries to produce the 24 V needed for the electrical system.
For servicing, see chapter F.

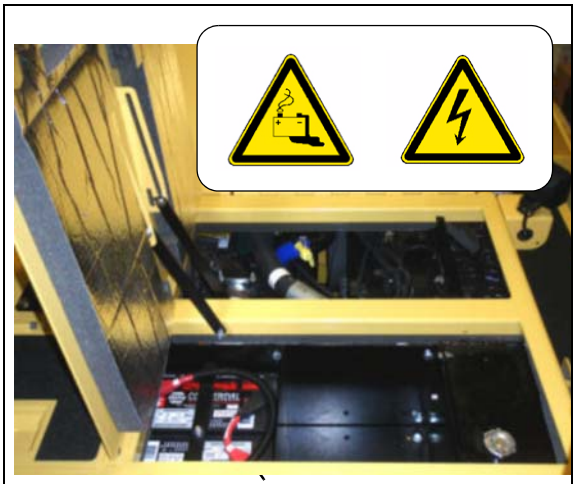

Batteries

NOTICE

Follow the instructions when jump starting the paver. (see section D 4).

https://truckmanualshub.com/

Battery main switch

The main switch interrupting the circuit between the battery and the main fuse is located above the battery pack.

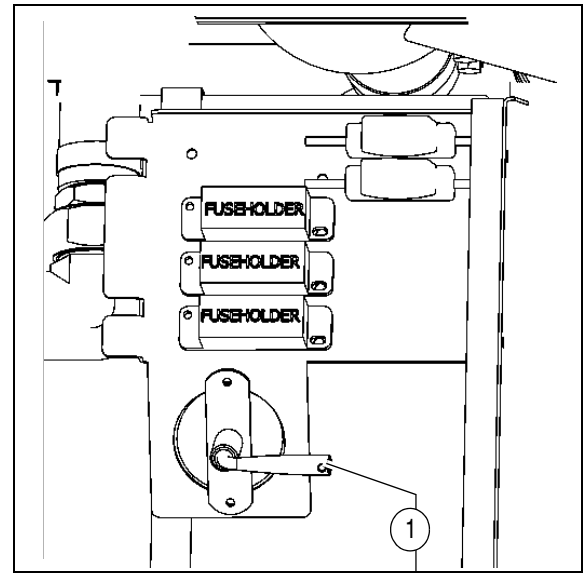

NOTICE

See chapter F for fuse locations and fuse order.

- To switch the ignition off, turn the key (1) to the left and pull it out.

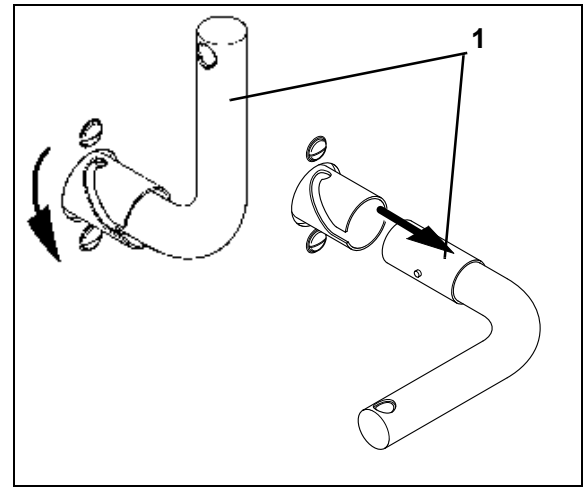

⚠ WARNING

Do not lose the key. Without it the paver can no longer be moved!

⚠ CAUTION

Do not turn the main switch off until 30 seconds after the ignition has been turned off!
Lock the service doors/covers.

- To prevent the engine's electronic control module (ECM) from sustaining damage.
- To avoid battery discharging.
- To make it difficult for unauthorized persons to start and operate the machine.

https://truckmanualshub.com/

Transport safeguards for the hopper

Before parking or transporting the paver, the hopper halves must be pivoted upwards and the transport safeguards for the hopper must be inserted.

- Insert the safeguards on both sides of the machine (1) into the pinning hole.
- Without transport safeguards inserted, the hopper halves will slowly open; danger during transportation!

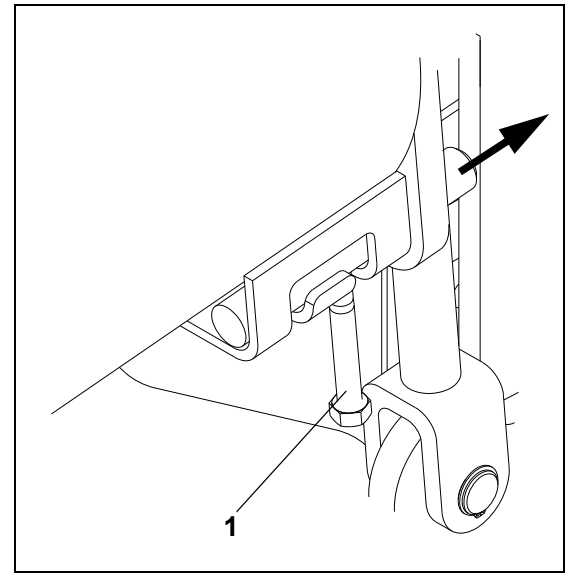

⚠ WARNING

Do not enter the hopper while the engine is running! Danger of being caught by the conveyor!

Mechanical screed transport safeguard (to the left and the right beneath the driver's seat)

Used to protect the lifted screed from inadvertent lowering. The screed transport safeguard must be inserted before transportation and when work is finished.

- Lift the screed.
- Activate the levers (1).
- Check that the safeguards (to the left and to the right) engage under the crossbeams.

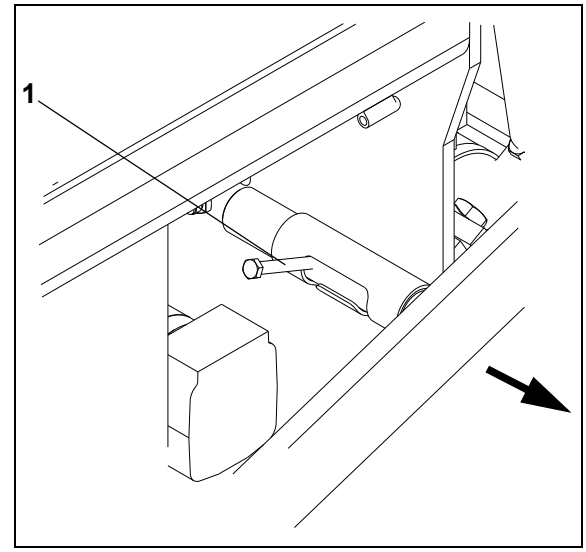

⚠ WARNING

Transportation with an unsecured screed bears the danger of accidents!

⚠ DANGER

Insert screed lock only at crown adjustment "zero"! Lock the screed only for transportation. Use the lock for transportation only! Do not enter or work under screed if it is only secured with the screed locked for transportation!

https://truckmanualshub.com/

Paving thickness indicator

The Paving Thickness Indicator scales are located on the left and right sides of the vehicle.

- The Paving Thickness Indicator (1) shows the setting on the Scale (2).
- In normal paving situations, the same paving thickness should be set on both sides of the vehicle!

:

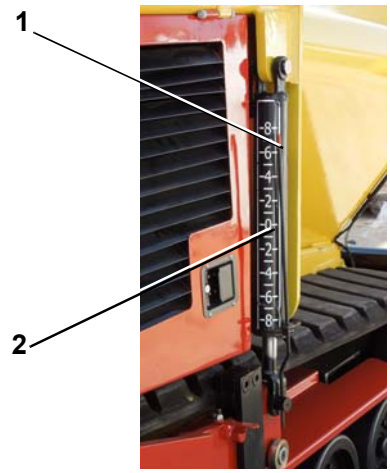

CAUTION

Avoid different settings on the scales as this will produce un-even pavement.

https://truckmanualshub.com/

Release Agent System

Used to spray the parts coming into contact with asphalt with a separator emulsion.

NOTE:

Check local regulations concerning use of cleaners and use of solvents!

- Pull hose (1) out of the guide until there is an audible click. The hose will lock in this position.

NOTE:

The hose will retract automatically into the guide by pulling out until it clicks again, then it will reel in again.

- On/off switch (2) for the emulsion pump.
- Press hand-valve (3) to spray, release to stop spraying.

- The spraying system is fed by the tank (4). (Only fill the tank when the machine is not moving.)

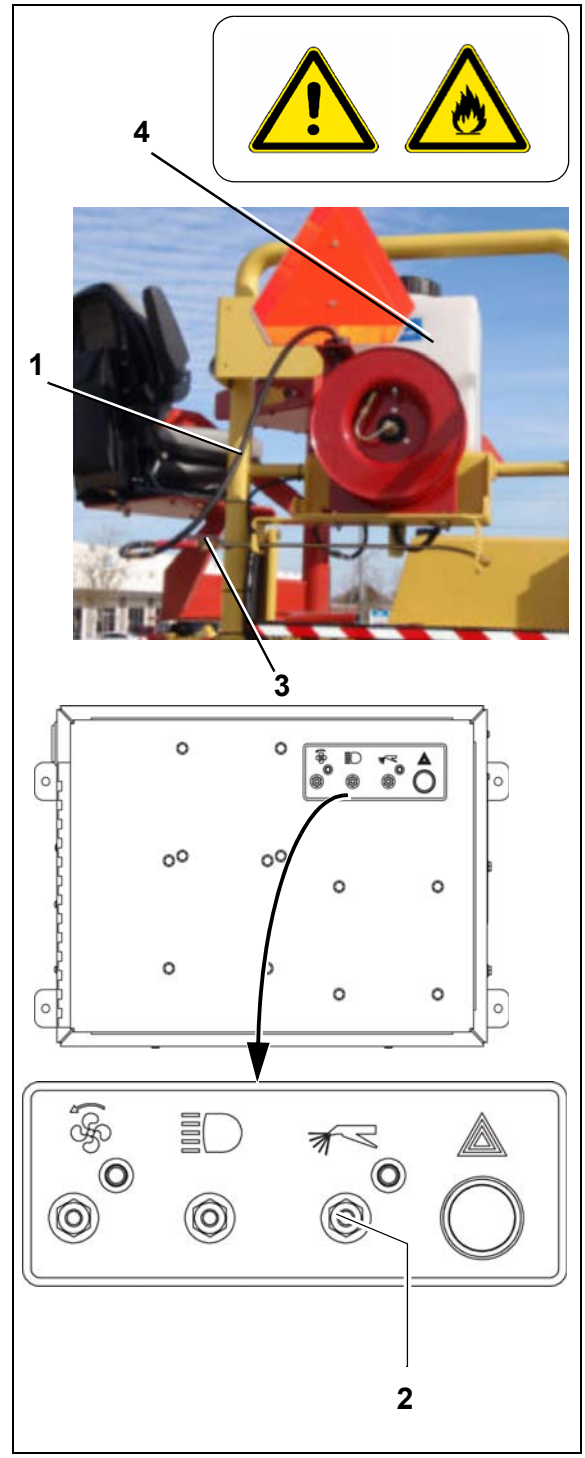

CAUTION

Switch on the spraying system only when the diesel engine is running; otherwise, the battery will be drained. Switch off after use.

DANGER

Don't spray into open flame or onto hot surface! Danger of explosion!

https://truckmanualshub.com/

On/Off switch of working lights (1)

Toggle switch (1) to switch on all installed working lights.

On/Off switch hazard flasher (2):

Activate switch (2) to switch on installed flasher.

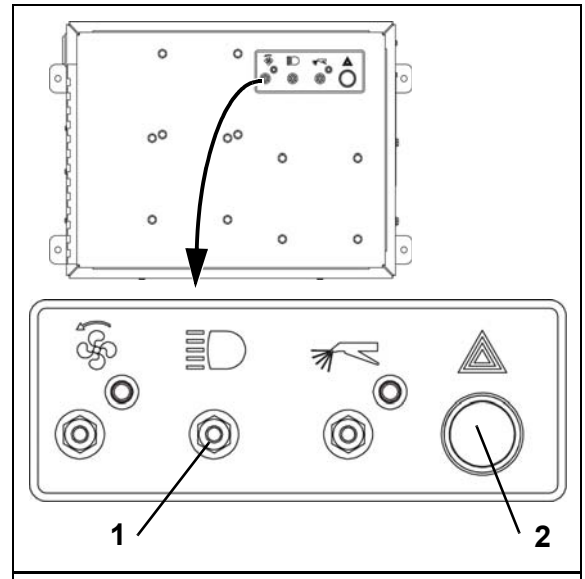

Warning Beacon

NOTE:

The function of the warning beacon must be checked daily before starting work.

- Place the warning beacon onto the plug-in contact and secure with a wing bolt (1).
- Slide the warning beacon with tube (2) to the desired height and secure with the both clamping screws (3).
- Turn the switch on to activate the warning beacon.

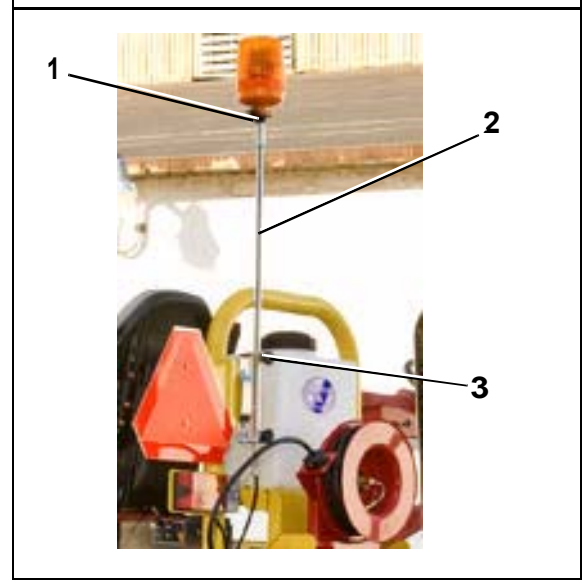

NOTE:

The rotary warning beacon is easy to remove and should be stored securely when the work is done.

https://truckmanualshub.com/

Conveyor limit sensors

The ultrasonic conveyor limit sensors control the material flow at the respective conveyor half. The conveyors should stop when the material has roughly reached the area below the auger tube.

NOTE:

This requires that the auger height has been adjusted correctly (see chapter E).

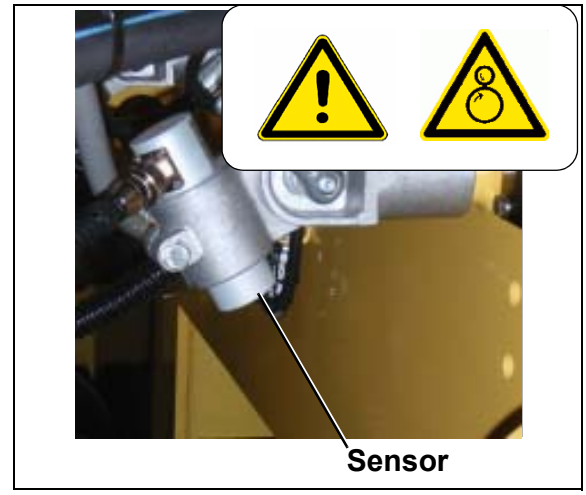

Ultrasonic auger limit sensors (left and right)

The limit sensors control the material flow at the respective auger half.

The ultrasonic sensor is mounted to the side plate. Loose clamping lever for adjustment and modify angle / height of the sensor.
The cables must be connected to the remote control units located at the sides of the screed.

NOTE:

Adjust the limit sensor positions while the material is distributed.

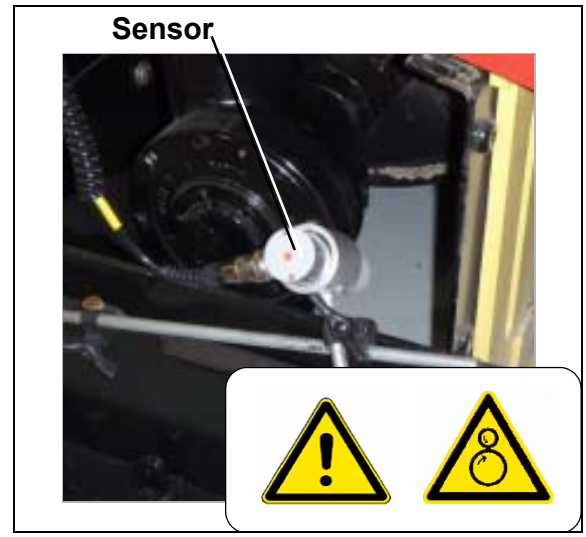

Sockets 24V

Connect the working lights (24 V) or other devices here.

- Power is present when the main switch is switched on.

NOTE:

As an option, one socket can be used to provide power for accessories.

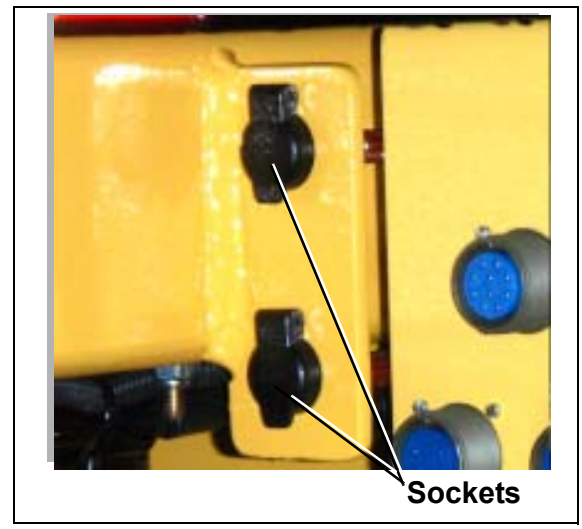

https://truckmanualshub.com/

D 4.0 Operation

1 Preparation of operation

Required equipment and tools

To avoid delays on site, check before starting work whether or not the following equipment and tools are present:

- Wheel loader for transporting heavy extendable parts
- Diesel fuel
- Engine oil and hydraulic oil, lubricants
- Separating agents (emulsion) and manual injector
- Shovel and broom
- Scraper (shovel or scoop) for cleaning the auger and the hopper intake area
- Necessary parts for extending the auger
- Necessary parts for extending the screed
- Percentage spirit level and levelling rail, 4 yards (4 m) long
- Levelling wire
- Protective clothing, signal vest, gloves, hearing protection

https://truckmanualshub.com/

Before starting work

(in the morning or when starting paving)

- Follow the safety instructions.
- Check personal protective equipment.
- Take an inspection walk around the paver and check for leaks and damages.
- Install parts removed for transportation or for the night.
- Perform the check according to the ”Checklist for the machine operator” given below.

Checklist for the machine operator

Check!	How?
Emergency stop button - on the operating panel - on both remote control units	Push in the button. The diesel engine and all running drives must stop immediately. Button must be pulled out to start machine again
Steering	The paver must follow every movement of the steering wheel. Check straight running.
Horn - on the operating panel - on both remote control units	Briefly press the horn button. The horn must sound.
Lights	Switch on (with the paver started), walk around the paver and inspect it, then switch off again.

https://truckmanualshub.com/

Check!	How?
Auger covers	For larger working widths, the walkway plates must be extended and the auger tunnels must be covered.
Screed covers and walkways	For larger working widths, the walkway plates must be extended. Hinged walkway plates must be swung down. Check that the side shields, the side plates and the covers are securely seated.
Screed transport safeguard	When the screed is lifted, the operator must be able to engage both screed transport safeguards.
Hopper transport safeguard	When the hopper is closed, the operator must be able to engage both hopper transport safeguards.
Miscellaneous: - Engine hood - Lateral flaps	Check that the hoods and flaps are closed and secured.
Accessories: - First-aid kit	The accessories must be in the provided holders.

https://truckmanualshub.com/

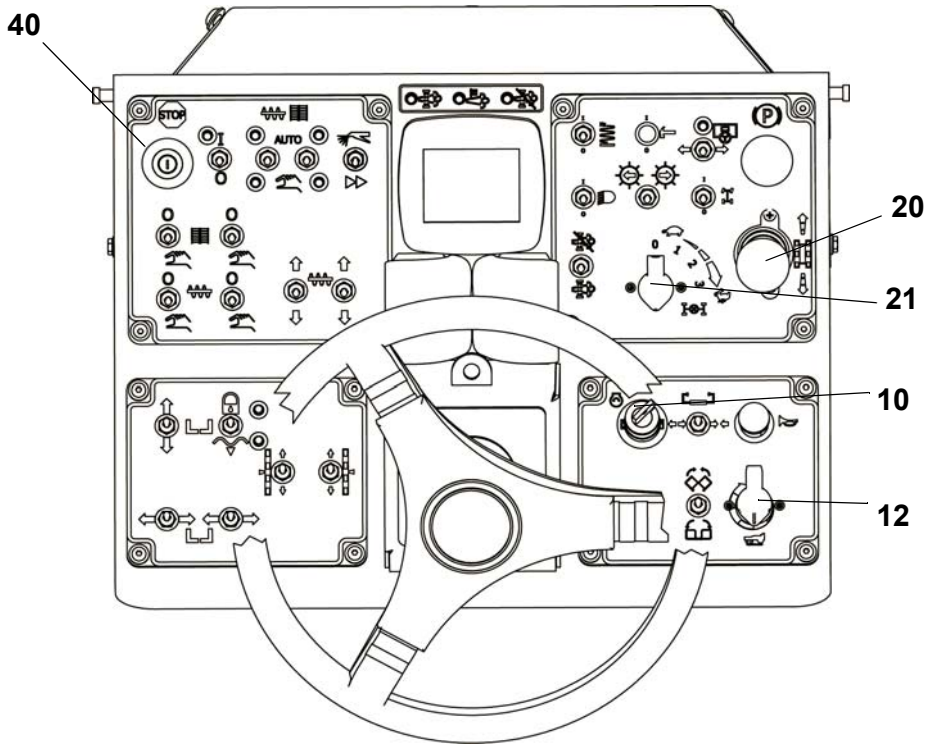

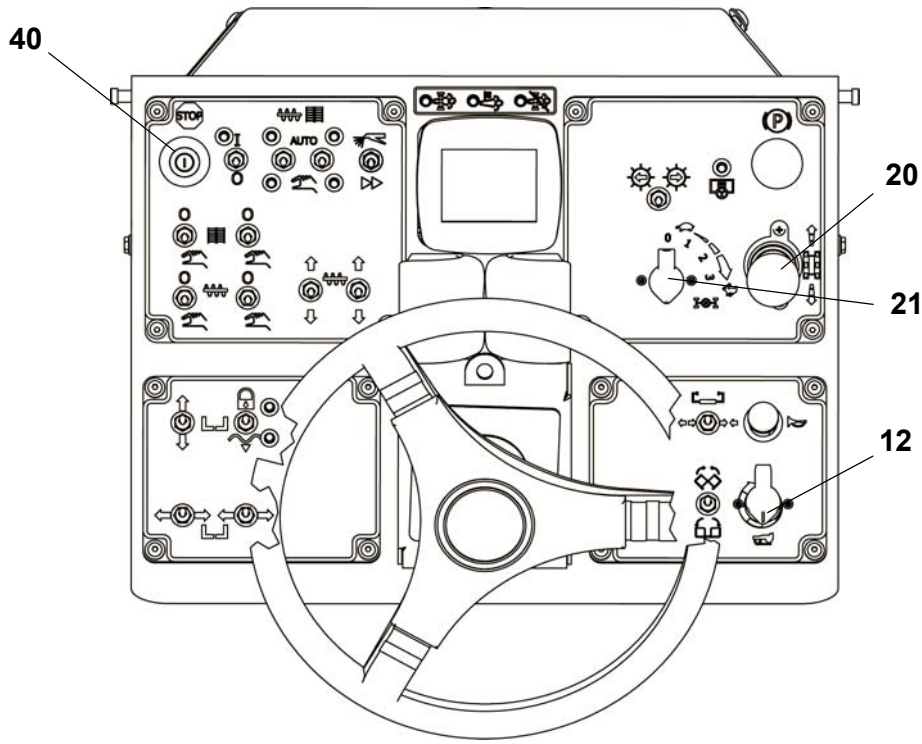

D_4.1_01_US.fm 4-26

https://truckmanualshub.com/

1.1 Starting the paver

Before starting the paver

Before starting the diesel engine and beginning operation, the following steps must be performed:

- Daily maintenance of the paver (see chapter F)

⚠ CAUTION

Check the operating hours counter to determine whether or not additional maintenance work (such as monthly or yearly maintenance) must be performed.

- Check the safety devices and protective devices.

“Normal” starting

- Set the drive lever (20) to the center position and the speed preselector (12) and the selector (21) for traction drive / engine to minimum.
- Insert the ignition key (10) in position “0”. The lights should be switched off during starting to reduce the current drain on the battery.

NOTICE

Starting is not possible if the drive lever is not in the central position or if the emergency stop button (40) is depressed,

- Turn the ignition key (10) into position 3 to start the engine. Once engine has started, release the key and it will spring-return to the “On” position. Do not let the starter run continuously for more than 20 seconds; wait 1 minute before turning the starter again.

https://truckmanualshub.com/

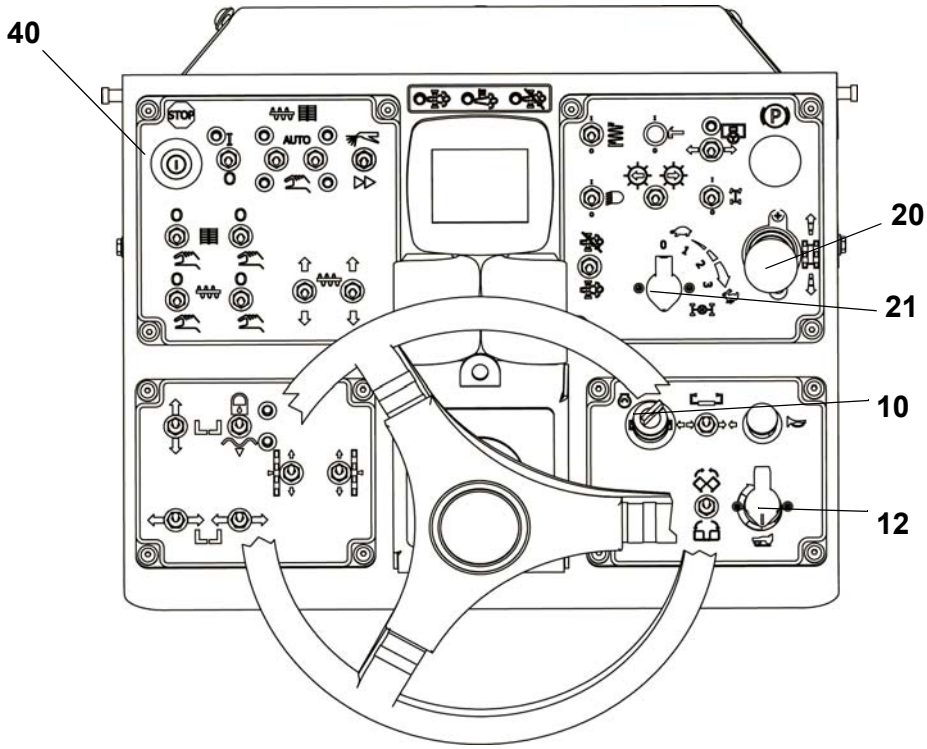

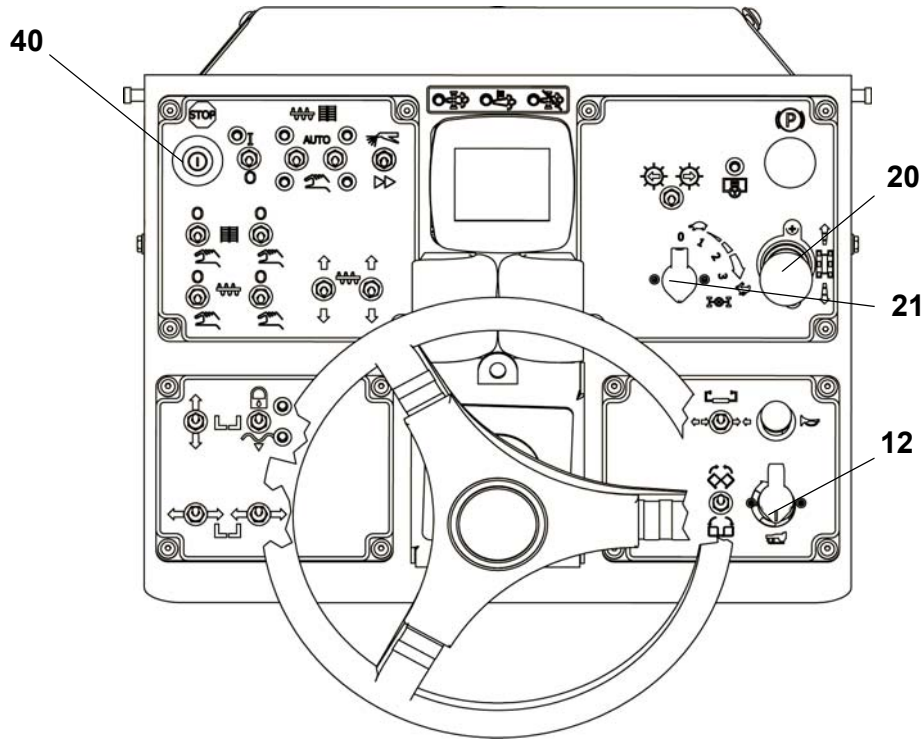

D_4.1_01_US.fm 6-26

https://truckmanualshub.com/

Jump starting

The engine can be started with the help of an external power source if the batteries are low and the starter no longer turns.

Suitable power sources are:

- Other vehicles with a 24 V system
- Additional 24 V battery
- Start device that is suitable for jump starting (24 V/90 A).

NOTICE

Standard 12V chargers or quick chargers cannot be used for jump starting.

To jump start the engine:

- Set the drive lever (20) to the center position. Set the speed preselector (12) and the selector (21) for traction drive / engine to minimum.
- Insert ignition switch (10) to position “0“ to turn on the ignition.
- Connect the power source with the appropriate cables.

⚠ CAUTION

Check for proper polarity! Always connect the negative cable last and remove it first!

- Turn the ignition key (10) completely to the right to start the engine. Once the engine starts, release the key and it will spring-return to the “ON” position. Do not let the starter run for more than 20 seconds; wait 1 minute after every attempt before turning the starter again!

https://truckmanualshub.com/

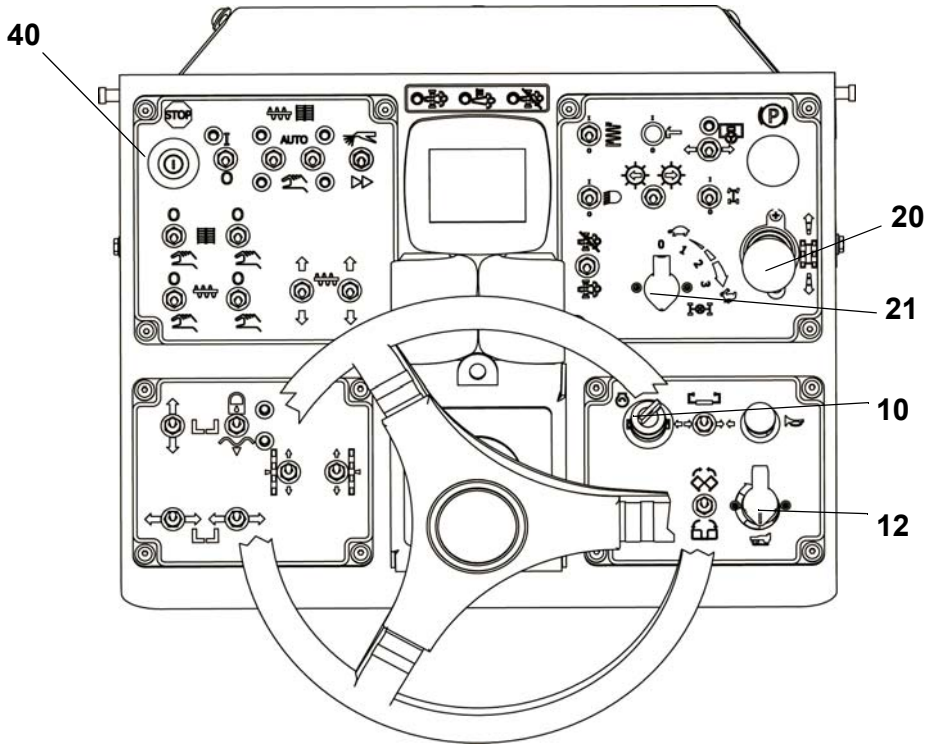

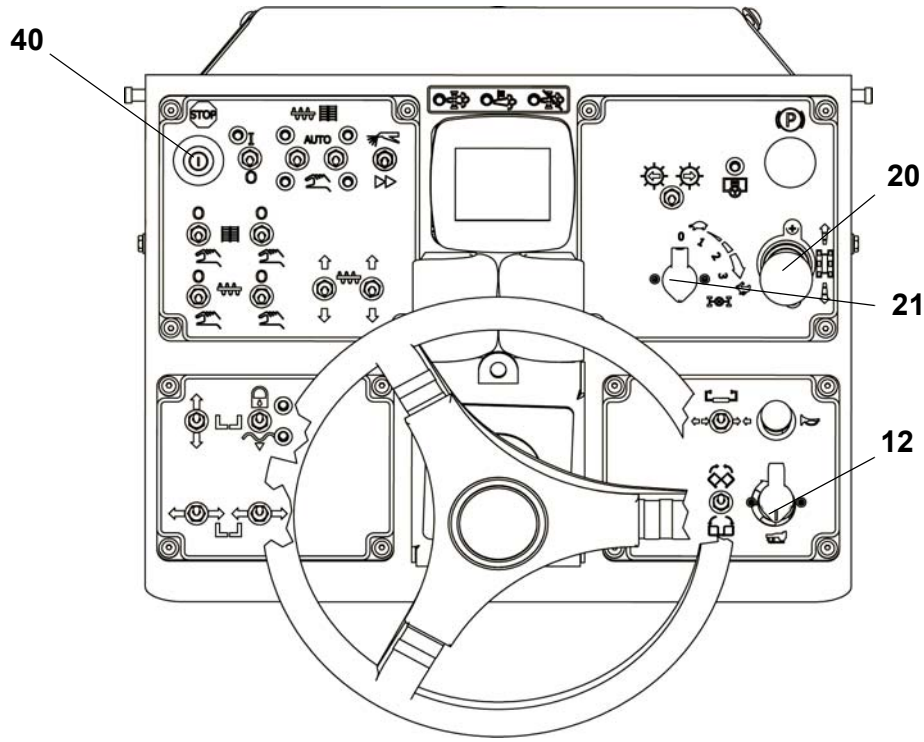

D_4.1_01_US.fm 8-26

https://truckmanualshub.com/

After starting

To increase the engine speed:

- Set selector (21) for traction drive / engine to position 2.

NOTICE

Let the paver warm up for about 5 minutes if the engine is cold.

NOTICE

Read and follow Chapter D2 of this manual for possible warnings on the graphical terminal!

https://truckmanualshub.com/

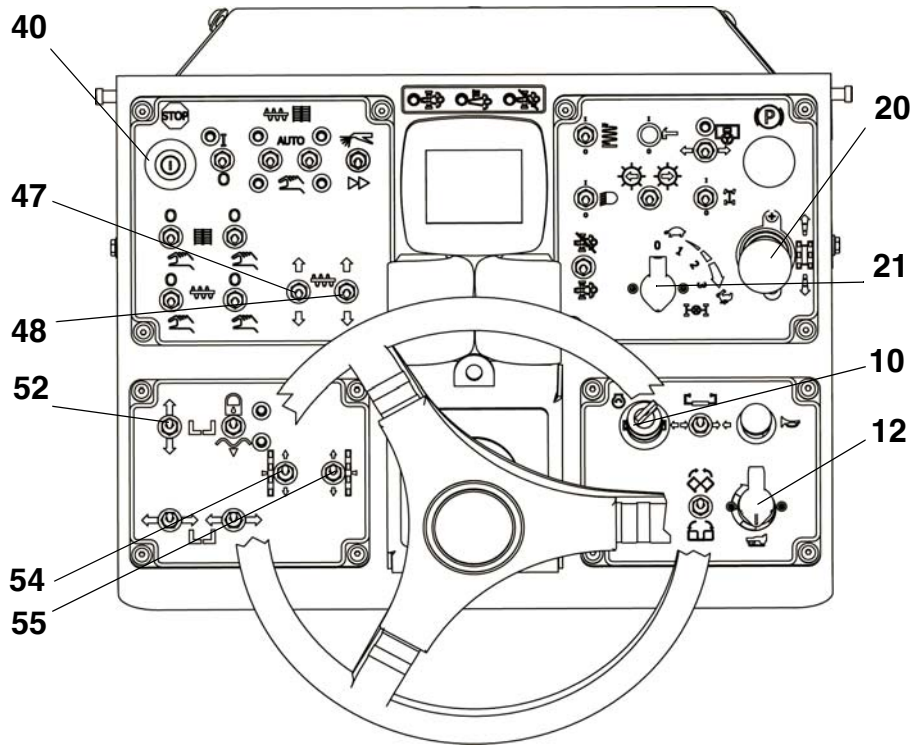

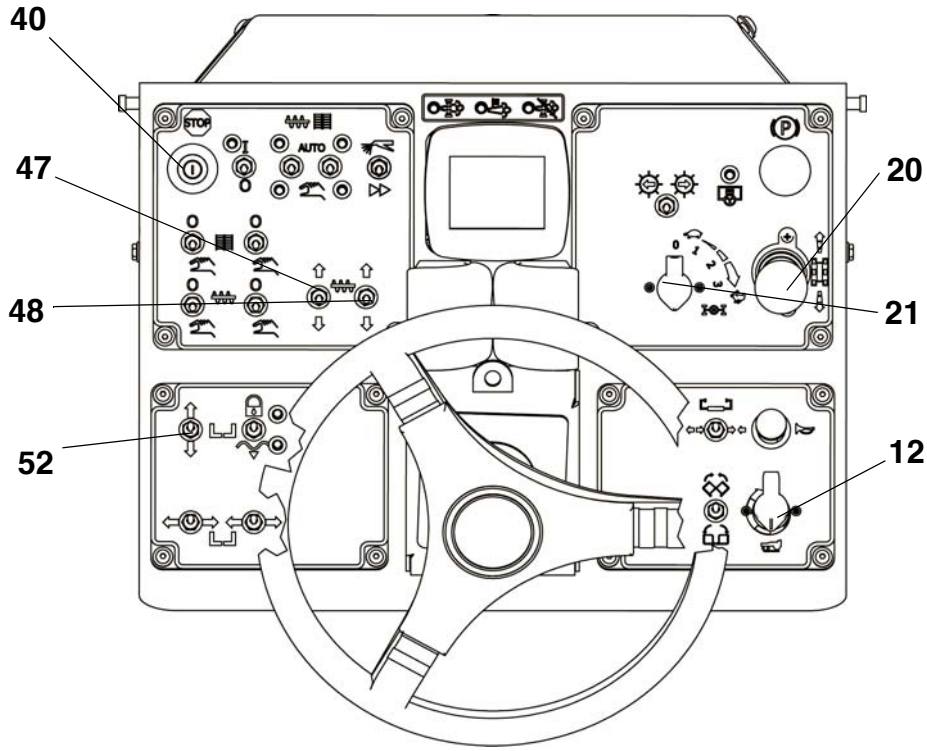

D_4.1_01_US.fm 10-26

https://truckmanualshub.com/

1.2 Transport Operation

Lifting and securing the screed

- Raise the screed using switch (52).
- Center the levelling cylinders using the switches (54)/(55).

NOTICE

The remote control must be connected and this function must be set to “Manual“.

- Raise the auger crossbeam using switches (47)/(48).

NOTICE

Engage both screed transport safeguards to secure the screed in the raised position.

Driving and stopping the paver

- Set the selector (21) for traction drive / engine to position 3.
- Set the preselector (12) for traction drive to approx. 50%.
- To start driving, carefully tilt the drive lever (20) forward or backward according to the drive direction desired.

⚠ WARNING

In case of an emergency, press the emergency stop button (40)!

- To stop the vehicle, move the drive lever (20) into its center position.

Switching off and securing the paver

- Lower the screed using switch (52).
- Turn off the engine by turning the ignition key (10) to the “0“ position. Pull the key out of the switch.

⚠ CAUTION

The battery may become drained if the paver stands still for long periods of time even though the ignition is not switched on.

https://truckmanualshub.com/

1.3 Preparations for paving

Releasing agent

Spray the parts coming into contact with asphalt (hopper, screed, auger, push roller) with a separator emulsion.

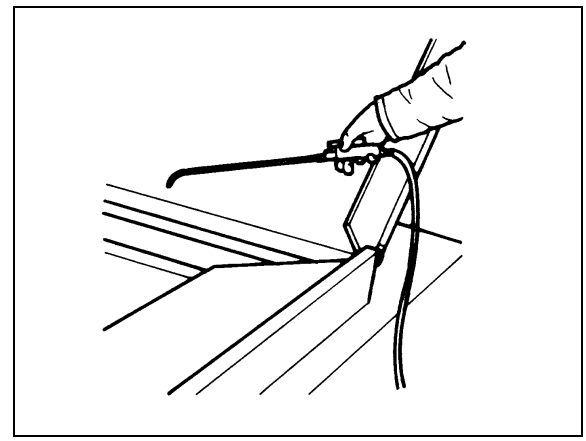

⚠ WARNING

Do not use diesel fuel as it dissolves the bitumen.

Screed heater

Switch the screed heater “On” for about 15–30 minutes (depending on the ambient temperature) before paving begins. Warming up prevents the material from sticking to the screed plates.

Direction marks

To ensure straight paving, a direction mark must be present or established (road edge, chalk lines or similar).

- Slide the operating panel to the desired side and secure it.
- Pull the alignment indicator out of the bumper (see arrow) and adjust it accordingly.

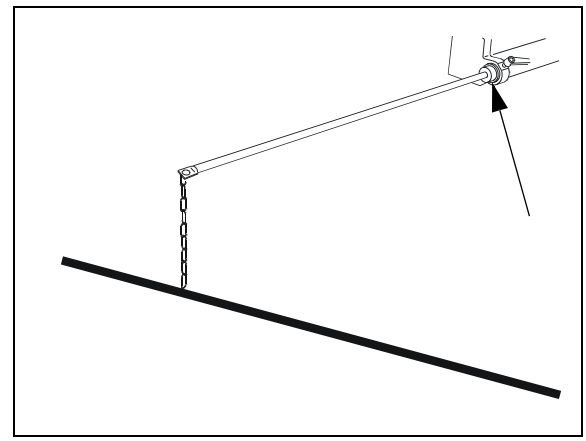

https://truckmanualshub.com/

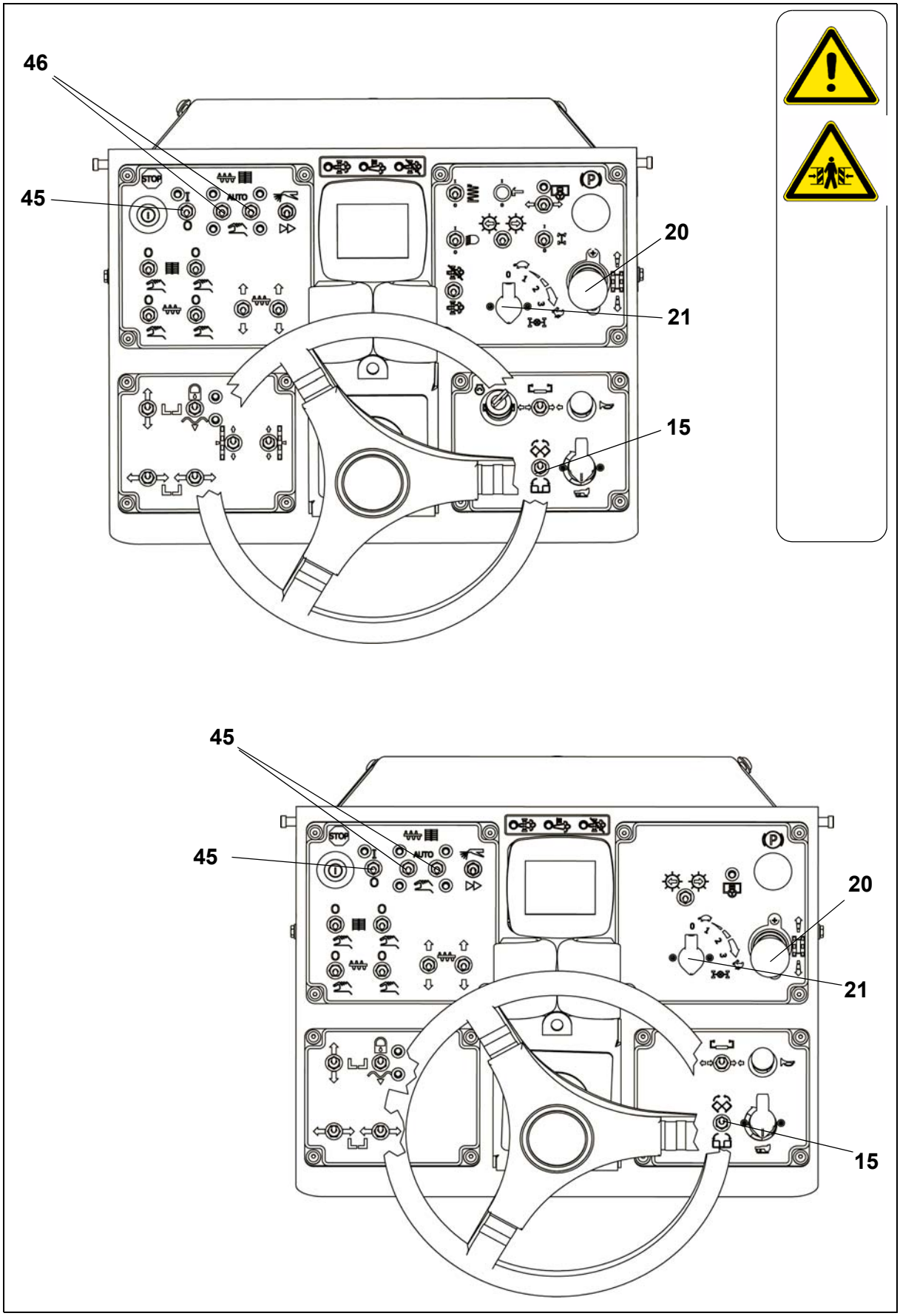

https://truckmanualshub.com/

Loading/distributing material

- Open the hopper with switch (15).
  Have the truck back short of the paver and pull the paver against the truck tires. Guide the truck driver when dumping the material mix.
- Set the switch (45) of the auger and conveyor to the “ON” position.
- Set both switches (46) of the auger and conveyor to “AUTO“ position.
- Set the appropriate auger switch on the remote control and conveyor switch (if applicable) to “auto“ position.
- Set the selector (21) for traction drive / engine to position 1 and push the drive lever (20) forward (away from operator).

Conveyor and auger will begin to work.

NOTICE

The limit sensors for the conveyors and augers must switch off the function when the material has reached the height limit in the area beneath the auger crossbeam (conveyor sensors) or at the auger ends (auger sensors).

Check that the material is being conveyed properly.

- If the material is not being conveyed properly, switch conveyor and auger to “MANUAL“ by using switch (46) until a sufficient amount of material lies in front of the screed.
- Switch conveyor and auger to “AUTO“ using switch (46).

https://truckmanualshub.com/

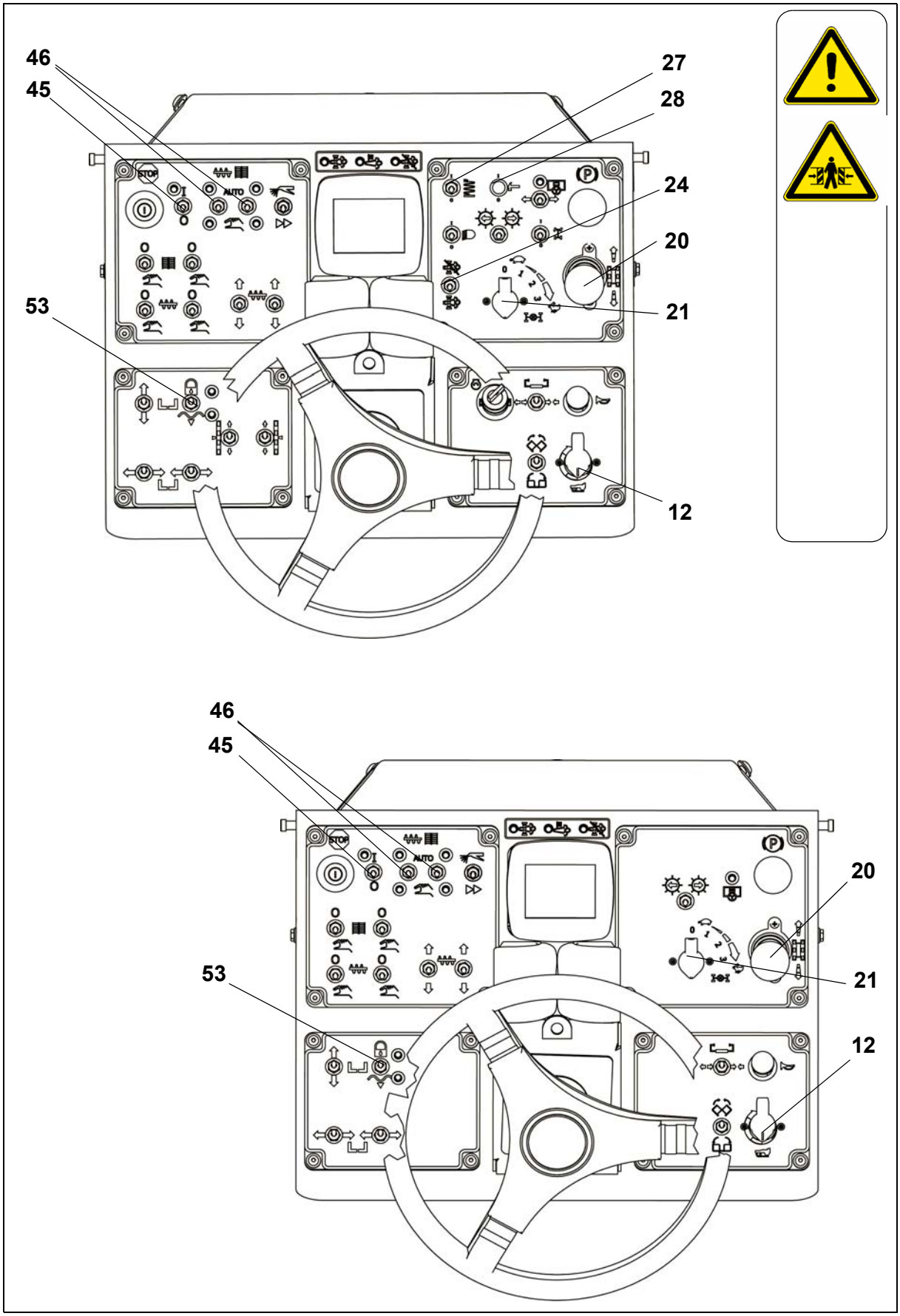

https://truckmanualshub.com/

1.4 Starting for paving

Set the switches, levers and controls listed below to the specified positions when the screed has reached its operating temperature and a sufficient amount of material lies in front of the screed:

Item	Switch	Position
21	Selector	position 1
12	Preselector	approx. 50%
53	Screed position	to floating position.
27	Vibration	ON
45	Auger+conveyor	ON
46	Auger+conveyor	AUTO

- Push the drive lever (20) to its most forward position and start driving. Screed floating position is activated now.
- Observe the distribution of the material and adjust the limit sensors if necessary.
- Set the compacting elements (vibration and/or tamper) according to the required compaction ratio.
- Let the paving supervisor check the layer thickness after 15-20 feet (5–6 meters) and correct if necessary.

Carry out the check in the area of the drive chains or wheels as the screed tends to level an uneven ground. The reference points for the layer thickness are the drive chains or wheels.

The basic screed setting must be corrected when the actual layer thickness deviates significantly from the values needed for the job requirement (see the operating instructions for the screed).

https://truckmanualshub.com/

1.5 Check during paving

The following points must be constantly observed during paving:

Paver function

- Screed heater
- Vibration and/or tamper
- Engine oil and hydraulic oil temperature
- The screed parts must be retracted and extended in time when obstacles are in the way.
- Uniform material transport and distribution or supply to the screed; may require corrections to settings of the material switches for conveyor and auger.

NOTE:

See the section D4 ”Malfunctions” when paver functions fail.

Quality of the layer

- Mat thickness
- Slope
- Evenness in the driving direction and at right angles to it (check with a level)
- Surface structure/texture behind the screed.

NOTE:

See section D 4 ”Malfunctions, Problems during Paving” if the paving quality is poor.

https://truckmanualshub.com/

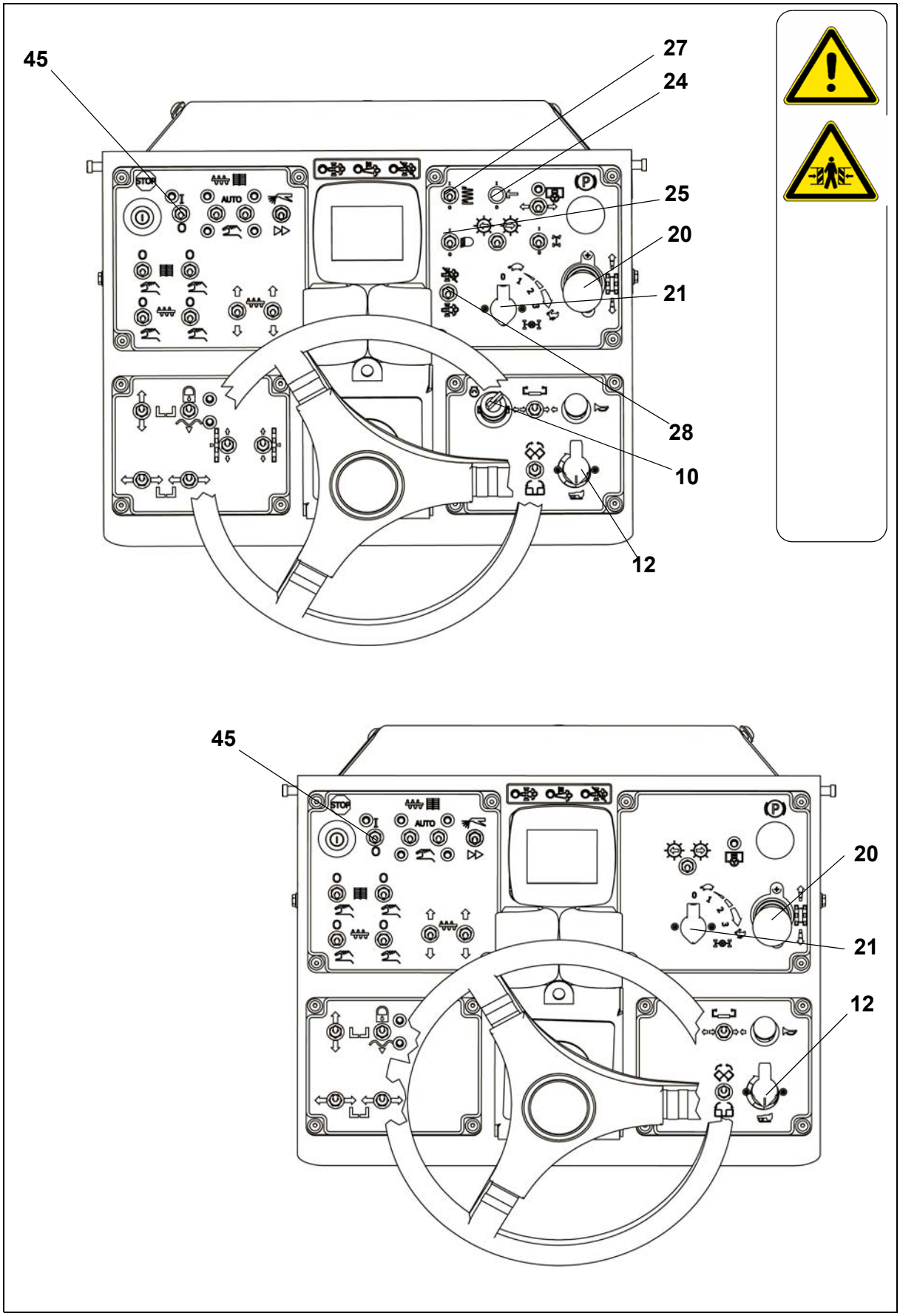

D_4.1_01_US.fm 18-26

https://truckmanualshub.com/

1.6 Interrupting/terminating operation

During breaks (i.e. the material supply truck is late)

- Determine the approximate duration.
- When the material's temperature drops below the minimum paving temperature, run the paver empty and create an edge like the end of a layer.
- Set the drive lever (20) to the center position.

NOTICE

Screed will be switched into "STOP" function automatically.

During extended interruptions (i.e. lunch break)

- Turn drive lever (20) to center position. Move the preselector (12) and selector (21) to minimum position.

NOTICE

Screed will be switched into "STOP" function automatically.

- Switch off conveyor+auger (45), vibration (27), tamper (if equipped)(24), lights (25) and exhaust system (28).
- Switch ignition (10) off.
  - Switch screed heater (system) off.

NOTICE

The screed must be heated up to the correct paving temperature before paving can be resumed.

https://truckmanualshub.com/

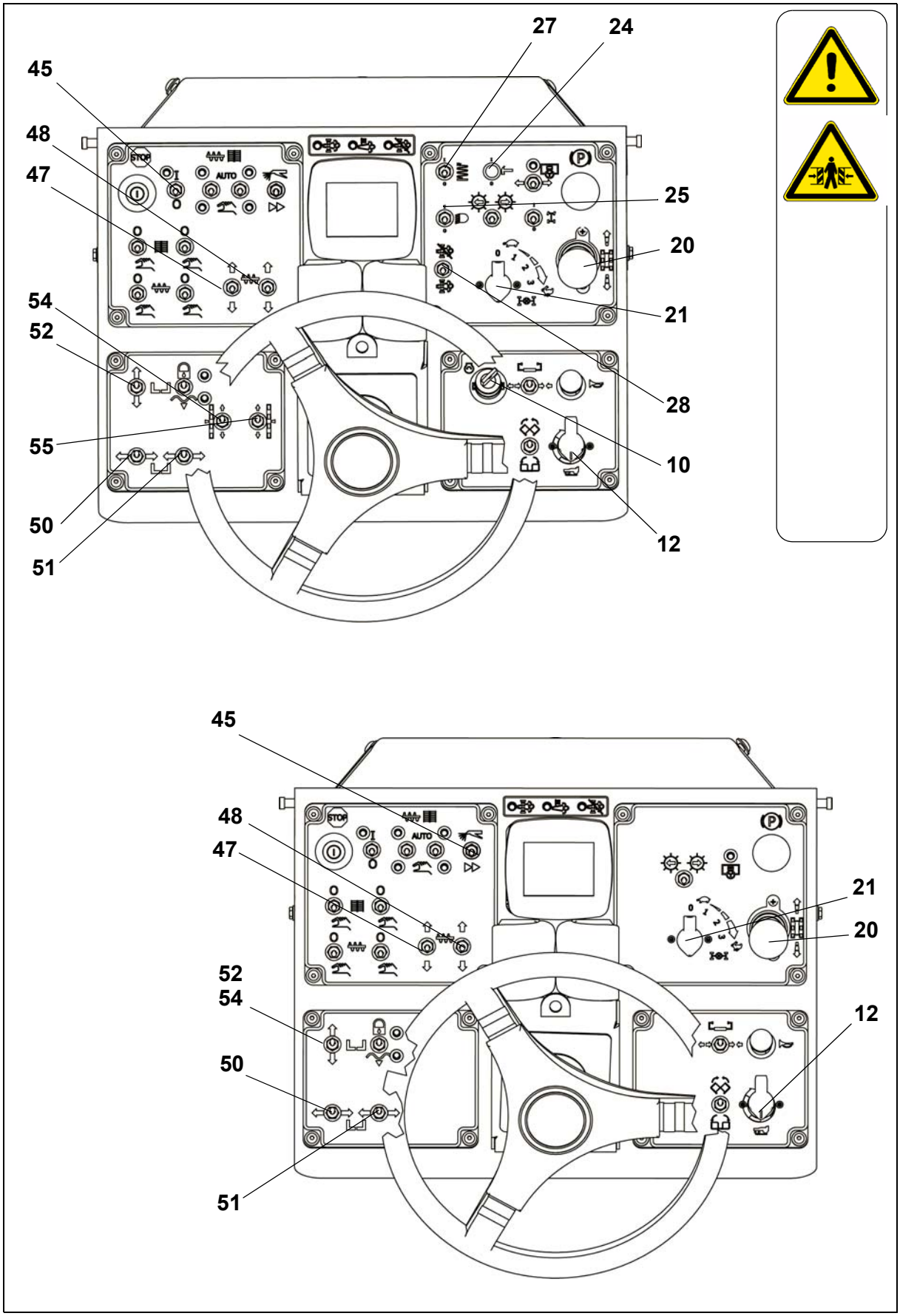

D_4.1_01_US.fm 20-26

https://truckmanualshub.com/

When work is finished

- Run the paver empty, then bring it to a stop.
- Turn drive lever (20) to the center position. Move the preselector (12) and selector (21) to minimum position.
- Switch off conveyor+auger (45), vibration (27), tamper (if equipped)(28), lights (25) and exhaust system (24).
- Lift the screed by using switch (52).
- Retract the screed parts to the basic screed width with switches (50) and (51).
- Use switch (47) and (48) to lift the auger .
- Where applicable, completely extend the levelling cylinders by using switches (54) and (55).

- Insert the mechanical screed transport safeguard (74) on both screed lifting cylinders.
- While operating the tampers at a low speed, let any material residue drop out.

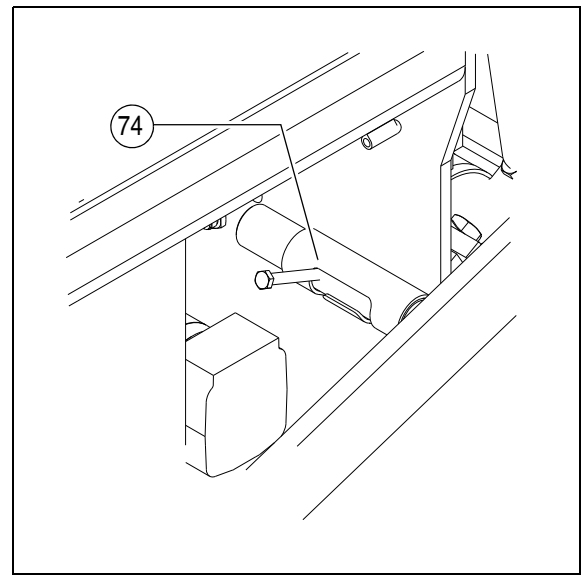

Switch the ignition (10) off.

- Switch screed heater (system) off.
- Remove the levelling units and stow them away in their boxes and close the boxes.
- Remove all parts that extend beyond the paver width. Secure them if the paver is to be transported over public roads on a low-bed trailer.

⚠ CAUTION

Do not turn the main switch off until 30 seconds after the ignition has been turned off!
The engine electronics require this length of time to back up data, and such device can prevent the engine's electronic control module (ECM) from sustaining damage and battery discharging.

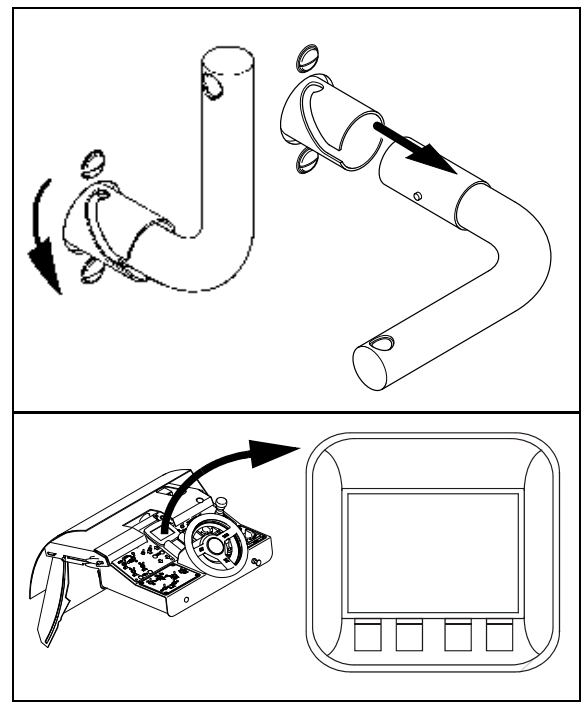

- Read and check the operating hour meter to determine whether maintenance work must be performed (see chapter F).
- Cover and lock the operating panel, so as to restrain unauthorized persons from starting and operating the machine.
- Remove material residue from the screed and the paver and spray all parts with release agent fluid.

https://truckmanualshub.com/

2 Malfunctions

2.1 Problems during paving

Problem	Cause:
Wavy surface (”short waves”)	- change in the material temperature, segregation - wrong material composition - incorrect operation of the roller - incorrectly prepared foundation - long idle standing times between loads - grade control reference line is not suitable - grade control jumps to the reference line - grade control toggles between up and down (inertia setting is too high) - bottom plates of the screed are loose - bottom plates of the screed are warped or not uniformly worn - screed does not work in the floating position - too much play in the mechanical screed link/suspension - paver speed is too high - augers are overloaded - changing material pressure against the screed
Wavy surface (”long waves”)	- change in the material temperature - segregation - roller has stopped on the hot material - roller has turned or roller speed has been changed too quickly - incorrect roller operation - incorrect foundation preparation - truck brake is applied too tight - long idle standing times between loads - grade control reference line is not suitable - incorrect installation of the grade control - limit sensors are not correctly set - screed is empty - screed has not been switched to the floating position - too much play in the mechanical screed link - auger is set too deep - auger is overloaded - changing material pressure against the screed
Cracks in the layer (over the entire width)	- material temperature is too low - change in the material temperature - moisture on the foundation - segregation - wrong material composition - wrong layer height for the maximum grain size - cold screed - bottom plates of the screed are worn or warped - paver speed is too high

https://truckmanualshub.com/

Problem	Cause:
Cracks in the layer (center strip)	- temperature of the material - cold screed - bottom plates are worn or warped - wrong crowning
Cracks in the layer (outer strip)	- temperature of the material - screed extendable parts are incorrectly installed - limit switch is not correctly set - cold screed - bottom plates are worn or warped - paver speed is too high
Layer composition is not uniform	- temperature of the material - change in the material temperature - moisture on the foundation - segregation - wrong material composition - incorrectly prepared foundation - wrong layer height for the maximum stone size - long idle standing times between loads - vibration is too slow - screed extendable parts are incorrectly installed - cold screed - bottom plates are worn or warped - screed does not work in the floating position - paver speed is too high - auger is overloaded - changing material pressure against the screed
Marks in the surface	- truck hits against the paver too much while aligning to the paver - too much play in the mechanical screed link/suspension - truck parking brake is applied - vibration is too high while standing in one spot
Screed does not react to corrective measures as expected	- temperature of the material - change in the material temperature - wrong layer height for maximum grain size - incorrect installation of the grade control - vibration is too slow - screed does not work in the floating position - too much play in the mechanical screed link - paver speed is too high

https://truckmanualshub.com/

2.2 Malfunctions on the paver or screed

Malfunction	Cause:	Remedy
At the diesel engine	Diverse	See operating instructions for the engine
Diesel engine does not start	Batteries drained	See ”External starting” (start assistance)
	Other	see ”Towing”
Tamper or vibration does not operate	Tamper is obstructed by cold bitumen	Properly heat the screed
	Hydraulic oil level in the tank is too low	Fill with oil
	Pressure limiting valve is defective	Replace the valve; if necessary, repair and adjust the valve
	Leak in the suction line of the pump	Seal or replace the connections
		Tighten or replace the hose clamps
	Oil filter is dirty or plugged (clogged)	Replace the filter
Conveyor or augers run too slowly	Hydraulic oil level in the tank is too low.	Fill with oil
	Power supply is interrupted	Check fuses and cables; replace if necessary
	Sensor is defective	Replace the sensor
	One of the pressure limiting valves is defective	Repair or replace the valves
	Pump shaft broken	Replace the pump
	Limit sensor does not regulate correctly	Check the sensor; replace the sensor if necessary
	Pump is defective	Replace the pump. Check the system for contaminants
	Oil filter is dirty or plugged	Replace the filter
Hopper cannot be swung open	Engine speed is too low	Increase the speed
	Hydraulic oil level is too low	Fill with oil
	Leak in the suction line	Tighten the connections
	Flow rate regulator defective	Replace
	Leaking seals in the hydraulic cylinder	Replace
	Control valve is defective	Replace
	Power supply interrupted	Check fuse and cables; replace if necessary

https://truckmanualshub.com/

Malfunction	Cause:	Remedy
Hoppers lowers inadvertently	Control valve is defective	Replace
	Leaking seals in the hydraulic cylinder	Replace
Screed cannot be lifted	Oil pressure too low	Increase the oil pressure
	Leaking seal	Replace
	Screed relieving or charging is switched on	Switch must be in the center position
	Power supply is interrupted	Check fuse and cables; replace if necessary
Lifting Arms cannot be lifted or lowered	Check to see if the switch on the remote control is set to ”auto”	Set the switch to ”manual”
	Power supply is interrupted	Check fuse and cables; replace if necessary
	Switch on the operating panel defective	Replace
	Excess pressure valve defective	Replace
	Flow rate regulator defec-tive	Replace
	Seals defective	Replace
Lifting Arms lower inadvertently	Control valves defective	Replace
	Pilot-controlled non-return valves defective	Replace
	Seals defective	Replace

https://truckmanualshub.com/

Malfunction	Cause:	Remedy
Traction does not work	Traction drive fuse defective	Replace (Fuse holder is on the operating panel)
	Power supply is interrupted	Check potentiometer, cables, connectors; replace if necessary
	Traction drive monitoring defective	Replace
	Electro-hydraulic servo unit of the pump is defective	Replace the servo unit
	Insufficient supply pressure	Check and adjust if necessary
		Check the suction filter; replace the supply pump and the filter if necessary
	Drive shaft at hydraulic pumps or engine is broken	Replace pump or engine
Irregular engine speed, engine stop function does not work	Fuel level too low	Check the fuel level; refill fuel if necessary
	Fuse for ”engine speed control” defective	Replace (fuse strip on the operating panel)
	Defective power supply cables (cables broken or short-circuits)	Check potentiometer, cables, connectors; replace if necessary

https://truckmanualshub.com/

E 01 Set-up and modification

1 Special notes on safety

⚠ DANGER

Inadvertently starting the engine, the traction drive, the conveyor, the auger, the screed or the lifting units can be dangerous. Unless specified otherwise, work may only be performed when the engine is not running!

- To protect the paver against inadvertent starting:
  Set the drive lever to the center position and set the preselector to zero; if applicable, pull out the ignition key and the battery main switch.
- Secure lifted machine parts (e.g. screed or hopper) against lowering by means of mechanical supports.
- Replace parts or have them replaced as required.

⚠ WARNING

When connecting or disconnecting hydraulic hoses and when working on the hydraulic system, hot hydraulic fluid can escape at a high pressure.
Switch the engine off and de-pressurize the hydraulic system! Protect your eyes!

- Mount all protective and safety devices before re-commissioning the paver.
- The walking platform must always reach over the entire width of the screed. The hinged walkway (optional for all variable screeds) may only be swung up under the following circumstances:
- When paving next to a wall or a similar obstacle.
- During transportation on a low-bed trailer.

https://truckmanualshub.com/

2 Auger

2.1 Height adjustment

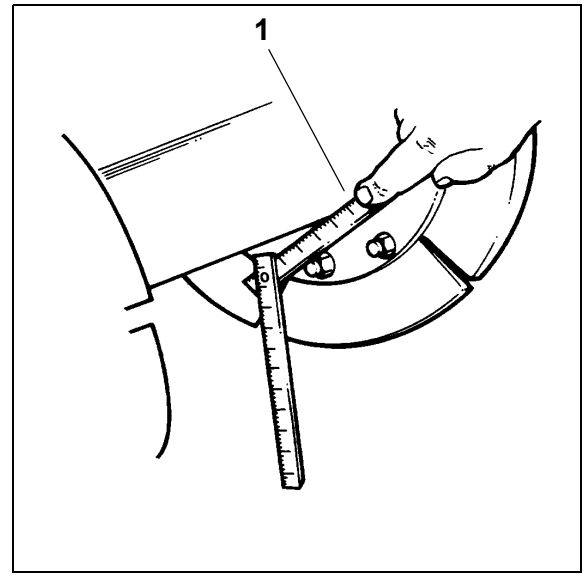

Depending on the mix of materials, when working with layer thicknesses of up to 10 in. (25.4 cm), the height of the distribution auger (1) – measured from its bottom edge – should be around 5 cm (2 inches) above the material layer thickness (depending on its mix of materials).

Example: Layer height 3 in. (7.6 cm)
Adjustment: 5 in. (12.7 cm) from the ground

An incorrect height adjustment can result in the following problems:

- Auger too high:
  Too much material in front of the screed; material overflow. When operating with larger widths, segregation and traction problems may occur.
- Auger too low:
  Not enough material that can be pre-compacted by the auger. Irregularities resulting from this cannot be completely compensated for by the screed (wavy surface).
  In addition, an increased wear on the auger segments occurs.

2.2 Auger crossbeam - hydraulic height adjustment

- Measure the set height of the auger crossbeam (left and right).

NOTE:

Equally press both switches/buttons (47)/(48) so that the auger beam stays level.

- Check whether the height on the left and on the right are identical.

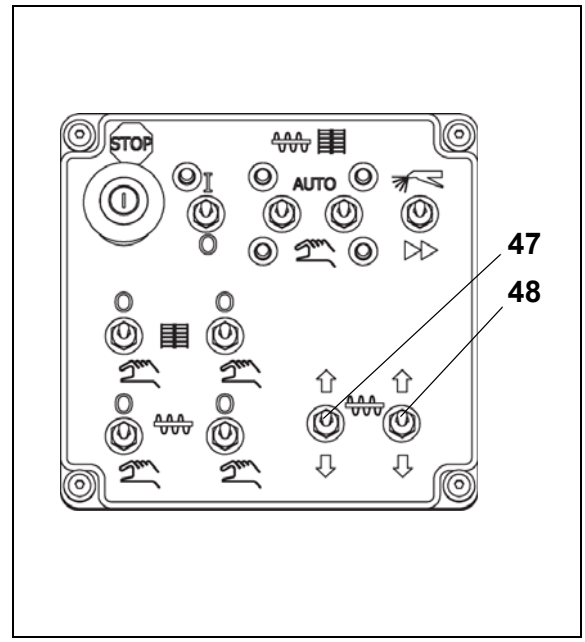

https://truckmanualshub.com/

2.3 Auger extension

Depending on the type of screed, the most diversified working widths can be reached.

NOTICE

Auger and screed extension must match. See the operating instructions for the appropriate screed, chapter ”Set-up and modification”, especially:
– Screed extension chart,
– Auger extension chart.

To attain the desired working width, the respective screed extensions, side plates, augers, tunnel plates or cut-off shoes must be mounted.

For widths of more than 11.5 ft. (3.5 m.), the auger should be fitted with extension parts on both sides to improve material distribution and to reduce the wear.

⚠ DANGER

The diesel engine must be switched off whenever work is performed on the auger as there is a danger of being pulled into rotating parts. This could cause severe injury or death!

https://truckmanualshub.com/

2.4 Mounting extension parts

- Loosen the clamping screws (6) on the support tube. Then turn in the center expanding screw (5) to expand the clamping joint.

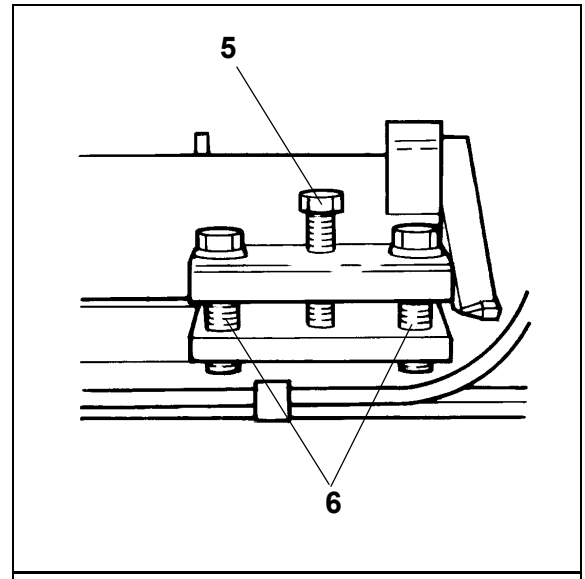

- Pull the telescopic tube out of the support tube (7).
- Mount the required extension parts.

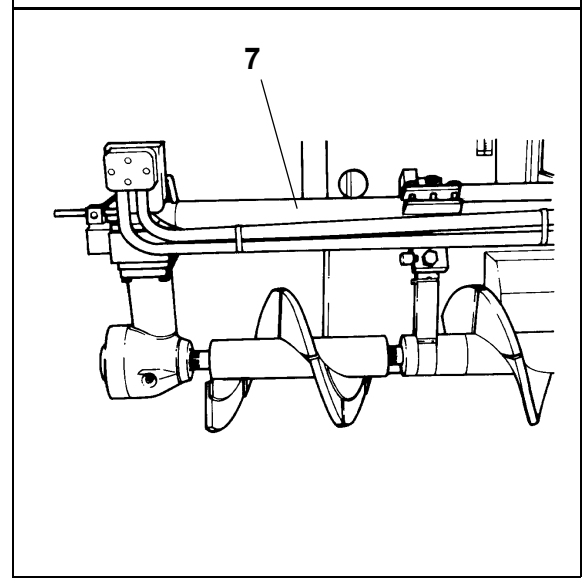

NOTE:

Observe the guide groove of the spline! Make sure that the shaft end is clean!

- Install auger so pick end of auger is “IN TIME” with the discharge of the main auger. This is called “IN TIME” or “NORMAL” set up and is used to prevent segregation (or separation) of material. The auger pickup can be mounted 180 degrees away from the discharge. This called “OUT OF TIME” and is used with large or rounded stone to prevent segregation. If already mounted and segregation occurs in the mat at extension to main connection, move the auger pickup 180 degrees from the current position.
- Slide in the telescopic tube. When doing so, make sure that the drive of the auger gear is slid all the way over the shaft end of the auger extension part and that the threads of the augers match.
- Remove the expansion screw (5). Then tighten the clamping screws (6). Finally tighten the expansion screw by hand.

⚠ CAUTION

Before the clamping screws (6) can be tightened again, the expansion screw (5) must be sufficiently turned back!
Otherwise, the telescopic tube cannot be safely clamped and the splined shaft ends break.

⚠ DANGER

When clamped insufficiently, the telescopic tube can slide out of the support tube and can cause severe injury or death as well as damage to the machine!

https://truckmanualshub.com/

2.5 Mounting support tube extensions

If the working width exceeds 23 ft. (7.01 m.), an auger crossbeam extension must be mounted.

The support tube extension of the auger cross-beam consists of two halves (8) and is attached to the existing support tube by using a total of 5 screws. After the two halves have been screwed to the support tube, they also must be linked to each other by means of screwed connections.

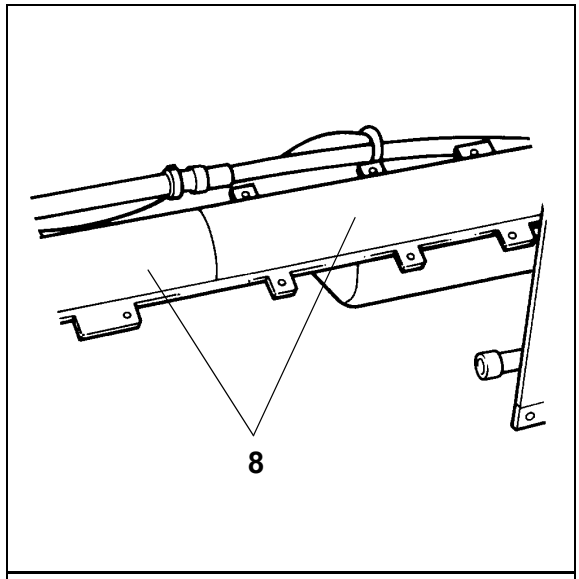

Clamping of the telescopic tube occurs by tightening the screwed connections (9) linking the support tube extension.

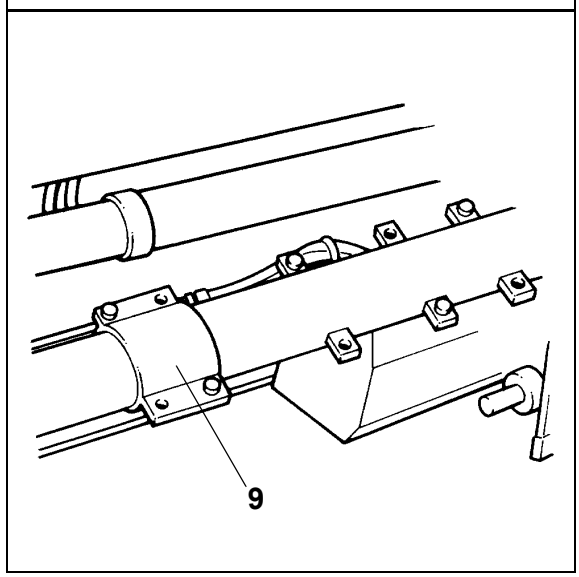

If the working width exceeds 14 ft. (6.26 m.) the hydraulic hoses (10) for the auger motors must be replaced with longer ones.
These long hoses are included in the scope of delivery for this working width.

⚠ DANGER

When connecting or disconnecting hydraulic hoses, hydraulic fluid can spray out at a high pressure and can cut or enter the skin.
Switch the paver off and de-pressurize the hydraulic circuit! Protect your eyes!

⚠ CAUTION

When installing the hoses, make sure that the area around the connections is clean.
Any contaminants that enter the hydraulic system can cause damage to the hydraulic system.

https://truckmanualshub.com/

2.6 Installing tunnel plates

To ensure an optimum material flow – especially in the case of large paving widths – so-called tunnel plates (11) must be installed.
They are located directly in front of the auger distributor and – in conjunction with the auger – are an ideal system for conveying the material.

When operating with widths of more than 14.4 ft (4.4 m), two or more combined tunnel plates (13) must be used.
In this case, additional stabilizing supports (12) must be attached to the telescopic tube.

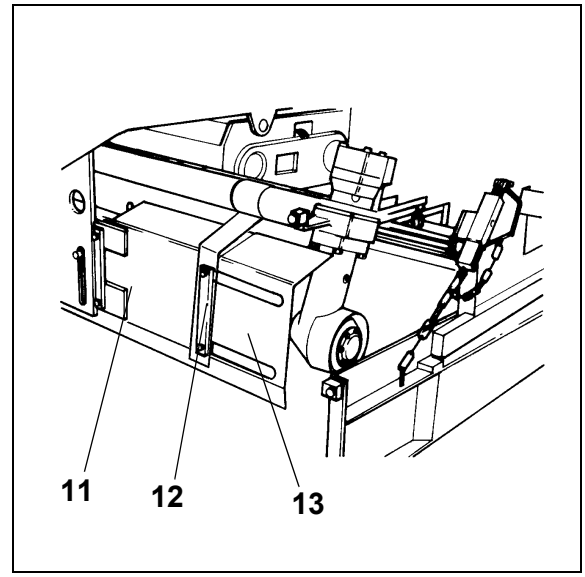

The tunnel plates must be directly screwed to the receptacles provided for this purpose (14); they are located on the auger frame sides and can be adjusted in height.

Refer to the auger extension chart to determine which parts of the conveyor system are required for the desired paving width.

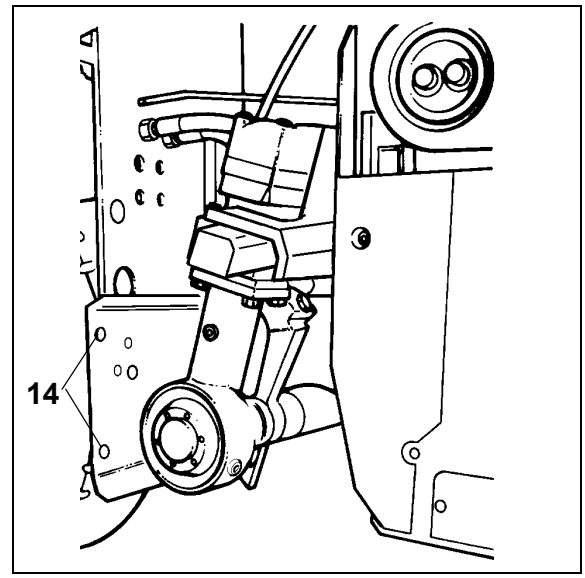

https://truckmanualshub.com/

2.7 Installing additional braces

When operating with width of more than 25 ft. (7.62 m.) the augers must be provided with an additional support.

To do so, attach two braces on both the left-hand and the right-hand side, between the tunnel plate support and the bracket provided on the paver.

The braces are included in the scope of delivery for this working width.

https://truckmanualshub.com/

3 Screed

The operating instructions for the screed explains what is required for mounting, setting up and extending the screed.

4 Electrical connections

Ensure the following connections have been made once the screed has been mounted and set up:

4.1 Remotes from screed to paver

The screed plugs into the back of the paver socket (15). The paver and the screed communicate through this connection.

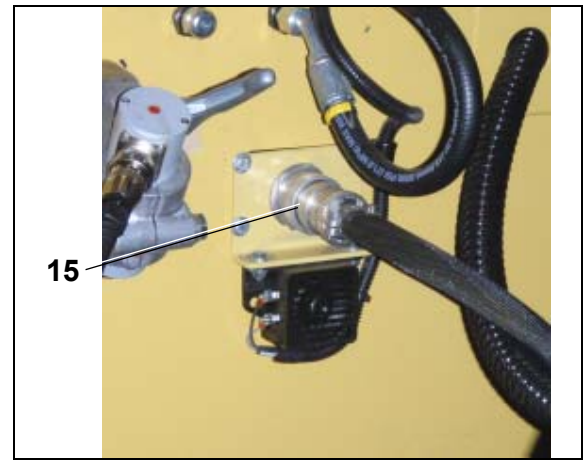

4.2 Right hand conveyor sensor control

The conveyor sensor connects to the DC control box. The control box is connected to the right remote by a cable through the rear bulkhead. The remote then sends the signal from the sensor to the paver thru the cable shown.

4.3 Right hand auger sensor control

The auger sensor connects to the DC control box. The control box is connected to the right remote by a cable through the rear bulkhead. The remote then sends the signal from the sensor to the paver thru the cable shown.

https://truckmanualshub.com/

4.4 Left hand conveyor sensor control

The conveyor sensor connects to the DC control box. The control box is connected to the right remote by a cable through the rear bulkhead. The remote then sends the signal from the sensor to the paver thru the cable shown.

4.5 Left hand auger sensor control

The auger sensor connects to the DC control box. The control box is connected to the right remote by a cable through the rear bulkhead. The remote then sends the signal from the sensor to the paver thru the cable shown.

https://truckmanualshub.com/

4.6 Auger Chart

Auger ext. parts per side							Auger extension width (per side)
Auger			Guide plate		Support for tunnel extensions	Hyd. hose - as required	
1	2	3	1	2			
11.4 in. (290 mm)	17.0 in. (434 mm)	34.1 in. (866 mm)	11.75 in. (298 mm)	19.75 in. (502 mm)			
1			1			3	11.4 in. (289.6 mm)
	1			1		3	17.0 in. (431.8 mm)
2			1	1		3	22.8 in. (579.1 mm)
1	1		1	1		3	28.4 in. (721.4 mm)
		1		2	1	3	34.1 in. (866.1 mm)
1		1	1	2	1	3	45.5 in. (1155.7 mm)

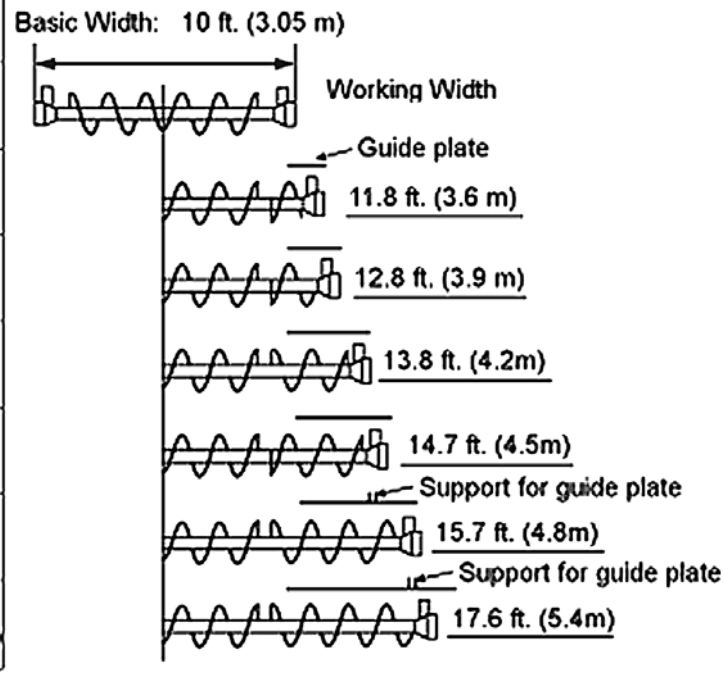

https://truckmanualshub.com/

F 1.0 Maintenance

1 Notes regarding safety

WARNING

Maintenance work: Maintenance work may only be carried out when the engine is not running.

Secure the paver and the attachments against inadvertent starting before beginning any maintenance work:

- Set the drive lever to the center position and the speed preselector to zero.
- Remove the ignition key and the battery main switch.

WARNING

Lifting and jacking up: Secure lifted machine parts (i.e. screed or hopper) against lowering by means of mechanical supports.

CAUTION

Spare parts: Use only approved parts and install them according to the specifications! If in doubt, contact the manufacturer!

CAUTION

Re-commissioning: Mount all protective devices before re-commissioning the paver.

WARNING

Cleaning: Cleaning must not be carried out while the engine is running.
Do not use any flammable substances (such as gasoline or diesel fuel).
Avoid directly cleaning electrical parts and insulation material with a steam jet; cover them up beforehand.

WARNING

Working in closed environments: Always run the engine in a well ventilated area.

NOTICE

In addition to these Maintenance Instructions, the Maintenance Instructions of the engine manufacturer must always be observed. All other maintenance work and intervals noted in these instructions are also binding.

https://truckmanualshub.com/

https://truckmanualshub.com/

F 2.1 Maintenance Overview

1 Maintenance overview

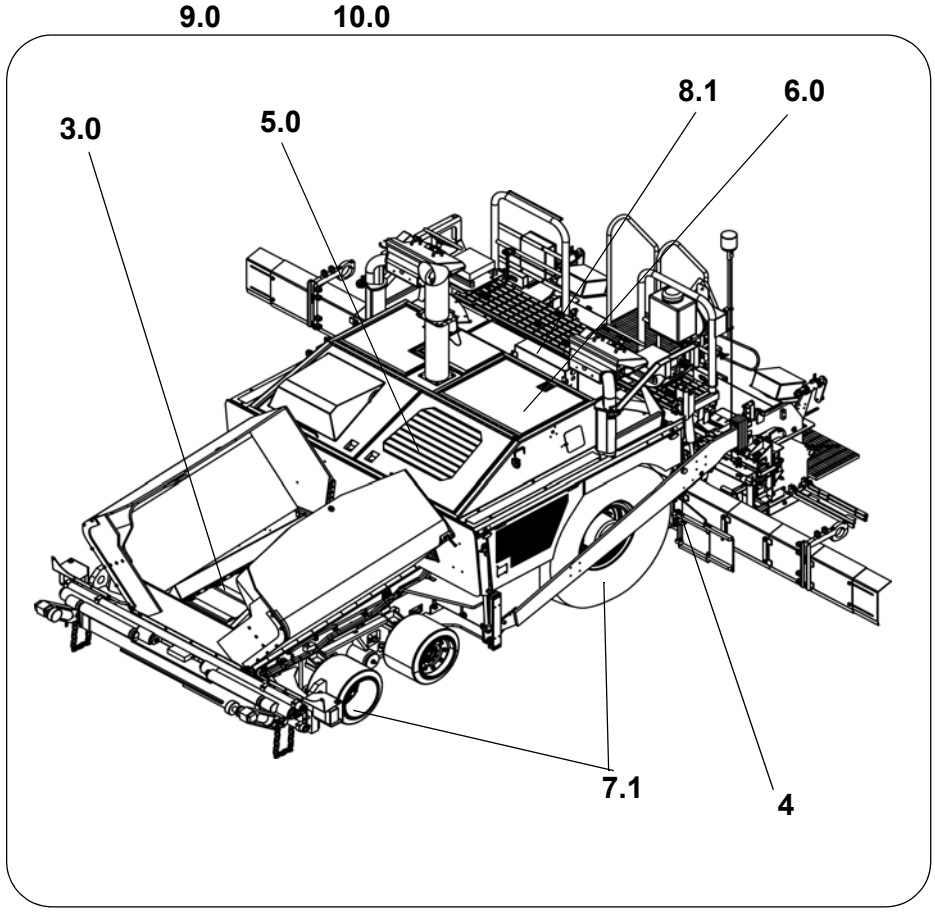

https://truckmanualshub.com/

Assembly	Chapter	Maintenance required after the following service hours									
		10	50	100	250	500	1000 / annually	2000 / every 2 years	5000	20000	If necessary
Conveyor	F3.0		■	■	■		■	■			■
Auger	F4.0		■	■	■		■	■			■
Engine	F5.0	■			■	■	■	■			■
Hydraulics	F6.0	■	■			■	■	■			■
Travel drive, steering	F7.1		■		■		■				■
Electronics	F8.1	■		■	■		■		■	■	■
Lubrication points	F9.0		■					■			■
Checking/decommis-sioning	F10.0	■					■				■

Maintenance required	■

https://truckmanualshub.com/

F 3.0 Maintenance - Conveyor and Hopper

1 Maintenance - Conveyor and Hopper

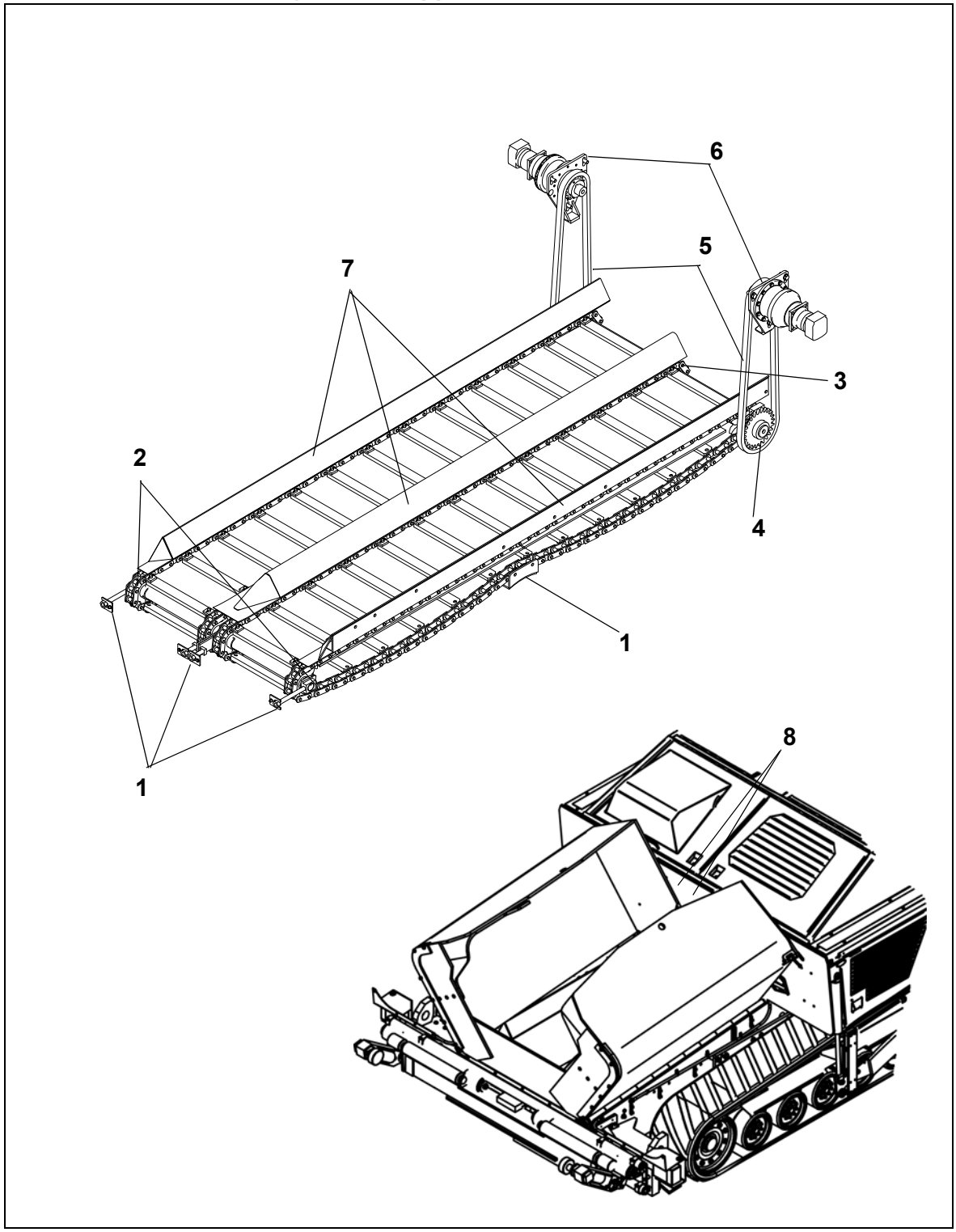

https://truckmanualshub.com/

1.1 Maintenance intervals

No.	Interval								Points of maintenance	Remark
	10	50	100	250	500	1000 / year	2000 / 2 years	as required		
1		■							- Checking the tension of the conveyor chain	
								■	- Adjusting the tension of the conveyor chain	
			■						- Conveyor chain - Check chain	
								■	- Conveyor chain - Replace chain	
						■			- Clean Conveyor chain supports	
2		■							- Conveyor tensioning sprocket - Lubricate grease zert	
3		■							- Conveyor bearing - Lubricate grease zert	
4		■							- Conveyor drive bearings - Lubricate grease zert	
5			■						- Conveyor drive / drive chains Check chain tension	
								■	- Conveyor drive / drive chains Set chain tension	
6				■					- Conveyor drive - planetary gear - Oil level check	
								■	- Conveyor drive - planetary gear - Fill with oil	
			▼				■		- Conveyor drive - planetary gear Oil change (▼ indicates initial break-in period)	
7						■			- Check conveyor chain guards, conveyor plates	
								■	- Replace conveyor chain guards, conveyor plates	
8		■							- Hopper cylinders - Lubricate grease zerts	

Maintenance	■
Maintenance during break-in period	▼

https://truckmanualshub.com/

1.2 Points of maintenance

Chain tension of the conveyor (1)

Checking the track tension:

For daily inspection look straight through under the bumper. The chain must not hang below the bottom edge of the bumper.
Should readjustment be necessary, measure the slack unloaded from the bottom edge of the floor plate to the bottom edge of the chain (see the figure). Also conveyor chain supports should be inspected daily and can be seen by looking straight through under the bumper. Clean the support every 1000 hours of operation and before adjusting the tension.

CAUTION

The chains should not be too tight or too slack. If the chain is too tight, material between the chain and the sprocket wheel can lead to stoppage or breakage.
If the chain is too slack, it may get stuck in the protruding objects and be damaged.

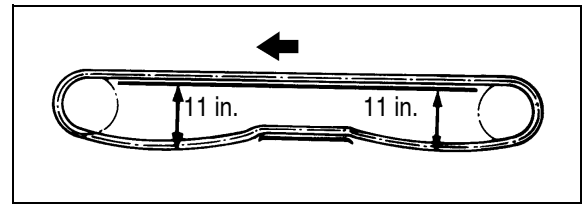

NOTICE

With the paver resting on a level surface the sag of both portions should be a minimum of 11 inches!

Checking the chain tension:

Chain tension can be adjusted with 4 tension-screws (A) The tension-screws are located at the front of the crossbeam.

- Loosen the bolts (B) and remove the locking clamp (C).
- Set the necessary chain tension by turning the tension-screws (A).
- Remount the locking clamp (C) with the bolt (B).

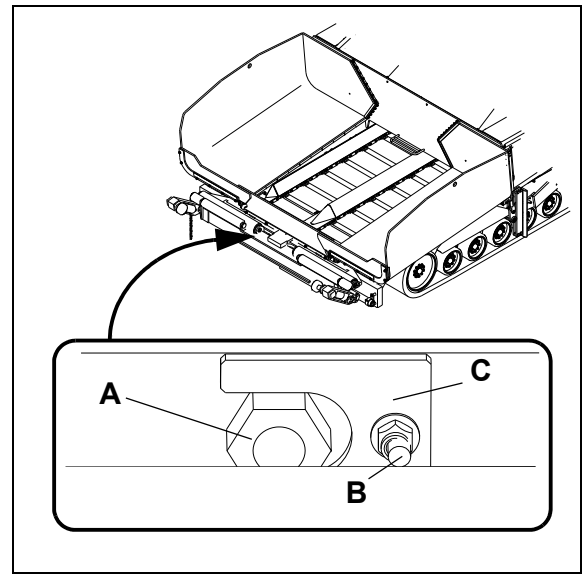

https://truckmanualshub.com/

Check / replace chain:

NOTICE

When the conveyor chains (A) have stretched so far that they can no longer be adjusted, they must be replaced.

WARNING

Chain links must not be removed to shorten the chain!
Shortening the chains would lead to the destruction of the drive sprockets!
Adjust the tensioning instead!

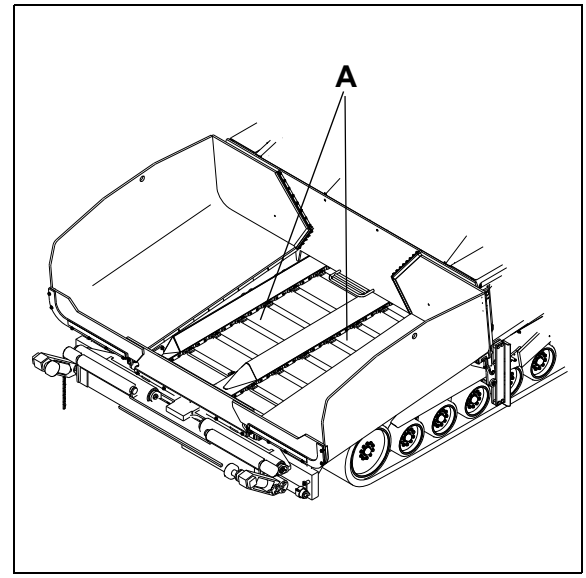

CAUTION

If components have to be replaced as a result of wear, the following components should always be replaced in sets:

- Conveyor chain
- Conveyor chain guards
- Conveyor plates
- Conveyor chain tensioning sprockets
- Conveyor gear drive sprockets

NOTICE

Contact your Dynapac customer service representative for support during maintenance, repair and the replacement of worn parts!

https://truckmanualshub.com/

Conveyor tensioning sprocket bearings (2)

The tensioning sprocket bearings for the conveyors are lubricated at the grease zerts (A) located behind the crossbeam.
The center bearings are lubricated at the outer lubricating grease zerts.

Pump 5 strokes of grease with a grease gun.!

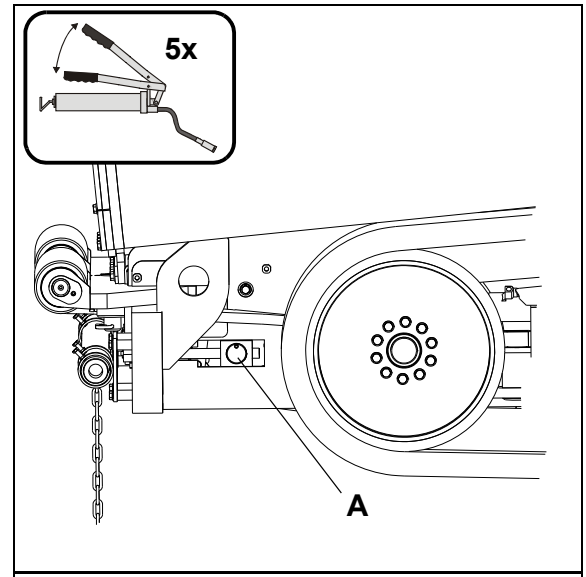

Conveyor bearing block (1)

The center conveyor bearing block is lubricated with the grease zert (B) located insided the rear crossbeam, r.h. side.

Pump 5 strokes of grease with a grease gun.!

Conveyor drive bearing (4)

The conveyor drive bearings are lubricated with grease zerts (C) located inside the front and rear crossbeam, r.h. and l.h. side.

Pump 5 strokes of grease with a grease gun.

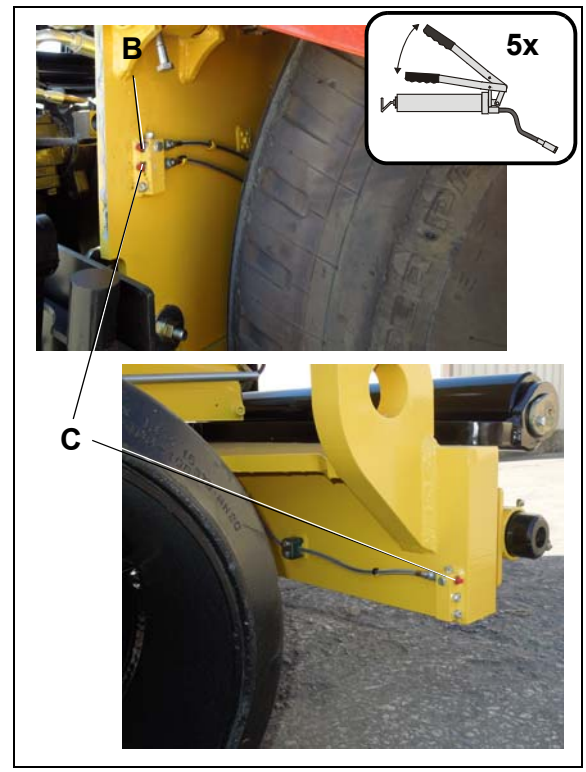

https://truckmanualshub.com/

Conveyor drive - (5) drive chains

Checking for chain **tension**:

- In normal conditions, the chain has to have approximately .4 to .6 inch (10 - 15 mm) of play.

To set the chain **tension**:

- Loosen the locking bolts (A) and the lock-nut (B).
- Set the necessary chain tension with the tension-screw (C).
- Tighten the locking bolts (A) and lock-nut (B) again.

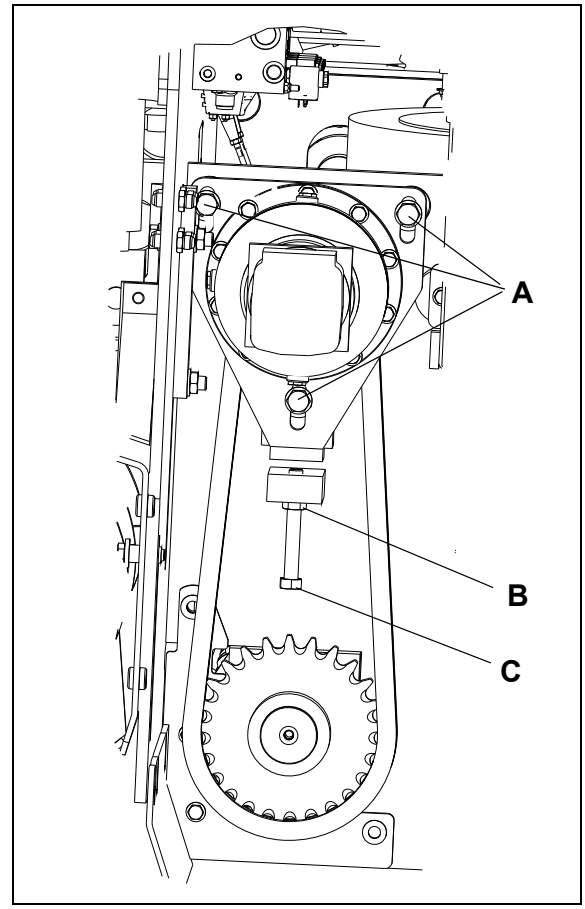

https://truckmanualshub.com/

Conveyor drive - (6) planetary drive (left/right)

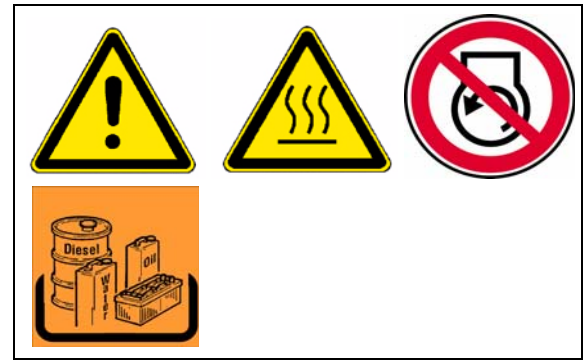

- To **check the oil level,** unscrew the inspection plug (A).

NOTE:

For proper oil level, the oil must be at the lower edge of the inspection port or a little oil flows from the hole.

To **add** oil:

- Check oil at oil level site glass (A).
- Fill with oil of the correct specification through port (B) until the oil level reaches the middle of the oil level site glass (A). Use only recommended oil.

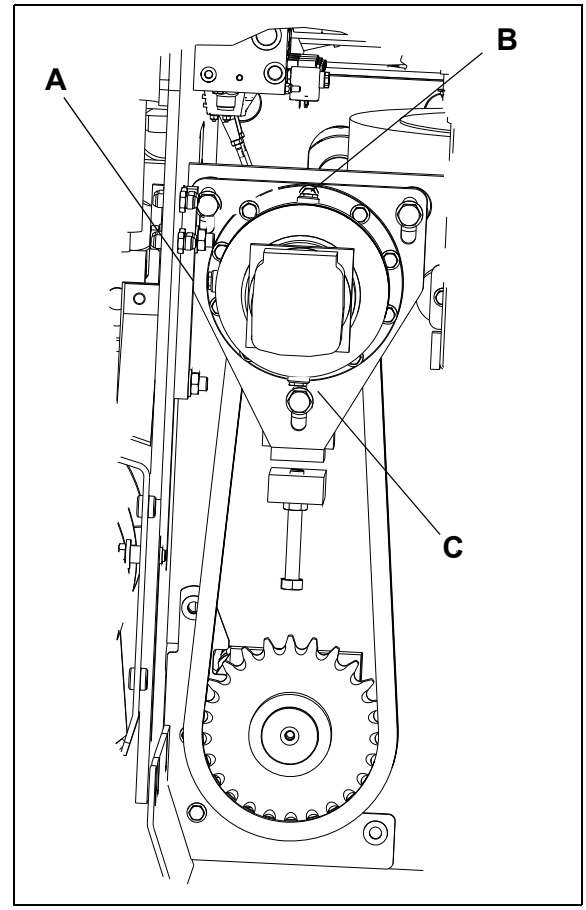

Oil change:

NOTE:

Change the oil when the engine is at operating temperature.

- Remove the the filling plug (B) and the drain plug (C).
- Drain the oil.
- Return plug (C).
- Fill oil through the filling port until the oil level reaches the middle of the oil level site glass (A).
- Replace the plug at the filling port (B).

⚠ CAUTION

Make sure that no pollution or foreign matter gets into the drive.

https://truckmanualshub.com/

Conveyor chain guards / conveyor plates (7)

NOTE:

When the lower edges of the conveyor chain guards (A) are worn or reveal holes, they must be replaced.

CAUTION

The conveyor chain is not protected when the conveyor chain guards are worn!

- Remove conveyor chain guard bolts.
- Remove the conveyor chain guards from the material tunnel.
- Install new conveyor chain guards with new bolts.

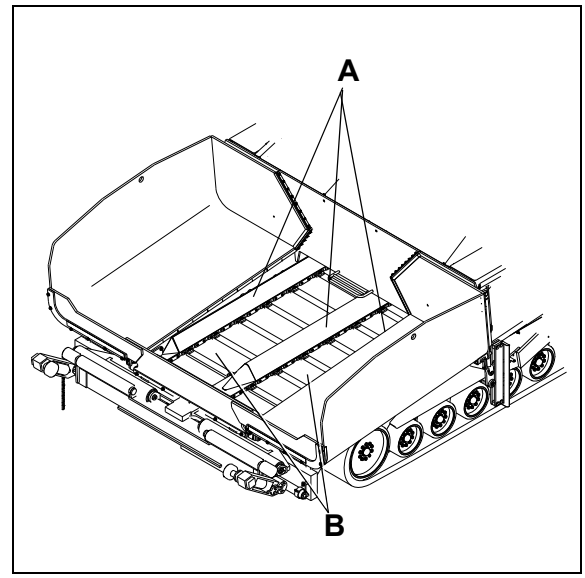

NOTE:

The conveyor plates (B) must be replaced when the wear limit of .2 inch (5 mm) in the rear area beneath the chain has been reached.

CAUTION

If components have to be replaced as a result of wear, the following components should always be replaced in sets:

- Conveyor chain
- Conveyor chain guards
- Conveyor plates
- Conveyor chain tensioning sprockets
- Conveyor gear drive sprockets

NOTICE

Contact your Dynapac customer service representative for support during maintenance, repair and the replacement of worn parts!

https://truckmanualshub.com/

F 4.0 Maintenance - Auger

1 Maintenance - Auger sub-unit I

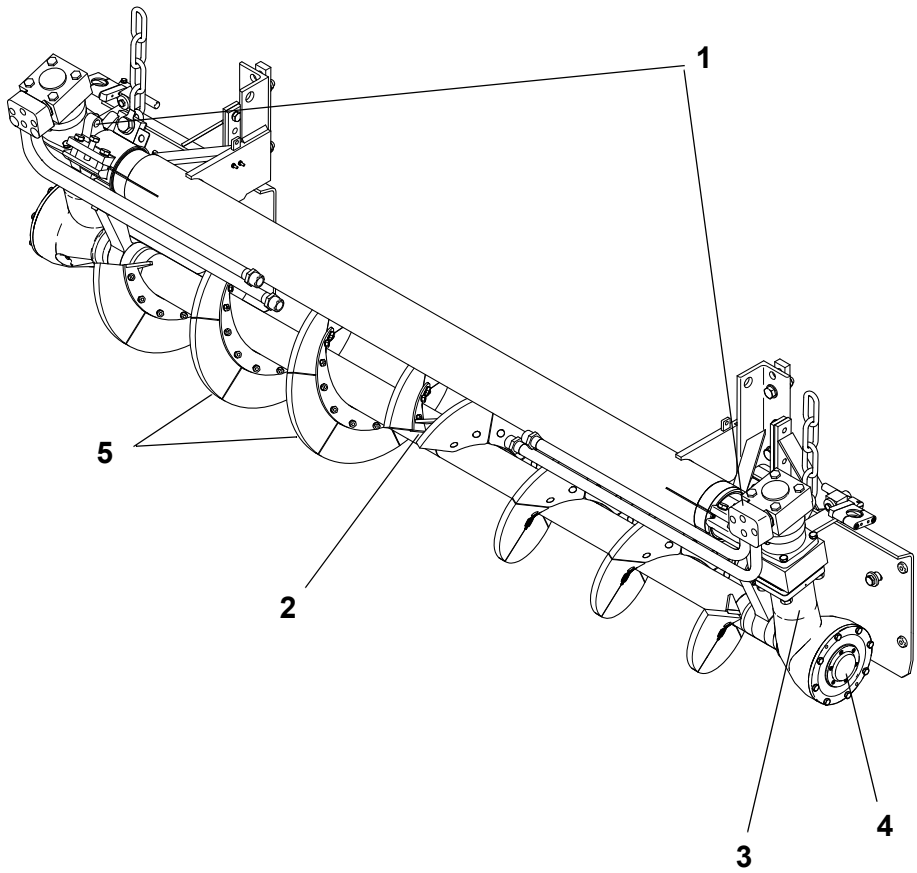

https://truckmanualshub.com/

1.1 Maintenance intervals

No.	Interval								Points of maintenance	Remark
	10	50	100	250	500	1000 / year	2000 / 2 years	as required		
1		■							- Auger - outer bearing Lubrication	
2				■					- Auger central bearing Lubrication	
3		▼				■			- Auger drive neck bearing Lubrication	
4		▼		■					- Auger bevel gear oil level check	
								■	- Auger bevel gear topping up the oil	
							■		- Auger bevel gear oil change	
5			■						- Auger wear plates (auger segments)- Check wear	
								■	- Auger wear plates (auger segments)- Replace auger blade	

Maintenance	■
Maintenance during run-in period	▼

https://truckmanualshub.com/

1.2 Points of maintenance

Auger - outer bearing (1)

The grease zerts (A) are located on each side on the top of outer bearing. These zerts must be lubricated each time work is finished.

NOTICE

The outer bearings of the auger must be lubricated when hot, so that the eventual bitumen residue is expelled.

Pump 5 strokes of grease with a grease gun!

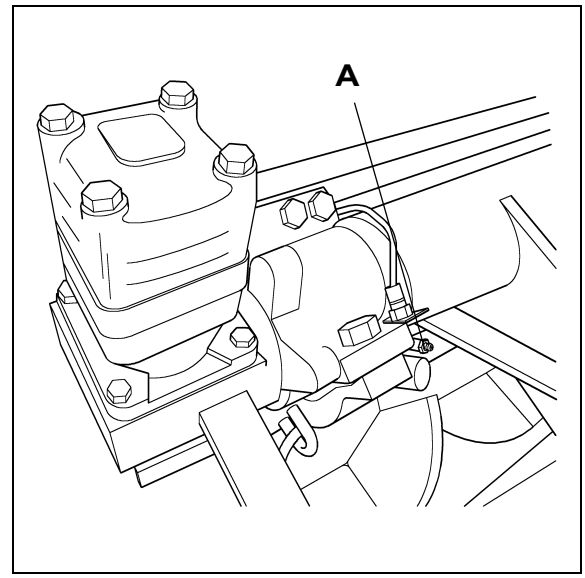

Auger middle bearing (2)

The central bearing (A) is lubricated on the LH-side of the auger.
To do so, slide the bevel gear out.

NOTICE

The central bearing must be lubricated when hot, so that the eventual bitumen residue is expelled.

Pump 5 strokes of grease with a grease gun!

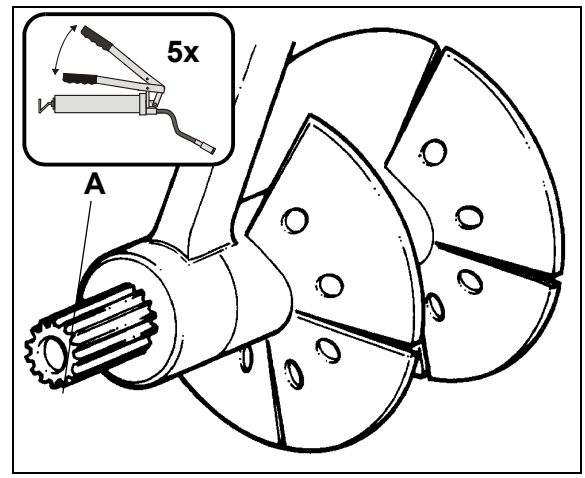

https://truckmanualshub.com/

Auger - drive gear neck bearing (3)

Remove the hexagonal plug (A) in the neck of the drive. Replace the plug under it with an extended grease zert 10x1. Use a grease gun to pump about 10 strokes of grease.

Next, unscrew the grease zert and screw back in both plugs. The neck of the drive is sealed downwards and is lubricated with grease only.

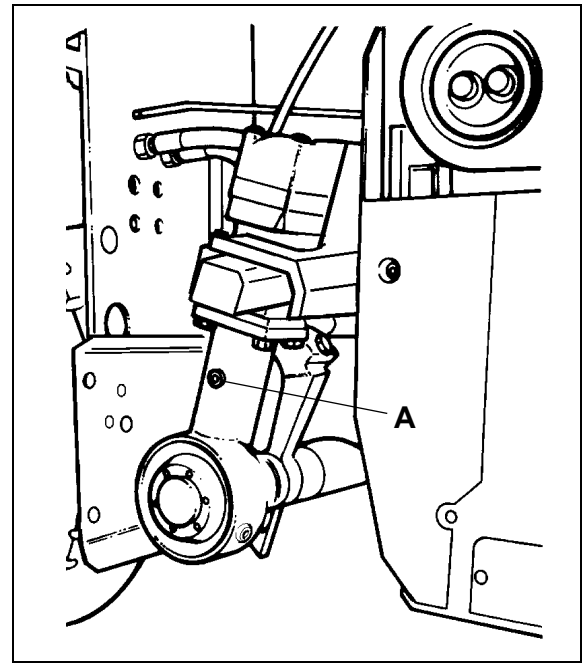

https://truckmanualshub.com/

Auger bevel gear (on the RH and LH sides) (4)

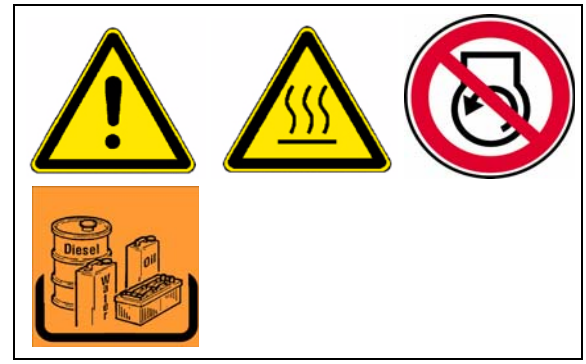

- To **check the oil level** unscrew the inspection / filling plug (A).

NOTE:

The oil level is full when the oil is at the lower edge of the inspection port or a little oil flows from the hole.

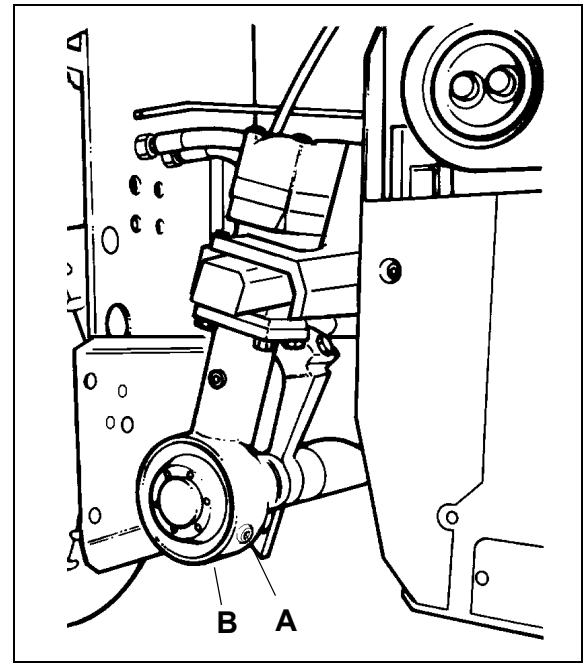

To **add** oil:

- Remove the inspection / filling plug (A).
- Add the proper oil through port (A) until the oil level reaches the lower edge of the inspection hole (A). Use only approved oil.
- Replace the inspection / filling plug (A).

To **change** the oil:

NOTE:

Change the oil when the engine is at operating temperature.

- Remove the inspection / filling plug (A) and the drain plug (B).
- Drain the oil.
- Return the oil drain plug (B) and tighten.
- Fill oil, using an approved fluid, through the filling port (A) until the oil level reaches the lower edge of the inspection hole (A).
- Replace the inspection / filling plug (A).

⚠ CAUTION

Keep the work area clean. Clean any spills!

https://truckmanualshub.com/

Auger blade (5)

NOTICE

If the surface of the auger blade (A) becomes sharp-edged, the diameter of the auger is reduced and the blades (B) have to be replaced.

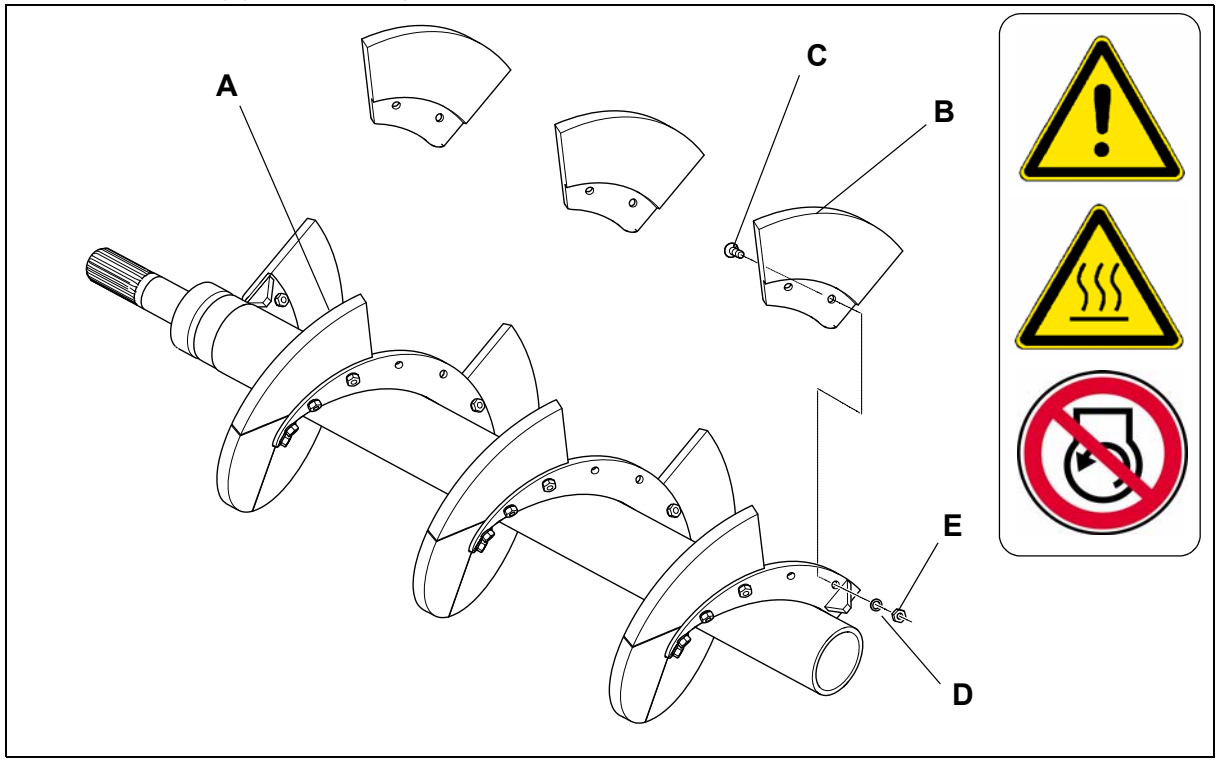

- Remove the bolts (C), washers (D), nuts (E) and auger blade (B).

⚠ CAUTION

Sharp-edged parts can cause personal injury!

⚠ WARNING

Auger blades must be installed with out any play and the contact surfaces must be dirt-free!

- Install the new auger blade (B); replace the bolts (C), washers (D) and nuts (E) if necessary.

https://truckmanualshub.com/

F 5.0 Maintenance - Engine

1 Maintenance - engine sub-unit

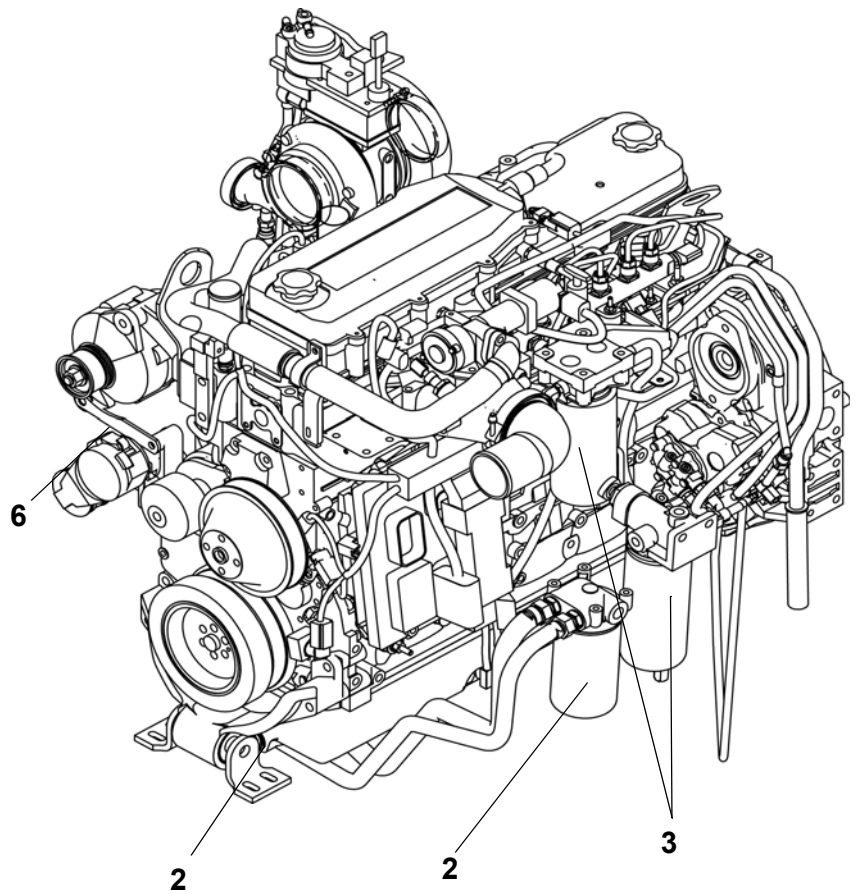

1 - Fuel Tank (Not Shown)
4 - Air Cleaner (Not Shown)
5 - Radiator (Not Shown)

https://truckmanualshub.com/

NOTICE

In addition to these Maintenance Instructions, the Maintenance Instructions of the engine manufacturer must always also be observed. All other maintenance work and intervals noted in these instructions are also binding.

1.1 Maintenance intervals

No.	Interval								Points of maintenance	Remark
	10	50	100	250	500	1000 / year	2000 / 2 years	as required		
1	■								- Fuel tank Check the filling level	
								■	- Fuel tank Refill with fuel	
							■		- Fuel tank Clean the tank	
2	■								- Engine oil system Check oil level	
								■	- Engine oil system Fill with oil	
					■				- Engine lube-oil system Change the oil	
					■				- Engine lube-oil system Oil filter change	
3	■								- Engine fuel system Fuel filter (drain the water separator)	
					■				- Engine fuel system Replace the fuel pre-filter	
					■				- Engine fuel system Replace the fuel filter	
								■	- Engine fuel system Bleeding the fuel system	

Maintenance	■
Maintenance during run-in period	▼

https://truckmanualshub.com/

No.	Interval								Points of maintenance	Remark
	10	50	100	250	500	1000 / year	2000 / 2 years	as required		
4	■								- Engine air filter Check the air filter	
	■								- Engine air filter Empty the dust collecting bin	
								■	- Engine air filter Clean / Replace the filter car- tridge	
5	■								- Engine cooling system Inspection the radiator fins	
								■	- Engine cooling system Clean the radiator fins	
	■								- Engine cooling system Check the level of the coolant.	
								■	- Engine cooling system Fill with coolant	
							■		- Engine cooling system Changing the coolant	
					■				- Engine cooling system Check coolant level (additive concentration)	
6						■			- Engine drive belt Checking of drive belt	
								■	- Engine drive belt Tightening the drive belt	
						■			- Engine drive belt Replace drive belt	

Maintenance	■
Maintenance during run-in period	▼

https://truckmanualshub.com/

1.2 Points of maintenance

Engine fuel tank (1)

NOTE:

There is one fuel tank on each side of the machine!

- Check the **fuel level** on the operating panel (check display).

NOTICE

Fill the fuel tank before each work shift to prevent the fuel system of running dry. If the tank is ran dry, the system will have to be bled causing work delay.

To **add** fuel:

- Unscrew cap (A) (under the tank covers, r.h. and l.h. paver side).
- Fill with fuel through the filler neck until the tank is full.
- Replace the cap (A).
- Repeat the process for the other tank.

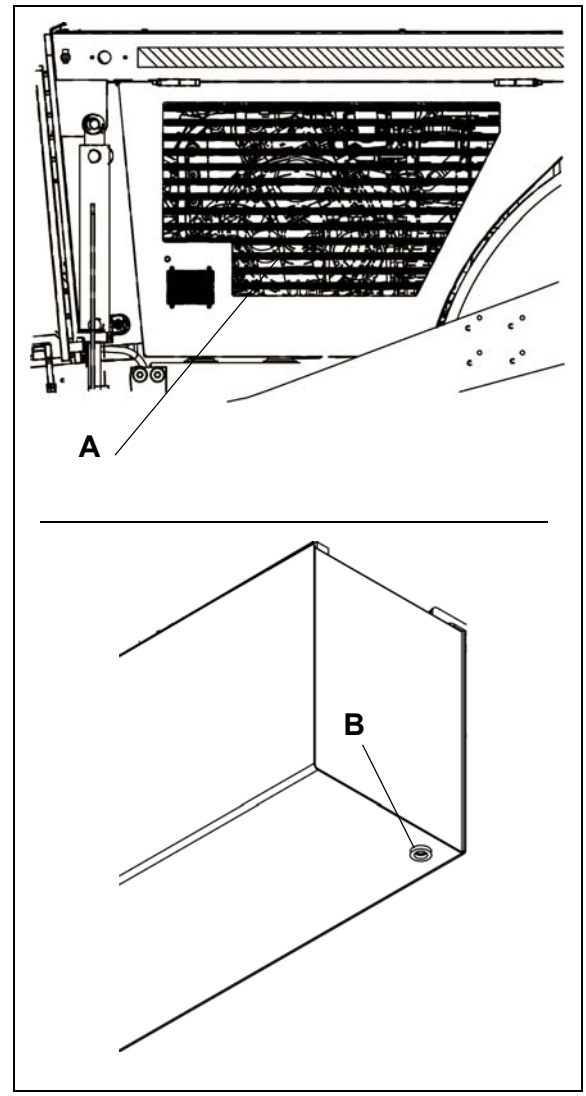

Cleaning the fuel tanks:

- Unscrew the plug (B) at the bottom of the tank and drain about 1 qt. (1 L) of fuel into an environmentally safe collection pan.
- After draining, add a new seal ring to the plug and screw the plug back in place.

Repeat the process for the second fuel tank.

https://truckmanualshub.com/

Engine lube-oil system (2)

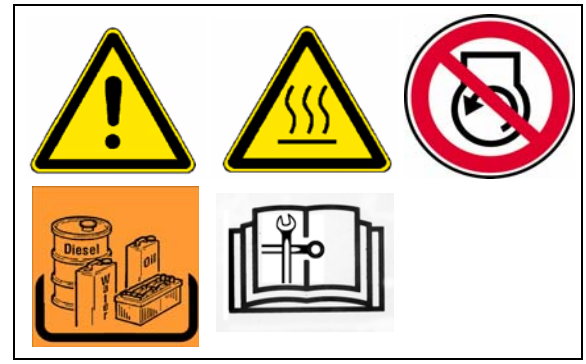

Check oil level

Check that the oil level is between the maximum and minimum lines on the dipstick (A).

NOTE:

Check the oil level with the paver parked on a flat surface!

WARNING

Some state and federal agencies in the United States of America have determined that used engine oil can be carcinogenic and can cause reproductive toxicity. Avoid inhaling vapors, ingestion and common prolonged contact with used engine oil. Do not allow used oil to drain into the ground. Always used proper proceedures to dispose of the oil.

WARNING

To avoid personal injury, avoid direct contact of hot oil with your skin.

CAUTION

If there is too much oil in the engine, the gaskets and seals may become damaged, while too little oil can lead to the oil overheating and damage to the engine.

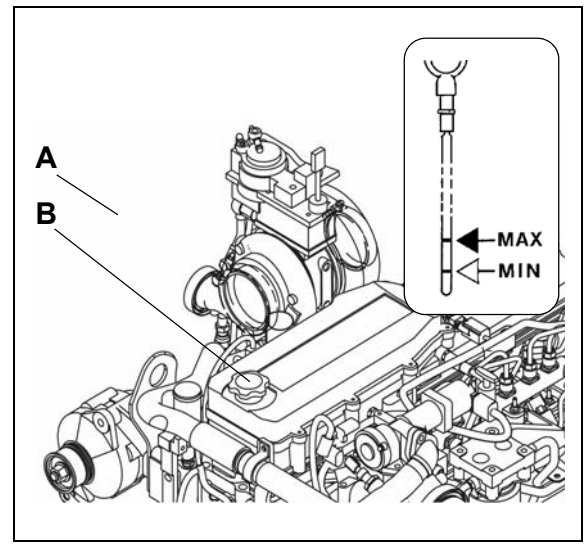

To **add** oil:

- Remove the cap (B).
- Add oil until the correct level is achieved.
- Return and tighten the cap (B).
- Check the oil level once again using the dipstick.

https://truckmanualshub.com/

Oil change:

Do not drain the oil when the engine is cold. As the oil cools, suspended waste particals settle on the bottom of the oil pan. The waste particles are not removed with the draining cold oil. Drain the crankcase with the engine stopped. Draining the crankcase with the oil warm will allow the waste particles that are suspended in the oil to be drained properly.

⚠ WARNING

Avoid contact with hot oil or components. Do not allow used oil to drain into the ground.

There is a drain hose stored behind the left hand side flap.

- Place the end of the hose into a pan to catch the oil.
- Remove the oil drain port plug (C) and let the oil drain.
- Return the plug.
- Remove the oil cap (B) and add only approved oil until the oil level reaches the full mark on the dipstick (A).

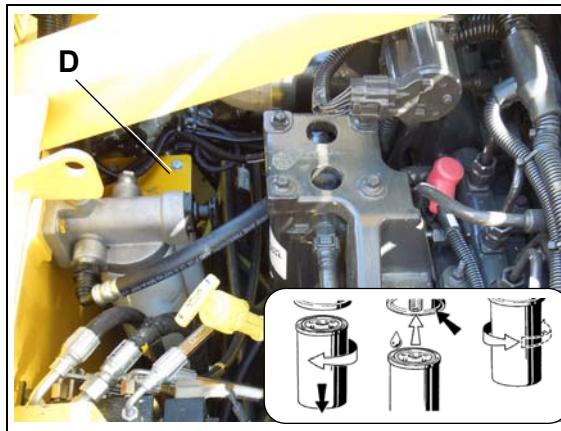

Changing the oil filter:

When changing the oil, mount the new filter after the used oil has been drained.

- Remove the filter (D) located beneath the yellow plate and clean where the new filter installs.
- Apply a thin coat of oil to the seal of the new filter and fill the filter with oil, then mount the filter and tighten by hand.

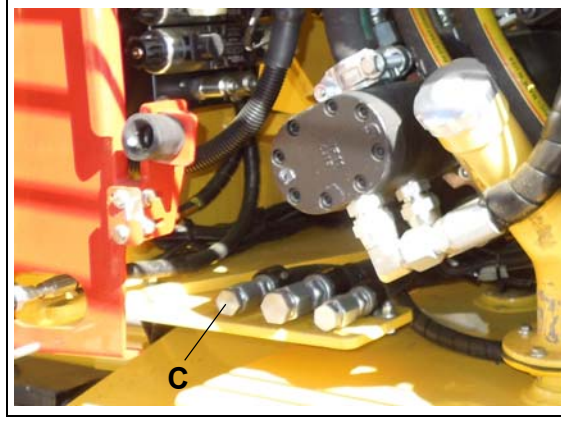

⚠ CAUTION

Fill the oil filter(s) with clean lubricating oil before installation onto the engine. Lack of engine lubrication while the filter(s) are pumped full of oil is harmful to the engine.

https://truckmanualshub.com/

Engine fuel system (3)

The fuel filter system consists of two filters:

- Pre-filter (A) with water separator (located in the engine compartment).
- Main filters (B)

Pre-filter - drain the water

Empty the condensation prior to every engine start or when the engine electronics indicate a fault.

- Drain the water at the drain valve (C), collect it, then close the drain valve again.

⚠ WARNING

Fuel leaked or spilled onto hot surfaces or electrical components can cause a fire. To help prevent possible injury, turn the start switch off when chaning fuel filter or water separtor elements. Clean up any spilled fuel immediately.

Change the pre-filter:

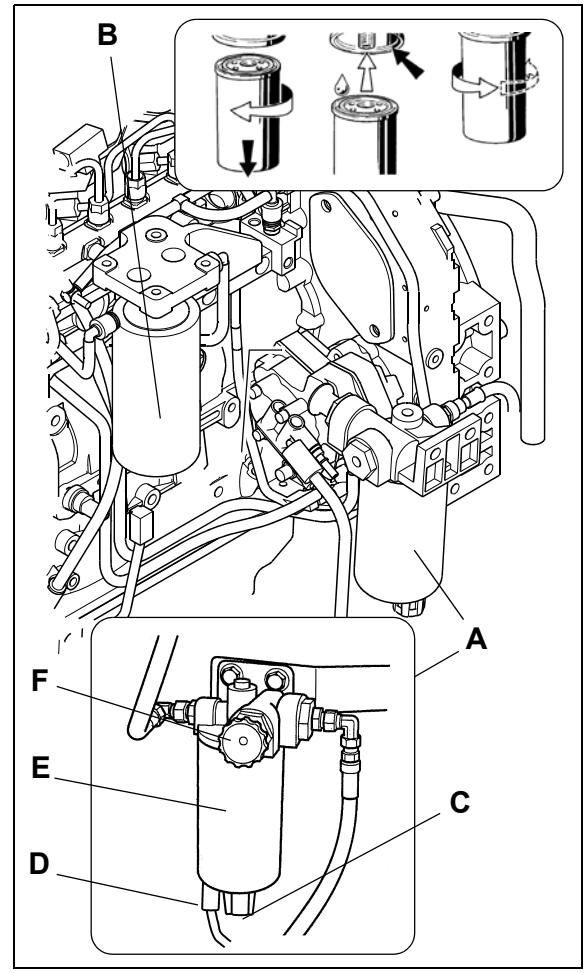

- Drain the separated water at the tap (C), collect it, then close the tap again.
- Remove the water detection indicator connection (D).
- Loosen the filter cartridge (E) using an oil filter wrench or oil filter strap and remove it.
- Clean the sealing surface where the new filter will mount.
- Apply a thin coat of oil to the gasket of the collection sump, mount it under the filter cartridge and tighten by hand.
- Apply a thin coat of oil to the gasket of the filter cartridges, mount them under the holder and tighten by hand.
- Replace the water detector indicator connection (D).
- Unscrew hand wheel of the pump (F). Pump the hand wheel until the filter has filled with fuel.

The system is filled with fuel when resistance at the hand wheel is noticeable during pumping!

- Screw in pump's hand wheel (F).

https://truckmanualshub.com/

Main filter replacement:

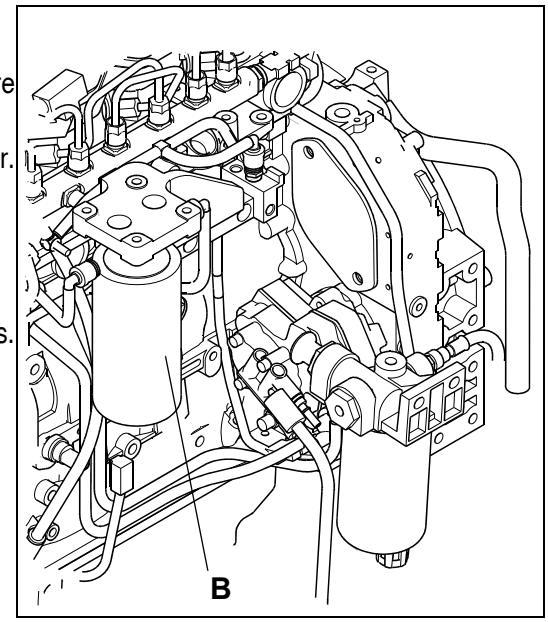

- Loosen the filter (B) and clean the surface where the new filter will mount.
- Apply a thin coat of oil to the gasket of the new filter.
- Tighten the filter by hand.

NOTE:

After mounting the filter, check it for proper tightness.

CAUTION

Do not fill the fuel filters with fuel before installing them. Then fuel would not be filtered and could be contaminated. Comtaminated fuel will cause accelerated wear to the fuel system parts.

https://truckmanualshub.com/

Engine air cleaner (4)

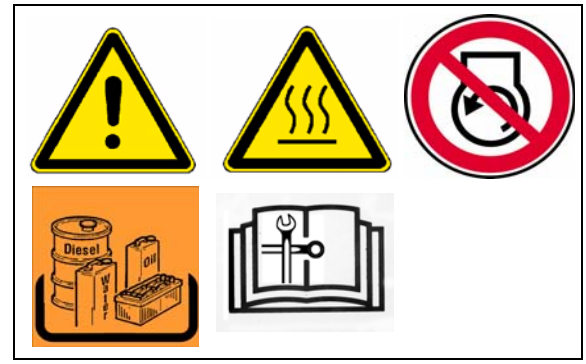

The function of the engine air cleaner is to filter the air taken into the engine through the engine's air intake. The engine air cleaner is the dry type with two elements: a primary element that is cleanable and replacable, and a safety element that should only be replaced and not cleaned. The assembly also include a dust vacuator valve and an air cleaner indicator.

Cleaning / replaciing the dust vacuator valve

Discharge the dust by pressing together the upper part of the valve.

Cleaning / replacing the air filter cartridge

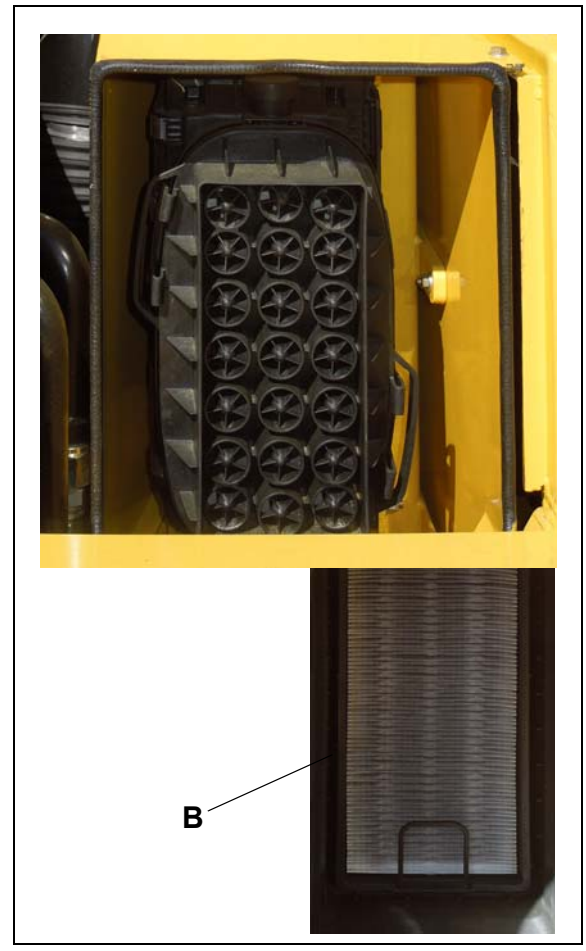

NOTE:

Air intake filter pollution depends on the dust content in the air and the mesh size of the filter selected.

The maintenance of the filter becomes necessary if:

- The restriction gauge reads 25" H_2O when the engine is stopped. This indicates that a restriction has occured. This usually means the filters are dirty and requires opening the air cleaner and cleaning or replacing the elements.
- When the engine electronic unit indicates service required.

NOTICE

Never leave the air cleaner open longer than necessary!

https://truckmanualshub.com/

To remove the filter cartridges:

- Open the latches to remove the cover.
- Remove the primary filter and then the filter cartridge (B).

NOTE:

Clean the filter cartridge and replace at least once per year.

- Blow out with dry pressure air (max. 30 psi / 2.07 bar) from inside blowing out. In case of an urgency, tap the cartridge to remove dust.

- Check the filter's paper of the filter cartridge (by exposing to light) and inspect the seals. Replace them as required.

After completing the maintenance:

- Press the reset button (F) for the maintenance indicator (if equipped). The maintenance indicator is ready for operation.

https://truckmanualshub.com/

Engine Coolant system (5)

Fully formulated antifreeze must be mixed with quality water at a 50/50 ratio. A 50/50 mixture of water and ethylene glycol or propylene glycol antifreeze to fill the cooling system. The 50/50 mix gives protection to the cooling system at a range of --34_F(--36_C) freezing point and a 228_F (110_C) boiling point, which is adequate for locations in North America. The actual lowest freezing point of ethylene glycol antifreeze is 68 percent. Using higher concentrations of antifreeze will raise the freezing point of the solution and increase the possibility of a silica gel problem.

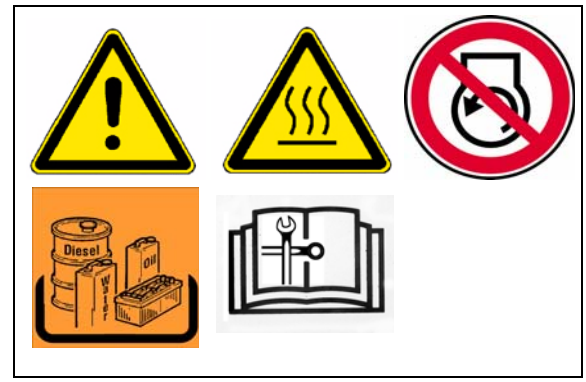

WARNING

Do not remove the radiator cap from a hot engine. Wait until the temperature is below 120° F (50° C) before removing the pressure cap. Failure to do so can result in personal injury from heated coolant spray or steam. Remove the filler cap slowly to relieve coolant system pressure.

Checking / filling coolant level

The coolant level is checked when the engine is cold. Check the coolant level daily (10 hours or as needed). Use a Refractometer to ensure the anti-freeze and anti-corrosive liquid is sufficient (-25° F / -31.6° C).

- Add sufficient amount of coolant through the fill cap (A) on the coolant tank. Check the coolant level at the site-glass (B) inside the fuel fill door. Do not mix coolants. Only use Dynapac approved coolants.

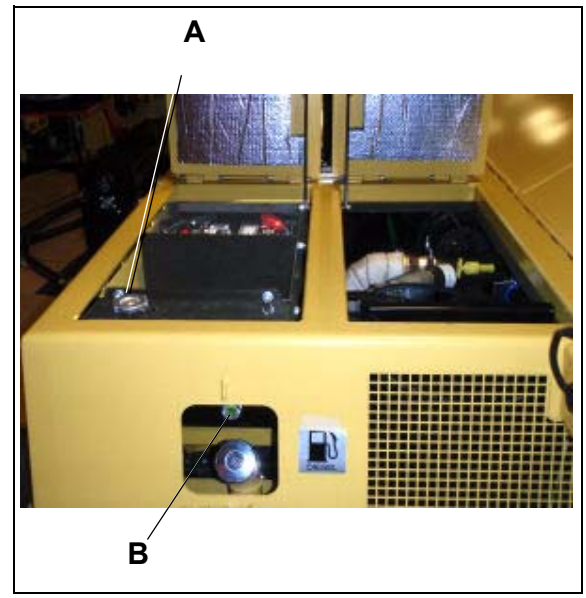

CAUTION

Do not add cold coolant to a hot engine. Engine castings can be damaged. Allow the engine to cool to 120° F (50° C) before adding coolant.

Changing the coolant

To change the coolant:

- Remove the radiator cap.
- Open the drain valve at the bottom of the radiator and drain the cooler into an environmentally approved drain pan with a capacity of about 5 gallons (19 liters).
- Inspect the hoses to and from the radiator and replace them if they look worn or cracked.

https://truckmanualshub.com/

- Once drained, dispose of the coolant fluid in an appropriate manner.

⚠ DANGER

Coolant is toxic. Keep away from children and pets. Dispose of in accordance with federal, state and local environmental regulations

- Close the drain valve.
- Fill the radiator with a 50/50 mix of water and ethylene glycol or propylene glycol antifreeze.
- Install the radiator cap.
- Start the engine and allow it to run a few minutes.
- While the engine is running, check the radiator and hoses for leaks.
- When the engine coolant temperature reaches about 180°F (80°C), turn the engine off and check the coolant level again.

Checking and cleaning of the radiator fins

- If necessary, remove leaves, asphaltic oils and residue, dust or sand from the radiator.

https://truckmanualshub.com/

Engine drive belt (6)

Check drive belt/replacement

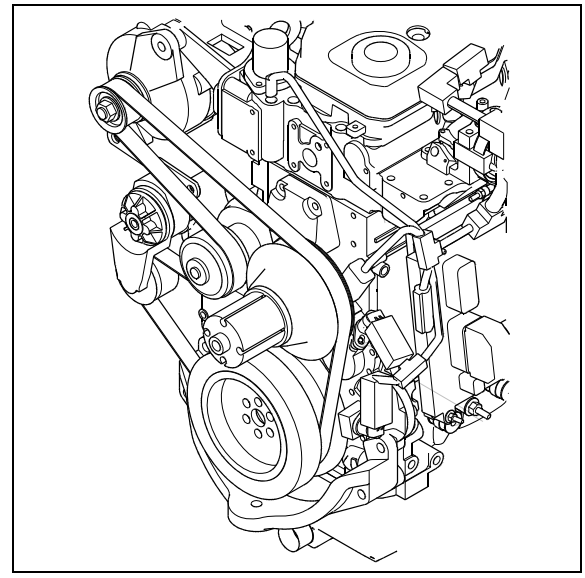

Under normal operating conditions, the engine drive belt(s) should be inspected daily. Belt damage can be caused by incorrect size or length, pulley misalignment, incorrect installation, severe operating environment and oil or grease on the belt(s).

Adjust the belt tension in order to minimize belt slippage. Belt slippage will decrease the life of a belt. If the belt is too loose, the belt will vibrate. This vibration is enough to cause unnecessary wear on the belt(s) and on the pulleys. If the belt(s) are too tight, unnecessary stresses are placed upon the pulley bearings and upon the belts. These stresses will shorten the life of the belt(s) and the pulley bearings.

To maximize the engine performance, visually inspect the belts for tension, wear, breaks, cracks or other damage. Replace the belts that are cracked or frayed. Adjust belts that have a glazed or shiny surface which indicates belt slippage. Correctly installed and tensioned belst will show even pulley and belt wear.

Refer to the Engine Manual for proper proceedure for removing and installing the belts.

https://truckmanualshub.com/

https://truckmanualshub.com/

F 6.0 Maintenance - Hydraulic System

1 Maintenance - hydraulic system

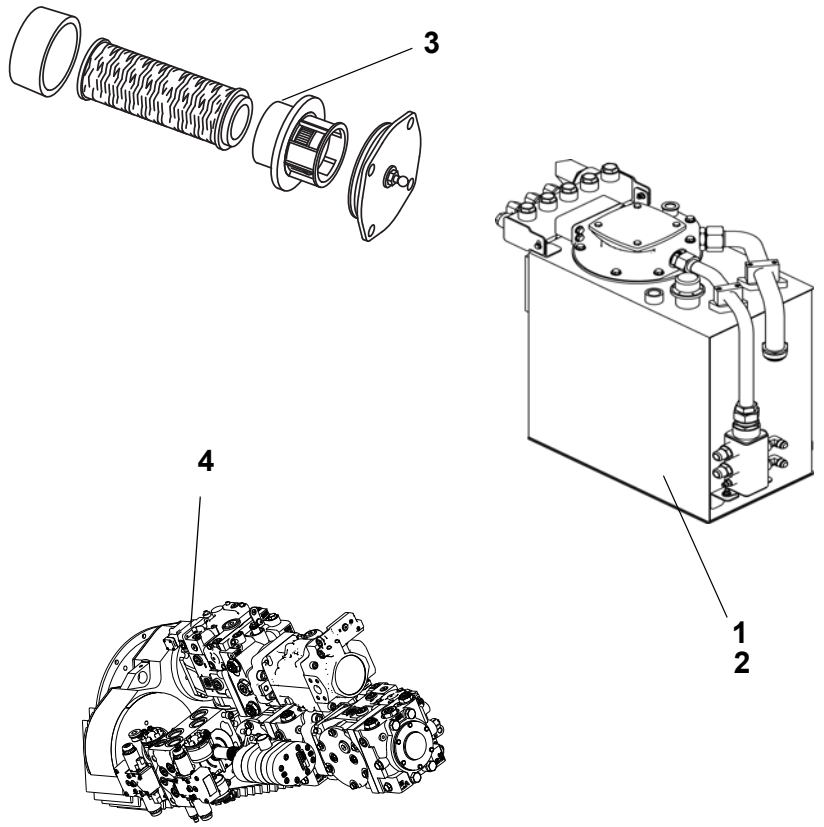

5 Hydraulic Hoses - Not Shown

https://truckmanualshub.com/

1.1 Maintenance intervals

No.	Interval								Points of maintenance	Remark
	10	50	100	250	500	1000	2000 / 1 years	as required		
1	■								- Hydraulic oil tank Check the oil level	
								■	- Hydraulic oil tank Fill with oil	
							■		- Hydraulic oil tank Oil change and cleaning	
2	■								- Hydraulic oil tank Check the maintenance indicator	
							■	■	- Hydraulic oil tank Intake / return	
			▼			■		■	- Change the hydraulic filter	
3	■								- High pressure filter Check the maintenance indicator	
			▼			■		■	- High pressure filter Replace the filter cartridge	
4		■							- Pump distribution gear Check the oil level	
								■	- Pump distribution gear Fill with oil	
						■			- Pump distribution gear Oil change	
5					■				- Hydraulic hoses Inspect hoses	
							■	■	- Hydraulic hoses Replace the hoses	

Maintenance	■
Maintenance during break-in period	▼

https://truckmanualshub.com/

1.2 Hydraulic System

A paving machine has many components and implements that are controlled by a hydraulic system, either directly or indirectly. Before working on or inspecting any part of a paving machine, it is important that the individual knows how the components move and are controlled by the hydraulic system components including the respective control circuits.

Before working on or inspecting any component, it must be physically constrained from any movement that could cause injury to the worker. The worker must be alert to not placing any part of his/her body where movement of a component could cause injury, unless that component is physically contrained from movement, if the hydraulic system fails, is disconnected, or is asignaled to cause movement.

It must also be recognized that there are occasions where component and or vehicle movement may react to the release of potential energy. Where applicable it must be confirmed that all measures are employed to ensure that any and all sources of potential energy are released and/ or physically restrained.

All tramming, hopper and conveyor functions and augers are hydraulically powered. The hydraulic system consists of a 50 gallon (189.21 liter) hydraulic reservoir with a 10 micron filtration system. The propel pumps, conveyor and auger pump, generator pump and screed functions are driven by the pump drive gear box which is mounted directly to the engine. The hydraulic system includes various motors, cylinders, valves, filters and hose piping. A hydraulic oil cooler assures optimum oil temperatures to maximize system efficiency and component life.

https://truckmanualshub.com/

1.3 Points of maintenance

Hydraulic oil tank (1)

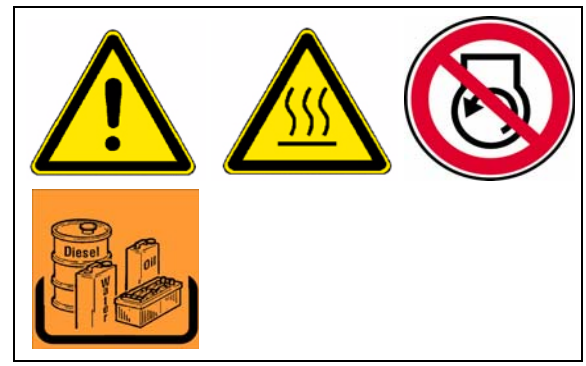

- **Oil level** check at sight level gauge (A) on the side of the tank.

NOTE:

View the sight level gauge by the opening fuel tank flap on the L.H. side of the machine.

NOTICE

With the cylinders fully retracted, the oil level should be at the upper mark.

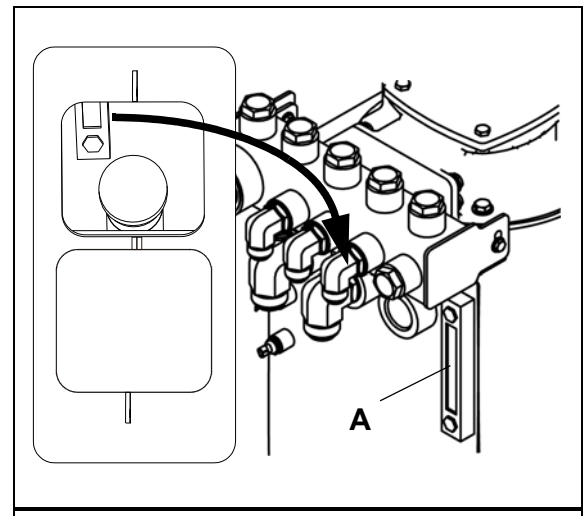

To **add** oil:

- Remove cap (B).
- Add oil through the fill port until the level shows full at the sight level gauge (A).
- Return cap (B).

NOTE:

Regularly clean dust and contaminants from the vent port on the oil tank. Clean the surfaces of the oil cooler.

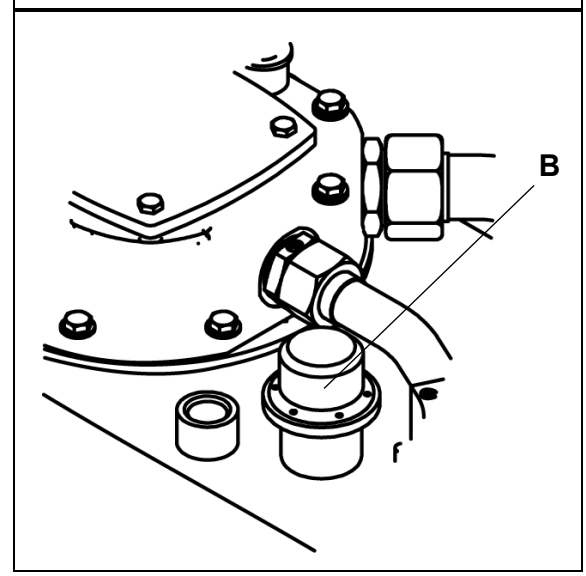

⚠ CAUTION

Use only the recommended hydraulic oils - see section “Recommended hydraulic oils“.

https://truckmanualshub.com/

To **change** the oil:

- To drain the hydraulic oil unscrew the drain plug (C) at the bottom of the tank.
- Collect the oil in an appropriate container using a funnel.
- After draining, add a new seal ring and then screw the plug back into place.

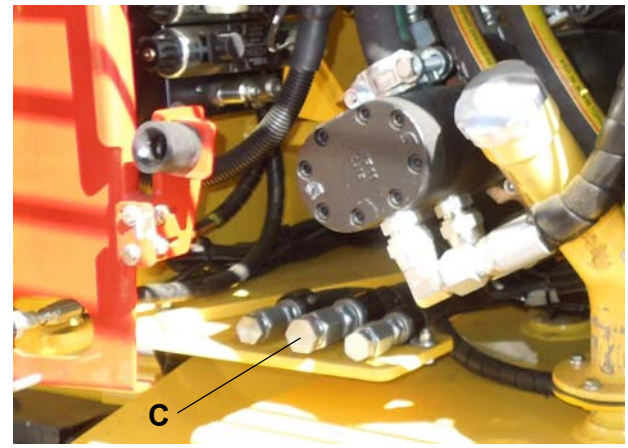

⚠ WARNING

Hot oil or components can burn. Oil must be at normal operation temperature when draining. Avoid contact with hot oil or components.

⚠ WARNING

Gearbox must be filled with fresh, clean oil.

⚠ WARNING

Always change the hydraulic oil filter(s) when changing the hydraulic oil.

https://truckmanualshub.com/

Suction/return flow hydraulic filter (2)

Change the **filter** at the intervals specified or when the **maintenance indicator (A)** is at the red mark or when changing hydraulic oil. When inspecting the maintenance indicator, the hydraulic oil must be at least 175° F (80° C).

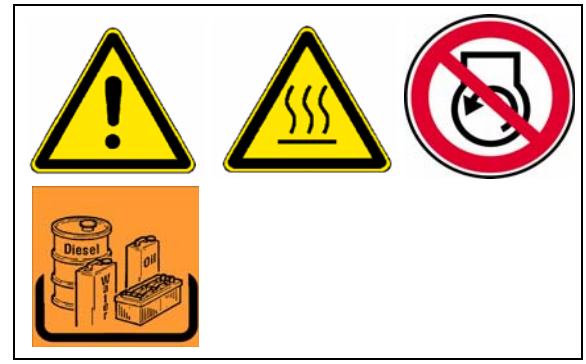

⚠ WARNING

When changing the hydraulic oil also change the filter.

- Remove the lid fastening screws (B) and remove the lid.
- Disassemble the withdrawn unit into the following parts:
  - lid (C)
  - separating plate (D)
  - filter (E)
  - dirt collection cage (F)
- Clean the filter case, the lid, the separating plate and the dirt collection cage.
- Check and replace the O-rings (G) when required.
- Wet the seal surfaces and the O-ring with clean fuel.

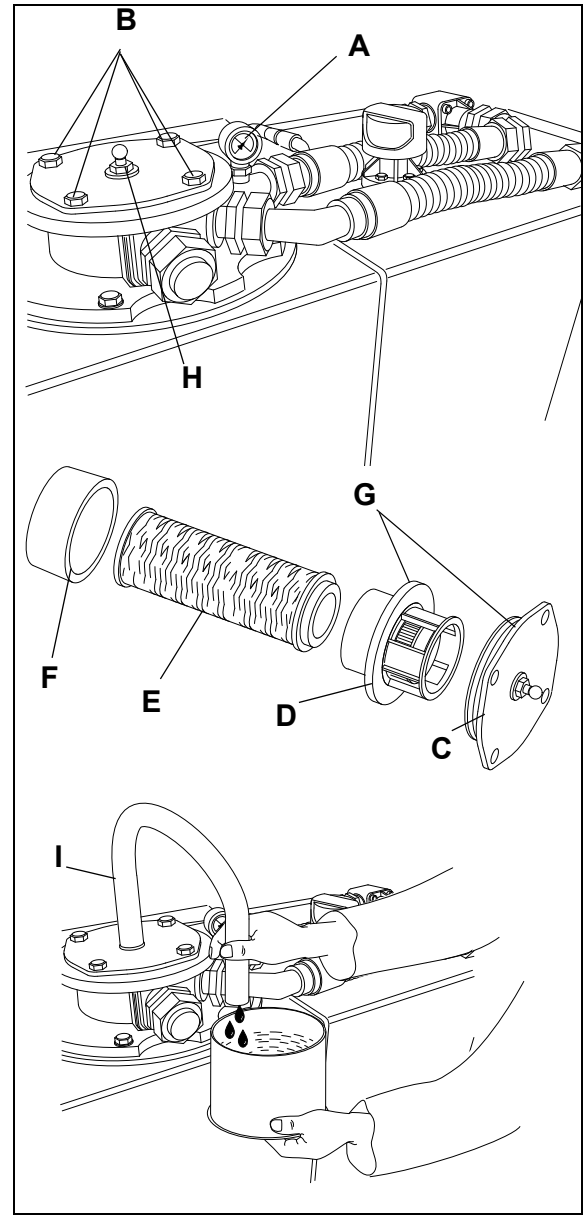

https://truckmanualshub.com/

Venting the filter:

- Fill the open filter case with hydraulic oil to just below the upper rim.
- Should the oil level drop, fill with oil.

NOTICE

The oil level slowly lowering by about 1/4 in./min. (1 cm/min) is normal!

- When the oil level remains steady, mount the assembled unit with the new filter cartridge, carefully into the housing and tighten the locking screws of the lid (B).
- Open the vent screw (H).
- Mount a transparent hose (I) on the vent screw and lead it into an appropriate container.
- Start the engine and run it at idle speed.
- Shut-off the bleeding screw (H) as soon as the oil discharged through the hose is clean and free of air bubbles.

⚠ WARNING

The process from mounting the filter lid until starting the engine should take place within 3 minutes or the oil level will drop too much in the filter case.

⚠ CAUTION

Check the seal after changing the filter.

https://truckmanualshub.com/

High pressure filters (3)

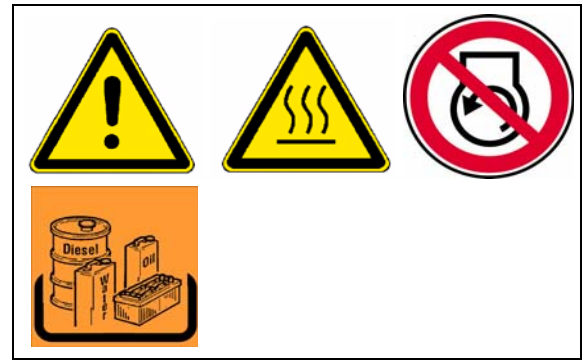

Replace the auger charge filter (A) cartridge and conveyor pump / work system filter (B) when the maintenance indicator on top of the filter cartridge head turns “red”.

- Unscrew filter housing.
- Remove the filter cartridge.
- Clean the filter housing.
- Insert the new filter cartidge.
- Replace the seal (o’ring) on the filter housing.
- Screw the filter housing on by hand, then tighten it using the appropriate tool.
- Test the filter for tightness and leaks.

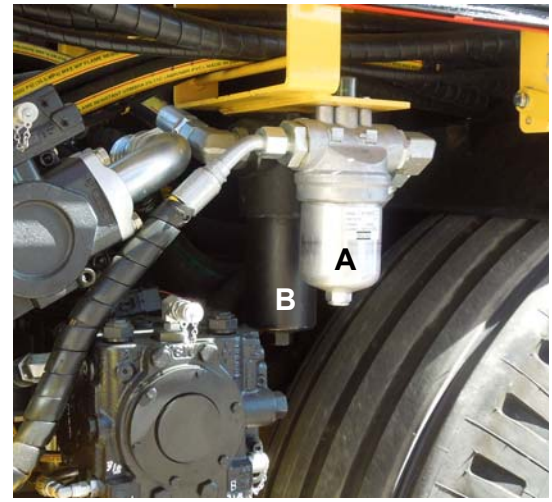

WARNING

Always replace the seal (o’ring) whenever the filter cartridge is replaced.

NOTICE

After the filter cartridge has been replaced, the indicator on top of the filter cartridge head will return to “green”.

https://truckmanualshub.com/

Pump distribution gear (4)

- **Check the Oil level** at the sight glass (A) (at the side of the distribution box).

NOTE:

The oil level must be up to the center of the sight glass.

To **add** oil:

- Unscrew the plug (B).
- Add oil until the sight glass (A) shows the correct fluid level.
- Return and tighten the plug (B).

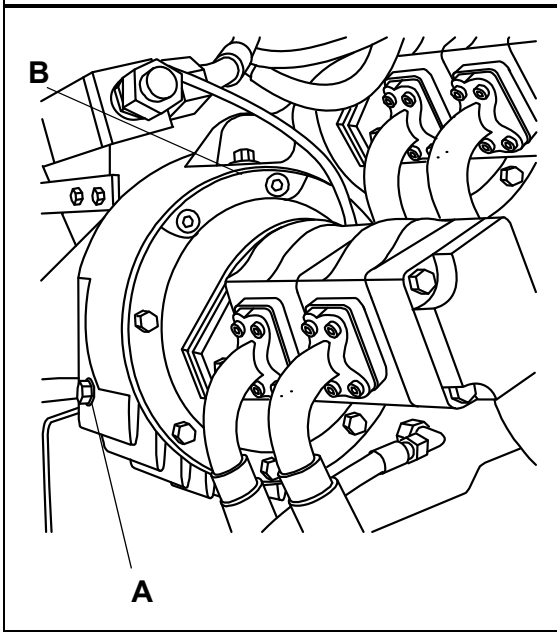

CAUTION

Keep the work area clean!

WARNING

Hot oil or components can burn. Oil must be at normal operation temperature when draining. Avoid contact with hot oil or components.

WARNING

Gearbox must be filled with fresh, clean oil.

https://truckmanualshub.com/

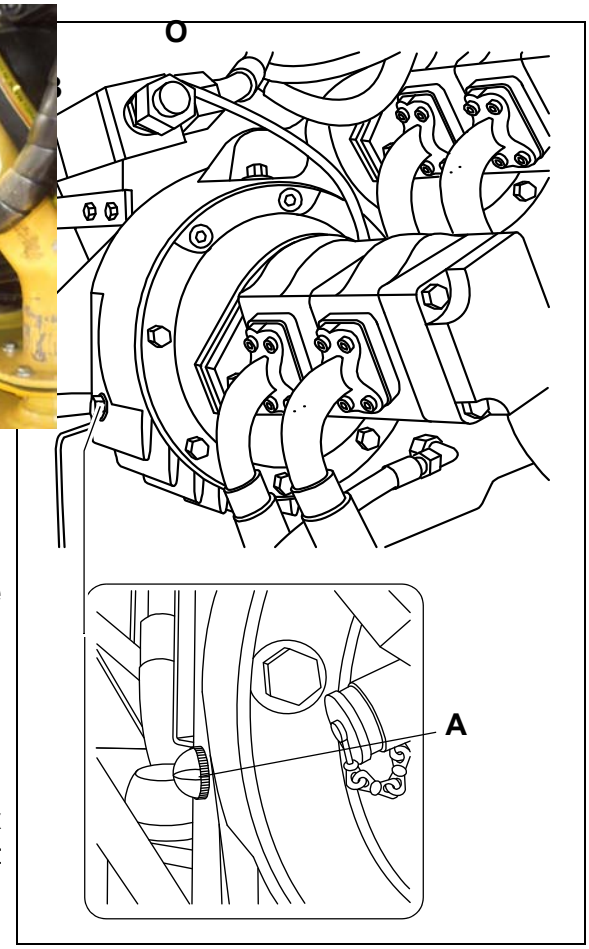

Change the oil when the engine is at operating temperature.

- Place the end of the hose in an appropriate container and catch the oil.
- Open the shut-off valve and let the oil drain completely.
- Shut off the valve, remove the hose and return the cover cap.
- Add only approved oil to the distribution box (B) until the oil level is at the center of the sight glass (A).

⚠ WARNING

Hot oil or components can burn. Oil must be at normal operation temperature when draining. Avoid contact with hot oil or components.

https://truckmanualshub.com/

Hydraulic hoses (5)

Frayed or damaged hoses can break instantly causing hot hydraulic fluid to spray causing severe burns. Always replace worn or damage hoses immediately.

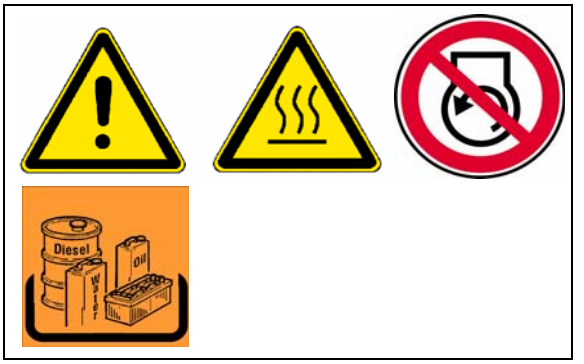

WARNING

Hot oil or components can burn. Oil must be at normal operation temperature when draining. Avoid contact with hot oil or components.

- Check the condition of the hydraulic hoses carefully.
- Immediately replace any damaged hoses.

DANGER

Old hoses may become porous and burst! Hot oil spraying from a burst hose can cause severe burns!

NOTICE

Each hose has the maximum pressure allowed for that hose printed on it.

CAUTION

Do not use hoses that have been in storage for a long time. Check for the proper pressure rating printed on the hose.

https://truckmanualshub.com/

https://truckmanualshub.com/

F 7.1 Maintenance - Travel Drive, Steering

1 Maintenance - travel drive, steering

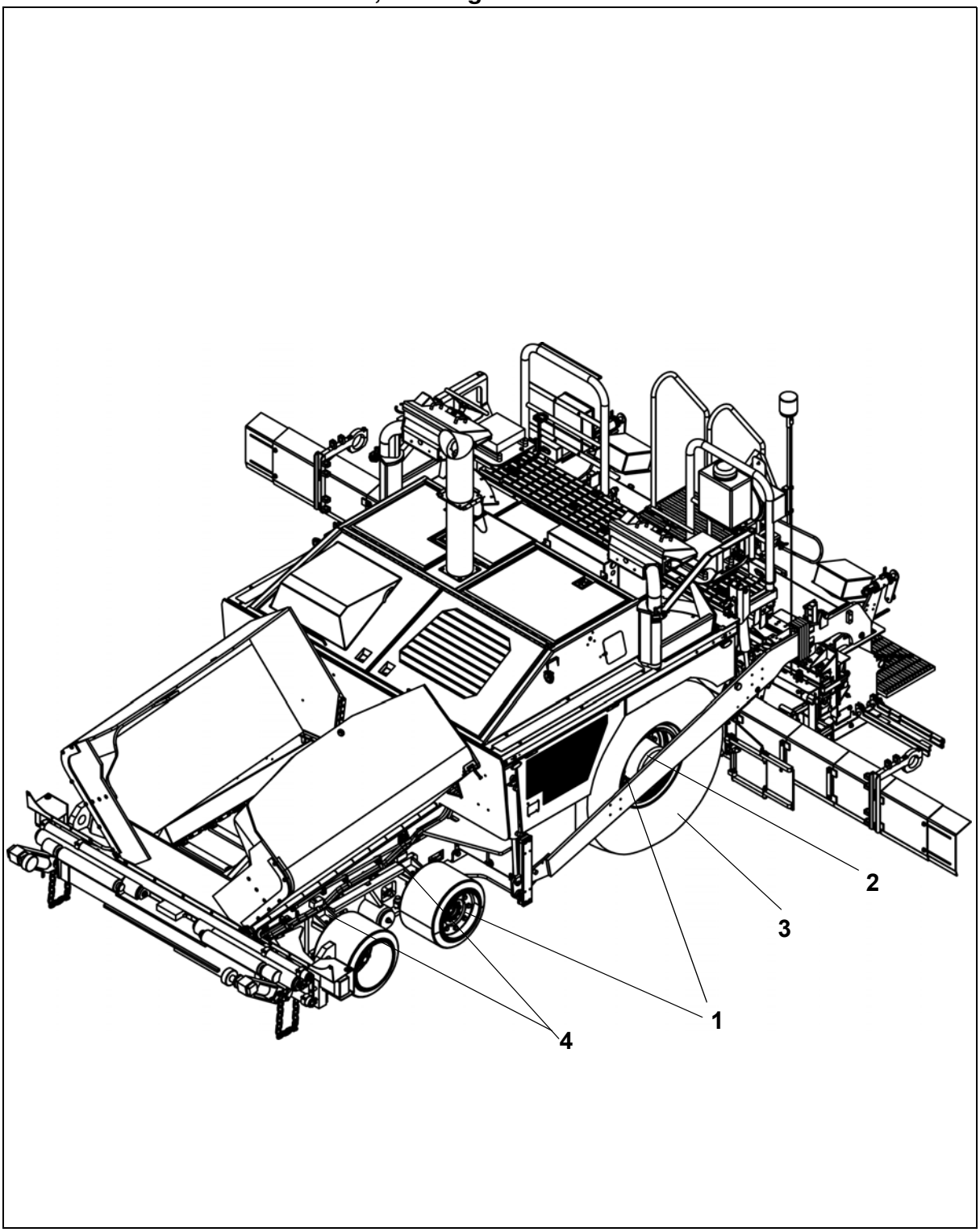

https://truckmanualshub.com/

1.1 Maintenance intervals

No.	Interval								Points of maintenance	Remark
	10	50	100	250	500	1000 / year	2000 / 2 years	as required		
1		▼							- Rear wheels - wheel mounting nuts	
		▼							- Front wheels - wheel mounting nuts	
2				■					- Check the oil level of the planetary gear	
								■	- Check the oil level of the planetary gear (drive)	
						■			- Planetary gear (drive) - Change the oil	
3		■							- Air pressure (drive wheels) - check	
								■	- Air pressure (drive wheels) - adjust	
4		■							- Lubrication points - lubrication of axle stubs	
		■							- Lubrication points - lubrication of steering	
		■							- Lubrication points - lubrication of swing axle	
		■							- Lubrication points - lubrication of swing axle	

Maintenance	■
Maintenance during run-in period	▼

https://truckmanualshub.com/

1.2 Points of maintenance

Wheel mounting nuts (1)

Rear wheels

The 16 wheel mounting nuts have to be tighten in the described order with a torque of 375 ft. lbs. (508 Nm) dry thread.

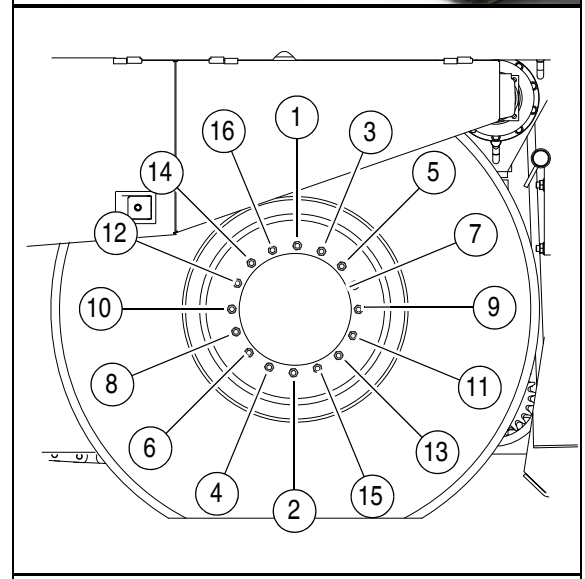

Front wheels (with front wheel drive)

The 10 wheel mounting nuts have to be tighten in the described order with a torque of 400 ft. lbs. (542 Nm) dry thread.

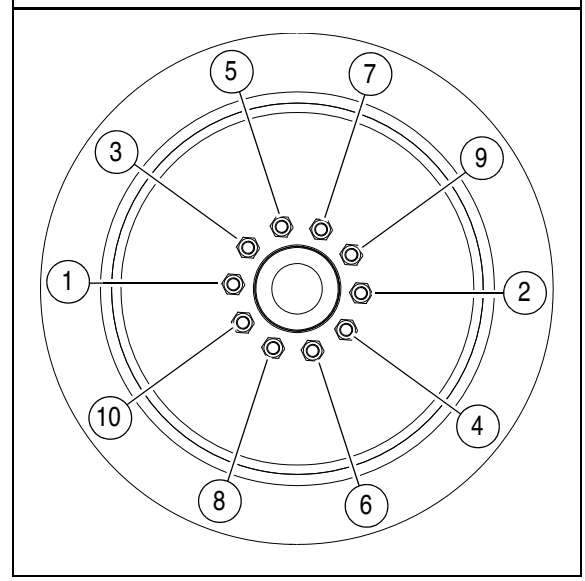

https://truckmanualshub.com/

Planetary gear (2)

NOTICE

Care must be taken to ensure fluids are contained during performance of inspection, maintenance, testing, adjusting and repair of the paver. Be prepared to collect the fluid with suitable containers before opening any compartment or disassembling any component containing fluids. Always dispose of fluids according to local regulations and mandates.

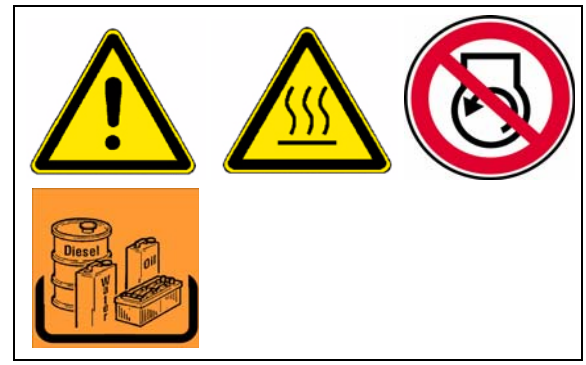

To check the oil level in the Planetary Gearbox

- Position the planetary gearbox so that the oil drain (B) is vertical at its lowest point (about the 6 o'clock position). The oil filler plug (C) should then be on the Left or Right outside fo the planetary middle.
- Clean the area around the check and fill plugs and the drain plug.
- Place an oil collection container underneath the planetary gearbox.

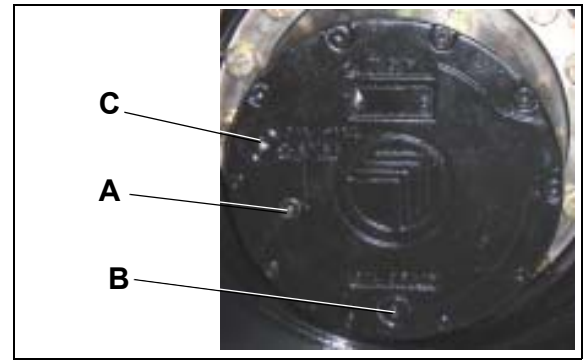

NOTICE

The proper oil level is at the lower edge of the inspection port (A) or a little oil flows from the hole.

- Remove the oil level check plug (A). The oil level should be at the oil level check port.
- If the level is low, add oil.

⚠ WARNING

Gearbox must be filled with fresh, clean oil.

NOTICE

If the oil looks contaminated, it must be drained and replaced with clean, fresh oil.

- Fill with oil until the level has reached the oil level check port (A). Insert check and fill plugs and then tighten

https://truckmanualshub.com/

To change oil:

NOTICE

Change the oil when the engine is at operating temperature.

⚠ WARNING

Hot oil or components can burn. Oil must be at normal operation temperature when draining. Avoid contact with hot oil or components.

⚠ CAUTION

Make sure that no pollution or foreign matter gets into the drive.

- Stop the machine so that the “TOP” is at the topmost position and the drain plug is at the bottom.
- Place an oil collection container underneath the planetary gearbox.
- Unscrew the drain plug and the filling plug and drain the oil.
- Check and replace the seals of both screw plugs.
- Return drain plug.
- Remove the inspection plug.
- Fill oil through the filling hole until the oil level reaches the lower edge of the inspection hole. Use only approved fluids.
- Replace and tighten the inspection plug and filling plug.

https://truckmanualshub.com/

Air pressure (driving wheels) (3)

Check/adjust the air pressure:

NOTICE

The required tire pressure is 45 psi (pounds per square inch) for each tire.

Check the air pressure at the valve and adjust as required.

https://truckmanualshub.com/

Places of lubrication (4)

Steering

NOTICE

The grease zert is located on the **right** side wall and the steering linkage is supplied with grease through a lubrication line.

Pump the grease gun 5 times into the zert at the end of the lubrication line for the steering linkage.

Wheel bearing

NOTICE

The grease zerts are found on the wheel hub of each wheel.
There is no grease zert in the driven wheel.

Pump the grease gun 5 times at each of the wheel hubs.

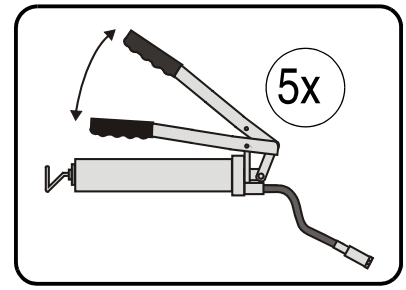

Grease Points

Non-curb side

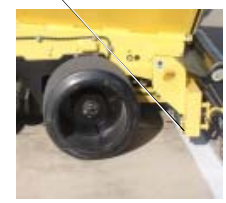

Curb side

Grease Point

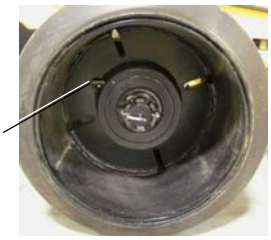

Wheel Hub

https://truckmanualshub.com/

Gear- lubrication materials (5)

Lubricants and fuels

NOTE:

Use only the lubricants listed or the equivalent quality lubricants. Use only clean containers for adding oil or fuel.

Take into account the filling volumes (see the section “Filling volumes“).

⚠ WARNING

Low quality oil or lubricant causes faster wear and the failure of the machine.

⚠ WARNING

Mixing of synthetic and natural oils is explicitly prohibited!

Grease	Dynapac Paver Grease
Gear oil - machine drive	Dynapac Gear Oil 200
Transmission oil - idlers	Dynapac Gear Oil 300

Filling volumes

	Material	Volume
Diesel engine	Ultra Low Sulphur Diesel	98 gal
Planetary gear	Dynapac Gear Oil 200	to the max filling level
Lubrication points	Dynapac Paver Grease	to the max filling level

https://truckmanualshub.com/

F 8.1 Maintenance - Electronic System

1 Maintenance - Electronic system

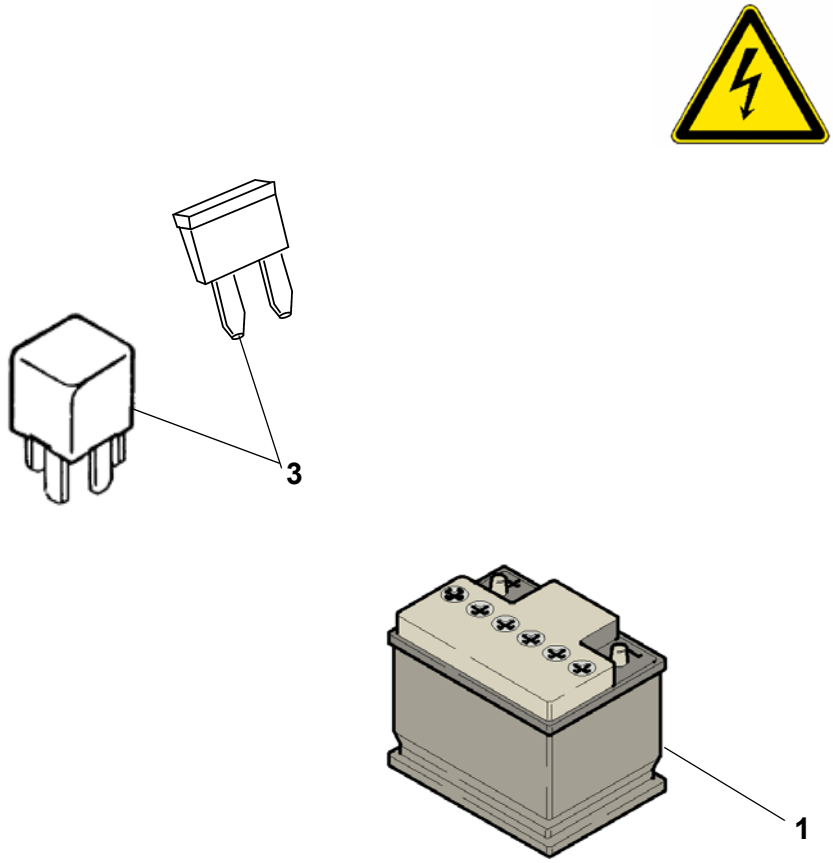

https://truckmanualshub.com/

1.1 Maintenance intervals

Item	Interval									Maintenance point	Note
	10	50	100	250	500	1000 / annually	5000	20000	If necessary		
1			■							Check the charge level of the batteries, replace if necessary	
				■						Apply grease to battery terminals	
3									■	Electric fuses	

Maintenance	■
Maintenance during the running-in period	▼

https://truckmanualshub.com/

1.2 Points of maintenance

Batteries (1)

Maintenance of batteries

NOTE:

The batteries equipped with the paver are “Maintenance Free” batteries. When batteries can no longer hold a charge, they must be replaced.

NOTICE

The battery terminal clips must be free of corrosion (oxide) and protected with grease.

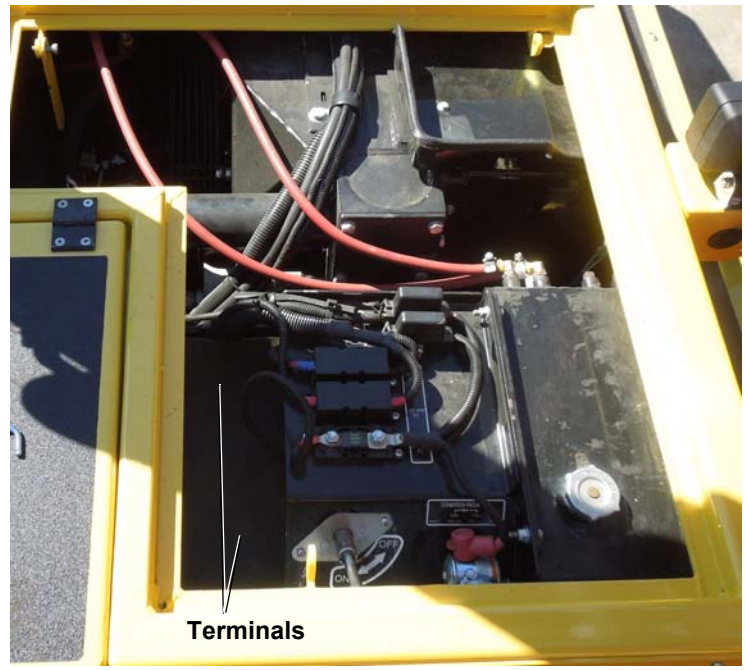

⚠ CAUTION

When removing the batteries, always remove the negative terminal first, ensuring that the battery terminals do not short circuit. After batteries are replaced, connect the negative terminal last

⚠ WARNING

Always where protective glasses when working with batteries.

⚠ WARNING

Never disconnect any charging unit circuit or battery circuit cable from the battery when charging unit is operating. A spark can cause explosions.

https://truckmanualshub.com/

Electric fuses / relays (3)

Main fuses (A)

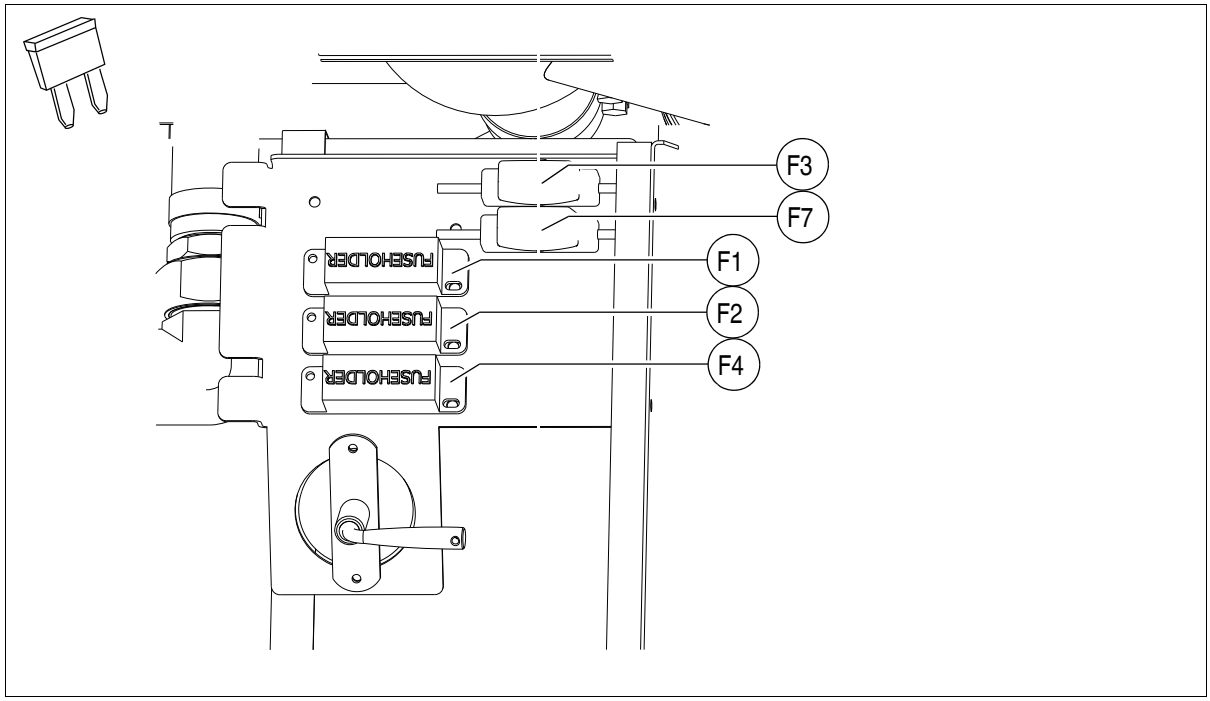

Fuse No.	Description	Rating (A)
F1	Main Battery Fuse	100
F2	Alternator Fuse	100
F3	Key Switch Line Fuse	50
F4	Air Heater Fuse	125
F7	ECM Power Supply Fuse	30

https://truckmanualshub.com/

Fuses in terminal box (B)

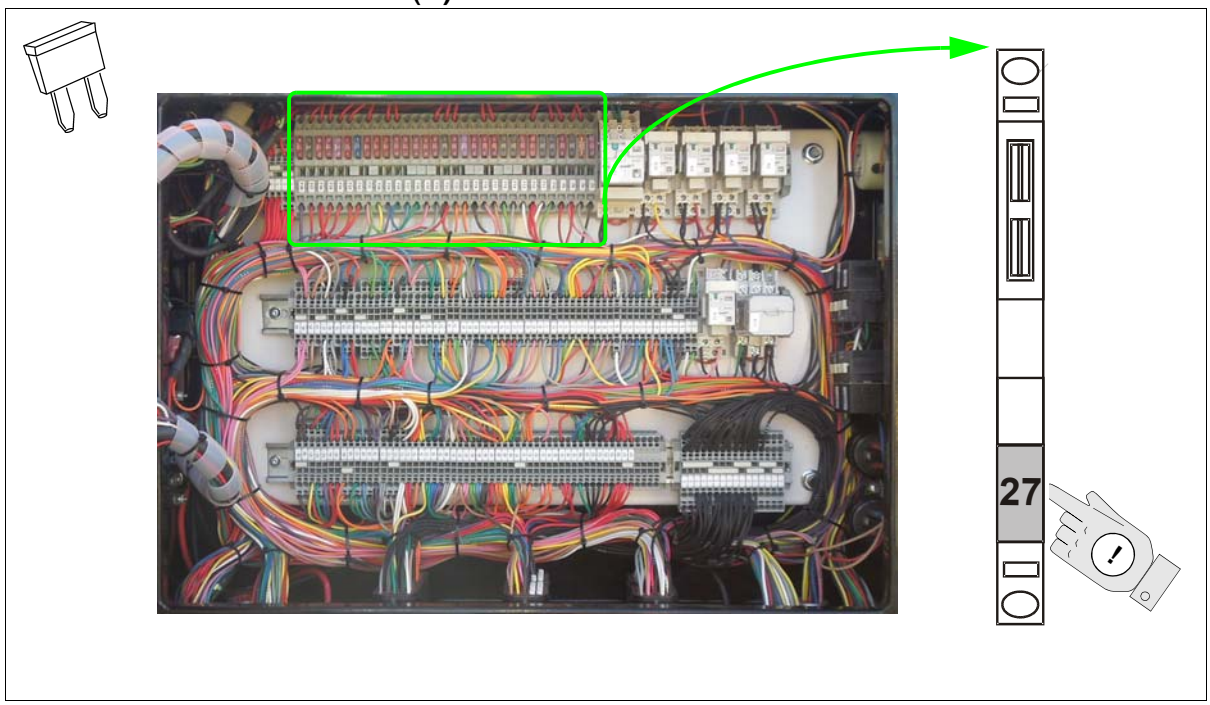

Fuse No.	Description	Rating (A)
F5	Propel Controller	10
F6	Emergency Stop	5
F8	ECM Key Switch Signal	5
F9	Key Switch Power	10
F10	DP200 Display Power	5
F11	Horn Power Supply	5
F12	Start Prevention Relay, Hour Meter	10
F13	Propel Devices	10
F14	Console Select Switch and Parking Brake	5
F15	Auger Conveyor On/Off and Auto/Manual Switch	5
F17	Auger Raise/Lower	10
F18	Tow Arm Levelling Control	10
F19	Screed Raise/Lower, Ext/Ret	10
F20	Vibration Solenoid	3
F22	Work Lights	10
F23	Dash Board Lamp	5
F24	DC 24 V Outlet Front	10
F25	DC 24 V Outlet Front	10
F26	DC 24 V Outlet Rear	10
F27	DC 24 V Outlet Rear	10
F28	Flasher 1	10
F29	Flasher 2	10
F30	Roading Lights	10

https://truckmanualshub.com/

Fuse No.	Description	Rating (A)
F31	Truck Hitch and Wash Down	10
F32	Screed Power Supply	15
F33	Screed Power Supply	15
F34	Front Wheel Assist	3
F35	Auger/Conveyor Controller Power Supply	10
F36	Auger/Conveyor Cleaning/Fast Fill Switch	10
F37	Auger/Conveyor Ultrasonic Sensors	5
F38	Auger/Conveyor Override Switch Power	10

https://truckmanualshub.com/

Relays in terminal box (C)

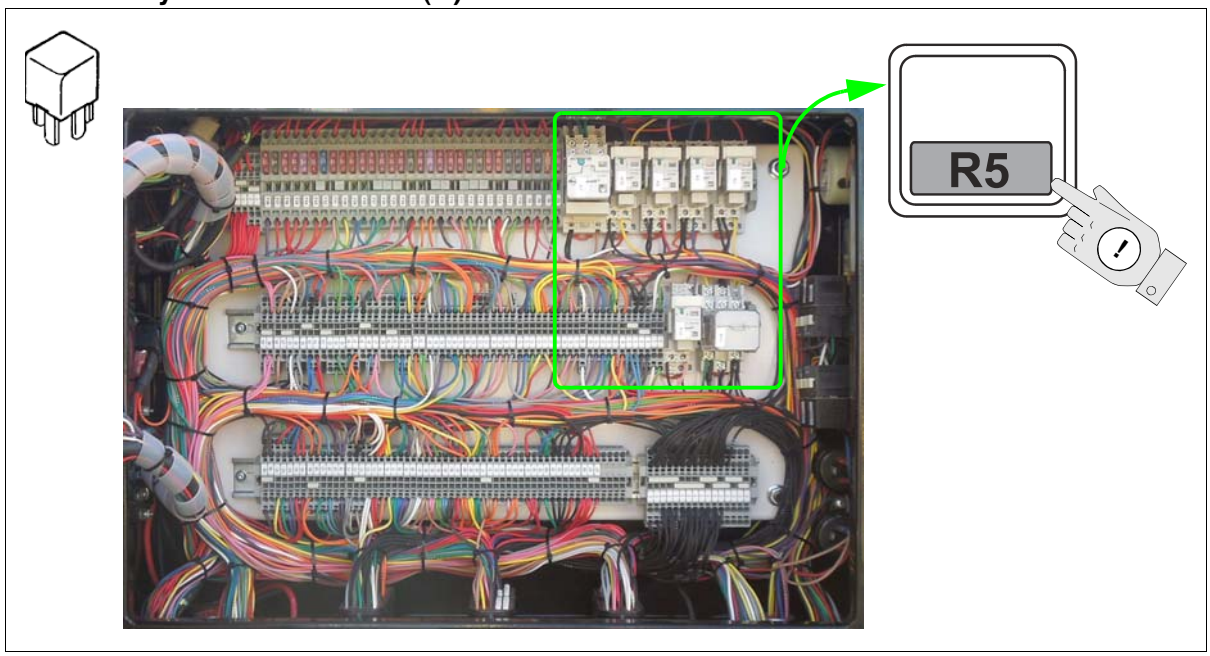

Relay No.	Description
K1	Starter
K2	Anti Start Circuit
K3	Emergency Stop Circuit
K4	Intake Air Heater
K5	Auger / Conveyor ON / OFF
K7	Auto Mode Enable (Screed Float, Vibration, Leveling)
K8	Left Conveyor OFF
K9	Right Conveyor OFF
K10	Starter Lock Out
K11	Screed Float / Lock
K12	Console Select Indication
K13	Left Auger OFF
K14	Right Auger OFF
K15	Key Switch Power
K16	Flasher - Warning / Turning Signal
K17	Flasher - Warning / Turning Signal

https://truckmanualshub.com/

https://truckmanualshub.com/

F 9.0 Maintenance - Lubricating Points

1 Maintenance - Lubricating points

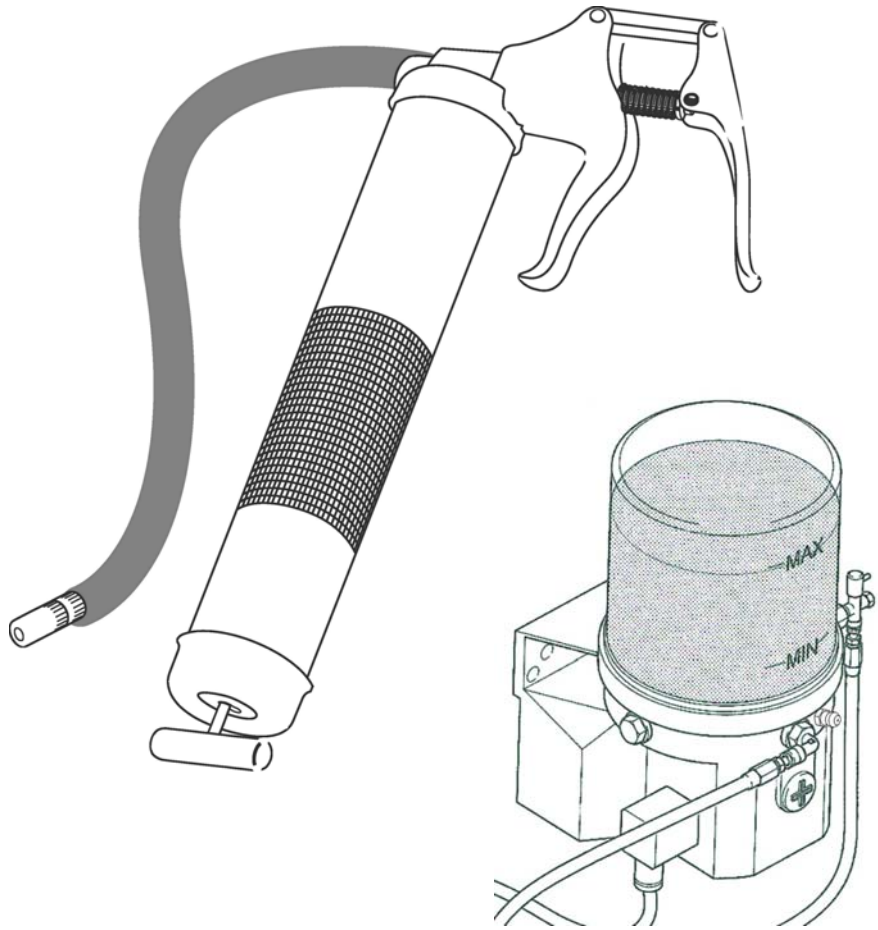

NOTE:

The information on the lubrication points for the various assemblies is assigned to the specific maintenance descriptions (I.E. grease points for the auger are in the auger section and grease points for the undercarriage are in the section on undercarriages)!

https://truckmanualshub.com/

1.1 Maintenance intervals

Item	Interval								Maintenance point	Note
	10	50	100	250	500	1000 / annually	2000 / every 2 years	If necessary		
1		■							- Bearing points	

Maintenance	■
Maintenance during the break-in period	▼

https://truckmanualshub.com/

1.2 Points of maintenance

Bearing points (1)

One grease zert (A) is located at each hydraulic cylinder bearing point (top and bottom).

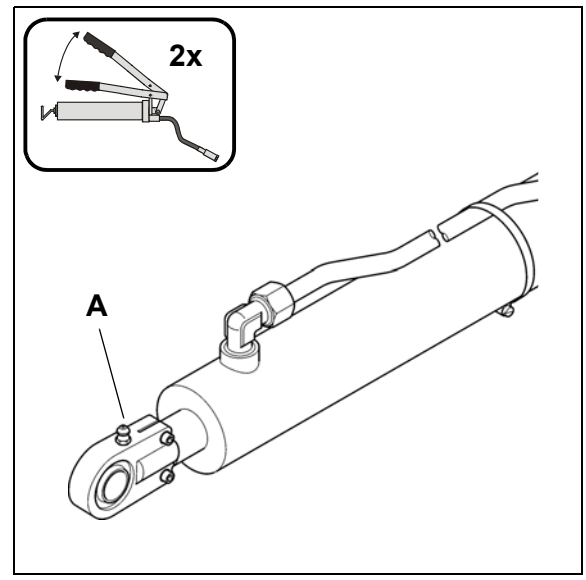

https://truckmanualshub.com/

https://truckmanualshub.com/

F10.0 Checks, Decommissioning

1 Tests, check-up, cleaning, stopping

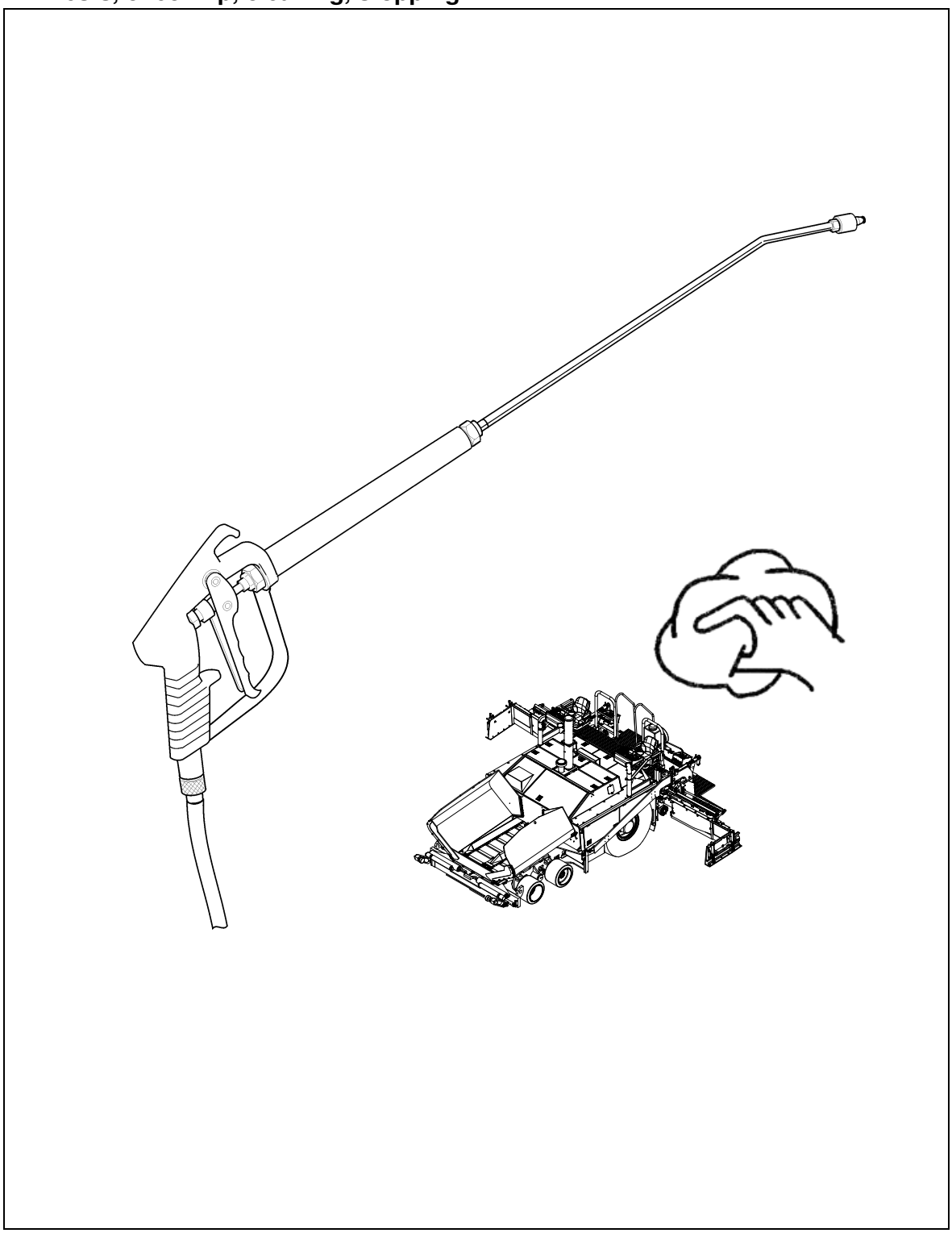

https://truckmanualshub.com/

1.1 Maintenance intervals

No.	Interval								Points of maintenance	Remark
	10	50	100	250	500	1000 / year	2000 / 2 years	as required		
1	■								- General observation	
2						■		■	- Checked by a specialist	
3								■	- Cleaning	
4								■	- Preservation for storage of paver	

Maintenance	■
Maintenance during run-in period	▼

https://truckmanualshub.com/

2 General observation

The daily check includes a walk around the machine while checking the following items:

- Are any of the parts or controls damaged?
- Are there leaks at the engine, the hydraulics, the gear box, etc.?
- Are all the locking points secure (conveyor, auger, screed)?

⚠ CAUTION

Repair the damages and clean any spills immediately to avoid risks of accidents and environmental pollution!

3 Check performed by a specialist

The paver, the screed and the electrical equipment MUST be checked regularly by a specialist:

- as required (according to the circumstances of application and operating conditions),
- however, at lease once a year, so that the machine retains its reliable operating condition.

https://truckmanualshub.com/

4 Cleaning

- Clean all parts that come into contact with the material to be laid.
  - Spray these parts with the release agent spray equipment.

CAUTION

Before cleaning with high pressure jet, lubricate all the bearings with grease as specified.

- Clean the machine with water after laying mineral mixes, lean concrete etc. Remove all residue of the materials laid.

WARNING

Do not spray water on the bearings, electric or electronic parts.

- Remove the residue of the material laid.

CAUTION

After cleaning with the high pressure jet, lubricate all of the bearings with grease as specified.

DANGER

Slippery walkways and steps can result in severe or deadly slipping and falling! Ensure the cleanliness of the walkways and steps and that they are free of grease and oil.

https://truckmanualshub.com/

5 Preservation for storage of paver

5.1 Downtime up to 6 months

- Stop the machine in a place protected from intensive sunshine, wind, moisture and frost.
- Lubricate all the lubrication points with grease as specified.
- Change the oil in the Diesel engine
- Seal the muffler of the exhaust pipe.
- Remove the batteries, charge and store them at room temperature in well ventilated premises.

NOTICE

Recharge the stored batteries every 2nd month.

- Protect all metal surfaces, (i.e. hydraulic cylinder piston rods) against corrosion using an appropriate agent.
- If the machine cannot be parked in a garage, barn or a shed, it must be covered with an appropriate canvas. In each case all the air inlets and outlets must be tightly sealed using plastic film and adhesive tape.

5.2 Downtime between 6 months and 1 year.

- Perform all operations described for “Downtime up to 6 months“.
- After draining the engine oil, fill the engine with preservative oil permitted by the manufacturer of the engine. Contact the Dynapac, USA (a part of Atlas Copco) customer center for further detail.

5.3 Re-commissioning:

- Reverse the steps in the section “Downtime“.

https://truckmanualshub.com/

6 Environmental protection, disposal

6.1 Environmental protection

Packaging materials, used operating substances, cleaning agents and machine accessories must be correctly recycled.

Always observe the local regulations!

6.2 Disposal

Correctly sorted disposal must be carried out after replacing wear and spare parts and after the machine has been withdrawn from service (scrapped). The materials must be sorted correctly according to metal, plastic, electronic scrap, various operating substances etc.
Any oily or greasy parts (hydraulic hoses, lube pipes etc.) must be treated separately.

Electric devices, accessories and packaging should be recycled in an environment-friendly manner.

Always observe the local regulations!

https://truckmanualshub.com/

F 11.0 Lubricants and Operating Substances

1 Lubricants and operating substances

CAUTION

Use only the lubricants listed below or their equivalents.

Only use clean containers for filling oil or fuel.

Follow to the correct filling volumes (see the section “Capacities“).

CAUTION

Incorrect oil or lubricant levels increase the wear and cause the paver to fail.

WARNING

Never mix synthetic oils with mineral oils!

	Atlas Copco	Dynapac
Grease		Paver Grease
Engine oil	AC Engine 100	
Hydraulic oils	AC Hydraulic 180	
Synthetic gearbox oil		Gear Oil 300
Cooling liquid	AC Coolant 150	
Distilled water		
Diesel fuel	ULSD only	

https://truckmanualshub.com/

1.1 Capacities

	Substance	Volume
Fuel tanks	Ultra-low sulfur diesel fuel	49 gal (185.43 L) each
Hydraulic oil tank	Hydraulic oil (Multigrade Oil ISO 46-68)	50 gal (189.21 L)
Pump distribution gear	80W-140 full synthetic oil	1.4 gal (5.3 L)
Planetary gear - track	80W-140 full synthetic oil	0.8 gal (3.0 L) each
Conveyor - gear box	80W-140 full synthetic oil	1.58 qt. (1.5 L) each
Auger - center gear box	80W-140 full synthetic oil	2.64 qt. (2.5 L) each
Auger - angle gear box	80W-140 full synthetic oil	0.63 qt. (0.6 L) each
Diesel engine oil (with filter)	Engine oil 15W-40 (API CJ-4)	18.5 qts (17.5 L)
Diesel - cooling system	Engine coolant 50:50 Mix	6.5 gal (24.6 L)
Batteries	Distilled water	

https://truckmanualshub.com/

Parts & Service

Training

We offer our customers training courses on DYNAPAC equipment in our dedicated factory training centre. We hold regular training courses in this training centre as well as courses outside the scheduled hours.

Service

Please contact one of our responsible service outlets if you encounter any operational problems or have enquiries about spare parts.
Our trained, specialist staff will ensure that you receive prompt attention and repairs in the event of any accident or malfunction you may encounter.

Factory Advisory Service

If ever for any reason our dealership network encounters limits to what it is able to do for you, please always feel free to contact us directly.
Our team of technical advisers is on hand to assist you.

Atlas Copco

https://truckmanualshub.com/

Atlas Copco

www.atlascopco.com