https://truckmanualshub.com/

Lull®

Service Manual

Model 944E-42

S/N 0160041827 & After

31200355

Original
December 31, 2011

JLG®
An Oshkosh Corporation Company

https://truckmanualshub.com/

https://truckmanualshub.com/

EFFECTIVITY PAGE

December 31, 2011 - A - Original Issue

https://truckmanualshub.com/

EFFECTIVITY PAGE

https://truckmanualshub.com/

SECTION CONTENTS

Section	Subject	Page
Section 1		
Safety Practices		**1.1**
1.1	Introduction	1.2
1.2	Disclaimer	1.2
1.3	Operation & Safety Manual	1.2
1.4	Do Not Operate Tags	1.2
1.5	Safety Information	1.2
1.6	Safety Instructions	1.3
1.7	Safety Decals	1.4
Section 2		
General Information and Specifications		**2.1**
2.1	Replacement Parts and Warranty Information	2.2
2.2	Torque Charts	2.3
2.3	Specifications	2.11
2.4	Fluid and Lubricant Capacities	2.13
2.5	Service and Maintenance Schedules	2.15
2.6	Lubrication Schedules	2.18
Section 3		
Boom		**3.1**
3.1	Boom System Component Terminology	3.2
3.2	Boom System	3.3
3.3	Boom Assembly Maintenance	3.3
3.4	Boom Extend and Retract Chains	3.14
3.5	Boom Wear Pads	3.22
3.6	Quick Attach Assembly	3.23
3.7	Forks	3.23
3.8	Troubleshooting	3.24
3.9	Emergency Boom Lowering	3.27
Section 4		
Cab and Covers		**4.1**
4.1	Operator’s Cab and Covers Component Terminology	4.2
4.2	Operator’s Cab	4.3
4.3	Cab Components	4.3
4.4	Enclosed Cab (Optional) Components	4.8
4.5	Cab Removal	4.9
4.6	Cab Installation	4.11
4.7	Valve Plate	4.12

https://truckmanualshub.com/

Section	Subject	Page
Section 5		
Axles, Drive Shafts, Wheels and Tires		**5.1**
5.1	Axle, Drive Shaft and Wheel Component Terminology	5.2
5.2	General Information	5.3
5.3	Axle Assemblies	5.3
5.4	Drive Shafts	5.10
5.5	Wheels and Tires	5.11
5.6	Brakes	5.12
5.7	Towing a Disabled Machine	5.13
Section 6		
Transmission		**6.1**
6.1	Transmission Assembly Component Terminology	6.2
6.2	Transmission Serial Number	6.3
6.3	Transmission Specifications And Maintenance Information	6.3
6.4	Transmission Replacement	6.3
6.5	Troubleshooting	6.7
6.6	Transfer Case Component Terminology	6.11
6.7	Transfer Case	6.12
6.8	Transfer Case Serial Number	6.12
6.9	Transfer Case Maintenance	6.12
6.10	Transfer Case Replacement	6.12
6.11	Troubleshooting	6.14
Section 7		
Engine		**7.1**
7.1	Introduction - Cummins QSB 4.5	7.2
7.2	Engine Serial Number	7.4
7.3	Specifications and Maintenance Information	7.4
7.4	Engine Cooling System	7.4
7.5	Engine Electrical System	7.5
7.6	Fuel System	7.5
7.7	Engine Exhaust System	7.7
7.8	Air Cleaner Assembly	7.8
7.9	Engine Replacement	7.9
7.10	Troubleshooting	7.13
Section 8		
Hydraulic System		**8.1**
8.1	Hydraulic Component Terminology	8.2
8.2	Safety Information	8.3
8.3	Hydraulic Pressure Diagnosis	8.4
8.4	Hydraulic Circuits	8.5
8.5	Hydraulic Reservoir	8.13
8.6	Hydraulic System Pump	8.16
8.7	Valves and Manifolds	8.17
8.8	Hydraulic Cylinders	8.38

https://truckmanualshub.com/

Section	Subject	Page
Section 9		
Electrical System		**9.1**
9.1	Electrical Component Terminology	9.3
9.2	Specifications	9.4
9.3	Safety Information	9.4
9.4	Fuses and Relays	9.4
9.5	Electrical Schematics	9.6
9.6	Circuit Breakdowns	9.12
9.7	Engine Start Circuit	9.14
9.8	Charging Circuit	9.15
9.9	Window Wiper/Washer Windshield Wiper Motor	9.16
9.10	Cab Heater and Fan	9.20
9.11	Switches and Solenoids	9.21
9.12	Dash Switches	9.36
9.13	Troubleshooting	9.37
Section 10		
Stabil-TRAK™ System		**10.1**
10.1	Stabil-TRAK™ System Component Terminology	10.2
10.2	Stabil-TRAK™ Description	10.3
10.3	Stabil-TRAK™ Electrical Circuit Operation and Troubleshooting	10.4
10.4	Stabil-TRAK™ System Test	10.10
10.5	Stabil-TRAK™ Hydraulic Circuit Operation and Troubleshooting	10.13
Section 11		
Transfer Carriage		**11.1**
11.1	Transfer Carriage Component Terminology	11.2
11.2	Transfer Carriage	11.3
11.3	Transfer Carriage Maintenance	11.3
11.4	Troubleshooting	11.22

https://truckmanualshub.com/

Section	Subject	Page

https://truckmanualshub.com/

Section 1
Safety Practices

Contents

PARAGRAPH	TITLE	PAGE
1.1	**Introduction**	**1-2**
1.2	**Disclaimer**	**1-2**
1.3	**Operation & Safety Manual**	**1-2**
1.4	**Do Not Operate Tags**	**1-2**
1.5	**Safety Information**	**1-2**
1.5.1	Safety Alert System and Signal Words	1-2
1.6	**Safety Instructions**	**1-3**
1.6.1	Personal Hazards	1-3
1.6.2	Equipment Hazards	1-3
1.6.3	General Hazards	1-3
1.6.4	Operational Hazards	1-4
1.7	**Safety Decals**	**1-4**

https://truckmanualshub.com/

1.1 INTRODUCTION

This service manual provides general directions for accomplishing service and repair procedures. Following the procedures in this manual will help assure safety and equipment reliability.

Read, understand and follow the information in this manual, and obey all locally approved safety practices, procedures, rules, codes, regulations and laws.

These instructions cannot cover all details or variations in the equipment, procedures, or processes described, nor provide directions for meeting every possible contingency during operation, maintenance, or testing. When additional information is desired consult the local distributor.

Many factors contribute to unsafe conditions: carelessness, fatigue, overload, inattentiveness, unfamiliarity, even drugs and alcohol, among others. For optimal safety, encourage everyone to think, and to act, safely.

Appropriate service methods and proper repair procedures are essential for the safety of the individual doing the work, for the safety of the operator, and for the safe, reliable operation of the machine. All references to the right side, left side, front and rear are given from the operator's seat looking in a forward direction.

Supplementary information is available from JLG in the form of Service Bulletins, Service Campaigns, Service Training Schools, the JLG website, other literature, and through updates to the manual itself.

1.2 DISCLAIMER

All information in this manual is based on the latest product information available at the time of publication. JLG reserves the right to make changes and improvements to its products, and to discontinue the manufacture of any product, at its discretion at any time without public notice or obligation.

1.3 OPERATION & SAFETY MANUAL

The mechanic must not operate the machine until the Operation & Safety Manual has been read & understood, training has been accomplished and operation of the machine has been completed under the supervision of an experienced and qualified operator.

An Operation & Safety Manual is supplied with each machine and must be kept in the manual holder located in the cab. In the event that the Operation & Safety Manual is missing, consult the local distributor before proceeding.

1.4 DO NOT OPERATE TAGS

Place Do Not Operate Tags on the ignition key switch and the steering wheel before attempting to perform any service or maintenance. Remove key and disconnect battery leads.

1.5 SAFETY INFORMATION

To avoid possible death or injury, carefully read, understand and comply with all safety messages.

In the event of an accident, know where to obtain medical assistance and how to use a first-aid kit and fire extinguisher/fire suppression system. Keep emergency telephone numbers (fire department, ambulance, rescue squad/paramedics, police department, etc.) nearby. If working alone, check with another person routinely to help assure personal safety.

1.5.1 Safety Alert System and Signal Words

DANGER

DANGER indicates an imminently hazardous situation which, if not avoided, will result in death or serious injury.

WARNING

WARNING indicates a potentially hazardous situation which, if not avoided, could result in death or serious injury.

CAUTION

CAUTION indicates a potentially hazardous situation which, if not avoided, may result in minor or moderate injury.

https://truckmanualshub.com/

1.6 SAFETY INSTRUCTIONS

Following are general safety statements to consider ***before*** performing maintenance procedures on the telehandler. Additional statements related to specific tasks and procedures are located throughout this manual and are listed prior to any work instructions to provide safety information before the potential of a hazard occurs.

For all safety messages, carefully read, understand and follow the instructions ***before*** proceeding.

1.6.1 Personal Hazards

PERSONAL SAFETY GEAR: Wear all the protective clothing and personal safety gear necessary to perform the job safely. This might include heavy gloves, safety glasses or goggles, filter mask or respirator, safety shoes or a hard hat.

LIFTING: **NEVER** lift a heavy object without the help of at least one assistant or a suitable sling and hoist.

1.6.2 Equipment Hazards

LIFTING OF EQUIPMENT: Before using any lifting equipment (chains, slings, brackets, hooks, etc.), verify that it is of the proper capacity, in good working order, and is properly attached.

NEVER stand or otherwise become positioned under a suspended load or under raised equipment. The load or equipment could fall or tip.

DO NOT use a hoist, jack or jack stands only to support equipment. Always support equipment with the proper capacity blocks or stands properly rated for the load.

HAND TOOLS: Always use the proper tool for the job; keep tools clean and in good working order, and use special service tools only as recommended.

1.6.3 General Hazards

SOLVENTS: Only use approved solvents that are known to be safe for use.

HOUSEKEEPING: Keep the work area and operator's cab clean, and remove all hazards (debris, oil, tools, etc.).

FIRST AID: Immediately clean, dress and report all injuries (cuts, abrasions, burns, etc.), no matter how minor the injury may seem. Know the location of a First Aid Kit, and know how to use it.

CLEANLINESS: Wear eye protection, and clean all components with a high-pressure or steam cleaner before attempting service.

When removing hydraulic components, plug hose ends and connections to prevent excess leakage and contamination. Place a suitable catch basin beneath the machine to capture fluid run-off.

It is good practice to avoid pressure-washing electrical/electronic components. In the event pressure-washing the machine is needed, ensure the machine is shut down before pressure-washing. Should pressure-washing be utilized to wash areas containing electrical/electronic components, JLG recommends a maximum pressure of 750 psi (52 bar) at a minimum distance of 12 in. (30,5 cm) away from these components. If electrical/electronic components are sprayed, spraying must not be direct and for brief time periods to avoid heavy saturation,

Check and obey all Federal, State and/or Local regulations regarding waste storage, disposal and recycling.

https://truckmanualshub.com/

1.6.4 Operational Hazards

ENGINE: Stop the engine before performing any service unless specifically instructed otherwise.

VENTILATION: Avoid prolonged engine operation in enclosed areas without adequate ventilation.

SOFT SURFACES AND SLOPES: **NEVER** work on a machine that is parked on a soft surface or slope. The machine must be on a hard level surface, with the wheels blocked before performing any service.

FLUID TEMPERATURE: **NEVER** work on a machine when the engine, cooling or hydraulic systems are hot. Hot components and fluids can cause severe burns. Allow systems to cool before proceeding.

FLUID PRESSURE: Before loosening any hydraulic or diesel fuel component, hose or tube, turn the engine OFF. Wear heavy, protective gloves and eye protection. **NEVER** check for leaks using any part of your body; use a piece of cardboard or wood instead. If injured, seek medical attention immediately. Diesel fluid leaking under pressure can explode. Hydraulic fluid and diesel fuel leaking under pressure can penetrate the skin, cause infection, gangrene and other serious personal injury.

Relieve all pressure before disconnecting any component, part, line or hose. Slowly loosen parts and allow release of residual pressure before removing any part or component. Before starting the engine or applying pressure, use components, parts, hoses and pipes that are in good condition, connected properly and are tightened to the proper torque. Capture fluid in an appropriate container and dispose of in accordance with prevailing environmental regulations.

RADIATOR CAP: The cooling system is under pressure, and escaping coolant can cause severe burns and eye injury. To prevent personal injury, NEVER remove the radiator cap while the cooling system is hot. Wear safety glasses. Turn the radiator cap to the first stop and allow pressure to escape before removing the cap completely. Failure to follow the safety practices could result in death or serious injury.

FLUID FLAMABILTITY: **DO NOT** service the fuel or hydraulic systems near an open flame, sparks or smoking materials.

NEVER drain or store fluids in an open container. Engine fuel and hydraulic fluid are flammable and can cause a fire and/or explosion.

DO NOT mix gasoline or alcohol with diesel fuel. The mixture can cause an explosion.

PRESSURE TESTING: When conducting any test, only use test equipment that is correctly calibrated and in good condition. Use the correct equipment in the proper manner, and make changes or repairs as indicated by the test procedure to achieve the desired result.

LEAVING MACHINE: Lower the forks or attachment to the ground before leaving the machine.

TIRES: Always keep tires inflated to the proper pressure to help prevent tipover. **DO NOT** over-inflate tires.

NEVER use mismatched tire types, sizes or ply ratings. Always use matched sets according to machine specifications.

MAJOR COMPONENTS: Never alter, remove, or substitute any items such as counterweights, tires, batteries or other items that may reduce or affect the overall weight or stability of the machine.

BATTERY: DO NOT charge a frozen battery.Charging a frozen battery may cause it to explode. Allow the battery to thaw before jump-starting or connecting a battery charger.

1.7 SAFETY DECALS

Check that all safety decals are present and readable on the machine. Refer to the Operation & Safety Manual supplied with machine for information.

https://truckmanualshub.com/

Section 2
General Information and Specifications

Contents

PARAGRAPH	TITLE	PAGE
2.1	**Replacement Parts and Warranty Information**	**2-2**
2.2	**Torque Charts**	**2-3**
2.2.1	SAE Fastener Torque Chart	2-3
2.2.2	Metric Fastener Torque Chart	2-7
2.2.3	Hydraulic Hose Torque Chart	2-10
2.3	**Specifications**	**2-11**
2.3.1	Travel Speeds	2-11
2.3.2	Hydraulic Cylinder Performance	2-11
2.3.3	Electrical System	2-11
2.3.4	Engine Performance Specifications	2-12
2.3.5	Tires	2-12
2.4	**Fluid and Lubricant Capacities**	**2-13**
2.5	**Service and Maintenance Schedules**	**2-15**
2.5.1	10 & 50 Hour	2-15
2.5.2	1st 100, 250 & 1st 500 Hour	2-16
2.5.3	500, 1000 & 2000 Hour	2-17
2.6	**Lubrication Schedules**	**2-18**

https://truckmanualshub.com/

2.1 REPLACEMENT PARTS AND WARRANTY INFORMATION

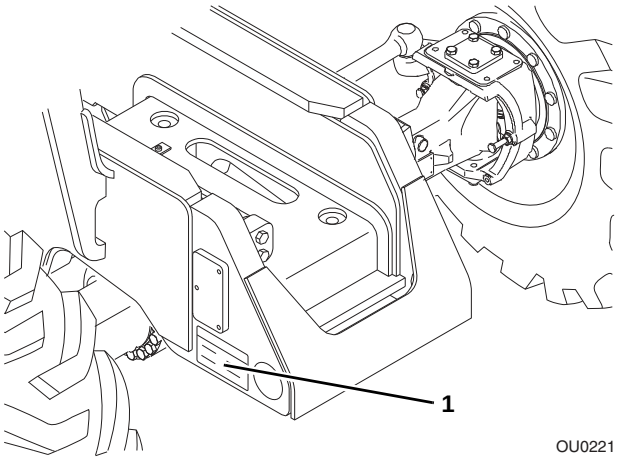

Before ordering parts or initiating service inquiries, make note of the machine serial number. The machine serial number plate (**1**) is located as indicated in the figure.

Note: *The replacement of any part on this machine with any other than **JLG** authorized replacement parts can adversely affect the performance, durability, or safety of the machine, and will void the warranty. **JLG** disclaims liability for any claims or damages, whether regarding property damage, personal injury or death arising out of the use of unauthorized replacement parts.*

A warranty registration form must be filled out by the **JLG** distributor, signed by the purchaser and returned to **JLG** when the machine is sold and/or put into use.

Registration activates the warranty period and helps to assure that warranty claims are promptly processed. To guarantee full warranty service, verify that the distributor has returned the business reply card of the warranty registration form to **JLG**.

https://truckmanualshub.com/

2.2 TORQUE CHARTS

2.2.1 SAE Fastener Torque Chart

				Values for Zinc Yellow Chromate Fasteners								
				SAE GRADE 5 BOLTS & GRADE 2 NUTS								
Size	TPI	Bolt Dia	Tensile Stress Area	Clamp Load	Torque (Dry)		Torque Lubricated		Torque Loctite® 242™ or 271™ OR Vibra-TITE™ 111 or 140		Torque Loctite® 262™ OR Vibra-TITE™ 131	
		In	Sq In	LB	IN-LB	[N.m]	IN-LB	[N.m]	IN-LB	[N.m]	IN-LB	[N.m]
4	40	0.1120	0.00604	380	8	0.9	6	0.7				
	48	0.1120	0.00661	420	9	1.0	7	0.8				
6	32	0.1380	0.00909	580	16	1.8	12	1.4				
	40	0.1380	0.01015	610	18	2.0	13	1.5				
8	32	0.1640	0.01400	900	30	3.4	22	2.5				
	36	0.1640	0.01474	940	31	3.5	23	2.6				
10	24	0.1900	0.01750	1120	43	4.8	32	3.5				
	32	0.1900	0.02000	1285	49	5.5	36	4				
1/4	20	0.2500	0.0318	2020	96	10.8	75	9	105	12		
	28	0.2500	0.0364	2320	120	13.5	86	10	135	15		
		In	Sq In	LB	FT-LB	[N.m]	FT-LB	[N.m]	FT-LB	[N.m]	FT-LB	[N.m]
5/16	18	0.3125	0.0524	3340	17	23	13	18	19	26	16	22
	24	0.3125	0.0580	3700	19	26	14	19	21	29	17	23
3/8	16	0.3750	0.0775	4940	30	41	23	31	35	48	28	38
	24	0.3750	0.0878	5600	35	47	25	34	40	54	32	43
7/16	14	0.4375	0.1063	6800	50	68	35	47	55	75	45	61
	20	0.4375	0.1187	7550	55	75	40	54	60	82	50	68
1/2	13	0.5000	0.1419	9050	75	102	55	75	85	116	68	92
	20	0.5000	0.1599	10700	90	122	65	88	100	136	80	108
9/16	12	0.5625	0.1820	11600	110	149	80	108	120	163	98	133
	18	0.5625	0.2030	12950	120	163	90	122	135	184	109	148
5/8	11	0.6250	0.2260	14400	150	203	110	149	165	224	135	183
	18	0.6250	0.2560	16300	170	230	130	176	190	258	153	207
3/4	10	0.7500	0.3340	21300	260	353	200	271	285	388	240	325
	16	0.7500	0.3730	23800	300	407	220	298	330	449	268	363
7/8	9	0.8750	0.4620	29400	430	583	320	434	475	646	386	523
	14	0.8750	0.5090	32400	470	637	350	475	520	707	425	576
1	8	1.0000	0.6060	38600	640	868	480	651	675	918	579	785
	12	1.0000	0.6630	42200	700	949	530	719	735	1000	633	858
1 1/8	7	1.1250	0.7630	42300	800	1085	600	813	840	1142	714	968
	12	1.1250	0.8560	47500	880	1193	660	895	925	1258	802	1087
1 1/4	7	1.2500	0.9690	53800	1120	1518	840	1139	1175	1598	1009	1368
	12	1.2500	1.0730	59600	1240	1681	920	1247	1300	1768	1118	1516
1 3/8	6	1.3750	1.1550	64100	1460	1979	1100	1491	1525	2074	1322	1792
	12	1.3750	1.3150	73000	1680	2278	1260	1708	1750	2380	1506	2042
1 1/2	6	1.5000	1.4050	78000	1940	2630	1460	1979	2025	2754	1755	2379
	12	1.5000	1.5800	87700	2200	2983	1640	2224	2300	3128	1974	2676

NOTES: 1. THESE TORQUE VALUES DO NOT APPLY TO CADMIUM PLATED FASTENERS
2. ALL TORQUE VALUES ARE STATIC TORQUE MEASURED PER STANDARD AUDIT METHODS TOLERANCE = ±10%
3. * ASSEMBLY USES HARDENED WASHER

REFERENCE JLG ANEROBIC THREAD LOCKING COMPOUND			
JLG P/N	Loctite® P/N	ND Industries P/N	Description
0100011	242™	Vibra-TITE™ 121	Medium Strength (Blue)
0100019	271™	Vibra-TITE™ 140	High Strength (Red)
0100071	262™	Vibra-TITE™ 131	Medium - High Strength (Red)

MY4650J

https://truckmanualshub.com/

2.2.1 SAE Fastener Torque Chart (Continued)

				Values for Zinc Yellow Chromate Fasteners						
				SAE GRADE 8 (HEX HD) BOLTS & GRADE 8 NUTS*						
Size	TPI	Bolt Dia	Tensile Stress Area	Clamp Load	Torque (Dry or Loctite® 263) K= 0.20		Torque Loctite® 242™ or 271™ OR Vibra-TITE™ 111 or 140 K=.18		Torque Loctite® 262™ OR Vibra-TITE™ 131 K=0.15	
		In	Sq In	LB	IN-LB	[N.m]	IN-LB	[N.m]	IN-LB	[N.m]
4	40	0.1120	0.00604							
	48	0.1120	0.00661							
6	32	0.1380	0.00909							
	40	0.1380	0.01015							
8	32	0.1640	0.01400							
	36	0.1640	0.01474	1320	43	5				
10	24	0.1900	0.01750	1580	60	7				
	32	0.1900	0.02000	1800	68	8				
1/4	20	0.2500	0.0318	2860	143	16	129	15		
	28	0.2500	0.0364	3280	164	19	148	17		
		In	Sq In	LB	FT-LB	[N.m]	FT-LB	[N.m]	FT-LB	[N.m
5/16	18	0.3125	0.0524	4720	25	35	20	25	20	25
	24	0.3125	0.0580	5220	25	35	25	35	20	25
3/8	16	0.3750	0.0775	7000	45	60	40	55	35	50
	24	0.3750	0.0878	7900	50	70	45	60	35	50
7/16	14	0.4375	0.1063	9550	70	95	65	90	50	70
	20	0.4375	0.1187	10700	80	110	70	95	60	80
1/2	13	0.5000	0.1419	12750	105	145	95	130	80	110
	20	0.5000	0.1599	14400	120	165	110	150	90	120
9/16	12	0.5625	0.1820	16400	155	210	140	190	115	155
	18	0.5625	0.2030	18250	170	230	155	210	130	175
5/8	11	0.6250	0.2260	20350	210	285	190	260	160	220
	18	0.6250	0.2560	23000	240	325	215	290	180	245
3/4	10	0.7500	0.3340	30100	375	510	340	460	280	380
	16	0.7500	0.3730	33600	420	570	380	515	315	430
7/8	9	0.8750	0.4620	41600	605	825	545	740	455	620
	14	0.8750	0.5090	45800	670	910	600	815	500	680
1	8	1.0000	0.6060	51500	860	1170	770	1045	645	875
	12	1.0000	0.6630	59700	995	1355	895	1215	745	1015
1 1/8	7	1.1250	0.7630	68700	1290	1755	1160	1580	965	1310
	12	1.1250	0.8560	77000	1445	1965	1300	1770	1085	1475
1 1/4	7	1.2500	0.9690	87200	1815	2470	1635	2225	1365	1855
	12	1.2500	1.0730	96600	2015	2740	1810	2460	1510	2055
1 3/8	6	1.3750	1.1550	104000	2385	3245	2145	2915	1785	2430
	12	1.3750	1.3150	118100	2705	3680	2435	3310	2030	2760
1 1/2	6	1.5000	1.4050	126500	3165	4305	2845	3870	2370	3225
	12	1.5000	1.5800	142200	3555	4835	3200	4350	2665	3625

NOTES: 1. THESE TORQUE VALUES DO NOT APPLY TO CADMIUM PLATED FASTENERS
2. ALL TORQUE VALUES ARE STATIC TORQUE MEASURED PER STANDARD AUDIT METHODS TOLERANCE = ±10%
3. * ASSEMBLY USES HARDENED WASHER

MY4660J

https://truckmanualshub.com/

2.2.1 SAE Fastener Torque Chart (Continued)

				SOCKET HEAD CAP SCREWS						
				Magni Coating*						
Size	TPI	Bolt Dia	Tensile Stress Area	Clamp Load See Note 4	Torque (Dry) K = .17		Torque Loctite® 242™ or 271™ OR Vibra-TITE™ 111 or 140 OR Precoat 85® K=0.16		Torque Loctite® 262™ OR Vibra-TITE™ 131 K=0.15	
		In	Sq In	LB	IN-LB	[N.m]	IN-LB	[N.m]	IN-LB	[N.m]
4	40	0.1120	0.00604							
	48	0.1120	0.00661							
6	32	0.1380	0.00909							
	40	0.1380	0.01015							
8	32	0.1640	0.01400							
	36	0.1640	0.01474							
10	24	0.1900	0.01750							
	32	0.1900	0.02000							
1/4	20	0.2500	0.0318	2860	122	14	114	13		
	28	0.2500	0.0364	3280	139	16	131	15		
		In	Sq In	LB	FT-LB	[N.m]	FT-LB	[N.m]	FT-LB	[N.m]
5/16	18	0.3125	0.0524	4720	20	25	20	25	20	25
	24	0.3125	0.0580	5220	25	35	20	25	20	25
3/8	16	0.3750	0.0775	7000	35	50	35	50	35	50
	24	0.3750	0.0878	7900	40	55	40	55	35	50
7/16	14	0.4375	0.1063	9550	60	80	55	75	50	70
	20	0.4375	0.1187	10700	65	90	60	80	60	80
1/2	13	0.5000	0.1419	12750	90	120	85	115	80	110
	20	0.5000	0.1599	14400	100	135	95	130	90	120
9/16	12	0.5625	0.1820	16400	130	175	125	170	115	155
	18	0.5625	0.2030	18250	145	195	135	185	130	175
5/8	11	0.6250	0.2260	20350	180	245	170	230	160	220
	18	0.6250	0.2560	23000	205	280	190	260	180	245
3/4	10	0.7500	0.3340	30100	320	435	300	410	280	380
	16	0.7500	0.3730	33600	355	485	335	455	315	430
7/8	9	0.8750	0.4620	41600	515	700	485	660	455	620
	14	0.8750	0.5090	45800	570	775	535	730	500	680
1	8	1.0000	0.6060	51500	730	995	685	930	645	875
	12	1.0000	0.6630	59700	845	1150	795	1080	745	1015
1 1/8	7	1.1250	0.7630	68700	1095	1490	1030	1400	965	1310
	12	1.1250	0.8560	77000	1225	1665	1155	1570	1085	1475
1 1/4	7	1.2500	0.9690	87200	1545	2100	1455	1980	1365	1855
	12	1.2500	1.0730	96600	1710	2325	1610	2190	1510	2055
1 3/8	6	1.3750	1.1550	104000	2025	2755	1905	2590	1785	2430
	12	1.3750	1.3150	118100	2300	3130	2165	2945	2030	2760
1 1/2	6	1.5000	1.4050	126500	2690	3660	2530	3440	2370	3225
	12	1.5000	1.5800	142200	3020	4105	2845	3870	2665	3625

NOTES: 1. THESE TORQUE VALUES DO NOT APPLY TO CADMIUM PLATED FASTENERS
2. ALL TORQUE VALUES ARE STATIC TORQUE MEASURED PER STANDARD AUDIT METHODS TOLERANCE = ±10%
*3. ASSEMBLY USES HARDENED WASHER OR FASTENER IS PLACED AGAINST PLATED STEEL OR RAW ALUMINUM
4. CLAMP LOAD LISTED FOR SHCS IS SAME AS GRADE 8 OR CLASS 10.9 AND DOES NOT REPRESENT FULL STRENGTH CAPABILITY OF SHCS. IF HIGHER LOAD IS REQUIRED, ADDITIONAL TESTING IS REQUIRED.

MY4670J

https://truckmanualshub.com/

2.2.1 SAE Fastener Torque Chart (Continued)

				SOCKET HEAD CAP SCREWS						
				Zinc Yellow Chromate Fasteners*						
Size	TPI	Bolt Dia	Tensile Stress Area	Clamp Load See Note 4	Torque (Dry) K = .20		Torque (Loctite® 242™ or 271™ OR Vibra-TITE™ 111 or 140 OR Precoat 85® K=0.18		Torque (Loctite® 262™ or Vibra-TITE™ 131) K=0.15	
		In	Sq In	LB	IN-LB	[N.m]	IN-LB	[N.m]	IN-LB	[N.m]
4	40	0.1120	0.00604							
	48	0.1120	0.00661							
6	32	0.1380	0.00909							
	40	0.1380	0.01015							
8	32	0.1640	0.01400							
	36	0.1640	0.01474							
10	24	0.1900	0.01750							
	32	0.1900	0.02000							
1/4	20	0.2500	0.0318	2860	143	16	129	15		
	28	0.2500	0.0364	3280	164	19	148	17		
		In	Sq In	LB	FT-LB	[N.m]	FT-LB	[N.m]	FT-LB	[N.m]
5/16	18	0.3125	0.0524	4720	25	35	20	25	20	25
	24	0.3125	0.0580	5220	25	35	25	35	20	25
3/8	16	0.3750	0.0775	7000	45	60	40	55	35	50
	24	0.3750	0.0878	7900	50	70	45	60	35	50
7/16	14	0.4375	0.1063	9550	70	95	65	90	50	70
	20	0.4375	0.1187	10700	80	110	70	95	60	80
1/2	13	0.5000	0.1419	12750	105	145	95	130	80	110
	20	0.5000	0.1599	14400	120	165	110	150	90	120
9/16	12	0.5625	0.1820	16400	155	210	140	190	115	155
	18	0.5625	0.2030	18250	170	230	155	210	130	175
5/8	11	0.6250	0.2260	20350	210	285	190	260	160	220
	18	0.6250	0.2560	23000	240	325	215	290	180	245
3/4	10	0.7500	0.3340	30100	375	510	340	460	280	380
	16	0.7500	0.3730	33600	420	570	380	515	315	430
7/8	9	0.8750	0.4620	41600	605	825	545	740	455	620
	14	0.8750	0.5090	45800	670	910	600	815	500	680
1	8	1.0000	0.6060	51500	860	1170	775	1055	645	875
	12	1.0000	0.6630	59700	995	1355	895	1215	745	1015
1 1/8	7	1.1250	0.7630	68700	1290	1755	1160	1580	965	1310
	12	1.1250	0.8560	77000	1445	1965	1300	1770	1085	1475
1 1/4	7	1.2500	0.9690	87200	1815	2470	1635	2225	1365	1855
	12	1.2500	1.0730	96600	2015	2740	1810	2460	1510	2055
1 3/8	6	1.3750	1.1550	104000	2385	3245	2145	2915	1785	2430
	12	1.3750	1.3150	118100	2705	3680	2435	3310	2030	2760
1 1/2	6	1.5000	1.4050	126500	3165	4305	2845	3870	2370	3225
	12	1.5000	1.5800	142200	3555	4835	3200	4350	2665	3625

NOTES: 1. THESE TORQUE VALUES DO NOT APPLY TO CADMIUM PLATED FASTENERS
2. ALL TORQUE VALUES ARE STATIC TORQUE MEASURED PER STANDARD AUDIT METHODS TOLERANCE = ±10%
*3. ASSEMBLY USES HARDENED WASHER OR FASTENER IS PLACED AGAINST PLATED STEEL OR RAW ALUMINUM
4. CLAMP LOAD LISTED FOR SHCS IS SAME AS GRADE 8 OR CLASS 10.9 AND DOES NOT REPRESENT FULL STRENGTH CAPABILITY OF SHCS. IF HIGHER LOAD IS REQUIRED, ADDITIONAL TESTING IS REQUIRED.

MY4680J

https://truckmanualshub.com/

2.2.2 Metric Fastener Torque Chart

			Values for Zinc Yellow Chromate Fasteners				
			CLASS 8.8 METRIC BOLTS CLASS 8 METRIC NUTS				
Size	PITCH	Tensile Stress Area	Clamp Load	Torque (Dry or Loctite® 263™)	Torque (Lub)	Torque Loctite® 262™ OR Vibra-TITE™ 131	Torque Loctite® 242™ or 271™ OR Vibra-TITE™ 111 or 140
		Sq mm	KN	[N.m]	[N.m]	[N.m]	[N.m]
3	0.5	5.03	2.19	1.3	1.0	1.2	1.4
3.5	0.6	6.78	2.95	2.1	1.6	1.9	2.3
4	0.7	8.78	3.82	3.1	2.3	2.8	3.4
5	0.8	14.20	6.18	6.2	4.6	5.6	6.8
6	1	20.10	8.74	11	7.9	9.4	12
7	1	28.90	12.6	18	13	16	19
8	1.25	36.60	15.9	26	19	23	28
10	1.5	58.00	25.2	50	38	45	55
12	1.75	84.30	36.7	88	66	79	97
14	2	115	50.0	140	105	126	154
16	2	157	68.3	219	164	197	241
18	2.5	192	83.5	301	226	271	331
20	2.5	245	106.5	426	320	383	469
22	2.5	303	132.0	581	436	523	639
24	3	353	153.5	737	553	663	811
27	3	459	199.5	1080	810	970	1130
30	3.5	561	244.0	1460	1100	1320	1530
33	3.5	694	302.0	1990	1490	1790	2090
36	4	817	355.5	2560	1920	2300	2690
42	4.5	1120	487.0	4090	3070	3680	4290

NOTES: 1. THESE TORQUE VALUES DO NOT APPLY TO CADMIUM PLATED FASTENERS
2. ALL TORQUE VALUES ARE STATIC TORQUE MEASURED PER STANDARD AUDIT METHODS TOLERANCE = ±10%
*3. ASSEMBLY USES HARDENED WASHER OR FASTENER IS PLACED AGAINST PLATED STEEL OR RAW ALUMINUM
4. CLAMP LOAD LISTED FOR SHCS IS SAME AS GRADE 8 OR CLASS 10.9 AND DOES NOT REPRESENT FULL STRENGTH CAPABILITY OF SHCS. IF HIGHER LOAD IS REQUIRED, ADDITIONAL TESTING IS REQUIRED.

MY4690J

https://truckmanualshub.com/

2.2.2 Metric Fastener Torque Chart (Continued)

			Values for Zinc Yellow Chromate Fasteners			
			CLASS 10.9 METRIC BOLTS CLASS 10 METRIC NUTS CLASS 12.9 SOCKET HEAD CAP SCREWS M3 - M5*			
Size	PITCH	Tensile Stress Area	Clamp Load	Torque Dry or Loctite® 263™ K = 0.20	Torque Lube OR Loctite® 242™ or 271™ OR Vibra-TITE™ 111 or 140 K= 0.18	Torque Loctite® 262™ OR Vibra-TITE™ 131 K=0.15
		Sq mm	KN	[N.m]	[N.m]	[N.m]
3	0.5	5.03	3.13			
3.5	0.6	6.78	4.22			
4	0.7	8.78	5.47			
5	0.8	14.20	8.85			
6	1	20.10	12.5			
7	1	28.90	18.0	25.2	22.7	18.9
8	1.25	36.60	22.8	36.5	32.8	27.4
10	1.5	58.00	36.1	70	65	55
12	1.75	84.30	52.5	125	115	95
14	2	115	71.6	200	180	150
16	2	157	97.8	315	280	235
18	2.5	192	119.5	430	385	325
20	2.5	245	152.5	610	550	460
22	2.5	303	189.0	830	750	625
24	3	353	222.0	1065	960	800
27	3	459	286.0	1545	1390	1160
30	3.5	561	349.5	2095	1885	1575
33	3.5	694	432.5	2855	2570	2140
36	4	817	509.0	3665	3300	2750
42	4.5	1120	698.0	5865	5275	4395

NOTES: 1. THESE TORQUE VALUES DO NOT APPLY TO CADMIUM PLATED FASTENERS
2. ALL TORQUE VALUES ARE STATIC TORQUE MEASURED PER STANDARD AUDIT METHODS TOLERANCE = ±10%
*3. ASSEMBLY USES HARDENED WASHER OR FASTENER IS PLACED AGAINST PLATED STEEL OR RAW ALUMINUM
4. CLAMP LOAD LISTED FOR SHCS IS SAME AS GRADE 8 OR CLASS 10.9 AND DOES NOT REPRESENT FULL STRENGTH CAPABILITY OF SHCS. IF HIGHER LOAD IS REQUIRED, ADDITIONAL TESTING IS REQUIRED.

MY4700J

https://truckmanualshub.com/

2.2.2 Metric Fastener Torque Chart (Continued)

			Magni Coating*			
			CLASS 12.9 SOCKET HEAD CAP SCREWS M6 AND ABOVE*			
Size	PITCH	Tensile Stress Area	Clamp Load See Note 4	Torque Dry or Loctite® 263™ K = .17	Torque Lube OR Loctite® 242™ or 271™ OR Vibra-TITE™ 111 or 140 K = .16	Torque Loctite® 262™ OR Vibra-TITE™ 131 K = .15
		Sq mm	kN	[N.m]	[N.m]	[N.m]
3	0.5	5.03				
3.5	0.6	6.78				
4	0.7	8.78				
5	0.8	14.20				
6	1	20.10	12.5	13	12	11
7	1	28.90	18.0	21	20	19
8	1.25	36.60	22.8	31	29	27
10	1.5	58.00	36.1	61	58	54
12	1.75	84.30	52.5	105	100	95
14	2	115	71.6	170	160	150
16	2	157	97.8	265	250	235
18	2.5	192	119.5	365	345	325
20	2.5	245	152.5	520	490	460
22	2.5	303	189.0	705	665	625
24	3	353	220.0	900	845	790
27	3	459	286.0	1315	1235	1160
30	3.5	561	349.5	1780	1680	1575
33	3.5	694	432.5	2425	2285	2140
36	4	817	509.0	3115	2930	2750
42	4.5	1120	698.0	4985	4690	4395

NOTES: 1. THESE TORQUE VALUES DO NOT APPLY TO CADMIUM PLATED FASTENERS
2. ALL TORQUE VALUES ARE STATIC TORQUE MEASURED PER STANDARD AUDIT METHODS TOLERANCE = ±10%
*3. ASSEMBLY USES HARDENED WASHER OR FASTENER IS PLACED AGAINST PLATED STEEL OR RAW ALUMINUM
4. CLAMP LOAD LISTED FOR SHCS IS SAME AS GRADE 8 OR CLASS 10.9 AND DOES NOT REPRESENT FULL STRENGTH CAPABILITY OF SHCS. IF HIGHER LOAD IS REQUIRED, ADDITIONAL TESTING IS REQUIRED.

MY4710J

https://truckmanualshub.com/

2.2.3 Hydraulic Hose Torque Chart

O-Ring Face Seal & JIC Torque Chart

Size	ORFS	JIC	Flats Method
4	13 lb-ft (18 Nm)	13 lb-ft (18 Nm)	1.5 to 1.75
6	23 lb-ft (31 Nm)	23 lb-ft (31 Nm)	1 to 1.5
8	40 lb-ft (54 Nm)	40 lb-ft (54 Nm)	1.5 to 1.75
10	60 lb-ft (81 Nm)	60 lb-ft (81 Nm)	1.5 to 1.75
12	74 lb-ft (100 Nm)	85 lb-ft (115 Nm)	1.0 to 1.5
16	115 lb-ft (156 Nm)	115 lb-ft (156 Nm)	0.75 to 1.0
20	170 lb-ft (230 Nm)	170 lb-ft (230 Nm)	0.75 to 1.0
24	200 lb-ft (271 Nm)	200 lb-ft (271 Nm)	0.75 to 1.0
32	N/A	270 lb-ft (366 Nm)	0.75 to 1.0

Note: *By definition the "Flats Method" will contain some variance. Use the "Flats Method" only when accessibility with a torque wrench is not possible.*

Torque Wrench:

1. Identify the appropriate application and refer to the above chart for the correct torque value.
2. If equipped, lubricate o-ring with hydraulic oil. Hand tighten the swivel nut until no lateral movement of the swivel nut can be detected. Average hand torque is 3 lb-ft (4 Nm).
3. Use the double wrench method while tightening to avoid hose twist.
4. Torque wrench must be held at the center of the grip. Apply constant force until it clicks.
5. After the connection has been properly tightened, mark a straight line across the connecting parts indicating that the connection has been properly tightened.

Flats Method:

1. If equipped, lubricate o-ring with hydraulic oil. Hand tighten the swivel nut until no lateral movement of the swivel nut can be detected. Average hand torque is 3 lb-ft (4 Nm).
2. Mark a dot on one of the swivel nut flats and another dot in line on the hex of the adapter it's connecting to.
3. Use the double wrench method while tightening to avoid hose twist.
4. After the connection has been properly tightened, mark a straight line across the connecting parts, not covering the dots indicating that the connection has been properly tightened.

https://truckmanualshub.com/

2.3 SPECIFICATIONS

2.3.1 Travel Speeds

First Gear	3.5 mph (5,6 km/hr)
Second Gear	6 mph (9,7 km/hr)
Third Gear	14 mph (23 km/hr)
Fourth Gear	20 mph (32 km/hr)

2.3.2 Hydraulic Cylinder Performance

Note: *Machine with no attachment or load, engine at full throttle, hydraulic oil above 130° F (54° C) minimum, engine at operating temperature.*

Function	Approximate Times, in Seconds
Boom Extend (boom level)	11 to 15
Boom Retract (boom level)	13 to 17
Boom Lift (boom retracted)	11 to 15
Boom Lower (boom retracted)	11 to 15
Quick Attach Tilt Up	2.5 to 3.5
Quick Attach Tilt Down	3 to 5
Transfer Carriage Forward (boom retracted and level)	9 to 14
Transfer Carriage Rearward (boom retracted and level)	9 to 13
Frame Sway Left to Right (boom retracted and level)	9 to 11
Frame Sway Left to Right (boom retracted, raised above 40° and emergency brake engaged)	26 to 30
Frame Sway Right to Left (boom retracted and level)	9 to 11
Frame Sway Right to Left (boom retracted, raised above 40° and emergency brake engaged)	26 to 30

2.3.3 Electrical System

Battery	
Type, Rating	12 VDC, Negative (-) Ground, Maintenance Free
Quantity	2
Reserve Capacity	850 Cold Cranking Amps @ 0° F (-18° C)
Group/Series	Group 27
Alternator	12V, 100 Amps

https://truckmanualshub.com/

2.3.4 Engine Performance Specifications

Note: *Engine manufacturer's maximum "high idle" setting is lockwired and sealed.* ***DO NOT*** *disturb this setting*

Engine Make/Model	Cummins QSB 4.5
Displacement	275 in^3 (4.5 liters)
Low Idle	950 rpm
High Idle	2500 rpm
Horsepower	110 hp (82 Kw) @ 2500 rpm
Peak Torque	360 lb-ft (4488 Nm) @ 1500 rpm
Fuel Delivery	Fuel Injection
Air Cleaner	Dry Type, Replaceable Primary and Safety Elements

2.3.5 Tires

Note: *Standard wheel lug nut torque is 430-470 lb-ft (583-637 Nm).*

15.50 x 25	G-2/L-2 Bias-Ply Traction	12 Ply	Pneumatic	65 psi (4,5 bar)
			Foam	798 lb (362 kg)
15.50 x 25	G-2/L-2 Radial	1 Star	Pneumatic	65 psi (4,5 bar)
			Foam	798 lb (362 kg)
15.50 x 25	G-3/L-3 Bias-Ply Rock	12 Ply	Pneumatic	65 psi (4,5 bar)
			Foam	798 lb (362 kg)
370/75x28	DuraForce	14 Ply	Pneumatic	76 psi (5,2 bar)
			Foam-Approx 464 lb (210 kg)	73 psi (5,0 bar)

https://truckmanualshub.com/

2.4 FLUID AND LUBRICANT CAPACITIES

Engine Crankcase Oil

Capacity with Filter Change	13.5 quarts (12.8 liters)
Type of Oil	
0° to 104° F (-20° to 40° C)	15W-40 CD
-40° to 0° F (-40° to 20° C)	0W-40 CD

Fuel Tank

Capacity	45 gallons (171 liters)
Type of Fuel	
0° to 104° F (-20° to 40° C)	#2 Diesel
-40° to 0° F (-40° to 20° C)	#1 Diesel
Anti-Gel	
-40° to 0° F (-40° to 20° C)	16 ounces (0,5 liters)

Cooling System

System Capacity W/O Heater	7.7 gallons (29,1 liters)
Type of Coolant	50/50 ethylene glycol & water

Hydraulic System

System Capacity	50 gallons (190 liters)
Reservoir Capacity	34 gallons (127 liters)
Type of Fluid	Mobilfluid 424® Tractor Hydraulic Fluid (ISO 46)

Transmission

Capacity with Filter Change	4.2 gallons (16 liters)
Type of Fluid	Mobilfluid 424® Tractor Hydraulic Fluid (ISO 46)

Transfer Case

Capacity	1.7 quarts (1,6 liters)
Type of Fluid	Mobilfluid 424® Tractor Hydraulic Fluid (ISO 46)

Axles

Differential Housing Capacity	
Front	12.7 quarts (12,0 liters)
Rear	12.5 quarts (11,8 liters)
Wheel End Capacity	
Front	2.1 quarts (2,0 liters)
Rear	2.2 quarts (2,1 liters)
Type of Fluid	Mobilfluid 424® Tractor Hydraulic Fluid (ISO 46)

https://truckmanualshub.com/

Air Conditioning System (if equipped)

System Capacity	2.5 lb (1134 g)
Type of Fluid	Refrigerant R-134a - Tetrafluorethane

Window Washer Bottle

Capacity	2.1 quart (2 liters)

https://truckmanualshub.com/

2.5 SERVICE AND MAINTENANCE SCHEDULES

2.5.1 10 & 50 Hour

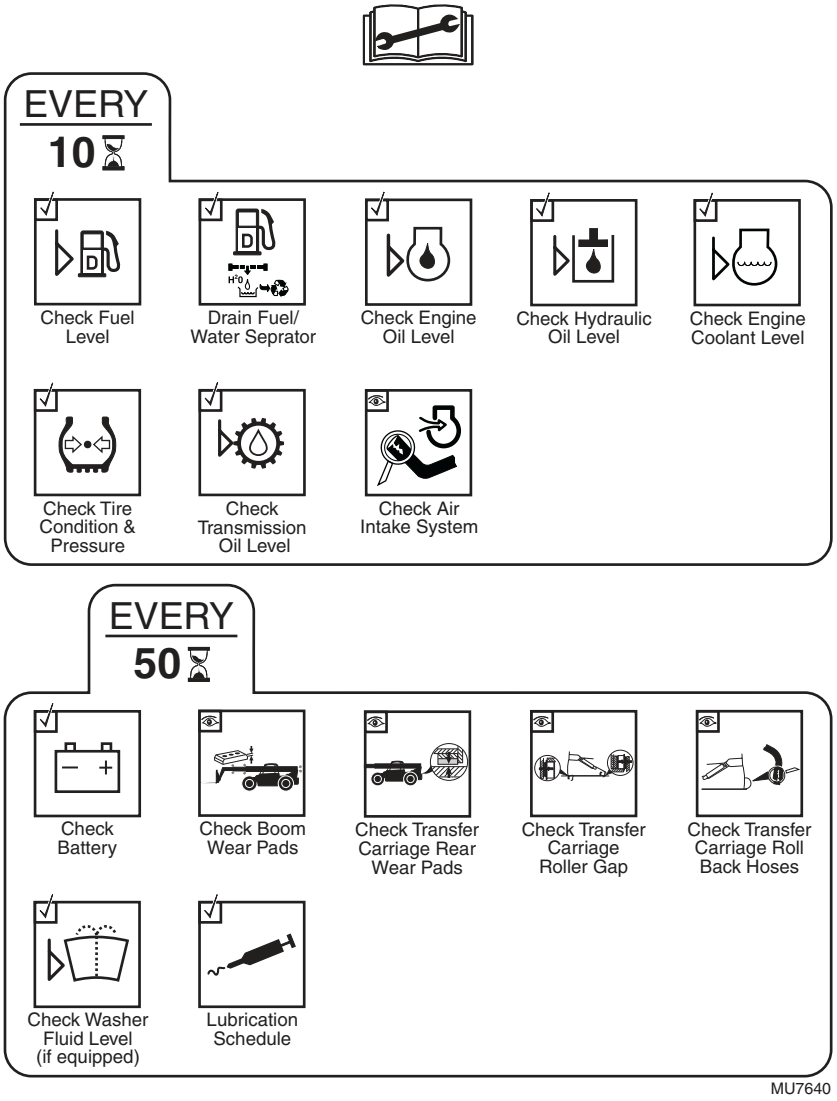

https://truckmanualshub.com/

2.5.2 1st 100, 250 & 1st 500 Hour

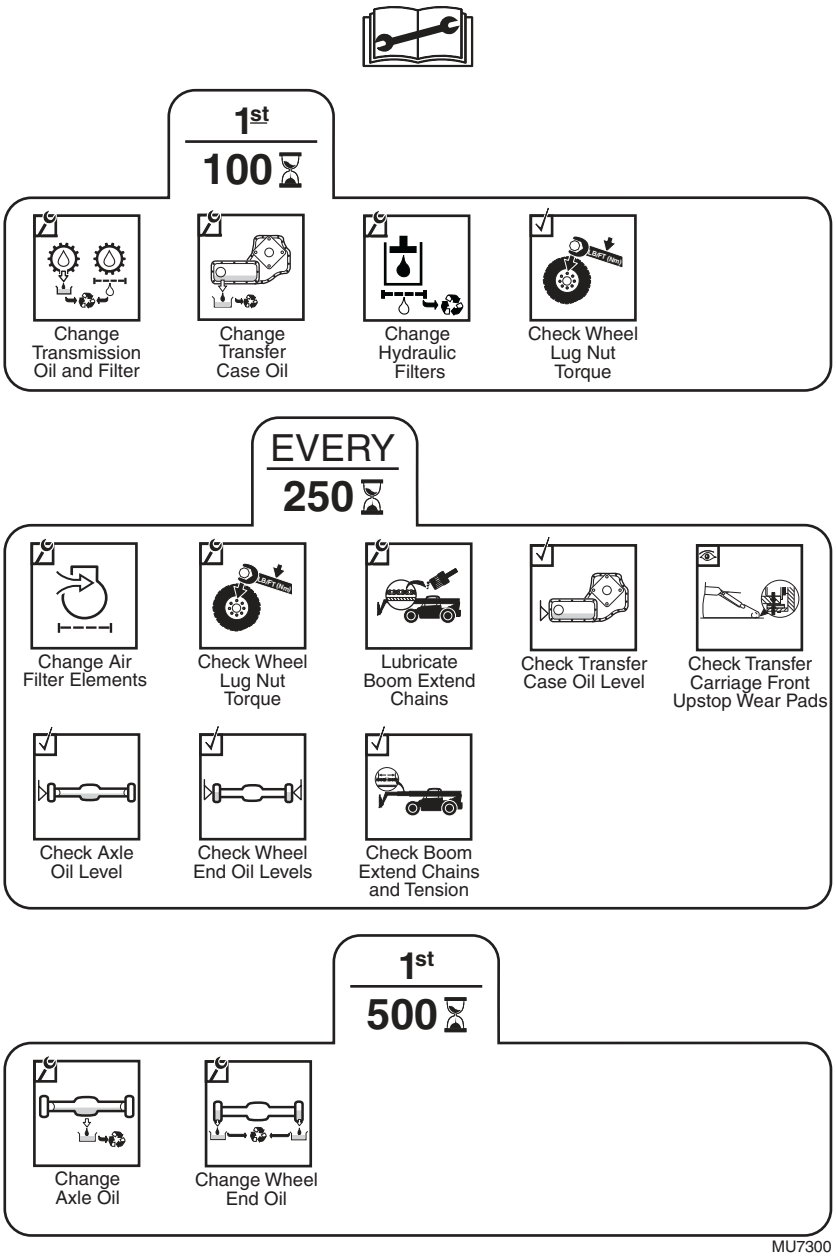

https://truckmanualshub.com/

2.5.3 500, 1000 & 2000 Hour

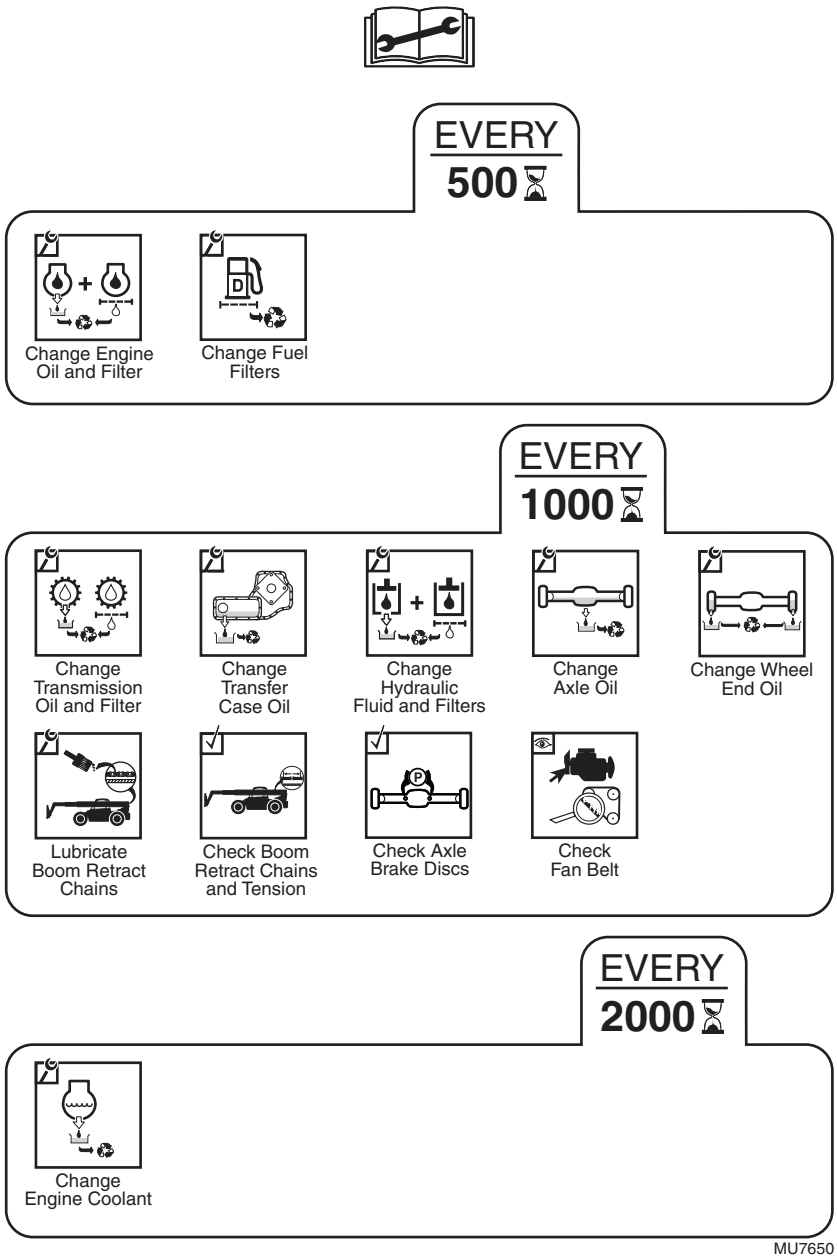

https://truckmanualshub.com/

2.6 LUBRICATION SCHEDULES

a. 50 Hour

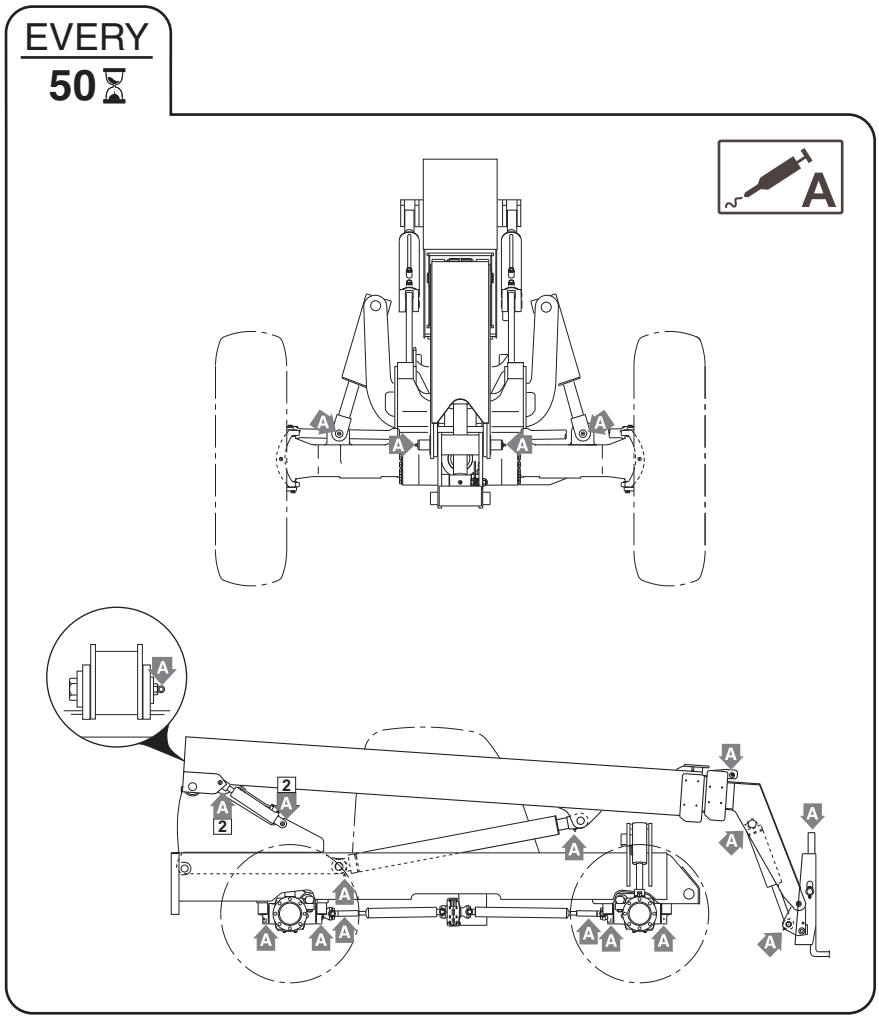

OU2430

https://truckmanualshub.com/

Section 3
Boom

Contents

PARAGRAPH		TITLE	PAGE
3.1		**Boom System Component Terminology**	**3-2**
3.2		**Boom System**	**3-3**
	3.2.1	Boom System Operation	3-3
3.3		**Boom Assembly Maintenance**	**3-3**
	3.3.1	Third Boom Section Removal	3-3
	3.3.2	Second Boom Section Removal	3-7
	3.3.3	First Boom Section Removal	3-8
	3.3.4	First Boom Section Installation	3-10
	3.3.5	Second Boom Section Installation	3-11
	3.3.6	Third Boom Section Installation	3-11
3.4		**Boom Extend and Retract Chains**	**3-14**
	3.4.1	Boom Chain Inspection	3-14
	3.4.2	Inspection Guidelines	3-15
	3.4.3	Expose Chains for Inspection	3-17
	3.4.4	Chain Lubrication	3-17
	3.4.5	Boom Chain Tension Check	3-17
	3.4.6	Boom Chain Tension Adjustment	3-18
	3.4.7	Extend Chains Removal and Replacement	3-20
	3.4.8	Retract Chain Removal and Replacement	3-20
3.5		**Boom Wear Pads**	**3-22**
	3.5.1	Wear Pad Inspection	3-22
	3.5.2	Wear Pad Installation and Lubrication	3-22
3.6		**Quick Attach Assembly**	**3-23**
	3.6.1	Quick Attach Removal	3-23
	3.6.2	Quick Attach Installation	3-23
3.7		**Forks**	**3-23**
3.8		**Troubleshooting**	**3-24**
3.9		**Emergency Boom Lowering**	**3-27**
	3.9.1	Loss of Engine Power or Hydraulic Pump Failure	3-27
	3.9.2	Hydraulic Line Failure	3-27
	3.9.3	Hydraulic Hose Replacement	3-28
	3.9.4	Hydraulic Hose Replacement - Step 1	3-28
	3.9.5	Hydraulic Hose Replacement - Step 2	3-29

https://truckmanualshub.com/

3.1 BOOM SYSTEM COMPONENT TERMINOLOGY

The following illustrations identify the components that are referred to throughout this section.

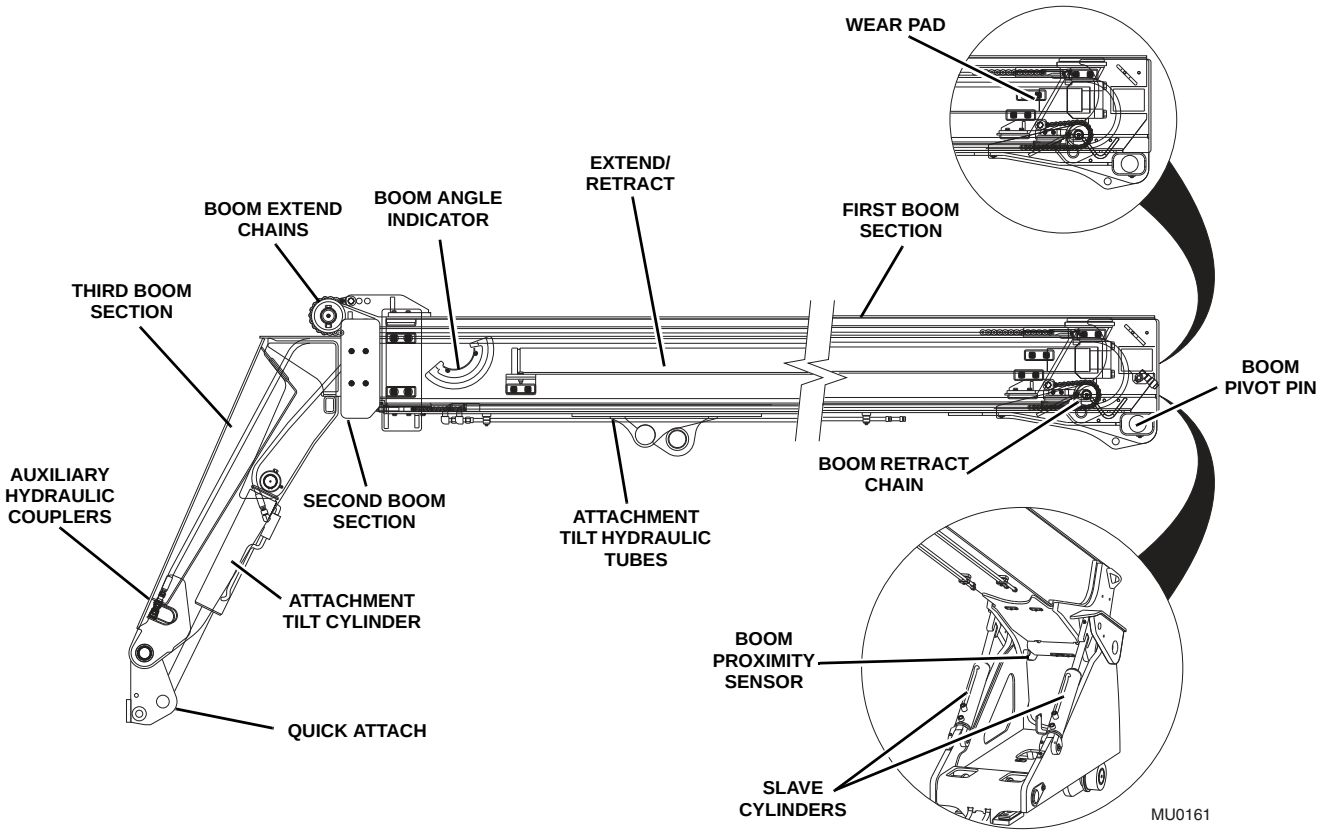

https://truckmanualshub.com/

3.2 BOOM SYSTEM

3.2.1 Boom System Operation

The three section boom assembly consists of first, second and third boom section assemblies. Boom extension and retraction is accomplished via hydraulic power and chain movement.

As the Extend/Retract hydraulic cylinder, which is anchored at the rear of the second boom section and the rear of the first boom section, begins to extend, it forces the second boom section out of the first boom section.

The second and third boom sections are connected by extend and retract chains. These chains are routed around sheaves on the second boom section. As the second boom section is forced out, the extend chain pulls the third boom section out of the second boom section.

As hydraulic pressure is applied to the retract port on the extend/retract cylinder, the second boom section is pulled back into the first boom section, and retract chain pulls the third boom section back into the second section.

This mechanical linkage formed by the chains and supporting hardware extends and retracts the second and third boom sections at the same rate.

The first boom section does not extend or retract, but lifts and lowers via action of the lift/lower cylinder.

3.3 BOOM ASSEMBLY MAINTENANCE

These instructions must be completed in sequence. The third boom section must be removed before removing the second boom section. The third and second boom section must be removed at one time before removing the first boom section.

Before beginning, conduct a visual inspection of the machine and work area, and review the task about to be undertaken. Read, understand and follow these instructions.

⚠ WARNING

NEVER weld or drill the boom unless approved in writing by the manufacturer. The structural integrity of the boom will be impaired if subjected to any repair involving welding or drilling.

3.3.1 Third Boom Section Removal

1. Remove any attachment from the quick attach assembly.

Note: *If replacing the third section boom, remove the quick attach from the third section. Refer to Section 3.6.1, "Quick Attach Removal."*

2. Park the machine on a hard, level surface, level the machine, position the boom until it is extended approximately 3 to 6 inches (76 to 152 mm), level the boom, place the transmission control lever in (N) NEUTRAL, engage the park brake and shut the engine OFF.

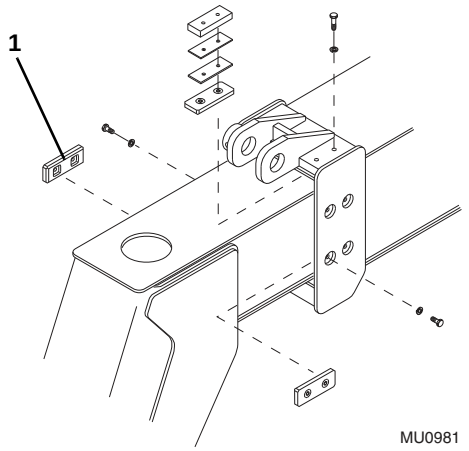

3. At the front of the second boom section, remove the top and side (**1**) wear pads. Label all parts for installation.
4. Remove the rear boom cover.

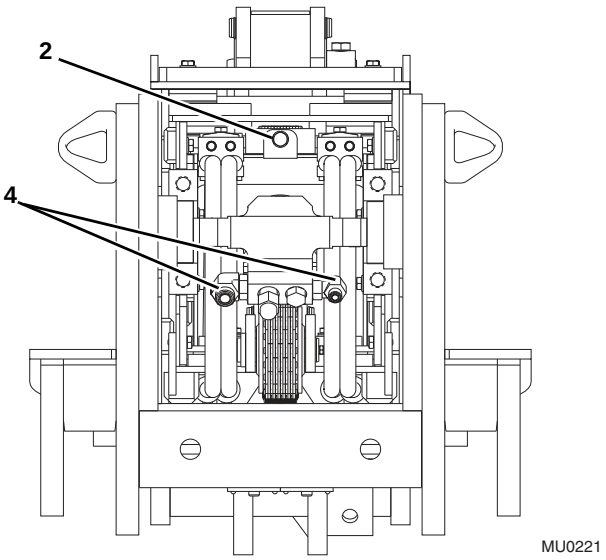

https://truckmanualshub.com/

5. Loosen the extend chain locknut (**2**) at the rear of the boom halfway. The locknut must remain fully engaged on the threads of the extend chain clevis.
6. In the cab, start the engine and retract the boom slightly until slack is noticed in the extend chain. Shut the engine OFF.
7. Move the attachment tilt joystick in both directions to relieve any trapped pressure in the system. Move the auxiliary hydraulic joystick in both directions to relieve any trapped pressure in the system.
8. Place a Do Not Operate Tag on both the ignition key switch and the steering wheel, stating that the machine should not be operated.
9. Open the engine cover. Allow the system fluids to cool.
10. Properly disconnect the batteries.

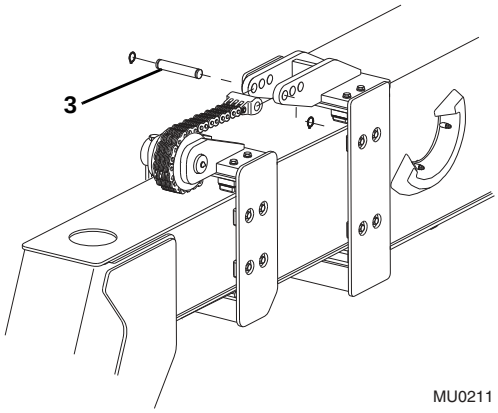

11. Remove the clevis pin (**3**) to disconnect the extend chain yoke from the first boom section. Lay the chain assembly flat against the third boom section.
12. Label, disconnect and cap the hydraulic hoses (**4**) attached to the Extend/Retract cylinder. Plug all fittings to keep dirt & debris from entering the hydraulic system.

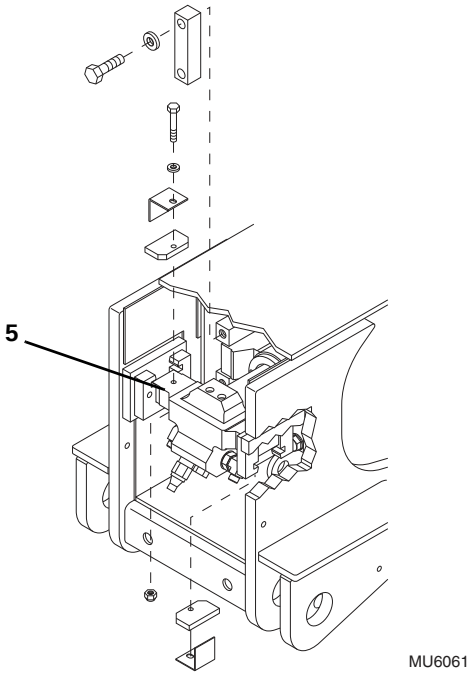

13. Remove the one locknut, key plate, shim(s), flat washer and capscrew on the left and right side of the Extend/Retract cylinder rod trunnion mount (**5**). Label all parts for installation.
14. Remove the capscrews and washers securing the cylinder tube trunnion clamps to the second boom section.

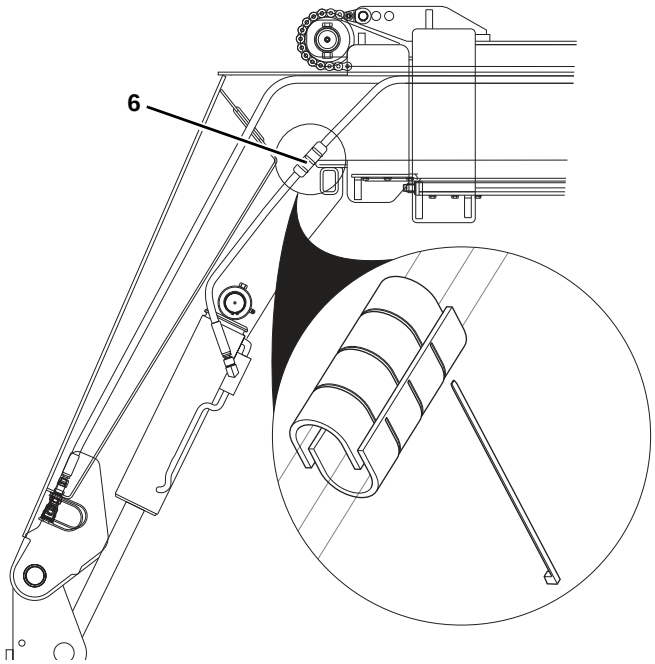

15. Remove the tie wraps from the two hose guards (**6**) and remove the hose guards from the cylinder hoses.

https://truckmanualshub.com/

16. Label, disconnect and cap the attachment tilt hoses at the fittings at the front of the third boom section. Cap all fittings to keep dirt & debris from entering the hydraulic system.

Note: *If replacing the third boom section with a new boom section; Remove the female coupler, male nipple and bulkhead fittings from the bulkhead plate inside the boom head.*

Note: *If the third boom section is equipped with remote auxiliary hydraulic couplers, remove the couplers, tubes and mounting plate from the boom head. Transfer the couplers to the boom head of the new boom section.*

17. Remove the capscrews holding the hose clamps to their boom mounts at the rear of the third boom section.

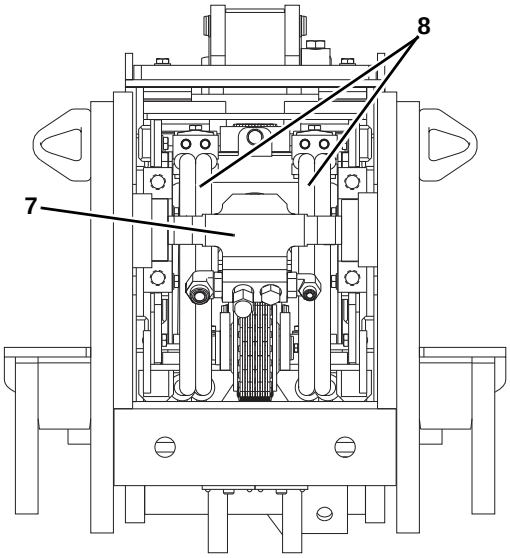

18. Use a suitable overhead lifting device and sling, attach to the Extend/Retract cylinder trunnion (**7**). Rotate and pull the cylinder out of the third boom section far enough to give the attachment tilt and auxiliary hydraulic hoses (**8**) enough room to be pulled out of the boom.
19. Remove the attachment tilt and auxiliary hydraulic hoses from the third boom section by pulling them out from the top of the third boom section. Lay the hoses behind the machine.
20. Completely remove the Extend/Retract cylinder. Readjust the position of the sling as needed to help balance the cylinder during withdraw. When the cylinder is clear of the machine, carefully lower it to the ground.

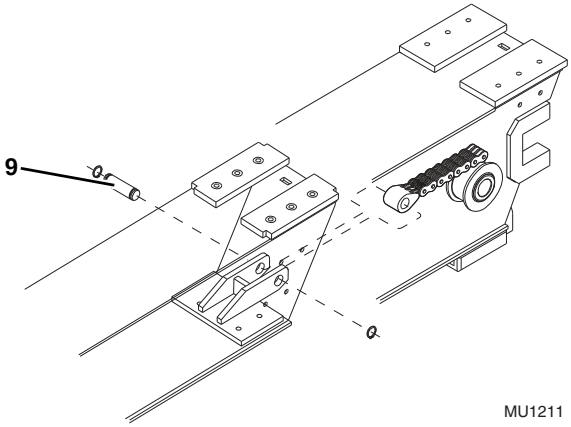

21. Remove the clevis pin (**9**) to disconnect the retract chain yoke from the rear of the third boom section. Lay the chain assembly flat behind the third boom section.
22. Install a lifting eye to the nut on the attachment tilt cylinder. Attach a suitable overhead lifting device and sling to the lifting eye.
23. Remove the pin from the attachment tilt cylinder and lower the cylinder to the ground.
24. Use a suitable overhead lifting device and sling attached to the third boom section; remove slack from the hoist sling, and withdraw the boom 6 ft. (2 m).
25. Remove the bottom wear pads at the front of the second boom section. Label each part for installation.
26. Pull the third boom section straight out of the second boom section. Reposition the slings as needed so the third boom section balances when removed from the second boom section. Set the boom section down on a hard, level surface. Support the boom as needed to prevent it from tipping over.

https://truckmanualshub.com/

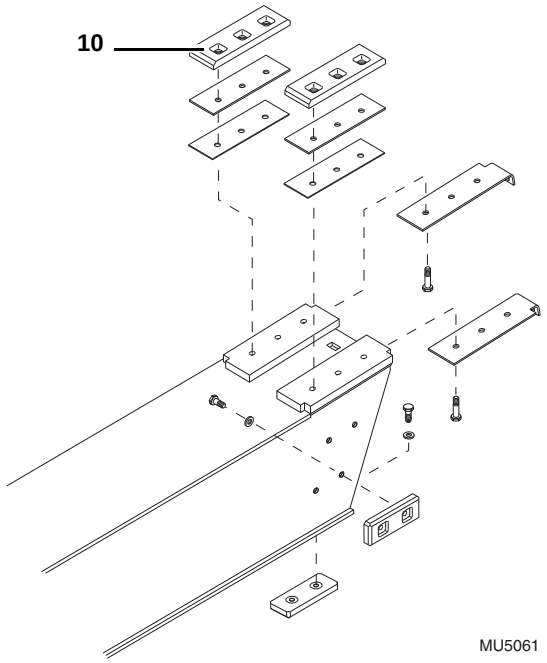

27. At the rear of the third boom section, remove the remaining wear pads (**10**), shims and hardware. Label all parts for installation.
28. Inspect all wear pads for wear. Refer to Section 3.5, “Boom Wear Pads.”

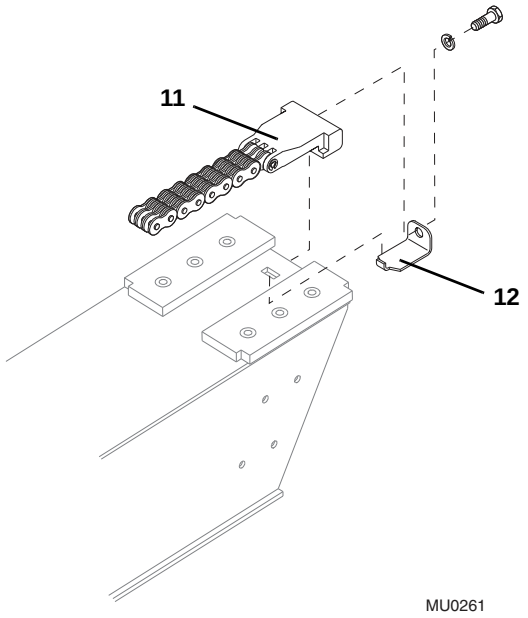

29. At the rear of the third boom section, disconnect the retract chain (**11**) from the anchor link (**12**).

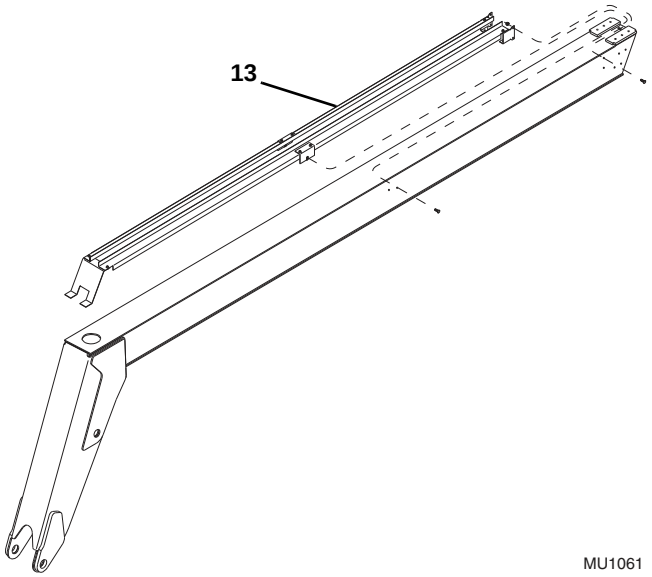

30. Remove the hydraulic hose rack (**13**) inside the third boom section.

https://truckmanualshub.com/

3.3.2 Second Boom Section Removal

1. At the front of the first boom section, remove the top and side wear pads. Label all parts for installation.

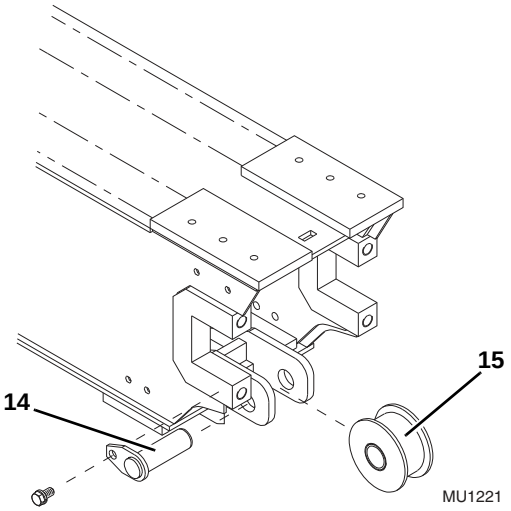

2. At the rear of the boom, remove the sheave pin (**14**) and sheave (**15**).
3. Use suitable overhead lifting device and sling to lift the second boom section enough to gain access to bottom wear pads. Remove the bottom wear pads. Label all parts for installation.
4. Reposition the sling and continue pulling the second boom section straight out of the first boom section. Reposition the slings as needed so the second boom section balances when removed from the first boom section. Set the second boom section down on blocks on a hard, level surface.
5. Remove the remaining wear pads. Label all parts for installation.
6. Inspect all wear pads for wear. Refer to Section 3.5, “Boom Wear Pads.”

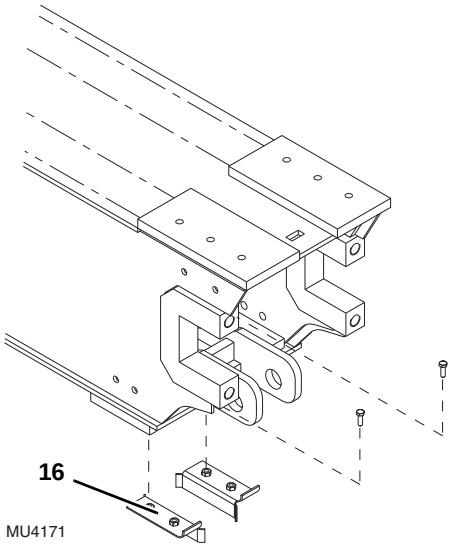

7. At the rear of the second boom section, remove the two hose guides (**16**).

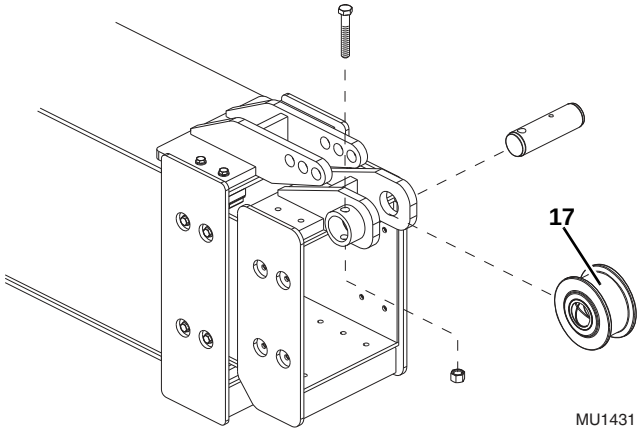

8. Remove the chain sheave (**17**).

https://truckmanualshub.com/

3.3.3 First Boom Section Removal

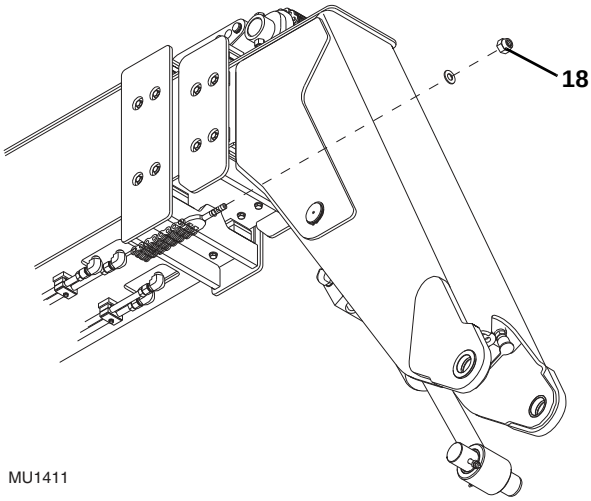

1. At the front of the boom, remove the retract chain locknut (**18**) and washer.

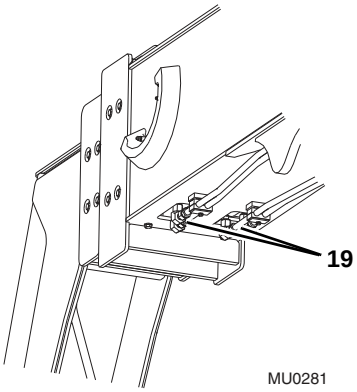

2. Label, disconnect and cap the hydraulic hoses (**19**) attached to the attachment tilt and auxiliary hydraulic tubes. Plug all fitting to keep dirt & debris from entering the hydraulic system.
3. Remove all clamps (**1**) securing the hydraulic tubes and rear hydraulic hoses to the boom and frame. Label and remove the tubes. Cap all hose ends.

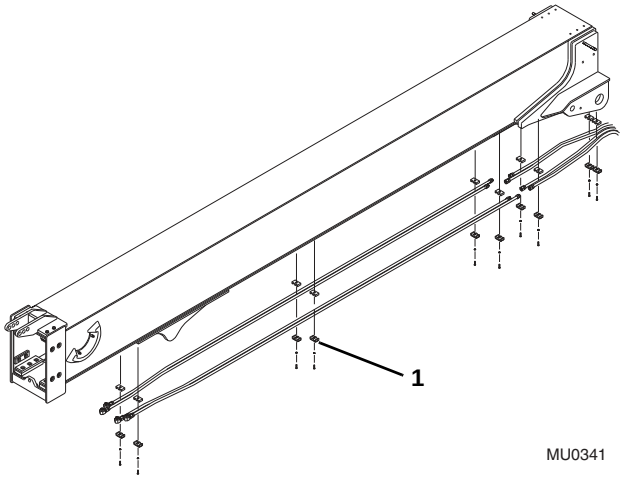

4. Pull the hydraulic hoses out of the boom. Label all parts for installation.

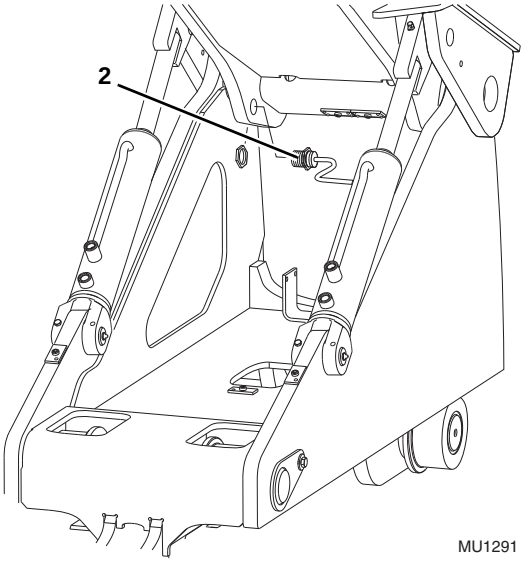

5. Remove the boom proximity sensor (**2**) from the boom.

https://truckmanualshub.com/

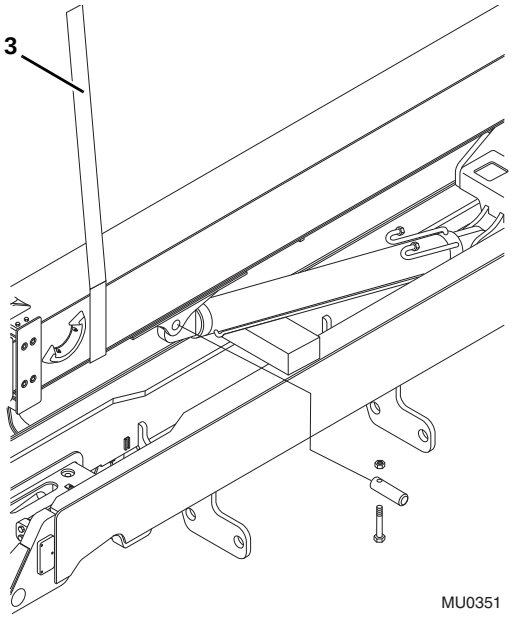

6. Use a suitable overhead lifting device and sling (**3**) to support the first boom section. Remove any slack from the sling
7. Block up or support the lift/lower cylinder. Remove the cylinder pin and carefully lower the cylinder onto the support.

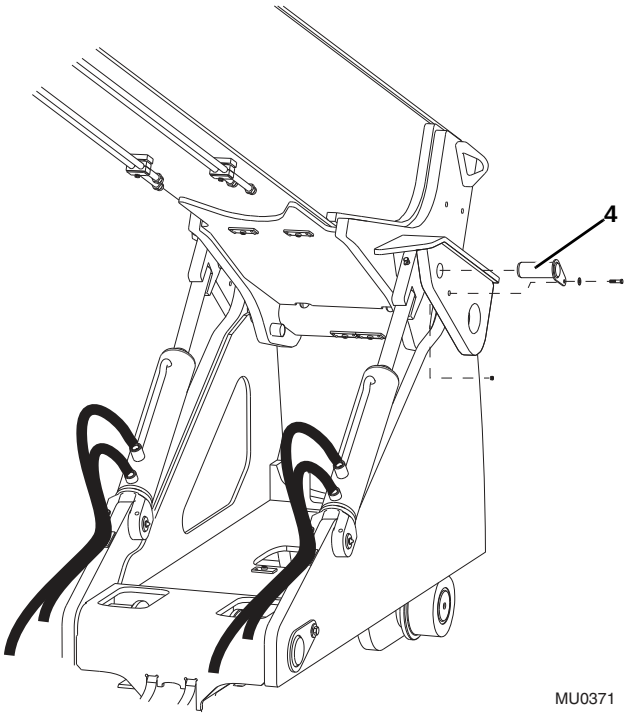

8. Working on the top of each slave cylinder, remove the cylinder mount pin (**4**). Lower each cylinder against the transfer carriage. DO NOT stretch or damage the hydraulic hoses.
9. Use a suitable overhead lifting device and sling to support the boom.

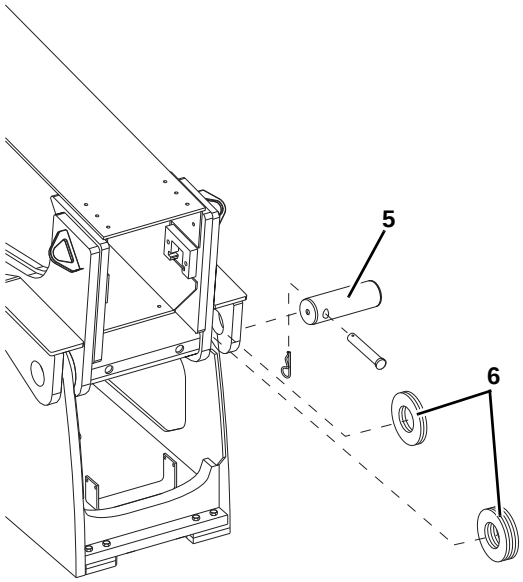

10. Remove the boom pivot pins (**5**) and shim washers (**6**). Label all parts for installation.
11. Carefully lift the first boom section away from the machine. Set the boom section down on a hard, level surface.

https://truckmanualshub.com/

3.3.4 First Boom Section Installation

1. Use a suitable overhead lifting device and sling and carefully lift the first boom section into place on the transfer carriage.

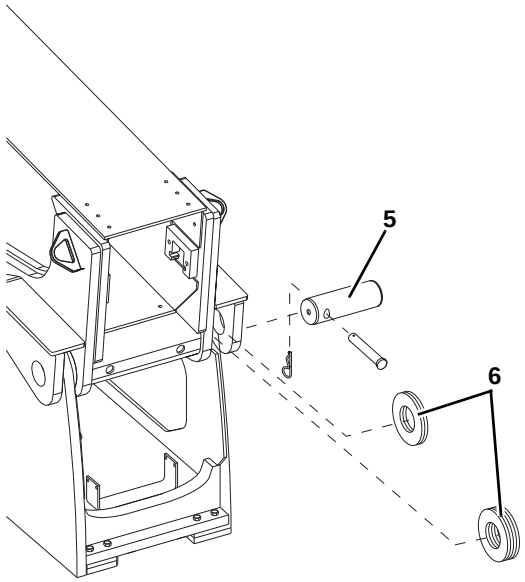

2. Install the boom pivot pin (**5**) with the previously used hardware. DO NOT coat the boom pivot pins with anti-seize compound.
3. Add or remove shims (**6**) as required until a maximum total gap of 0.09 in (2,3 mm) is obtained. Balance the number and thickness of shims equally on both sides. If an additional (odd) shim must be added to obtain the proper gap, add to the right side of the boom.

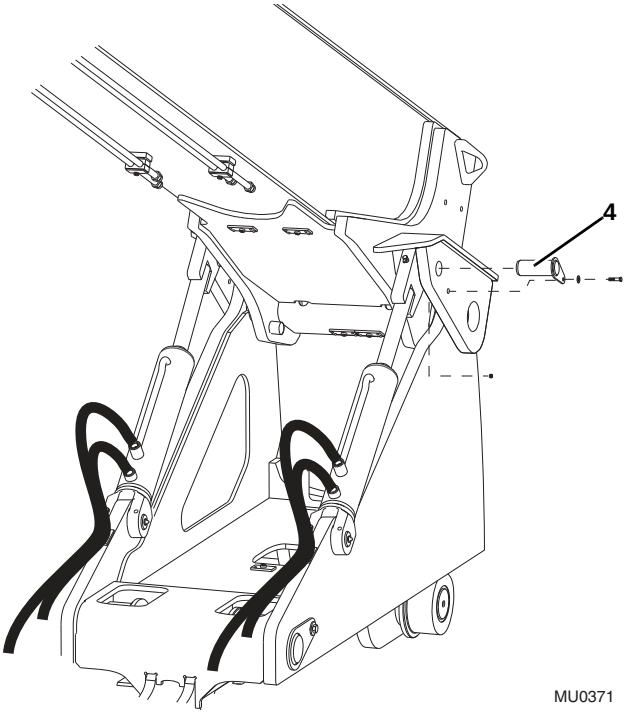

4. Raise each slave cylinder into position, coat each mount pin (**4**) and bore hole with anti-seize compound and install the mounting pins. Loctite® 242™ and torque each capscrew to 18-31 lb-ft (13-23 Nm). DO NOT stretch or damage the slave cylinder hydraulic hoses.
5. Use a suitable overhead lifting device and sling attached to the lift/lower cylinder. Remove slack from the sling and raise the cylinder into its mount boss on the underside of the boom.
6. Coat the lift/lower cylinder pivot pin and bore hole with anti-seize compound. Install the pin and secure with capscrew. Loctite® 242™ and torque to 70-77 lb-ft (95-105 Nm).
7. Remove the slings from the lift/lower cylinder, and remove the blocks or supports from beneath the cylinder.
8. As required, install the hydraulic clamps on the boom and secure the attachment tilt and auxiliary hydraulic tubes and hoses within the clamps on the boom and frame. Torque clamp capscrews to 4-8 lb-ft (6-11 Nm).
9. Install new o-rings into the fittings. Lubricate o-rings with clean hydraulic oil.
10. Uncap and connect the previously labeled hydraulic fittings to their appropriate locations.

https://truckmanualshub.com/

11. Install the boom proximity sensor. The gap between the sensor and the transfer carriage should be 0.12-0.19 in (3-5 mm). Torque the inside jam nut to 33-41 lb-ft (45-55 Nm).
12. At the front of the boom, install the locknut and flat washer to the retract chain clevis. DO NOT twist or kink the retract chain.

3.3.5 Second Boom Section Installation

1. Install the top, side and bottom wear pads to the rear of the second boom section.
2. Grease the sections of the boom in areas where the wear pads will slide.
3. Use a suitable overhead lifting device and sling, carefully lift and slide the second boom section into the first boom section until it extends approximately 6 in (150 mm) from the front of the first boom section.

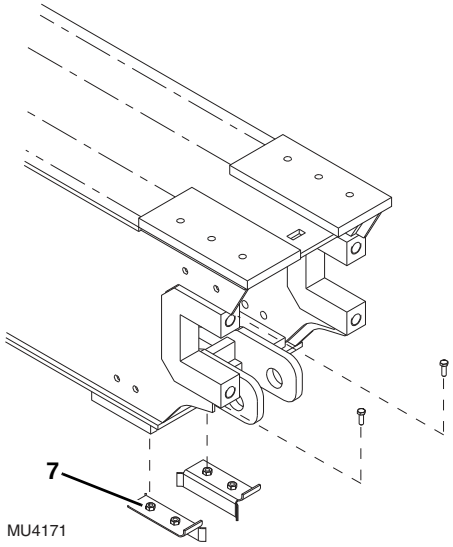

4. At the rear of the second boom section, install the two hose guides (**7**). Loctite® 242™ and torque capscrews to 10-19 lb-ft (14-26 Nm).

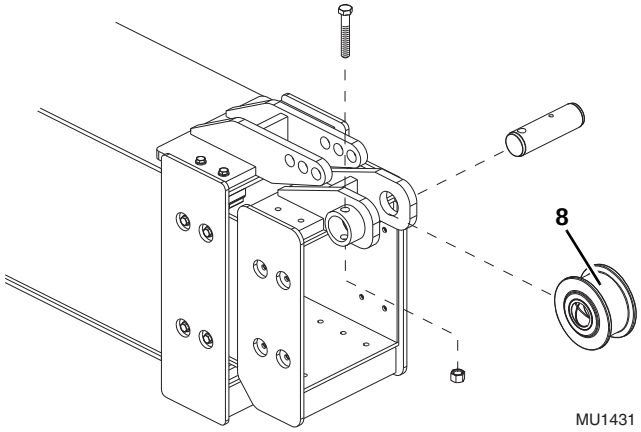

5. Install the sheave (**8**) and sheave pin at the rear of the second boom section. Coat sheave pin with anti-seize compound. Loctite® 242™ and torque capscrews to 36-66 lb-ft (50-90 Nm).
6. At the front of the second boom section, install the sheave and sheave pin. Coat the sheave pin with anti-seize compound. Loctite® 242™ and torque capscrews to 90-162 lb-ft (123-220 Nm).
7. Install the top, side and bottom wear pads to the inside of the first boom section.

3.3.6 Third Boom Section Installation

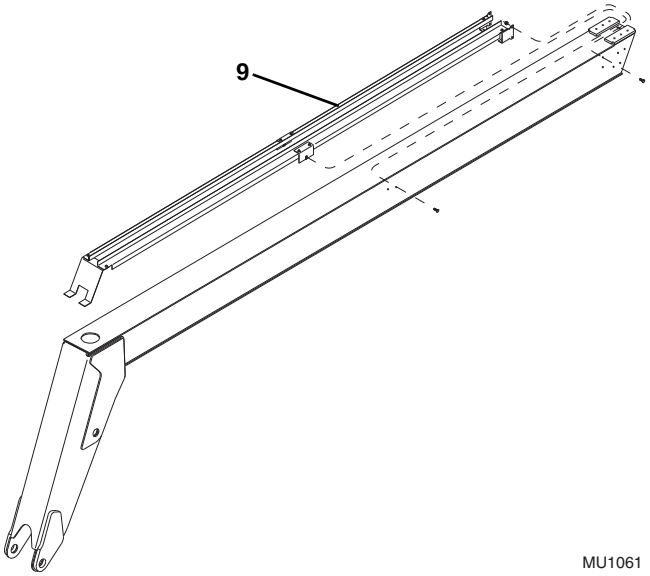

1. Install the hose guide (**9**) to its original orientation. Secure in place with the previously used hardware. Loctite® 242™ all capscrews. Torque the middle capscrews to 10-19 lb-ft (14-26 Nm) and torque the rear capscrews to 21-38 lb-ft (29-52 Nm).

https://truckmanualshub.com/

2. Place the extend chain and clevis, as an assembly on top of the third boom section and allow the chains and clevis to overhang the boom head. DO NOT allow the chain to twist or kink.

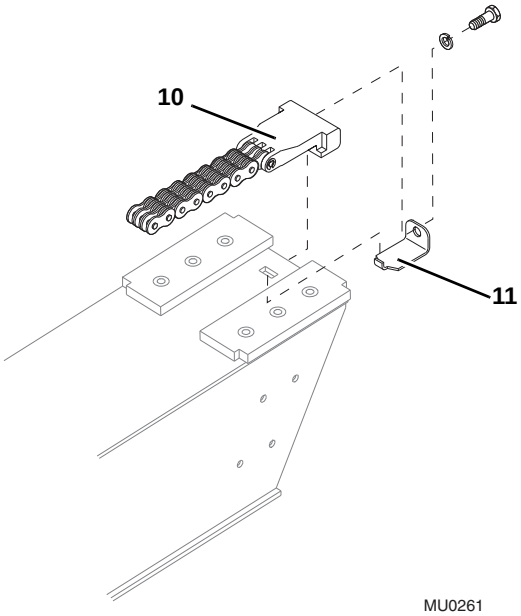

3. At the rear of the boom, attach the retract chain (**10**) to the same hole in the anchor link (**11**) with the previously used hardware. Loctite® 242™ and torque to 37-66 lb-ft (50-90 Nm).

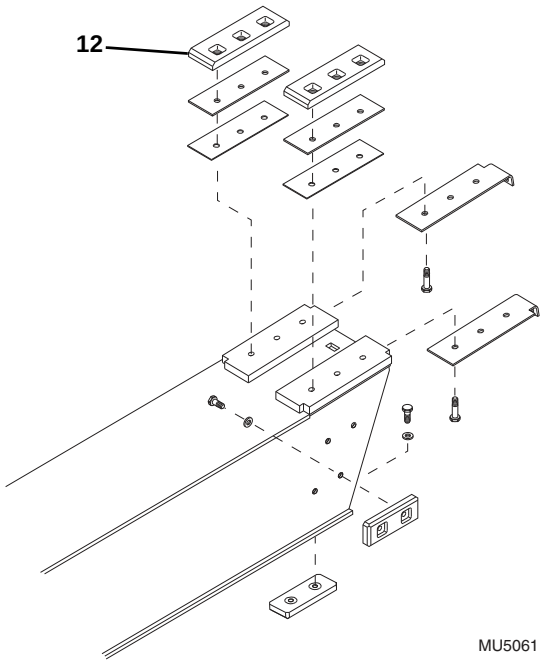

4. Install the top, side and bottom wear pads (**12**) to the rear of the third boom section.
5. Grease the sections of the boom in areas where the wear pads will slide.
6. Using a suitable overhead lifting device and sling, carefully slide the third boom section into the second boom section.
7. Install the bottom wear pads at the front of the second boom section.
8. Slide the third boom section into the second boom section. Remove the sling.

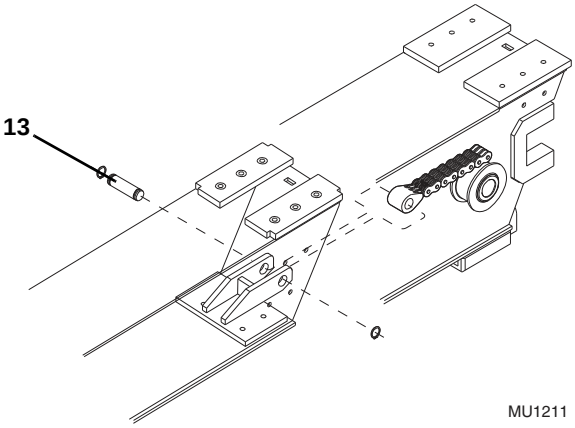

9. Install the extend chain yoke to the third boom section. Coat the clevis pin (**13**) with anti-seize compound.

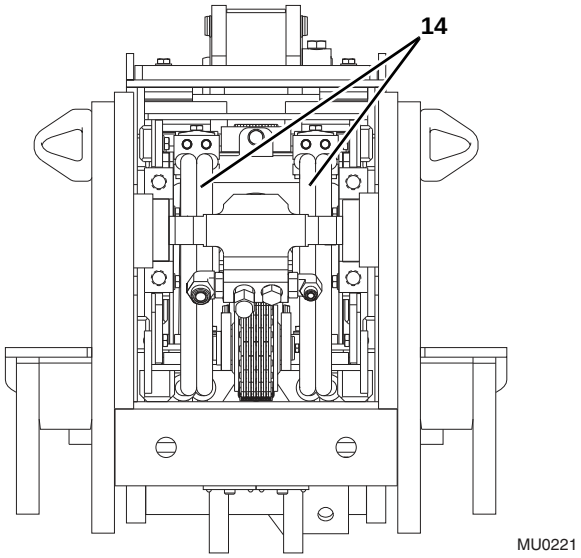

10. From the rear of the boom, push the attachment tilt and auxiliary hydraulic hoses (**14**) through the third boom section along the hose guides. Leave enough hose out of the back of the boom for the Extend/Retract cylinder to be installed.
11. Use a suitable overhead lifting device and sling to carefully raise and position the Extend/Retract cylinder into the rear of the third boom section. Readjust the sling as needed to help balance the cylinder in the sling during installation.

https://truckmanualshub.com/

12. After the manifold clears the hoses and is inside the boom, push the hydraulic hoses the rest of the way into the boom.

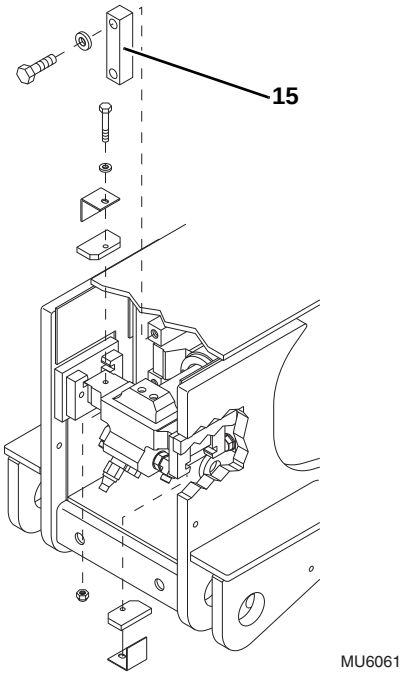

13. Install the cylinder trunnion clamps (**15**) with the previously used hardware. Loctite® 242™ and torque capscrews to 245-274 lb-ft (333-372 Nm).

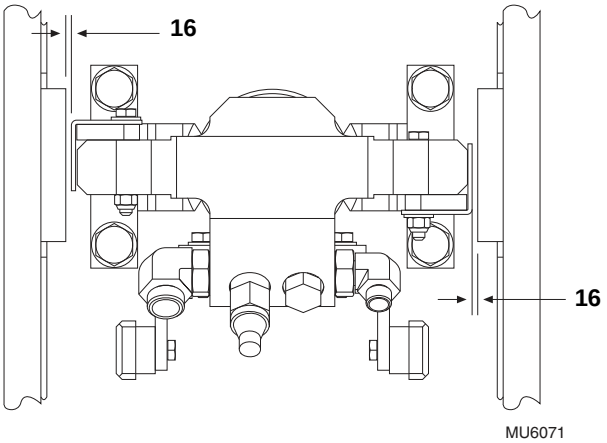

14. Position one end of the cylinder rod trunnion against its mounting boss. Install the cylinder trunnion clamps using the previously used hardware. Check that the gap (**16**) between the shim and the first boom section is within 0.07 in (1,8 mm) on both sides of the cylinder trunnion. Loctite® 242™ and torque all capscrews to 21-38 lb-ft (29-52 Nm).
15. Remove the sling and hoist.
16. Attach a suitable overhead lifting device and sling to the lifting eye of the attachment tilt cylinder.
17. Lift the attachment tilt cylinder into position and coat the mount pin and bore hole with anti-seize compound. Install the mount pin.
18. Install new o-rings into the fittings. Lubricate o-rings with clean hydraulic oil.
19. Loosely install the female coupler, male nipple and bulkhead fittings to the bulkhead plate inside the boom head.
20. Uncap and connect the previously labeled attachment tilt and auxiliary hydraulic fittings to their appropriate locations.
21. Install the hose guards to the tilt cylinder hoses. The guard edges should overlap inside and outside of the other hose guard.
22. Install the top and side wear pads to the front of the second boom section.

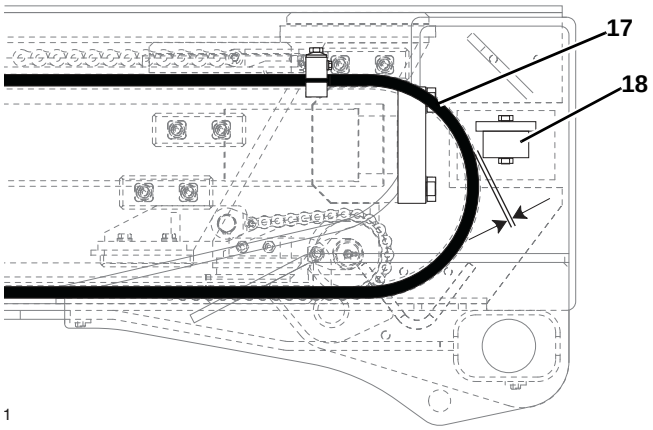

23. Working from the rear of the boom, move the attachment tilt and auxiliary hydraulic hoses (**17**) until there is approximately a 0.5 in (12 mm) gap between the Extend/Retract cylinder trunnion (**18**) and the hoses.
24. Install the attachment tilt and auxiliary hydraulic hose clamps to their mounting brackets at the rear of the second boom section.

Note: *ALWAYS use new o-rings when servicing the machine.*

25. Uncap and connect the previously labeled Extend/Retract cylinder hoses to their appropriate locations.

https://truckmanualshub.com/

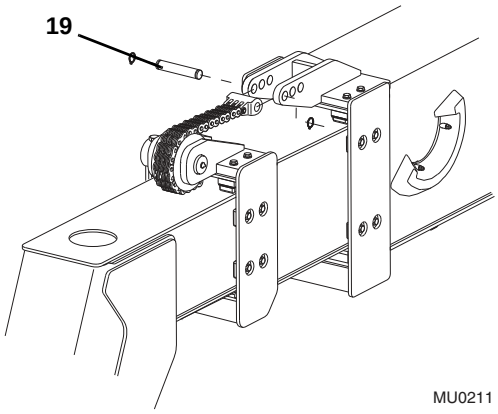

26. If needed, pull the second boom section out slightly to align the extend chain yoke with the bracket. Route the extend chain yoke and chains around the sheave on the second boom section. Connect the yoke to the anchor bracket on the first boom section with the clevis pin (**19**). Coat the clevis pin with anti-seize compound.
27. Check and adjust the boom chains. Refer to Section 3.4.5, “Boom Chain Tension Check.”
28. Properly connect the batteries.
29. Start the engine and operate all boom functions several times. Check the chain tension again and adjust as necessary. Check for leaks, and check the hydraulic fluid level in the tank; add fluid if required.
30. Clean up all debris, hydraulic fluid, etc., in, on, near and around the machine.
31. Install the rear cover to the boom.
32. Close and secure the engine cover.

3.4 BOOM EXTEND AND RETRACT CHAINS

3.4.1 Boom Chain Inspection

WARNING

Worn pins, stretched or cracked links or corrosive environments can cause chain failure. A chain failure could result in uncontrolled boom movement, loss of load or machine instability.

Under normal operating conditions the boom extend chains will need to be inspected every 250 hours of operation. The retract chains need to be exposed and inspected every 1000 hours of operation. Environmental conditions and dynamic impulse/shock loads can drastically affect normal operating conditions and require more frequent inspection intervals.

Environments in which material handling machines operate can vary widely from outdoor moisture to temperature to mildly corrosive or highly corrosive industrial atmospheres, in addition to abrasive exposures such as sand and grit. Some effects can be as follows:

- Moisture - Corrosive rusting reduces chain strength by pitting and cracking.
- Temperature - Low temperature reduces chain strength by embrittlement. Going in and out of cold storage results in moisture from condensation.
- Chemical Solutions or Vapors - Corrosive attack on the chain components and/or the mechanical connections between the chain components. Cracking can be (and often is) microscopic. Going from microscopic cracking to complete failure can be either abrupt or may require an extended period of time.

https://truckmanualshub.com/

- Abrasives - Accelerated wearing and scoring of the articulating members of the chain (pins and plates), with a corresponding reduction in chain strength. Due to the inaccessibility of the bearing surfaces (pin surfaces and plate apertures), wear and scoring are not readily noticeable to the naked eye.

Following are some examples of dynamic shock loading which can impose abnormal loads above the endurance limit of a leaf chain.

- High velocity movement of load, followed by sudden, abrupt stops.
- Carrying loads in suspension over irregular surfaces such as railroad tracks, potholes, and rough terrain.
- Attempting to “inch” loads which are beyond the rated capacity of the machine.

The above load cycles and environmental conditions make it impossible to predict chain life. It is therefore necessary to conduct frequent inspections until replacement life can be predicted.

The boom chain’s normal life expectancy can be expressed as a maximum percent of elongation. This is generally 3%. As the chain flexes back and forth over the sheave, the bearing joints (pins and inside link plates) gradually incur wear due to articulation.

3.4.2 Inspection Guidelines

1. Park the machine on a firm, level surface, raise the boom to a horizontal (level) position, place the transmission control lever in (N) NEUTRAL, engage the park brake switch.
2. Fully extend the boom until the extend chain is taut. Shut the engine off.
3. The extend chains will be visible for inspection with the machine in this state.
4. While doing the chain inspection, check all chain clevis ends for distortion or cracking and sheaves for bearing wear or grooving from the chain.
5. Inspect the retract chains every 1000 hours of operation.
6. Inspect the chains for the following conditions:

Edge Wear

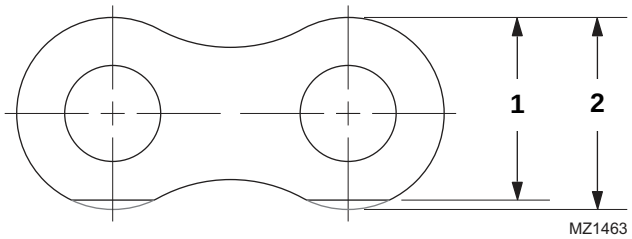

Check the chain for wear on the link plate edges caused by running back and forth over the sheave. The maximum reduction of material should not exceed 5%. Measure and compare to a normal link plate height by measuring a portion of chain that does not run over the sheave. If the measured plate height (**1**) is 5% less than the normal plate height (**2**), discard and replace the chain.

Elongation

It is important to measure the chain in the section that moves over the sheaves because it receives the most frequent articulation. Measuring the chain near its clevis terminals could give an inaccurate reading. The ends of the chains, near the clevis terminal, will not have flexed as frequently, if at all, as the middle of the chains.

It is best to measure in 12 pin increments from pin center to pin center. For example, if the links are one inch from pin center to pin center, the distance should be 12 in (305 mm). If the links are 3/4 in (9,5 mm) apart, the distance after 12 pins should be 9 in (229 mm).

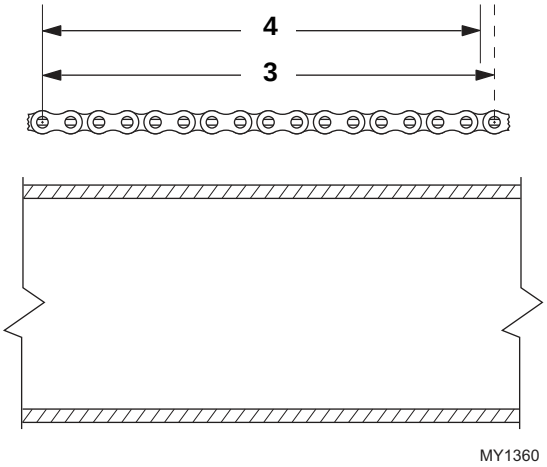

If the distance measured (**3**) is 3% greater than the normal length (**4**), discard and replace the chain.

https://truckmanualshub.com/

Distorted or Battered Link Plates

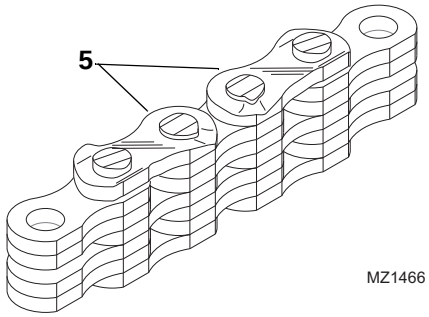

Distorted or battered link plates (**5**) on a leaf chain can cause tight joints and prevent flexing.

Turning or Protruding Pins

Highly loaded chain, operating with inadequate lubrication can generate abnormal frictional forces between pin and link plates. When chain is allowed to operate in this condition, a pin or series of pins, can begin to twist out of a chain, resulting in failure.

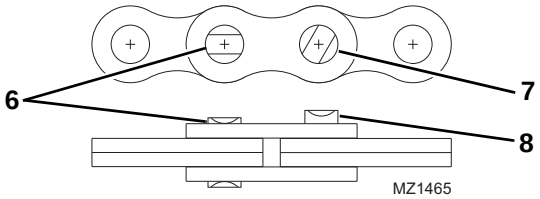

Examine the pin head rivets to determine if the “VEE” flats are still in correct alignment (**6**). Chain with rotated/displaced heads (**7**) or abnormal pin protrusion (**8**) should be replaced immediately.

DO NOT attempt to repair the chain by welding or driving the pin(s) back into the chain. Once the press fit integrity between outside plates and pins has been altered, it cannot be restored.

Any wear pattern on the pin heads or the sides of the link plates indicates misalignment in the system. This condition damages the chain as well as increases frictional loading and should be corrected.

Cracked Plates

Inspect the chains very carefully, front and back as well as side to side, for any evidence of cracked plates. If any one crack is discovered, the chain should be replaced in its entirety.

It is important, however to determine the cause of the crack before installing a new chain so the condition does not repeat itself.

The types of cracks are:

- **Fatigue Cracking** - Fatigue cracks (**9**) are a result of repeated cyclic loading beyond the chain’s endurance limit.

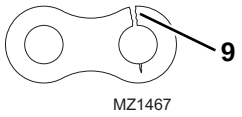

- **Stress Corrosion Cracking** - The outside link plates are particularly susceptible to stress corrosion cracking (**10**).

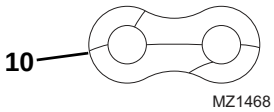

- **Corrosion Fatigue Cracking** - Corrosion fatigue cracks are very similar to fatigue cracks in appearance. Corrosion fatigue is the combined action of an aggressive environment and cyclic stress.

Other Modes of Failure

- **Ultimate Strength Failure** - These types of failures are caused by overloads far in excess of the design load. Either fractured plates (**1**) or enlarged holes (**2**) can occur. If either of these failures occurs, the chain should be replaced immediately.

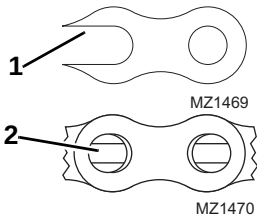

- **Tight Joints** - All joints in the chain should flex freely. Tight joints (**3**) resist flexing.

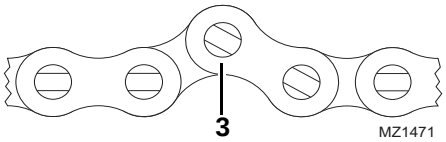

If the problem is caused by dirt or foreign substance packed in the joints, clean and lubricate thoroughly before re-installing the chain.
If the problem is caused by corrosion and rust or bent pins, replace the chain.

https://truckmanualshub.com/

3.4.3 Expose Chains for Inspection

b. Extend Chains

1. Park the machine on a firm, level surface. Place the transmission control lever in (N) NEUTRAL, engage the park brake switch and raise the boom to a horizontal (level) position.
2. Fully extend the boom and shut the engine OFF.

The extend chains will be visible for inspection with the machine in this state.

While doing the chain inspection, check all chain clevis ends for distortion or cracking and sheaves for bearing wear or grooving from the chain.

If during the inspection, any chain is found to be damaged or stretched, the chain must be replaced. It is recommended that when any chain is replaced, that all the chains and clevises be replaced at the same time.

c. Retract Chains

The retract chains are only partially visible through the rear of the boom with all the sections retracted. It is possible to see a section of the retract chain as the boom is slowly extended. The retract chain must be removed from the boom in order to be fully inspected. This must be done every 1000 hours or whenever the retract chain is removed from the boom. If there is ANY question that one or all the retract chains are damaged, the boom should be removed and disassembled with the retract chains being inspected and replaced if necessary.

Note: *DO NOT attempt to repair a chain. Replace a stretched or damaged chain with a new part. Always replace both the chain and the clevis. It is recommended that when any chain is replaced, that all chains and clevis' be replaced at the same time.*

3.4.4 Chain Lubrication

After inspection and before being returned to service, chains must be lubricated with a quality chain lubricant (“LUBRIPLATE” Chain & Cable Fluid, “LPS3” or equivalent).

The lubricant must penetrate the chain joint to prevent wear. Applying lubricant to the external surfaces will prevent rust, but the chains should be articulated to make sure the lubricant penetrates to the working surfaces between the pins and links.

To prepare the chain for lubrication, the chain plates should be brushed with a stiff brush or wire brush to clear the space between the plates so that lubricant can penetrate to the working surfaces.

Lubricant may be applied with a narrow paint brush or directly poured on, but the chain should be well flooded with lubricant and the boom should be extended and retracted to be sure that the lubricant penetrates to the working surfaces. All surplus lubricant should be wiped away from the external surfaces. DO NOT use a solvent for this wiping operation.

Regular application of lubricant is necessary to make sure that all working surfaces are adequately lubricated. In extremely dusty conditions, it may be necessary to lubricate the chains more often.

Lubrication of chains on machines working consistently in extreme hot or cold conditions requires special consideration. It is important that a reputable lubrication specialist or an authorized distributor be consulted for guidance.

3.4.5 Boom Chain Tension Check

1. Make sure the attachment is attached to the boom head before doing the tension check.
2. Park the machine on level ground. Place the transmission control lever in (N) NEUTRAL, engage the parking brake switch and level the boom.
3. Slowly, fully extend the boom and retract it about halfway. Fully extend the boom, then retract it 2 in (51 mm) (one inch per section). Turn the engine OFF.

https://truckmanualshub.com/

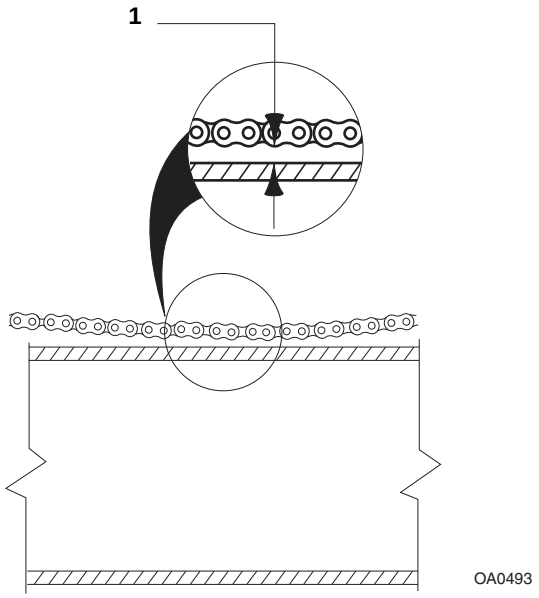

4. Measure the sag (**1**) in the top boom extend chain between the bottom of the chain and the top of the boom at their closest point. Acceptable boom chain sag is between 3.0 in (76 mm) and 4.0 in (102 mm). If the measurement is still less than 3.0 in (76 mm), the boom chain needs to be adjusted.

   If the measurement is either less than, or greater than the range given, the boom chains need to be adjusted. Continue with Section 3.4.6, “Boom Chain Tension Adjustment” to adjust the chain system.

5. Start the engine, retract the boom completely and turn the engine OFF.

3.4.6 Boom Chain Tension Adjustment

Note: *Always perform Section 3.4.5, “Boom Chain Tension Check” before adjusting the boom chain tension.*

1. Park the machine on a hard, level surface, level the machine, retract the boom, level the boom, place the transmission control lever in (N) NEUTRAL, engage the park brake and shut the engine OFF.
2. Remove the rear boom cover.
3. Adjust the extend chain by tightening or loosening the retract chain adjustment nut on the front underside of the first boom section.
4. If the chain sag measurement is less than 3.0 in (76 mm), the retract chain adjustment nut needs to be tightened.
   If the chain sag measurement is more than 4.0 in (102 mm), the retract chain adjustment nut needs to be loosened.
5. Return to the cab, start the engine and cycle the boom all the way out and all the way in several times.
6. Fully extend the boom, then retract it 2 in (51 mm) Shut the engine OFF.
7. Measure the sag in the top boom extend chain between the bottom of the chain and the top of the second boom section at their closest point. Acceptable boom sag is between 3.0 in (76 mm) and 4.0 in (102 mm). If the measurement is still less than 3.0 in (76 mm), the boom chain needs to be readjusted.

Note: *If all the adjustment has been used up on the retract chain adjustment nut and the extend chain is not within the acceptable sag range, the clevis at the top front of the first boom section will need to be repositioned.*

8. Return to the cab, start the engine and fully retract the boom. With the boom horizontal, extend the boom out approximately 2 ft (610 mm) and shut the engine OFF.
9. At the front underside of the first boom section, loosen the retract chain adjustment nut. Back the nut off until the top of the nut is flush with the end of the threaded clevis.
10. Return to the cab. Have an assistant watch at the front underside of the first boom section. Slowly retract the boom until the retract chain adjustment nut touches the clevis mounting tab on the underside of the first boom section.
11. At the front top of the first boom section, move the extend chain clevis to the next hole toward the rear of the mounting plates. Coat the mounting pin and bore hole with anti-seize compound and reinstall the pin.
12. Return to the cab, start the engine and fully retract the boom. Shut the engine OFF.
13. At the front underside of the first boom section, tighten the retract chain adjustment nut to remove the excess slack from the chains.
14. Make sure that the chain system is properly tensioned. Refer to Section 3.4.5, “Boom Chain Tension Check.”
15. Install the rear boom cover.

https://truckmanualshub.com/

a. Component/Assembly Verification

The third to second boom section separation should be checked when assembling new boom sections or chains, or when the rear retract chain clevis has been moved forward on the anchor plate.

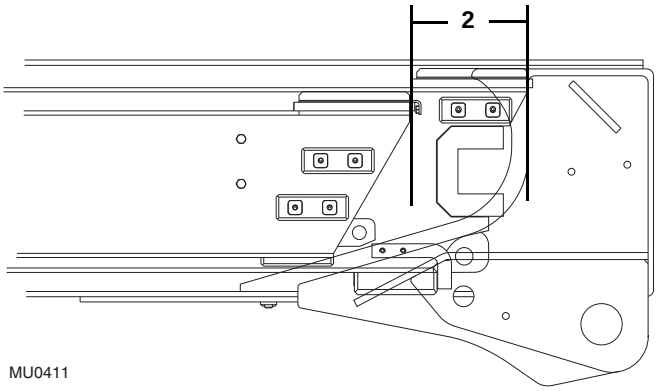

Measure the separation (**2**) between the third and second boom section top plates. The distance should be at least 8.5 in (216 mm) and not greater than 9.5 in (241 mm) with the boom fully retracted and the chains properly tensioned. A distance of less than 8.5 in (216 mm) could result in interference and cause damage to boom components.

If the distance is less than 8.5 in (216 mm):

1. Tighten the retract chain locknut (**3**) on the bottom of the first boom section.
2. Measure the distance and tighten until the distance is between 8.5 in (216 mm) and 9.5 in (241 mm). If the locknut cannot be tightened any more, loosen the locknut until one full thread on the clevis protrudes beyond the collar of the locknut.
3. Verify that the extend chain clevis (**4**) is not mounted in the last hole in the anchor plate. If the clevis can be moved to the next hole, do so and check the chain tension. Refer to Section 3.4.5, “Boom Chain Tension Check.”
4. Measure the distance again and tighten locknut until the distance is between 8.5 in (216 mm) and 9.5 in (241 mm).
5. Install the rear boom cover.
6. If the third to second boom separation distance cannot be achieved, contact your local authorized service distributor.

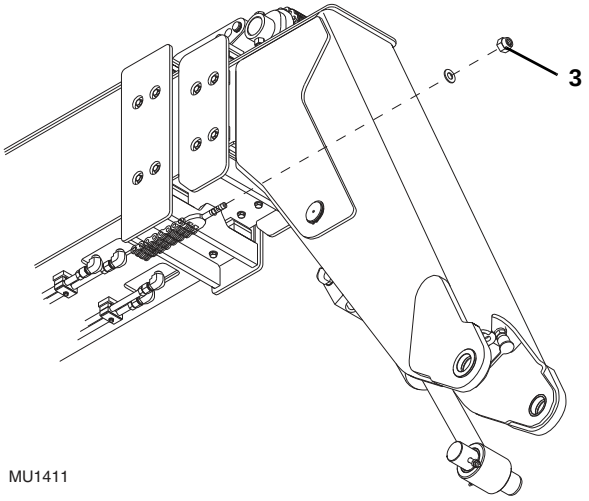

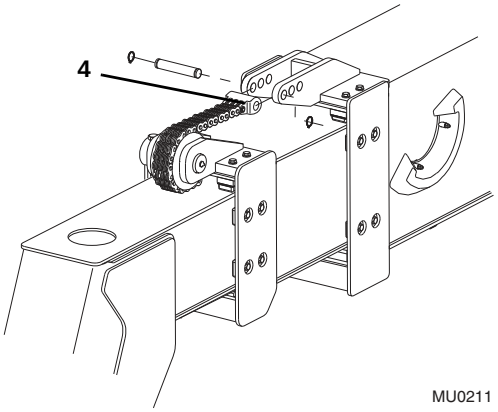

If the distance is greater than 9.5 in (241 mm):

1. Loosen the retract chain locknut (**3**) on the bottom of the first boom section one or two turns. A minimum of one full thread on the clevis must protrude beyond the collar of the locknut.
2. Measure the distance and loosen the locknut until the distance is between 8.5 in (216 mm) and 9.5 in (241 mm) or until one full thread on the clevis protrudes beyond the collar of the locknut.
3. Verify that the extend chain clevis (**4**) is not mounted in the first hole in the anchor plate. If the clevis can be moved to the next hole, do so and check the chain tension. Refer to Section 3.4.5, “Boom Chain Tension Check.”
4. Measure the distance again and loosen the locknut until the distance is between 8.5 in (216 mm) and 9.5 in (241 mm).
5. Install the rear boom cover.
6. If the third to second boom separation distance cannot be achieved, contact your local authorized service distributor.

https://truckmanualshub.com/

3.4.7 Extend Chains Removal and Replacement

1. Park the machine on level ground. Place the transmission control lever in (N) NEUTRAL, engage the parking brake switch, level the boom and shut the engine OFF.
2. Place a Do Not Operate Tag on both the ignition key switch and the steering wheel, stating that the machine should not be operated.
3. Properly disconnect the battery.
4. Remove the boom rear cover.

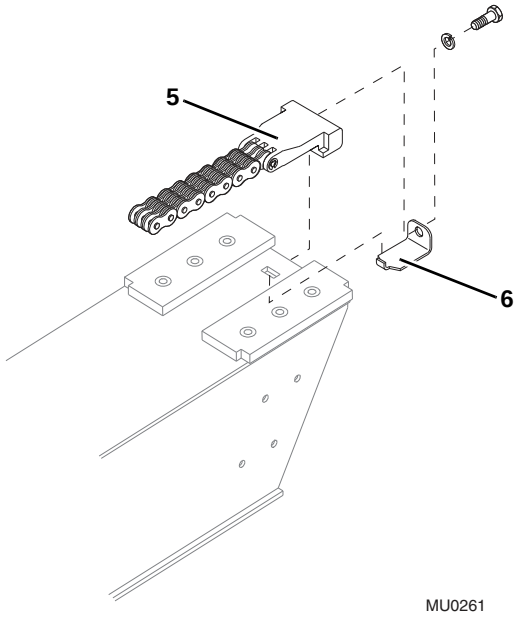

5. At the rear of the third boom section, disconnect the retract chain (**5**) from the anchor link (**6**).

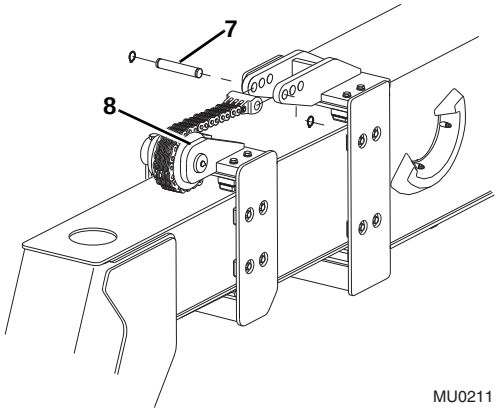

6. Remove the clevis pin (**7**) from the extend chain yoke at the front of the boom. Lay the chain assembly flat against the third boom section.

Note: *Chains and clevis' are wear items and experience the same stress. DO NOT attempt to repair a chain. Replace a stretched or damaged chain with a new part. Always replace both the chain and the clevis'.*

7. Remove the extend chain sheave (**8**).
8. Attach one end of a string or wire to the extend chain yoke. The string or wire must be long enough to pull the extend chain through the boom.
9. Pull the extend chain out through the rear of the boom. Remove the wire from the clevis, but not from inside the boom.
10. Inspect wear and condition of the booms, chains, clevis', chain sheaves, extend/retract cylinder, chain rods, clevis anchors and all mounting hardware. Replace any worn or damaged parts. DO NOT attempt to make any repairs to the chain.
11. Attach the wire to the new extend chain and pull it through the boom between the third and second boom section.
12. At the front of the second boom section, coat the sheave pin and bore with anti-seize compound. Install the sheave. Loctite® 242™ and torque the capscrew to 90-162 lb-ft (123-220 Nm).
13. If needed, pull the boom out slightly to align the extend chain yoke with the sheave. Route the extend chain around the sheave on the second boom section. Coat the clevis pin and bore hole with anti-seize compound. Install the extend chain yoke to the first boom section.
14. At the rear of the boom, install the retract chain to the anchor link. Loctite® 242™ and torque to 37-66 lb-ft (50-90 Nm).
15. Check and adjust boom chain tension. Refer to Section 3.4.5, "Boom Chain Tension Check."
16. Install the rear boom cover.
17. Properly connect the battery.

3.4.8 Retract Chain Removal and Replacement

1. Park the machine on level ground. Place the transmission control lever in (N) NEUTRAL, engage the parking brake switch, level the boom and shut the engine OFF.
2. Place a Do Not Operate Tag on both the ignition key switch and the steering wheel, stating that the machine should not be operated.
3. Properly disconnect the battery.
4. Remove the boom rear cover.

https://truckmanualshub.com/

5. At the front underside of the boom, record the amount of threads extending beyond the locknut. This measurement will be the starting point for adjustment of the boom retract chain.

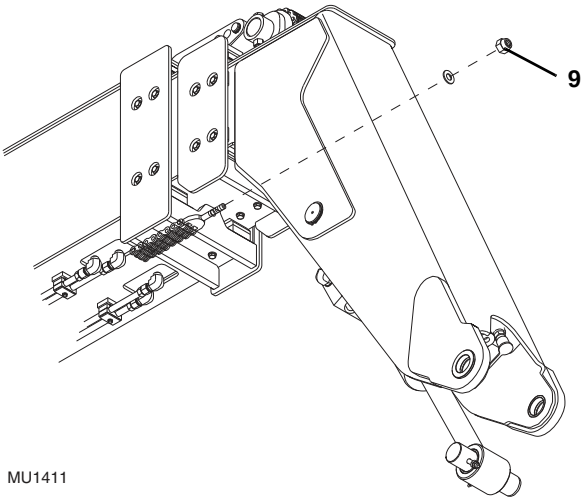

6. Remove the locknut (**9**) and washer securing the retract chain to the boom.

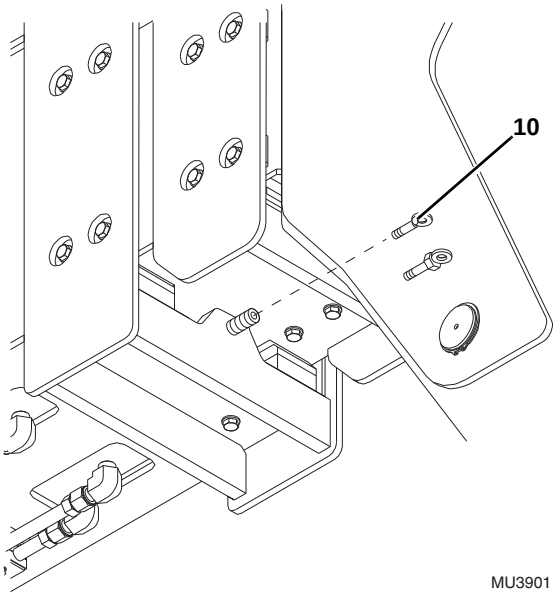

7. Attach a wire or string to the threaded clevis with a threaded eye (**10**) or a flat washer tack welded to a capscrew. The outside diameter of the eye or flat washer must be smaller than the diameter of the threads on the clevis. The wire or string will be used to pull the chain back through the boom during reassembly.

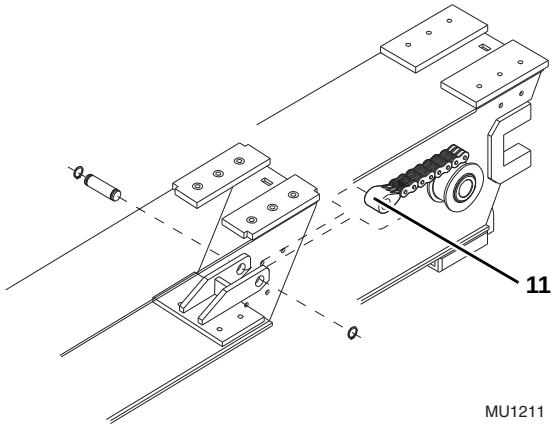

8. Disconnect the retract chain yoke (**11**) from the rear of the third boom section. Lay the chain assembly flat behind the boom.
9. From the rear of the boom, pull the retract chain out of the boom. Remove the wire from the clevis, but not from the inside of the boom.
10. Inspect wear and condition of the booms, chains, clevis', chain sheaves, extend/retract cylinder, chain rods, clevis anchors and all mounting hardware. Replace a worn or damaged chain. DO NOT attempt to make any repairs to the chain.

Note: *Chains and clevis' are wear items and experience the same stress. DO NOT attempt to repair a chain. Replace a stretched or damaged chain with a new part.*

11. Attach the wire to the new retract chain.
12. From the rear of the boom, push the threaded clevis end of the retract chain under the chain sheave and down between the second and first boom sections. Have an assistant pull the string or wire from the front of the boom.
13. Guide the clevis through the hole in the tab at the front of the boom.
14. Install the retract chain yoke on the rear of the third boom section.
15. Remove the string or wire from the end of the clevis.
16. Secure the clevis with a locknut and washer. Tighten the locknut on the retract chain clevis until the amount of threads protruding beyond the locknut is the same as the measurement recorded during removal of the retract chain.
17. Check and adjust retract chain tension. Refer to Section 3.4.5, "Boom Chain Tension Check."
18. Install the boom rear cover.
19. Properly connect the battery.

https://truckmanualshub.com/

3.5 BOOM WEAR PADS

The wear pads on this machine are flat rectangular wear pads with metal inserts.

A total of 30 wear pads are installed on the boom sections.

3.5.1 Wear Pad Inspection

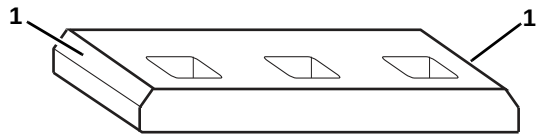

Inspect all wear pads for wear. If the angle indicators (**1**) on the ends of the wear pads are visible, the wear pads can be reused. If the pads show uneven wear (front to back), they should be replaced. Replace pads as a set if worn or damaged.

3.5.2 Wear Pad Installation and Lubrication

Note: *Inspect all wear pads. Replace as necessary.*

The following wear pad procedure must be followed to insure the proper wear pad installation:

- The wear pad inserts and mounting bolts MUST be clean from any grease, oil or other contaminates before applying Loctite® 242™ and installing mounting bolts.
- Apply Loctite® 242™ to all wear pad mounting bolts.

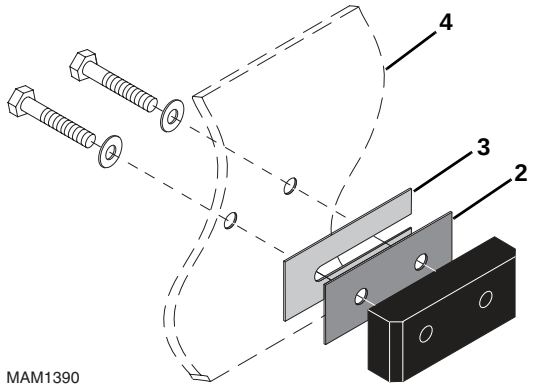

- A spacer (**2**) with holes must be used before any shim (**3**) is used.
- A shim (**3**) must be inserted between the spacer (**2**) and wear pad support plate, block or boom section (**4**).
- The number of shims can vary at each shim point.
- The bottom wear pads must be shimmed equally on each side.

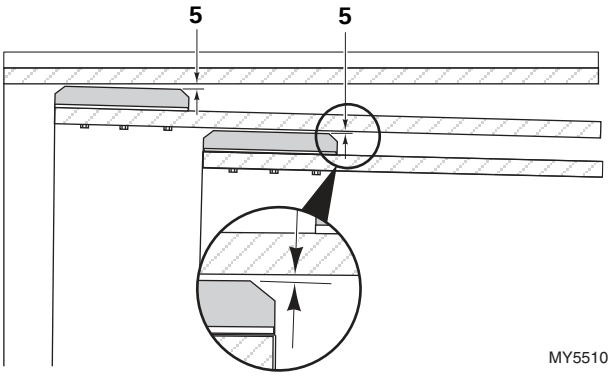

- Maintain a total boom section clearance (**5**) of 0.070 - 0.130 in (1,78 - 3,30 mm) both the horizontal and vertical directions.

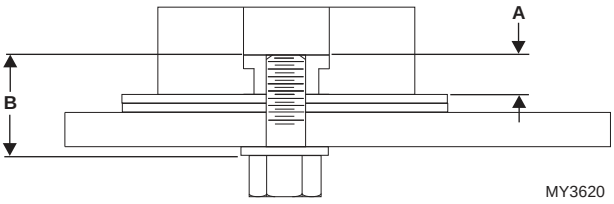

- The length of the wear pad bolt depends on the number of shims, spacers and washers being used.
- The thickness of each threaded wear pad insert is 0.312 in (7,92 mm)(**A**).
- The bolt length should be determined by measuring the distance from the face of the insert to the face of the boom (**B**) including any spacer, shim(s) and washer(s).
- Bolt thread engagement in the wear pad insert should be 0.275 ± 0.040 in (6,98 ± 1,0 mm).
- One or two hardened washers are to be used on each wear pad bolt except where noted otherwise. DO NOT use more than two hardened washers.
- Use only one hardened washer if mounting bolts are recessed.
- Wear Pad Bolt Torque:
  M8-1.25 Bolt, 29 lb-ft (39 Nm)
  M10-1.5 Bolt, 55 lb-ft (75 Nm)
- Torque wear pad bolts after shimming is completed.
- Lubricate the face and pockets of each wear pad after being installed.

Boom Section Wear Pad Pathway Lubrication:

- Clean and lightly grease all wear pad pathways with Mystik Tetrimoly grease.

20. Clean and lightly grease the hose carrier guide bar pathways with Mystik Tetrimoly grease.

https://truckmanualshub.com/

3.6 QUICK ATTACH ASSEMBLY

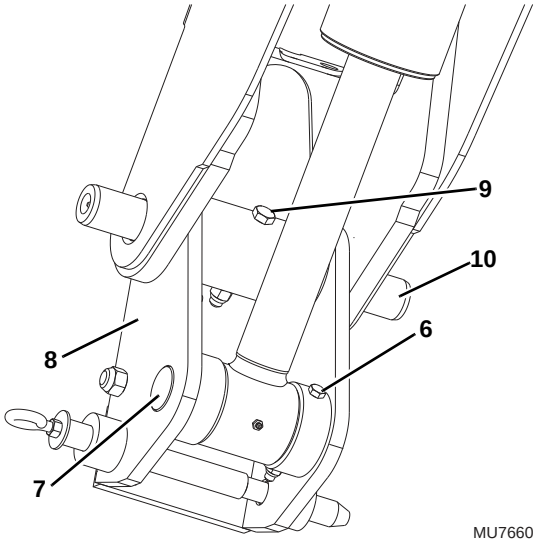

3.6.1 Quick Attach Removal

1. Remove the lock bolt holding (**6**) the tilt cylinder rod end pin (**7**) to the quick attach assembly (**8**). Remove the Tilt Cylinder pin.
2. Support the quick attach assembly. Remove the capscrew and locknut (**9**) securing the quick attach pivot pin (**10**) to the quick attach assembly. Remove the quick attach pivot pin and assembly. Record the location and quantity of the shim washers as the pin is being removed.
3. Inspect the above pins for nicks or surface corrosion. Use fine emery cloth to fix minor nicks or corrosion. If damaged or if it cannot be repaired the pin must be replaced.

3.6.2 Quick Attach Installation

1. Assemble the quick attach to the boom head. Line up the quick attach between the mounts on the boom head. The quick attach should be centered in the boom head. Reassemble the shims between the quick attach and the boom head.
2. Coat the quick attach head pin with an anti-seize compound. Insert the quick attach head pin through the quick attach and boom head. Secure with the previous capscrew and locknut.
3. Align the quick attach with the tilt cylinder rod end and insert the tilt cylinder pin. Align the tilt cylinder pin and screw in the locking bolt. Torque as required.

3.7 FORKS

Forks should be cleaned and inspected prior to being attached to carriage. If the following criteria is not met, forks must be removed from service immediately.

Daily Inspection

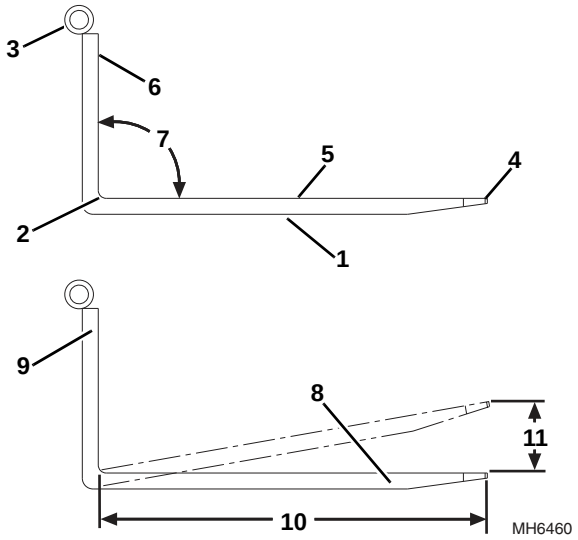

1. Inspect forks (**1**) for cracks, paying special attention to heel (**2**) and mounting tubes (**3**).
2. Inspect forks for broken or bent tips (**4**) and twisted blades (**5**) and shanks (**6**).

Yearly Inspection

1. Straightness of the upper face of blade (**5**) and the front face of shank (**6**) should not exceed 0.5 percent of the length of blade or height of shank.
2. Angle (**7**) between upper face of blade and front face of shank should not exceed 93 degrees.
3. Thickness of blade (**8**) and shank (**9**) should not be reduced to 90 percent of original thickness.

Note: *Contact the local distributor with the fork part number to find the manufactured dimensions of the fork blade.*

4. Ensure fork length (**10**) is adequate for intended loads.
5. Fork markings should be legible, re-stamp if required.
6. Compare fork tips (**11**) when mounted on a carriage. Maximum difference in height of fork tips is 3 percent of the length of the blade (**10**).

https://truckmanualshub.com/

3.8 TROUBLESHOOTING

This section provides an easy reference guide covering the most common problems that occur during operation of the boom.

Boom Troubleshooting

Problem	Cause	Remedy
1. Boom will not extend or retract.	1. Broken hydraulic hose(s) or tube(s) and/or connections leaking.	1. Locate break, replace hose(s) or tube(s), tighten connections.
	2. Extend/Retract hydraulic system not operating properly.	2. Refer to Section 8.4, “Hydraulic Circuits.”
	3. Faulty extend/retract cylinder.	3. Repair cylinder, Refer to Section 8.7.17, “Accumulator Charge Troubleshooting.”
	4. Broken chains or anchors.	4. Replace chains as needed.
2. Boom shifts to right or left when extending.	1. Boom side wear pads improperly shimmed or worn.	1. Shim wear pads to correct gap. Replace wear pads as needed. Refer to Section 3.5.2, “Wear Pad Installation and Lubrication.”
3. Excessive boom pivot pin noise and/or wear.	1. Insufficient lubrication.	1. Lubricate at regular intervals. Refer to Section 2.6, “Lubrication Schedules.”
	2. Worn bushing(s).	2. Replace bushing(s) and lubricate at regular intervals
4. Excessive Compensation cylinder pivot pin noise and/ or wear.	1. Insufficient lubrication.	1. Lubricate at regular intervals. Refer to Section 2.6, “Lubrication Schedules.” Replace worn pins as needed.
	2. Worn bushing(s).	2. Replace bushing(s) and lubricate at regular intervals.

https://truckmanualshub.com/

Boom Troubleshooting (Continued)

Problem	Cause	Remedy
5. Drooping chain, or jerky boom extend or retract functions.	1. Chain(s) tension not properly adjusted.	1. Adjust chain(s).
	2. Chain(s) stretched or binding.	2. Replace chains as needed. Refer to Section 3.4, “Boom Extend and Retract Chains.”
	3. Wear pads loose, contaminated, excessively worn or damaged.	3. Replace wear pad. Refer to Section 3.5.2, “Wear Pad Installation and Lubrication.”
	4. Contaminated, corroded or rusted wear pad sliding surfaces.	4. Remove contamination and/or corrosion from wear pad sliding surfaces and lubricate. If the surfaces cannot be reconditioned, replace the boom section(s).
	5. Extend/Retract hydraulic system not operating properly.	5. Refer to Section 8.4, “Hydraulic Circuits.”
	6. Damaged boom section.	6. Replace the damaged boom section. Refer to Section 3.3, “Boom Assembly Maintenance.”
6. Boom will not raise or lower.	1. Broken hydraulic hoses or tubes and/or connection leaks.	1. Locate break, replace hose(s) or tube(s), tighten connections.
	2. Lift/Lower hydraulic system not operating properly.	2. Refer to Section 8.4, “Hydraulic Circuits.”
	3. Faulty Lift cylinder.	3. Repair cylinder. Refer toSection 8.7.17, “Accumulator Charge Troubleshooting.”
	4. Seized boom pivot pin bushing.	4. Replace bushing.
7. Excessive Lift/Lower cylinder pivot pin noise and/or wear.	1. Insufficient lubrication.	1. Lubricate at regular intervals. Refer to Section 2.5, “Service and Maintenance Schedules.” Replace worn pins as needed. Refer to Section 8.7.17, “Accumulator Charge Troubleshooting.”
	2. Worn self-aligning bushing(s).	2. Replace bushing(s) and lubricate at regular intervals. Refer to Section 2.6, “Lubrication Schedules.”

https://truckmanualshub.com/

Boom Troubleshooting (Continued)

Problem	Cause	Remedy
8. Rapid boom pad wear.	1. Incorrect wear pad gap.	1. Check wear pad gaps and correct as needed. Refer to Section 3.5.2, “Wear Pad Installation and Lubrication.”
	2. Rapid cycle times with heavy loads.	2. Reduce cycle times.
	3. Contaminated, corroded or rusted wear pad sliding surfaces.	3. Remove contamination and/or corrosion from wear pad sliding surfaces and lubricate. If the surfaces cannot be reconditioned, replace the boom section(s).
	4. Operating in extremely dusty/ abrasive conditions.	4. Clean equipment frequently.
9. Auxiliary hydraulics will not operate.	1. Auxiliary hydraulic system not operating properly.	1. Refer to Section 8, “Hydraulic System.”
10. Excessive chain wear.	1. Improper chain adjustment.	1. Adjust to correct tension. Refer to Section 3.4.1, “Boom Chain Inspection.”- Replace chains as needed.
	2. Chain sheave(s) not properly lubricated.	2. Lubricate chain sheave. (Refer to Section 2.5, “Service and Maintenance Schedules.”
	3. Chain sheave(s) not rotating freely.	3. Lubricate chain sheave. Refer to Section 2.5, “Service and Maintenance Schedules.” Repair or replace chain sheave(s) as needed.
	4. Improper chain lubrication.	4. Lubricate at regular intervals. Refer to Section 2.5, “Service and Maintenance Schedules.” Replace chains as needed.

https://truckmanualshub.com/

3.9 EMERGENCY BOOM LOWERING

3.9.1 Loss of Engine Power or Hydraulic Pump Failure

Note: *In the event of total loss of engine power or hydraulic pump failure with an elevated load, the situation must be properly evaluated and dealt with on an individual basis. Contact your local Authorized distributor for specific instructions for your particular situation.*

Note: *Refer to Section 5.7, "Towing a Disabled Machine," if needed.*

In any event, the machine should be secured until the situation has been properly evaluated. Secure the machine by following the procedures below.

1. Clear the area around the machine of all personnel.
2. Block all four wheels.
3. Section off a large area under the boom with string or tape to restrict any personnel from entering this potentially dangerous area.

WARNING

DO NOT get under a raised boom unless the boom is blocked up. Always block the boom before doing any servicing that requires the boom to be up.

4. Temporarily block up or support the outer boom so that it cannot be lowered.
5. If the load is in a position where it can removed safely, completely remove the load from the carriage, otherwise leave the load in place.
6. Place an Do Not Operate Tag on both the ignition key switch and the steering wheel, stating that the machine should not be operated.

3.9.2 Hydraulic Line Failure

In case of hydraulic line failure, there are step-by-step procedures available to assist you in safely retracting and then lowering the boom. Read this section from start to finish before performing any of these procedures so you fully understand the process and danger involved. If you are unsure about any part of these procedures contact your local Authorized distributor for specific instructions on your particular situation.

Note: *For boom retract and lower, the hydraulic lines MUST be replaced, then retracted and lower the boom in it's normal fashion.*

WARNING

Be aware that the boom must first be retracted and than lowered to avoid machine tipover.

In any case of hydraulic line failure, it is critical to correctly identify which hydraulic line has failed. Identify the hydraulic line that has failed and use the table Section 3.9.3, "Hydraulic Hose Replacement,"on the following page to determine which step to follow to retract and lower the boom.

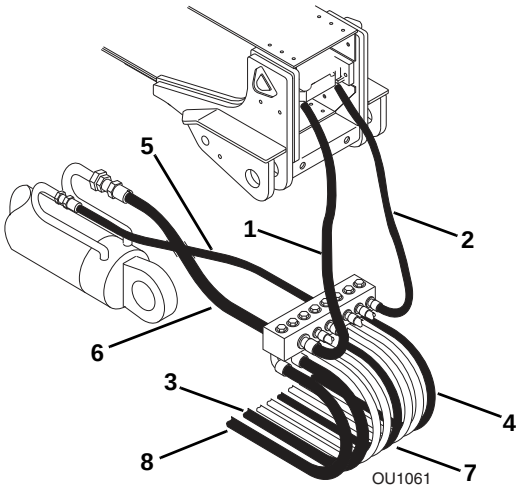

The hydraulic lines are:

- Boom Extend line - Extend Cylinder to Block (**1**)
- Boom Retract Line - Extend Cylinder to Block (**2**)
- Boom Extend line - Block to Frame Bulkhead (**3**)
- Boom Retract Line - Block to Frame Bulkhead (**4**)
- Boom Lower Line - Lift Cylinder to Block (**5**)
- Boom Lift Line - Lift Cylinder ot Block (**6**)
- Boom Lower Line - Block to Frame Bulkhead (**7**)
- Boom Lift Line - Block to Frame Bulkhead (**8**)

https://truckmanualshub.com/

3.9.3 Hydraulic Hose Replacement

NORMAL STEPS		
HYDRAULIC LINE THAT FAILED	Follow this step if parts are available	Follow this step if parts are not available
BOOM **LIFT** LINE (Lift Cylinder to Block or Block to Frame Bulkhead)	STEP 1	STEP 2
BOOM **LOWER** LINE (Lift Cylinder to Block or Block to Frame Bulkhead)	STEP 1	STEP 1
BOOM **EXTEND** LINE (Extend Line to Block or Block to Frame Bulkhead)	STEP 1	STEP 2
BOOM **RETRACT** LINE (Extend Line to Block or Block to Frame Bulkhead)	STEP 1	STEP 1

3.9.4 Hydraulic Hose Replacement - Step 1

1. Clear area of any unnecessary personnel.
2. Block all four wheels.
3. If the load is in a position where it can removed safely, completely remove the load from the carriage, otherwise leave the load in place.
4. Temporarily block up or support the outer boom.

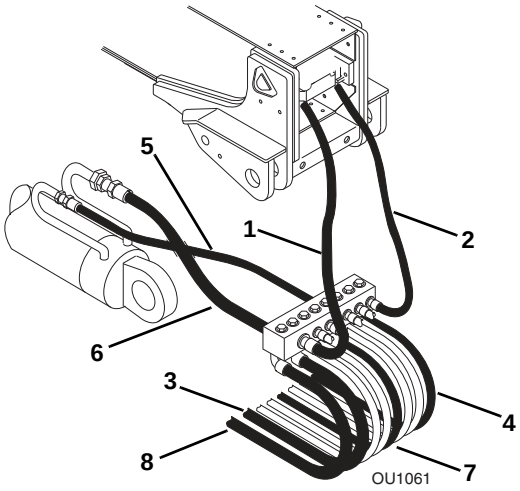

5. Replace the failed hydraulic line with a new part.
   - Boom Extend line - Extend Cylinder to Block (**1**)
   - Boom Retract Line - Extend Cylinder to Block (**2**)
   - Boom Extend line - Block to Frame Bulkhead (**3**)
   - Boom Retract Line - Block to Frame Bulkhead (**4**)
   - Boom Lower Line - Lift Cylinder to Block (**5**)
   - Boom Lift Line - Lift Cylinder ot Block (**6**)
   - Boom Lower Line - Block to Frame Bulkhead (**7**)
   - Boom Lift Line - Block to Frame Bulkhead (**8**)
6. Check the hydraulic oil level, add oil if needed.
7. Remove the blocking or support from the outer boom.
8. Return to cab, fasten seat belt and start engine.
9. Tilt the carriage upward, if necessary, for clearance before retracting the boom.
10. Slowly retract the boom.
11. Slowly lower the boom and ground the carriage.
12. Shut off engine.
13. Completely remove the load from the carriage, if not previously done.
14. Return to cab, fasten seat belt and start engine.
15. Cycle the lift/lower and extend/retract cylinders several times to bleed air from the system. Check for leaks.
16. Recheck hydraulic oil level. Add oil if necessary.

https://truckmanualshub.com/

3.9.5 Hydraulic Hose Replacement - Step 2

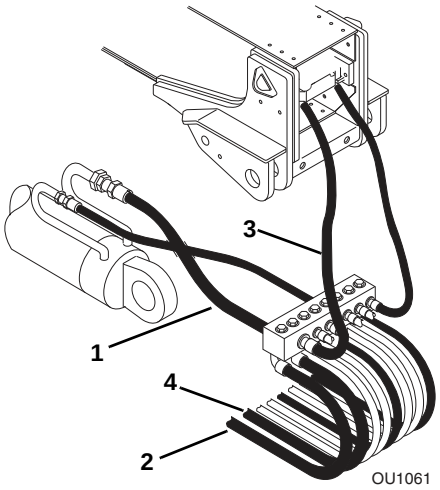

USE IN CASE OF:

BOOM LIFT LINE FAILURE - Lift Cylinder to Block (1)

BOOM LIFT LINE FAILURE - Block to Frame Bulkhead (2)

BOOM EXTEND LINE FAILURE - Extend Cylinder to Block (3)

BOOM EXTEND LINE FAILURE - Block to Frame Bulkhead (4)

1. Clear area of any unnecessary personnel.
2. Block all four wheels.
3. Place a container under the failed hose to catch any hydraulic oil that may escape from this procedure.
4. Return to the cab, fasten seat belt and start engine.
5. Slowly retract the boom.
6. Slowly lower the boom and ground the carriage.
7. Shut off engine.
8. Completely remove the load from the carriage, if not previously done.
9. Place an Do Not Operate Tag on both the ignition key switch and the steering wheel, stating that the machine should not be operated.
10. Have the machined serviced immediately. Replace any failed hydraulic lines with new parts.
11. Return to the cab, fasten seat belt and start engine.
12. Cycle the lift/lower and extend/retract cylinders several times to bleed air from the system. Check for leaks.
13. Recheck hydraulic oil level. Add oil if necessary.
14. Transfer any waste oil to a properly labeled container and dispose of accordingly.

https://truckmanualshub.com/

This Page Intentionally Left Blank

https://truckmanualshub.com/

Section 4
Cab and Covers

Contents

PARAGRAPH		TITLE	PAGE
4.1		**Operator's Cab and Covers Component Terminology**	**4-2**
4.2		**Operator's Cab**	**4-3**
	4.2.1	Cab Safety	4-3
	4.2.2	Serial Number Decal	4-3
4.3		**Cab Components**	**4-3**
	4.3.1	Steering Column and Steering Valve	4-3
	4.3.2	Steer Select Valve	4-4
	4.3.3	Service Brake Valve and Pedal	4-4
	4.3.4	Throttle Pedal	4-5
	4.3.5	Throttle Position Sensor Replacement	4-6
	4.3.6	Joystick Assemblies	4-7
4.4		**Enclosed Cab (Optional) Components**	**4-8**
	4.4.1	Front Windshield Wiper Switch	4-8
	4.4.2	Front Windshield Wiper Motor	4-8
	4.4.3	Windshield Washer Control	4-8
	4.4.4	Skylight Wiper Washer & Rear Window Washer Switch	4-8
	4.4.5	Skylight Wiper Motor	4-8
	4.4.6	Windshield/Skylight/Rear Wiper Washer Reservoir w/Pump	4-8
	4.4.7	Rear Wiper Switch/Motor	4-8
	4.4.8	Heater/Defroster System	4-8
4.5		**Cab Removal**	**4-9**
4.6		**Cab Installation**	**4-11**
4.7		**Valve Plate**	**4-12**
	4.7.1	Valve Plate Removal	4-12
	4.7.2	Valve Plate Installation	4-12

https://truckmanualshub.com/

4.1 OPERATOR'S CAB AND COVERS COMPONENT TERMINOLOGY

To understand the safety, operation and maintenance information presented in this section, it is necessary that the operator/mechanic be familiar with the names and locations of the major assemblies of the machine cab and covers. The following illustration identifies the components that are referred to throughout this section.

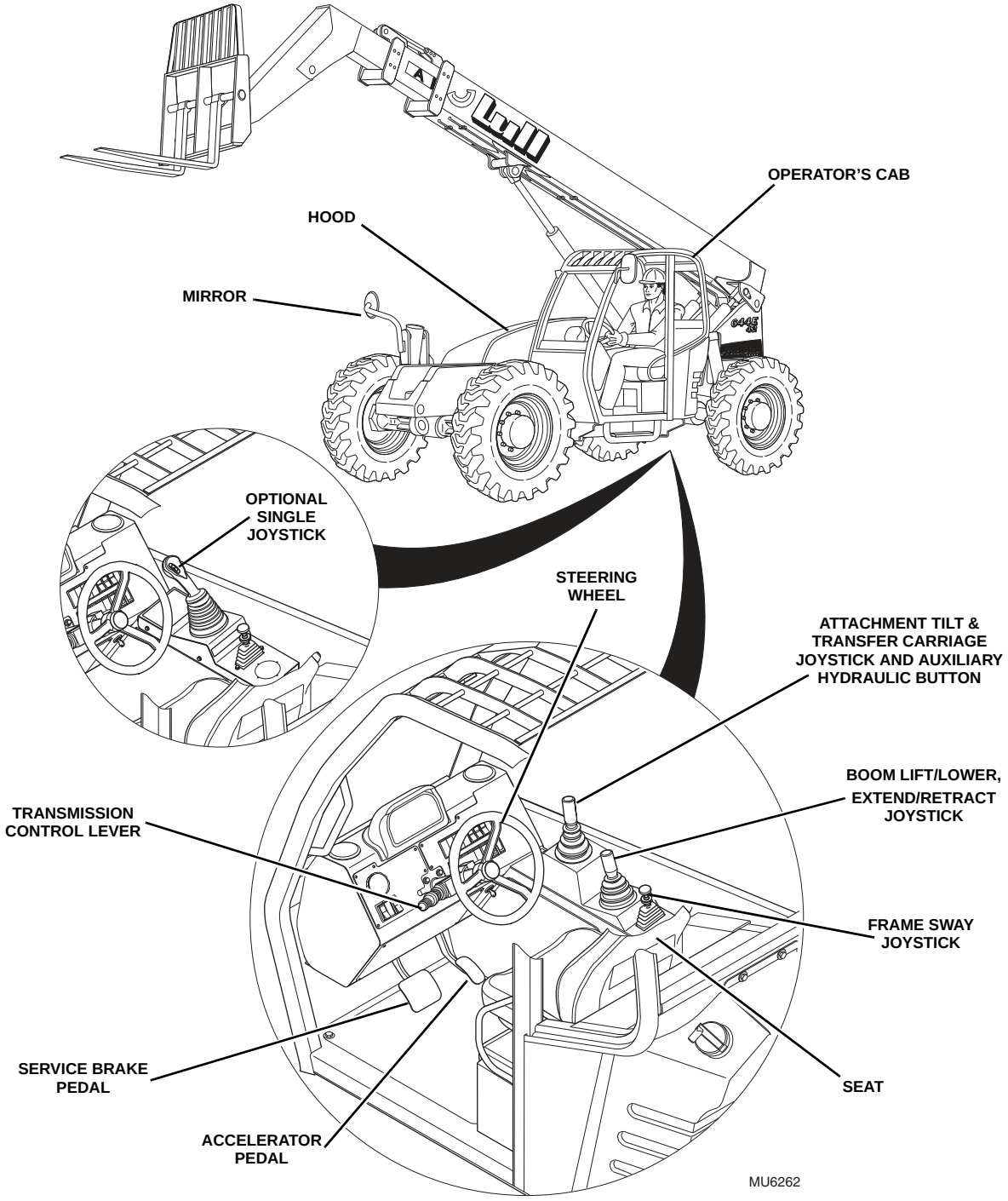

https://truckmanualshub.com/

WARNING

DO NOT service the machine without following all safety precautions as outlined in the “Safety Practices” section of this manual.

4.2 OPERATOR’S CAB

4.2.1 Cab Safety

WARNING

The protection offered by this ROPS/FOPS will be impaired if subjected to any modification or structural damage, at which time replacement is necessary. ROPS/FOPS must be properly installed using fasteners of correct size and grade, and torqued to their specified value.

DO NOT weld, grind, drill, repair or modify the cab in any way. Any modification or damage to cab structural components requires cab replacement. The lives of the operator and others are potentially at stake.

To help ensure optimum safety, protection and performance, replace the cab if it is damaged. Refer to the appropriate parts manual for ordering information.

4.2.2 Serial Number Decal

The cab serial number decal is located on the inside of the cab, above the rear window opening. Information specified on the serial number plate includes the cab model number, the cab serial number and other data. Write this information down in a convenient location to use in cab correspondence.

4.3 CAB COMPONENTS

4.3.1 Steering Column and Steering Valve

a. Steering Valve Removal

1. Park the machine on a firm, level surface, level the machine, fully retract the boom, lower the boom, place the travel select lever in the (N) NEUTRAL position, engage the parking brake and turn the engine OFF.
2. Place a Do Not Operate Tag on both the ignition key switch and the steering wheel, stating that the machine should not be operated.
3. Open the engine cover. Allow the system fluids to cool.
4. Properly disconnect the batteries.
5. Remove the front display panel. Label and disconnect the electrical connector attached to the display panel.
6. Remove the lower dash panel.

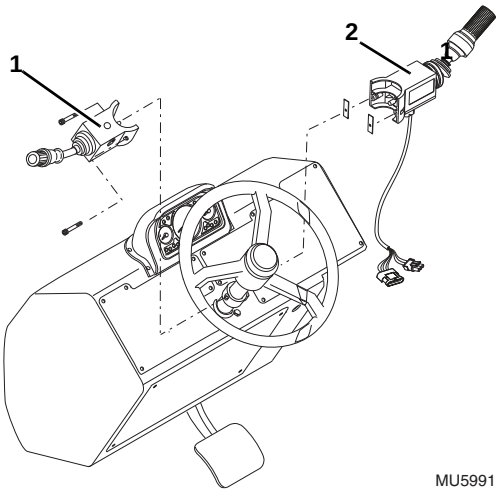

7. Remove the steering wheel and disconnect and remove the travel select lever (**1**) and turn signal lever (**2**).

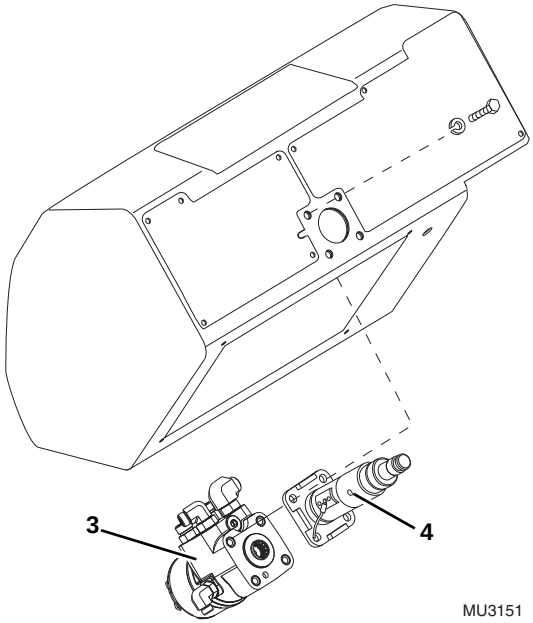

8. Label, disconnect and cap the four hoses from the top of the steering valve (**3**). Cap the fittings on the steering valve. Label, disconnect and plug the load sense hose on the left of the steering valve. Cap the fitting on the steering valve.

https://truckmanualshub.com/

9. Disconnect the horn button wire from the cab wiring harness.
10. Support the bottom of the steering valve, and remove the four capscrews and lockwashers. Remove the steering valve through the lower dash panel opening.
11. Remove the steering column (**4**), by pushing it down, and removing it through the lower dash panel opening.

Note: *DO NOT disassemble the steering valve. The steering valve is not serviceable and must be replaced in its entirety, if defective.*

b. Steering Valve Installation

1. Install the steering column and steering valve, by inserting them through the lower dash panel opening. Position steering valve in the cab to its original orientation. Secure the steering valve and column with the previously used hardware. Torque to 13 lb-ft (18 Nm).

Note: *ALWAYS use new o-rings when servicing the machine.*

2. Install new o-rings into the fittings. Lubricate the o-rings with clean hydraulic oil.
3. Uncap and connect the previously labeled load sense hose to the steering valve.
4. Install new o-rings into the steering valve fittings. Lubricate the o-rings with clean hydraulic oil.
5. Uncap and connect the remaining previously labeled four hoses to the steering valve.
6. Connect the horn button wire to the cab wiring harness.
7. Install the travel select lever, turn signal lever and steering wheel. Torque the steering wheel nut to 50 lb-ft (68 Nm).
8. Connect the previously labeled electrical connector to the display panel. Install the display panel.
9. Properly connect the batteries.
10. Carefully examine all connections one last time before engine start-up. Rectify any faulty conditions.
11. Start the engine and check the operation of steering system. Check for hydraulic fluid leaks. Check the hydraulic fluid level in the tank and add fluid as required.
12. Install the lower dash panels.
13. Close and secure the engine cover.

c. Steering Test

Conduct a pressure check of the steering hydraulic circuits at the main control valve. Refer to Section 8.3.1, “Pressure Checks and Adjustments.”

4.3.2 Steer Select Valve

a. Steer Select Valve Removal

Refer to Section 8.7.12, “Steer Select Valve,” for removal information

b. Steer Select Valve Installation

Refer to Section 8.7.12, “Steer Select Valve,” for installation information

4.3.3 Service Brake Valve and Pedal

a. Brake Valve Removal

Refer to Section 8.7.9, “Service Brake Valve,” for removal information.

b. Brake Valve Installation

Refer to Section 8.7.9, “Service Brake Valve,” for installation information.

c. Service Brake Pedal Removal

1. Park the machine on a firm, level surface, level the machine, fully retract the boom, lower the boom, place the travel select lever in the (N) NEUTRAL position, engage the parking brake and turn the engine OFF.
2. Place a Do Not Operate Tag on both the ignition key switch and steering wheel, stating that the machine should not be operated.
3. Open the engine cover. Allow the system fluids to cool.
4. Properly disconnect the batteries.
5. Remove the lower dash panel.

https://truckmanualshub.com/

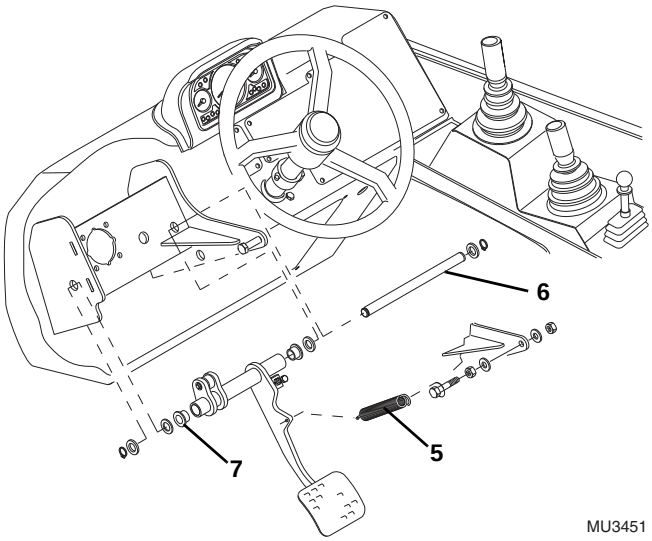

6. Disconnect the brake return spring (**5**).
7. Remove the retaining clips and slide brake pedal shaft (**6**) out, toward the right side console, from the pedal support and brake pedal assembly.
8. Remove the bushings (**7**) from the brake pedal tube.
9. Remove the service brake pedal from the cab.

d. Service Brake Pedal Installation

Note: *The bushings are a self-lubricating soft material and should be inspected for reuse prior to installation.*

1. Install the bushings (**7**) into the ends of the brake pedal tube.
2. Slide the shaft (**6**) through the brake pedal tube and install the shims and retaining clips.
3. Reattach the brake return spring (**5**).
4. Adjust the service brake as needed. Refer to Section 9.11.16, c. “Stabilizer Brake Switch Adjustment.”
5. Install the lower dash panel.
6. Properly connect the batteries.
7. Close and secure the engine cover.

4.3.4 Throttle Pedal

a. Throttle Pedal Removal

1. Park the machine on a firm, level surface, level the machine, fully retract the boom, lower the boom, place the travel select lever in the (N) NEUTRAL position, engage the parking brake and turn the engine OFF.
2. Place a Do Not Operate Tag on both the ignition key switch and steering wheel, stating that the machine should not be operated.
3. Properly disconnect the batteries.

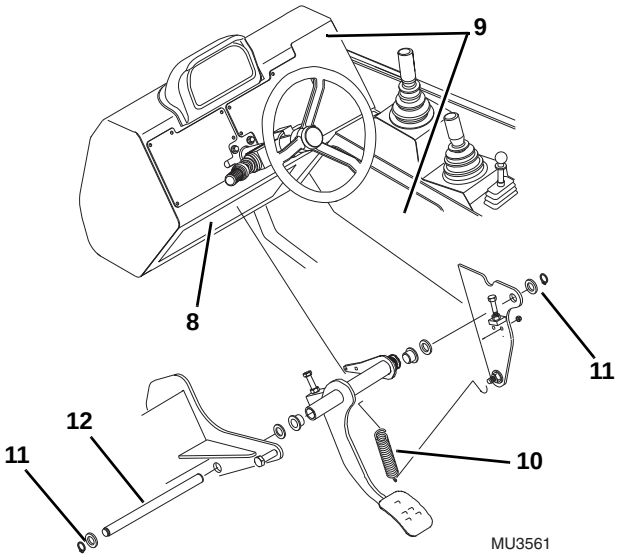

4. Remove the lower (**8**), right front and right side (**9**) console access panels.
5. Disconnect the throttle return spring (**10**).
6. Disconnect the electrical harness connector.
7. Remove the retaining clips (**11**) and shims (**12**) and slide the shaft out, towards the left, from the throttle assembly.
8. Remove the throttle pedal assembly from the cab.

b. Throttle Pedal Installation

1. Position the throttle pedal in its mounting location within the cab.
2. Secure the throttle pedal in place with previously used hardware.
3. Reconnect the wire harness plug to the front of the throttle pedal.
4. Attach the return spring to the throttle pedal.
5. Properly connect the batteries.

https://truckmanualshub.com/

4.3.5 Throttle Position Sensor Replacement

a. Throttle Position Sensor Removal

The throttle position sensor controls the engine speed. It is designed to sense the position of the throttle pedal and send the signal back to the engine control module.
The sensor is located on the bracket below the dash where the throttle pedal is attached.
The sensor must be tested while it is still on the machine. Refer to step “C”.

1. Park the machine on a firm, level surface, level the machine, fully retract the boom, lower the boom, place the travel select lever in the (N) NEUTRAL position, engage the parking brake and turn the engine OFF.

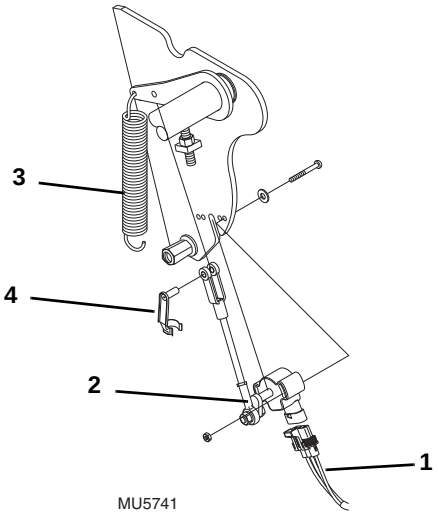

2. Disconnect the ECM cab harness connector (**1**) from the throttle position sensor (**2**).
3. Disconnect the bottom of the return spring (**3**) from the bolt at the bottom of the mounting bracket inside the cab.
4. Remove the clevis locking pin (**4**) from the clevis on the linkage assembly.
5. Remove the two slotted pan head screws securing the sensor and linkage assembly to the mounting bracket.
6. Slide the sensor (**2**) and linkage assembly out of the slot on the mounting plate.

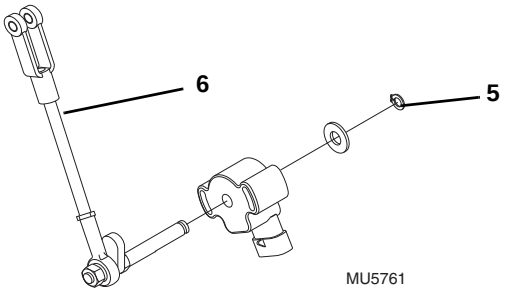

7. Remove the snap ring (**5**) and flat washer securing the sensor to the linkage assembly (**6**).

b. Throttle Position Sensor Installation

1. Slide the sensor onto the linkage assembly shaft.
2. Lock in place on the shaft using the flat washer and snap ring.
3. Slide the sensor and linkage assembly into the slot on the mounting plate.
4. Line up the hole in the clevis on the linkage assembly with the hole on the throttle pedal stop plate.
5. Secure the clevis with the clevis locking pin.
6. Center and secure the sensor to the cab mounting bracket with two slotted pan head screws, washers and nuts. Torque nuts to 2-4 lb-ft (1,5-3 Nm).
7. Connect the ECM cab harness connector to the throttle rotary sensor.
8. Start the engine. Engine rpm should increase as soon as the throttle pedal is depressed and continue to increase until the throttle pedal is fully depressed.

c. Throttle Position Sensor Adjustment

1. Inspect the sensor terminals for continuity. Attach the ohmmeter leads to the two outside pins, 1 and 3. The resistance reading should be approximately 4,000 - 6,000 ohms, whether the pedal is at rest or at fully depressed.
   Attach the ohmmeter leads to pins 2 and 3. The resistance reading should be approximately 2,000 ohms, with the throttle at rest and change to approximately 4,000 ohms, with the throttle pedal fully depressed.
2. Replace the sensor if the readings are not as described in step 1.

https://truckmanualshub.com/

4.3.6 Joystick Assemblies

Refer to Section 8.7, “Valves and Manifolds,” for removal and installation instructions apply to the front, rear and frame sway joysticks.

a. Joystick Assembly Removal

1. Park the machine on a firm, level surface, level the machine, fully retract the boom, lower the boom, place the travel select lever in the (N) NEUTRAL position, engage the parking brake and turn the engine OFF.
2. Place a Do Not Operate Tag on both the ignition key switch and steering wheel, stating that the machine should not be operated.
3. Properly disconnect the batteries.

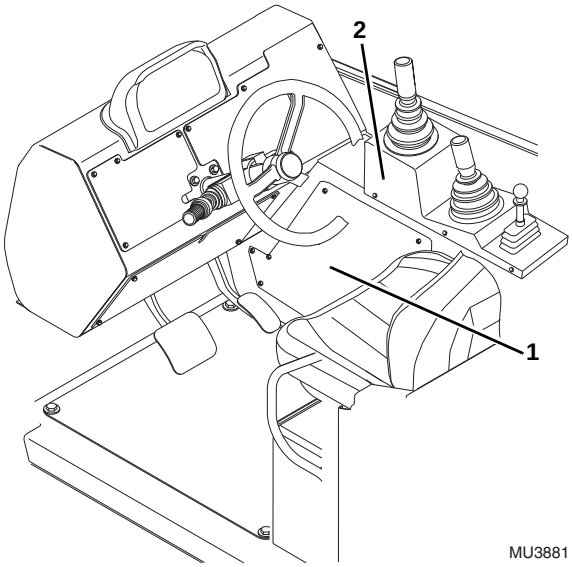

4. Remove the access **(1)** and console panel **(2)** in the cab.

Note: *Record the location, and label all hydraulic hoses to ensure correct installation.*

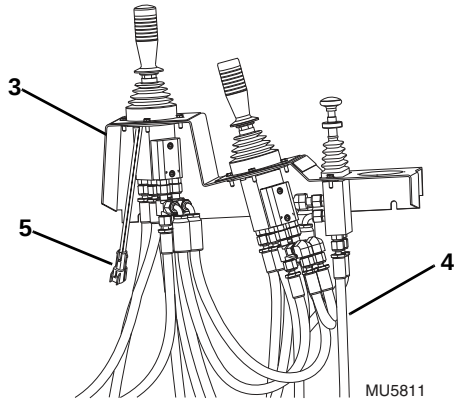

5. Lift the joystick console **(3)** away from the cab and label the hydraulic hoses **(4)** and electrical connectors **(5)**.
6. Disconnect and cap all hydraulic hoses attached to the joysticks. Cap all fittings and openings to prevent dirt and debris from entering the hydraulic system.
7. Remove the capscrews holding the joystick base to the console and remove the joystick assembly through the bottom of the console.

b. Joystick Assembly Installation

1. Secure the joystick to the console with the previously used hardware.
2. Uncap and reconnect the previously labeled hydraulic hoses to the appropriate locations.
3. Connect the electrical plug (front joystick only).
4. Place the joystick console on the cab and secure it with the previously removed hardware.

Note: *Check the routing of all hoses, wiring and tubing for sharp bends or interference with any rotating members, and install tie wraps and /or protective conduit as required.*

5. Install the access panel.
6. Properly connect the batteries.
7. Test all joystick functions for proper performance.

https://truckmanualshub.com/

4.4 ENCLOSED CAB (OPTIONAL) COMPONENTS

4.4.1 Front Windshield Wiper Switch

Refer to Section 9.12.1, “Dash Switches.”

4.4.2 Front Windshield Wiper Motor

Refer to Section 9.9.1, “Windshield Wiper Motor.”

4.4.3 Windshield Washer Control

Refer to Section 9.12.1, “Dash Switches.”

4.4.4 Skylight Wiper Washer & Rear Window Washer Switch

Refer to Section 9.12.1, “Dash Switches.”

4.4.5 Skylight Wiper Motor

Refer to Section 9.9.2, “Skylight Wiper Motor.”

4.4.6 Windshield/Skylight/Rear Wiper Washer Reservoir w/Pump

Refer to Section 9.9.4, “Windshield Washer Reservoir and Pump.”

4.4.7 Rear Wiper Switch/Motor

Refer to Section 9.9.3, “Rear Wiper Switch/Motor.”

4.4.8 Heater/Defroster System

a. Heater Assembly Removal

1. Park the machine on a firm, level surface, level the machine, fully retract the boom, lower the boom, place the travel select lever in the (N) NEUTRAL position, engage the park brake and shut the engine OFF.

Note: *For machines equipped with air conditioning, before the heater assembly can be removed, the air conditioning hoses and electrical connections must be completed by an authorized air conditioning service technician. A technician will also be needed to restore the connections when the heater assembly is installed.*

2. Place a Do Not Operate Tag on both the ignition key switch and the steering wheel, stating that the machine should not be operated.
3. Open the engine cover. Allow the system fluids to cool.
4. Properly disconnect the batteries.
5. Place a suitable container beneath the radiator drain plug or petcock. Slowly turn the radiator cap to the first stop, and allow any pressure to escape. Remove the radiator cap.
6. Place a funnel at the base of the radiator to channel the drained coolant into the container. Loosen the drain plug or petcock and allow the coolant to drain.
7. Transfer the coolant to a container with a cover, and label as “Used Antifreeze.” Dispose of the used coolant at an approved recycling facility.
8. Close the radiator drain plug or petcock.

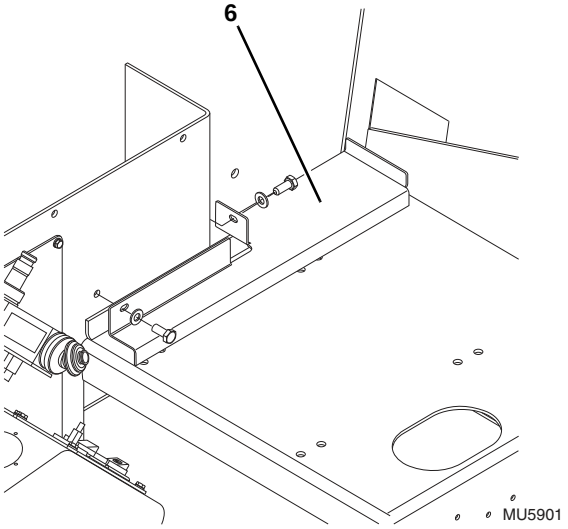

9. Remove the seat, washer fluid reservoir and seat mounting panel **(6)**.

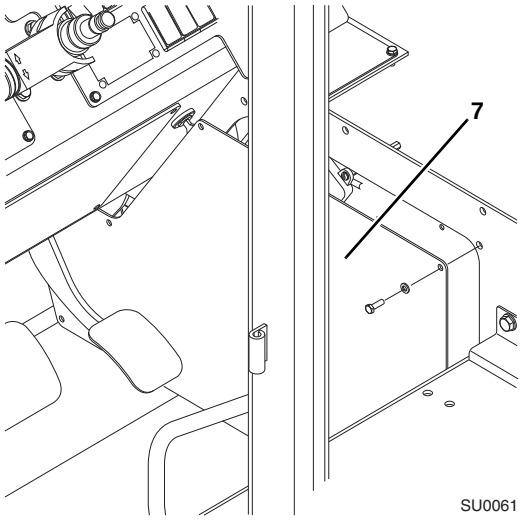

10. Remove the right side console access panel **(7)**.
11. Disconnect the heater wire from the cab harness.
12. Label and remove all duct hoses at the heater assembly.

https://truckmanualshub.com/

13. Label, disconnect and cap the heater hoses at the heater.
14. Remove the three capscrews and washers securing the heater assembly to the cab.
15. Carefully slide the heater assembly forward and out from under the seat support riser.

b. Heater Assembly Installation

Note: *For machines equipped with air conditioning, before the heater assembly can be installed, the air conditioning hoses and electrical connections must be completed by an authorized air conditioning service technician.*

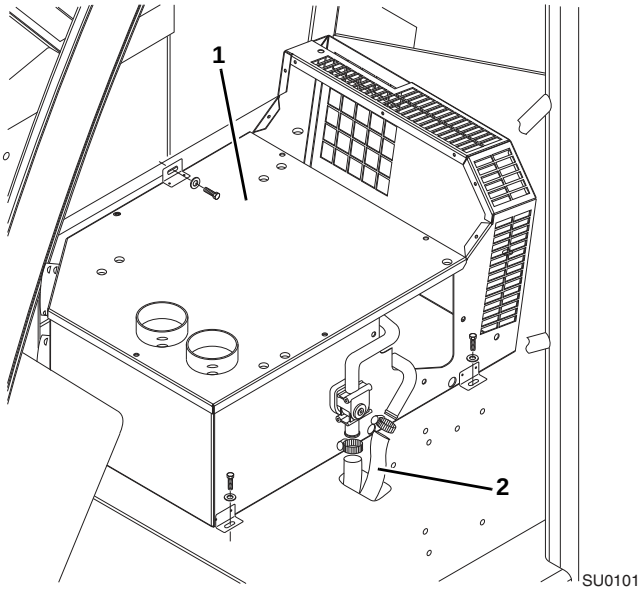

1. Install the heater assembly **(1)** by tilting it up and sliding it under the seat support riser.
2. Install the three cap screws and washers to secure the heater assembly to the cab.
3. Install the coolant hoses **(2)** on the heater assembly and tighten the hose clamps.
4. Connect all duct hoses to the heater assembly.
5. Connect heater wiring to the cab harness.
6. Install the seat mounting panel.
7. Install the operators seat.
8. Install the right side console access panel.
9. Refill the cooling system. Refer to Section 2.4, “Fluid and Lubricant Capacities.”
10. Properly connect the batteries.

IMPORTANT: *When the engine is initially started, run it briefly at low idle and check the machine for any visual sign of fluid leakage. STOP the engine immediately if any leakage is noted, and make any necessary repairs before continuing.*

11. Wait for the engine to cool and check the coolant level. Add coolant as required to bring the coolant to the proper level.
12. Close and secure engine cover.

4.5 CAB REMOVAL

WARNING

The protection offered by this ROPS/FOPS will be impaired if subjected to any modification or structural damage, at which time replacement is necessary. ROPS/FOPS must be properly installed using fasteners of correct size and grade, and torqued to their specified value.

Note: *To help ensure safety and optimum performance, replace the cab if it is damaged. Refer to the appropriate parts manual for ordering information.*

Inspect the cab, its welds and mounts. If modification, damage, a cracked weld and/or fatigued metal is discovered, replace the cab. Contact an authorized service distributor with any questions about the suitability or condition of a cab.

Note: *Remove and label cab components as needed before removing the cab from the machine. Label, disconnect and cap hydraulic hoses. Transfer cab parts to the replacement cab after the replacement cab is securely mounted on the machine.*

1. Park the machine on a firm, level surface. Allow sufficient overhead and side clearance for cab removal. Level the machine, fully retract the boom, lower the boom, place the travel select lever in the (N) NEUTRAL position, engage the park brake and shut the engine OFF.
2. Block all four wheels to help prevent the machine from moving. Assure that there is sufficient overhead and side clearance for cab removal.
3. Open the engine cover. Allow the system fluids to cool.
4. Properly disconnect the batteries.

https://truckmanualshub.com/

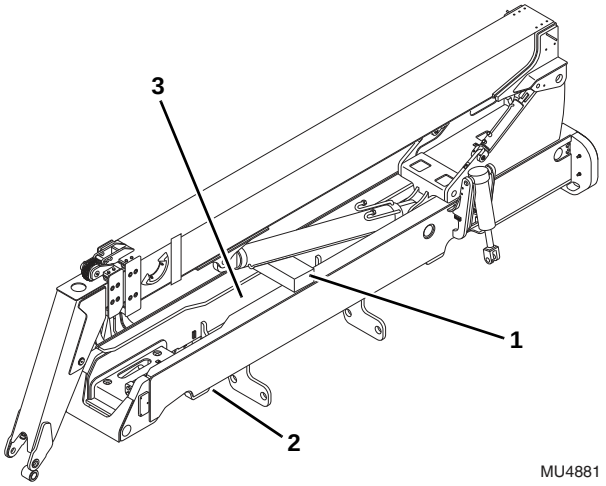

5. Block the boom (**1**) sufficiently enough to provide access to the hydraulic hoses between the cab, hydraulic valve plate and the engine compartment
6. Label, disconnect and plug the hydraulic hoses leaving the cab and going to the hydraulic cylinders, brakes and engine compartment. All of the hoses may be accessed either above (**3**) or below (**2**) the frame.

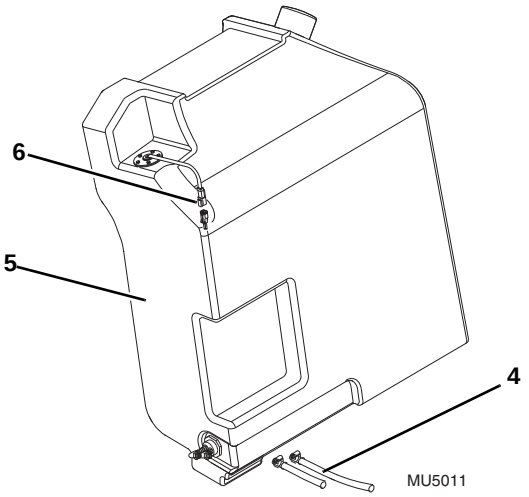

7. Disconnect the supply and return fuel lines (**4**) at the fuel tank (**5**).
8. Disconnect the electrical connection (**6**) to the fuel level sending unit.

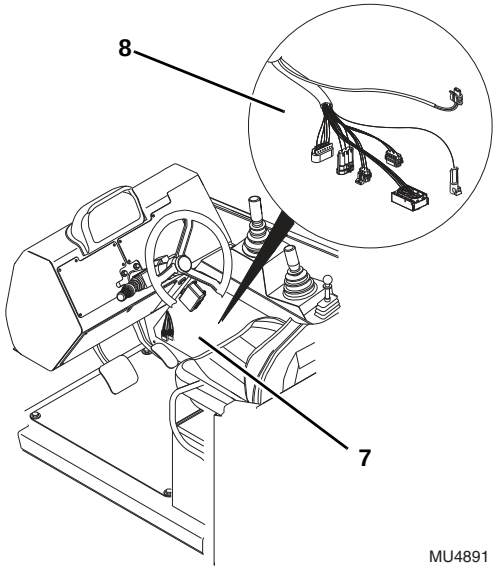

9. Remove the right side console access panel (**7**).

Note: *Record the location, and label all electrical cables to ensure correct installation.*

10. Disconnect all of the electrical connections (**8**) that run from the cab out to the frame and engine compartment.
11. If equipped, Disconnect the heating and air conditioning hoses and electrical connections.
12. Remove the mirror from the left side of the cab.

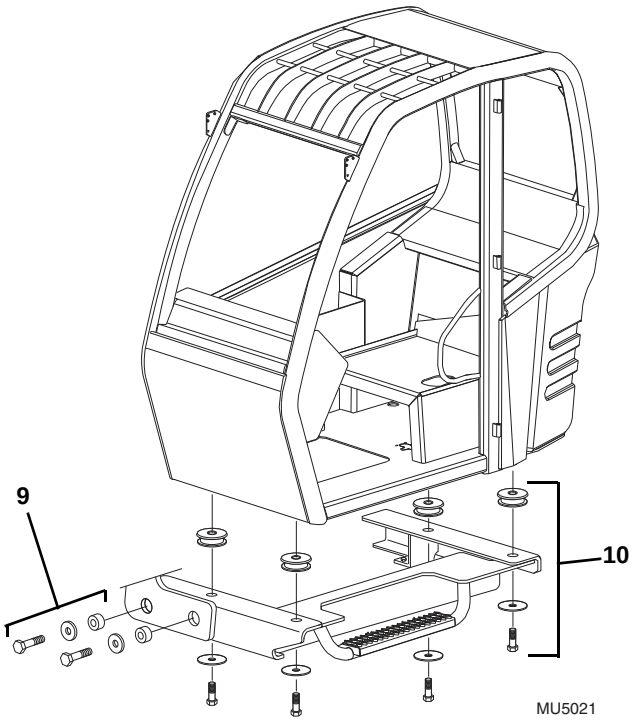

https://truckmanualshub.com/

13. Remove the four capscrews, washers and sheer pins (**9**) that secure the cab mount supports to the frame.
14. If equipped, remove the skylight glass.
15. Use a suitable overhead lifting device and attach to the top of the cab.
16. When all wiring, hydraulic hoses and fasteners are disconnected or removed, carefully and slowly lift the cab and remove it from the frame. Readjust the position of the sling as needed to help balance the cab during removal.
17. When the cab is completely clear of the machine, carefully lower it to the ground. Block up or support the cab so that it does not move or fall. Assure that no personnel enter the cab while it is being removed from the machine.
18. Inspect the condition of the fittings, clamps, hydraulic hoses, etc. Replace parts as indicated by their condition.
19. Inspect and replace other machine parts that are exposed with the cab removed. Repair or replace as required.
20. Remove the valve plate assembly from underneath the cab. Refer to Section 8.7.2, “Main Control Valve.”
21. Remove the four capscrews, rebound washers and cab isolators (**10**) that secure the cab to the front and rear cab mount supports.
22. Transfer all remaining components from the original cab into the new cab.
23. DO NOT attempt to transfer any decals from the original cab into the new replacement cab. Always replace decals with new parts. Refer to the appropriate Parts Manual to order new decals.

4.6 CAB INSTALLATION

1. Install the cab mount support to the front and rear of the cab. Use the four capscrews, rebound washers and cab isolators (**10**). Torque capscrews to 225 - 350 lb-ft (305 - 474 Nm).
2. Install the valve plate assembly from underneath the cab. Refer to Section 8.7.2, “Main Control Valve.”
3. Block all four wheels to help prevent the machine from moving. Assure that there is sufficient overhead and side clearance for cab installation.
4. Attach a suitable overhead lifting device to the top of the cab.
5. Carefully begin to lift and align the cab with the mounting holes in the frame. Stop and check that wiring, hydraulic hoses, cables, etc., will not be pinched or damaged as the cab is positioned. Readjust the position of the sling as needed to help balance the cab during installation.
6. If equipped, install the skylight glass.

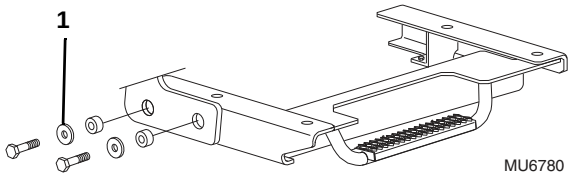

7. Install the four capscrews, washers and sheer pins (**1**). Torque capscrews to 1,450 - 1,850 lb-ft (1,966 - 2,508 Nm).
8. Connect all electrical connections that run from the cab out to the frame and engine compartment.
9. Install the right side console access panel.
10. Connect the supply and return fuel lines at the fuel tanks.
11. Connect the electrical connection to the fuel level sending unit.
12. If equipped, connect heating and air conditioning hoses and electrical connections. Refer to Section 4.4.8, “Heater/Defroster System.”
13. Uncap and reconnect the hydraulic hoses going from the hydraulic cylinders, brakes and engine compartment to the cab. All the hoses may be accessed either above or below the frame.
14. Remove the blocking from between the frame and lift/lower cylinder.
15. Properly connect the batteries.
16. Carefully examine all cab components, fasteners, etc., one last time before engine start-up. Rectify any faulty conditions.
17. Start the engine and check the operation of all controls. Check for hydraulic fluid leaks. Check the hydraulic fluid level in the tank and add fluid as required.

Note: *When the engine is initially started, run it briefly at low idle and check the machine for any visual sign of fluid leakage. STOP the engine immediately if any leakage is noted, and make any necessary repairs before continuing.*

18. Wait for the engine to cool and check the coolant level. Add coolant to the overflow bottle as required to bring the coolant to the proper level.

https://truckmanualshub.com/

19. Install the mirrors and all other cab components as needed, if removed.
20. Unblock the wheels.
21. Close and secure the rear door.

4.7 VALVE PLATE

4.7.1 Valve Plate Removal

1. Park the machine on a firm, level surface. Allow sufficient overhead and side clearance for cab removal. Level the machine, fully retract the boom, lower the boom, place the travel select lever in the (N) NEUTRAL position, engage the park brake and shut the engine OFF.
2. Place a Do Not Operate Tag on both the ignition key switch and steering wheel, stating that the machine should not be operated.
3. Properly disconnect the batteries.
4. Attach a suitable lifting device to the cab step and remove the slack.
5. Remove the four capscrews and washers from the cab step and lower to the ground.

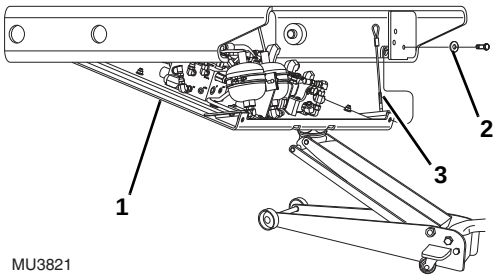

6. Support the valve plate (**1**) with a suitable lifting device.
7. From under the valve plate, remove the two capscrews and washers (**2**) securing the plate to the cab mount frame. Lower the valve plate.
8. Disconnect the two tethers (**3**) from the cab mounting frame.

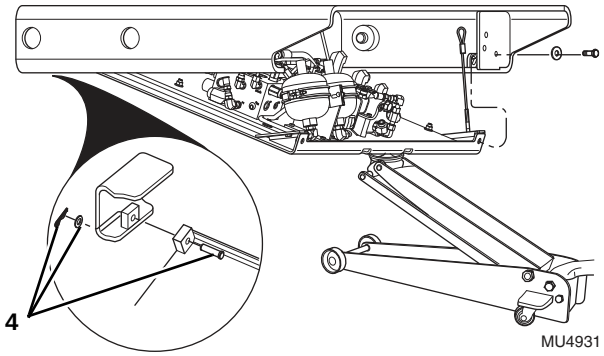

9. Remove the two cotter pins, washers and valve plate hinge pins (**4**).
10. Disconnect, label, cap and plug all hydraulic hose connections and fittings.
11. Disconnect and label all electrical connections.
12. Remove the valve plate from the machine.
13. Service individual valve plate components as required. Refer to Section 8.7.2, “Main Control Valve.”

4.7.2 Valve Plate Installation

1. Use a suitable lifting device to lift the valve plate into position under the cab.
2. Uncap and reconnect the previously labeled electrical and hydraulic hose connections. To properly reconnect all hydraulic connections refer, to Section 2.2, “Torque Charts.”
3. Replace the hinge plate pins, washers and cotter pins to secure the valve plate to the cab mount frame.
4. Reconnect the two tethers to the cab mount frame.
5. Lift the valve plate and secure with two capscrews and washers.
6. Attach a suitable lifting device to the cab step and lift into position under the cab.
7. Replace the four capscrews and washers securing the cab step. Torque the capscrews to 43 - 78 lb-ft (59 - 106 Nm).
8. Properly disconnect the batteries.

https://truckmanualshub.com/

Section 5
Axles, Drive Shafts, Wheels and Tires

Contents

PARAGRAPH		TITLE	PAGE
5.1		**Axle, Drive Shaft and Wheel Component Terminology**	**5-2**
5.2		**General Information**	**5-3**
5.3		**Axle Assemblies**	**5-3**
	5.3.1	Axle Serial Number Plate	5-3
	5.3.2	Axle Specifications	5-3
	5.3.3	Axle Internal Service	5-3
	5.3.4	Axle Maintenance	5-3
	5.3.5	Axle Replacement	5-4
	5.3.6	Axle Installation	5-5
	5.3.7	Axle Assembly and Drive Shaft Troubleshooting	5-7
5.4		**Drive Shafts**	**5-10**
	5.4.1	Drive Shaft Inspection and Service	5-10
	5.4.2	Drive Shaft Maintenance	5-10
	5.4.3	Drive Shaft Removal	5-10
	5.4.4	Drive Shaft Cleaning and Drying	5-10
	5.4.5	Drive Shaft Installation	5-10
5.5		**Wheels and Tires**	**5-11**
	5.5.1	Removing Wheel and Tire Assembly from Machine	5-11
	5.5.2	Installing Wheel and Tire Assembly onto Machine	5-12
5.6		**Brakes**	**5-12**
	5.6.1	Brake Disc Inspection	5-12
5.7		**Towing a Disabled Machine**	**5-13**

https://truckmanualshub.com/

5.1 AXLE, DRIVE SHAFT AND WHEEL COMPONENT TERMINOLOGY

To understand the safety, operation and maintenance information presented in this section, it is necessary that the operator/mechanic be familiar with the names and locations of the major assemblies of the axles, drive shafts, wheels and tires. The following illustration identifies the components that are referred to throughout this section.

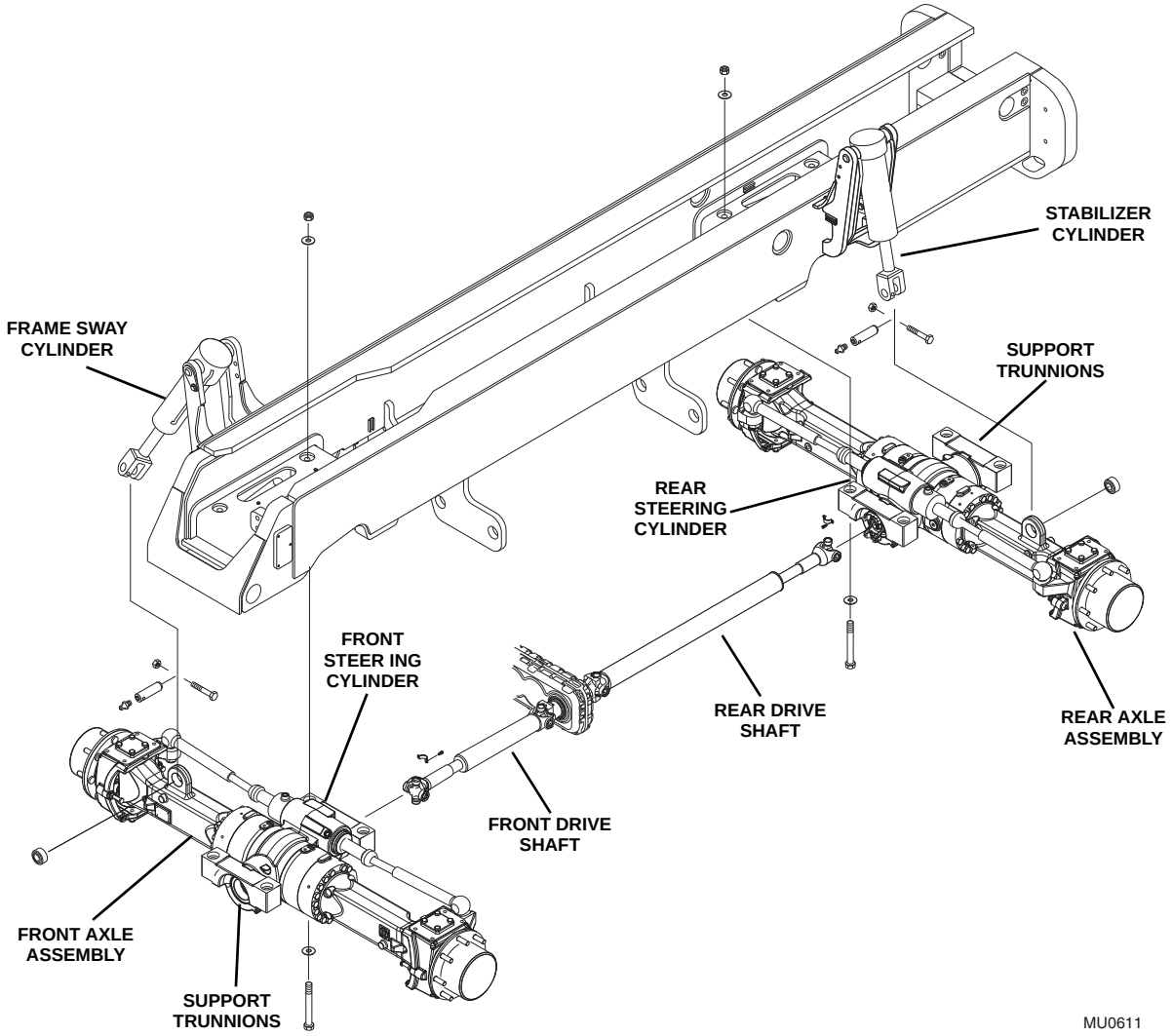

https://truckmanualshub.com/

5.2 GENERAL INFORMATION

WARNING

DO NOT service the machine without following all safety precautions as outlined in Section 1, “Safety Practices,” of this manual.

Note: *To help ensure optimum performance, the drive shaft assemblies are specially balanced as a unit at the factory. When servicing any flange yoke, slip yoke or drive shaft tube, order a complete assembly if components are bent or damaged. Refer to the appropriate parts manual for ordering information.*

Before performing any inspection, maintenance or service operation, thoroughly clean the unit. The axles and drive shafts should be checked and repaired only by experienced service technicians who are aware of all safety instructions and particular component features.

Use suitable products to thoroughly clean all disassembled mechanical parts to help prevent personal injury to the worker and prevent damage to the parts. Carefully inspect the integrity of all moving parts (bearings, yokes, tubes, gears, shafts, etc.) and fasteners (nuts, bolts, washers, etc.) as they are subject to major stress and wear. Always replace any damaged, worn, cracked, seized or otherwise improper parts that could affect the safe and proper functioning of the machine, axles and drive shafts.

5.3 AXLE ASSEMBLIES

5.3.1 Axle Serial Number Plate

The front axle serial number plate is located on a mounting pad on the inboard portion of the right beam trumpet. The rear axle serial number plate is located on a mounting pad on the inboard portion of the left trumpet. Information on the serial number plate is required in correspondence regarding the axle.

Supply information from the axle serial number plate when communicating about an axle assembly or axle components.

5.3.2 Axle Specifications

General axle specifications are found in Section 2.4, “Fluid and Lubricant Capacities.”

5.3.3 Axle Internal Service

Detailed axle service instructions (covering the axle, differential, brakes and wheel-end safety, repair, disassembly, reassembly, adjustment and troubleshooting information) are provided in the appropriate ZF Axle Repair Manual.

Machine	ZF Model	Axle	P/N
944E	MS-T 3060 II	Front	31200695
944E	MS-T 3055 II	Rear	31200694

5.3.4 Axle Maintenance

CLEANING: Clean parts with machined or ground surfaces (such as gears, bearings and shafts) with emulsion cleaners or petroleum-based cleaners. DO NOT steam clean internal components and the interior of the planetary hub and axle housing. Water can cause corrosion of critical parts. Rust contamination in the lubricant can cause gear and bearing failure. Remove old gasket material from all surfaces.

DRYING: Use clean, lintless towels to dry components after cleaning. DO NOT dry bearings by spinning them with compressed air; this can damage mating surfaces due to lack of lubrication. After drying, lightly coat components with oil or a rust-preventive chemical to help protect them from corrosion. If storing components for a prolonged period, wrap them in wax paper.

PERIODIC OPERATION REQUIREMENT: Every two weeks, drive the machine far enough to cause the drive-train components to make several complete revolutions. This will help ensure that internal components receive lubrication to minimize deterioration caused by environmental factors such as high humidity.

SUBMERSION: If the machine has been exposed to water deep enough to cover the hubs, disassemble the wheel ends and inspect for water damage and contamination. If the carrier housing was submerged in water, especially if the water level was above the vent tube (breather), drain the axle and inspect internal parts for water damage and contamination. Before assembling and refilling the unit with the specified lubricant(s), clean, examine and replace damaged parts as necessary.

Note: *Use a suitable puller for bearing removal. Clean, inspect and lubricate all bearings just prior to reassembly. If replacement of a damaged bearing cup or cone is necessary, replace the cup and cone as a set.*

https://truckmanualshub.com/

5.3.5 Axle Replacement

c. Axle Removal

The front and rear axle assemblies differ in that the front axle assembly is equipped with a parking brake mechanism and a limited-slip feature; the rear axle has neither. The following steps outline a typical axle removal procedure, suitable for either the front or the rear axle assembly.

Cleanliness is extremely important. Before attempting to remove the axle, thoroughly clean the machine. Avoid spraying water or cleaning solution on the stabilizer solenoids and other electrical components. If using a steam cleaner, seal all openings before steam cleaning.

Note: *Clear the work area of all debris, unnecessary personnel, etc. Allow sufficient space to raise the machine and to remove the axle.*

1. Park the machine on a firm, level surface, level the machine, fully retract the boom, lower the boom, place the travel select lever in the (N) NEUTRAL position, engage the parking brake, straighten all wheels and shut the engine OFF.
2. Place a Do Not Operate Tag on both the ignition key switch and steering wheel, stating that the machine should not be operated.
3. Open the engine cover. Allow the system fluids to cool.
4. Properly disconnect the batteries.

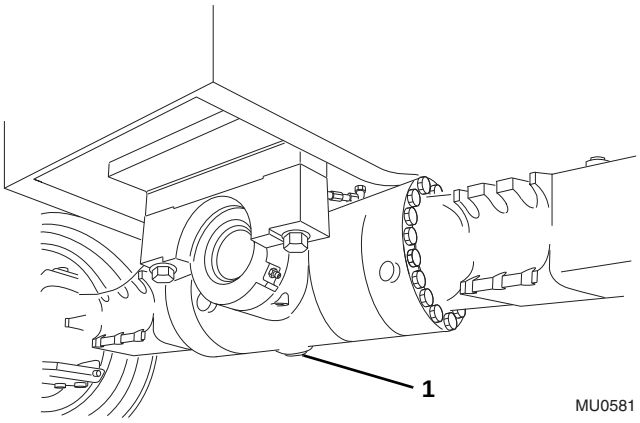

5. If the axle will be disassembled after removal, place a suitable receptacle under the axle drain plug (**1**). Remove the drain plug and allow the axle oil to drain into the receptacle. Transfer the used axle oil into a suitable covered container, and label the container as “Used Oil.” Dispose of used oil at an approved recycling facility.
6. Label, disconnect and cap the steering and brake lines at the axle. Cap all fittings to prevent dirt & debris from entering the hydraulic system. Wipe up any spilled oil.
7. Block the front and rear of both tires on the axle that is not being removed. Ensure that the machine will remain in place during axle removal before proceeding.
8. Raise the machine using a suitable jack or hoist. Place suitable supports under both sides of the frame and lower the machine onto the supports. Ensure that the machine will remain in place during axle removal.
9. Support the axle that is being removed with a suitable jack, hoist or overhead crane and sling. DO NOT raise the axle or the machine.
10. Remove both wheel and tire assemblies from the axle that is being removed. (Refer to Section 5.5.1, “Removing Wheel and Tire Assembly from Machine.”)

Note: *The wheel and tire assemblies must be re-installed later with the directional tread pattern “arrows” facing in the direction of forward travel.*

11. Remove the drive shaft assembly. Refer to Section 5.4.3, “Drive Shaft Removal.”

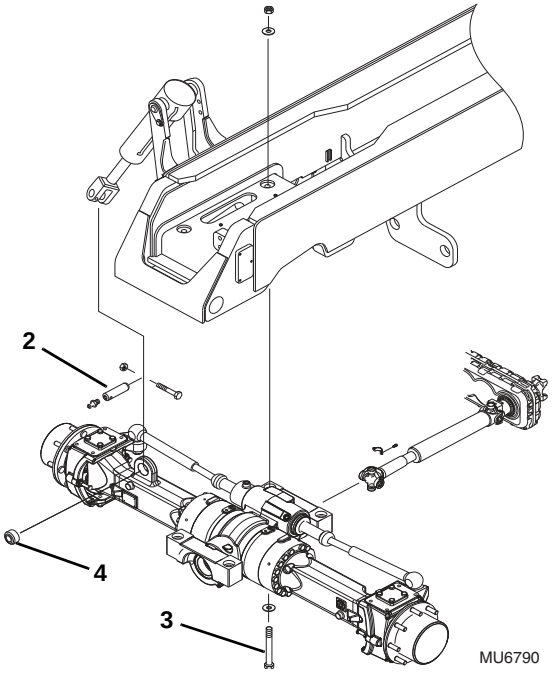

12. Remove the capscrew and locknut securing the lower position cylinder-mount pin (**2**) to the cylinder. Tap the cylinder mount pin out, and move the cylinder to prevent it from interfering with axle removal.

https://truckmanualshub.com/

Note: *The axle will oscillate freely when the cylinder mounting pin is removed.*

13. Remove the four capscrews, locknuts and hardened washers (**3**) securing the front or rear axle supports (rotating trunnions) to the frame.

Note: *Remove the capscrews at equal intervals to avoid binding.*

14. Remove the axles from the machine using the jack, hoist or overhead crane and sling supporting the axle. DO NOT raise or otherwise disturb the machine while removing the axle. Balance the axle and prevent it from tipping, turning or falling while removing it from beneath the machine.Place the axle on a suitable support or holding stand.

5.3.6 Axle Installation

1. Before proceeding, ensure that the machine will remain in place during axle installation. Block the front and rear of both tires on the axle that is already installed on the machine.
2. If applicable, raise the machine using a suitable jack or hoist. Place suitable supports beneath the frame and lower the machine onto the supports, allowing enough room for axle installation. Ensure that the machine will remain in place during axle installation.
3. Using a suitable jack, hoist or overhead crane and sling, remove the axle from its support or holding stand. Balance the axle and prevent it from tipping, turning or falling while positioning it beneath the machine. DO NOT raise or otherwise disturb the machine while installing the axle. Keep the axle supported and balanced on the jack, hoist or overhead crane and sling throughout the installation procedure.

Note: *ALWAYS replace elastic locknuts with new elastic locknuts to help ensure proper fastening.*

Note: *If you are installing the rear axle it may be easier to install the capscrews if the transfer carriage was moved all the way forward.*

4. Position the axle under the frame, and align the support trunnion holes with the holes in the frame.
5. Coat the capscrews (**3**) with anti-seize compound. Install the capscrews, locknuts and hardened washers securing the axle supports to the frame. Torque capscrews to 600 - 680 lb-ft (813 - 922 Nm).

Note: *If new frame sway (front) or stabilizer (rear) cylinder bearings (**4**) have been installed in the axle, the fracture (**5**) in the bearing race must be positioned at the 9 o'clock or 3 o'clock position as shown below.*

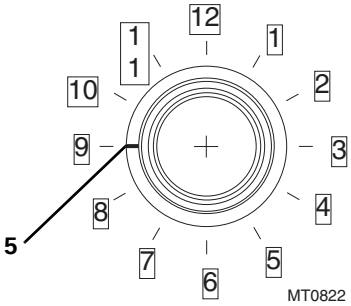

6. Move the cylinder into position on the axle cylinder anchor. Insert a cylinder-mount pin (**2**) through the cylinder and cylinder anchor. Secure the cylinder-mount pin with one capscrew and new locknut.
7. Apply multi-purpose grease through the self-tapping lube fitting to lubricate the self-align bearing and the cylinder-mount pin.
8. Install the drive shaft assemblies. (Refer to Section 5.4.5, "Drive Shaft Installation.")
9. If reinstalling an axle previously removed from the machine, position the driveshaft yoke on the axle according to the alignment marks made earlier. If installing a new axle, note the position of the driveshaft yoke at the transmission. Align the driveshaft yoke on the axle in the same plane as the yoke on the transmission.
10. Install the wheel and tire assemblies. Refer to Section 5.5.2, "Installing Wheel and Tire Assembly onto Machine."
11. Carefully remove the jack, hoist or overhead crane and sling supporting the axle.
12. Carefully raise the machine using a suitable jack or hoist. Remove the supports from beneath the frame and lower the machine to the ground.
13. Remove the blocks from the front and rear of both tires on the other axle.

Note: *ALWAYS use new o-rings when servicing the machine.*

14. Install new o-rings into the fittings. Lubricate the o-rings with clean hydraulic oil.

https://truckmanualshub.com/

15. Uncap and connect the steering and brake lines at their axle fittings.
16. Check wheel end and hydraulic reservoir oil levels.
17. Start the engine. Turn the steering wheel several times lock to lock, operate the frame tilt function several times in both directions and check the function of the brakes. Check for hydraulic leaks, and tighten or repair as necessary.

Note: *The service brake circuit will need to bled after axle installation. Refer to Section 8.7.10, "Brake Test."*

18. Close and secure the engine cover.

https://truckmanualshub.com/

5.3.7 Axle Assembly and Drive Shaft Troubleshooting

Problem	Cause	Remedy
1. Excessive axle noise while driving.	1. Oil level too low.	1. Fill oil to correct level. Refer to Section 2.4, “Fluid and Lubricant Capacities.”
	2. Axle and/or wheel end housings filled with incorrect oil or oil level low.	2. Drain axle and/or wheel end housings and fill to correct level with Mobilfluid 424® (ISO 46). Refer to Section 2.4, “Fluid and Lubricant Capacities.”
	3. Incorrect alignment of ring and pinion gears.	3. Correct alignment by adding or removing shims as needed.
	4. Incorrect pinion (input) shaft bearing preload.	4. Correct bearing preload by adding or removing shims as needed.
	5. Worn or damaged bearings.	5. Replace bearings as needed.
	6. Worn or broken gear teeth.	6. Replace gears as needed.
	7. Contamination in the axle.	7. Drain axle and/or wheel end housings and fill to correct level with Mobilfluid 424® (ISO 46). Refer to Section 2.4, “Fluid and Lubricant Capacities.”
	8. Axle housing damaged.	8. Replace damaged parts.
2. Intermittent noise when traveling.	1. Universal joint(s) worn or damaged.	1. Repair or replace universal joints as needed.
	2. Differential ring and/or pinion gears damaged.	2. Determine cause and repair as needed.
3. Vibration or intermittent noise when traveling.	1. Drive shaft universal joint assembly(ies) incorrectly tightened.	1. Tighten capscrews to correct torque.
	2. Drive shaft universal joint(s) worn or damaged.	2. Repair or replace universal joints as needed.
	3. Drive shaft(s) damaged/ unbalanced.	3. Replace drive shaft(s) as needed.

https://truckmanualshub.com/

Problem	Cause	Remedy
4. Oil leaking from axle (differential housing and/or axle housings).	1. Drain and/or inspection plugs loose and/or o-rings damaged or missing.	1. Replace o-rings as needed and tighten plugs to 96 lb-ft (130 Nm).
	2. Hose fittings loose.	2. Tighten fittings.
	3. Axle shaft seal damaged or missing and/or worn or damaged shaft sealing surfaces.	3. Replace seal and/or joint coupling fork shaft (axle shaft).
	4. Input shaft multi-seal ring damaged or missing and/or worn or damaged pinion (input) shaft sealing surfaces.	4. Replace multi-seal ring and/or input shaft. Adjust ring and pinion alignment and bearing preload as described in the ZF Repair Manuals.
	5. Axle casing to brake housing and/or brake housing to differential assembly o-rings and/or seals worn or damaged.	5. Replace o-rings and seals.
	6. Axle housing mounting nuts and capscrews loose.	6. Tighten housing nuts and capscrews to 288 lb-ft (390 Nm).
	7. Differential and/or axle housing(s) damaged.	7. Replace housing(s) as needed.
5. Oil leaking from wheel end housing (planet carrier).	1. Oil level plugs loose and/or o-rings damaged or missing.	1. Replace o-rings as needed and tighten plugs to 96 lb-ft (130 Nm).
	2. O-ring between hub and housing (planet carrier) damaged or missing.	2. Replace o-ring.
	3. Shaft seal damaged or missing and/or worn or damaged shaft sealing surfaces.	3. Replace seal and/or fork joint shaft.
	4. Housing capscrews loose.	4. Tighten housing capscrews to 41 lb-ft (55 Nm).
	5. Housing (planet carrier) damaged.	5. Replace housing (planet carrier).
6. Oil leaking from steering cylinder.	1. Hose fittings loose.	1. Tighten fittings.
	2. Steering cylinder o-rings and/or seals worn or damaged.	2. Replace o-rings and seals.
	3. Piston rod seal worn or damaged.	3. Replace piston rod seal.
	4. Cylinder tube damaged.	4. Replace cylinder tube.

https://truckmanualshub.com/

Problem	Cause	Remedy
7. Axle overheating.	1. Oil level too high.	1. Fill oil to correct level with Mobilfluid 424® (ISO 46). Refer to Section 2.4, “Fluid and Lubricant Capacities.”
	2. Axle and/or wheel end housings filled with incorrect oil or oil contaminated or oil level low.	2. Drain axle and fill to correct level with Mobilfluid 424® (ISO 46). Refer to Section 2.4, “Fluid and Lubricant Capacities.”
8. High steering effort required.	1. Steering (hydraulic) system not operating properly.	1. Refer to Section 8.4, “Hydraulic Circuits.”
	2. Excessive joint housing swivel bearing preload.	2. Correct bearing preload by adding or removing shims as needed.
	3. Worn or damaged swivel bearings.	3. Replace swivel bearings as needed.
9. Slow steering response.	1. Steering (hydraulic) system not operating properly.	1. Refer to Section 8.4, “Hydraulic Circuits.”
	2. Steering cylinder leaking internally.	2. Repair or replace steering cylinder as needed.
10. Excessive noise when brakes are engaged.	1. Brake discs worn.	1. Check brake discs for wear. Refer to Section 2.4, “Fluid and Lubricant Capacities.”
	2. Brake discs damaged.	2. Replace brake discs.
11. Brakes will not engage.	1. Brake (hydraulic) system not operating properly.	1. Refer to Section 8.4, “Hydraulic Circuits.”
	2. Brake piston o-rings and seals damaged (leaking).	2. Replace o-rings and seals.
12. Brakes will not hold the machine or braking power reduced.	1. Brake discs worn.	1. Check brake discs for wear. Refer to Section 2.4, “Fluid and Lubricant Capacities.”
	2. Brake (hydraulic) system not operating properly.	2. Refer to Section 8.4, “Hydraulic Circuits.”
	3. Brake piston o-rings and seals damaged (leaking).	3. Replace o-rings and seals.

https://truckmanualshub.com/

5.4 DRIVE SHAFTS

5.4.1 Drive Shaft Inspection and Service

Whenever servicing the machine, conduct a visual inspection of the drive shafts and cross and bearing assemblies (universal joints, or U-joints). A few moments spent doing this can help prevent further problems and down time later.

Inspect areas where the drive shaft flange yokes and slip yokes mount to the drive shafts. Attempt to turn each drive shaft in both directions. Look for excessive looseness, missing parts, cracks or other damage. Worn or damaged drive shafts and cross and bearing assemblies may cause an excessive amount of vibration or noise.

Note: *Any bolt removed from the drive shaft assembly MUST be replaced. Do Not re-torque.*

5.4.2 Drive Shaft Maintenance

Refer to Section 2.4, “Fluid and Lubricant Capacities.” for information regarding the lubrication of the grease fittings on the drive shafts.

5.4.3 Drive Shaft Removal

1. Park the machine on a firm, level surface, level the machine, fully retract the boom, lower the boom, place the transmission control lever in (N) NEUTRAL, engage the park brake and shut the engine OFF.
2. Place a Do Not Operate Tag on both the ignition key switch and steering wheel, stating that the machine should not be operated.
3. Open the engine cover. Allow the system fluids to cool.
4. Properly disconnect the battery.
5. Block the wheels.
6. The drive shaft assembly is a balanced assembly. Mark the yoke and axle, transmission and the shaft and slip yoke so that these components can be returned to their original positions when reinstalled. Yokes at both ends of the drive shaft must be in the same plane to help prevent excessive vibration.

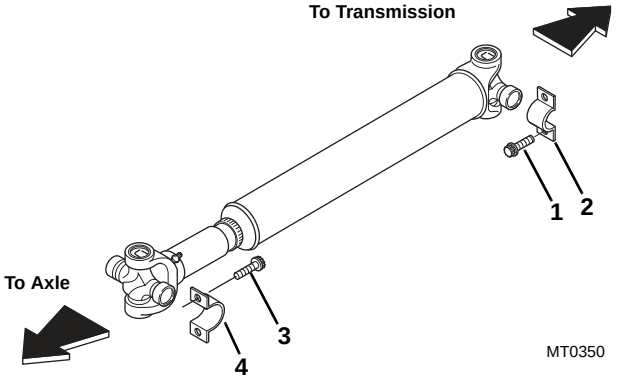

7. Remove the four bolts (**1**) and two straps (**2**) securing the bearing cross to the transmission output shaft flange. Discard bolts.
8. Remove the four bolts (**3**) and two straps (**4**) securing the bearing crosses to the axle. Discard bolts.
9. Remove the front drive shaft assembly.
10. Repeat the above procedure on the rear drive shaft.

5.4.4 Drive Shaft Cleaning and Drying

1. Disassemble and clean all parts using an approved cleaning fluid. Allow to dry.
2. Remove and burrs or rough spots from all machined surfaces. Re-clean and dry as required.

5.4.5 Drive Shaft Installation

1. Raise the drive shaft assembly into position. The slip-yoke end of the drive shaft mounts toward the axle. If reinstalling a drive shaft previously removed, align the flange yokes according to the alignment marks made during removal.

Note: *The yokes at both ends of the drive shaft must be in the same plane to help prevent excessive vibration.*

2. Apply Loctite® 242™ to all mounting bolts.
3. Install the two straps (**2**) and four new bolts (**1**) securing the bearing crosses to the transmission. Torque bolts to 55-60 lb-ft (75-81 Nm).
4. Install the two straps (**4**) and four new bolts (**3**) securing the bearing crosses to the axle. Torque bolts to 55-60 lb-ft (75-81 Nm).
5. Repeat the above procedure on the rear drive shaft.
6. Properly connect the battery.
7. Close and secure the engine cover.
8. Unblock the wheels.
9. Remove the Do Not Operate Tags from both the ignition key switch and the steering wheel.

https://truckmanualshub.com/

5.5 WHEELS AND TIRES

WARNING

Mismatched tire sizes, ply ratings or mixing of tire types (radial tires with bias-ply tires) may compromise machine stability and may cause machine to tip over.

It is recommended that a replacement tire to be the same size, ply and brand as originally installed. Refer to the appropriate parts manual for ordering information. If not using an approved replacement tire, It is recommended that replacement tires have the following characteristics:

- Equal or greater ply/load rating and size of original.
- Tire tread contact width equal or greater than original.
- Wheel diameter, width and offset dimensions equal to the original.
- Approved for the application by the tire manufacturer (including inflation pressure and maximum tire load).

The rims installed have been designed for stability requirements which consist of track width, tire pressure and load capacity. Size changes such as rim width, center piece location, larger or smaller diameter, etc., without written factory recommendations, may result in unsafe condition regarding stability.

Foam filled tires have a positive effect on the weight, stability and handling characteristics of the machine, especially under load. The use of hydrofill as a tire-fill substance is not recommended because of possible environmental impact.

Large-bore valve stems are used to help expedite tire inflation and deflation. An inner tube may be used if a tire does not provide an airtight seal. Check tire inflation pressures when the tires are cold. When mounting a tire on the wheel, the tire must be mounted on the wheel respective of the directional tread pattern of the tire; this produces a left or right tire and wheel assembly.

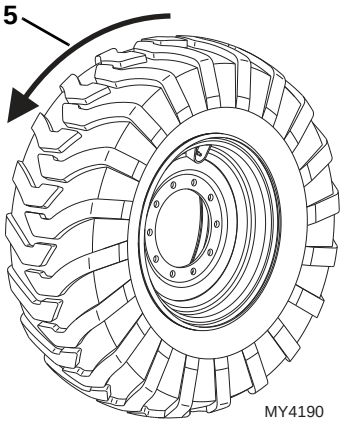

The wheel and tire assemblies must be installed with the directional tread pattern “arrows” (**5**) facing in the direction of forward travel.

5.5.1 Removing Wheel and Tire Assembly from Machine

1. Park the machine on a firm, level surface, fully retract the boom, lower the boom, place the transmission control lever in (N) NEUTRAL, engage the park brake and shut the engine OFF.
2. Place an Do Not Operate Tag on both the ignition key switch and steering wheel, stating that the machine should not be operated.
3. Loosen but **DO NOT** remove the lug nuts on the wheel and tire assembly to be removed.
4. Place a suitable jack under the axle pad closest to the wheel being removed. Raise the machine and position a suitable support beneath the axle. Allow sufficient room to lower the machine onto the support and to remove the wheel and tire assembly.
5. Lower the machine onto the support.
6. Remove lug nuts and lug washers in an alternating pattern.
7. Remove the wheel and tire assembly from the machine.

https://truckmanualshub.com/

5.5.2 Installing Wheel and Tire Assembly onto Machine

Note: *The wheel and tire assemblies must be installed with the directional tread pattern "arrows" facing in the direction of forward travel.*

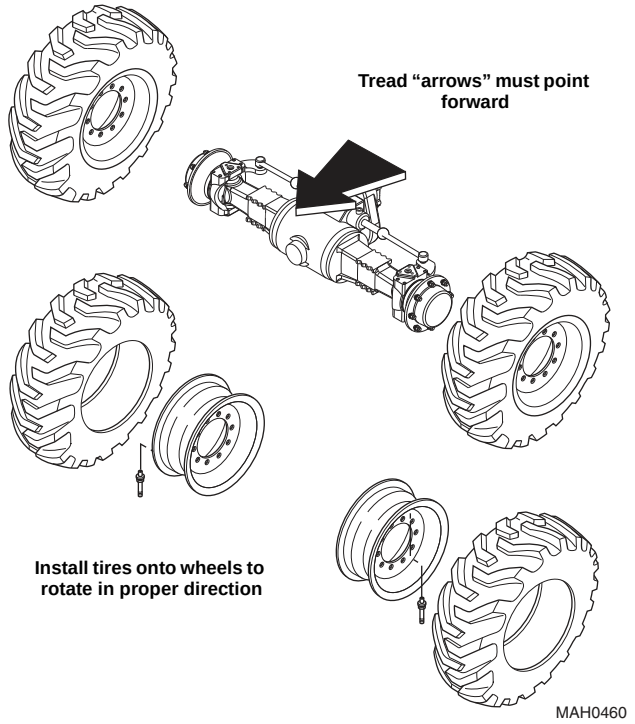

1. Position wheel onto studs on wheel end of axle.
2. Install wheel lug washers.
3. Start all nuts by hand to prevent cross threading. DO NOT use a lubricant on threads or nuts.

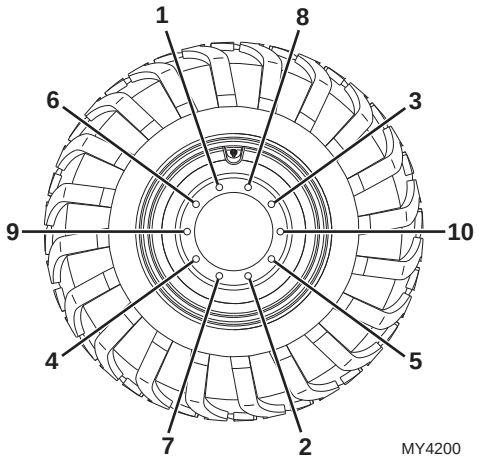

4. Tighten lug nuts in an alternating pattern as indicated in figure. Torque to 430-470 lb-ft (583-637 Nm).
5. Remove machine from supports.
6. Remove the Do Not Operate Tags from both the ignition key switch and the steering wheel.
7. Drive the machine and aggressively steer and brake several times. Re-torque the lug nuts.

5.6 BRAKES

5.6.1 Brake Disc Inspection

Check the brake disks for wear every 1,000 hours of operation or yearly.

For more information on brake disc inspection, refer to the appropriate axle repair manual.

a. Front Axle

1. Block all four wheels to help prevent the machine from moving after the parking brake is disabled.
2. Remove the four capscrews securing the valve plate cover to the cab floor. Remove the cover.

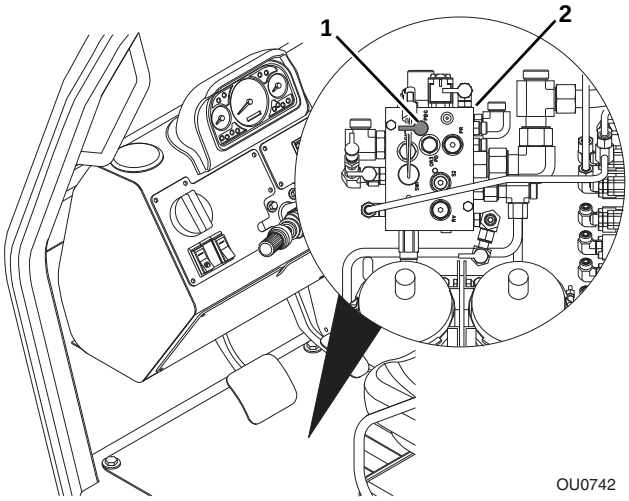

3. Attach a remote portable hydraulic pressurizing unit to the park brake gauge port (**1**) on the secondary function manifold (**2**) mounted on the valve plate.

Note: *DO NOT turn the key switch to the ON position. DO NOT release the parking brake switch. Oil pressure will be lost and parking brake will be engaged.*

⚠ CAUTION

DO NOT exceed 650 psi (45 bar) when pressurizing the park brake. Applying to much pressure may damage the brake seals.

4. Pressurize the parking brake with the pressurizing unit. Close the needle valve on the pressurizing unit.

https://truckmanualshub.com/

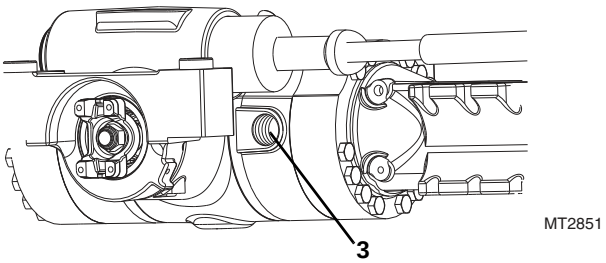

5. Working through the level plug hole (**3**), carefully use a screwdriver to spread the brake discs apart.

Note: *DO NOT damage the surfaces of the brake discs when spreading the brake discs.*

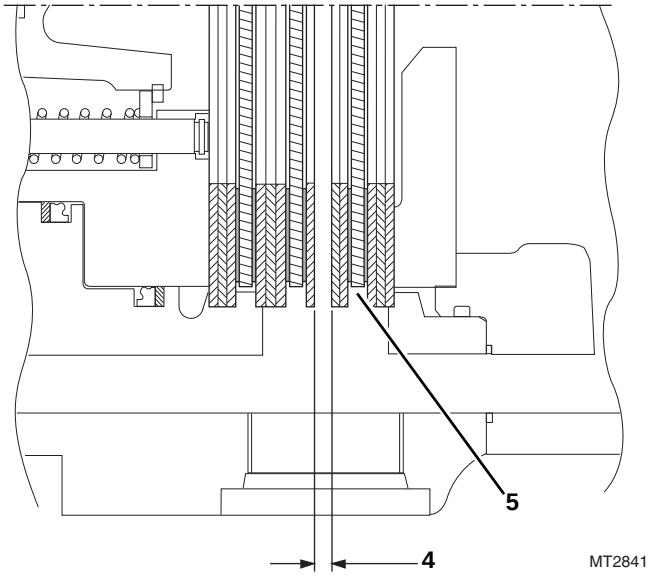

6. Using a feeler gauge, check the gap (**4**) between the brake discs (**5**). If the gap is greater than 0.185 in. (4,7 mm), replace the brake discs.

Note: *If the brake discs and worn beyond their tolerance, the brake disc must be replaced on both sides of the axle at the same time.*

7. Repeat steps 4 and 5 for the other side of the axle.
8. Fill the axle with Mobilfluid 424® Tractor Hydraulic Fluid (ISO 46) through the axle fill hole until the oil level is even with both axle level holes. Fill the axle slowly, allow time for the oil to run across the differential.
9. Reassemble the level plugs using new o-rings.
10. Install the axle fill plug into axle housing.
11. Remove the remote portable hydraulic pressurizing unit from the port.

b. Rear Axle

1. Block all four wheels to help prevent the machine from moving after the parking brake is disabled.
2. Working through the level plug hole (**3**), carefully use a screwdriver to spread the brake discs apart.

Note: *DO NOT damage the surfaces of the brake discs when spreading the brake discs.*

3. Using a feeler gauge, check the gap (**4**) between the brake discs (**5**). If the gap is greater than 0.143 in. (3,65 mm), replace the brake discs.

Note: *If the brake discs and worn beyond their tolerance, the brake disc must be replaced on both sides of the axle at the same time.*

4. Repeat steps 4 and 5 for the other side of the axle.
5. Fill the axle with Mobilfluid 424® Tractor Hydraulic Fluid (ISO 46) through the axle fill hole until the oil level is even with both axle level holes. Fill the axle slowly, allow time for the oil to run across the differential.
6. Reassemble the level plugs using new o-rings.
7. Install the axle fill plug into axle housing.

5.7 TOWING A DISABLED MACHINE

Towing a disabled machine should only be attempted as a last resort, after exhausting all other options. Make every effort to repair the machine, and move it under its own power. Towing the machine improperly can result in damage to the machine drivetrain.

Note: *In the event the machine is disabled and cannot be moved under engine power, the situation must be properly evaluated and dealt with on an individual basis. Contact your local Authorized distributor for specific instructions for your particular situation.*

If it is necessary to tow the machine a short distance to avoid a potentially hazardous situation such as being in an unsafe area on the work site or on a roadway, prepare the machine for towing as follows:

1. Remove the load from the machine.
2. Fully retract the transfer carriage.
3. Fully retract the boom. Position the forks approximately 24 in (607 mm) above the ground. Refer to Section 3.9, “Emergency Boom Lowering,” if needed.

https://truckmanualshub.com/

WARNING

BLOCK ALL FOUR WHEELS. Failure to do so could result in machine roll-away.

4. **Block all four wheels** to help prevent the machine from moving after the parking brake is disabled.
5. Position the towing vehicle in place. Attach a rigid tow bar to the disabled machine.

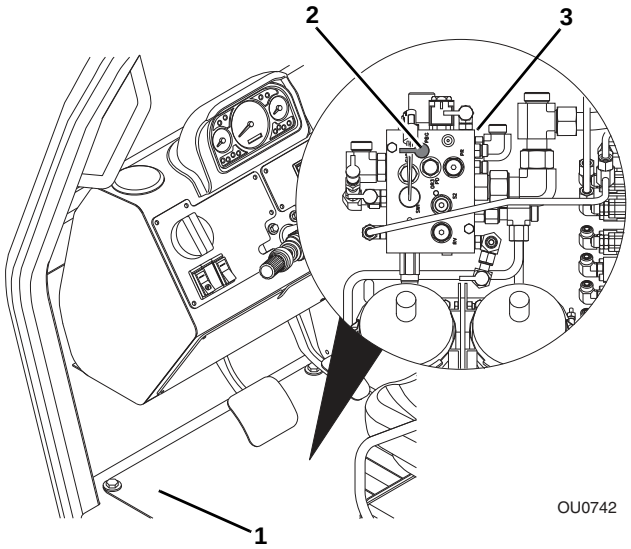

6. Remove the cover (**1**) from the cab floor to gain access to the valve plate under the cab.
7. Attach a remote portable hydraulic pressurizing unit to the parking brake gauge port (**2**) on the accumulator charge/secondary function valve (**3**) located under the cab floor.
8. Clear the area of all unnecessary personnel.
9. Have an operator seated in the machine.
10. Turn the key switch to the ON position (with the engine not running), release the park brake (park brake switch off).
11. Pressurize the park brake with the pressurizing unit. DO NOT exceed 650 psi (45 bar). Close the pump needle valve on the pressurizing unit.

CAUTION

DO NOT exceed 650 psi (45 bar) when pressurizing the park brake. Applying to much pressure may damage the brake seals.

12. Watch the pressure gauge on the pressurizing unit to ensure that the pressure in the park brake system does not drop during the towing operation.
13. Remove the blocks from the wheels. SLOWLY tow the machine to a secure location.
14. When towing is completed, remove the pressurizing unit and replace the cab floor.

https://truckmanualshub.com/

Section 6
Transmission

Contents

PARAGRAPH	TITLE	PAGE
6.1	**Transmission Assembly Component Terminology**	**6-2**
6.2	**Transmission Serial Number**	**6-3**
6.3	**Transmission Specifications And Maintenance Information**	**6-3**
6.4	**Transmission Replacement**	**6-3**
6.4.1	Transmission Removal	6-3
6.4.2	Transmission Inspection and Internal Repair	6-5
6.4.3	Transmission Installation	6-5
6.4.4	After Transmission Service or Replacement	6-6
6.5	**Troubleshooting**	**6-7**
6.5.1	Transmission Troubleshooting	6-7
6.6	**Transfer Case Component Terminology**	**6-11**
6.7	**Transfer Case.**	**6-12**
6.7.1	Transfer Case Description	6-12
6.8	**Transfer Case Serial Number**	**6-12**
6.9	**Transfer Case Maintenance**	**6-12**
6.10	**Transfer Case Replacement**	**6-12**
6.10.1	Transfer Case Removal	6-13
6.10.2	Transfer Case Installation	6-13
6.11	**Troubleshooting**	**6-14**
6.11.1	Transfer Case Troubleshooting	6-14

https://truckmanualshub.com/

6.1 TRANSMISSION ASSEMBLY COMPONENT TERMINOLOGY

To understand the safety, operation and maintenance information presented in this section, it is necessary that the operator/mechanic be familiar with the names and locations of the major assemblies of the transmission. The following illustration identifies the components that are referred to throughout this section.

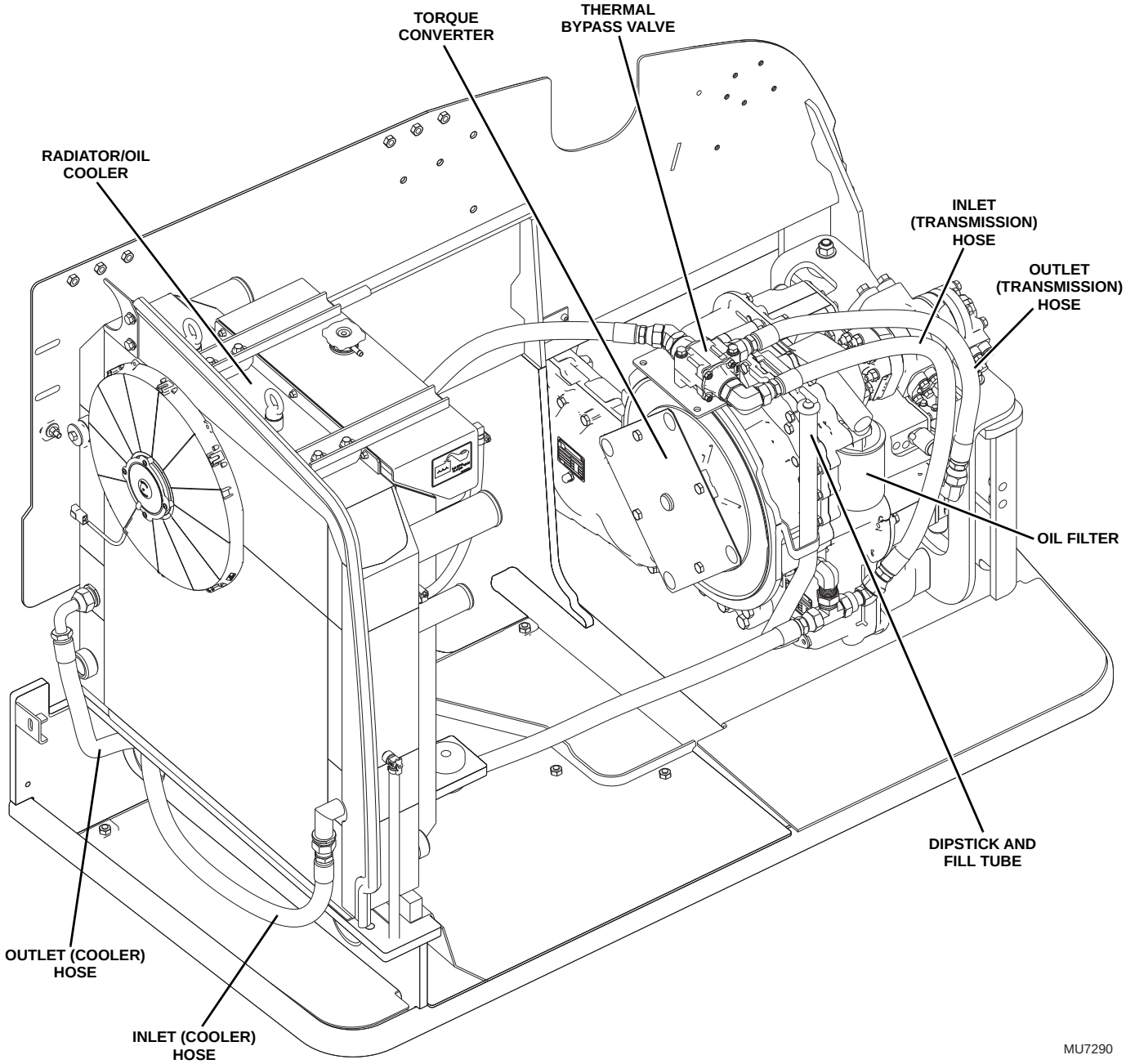

https://truckmanualshub.com/

WARNING

DO NOT service the machine without following all safety precautions as outlined in Section 1, “Safety Practices,” of this manual.

6.2 TRANSMISSION SERIAL NUMBER

The transmission serial number plate is located on the pump side (front) of the transmission at the bottom right toward the machine frame. Information specified on the serial number plate includes the transmission model number, the transmission serial number and other data. Information on the serial number plate is required in correspondence regarding the transmission.

6.3 TRANSMISSION SPECIFICATIONS AND MAINTENANCE INFORMATION

For transmission, oil specifications and maintenance information, refer to Section 2, “General Information and Specifications.”

Detailed transmission service instructions are provided in the following publications:

- Service Manual (P/N 31200241)
- Parts Manual (P/N 8990462)

6.4 TRANSMISSION REPLACEMENT

Note: *Contact the local distributor if internal transmission repair is required during the warranty period.*

Note: *Cleanliness is of extreme importance. Before attempting to remove the transmission, thoroughly clean the exterior of the transmission to help prevent dirt from entering during the replacement process. Avoid spraying water or cleaning solution onto or near the transmission shift solenoids and other electrical components.*

6.4.1 Transmission Removal

WARNING

NEVER lift a transmission alone; enlist the help of at least one assistant or use a suitable hoist or overhead crane and sling with a minimum lifting capacity of 1000 lb (454 kg).

1. Park the machine on a firm, level surface, level the machine, fully retract the boom, raise the boom, place the transmission control lever in (N) NEUTRAL, engage the park brake and shut the engine OFF.
2. Place a Do Not Operate Tag on both the ignition key switch and steering wheel, stating that the machine should not be operated.
3. Temporarily block up or support the boom.
4. Open the engine cover. Allow the system fluids to cool.
5. Properly disconnect the batteries.
6. Remove the engine cover.
7. Remove the air cleaner assembly and cover the exposed intake to prevent dirt and debris from entering the engine.
8. Raise the machine up and place all four wheels on blocks so there is a minimum of 36 in. (914 mm) of clearance between the ground and the bottom of the engine pod.
9. Remove the engine-to- transmission and transmission-to-axle drive shafts. Refer to Section 5.4.3, “Drive Shaft Removal.”

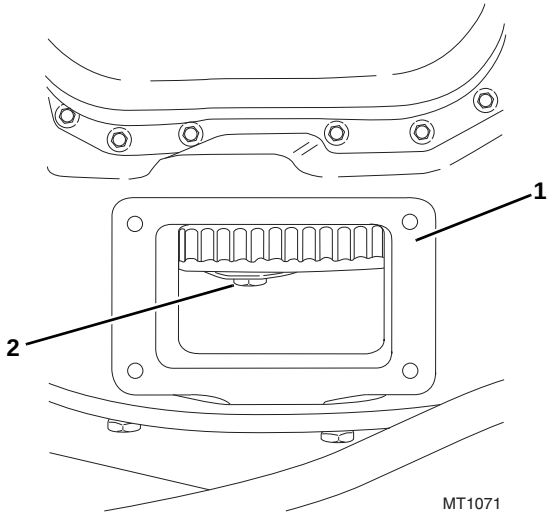

10. Working through the engine flywheel inspection and access hole (**1**), remove the four hex head capscrews (**2**) securing the converter diaphragm to

https://truckmanualshub.com/

the engine flywheel. Use a engine baring tool or similar device, to prevent the flywheel from turning while removing the capscrews.

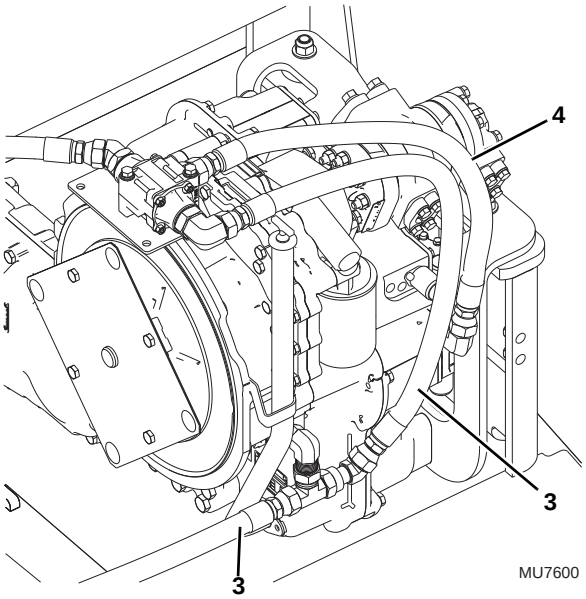

11. Label and remove the transmission inlet hose (**3**) and transmission outlet hose (**4**) from the fittings on the transmission only. Cap and plug all fittings and hoses to prevent dirt and debris from contaminating the transmission fluid.
12. Remove the gear pump from the transmission. Refer to Section 8.6.3, “Pump Replacement,” for removal procedures.

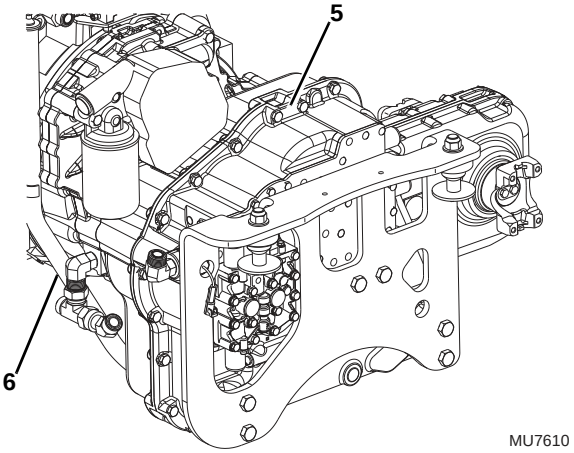

13. Install a lifting ring to top of the transmission (**5**). Connect a lifting strap or chain to the lifting ring on top of the transmission, and to a suitable hoist or overhead crane. Remove any slack prior to lifting, but DO NOT raise the transmission at this time. Connect another suitable lifting device to the lifting device on the flywheel end of the engine. Remove the slack, but do not lift the engine.
14. Remove the twelve hex bolts (**6**) securing the torque converter housing to the rear of the engine.
15. Label and disconnect the transmission shift solenoid wiring harness connectors on the transmission.
16. Remove all the capscrews securing the shift valve body cover to the transmission. Carefully remove the cover and gasket. Watch for any check valve balls within the valve body.
17. Remove any wire ties or clamps as they relate to anchor points on the transmission.

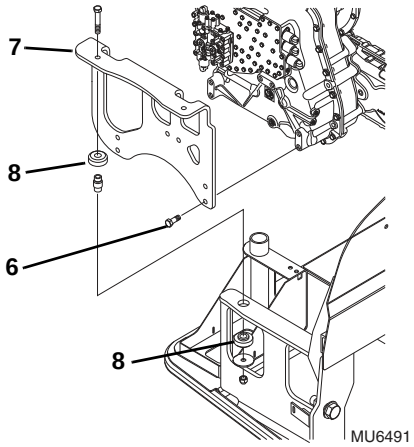

18. Remove the six capscrews (**6**) securing the transmission to the transmission mount (**7**).
19. Remove the two transmission isolator mounts (**8**) from the transmission mount and the engine pod frame. Remove the mount from the engine.
20. Carefully separate the transmission and the engine. While separating the transmission from the engine, carefully lower the both the engine and transmission at the same time.
21. Use the hoist connected to the transmission to lower the transmission down onto a skid and remove the transmission from under the engine pod.
22. Secure the transmission to a stand or other means to inspect and repair.
23. Remove any external transmission components as required, including temperature switch and fittings. Cover all openings.
24. Remove the transmission oil filter and dispose of properly. Clean the filter mounting surface. Cover or cap the oil filter mount.

https://truckmanualshub.com/

WARNING

Risk of personal injury. The transmission may move while hoisting it out of the chassis. Carefully move the transmission and adjust the sling as needed. Keep fingers, hands, legs and other body parts clear of the transmission.

6.4.2 Transmission Inspection and Internal Repair

If replacing the entire transmission, transfer the transmission temperature switch to the replacement transmission. The gear shift solenoids are included with a new transmission.

6.4.3 Transmission Installation

1. Install the temperature switch and fittings.
2. Install new transmission filter and torque to 20-25 lb-ft (27-34 Nm).
3. Carefully position the transmission assembly under the engine pod.
4. Use a hoist or overhead crane and sling attached to the lifting eye (**9**) at the top of the transmission. Operate the hoist or crane to remove any slack prior to lifting, but DO NOT raise the transmission at this time.
5. Clean all mating surfaces on both the engine and transmission prior to assembly.
6. Operate the hoist or crane to lift and position the transmission against the flywheel housing. Raise or lower the rear of the engine as needed to align the transmission to the engine. Be careful not to lower the engine to the point where the fan will contact the radiator fins.

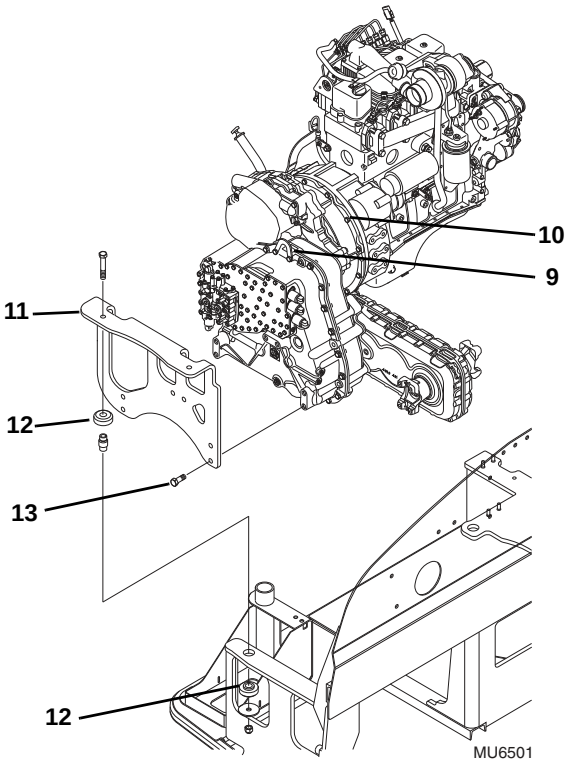

7. Begin securing the transmission to the flywheel housing with twelve M10 x 1.5 x 45 mm hex head cap screws (**10**). Tighten the capscrews evenly, in stages, to insure that the transmission converter housing installs evenly against the engine transmission housing. When all the capscrews have been installed, torque to 39-45 lb-ft (54-61 Nm).
8. Position the transmission mount plate (**11**) in place at the rear of the transmission.
9. Reinstall the two transmission isolator mounts (**12**). Install the 5/8-11 x 3-3/4 in. grade 8 capscrews from the top through the isolators. Secure in place with the lower isolator half, rebound washer and new elastic locknut. Torque to 106-191 lb-ft (14-259 Nm).
10. Line up the holes in the plate with the mounting holes in the transmission. Secure the mounting plate with six capscrews (**13**) and torque to 107-192 lb-ft (145-260 Nm).

https://truckmanualshub.com/

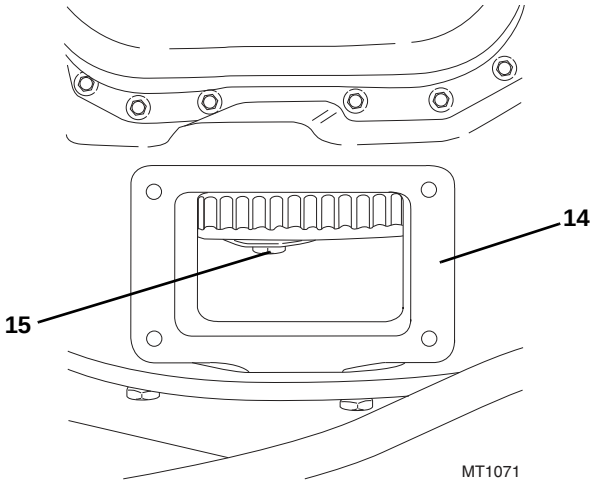

11. Working through the engine flywheel inspection and access hole (**14**), install the four hex head capscrews (**15**) securing the converter diaphragm to the engine flywheel. Use a engine baring tool or similar device, to prevent the flywheel from turning while installing the capscrews.

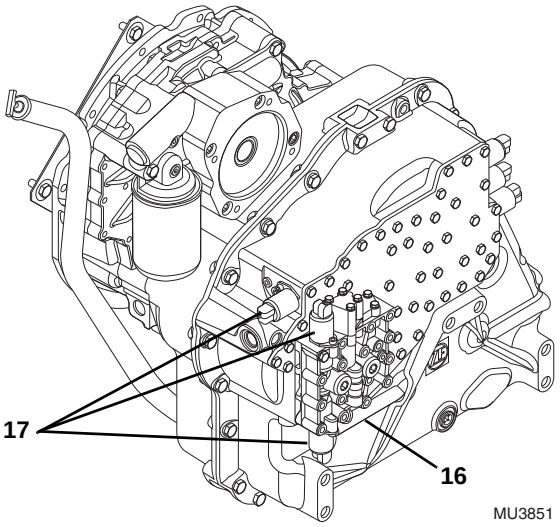

12. Install the shift valve body cover (**16**). Be sure the gasket remains in place and secure with capscrews. Torque to 84 lb-ft (9,5 Nm).
13. Install the gear pump from the transmission. Refer to Section 8.6.3, “Pump Replacement,” for installation procedures.
14. Reconnect the wire harness connectors to the solenoids (**17**) on the transmission. Snap the connectors all the way onto the solenoids.
15. Uncap and connect the previously labeled transmission oil cooler inlet and out hoses at the transmission. Torque all fittings as specified in Section 2.2, “Torque Charts.”
16. Transmission oil may be added through the dipstick tube. Remove the dipstick and add Mobilfluid 424® (ISO Grade 46). Check the oil level by taking intermittent dipstick readings as outlined in the appropriate Operation & Safety Manual. DO NOT overfill. Reinstall the dipstick when finished.
17. Install the engine-to-transmission and transmission-to-axle drive shafts. Refer to Section 5.4.5, “Drive Shaft Installation.”
18. Install the previously removed air cleaner assembly and reconnect the wire harness to the air intake sensor.
19. Install the engine cover.
20. Carefully remove the blocks from under the machine wheels and lower to the ground.
21. Properly connect the batteries.
22. Close and secure the engine cover.

6.4.4 After Transmission Service or Replacement

In general:

1. Check the transmission oil level and add oil as required.
2. Disconnect and clean all transmission cooler hoses. When possible, remove transmission lines from the machine for cleaning.
3. Drain and flush the entire transmission cooling system.
4. Thoroughly clean transmission filter screens and cases, and replace transmission filter elements.
5. Reassemble all components and fill the transmission with clean, fresh Mobilfluid 424® (ISO Grade 46) through the dipstick tube opening (**19**). Check the level by taking intermittent dipstick readings as outlined in the appropriate Operation & Safety Manual. DO NOT overfill. Reinstall the dipstick when finished.
6. Run the engine for two minutes at idle to help prime the torque converter and the transmission oil lines.
7. Recheck the level of the fluid in the transmission with the engine running at idle.
8. Add Mobilfluid 424® (ISO Grade 46) as necessary to bring the fluid level up until it reaches the FULL mark on the dipstick. Recheck the oil level when it reaches operating temperature 180-200° F (83-94° C).
9. Recheck all drain plugs, lines, connections, etc., for leaks, and tighten where necessary.

https://truckmanualshub.com/

6.5 TROUBLESHOOTING

This section provides an easy reference guide covering the most common problems that may occur during operation of the transmission.

Note: *Contact your local authorized Service Department if internal transmission repair is required during the warranty period.*

The transmission should be checked, serviced and repaired only by experienced service technicians who are aware of all safety instructions and particular component features.

6.5.1 Transmission Troubleshooting

Problem	Cause	Remedy
1. Transmission will not engage or will not shift properly.	1. Oil level too high or low.	1. Fill transmission to correct level with Mobilfluid 424® (ISO Grade 46). (Refer to Section 2.4, “Fluid and Lubricant Capacities.”)
	2. Travel select lever not functioning properly and/or a fault in the wiring harness.	2. Refer to Section 9.5, “Electrical Schematics.”
	3. Transmission valve body solenoids not functioning properly.	3. Refer to Section 9.5, “Electrical Schematics.”
	4. Pilot-operated shift valves not operating properly.	4. Clean the valve spool and housing. Replace return spring as needed.
	5. Pump output pressure low.	5. Refer to Section 6.5.1, “Transmission Troubleshooting,” **Problem 2.** “Low or no pump flow or pressure.”
	6. Clutch piston o-rings damaged.	6. Replace o-rings.
	7. Clutch discs worn or damaged.	7. Replace clutch discs.
	8. Coupling shafts or gear teeth damaged.	8. Replace couplings.

https://truckmanualshub.com/

6.5.1 Transmission Troubleshooting (Continued)

Problem	Cause	Remedy
2. Low or no pump flow or pressure.	1. Low oil level.	1. Fill transmission to correct level with Mobilfluid 424® (ISO Grade 46). (Refer to Section 2.4, “Fluid and Lubricant Capacities.”)
	2. Transmission filled with incorrect oil, or oil contaminated.	2. Drain transmission and fill to correct level with Mobilfluid 424® (ISO Grade 46). (Refer to Section 2.4, “Fluid and Lubricant Capacities.”)
	3. Pump suction pipe screen clogged.	3. Clean, repair and/or replace suction pipe.
	4. Central shaft damaged.	4. Replace central shaft.
	5. Pump worn or damaged.	5. Repair or replace pump assembly.
3. Low clutch pressure.	1. Incorrect oil level.	1. Fill transmission to correct level with Mobilfluid 424® (ISO Grade 46). Refer to Section 2.4, “Fluid and Lubricant Capacities.”
	2. Main pressure valve stuck open.	2. Clean the valve spool and housing.
	3. Broken or worn coupling shaft or piston o-rings.	3. Replace coupling and/or o-rings.
	4. Pressure reducing valve stuck open.	4. Clean the valve spool and housing.
4. Lack of power.	1. Park or service brake dragging.	1. Refer to Section 8.4, “Hydraulic Circuits.”
	2. Low engine rpm causes converter stall.	2. Adjust the engine rpm to specifications. Refer to Cummins Service Manual.
	3. Pump output pressure is low.	3. Refer to Section 6.5.1, “Transmission Troubleshooting,” **Problem 2.** “Low or no pump flow or pressure.”
	4. Clutch discs worn or damaged.	4. Replace clutch discs.
	5. Transmission overheating.	5. Refer to Section 6.5.1, “Transmission Troubleshooting,” **Problem 5.** “Transmission overheating (oil above 248° F (120° C)).”

https://truckmanualshub.com/

6.5.1 Transmission Troubleshooting (Continued)

Problem	Cause	Remedy
5. Transmission overheating (oil above 248° F (120° C)).	1. Low oil level.	1. Fill transmission to correct level with Mobilfluid 424® (ISO Grade 46). Refer to Section 2.4, “Fluid and Lubricant Capacities.”
	2. Clogged radiator.	2. Remove debris from the radiator.
	3. Transmission filled with incorrect oil, or oil contaminated.	3. Drain transmission and fill to correct level with Mobilfluid 424® (ISO Grade 46). Refer to Section 2.4, “Fluid and Lubricant Capacities.”
	4. Excessive “roading.”	4. Stop and idle the engine.
	5. Restriction in oil cooler hoses.	5. Replace cooler hoses.
	6. Pump worn or damaged.	6. Repair or replace pump assembly.
	7. Engine thermostat stuck.	7. Replace engine thermostat.
6. Grinding or “clunking” noise from transmission.	1. Oil level too low.	1. Fill oil to correct level. Refer to Section 2.4, “Fluid and Lubricant Capacities.”
	2. Transmission filled with incorrect oil.	2. Drain transmission and fill to correct level with Mobilfluid 424® (ISO Grade 46). Refer to Section 2.4, “Fluid and Lubricant Capacities.”
	3. Incorrect clutch engagement.	3. Refer to Section 9.11.8, “Transmission Solenoid Valves.”
	4. Internal damage.	4. Repair or replace parts as needed.
	5. Broken diaphragm (flex plate).	5. Replace diaphragm (flex plate). Refer to Section 6.4.1, “Transmission Removal.”
	6. Loose diaphragm (flex plate) mounting capscrews.	6. Tighten capscrews.

https://truckmanualshub.com/

6.5.1 Transmission Troubleshooting (Continued)

Problem	Cause	Remedy
7. Oil leaking from transmission.	1. Oil leaking from vent (high oil level).	1. Remove drain plug and drain oil as needed, until oil is at correct level. Refer to Section 2.4, “Fluid and Lubricant Capacities.” Replace o-rings as needed and tighten plugs to 96 lb-ft (130 Nm).
	2. Drain plug loose and/or o-rings damaged or missing.	2. Replace o-rings as needed and tighten plug to 26 lb-ft (35 Nm).
	3. Hose fittings loose.	3. Tighten fittings.
	4. Oil leaking at valve bodies (possible valve body gaskets damaged or missing and/or mounting capscrews not tight).	4. Replace gaskets and/or tighten capscrews to 7 lb-ft (9,5 Nm).
	5. Housing capscrews loose.	5. Tighten capscrews to 34 lb-ft (46 Nm).
	6. Oil leaking at pump (possible pump-to-housing o-rings missing or damaged, and/or pump mounting capscrews not tight).	6. Replace o-rings and/or tighten capscrews to 85 lb-ft (115 Nm).
	7. Oil leaking at converter bell (possible converter leak and/or input shaft seal damage).	7. Replace converter and/or input shaft seal.
	8. Oil leaking at output shaft (output shaft seal damaged).	8. Replace output shaft seal.
	9. Housing damaged.	9. Replace housing as needed.

https://truckmanualshub.com/

6.6 TRANSFER CASE COMPONENT TERMINOLOGY

To understand the safety, operation and maintenance information presented in this section. It is necessary that the operator/mechanic be familiar with the name and location of the major assemblies of the transfer case. The following illustration identifies the components that are referred to throughout this section.

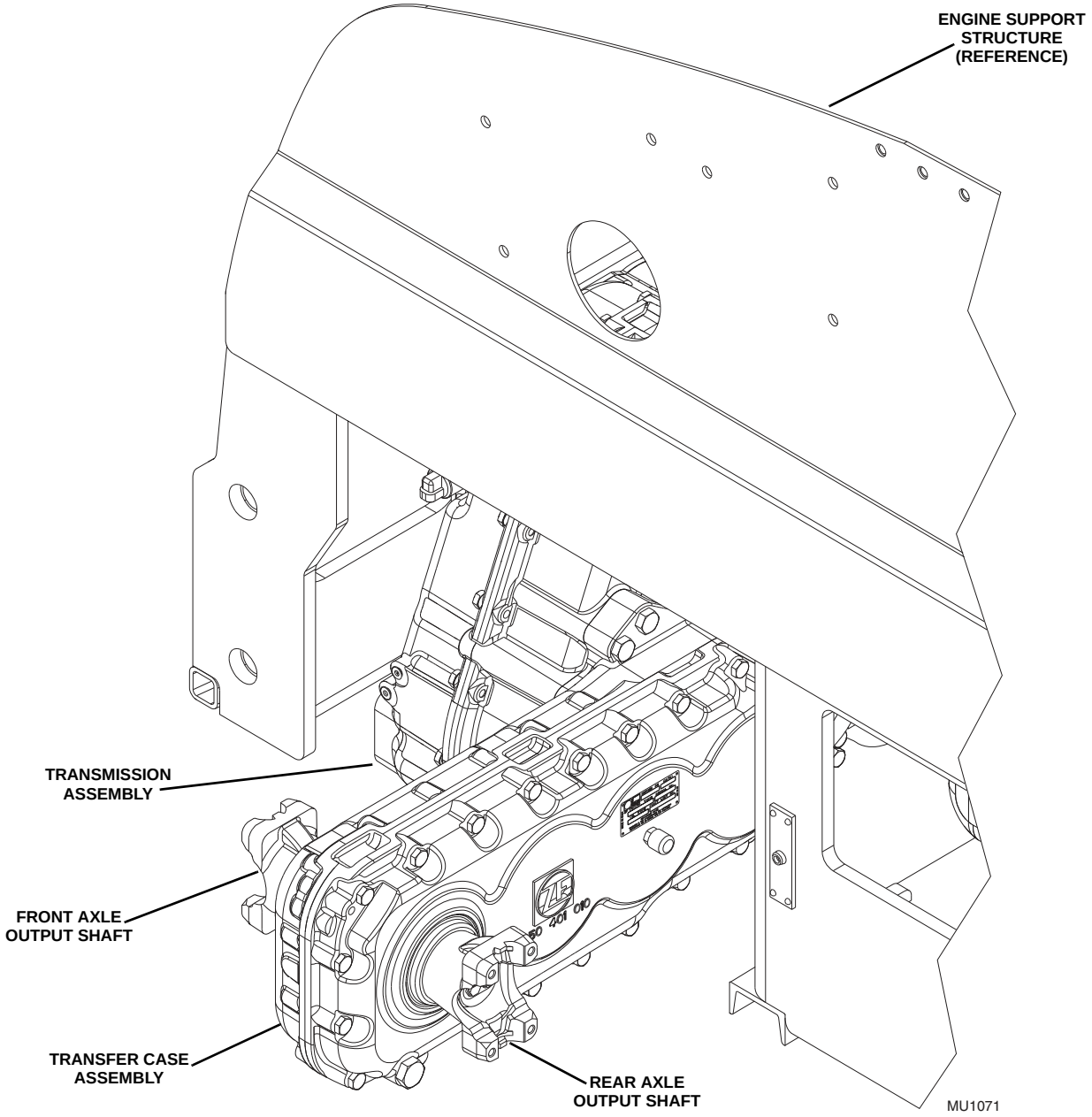

https://truckmanualshub.com/

6.7 TRANSFER CASE

6.7.1 Transfer Case Description

The ZF Model TB92-I4 transfer case is a single speed, mechanical unit designed for heavy duty commercial use. The transfer case is located beneath the frame of the machine, mounted directly to the transmission.

6.8 TRANSFER CASE SERIAL NUMBER

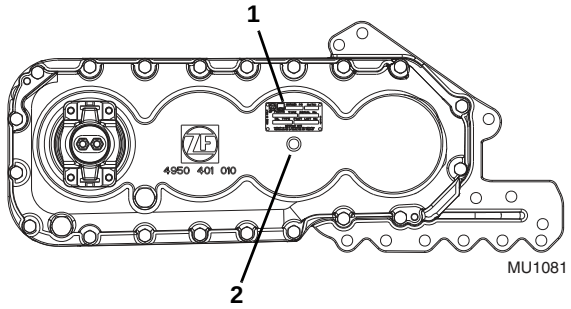

The ZF serial number plate (**1**) is riveted to the front of the transfer case above the breather (**2**). Information specified on the serial number plate includes Type (TB92-I4), Serial Number, ZF reference number, Oil Specification (oil type) and Ratios (final gear ratio, 1:1). Write this information down in a convenient location to use in a transfer case correspondence.

6.9 TRANSFER CASE MAINTENANCE

Information regarding checking the transfer case oil level and /or changing the transfer case oil is located in Section 2, “General Information and Specifications.”

Detailed transfer case service instructions covering repair, disassembly, reassembly, adjustment and troubleshooting information is provided in the ZF Model TB92-I4 Transfer Case Operating and Repair Manual, **JLG** P/N 8990495 (ZF P/N 5871.134.022).

6.10 TRANSFER CASE REPLACEMENT

Note: *Contact your local authorized service distributor if internal transfer case repair is required during the warranty period.*

Note: *To help ensure safety and optimum performance, replace the transfer case if it is damaged. Refer to the appropriate parts manual for ordering information.*

Cleanliness is of extreme importance. Before attempting to remove the transfer case, thoroughly clean the exterior of the case to help prevent dirt from entering during the replacement process. Avoid spraying water or cleaning solution onto or near electrical components.

https://truckmanualshub.com/

6.10.1 Transfer Case Removal

WARNING

NEVER lift a transmission alone; enlist the help of at least one assistant or use a suitable hoist or overhead crane and sling with a minimum lifting capacity of 1000 lb (454 kg).

Note: *This operation can be performed with the transmission/transfer case still attached to the power train.*

1. Park the machine on a firm, level surface, level the machine, fully retract the boom, raise the boom, place the transmission control lever in (N) NEUTRAL, engage the park brake and shut the engine OFF.
2. Place a Do Not Operate Tag on both the ignition key switch and steering wheel, stating that the machine should not be operated.
3. Temporarily block up or support the boom.
4. Open the engine cover. Allow the system fluids to cool.
5. Properly disconnect the batteries.
6. Remove the engine-to- transmission and transmission-to-axle drive shafts. Refer to Section 5.4.3, “Drive Shaft Removal.”
7. Connect a lifting strap or chain to the transfer case and to a suitable hoist or overhead crane. Remove any slack prior to lifting.

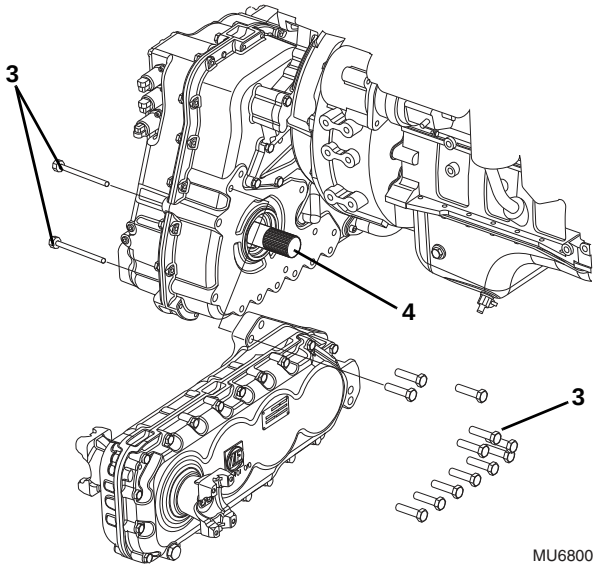

8. Remove the fourteen capscrews (2-rear, 12-front)(**3**) securing the transfer case to the transmission.
9. Carefully pull the transfer case back from the transmission approximately 3 inches to fully disengage the splined output shaft (**4**). Once clear, lower the transfer case and remove it from the machine.

6.10.2 Transfer Case Installation

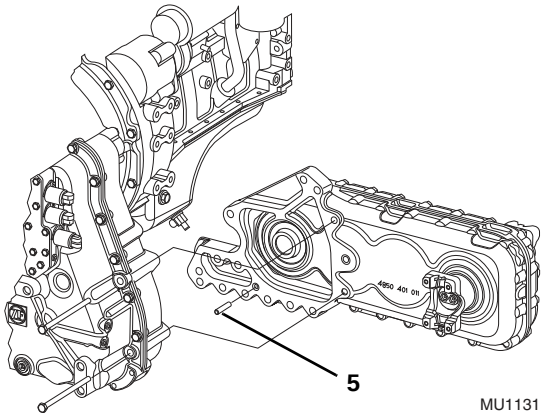

1. Connect a lifting strap or chain to the transfer case and to a suitable hoist or overhead crane. Raise the transfer case into position (make certain that the alignment dowel pin is located in the correct transfer case hole (**5**).
2. Align the dowel pin (**5**) of the transfer case with the hole in the transmission and also the input spline of the transfer case with the output shaft of the transmission. Carefully press the transfer case onto the output shaft until the mating surfaces of both cases meet.
3. Install the fourteen capscrews (2-rear/long, 12-front/short) and torque to 140 lb-ft (190 Nm).
4. Refer to Section 5.4.5, “Drive Shaft Installation,” for installation of the drive shafts.
5. Properly connect the batteries.
6. Close and secure the engine cover.

https://truckmanualshub.com/

6.11 TROUBLESHOOTING

This section provides an easy reference guide covering the most common problems that may occur during operation of the transfer case.

Note: *Contact your local authorized Service Department if internal transfer case repair is required during the warranty period.*

The transfer case should be checked, serviced and repaired only by experienced service technicians who are aware of all safety instructions and particular component.

6.11.1 Transfer Case Troubleshooting

Problem	Cause	Remedy
1. Excessive transfer case noise.	1. Oil level too low.	1. Fill transfer case to correct level with Mobilfluid 424® (ISO Grade 46). (Refer to Section 2.4, “Fluid and Lubricant Capacities.”)
	2. Transfer case filled with incorrect oil.	2. Drain transfer case and fill to correct level with Mobilfluid 424® (ISO Grade 46). (Refer to Section 2.4, “Fluid and Lubricant Capacities.”
	3. Excessive bearing “end play”.	3. Check bearing end play and correct with shims as needed.
	4. Worn or damaged bearings.	4. Replace bearings as needed.
	5. Worn or broken gear teeth.	5. Replace gears as needed.
	6. Contamination in transfer case.	6. Check for foreign particles.
	7. Incorrect assembly of parts.	7. Check assembly of transfer case components.

https://truckmanualshub.com/

6.11.1 Transfer Case Troubleshooting (Continued)

Problem	Cause	Remedy
2. Oil leaking from transfer case.	1. Breather blocked.	1. Clean or replace breather.
	2. Plugs or fittings loose.	2. Tighten plugs or fittings.
	3. Incorrect oil level.	3. Fill transfer case to correct level with Mobilfluid 424® (ISO Grade 46). (Refer to Section 2.4, “Fluid and Lubricant Capacities.”)
	4. Gaps in sealant between housing halves.	4. Clean housing mating surfaces, apply new sealant (Loctite® 518) and torque housing capscrews to 34 lb-ft (46 Nm).
	5. Worn, damaged or improperly seated seals and/or worn or damaged input/output shaft sealing surfaces.	5. Replace seals and/or input/output gear assemblies as needed.
	6. Damaged housing.	6. Replace housing.
3. Noise when coasting: even slight transfer case noise can be heard when machine is coasting.	1. Worn splines on input flange and/or gears.	1. Replace worn parts as needed.
4. Transfer case overheating (oil above 230° F (110° C).	1. Build-up of mud and/or debris on the exterior of transfer case.	1. Remove mud and/or debris from the transfer case exterior.
	2. Oil level to high or low.	2. Fill oil to correct level with Mobilfluid 424® (ISO Grade 46). (Refer to Section 2.4, “Fluid and Lubricant Capacities.”)
	3. Transfer case filled with incorrect oil or oil contaminated.	3. Drain transfer case and fill with Mobilfluid 424® (ISO Grade 46). (Refer to Section 2.4, “Fluid and Lubricant Capacities.”)
	4. Incorrect bearing “end play”.	4. Check bearing end play and correct with shims as needed.
	5. Worn or damaged bearings.	5. Replace bearings as needed.

https://truckmanualshub.com/

This Page Intentionally Left Blank

https://truckmanualshub.com/

Section 7
Engine

Contents

PARAGRAPH	TITLE	PAGE
7.1	**Introduction - Cummins QSB 4.5**	**7-2**
7.1.1	Disclaimer and Scope	7-2
7.1.2	Component Terminology	7-3
7.2	**Engine Serial Number**	**7-4**
7.3	**Specifications and Maintenance Information**	**7-4**
7.4	**Engine Cooling System**	**7-4**
7.4.1	Radiator Pressure Cap	7-4
7.4.2	Radiator/Oil Cooler and Replacement	7-4
7.5	**Engine Electrical System**	**7-5**
7.6	**Fuel System**	**7-5**
7.6.1	Diesel Fuel	7-5
7.6.2	Fuel Tank	7-5
7.6.3	After Fuel System Service	7-7
7.7	**Engine Exhaust System**	**7-7**
7.7.1	Exhaust System Removal	7-7
7.7.2	Exhaust System Installation	7-7
7.8	**Air Cleaner Assembly**	**7-8**
7.8.1	Air Cleaner Assembly Removal	7-8
7.8.2	Air Cleaner Assembly Installation	7-8
7.9	**Engine Replacement**	**7-9**
7.9.1	Engine Removal	7-9
7.9.2	Engine Installation	7-11
7.10	**Troubleshooting**	**7-13**

https://truckmanualshub.com/

7.1 INTRODUCTION - CUMMINS QSB 4.5

7.1.1 Disclaimer and Scope

These instructions are written for worldwide use. In territories where legal requirements govern engine smoke emission, noise, safety factors, etc., apply all instructions, data and dimensions provided herein in such a way that after maintenance, service and repair of the engine, engine operation does not violate local regulations.

Note: *These instructions cover only the routine maintenance, removal, installation and troubleshooting of the engine. Refer to the local Cummins Engine Distributor and the applicable Cummins Engine Service Manual for assistance with comprehensive engine diagnosis, repair and component replacement.A gradual running-in (break-in) of a new engine is not necessary. Full load can be applied to a new engine as soon as the engine is put into service and the coolant temperature is at least 60° C (140° F). Extended light-load operation during the early life of the engine is not recommended. DO NOT run the engine at high, no-load speeds. DO NOT apply an overload to the engine.*

https://truckmanualshub.com/

7.1.2 Component Terminology

To understand the safety, operation and maintenance information presented in this section, it is necessary that the operator/mechanic be familiar with the names and locations of the engine components. The following illustration identifies the components that are referred to throughout this section.

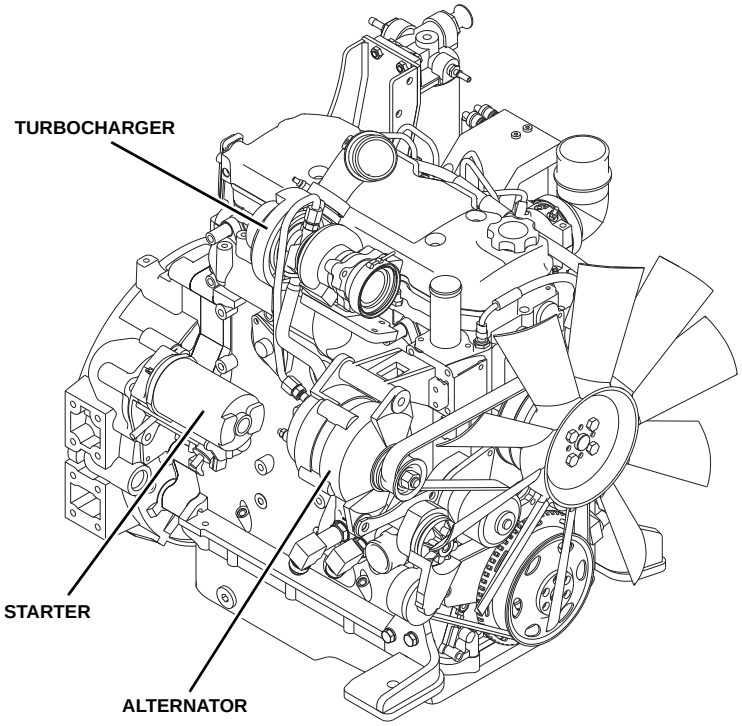

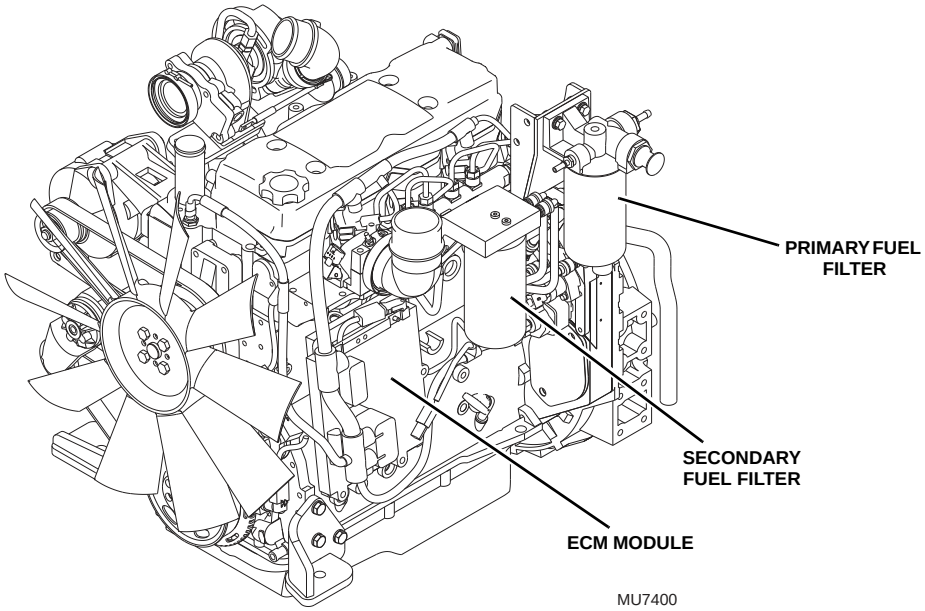

https://truckmanualshub.com/

7.2 ENGINE SERIAL NUMBER

The Cummins QSB 4.5 serial number is stamped on a plate which is typically located on the engine rocker cover, but may be located on the side of the gear housing. Information contained in the serial number is required in correspondence with the engine manufacturer.

7.3 SPECIFICATIONS AND MAINTENANCE INFORMATION

For engine, coolant and oil specifications, and maintenance information, refer to Section 2, “General Information and Specifications.”

Note: *Detailed Cummins engine service instructions (covering disassembly, inspection, internal repair, assembly, adjustment and troubleshooting information) are provided in the appropriate Cummins engine service manual.*

7.4 ENGINE COOLING SYSTEM

7.4.1 Radiator Pressure Cap

Use a 16 psi (1,1 bar) radiator cap. An incorrect or malfunctioning cap can result in the loss of coolant and a hot-running engine.

7.4.2 Radiator/Oil Cooler and Replacement

Before considering radiator or oil cooler replacement for other than obvious damage, conduct a cooling system pressure test check the coolant specific gravity, coolant level, fan belt tension and dash panel temperature indicator.

- If the engine runs hot, check the temperature of the upper radiator hose.
- If the hose is not hot, the thermostat may be stuck in the closed position.
- If the engine has overheated, performance may suffer, indicating other damage including a leaking cylinder head gasket, cracked cylinder head or block, and/or other internal engine damage.

a. Radiator/Oil Cooler Removal

1. Park the machine on a firm, level surface, level the machine, fully retract the boom, lower the boom, place the travel select lever in the (N) NEUTRAL position, engage the parking brake, and shut the engine OFF.
2. Place a Do Not Operate Tag on both the ignition key switch and steering wheel, stating that the machine should not be operated.
3. Open the engine cover. Allow the system fluids to cool.
4. Properly disconnect the batteries.
5. Remove the engine cover.

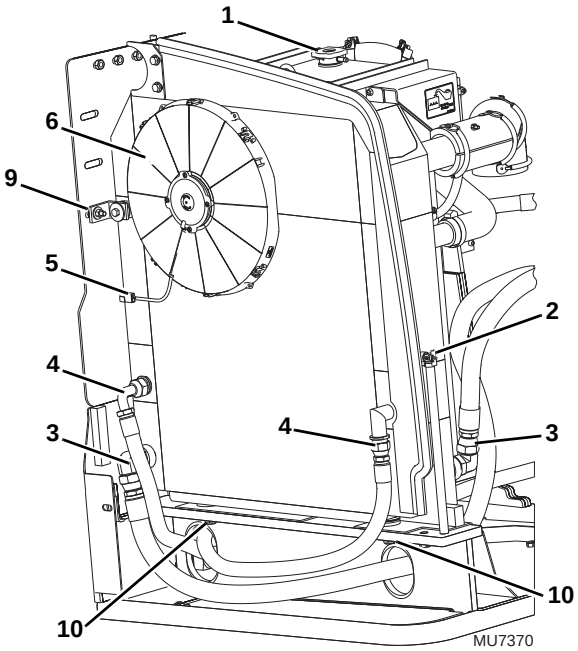

6. Slowly turn the radiator cap (**1**) to the first stop and allow any pressure to escape. Remove the radiator cap.
7. Place a suitable container beneath the radiator drain.
8. Place a funnel at the base of the radiator to channel the drained coolant into a container. Loosen the drain petcock (**2**) and slowly allow the coolant to drain. Transfer the coolant into a properly labeled container. Dispose of properly if coolant needs to be replaced. Tighten the radiator drain petcock (**2**).
9. Label, disconnect and cap the hoses attached to the hydraulic oil cooler (**3**). Cap all fittings to keep dirt & debris from entering the hydraulic system.
10. Label, disconnect and cap the hoses attached to the transmission oil cooler (**4**). Cap all fitting to keep dirt & debris from entering the system.
11. Unplug the electrical connection (**5**) at the radiator fan (**6**).

https://truckmanualshub.com/

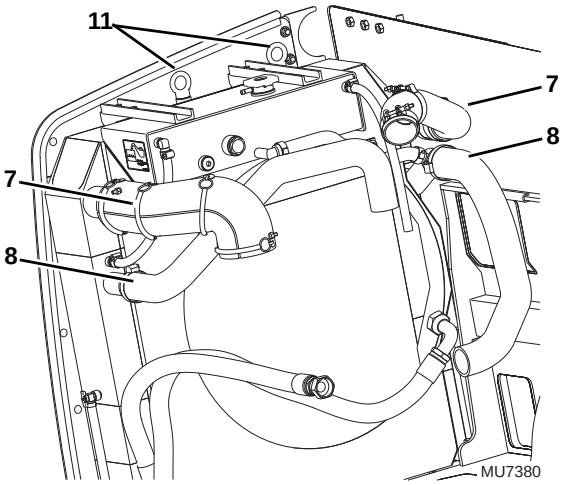

12. Label and disconnect the air intercooler hoses (**7**). Inspect the hoses and replace if necessary.
13. Label and disconnect the radiator hoses (**8**). Inspect the hoses and replace if necessary.
14. Disassemble the radiator from the frame assembly by removing capscrews, washers, isolators (**9** & **10**).
15. Attach lifting straps to the two eye bolts (**11**) on top of the radiator assembly.
16. Remove the radiator assembly

b. Radiator/Oil Cooler Installation

1. Assemble the radiator to the frame assembly with the previously used hardware (**9**).
2. Uncap and connect the previously labeled hoses to the transmission cooler (**4**).
3. Uncap and connect the previously labeled hoses to the hydraulic oil cooler (**3**).
4. Connect the previously labeled hoses to the radiator (**8**).
5. Connect the previously labeled hoses to the air inter cooler (7).
6. Properly connect the batteries.
7. Open the radiator cap (**1**) and fill the radiator completely with a 50/50 mixture of ethylene glycol and water. Replace and tighten the radiator cap. Refer to Section 2.4, “Fluid and Lubricant Capacities,” for proper capacities.
8. Run the engine to operating temperature. Visually check for leaks with the engine running. Check the coolant level in the overflow bottle and fill, or drain, as necessary.
9. Close and secure the engine cover.

7.5 ENGINE ELECTRICAL SYSTEM

The engine electrical system, including the starter, alternator and primary wiring, is described in Section 9.5, “Electrical Schematics.”

7.6 FUEL SYSTEM

7.6.1 Diesel Fuel

Fuel represents a major portion of machine operating costs and therefore must be used efficiently. ALWAYS use a premium brand of high-quality, clean diesel fuel. Low cost, inferior fuel can lead to poor performance and expensive engine repair.

Note: *Use only diesel fuel designed for diesel engines. Some heating fuels contain harmful chemicals that can seriously affect engine efficiency and performance.*

Note: *Due to the precise tolerances of diesel injection systems, keep the fuel clean, and free of dirt and water. Dirt and water in the fuel system can cause severe damage to both the injection pump and the injection nozzles. Use ASTM #2 diesel fuel with a minimum Cetane rating of 40. #2 diesel fuel gives the best economy and performance under most operating conditions. Fuels with Cetane numbers higher than 40 may be needed in high altitudes or extremely low ambient temperatures to help prevent misfiring and excessive smoking.*

Inform the owner/operator of the machine to use #2 diesel fuel, unless ambient temperatures are below 32° F (0° C). When temperatures are below 32° F (0° C), a blend of #1 diesel and #2 diesel fuels (known as “winterized” #2 diesel) may be used.

Note: *#1 diesel fuel may be used, however, fuel economy will be reduced.*

Use a low-sulfur content fuel with a cloud point (the temperature at which wax crystals form in diesel fuel) at least 10° below the lowest expe.cted fuel temperature. The viscosity of the fuel must be kept above 1.3 centistrokes to provide adequate fuel system lubrication.

7.6.2 Fuel Tank

The fuel tank is located directly behind the operator’s cab.

a. Fuel/Hydraulic OIl Tank Removal

1. Park the machine on a firm, level surface, level the machine, fully retract the boom, lower the boom, place the travel select lever in the (N) NEUTRAL

https://truckmanualshub.com/

position, engage the parking brake, and shut the engine OFF.

2. Place a Do Not Operate Tag on both the ignition key switch and steering wheel, stating that the machine should not be operated.
3. Open the engine cover. Allow the system fluids to cool.
4. Properly disconnect the batteries.

Note: *If replacing the tank, remove all internal and external components from the old tank, and retain for use on the replacement tank.*

Note: *Have a dry chemical (Class B) fire extinguisher near the work area.*

WARNING

NEVER drain or store fuel in an open container due to the possibility of explosion or fire. Discard the fuel in an approved manner.

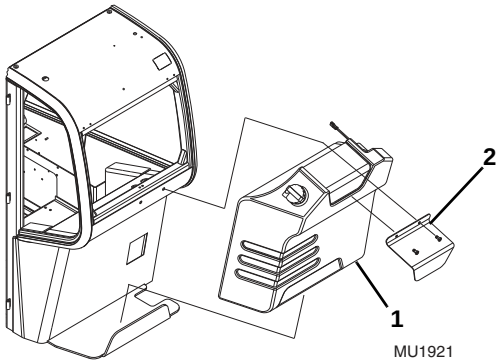

5. Remove fuel tank drain plug (**1**), and drain fuel into an approved and suitable container. Dispose of fuel properly.
6. Disconnect the fuel level gauge wire from the fuel tank sender.
7. Label, disconnect and cap the fuel lines from the tank.
8. Remove the fuel tank retaining panel (**2**) and remove the fuel tank from the machine.

b. Disassembly

The fuel tank is a one-piece unit and cannot be disassembled. The fuel level indicator can be removed and reused on the new replacement tank. Dispose of the old tank according to local regulations concerning hazardous materials disposal.

c. Cleaning and Drying

If contaminated fuel or foreign material is in the tank, the tank can usually be cleaned.

Note: *If a leak is suspected in the fuel tank, contact your local authorized Service Department.*

To clean the fuel tank:

1. Have a dry chemical (Class B) fire extinguisher near the work area.
2. Depending on which side of the tank is contaminated (fuel or hydraulic oil), remove the fuel or oil tank drain plug, and safely drain any fuel or hydraulic oil into a suitable container. Dispose of fuel or hydraulic oil properly.
3. Clean the fuel/hydraulic oil tank with a high pressure washer, or flush the tank with hot water for five minutes and drain the water. Dispose of contaminated water properly.
4. For the fuel tank side, add a diesel fuel emulsifying agent to the tank. Refer to manufacturer's instructions for the correct emulsifying agent-to-water mixture ratio. Refill the tank with water, and agitate mixture for 10 minutes. Drain the tank completely. Dispose of contaminated water properly.
5. Refill the fuel tank with water until it overflows. Completely flush the tank with water. Empty the fuel tank, and allow it to dry completely.

d. Assembly

The fuel/hydraulic oil tank is a one piece-unit and cannot be disassembled. The fuel level indicator and hydraulic filters can be removed and reused on the new replacement tank. Dispose of the old tank according to local regulations concerning hazardous materials disposal regulations.

e. Inspection

Note: *If a leak is suspected in the fuel tank, contact your local authorized Service Department.*

1. Inspect the tank thoroughly for any cracks, slices, leaks or other damage.
2. With the tank removed from the machine, plug all openings except one elbow fitting. Install the elbow fitting, and apply approximately 1-1.5 psi (7-10 kPa) of air pressure through the elbow. Check the reservoir for leaks by applying a soap solution to the exterior and look for bubbles to appear at the cracked or damaged area.

https://truckmanualshub.com/

f. Fuel Tank Installation

1. Set the fuel tank on to the tank support.
2. Secure the fuel tank retaining panel with the two previously removed capscrews. Torque to 38-59 lb-ft (50-80 Nm).
3. Install the fuel tank drain plug (3/8 in. NPT square head).
4. Connect the fuel level gauge wire to the fuel tank sender.
5. Uncap and connect the previously labeled fuel lines to their appropriate locations.
6. Fill the tank according to specifications. Refer to Section 2.4, “Fluid and Lubricant Capacities.”
7. Check tank for leaks.
8. Properly connect the batteries.
9. Close and secure the engine cover.

7.6.3 After Fuel System Service

1. Drain and flush the fuel tank if it was contaminated.
2. Vent air from the fuel system in accordance with the instructions found in the appropriate Operator & Safety Manual.
3. Fill the fuel tank with fresh, clean diesel fuel as required.

7.7 ENGINE EXHAUST SYSTEM

Rattles and noise vibrations in the exhaust system are usually caused by misalignment or parts. When aligning the system, leave all capscrews and nuts slightly loose until all parts are properly aligned, then tighten all fasteners working from the front of the system to the rear.

When replacing the muffler, also replace the tail pipe.

Before assembling components, use exhaust system sealer at all slip joint connections.

When installing exhaust system components, allow sufficient clearance between the components and other pipes, hoses and wiring that could be adversely affected by excessive heat.

7.7.1 Exhaust System Removal

1. Park the machine on a firm, level surface, level the machine, fully retract the boom, lower the boom, place the travel select lever in the (N) NEUTRAL position, engage the parking brake, and shut the engine OFF.
2. Place a Do Not Operate Tag on both the ignition key switch and steering wheel, stating that the machine should not be operated.
3. Open the engine cover. Allow the system fluids to cool.
4. Properly disconnect the batteries.

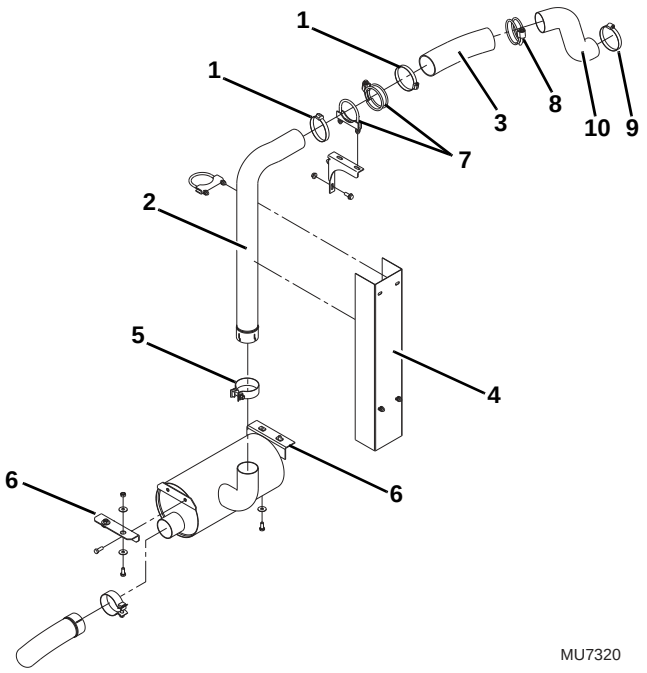

5. Loosen the hose clamps (**1**) and remove the thermal insulation socks on the exhaust (**2**) and flex pipe (**3**).
6. Loosen and remove the exhaust pipe heat shield (**4**).
7. Loosen the lower clamp (**5**) attaching the exhaust pipe to the muffler.
8. Loosen and remove the bolts and brackets (**6**) holding the muffler to the frame. Remove the muffler.
9. Loosen the upper clamps (**7**) on the exhaust pipe and remove the exhaust pipe (**2**).
10. Loosen the clamp (**8**) on the flex pipe (**3**) and remove the flex pipe (**2**).
11. Loosen the V-band clamp (**9**) securing the outlet exhaust pipe (**10**) to the engine turbo outlet. Remove the exhaust pipe.

7.7.2 Exhaust System Installation

Note: *Keep all clamps loosened until entire exhaust system is in place.*

1. Install the outlet exhaust pipe (**10**) to the engine turbo outlet and tighten the V-band clamp (**9**) ONLY enough to hold the outlet exhaust pipe in place.

https://truckmanualshub.com/

2. Install the flex pipe (**3**) and secure with clamp (**8**).
3. Install the exhaust pipe (**2**) and secure with clamps (**7** & **8**).
4. Align the elbow portion of the exhaust pipe (**2**), so the pipe is parallel with the frame of the machine.
5. Install the muffler bracket to the frame. Apply Loctite® 242 to two bolts and loosely secure the bracket into place with the two bolts, washers and nuts.
6. Slide the front muffler bracket onto the frame mounted hangar. Apply Loctite® 242 to two bolts and loosely secure the front of the muffler in place with the two bolts and washers (**6**).
7. Lift the rear of the muffler into place. Apply Loctite® 242 to the two bolts and washers (**2**) and secure the rear of the muffler in place.
8. Install the exhaust pipe (**2**) between the muffler and the flex pipe (**3**) and secure with clamp (**5**).
9. Align the muffler and the exhaust pipe being careful to allow sufficient clearance between tubes, hoses and electrical wiring.
10. Tighten all muffler bolts and exhaust pipe clamps (**1, 5, 7, 8** & **9**).
11. Instal the exhaust pipe heat shield (**4**).
12. Properly connect the batteries.
13. Start engine and check for exhaust leaks at all exhaust connections. Adjust or repair as needed.
14. Close and secure the engine cover.

7.8 AIR CLEANER ASSEMBLY

WARNING

NEVER run the engine with only the inner safety element installed.

Note: *Refer to the appropriate Operation & Safety Manual for your machine for the correct element change procedure.*

7.8.1 Air Cleaner Assembly Removal

1. Park the machine on a firm, level surface, level the machine, fully retract the boom, lower the boom, place the travel select lever in the (N) NEUTRAL position, engage the parking brake, and shut the engine OFF.
2. Place a Do Not Operate Tag on both the ignition key switch and steering wheel, stating that the machine should not be operated.
3. Open the engine cover. Allow the system fluids to cool.
4. Properly disconnect the batteries.

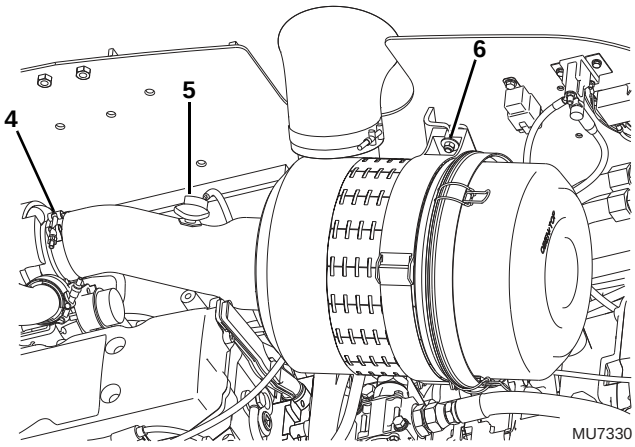

5. Loosen, but do not remove the clamp securing the air intake hose (**4**) to the engine turbocharger.
6. Disconnect the air intake sensor (**5**).
7. Loosen both hex bolts (**6**) securing the air cleaner mounting band to the firewall enough to allow the hex bolts to slip from the mounting band. Remove the air cleaner assembly.

7.8.2 Air Cleaner Assembly Installation

Note: *Apply Loctite® 242 threadlock to the capscrew threads before installation.*

1. Position the air intake hose over the engine turbocharger.
2. Align the mounting band with the firewall, and slide the hex bolts (**6**) into the slots.Tighten the hex bolts.
3. Tighten the air intake hose clamp (**4**) at the engine turbocharger.
4. Reconnect the air intake sensor (**5**).
5. Properly connect the batteries.
6. Close and secure the engine cover.

https://truckmanualshub.com/

7.9 ENGINE REPLACEMENT

7.9.1 Engine Removal

Note: *The radiator and oil cooler must be removed from the machine before engine removal. Refer to Section 7.4, "Engine Cooling System." Several additional components must be removed before engine removal. They will be addressed in the following procedures.*

1. Park the machine on a firm, level surface, level the machine, fully retract the boom, lower the boom, place the travel select lever in the (N) NEUTRAL position, engage the parking brake, and shut the engine OFF.
2. Place a Do Not Operate Tag on both the ignition key switch and steering wheel, stating that the machine should not be operated.
3. Open the engine cover. Allow the system fluids to cool.
4. Properly disconnect the batteries.
5. Remove the engine cover.
6. Drain and remove the radiator assembly. Refer to Section 7.4.2, "Radiator/Oil Cooler and Replacement."
7. Label, disconnect and cap the heater hoses attached to the engine (if equipped).
8. Disconnect block heater cord from the engine (if equipped).

Note: *The engine harness is routed and attached to the engine using hold-down clamps and plastic wire ties at various places on the engine. Before removing engine, ensure that the harness has been completely separated (disconnected) from the engine. Move the harness clear of the engine, and with the help of an observer, ensure that the engine clears the harness during removal.*

9. Label and disconnect all electrical wire connections on the engine.
10. Label, disconnect and cap the fuel inlet line at the fuel lift pump.
11. Label, disconnect and cap the fuel return line from the injector pump.
12. Label, disconnect and cap the engine oil filter inlet hose at the engine.
13. Label, disconnect and cap the engine oil filter return hose from the engine.
14. Remove the engine oil filter assembly.
15. Remove the engine-to-transmission drive shaft. Refer to Section 5.4.3, "Drive Shaft Removal."

Note: *Before the engine can be removed from the machine, the air conditioning hoses need to be removed from the air conditioning compressor. This procedure must be completed by an authorized air conditioning service technician. This service technician will also need to be available when the new engine is installed to re-install the air conditioning hoses and to the air conditioning compressor.*

16. Remove the air cleaner assembly. Refer to Section 7.8.1, "Air Cleaner Assembly Removal."
17. Remove the exhaust pipe from the exhaust manifold. Refer to Section 7.7.1, "Exhaust System Removal."

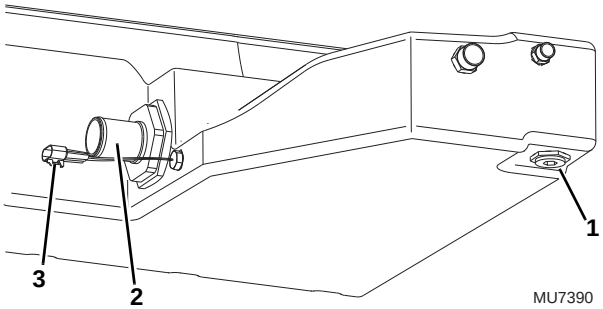

18. Remove all of the hydraulic oil from the reservoir and system. The receptacle must be large enough to hold 50 gallons of oil. Remove the drain plug (**1**) and allow the oil to drain into the receptacle. Dispose of used oil at an approved recycling facility.

Note: *If an oil evacuation system is available, removal of the hydraulic oil can best be accomplished by evacuating the oil through the filler tube.*

19. Clean and reinstall the drain plug (**1**) into the reservoir. Torque the drain plug to 25-40 lb-ft (34-54 Nm).
20. Loosen the hose clamps and remove the lower section hydraulic suction hose from the hydraulic reservoir fitting (**2**).
21. Disconnect the hydraulic oil temperature switch connector (**3**).

https://truckmanualshub.com/

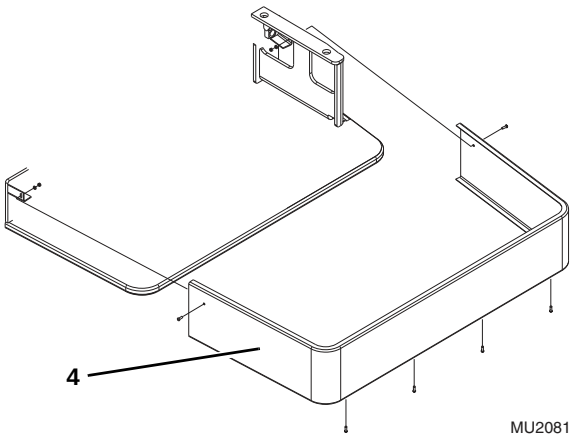

22. Remove the engine frame skirt (**4**) to gain access to the hydraulic reservoir.

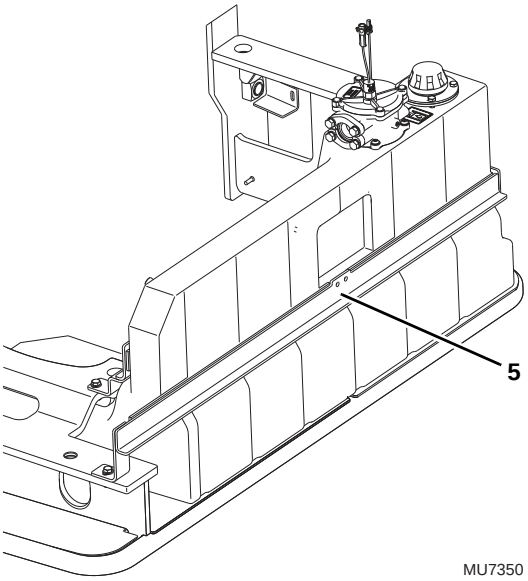

23. Remove the hydraulic reservoir support bracket (**5**).
24. Label, disconnect and cap all hydraulic hoses attached to the hydraulic reservoir. Cap all fittings and openings to keep dirt and debris from entering the hydraulic system.

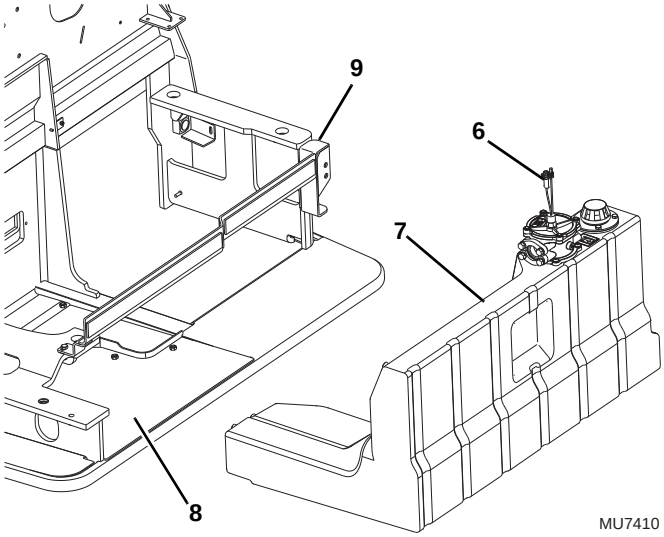

25. Disconnect the connector harness at the return oil filter pressure switch (**6**).
26. Remove the hydraulic reservoir (**7**), sliding the tank out from under the engine and away from the engine mount frame (**8**).
27. Disconnect and remove the transmission hoses. Cap all fittings and openings to keep dirt and debris from entering the system.
28. Remove the reservoir retainer assembly (**9**).
29. Remove air cleaner assembly. Refer to Section 7.8.1, “Air Cleaner Assembly Removal.”

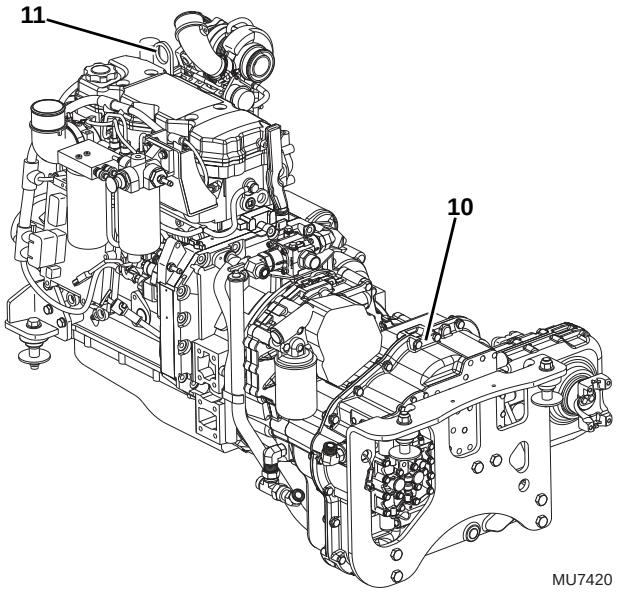

30. Install a lifting bracket to the top of the transmission (**10**).

https://truckmanualshub.com/

31. Connect a suitable engine hoist to the front engine lift bracket (**11**) and the transmission lifting bracket (**10**).
32. Remove the two elastic locknuts, washers, lower half isolators and capscrews securing the engine mounts to the frame (front).
33. Remove the two elastic locknuts and washers securing the transmission mount to the frame (rear).
34. Carefully lift the engine/transmission assembly out and away from the machine
35. Place engine on ground supports or a suitable engine stand.
36. Remove the transmission mounting bracket.
37. If required, the transmission can now be separated from the engine. Refer to Section 6.4.1, “Transmission Removal.”

7.9.2 Engine Installation

Note: *The engine harness is routed and attached at various places on the engine using hold-down clamps and plastic wire ties. Before installing engine and with the help of an assistant, ensure that the engine clears the harness during installation.*

1. Attach the transmission, if removed, to the engine. Refer to Section 6.4.3, “Transmission Installation.”

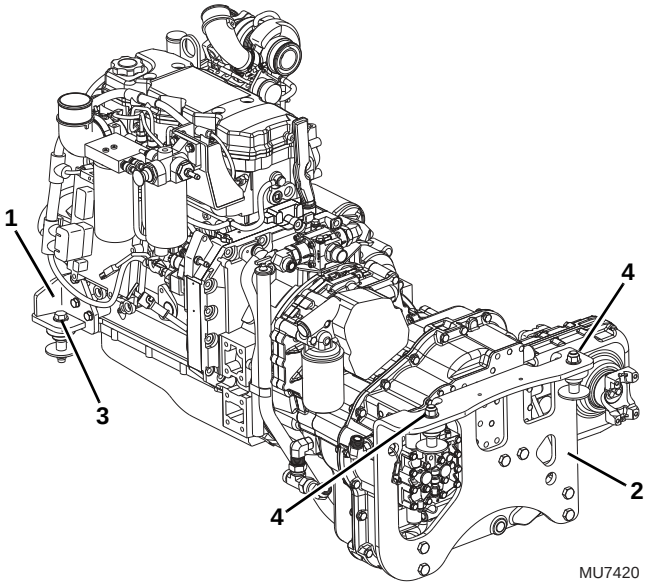

2. If removed during engine work, install the front and rear engine mounts. Torque the FRONT (**1**) mounting bolts to 44-78 lb-ft (59-106 Nm). Torque the REAR (**2**) mounting bolts to 107-192 lb-ft (145-260 Nm).
3. Attach a lifting strap or chain to the engine lift brackets, and lift the engine clear of the ground.
4. Install two Grade 8, 5/8-11 x 3-3/4 in. capscrews (**3**) down through each upper half isolators.
5. Carefully install the engine, guiding the mounting bolts through the engine frame mounting holes.
6. Install the two bottom half isolators, rebound washers and new elastic locknuts.Torque to 106-191 lb-ft (144-259 Nm).
7. Align the rear transmission mounts to the transmission mounting plate (**2**).
8. Install two Grade 8, 5/8-11 x 3-3/4 in. capscrews and washers (**4**) up through each lower half isolators and transmission mounting plate (**2**).
9. Install the two washers and new elastic locknuts.Torque to 106-191 lb-ft (144-259 Nm).
10. Remove the hoist from the lifting brackets. Remove the lifting hook from the transmission.
11. Install the engine-to-transmission drive shaft. Refer to Section 5.4.5, “Drive Shaft Installation.”
12. Install the engine oil filter assembly.
13. Uncap and connect and the engine oil filter inlet hose at the engine.
14. Uncap and connect the engine oil filter return hose from the engine.
15. Uncap and connect the previously labeled fuel return line to the injector pump.
16. Uncap and connect the previously labeled fuel inlet line to the fuel lift pump.
17. Connect the previously labeled electrical wire connections on the engine.
18. Uncap and connect the previously labeled heater hoses to the engine (if equipped).
19. Install the reservoir retainer assembly and battery tray.
20. Uncap and connect previously labeled transmission hoses.
21. Install the hydraulic reservoir.
22. Install the complete radiator assembly. Refer to Section 7.4.2, “Radiator/Oil Cooler and Replacement.”

Note: *Use new oiled o-rings as required. ALWAYS replace seals, o-rings, gaskets, etc., with new parts to help ensure proper sealing and operation. Lubricate seals and o-rings with clean hydraulic oil.*

https://truckmanualshub.com/

Note: *Torque all fittings as specified in Section 2.2, "Torque Charts."*

23. Properly connect the batteries.
24. Refill hydraulic reservoir with clean hydraulic oil and check for leaks.
25. Check that all hydraulic system, electrical system, cooling system, fuel system and exhaust system connections are correct and connected tightly.

Note: *Have an assistant stand by with a Class B fire extinguisher.*

26. Start the engine and run to normal operating temperature then shut off the engine. While the engine is cooling, check for leaks.
27. Allow the engine to cool. Check the radiator coolant level, and top off with a 50/50 mixture of ethylene glycol and water. Replace the radiator cap.
28. Check for leaks from the engine, main hydraulic pump and lines, transmission, hydraulic reservoir and fuel tank. Check the levels of all fluids and lubricants. Fill as required.

Note: *During the full throttle check:*

- DO NOT operate any hydraulic function.
- DO NOT steer or apply any pressure to the steering wheel.
- Keep the transmission in (N) NEUTRAL.

29. Obtain and connect an appropriate engine analyzer or tachometer. Check the engine rpm at full throttle.
30. Purge the hydraulic system of air by operating all boom functions through their entire range of motion several times. Check the hydraulic oil level.
31. Check for proper operation of all components.
32. Turn the engine OFF.
33. Install the engine cover.

https://truckmanualshub.com/

7.10 TROUBLESHOOTING

Trouble	Possible Causes (see key, below)
Low Cranking Power	1, 2, 3, 4
Will Not Start	5, 6, 7, 8, 9, 10, 12, 13, 14, 15, 16, 17, 18, 19, 20, 22, 31, 32, 33
Difficult Starting	5, 7, 8, 9, 10, 11, 12, 13, 14, 15, 16, 18, 19, 20, 21, 22, 24, 29, 31, 32, 33, 61, 63
Lack of Power	8, 9, 10, 11, 12, 13, 14, 18, 19, 20, 21, 22, 23, 24, 25, 26, 27, 31, 32, 33, 61, 63
Misfiring	8, 9, 10, 12, 13, 14, 16, 18, 19, 20, 25, 26, 28, 29, 30, 32
Excessive Fuel Consumption	11, 13, 14, 16, 18, 19, 20, 22, 23, 24, 25, 27, 28, 29, 31, 32, 33, 63
Black Exhaust	11, 13, 14, 16, 18, 19, 20, 22, 24, 25, 27, 28, 29, 31, 32, 33, 61, 63
Blue/White Exhaust	4, 16, 18, 19, 20, 25, 27, 31, 33, 34, 35, 45, 56, 62
Low Oil Pressure	4, 36, 37, 38, 39, 40, 42, 43, 44, 58
Knocking	9, 14, 16, 18, 19, 22, 26, 28, 29, 31, 33, 35, 36, 45, 46, 59
Erratic Running	7, 8, 9, 10, 11, 12, 13, 14, 16, 20, 21, 23, 26, 28, 29, 30, 33, 35, 45, 59
Vibration	13, 14, 20, 23, 25, 26, 29, 30, 33, 45, 47, 48, 49
High Oil Pressure	4, 38, 41
Overheating	11, 13, 14, 16, 18, 19, 24, 25, 45, 50, 51, 52, 53, 54, 57
Excessive Crankcase Pressure	25, 31, 33, 34, 45, 55, 60
Poor Compression	11, 19, 25, 28, 29, 31, 32, 33, 34, 46, 59
Starts and Stops	10, 11, 12

Key to Possible Causes

1. Battery charge low
2. Bad electrical connection
3. Faulty starter motor
4. Incorrect grade of lubricating oil
5. Low cranking speed
6. Fuel tank empty
7. Faulty stop control operation
8. Fuel inlet restricted
9. Faulty fuel lift pump
10. Clogged fuel filter
11. Restricted air cleaner
12. Air in fuel system
13. Faulty fuel injection pump
14. Faulty fuel injectors or incorrect type
15. Incorrect use of cold start equipment
16. Faulty cold start equipment
17. Broken fuel injection pump drive
18. Incorrect fuel pump timing
19. Incorrect valve timing
20. Poor compression
21. Blocked fuel tank vent
22. Incorrect grade of fuel
23. Sticking throttle or restricted movement
24. Exhaust pipe restriction
25. Leaking cylinder head gasket
26. Overheating
27. Cold running
28. Incorrect tappet adjustment
29. Sticking valves
30. Incorrect high pressure pipes
31. Worn cylinder bores
32. Pitted valves and seats
33. Broken, worn or sticking piston ring(s)
34. Worn valve stems and guides
35. Restricted air cleaner
36. Worn or damaged bearings
37. Insufficient oil in sump
38. Inaccurate gauge
39. Oil pump worn
40. Pressure relief valve sticking open
41. Pressure relief valve sticking closed
42. Broken relief valve spring
43. Faulty suction pipe
44. Restricted oil filter
45. Piston seizure/pick up
46. Incorrect piston height
47. Damaged fan
48. Faulty engine mounting
49. Incorrectly aligned flywheel housing or incorrectly aligned flywheel
50. Faulty thermostat
51. Restriction in water jacket
52. Loose fan belt
53. Restricted radiator
54. Faulty water pump
55. Restricted breather pipe
56. Damaged valve stem oil deflectors (if fitted)
57. Coolant level too low
58. Blocked sump strainer
59. Broken valve spring
60. Exhauster or vacuum pipe leak
61. Turbo impeller damaged or dirty
62. Turbo lubricating oil seal leak
63. Induction system leaks

https://truckmanualshub.com/

This Page Intentionally Left Blank

https://truckmanualshub.com/

Section 8
Hydraulic System

Contents

PARAGRAPH		TITLE	PAGE
8.1		**Hydraulic Component Terminology**	**8-2**
8.2		**Safety Information**	**8-3**
8.3		**Hydraulic Pressure Diagnosis**	**8-4**
	8.3.1	Pressure Checks and Adjustments	8-4
8.4		**Hydraulic Circuits**	**8-5**
	8.4.1	Hydraulic Pressures	8-5
	8.4.2	Hydraulic Schematic, 944E	8-12
8.5		**Hydraulic Reservoir**	**8-13**
	8.5.1	Hydraulic Oil Reservoir Draining	8-13
	8.5.2	Hydraulic Oil Reservoir Filling	8-13
	8.5.3	Hydraulic Oil Reservoir Replacement	8-13
8.6		**Hydraulic System Pump**	**8-16**
	8.6.1	Pump Description	8-16
	8.6.2	Pump Failure Analysis	8-16
	8.6.3	Pump Replacement	8-16
8.7		**Valves and Manifolds**	**8-17**
	8.7.1	Valve Plate Assembly	8-17
	8.7.2	Main Control Valve	8-18
	8.7.3	Joystick Valve (Dual Joystick)	8-22
	8.7.4	Pilot Select Valve (Dual Joystick)	8-23
	8.7.5	Joystick Valve (Single Joystick)	8-24
	8.7.6	Single Joystick Pilot Select Valve	8-25
	8.7.7	Frame Sway Joystick Valve	8-26
	8.7.8	Auxiliary Hydraulic Pressure Release Valve	8-26
	8.7.9	Service Brake Valve	8-28
	8.7.10	Brake Test	8-29
	8.7.11	Power Steering Valve	8-29
	8.7.12	Steer Select Valve	8-30
	8.7.13	Accumulator Charge/Secondary Function Valve	8-32
	8.7.14	Accumulators	8-33
	8.7.15	General Information	8-34
	8.7.16	Checking Pre-Charge	8-36
	8.7.17	Accumulator Charge Troubleshooting	8-37
8.8		**Hydraulic Cylinders**	**8-38**
	8.8.1	Cylinder Pressure Checking	8-40
	8.8.2	Steering Cylinders	8-40
	8.8.3	Cylinder Torque Specifications	8-41

https://truckmanualshub.com/

8.1 HYDRAULIC COMPONENT TERMINOLOGY

To understand the safety, operation and service information presented in this section, it is necessary that the operator/mechanic be familiar with the name and location of the hydraulic components of the machine. The following illustration identifies the components that are referred to throughout this section.

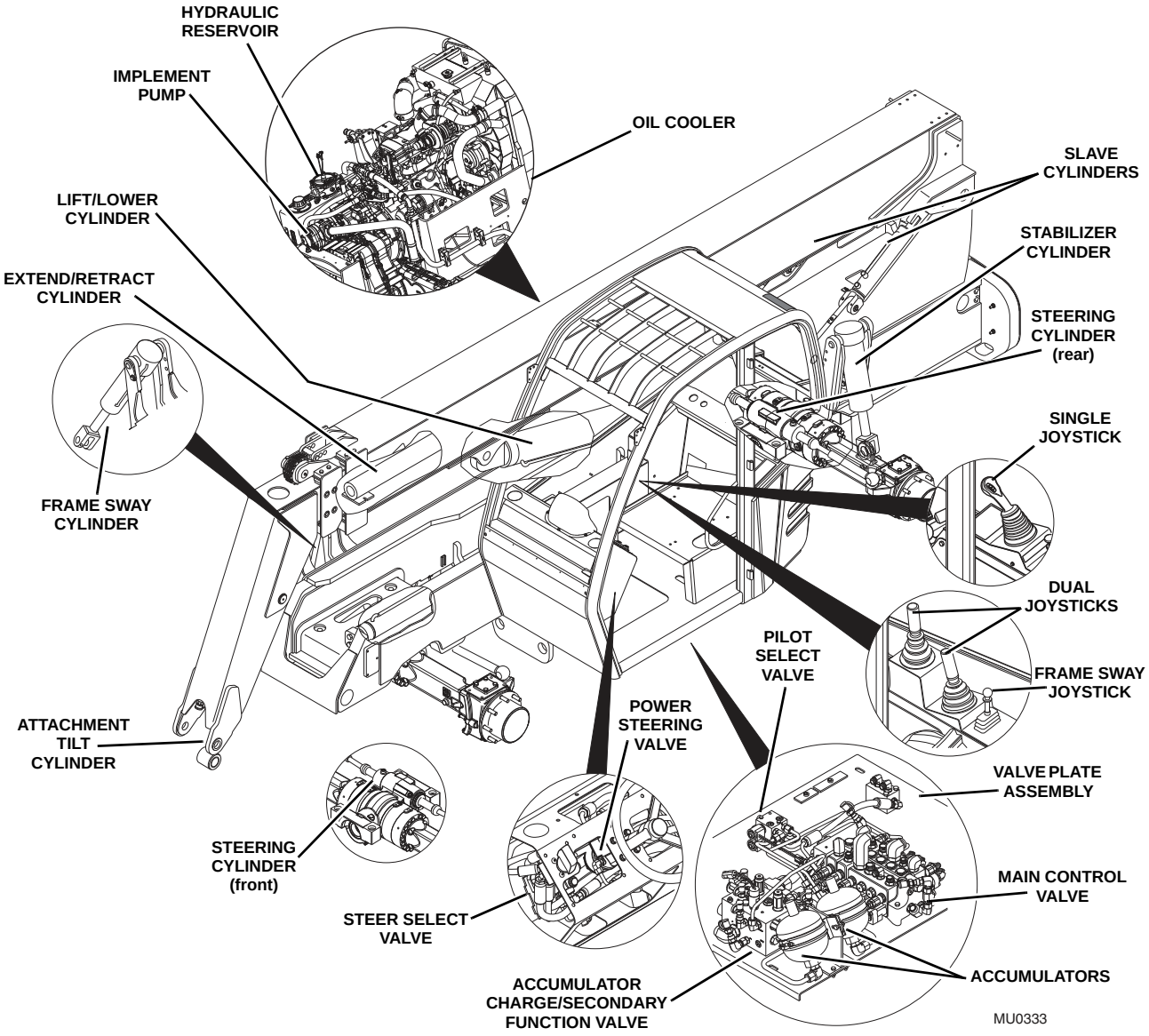

https://truckmanualshub.com/

8.2 SAFETY INFORMATION

WARNING

DO NOT service the machine without following all safety precautions as outlined in Section 1, “Safety Practices,” of this manual.

Petroleum-based hydraulic fluids are used in this machine. The temperature of hydraulic fluid increases during the operation of various hydraulic functions. A heated petroleum-based hydraulic fluid presents a fire hazard, especially when an ignition source is present. Hydraulic fluid has a flash point that ranges from 300-600° F (150-318° C) and an auto-ignition temperature of 500-750° F (262-402° C).

Accordingly, periodically inspect all hydraulic system components, hoses, tubes, lines, fittings, etc. Carefully examine any deterioration and determine whether any further use of the component would constitute a hazard. If in doubt, replace the component.

Operate the hydraulic controls after the engine has stopped to relieve trapped pressure.

Note: *Residual pressure may remain in hydraulic cylinders, hoses, valve bodies, components, etc. If the hydraulic lines going to or coming from a component are taut, slowly and cautiously relieve (“bleed off”) pressure.*

Whenever you disconnect a hydraulic line, coupler, fitting or other component, slowly and cautiously loosen the part involved. A hissing sound or slow seepage of hydraulic fluid may occur in most cases. After the hissing sound has ceased, continue removing the part. Any escaping oil should be directed into an appropriate container. Cap or otherwise block off the part to prevent further fluid seepage.

Hydraulic system maintenance will, at times, require that the engine be operated. Always follow safety precautions.

A major cause of hydraulic component failure is contamination. Keeping the hydraulic fluid as clean as possible will help avoid downtime and repairs. Sand, grit and other contaminants can damage the finely machined surfaces within hydraulic components. If operating in an exceptionally dirty environment, change filters and inspect the fluid more often. When servicing the system, cap or plug hydraulic fittings, hoses and tube assemblies. Plug all cylinder ports, valves and the hydraulic reservoir, and pump openings until installation occurs. Protect threads from contamination and damage.

Some hydraulic functions are actuated by interfacing with electrical system components (switches, solenoids and sensors). When the hydraulic system is not functioning properly, check the electrical aspect of the malfunctioning circuit also. Refer to Section 9.5, “Electrical Schematics.” in this manual.

https://truckmanualshub.com/

8.3 HYDRAULIC PRESSURE DIAGNOSIS

Two kits are available to use for hydraulic system maintenance and troubleshooting. The kit is contained in a durable polyethylene carrying case for demanding field service conditions.

Pressure Test Kit

The hydraulic pressure test kit is used to pressure test the various hydraulic components in the hydraulic system. The kit includes:

- Gauges for testing high and low pressure circuits
- Fittings, couplers and hoses
- Durable carrying case

Flowmeter Kit

A flowmeter test kit is used to pinpoint hydraulic system faults. It includes a flowmeter with load valve, magnetic base, photo tachometer head and flex arm. The kit features:

- Bi-directional for unrestricted connection and simplified testing
- Internal by-pass to protect system and tester from over-pressure
- Measures up to 60 GPM and 6000 psi
- Durable carrying case

Contact your local authorized distributor for ordering information.

Part Number	Description	Approximate Weight	Price and Availability
80904003	Hydraulic Pressure Test Kit	10 lbs.	Consult Factory
1321107	Hydraulic Flowmeter Kit	28 lbs.	Consult Factory

8.3.1 Pressure Checks and Adjustments

When diagnosing trouble in the hydraulic system, use the hydraulic testing information in Section 8.4.1, “Hydraulic Pressures.”

In general, follow the steps below whenever conducting pressure checks and performing adjustments:

1. Park the machine on a firm, level surface. Engage the park brake, place the travel select lever in (N) NEUTRAL, level the boom and turn the engine OFF.
2. Remove the access plate from the cab floor to gain access to the test ports.

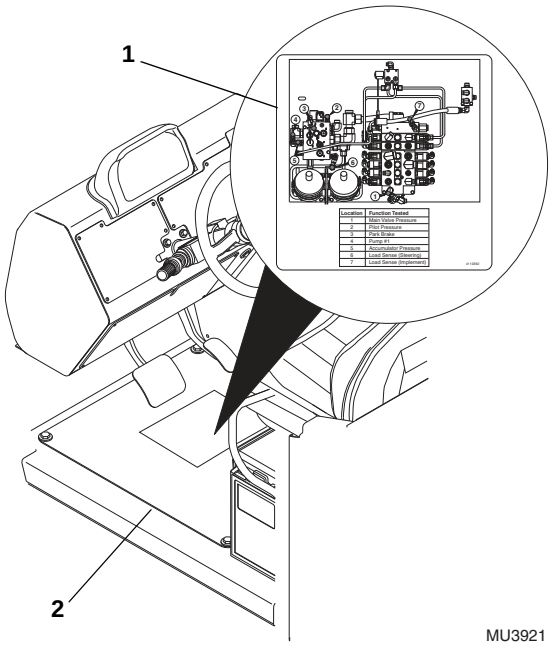

3. Pressure test ports are located under the cab floor and are for each hydraulic circuit being tested. A decal (**1**) showing each test port and function being tested is located on the underside of the access plate (**2**). Install a pressure gauge capable of measuring at least 10% more pressure than that which the circuit being checked operates under.
4. Start the engine. Operate machine functions several times to allow hydraulic oil to reach operating temperature. The hydraulic oil temperature should be between 100-120°F (38-49° C). If a temperature gauge or thermometer is unavailable, the hydraulic oil reservoir should be warm to the touch.
5. Refer to Section 8.4.1, “Hydraulic Pressures,” for testing procedures.
6. Fully depress the accelerator pedal if required. Place and hold the joystick in the position needed to operate the particular machine function being checked. Continue holding the joystick in position until pressure readings are taken.

https://truckmanualshub.com/

7. Check the pressure gauge reading. It should read as specified in the Pressure Readings column of the charts found in Section 8.4.1, “Hydraulic Pressures.” If the reading is not as specified, turn the engine OFF and check other components in the system. Verify that all related hydraulic components and electrical switches, sensors, solenoids, etc. are operating correctly.
8. Adjust the relief valve by turning the adjustment screw Turning clockwise will increase the pressure; turning the screw counterclockwise will decrease the pressure.
9. Start the engine and check the pressure again. Turn the engine OFF. If there is pressure reading in the gauge, bleed it off then disconnect or remove the pressure gauge from the machine.

8.4 HYDRAULIC CIRCUITS

This section covers the hydraulic circuits and includes listings for all hydraulic function pressures, where and how to check those pressures and a hydraulic schematic.

Electrical and hydraulic functions are often related. Verify that the electrical components of the circuit are functioning properly whenever troubleshooting the hydraulic circuit.

Always check the following before beginning to troubleshoot a circuit that is not functioning correctly.

1. Check the hydraulic oil level in the reservoir. Oil level should be to the middle of the sight glass with all cylinders retracted.
2. Check hoses, tubes, fittings and other hydraulic components for leaks, bends, kinks, interference, etc.
3. Check for air in the hydraulic system. Erratic machine performance and/or spongy cylinder operation are signs of air in the hydraulic system.

   If air in the hydraulic system is suspected, you will hear air leakage when hydraulic fittings are loosened and see air bubbles in the hydraulic fluid.

   Loose fittings, faulty o-rings or seals, trapped oil, leaks, system opened for service, etc., can cause air in the system. Determine what is causing air to enter the system and correct it. Bleed air from the system.

8.4.1 Hydraulic Pressures

a. Checking Pressure

1. Start the machine and warm the hydraulic system to operating temperature.
2. Shut off the machine and install a gauge of suitable pressure rating according to the following chart to the appropriate test port.

Test Location	Gauge	Fittings
2, 3, 4, 5	4000 psi gauge (280 bar gauge)	Unit equipped with fittings from factory.
6, 7, 8, 10	1000 psi gauge (70 bar gauge)	Unit equipped with fittings from factory.
9	4000 psi gauge (280 bar gauge)	Requires a male or female quick disconnect coupler.

CAUTION

GAUGE DAMAGE may occur. Malfunctioning hydraulic system circuits may have excessive pressure and can cause hydraulic pressure spikes. Test circuit with the highest reading pressure gauge first. If this gauge cannot record an accurate pressure reading, use the next lower pressure gauge.

3. Start the machine, run the engine and follow the procedures in Section 8.4.1, c. “Hydraulic Testing - Dual Joysticks.”

b. Adjusting Hydraulic Pressure

1. Shut the machine off. Remove the cap on the relief (if necessary).
2. Start the machine and loosen the jam nut on the relief. Turn the relief clockwise to increase pressure or counter-clockwise to decrease pressure. Set to the correct pressure.
3. Tighten the jam nut and recheck the pressure at full throttle. If the reading is within specification, shut the machine off, install the safety cap and remove the gauge from the test port.
4. If the proper pressure cannot be set, use the accompanying hydraulic schematic and/or the electrical schematic to help troubleshoot and correct the problem.

https://truckmanualshub.com/

c. Hydraulic Testing - Dual Joysticks

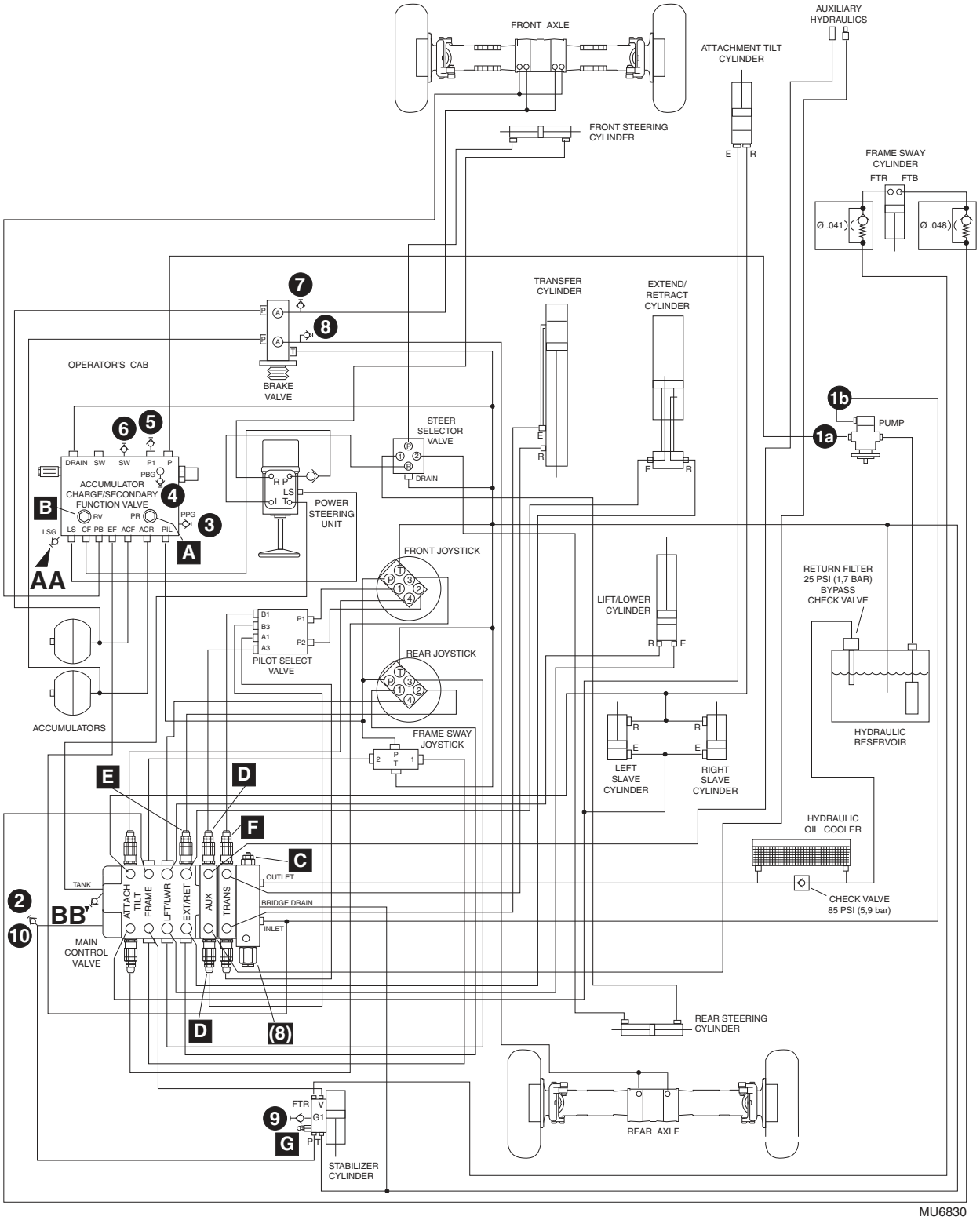

https://truckmanualshub.com/

Engine Information

Idle . . . . . 950 rpm
Full Speed . . . . . 2500 rpm

Hydraulic Oil Information

Oil Type - 10W, meet ISO Grade 46
Capacity - Reservoir . . . . . 34 gal. (127 liter)
Capacity - System . . . . . 50 gal. (190 liter)

Note: To adjust relief settings, pressure reducing settings or standby pressure, turn the adjustment screw clockwise to increase pressure or counterclockwise to decrease pressure.

The hydraulic oil temperature for the pump flow test should be between 100-120° F (38-49° C) (tank hot to the touch) during testing.

Equipment Needed to Perform Tests from Hydraulic Diagnostic Test Kit

Test Location	Gauge	Fittings
2, 6, 5	4,000 psi gauge (280 bar gauge)	Unit equipped with fittings from factory.
3, 4, 7, 8	1,000 psi gauge (70 bar gauge)	Unit equipped with fittings from factory.
9, 10	300 psi gauge (21 bar gauge)	Requires a #4 o-ring Boss Fitting with Diagnostic Nipple.

CAUTION: GAUGE DAMAGE may occur. Malfunctioning hydraulic system circuits may have excessive pressure and can cause hydraulic pressure spikes. Test circuit with the highest reading pressure gauge first. If this gauge cannot record an accurate pressure reading, use the next lower pressure gauge.

TEST SEQUENCE	TEST LOCATION	Hydraulic Pump Flow Test
1	**1a** **1b**	**To check flow readings, a flow meter capable of measuring 60 gpm (227,1 liter/min) and a load valve capable of 6,000 psi (413,4 bar) will be required (not included with Hydraulic Diagnostic Test Kit).** Test both pump sections of the tandem gear pump separately. Test the primary pump section first. When testing the pump sections, return the oil from the flow meter directly into the hydraulic tank fill hole. Run test at 2,000 psi (137,8 bar) load @ Engine Speed of 2,475 - 2,525 rpm. **PRIMARY PUMP (pump section closest to the transmission) -** Label and disconnect the outlet hose from the primary pump and allow the hose to hang loose. Cover, cap or plug the primary pump outlet hose to prevent contamination of the hydraulic system. Connect the flow meter to the outlet port on the primary pump — Flow rate should be 16.5-19.5 GPM (62,5-73,8 liter/min). **SECONDARY PUMP (pump section furthest from the transmission) -** Label and disconnect the outlet hose from the secondary pump and connect to the outlet port on the primary pump. Connect the flow meter to the outlet port on the secondary pump — Flow rate should be 13.2-15.5 GPM (49,9-58,7 liter/min). ***Note:*** *When testing on the secondary pump is completed make sure to disconnect the secondary pump outlet hose from the primary pump outlet port and reconnect it to the secondary pump outlet port. Also make sure to re-connect the primary pump outlet hose to the primary pump outlet port.*

TEST SEQUENCE	TEST LOCATION	Valve Port	ADJUST. LOCATION	COMPONENT DESCRIPTION	PRESSURE READINGS	PRESSURE TEST PROCEDURES
2	**10**	—	N/A	Stand By Pressure	275-375 psi (19,0-25,8 bar)	With engine at idle, check the pressure. The pressure is not adjustable. If the pressure is incorrect, replace unloader cartridge (**8**) on Main Control Valve.
3	**3**	PPG	**A**	Pilot Valve Pressure	500-600 psi (34,5-41,4 bar)	With engine at idle, check the pressure. If the pressure is incorrect, adjust or replace the pressure reducing cartridge located on the accumulator charge/secondary function valve.
4	**4**	PBG	**A**	Accumulator Charge/ Secondary Function Valve	Park Brake Release 500-600 psi (34,5-41,4 bar)	With engine at idle, turn the park brake switch to the disengaged position. Check the pressure. If the pressure is incorrect, adjust or replace the pressure reducing cartridge located on the accumulator charge/secondary function valve.
5	**5**	P1	**B**	Power Steering Supply	2,600-2,800 psi (179-193 bar)	With engine at idle, turn the steering wheel all the way in one direction and hold while checking pressure. If pressure is incorrect, adjust or replace the relief valve located on the accumulator charge/secondary function valve.
6	**6**	SW	N/A	Accumulator Charge/ Secondary Function Valve	See “Pressure Test Procedures” for Pressure Readings	At start up, the pressure should jump up to and stop momentarily at 750 psi (51,7 bar), which is the pre-charge pressure. The pressure should then continue to rise to 2,200-2,400 psi (151,6-165,4 bar) which is the accumulator charge pressure. Let the system bleed down naturally with the engine at idle (minimum of 2 minutes). The accumulator charge pressure should recharge at 1145-1345 psi (78,9-92,7 bar).
7	**2**	—	**C**	Main System Relief	3,400-3,600 psi (234-248 bar)	With engine at high idle, use the boom control lever to fully retract the boom. Hold over relief and check pressure. If pressure is incorrect, adjust or replace cartridge located in the end section of the main control valve.

https://truckmanualshub.com/

TEST SEQUENCE	TEST LOCATION	Valve Port	ADJUST. LOCATION	COMPONENT DESCRIPTION	PRESSURE READINGS	PRESSURE TEST PROCEDURES
8	2	—	D	Auxiliary Hydraulics	2,900-3,100 psi (200-214 bar)	With engine at high idle, use the auxiliary hydraulic control lever to check pressure to both male and female connectors. Hold over relief and check pressure. If pressure is incorrect, adjust or replace cartridge located in the auxiliary section of the main control valve.
9	2	—	N/A	Main Valve Port Relief Attachment Tilt Backward	3,400-3,600 psi (234-248 bar)	CONSULT FACTORY
10	2	—	N/A	Main Valve Port Relief Attachment Tilt Forward	3,400-3,600 psi (234-248 bar)	CONSULT FACTORY
11	2	—	E	Main Valve Port Relief Boom Extend	2,900-3,100 psi (200-214 bar)	With engine at high idle, use the boom extend lever to fully extend the boom. Hold over relief and check pressure. If pressure is incorrect, check the main system pressure using test sequence 7.
12	2	—	N/A	Main Valve Port Relief Transfer Carriage Forward	3,400-3,600 psi (234-248 bar)	With engine at high idle, use the transfer carriage lever to fully extend the transfer carriage. Hold over relief and check pressure. If pressure is incorrect, check the main system pressure using test sequence 7.
13	2	—	F	Main Valve Port Relief Transfer Carriage Back	See ⚠ 2,400-2,600 psi (165-179 bar)	With engine at high idle, use the transfer carriage lever to fully retract the transfer carriage. Hold over relief and check pressure. If pressure is incorrect, adjust or replace cartridge located in the transfer section of the main control valve.
14	7	—	N/A	Brake Valve (Service Brake Pressure)	See ⚠ 450-550 psi (31-38 bar)	With engine at idle, depress and hold brake pedal. Check pressure for the front axle. If pressure is incorrect, check accumulator pressure using test sequence 6.
15	8	—	N/A	Brake Valve (Service Brake Pressure)	See ⚠ 450-550 psi (31-38 bar)	With engine at idle, depress and hold brake pedal. Check pressure for the rear axle. If pressure is incorrect, check accumulator pressure using test sequence 6.
16	7	—	N/A	Brake Valve (Service Brake Accumulator Pressure)	See ⚠ 450-550 psi (31-38 bar)	With engine OFF, depress and hold brake pedal. Check pressure for the front axle. If pressure is incorrect, check for external leaks. If no leaks are found, check accumulator pressure using test sequence 6.
17	8	—	N/A	Brake Valve (Service Brake Accumulator Pressure)	See ⚠ 450-550 psi (31-38 bar)	With engine OFF, depress and hold brake pedal. Check pressure for the rear axle. If pressure is incorrect, check for external leaks. If no leaks are found, check accumulator pressure using test sequence 6.
18	9	G1	G	Stabilizer Cylinder	See ⚠ 75-150 psi (5,2-10,3 bar)	With the engine at idle, check the pressure on the cylinder. If the pressure is not correct, adjust or replace the cartridge located on the stabilizer cylinder block.
19	9	G1	G	Stabilizer Cylinder	See ⚠ 50 psi min. (3,4 bar) min.	With the engine at idle and boom below 40°, frame sway all the way to the right, check the pressure on the cylinder. If the pressure is not correct, adjust or replace the cartridge located on the stabilizer cylinder block.
20	9	G1	G	Stabilizer Cylinder	See ⚠ 200 psi max. (13,8 bar) max.	With the engine at idle and boom below 40°, frame sway all the way to the left, check the pressure on the cylinder. If the pressure is not correct, adjust or replace the cartridge located on the stabilizer cylinder block.
—	AA	—	—	Load Sense (Steering)	—	Consult with JLG Technical Service Department for additional testing information.
—	BB	—	—	Load Sense (Implement)	—	Consult with JLG Technical Service Department for additional testing information.

https://truckmanualshub.com/

a. Hydraulic Testing - Single Joystick

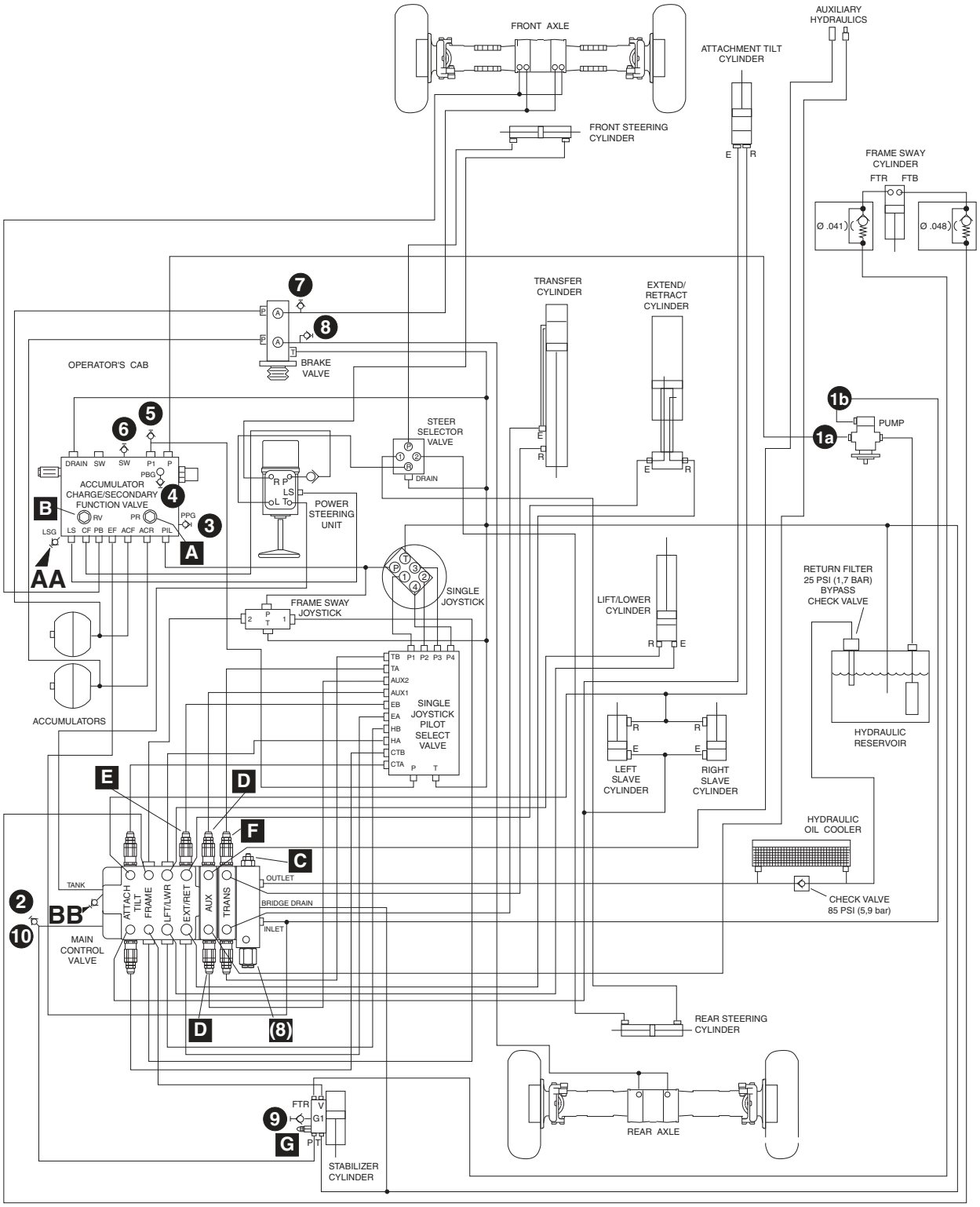

https://truckmanualshub.com/

Engine Information

Idle . . . . . 950 rpm
Full Speed . . . . . 2500 rpm

Hydraulic Oil Information

Oil Type - 10W, meet ISO Grade 46
Capacity - Reservoir . . . . . 34 gal. (127 liter)
Capacity - System . . . . . 50 gal. (190 liter)

Note: To adjust relief settings, pressure reducing settings or standby pressure, turn the adjustment screw clockwise to increase pressure or counterclockwise to decrease pressure.

The hydraulic oil temperature for the pump flow test should be between 100-120° F (38-49° C) (tank hot to the touch) during testing.

Equipment Needed to Perform Tests from Hydraulic Diagnostic Test Kit

Test Location	Gauge	Fittings
2, 6, 5	4,000 psi gauge (280 bar gauge)	Unit equipped with fittings from factory.
3, 4, 7, 8	1,000 psi gauge (70 bar gauge)	Unit equipped with fittings from factory.
9, 10	300 psi gauge (21 bar gauge)	Requires a #4 o-ring Boss Fitting with Diagnostic Nipple.

CAUTION: GAUGE DAMAGE may occur. Malfunctioning hydraulic system circuits may have excessive pressure and can cause hydraulic pressure spikes. Test circuit with the highest reading pressure gauge first. If this gauge cannot record an accurate pressure reading, use the next lower pressure gauge.

TEST SEQUENCE	TEST LOCATION	Hydraulic Pump Flow Test
1	**1a** **1b**	**To check flow readings, a flow meter capable of measuring 60 gpm (227,1 liter/min) and a load valve capable of 6,000 psi (413,4 bar) will be required (not included with Hydraulic Diagnostic Test Kit).** Test both pump sections of the tandem gear pump separately. Test the primary pump section first. When testing the pump sections, return the oil from the flow meter directly into the hydraulic tank fill hole. Run test at 2,000 psi (137,8 bar) load @ Engine Speed of 2,475 - 2,525 rpm. **PRIMARY PUMP (pump section closest to the transmission) -** Label and disconnect the outlet hose from the primary pump and allow the hose to hang loose. Cover, cap or plug the primary pump outlet hose to prevent contamination of the hydraulic system. Connect the flow meter to the outlet port on the primary pump — Flow rate should be 16.5-19.5 GPM (62,5-73,8 liter/min). **SECONDARY PUMP (pump section furthest from the transmission) -** Label and disconnect the outlet hose from the secondary pump and connect to the outlet port on the primary pump. Connect the flow meter to the outlet port on the secondary pump — Flow rate should be 13.2-15.5 GPM (49,9-58,7 liter/min). ***Note:*** *When testing on the secondary pump is completed make sure to disconnect the secondary pump outlet hose from the primary pump outlet port and reconnect it to the secondary pump outlet port. Also make sure to re-connect the primary pump outlet hose to the primary pump outlet port.*

TEST SEQUENCE	TEST LOCATION	Valve Port	ADJUST. LOCATION	COMPONENT DESCRIPTION	PRESSURE READINGS	PRESSURE TEST PROCEDURES
2	**10**	—	N/A	Stand By Pressure	275-375 psi (19,0-25,8 bar)	With engine at idle, check the pressure. The pressure is not adjustable. If the pressure is incorrect, replace unloader cartridge (8) on Main Control Valve.
3	**3**	PPG	**A**	Pilot Valve Pressure	500-600 psi (34,5-41,4 bar)	With engine at idle, check the pressure. If the pressure is incorrect, adjust or replace the pressure reducing cartridge located on the accumulator charge/secondary function valve.
4	**4**	PBG	**A**	Accumulator Charge/ Secondary Function Valve	Park Brake Release 500-600 psi (34,5-41,4 bar)	With engine at idle, turn the park brake switch to the disengaged position. Check the pressure. If the pressure is incorrect, adjust or replace the pressure reducing cartridge located on the accumulator charge/secondary function valve.
5	**5**	P1	**B**	Power Steering Supply	2,600-2,800 psi (179-193 bar)	With engine at idle, turn the steering wheel all the way in one direction and hold while checking pressure. If pressure is incorrect, adjust or replace the relief valve located on the accumulator charge/secondary function valve.
6	**6**	SW	N/A	Accumulator Charge/ Secondary Function Valve	See “Pressure Test Procedures” for Pressure Readings	At start up, the pressure should jump up to and stop momentarily at 750 psi (51,7 bar), which is the pre-charge pressure. The pressure should then continue to rise to 2,200-2,400 psi (151,6-165,4 bar) which is the accumulator charge pressure. Let the system bleed down naturally with the engine at idle (minimum of 2 minutes). The accumulator charge pressure should recharge at 1145-1345 psi (78,9-92,7 bar).
7	**2**	—	**C**	Main System Relief	3,400-3,600 psi (234-248 bar)	With engine at high idle, use the boom control lever to fully retract the boom. Hold over relief and check pressure. If pressure is incorrect, adjust or replace cartridge located in the end section of the main control valve.

https://truckmanualshub.com/

TEST SEQUENCE	TEST LOCATION	Valve Port	ADJUST. LOCATION	COMPONENT DESCRIPTION	PRESSURE READINGS	PRESSURE TEST PROCEDURES
8	**2**	—	**D**	Auxiliary Hydraulics	2,900-3,100 psi (200-214 bar)	With engine at high idle, use the auxiliary hydraulic control lever to check pressure to both male and female connectors. Hold over relief and check pressure. If pressure is incorrect, adjust or replace cartridge located in the auxiliary section of the main control valve.
9	**2**	—	N/A	Main Valve Port Relief Attachment Tilt Backward	3,400-3,600 psi (234-248 bar)	CONSULT FACTORY
10	**2**	—	N/A	Main Valve Port Relief Attachment Tilt Forward	3,400-3,600 psi (234-248 bar)	CONSULT FACTORY
11	**2**	—	**E**	Main Valve Port Relief Boom Extend	2,900-3,100 psi (200-214 bar)	With engine at high idle, use the boom extend lever to fully extend the boom. Hold over relief and check pressure. If pressure is incorrect, check the main system pressure using test sequence 7.
12	**2**	—	N/A	Main Valve Port Relief Transfer Carriage Forward	3,400-3,600 psi (234-248 bar)	With engine at high idle, use the transfer carriage lever to fully extend the transfer carriage. Hold over relief and check pressure. If pressure is incorrect, check the main system pressure using test sequence 7.
13	**2**	—	**F**	Main Valve Port Relief Transfer Carriage Back	See ⚠ 2,400-2,600 psi (165-179 bar)	With engine at high idle, use the transfer carriage lever to fully retract the transfer carriage. Hold over relief and check pressure. If pressure is incorrect, adjust or replace cartridge located in the transfer section of the main control valve.
14	**7**	—	N/A	Brake Valve (Service Brake Pressure)	See ⚠ 450-550 psi (31-38 bar)	With engine at idle, depress and hold brake pedal. Check pressure for the front axle. If pressure is incorrect, check accumulator pressure using test sequence 6.
15	**8**	—	N/A	Brake Valve (Service Brake Pressure)	See ⚠ 450-550 psi (31-38 bar)	With engine at idle, depress and hold brake pedal. Check pressure for the rear axle. If pressure is incorrect, check accumulator pressure using test sequence 6.
16	**7**	—	N/A	Brake Valve (Service Brake Accumulator Pressure)	See ⚠ 450-550 psi (31-38 bar)	With engine OFF, depress and hold brake pedal. Check pressure for the front axle. If pressure is incorrect, check for external leaks. If no leaks are found, check accumulator pressure using test sequence 6.
17	**8**	—	N/A	Brake Valve (Service Brake Accumulator Pressure)	See ⚠ 450-550 psi (31-38 bar)	With engine OFF, depress and hold brake pedal. Check pressure for the rear axle. If pressure is incorrect, check for external leaks. If no leaks are found, check accumulator pressure using test sequence 6.
18	**9**	G1	**G**	Stabilizer Cylinder	See ⚠ 75-150 psi (5,2-10,3 bar)	With the engine at idle, check the pressure on the cylinder. If the pressure is not correct, adjust or replace the cartridge located on the stabilizer cylinder block.
19	**9**	G1	**G**	Stabilizer Cylinder	See ⚠ 50 psi min. (3,4 bar) min.	With the engine at idle and boom below 40°, frame sway all the way to the right, check the pressure on the cylinder. If the pressure is not correct, adjust or replace the cartridge located on the stabilizer cylinder block.
20	**9**	G1	**G**	Stabilizer Cylinder	See ⚠ 200 psi max. (13,8 bar) max.	With the engine at idle and boom below 40°, frame sway all the way to the left, check the pressure on the cylinder. If the pressure is not correct, adjust or replace the cartridge located on the stabilizer cylinder block.
—	**AA**	—	—	Load Sense (Steering)	—	Consult with JLG Technical Service Department for additional testing information.
—	**BB**	—	—	Load Sense (Implement)	—	Consult with JLG Technical Service Department for additional testing information.

⚠ CAUTION: GAUGE DAMAGE may occur. Malfunctioning hydraulic system circuits may have excessive pressure and can cause hydraulic pressure spikes. Test circuit with the highest reading pressure gauge first. If this gauge cannot record an accurate pressure reading, use the next lower pressure gauge.

https://truckmanualshub.com/

8.4.2 Hydraulic Schematic, 944E

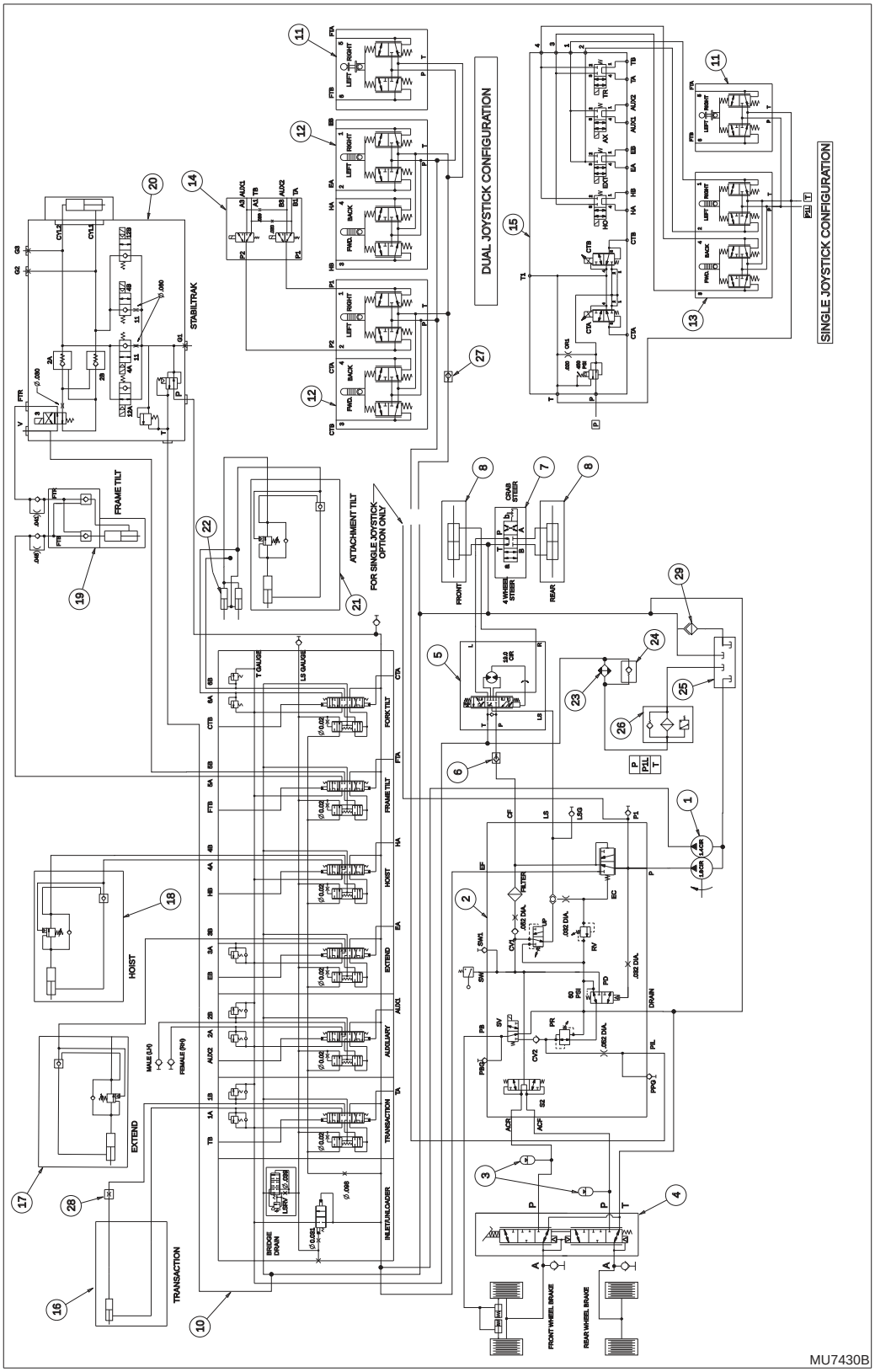

https://truckmanualshub.com/

8.5 HYDRAULIC RESERVOIR

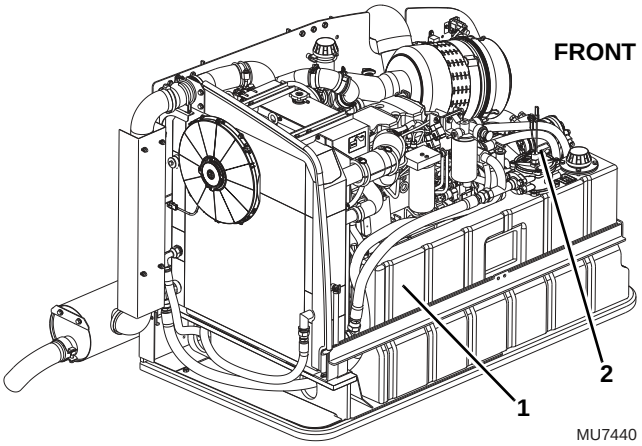

The hydraulic reservoir (**1**) is located on the right side of the machine. The reservoir is held in place inside the engine pod.

Occasionally, fluid may seep, leak or be more forcefully expelled from the filter head (**2**) when system pressure exceeds the rating of the filter head or breather. If the return filter becomes plugged, return hydraulic oil will bypass the filter when pressure reaches 25 psi (1,7 bar) and return to the reservoir unfiltered.

Carefully examine fluid seepage or leaks from the hydraulic reservoir to determine the exact cause. Clean the reservoir and note where any seepage occurs.

Leaks from a cracked or damaged reservoir require that the reservoir be removed from the machine, flushed completely with water and repaired by a certified welder using approved techniques. If these conditions cannot be met, the reservoir must be replaced in its entirety.

8.5.1 Hydraulic Oil Reservoir Draining

1. Park the machine on a firm, level surface, level the machine, fully retract the boom, lower the boom, place the transmission control lever in (N) NEUTRAL, engage the park brake and shut the engine OFF.
2. Place a Do Not Operate Tag on both the ignition key switch and the steering wheel, stating that the machine should not be operated.
3. Open the engine cover. Allow the system fluids to cool.
4. Properly disconnect the batteries.
5. Open the filler cap on the hydraulic oil reservoir. Remove the drain plug on the side of the hydraulic oil reservoir.
6. Transfer the used hydraulic oil into a suitable covered container, and label as "Used Oil". Dispose of used oil at an approved recycling facility. Clean and reinstall the drain plug.
7. Wipe up any hydraulic fluid spillage in, on, near and around the machine and the work area.

8.5.2 Hydraulic Oil Reservoir Filling

1. Be sure the reservoir is clean and free of all debris.
2. Install a new hydraulic oil filter.
3. Fill the reservoir with Mobilfluid 424® (ISO Grade 46) oil. Refer to Section 2.4, “Fluid and Lubricant Capacities.”
4. Properly connect the batteries.
5. Close and secure the engine cover.

8.5.3 Hydraulic Oil Reservoir Replacement

a. Hydraulic Oil Reservoir Removal

1. Park the machine on a firm, level surface, level the machine, fully retract the boom, lower the boom, place the transmission control lever in (N) NEUTRAL, engage the park brake and shut the engine OFF.
2. Place a Do Not Operate Tag on both the ignition key switch and the steering wheel, stating that the machine should not be operated.
3. Open the engine cover. Allow the system fluids to cool.

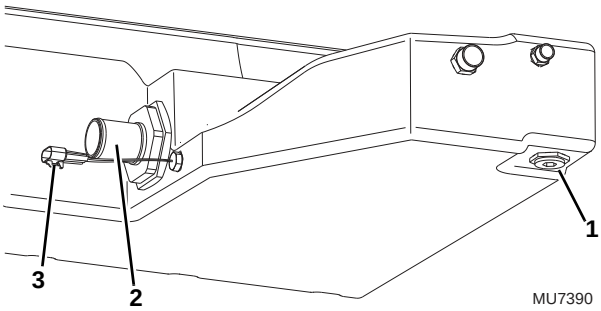

4. Remove all of the hydraulic oil from the reservoir and system. The receptacle must be large enough to hold 50 gallons of oil. Remove the drain plug (**1**) and allow the oil to drain into the receptacle. Dispose of used oil at an approved recycling facility.

Note: *If an oil evacuation system is available, removal of the hydraulic oil can best be accomplished by evacuating the oil through the filler tube.*

https://truckmanualshub.com/

5. Clean and reinstall the drain plug (**1**) into the reservoir. Torque the drain plug to 25-40 lb-ft (34-54 Nm).
6. Loosen the hose clamps and remove the lower section hydraulic suction hose (**2**).
7. Disconnect the hydraulic oil temperature switch connector (**3**).

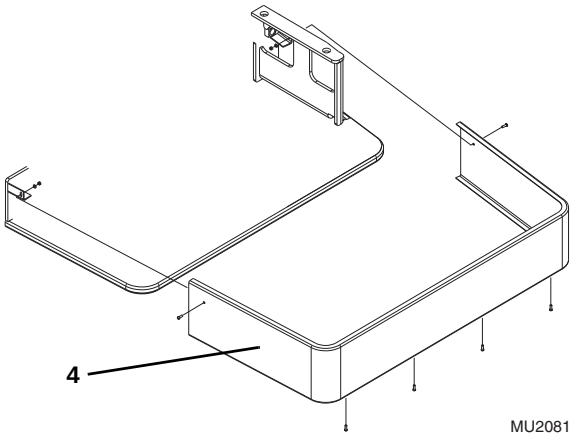

8. Remove the engine frame skirt (**4**) to gain access to the hydraulic reservoir.

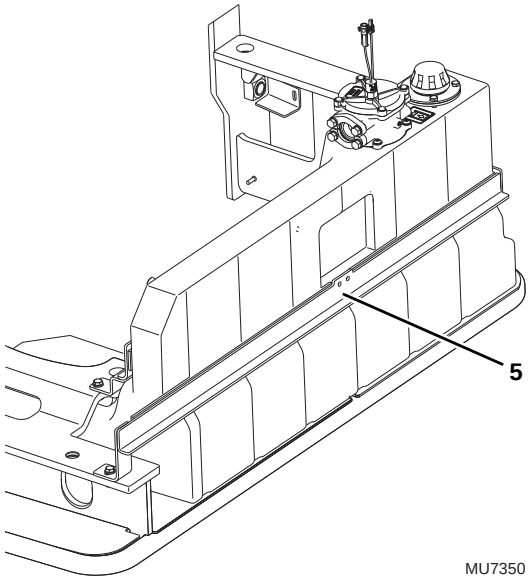

9. Remove the hydraulic reservoir support bracket (**5**).
10. Label, disconnect and cap all hydraulic hoses attached to the hydraulic reservoir. Cap all fittings and openings to keep dirt and debris from entering the hydraulic system.

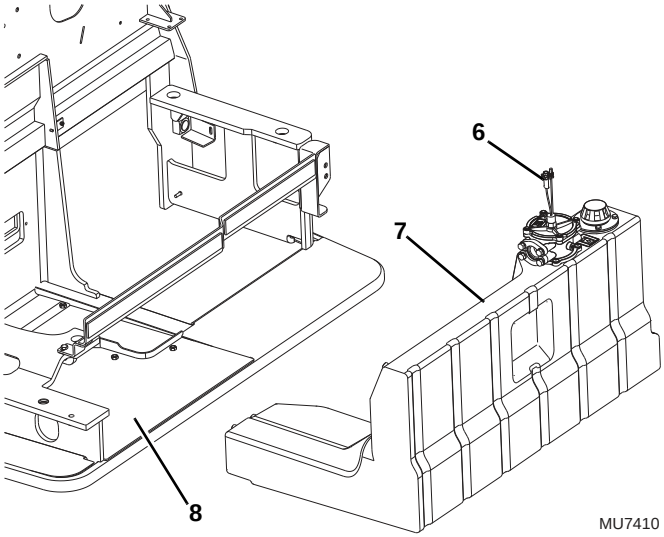

11. Disconnect the connector harness at the return oil filter pressure switch (**6**).
12. Remove the hydraulic reservoir (**7**), sliding the tank out from under the engine and away from the engine mount frame (**8**).

b. Disassembly

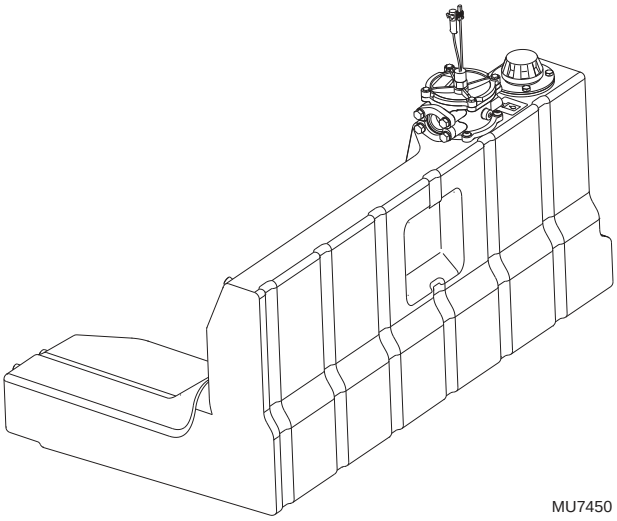

The hydraulic oil reservoir is a one piece unit and cannot be disassembled. The hydraulic filter, suction filter, filler tube, sight gauge and temperature switch can be removed and reused on the new replacement reservoir. Dispose of old reservoir according to local regulations concerning hazardous materials disposal.

https://truckmanualshub.com/

c. Cleaning and Drying

If contaminated oil or foreign material is in the reservoir, the reservoir can usually be cleaned.

Note: *If a leak is suspected in the reservoir, contact your local authorized Service Department.*

To clean the reservoir:

1. Have a dry chemical (Class B) fire extinguisher near the work area.
2. Remove the hydraulic reservoir drain plug, and safely drain the hydraulic oil into a suitable container.
3. Clean the reservoir with a high pressure washer, or flush the reservoir with hot water for five minutes and drain the water. Dispose of contaminated water properly.
4. Refill the reservoir with water until it overflows. Completely flush the reservoir with water, empty and allow to dry.

d. Assembly

The hydraulic oil reservoir is a one piece unit and cannot be disassembled. The hydraulic filter, suction filter, filler tube, sight gauge and temperature switch can be removed and reused on the new replacement reservoir. Dispose of old reservoir according to local regulations concerning hazardous materials disposal.

e. Inspection

Note: *If a leak is suspected in the reservoir, contact your local authorized Service Department.*

1. Inspect the reservoir thoroughly for any cracks, slices, leaks or other damage.
2. With the reservoir removed from the machine, plug all openings except one. Install a fitting and apply approximately 1-1.5 psi (7-10 kPa) of air pressure through the fitting. Check the reservoir for leaks and apply a soap solution to the exterior and look for bubbles to appear at the crack or damaged area.

f. Hydraulic Reservoir Installation

1. Slide the Hydraulic reservoir under the engine and onto the frame.
2. Uncap and connect the previously labeled hydraulic hoses to there appropriate locations.
3. Connect the temperature and filter pressure switches.
4. Install the hydraulic reservoir support bracket.
5. Install the engine frame skirt.
6. Uncap and install the lower hydraulic suction hose.
7. Fill the reservoir according to specifications. Refer to Section 2.4, “Fluid and Lubricant Capacities.”
8. Check reservoir for leaks.
9. Properly connect the batteries.
10. Install engine cover and close.

https://truckmanualshub.com/

8.6 HYDRAULIC SYSTEM PUMP

8.6.1 Pump Description

Hydraulic system pressure begins at the pump. Various factors are involved in creating the relatively high pressure used in the hydraulic system. Pump rpm, controlled via a transmission input shaft (and dependent on engine rpm), the internal pump passageways and the differential between pump inlet and outlet openings, all contribute to pressure supplied.

For internal service instructions contact your local authorized service distributor.

8.6.2 Pump Failure Analysis

The pump is the “heart” of the hydraulic system, and whenever there is a problem in the system, the pump often is blamed. However, pump failure is seldom due to failure of pump components. Pump failure usually indicates another problem in the hydraulic system.

According to pump manufacturer statistics, 90-95 percent of pump failures are due to one or more of the following causes:

- Aeration
- Cavitation
- Contamination
- Excessive Heat
- Over-Pressurization
- Improper Fluid

In the event of pump failure, investigate further to determine the cause of the problem.

8.6.3 Pump Replacement

a. Pump Removal

1. Park the machine on a firm, level surface, level the machine, fully retract the boom, raise the boom, place the transmission control lever in (N) NEUTRAL, engage the park brake and shut the engine OFF.
2. Place a Do Not Operate Tag on both the ignition key switch and the steering wheel, stating that the machine should not be operated.
3. Temporarily block up or support the raised boom.
4. Open the engine cover. Allow the system fluids to cool.
5. Properly disconnect the batteries.
6. Drain the hydraulic reservoir. Refer to Section 8.5.1, “Hydraulic Oil Reservoir Draining.”

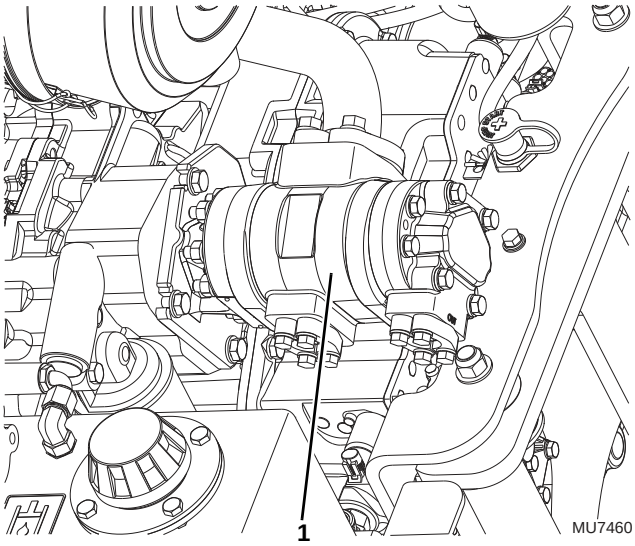

7. Thoroughly clean the pump (**1**) and surrounding area, including all hoses and fittings before proceeding.
8. Label, disconnect and cap the hydraulic hoses attached to the pump.
9. Remove the bolts, lockwashers and washers securing the pump to the transmission. Remove the o-ring located between the transmission and the pump. Wipe up any hydraulic oil spillage.
10. Remove the hydraulic fittings from the pump to use for later installation.

Note: *Before removing any fittings from the pump, note their orientation to ensure correct installation.*

Note: *DO NOT disassemble the operating pump. The pump is pre-set from the manufacturer. Any adjustments or repairs performed by anyone other than an authorized dealer could void the warranty.*

b. Pump Installation

1. Install the fittings on the pump in the same orientation as noted during removal.

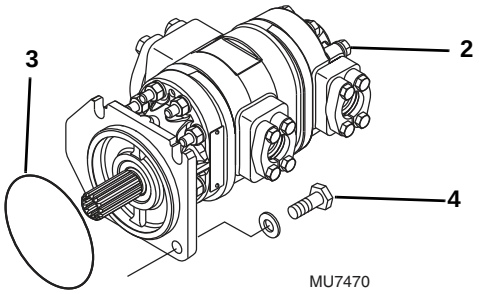

https://truckmanualshub.com/

2. Place the pump (**2**) and a new, oiled o-ring (**3**) into position on the transmission. Align the pump shaft with the internal transmission gear, so that the machined teeth mesh together.
3. Align the bolt holes with the pump mount holes. Secure the pump to the transmission with the previously used hardware. Torque the capscrews (**4**) to 69-78 lb-ft (94-106 Nm).
4. Uncap and connect the previously labeled hydraulic hoses to their appropriate locations.
5. Fill the hydraulic reservoir. Refer to Section 8.5.2, “Hydraulic Oil Reservoir Filling.”
6. Prime the pump by filling the case drain port with fresh, filtered hydraulic oil from a clean container before installing the case drain connector and hose.
7. Check all routing of hoses and tubing for sharp bends or interference with any rotating members. All tube and hose clamps must be tight.
8. Start the engine and run at approximately one-third to one-half throttle for about one minute without moving the machine or operating any hydraulic functions.
9. Inspect for leaks and check all fluid levels. The hydraulic reservoir oil level must be to the middle of the sight gauge.

c. Pump Test

Refer to Section 8.3.1, “Pressure Checks and Adjustments.”

8.7 VALVES AND MANIFOLDS

8.7.1 Valve Plate Assembly

The main control valve (**5**), accumulators (**6**), accumulator charge/secondary function valve (**7**), auxiliary hydraulic pressure release valve (**8**) and the pilot select valve (**9**) are mounted on the valve plate which is bolted to the sub plate located under the cab. The sub plate can be swung down for servicing of components or removed from the cab mount for valve removal.

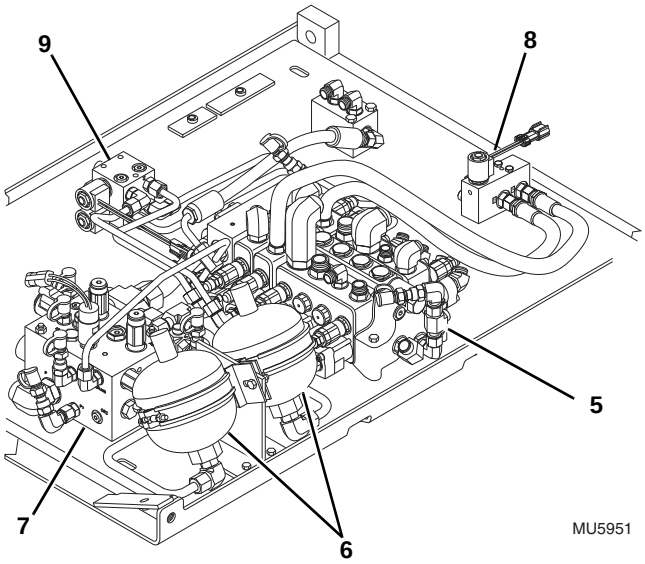

Follow the procedure in this section to swing down the sub plate and valve plate assembly from the machine in order to service the main control valve (**5**), accumulators (**6**), accumulator charge/secondary function valve (**7**), auxiliary hydraulic pressure release valve (**8**) and the pilot select valve (**9**).

a. Sub Plate with Valve Plate Lowering

1. Park the machine on a firm, level surface, level the machine, fully retract the boom, raise the boom, place the transmission control lever in (N) NEUTRAL, engage the park brake and shut the engine OFF.
2. Place a Do Not Operate Tag on both the ignition key switch and the steering wheel, stating that the machine should not be operated.
3. Open the engine cover. Allow the system fluids to cool.
4. Remove the access plate from the cab floor to gain access to the hose and tube fittings on the valve plate which is located under the cab.

https://truckmanualshub.com/

5. Thoroughly clean the main control valve and surrounding area, including all hoses and fittings, before proceeding.
6. Label, disconnect and cap all hydraulic hoses attached to the main control valve, accumulator charge/secondary function valve and the pilot select valve. Place a suitable container to catch hydraulic fluid drainage from beneath the cab.
7. Remove the step assembly from the side of the cab. Refer to Section 4.5, “Cab Removal.”

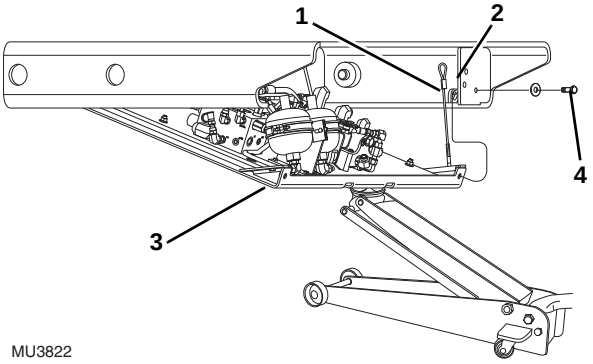

8. Check to make sure the two tethers (**1**) are positioned in the two mounting tabs (**2**) on the front and rear sides of the cab mount. If not, place the loop of the tether in the mount before proceeding.

WARNING

ALWAYS support the sub plate before loosening or removing any mounting hardware.

9. Place a floor jack under the outer edge of the sub plate (**3**) to hold the sub plate in position while removing the two cap screws (**4**) and washers securing the sub plate to the cab support.
10. Remove the cap screws and slowly lower the sub plate down until the sub plate is supported by the two tethers mounted on the cab support.

b. Sub Plate with Valve Plate Removal

Refer to Section 4.5, “Cab Removal,” for sub plate removal procedure and reassembly procedure.

8.7.2 Main Control Valve

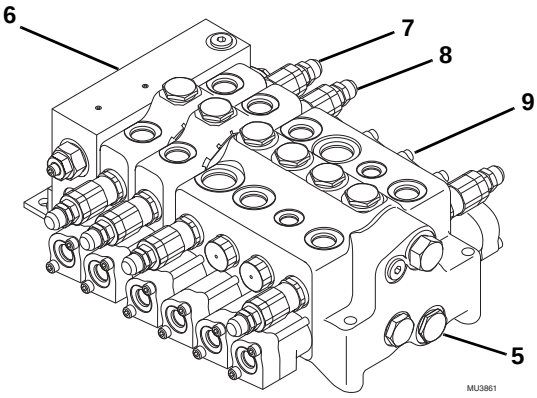

The main control valve assembly (**5**) consists of various working sections with their own valve assemblies, each providing a specific hydraulic function. The section assemblies are the inlet (**6**), transfer carriage spool section (**7**), auxiliary section (**8**) and the four spool mono block section (**9**).

If service to the main control valve assembly is required, swing the sub plate, with valve plate assembly, down to gain access to the valve and fittings. Refer to Section 8.7.1, “Valve Plate Assembly.”

a. Main Control Valve Removal from Valve Plate

Before disassembling the main control valve, remove it from the valve plate assembly. Label and remove all the hoses from the fittings. Cap and plug all hose ends and fittings.

1. Wipe up any hydraulic fluid spillage in, on, near and around the machine and work area.
2. Secure the main control valve in place on the valve plate to prevent sudden movement when the hardware is removed.

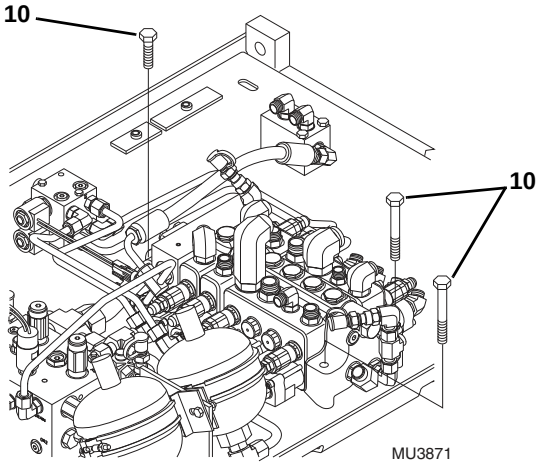

https://truckmanualshub.com/

3. Remove the three capscrews (**10**) securing the main control valve to the valve plate.
4. Remove the main control valve from the valve plate by sliding the valve out between the valve plate and the bottom of the cab.

b. Main Control Valve Disassembly

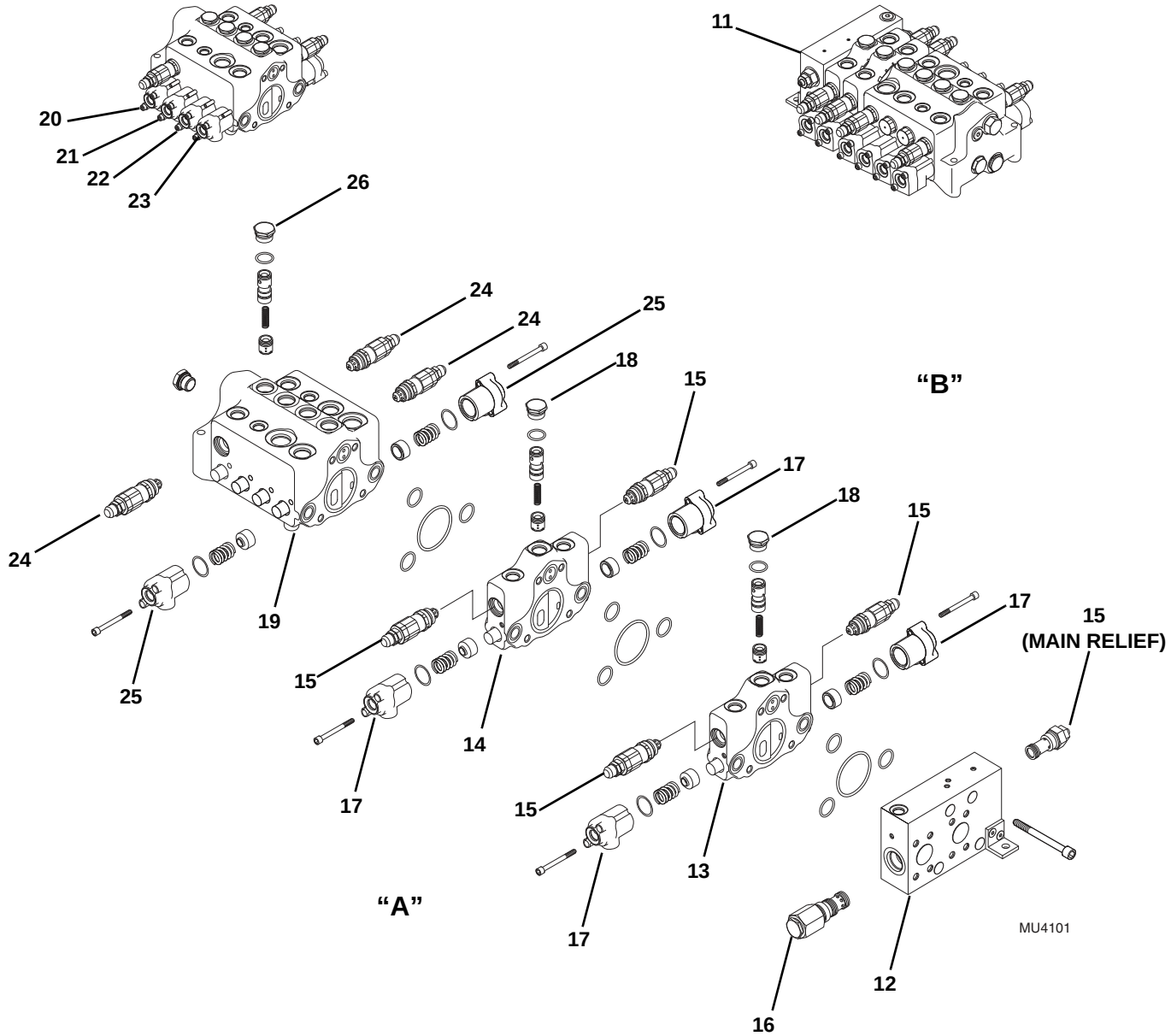

1. To disassemble the individual sections of the main control valve (**11**), remove the four hex socket head capscrews which hold the inlet section (**12**), transfer carriage section (**13**), auxiliary hydraulic section (**14**) to the mono block section.

Note: *Refer to Section 8.3.1, "Pressure Checks and Adjustments." to properly test and reset any relief valve pressure settings if necessary.*

https://truckmanualshub.com/

Disassemble each Valve Section

1. Carefully separate the inlet section (**12**) from the transfer carriage section (**13**).
2. Remove and discard o-rings from between the two sections.
3. Carefully separate transfer section (**13**) from the auxiliary hydraulic section (**14**).
4. Remove any relief valves (**15**), the unloader valve (**16**), spool end housings (**17**) or compensators (**18**) from individual valve section if equipped.

Note: *The internal parts of the relief valves and unloader valves are not serviceable. Replace the entire relief/unloader valve if necessary.*

Note: *The spool in the section is not serviceable separately. If the spool is scratched or nicked the entire section must be replaced.*

Note: *The plungers of the compensators are not serviceable. If these parts require replacement the entire section must be replaced.*

Mono Block Disassembly

The mono block section (**19**) contains the relief valves, spools and compensators for the attachment tilt (**20**), frame sway (**21**), boom lift/lower (**22**) and boom extend/retract functions (**23**).

1. Remove the relief valves (**24**) from the appropriate function.
2. Remove the spool end housings (**25**) and compensators (**26**) from the appropriate function.

Note: *The internal parts of the relief valves are not serviceable. Replace the entire relief valve if necessary.*

Note: *The spool in the section is not serviceable separately. If the spool is scratched or nicked the entire mono block must be replaced.*

Note: *The plungers of the compensators are not serviceable. If these parts require replacement the entire mono block must be replaced.*

c. Main Control Valve Parts Cleaning

Clean all components with a suitable cleaner, such as triclorethylene, before continuing. Blow dry.

d. Main Control Valve Parts Inspection

Inspect all parts and internal passageways for wear, damage, etc. If inner surfaces of any component **DO NOT** display an ultra-smooth, polished finish, or are damaged in any way, replace the damaged part. Often, dirty hydraulic fluid causes failure of internal seals, damage to the polished surfaces within the component, and wear of and/or harm to other parts.

e. Main Control Valve Assembly

Note: *ALWAYS replace seals, o-rings, gaskets, etc., with new parts to help ensure proper sealing and operation. Lubricate seals and o-rings with clean hydraulic oil.*

Mono Block Assembly

1. Install the spring and plunger into the spool end housing (**25**). Place the spool end housing on the end of the spool. Secure the spool end housing to the mono block and install two capscrews. Repeat for the other spool end housings on the mono block.
2. Install the appropriate relief valves (**24**) into the appropriate function. The two relief valves for the attachment tilt section are preset to 4000 psi (276 bar). The relief valve in the extend/retract section is preset to 2900 psi (200 bar). Torque the relief valves to 33 ± 3.5 lb-ft (45 ± 4,8 Nm).
3. Place the lower compensator plunger followed by the spring and the upper compensator plunger (**26**) into the cavity on top of the mono block. Secure in place with the hex plug and new oiled o-ring. Torque the plug to 48 ± 5 lb-ft (65 ± 7 Nm). Repeat for the other compensators on the mono block.

Inlet Section Assembly

1. Install the main relief valve (**15**) into the side of the inlet section. Torque the main relief valve to 33 ± 3.5 lb-ft (45 ± 4,8 Nm).
2. Install the unloader valve (**16**) into the side of the inlet section. Torque the unloader valve to 48 ± 5 lb-ft (65 ± 7 Nm).
3. Insert the four hex socket head capscrews through the inlet section.

Transfer Carriage Section Assembly

1. Install the relief valve (**15**) preset to 3700 psi (255 bar) into the “A” side of the transfer carriage section. Torque the relief valve to 33 ± 3.5 lb-ft (45 ± 4,8 Nm).

https://truckmanualshub.com/

2. Install the relief valve (**15**) preset to 2400 psi (165 bar) into the “B” side of the transfer carriage section. Torque the relief valve to 33 ± 3.5 lb-ft (45 ± 4,8 Nm).
3. Install the spring and plunger into the spool end housing (**17**). Place the spool end housing on the end of the spool. Secure the spool end housing to the transfer carriage section and install two capscrews.
4. Place the lower compensator plunger followed by the spring and the upper compensator plunger (**18**) into the cavity on top of the transfer carriage section. Secure in place with the hex plug and new oiled o-ring. Torque the plug to 48 ± 5 lb-ft (65 ± 7 Nm).
5. Place the four new oiled o-rings in place on the transfer carriage section (**13**). Carefully slide the transfer carriage section onto the four hex head socket capscrews and set tightly against the inlet section (**12**).

Auxiliary Hydraulic Section Assembly

1. Install the relief valve (**15**) preset to 2900 psi (200 bar) into the “A” and “B” sides of the aux hydraulic section. Torque the relief valve to 33 ± 3.5 lb-ft (45 ± 4,8 Nm).
2. Install the spring and plunger into the spool end housing (**17**). Place the spool end housing on the end of the spool. Secure the spool end housing to the aux hydraulic section and install two capscrews.
3. Place the lower compensator plunger followed by the spring and the upper compensator plunger (**18**) into the cavity on top of the aux hydraulic section. Secure in place with the hex plug and new oiled o-ring. Torque the plug to 48 ± 5 lb-ft (65 ± 7 Nm).
4. Place the four new oiled o-rings in place on the aux hydraulic section (**14**). Carefully slide the aux hydraulic section onto the four hex head socket capscrews and set tightly against the transfer carriage section (**13**).
5. Place the four new oiled o-rings in place on the mono block section. Carefully place the aux hydraulic section (**14**), transfer carriage section (**13**) and inlet section (**12**) against the mono block (**11**). Tighten the four hex socket head capscrews to hold all the sections together. Torque the four capscrews to 25 ± 2.5 lb-ft (34 ± 3,4 Nm).

f. Main Control Valve Installation

1. Place the assembled main control valve into position on the valve plate assembly and align the bolt holes.
2. Insert the two long capscrews (**1**) and the short capscrew (**2**) through the valve and tighten into the valve plate assembly.

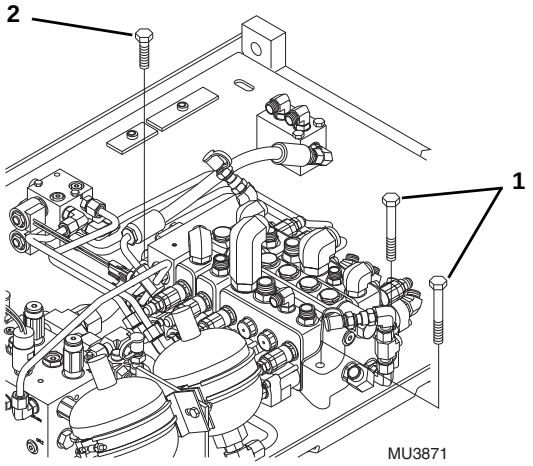

3. Use new oiled o-rings as required. Uncap and connect all previously labeled hoses, clamps, etc. to the main control valve.
4. Using the floor jack, raise the sub plate, with the valve plate assembly, up into position.

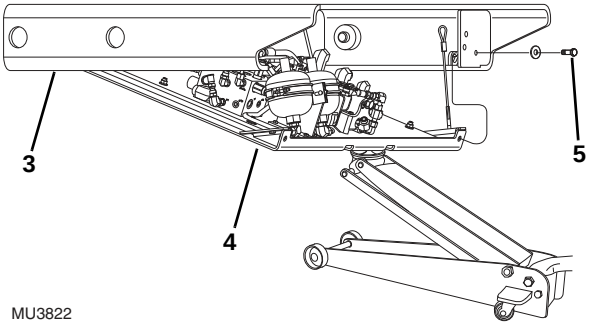

5. Line up the mounting holes in the cab support (**3**) and the holes in the sub plate (**4**). Secure in place with the capscrews and flat washers (**5**).
6. Reassemble the step. Refer to Section 4.6, “Cab Installation,” for step assembly procedures.
7. Check the routing of all hoses, wiring and tubing for sharp bends or interference with any rotating members, and install tie wraps and/or protective conduit as required. Tighten all tube and hose clamps.
8. Fill the hydraulic fluid reservoir. Refer to Section 8.5.2, “Hydraulic Oil Reservoir Filling.”

https://truckmanualshub.com/

9. Start the engine and run at approximately one-third to one-half throttle for about one minute without moving the machine or operating any hydraulic functions.
10. Inspect for leaks and check the level of the hydraulic fluid in the reservoir. Shut the engine OFF.

Note: *Check for leaks and repair as required before continuing. Add hydraulic fluid to the reservoir as needed.*

11. Wipe up any hydraulic fluid spillage in, on, near and around the machine, work area and tools.
12. Install the transmission covers.
13. Close and secure the rear door.

g. Main Control Valve Test

Conduct a pressure check of the hydraulic system in its entirety. Adjust pressure(s) as required. Refer to Section 8.3.1, “Pressure Checks and Adjustments.”

8.7.3 Joystick Valve (Dual Joystick)

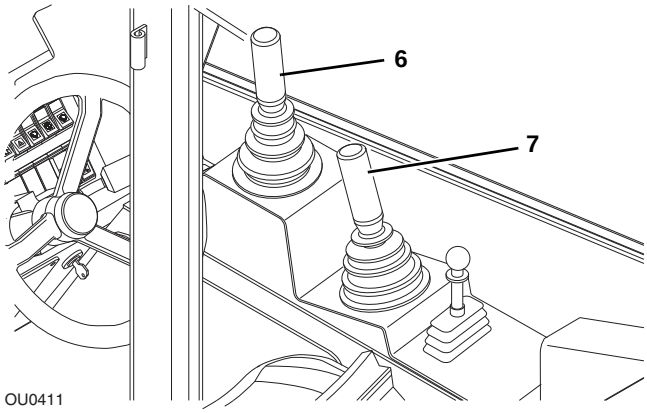

The individual joystick valves are mounted on the right side console in the cab. The front joystick (**6**) has an electric circuit in it to control the auxiliary hydraulic functions.Verify that the electrical solenoids on the pilot select valve are functioning properly before considering replacement of the front joystick. Refer to Section 9.5.2, “944E-42 Electrical Schematics.”

The rear joystick (**7**) has no electrical connections and is only pilot operated. If this joystick is not functioning properly, the joystick must be replaced.

Verify the correct operation of the joysticks before considering replacement of the joystick valve. The capsules for individual joysticks are the only serviceable component within the individual joysticks. The joysticks must be replaced in their entirety if replacement is necessary. Refer to Section 4.3.6, “Joystick Assemblies.”

a. Front and Rear Joystick Capsule Replacement

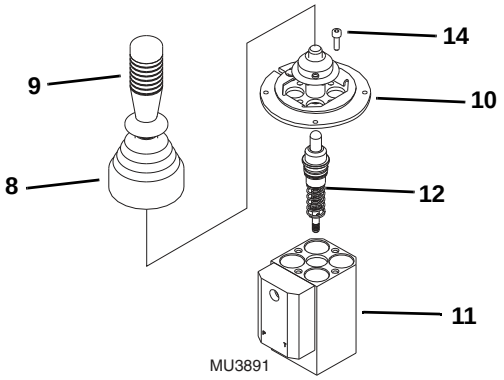

1. Lift up boot (**8**) and remove the handle (**9**) from the joystick joint assembly.
2. Remove the joint assembly (**10**) from the valve body (**11**).
3. Remove the capsule (**12**) from the valve body (**11**).
4. Clean all components with a suitable cleaner before inspection.
5. Inspect internal passageways of the pilot select valve and it’s component parts for wear, damage, etc. If inner surfaces of the pilot select valve DO NOT display an ultra-smooth, polished finish, or components are damaged in any way, replace the pilot select valve or appropriate part. Often, dirty hydraulic fluid causes failure of internal seals and damage to the polished surfaces within the pilot select valve.
6. Assemble the new capsule assembly (**12**), with the lightly oiled o-ring, into the valve body (**11**).
7. Reassemble the joint assembly (**10**) to the valve body (**11**). Torque the four capscrews to (**14**) to 7 ± 1 lb-ft (9,5 ± 1,4 Nm).
8. Reassemble the handle (**9**) and the boot (**8**) to the joint assembly. Use a punch in the hole on the joint assembly to hold it in place while tightening the handle assembly. Torque the handle assembly to 33 ± 3.5 lb-ft (44,7 ± 4,7 Nm).

After replacing a joystick valve assembly, check for proper function of all joystick functions.

https://truckmanualshub.com/

8.7.4 Pilot Select Valve (Dual Joystick)

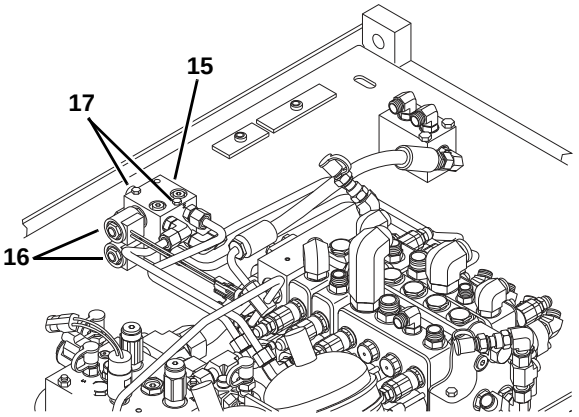

Pilot pressure from the front joystick flows to the pilot select valve (**15**). The pilot pressure is then directed to the auxiliary hydraulic section of the main control valve or to the transfer carriage section of the main control valve. The direction of the flow is controlled by the two solenoid cartridges (**16**) on the valve. The solenoid cartridges are controlled by the push button on top of the joystick. The pilot select valve is located on the valve plate which is located under the cab floor.

a. Pilot Select Valve Removal

1. Park the machine on a firm, level surface, level the machine, fully retract the boom, lower the boom, place the transmission control lever in (N) NEUTRAL, engage the park brake and shut the engine OFF.
2. Place a Do Not Operate Tag on both the ignition key switch and the steering wheel, stating that the machine should not be operated.
3. Open the engine cover. Allow the system fluids to cool.
4. Remove the access plate from the floor of the cab.
5. Label, disconnect and cap all hydraulic hoses attached to the pilot select valve (**15**). Cap all fittings and openings to keep dirt and debris from entering hydraulic system. Label and disconnect the wire harness connectors as they relate to the pilot select valve.
6. Remove the two cap screws (**17**) holding the pilot select valve and remove the valve.

b. Pilot Select Valve Disassembly, Inspection and Reassembly

Note: *ALWAYS replace seals, o-rings, gaskets, etc., with new parts to help ensure proper sealing and operation. Lubricate seals and o-rings with clean hydraulic oil.*

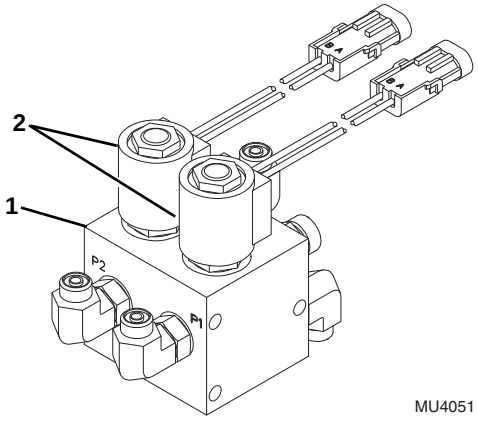

1. Remove all fittings from the pilot select valve (**1**), noting the location and orientation of each fitting.
2. Remove the two solenoid cartridges (**2**) from the valve.
3. Clean all components with a suitable cleaner before inspection.
4. Inspect internal passageways of the pilot select valve and it's component parts for wear, damage, etc. If inner surfaces of the pilot select valve DO NOT display an ultra-smooth, polished finish, or components are damaged in any way, replace the pilot select valve or appropriate part. Often, dirty hydraulic fluid causes failure of internal seals and damage to the polished surfaces within the pilot select valve.
5. Secure the pilot select valve in a bench vise or by other suitable means.
6. Install the fittings to there proper locations.
7. Install the two solenoid cartridges and torque the cartridges to 20 lb-ft (27 Nm). Torque the solenoid nuts to 5 lb-ft (7 Nm).

c. Pilot Select Valve Installation

1. Position the pilot select valve back onto the valve plate. Install and tighten the two capscrews.
2. Uncap and reconnect the previously labeled hydraulic hoses.
3. Reconnect any electrical connections to the appropriate locations.

https://truckmanualshub.com/

4. Start the machine and run at approximately one-third to one-half throttle for about one minute without moving the machine or operating any hydraulic function.
5. Inspect the pilot select valve for leaks and check the level of the hydraulic fluid in the reservoir. Shut the engine OFF.
6. Wipe up any hydraulic fluid spillage in, on, near and around the machine, work area and tools.
7. Reinstall the access plate to the cab floor.
8. Close and secure the engine cover.

a. Pilot Select Valve Test

Conduct a pressure check of the joystick circuit. Refer to Section 8.3.1, “Pressure Checks and Adjustments.”

8.7.5 Joystick Valve (Single Joystick)

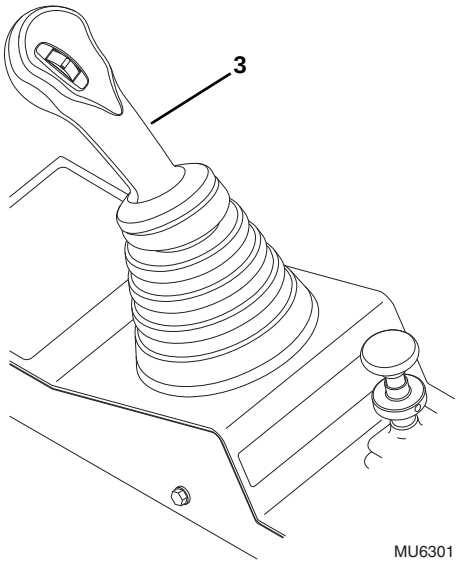

Pilot pressure from the joystick flows to the single joystick pilot select valve (**3**). Joystick commands are actuated both electrically and hydraulically via a set of solenoid-operated control valves mounted in an array at the pilot select manifold.

Verify the correct operation of the joystick switches and circuit solenoids before considering replacement of the joystick valve. Refer to Section 9.5.2, “944E-42 Electrical Schematics.”

The valve itself is not serviceable and must be replaced in it’s entirety if replacement of electrical parts does not solve the problem. Refer to Section 9.5.2, “944E-42 Electrical Schematics.”

After replacing the joystick valve assembly, check all joystick functions.

a. Single Joystick Capsule Replacement

1. Remove the entire single joystick assembly from the cab. Refer to Section 4.3.6, “Joystick Assemblies.”
2. Secure the single joystick body in s vise or suitable device.

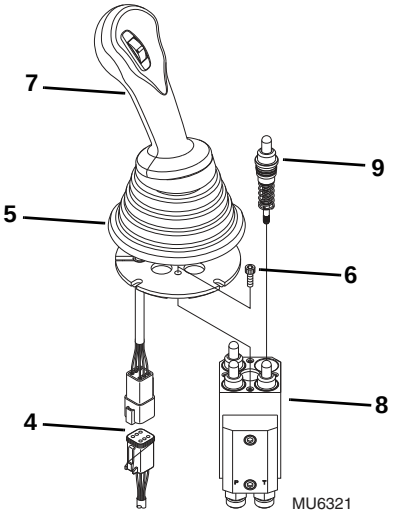

3. Disconnect the joystick harness connection (**4**).
4. Lift up the boot (**5**), loosen and remove the capscrews (**6**) that secure the joint and handle assembly (**7**) to the valve body (**8**). Lift the joint and handle assembly from the top of the valve body.
5. Remove the capsules (**9**) from the valve body.
6. Clean all components with a suitable cleaner before inspection.
7. Inspect internal passageways of the pilot select valve and it’s component parts for wear, damage, etc. If inner surfaces of the pilot select valve DO NOT display an ultra-smooth, polished finish, or components are damaged in any way, replace the pilot select valve or appropriate part. Often, dirty hydraulic fluid causes failure of internal seals and damage to the polished surfaces within the pilot select valve.
8. Assemble the new capsule assembly (**9**), with the lightly oiled o-ring, into the valve body (**8**).
9. Reassemble the joint and handle assembly (**7**) to the valve body (**8**). Torque the four capscrews (**6**) to 7 ± 1 lb-ft (9,5 ± 1,4 Nm).
10. Reassemble the boot to the joint and handle assembly.
11. Reconnect the joystick harness connection.
12. Replace the joystick body into the cab. Refer to Section 4.3.6, “Joystick Assemblies.”

https://truckmanualshub.com/

8.7.6 Single Joystick Pilot Select Valve

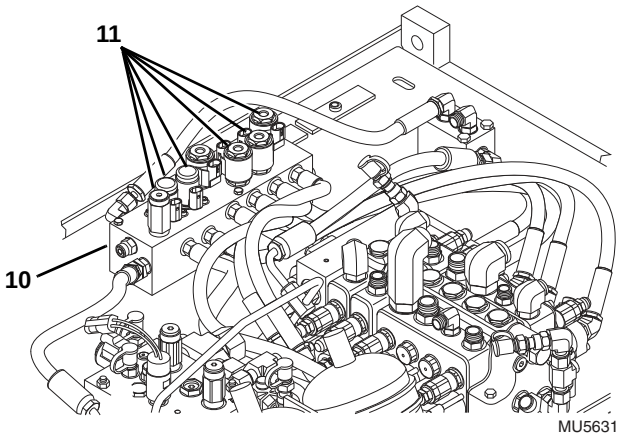

Pilot pressure from the joystick flows to the single joystick pilot select valve (**10**). The pilot pressure is then directed to the appropriate section of the main control valve. The direction of the flow is controlled by the solenoid cartridges (**11**) on the valve. The solenoid cartridges are controlled by holding the trigger button down on the joystick or by pushing the thumb button up or down.

The single joystick pilot select valve is located on the valve plate which is located under the cab floor.

a. Single Joystick Pilot Select Valve Removal

1. Park the machine on a firm, level surface, level the machine, fully retract the boom, lower the boom, place the transmission control lever in (N) NEUTRAL, engage the park brake and shut the engine OFF.
2. Place a Do Not Operate Tag on both the ignition key switch and the steering wheel, stating that the machine should not be operated.
3. Open the engine cover. Allow the system fluids to cool.
4. Properly disconnect the batteries.
5. Remove the access plate from the floor of the cab and right console side panel access panel.
6. Label, disconnect and cap all hose attached to the single joystick pilot select valve (**10**). Label or mark any wire harness connectors as they relate to the single joystick pilot select valve.
7. Remove the two capscrews on the single joystick pilot select valve and remove the valve.

b. Single Joystick Pilot Select Valve Disassembly, Inspection and Reassembly

Note: *ALWAYS replace seals, o-rings, gaskets, etc., with new parts to help ensure proper sealing and operation. Lubricate seals and o-rings with clean hydraulic oil.*

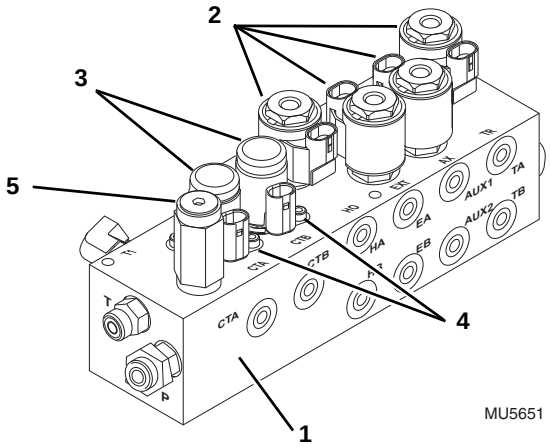

1. Remove all fittings from the pilot select valve (**1**), noting the location and orientation of each fitting.
2. Remove the six solenoid cartridges (**2**&**3**)and the pressure reducing cartridge from the block.
3. Clean all components with a suitable cleaner before inspection.
4. Inspect internal passageways of the pilot select valve and it's component parts for wear, damage, etc. If inner surfaces of the pilot select valve DO NOT display an ultra-smooth, polished finish, or components are damaged in any way, replace the pilot select valve or appropriate part. Often, dirty hydraulic fluid causes failure of internal seals and damage to the polished surfaces within the pilot select valve.
5. Secure the pilot select valve in a bench vise or by other suitable means.
6. Install the fittings to there proper locations.
7. Install four solenoid cartridges (**2**) and torque the cartridges to 20 lb-ft (27 Nm). Torque the solenoid nuts to 5 lb-ft (7 Nm).
8. Install the other two solenoid cartridges (**3**) and secure with two capscrews (**4**) each. Torque the capscrews to 2.5 lb-ft (3 Nm).
9. Install the pressure reducing cartridge (**5**) and torque to 25 lb-ft (33 Nm).

https://truckmanualshub.com/

c. Single Joystick Pilot Select Valve Installation

1. Position the pilot select valve back onto the valve plate. Install and tighten the two capscrews.
2. Uncap and reconnect the previously labeled hydraulic hoses.
3. Reconnect any electrical connections to the appropriate locations.
4. Properly connect the batteries.
5. Start the machine and run at approximately one-third to one-half throttle for about one minute without moving the machine or operating any hydraulic function.
6. Inspect the pilot select valve for leaks and check the level of the hydraulic fluid in the reservoir. Shut the engine OFF.
7. Wipe up any hydraulic fluid spillage in, on, near and around the machine, work area and tools.
8. Reinstall the access plate and side access panel to the cab.
9. Close and secure the engine cover.

d. Single Joystick Pilot Select Valve Test

Conduct a pressure check of the joystick circuit. Refer to Section 8.3.1, “Pressure Checks and Adjustments.”

8.7.7 Frame Sway Joystick Valve

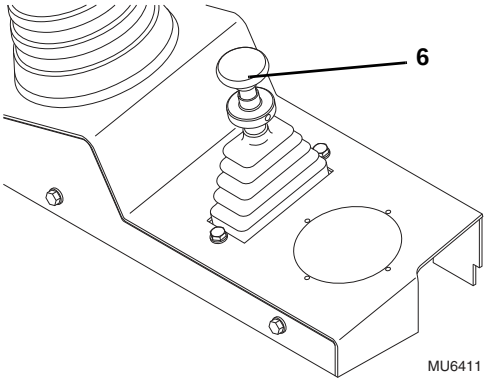

The frame sway joystick (**6**) controls the frame sway only and is only pilot operated. If the frame sway is not functioning properly, check the electrical circuits of the Stabil-TRAK system to ensure proper electrical operation before considering replacement of this joystick.

Verify the correct operation of the joystick before considering replacement of the joystick valve. The capsules are the only serviceable components within the joysticks. The joystick must be replaced in their entirety if replacement is necessary. Refer to Section 4.3.6, “Joystick Assemblies.”

a. Frame Sway Joystick Capsule Replacement

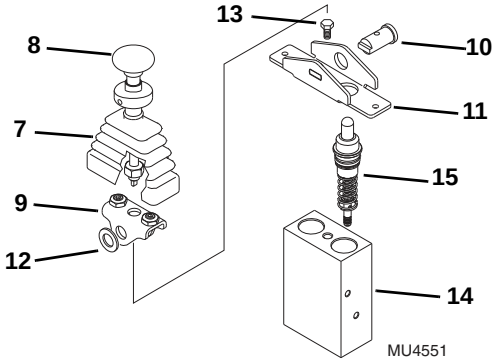

1. Lift up boot (**7**) and remove the handle assembly (**8**) from the pivot mechanism (**9**).
2. Drive out pivot pin (**10**) from the pivot mount (**11**). Watch for the washer (**12**) on the square side of the pin.
3. Remove the pivot mechanism (**9**) to access the capscrew (**13**). Remove the capscrew and mount from the valve body (**14**).
4. Remove the capsule (**15**) from the valve body.
5. Clean all components with a suitable cleaner before inspection.
6. Inspect internal passageways of the valve body and it’s component parts for wear, damage, etc. If inner surfaces of the pilot select valve DO NOT display an ultra-smooth, polished finish, or components are damaged in any way, replace the pilot select valve or appropriate part. Often, dirty hydraulic fluid causes failure of internal seals and damage to the polished surfaces within the valve body.
7. Assemble the new capsule (**15**) with the lightly oiled o-ring into the valve body.
8. Reassemble the pivot mount with capscrew. Place the pivot mechanism in place and reassemble the pivot pin and washer.
9. Reassemble the handle assembly to the pivot mechanism

After replacing a joystick valve assembly, check that all joystick functions operate correctly.

8.7.8 Auxiliary Hydraulic Pressure Release Valve

The auxiliary hydraulic pressure release valve is attached to the right side of the valve plate under the cab.

The auxiliary hydraulic pressure release valve switch is located on the right console and when activated it relieves all trapped pressure in the auxiliary hydraulic circuit.

https://truckmanualshub.com/

a. Auxiliary Hydraulic Pressure Release Valve Removal

1. Park the machine on a firm, level surface, level the machine, fully retract the boom, lower the boom, place the transmission control lever in (N) NEUTRAL, engage the park brake and shut the engine OFF.
2. Place a Do Not Operate Tag on both the ignition key switch and the steering wheel, stating that the machine should not be operated.
3. Open the engine cover. Allow the system fluids to cool.
4. Properly disconnect the batteries.
5. Remove the access plate from the floor of the cab.

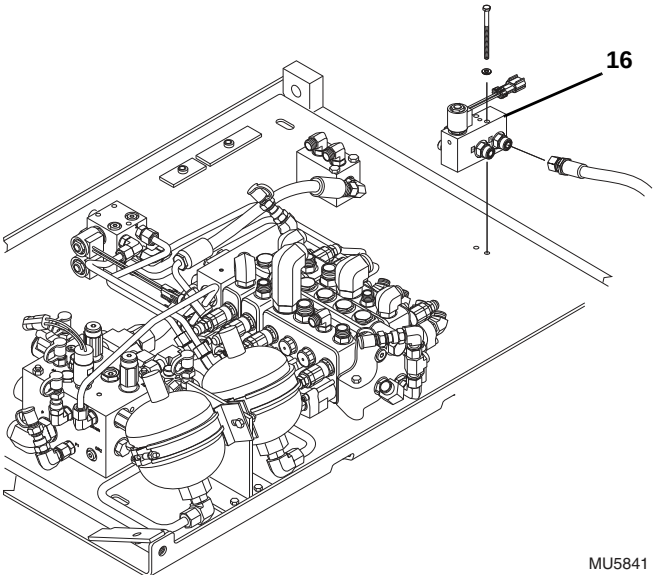

6. Label, disconnect and cap all hose attached to the auxiliary hydraulic pressure release valve (**16**).
7. Label or mark the wire harness connector attached to the auxiliary hydraulic pressure release valve. Disconnect electrical connector.
8. Remove the two capscrews and washers from the auxiliary hydraulic pressure release valve and remove the valve.

b. Auxiliary Hydraulic Pressure Release Valve Disassembly, Inspection and Reassembly

Note: *ALWAYS replace seals, o-rings, gaskets, etc., with new parts to help ensure proper sealing and operation. Lubricate seals and o-rings with clean hydraulic oil.*

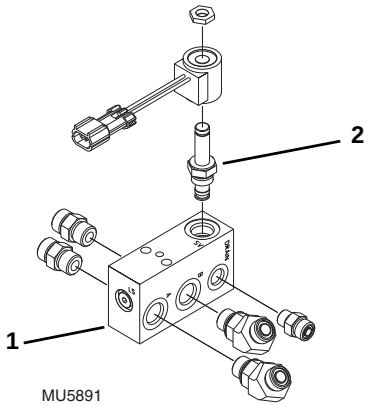

1. Remove all fittings from the release valve (**1**), noting the location and orientation of each fitting.
2. Remove the solenoid cartridge (**2**) from the block.
3. Clean all components with a suitable cleaner before inspection.
4. Inspect internal passageways of the release valve and it's component parts for wear, damage, etc. If inner surfaces of the pilot select valve DO NOT display an ultra-smooth, polished finish, or components are damaged in any way, replace the pilot select valve or appropriate part. Often, dirty hydraulic fluid causes failure of internal seals and damage to the polished surfaces within the release valve.
5. Secure the release valve in a bench vise or by other suitable means.
6. Install the fittings to there proper locations.
7. Install the solenoid cartridge (**2**) and torque the cartridges to 20 lb-ft (27 Nm). Torque the solenoid nut to 5 lb-ft (7 Nm).

c. Auxiliary Hydraulic Pressure Release Valve Installation

1. Position the release valve back onto the valve plate. Install and tighten the two capscrews.
2. Uncap and reconnect the previously labeled hydraulic hoses.
3. Reconnect any electrical connections to the appropriate locations.
4. Properly connect the batteries
5. Start the machine and run at approximately one-third to one-half throttle for about one minute without moving the machine or operating any hydraulic function.

https://truckmanualshub.com/

6. Inspect the release valve for leaks and check the level of the hydraulic fluid in the reservoir. Shut the engine OFF.
7. Wipe up any hydraulic fluid spillage in, on, near and around the machine, work area and tools.
8. Reinstall the access plate to the cab floor.
9. Close and secure the engine cover.

8.7.9 Service Brake Valve

The service brake valve is secured at the base of the steering column support inside the dash, concealed by the lower dash cover.

The service brakes themselves are part of the axles (the park brake is part of the front axle only). Refer to Section 5.3, “Axle Assemblies.”

a. Service Brake Valve Removal

1. Park the machine on a firm, level surface, level the machine, fully retract the boom, lower the boom, place the transmission control lever in (N) NEUTRAL, engage the park brake and shut the engine OFF.
2. Place a Do Not Operate Tag on both the ignition key switch and the steering wheel, stating that the machine should not be operated.
3. Open the engine cover. Allow the system fluids to cool.
4. Properly disconnect the batteries.
5. Remove the lower dash panel.
6. Pump the brake pedal several times to relieve all the stored pressure in the accumulator system.
7. Remove the brake pedal from the dash. Refer to Section 4.3.3, “Service Brake Valve and Pedal,” for the proper removal procedure.

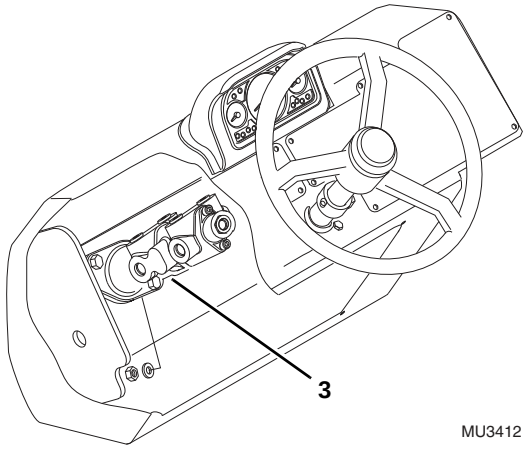

8. Label, disconnect and cap all hoses attached to the service brake valve (**3**).
9. Remove the two capscrews, washers and nuts mounting the service brake valve to the steering column support. Remove the service brake valve through the lower dash panel opening.

b. Service Brake Valve Installation

Note: *DO NOT disassemble the service brake valve. The service brake valve is not serviceable and must be replaced in its entirety, if defective.*

Note: *ALWAYS replace seals, o-rings, gaskets, etc., with new parts to help ensure proper sealing and operation. Lubricate seals and o-rings with clean hydraulic oil.*

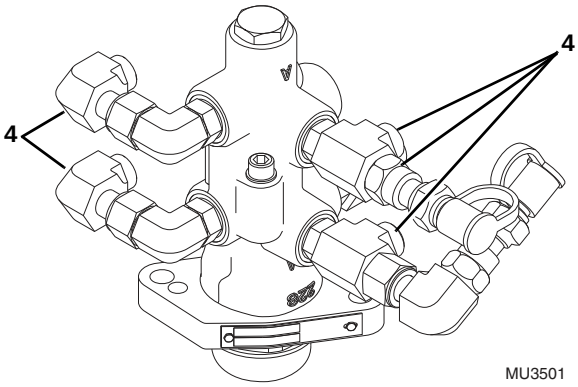

1. Transfer the fittings (**4**) to the new brake valve. Note the orientation of each fitting before removing them.
2. Install the service brake valve with the two capscrews, washers and nuts onto the steering column support.
3. Use new oiled o-rings as required. Uncap and connect the previously labeled hoses to the service brake valve.
4. Check the routing of all hoses, and tubing for sharp bends or interference with any rotating members, and install tie wraps and/or protective conduit as required. Tighten all tube and hose clamps.
5. Properly connect the batteries.
6. Start the engine and run at approximately one-third to one-half throttle for about one minute, without moving the machine or operating any hydraulic functions.
7. Inspect the service brake valve and connections for leaks, and check the level of the hydraulic fluid in the reservoir. Shut the engine OFF.

https://truckmanualshub.com/

Note: *Check for leaks, and repair as required before continuing. Add hydraulic fluid to the reservoir as needed.*

8. Wipe up any hydraulic fluid spillage in, on, near and around the machine, work area and tools.
9. Install the lower dash panel.
10. Close and secure the engine cover.

8.7.10 Brake Test

Carefully bleed the brake lines as soon as the brake valve is installed in the machine. Air in the system will not allow the brakes to apply properly. There are two brake bleeder locations on each axle. Work with an assistant to perform this procedure.

1. Place the travel select lever in (N) NEUTRAL, engage the park brake, and start the engine.
2. Have the assistant frame sway the machine full left to expose the brake bleeders on the right front and right rear axles.

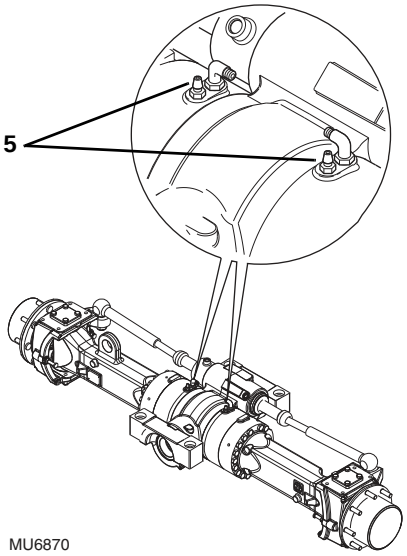

3. Remove the plastic cap from the brake bleeder (**5**). Attach one end of a length of transparent tubing over the brake bleeder. Place the other end of this tubing in a suitable transparent container that is partially filled with hydraulic oil. The end of the tubing must be below the oil level in the container.
4. DO NOT open the brake bleeder without holding the tubing firmly on the bleeder. There is pressure at the brakes. Carefully open the bleeder with a 12 mm wrench. Have the assistant depress the brake pedal. Close the brake bleeder when air bubbles no longer appear in the oil. Release the brake pedal. Remove the tubing from the brake bleeder.
5. Repeat Steps 3 and 4 for the right rear brake bleeders.
6. Frame sway the machine full right to expose the brake bleeders on the left front and left rear axles.
7. Repeat steps 3 and 4 for the left front and left rear brakes.
8. Conduct a pressure and function check of the service brake. Refer to Section 8.4.1, “Hydraulic Pressures.”

8.7.11 Power Steering Valve

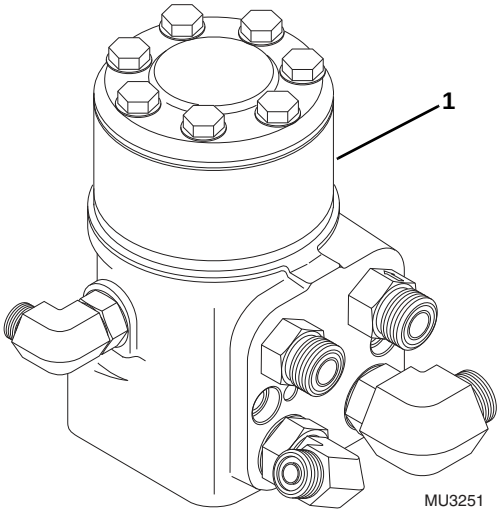

The power steering valve (**1**) is located at the base of the steering wheel shaft, concealed by the lower dash cover. The valve is not serviceable and must be replaced in its entirety if defective. For detailed information refer to Section 4.3.1, “Steering Column and Steering Valve.”

https://truckmanualshub.com/

8.7.12 Steer Select Valve

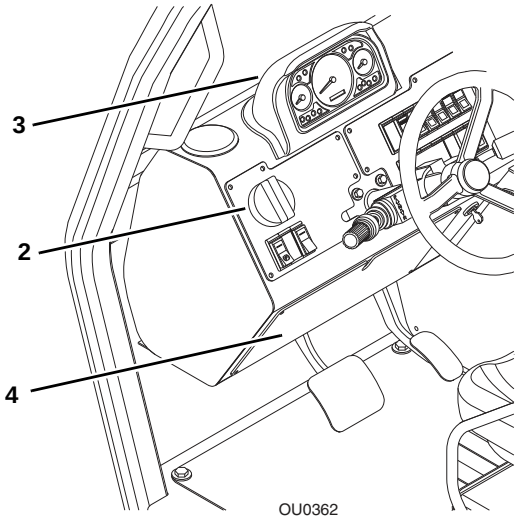

The machine can be used in the front-wheel, four-wheel or crab steering mode. The steer select valve (**2**) controls the direction of hydraulic fluid flow to the steering cylinders mounted on each axle. The steer select valve is located inside the front dash on the upper left side.

Note: *The steer select valve is not serviceable and must be replaced if defective.*

a. Steer Select Manifold and Valve Removal

1. Park the machine on a firm, level surface, level the machine, fully retract the boom, raise the boom, place the transmission control lever in (N) NEUTRAL, engage the park brake and shut the engine OFF.
2. Place a Do Not Operate Tag on both the ignition key switch and the steering wheel, stating that the machine should not be operated.
3. Open the engine cover. Allow the system fluids to cool.
4. Properly disconnect the batteries.
5. Remove the front (**3**) and lower dash panels (**4**).
6. Label, disconnect and cap the hydraulic hoses connected to the steering select valve.
7. Remove the retaining nut and remove the steer selector knob
8. Remove the four socket-head screws that secure the select valve to the dash
9. Remove the left front dash panel and pull the select valve through the dash opening. Label and remove the remaining hoses from the rear of the select valve.
10. Remove the steer select valve from the cab. Wipe up any hydraulic fluid spillage in, on, near and around the machine.

b. Steer Select Valve and Manifold Installation

Note: *ALWAYS replace seals, o-rings, gaskets, etc., with new parts to help ensure proper sealing and operation. Lubricate seals and o-rings with clean hydraulic oil.*

1. Place the steer select assembly on a suitable work surface.
2. Transfer the fittings to the new steer select valve. Note the orientation of each fitting before removing them.

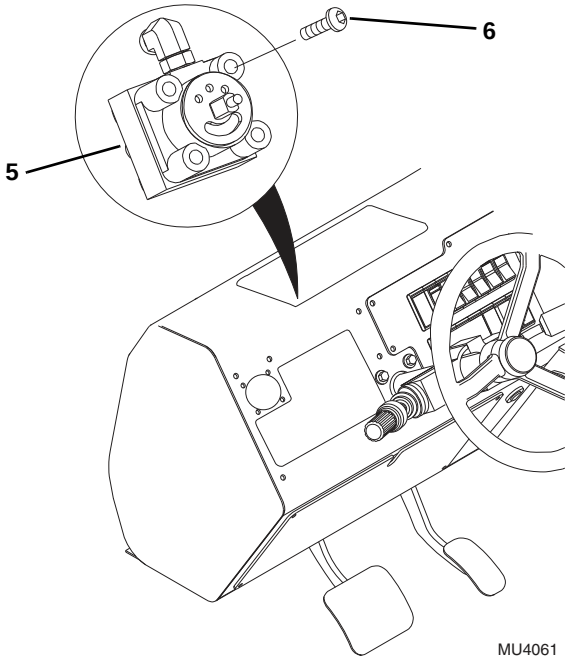

3. Place the steer select valve (**5**) in the front dash opening and connect all the hoses, except for the drain hose to their corresponding fittings.
4. Insert the selector valve through the dash and secure in place with the four capscrews (**6**).

https://truckmanualshub.com/

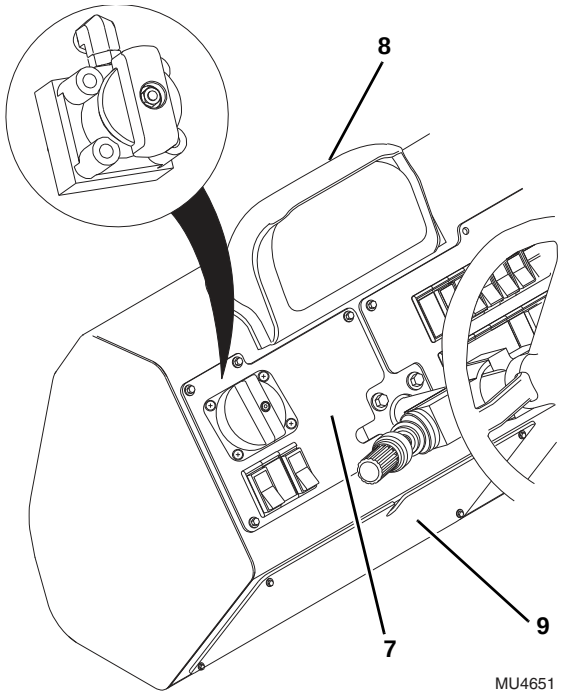

5. Install the left front dash panel (**7**) and secure with the five washers and capscrews.
6. Install the selector knob and secure with the retaining nut.
7. Connect the drain hose to the top of the select valve.
8. Install the front dash panel (**8**) and lower dash panel (**9**).
9. Check the routing of all hoses, wiring and tubing for sharp bends or interference with any rotating members, and install tie wraps and/or protective conduit as required. Tighten all hose clamps.
10. Properly connect the batteries
11. Start the engine and run at approximately 1/3-1/2 throttle for about one minute without moving the machine or operating any hydraulic functions.
12. Inspect for leaks and check the level of the hydraulic fluid in the reservoir. Shut the engine OFF.

Note: *Check for leaks and repair as required before continuing. Add hydraulic fluid to the reservoir as needed.*

13. Wipe up any hydraulic fluid spillage in, on, near and around the machine, work area and tools.
14. Close and secure the engine cover.

c. Steering Test

Refer to Section 8.4.1, “Hydraulic Pressures.”

1. Conduct a pressure check of the steering hydraulic circuit.
2. Check each steering mode for proper function.

https://truckmanualshub.com/

8.7.13 Accumulator Charge/Secondary Function Valve

Hydraulic oil from the front pump flows into the accumulator charge/secondary function valve and then is directed to the power steering unit, the two accumulators which direct pressure to the service brakes. Oil also flows from the accumulator charge/secondary function valve to the main control valve, the park brakes in the front axle and also provides pilot pressure to the joysticks.

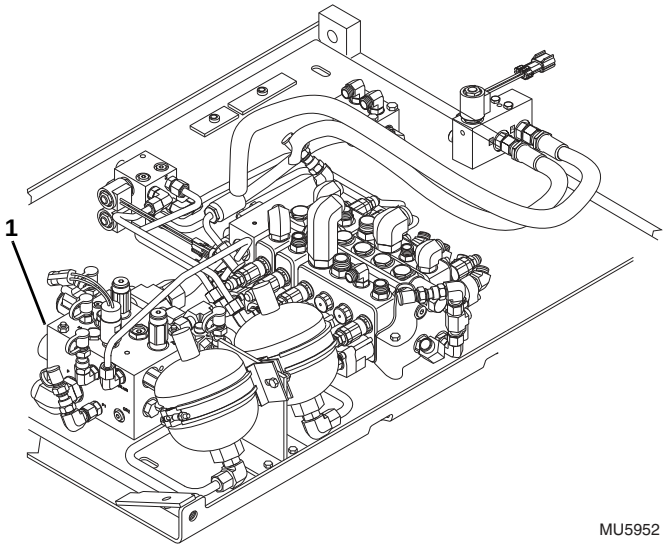

The accumulator charge/secondary function valve is a machined block with ports for various valves, cartridges and other fittings. The accumulator charge/secondary function valve (**1**) is located on the valve plate which is located under the cab floor.

a. Accumulator Charge/Secondary Function Valve Replacement

1. Park the machine on a firm, level surface, level the machine, fully retract the boom, raise the boom, place the transmission control lever in (N) NEUTRAL, engage the park brake and shut the engine OFF.
2. Place a Do Not Operate Tag on both the ignition key switch and the steering wheel, stating that the machine should not be operated.
3. Open the engine cover. Allow the system fluids to cool.
4. With the engine OFF, relieve the hydraulic pressure from the accumulators. Apply the service brake pedal and then release. Do this several times until all hydraulic pressure has been relieved from the accumulators.
5. Properly disconnect the batteries
6. Remove the access plate from the floor of the cab.
7. Label, disconnect and cap the hydraulic hoses and the electrical plugs connected to the accumulator charge/secondary function valve.
8. Swing the valve plate down. See Section 4.7.1, “Valve Plate Removal,” for removal procedure.
9. Remove the accumulator charge/secondary function valve from the valve plate.
10. Wipe up any hydraulic fluid spillage in, on, near and around the machine, work area and tools.

b. Accumulator Charge/Secondary Function Valve Disassembly, Cleaning, Inspection and Assembly

1. Secure the accumulator charge/secondary function valve assembly in a suitable bench vise if possible.
2. Tag and remove all hydraulic fittings, test ports, cartridges, switches and compensator, noting there location and orientation.
3. Clean all components with a suitable cleaner before inspection.
4. Inspect internal passageways of the accumulator charge/secondary function valve for wear, damage, etc. If inner surfaces of the valve DO NOT display an ultra-smooth, polished finish, or components are damaged in any way, replace the valve or appropriate part. Often, dirty hydraulic fluid causes failure of internal seals and damage to the polished surfaces within the accumulator charge/secondary function valve.

Note: *ALWAYS replace seals, o-rings, gaskets, etc., with new parts to help ensure proper sealing and operation. Lubricate seals and o-rings with clean hydraulic oil.*

5. Secure the accumulator charge/secondary function valve assembly in a suitable bench vise if possible.

Note: *Refer to the Parts Manual for the correct seal fits.*

https://truckmanualshub.com/

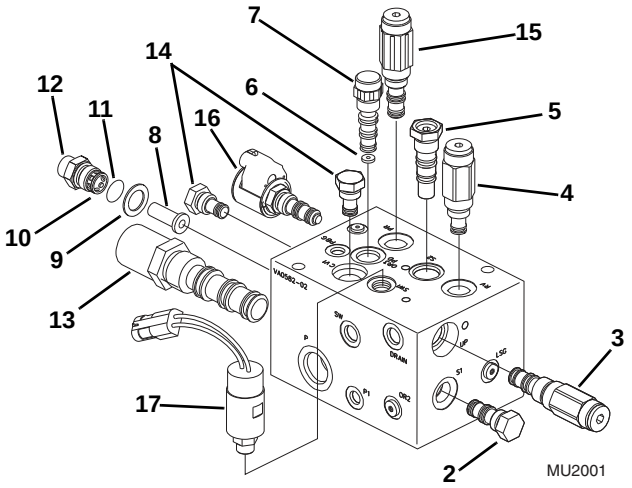

6. Install the load shuttle cartridge (**2**), with new seals and torque to 20 lb-ft (27 Nm).
7. Install the accumulator charge logic cartridge (**3**), with new seals and torque to 28 lb-ft (38 Nm).
8. Install the direct acting relief valve (**4**), with new seals and torque to 20 lb-ft (27 Nm).
9. Install the inverted shuttle cartridge (**5**), with new seals and torque to 28 lb-ft (38 Nm).
10. Place the orifice disc (**6**) in the port and install the pilot directional cartridge (**7**) with new seals and torque to 20 lb-ft (27 Nm).
11. Install the new sintered filter (**8**) followed by the washer (**9**) into the port. Secure in place with the filter retainer (**10**) and o-ring (**11**). Torque the retainer to 18-22 lb-ft (24-30 Nm). Tighten the filter nut (**12**) and torque to 27-29 lb-ft (37-39 Nm).
12. Install the load sense compensator (**13**), with new seals and torque to 50 lb-ft (68 Nm).
13. Install the two check valves (**14**), with new seals and torque to 20 lb-ft (27 Nm).
14. Install the pressure reducing cartridge (**15**), with new seals and torque to 20 lb-ft (27 Nm).
15. Install the coil assembly (**16**), with new seals and torque to 20 lb-ft (27 Nm).
16. Install the accumulator brake pressure switch (**17**), with new seals and torque to 15 lb-ft (20 Nm).

c. Accumulator Charge/Secondary Function Valve Installation

1. Reassemble all remaining fittings and test ports to the accumulator charge/secondary function valve.
2. Align the accumulator charge/secondary function valve with the carriage bolts in the mount holes on the valve plate assembly. Tighten both carriage bolts.
3. Connect all the previously labeled hydraulic hoses, fittings, wire terminal leads, etc., to the accumulator charge/secondary function valve.
4. Check the routing of all hoses and wiring for sharp bends or interference with any rotating members, and install tie wraps and/or protective conduit as required. Tighten all hose clamps.
5. Lift valve plate up and secure in position under cab. Refer to Section 4.7.2, “Valve Plate Installation,” for installation procedure.
6. Properly connect the batteries
7. Start the engine and run at approximately 1/3-1/2 throttle for about one minute without moving the machine or operating any hydraulic functions.
8. Inspect for leaks and check the level of the hydraulic fluid in the reservoir. Shut the engine OFF.
9. Wipe up any hydraulic fluid spillage in, on, near and around the machine, work area and tools.
10. Close and secure the engine cover.

d. Accumulator Charge Test

Conduct a pressure check of the accumulator circuit. Refer to Section 8.3, “Hydraulic Pressure Diagnosis.”

8.7.14 Accumulators

This section covers the testing and charging of the accumulator system.

The accumulators are located under the floor of the cab and are mounted to the valve plate. The internal parts of these accumulators are not serviceable. If the internal diaphragm is leaking, or the seals on the top or bottom cap are leaking, the accumulator requires replacement.

The accumulator pre charge pressure will vary depending on the ambient temperature that the accumulators were pre-charged at and the actual operating temperature of the accumulators. The following table shows how the pre-charged pressure can be affected by temperature range.

The following table depicts the accumulators pre-charged to 450 psi (3103 kPa), at a baseline temperature of 70° F (21° C).

https://truckmanualshub.com/

Pre-charge Pressure/Temperature Range	
Operating Temperature	**Actual Pre-charge Pressure**
30°F (-1° C)	414 psi (2854 kPa)
40°F (4° C)	423 psi (2916 kPa)
50°F (10° C)	432 psi (2978 kPa)
60°F (16° C)	441 psi (3040 kPa)
70°F (21° C)	450 psi (3103 kPa)
80°F (27° C)	459 psi (3165 kPa)
90°F (32° C)	468 psi (3227 kPa)
100°F (38° C)	477 psi (3289 kPa)
110°F (43° C)	486 psi (3351 kPa)
120°F (49° C)	490 psi (3378 kPa)
130°F (54° C)	499 psi (3440 kPa)
140°F (60° C)	508 psi (3503kPa)
150°F (66° C)	517 psi (3565 kPa)
160°F (71° C)	526 psi (3627 kPa)

8.7.15 General Information

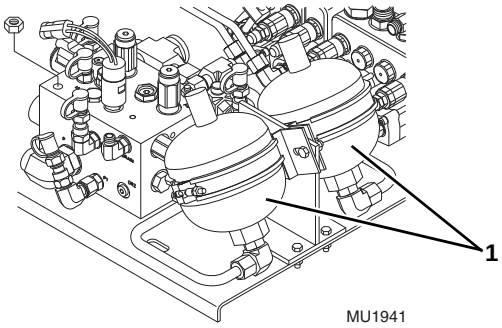

Each accumulator (**1**) is a 3,000 psi (207 bar) diaphragm type accumulator. Each accumulator has a total volume of 1.06 qt. (1 liter) (gas & oil combined).

The pneumatic accumulator is operated by compressed gas. Gas and hydraulic oil occupy the same container. When oil pressure rises, incoming oil compresses the gas. When oil pressure drops, the gas expands, forcing the oil out into the service brake system.

The gas is separated from the oil by a flexible diaphragm. This diaphragm prevents the mixing of gas and oil and keeps the gas out of the hydraulic system.

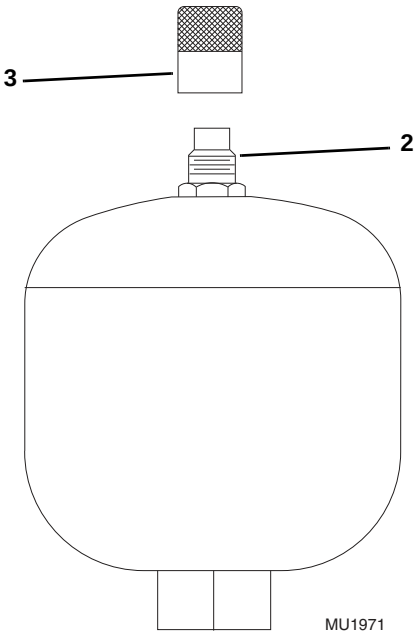

The accumulator must be “pre-charged” with gas before use in the service brake system. This is done by filling the gas chamber with dry nitrogen to a pressure of 450 ± 35 psi (3103 ± 241 kPa). The gas valve (**2**) is located under the protective cap (**3**) at the top of the accumulator. The gas valve is used for pre-charging and testing the accumulator.

e. Pre-Charging the Accumulator

Note: *Replacement accumulators are not pre-charged when shipped.*

WARNING

NEVER fill an accumulator with oxygen! An explosion could result if oil and oxygen mix under pressure. Only fill accumulator with dry nitrogen.

Pre-charge accumulators with nitrogen gas only. Nitrogen gas is free of water vapor and oxygen which makes it harmless to internal parts and will not react if mixed with oil under pressure.

CAUTION

Never fill an accumulator with air. When air is compressed, water vapor condenses and can cause corrosion. This corrosion may damage seals and ruin the accumulator.

https://truckmanualshub.com/

NEVER charge an accumulator to a pressure more than specified. The proper pressure for these accumulators is 450 ± 35 psi (3103 ± 241 kPa).

Note: *Make sure the nitrogen bottle, as well as the charging and gauging assembly used is compatible with the gas valve assembly on the accumulator. The nitrogen source and all components must be rated for a pressure at least as high as the nitrogen source. It is strongly recommended that the nitrogen bottle has a high pressure regulator. Nitrogen gas bottles for water-pumped nitrogen have right-hand valve threads and are used with accumulators up to 3000 psi (207 bar).*

You will require an accumulator fill kit to properly charge the accumulators. Refer to Parts Manual for the correct part number or contact JLG Parts Department.

Use the following steps to properly pre-charge each accumulator:

1. Remove the floor plate to gain access to the accumulators.
2. Thoroughly clean the top of each accumulator.
3. Make sure the nitrogen supply is shut off.

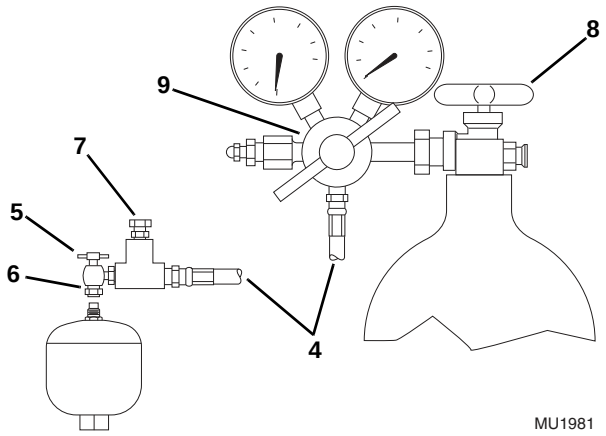

4. Attach the accumulator fill kit (**4**) to the nitrogen bottle.
5. Remove the protective cap from the gas valve on the accumulator.
6. Back the “T” handle (**5**) on the accumulator fill kit all the way out (counter-clockwise). Attach the schrader adaptor (**6**) to the gas valve on the accumulator. Tighten securely.
7. Turn the gas valve/bleed valve (**7**) on the accumulator fill kit all the way in.
8. Turn the “T” handle (**5**) all the way in to open the valve core on the accumulator.
9. Open the valve (**8**) on the nitrogen bottle.
10. Slowly adjust the regulator (**9**) on the nitrogen bottle to read 450 ± 35 psi (3103 ± 241 kPa).
11. Close the main valve (**8**) on the nitrogen bottle.
12. Back the “T” handle (**5**) on the accumulator fill kit all the way out (counter-clockwise).
13. Let the pre-charge on the accumulator set for 10-15 minutes. This will allow the gas temperature to stabilize. If the desired pre-charged range is exceeded, turn the “T” handle (**5**) all the way in. With the main valve (**8**) closed on the nitrogen bottle, turn the gas valve/bleeder valve (**7**) out to bleed pressure off the accumulator. Turn the valve all the way in and check the pressure reading on the regulator gauge.
14. When the correct pressure is reached, back the “T” handle (**5**) on the accumulator fill kit all the way out (counter-clockwise). Bleed the pressure from the hose by turning the gas valve/bleed valve out to relieve the pressure.
15. Turn the gas valve/bleed valve (**7**) all the way in and remove the schrader adapter (**6**) from the valve on the accumulator.
16. Reassemble the protective cap onto the gas valve on the accumulator.

https://truckmanualshub.com/

8.7.16 Checking Pre-Charge

a. Gas Leaks

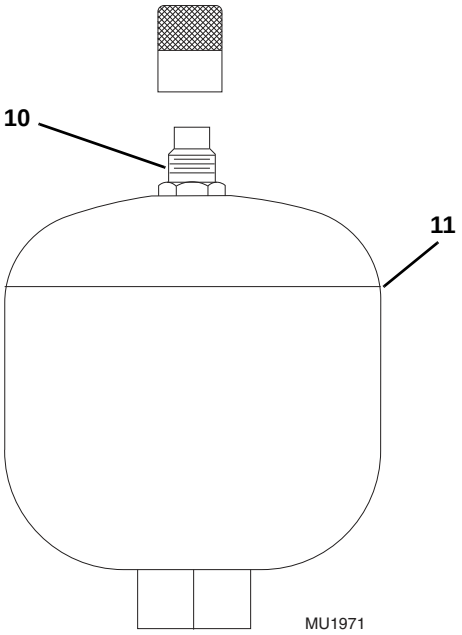

1. If an external leak is suspected, apply soapy water to the gas valve (**10**) and the seams of the gas bottle (**11**). If bubbles form, the accumulator has to be replaced.
2. If an internal leak is suspected, check for foaming oil in the hydraulic reservoir and/or no accumulator action. If any of these signs are evident, the accumulator has to be replaced.

b. Checking Accumulator Recharge Pressure and Nitrogen Pre-Charge

1. Park the machine on a firm, level surface, level the machine, fully retract the boom, raise the boom, place the transmission control lever in (N) NEUTRAL, engage the park brake and shut the engine OFF.
2. With the engine OFF, pump the brake pedal repeatedly until the accumulators are completely discharged. ALL stored pressure should now be removed from the brake accumulator system.
3. Remove the access plate from the cab floor.

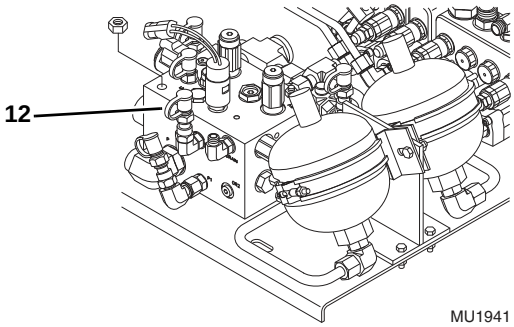

4. Locate the test port (**12**) on the accumulator charge/secondary function valve in the “SW” port. Attach a 3000 psi (207 bar) pressure gauge to the test port.
5. Start the engine and allow the accumulators to fully charge. Slowly pump the service brake pedal, while closely watching the test gauge.
6. Record the lowest pressure observed before the accumulator recharges. The pressure should be 950 -1200 psi (65 -83 bar). This reading is the accumulator recharge pressure.
7. Record the highest pressure observed when the accumulator charge valve shifts and unloads the pump. This pressure should be 1900 -2100 psi (131 -145 bar) and is the high limit. If the accumulator charge valve does not reach the high limit and continues to load the pump, refer to Section 8.7.17, “Accumulator Charge Troubleshooting,” step 2.
8. If either of these readings are outside the recommended range, the accumulator charge/secondary function valve may need repaired or replaced. Refer to Section 8.7.14, “Accumulators.”
9. Shut engine OFF.
10. Slowly pump the service brake pedal while closely watching the pressure gauge.
11. Record the lowest pressure observed before the pressure drops to nearly zero. This reading is the nitrogen pre-charge of the accumulators. This pressure should be approximately 450 psi (31 bar). If there is any doubt about the pressure reading, proceed to the next step.
12. If the nitrogen charge pressure is not correct, follow procedures in Section 8.7.16, “Checking Pre-Charge.”

https://truckmanualshub.com/

8.7.17 Accumulator Charge Troubleshooting

Problem	Cause	Remedy
1. Accumulator charging cycle repeats frequently when accumulator is not normally being discharged.	1. Incorrect accumulator gas charge on one or both accumulators.	1. Check accumulator gas charge. Refer to Section 8.7.16, “Checking Pre-Charge.”
	2. Joystick leaking internally.	2. Temporarily cap OFF “PIL” port and hose on accumulator charge /secondary function valve to see if problem is resolved. Troubleshoot joysticks if it does.
	3. Inoperative accumulator charging valve “UP” cartridge.	3. Check cartridge and replace as needed.
2. Accumulator starts to charge but does not reach high limit.	1. Pump worn or inoperative and not delivering full flow or pressure.	1. Increase engine RPM to see if pressure rises to high limit.
	2. Inoperative relief valve in accumulator charge/secondary function valve. Valve leaking or has low setting so full pressure cannot be reached.	2. Check relief valve and/or replace. Refer to Section 8.7.13, “Accumulator Charge/ Secondary Function Valve.”
	3. Inoperative accumulator charging valve. “UP” cartridge or valve adjusted too high.	3. Adjust or replace cartridge as needed.
3. Accumulator charging time too long.	1. Charge rate orifice or filter in accumulator charge/secondary function valve partially plugged.	1. Remove and clean charge rate orifice and filter. Contact the JLG Service Department if needed.
	2. Pump worn or inoperative and not delivering full flow or pressure.	2. Check pump flow and pressure. Refer to Section 8.7.14, “Accumulators.”
4. Accumulator fails to start charging.	1. Inoperative accumulator charging valve “EC” cartridge.	1. Check cartridge and replace as needed.
	2. Pump worn or inoperative and not delivering full flow or pressure.	2. Increase engine RPM to see if valve starts charge cycle.
	3. Charge rate orifice or filter in accumulator charge/secondary function valve partially plugged.	3. Remove and clean charge rate orifice and filter.

https://truckmanualshub.com/

8.8 HYDRAULIC CYLINDERS

1. Remove any attachment from the machine. Park the machine on a firm level surface and fully retract the boom. Allow sufficient work space around the hydraulic cylinder being removed. Support the boom if the lift/lower cylinder is being removed. Place the travel select lever in (N) NEUTRAL, engage the park brake, shut the engine OFF and chock wheels.
2. Place a Do Not Operate Tag on both the ignition key switch and the steering wheel, stating that the machine should not be operated.
3. Open the rear door. Allow the system fluids to cool.
4. Label, disconnect and cap or plug hydraulic hoses in relation to the cylinder.
5. Attach a suitable sling to an appropriate lifting device and to the cylinder. Make sure the device used can actually support the cylinder.
6. Remove the lock bolt and/or any retaining clips securing the cylinder pins. Remove the cylinder pins.
7. Remove the cylinder.
8. Wipe up any hydraulic fluid spillage in, on, near and around the machine, work area and tools.

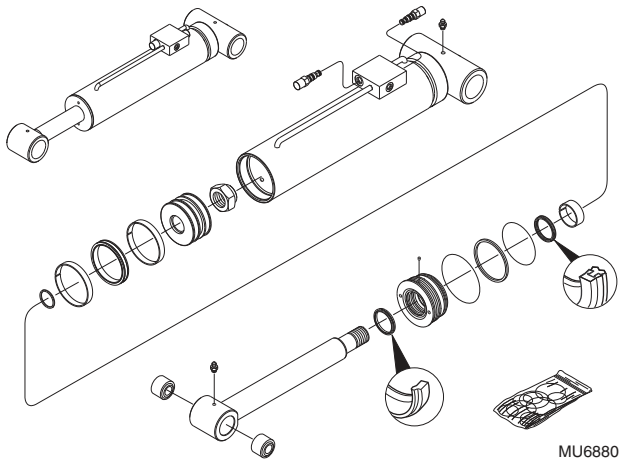

a. Cylinder Disassembly

1. Clean the cylinder with a suitable cleaner before disassembly. Remove all dirt, debris and grease from the cylinder.
2. Clamp the barrel end of the cylinder in a soft-jawed vise or other acceptable holding equipment if possible.

WARNING

Significant pressure may be trapped inside the cylinder. Exercise caution when removing a counterbalance valve or a pilot-operated check valve from a cylinder.

Note: *Avoid using excessive force when clamping the cylinder in a vise. Apply only enough force to hold the cylinder securely. Excessive force can damage the cylinder tube.*

3. If applicable, remove the counterbalance valve from the side of the cylinder barrel.

Note: *DO NOT tamper with or attempt to adjust the counterbalance valve cartridge. If adjustment or replacement is necessary, replace the counterbalance valve with a new part.*

4. Extend the rod as required to allow access to the base of the cylinder.

Note: *Protect the finish of the rod at all times. Damage to the surface of the rod can cause seal failure.*

5. Using a pin spanner wrench, unscrew the head gland from the tube. A considerable amount of force will be needed to remove the head gland. Carefully slide the head gland down along the rod toward the rod eye, away from the cylinder barrel.

Note: *When sliding the rod and piston assembly out of the barrel, prevent the threaded end of the barrel from damaging the piston. Keep the rod centered within the barrel to help prevent binding.*

6. Carefully pull the rod assembly along with the head gland out of the cylinder barrel.
7. Fasten the rod eye in a soft-jawed vise, and place a padded support under and near the threaded end of the rod to prevent any damage to the rod.
8. Remove the set screw from the piston head.

Note: *It may be necessary to apply heat to break the bond of the sealant between the piston and the rod before the piston can be removed.*

https://truckmanualshub.com/

Some cylinder parts are sealed with a special organic sealant and locking compound. Before attempting to disassemble these parts, remove any accessible seals from the area of the bonded parts. Wipe off any hydraulic oil, then heat the part(s) uniformly to break the bond. A temperature of 300-400° F (149-204° C) will destroy the bond. Avoid overheating, or the parts may become distorted or damaged. Apply sufficient torque for removal while the parts are still hot. The sealant often leaves a white, powdery residue on threads and other parts, which must be removed by brushing with a soft brass wire brush prior to reassembly.

9. Remove the piston head from the rod and carefully slide the head gland off the end of the rod.
10. Remove all seals, back-up rings and o-rings from the piston head and all seals, back-up rings and o-rings from the head gland.

Note: *The head gland bearing will need to be inspected to determine if replacement is necessary.*

DO NOT attempt to salvage cylinder seals, sealing rings or o-rings. ALWAYS use a new, complete seal kit when rebuilding hydraulic components. Consult the parts catalog for ordering information.

b. Cylinder Cleaning Instructions

1. Discard all seals, back-up rings and o-rings. Replace with new items from seal kit to ensure proper cylinder function.
2. Clean all metal parts with an approved cleaning solvent such as trichlorethylene. Carefully clean cavities, grooves, threads, etc.

Note: *If a white powdery residue is present on threads or parts, it can be removed by using a soft brass wire brush. Wipe clean with Loctite Cleaner prior to reassembly.*

c. Cylinder Inspection

1. Inspect internal surfaces and all parts for wear, damage, etc. If the inner surface of the cylinder barrel does not display a smooth finish, or is scored or damaged in any way, replace the barrel.
2. Remove light scratches on the piston, head gland, rod or inner surface of the cylinder barrel with a 400-600 grit emery cloth. Use the emery cloth in a rotary motion to polish out and blend the scratch(es) into the surrounding surface.
3. Check the piston rod assembly for run-out. If the rod is bent, it must be replaced.

d. Cylinder Assembly Instructions

1. Use the proper tools for specific installation tasks. Clean tools are required for installation.
2. Install new seals, back-up rings and o-rings on the piston and new seals, back-up rings, o-rings and bearing on the head gland.

Note: *The extend/retract cylinder has a spacer that MUST be installed over the rod AFTER the head gland and BEFORE the piston head.*

3. Fasten the rod eye in a soft-jawed vise, and place a padded support under and near the threaded end of the rod to prevent any damage to the rod.

CAUTION

Protect the finish on the cylinder rod at all times. Damage to the surface of the rod can cause seal failure.

4. Lubricate and slide the head gland over the cylinder rod. Install the piston head on to the end of the cylinder rod. Loctite and install the set screw in the piston head. Refer to Section 8.8.3, “Cylinder Torque Specifications” for torque specifications for the piston head and the set screw.

CAUTION

Avoid using excess force when clamping the cylinder barrel in a vise. Apply only enough force to hold the cylinder barrel securely. Excessive force can damage the cylinder barrel.

5. Place the cylinder barrel in a soft-jawed vise or other acceptable holding devise.

Note: *When sliding the rod and piston assembly into the cylinder barrel, prevent the threaded end of the cylinder barrel from damaging the piston head. Keep the cylinder rod centered within the barrel to prevent binding.*

6. Carefully insert the cylinder rod assembly into the cylinder barrel.
7. Screw the head gland into the cylinder barrel and tighten with a spanner wrench. Refer to Section 8.8.3, “Cylinder Torque Specifications” for torque specifications for the head gland.
8. If applicable, install new counter balance valve into block on the cylinder barrel.

https://truckmanualshub.com/

e. Cylinder Installation

1. Grease the bushings at the ends of the hydraulic cylinder. Using an appropriate sling, lift the cylinder into it's mounting position.
2. Align cylinder bushing and install pin, lock bolt or retaining clip.
3. Connect the hydraulic hoses in relation to the labels or markings made during removal.
4. Before starting the machine, check fluid level of the hydraulic fluid reservoir and if necessary fill to full mark with Mobilfluid 424® (ISO 46).
5. Start the machine and run at low idle for about one minute. Slowly activate hydraulic cylinder function in both directions allowing cylinder to fill with hydraulic oil.
6. Inspect for leaks and check level of hydraulic fluid in reservoir. Add hydraulic fluid if needed. Shut the engine OFF.
7. Wipe up any hydraulic fluid spillage in, on, near and around the machine, work area and tools.
8. Close and secure the engine cover.

8.8.1 Cylinder Pressure Checking

Attach a 4000 psi (276 bar) gauge to the test port on the hydraulic pump to check the system pressure. For more information, refer to Section 8.3.1, "Pressure Checks and Adjustments."

Note: *If a hydraulic cylinder pressure is greater than the main control valve pressure, increase the main control valve pressure by adjusting the main relief. Generally, one half turn clockwise will be adequate to check an individual circuit. Activate the circuit and if pressure is obtained turn the main relief counter clockwise one half turn. Re-check the main relief setting and adjust if necessary.*

8.8.2 Steering Cylinders

The steer cylinder is attached to each axle center housing.The steer cylinder assembly can be found in Section 5.3, "Axle Assemblies." The steer cylinder is covered in the appropriate manufacturer's axle literature.

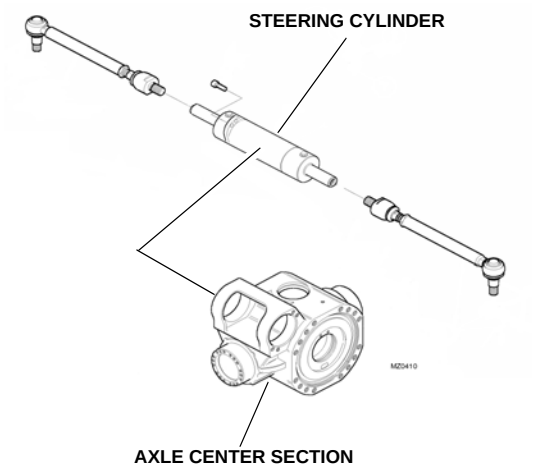

https://truckmanualshub.com/

8.8.3 Cylinder Torque Specifications

a. Lift/Lower Cylinder

Locknut	Head	Counterbalance Valve	Hex Plugs
2200-2600 lb-ft (2983-3525 Nm)	500-600 lb-ft (678-814 Nm)	45-50 lb-ft (61-68 Nm)	10-12 lb-ft (14-16 Nm)

b. Extend/Retract Cylinder

Piston	Set Screw	Head	Counterbalance Valve
330-390 lb-ft (447-529 Nm)	13-15 lb-ft (18-20 Nm)	300-400 lb-ft (407-542 Nm)	45-50 lb-ft (61-68 Nm)

c. Tilt Cylinder

Locknut	Head	Valve
1100-1250 lb-ft (1491-1695 Nm)	300-400 lb-ft (407-542 Nm)	30-35 lb-ft (41-47 Nm)

d. Sway Cylinder

Head	Locknut	Valve	Hex Plugs
300-400 lb-ft (407-542 Nm)	1840-2025 lb-ft (2495-2745 Nm)	35-40 lb-ft (47-54 Nm)	10-12 lb-ft (14-16 Nm)

e. Transfer Carriage Cylinder

Head	Locknut
250-300 lb-ft (339-407 Nm)	500-550 lb-ft (678-746 Nm)

f. Slave Cylinder

Head	Locknut
250-300 lb-ft (339-407 Nm)	445-515 lb-ft (603-698 Nm)

g. Stabilizer Cylinder

Head	Locknut	Valve
300-400 lb-ft (407-542 Nm)	1840-2025 lb-ft (2495-2745 Nm)	35-40 lb-ft (47-54 Nm)

https://truckmanualshub.com/

h. Swing Carriage Cylinder (optional)

Piston	Set Screw	Head	Valves
440-500 lb-ft (597-678 Nm)	85-95 lb-ft (115-129 Nm)	250-300 lb-ft (339-407 Nm)	30-35 lb-ft (41-47 Nm)

i. Side Tilt Carriage Cylinder (optional)

Locknut	Head	Valve
550-650 lb-ft (745-881 Nm)	300-400 lb-ft (407-542 Nm)	30-35 lb-ft (41-47 Nm)

https://truckmanualshub.com/

Section 9
Electrical System

Contents

PARAGRAPH	TITLE	PAGE
9.1	**Electrical Component Terminology**	**9-3**
9.1.1	General Overview	9-3
9.2	**Specifications**	**9-4**
9.3	**Safety Information**	**9-4**
9.4	**Fuses and Relays**	**9-4**
9.4.1	Engine Compartment	9-4
9.4.2	Cab	9-4
9.4.3	Cab Harness Fuses and Relays	9-5
9.5	**Electrical Schematics**	**9-6**
9.5.1	Electrical Symbols Directory	9-6
9.5.2	944E-42 Electrical Schematics	9-7
9.6	**Circuit Breakdowns**	**9-12**
9.6.1	Constant Power Circuit from Battery	9-12
9.6.2	Start & Charge Circuit	9-13
9.7	**Engine Start Circuit**	**9-14**
9.7.1	Starter	9-14
9.8	**Charging Circuit**	**9-15**
9.8.1	Alternator	9-15
9.9	**Window Wiper/Washer Windshield Wiper Motor**	**9-16**
9.9.1	Windshield Wiper Motor	9-16
9.9.2	Skylight Wiper Motor	9-17
9.9.3	Rear Wiper Switch/Motor	9-18
9.9.4	Windshield Washer Reservoir and Pump	9-19
9.10	**Cab Heater and Fan**	**9-20**
9.10.1	Cab Heater Controls	9-20

https://truckmanualshub.com/

9.11 Switches and Solenoids 9-21
9.11.1 Ignition Key Switch 9-21
9.11.2 Hydraulic Oil Filter Pressure Switch 9-21
9.11.3 Dual Hydraulic Oil Temperature Switch 9-22
9.11.4 Auxiliary Hydraulic Pressure Release Switch 9-23
9.11.5 Parking Brake Switch 9-23
9.11.6 Transmission Disconnect Switch 9-24
9.11.7 Transmission Shift Control Switch 9-25
9.11.8 Transmission Solenoid Valves 9-25
9.11.9 Dual Joystick 9-27
9.11.10 Optional Single Joystick 9-28
9.11.11 Boom Angle Sensor 9-30
9.11.12 Coolant Temperature Switch 9-31
9.11.12 Coolant Temperature Switch 9-31
9.11.13 Transmission Temperature Switch 9-32
9.11.14 Fuel Level Gauge and Fuel Level Sender 9-32
9.11.15 Hourmeter 9-33
9.11.16 Stabilizer Brake Switch 9-34
9.12 Dash Switches 9-36
9.12.1 Dash Switches 9-36
9.13 Troubleshooting 9-37
9.13.1 Engine Fault Codes Retrieval 9-37
9.13.2 Engine Fault Codes Chart 9-37
9.13.3 Troubleshooting with a Digital Multimeter (DMM) 9-50
9.13.4 Probing Electrical Connectors 9-50

https://truckmanualshub.com/

9.1 ELECTRICAL COMPONENT TERMINOLOGY

To understand the safety, operation, and service information presented in this section, it is necessary that the operator/mechanic be familiar with the name and location of the electrical components of the machine. The following illustration identifies the components that are referred to throughout this section.

9.1.1 General Overview

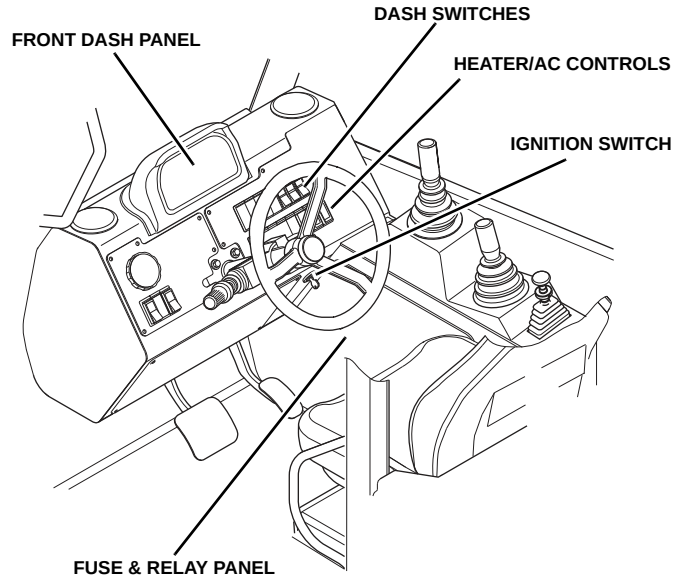

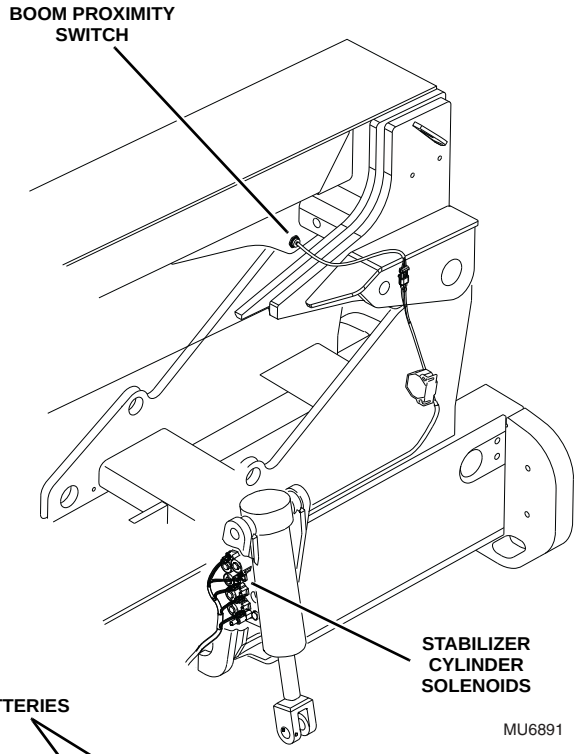

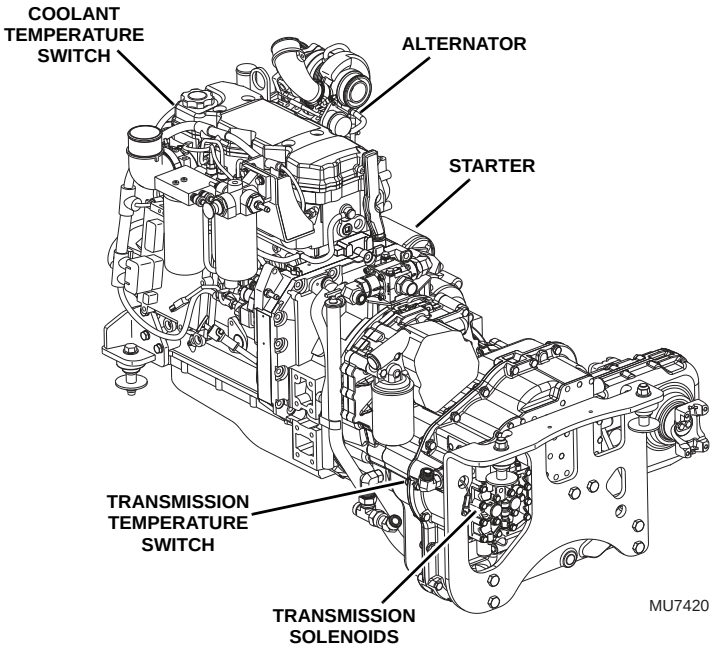

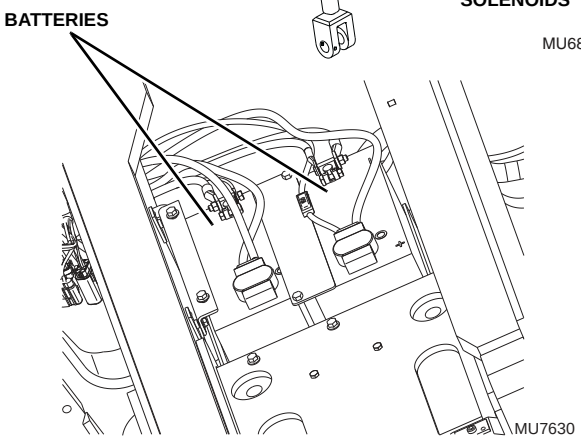

https://truckmanualshub.com/

9.2 SPECIFICATIONS

Electrical system specifications are listed in Section 2, “General Information and Specifications.”

9.3 SAFETY INFORMATION

WARNING

DO NOT service the machine without following all safety precautions as outlined in Section 1, “Safety Practices,” of this manual.

9.4 FUSES AND RELAYS

9.4.1 Engine Compartment

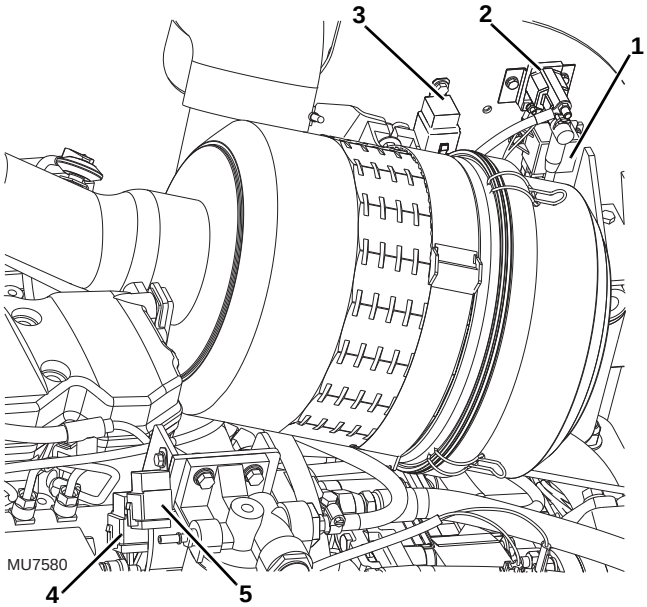

The starter relay (**1**), grid heater relay (**2**), grid heater fuse block (**3**) for the cold start grid heater (if equipped) are located inside the engine compartment and are mounted on the firewall.

The oil pressure sender relay (**4**) and water temperature sender relay (**5**) are located inside the engine compartment and are mounted on the fuel filter bracket.

The fuse holder that protects the ECM diagnostic system is located under the engine hood and is tie wrapped to the wire harness by the engine starter.

9.4.2 Cab

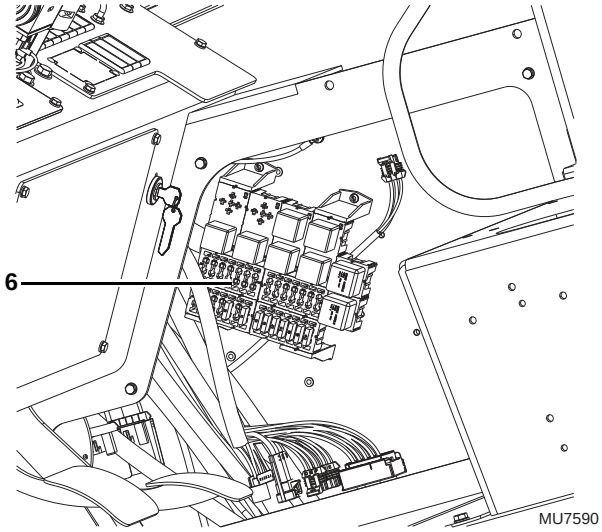

The fuse and relay block (**6**) is mounted under the lower right side of the operators side console. To gain access, remove the cover plate from the right side console.

https://truckmanualshub.com/

9.4.3 Cab Harness Fuses and Relays

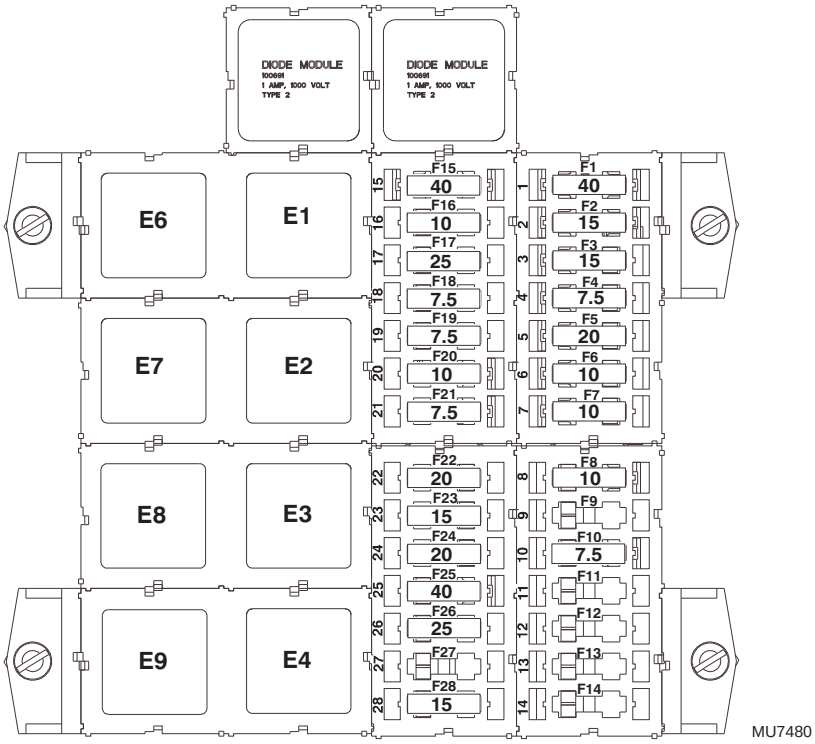

No.	Amp	Circuit
1	40 Amp	Open Cab Machine Main
2	15 Amp	Ignition Control
3	15 Amp	Transmission
4	7.5 Amp	Fuel Solenoid
5	20 Amp	Ignition Power
6	10 Amp	Back-up Alarm/Horn
7	10 Amp	Stability Circuit
8	10 Amp	Dash
9	-	Open
10	7.5 Amp	Auxiliary Hydraulic
11	-	Open
12	-	Open
13	-	Open
14	3 Amp	ECM Indicator Light
15	40 Amp	Closed Cab Main (Option)
16	10 Amp	Front Wiper (Option)
17	25 Amp	Heater Fan (Option)
18	7.5 Amp	Skylight Wiper (Option)
19	7.5 Amp	Rear Wiper (Option)
20	10 Amp	Beacon/Strobe (Option)

No.	Amp	Circuit
21	7.5 Amp	Brake Lights (Option)
22	20 Amp	Headlights (Option)
23	15 Amp	Turn Signals (Option)
24	20 Amp	Worklight (Option)
25	40 Amp	Lights Main (Option)
26	25 Amp	Condenser Fan (Option)
27	-	Open
28	15 Amp	Hazard Switch

No.	Volt	Circuit
E1	12 Volt	Transmission Control
E2	12 Volt	Ignition
E3	12 Volt	Neutral Start
E4	12 Volt	Back-Up Alarm
E5	-	Open
E6	12 Volt	Stability Lock
E7	12 Volt	Boom Proximity
E8	12 Volt	Light Power (Option)
E9	12 Volt	Cab Power (Option)
E10	-	Open

https://truckmanualshub.com/

9.5 ELECTRICAL SCHEMATICS

9.5.1 Electrical Symbols Directory

The following directory shows the most common electrical symbols used in the electrical schematics and circuit diagrams in this section.

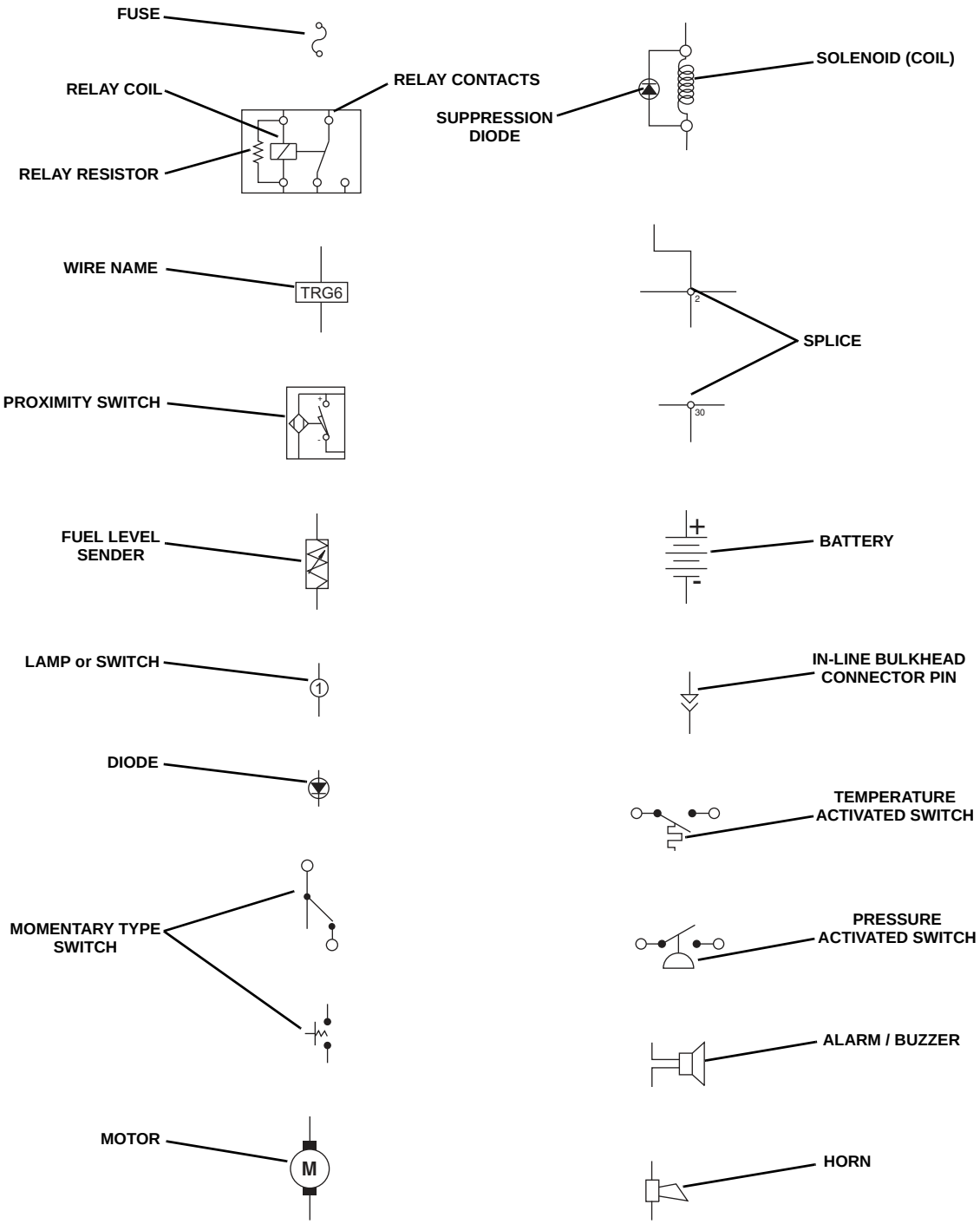

https://truckmanualshub.com/

9.5.2 944E-42 Electrical Schematics

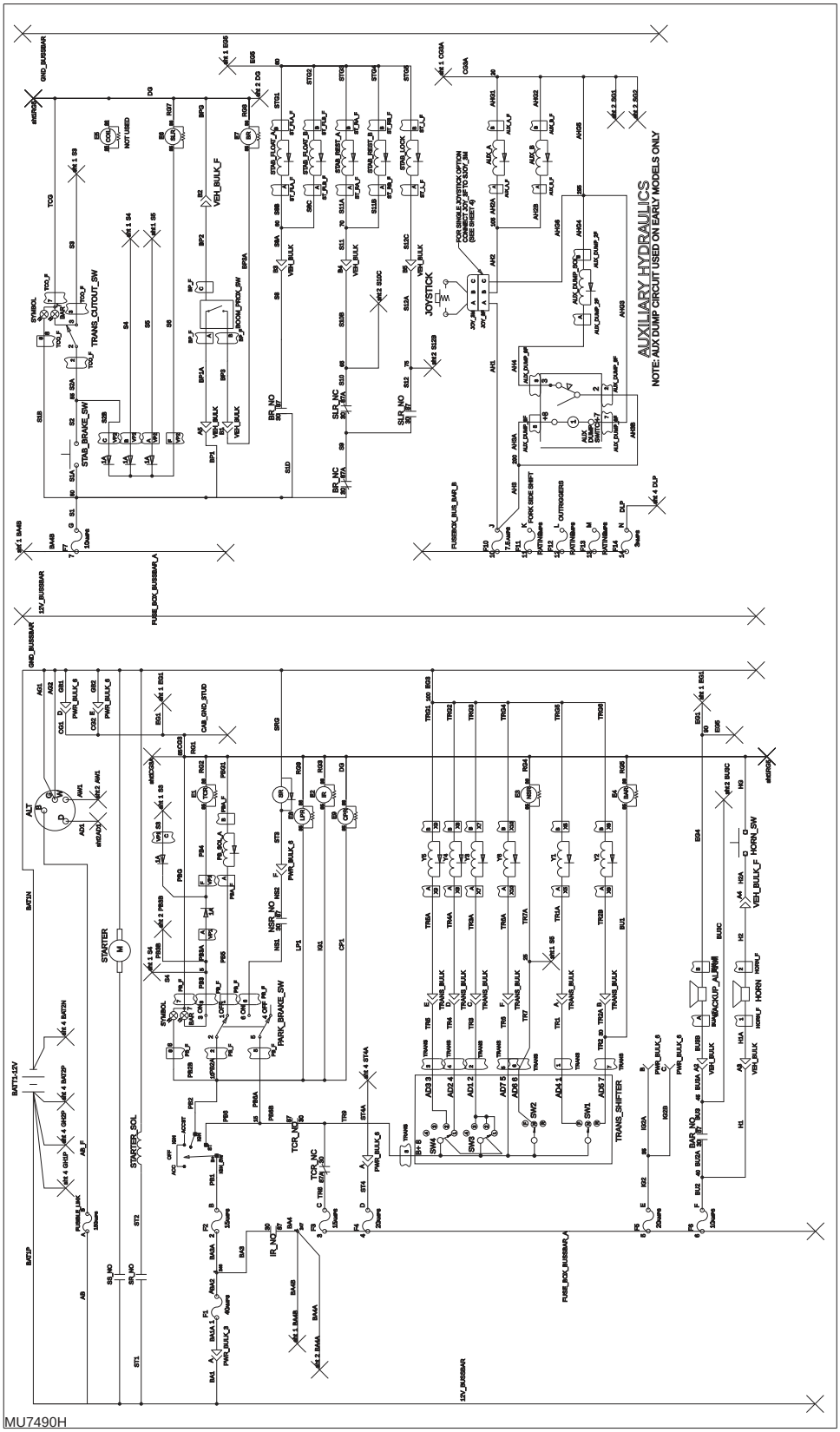

https://truckmanualshub.com/

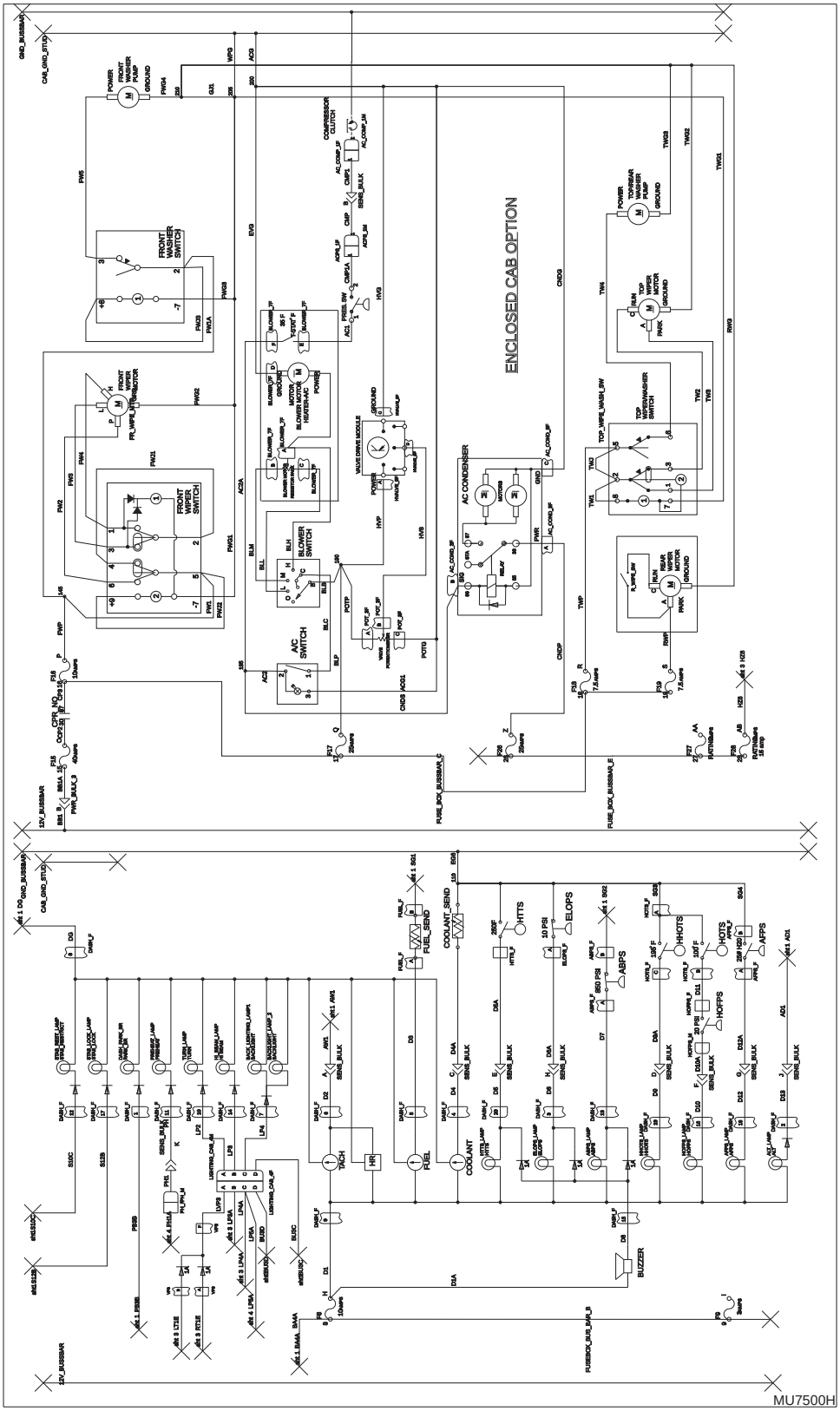

https://truckmanualshub.com/

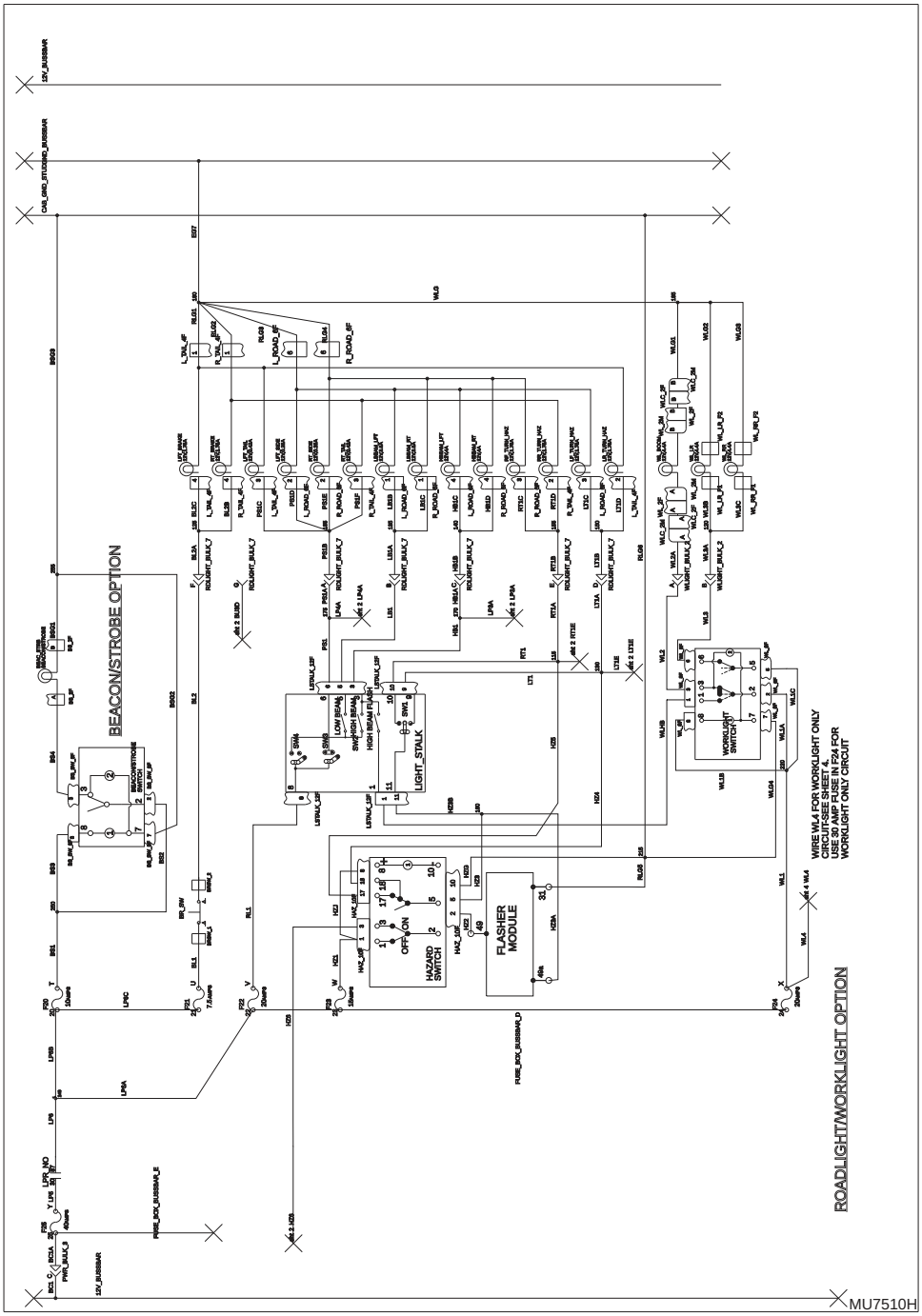

https://truckmanualshub.com/

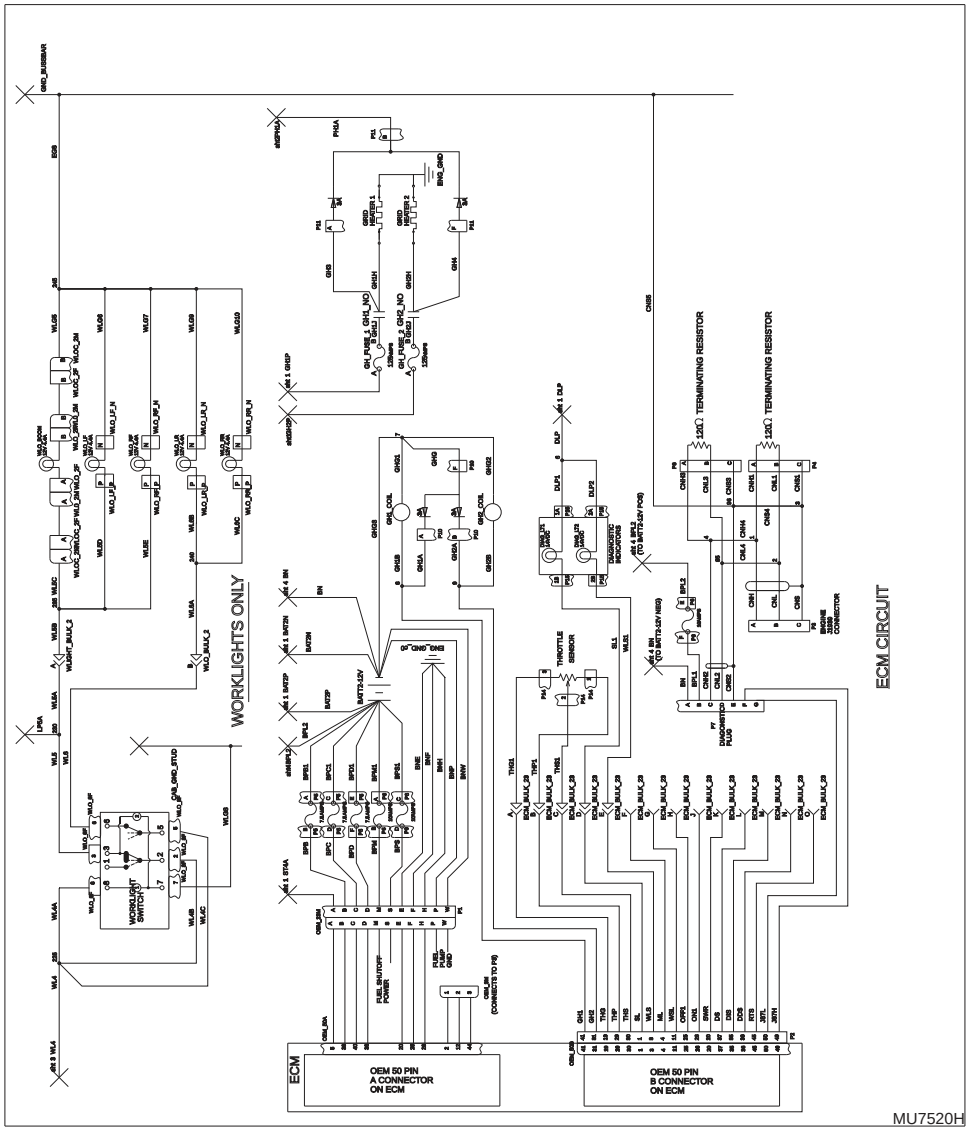

https://truckmanualshub.com/

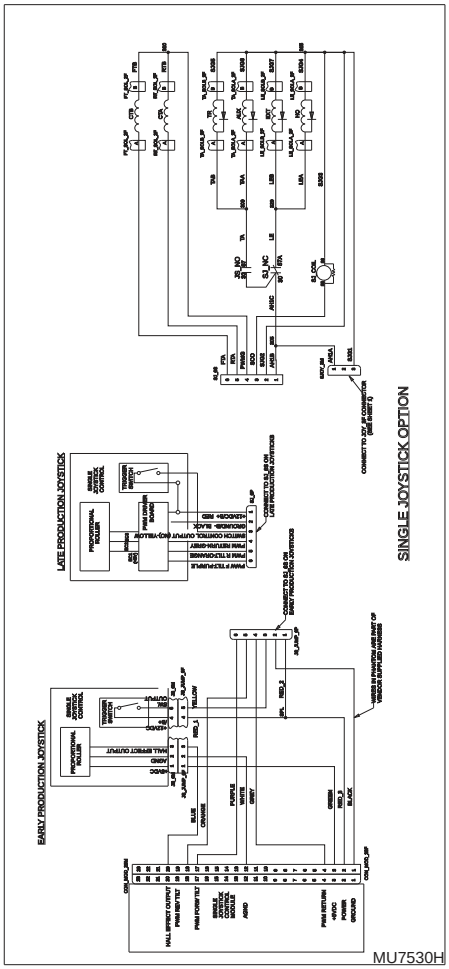

https://truckmanualshub.com/

9.6 CIRCUIT BREAKDOWNS

9.6.1 Constant Power Circuit from Battery

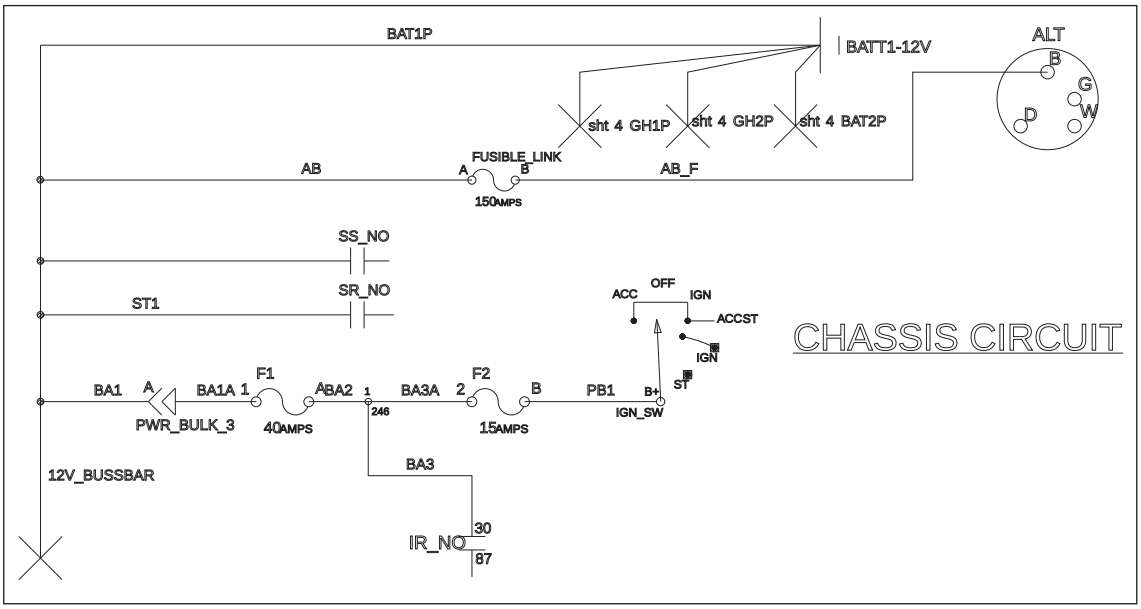

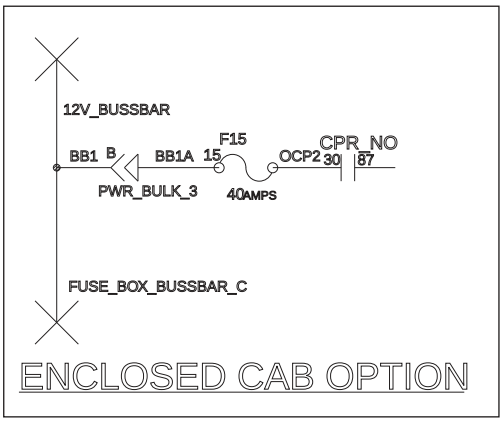

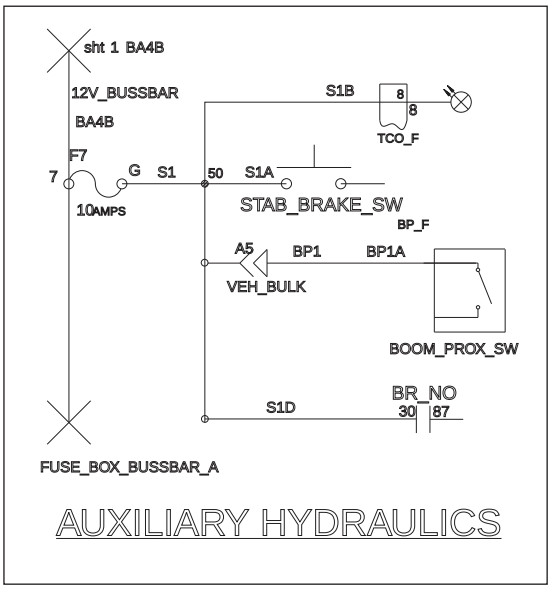

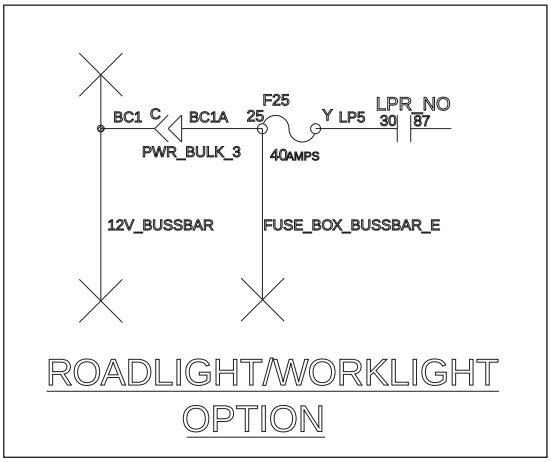

MU7550

https://truckmanualshub.com/

9.6.2 Start & Charge Circuit

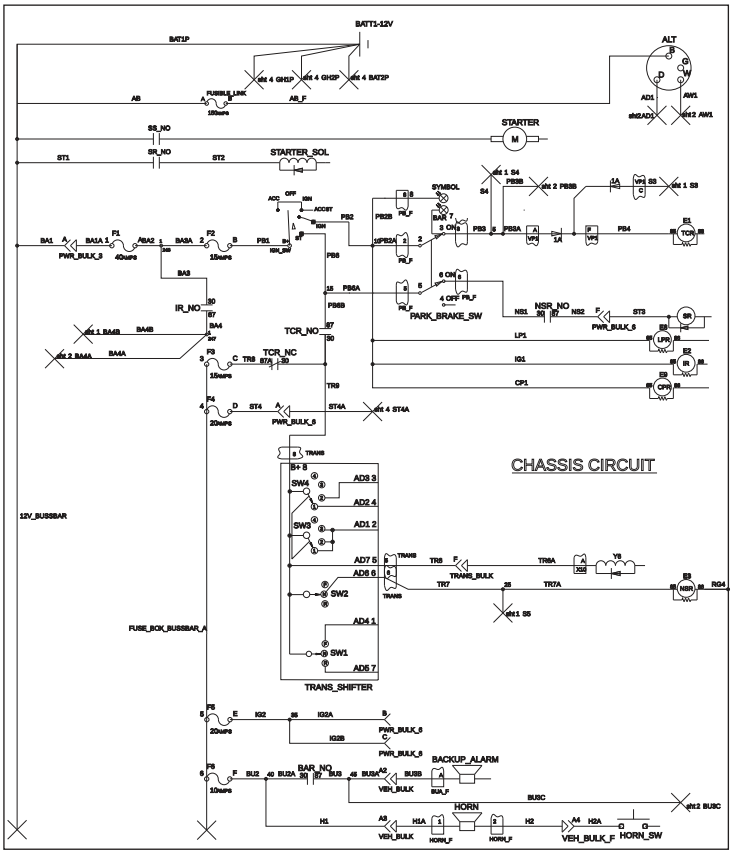

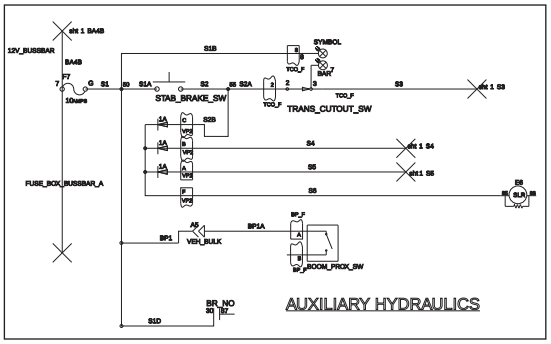

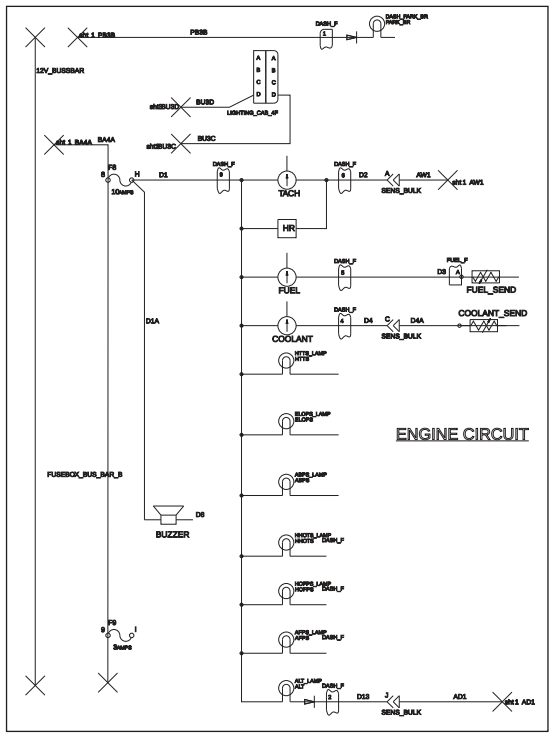

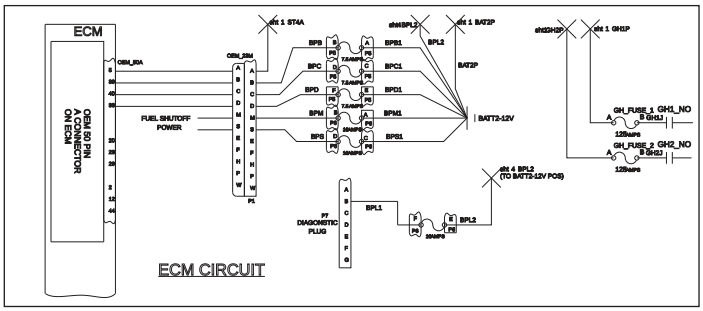

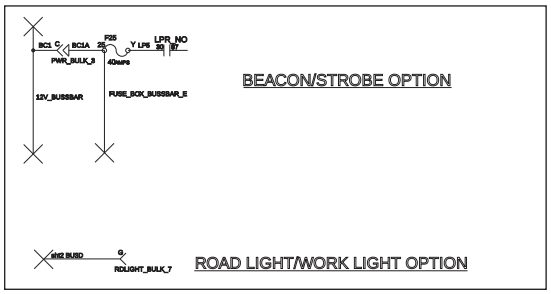

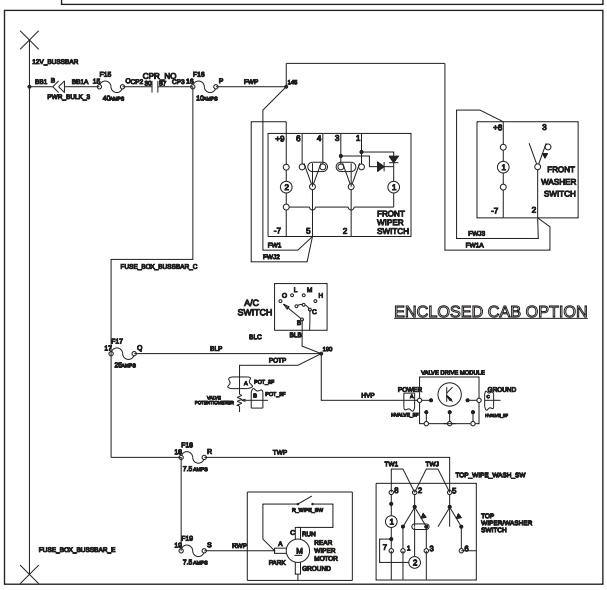

MU7540

https://truckmanualshub.com/

9.7 ENGINE START CIRCUIT

9.7.1 Starter

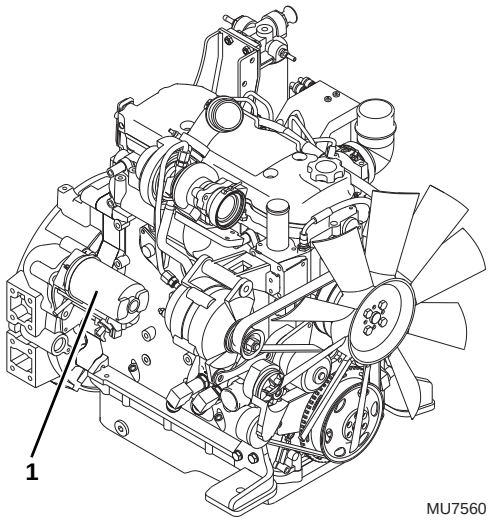

The starter (**1**) is located on the left side of the engine.

a. Testing the Starter on the Engine

If the starter does not engage when the ignition key switch is turned, check the following:

1. The main fuse may be blown, requiring replacement. Check for the cause of the blown fuse.
2. There may be a defect in the ignition key switch, ignition wiring or starter solenoid.
3. Check battery condition. Clean the battery posts and the connectors at each end of the battery cables.
4. Check for broken wiring and damaged insulation on the wiring. Replace all broken or damaged wiring.
5. Check all connections at the starter solenoid, key switch and wiring harness plugs. Clean and tighten all connections.
6. If the starter still does not operate after these checks have been performed, check the starting circuit.

b. Starter Circuit Checks

1. Check wires and connections for looseness, corrosion, damage, etc.
2. If a “whirring” noise is heard but the engine does not turn over, the starter is spinning but not engaging the flywheel. The starter drive or solenoid that pushes the drive forward to engage the flywheel may be defective. Missing or damaged teeth on the flywheel can also prevent the starter from cranking the engine.
3. If the starter only “clicks” it may indicate that the battery is discharged, or that there is a loose or corroded battery cable connection. Check the battery state of charge and battery condition first, then check the cables and cable connections.
4. For additional information on the starting circuit, refer to Section 9.5, “Electrical Schematics.”

c. Starter Removal

Remove the starter only if it fails. To remove the starter:

1. Open the engine cover. Allow the system fluids to cool.
2. Properly disconnect the batteries.
3. Remove the wires from the solenoid stud. Remove the positive (+) battery cable from the starter. Label and disconnect the wire from the starter solenoid housing stud. Record how the wires are installed to ensure correct installation later.
4. Loosen, but DO NOT remove, the fasteners securing the starter to the flywheel housing. Support the starter securely, as it is relatively heavy and will fall if not supported.
5. Support the starter and remove the fasteners securing the starter to the engine. Remove the negative (-) ground cable from its starter mounting bolt.
6. Remove the starter from the machine.

d. Starter Installation

1. Position the starter in its mounting opening on the flywheel housing. Position the ground cable over the correct starter mounting bolt. Secure the starter with the previously used hardware.
2. Connect the positive (+) battery cable to the upper solenoid stud. Install the wires to the upper solenoid stud, and secure with lock washer and nut.
3. Connect the wire to the solenoid mounting stud.
4. Properly connect the batteries.
5. Close and secure the engine cover.

https://truckmanualshub.com/

9.8 CHARGING CIRCUIT

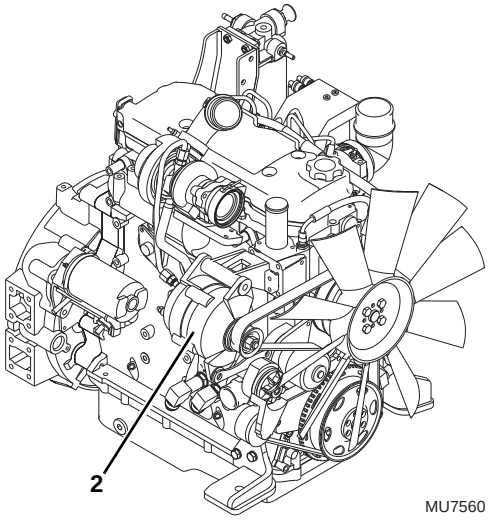

Before using a battery charger, an attempt can be made to recharge the battery by jump-starting the machine (Refer to the appropriate Operation & Safety Manual). Allow the engine to run, which will enable the alternator (**2**) to charge the battery.

If the engine alternator charging warning indicator illuminates, perform the following checks:

1. Check all battery cable connections at the battery, and verify that they are clean and tight.
2. Check the external alternator wiring and connections, and verify that they are in good condition.
3. Check the fan belt condition and tension.
4. Run the engine and check the alternator for noise. A loose drive pulley, loose mounting hardware, worn or dirty internal alternator bearings, a defective stator or defective diodes can cause noise. Replace a worn or defective alternator.

9.8.1 Alternator

a. Alternator Removal

1. Open the engine cover. Allow the system fluids to cool.
2. Properly disconnect the batteries.
3. Install a drive ratchet into the square hole in the serpentine belt tensioner bracket.
4. While lifting the automatic belt tensioner away from the belt, remove the fan serpentine belt.

Note: *Record how the alternator is installed to ensure correct installation later.*

5. Label and disconnect the wire leads attached to the alternator.
6. Remove the lower mounting capscrew securing the alternator to the lower mounting hole on the engine.
7. While supporting the alternator with one hand, remove the upper (longer) mounting hardware from the upper alternator mount. Remove the alternator from the machine.

b. Alternator Installation

1. Position the alternator and align with the upper alternator mount on the engine bracket. Insert the upper (longer) mounting hardware through the alternator mount. Thread the longer capscrew into the alternator front mount. DO NOT tighten completely at this time.
2. Align the lower alternator mount hole with the lower mounting bracket on the engine, and insert the lower mounting capscrew. Tighten the lower capscrew and upper capscrew securely.
3. Place a drive ratchet into the square hole on the serpentine belt tensioner bracket. Apply pressure against the tensioner bracket and route the serpentine belt onto the alternator and engine pulleys. Release and check the tensioner pulley to verify that it is pivoting freely in order to provide the proper tension on the belt. Check for proper belt alignment. (Refer to the appropriate Operation & Safety Manual.)
4. Connect the previously labeled wire leads to the alternator.
5. Properly connect the batteries.
6. Close and secure the engine cover.

https://truckmanualshub.com/

9.9 WINDOW WIPER/WASHER WINDSHIELD WIPER MOTOR

9.9.1 Windshield Wiper Motor

a. Removal

Note: *It may be necessary to remove several hydraulic hoses from behind the dash in order to remove and install the wiper motor housing. (Refer to Section 8.7.9, "Service Brake Valve," or Section 8.7.11, "Power Steering Valve."*

1. Park the machine on a firm, level surface, level the machine, fully retract the boom, lower the boom, place the transmission control lever in (N) NEUTRAL, engage the park brake and shut the engine OFF.
2. Place a Do Not Operate Tag on both the ignition key switch and the steering wheel, stating that the machine should not be operated.
3. Open the engine cover. Allow the system fluids to cool.
4. Properly disconnect the batteries.

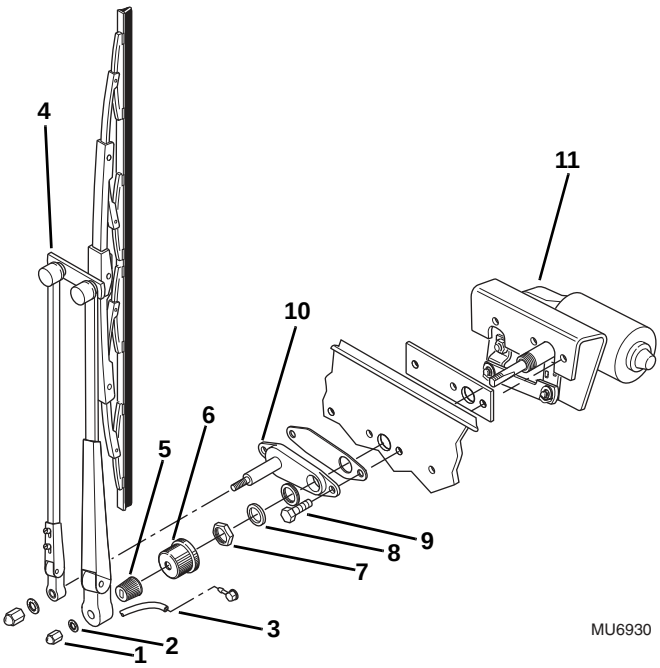

5. From the outside and front of the cab, remove the nuts (**1**) and washers (**2**) from the motor shaft.
6. Disconnect the washer hose (**3**) from the hose connector.
7. Remove the wiper arms (**4**), knurled driver (**5**) and rubber cap (**6**) from the motor shaft.
8. Remove the metal hex jam nut (**7**) and metal washers (**8**) from the motor shaft.
9. Tag and remove any hydraulic or electrical components which will be in the way of removing the wiper motor.
10. Remove the motor mounting bolts (**9**), pantographic adapter (**10**) and gasket from the motor shaft.

Note: *Retain all hardware removed from the wiper assembly for possible reuse on the replacement motor housing.*

11. Disconnect the cab harness connector and the ground wire from the wiper motor (**11**).
12. Remove the motor from the inside of the cab.

b. Disassembly

DO NOT disassemble the motor. The motor is not serviceable. Replace motor if found to be defective.

c. Inspection and Replacement

Inspect the motor terminals for continuity. Replace motor if continuity is not found.

d. Installation and Testing

Note: *An assistant will be required for the installation of the front windshield wiper motor.*

1. Connect the cab harness connector and ground wire to the wiper motor.
2. Align motor with the mounting holes and insert motor through cab.
3. Have an assistant insert gasket, pantographic adapter onto the motor shaft. Insert bolts through front cab holes and thread into motor housing. Tighten bolts.
4. Install metal washer and metal hex jam nut. Tighten metal hex jam nut. Install rubber cap and knurled driver onto the motor shaft.
5. Replace any hydraulic or electrical components which were removed earlier to remove the wiper motor
6. Properly connect the batteries.
7. With the ignition switch in the run position, press the front wiper switch to the LOW position and then back to the OFF position to "Park" the front wiper motor on the left side of the windshield.

https://truckmanualshub.com/

8. Install wiper arm assembly to the wiper motor shaft. The blade should be parallel with the left side of the windshield. Install the wiper washer hose onto the hose adapter.
9. Turn the ignition key to the RUN position and turn front wiper switch to the ON position. Ensure wiper stays on the window through a full stroke. Turn the front wiper switch to the OFF position
10. If previously removed, install hydraulic hoses under the dash. (Refer to Section 4.3.1, “Steering Column and Steering Valve.”)
11. Close and secure the engine cover.

9.9.2 Skylight Wiper Motor

a. Removal

1. Park the machine on a firm, level surface, level the machine, fully retract the boom, lower the boom, place the transmission control lever in (N) NEUTRAL, engage the park brake and shut the engine OFF.
2. Place a Do Not Operate Tag on both the ignition key switch and the steering wheel, stating that the machine should not be operated.
3. Open the engine cover. Allow the system fluids to cool.
4. Properly disconnect the batteries.
5. Remove the skylight wiper arm from the wiper motor shaft.
6. Disconnect the washer hose from the top hose fitting.

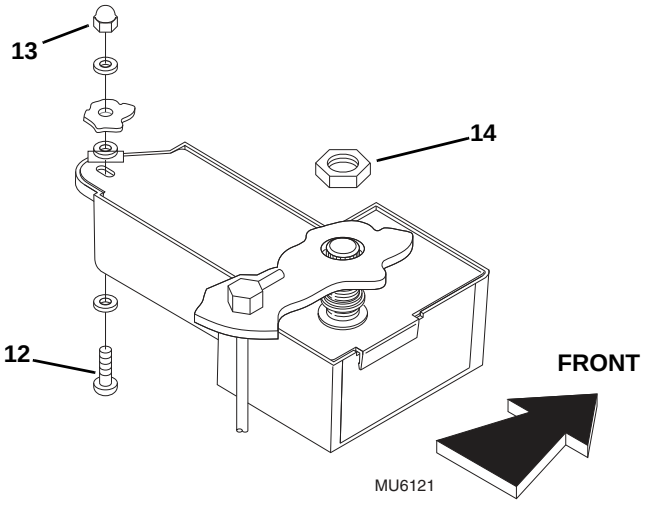

7. From inside the cab, remove the screw (**12**) and acorn nut (**13**) from the plastic case of the wiper motor.
8. From the top of the cab, remove the nut (**14**) from the wiper motor shaft.
9. From inside the cab, pull the wiper motor down and away from the roof.
10. Label and disconnect the cab harness connectors from the wiper motor.

b. Disassembly

DO NOT disassemble the motor. The motor is not serviceable. Replace motor if found to be defective.

c. Inspection and Replacement

Inspect the motor terminals for continuity. Replace motor if continuity is not found.

d. Installation and Testing

Note: *An assistant will be required for the installation of the skylight wiper motor.*

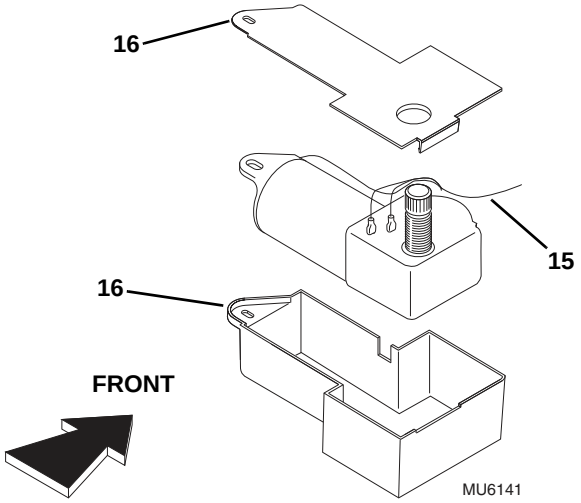

1. Reconnect the previously labeled electrical connections (**15**).
2. Assemble the plastic case (**16**) onto the wiper motor.

https://truckmanualshub.com/

3. With the help of an assistant, insert the wiper motor through the roof hole and have the assistant thread the nut onto the wiper motor shaft. Ensure that the motor housing is facing the front of the cab.
4. Secure the tab of the plastic case using the previously removed screw and acorn nut.

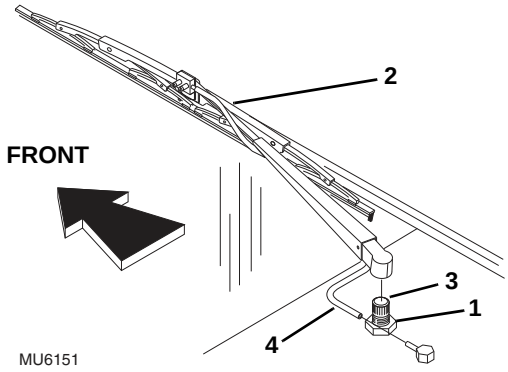

5. Tighten the motor shaft nut (**1**).
6. Install the wiper arm (**2**) onto the wiper motor shaft (**3**).
7. Connect washer hose (**4**) to top hose fitting.
8. Properly connect the batteries.
9. Turn the ignition key to the RUN position and turn skylight wiper switch to the ON position. Ensure wiper stays on the window through a full stroke. Turn the skylight wiper switch to the OFF position.
10. Engage the washer switch and ensure washer fluid is sprayed on the skylight window. Turn the ignition key switch to the OFF position.
11. Close and secure the engine cover.

9.9.3 Rear Wiper Switch/Motor

a. Removal

1. Park the machine on a firm, level surface, level the machine, fully retract the boom, lower the boom, place the transmission control lever in (N) NEUTRAL, engage the park brake and shut the engine OFF.
2. Place a Do Not Operate Tag on both the ignition key switch and the steering wheel, stating that the machine should not be operated.
3. Open the engine cover. Allow the system fluids to cool.
4. Properly disconnect the batteries.
5. Remove the rear wiper arm from the rear wiper motor shaft.

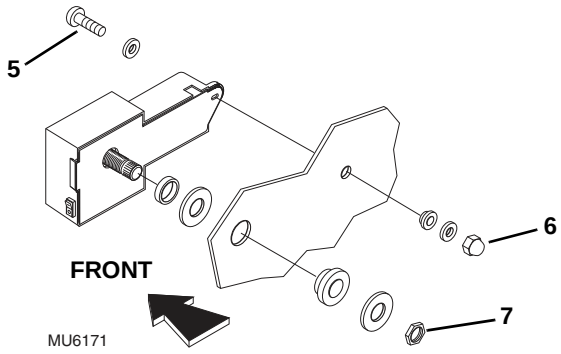

6. From inside the cab, remove the phillips screw (**5**), washers and acorn nut (**6**) securing the right side of the plastic case and wiper motor to the rear window.
7. From the outside of the cab, remove the nut (**7**) and hardware from the wiper motor shaft.
8. Open the plastic case, label and disconnect the cab harness and two jumper wires from the wiper motor.
9. Remove the wiper motor assembly from the machine and disconnect the two jumper wires running between the wiper motor switch and the wiper motor.
10. Carefully pry the wiper motor switch from the plastic case.

b. Disassembly

DO NOT disassemble the motor or the wiper motor switch. The motor and switch are not serviceable. Replace motor or switch if either are found to be defective.

c. Inspect and Replacement

Inspect the motor terminals for continuity. Replace motor if continuity is not found. Inspect the switch terminals with the switch in the OFF and ON positions. Replace the switch if continuity is not found.

d. Installation and Testing

Note: *An assistant will be required for the installation of the Rear Wiper Switch/Motor.*

1. Install the wiper switch into the plastic case.
2. Reconnect the previously labeled jumper wires between the switch and motor.

https://truckmanualshub.com/

3. Reconnect the cab harness to the wiper motor assembly and with the help of an assistant, insert the wiper motor through the rear window hole and have the assistant thread the nut onto the wiper motor shaft.
4. Tighten the motor shaft nut (**7**).
5. Secure the tab of the plastic case using the previously removed screw and acorn nut.
6. Properly connect the batteries.
7. Turn the ignition key to the RUN position and turn rear wiper switch to the ON position and then to the OFF position to “Park” the rear wiper on the right side of the rear window. Turn the ignition switch back to the OFF position.
8. Assemble the rear wiper arm to the rear wiper motor shaft with the wiper blade on the right side of the rear window. The wiper blade should be parallel to the edge of the window.
9. Close and secure the engine cover.

9.9.4 Windshield Washer Reservoir and Pump

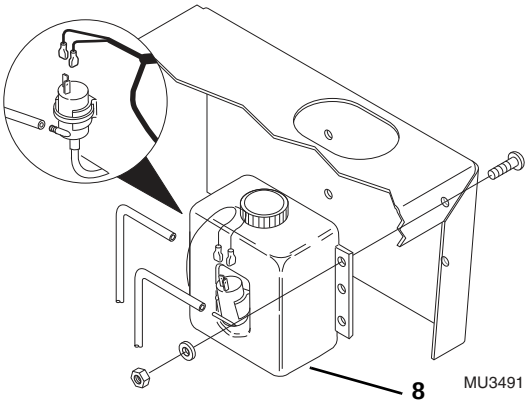

The windshield washer motor and reservoir (**8**) is a unit and cannot be serviced separately.

a. Removal

1. Park the machine on a firm, level surface, level the machine, fully retract the boom, lower the boom, place the transmission control lever in (N) NEUTRAL, engage the park brake and shut the engine OFF.
2. Place a Do Not Operate Tag on both the ignition key switch and the steering wheel, stating that the machine should not be operated.
3. Open the engine cover. Allow the system fluids to cool.
4. Properly disconnect the batteries.
5. Remove the nuts and the lock washers from the washer mounting bolts.
6. Pull the washer reservoir out and away from the mounting bracket.
7. Rotate the washer reservoir, label and remove the cab harness connectors from the washer reservoir connectors.
8. Remove the windshield washer hose from the reservoir.

b. Disassembly

DO NOT disassemble the pump. The pump is not serviceable. Replace pump if found to be defective.

c. Installation and Testing

1. Connect the windshield washer hoses to the reservoir.
2. Connect the cab wiring harness connectors to the reservoir connectors.
3. Install the reservoir tank onto the welded studs.
4. Install the lock washers and nuts and secure.
5. Fill the washer fluid reservoir with washer fluid.
6. Properly connect the batteries.
7. Turn the ignition key switch to the RUN position and press the washer switch. Verify that fluid is sprayed on both the windshield and rear glass.
8. Close and secure the engine cover.

https://truckmanualshub.com/

9.10 CAB HEATER AND FAN

9.10.1 Cab Heater Controls

Note: *If the suspect component is found to be within the heater box, the heater box must be removed as a complete unit and replaced.*

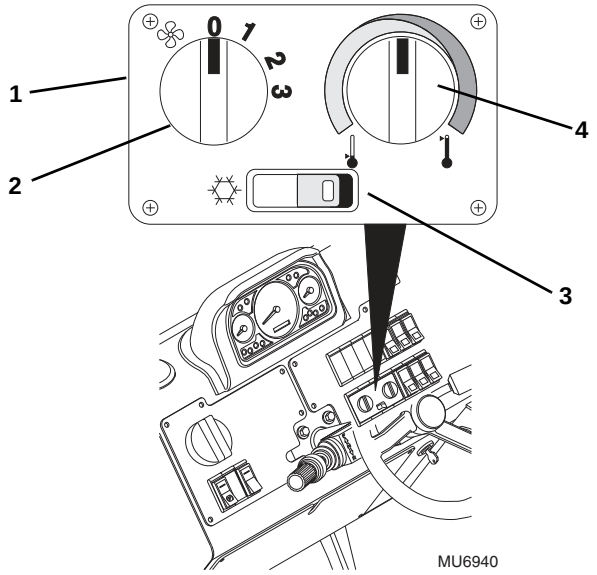

The cab heater and air conditioning controls (**1**) are located in the lower bank of switches on the right side of the dash. From left to right the control panel consists of: a variable speed fan control (**2**), an A/C on-off switch (**3**) and a temperature control (**4**).

a. Cab Heater Controls Removal

1. Park the machine on a firm, level surface, level the machine, fully retract the boom, lower the boom, place the transmission control lever in (N) NEUTRAL, engage the park brake and shut the engine OFF.
2. Place a Do Not Operate Tag on both the ignition key switch and the steering wheel, stating that the machine should not be operated.
3. Open the engine cover. Allow the system fluids to cool.
4. Properly disconnect the batteries.
5. Remove the setscrew from the variable speed fan control knob or temperature control knob.
6. Remove the screws and backing locknuts from the cab heater and fan control panel.
7. Pull the control panel out from the dash panel, and if removing variable speed fan control, remove the cab harness connector.
8. If removing the temperature control knob, disconnect the cable connector and remove control knob.
9. Remove the locknut from the suspect control shaft.
10. Remove the control from the panel.
11. If removing the air conditioning rocker switch, label and disconnect the cab harness connector. Carefully pry the switch out of the mounting hole.

b. Disassembly

DO NOT disassemble the cab heater and fan controls. The controls are not serviceable. Replace controls if found to be defective.

c. Installation and Testing

1. Check that the variable speed fan control is in the OFF position.
2. If installing the temperature control, attach the control cable to the back of the control.
3. Insert the control shaft through the panel, ensuring that the knob is in the VERTICAL position.
4. Install the locknut on the shaft and tighten.
5. Install the setscrew securing the knob to the control.
6. Snap the air conditioning rocker switch into the mounting hole on the control panel. Connect the cab harness connector to the back of the rocker switch.
7. Install the screws and backing locknuts securing the control panel to the dash panel.
8. Properly connect the batteries.
9. Turn the ignition key to the ON position and check the fan speeds. If further repair is needed, refer to Section 9.5, “Electrical Schematics.”
10. Start the machine and allow engine to warm to operating temperature. Check heat control at different levels.
11. Close and secure the engine cover.

https://truckmanualshub.com/

9.11 SWITCHES AND SOLENOIDS

9.11.1 Ignition Key Switch

The ignition switch is located on the lower right side of the dash.

a. Ignition Switch Removal

1. Park the machine on a firm, level surface, level the machine, fully retract the boom, lower the boom, place the transmission control lever in (N) NEUTRAL, engage the park brake and shut the engine OFF.
2. Place a Do Not Operate Tag on both the ignition key switch and the steering wheel, stating that the machine should not be operated.
3. Open the engine cover. Allow the system fluids to cool.
4. Properly disconnect the batteries.
5. Remove the lower dash cover.
6. Remove the hex nut securing the ignition key switch to the dash.
7. Label and disconnect the ignition switch connectors and remove the switch from the machine.

b. Disassembly

DO NOT disassemble the ignition switch. Replace a defective switch with a new part.

c. Inspection and Replacement

To determine the proper operation of the ignition key switch, test the terminals on the back of the switch for continuity with an ohmmeter.

Test the ignition key switch for continuity, by checking from the terminal “BAT” (Red/Tan) wire to each of the other terminals in each switch position. Continuity (**X**) should be present as indicated in the following table:

Switch Position			
Test from “BAT” (Red/Tan wire) to:	**OFF**	**RUN**	**START**
“IGN” (Tan wire)		**X**	
“IGN” (Tan wire) & “ST” (Red/White wire)			**X**

If all terminals do not show proper continuity, replace the ignition switch.

d. Ignition Switch Installation

1. Connect the ignition key switch to the previously labeled connectors.
2. The ignition switch has a drain hole located on the shaft, between the backing nut and the face of the ignition switch cylinder, behind the dash panel. Align the ignition switch so that when it is in the OFF position, the key slot is positioned vertically (straight up and down) and the indicator mark for the drain hole, is pointing down. Install the nut securing the ignition switch to the dash. DO NOT overtighten.
3. Install the lower dash panel.
4. Properly connect the batteries.
5. Close and secure the engine cover.

Note: *If further information is needed, refer to* Section 9.5, “Electrical Schematics.”

9.11.2 Hydraulic Oil Filter Pressure Switch

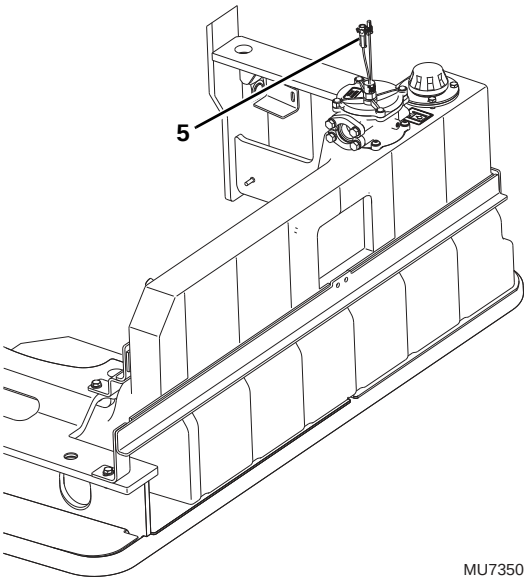

The hydraulic oil filter pressure switch (**5**) is threaded into the top of the hydraulic oil filter, at the top front of the hydraulic oil reservoir.

a. Removal

1. Park the machine on a firm, level surface, level the machine, fully retract the boom, lower the boom, place the transmission control lever in (N) NEUTRAL, engage the park brake and shut the engine OFF.
2. Place a Do Not Operate Tag on both the ignition key switch and the steering wheel, stating that the machine should not be operated.

https://truckmanualshub.com/

3. Open the engine cover. Allow the system fluids to cool.
4. Properly disconnect the batteries.
5. Label and disconnect the pressure switch wiring connector from the harness connector.
6. Remove the switch from the hydraulic oil filter.

b. Disassembly

DO NOT disassemble the switch. The switch is not serviceable. Replace switch if found to be defective.

c. Inspection and Replacement

Inspect switch wiring for continuity and shorting. Replace a defective or faulty switch with a new part.

d. Installation

1. Thread the switch into its fitting on the hydraulic oil filter. Tighten securely.
2. Connect the switch wiring connector to the harness connector.
3. Connect the battery negative (-) cable(s) to the battery negative (-) terminal(s).
4. Start the engine, check for hydraulic fluid leaking at the hydraulic oil filter pressure switch and allow the hydraulic fluid to reach operating temperature. Cycle the boom several times and check whether the hydraulic oil filter restriction indicator illuminates on the operator's display panel.
5. Close and secure the engine cover.

9.11.3 Dual Hydraulic Oil Temperature Switch

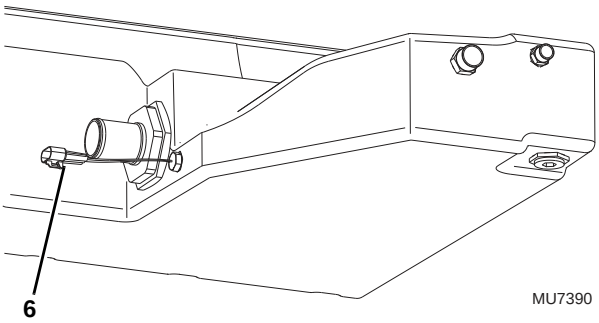

The hydraulic oil temperature switch (**6**) is threaded into a fitting at the lower inside wall of the hydraulic oil reservoir.

a. Removal

1. Park the machine on a firm, level surface, level the machine, fully retract the boom, lower the boom, place the transmission control lever in (N) NEUTRAL, engage the park brake and shut the engine OFF.
2. Place a Do Not Operate Tag on both the ignition key switch and the steering wheel, stating that the machine should not be operated.
3. Open the engine cover. Allow the system fluids to cool.
4. Properly disconnect the batteries.
5. Label and disconnect the temperature switch wiring connector from the harness connector.
6. Remove the switch from the hydraulic oil reservoir.

b. Disassembly

DO NOT disassemble the switch. The switch is not serviceable. Replace switch if found to be defective.

c. Inspection and Replacement

Inspect switch wiring for continuity and shorting. Replace a defective or faulty switch with a new part.

d. Installation and Testing

1. Thread the switch into its fitting on the hydraulic oil filter. Tighten securely.
2. Connect the switch wiring connector to the harness connector.
3. Properly connect the batteries.
4. Start the engine, check for hydraulic fluid leaking at the hydraulic oil temperature switch and allow the hydraulic fluid to reach operating temperature. Cycle the boom several times and check whether the hydraulic oil temperature warning indicator illuminates on the operator's display panel.
5. Close and secure the engine cover.

https://truckmanualshub.com/

9.11.4 Auxiliary Hydraulic Pressure Release Switch

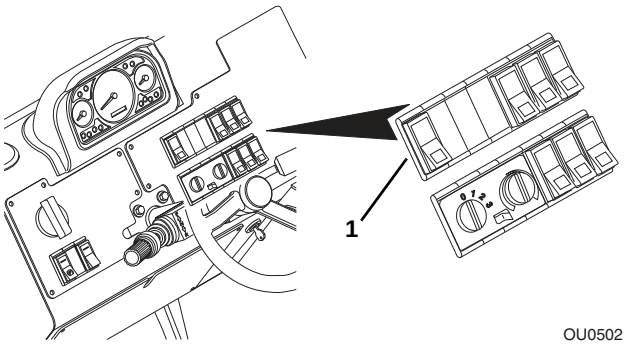

The auxiliary hydraulic pressure release switch (**1**) is located in the upper bank of switches on the right side of the dash and is pressed into a rectangular switch bezel.

a. Removal

1. Park the machine on a firm, level surface, level the machine, fully retract the boom, lower the boom, place the transmission control lever in (N) NEUTRAL, engage the park brake and shut the engine OFF.
2. Place a Do Not Operate Tag on both the ignition key switch and the steering wheel, stating that the machine should not be operated.
3. Open the engine cover. Allow the system fluids to cool.
4. Properly disconnect the batteries.
5. Carefully pry the auxiliary hydraulic pressure release switch and wiring out of the mounting hole.
6. Label and disconnect the wiring from the switch. Remove the switch from the machine.

b. Disassembly

DO NOT disassemble the switch. The switch is not serviceable. Replace switch if found to be defective.

c. Inspection and Replacement

Inspect switch wiring for continuity and shorting. Replace a defective or faulty switch with a new part.

d. Installation and Testing

1. Connect the previously labeled wires to the switch.
2. Make sure the symbol is at the bottom of the switch, then press the switch into place in the benzel.
3. Properly connect the batteries.
4. The ignition switch must be in the RUN position. The engine can be either idling or shut OFF. Press and hold the momentary auxiliary hydraulic pressure release switch for two seconds to release trapped pressure in the auxiliary hydraulic system. If the two auxiliary hydraulic couplings can now be easily connected or disconnected, the switch is operating properly.
5. Close and secure the engine cover.

9.11.5 Parking Brake Switch

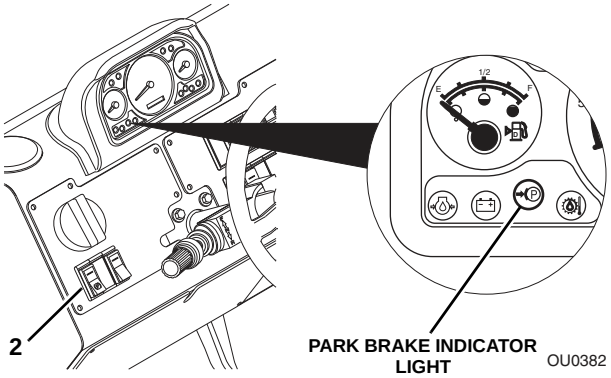

The park brake switch (**2**) is located on the dash to the left of the steering column and is pressed into a rectangular switch bezel.

a. Removal

1. Park the machine on a firm, level surface, level the machine, fully retract the boom, lower the boom, place the transmission control lever in (N) NEUTRAL, engage the park brake and shut the engine OFF.
2. Place a Do Not Operate Tag on both the ignition key switch and the steering wheel, stating that the machine should not be operated.
3. Open the engine cover. Allow the system fluids to cool.
4. Properly disconnect the batteries.
5. Carefully pry the park brake switch and wiring out of the mounting hole.
6. Label and disconnect the wiring from the switch. Remove the switch from the machine.

b. Disassembly

DO NOT disassemble the switch. The switch is not serviceable. Replace switch if found to be defective.

https://truckmanualshub.com/

c. Inspection and Replacement

Inspect switch wiring for continuity and shorting in both the ENGAGED and DISENGAGED positions. Replace a defective or faulty switch with a new part.

d. Installation and Testing

1. Connect the previously labeled wires to the switch.
2. Make sure the symbol is at the bottom of the switch, then press the switch into place in the benzel.
3. Properly connect the batteries.
4. Start the engine, engage the park lock switch, place the travel select lever in FORWARD or REVERSE and in second gear apply full throttle. The machine should remain motionless in both FORWARD and REVERSE positions.
5. To test for proper parking brake switch disengagement, firmly depress the service brake pedal, disengage the park lock switch, place the travel select lever in either FORWARD or REVERSE and in first gear, and slowly press the throttle while releasing the service brake pedal. The parking brake should release and the machine should travel freely.
6. Close and secure the engine cover.

9.11.6 Transmission Disconnect Switch

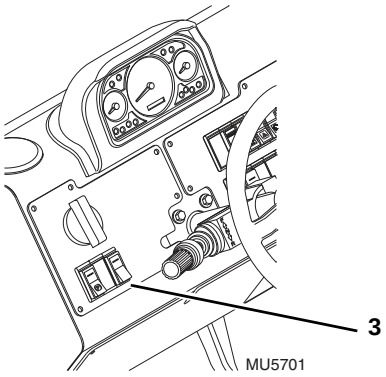

The transmission disconnect switch (**3**) is located on the dash to the left of the steering column and is pressed into a rectangular switch benzel.

a. Removal

1. Park the machine on a firm, level surface, level the machine, fully retract the boom, lower the boom, place the transmission control lever in (N) NEUTRAL, engage the park brake and shut the engine OFF.
2. Place a Do Not Operate Tag on both the ignition key switch and the steering wheel, stating that the machine should not be operated.
3. Open the engine cover. Allow the system fluids to cool.
4. Properly disconnect the batteries.
5. Carefully pry the park brake switch and wiring out of the mounting hole.
6. Label and disconnect the wiring from the switch. Remove the switch from the machine.

b. Disassembly

DO NOT disassemble the switch. The switch is not serviceable. Replace switch if found to be defective.

c. Inspection and Replacement

Inspect switch wiring for continuity and shorting in both the ENGAGED and DISENGAGED positions. Replace a defective or faulty switch with a new part.

d. Installation and Testing

1. Connect the previously labeled wires to the switch.
2. Make sure the symbol is at the bottom of the switch, then press the switch into place in the benzel.
3. Properly connect the batteries.
4. Close and secure the engine cover.
5. Start the engine, activate the transmission disconnect switch, firmly depress the service brake pedal, place the travel select lever in either FORWARD or REVERSE and in second gear, and apply full throttle. The machine should remain motionless in both FORWARD and REVERSE positions and the hydraulic system has full engine power.

Note: *With the disconnect feature active and the service brake pedal being released, the transmission will be reconnected in the same gear and direction of travel as when it was originally disconnected. The service brakes must remain fully applied for this feature to be functional.*

https://truckmanualshub.com/

9.11.7 Transmission Shift Control Switch

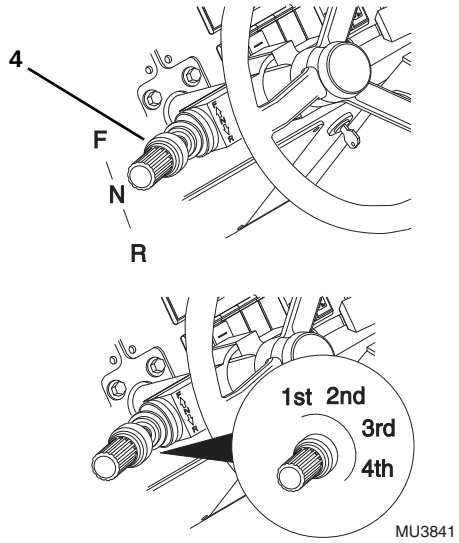

The transmission control switch and travel select lever (**4**) is located on the left side of the steering column.

a. Removal

1. Park the machine on a firm, level surface, level the machine, fully retract the boom, lower the boom, place the transmission control lever in (N) NEUTRAL, engage the park brake and shut the engine OFF.
2. Place a Do Not Operate Tag on both the ignition key switch and the steering wheel, stating that the machine should not be operated.
3. Open the engine cover. Allow the system fluids to cool.
4. Properly disconnect the batteries.
5. Disconnect the wiring connector on the underside of the transmission travel and gear selector lever.
6. Remove the two screws securing the lever assembly to the steering column.
7. Remove the lever and the collar.

b. Disassembly

DO NOT disassemble the switch or lever. The switch and lever are not serviceable. Replace switch or lever if found to be defective.

c. Inspection and Replacement

Inspect switch wiring for continuity and shorting in each gear selection. Replace a defective or faulty switch with a new part.
Inspect lever wiring for continuity and shorting in FORWARD and REVERSE positions. Replace a defective or faulty lever with a new part.

d. Installation and Testing

1. Position the lever onto the steering column, aligning the pin with the hole in the steering column.
2. Install both screws through the lever and into the collar. Tighten the screws securely, but DO NOT overtighten. Overtightening will cause the lever to break.
3. Connect the wiring connector on the underside of the transmission travel and gear selector lever.
4. Properly connect the batteries.
5. Close and secure the engine cover.
6. To test for proper travel lever function, firmly depress the service brake pedal, disengage the park lock switch, place the travel select lever in either FORWARD or REVERSE and in first gear, and slowly press the throttle while releasing the service brake pedal. The machine should travel freely. Repeat the above procedure in each of the four forward speeds and the three reverse speeds.

9.11.8 Transmission Solenoid Valves

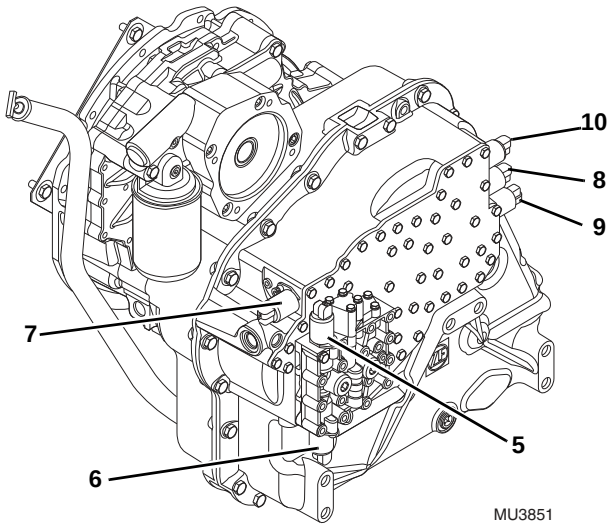

The Transmission is shifted via six solenoids. Three solenoids valves, Y1 (**5**), Y2 (**6**) and Y3 (**7**) are located on the right front corner of the transmission. The remaining three solenoid valves, Y4 (**8**), Y5 (**9**) and Y6 (**10**) are located at the left front corner of the transmission.

https://truckmanualshub.com/

Note: If the transmission is not shifting properly, the transmission shift control switch (travel select lever), wiring harness or transmission shift solenoids should be checked in order to determine which component is defective. Specific information to determine which travel position and corresponding component is not responding can be found in the detailed transmission service instructions (covering repair, disassembly, reassembly and adjustment information) are provided in the ZF 4 WG-98 TC Repair Manual P/N 5871 135 002 (JLG P/N 8990455). and can be obtained by calling your local Authorized Service Department.

The transmission should be checked, serviced and repaired only by experienced service technicians who are aware of all safety instructions and particular component features.

Note: *Contact your local authorized Service Department if internal transmission repair is required during the warranty period.*

a. Travel Select Lever and Wiring Harness Testing

Note: *An assistant will be required to be **seated** and operate the travel select lever in order to perform the following test.*

1. Disconnect the wiring harness plugs from all of the transmission solenoid valve bodies. Turn the ignition switch to the run position.

Note: *In order to perform the solenoid test, the Parking Brake Switch must be in the OFF position.*

2. Have an assistant place the transmission lever in the position that is not functioning correctly.

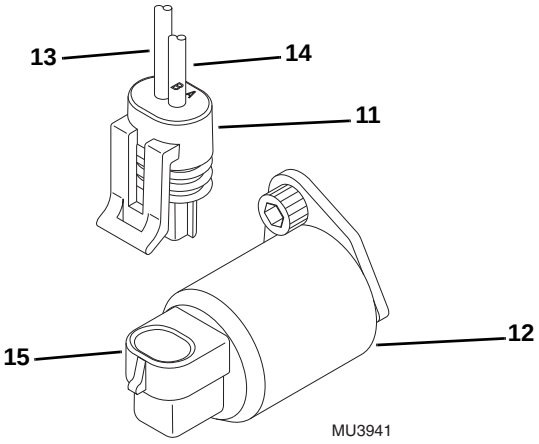

3. Check the harness side plug connector plugs on the active solenoids corresponding to the direction and gear that has been selected with a DMM for battery voltage. Refer to the chart that follows. Place the negative (-) lead on pin B (ground) (**13**) and the positive (+) lead on pin A (**14**), and test for battery voltage. If battery voltage is not present on any of the pins that have been tested, the wiring harness is suspect and should be replaced. If battery voltage is present, the harness is functioning properly.

Note: *The following chart shows which solenoids are active with any given selection of the transmission lever and gear select position.*

Solenoid Valve Callout		Y1 (5)	Y2 (6)	Y3 (7)	Y4 (8)	Y5 (9)	Y6 (10)
Driving Direction	**Speed**						
Forward	First	•		•	•		•
Forward	Second	•		•		•	•
Forward	Third	•		•			•
Forward	Fourth	•					•
Reverse	First		•	•	•		•
Reverse	Second		•	•		•	•
Reverse	Third		•	•			•

b. Transmission Solenoid Testing

Inspect each solenoid connector plug (**15**). Test across the two pins inside the connector for continuity and shorting. Each solenoid should have between 10.0 and 15.0 ohms of resistance when testing with an ohmmeter.

Replace a defective solenoid valve. Refer to Section 9.11.8, “Transmission Solenoid Valves.”

c. Removal

1. Park the machine on a firm, level surface, level the machine, fully retract the boom, raise the boom, place the transmission control lever in (N) NEUTRAL, engage the park brake and shut the engine OFF.
2. Place a Do Not Operate Tag on both the ignition key switch and the steering wheel, stating that the machine should not be operated.
3. Properly disconnect the batteries.

https://truckmanualshub.com/

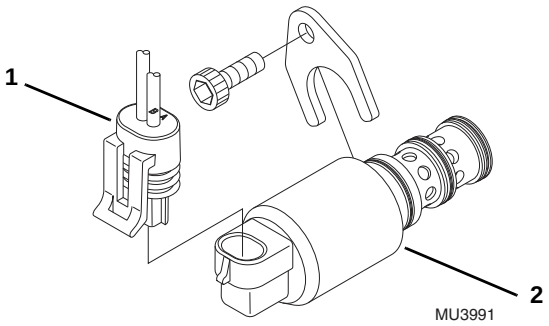

4. Label and disconnect the wire harness connector plug (**1**) on the solenoid valve (**2**) to be replaced.
5. Remove the solenoid valve and replace.

d. Installation

1. Install the solenoid valve along with the retaining bracket and capscrew.
2. Connect the wire harness connector plug to the solenoid connector plug.
3. Properly connect the batteries.
4. Close and secure the engine cover.
5. Test the operation of the transmission. Verify that each function works properly, that the transmission does not engage when in NEUTRAL (N) and that the proper indicators illuminate on the front dash panel.

For further transmission information, refer to Section 6, “Transmission.”

9.11.9 Dual Joystick

This machine is equipped with three separate hydraulic joysticks.

a. Front Joystick Button Testing

1. Remove the access panel from the side console.
2. Disconnect the cab wire harness connector plug (**3**) from the joystick connector plug (**4**).

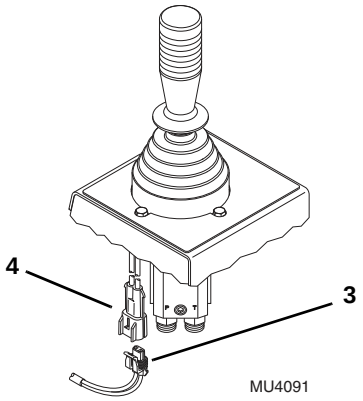

3. Check the cab harness connector plug (**3**) with a DMM for battery voltage. Place the negative (-) lead on pin B and the positive (+) lead on pin A, and test for battery voltage.
   If battery voltage is not present, the wiring harness is suspect and should be replaced. If battery voltage is present, the harness is functioning properly.
4. If the harness is functioning properly, test the joystick button (**5**) for continuity. With the joystick button pressed down, test across the two pins inside the joystick connector plug for continuity and shorting. If there is no continuity, replace the joystick handle. Refer to Section 4.3.6, “Joystick Assemblies.”

b. Front Joystick Handle Replacement

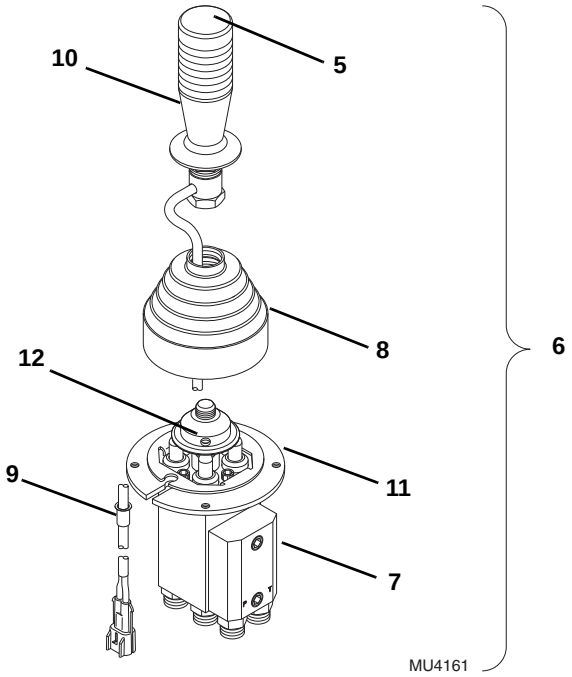

https://truckmanualshub.com/

1. Remove the joystick valve assembly (**6**) from the side console. Refer to Section 4.3.6, “Joystick Assemblies.”
2. Secure the valve body (**7**) in a bench vise or by other suitable means.
3. Roll the boot (**8**) up to expose the locknut at the bottom of the handle.
4. Lift the wire harness bushing (**9**) to clear the retaining hole in the ring on the joystick assembly. Slide the wire harness out through the slot.
5. Use a vise grip to remove the handle assembly (**10**) from the joint assembly (**11**). Use a punch in the hole (**12**) on the joint assembly to hold it in place while loosening the handle assembly.
6. Remove the handle assembly with the boot. If not replacing the boot, remove the boot from the handle assembly.
7. To assemble the new handle, slide the wire harness through the boot and assemble the boot to the handle assembly.
8. Roll the boot up to expose the locknut at the bottom of the handle assembly.
9. Thread the handle assembly onto the joint assembly. Use a punch in the hole (**12**) on the joint assembly to hold it in place while tightening the handle assembly.
10. Assemble the front joystick valve assembly into the side console. Refer to Section 4.3.6, “Joystick Assemblies.”

c. Front Joystick Function Solenoid Valve

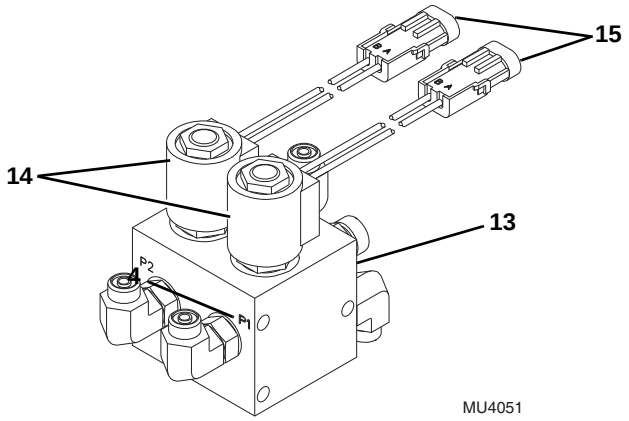

The front joystick commands are actuated, both electrically and hydraulically, via a set of solenoid-operated cartridges within the pilot select valve (**13**). The pilot select valve is located on the valve plate which is located under the cab floor.

d. Solenoid Coil and Cartridge Valve Replacement

If a solenoid coil (**14**) is suspect of malfunctioning, disconnect the coil wire lead (**15**) and test the coil for proper resistance (8-12 ohms). Replace solenoid if open or shorted to ground. Also inspect the valve cartridges, o-rings and other hydraulic and electrical components in the circuit to accurately determine the cause of the problem.
The solenoid coils are of the same design. If testing both coils, insure that the coil wiring connectors are correctly re-connected.

9.11.10 Optional Single Joystick

This machine can be equipped with an optional single joystick.

a. Single Joystick Harness Testing

1. Remove the access panel from the side console.

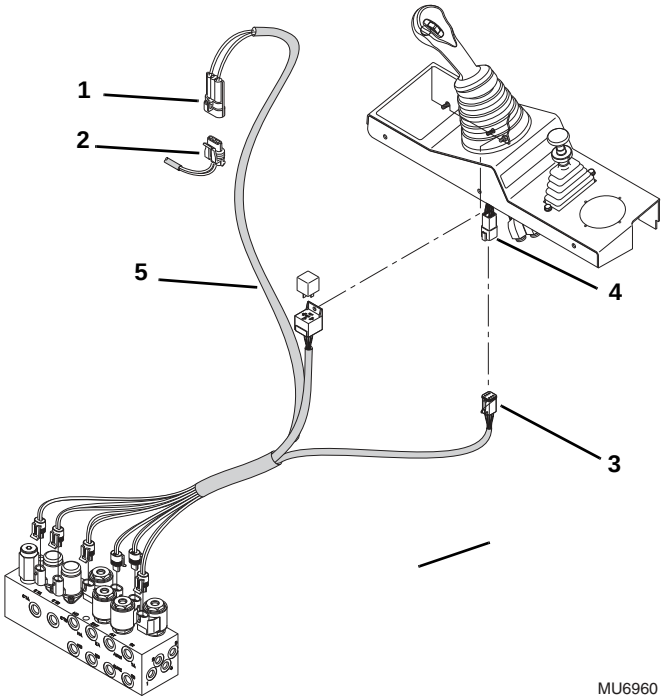

2. Disconnect the single joystick harness connector (**1**) from the machine cab harness.
3. Check the cab harness 3 pin connector plug (**2**) with a DMM for battery voltage. Place the negative (-) lead on pin C and the positive (+) lead on pin A, and test for battery voltage.
   If battery voltage is not present, the wiring harness is suspect and should be replaced. If battery voltage is present, the harness is functioning properly.

https://truckmanualshub.com/

4. Disconnect the single joystick harness connector (**3**) from the joystick connector (**4**).
   Check the single joystick harness 6 pin connector (**3**) with a DMM for battery voltage. Place the negative (-) lead in pin 2 (ground) and the positive (+) lead on pin 1, and test for battery voltage.
   If battery voltage is not present, the single joystick harness (**5**) is suspect and should be replaced. If battery voltage is present, the harness is functioning properly.
5. If the single joystick harness (**5**) is functioning properly, test the handle assembly. Refer to Section 4.3.6, “Joystick Assemblies.”
6. If the joystick handle is not working properly, the handle can be replaced

b. Single Joystick Handle Replacement

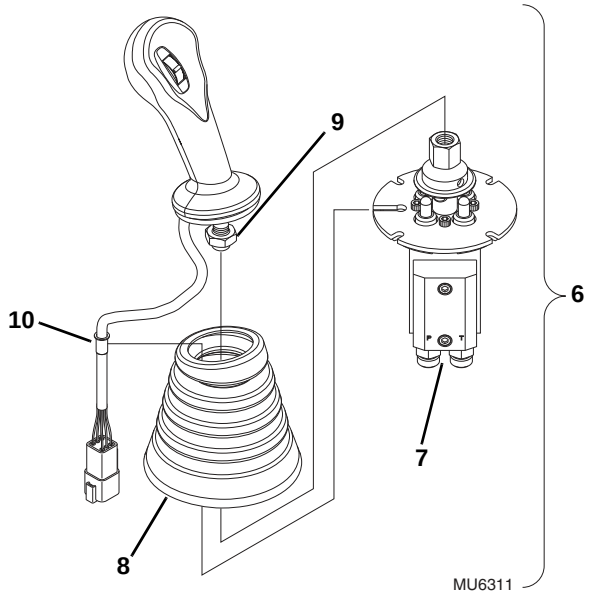

1. Remove the joystick valve assembly (**6**) from the side console. Refer to Section 4.3.6, “Joystick Assemblies.”
2. Secure the valve body (**7**) in a bench vise or by other suitable means.
3. Roll the boot (**8**) up to expose the locknut (**9**) at the bottom of the handle.
4. Lift the wire harness bushing (**10**) to clear the retaining hole in the ring on the joystick assembly. Slide the wire harness out through the slot.
5. Hold the nut on top of the joint assembly in place while loosening the locknut (**9**) on the handle assembly.
6. Remove the handle assembly with the boot. If not replacing the boot, remove the boot from the handle.
7. To assemble the new handle, slide the wire harness through the boot and assemble the boot to the handle assembly.
8. Roll the boot up to expose the locknut at the bottom of the handle assembly.
9. Thread the handle assembly onto the joint assembly.

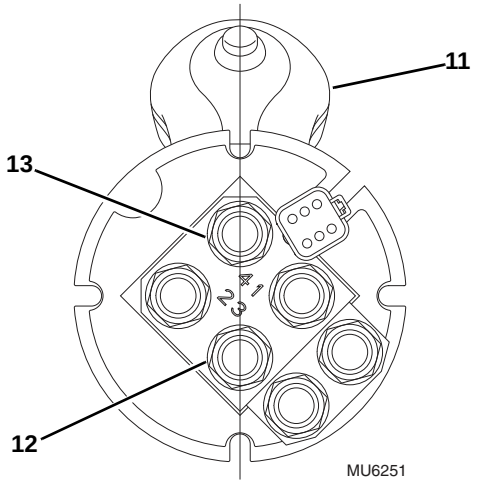

10. Make sure that the center line of the handle (**11**) is in line with ports 3 (**12**) and 4 (**13**) on the valve body before tightening the locknut on the handle assembly.
11. Assemble the front joystick valve assembly into the side console. Refer to Section 4.3.6, “Joystick Assemblies.”

https://truckmanualshub.com/

c. Single Joystick Function Solenoid Valves

The single joystick commands are actuated, both electrically and hydraulically, via a set of solenoid operated cartridges within the single joystick pilot select valve. The single joystick pilot select valve is located on the valve plate which is located under the cab floor.

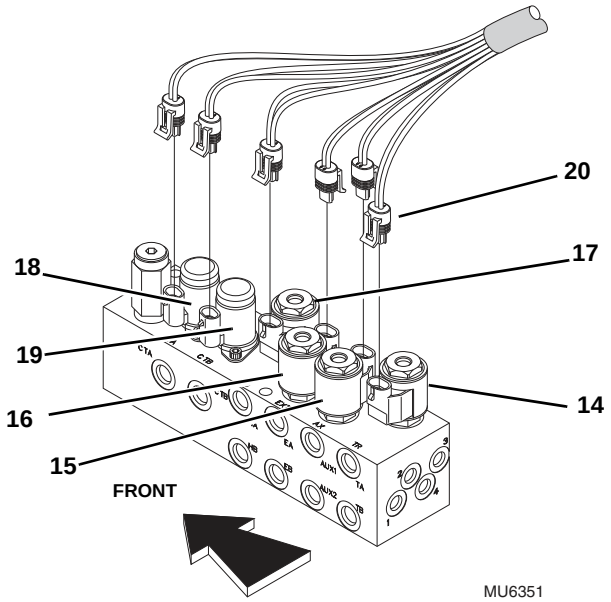

Single Joystick Pilot Select Valve Solenoids	
Function	**Abbreviation on Valve**
Transfer Carriage (**14**)	TR
Auxiliary Hydraulics (**15**)	AX
Extend/Retract (**16**)	EXT
Lift/Lower (**17**)	HO
Attachment Tilt Down (**18**)	CTB
Attachment Tilt Up (**19**)	CTA

d. Solenoid Coil and Cartridge Valve Replacement

If a solenoid coil (**14** through **19**) is suspected of malfunctioning, label and disconnect the wire harness connector (**20**) at the coil and test the coil for proper resistance. Solenoids (**14)** through (**17)** should have a resistance reading of 8.6 ohms. Proportional solenoids (**18)** and (**19)** should have a resistance reading of 7.2 ohms. Replace solenoid if open or shorted to ground. Also inspect the valve cartridges, o-rings, and the other hydraulic and electrical components in the circuit to accurately determine the cause of the problem.

If testing more than one coil, insure that the wire harness connectors are correctly re-connected.

9.11.11 Boom Angle Sensor

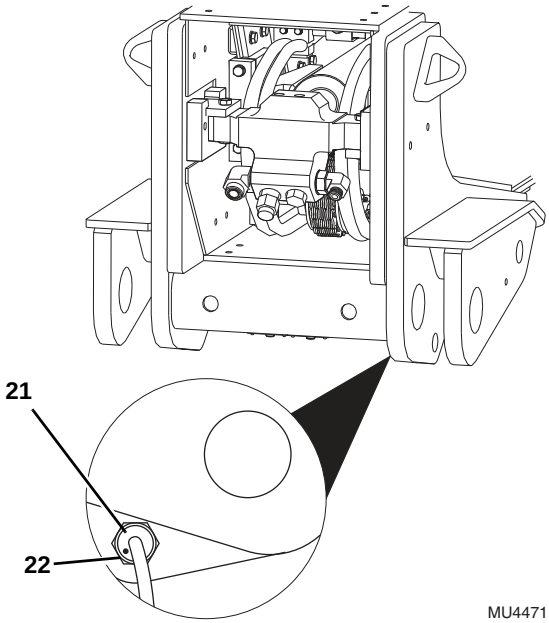

The boom angle sensor (**21**) is located at the rear of, and on the right side of the outer boom. When the boom is lifted above 40°, the boom sensor sends a signal to one of the Stabil-Trak indicators on the instrument cluster.

Note: *The boom sensor has a yellow L.E.D. (**22**) that is illuminated when the boom is below 40°.*

a. Boom Angle Sensor Removal

1. Park the machine on a firm, level surface, level the machine, fully retract the boom, lower the boom, place the transmission control lever in (N) NEUTRAL, engage the park brake and shut the engine OFF.
2. Place a Do Not Operate Tag on both the ignition key switch and the steering wheel, stating that the machine should not be operated.
3. Open the engine cover. Allow the system fluids to cool.
4. Properly disconnect the batteries.

https://truckmanualshub.com/

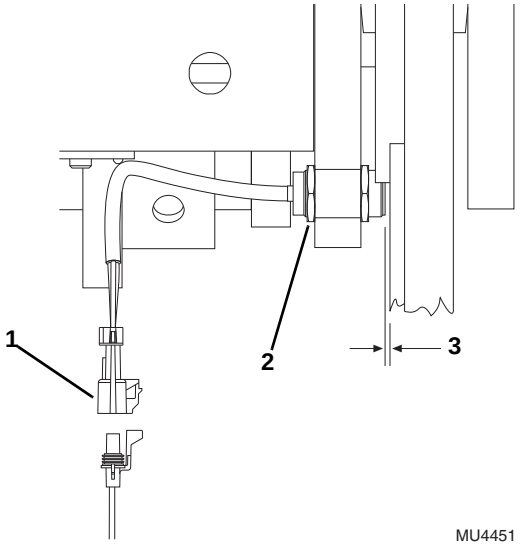

5. Unplug the engine boom angle sensor connector (**1**) from the wiring harness connector.
6. Loosen and remove the sensor locknut (**2**).
7. Remove the sensor from the outside of boom frame.

b. Disassembly

DO NOT disassemble the sensor. The sensor is not serviceable. Replace the sensor if found to be defective.

c. Boom Angle Sensor Installation

1. Install boom angle sensor through outside of boom frame.
2. Install locknut onto sensor.
3. Measure the clearance between the sensor and frame, and adjust sensor distance (**3**) to 0.120”- 0.190” (3,05 - 4,8 mm) and tighten locknut.
4. Properly connect the batteries.
5. Close and secure the engine cover.

9.11.12 Coolant Temperature Switch

a. Coolant Temperature Switch Removal

1. Park the machine on a firm, level surface, level the machine, fully retract the boom, raise the boom, place the transmission control lever in (N) NEUTRAL, engage the park brake and shut the engine OFF.
2. Place a Do Not Operate Tag on both the ignition key switch and the steering wheel, stating that the machine should not be operated.
3. Open the engine cover. Allow the system fluids to cool.
4. Properly disconnect the batteries.

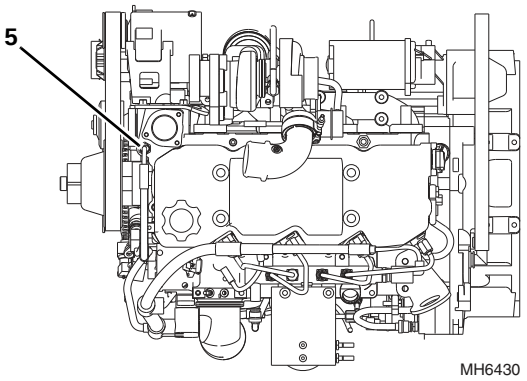

5. Label and disconnect the wiring connector from the Coolant Temperature Switch (**5**).
6. Unthread the switch from the engine.

b. Coolant Temperature Switch Disassembly

DO NOT disassemble the Coolant Temperature Switch. Replace a defective switch with a new part.

https://truckmanualshub.com/

c. Coolant Temperature Switch Installation

1. Thread the switch into the engine. Tighten securely.
2. Connect the previously labeled wiring connector to the switch.
3. Properly connect the batteries.
4. Start the engine. Allow it to reach operating temperature and observe the operator's instrument cluster for warning indication. If the switch is not defective, the problem could be elsewhere; possibly in a shorted wire, improper running engine, improper or low coolant, obstructed or faulty radiator, coolant pump, loose fan belt, defective instrument cluster, etc.
5. Close and secure the engine cover.

9.11.13 Transmission Temperature Switch

The transmission temperature switch (**6**) is threaded into the rear of the transmission below the main hydraulic pump.

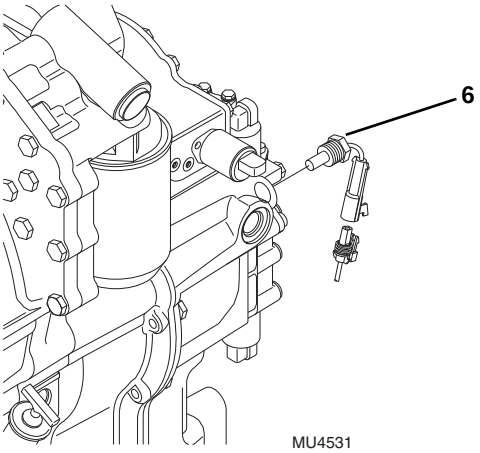

a. Transmission Temperature Sender Removal

1. Park the machine on a firm, level surface, level the machine, fully retract the boom, raise the boom, place the transmission control lever in (N) NEUTRAL, engage the park brake and shut the engine OFF.
2. Place a Do Not Operate Tag on both the ignition key switch and the steering wheel, stating that the machine should not be operated.
3. Open the engine cover. Allow the system fluids to cool.
4. Properly disconnect the batteries.
5. Unplug the transmission temperature sender connector from the wiring harness connector.
6. The sender is threaded into the transmission housing. Remove the sender.

b. Transmission Temperature Sender Inspection and Replacement

Inspect the sender and the wiring harness connector terminals for continuity. Replace a defective or faulty sender with a new part.

c. Transmission Temperature Sender Installation and Testing

1. Thread the transmission temperature sender into the transmission housing snugly, then connect the sender connector to the wiring harness connector.
2. Properly connect the batteries.
3. Check for proper fluid level.
4. Start the engine, allow it to reach operating temperature and observe the operator's display cluster for warning indication. If the sender is not defective, the problem could be elsewhere; possibly in a shorted wire, damaged transmission, improper or low fluid, etc.
5. Close and secure the engine cover.

9.11.14 Fuel Level Gauge and Fuel Level Sender

The fuel level gauge can be found on the operator's dash panel. The fuel level sender is mounted in the top of the fuel tank.

a. Fuel Level Gauge Testing

1. This test requires an assistant in the operator's cab.
2. The fuel level sender wiring harness connector and the cab harness connector, can be accessed at the right rear corner of the cab. Disconnect the two connectors. With a piece of wire, touch both pins inside the cab harness connector.
3. From the operator's cab, have the assistant turn the ignition key switch to the RUN position. **DO NOT** start the engine. Observe the fuel level gauge needle on the operator's dash panel. The reading must be at the FULL mark after the engine startup bulb test is completed.
4. Turn the ignition key switch to the OFF position. The fuel level gauge needle should return to the EMPTY position.

https://truckmanualshub.com/

b. Fuel Level Circuit Tests

If the fuel level gauge is suspected of giving a false reading, perform the following checks:

1. Check for loose or defective wiring, faulty ground connections, and corrosion on the fuel tank level sender and wiring lead.
2. If the fuel level gauge needle does not move after the ignition key switch is turned to the RUN position, use a test lamp to determine whether current is flowing from the ignition switch to the fuel level gauge wiring connector behind the operator's dash panel.

   If the fuel level gauge needle does not move, check the fuel tank for fuel.

   If the fuel level gauge does not move and a faulty or defective fuel level sender in the fuel tank has been ruled out, and in addition, wiring and connectors have been checked and ruled out, the front dash panel is defective and must be replaced.
3. Check that the ignition terminal has current and that the fuse in the fuse panel is not blown.
4. Check for broken, shorted, frayed, disconnected or damaged wiring between the fuel level gauge wiring at the operator's dash panel, fuse and relay panel, ignition key switch, and from the fuel level sender on the fuel tank through the wiring in the cab.
5. Check the fuel level sender. The resistance of the fuel sender is 31 ohms for a full tank of fuel, 101 ohms for 1/2 tank and 255 ohms for an empty tank. A defective fuel level sender in the fuel tank may also prevent the fuel level gauge from moving.

Excessive fuel level gauge "fluctuation" may be caused by loose wire connections or a defective fuel level sender in the fuel tank.

A full tank reading at all times may occur if the wiring to the fuel level sender in the tank is broken, if the sender is not properly grounded or if the sender is defective.

If the fuel level gauge appears to be inaccurate, the fuel sender in the tank may be defective, or there may be low voltage at the fuel level gauge connector to the operator's dash panel.

If the fuel level gauge fluctuates when other electrical items are used, there may be a defective, corroded or improper ground. Check the cab harness ground stud under the dash, the engine to chassis ground, and the negative (–) battery cable and ground stud cable.

Examine the fuel level sender circuit in Section 9.5, "Electrical Schematics."

9.11.15 Hourmeter

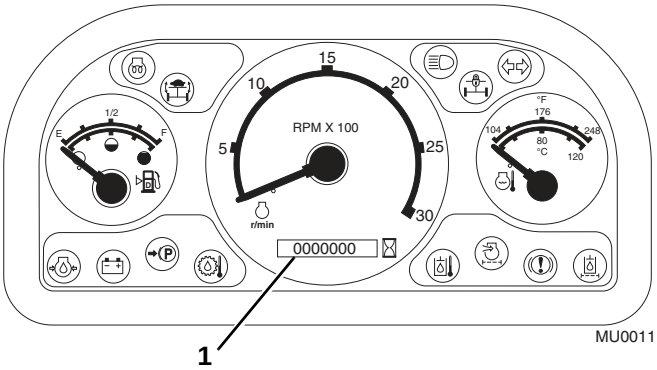

The hourmeter (**1**) is a non-repairable instrument that records hours of machine engine operation in tenths of an hour increments and is located in the dash panel.

The hourmeter is an analog device, similar to an odometer, and will display 99,999.9 hours before resetting to zero.

If trouble is suspected, time the hourmeter for six minutes to verify that a tenth of an hour has been recorded.

The hourmeter is built into the dash panel and cannot be repaired. If the hourmeter is suspect, replace the dash panel.

https://truckmanualshub.com/

9.11.16 Stabilizer Brake Switch

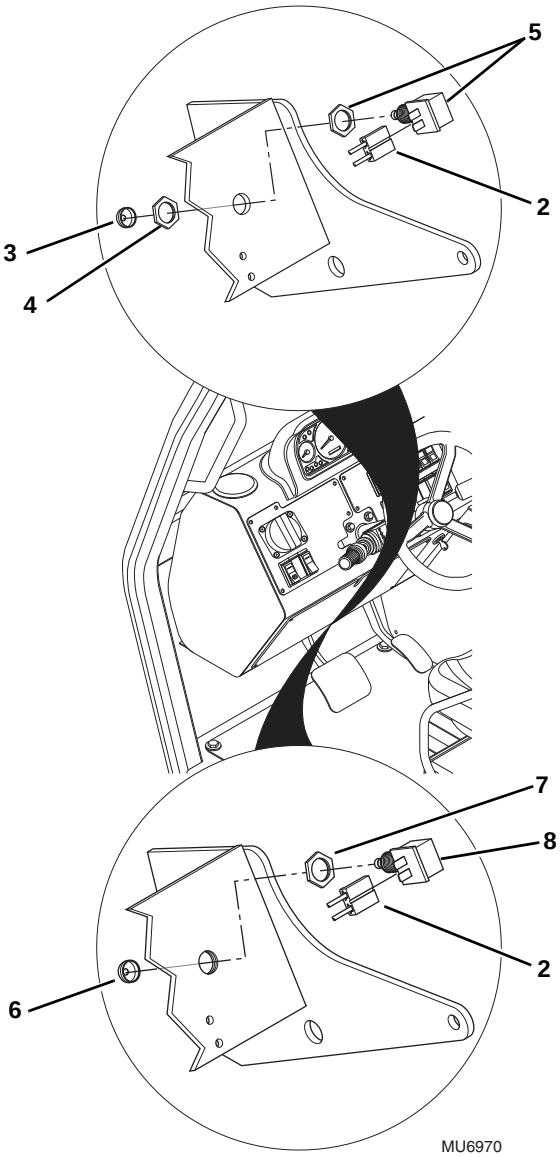

The stabilizer brake switch (**2**) works in conjunction with the Stabil-Trak system. With the boom above 40° and the service brake depressed, the Stabil-Trak system engages. If the Stabilizer Brake Switch is suspect in the proper operation of the Stabil-Trak system, refer to Section 10.4, “Stabil-TRAK™ System Test.”.

a. Stabilizer Brake Switch Removal

1. Park the machine on a firm, level surface, level the machine, fully retract the boom, lower the boom, place the transmission control lever in (N) NEUTRAL, engage the park brake and shut the engine OFF.
2. Place a Do Not Operate Tag on both the ignition key switch and the steering wheel, stating that the machine should not be operated.
3. Open the engine cover. Allow the system fluids to cool.
4. Properly disconnect the batteries.
5. Label and disconnect the electrical connectors attached to the stabilizer brake switch.

When Service Brake Valve Mounting Plate <u>Does Not Have</u> Threaded Mounting Hole

Remove switch dust cover (**3**) and bottom locknut (**4**). Remove switch body with top locknut still attached (**5**), from the mounting plate.

When Service Brake Valve Mounting Plate <u>Has</u> Threaded Mounting Hole

Remove switch dust cover (**6**). Remove the switch by loosening the locknut (**7**) and unscrewing the switch (**8**) from the mounting plate.

b. Stabilizer Brake Switch Installation

When Service Brake Valve Mounting Plate <u>Does Not Have</u> Threaded Mounting Hole

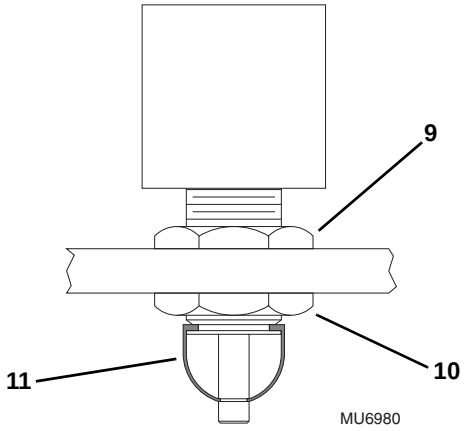

1. Thread the top locknut (**9**) onto the shaft of the switch. Leave enough threads at the bottom of the shaft for the thickness of the plate and second locknut.
2. Insert switch body through the top of the service brake switch bracket. There should be approximately 5 threads on the switch shaft beyond the mounting plate.
3. Thread the bottom locknut (**10**) onto the switch body until finger tight against the service brake valve mounting plate.
4. Use a wrench and fully tighten the top locknut against the service brake valve mounting plate.

https://truckmanualshub.com/

5. Install the dust cover (**11**).
6. Connect the cab harness electrical connectors to the service brake switch connectors.
7. Properly connect the batteries.
8. Adjust the brake switch. Refer to Section c, “Stabilizer Brake Switch Adjustment.”

When Service Brake Valve Mounting Plate Has Threaded Mounting Hole

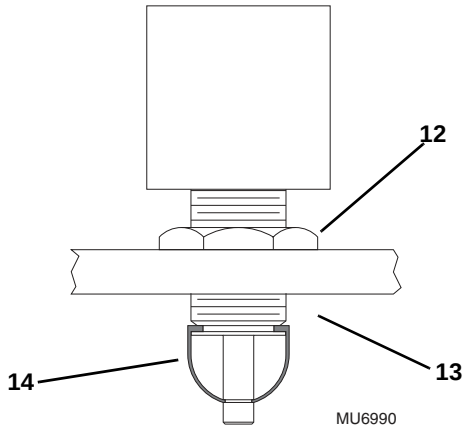

1. Thread the locknut (**12**) onto the shaft of the switch. Leave enough threads at the bottom of the shaft for the thickness of the plate plus approximately 5 threads to extend beyond the plate when mounted.
2. Thread the switch (**13**) through the top of the service brake valve mounting plate. There should be approximately 5 threads on the switch shaft beyond the mounting plate.
3. Use a wrench and fully tighten the locknut against the service brake valve mounting plate.
4. Install the dust cover (**14**).
5. Connect the cab harness electrical connectors to the service brake switch connectors.
6. Properly connect the batteries.
7. Adjust the brake switch. Refer to Section c, “Stabilizer Brake Switch Adjustment.”

c. Stabilizer Brake Switch Adjustment

Note: *The service brake switch adjustment will require two people. Enlist the help of an assistant before attempting to follow the adjustment procedure.*

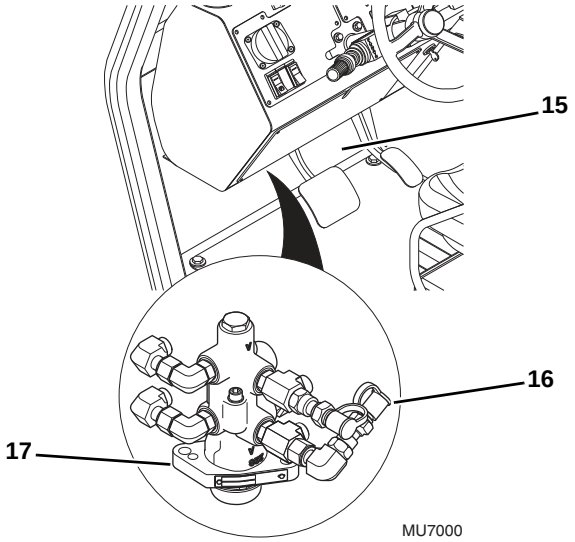

1. Remove the lower access panel (**15**).
2. Connect a 1000 psi (69 bar) pressure gauge to the test port (**16**) on the service brake valve (**17**).

WARNING

NEVER attempt to adjust the service brake switch without an assistant. Anytime the engine is running and the parking brake is disengaged, there must be an operator located in the cab and the two front tires must be blocked.

3. Block both front tires.
4. Start the engine and run at low idle.
5. Ensure that the boom is below 40°, and the park brake switch is ON.
6. Ensure that the Stabil-Trak “Slow Pivot” Mode indicator is OFF.
7. Slowly depress and hold the brake pedal to maintain 150 ±50 psi (10,3 ±3,4 bar) brake pressure.
8. Adjust the stabilizer brake switch.

When Service Brake Valve Mounting Plate Does Not Have Threaded Mounting Hole

Using the top and bottom locknuts in combination, position the brake switch so the Stabil-Trak “Slow Pivot” Mode indicator comes ON at the 150 ±50 psi (10,3±3,4 bar) brake pressure.

When Service Brake Valve Mounting Plate Has

https://truckmanualshub.com/

Threaded Mounting Hole

Position the brake switch so the Stabil-TRAK "Locked" Mode indicator comes ON at the 150 ±50 psi (10,3 ±3,4 bar) brake pressure. If the brake switch needs to be adjusted, remove the wire leads from the switch, loosen the locknut from the top of the switch mounting bracket and thread the switch in or out until you hear an audible click.

9. Repeat steps 6 through 8 until the Stabil-TRAK "Slow Pivot" Mode indicator comes ON at the 150 ±50 psi (10,3 ±3,4 bar) brake pressure.
10. After the required pressure is achieved, use a wrench and fully tighten the locknut against the service brake valve mounting plate.

In order to test the switch for proper operation, the boom must be below the 40° position, the parking brake switch must be in the ON position. Proper operation of the switch will activate the Stabil-TRAK "Slow Pivot" Mode indicator (**1**). If the Stabil-TRAK indicator does not activate when all conditions are met, the sensor must be adjusted. Refer to Section 9.11.11, "Boom Angle Sensor."

11. Shut off the engine.
12. Remove blocking from front tires.
13. Remove the pressure gauge.
14. Replace lower access panel (**15**).

9.12 DASH SWITCHES

Note: *For information on the front windshield wiper, rear window wiper and washer systems, refer to Section 9.9, "Window Wiper/Washer Windshield Wiper Motor."*

9.12.1 Dash Switches

a. Switch Removal

1. Park the machine on a firm, level surface, level the machine, fully retract the boom, lower the boom, place the transmission control lever in (N) NEUTRAL, engage the park brake and shut the engine OFF.
2. Place a Do Not Operate Tag on both the ignition key switch and the steering wheel, stating that the machine should not be operated.
3. Open the engine cover. Allow the system fluids to cool.
4. Properly disconnect the batteries.
5. Carefully pry the switch and wiring out of the mounting hole.
6. Label and disconnect the wiring from the switch. Remove the switch.

b. Disassembly

DO NOT disassemble the dash switch. Replace a defective switch with a new part.

c. Inspection and Replacement

Inspect the switch terminals for continuity and shorting in both the engaged and disengaged positions. Replace a defective or faulty switch with a new switch.

d. Switch Installation

1. Connect the switch to the cab harness connector.
2. Position the switch over the rectangular switch bezel and snap into position.
3. Properly connect the batteries.
4. Start the machine and check the replaced switch for proper function.
5. Close and secure the rear door.

https://truckmanualshub.com/

9.13 TROUBLESHOOTING

9.13.1 Engine Fault Codes Retrieval

1. Park the machine on a firm, level surface, level the machine, fully retract the boom, lower the boom, place the transmission control lever in (N) NEUTRAL and engage the park brake.
2. Turn the ignition switch to “ON”.
3. Cycle the throttle pedal 3 times. The fault lamp will begin to flash a code number. The light will flash the first digit then pause for a short time and then flash the second digit.
4. Once the code is retrieved, turn the ignition OFF.

For more information, contact your local authorized Cummins service distributor.

9.13.2 Engine Fault Codes Chart

Fault Codes	SPN Codes	FMI Codes	Lamp Color	SPN Description	Cummins Description
111	629	12	Red	Controller #1	Engine Control Module Critical internal failure - Bad intelligent Device or Component
115	612	2	Red	System Diagnostic Code #2	Engine Speed/Position Sensor Circuit lost both of two signals from the magnetic pickup sensor - Data Erratic, Intermittent, or incorrect
122	102	3	Amber	Boost Pressure	Intake Manifold Pressure Sensor Circuit - Voltage Above Normal, or Shorted to High Source
123	102	4	Amber	Boost Pressure	Intake Manifold Pressure Sensor Circuit - Voltage Below Normal, or Shorted to Low Source
124	102	16	Amber	Boost Pressure	Intake Manifold 1 Pressure - Data Valid but Above Normal Operational Range - Moderately Severe Level
131	91	3	Red	Accelerator Pedal Position	Accelerator Pedal or Lever Position Sensor Circuit - Voltage Above Normal, or Shorted to High Source
132	91	4	Red	Accelerator Pedal Position	Accelerator Pedal or Lever Position Sensor Circuit - Voltage Below Normal, or Shorted to Low Source
133	974	3	Red	Remote Accelerator	Remote Accelerator Pedal or Lever Position Sensor Circuit - Voltage Above Normal, or Shorted to High Source

https://truckmanualshub.com/

Fault Codes	SPN Codes	FMI Codes	Lamp Color	SPN Description	Cummins Description
134	974	4	Red	Remote Accelerator	Remote Accelerator Pedal or Lever Position Sensor Circuit - Voltage Below Normal, or Shorted to Low Source
135	100	3	Amber	Engine Oil Pressure	Oil Pressure Sensor Circuit - Voltage Above Normal, or Shorted to High Source
141	100	4	Amber	Engine Oil Pressure	Oil Pressure Sensor Circuit - Voltage Below Normal, or Shorted to Low Source
143	100	18	Amber	Engine Oil Pressure	Oil Pressure Low - Data Valid but Below Normal Operational Range - Moderately Severe Level
144	110	3	Amber	Engine Coolant Temperature	Coolant Temperature Sensor Circuit - Voltage Above Normal, or Shorted to High Source
145	110	4	Amber	Engine Coolant Temperature	Coolant Temperature Sensor Circuit - Voltage Below Normal, or Shorted to Low Source
146	110	16	Amber	Engine Coolant Temperature	Coolant Temperature High - Data Valid but Above Normal Operational Range - Moderately Severe Level
147	91	1	Red	Accelerator Pedal Position	Accelerator Pedal or Lever Position Sensor Circuit - Abnormal Frequency, Pulse Width, or Period
148	91	0	Red	Accelerator Pedal Position	Accelerator Pedal or Lever Position Sensor Circuit - Abnormal Frequency, Pulse Width, or Period
151	110	0	Red	Engine Coolant Temperature	Coolant Temperature Low - Data Valid but Above Normal Operational Range - Most Severe Level
153	105	3	Amber	Intake Manifold #1 Temp	Intake Manifold Air Temperature Sensor Circuit - Voltage Above Normal, or Shorted to High Source
154	105	4	Amber	Intake Manifold #1 Temp	Intake Manifold Air Temperature Sensor Circuit - Voltage Below Normal, or Shorted to Low Source
155	105	0	Red	Intake Manifold #1 Temp	Intake Manifold Air Temperature High - Data Valid but Above Normal Operational Range - Most Severe Level
187	3510	4	Amber	5 Volts DC Supply	Sensor Supply Voltage #2 Circuit - Voltage Below Normal, or Shorted to Low Source
193	520199	3	Amber	Cruise Control	Cruise Control (Resistive) Signal Circuit - Voltage Above Normal, or Shorted to High Source

https://truckmanualshub.com/

Fault Codes	SPN Codes	FMI Codes	Lamp Color	SPN Description	Cummins Description
194	520199	4	Amber	Cruise Control	Cruise Control (Resistive) Signal Circuit - Voltage Below Normal, or Shorted to Low Source
195	111	3	Amber	Coolant Level	Coolant Level Sensor Circuit - Voltage Above Normal, or Shorted to High Source
196	111	4	Amber	Coolant Level	Coolant Level Sensor Circuit - Voltage Below Normal, or Shorted to Low Source
197	111	18	Amber	Coolant Level	Coolant Level - Data Valid but Below Normal Operational Range - Moderately Severe Level
199	1661	4	Amber	Engine Automatic Start Lamp	Engine Automatic Start Lamp Driver Circuit - Voltage Above Normal, or Shorted to High Source
211	1484	31	None	J1939 Error	Additional Auxiliary Diagnostic Codes logged - Condition Exists
212	175	3	Amber	Oil Temperature	Engine Oil Temperature Sensor 1 Circuit - Voltage Above Normal, or Shorted to High Source
213	175	4	Amber	Oil Temperature	Engine Oil Temperature Sensor 1 Circuit - Voltage Below Normal, or Shorted to Low Source
214	175	0	Red	Oil Temperature	Engine Oil Temperature - Data Valid but Above Normal Operational Range - Most Severe Level
221	108	3	Amber	Barometric Pressure	Barometric Pressure Sensor Circuit - Voltage Above Normal, or Shorted to High Source
222	108	4	Amber	Barometric Pressure	Barometric Pressure Sensor Circuit - Voltage Below Normal, or Shorted to Low Source
227	3510	3	Amber	5 Volts DC Supply	Sensor Supply Voltage #2 Circuit - Voltage Above Normal, or Shorted to High Source
231	109	3	Amber	Coolant Pressure	Coolant Pressure Sensor Circuit - Voltage Above Normal, or Shorted to High Source
232	109	4	Amber	Coolant Pressure	Coolant Pressure Sensor Circuit - Voltage Below Normal, or Shorted to Low Source
233	109	18	Amber	Coolant Pressure	Coolant Pressure - Data Valid but Below Normal Operational Range - Moderately Severe Level
234	190	0	Red	Engine Speed	Engine Speed High - Data Valid but Above Normal Operational Range - Most Severe Level
235	111	1	Red	Coolant Level	Coolant Level Low - Data Valid but Below Normal Operational Range - Most Severe Level

https://truckmanualshub.com/

Fault Codes	SPN Codes	FMI Codes	Lamp Color	SPN Description	Cummins Description
237	644	2	Amber	External Speed Input	External Speed Input (Multiple Unit Synchronization) - Data Erratic, Intermittent, or Incorrect
238	3511	4	Amber	System Diagnostic code #1	Sensor Supply Voltage #3 Circuit - Voltage Below Normal, or Shorted to Low Source
239	3511	3	Amber	System Diagnostic code #2	Sensor Supply Voltage #3 Circuit - Voltage Above Normal, or Shorted to High Source
241	84	2	Amber	Wheel-based Vehicle Speed	Vehicle Speed Sensor Circuit - Data Erratic, Intermittent, or Incorrect
242	84	10	Amber	Wheel-based Vehicle Speed	Vehicle Speed Sensor Circuit tampering has been detected - Abnormal Rate of Change
244	623	4	Amber	Red Stop Lamp	Red Stop Lamp Driver Circuit - Voltage Below Normal, or Shorted to Low Source
245	647	4	Amber	Fan Clutch Output Device Driver	Fan Control Circuit - Voltage Below Normal, or Shorted to Low Source
249	171	3	Amber	Ambient Air Temperature	Ambient Air Temperature Sensor Circuit - Voltage Above Normal, or Shorted to High Source
256	171	4	Amber	Ambient Air Temperature	Ambient Air Temperature Sensor Circuit - Voltage Below Normal, or Shorted to Low Source
261	174	16	Amber	Fuel Temperature	Engine Fuel Temperature - Data Valid but Above Normal Operational Range - Moderately Severe Level
263	174	3	Amber	Fuel Temperature	AEB15.60 Page 149 of 157 Engine Fuel Temperature Sensor 1 Circuit - Voltage Above Normal, or Shorted to High Source
265	174	4	Amber	Fuel Temperature	Engine Fuel Temperature Sensor 1 Circuit - Voltage Below Normal, or Shorted to Low Source
268	94	2	Amber	Fuel Delivery Pressure	Fuel Pressure Sensor Circuit - Data Erratic, Intermittent, or Incorrect
271	1347	4	Amber	Fuel Pump Pressurizing Assembly #1	High Fuel Pressure Solenoid Valve Circuit - Voltage Below Normal, or Shorted to Low Source
272	1347	3	Amber	Fuel Pump Pressurizing Assembly #1	High Fuel Pressure Solenoid Valve Circuit - Voltage Above Normal, or Shorted to High Source

https://truckmanualshub.com/

Fault Codes	SPN Codes	FMI Codes	Lamp Color	SPN Description	Cummins Description
281	1347	7	Amber	Fuel Pump Pressurizing Assembly #1	High Fuel Pressure Solenoid Valve #1 - Mechanical System Not Responding Properly or Out of Adjustment
284	1043	4	Amber	Internal Sensor Voltage Supply	Engine Speed/Position Sensor (Crankshaft) Supply Voltage Circuit - Voltage Below Normal, or Shorted to Low Source
285	639	9	Amber	SAE J1939 Datalink	SAE J1939 Multiplexing PGN Timeout Error - Abnormal Update Rate
286	639	13	Amber	SAE J1939 Datalink	SAE J1939 Multiplexing Configuration Error-Out of Calibration
287	91	19	Red	Accelerator Pedal Position	SAE J1939 Multiplexing Accelerator Pedal or Lever Sensor System Error - Received Network Data In Error
288	974	19	Red	Remote Accelerator	SAE J1939 Multiplexing Remote Accelerator Pedal or Lever Data Error - Received Network Data In Error
292	441	14	Red	Auxiliary Temperature 1	Auxiliary Temperature Sensor Input 1 - Special Instructions
293	441	3	Amber	OEM Temperature	Auxiliary Temperature Sensor Input #1 Circuit - Voltage Above Normal, or Shorted to High Source
294	441	4	Amber	OEM Temperature	Auxiliary Temperature Sensor Input #1 Circuit - Voltage Below Normal, or Shorted to Low Source
295	108	2	Amber	Barometric Pressure	Barometric Pressure Sensor Circuit - Data Erratic, Intermittent, or Incorrect
296	1388	14	Red	Auxiliary Pressure	Auxiliary Pressure Sensor Input 1 - Special Instructions
297	1388	3	Amber	Auxiliary Pressure	Auxiliary Pressure Sensor Input #2 Circuit - Voltage Above Normal, or Shorted to High Source
298	1388	4	Amber	Auxiliary Pressure	Auxiliary Pressure Sensor Input #2 Circuit - Voltage Below Normal, or Shorted to Low Source
319	251	2	Maint	Real Time Clock Power	Real Time Clock Power Interrupt - Data Erratic, Intermittent, or Incorrect
322	651	5	Amber	Injector Cylinder #01	Injector Solenoid Cylinder #1 Circuit - Current Below Normal, or Open Circuit
323	655	5	Amber	Injector Cylinder #05	Injector Solenoid Cylinder #5 Circuit - Current Below Normal, or Open Circuit

https://truckmanualshub.com/

Fault Codes	SPN Codes	FMI Codes	Lamp Color	SPN Description	Cummins Description
324	653	5	Amber	Injector Cylinder #03	Injector Solenoid Cylinder #3 Circuit - Current Below Normal, or Open Circuit
325	656	5	Amber	Injector Cylinder #06	Injector Solenoid Cylinder #6 Circuit - Current Below Normal, or Open Circuit
331	652	5	Amber	Injector Cylinder #02	Injector Solenoid Cylinder #2 Circuit - Current Below Normal, or Open Circuit
332	654	5	Amber	Injector Cylinder #04	Injector Solenoid Cylinder #4 Circuit - Current Below Normal, or Open Circuit
334	110	2	Amber	Engine Coolant Temperature	Coolant Temperature Sensor Circuit - Data Erratic, Intermittent, or Incorrect
338	1267	3	Amber	Vehicle Accessories Relay Driver	Idle Shutdown Vehicle Accessories Relay Driver Circuit - Voltage Above Normal, or Shorted to High Source
339	1267	4	Amber	Vehicle Accessories Relay Driver	Idle Shutdown Vehicle Accessories Relay Driver Circuit - Voltage Below Normal, or Shorted to Low Source
341	630	2	Amber	Calibration Memory	Engine Control Module data lost - Data Erratic, Intermittent, or Incorrect
342	630	13	Red	Calibration Memory	Electronic Calibration Code Incompatibility - Out of Calibration
343	629	12	Amber	Controller #1	Engine Control Module Warning internal hardware failure - Bad Intelligent Device or Component
349	191	16	Amber	Transmission Output Shaft Speed	Transmission Output Shaft Speed - Data Valid but Above Normal Operational Range - Moderately Severe Level
351	627	12	Amber	Controller #1	Injector Power Supply - Bad Intelligent Device or Component
352	3509	4	Amber	5 Volts DC Supply	Sensor Supply Voltage #1 Circuit - Voltage Below Normal, or Shorted to Low Source
386	3509	3	Amber	5 Volts DC Supply	Sensor Supply Voltage #1 Circuit - Voltage Above Normal, or Shorted to High Source
415	100	1	Red	Engine Oil Pressure	Oil Pressure Low - Data Valid but Below Normal Operational Range - Most Severe Level
418	97	15	Maint.	Water in Fuel Indicator	Water in Fuel Indicator High - Data Valid but Above Normal Operational Range - Least Severe Level
422	111	2	Amber	Coolant Level	Coolant Level - Data Erratic, Intermittent, or Incorrect

https://truckmanualshub.com/

Fault Codes	SPN Codes	FMI Codes	Lamp Color	SPN Description	Cummins Description
425	175	2	Amber	Oil Temperature	Engine Oil Temperature - Data Erratic, Intermittent, or Incorrect
428	97	3	Amber	Water in Fuel Indicator	Water in Fuel Sensor Circuit - Voltage Above Normal, or Shorted to High Source
429	97	4	Amber	Water in Fuel Indicator	Water in Fuel Sensor Circuit - Voltage Below Normal, or Shorted to Low Source
431	558	2	Amber	Accelerator Pedal Low Idle Switch	Accelerator Pedal or Lever Idle Validation Circuit - Data Erratic, Intermittent, or Incorrect
432	558	13	Red	Accelerator Pedal Low Idle Switch	Accelerator Pedal or Lever Idle Validation Circuit - Out of Calibration
435	100	2	Amber	Engine Oil Pressure	Oil Pressure Sensor Circuit - Data Erratic, Intermittent, or Incorrect
441	168	18	Amber	Electrical Potential (Voltage)	Battery #1 Voltage Low - Data Valid but Below Normal Operational Range - Moderately Severe Level
442	168	16	Amber	Electrical Potential (Voltage)	Battery #1 Voltage High - Data Valid but Above Normal Operational Range - Moderately Severe Level
449	157	0	Red	Injector Metering Rail 1 Pressure	Fuel Pressure High - Data Valid but Above Normal Operational Range - Moderately Severe Level
451	157	3	Amber	Injector Metering Rail 1 Pressure	Injector Metering Rail #1 Pressure Sensor Circuit - Voltage Above Normal, or Shorted to High Source
452	157	4	Amber	Injector Metering Rail 1 Pressure	Injector Metering Rail #1 Pressure Sensor Circuit - Voltage Below Normal, or Shorted to Low Source
488	105	16	Amber	Intake Manifold	Intake Manifold 1 Temperature - Data Valid but Above Normal Operational Range - Moderately Severe Level
489	191	18	Amber	Transmission Output Shaft Speed	Transmission Output Shaft Speed - Data Valid but Below Normal Operational Range - Moderately Severe Level
497	1377	2	Amber	Switch Circuit	AEB15.60 Page 151 of 157 Multiple Unit Synchronization Switch Circuit - Data Erratic, Intermittent, or Incorrect
523	611	2	Amber	System Diagnostic code #1	OEM Intermediate (PTO) Speed switch Validation - Data Erratic, Intermittent, or Incorrect

https://truckmanualshub.com/

Fault Codes	SPN Codes	FMI Codes	Lamp Color	SPN Description	Cummins Description
527	702	3	Amber	Circuit - Voltage	Auxiliary Input/Output 2 Circuit - Voltage Above Normal, or Shorted to High Source
528	93	2	Amber	Switch - Data	Auxiliary Alternate Torque Validation Switch - Data Erratic, Intermittent, or Incorrect
529	703	3	Amber	Circuit - Voltage	Auxiliary Input/Output 3 Circuit - Voltage Above Normal, or Shorted to High Source
546	94	3	Amber	Fuel Delivery Pressure	Fuel Delivery Pressure Sensor Circuit - Voltage Above Normal, or Shorted to High Source
547	94	4	Amber	Fuel Delivery Pressure	Fuel Delivery Pressure Sensor Circuit - Voltage Below Normal, or Shorted to Low Source
551	558	4	Amber	Accelerator Pedal Low Idle Switch	Accelerator Pedal or Lever Idle Validation Circuit - Voltage Below Normal, or Shorted to Low Source
553	157	16	Amber	Injector Metering Rail 1 Pressure	Injector Metering Rail #1 Pressure High - Data Valid but Above Normal Operational Range - Moderately Severe Level
554	157	2	Amber	Injector Metering Rail 1 Pressure	Fuel Pressure Sensor Error - Data Erratic, Intermittent, or Incorrect
559	157	18	Amber	Injector Metering Rail 1 Pressure	Injector Metering Rail #1 Pressure Low - Data Valid but Below Normal Operational Range - Moderately Severe Level
584	677	3	Amber	Starter Solenoid Lockout Relay Driver Circuit	Starter Relay Circuit - Voltage Above Normal, or Shorted to High Source
585	677	4	Amber	Starter Solenoid Lockout Relay Driver Circuit	Starter Relay Circuit - Voltage Below Normal, or Shorted to Low Source
595	103	16	Amber	Turbocharger 1 Speed	Turbocharger #1 Speed High - Data Valid but Above Normal Operational Range - Moderately Severe Level
596	167	16	Amber	Alternate Potential (voltage)	Electrical Charging System Voltage High - Data Valid but Above Normal Operational Range - Moderately Severe Level
597	167	18	Amber	Alternate Potential (voltage)	Electrical Charging System Voltage Low - Data Valid but Below Normal Operational Range - Moderately Severe Level
598	167	1	Red	Alternate Potential (voltage)	Electrical Charging System Voltage Low - Data Valid but Below Normal Operational Range - Most Severe Level

https://truckmanualshub.com/

Fault Codes	SPN Codes	FMI Codes	Lamp Color	SPN Description	Cummins Description
599	640	14	Red	Engine External Protection Input	Auxiliary Commanded Dual Output Shutdown - Special Instructions
649	1378	31	Maint	Engine Oil Change Interval	Change Lubricating Oil and Filter - Condition Exists
687	103	18	Amber	Turbocharger 1 Speed	Turbocharger #1 Speed Low - Data Valid but Below Normal Operational Range - Moderately Severe Level
689	190	2	Amber	Engine Speed	Primary Engine Speed Sensor Error - Data Erratic, Intermittent, or Incorrect
691	1172	3	Amber	Turbocharger #1 Compressor Inlet Temperature	Turbocharger #1 Compressor Inlet Temperature Sensor Circuit - Voltage Above Normal, or Shorted to High Source
692	1172	4	Amber	Turbocharger #1 Compressor Inlet Temperature	Turbocharger #1 Compressor Inlet Temperature Sensor Circuit - Voltage Below Normal, or Shorted to Low Source
697	1136	3	Amber	Sensor Circuit - Voltage	ECM Internal Temperature Sensor Circuit - Voltage Above Normal, or Shorted to High Source
698	1136	4	Amber	Sensor Circuit - Voltage	ECM Internal Temperature Sensor Circuit - Voltage Below Normal, or Shorted to Low Source
719	22	3	Amber	Crankcase Pressure	AEB15.60 Page 152 of 157 Extended Crankcase Blow-by Pressure Circuit - Voltage Above Normal, or Shorted to High Source
729	22	4	Amber	Crankcase Pressure	Extended Crankcase Blow-by Pressure Circuit - Voltage Below Normal, or Shorted to Low Source
731	723	7	Amber	Engine Speed Sensor #2	Engine Speed/Position #2 mechanical misalignment between camshaft and crankshaft sensors - Mechanical System Not Responding Properly or Out of Adjustment
757	2802	31	Amber	Electronic Control Module	Electronic Control Module data lost - Condition Exists
778	723	2	Amber	Engine Speed Sensor #2	Engine Speed Sensor (Camshaft) Error - Data Erratic, Intermittent, or Incorrect
779	703	11	Amber	Auxiliary Equipment Sensor Input	Warning Auxiliary Equipment Sensor Input #3 (OEM Switch) - Root Cause Not Known
951	166	2	None	Cylinder Power	Cylinder Power Imbalance Between Cylinders - Data Erratic, Intermittent, or Incorrect

https://truckmanualshub.com/

Fault Codes	SPN Codes	FMI Codes	Lamp Color	SPN Description	Cummins Description
1117	627	2	None	Power Supply	Power Lost With Ignition On - Data Erratic, Intermittent, or Incorrect
1139	651	7	Amber	Injector Cylinder #01	Injector Cylinder #1 - Mechanical System Not Responding Properly or Out of Adjustment
1141	652	7	Amber	Injector Cylinder #02	Injector Cylinder #2 - Mechanical System Not Responding Properly or Out of Adjustment
1142	653	7	Amber	Injector Cylinder #03	Injector Cylinder #3 - Mechanical System Not Responding Properly or Out of Adjustment
1143	654	7	Amber	Injector Cylinder #04	Injector Cylinder #4 - Mechanical System Not Responding Properly or Out of Adjustment
1144	655	7	Amber	Injector Cylinder #05	Injector Cylinder #5 - Mechanical System Not Responding Properly or Out of Adjustment
1145	656	7	Amber	Injector Cylinder #06	Injector Cylinder #6 - Mechanical System Not Responding Properly or Out of Adjustment
1239	2623	3	Amber	Accelerator Pedal Position	Accelerator Pedal or Lever Position Sensor 2 Circuit - Voltage Above Normal, or Shorted to High Source
1241	2623	4	Amber	Accelerator Pedal Position	Accelerator Pedal or Lever Position Sensor 2 Circuit - Voltage Below Normal, or Shorted to Low Source
1242	91	2	Red	Accelerator Pedal Position	Accelerator Pedal or Lever Position Sensor 1 and 2 - Data Erratic, Intermittent, or Incorrect
1256	1563	2	Amber	Control Module Identification Input State	Control Module Identification Input State Error - Data Erratic, Intermittent, or Incorrect
1257	1563	2	Red	Control Module Identification Input State	Control Module Identification Input State Error - Data Erratic, Intermittent, or Incorrect
1852	97	16	Amber	Water in Fuel Indicator	Water in Fuel Indicator - Data Valid but Above Normal Operational Range - Moderately Severe Level
1911	157	0	Amber	Injector Metering Rail	Injector Metering Rail 1 Pressure - Data Valid but Above Normal Operational Range - Most Severe Level
2111	52	3	Amber	Coolant Temperature	Coolant Temperature 2 Sensor Circuit - Voltage Above Normal, or Shorted to High Source
2112	52	4	Amber	Coolant Temperature	Coolant Temperature 2 Sensor Circuit - Voltage Below Normal, or Shorted to Low Source

https://truckmanualshub.com/

Fault Codes	SPN Codes	FMI Codes	Lamp Color	SPN Description	Cummins Description
2113	52	16	Amber	Coolant Temperature	Coolant Temperature 2 - Data Valid but Above Normal Operational Range - Moderately Severe Level
2114	52	0	Red	Coolant Temperature	Coolant Temperature 2 - Data Valid but Above Normal Operational Range - Most Severe Level
2115	2981	3	Amber	Coolant Pressure	Coolant Pressure 2 Circuit - Voltage Above Normal, or Shorted to High Source
2116	2981	4	Amber	Coolant Pressure	AEB15.60 Page 153 of 157 Coolant Pressure 2 Circuit - Voltage Below Normal, or Shorted to Low Source
2117	2981	18	Amber	Coolant Pressure	Coolant Pressure 2 - Data Valid but Below Normal Operational Range - Moderately Severe Level
2182	1072	3	Amber	Engine Brake Output #1	Engine Brake Actuator Driver 1 Circuit - Voltage Above Normal, or Shorted to High Source
2183	1072	4	Amber	Engine Brake Output #1	Engine Brake Actuator Driver 1 Circuit - Voltage Below Normal, or Shorted to Low Source
2185	3512	3	Amber	System Diagnostic code #1	Sensor Supply Voltage #4 Circuit - Voltage Above Normal, or Shorted to High Source
2186	3512	4	Amber	System Diagnostic code #1	Sensor Supply Voltage #4 Circuit - Voltage Below Normal, or Shorted to Low Source
2195	703	14	Red	Auxiliary Equipment Sensor	Auxiliary Equipment Sensor Input 3 Engine Protection Critical - Special Instructions
2215	94	18	Amber	Fuel Delivery Pressure	Fuel Pump Delivery Pressure - Data Valid but Below Normal Operational Range - Moderately Severe Level
2216	94	1	Amber	Fuel Delivery Pressure	Fuel Pump Delivery Pressure - Data Valid but Above Normal Operational Range - Moderately Severe Level
2217	630	31	Amber	Calibration Memory	ECM Program Memory (RAM) Corruption - Condition Exists
2249	157	1	Amber	Injector Metering Rail 1 Pressure	Injector Metering Rail 1 Pressure - Data Valid but Below Normal Operational Range - Most Severe Level
2261	94	15	Maint	Fuel Delivery Pressure	Fuel Pump Delivery Pressure - Data Valid but Above Normal Operational Range - Least Severe Level
2262	94	17	Maint	Fuel Delivery Pressure	Fuel Pump Delivery Pressure - Data Valid but Below Normal Operational Range - Least Severe Level

https://truckmanualshub.com/

Fault Codes	SPN Codes	FMI Codes	Lamp Color	SPN Description	Cummins Description
2263	1800	16	Amber	Battery Temperature	Battery Temperature - Data Valid but Above Normal Operational Range - Moderately Severe Level
2264	1800	18	Amber	Battery Temperature	Battery Temperature - Data Valid but Below Normal Operational Range - Moderately Severe Level
2265	1075	3	Amber	Electric Lift Pump for Engine Fuel	Fuel Priming Pump Control Signal Circuit - Voltage Above Normal, or Shorted to High Source
2266	1075	4	Amber	Electric Lift Pump for Engine Fuel	Fuel Priming Pump Control Signal Circuit - Voltage Below Normal, or Shorted to Low Source
2292	611	16	Amber	Fuel Inlet Meter Device	Fuel Inlet Meter Device - Data Valid but Above Normal Operational Range - Moderately Severe Level
2293	611	18	Amber	Fuel Inlet Meter Device	Fuel Inlet Meter Device flow demand lower than expected - Data Valid but Below Normal Operational Range - Moderately Severe Level
2311	633	31	Amber	Fuel Control Valve #1	Fueling Actuator #1 Circuit Error - Condition Exists
2321	190	2	None	Engine Speed	Engine Speed / Position Sensor #1 - Data Erratic, Intermittent, or Incorrect
2322	723	2	None	Engine Speed Sensor #2	Engine Speed / Position Sensor #2 - Data Erratic, Intermittent, or Incorrect
2345	103	10	Amber	Turbocharger 1 Speed	Turbocharger speed invalid rate of change detected - Abnormal Rate of Change
2346	2789	15	None	System Diagnostic Code #1	Turbocharger Turbine Inlet Temperature (Calculated) - Data Valid but Above Normal Operational Range - Least Severe Level
2347	2790	15	None	System Diagnostic Code #1	Turbocharger Compressor Outlet Temperature (Calculated) - Data Valid but Above Normal Operational Range - Least Severe Level
2363	1073	4	Amber	Engine Compression Brake Output #2	Engine Brake Actuator Circuit #2 - Voltage Below Normal, or Shorted to Low Source
2365	1112	4	Amber	Engine Brake Output #3	Engine Brake Actuator Driver Output 3 Circuit - Voltage Below Normal, or Shorted to Low Source
2367	1073	3	Amber	Engine Compression Brake Output #2	Engine Brake Actuator Circuit #2 - Voltage Above Normal, or Shorted to High Source

https://truckmanualshub.com/

Fault Codes	SPN Codes	FMI Codes	Lamp Color	SPN Description	Cummins Description
2368	1112	3	Amber	Engine Brake Output #3	Engine Brake Actuator Driver 3 Circuit - Voltage Above Normal, or Shorted to High Source
2372	95	16	Amber	Engine Fuel Filter Differential Pressure	Fuel Filter Differential Pressure - Data Valid but Above Normal Operational Range - Moderately Severe Level
2373	1209	3	Amber	Exhaust Gas Pressure	Exhaust Gas Pressure Sensor Circuit - Voltage Above Normal, or Shorted to High Source
2374	1209	4	Amber	Exhaust Gas Pressure	Exhaust Gas Pressure Sensor Circuit - Voltage Below Normal, or Shorted to Low Source
2375	412	3	Amber	Exhaust Gas Recirculation Temperature	Exhaust Gas Recirculation Temperature Sensor Circuit - Voltage Above Normal, or Shorted to High Source
2376	412	4	Amber	Exhaust Gas Recirculation Temperature	Exhaust Gas Recirculation Temperature Sensor Circuit - Voltage Below Normal, or Shorted to Low Source
2377	647	3	Amber	Fan Clutch Output Device Driver	Fan Control Circuit - Voltage Above Normal, or Shorted to High Source
2425	730	4		Intake Air Heater #2	Intake Air Heater 2 Circuit - Voltage Below Normal, or Shorted to Low Source
2426	730	3		Intake Air Heater #2	Intake Air Heater 2 Circuit - Voltage Above Normal, or Shorted to High Source
2555	729	3	Amber	Inlet Air Heater Driver #1	Intake Air Heater #1 Circuit - Voltage Above Normal, or Shorted to High Source
2556	729	4	Amber	Inlet Air Heater Driver #1	Intake Air Heater #1 Circuit - Voltage Below Normal, or Shorted to Low Source
2557	697	3	Amber	Auxiliary PWM Driver #1	Auxiliary PWM Driver #1 - Voltage Above Normal, or Shorted to High Source
2558	697	4	Amber	Auxiliary PWM Driver #1	Auxiliary PWM Driver #1 - Voltage Below Normal, or Shorted to Low Source
2963	110	15	None	Engine Coolant Temperature	Engine Coolant Temperature High - Data Valid but Above Normal Operational Range - Least Severe Level
2973	102	2	Amber	Boost Pressure	Intake Manifold Pressure Sensor Circuit - Data Erratic, Intermittent, or Incorrect

https://truckmanualshub.com/

9.13.3 Troubleshooting with a Digital Multimeter (DMM)

Note: *Circuits which include any solid-state control modules should only be tested with a ten megohm or higher impedance digital multimeter (DMM), or damage could occur to the module.*

A DMM should be used instead of a test lamp in order to test for voltage in high impedance circuits. While a test lamp shows whether voltage is present, a DMM indicates how much voltage is present.

The ohmmeter function on a DMM shows how much resistance exists between two points along a circuit. Low resistance in a circuit means good continuity.

Note: *Disconnect the power feed from the suspect circuit when measuring resistance with a DMM. This prevents incorrect readings. DMM's apply such a small voltage to measure resistance that the presence of voltages can upset a resistance reading.*

Diodes and solid-state components in a circuit can cause a DMM to display a false reading. To find out if a component is affecting a measurement take a reading once, then reverse the leads and take a second reading. If the readings differ, the solid-state component is affecting the measurement.

Following are examples of the various methods of connecting the DMM to the circuit to be tested:

- Back probe both ends of the connector and either hold the leads in place while manipulating the connector or tape the leads to the harness for continuous monitoring while you perform other operations or test driving.

Note: ***DO NOT*** *back probe a sealed connector or a flat wire connector.*

- Disconnect the harness at both ends of the suspected circuit where it connects either to a component or to other harnesses.

9.13.4 Probing Electrical Connectors

a. Front Probe

Disconnect the connector and probe the terminals from the mating side (front) of the connector.

Note: ***DO NOT*** *insert test equipment probes into any connector or fuse block terminal. The diameter of the test probes will deform most terminals. A deformed terminal can cause a poor connection, which can result in system failures. Always use a connector test adapter kit or a flat wire probe adapter kit (usually supplied with a DMM) when front probing terminals.* ***DO NOT*** *use paper clips or other substitutes as they can damage terminals and cause incorrect measurements.*

b. Back Probe

Note: ***DO NOT*** *back probe a sealed connector or a flat wire connector.*

DO NOT disconnect the connector and probe the terminals from the harness side (back) of the connector.

- Back probe connector terminals only when specifically required in diagnostic procedures.
- Back probing can be a source of damage to connector terminals. Use care in order to avoid deforming the terminal, either by forcing the test probe too far into the cavity or by using too large of a test probe.
- After back probing any connector, inspect for terminal damage. If terminal damage is suspected, test for proper terminal contact.

c. Measuring Voltage

Testing for Voltage Drop

This test checks for voltage being lost along a wire, or through a connection or switch.

1. Connect the positive lead of a DMM to the end of the wire (or to one side of the connection or switch) which is closer to the battery.
2. Connect the negative lead to the other end of the wire (or the other side of the connection or switch).
3. Operate the circuit.
4. Voltage at the wire should be displayed.

https://truckmanualshub.com/

Measuring Voltage Drop

The following test determines the difference in voltage potential between two points.

1. Set the rotary dial of the DMM to the V (DC) position.

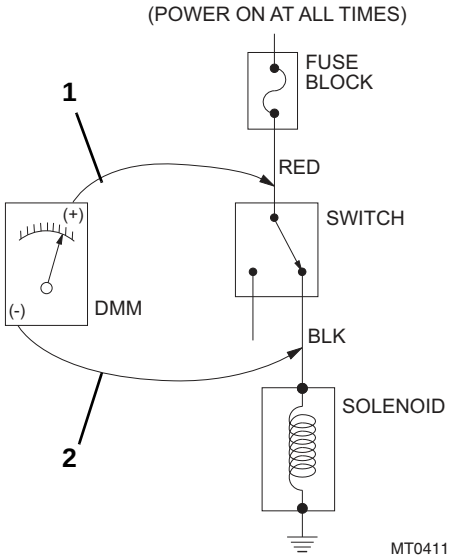

2. Connect the (+) positive lead (**1**) of the DMM to one point of the circuit to be tested.
3. Connect the (-) negative lead (**2**) of the DMM to the other point of the circuit.
4. Operate the circuit.
5. The DMM displays the difference in voltage between the two points.

Testing for Continuity

The following procedures verify good continuity in a circuit.

With a DMM

1. Set the rotary dial of the DMM to the Ohm position.
2. Disconnect the power feed (i.e. fuse, control module) from the suspect circuit.
3. Disconnect the load.
4. Press the MIN MAX button on the DMM.
5. Connect one lead of the DMM to one end of the circuit to be tested.
6. Connect the other lead of the DMM to the other end of the circuit.
7. If the DMM displays low or no resistance and a tone is heard, the circuit has good continuity.

With a Test Lamp

Note: *Only use the test lamp procedure on low impedance power and ground circuits.*

1. Remove the power feed (i.e. fuse, control module) from the suspect circuit.
2. Disconnect the load.
3. Connect one lead of the test lamp to one end of the circuit to be tested.
4. Connect the other lead of the test lamp to battery positive voltage.
5. Connect the other end of the circuit to ground.
6. If the test lamp illuminates (full intensity), then the circuit has good continuity.

https://truckmanualshub.com/

Testing for Short to Ground

The following procedures test for a short to ground in a circuit.

With a DMM

1. Remove the power feed (i.e. fuse, control module) from the suspect circuit.
2. Disconnect the load.
3. Set the rotary dial of the DMM to the Ohm position.
4. Connect one lead of the DMM to one end of the circuit to be tested.
5. Connect the other lead of the DMM to a good ground.
6. If the DMM does NOT display infinite resistance (OL), there is a short to ground in the circuit.

With a Test Lamp

1. Remove the power feed (i.e. fuse, control module) from the suspect circuit.
2. Disconnect the load.
3. Connect one lead of the test lamp to one end of the circuit to be tested.
4. Connect the other lead of the test lamp to battery positive voltage.
5. Connect the other end of the circuit to ground.
6. If the lamp illuminates (full intensity), then the circuit has good continuity.

Testing a Fuse Powering Several Loads

1. Review the system schematic and locate the fuse that is open.
2. Open the first connector or switch leading from the fuse to each load.
3. Connect a DMM across the fuse terminals (be sure that the fuse is powered).
   - When the DMM displays voltage the short is in the wiring leading to the first connector or switch.
   - If the DMM does not display voltage, refer to next step.
4. Close each connector or switch until the DMM or analog tester displays voltage in order to find which circuit is shorted.

Testing for Electrical Intermittence

Perform the following procedure while wiggling the harness from side to side. If possible, continue this at 6-inch intervals while watching the test equipment.

- Testing for Short to Ground
- Testing for Continuity

Testing Relays from the Fuse Block

Relays are used to control a large amount of current by using a small amount of control current flowing through the relay coil.

1. Park the machine on a firm, level surface, level the machine, fully retract the boom, lower the boom, place the transmission control lever in (N) NEUTRAL, engage the park brake and shut the engine OFF.
2. Place a Do Not Operate Tag on both the ignition key switch and the steering wheel, stating that the machine should not be operated.
3. Open the engine cover. Allow the system fluids to cool.
4. Properly disconnect the batteries.

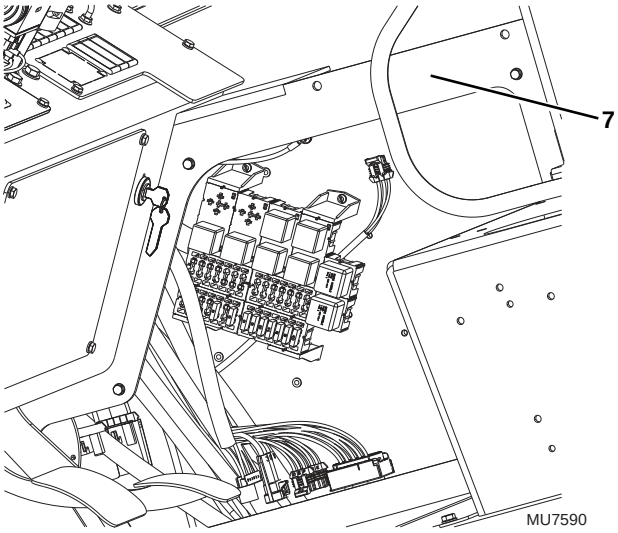

5. Remove the cover plate from the right side console (**7**).
6. Refer to the relay location chart, on page 9.4, for the location of the relays within the fuse block.
7. Remove the suspect relay from the machine.

https://truckmanualshub.com/

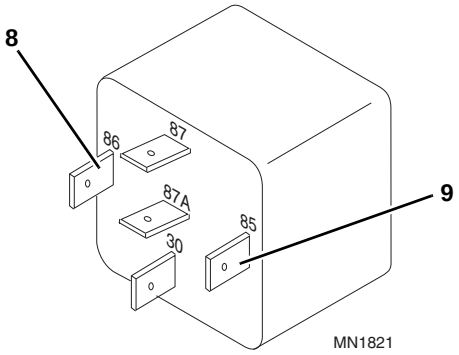

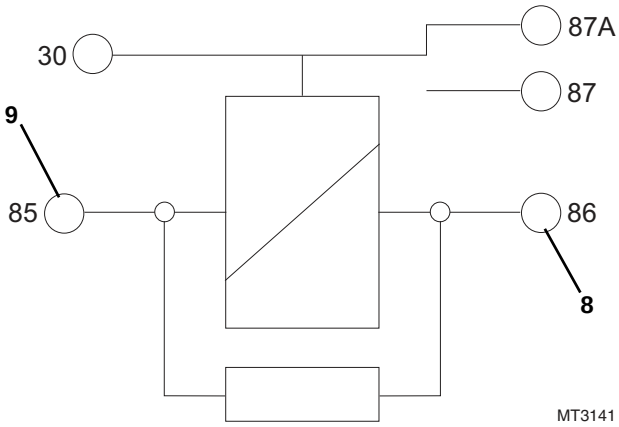

8. Apply the proper voltage to the relay coil at terminal 86 (**8**) and attach the ground (-) probe to terminal 85 (**9**), ground. An audible click should be heard indicating that the relay is functioning properly.
9. Install the cover (**7**) to the side console.
10. Properly connect the batteries.

Testing Relays located in the Engine Compartment

1. Park the machine on a firm, level surface, level the machine, fully retract the boom, lower the boom, place the transmission control lever in (N) NEUTRAL, engage the park brake and shut the engine OFF.
2. Place a Do Not Operate Tag on both the ignition key switch and the steering wheel, stating that the machine should not be operated.
3. Open the engine cover. Allow the system fluids to cool.
4. Properly disconnect the batteries.
5. To remove the relays from inside the engine compartment, label and remove all the wires connected to the suspect relay.

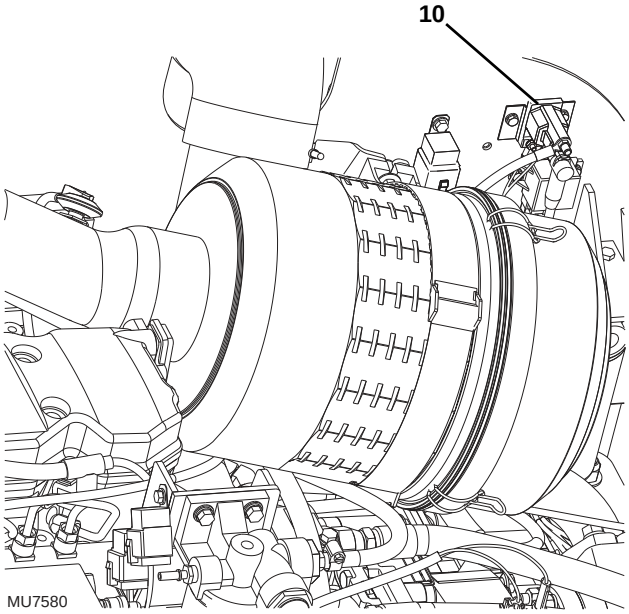

6. To access the terminal nuts and washers on the grid heater relays (**10**), lift the protective cover and slide it along the wire, away from the mounting hardware.

   Save the terminal nuts and washers for later reassembly.
7. Remove the mounting hardware from the mounting bracket on the relay. Remove the relay from the engine compartment.
8. Inspect the general condition of the relay casing and terminals. Replace the relay if it is cracked or damaged in any way.

https://truckmanualshub.com/

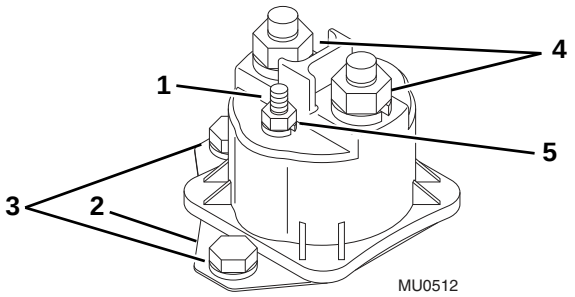

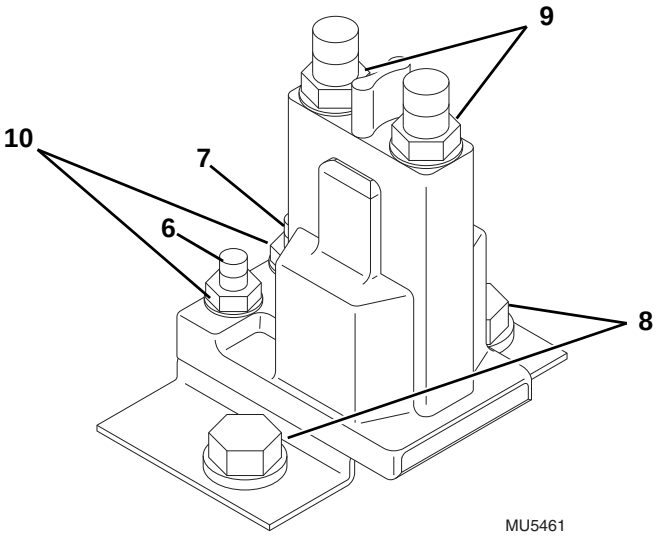

9. To test the operation of the relays, connect a 12-volt DC positive lead to the positive terminal (**1** or **6**). Connect the negative lead to the mounting bracket or negative post (**2** or **7**), listening for a “click” sound as the contacts close. Replace the relay if the contacts do not close.
10. When reassembling the relays to the mounting bracket, torque the relay mounting hardware (**3** or **8**) to 5 - 9 lb-ft (7 - 12,5 Nm).
11. When reassembling the wires to the relay, torque the nuts (**4** or **9**) to a maximum of 95 lb-in (11 Nm). Torque the other nuts (**5** or **10**), to a maximum of 40 lb-in (4,5 Nm).
12. Properly connect the batteries.
13. Close and secure the engine cover.

Testing Diodes

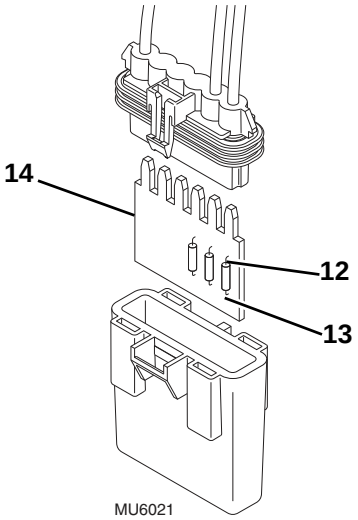

To test diodes in the electrical system, set the DMM dial on R x1 setting and connect one lead to each side (**12** and **13**) of the diode. Note the reading on the DMM. Reverse the leads and note reading. The DMM should indicate a high or infinite resistance (no meter movement) when connected one way and a low reading when connected to the other. If both readings are high or infinite, the diode is open. If both readings are low, the diode is shorted. Repeat test on remaining diodes. If any diodes are shorted or open, replace the diode board (**14**). Note the orientation of the board when removing it for replacement. Replace diode board in the same orientation as it was when it was removed.

https://truckmanualshub.com/

Section 10
Stabil-TRAK™ System

Contents

PARAGRAPH	TITLE	PAGE
10.1	**Stabil-TRAK™ System Component Terminology**	**10-2**
10.2	**Stabil-TRAK™ Description**	**10-3**
10.2.1	Stabil-TRAK™ Solenoid Valves	10-3
10.3	**Stabil-TRAK™ Electrical Circuit Operation and Troubleshooting**	**10-4**
10.4	**Stabil-TRAK™ System Test**	**10-10**
10.4.1	Stabil-TRAK™ System Test Instructions	10-10
10.4.2	Stabil-TRAK™ System Test Procedures	10-10
10.5	**Stabil-TRAK™ Hydraulic Circuit Operation and Troubleshooting**	**10-13**
10.5.1	Troubleshooting Symptom Chart	10-13
10.5.2	Stabil-TRAK™ Hydraulic Circuit	10-14
10.5.3	Stabilizer Cylinder Oil Flow	10-14
10.5.4	Hydraulic Circuit Operation - Free Pivot Mode, Rod Oil Out	10-15
10.5.5	Hydraulic Troubleshooting - Free Pivot Mode, Rod Oil Out	10-16
10.5.6	Hydraulic Circuit Operation - Free Pivot Mode, Base Oil Out	10-17
10.5.7	Hydraulic Troubleshooting - Free Pivot Mode, Base Oil Out	10-18
10.5.8	Hydraulic Circuit Operation - Slow Pivot Mode, Rod Oil Out	10-19
10.5.9	Hydraulic Troubleshooting - Slow Pivot Mode, Rod Oil Out	10-20
10.5.10	Hydraulic Circuit Operation - Slow Pivot Mode, Base Oil Out	10-21
10.5.11	Hydraulic Troubleshooting - Slow Pivot Mode, Base Oil Out	10-22
10.5.12	Hydraulic Circuit Operation - Locked Mode	10-23
10.5.13	Hydraulic Circuit Operation - Locked Mode, Frame Sway Right	10-23
10.5.14	Hydraulic Troubleshooting - Locked Mode, Will Not Frame Sway Right	10-25
10.5.15	Hydraulic Circuit Operation - Locked Mode, Frame Sway Left	10-26
10.5.16	Hydraulic Troubleshooting - Locked Mode, Will Not Frame Sway Left	10-27

https://truckmanualshub.com/

10.1 STABIL-TRAK™ SYSTEM COMPONENT TERMINOLOGY

To understand the safety, operation and maintenance information presented in this section, it is necessary that the operator/mechanic be familiar with the names and locations of the major assemblies of the Stabil-TRAK™ system. The following illustration identifies the components that are referred to throughout this section.

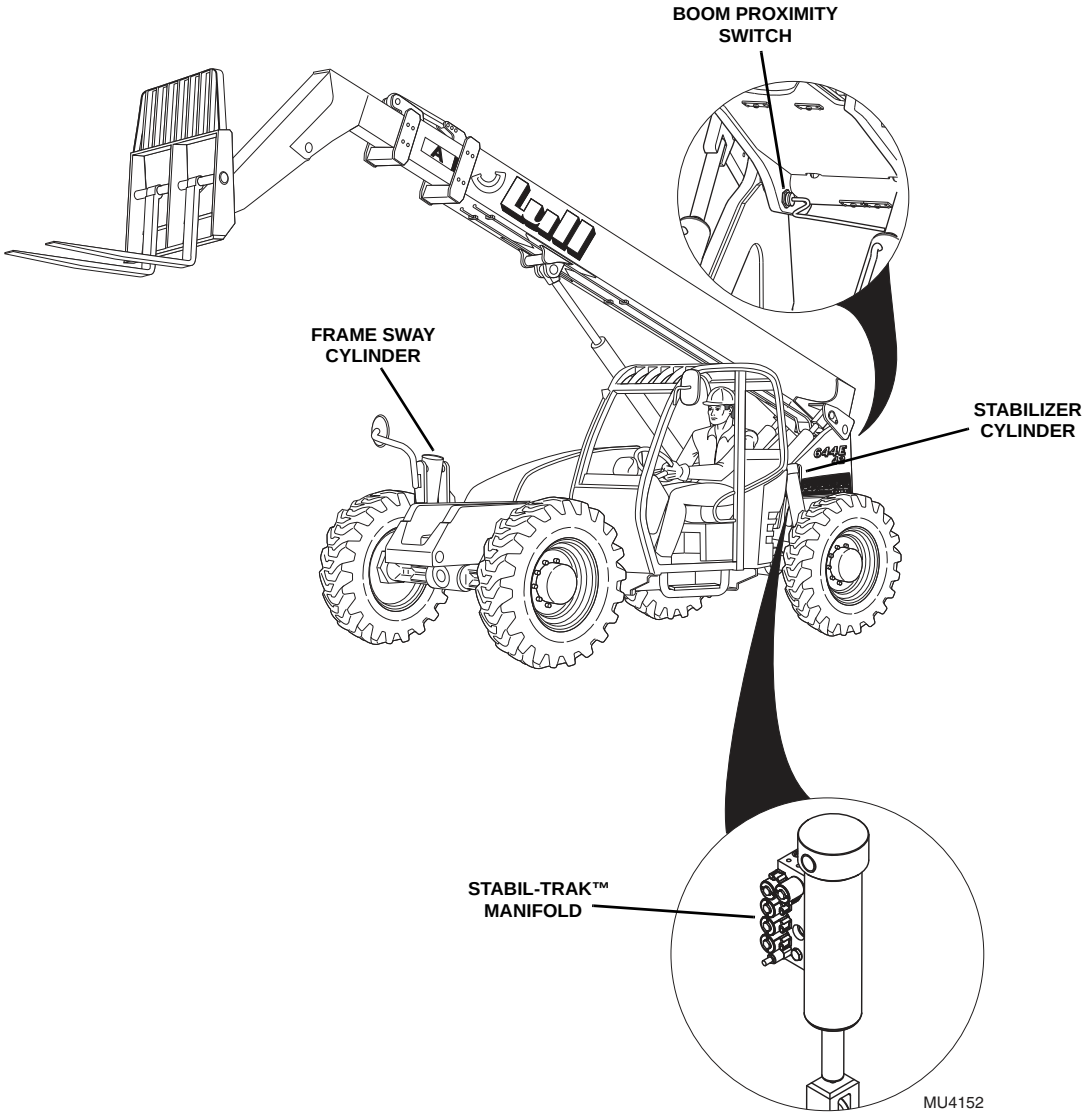

https://truckmanualshub.com/

10.2 STABIL-TRAK™ DESCRIPTION

The patented rear axle lock or Stabil-TRAK™ system works to stabilize the machine under various conditions. The appropriate Operation & Safety manual contains basic Stabil-TRAK™ information; a copy of the Operation & Safety manual should always be available in the storage compartment located on the left inside wall of the cab, next to the seat support.

The Stabil-TRAK™ lock system will be activated when the boom angle is greater than 40° and one or more of the following functions are activated:

- Engaging the Parking Brake Switch
- Placing the Travel Select Lever in (N) NEUTRAL
- Depressing and holding the Service Brake

With the boom lowered to an angle of less than 40°, the rear axle lock system is not active and none of these functions will affect the Stabil-TRAK™ system.

10.2.1 Stabil-TRAK™ Solenoid Valves

There are five Stabil-TRAK™ solenoid valves installed in the Stabil-TRAK™ manifold, attached to the stabilizer cylinder above the left side of the rear axle.

If a solenoid valve is suspected of malfunctioning, disconnect the coil wiring lead and test the coil for proper resistance (7-9 ohms) and for proper voltage from the harness (12 VDC). Replace the solenoid coil if open or shorted to ground.

Also inspect the valve cartridge, o-rings, and the other hydraulic and electrical components in the circuit to accurately determine the cause of the problem.

All solenoid coils are identical and can be interchanged for diagnostic purposes.

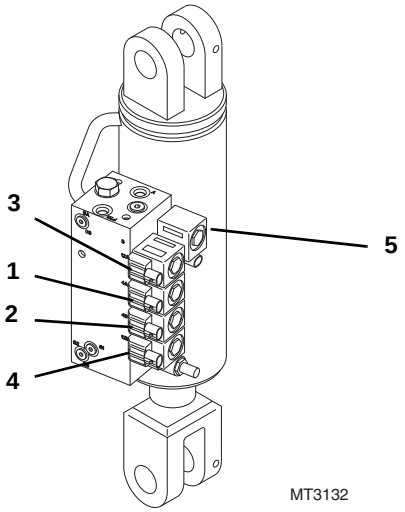

Note: *DO NOT interchange solenoid valves 4A (**1**), 4B (**2**), 12A (**3**) or 12B (**4**) with solenoid valve 3 (**5**). These valves will fit into the other locations, but are configured differently internally and will not operate properly if interchanged.*

Cartridge valves 4A (**1**), 4B (**2**), 12A (**3**) and 12B (**4**) are identical and can be interchanged for diagnostic proposes.

Note: *Make sure the 0.060 orifices are in place when installing solenoid valves 4A (**1**) and 4B (**2**).*

In general, if there is a problem with the Stabil-TRAK™ system beyond common electrical troubles, the involved electrical and hydraulic circuits should each be checked and the exact source of the problem diagnosed before any parts are replaced.

https://truckmanualshub.com/

10.3 STABIL-TRAK™ ELECTRICAL CIRCUIT OPERATION AND TROUBLESHOOTING

Note: *Before using the 944E Stabil-TRAK System Troubleshooting chart and diagrams, complete the Section 10.4, "Stabil-TRAK™ System Test", to determine what part of the system is not functioning properly.*

Stabil-TRAK™ System Troubleshooting

Machine Conditions / Switch/ Relay Solenoid	FREE PIVOT MODE	SLOW PIVOT MODE	LOCKED MODE I	LOCKED MODE II	LOCKED MODE III
	Ignition On. Boom Below 40°. PB "OFF" & SB Released. Transmission Fwd. or Rev.	Ignition On. Boom Above 40°. PB "OFF" & SB Released. Transmission Fwd. or Rev.	Ignition On. Boom Above 40°. PB "ON" & SB Released. Transmission Neutral.	Ignition On. Boom Above 40°. * PB "OFF" & SB Applied. Transmission Fwd. or Rev.	Ignition On. Boom Above 40°. PB "OFF" & SB Released. Transmission Neutral.
Solenoid 12A	E	DE	DE	DE	DE
Solenoid 12B	E	DE	DE	DE	DE
Solenoid 3	DE	DE	E	E	E
Solenoid 4A	DE	E	DE	DE	DE
Solenoid 4B	DE	E	DE	DE	DE
Boom Proximity Sensor	C	O	O	O	O
Boom Switch Relay (E7)	E	DE	DE	DE	DE
Stabilizer Lock Relay (E6)	DE	DE	E	E	E
Stabilizer Lock Mode Light	OFF (DE)	OFF (DE)	ON (E)	ON (E)	ON (E)
Stabilizer Slow Pivot Mode Light	OFF (DE)	ON (E)	OFF (DE)	OFF (DE)	OFF (DE)
Neutral Start Relay (E3)	DE	DE	DE	DE	E
Park Brake Solenoid	E	E	DE	E	E
Park Brake Switch	O	O	C	O	O
Stabilizer Brake Switch	O	O	O	C	O
Transmission Control Relay (E1)	DE	DE	E	DE	DE

Definitions:

PB = Park Brake

SB = Service Brake

DE = De-energized

E = Energized

C = Closed

O = Open

https://truckmanualshub.com/

FREE PIVOT MODE

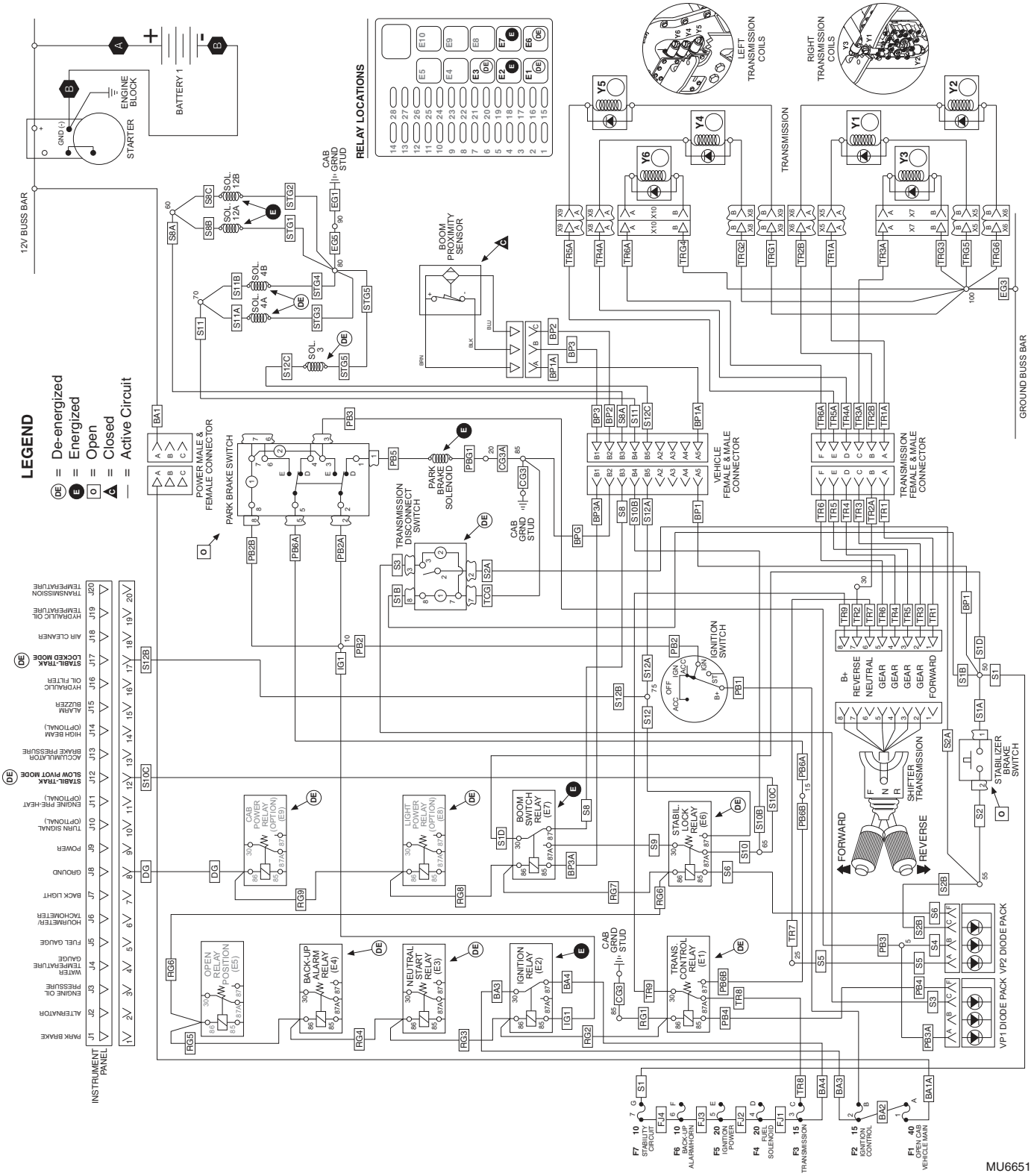

https://truckmanualshub.com/

SLOW PIVOT MODE

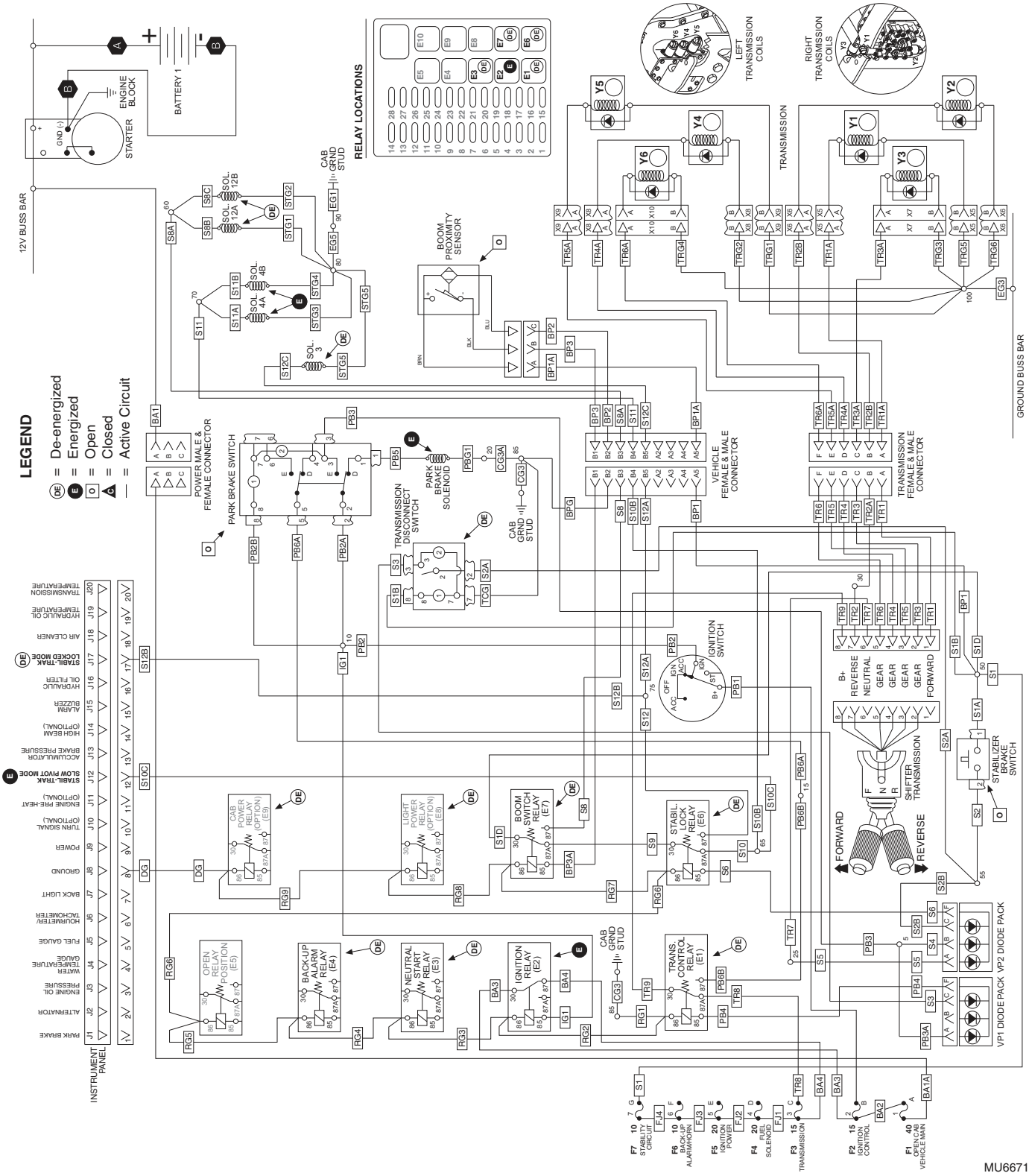

https://truckmanualshub.com/

LOCKED MODE I

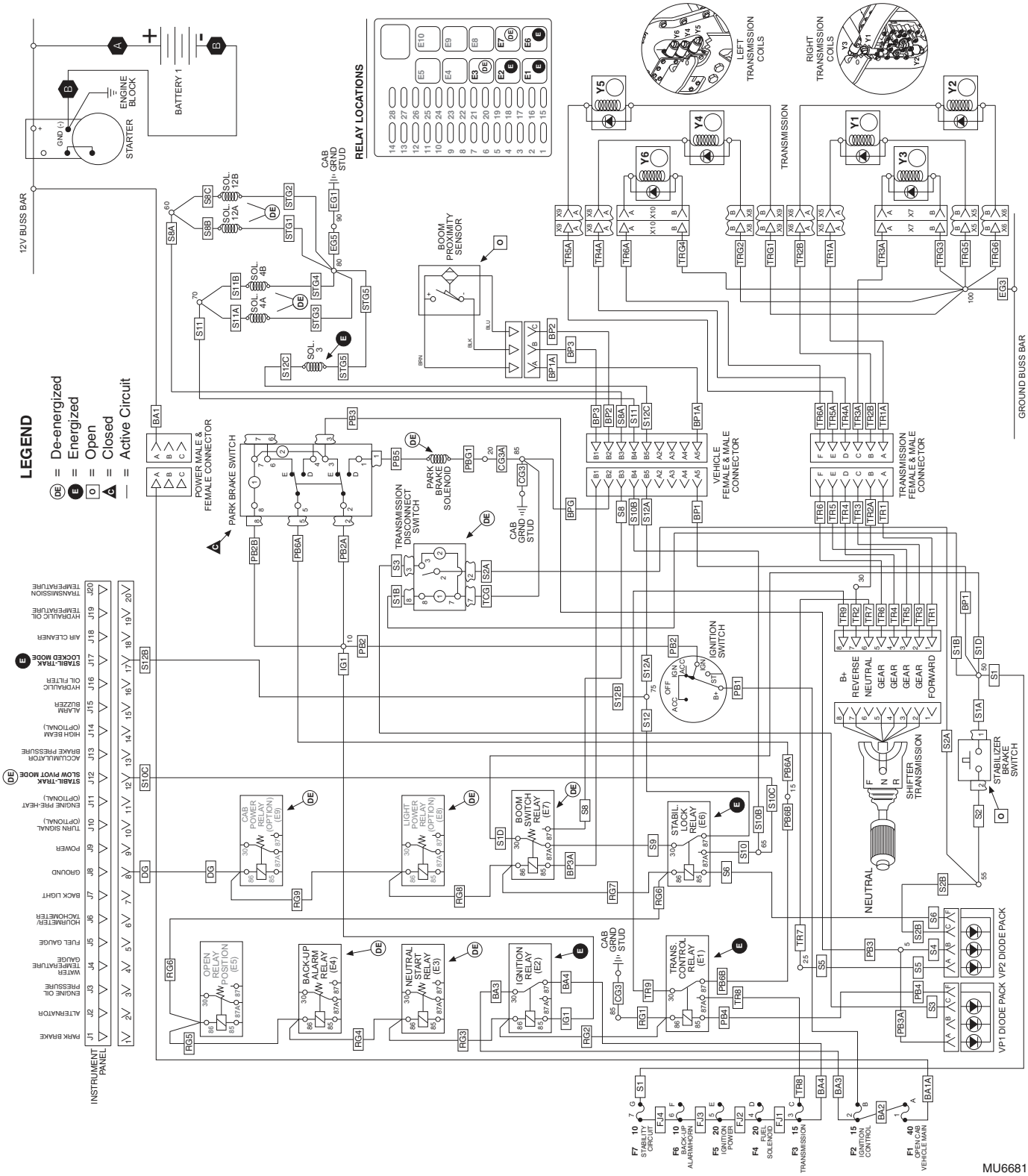

https://truckmanualshub.com/

LOCKED MODE II

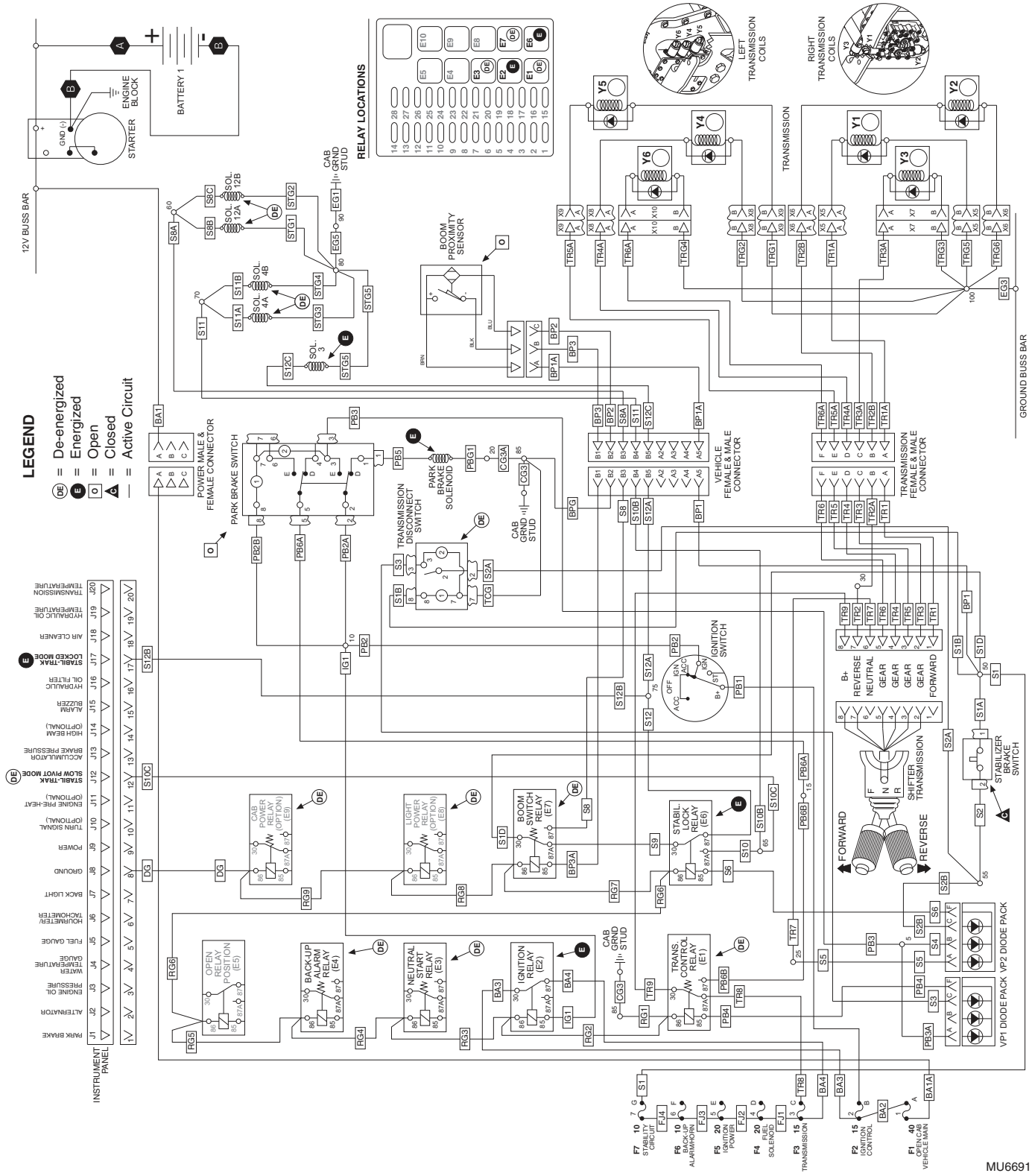

https://truckmanualshub.com/

LOCKED MODE III

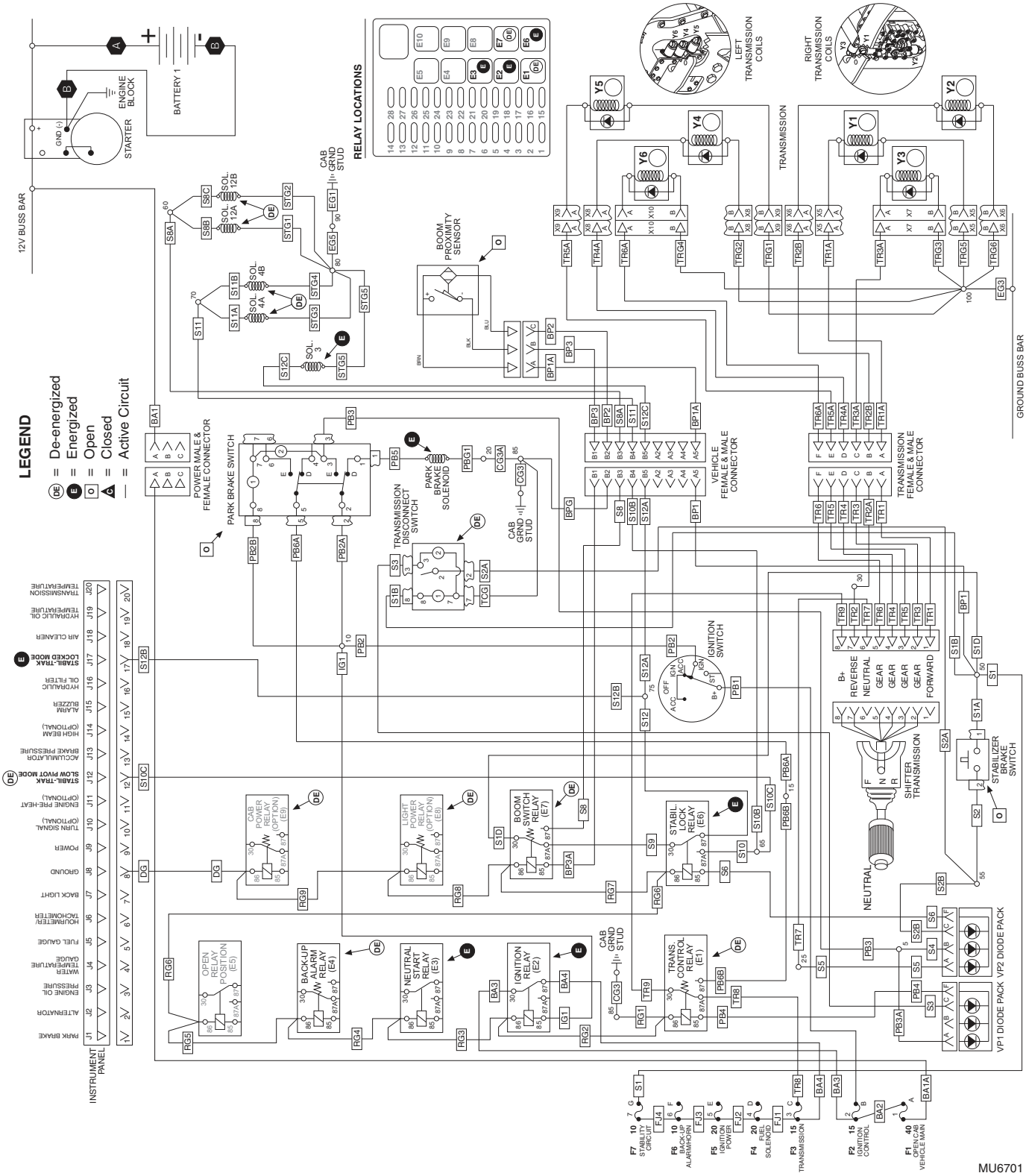

https://truckmanualshub.com/

10.4 STABIL-TRAK™ SYSTEM TEST

Note: *The operator must know that the Stabil-TRAK™ system is active and functioning properly.*

To test the function of the Stabil-TRAK™ system, read the Stabil-TRAK™ System Test instructions and follow Steps 1 through 9 of Section 10.4.2, “Stabil-TRAK™ System Test Procedures.”

10.4.1 Stabil-TRAK™ System Test Instructions

- Test the Stabil-TRAK™ system with the machine on a level surface.
- Remove any attachment from the quick attach before performing the test.
- DO NOT extend the boom at any time during the test. Perform the test with the boom fully retracted.
- DO NOT raise the boom above 60° for Steps 3-6.
- DO NOT raise the boom above 45° for Steps 7-9.
- Follow Steps 1 through 9 of the Stabil-TRAK™ system test procedure exactly as written.

Note: *If the Stabil-TRAK™ light goes OFF and the front left tire lowers to the ground at any time during Steps 4* through *7, the test was not performed properly or the Stabil-TRAK™ system is not functioning properly. Carefully repeat the steps starting with Step 1.*

If the Stabil-TRAK™ light goes OFF and the front left tire lowers to the ground consistently during Steps 4 through 7, the Stabil-TRAK™ system is not functioning properly and the test should be stopped immediately. If the Stabil-TRAK™ system is not functioning properly, follow the procedures in Section 10.5.2, “Stabil-TRAK™ Hydraulic Circuit,” to repair the system**.**

Note: *The front left tire off the ground during the test is a visible indication that the stability system is in the locked mode.*

10.4.2 Stabil-TRAK™ System Test Procedures

If Steps 1 through 9 prove positive, the Stabil-TRAK™ system is functioning properly, and the machine can be returned to service. If any of these steps indicate that the Stabil-TRAK™ system is not functioning properly, follow the procedures in Section 10.5.2, “Stabil-TRAK™ Hydraulic Circuit,” to repair the system.

https://truckmanualshub.com/

	Stabil-TRAK™ System Test Procedures
FREE PIVOT MODE	**Step 1**
	a. Place the vehicle on a level surface with 0° sway.
	b. Have the boom fully retracted and horizontal.
	c. Place an 8" (203 mm) wood or cement block in front of the front left tire.
	d. Enter the vehicle.
	e. Fasten the seat belt.
	f. Turn the ignition switch to the RUN position.
	g. Check to be sure the Stabil-TRAK™ lock light and the slow pivot light are both OFF.
	Step 2
	a. Turn the ignition switch and start the engine.
	b. Turn the parking brake switch OFF.
	c. Move the range select lever to (1) FIRST gear.
	d. Move the travel select lever to the (F) FORWARD position.
	e. Drive the vehicle up on the block and stop the vehicle.
	f. Use the frame sway control to level the vehicle back to 0°.
	Step 3
	a. Depress the service brake pedal.
	b. Move the travel select lever to the (N) NEUTRAL DETENT position.
LOCKED MODE — Service Brake Test ▶	c. Raise the boom to exactly 60°. The Stabil-TRAK™ lock light should come ON when the boom angle is at about 40° and remain ON. The Stabil-TRAK™ slow pivot light should be OFF.
	Step 4
	a. Use your left foot to depress the service brake pedal.
	b. Move the travel select lever to the (R) REVERSE position and the range selector to the (2) SECOND gear position.
	c. Ease your left foot partially off the service brake pedal, just keeping the Stabil-TRAK™ lock light ON Approximately 3/4 pedal travel which will be 150 psi (10,3 bar) pressure in the brake valve.
	d. With your right foot, increase the engine rpm slightly, as necessary, to back the vehicle off the block. The Stabil-TRAK™ lock light should remain ON while backing off the block, the front left tire should remain off the ground. If the front left tire drops to the ground, repeat steps 1 thru 4.
	IMPORTANT: *Perform Steps 5 thru 9 with the engine rpm at idle.*
	Step 5
LOCKED MODE — Neutral Test ▶	a. Keep the service brake pedal depressed.
	b. Move the travel select lever to the (N) NEUTRAL DETENT position.
	c. Take your foot off the service brake pedal. The Stabil-TRAK™ lock light should remain ON and the front left tire should remain off the ground.
	Step 6
LOCKED MODE — Park Brake Test ▶	a. With the travel select lever in the (N) NEUTRAL DETENT position, engage the parking brake switch.
	b. Move the travel select lever to the (F) FORWARD position. DO NOT depress the service brake pedal. The Stabil-TRAK™ lock light should remain ON and the front left tire should remain off the ground.

https://truckmanualshub.com/

Stabil-TRAK™ System Test Procedures	
	Step 7
LOCKED MODE	a. With the parking brake switch ON, move the travel select lever to the (N) NEUTRAL DETENT position.
	b. Lower the boom to exactly 45°.
	c. Frame sway the vehicle no more than 5° to the left.
	d. Frame sway the vehicle back to 0°.
	e. Frame sway the vehicle no more than 5° to the right. ***Note:*** *Observe that frame sway will be slower than normal during this test.*
	f. The Stabil-TRAK™ lock light should remain ON and the front left tire should remain off the ground. The front left tire should not raise or lower during frame sway.
	g. Frame sway back toward 0°, leaving the vehicle swayed to the right approximately 1° to 2°.
	Step 8
	a. Depress the service brake pedal fully.
	b. Disengage the parking brake switch.
	c. With the range select lever in (1) FIRST gear, move the travel select lever to the (R) REVERSE position.
	d. Release the service brake pedal to deactivate the Stabil-TRAK™ system.
SLOW PIVOT MODE	e. The Stabil-TRAK™ lock light should go OFF and the Stabil-TRAK™ slow pivot light should come ON.
	f. The front left tire should return to the ground while the vehicle travels in reverse.
LOCKED MODE	g. Depress the service brake pedal to stop the vehicle.
	Step 9
	a. With the service brake pedal depressed and the boom angle at exactly 45°, move the range select lever to (3) THIRD gear.
	b. Move the travel select lever to (F) FORWARD.
SLOW PIVOT MODE	c. Release the service brake pedal to deactivate the Stabil-TRAK™ system. The Stabil-TRAK™ lock light should go OFF and the Stabil-TRAK™ slow pivot light should come ON.
	d. Slowly drive the vehicle forward against the block to stop the vehicle from moving forward.
	e. With the front left tire against the block, frame sway the vehicle no more than 5° to the left.
	f. Check that the front left tire remains on the ground. It is normal for the front left tire to raise slightly when swaying to the left, but the tire should immediately lower when the frame sway function is stopped.
	g. Frame sway the vehicle back to 0° and pause briefly.
	h. Frame sway the vehicle no more than 5° to the right.
	i. Check that the front right tire remains on the ground. It is normal for the front right tire to raise slightly when swaying to the right, but the tire should immediately lower when the frame sway function is stopped.
	j. Frame sway the vehicle back to 0°.
	k. Depress the service brake pedal.
	l. Shift the travel select lever to the (N) NEUTRAL DETENT position.
	m. Lower the boom.

Note: *If Steps 1-9 prove positive, the Stabil-TRAK™ system is functioning properly, and the vehicle can be returned to service. If any of these steps indicate that the Stabil-TRAK™ system is not functioning properly, follow the procedures in Section 10.5.2, "Stabil-TRAK™ Hydraulic Circuit," to repair the system.*

https://truckmanualshub.com/

10.5 STABIL-TRAK™ HYDRAULIC CIRCUIT OPERATION AND TROUBLESHOOTING

The function of the Stabil-TRAK™ system varies under different operating conditions. The basic modes include the FREE PIVOT MODE, SLOW PIVOT MODE and LOCKED MODE.

The hydraulic operation and troubleshooting information for each of these modes are described below.

10.5.1 Troubleshooting Symptom Chart

Symptom	Conditions	Reference
With the boom below 40°, when swaying the frame to the right, the left front tire comes off the ground.	Ignition ON, engine running Boom angle is below 40° Travel select lever is in (F) FORWARD or (R) REVERSE Park brake OFF Service brake DISENGAGED	Refer to Section 10.5.4, “Hydraulic Circuit Operation - Free Pivot Mode, Rod Oil Out,” and Section 10.5.5, “Hydraulic Troubleshooting - Free Pivot Mode, Rod Oil Out.”
With the boom below 40°, when swaying the frame to the left, the right front tire comes off the ground.	Ignition ON, engine running Boom angle is below 40° Travel select lever is in (F) FORWARD or (R) REVERSE Park brake OFF Service brake DISENGAGED	Refer to Section 10.5.6, “Hydraulic Circuit Operation - Free Pivot Mode, Base Oil Out,” and Section 10.5.7, “Hydraulic Troubleshooting - Free Pivot Mode, Base Oil Out.”
While traveling, ride feels spongy (riding on 3 wheels).	Ignition ON, engine running Boom angle is above 40° Travel select lever is in (F) FORWARD or (R) REVERSE Park brake OFF Service brake DISENGAGED	Refer to Section 10.5.8, “Hydraulic Circuit Operation - Slow Pivot Mode, Rod Oil Out,” and Section 10.5.9, “Hydraulic Troubleshooting - Slow Pivot Mode, Rod Oil Out,” or Section 10.5.10, “Hydraulic Circuit Operation - Slow Pivot Mode, Base Oil Out,” and Section 10.5.11, “Hydraulic Troubleshooting - Slow Pivot Mode, Base Oil Out.”
Stabil-TRAK™ lock light in the front dash is not ON.	Ignition ON, engine running Boom angle is above 40° Travel select lever is in (N) NEUTRAL, or Park brake ON, or Service brake ENGAGED	Refer to Section 10.5.12, “Hydraulic Circuit Operation - Locked Mode,” and Section , “,” or Section 10.5.16, “Hydraulic Troubleshooting - Locked Mode, Will Not Frame Sway Left.”
With the boom above 40°, when swaying the frame to the right, the left front tire comes off the ground.	Ignition ON, engine running Boom angle is above 40° Travel select lever is in (N) NEUTRAL, or Park brake ON, or Service brake ENGAGED	Refer to Section 10.5.13, “Hydraulic Circuit Operation - Locked Mode, Frame Sway Right,” and Section , “.”
With the boom above 40°, when swaying the frame to the left, the right front tire comes off the ground.	Ignition ON, engine running Boom angle is above 40° Travel select lever is in (N) NEUTRAL, or Park brake ON, or Service brake ENGAGED	Refer to Section 10.5.15, “Hydraulic Circuit Operation - Locked Mode, Frame Sway Left,” and Section 10.5.16, “Hydraulic Troubleshooting - Locked Mode, Will Not Frame Sway Left.”

https://truckmanualshub.com/

10.5.2 Stabil-TRAK™ Hydraulic Circuit

The Stabil-TRAK™ hydraulic circuit can be tested using these basic guidelines. For more hydraulic information, refer to Section 8.4, “Hydraulic Circuits.”

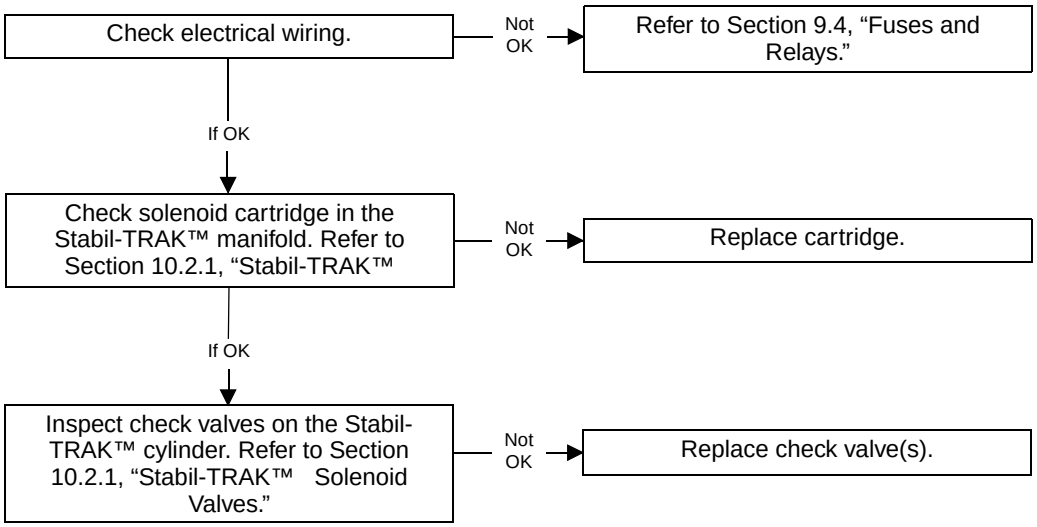

10.5.3 Stabilizer Cylinder Oil Flow

In the FREE PIVOT and SLOW PIVOT MODES, oil flow from the stabilizer cylinder will be in one of two directions; ROD OIL OUT or BASE OIL OUT.

ROD OIL OUT flow will occur when the left side of the rear axle is lower than the right side (left wheel in a pothole, or the right wheel passing over an obstruction), causing the cylinder to extend (**1**).

BASE OIL OUT flow will occur when the right side of the rear axle is lower than the left (right wheel in a pothole, or the left wheel passing over an obstruction), causing the cylinder to compress (**2**).

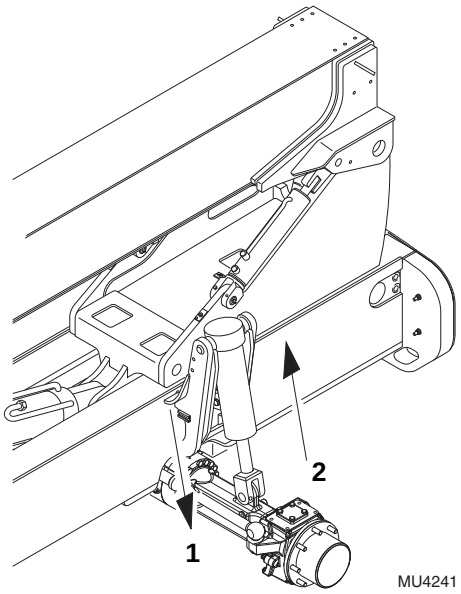

https://truckmanualshub.com/

10.5.4 Hydraulic Circuit Operation - Free Pivot Mode, Rod Oil Out

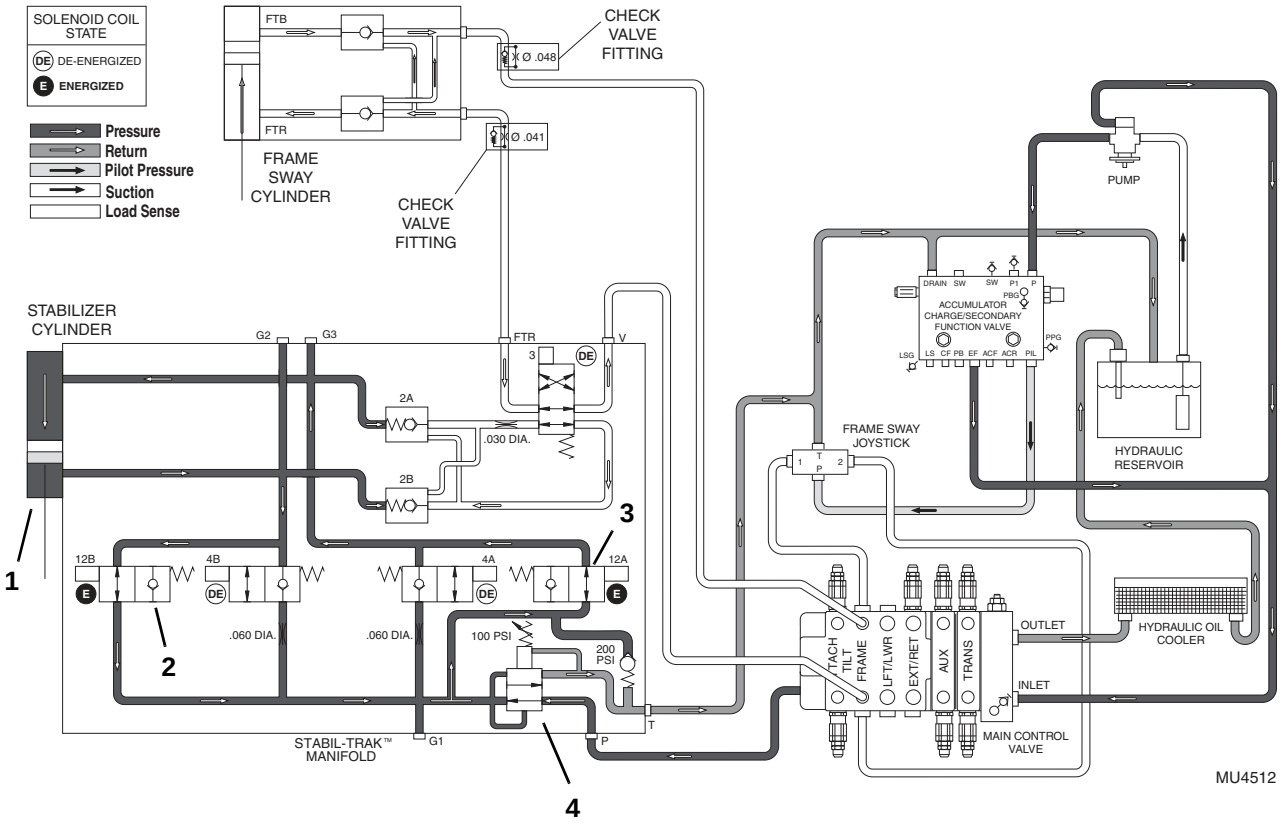

Conditions:

- Boom angle is below 40°
- Rear axle pivots freely
- Travel select lever in (F) FORWARD or (R) REVERSE position
- Park brake OFF
- Service brake DISENGAGED

Operation:

When the conditions are met, solenoids 12A and 12B are energized. As the left side of the rear axle moves down, the rod extends, forcing hydraulic oil out from the rod end of the stabilizer cylinder (**1**). The oil then flows through the solenoid-operated valve 12B (**2**) and back through solenoid-operated valve 12A (**3**), to the base side of the stabilizer cylinder.

Because the volume of oil needed on the base side is greater than that needed on the rod side, the extra oil needed is supplied from the main hydraulic system through a 100 psi (7 bar) reducing cartridge (**4**) in the Stabil-TRAK™ manifold.

https://truckmanualshub.com/

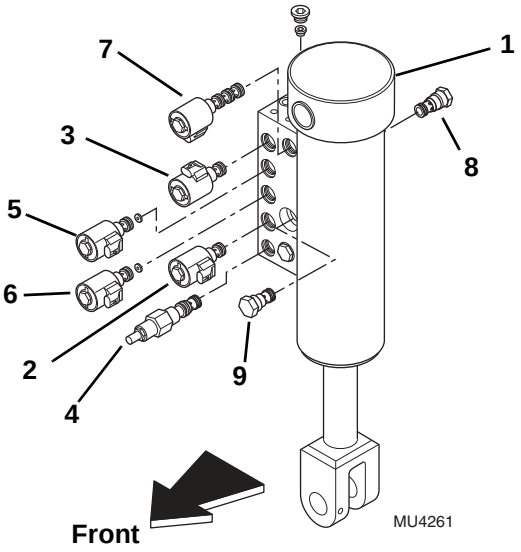

Legend

1. Stabilizer Cylinder
2. Solenoid 12B
3. Solenoid 12A
4. Pressure Reducing Cartridge
5. Solenoid 4A
6. Solenoid 4B
7. Solenoid 3
8. Check Valve 2A
9. Check Valve 2B

10.5.5 Hydraulic Troubleshooting - Free Pivot Mode, Rod Oil Out

Conditions:

- Ignition ON, engine running
- Boom angle is below 40°
- Travel select lever in (F) FORWARD or (R) REVERSE
- Park brake OFF
- Service brake DISENGAGED

When frame swaying right, left front tire comes off the ground

Check electrical wiring. — Not OK → Refer to Stabil-TRAK™ Electrical Circuit Operation and Troubleshooting

If OK ↓

Check solenoid coils 12A and 12B on the Stabil-TRAK™ manifold for correct resistance (7-9 ohms). — Not OK → Replace solenoid(s).

If OK ↓

Remove solenoid cartridges 12A and 12B from Stabil-TRAK™ manifold and inspect for debris or damage. Refer to Section 8.8, “Hydraulic Cylinders.” — Not OK → Clean passages or replace cartridge(s).

If OK ↓

Inspect check valves on frame sway cylinder. Refer to Section 8.8, “Hydraulic Cylinders.” — Not OK → Replace check valve(s).

If OK ↓

Inspect check valves 2A and 2B on the stabilizer cylinder. Refer to Section 8.8, “Hydraulic Cylinders.” — Not OK → Replace check valve(s).

https://truckmanualshub.com/

10.5.6 Hydraulic Circuit Operation - Free Pivot Mode, Base Oil Out

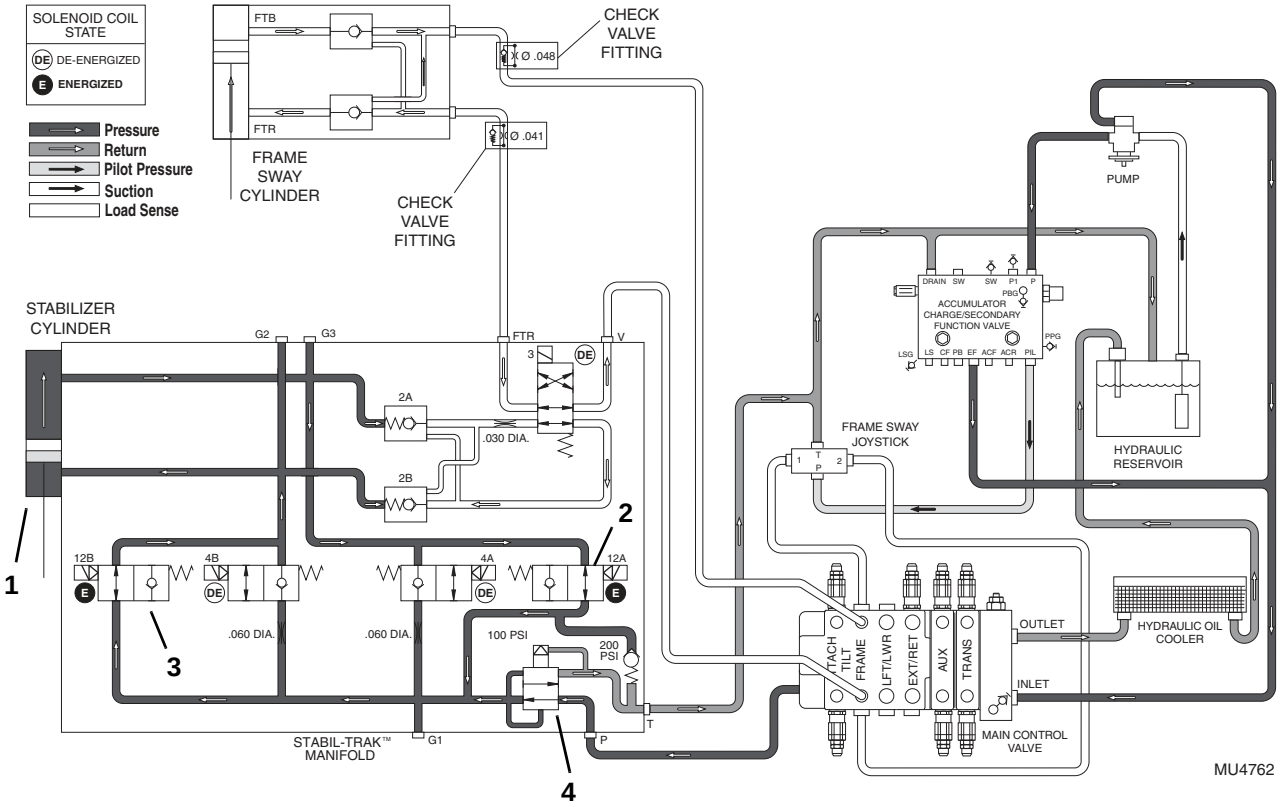

Conditions:

- Boom angle is below 40°
- Rear axle pivots freely
- Travel select lever in (F) FORWARD or (R) REVERSE position
- Park brake OFF
- Service brake DISENGAGED

Operation:

When the conditions are met, solenoids 12A and 12B are energized. As the left side of the rear axle moves down, the rod is forced up, forcing hydraulic oil out from the base end of the stabilizer cylinder (**1**). The oil then flows through the solenoid-operated valves 12A (**2**) and back through solenoid-operated valve 12B (**3**), to the rod side of the stabilizer cylinder.

Because the volume of oil needed on the rod side is less than that needed on the base side, excess oil is returned to the tank through a 100 psi (7 bar) reducing cartridge (**4**) in the Stabil-TRAK™ manifold.

https://truckmanualshub.com/

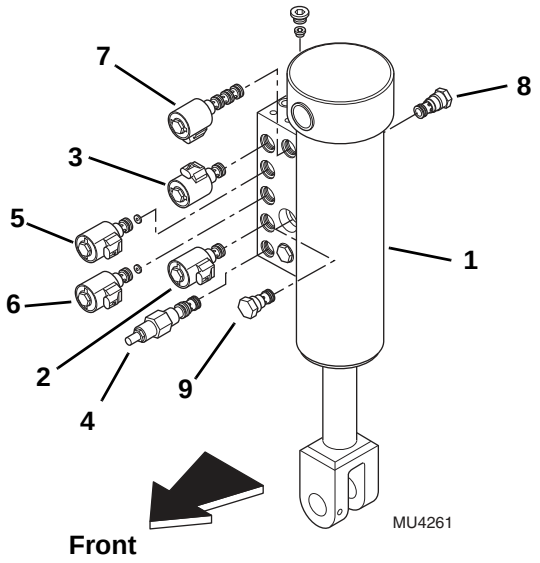

Legend

1. Stabilizer Cylinder
2. Solenoid 12A
3. Solenoid 12B
4. Pressure Reducing Cartridge
5. Solenoid 4A
6. Solenoid 4B
7. Solenoid 3
8. Check Valve 2A
9. Check Valve 2B

10.5.7 Hydraulic Troubleshooting - Free Pivot Mode, Base Oil Out

Conditions:

- Ignition ON, engine running
- Boom angle is below 40°
- Travel select lever in (F) FORWARD or (R) REVERSE
- Park brake ON
- Service brake DISENGAGED

With boom below 40°, when frame swaying to the left, the right front tire comes off the ground.

Check electrical wiring.
- Not OK → Refer to Stabil-TRAK™ Electrical Circuit Operation and Troubleshooting
- If OK ↓

Check solenoid coils 12A and 12B on the Stabil-TRAK™ manifold for correct resistance (7-9 ohms).
- Not OK → Replace solenoid(s).
- If OK ↓

Remove solenoid cartridges 12A and 12B from Stabil-TRAK™ manifold and inspect for debris or damage. Refer to Section 8.8, “Hydraulic Cylinders.”
- Not OK → Clean passages or replace cartridge(s).
- If OK ↓

Inspect check valves on frame sway cylinder. Refer to Section 8.8, “Hydraulic Cylinders.”
- Not OK → Replace check valve(s).
- If OK ↓

Inspect check valves 2A and 2B on the stabilizer cylinder. Refer to Section 8.8, “Hydraulic Cylinders.”
- Not OK → Replace check valve(s).

https://truckmanualshub.com/

10.5.8 Hydraulic Circuit Operation - Slow Pivot Mode, Rod Oil Out

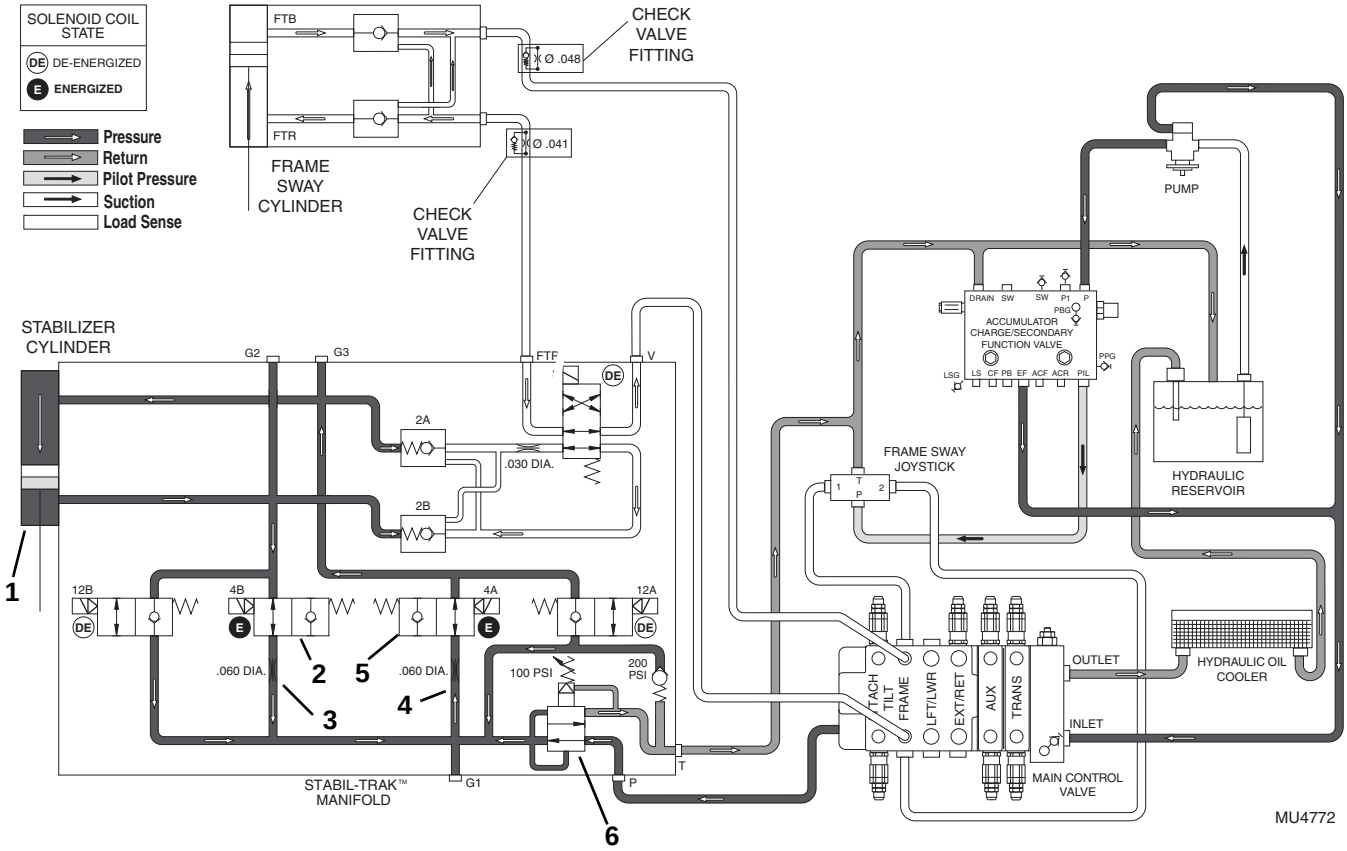

Conditions:

- Boom angle is above 40° **<u>OR</u>**
  (On SN 0160003881 & Before Only) below 40°
- Park brake OFF
- Service brake DISENGAGED **<u>OR</u>**
  (On SN 0160003881 & Before Only) with enough pedal movement to produce required pressure in brake system
- Travel select lever in (F) FORWARD or (R) REVERSE position

Operation:

As the boom is raised above 40°, the boom proximity switch is deactivated, causing solenoids 12A and 12B to de-energize and solenoids 4A and 4B to energize. This allows oil to flow from the rod end of the stabilizer cylinder (**1**), through solenoid-operated valve 4B (**2**), through a 0.060" orifice (**3**), through another 0.060" orifice (**4**), then through solenoid-operated valve 4A (**5**), then to the base end of the stabilizer cylinder.

The 0.060" orifices (**3** and **4**) in solenoid-operated valves 4A (**5**) and 4B (**2**) will slow the movement of the rear axle in reaction to terrain changes. The frame sway will react normally in this mode.

Because of the greater volume of oil required, extra oil is required from the system through the 100 psi (7 bar) reducing cartridge (**6**) in the Stabil-TRAK™ manifold. The restrictions produce the slow movement, or SLOW PIVOT mode.

https://truckmanualshub.com/

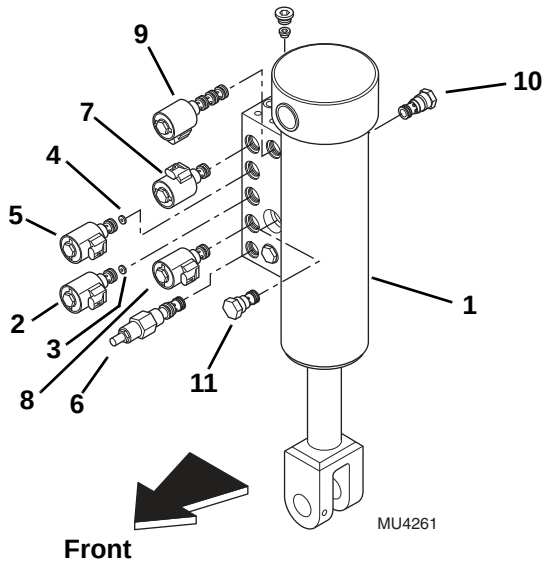

Legend

1. Stabilizer Cylinder
2. Solenoid 4B
3. .060" Orifice with Solenoid Valve 4B
4. .060" Orifice with Solenoid Valve 4A
5. Solenoid 4A
6. Pressure Reducing Cartridge
7. Solenoid 12A
8. Solenoid 12B
9. Solenoid 3
10. Check Valve 2A
11. Check Valve 2B

10.5.9 Hydraulic Troubleshooting - Slow Pivot Mode, Rod Oil Out

Conditions:

- Ignition ON, engine running
- Boom angle is above 40°
- Travel select lever in (F) FORWARD or (R) REVERSE
- Park brake OFF
- Service brake DISENGAGED

While traveling, ride feels spongy (riding on 3 wheels).

Check electrical wiring. — Not OK → Refer to Stabil-TRAK™ Electrical Circuit Operation and Troubleshooting

If OK ↓

Check solenoid coils 4A and 4B on the Stabil-TRAK™ manifold for correct resistance (7-9 ohms). — Not OK → Replace solenoid(s).

If OK ↓

Remove solenoid cartridges 4A and 4B from Stabil-TRAK™ manifold and inspect for debris or damage. Refer to Section 8.8, “Hydraulic Cylinders.” — Not OK → Clean passages or replace cartridge(s).

If OK ↓

Inspect check valves on frame sway cylinder. Refer to Section 8.8, “Hydraulic Cylinders.” — Not OK → Replace check valve(s).

If OK ↓

Inspect check valves 2A and 2B on the stabilizer cylinder. Refer to Section 8.8, “Hydraulic Cylinders.” — Not OK → Replace check valve(s).

https://truckmanualshub.com/

10.5.10 Hydraulic Circuit Operation - Slow Pivot Mode, Base Oil Out

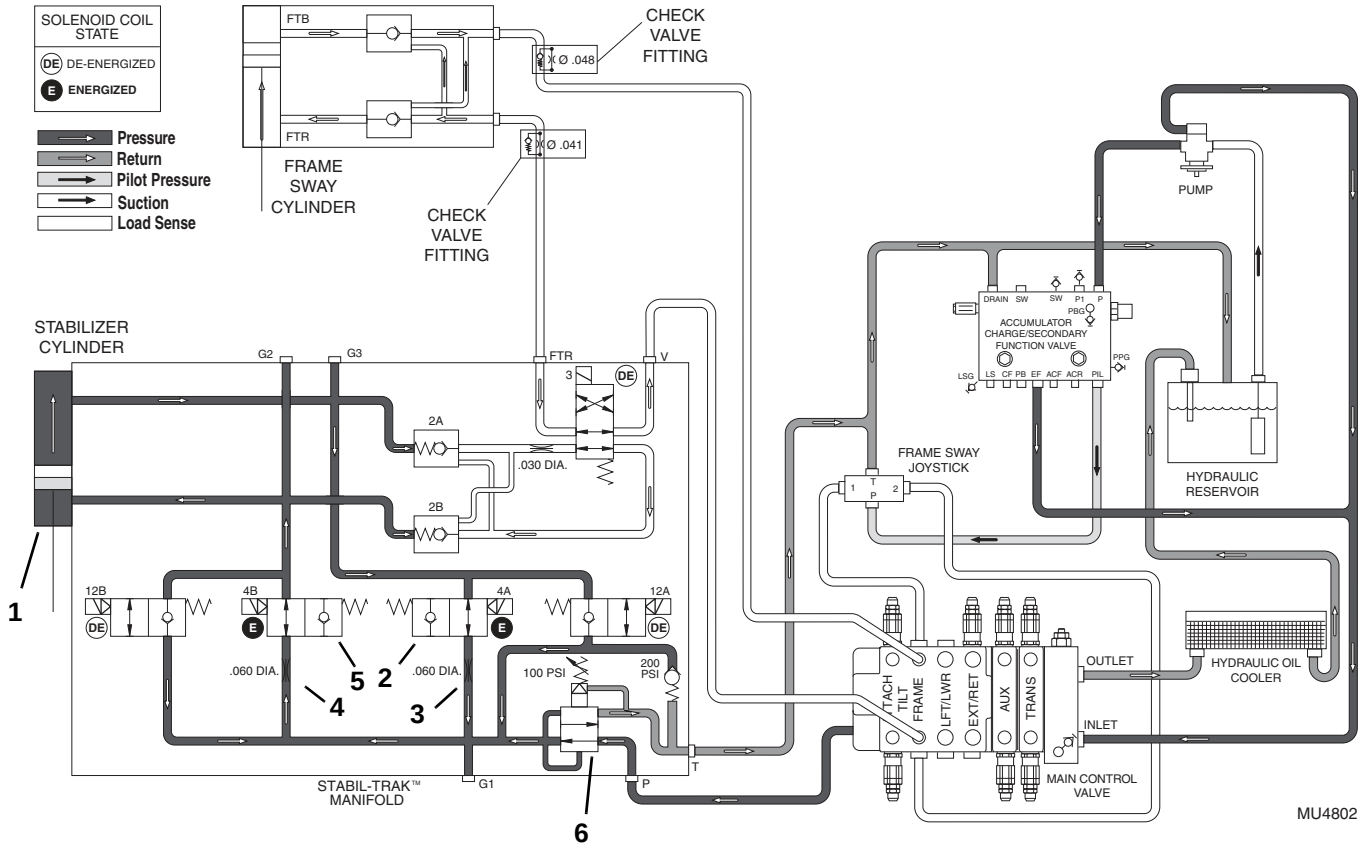

Conditions:

- Boom angle is above 40° **<u>OR</u>**
  (On SN 0160003881 & Before Only) below 40°
- Park brake OFF
- Service brake DISENGAGED **<u>OR</u>**
  (On SN 0160003881 & Before Only) with enough pedal movement to produce required pressure in brake system
- Travel select lever in (F) FORWARD or (R) REVERSE position

Operation:

As the boom is raised above 40°, the boom proximity switch is deactivated causing solenoids 12A and 12B to de-energize and solenoids 4A and 4B to energize. This allows oil to flow from the base end of the stabilizer cylinder (**1**), through solenoid-operated valve 4A (**2**), through a 0.060" orifice (**3**), through another 0.060" orifice (**4**), then through solenoid-operated valve 4B (**5**), to the rod end of the stabilizer cylinder.

The 0.060" orifices (**3** and **4**) in solenoid-operated valves 4A and 4B will slow the movement of the rear axle in reaction to terrain changes. The frame sway will react normally in this mode.

Because of the greater volume of oil in the base end, extra oil is returned to the tank through the 100 psi (7 bar) reducing cartridge (**6**) in the Stabil-TRAK™ manifold. The restrictions produce the slow movement, or SLOW PIVOT mode.

https://truckmanualshub.com/

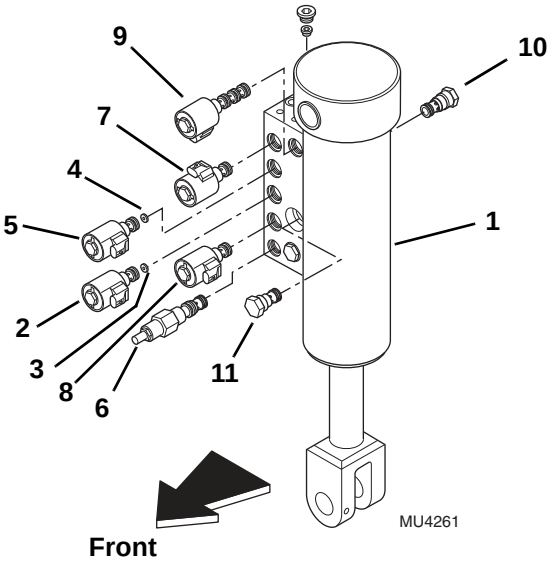

Legend

1. Stabilizer Cylinder
2. Solenoid 4B
3. .060" Orifice with Solenoid Valve 4B
4. .060" Orifice with Solenoid Valve 4A
5. Solenoid 4A
6. Pressure Reducing Cartridge
7. Solenoid 12A
8. Solenoid 12B
9. Solenoid 3
10. Check Valve 2A
11. Check Valve 2B

10.5.11 Hydraulic Troubleshooting - Slow Pivot Mode, Base Oil Out

Conditions:

- Ignition ON, engine running
- Boom angle is above 40°
- Travel select lever in (F) FORWARD or (R) REVERSE
- Park brake OFF
- Service brake DISENGAGED

While traveling, ride feels spongy (riding on 3 wheels).

Check electrical wiring. — Not OK → Refer to Stabil-TRAK™ Electrical Circuit Operation and Troubleshooting

If OK ↓

Check solenoid coils 4A and 4B in the Stabil-TRAK™ manifold for correct resistance (7-9 ohms). — Not OK → Replace solenoid(s).

If OK ↓

Remove solenoid coils 4A and 4B from Stabil-TRAK™ manifold and inspect for debris or damage. Refer to Section 8.8, “Hydraulic Cylinders.” — Not OK → Clean passages or replace cartridge(s).

If OK ↓

Inspect check valves on frame sway cylinder. Refer to Section 8.8, “Hydraulic Cylinders.” — Not OK → Replace check valve(s).

If OK ↓

Inspect check valves 2A and 2B on the stabilizer cylinder. Refer to Section 8.8, “Hydraulic Cylinders.” — Not OK → Replace check valve(s).

https://truckmanualshub.com/

10.5.12 Hydraulic Circuit Operation - Locked Mode

a. Conditions:

- Boom angle is above 40°
- Park brake ON, or service brake ENGAGED, or travel select lever in (N) NEUTRAL

b. Operation:

When the conditions are met, solenoids 4A, 4B, 12A and 12B are de-energized and solenoid 3 is energized. In the LOCKED MODE, oil is prevented from flowing through the Stabil-TRAK™ manifold due to check valves in solenoid-operated valves 4A (**1**), 4B (**2**), 12A (**3**), and 12B (**4**).

10.5.13 Hydraulic Circuit Operation - Locked Mode, Frame Sway Right

When the joystick control is placed in the frame sway mode, pilot pressure activates the frame sway section in the main control valve assembly. As the joystick is moved to the right, the frame sway spool valve is shifted, allowing oil to flow through the valve, to the Stabil-TRAK™ manifold, port V.

Oil entering the Stabil-TRAK™ manifold at port V flows through solenoid cartridge valve 3 (**5**), through a 0.030" orifice (**6**) and check valve 2A (**7**), to the base end of the stabilizer cylinder (**8**). The orifice slows the movement of the frame sway.

Some of this oil is diverted to the pilot line of check valve 2B (**9**), opening the valve.

Rod end oil from the stabilizer cylinder flows through check valve 2B (**9**), opened by pilot pressure in the Stabil-TRAK™ manifold. The oil then flows through cartridge valve 3 (**5**), out of the Stabil-TRAK™ manifold at port FTR, through a check valve fitting with a 0.041" orifice (**11**), through a check valve (**12**), to the rod end of the frame sway cylinder (**13**).

Oil from the base end of the frame sway cylinder flows through a piloted-open check valve (**14**), through the check valve fitting with a 0.048" orifice (**15**) and back through the frame sway spool valve in the frame sway section of the main control valve, dumping the returned oil to the reservoir.

Pressurized oil entering the Stabil-TRAK™ manifold at port P is stopped at the four closed solenoid-operated valves 4A (**1**), 4B (**2**), 12A (**3**) and 12B (**4**).

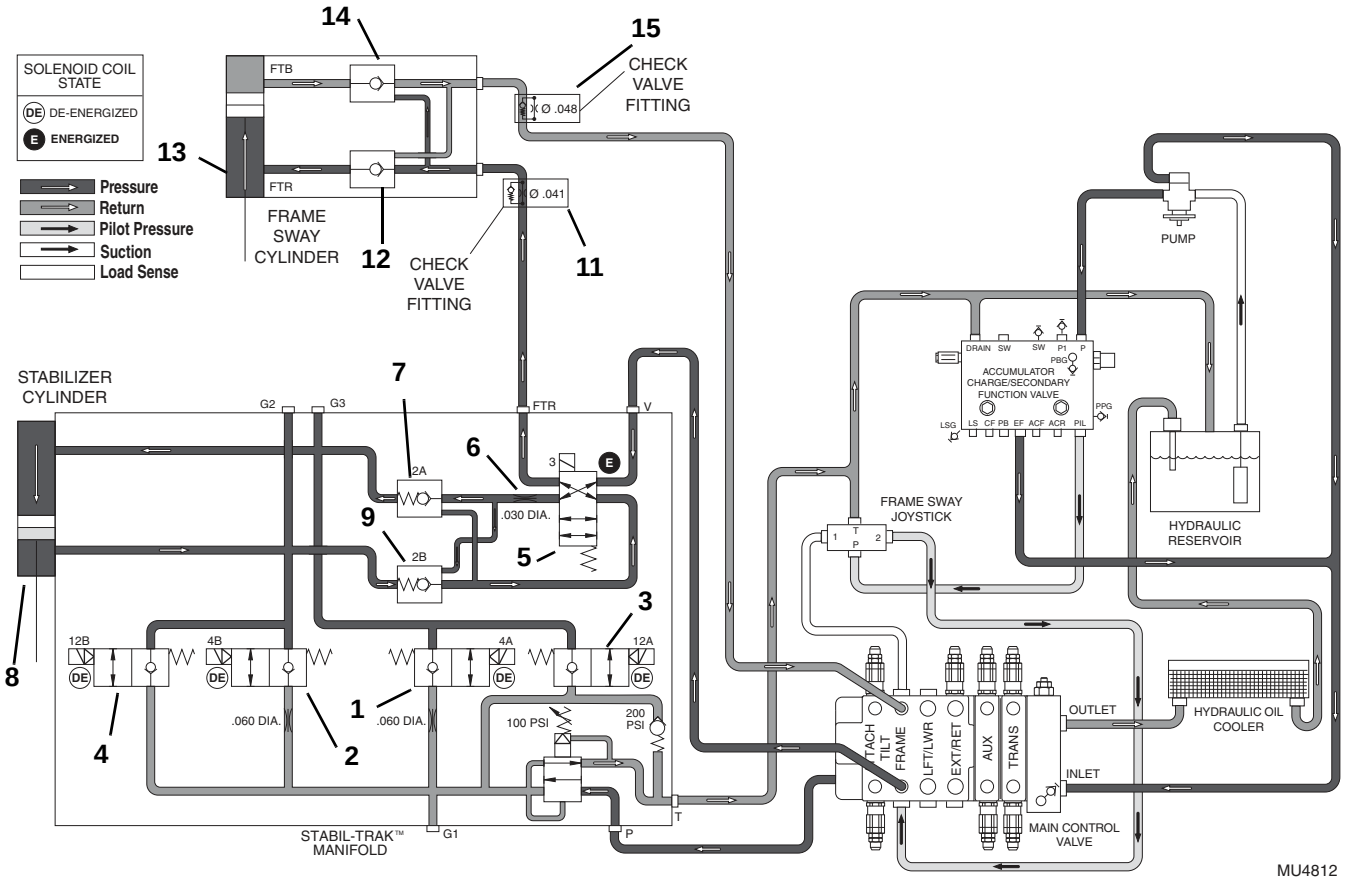

https://truckmanualshub.com/

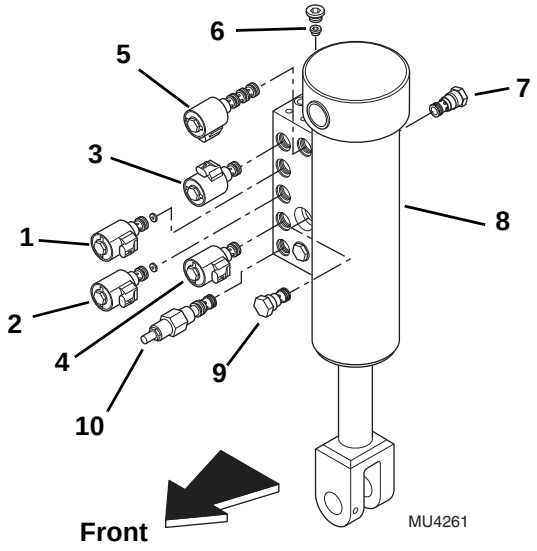

Legend

1. Solenoid 4A
2. Solenoid 4B
3. Solenoid 12A
4. Solenoid 12B
5. Solenoid 3
6. .030" Orifice Plug
7. Check Valve 2A
8. Stabilizer Cylinder
9. Check Valve 2B
10. Pressure Reducing Cartridge

https://truckmanualshub.com/

10.5.14 Hydraulic Troubleshooting - Locked Mode, Will Not Frame Sway Right

Conditions:

- Ignition ON, engine running
- Boom angle is above 40°
- Travel select lever in (N) NEUTRAL, or park brake ON, or service brake ENGAGED

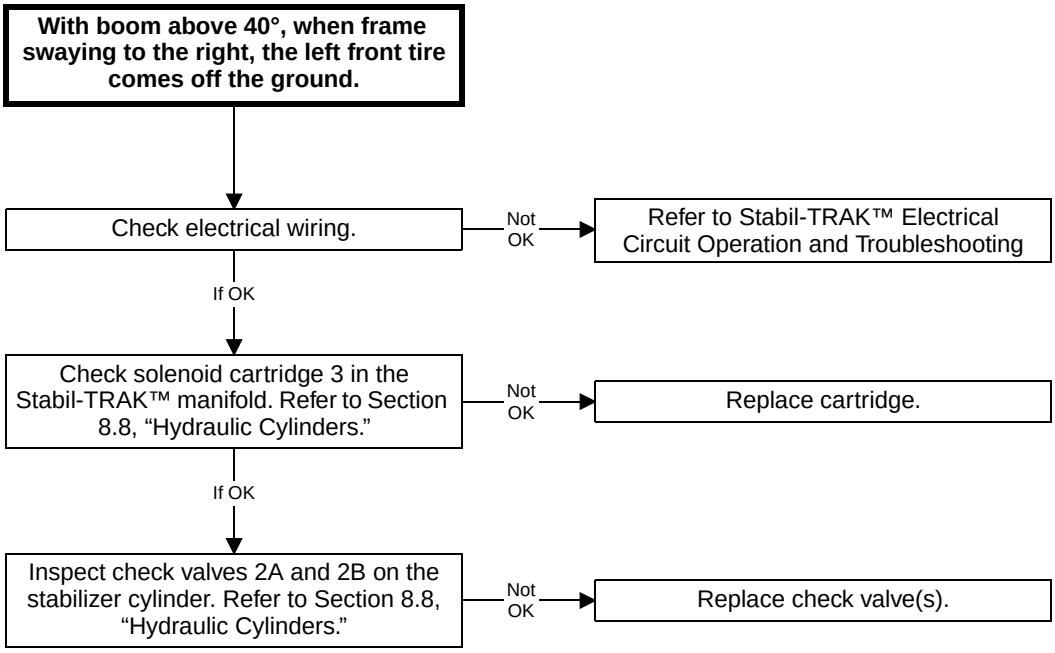

https://truckmanualshub.com/

10.5.15 Hydraulic Circuit Operation - Locked Mode, Frame Sway Left

a. Conditions

- Boom angle is above 40°
- Park brake ON, or service brake ENGAGED, or travel select lever in (N) NEUTRAL

b. Operation

When the joystick control is placed in the frame sway mode, pilot pressure activates the frame sway section in the main control valve assembly. As the joystick is moved to the right, the frame sway spool valve is shifted, allowing oil to flow through the valve, through the check valve with a 0.048" orifice (**1**), through the check valve (**2**) to the base end of the frame sway cylinder (**3**).

Some of this oil is diverted to the pilot line of the check valve (**4**) on the return side of the frame sway cylinder, opening the valve.

Oil from the rod end of the frame sway cylinder flows, through the check valve (**4**) opened by incoming pilot pressure oil, through the check valve with a 0.041" orifice (**5**), to the FTR port of the Stabil-TRAK™ manifold.

Oil entering at port FTR flows through solenoid valve 3 (**6**) through check valve 2B (**7**), to the rod end of the stabilizer cylinder (**8**). Some of this oil is diverted to the pilot line of check valve 2A (**9**), opening the valve.

Oil from the base end of the stabilizer cylinder flows through check valve 2A (**9**) and through a 0.030" orifice (**10**). This orifice slows the movement of the frame sway. The oil then flows through solenoid-operated valve 3 (**6**), through port V, to the frame sway spool valve in the main control valve. Oil flows through the valve, dumping the returned oil to the reservoir.

Pressurized oil entering the Stabil-TRAK™ manifold at port P is stopped at the four closed solenoid-operated valves 4A (**11**), 4B (**12**), 12A (**13**), and 12B (**14**).

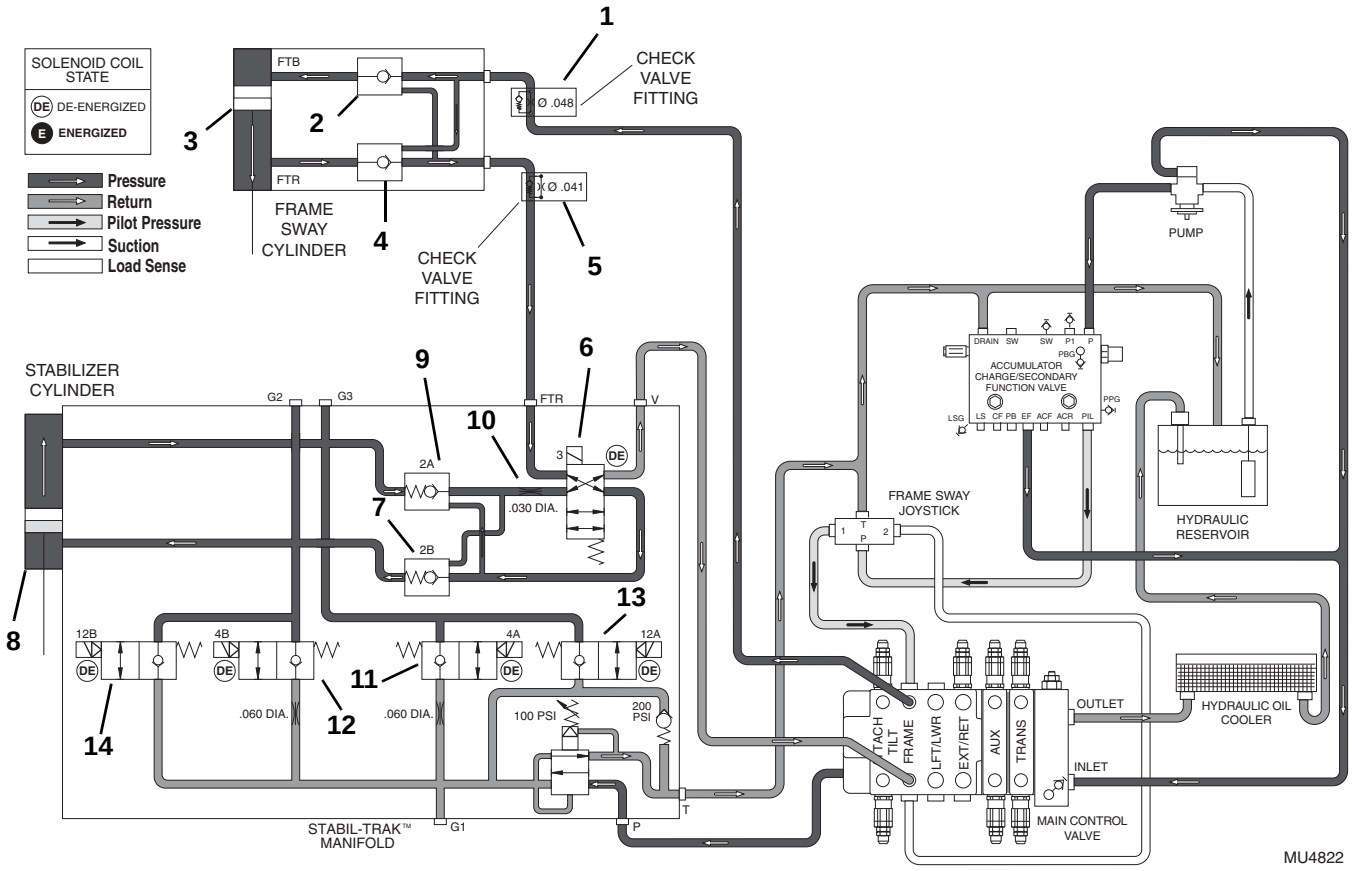

https://truckmanualshub.com/

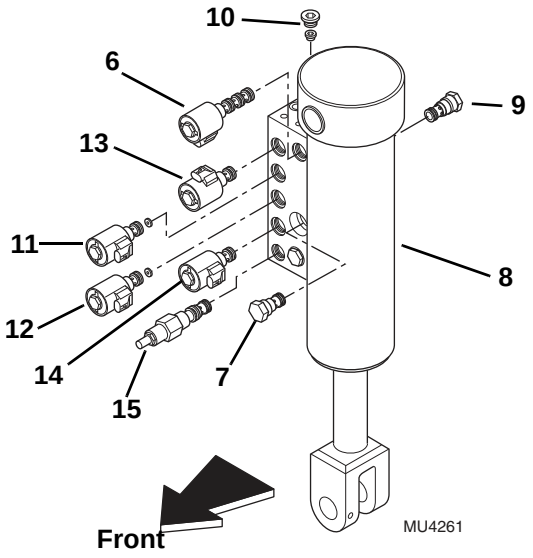

Legend

6. Solenoid 3
7. Check Valve 2B
8. Stabilizer Cylinder
9. Check Valve 2A
10. .030" Orifice Plug
11. Solenoid 4A
12. Solenoid 4B
13. Solenoid 12A
14. Solenoid 12B
15. Pressure Reducing Cartridge

10.5.16 Hydraulic Troubleshooting - Locked Mode, Will Not Frame Sway Left

Conditions:

- Ignition ON, engine running
- Boom angle is above 40°
- Travel select lever in (N) NEUTRAL, or park brake ON, or service brake ENGAGED

With boom above 40°, when frame swaying to the left, the right front tire comes off the ground.

Check electrical wiring.
- Not OK → Refer to Stabil-TRAK™ Electrical Circuit Operation and Troubleshooting
- If OK ↓

Check solenoid cartridge 3 in the Stabil-TRAK™ manifold. Refer to Section 8.8, “Hydraulic Cylinders.”
- Not OK → Replace cartridge.
- If OK ↓

Inspect check valves 2A and 2B on the stabilizer cylinder. Refer to Section 8.8, “Hydraulic Cylinders.”
- Not OK → Replace check valve(s).

https://truckmanualshub.com/

This Page Intentionally Left Blank

https://truckmanualshub.com/

Section 11
Transfer Carriage

Contents

PARAGRAPH	TITLE	PAGE
11.1	**Transfer Carriage Component Terminology**	**11-2**
11.2	**Transfer Carriage.**	**11-3**
11.2.1	Transfer Carriage Description	11-3
11.2.2	Transfer Carriage Operation	11-3
11.3	**Transfer Carriage Maintenance**	**11-3**
11.3.1	Transfer Carriage Removal	11-4
11.3.2	Transfer Carriage Installation	11-7
11.3.3	Rear Wear Pad Check	11-9
11.3.4	Rear Wear Pad Shimming	11-10
11.3.5	Rear Wear Pad Replacement	11-10
11.3.6	Front Upstop Wear Pad Check	11-11
11.3.7	Front Upstop Wear Pad Gap Check	11-11
11.3.8	Front Upstop Wear Pad Shimming	11-11
11.3.9	Front Upstop Wear Pad Replacement	11-12
11.3.10	Rear Roller Gap Check	11-12
11.3.11	Rear Roller Shimming	11-13
11.3.12	Front Roller Gap Check	11-14
11.3.13	Front Roller Shimming	11-15
11.3.14	Front Scraper Plate Replacement	11-15
11.3.15	Front Roller and Bushing Replacement	11-16
11.3.16	Rear Roller and Bushing Replacement	11-17
11.3.17	Boom Pivot Bushing Replacement	11-17
11.3.18	Slave Cylinder Pivot Bushing Replacement	11-18
11.3.19	Transfer Cylinder Replacement	11-19
11.4	**Troubleshooting**	**11-22**
11.4.1	Transfer Carriage Troubleshooting	11-22

https://truckmanualshub.com/

11.1 TRANSFER CARRIAGE COMPONENT TERMINOLOGY

To understand the safety, operation and maintenance information presented in this section, it is necessary that the operator/mechanic be familiar with the name and location of the major assemblies of the transfer carriage. The following illustration identifies the components that are referred to throughout this section.

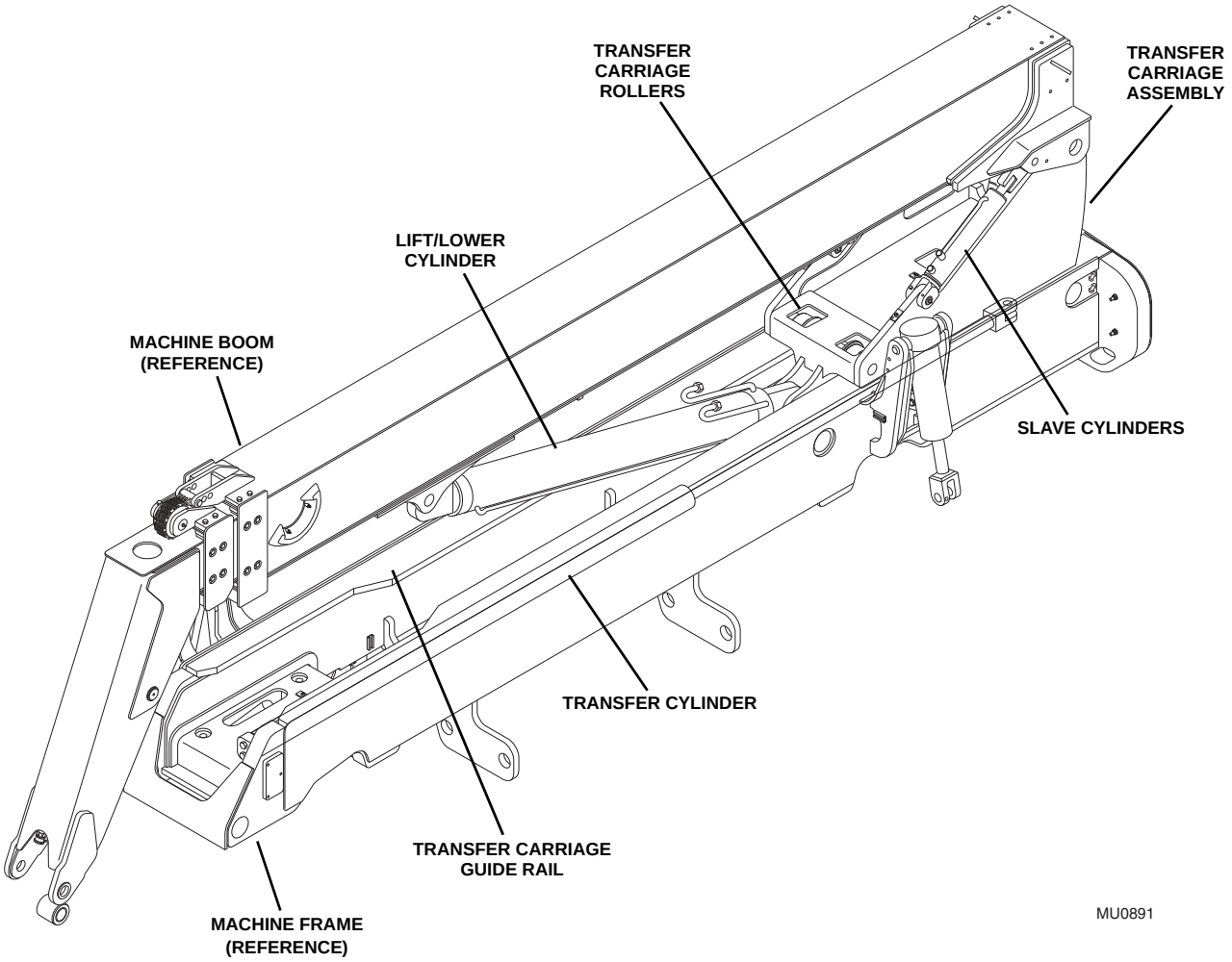

https://truckmanualshub.com/

WARNING

DO NOT service the vehicle without following all safety precautions as outlined in the “Safety Practices” section of this manual.

11.2 TRANSFER CARRIAGE

11.2.1 Transfer Carriage Description

The transfer carriage, along with the transfer cylinder, make up the “Place Ace” feature. This feature makes it possible to land materials from a parked, level vehicle by transferring the boom load forward at any height. The operator can then retract the boom and forks by moving the entire boom assembly rearward without driving the vehicle on uneven terrain.

11.2.2 Transfer Carriage Operation

The transfer carriage is used to place a load directly over the landing point. The transfer carriage allows easy placement of the load without moving the vehicle. (Consult load charts and the vehicle’s Operator’s Manual for transfer capacities in the transferred or fully retracted positions.)

The transfer carriage should be checked and repaired only by experienced service technicians who are aware of all safety instructions and particular component features.

11.3 TRANSFER CARRIAGE MAINTENANCE

The transfer carriage assembly consists of the carriage, cylinder, hoses and supporting hardware.

Before beginning, conduct a visual inspection of the vehicle, work area and task about to be undertaken. Read, understand and follow these instructions.

After servicing the transfer carriage, perform the following:

1. Check wear pads. (Refer to Section 11.3.3, “Rear Wear Pad Check,” and Section 11.3.6, “Front Upstop Wear Pad Check.”)
2. Check for proper operation by operating all boom and transfer carriage functions through their full range of motion several times.
3. Check roller gaps. (Refer to Section 11.3.10, “Rear Roller Gap Check,” and Section 11.3.12, “Front Roller Gap Check.”)

https://truckmanualshub.com/

11.3.1 Transfer Carriage Removal

1. Level the vehicle, place the travel select lever in the (N) NEUTRAL DETENT position, engage the parking brake.

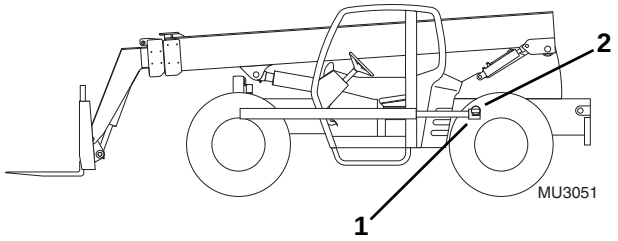

2. Move the transfer carriage 5 ft. 8 in. (172 cm) so that the pin (**1**) connecting the transfer cylinder to the transfer carriage is at a pin access hole (**2**) near the rear of the cab.

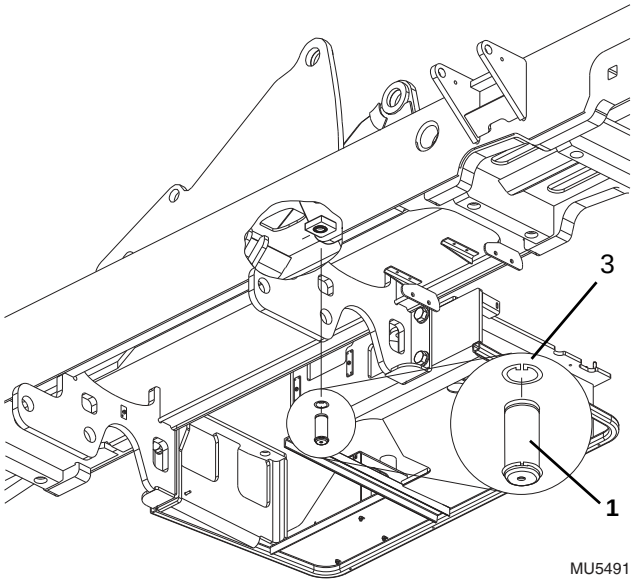

3. Remove the top snap ring (**3**) from the transfer carriage pin (**1**).
4. Temporarily tape the pin in place so it will not fall out during the following procedure.
5. Move the transfer carriage all the way forward.
6. Remove the tape and the pin (**1**).
7. If you are replacing the pin, remove the bottom snap ring (**3**).
8. Shut the engine OFF.
9. Park the machine on a firm, level surface, level the machine, fully retract the boom, lower the boom, place the travel select lever in the (N) NEUTRAL position, engage the parking brake and turn the engine OFF.
10. Place a Do Not Operate Tag on both the ignition key switch and the steering wheel, stating that the machine should not be operated.
11. Open the engine cover. Allow the system fluids to cool.
12. Properly disconnect the batteries.
13. Remove the boom as described in Section 3.3, “Boom Assembly Maintenance.”
14. Remove locknuts, washers, Lull logo plate and black backing from the rear of the vehicle.

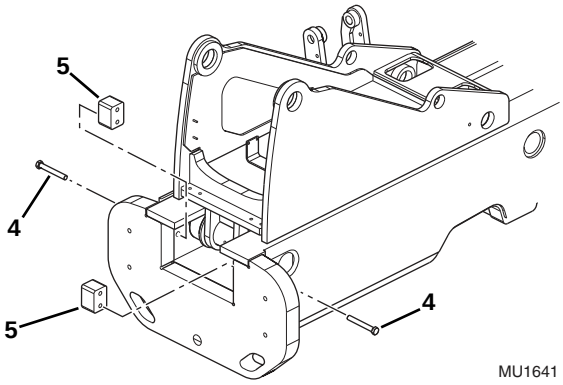

15. Remove the bolts (**4**) and stop blocks (**5**) on both sides.
16. Label, disconnect and cap the two hydraulic hoses connecting the lift cylinder (**6**) to the hydraulic junction manifold (**7**). Cap all fittings and openings to keep dirt and debris from entering the hydraulic system.

WARNING

To avoid personal injury and/or equipment damage, supporting the lift/lower cylinder is essential when lifting and reinstalling it back on the vehicle. Make sure that the lift/lower cylinder is properly supported until it is completely removed.

17. Secure the lift cylinder with a sling and take up any slack.

https://truckmanualshub.com/

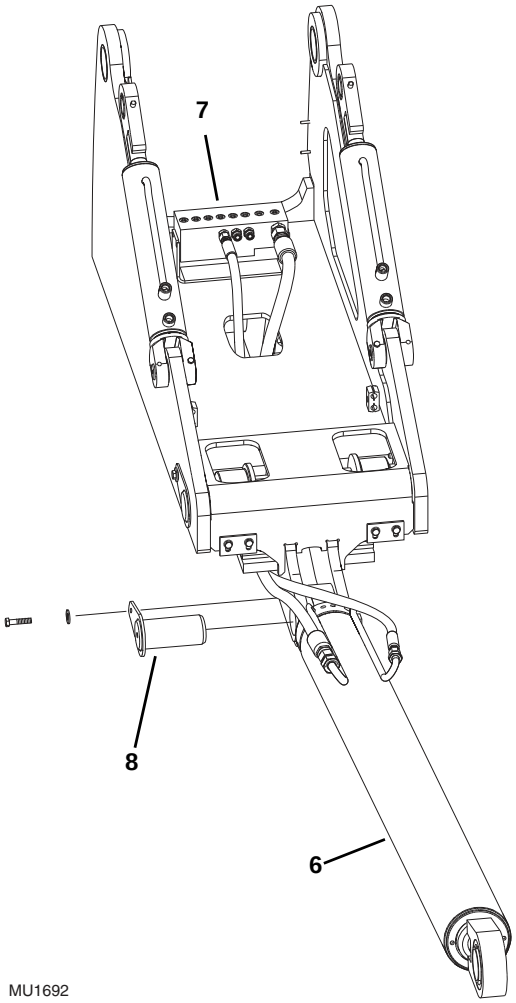

18. Remove the pin (**8**) from lift cylinder (**6**). Lower and place the cylinder on support blocks on a firm level surface.

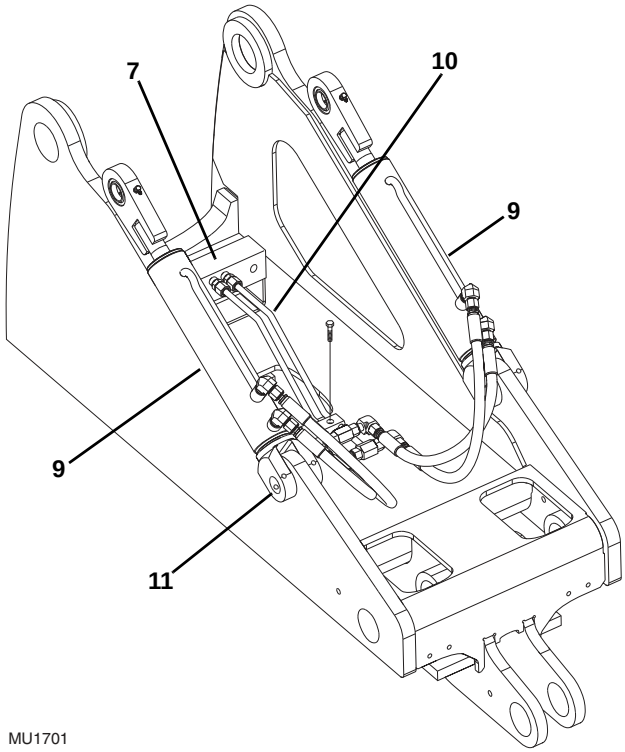

19. Label, disconnect and cap all hydraulic hoses connecting the slave cylinders (**9**) to the hydraulic tubes (**10**). Cap all fittings and openings to prevent dirt and debris from entering the hydraulic system.
20. Label, disconnect and cap the hydraulic tubes (**10**) from the hydraulic junction manifold (**7**). Cap all fittings and openings to prevent dirt and debris from entering the hydraulic system.
21. Secure the slave cylinder with a sling and take up any slack.
22. Remove the pin (**11**) from the slave cylinder (**9**). Lift, lower and place the slave cylinder on support blocks on a firm level surface.
23. Repeat steps 21 and 22 for the other slave cylinder.
24. Disconnect the back-up alarm electrical connection from the wire harness and remove the back-up alarm from the transfer carriage.
25. Remove the hydraulic junction manifold (**7**) from the transfer carriage. Lay hoses and hydraulic junction manifold behind frame.

https://truckmanualshub.com/

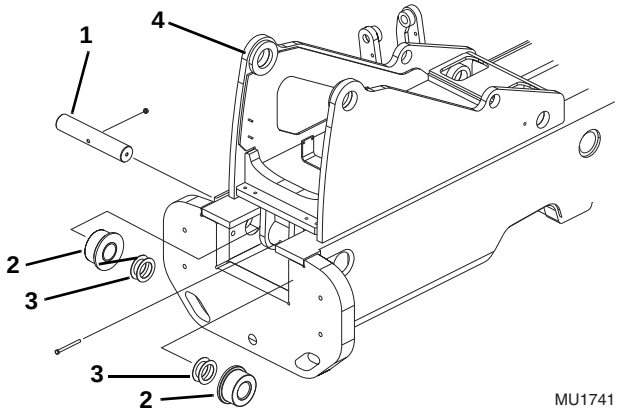

26. Remove pin bolt and locknut from rear roller pin (**1**). Slide the roller pin out and remove the rear rollers (**2**) and shims (**3**) from both sides of the transfer carriage (**4**). Count and label the rear rollers and shims for later replacement.

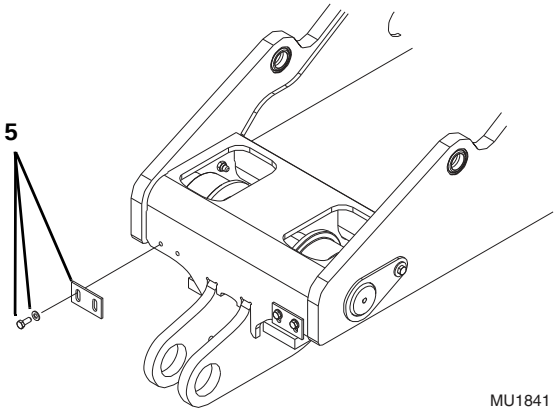

27. Remove capscrews, washers and scrapers (**5**) from the transfer carriage.

CAUTION

To avoid equipment damage, **DO NOT** put the straps through the pin holes to lift the transfer carriage. Damage to the bushings may result.

28. Lift and slide the transfer carriage out the back of the frame. Lower and place the transfer carriage onto support jacks, capable of supporting the weight of the transfer carriage, on a firm level surface.
29. Remove capscrews, shims, and rear wear pads. Count and label their position for later replacement.
30. Remove capscrews, shims, and front wear pads. Count and label their position for later replacement.

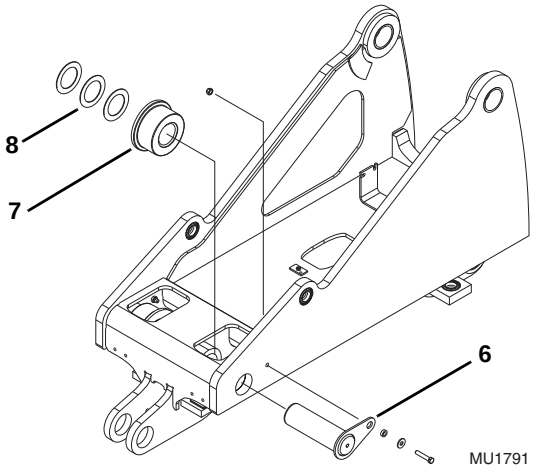

31. Remove front roller pin (**6**), front roller (**7**) and shims (**8**) from both sides of the transfer carriage. Count and label their positions for later replacement.
32. Remove lifting straps, boom pivot pins and slave cylinder pins.
33. Inspect transfer carriage cylinder mount, boom pivot and slave pivot bushings. (Refer to Section 11.3.17, “Boom Pivot Bushing Replacement.”)
34. Inspect front and rear roller bushings. (Refer to Section 11.3.17, “Boom Pivot Bushing Replacement.”)
35. Inspect front rollers. (Refer to Section 11.3.15, “Front Roller and Bushing Replacement.”)
36. Inspect rear rollers. (Refer to Section 11.3.16, “Rear Roller and Bushing Replacement.”)
37. Inspect front wear pads. (Refer to Section 11.3.6, “Front Upstop Wear Pad Check.”)
38. Inspect rear wear pads. (Refer to Section 11.3.3, “Rear Wear Pad Check.”)

https://truckmanualshub.com/

11.3.2 Transfer Carriage Installation

1. Insert front roller pin (**6**), front roller (**7**) and shims (**8**) in their previously labeled positions.
2. Coat the capscrews with Loctite® 242 (blue). Torque capscrew to 43 - 78 lb-ft (59 - 106 Nm).
3. Repeat steps 11.3.2 and 2 for the other front roller.
4. Coat the capscrews with Loctite® 242 (blue). Replace capscrews, shims, and wear pads in their previously labeled positions. Torque capscrew to, 21 - 38 lb-ft (29 - 52 Nm).
5. Lift and slide the transfer carriage in through the back of the frame.
6. Move the transfer carriage all the way forward on the frame.

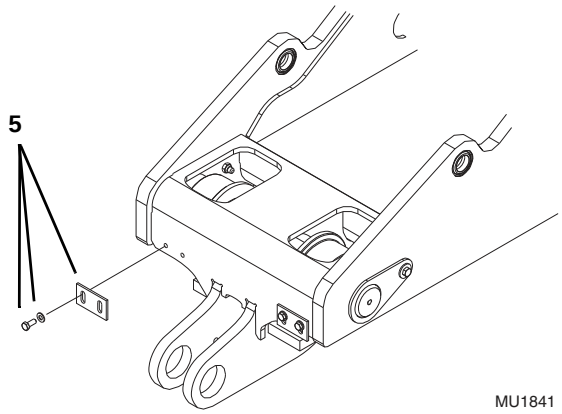

7. Coat the capscrews with Loctite® 242 (blue). Replace capscrews, washers and scrapers (**5**) on the front of the transfer carriage. Adjust scraper to have a gap of less than 0.12" (3 mm) between the scraper and the frame rail. Torque capscrews to, 25 - 44 lb-ft (34 - 61 Nm).

Note: *Make sure the threaded hole, of the transfer cylinder pin, is facing downward during installation.*

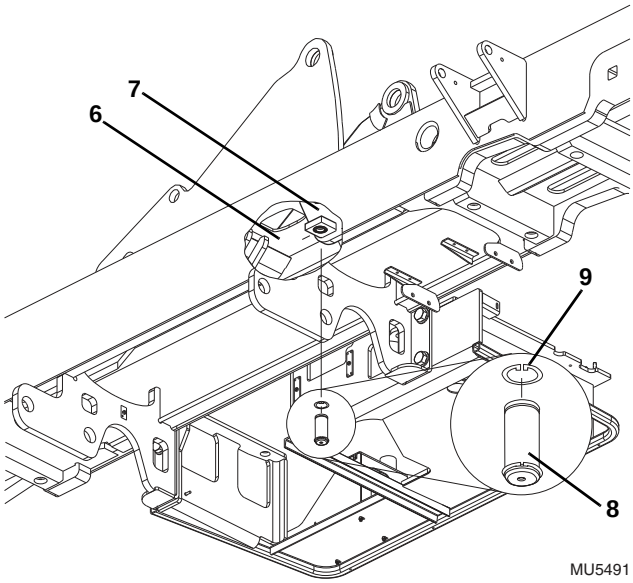

8. Connect the transfer cylinder (**6**) to the transfer carriage mount (**7**) with the transfer cylinder pin (**8**) securing it with retaining ring (**9**).

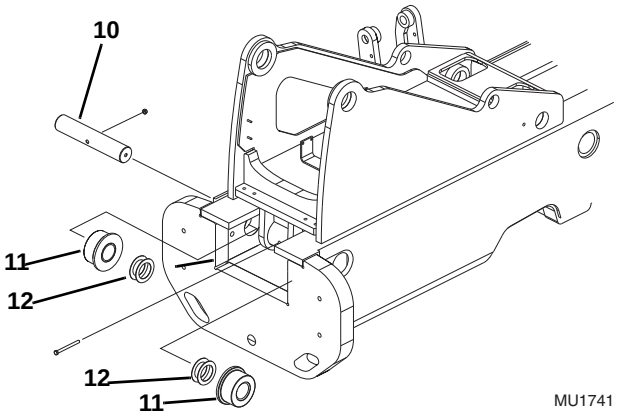

9. Insert the rear roller pin (**10**), rear rollers (**11**) and shims (**12**) according to their previously labeled positions. Coat the pin bolt with Loctite® 242 (blue). Replace pin bolt and locknut on the roller pin (**10**). Torque pin bolt to, 43 - 78 lb-ft (59 - 106 Nm).
10. Coat the capscrews with Loctite® 242 (blue). Replace four capscrews securing the hydraulic junction manifold to the transfer carriage. Torque capscrews to, 8 - 22 lb-ft (11 - 31 Nm).
11. Secure the slave cylinder (**13**) with a sling and take up any slack.
12. Lift the slave cylinder (**13**) into position and insert the pin (**14**). Coat the bolt with Loctite® 242 (blue). Install the bolt and locknut. Torque bolt to, 9 - 22 lb-ft (17 - 31 Nm).
13. Repeat steps 11 and 12 for the other slave cylinder.

https://truckmanualshub.com/

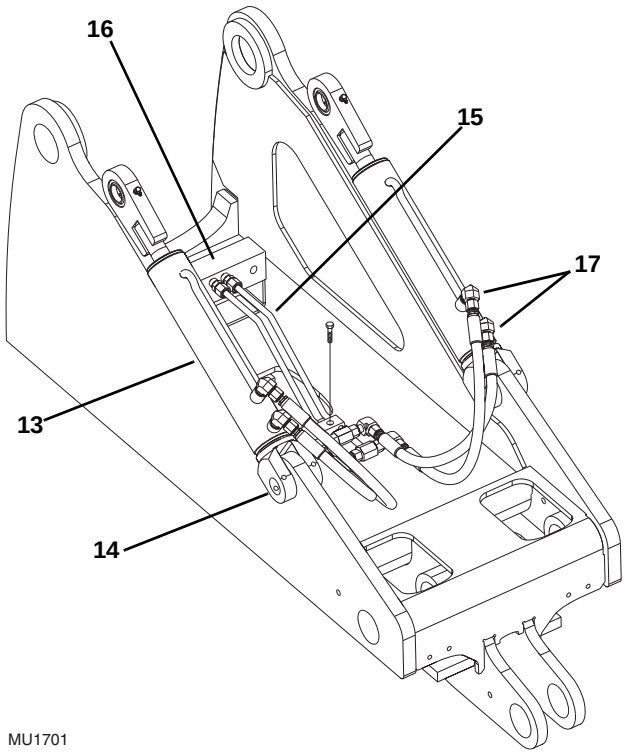

14. Coat the capscrew with Loctite® 242 (blue). Replace the hydraulic tubes (**15**) and mounting bracket with capscrew. Torque the hydraulic tubes (**15**) to the hydraulic junction manifold (**16**) to 45 - 59 lb-ft (61 - 80 Nm).
15. Replace the slave cylinder hydraulic hoses (**17**) according to their previously labeled positions. Torque the connections at the slave cylinder to, 50 - 60 lb-ft (67 - 81 Nm). Torque the connection at the hydraulic tubes to, 45 - 59 lb-ft (61 - 80 Nm).

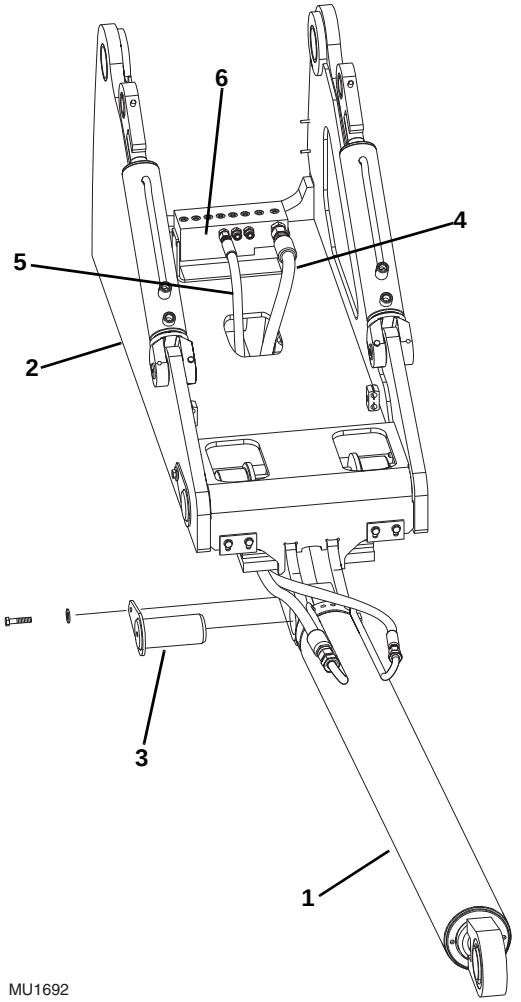

16. Lift and place the lift/lower cylinder (**1**) into position on the transfer carriage (**2**). Coat the capscrew with Loctite® 242 (blue). Insert pin (**3**) and secure it with capscrew and washer. Torque capscrew to, 43 - 78 lb-ft (59 - 106 Nm).
17. Replace the larger hydraulic hose (**4**) and smaller hydraulic hose (**5**) connecting the lift cylinder (**1**) to the hydraulic junction manifold (**6**). Route the hoses under and then up through the hole in the transfer carriage. Torque the larger hose (**4**) to, 100 - 140 lb-ft (135 - 190 Nm). Torque the smaller hose (**5**) to, 45 - 59 lb-ft (61 - 80 Nm).

https://truckmanualshub.com/

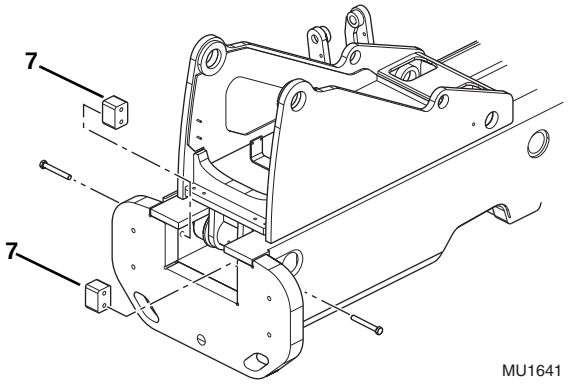

18. Coat the bolts with Loctite® 242 (blue). Replace the bolts and stop blocks (**7**) at the rear, left and right side of the frame. Torque the bolts to, 302 - 390 lb-ft (410 - 530 Nm).

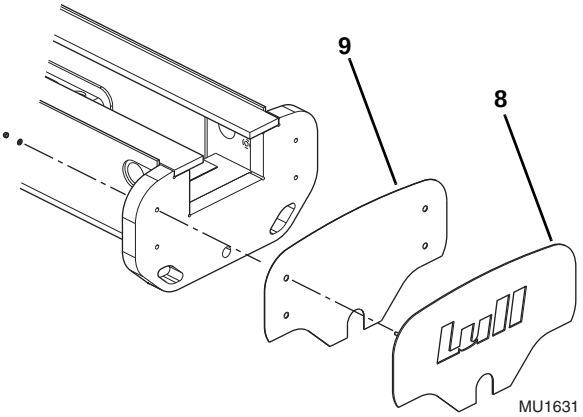

19. Coat the locknuts with Loctite® 242 (blue). Install the Lull logo plate (**8**) and black backing (**9**) at the rear of the machine. Torque locknuts to, 29 - 51 lb-ft (40 - 70 Nm).
20. Replace the boom as described in Section 3.3, “Boom Assembly Maintenance.”
21. Properly connect the batteries.
22. Close and secure the engine cover.
23. If required, replace any decals according to their previous positions. (Refer to the proper Parts Manual for correct locations).

11.3.3 Rear Wear Pad Check

Note: *The attachment should remain attached to the quick attach for these checks.*

1. Park the machine on a firm, level surface, level the machine, fully retract the boom, level the boom, place the transmission control lever in (N) NEUTRAL, engage the park brake and shut the engine OFF.
2. Leave the transfer carriage completely retracted.
3. If there is no attachment on the boom, extend the boom 2/3 of the way out to simulate the weight of an attachment. Shut engine OFF between gap checks.
4. This procedure will require the gap check to be made in three separate locations. Transfer carriage all the way retracted, transfer carriage all the way forward and the transfer carriage moved forward about halfway.

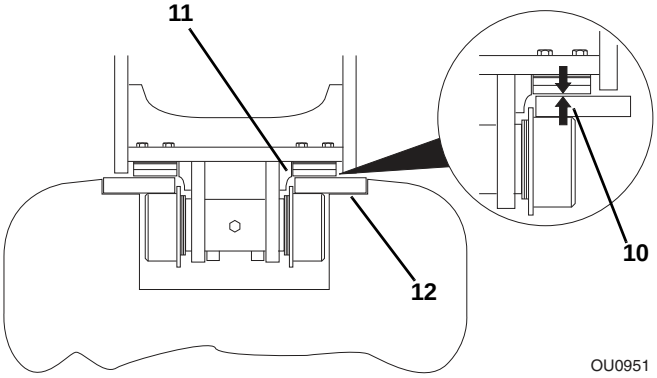

5. At the rear of the transfer carriage, use a feeler gauge to check the gap (**10**) between the wear pads (**11**) and the top of the rail (**12**). This gap should not be more than 0.06 in (1,6 mm) at the tightest location. If the gap is greater than 0.06 in (1,6 mm) the wear pads require shimming.
6. Check the thickness of the wear pads. The wear pad has a total thickness of 0.75" (19 mm). When the wear pad is worn down to 0.5" (13 mm) the pads should be replaced.

https://truckmanualshub.com/

11.3.4 Rear Wear Pad Shimming

Note: *The attachment should remain attached to the quick attach for this procedure.*

1. Park the machine on a firm, level surface, level the machine, fully extend the boom with the attachment being slightly off the ground, place the transmission control lever in (N) NEUTRAL, engage the park brake and shut the engine OFF.
2. Leave the transfer carriage completely retracted.

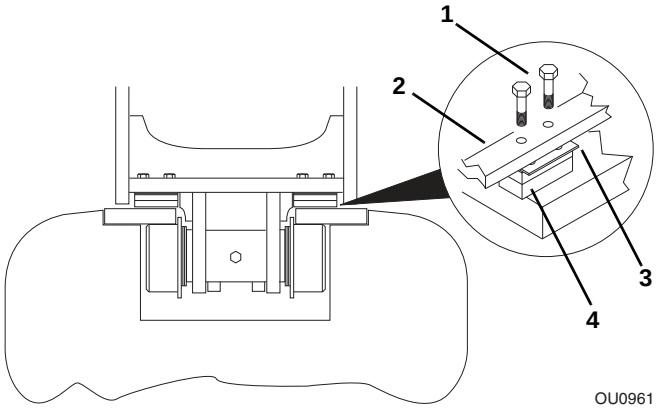

3. Remove the two capscrews (**1**) holding each wear pad and shims to the transfer carriage (**2**).
4. Add the required shims (**3**) between the wear pad (**4**) and the transfer carriage (**2**).
5. Coat the capscrews (**1**) with Loctite® 242 (blue). Secure in place with the two capscrews (**1**). Torque capscrews to, 28 - 49 lb-ft (38 - 67 Nm).

11.3.5 Rear Wear Pad Replacement

Note: *The attachment should remain attached to the quick attach for this procedure.*

1. Park the machine on a firm, level surface, level the machine, fully extend the boom with the attachment being slightly off the ground, place the transmission control lever in (N) NEUTRAL, engage the park brake and shut the engine OFF.
2. Leave the transfer carriage completely retracted.
3. Remove the two capscrews (**1**) holding each wear pad and shims to the transfer carriage (**2**).
4. Replace old wear pads with new wear pads (**4**) and shims (**3**).
5. Coat the capscrews (**1**) with Loctite® 242 (blue). Secure in place with the two capscrews (**1**). Torque capscrews to, 28 - 49 lb-ft (38 - 67 Nm).

https://truckmanualshub.com/

11.3.6 Front Upstop Wear Pad Check

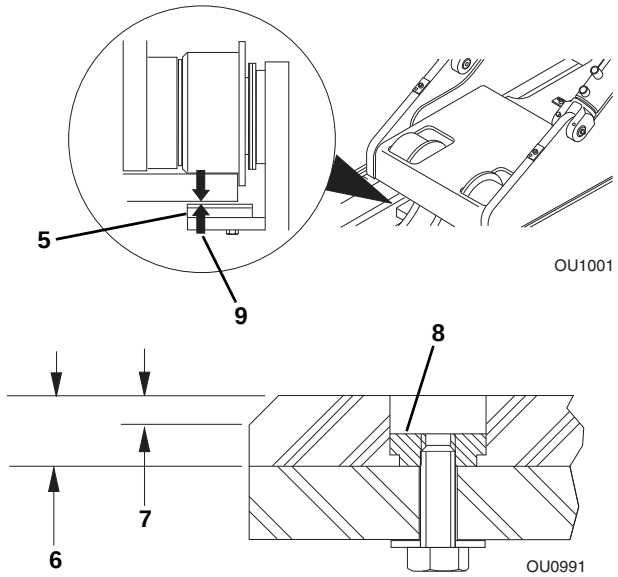

The front upstop wear pads (**5**) are located under the frame rails at the front of the transfer carriage.

Each wear pad is manufactured with a convenient wear pad indicator. This is the angled cut at each end of all wear pads.

The total thickness (**6**) of a new wear pad is 0.625 in (16 mm). The angled cut will provide a total wear thickness (**7**) of 0.25 in (6 mm). This will leave approximately 0.375 in (10 mm) of total unused base material.

The pads must never be worn past the angled cut indicator because the metal pad insert (**8**), that holds the pads in place, will begin to wear into the rail surfaces. If the pad wears past this point, the metal insert in the pad will begin to gouge the metal surfaces.

11.3.7 Front Upstop Wear Pad Gap Check

Note: *The attachment should remain attached to the quick attach for these checks.*

1. Park the machine on a firm, level surface, level the machine, fully retract the boom and transfer carriage, level the boom, place the transmission control lever in (N) NEUTRAL, engage the park brake and shut the engine OFF.
2. Check the gap (**9**) between the top of the wear pad and the bottom of the rail. The maximum gap should be 0.12" (3 mm).

11.3.8 Front Upstop Wear Pad Shimming

1. Park the machine on a firm, level surface, level the machine, fully retract the boom, level the boom, place the transmission control lever in (N) NEUTRAL, engage the park brake and shut the engine OFF.
2. Place a Do Not Operate Tag on both the ignition key switch and steering wheel, stating that the machine should not be operated.
3. Open the engine cover. Allow the system fluids to cool.
4. Properly disconnect the batteries.

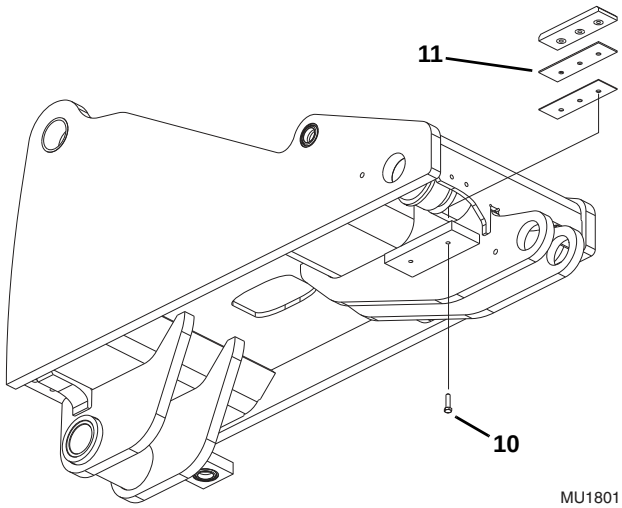

5. Remove capscrews (**10**), shims, and front wear pads (**11**). Label their position for later replacement.

Note: *New shims have a 0.06 inch (1,5 mm) thickness.*

6. Add new shims to the left and/or right side shim groups as required to achieve proper gap maximums. Spread shims evenly between the left and right shim groups.
7. Coat the capscrews with Loctite® 242 (blue). Replace capscrews, shims, and front wear pads (**11**) in their previously labeled positions. Torque the capscrews to, 21 - 38 lb-ft (29 - 52 Nm).
8. Properly connect the batteries.
9. Close and secure the engine compartment cover.

https://truckmanualshub.com/

11.3.9 Front Upstop Wear Pad Replacement

Note: *The attachment should remain attached to the quick attach for this procedure.*

1. Park the machine on a firm, level surface, level the machine, fully retract the boom, level the boom, place the transmission control lever in (N) NEUTRAL and engage the park brake.
2. Leave the transfer carriage completely retracted.
3. Fully extend the boom. The attachment must remain slightly off the ground. Turn the machine OFF.

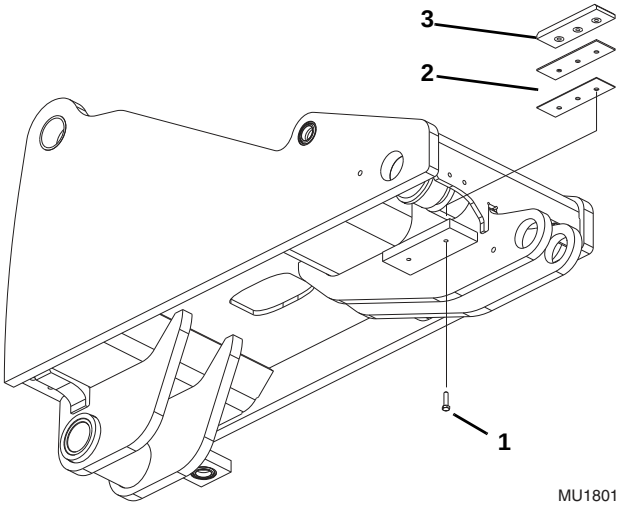

4. Remove the two capscrews (**1**) holding each wear pad (**3**) to the plate under the rail at the front of the transfer carriage.
5. Coat the capscrews with Loctite® 242 (blue). Place the new wear pads with original shims (**2**) in place and secure with the two capscrews. Torque the capscrews to, 21 - 38 lb-ft (29 - 52 Nm).

11.3.10 Rear Roller Gap Check

Note: *The attachment should remain attached to the quick attach for these checks.*

1. Park the machine on a firm, level surface, level the machine, fully retract the boom and transfer carriage, level the boom, place the transmission control lever in (N) NEUTRAL, engage the park brake and shut the engine OFF.
2. This procedure will require the gap check to be made in three separate locations. Transfer carriage all the way retracted, transfer carriage all the way forward and the transfer carriage moved forward about halfway.

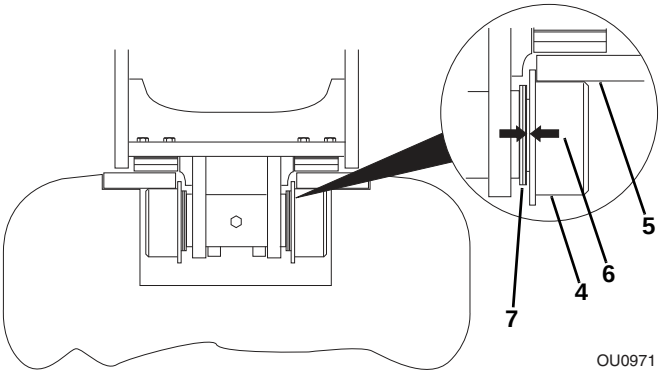

3. With the transfer carriage all the way retracted, use a rawhide hammer to tap the rollers (**4**) against the rails (**5**). Check the gap (**6**) between the roller and the existing shims (**7**) with a feeler gauge. Check both rear rollers and record the gap on each side.
4. Start the engine and move the transfer carriage all the way forward. Shut the vehicle OFF. Use a rawhide hammer to tap the rollers against the rails and again check the gap (**6**) between the roller and the existing shims of each roller with the transfer carriage in this position. Record the gap of each roller.
5. Start the engine and move the transfer carriage about halfway back. Shut the vehicle OFF. Use a rawhide hammer to tap the rollers against the rails and once again check the gap (**6**) between the roller and the existing shims of each roller with the transfer carriage in this position. Record the gap of each roller.
6. Find the location that had the smallest gap. This is the position that the roller gap will be adjusted to, if necessary. The maximum total gap of both sides should not exceed 0.08 in (2 mm).
7. If the total gap is larger than 0.08 in (2 mm), the rollers need to be shimmed.

https://truckmanualshub.com/

11.3.11 Rear Roller Shimming

Note: *The attachment should remain attached to the quick attach.*

1. Park the machine on a firm, level surface, level the machine, fully retract the boom and transfer carriage, level the boom, place the transmission control lever in (N) NEUTRAL, engage the park brake and shut the engine OFF.
2. Lift the boom with a hoist to remove pressure off the rear rollers. There should be a gap between the rollers and the rails.
3. Start the machine and move the transfer carriage so that the rear roller pin can be removed through the hole in the side of the frame.
4. Shut the engine OFF.
5. Place a Do Not Operate Tag on both the ignition key switch and the steering wheel, stating that the machine should not be operated.
6. Open the engine cover. Allow the system fluids to cool.
7. Properly disconnect the batteries.

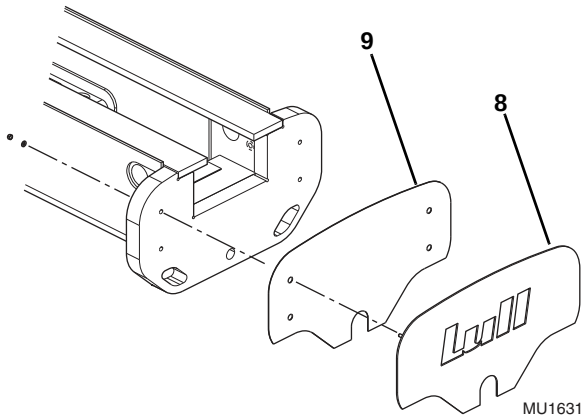

8. Remove locknuts, washers, Lull logo plate (**8**) and black backing (**9**) from the rear of the vehicle.

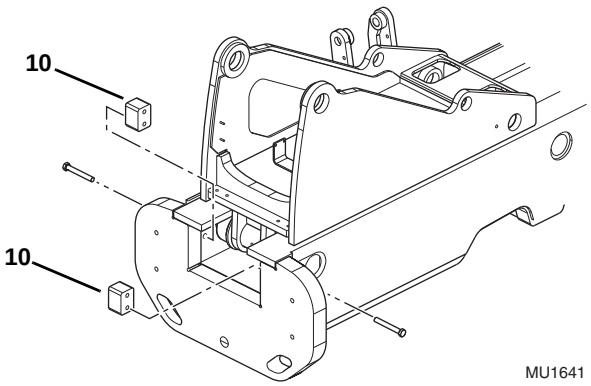

9. Remove the bolts and stop blocks (**10**) on both sides.

WARNING

To avoid personal injury and/or equipment damage, **DO NOT** over shim the rollers. The transfer carriage may jam at the narrowest part of the rails and cause the loss of a load or damage the rollers and/or rails.

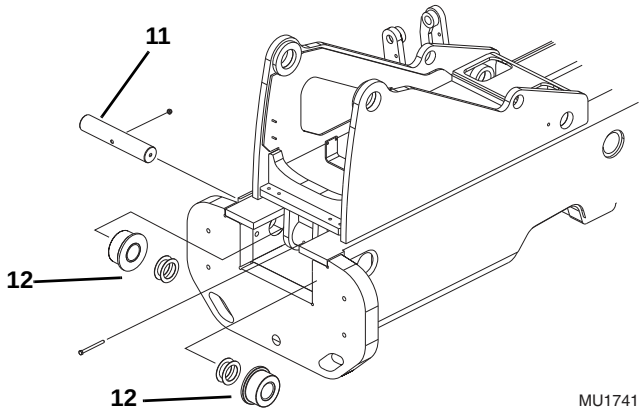

10. Remove the rear roller pin (**11**). Slide the roller pin out and remove the rollers and shims (**12**) from transfer carriage. Count and label the rollers and shims for later replacement.

Note: *New shims have a 0.06 in (1,5 mm) thickness.*

11. Add new shims to the left and/or right side shim groups as required to achieve proper gap maximums. Spread shims evenly between the left and right shim groups.
12. Insert the rear roller pin (**11**), rear rollers and shims (**12**) according to their new positions. Coat the pin bolt with Loctite® 242 (blue). Replace pin bolt and locknut on the roller pin (**11**). Torque locknut to, 43 - 78 lb-ft (59 - 106 Nm).

https://truckmanualshub.com/

13. Coat the bolts with Loctite® 242 (blue). Replace the bolts and stop blocks (**10**) at the rear, left and right side of the frame. Torque bolt to, 302 - 390 lb-ft (410 - 530 Nm).
14. Coat the locknuts with Loctite® 242 (blue). Install locknuts, washers, Lull logo plate and black backing at the rear of the vehicle. Torque locknuts to, 29 - 51 lb-ft (40 - 70 Nm).
15. Properly connect the batteries.
16. Close and secure the engine cover.
17. Inspect rear rollers. (Refer to Section 11.3.10, “Rear Roller Gap Check.”)
18. If required, perform rear rollers shimming. (Refer to Section 11.3.11, “Rear Roller Shimming.”)

11.3.12 Front Roller Gap Check

Note: *The attachment should remain attached to the quick attach for these checks.*

1. Park the machine on a firm, level surface, level the machine, fully retract the boom and transfer carriage, level the boom, place the transmission control lever in (N) NEUTRAL, engage the park brake and shut the engine OFF.
2. This procedure will require the gap check to be made in three separate locations. Transfer carriage all the way retracted, transfer carriage all the way forward and the transfer carriage moved forward about halfway.

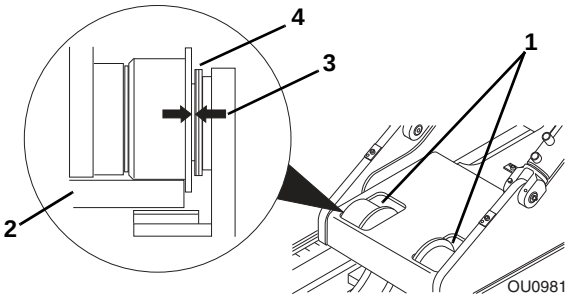

3. With the transfer carriage all the way retracted, use a rawhide hammer to tap the rollers (**1**) against the rails (**2**). Check the gap (**3**) between the roller and the existing shims (**4**) with a feeler gauge. Check both front rollers and record the gap on each side.
4. Start the engine and move the transfer carriage all the way forward. Shut the vehicle OFF. Use a rawhide hammer to tap the rollers against the rails and again check the gap (**4**) between the roller and the existing shims of each roller with the transfer carriage in this position. Record the gap of each roller.
5. Start the engine and move the transfer carriage about halfway back. Shut the vehicle OFF. Use a rawhide hammer to tap the rollers against the rails and once again check the gap (**4**) between the roller and the existing shims of each roller with the transfer carriage in this position. Record the gap of each roller.
6. Find the location that had the smallest gap. This is the position that the roller gap will be adjusted to, if necessary. The maximum total gap of both sides should not exceed 0.08 in (2 mm).
7. If the total gap is larger than 0.08 in (2 mm), the rollers need to be shimmed.

https://truckmanualshub.com/

11.3.13 Front Roller Shimming

Note: *The attachment should remain attached to the quick attach.*

1. Park the machine on a firm, level surface, level the machine, fully retract the boom and transfer carriage, level the boom, place the transmission control lever in (N) NEUTRAL, engage the park brake and shut the engine OFF.
2. Lift the boom with a hoist to remove pressure off the front rollers. There should be a gap between the rollers and the rails.
3. Place a Do Not Operate Tag on both the ignition key switch and the steering wheel, stating that the machine should not be operated.
4. Open the engine cover. Allow the system fluids to cool.
5. Properly disconnect the batteries.

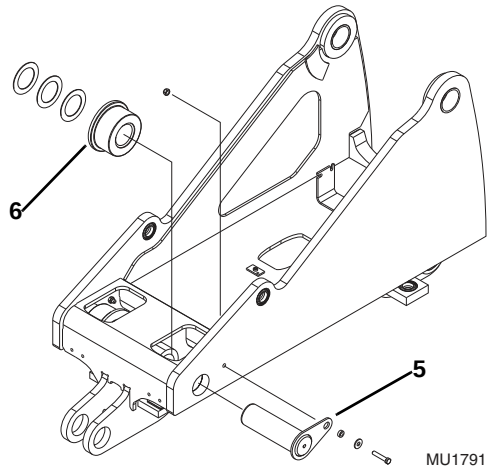

6. Remove the front roller pin (**5**), front roller and shims (**6**). Count and label their positions for later replacement.

Note: *New shims have a 0.06 inch (1,5 mm) thickness.*

7. Add new shims to the left and/or right side shim groups as required to achieve proper gap maximums. Spread shims evenly between the left and right shim groups.
8. Insert front roller pin (**5**), front roller and shims (**6**) according to their new positions.
9. Replace capscrew, washer, spacer and locknut to secure pin (**5**) on transfer carriage. Torque capscrew to, 43 - 78 lb-ft (59 - 106 Nm).
10. Properly connect the batteries.
11. Close and secure the engine cover.Inspect rear rollers. (Refer to Section 11.3.12, “Front Roller Gap Check.”)
12. If required, perform rear rollers shimming. (Refer to Section 11.3.13, “Front Roller Shimming.”)

11.3.14 Front Scraper Plate Replacement

1. Park the machine on a firm, level surface, level the machine, fully retract the boom and transfer carriage, level the boom, place the transmission control lever in (N) NEUTRAL, engage the park brake and shut the engine OFF.
2. Place a Do Not Operate Tag on both the ignition key switch and the steering wheel, stating that the machine should not be operated.
3. Open the engine cover. Allow the system fluids to cool.
4. Properly disconnect the batteries.

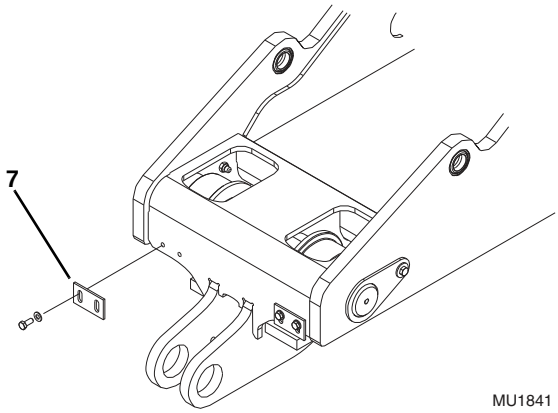

5. Remove the scraper plates (**7**) from the front of the transfer carriage. Clean, inspect for damage, and replace as necessary.
6. Coat the capscrews with Loctite® 242 (blue). Replace capscrews and washers and new scrapers (**7**) on the front of the transfer carriage. Adjust scraper to have a gap of less than 0.12 inches (3 mm) between it and the frame rail. Torque capscrews to, 25 - 44 lb-ft (34 - 61 Nm).
7. Properly connect the batteries.
8. Close and secure the engine cover.

https://truckmanualshub.com/

11.3.15 Front Roller and Bushing Replacement

Note: *The attachment should remain attached to the quick attach.*

1. Park the machine on a firm, level surface, level the machine, fully retract the boom and transfer carriage, level the boom, place the transmission control lever in (N) NEUTRAL, engage the park brake and shut the engine OFF.
2. Lift the boom with a hoist to remove pressure off the front rollers. There should be a gap between the rollers and the rails.
3. Place a Do Not Operate Tag on both the ignition key switch and the steering wheel, stating that the machine should not be operated.
4. Open the engine cover. Allow the system fluids to cool.
5. Properly disconnect the batteries.

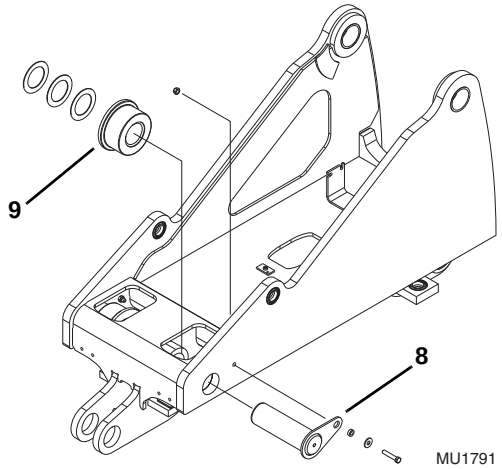

6. Remove the front roller pin (**8**), front roller and shims (**9**). Count and label their positions for later replacement.

Note: *It is reccomended to replace both rollers at the same time. Roller replacement includes bearings.*

7. Inspect front rollers (**9**) for cracks and flat wear spots. If front roller is damaged, replace it with a new front roller.

Note: *It is reccomended to replace both bearings at the same time.*

Note: ***DO NOT*** *apply any grease or anti-seize compound to bushing or roller pin.*

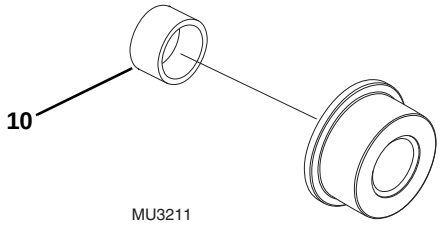

8. Inspect the front roller bearings (**10**). If they are worn and visibly shake on the roller pin, replace with new self-lubricating bearings.
9. Insert roller pin (**8**), front roller and shims (**9**) in their previously labeled positions.
10. Coat the capscrews with Loctite® 242 (blue). Replace capscrew, washer, spacer and locknut to secure pin (**8**) on transfer carriage. Torque capscrew to 43 - 78 lb-ft (59 - 106 Nm).
11. Repeat steps 8 through 10 for the other front roller.
12. Properly connect the batteries
13. Close and secure the engine cover.
14. Inspect rear rollers. (Refer to Section 11.3.12, “Front Roller Gap Check.”)
15. If required, perform rear rollers shimming. (Refer to Section 11.3.13, “Front Roller Shimming.”)

https://truckmanualshub.com/

11.3.16 Rear Roller and Bushing Replacement

Note: *The attachment should remain attached to the quick attach.*

1. Park the machine on a firm, level surface, level the machine, fully retract the boom and transfer carriage, level the boom, place the transmission control lever in (N) NEUTRAL, engage the park brake and shut the engine OFF.
2. Lift the boom with a hoist to remove pressure off the front rollers. There should be a gap between the rollers and the rails.
3. Place a Do Not Operate Tag on both the ignition key switch and the steering wheel, stating that the machine should not be operated.
4. Open the engine cover. Allow the system fluids to cool.
5. Properly disconnect the batteries
6. Remove the Lull logo plate and black backing from the rear of the vehicle.

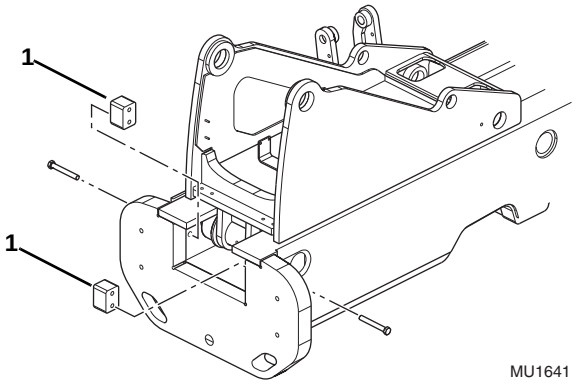

7. Remove the bolts and stop blocks (**1**) on both sides.

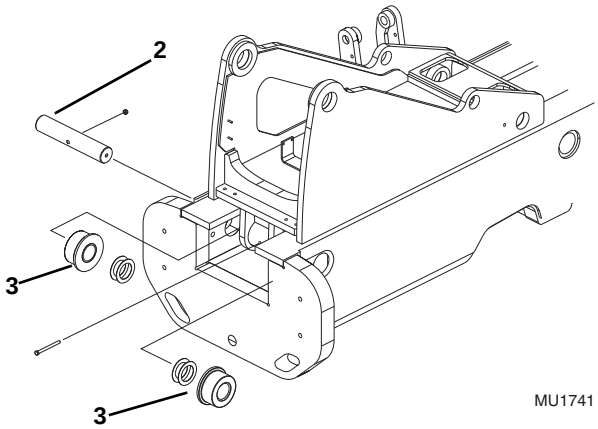

8. Remove the rear roller pin (**2**). Slide the roller pin out and remove the rollers and shims (**3**) from transfer carriage. Count and label the rollers and shims for later replacement.

Note: *It is reccomended to replace both rollers at the same time. Roller replacement includes bearings.*

9. Inspect rear rollers for cracks and flat wear spots. If front roller is damaged, replace it with a new front roller.

Note: *It is reccomended to replace both bearings at the same time.*

Note: DO NOT *apply any grease or anti-seize compound to bushing or roller pin.*

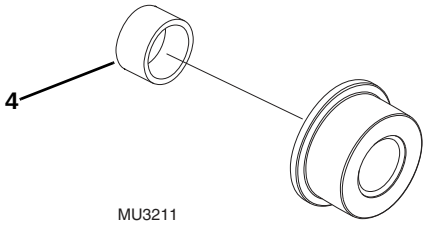

10. Inspect the rear roller bearings. If they are worn and visibly shake on the roller pin, install a new self-lubricating bearing (**4**) into the roller.
11. Insert the rear roller pin (**2**), rear rollers and shims (**3**) according to their new positions. Coat the pin bolt with Loctite® 242 (blue). Replace pin bolt and locknut on the roller pin (**2**). Torque locknut to, 43 - 78 lb-ft (59 - 106 Nm).
12. Coat the bolts with Loctite® 242 (blue). Replace the bolts and stop blocks (**1**) at the rear, left and right side of the frame. Torque bolt to, 302 - 390 lb-ft (410 - 530 Nm).
13. Install the Lull logo plate and black backing at the rear of the machine. Coat the locknuts with Loctite® 242 (blue) and torque to, 29 - 51 lb-ft (40 - 70 Nm).
14. Properly connect the batteries
15. Close and secure the engine cover.
16. Inspect rear rollers. (Refer to Section 11.3.10, “Rear Roller Gap Check.”)
17. If required, perform rear rollers shimming. (Refer to Section 11.3.11, “Rear Roller Shimming.”)

11.3.17 Boom Pivot Bushing Replacement

1. Park the machine on a firm, level surface, level the machine, fully retract the boom, level the boom, place the transmission control lever in (N) NEUTRAL, engage the park brake and shut the engine OFF
2. Remove the boom as described in Section 3.3, “Boom Assembly Maintenance.”

https://truckmanualshub.com/

***Note: DO NOT** apply any grease or anti-seize compound to bushing or roller pin.*

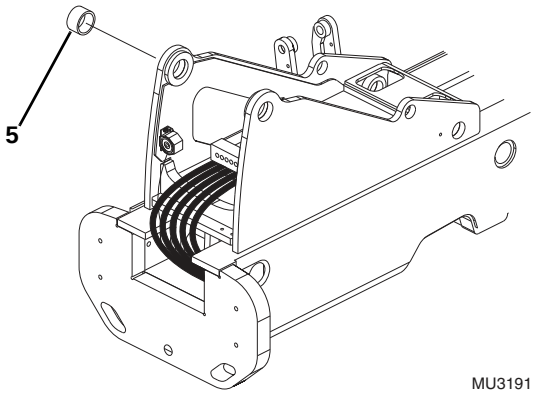

3. Inspect the boom pivot bushings (**5**). If they are worn and visibly shake on the boom pivot pin, install a new self-lubricating bushing into the transfer carriage.
4. Replace boom as described in Section 3.3, “Boom Assembly Maintenance.”

11.3.18 Slave Cylinder Pivot Bushing Replacement

1. Park the machine on a firm, level surface, level the machine, fully retract the boom, level the boom, place the transmission control lever in (N) NEUTRAL, engage the park brake and shut the engine OFF.

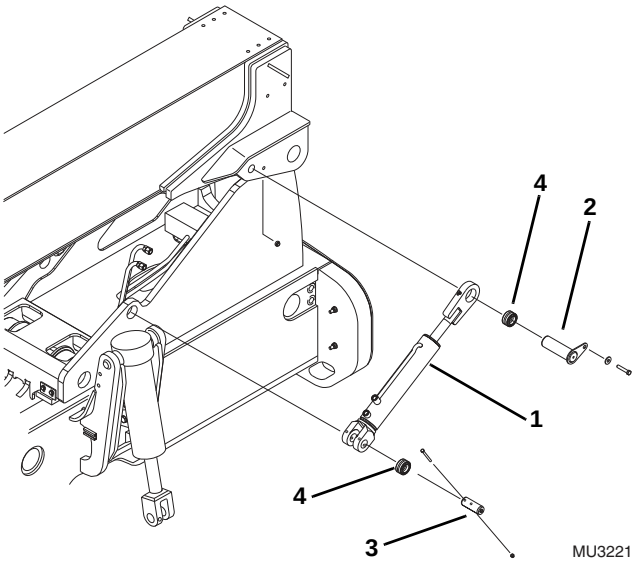

2. Label, disconnect and cap all hydraulic hoses attached to the slave cylinder (**1**). Cap all fittings and openings to prevent dirt and debris from entering the hydraulic system.
3. Secure the slave cylinder with a sling and take up any slack.
4. Remove the upper mounting pin (**2**) on the slave cylinder.
5. Remove the lower mounting pin (**3**) on the slave cylinder.
6. Lift, lower and place the slave cylinder on support blocks on a firm level surface.
7. Inspect the slave cylinder bearings (**4**). If they are worn and visibly shake on the slave cylinder pins, replace with new bearings.

https://truckmanualshub.com/

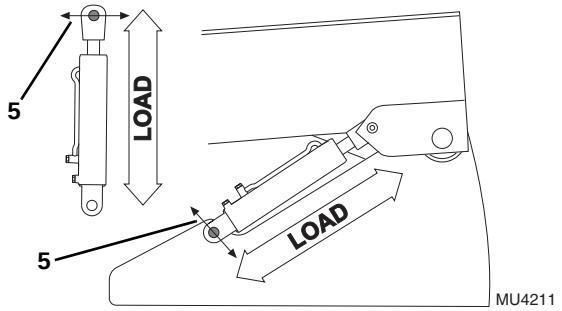

Note: *If new slave cylinder bearings (**4**) have been installed in the transfer carriage or slave cylinder, the fracture in the bearing race must be positioned perpendicular (**5**) to the force of the load.*

8. Install the lower bearing into the transfer carriage and the upper bearing into the slave cylinder (**2**).

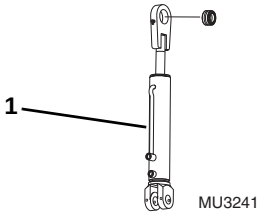

9. Lift the slave cylinder (**1**) into position on the transfer carriage.
10. Coat the mounting pin (**2**) with anti-seize compound. orient the grease points to the outside of the machine. Install the pin into the bottom of the slave cylinder and the transfer carriage. Coat the pin bolt with Loctite® 242 (blue) and torque bolt to, 9 - 22 lb-ft (17 - 31 Nm).
11. Coat each slave cylinder mount pin (**4**) with anti-seize compound. Insert each mount pin through its circular opening in the boom weldment and through the slave cylinder mount eye.
12. Coat the capscrews with Loctite® 242 (blue). Working from below, insert a capscrew and washer through each slave cylinder mount pin plate. Secure the capscrew with a new locknut. Torque capscrews to 18 lb-ft (24 Nm).
13. Grease each bearing with multi-purpose grease.
14. Repeat steps 9 through 13 for the other slave cylinder.

11.3.19 Transfer Cylinder Replacement

The transfer cylinder is located on the left rear side of the main frame and is connected to the main frame and transfer carriage. Its function is to control forward and backward movement of the transfer carriage. It has a maximum operating pressure of 3500 psi (241 bar) and has a stroke limit of 80 inches (2.032 mm).

a. Transfer Cylinder Removal

1. Park the machine on a firm, level surface. fully retract the boom, level the boom, place the transmission control lever in the (N) NEUTRAL and engage the park brake.

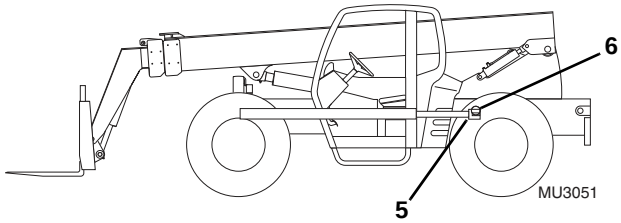

2. Move the transfer carriage 5 ft 8' in (172 cm) so that the pin (**5**) connecting the transfer cylinder to the transfer carriage is at a pin access hole (**6**) near the rear of the cab.

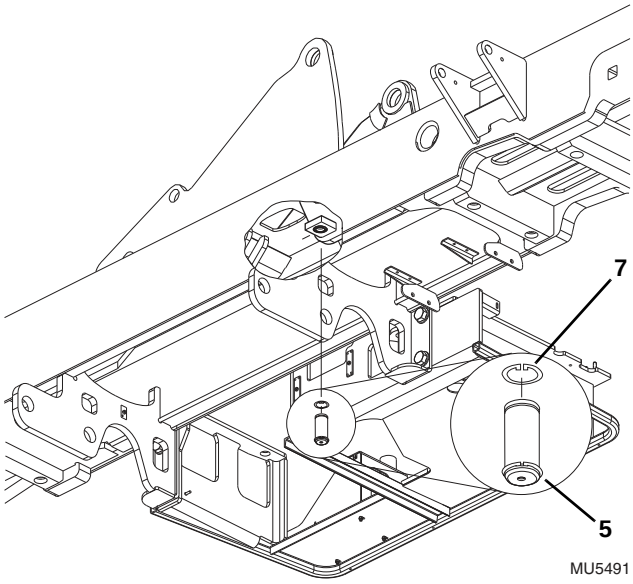

3. Remove the top snap ring (**7**) from the transfer carriage pin (**5**).
4. Temporarily tape the pin in place so it will not fall out during the following procedure.
5. Move the transfer carriage all the way forward.
6. Remove the tape and the pin (**5**).

https://truckmanualshub.com/

7. If you are replacing the pin, remove the bottom snap ring (**7**).
8. Shut the engine OFF.
9. Place a Do Not Operate Tag on both the ignition key switch and the steering wheel, stating that the machine should not be operated.
10. Open the engine cover. Allow the system fluids to cool.
11. Properly disconnect the batteries.
12. Secure the transfer cylinder with a sling and take up any slack.

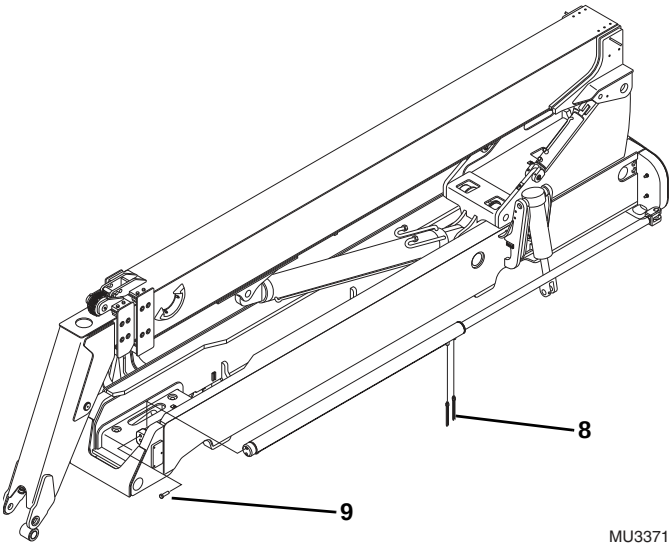

13. Label, disconnect and cap all hydraulic hoses (**8**) attached to the transfer cylinder. Cap all fittings and openings to keep dirt and debris from entering the hydraulic system.
14. Remove two bolts (**9**) securing the transfer cylinder to the machine.
15. Lift, lower and place the transfer cylinder on support blocks on a firm level surface.

b. Transfer Cylinder Installation

1. Lift the transfer cylinder into position on the vehicle chassis.
2. Replace two bolts securing the transfer cylinder to the frame.
3. Uncap and reconnect the previously labeled hydraulic hoses to the transfer cylinder.

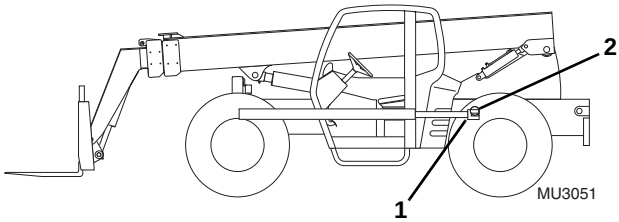

4. Move the transfer carriage 5 ft 8 in (172 cm) so that the pin (**1**) connecting the transfer cylinder to the transfer carriage is at a pin access hole (**2**) near the rear of the cab.

Note: *Make sure the threaded hole, of the transfer cylinder pin, is facing downward during installation.*

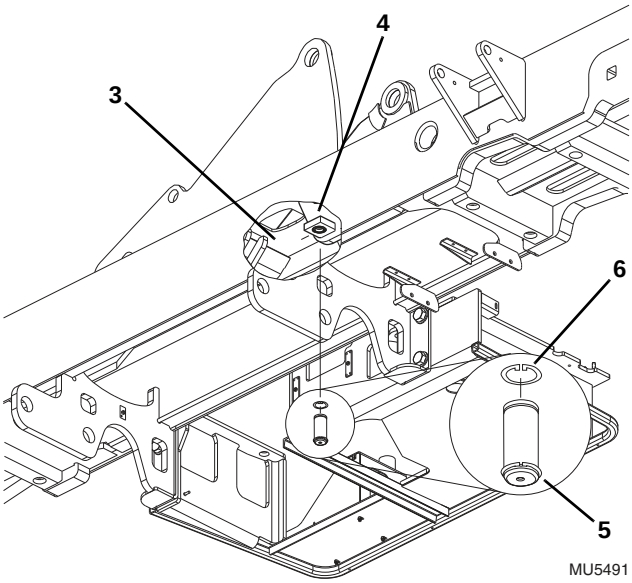

5. Connect the transfer cylinder (**3**) to the transfer carriage mount (**4**) with the transfer cylinder pin (**5**) securing it with retaining rings (**6**).
6. Properly connect the batteries.
7. Close and secure the engine cover.

https://truckmanualshub.com/

c. Transfer Carriage Bearing Replacement

1. Park the machine on a firm, level surface, level the machine, fully retract the boom, level the boom, place the transmission control lever in (N) NEUTRAL and engage the park brake.
2. Move the transfer carriage all the way forward.
3. Shut the engine OFF
4. Place a Do Not Operate Tag on both the ignition key switch and the steering wheel, stating that the machine should not be operated.
5. Open the engine cover. Allow the system fluids to cool.
6. Properly disconnect the batteries.

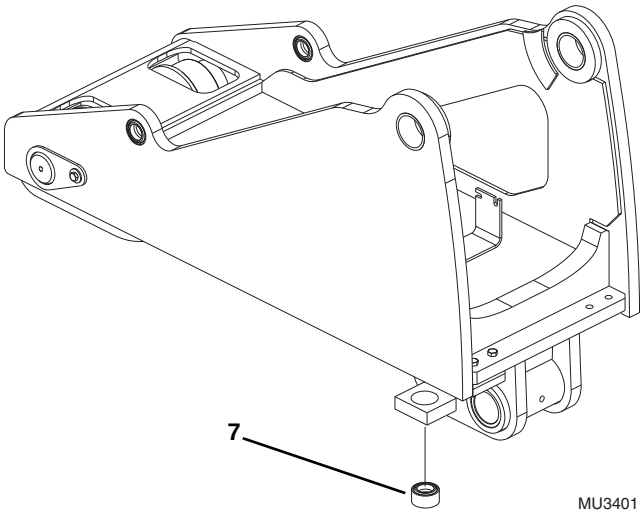

Note: *When new transfer cylinder bearings (**7**) are installed in the transfer carriage, the fracture in the bearing race must be positioned perpendicular (**8**) to the force of the load. The fracture in the bearing face must be positioned at the 9 o'clock (**8**) or 3 o'clock (**9**) position. The 12 o'clock and 6 o'clock positions are the direction the transfer carriage moves forward and reverse on the rails and is the force of the load.*

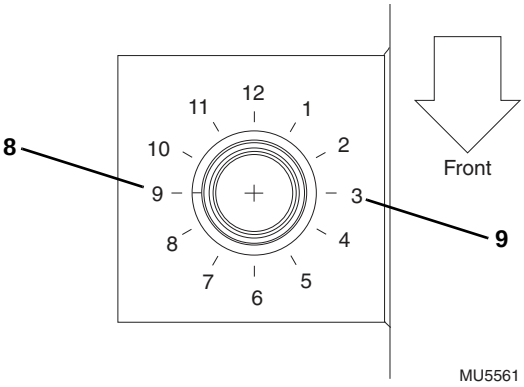

7. From under the vehicle remove the transfer cylinder bearing (**7**) from the transfer carriage mount.
8. Replace a new transfer cylinder bearing (**7**) into the transfer carriage mount.
9. Properly connect the batteries.
10. Close and secure the engine cover.

https://truckmanualshub.com/

11.4 TROUBLESHOOTING

This section provides an easy reference guide covering the most common problems that occur during operation of the transfer carriage.

11.4.1 Transfer Carriage Troubleshooting

Problem	Cause	Remedy
1. Transfer carriage will not extend or retract.	1. Broken transfer cylinder hydraulic hose(s) or tube(s) and/ or connections leaking.	1. Locate break, replace hose(s) or tube(s), tighten connections.
	2. Transfer Carriage Extend/ Retract hydraulic system not operating properly.	2. Refer to Section 8.4, “Hydraulic Circuits.”
	3. Faulty Transfer Carriage Cylinder.	3. Repair cylinder. (Refer to Section 8.8, “Hydraulic Cylinders.”)
	4. Rollers binding on rails.	4. Check roller gap. Refer to Section 11.3.10, “Rear Roller Gap Check,” and Section 11.3.12, “Front Roller Gap Check.”
2. Jerky transfer carriage extend or retract functions.	1. Front or rear wear pads loose, contaminated, excessively worn or damaged.	1. Replace wear pads. (Refer to Section 11.3.5, “Rear Wear Pad Replacement,” and Section 11.3.9, “Front Upstop Wear Pad Replacement.”)
	2. Transfer carriage extend/retract hydraulic system not operating properly.	2. Refer to Section 8.4, “Hydraulic Circuits.”
	3. Damaged transfer carriage.	3. Replace the damaged transfer carriage. (Refer to Section 11.3.1, “Transfer Carriage Removal.”)
	4. Damaged rollers.	4. Replace the damaged rollers. (Refer to Section 11.3.15, “Front Roller and Bushing Replacement,” or Section 11.3.16, “Rear Roller and Bushing Replacement.”)

https://truckmanualshub.com/

11.4.1 Transfer Carriage Troubleshooting

Problem	Cause	Remedy
3. Transfer carriage shifts to right or left when extending.	1. Transfer carriage rollers improperly shimmed.	1. Re-shim the transfer carriage. (Refer to Section 11.3.11, “Rear Roller Shimming,” and Section 11.3.13, “Front Roller Shimming.”)
	2. Incorrect front or rear wear pad gap or shimming, or wear pads excessively worn.	2. Shim wear pads to correct gap. (Refer to Section 11.3.4, “Rear Wear Pad Shimming,” and Section 11.3.8, “Front Upstop Wear Pad Shimming.”)
4. Excessive transfer carriage roller pin noise and/or wear.	1. Worn bearing(s).	1. Replace bearing(s). (Refer to Section 11.3.15, “Front Roller and Bushing Replacement,” and Section 11.3.16, “Rear Roller and Bushing Replacement.”)
	2. Excessive dirt or contamination in roller areas.	2. Clean roller areas.
5. Premature transfer carriage pad wear.	1. Incorrect front or rear wear pad gap.	1. Shim wear pads to correct gap. (Refer to Section 11.3.4, “Rear Wear Pad Shimming,” and Section 11.3.8, “Front Upstop Wear Pad Shimming.”)
	2. Rapid cycle times of transfer carriage with heavy loads.	2. Reduce transfer carriage cycle times or work with lighter loads.
	3. Operating in extremely dusty/ abrasive conditions.	3. Clean wear pad and transfer roller sliding surfaces frequently.
6. Transfer carriage drifts forward on it’s own.	1. Transfer carriage cylinder malfunctioning.	1. Replace transfer carriage cylinder (Refer to Section 11.3.19, “Transfer Cylinder Replacement.”)
	2. Transfer carriage cylinder control valve malfunctioning.	2. Replace transfer carriage cylinder control valve. (Refer to Section 8.4, “Hydraulic Circuits.”)

https://truckmanualshub.com/

This Page Intentionally Left Blank

https://truckmanualshub.com/

https://truckmanualshub.com/

31200355

An Oshkosh Corporation Company

JLG Industries, Inc.
1 JLG Drive
McConnellsburg PA. 17233-9533
USA
Phone: +1-717-485-5161
Customer Support Toll Free: 1-877-554-5438
Fax: +1-717-485-6417

JLG Worldwide Locations

JLG Industries (Australia)
P.O. Box 5119
11 Bolwarra Road
Port Macquarie
N.S.W. 2444
Australia
Phone: +61 2 65811111
Fax: +61 2 65813058

JLG Latino Americana Ltda.
Rua Antonia Martins Luiz, 580
Distrito Industrial João Narezzi
13347-404 Indaiatuba - SP
Brazil
Phone: +55 19 3936 8870
Fax: +55 19 3935 2312

JLG Industries (UK) Ltd
Bentley House
Bentley Avenue
Middleton
Greater Manchester
M24 2GP
England
Phone: +44 (0)161 654 1000
Fax: +44 (0)161 654 1001

JLG France SAS
Z.I. de Baulieu
47400 Fauillet
France
Phone: +33 (0)5 53 88 31 70
Fax: +33 (0)5 53 88 31 79

JLG Deutschland GmbH
Max-Planck-Str. 21
D - 27721 Ritterhude-Ihlpohl
Germany
Phone: +49 (0)421 69 350 20
Fax: +49 (0)421 69 350 45

JLG Equipment Services Ltd.
Rm 1107 Landmark North
39 Lung Sum Avenue
Sheung Shui N.T.
Hong Kong
Phone: +852 2639 5783
Fax: +852 2639 5797

JLG Industries (Italia) s.r.l.
Via Po. 22
20010 Pregnana Milanese - MI
Italy
Phone: +39 029 359 5210
Fax: +39 029 359 5845

JLG Europe B.V.
Polaris Avenue 63
2132 JH Hoofddorp
The Netherlands
Phone: +31 (0)23 565 5665
Fax: +31 (0)23 557 2493

JLG Polska
Ul. Krolewska
00-060 Warsawa
Poland
Phone: +48 (0)914 320 245
Fax: +48 (0)914 358 200

Plataformas Elevadoras
JLG Iberica, S.L.
Trapadella, 2
P.I. Castellbisbal Sur
08755Castellbisbal, Barcelona
Spain
Phone: +34 93 772 4 700
Fax: +34 93 771 1762

JLG Sverige AB
Enkopingsvagen 150
Box 704
SE - 176 27 Jarfalla
Sweden
Phone: +46 (0)850 659 500
Fax: +46 (0)850 659 534

www.jlg.com