https://truckmanualshub.com/

U.S.A. : **KUBOTA TRACTOR CORPORATION**
1000 Kubota Drive, Grapevine, TX 76051
Telephone : 888-4KUBOTA

Canada : **KUBOTA CANADA LTD.**
5900 14th Avenue, Markham, Ontario, L3S 4K4, Canada
Telephone : (905)294-7477

France : **KUBOTA EUROPE S.A.S**
19-25, Rue Jules Vercruysse, Z.I. BP88, 95101 Argenteuil Cedex, France
Telephone : (33)1-3426-3434

Italy : **KUBOTA EUROPE S.A.S Italy Branch**
Via Grandi, 29 20068 Peschiera Borrome (MI) Italy
Telephone : (39)02-51650377

Germany : **KUBOTA BAUMASCHINEN GmbH**
Steinhauser str, 100, 66482 Zweibrucken Rheinlandpfalz Germany
Telephone : (49)6332-4870100

U.K. : **KUBOTA (U.K.) LTD.**
Dormer Road, Thame, Oxfordshire, OX9 3UN, U.K.
Telephone : (44)1844-214500

Australia : **KUBOTA AUSTRALIA PTY LTD.**
25-29 Permas Way, Truganina, VIC 3029, Australia
Telephone : (61)-3-9394-4400

Malaysia : **KUBOTA MALAYSIA SDN. BHD.**
No.3 Jalan Sepadu 25/123 Taman Perindustrian Axis,
Seksyen 25, 40400 Shah Alam, Selangor Darul Ehsan Malaysia
Telephone : (60)3-736-1388

Philippines : **KUBOTA PHILIPPINES, INC.**
232 Quirino Highway, Baesa, Quezon City 1106, Philippines
Telephone : (63)2-422-3500

Taiwan : **SHIN TAIWAN AGRICULTURAL MACHINERY CO., LTD.**
16, Fengping 2nd Rd, Taliao Shiang Kaohsiung 83107, Taiwan R.O.C.
Telephone : (886)7-702-2333

Thailand : **SIAM KUBOTA CORPORATION CO., LTD.**
101/19-24 Moo 20, Navanakorn Industrial Estate, Tambon Khlongnueng, Amphur Khlongluang,
Pathumthani 12120, THAILAND
Telephone : (66)2-909-0300

Japan : **KUBOTA Corporation**
Farm & Industrial Machinery International Operations Headquarters
2-47, Shikitsuhigashi 1-chome, Naniwa-ku, Osaka, Japan 556-8601

AX. L. 7-7. -. K

English (U.S.A.)
Code No. R5611-8130-7

R530.R630

OPERATOR'S MANUAL

KUBOTA WHEEL LOADER

MODELS R530·R630

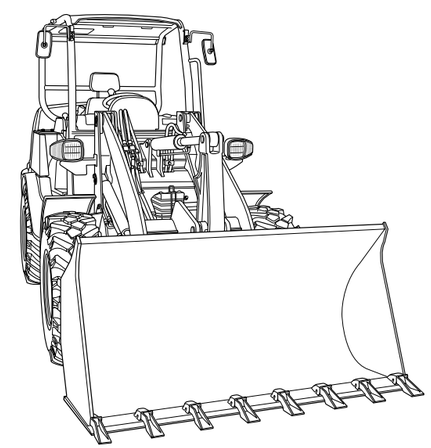

1BBABBKAP0460

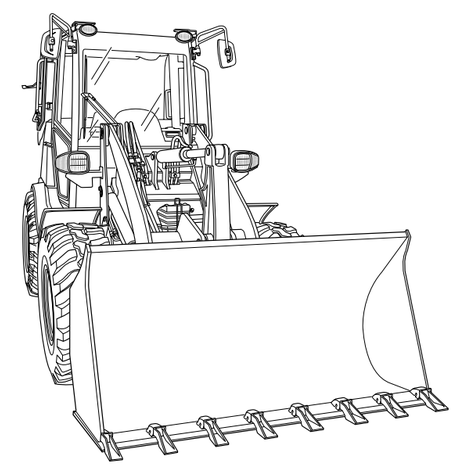

1BBABBKAP0450

READ AND SAVE THIS MANUAL

© KUBOTA Corporation 2014

https://truckmanualshub.com/

ABBREVIATION LIST

Abbreviations	Definitions
API	American Petroleum Institute
ASTM	American Society for Testing and Materials, USA
DIN	Deutsches Institut für Normung, GERMANY
	(German Institute for Standardization)
EN	European Standard
FOPS	Falling Objects Protective Structures
HST	Hydrostatic Transmission
ISO	International Organization for Standaridization
JIS	Japanese Industry Standard
MIL	Militaly Standard
ROPS	Roll-Over Protective Structures
rpm	Revolutions Per Minute
rps	Revolutions Per Second
SAE	Society of Automotive Engineers, USA
SMV	Slow Moving Vehicle

California Proposition 65

⚠ WARNING ⚠

Engine exhaust, some of its constituents, certain vehicle components and fluids, contain or emit chemicals known to the State of California to cause cancer and birth defects or other reproductive harm.

IMPORTANT

The engine in this machine is not equipped by the manufacturer with a standard spark arrester.
It is a violation of California Public Resource Code Section 4442 to use or operate this engine on or near any forest-covered, brush-covered land, or grass- covered land unless the exhaust system is equipped with a working spark arrester meeting state laws. Other states or federal areas may have similar laws.

Canadian Electromagnetic Compatibility (EMC):
This machine complies with Industry Canada ICES-002.

https://truckmanualshub.com/

UNIVERSAL SYMBOLS

As a guide to the operation of your machine, various universal symbols have been utilized on the instruments and controls. The symbols are shown below with an indication of their meaning.

- Safety Alert Symbol
- Engine Oil-Pressure
- Battery Charging Condition
- Diesel Preheat/Glow Plugs
- Water separator fill-up
- Horn
- Engine Warning
- Wiper/washer
- Coolant Temperature
- HST Temperature
- HST Oil-Pressure
- Diesel Fuel
- Hydraulic Oil
- Low Travel Speed
- High Travel Speed
- Parking Brake
- Neutral
- Travel Forward
- Travel Backward
- Lock
- Unlock
- Hydraulic lock indicator
- Auxiliary port indicator
- Auxiliary hold indicator
- Insert key indicator
- Pull out key indicator
- Read the Operating Instructions
- ECO mode
- Power mode
- Attachment mode
- Diesel Particulate Filter Regeneration
- Parked Diesel Particulate Filter Regeneration
- Diesel Particulate Filter Regeneration Inhibit
- Parked Regeneration switch
- Bucket Up
- Bucket Down
- Bucket Tilt
- Bucket Dump
- Bucket Float
- Working Light
- High-beam
- Low-beam
- Hazard Switch
- Hazard / Turn Signal
- Clearance Light
- Rotary Beacon
- Differential Lock
- Display Selector
- User Setting
- Set Clock
- Service Interval

https://truckmanualshub.com/

FOREWORD

You are now the proud owner of a KUBOTA wheel loader. This wheel loader is a product of KUBOTA quality engineering and manufacturing. It is made of fine materials and under a rigid quality control system. It will give you long, satisfactory service. To obtain the best use of your wheel loader, please read this manual carefully. It will help you become familiar with the operation of the wheel loader and contains many helpful hints about wheel loader maintenance. It is KUBOTA's policy to utilize as quickly as possible every advance in our research. The immediate use of new techniques in the manufacture of products may cause some small parts of this manual to be outdated. KUBOTA distributors and dealers will have the most up-to-date information. Please do not hesitate to consult with them.

SAFETY FIRST

This symbol, the industry's "Safety Alert Symbol", is used throughout this manual and on labels on the machine itself to warn of the possibility of personal injury. Read these instructions carefully. It is essential that you read the instructions and safety regulations before you attempt to assemble or use this unit.

DANGER :	Indicates an imminently hazardous situation which, if not avoided, will result in death or serious injury.
WARNING :	Indicates a potentially hazardous situation which, if not avoided, could result in death or serious injury.
CAUTION :	Indicates a potentially hazardous situation which, if not avoided, could result in minor or moderate injury.
IMPORTANT :	Indicates that equipment or property damage could result if instructions are not followed.
NOTE :	Gives helpful information.

https://truckmanualshub.com/

CONTENTS

⚠SAFE OPERATION ..... ⚠-1
1. BEFORE OPERATING THE WHEEL LOADER 1
2. ENSURE THE DURABILITY OF THE AXLE SUSPENSION 3
3. OPERATING THE MACHINE 4
4. TRAVELING 5
5. AFTER OPERATION 6
6. SAFE LOADING AND TRANSPORT 7
7. SERVICING THE MACHINE SAFELY 8
8. DANGER AND WARNING LABELS 12
CARE OF DANGER, WARNING AND CAUTION LABELS 17

SERVICING OF WHEEL LOADER 1

SPECIFICATIONS 3
SPECIFICATION TABLE 3

DESCRIPTION OF MACHINE PARTS 5

INSTRUMENT PANEL AND CONTROL ELEMENTS 7

CHECKS BEFORE START 13
DAILY CHECKS 13
CHECKING THE SWITCHES 13
Parking Brake Switch 13
Starter Switch 14
Horn Switch 14
Turn Signal Switch 14
High-Low Beam Changing Switch 14
Headlight Switch 15
Hazard Lamp Switch 15
Attachment Unlock Switch 16
Diesel Particulate Filter (DPF) Switch (Inhibit / Parked Regeneration) 16
Differential Lock Switch 17
Display Selector Switch 17
Battery Charge Indicator 19
Engine Oil Pressure Indicator 20
Grow Plug Indicator 20
Water Separator Filled-Up Indicator 20
LCD for Normal Operation 21
LCD for Warning 22
Warning Indicator 23
Hydraulic Lock Switch 24
AUX Port Enable Switch 24
AUX Port Variable Switch 24
AUX Hold Switch 24
Float Switch 25
SAFETY LEVERS AND APPLIANCE 25
Safety Key Start System 25
Lift Arm Support 25

https://truckmanualshub.com/

Steering Frame Lock 26
Control Lever Lock 26
Auxiliary Port Lever Lock 27
CABIN TYPE MACHINE 27
Front Wiper / Washer Switch 27
Rear Wiper/ Washer Switch 28
Interior Lamp 28
Working Light Switch 28
Opening/Closing of CABIN Door 29
Opening/Closing of Side CABIN Window 29
Emergency Hammer 30
Sun visor 30
AIR CONDITIONER 30
Airflow 30
Air Control Vent 32
Control panel 32
Operation 33

OPERATION OF THE ENGINE 34
EXHAUST AFTERTREATMENT DEVICES 34
Diesel Oxidation Catalyst and Diesel Particulate Filter (DPF) Muffler 34
Handling Points 35
DPF Regeneration Process 35
Regeneration Operating Procedure 36
PM Warning Level and Required Procedures 37
Regeneration Operating Procedure 39
PM Warning Level and Required Procedures 40
Tips on DPF Regeneration 41
STARTING THE ENGINE 41
Checkpoints after Starting the Engine 42
STARTING THE ENGINE UNDER COLD CONDITIONS 43
STOPPING THE ENGINE 43
Engine Stop Knob 43
STARTING WITH AN AUXILIARY BATTERY 44
Observe Following Guidelines when Starting with an Auxiliary Battery 44

OPERATION OF THE MACHINE 45
GUIDING THE OPERATOR 45
WORKING IN THE VICINITY OF OVERHEAD POWER LINES 45
RUNNING-IN OF THE MACHINE 45
Do not Work with Full Engine Rpm's or Full Loads during the First 50 Working Hours 45
Oil Change in the Run-in Stage 45
STARTING 46
Adjusting the Operator's Seat 46
Seat Belt 47
Tilt Steering Adjustment 47
SELECTION OF THE DRIVING MODE 48
Setting Procedure 49
TRAVELING 49
Starting 49
Accelerator Pedal 50
Inching and Brake Pedals 50

Neutral Switch....50
Direction Switch....51
Speed Control Switch....52
Engine Speed Control Knob....53
Turning....53
Deceleration on a Slope....53
Traveling on Rough Roads....54
Traveling on Snow....54
STOPPING....54
OPERATION OF THE LIFT ARM....55
OPERATION OF THE BUCKET....56
AUXILIARY PORT OPERATION....57
Auxiliary Port Lever....57
HOW TO RELEASE PRESSURE TRAPPED IN THE HYDRAULIC SYSTEM....57
AUXILIARY PORT OPERATION....58
Selecting the Action Modes....58
AUX Port Handling Procedure....59
Setting the Maximum Flow Volume....60
HOW TO RELEASE PRESSURE TRAPPED IN THE HYDRAULIC SYSTEM....63
MECHANICAL QUICK-HITCH....64
Attaching Attachments....64
Detaching Attachments....65
QUICK COUPLER (HYDRAULIC)....66
Attaching Attachments....66
Connecting and disconnecting the hydraulic hose....69
HOW TO USE THE INCHING AND BRAKE PEDAL....69
Inching and Brake Pedal Operation....69
Using the Inching and Brake Pedal According to the Job....70
TYPICAL JOBS USING A WHEEL LOADER....71
Digging and Loading....72
Refilling....73
Leveling Ground....73
Loading onto a Truck....73
ANTI-THEFT DEVICE (FOR KCL ONLY)....74
Anti-Theft Device....74

TRANSPORT BY TRUCK....76

LIFTING THE MACHINE....78

HANDLING LOADER IN COLD WEATHER....79
PREPARATIONS FOR COLD WEATHER....79
AFTER-OPERATION DIRECTIONS....79

MAINTENANCE....80
MAINTENANCE INTERVALS....81

PERIODIC SERVICE....85
OPENING AND CLOSING OF COVERS....85
Engine cover....85
Side cover....85
DAILY CHECK....86
Checking the engine oil....86

https://truckmanualshub.com/

Checking hydraulic oil level 87
Checking the fuel and replenishing the wheel loader 88
Checking coolant level and replenishing 89
Checking and replenishment of oil in the brake fluid reservoir 89
Grease fittings 90
Checking tire pressure, wear and wheel nuts 91
Checking and cleaning the radiator and oil cooler 91
Checking the steering 91
Checking Gear Locked Parking Brake 92
Checking the disc brake 92
Checking and cleaning engine and electrical wiring 92
Checking V-belt 92
Washing whole machine 92
Draining water separator 92
Cleaning evacuator valve 93
Checking dust indicator 93
Checking Diesel Particulate Filter (DPF) Muffler 93
Checking washer liquid [CABIN TYPE ONLY] 94
Checking and tightening loose bolts and nuts 94
Checking electrical wiring for short-circuits and loose terminals 94
Checking the lamps and instruments 94
Testing the horn 94
Checking the machine for leaks 94
Checking and cleaning after operating in muddy areas 94
EVERY 50 HOURS SERVICE 95
Checking the battery condition 95
EVERY 250 HOURS SERVICE 96
Grease fittings 96
Checking fan belt tension 97
Checking radiator hoses and clips 97
Cleaning and checking air cleaner element 98
Checking Fuel Line and Intake Air Line 98
Checking wheel nuts 98
Cleaning the filter element 98
Replacing water separator filter element 99
EVERY 500 HOURS SERVICE 99
Changing engine oil 99
Replacing the engine oil filter cartridge 100
Checking and replenishing oil in the front and rear axle, reduction gear case 101
Replacing return filter 101
Changing the fuel filter 102
EVERY 1000 HOURS SERVICE 102
Changing oil for the front and rear axle case 102
Replacing HST oil filter 103
Changing hydraulic oil and the suction filter 104
Replacing air cleaner element 105
Adjusting Engine Valve Clearance 105
EVERY 1500 SERVICE HOURS 105
Checking Injector Tip 105
Replacing Oil Separator Element 105
Checking EGR Cooler 106
EVERY 2000 HOURS SERVICE 106

Checking alternator and starter motor 106
EVERY 3000 SERVICE HOURS 106
Checking EGR System 106
Checking Turbocharger 106
Cleaning Diesel Particulate Filter (DPF) 106
ANNUAL SERVICE 106
Checking electrical leads and terminals 106
Checking Exhaust Manifold (Cracks, Gas, Leakage and Mounting Screw) 106
Checking Intake Air Line for Air Leaks 106
Checking Boost Sensor and AFS (Air Flow Sensor) 106
Checking Condition of Diesel Particulate Filter (DPF) Muffler 106
Checking Diesel Particulate Filter (DPF) Differential Pressure Sensor and Piping for Gas Leak 106
Checking Diesel Particulate Filter (DPF) Exhaust Gas Temperature Sensor 106
Checking EGR Piping for Gas Leak 106
BIENNIAL SERVICE 107
Replacing fuel hoses and clamps 107
Changing coolant 107
Replacing Intake Air line 108
Replacing Rubber Piping Related Oil Separator 108
Replacing Diesel Particulate Filter (DPF) Differential Pressure Sensor Rubber Piping (Front and Back) 108
Replacing Suction pipe downstream the AFS (Air Flow Sensor) 108
Replacing Boost Sensor Pressure Rubber Piping 108
Replacing EGR Cooler Hose 108
Replacing Radiator Hoses (Water pipes) 108
PERIODIC PARTS REPLACEMENT 108
Replacing Air-Conditioner Pipes and Hoses [CABIN type only] 108
SERVICE AS REQUIRED 109
Electrical system 109
Draining the fuel filter 111
Bleeding the fuel system 112
TIRES 112
Handling tires 112
Tire pressure 112
Changing tires 113
Mounting tires 113
Tire chains 113

TAKING OUT OF OPERATION AND STORAGE 114
CAUTION WHEN WASHING THE MACHINE 114

RECOMMENDED OILS 115
BIODIESEL FUEL (BDF) 116

TROUBLE SHOOTING 118
List of Error Code Numbers 120

APPENDIX 125
SERVICE HOUR METER 125

https://truckmanualshub.com/

https://truckmanualshub.com/

SAFE OPERATION

Careful operation is your best insurance against an accident.

Read and understand this section carefully before operating the Wheel Loader.

All operators, no matter how much experience they may have had, should read this and other related manuals before operating the machine or any attachment. It is the owner's obligation to instruct all operators in safe operation.

1. BEFORE OPERATING THE WHEEL LOADER

1. Know your equipment and its limitations. Read this entire manual before attempting to start and operate the machine.
2. If using an attachment on the machine, read the attachment operator's manual to ensure safe operating procedures.
3. Pay special attention to the danger and warning labels on the machine and the attachments.
4. For your safety, ROPS(Roll-Over Protective Structure)/FOPS(Falling-Object Protective Structure) and a seat belt have been installed by KUBOTA. Always use the seat belt when the machine is equipped with canopy or cab.
   ROPS/FOPS is required on Wheel Loaders, Bulldozers, Truck Type Loaders, Graders and Scrapers by OSHA and SAE regulations.

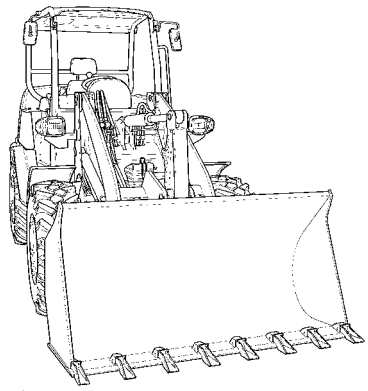

1BBABBKAP046A

5. Never attempt to modify structural members of ROPS by welding, drilling, bending, grinding or cutting, as this may weaken the structure. If any component is damaged, replace it. Do not attempt repairs. If ROPS is loosened or removed for any reason, make certain all parts are reinstalled correctly.
6. Do not install any attachments, including water and calcium chloride that is added into the tires, that exceed the specified maximum weight shown under "MAXIMUM GROSS MACHINE WEIGHT" space on the ROPS label.
7. Do not start or operate an unsafe machine. Before working the machine, be sure that any unsafe condition has been satisfactorily remedied. Check brakes, steering and attachment controls before moving. Consult a qualified technician if any malfunctioning part of the system is observed. Be sure all safety appliances are in the right place and in good operating condition.
8. Wear and use safety gear such as non-slip safety shoes or boots, safety glasses and safety hardhats.
   Do not operate or work around the machine, when wearing loose, bulky clothing.
9. Never operate the machine or any equipment while under the influence of alcohol or other drugs, or while fatigued.
10. Before allowing other people to use your machine, give instruction to the operator on safe and correct use of the machine and make sure the operator reads and understands the Operator’s Manual for the machine.
11. Inspect your seat belt daily for signs of fraying, wear or other weakness that could endanger your safety.
12. Do not use the loader bucket or an attachment to lift or carry a person.

https://truckmanualshub.com/

13. Do not use the bucket or any other parts of the attachments to pull anything.
14. Carry out the following procedure in order to change the attachment.
    - Position the machine and attachment on level ground.
    - Make sure no persons are in the immediate vicinity of the machine.
    - When actuating the machine to change the front attachment:
    - Stop the engine. (For machines with mechanical quick coupler)
    - Actuate the parking brake switch.
    - Lower the bucket and attachment to the ground.
    - Release the hydraulic pressure in the hydraulic system by operating the appropriate control levers. (For machines with mechanical quick coupler)
    - Lock all control levers in neutral.
    - After changing the front attachment, make sure the installed attachment is securely attached to the quick coupler.
15. To mount a fire extinguisher, use the space above the fender on the side of the operator's seat.

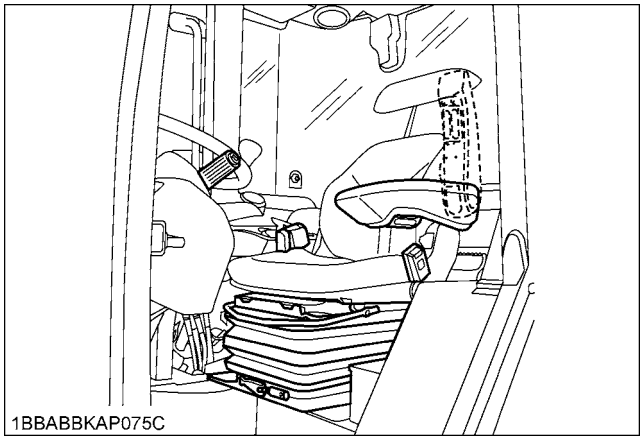

16. Carry out the following procedure in order to lift the machine.
    - Attach the steering frame lock.

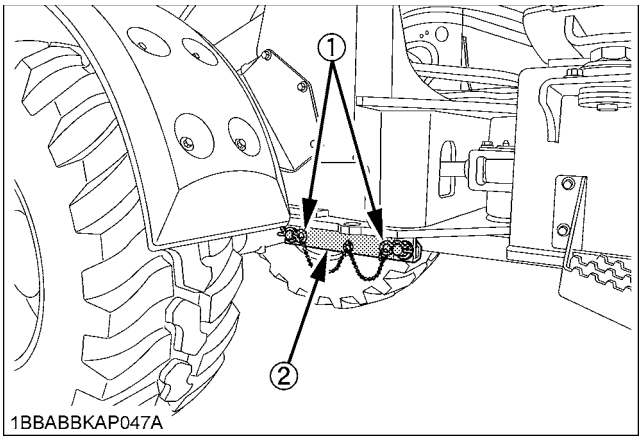

(1) Snap pin
(2) Steering frame lock (steering frame in locked position)

- Use the locations indicated by marks in the diagram to lift the machine.

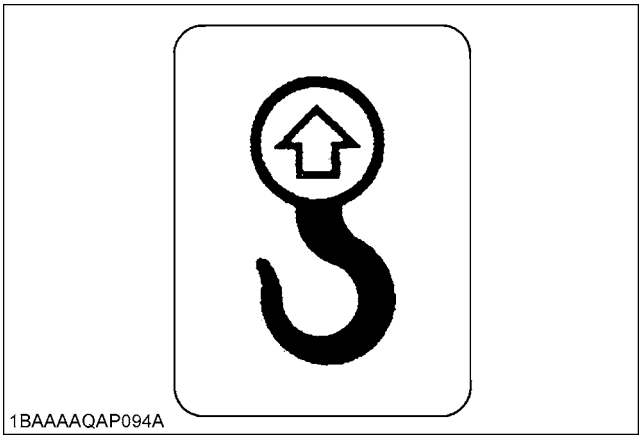

https://truckmanualshub.com/

- Pass a nylon sling or chain through the lugs and lift as shown in the diagram.

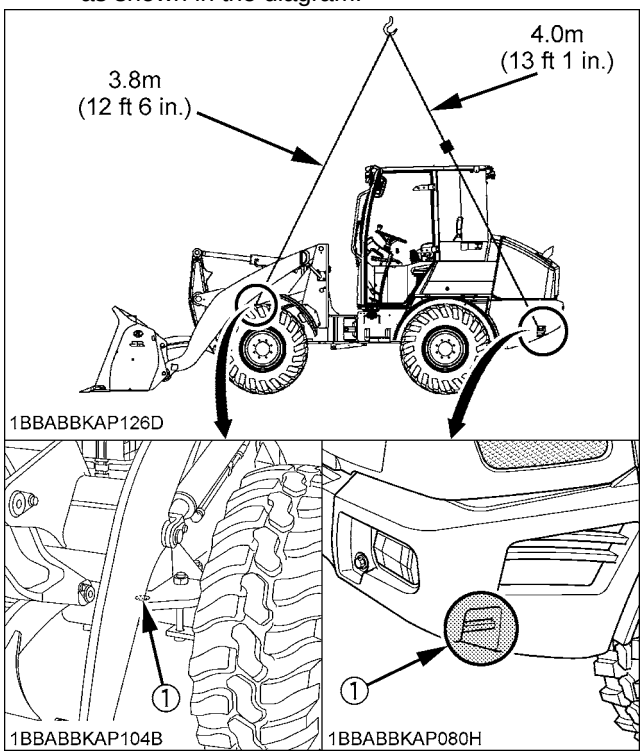

(1) Lugs (Both sides)

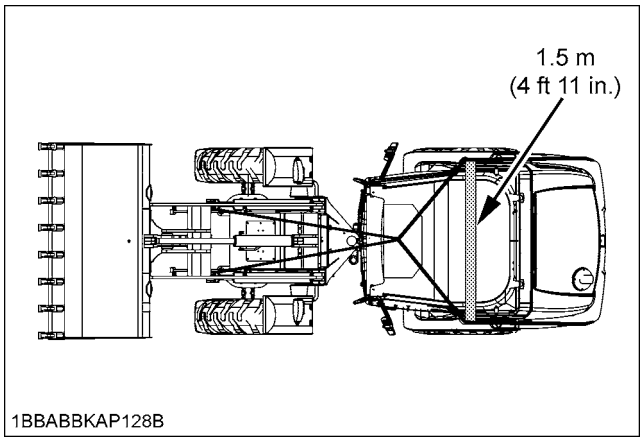

- Use only a nylon sling or chain that is capable of holding the weight of the machine.

2. ENSURE THE DURABILITY OF THE AXLE SUSPENSION

Improper handling of the machine damages the axle suspension! To protect the axle suspension from excessive wear, observe the following instructions.

- Only use KUBOTA-approved tire sizes.
- Observe the tire pressure table. (See "Tire pressure" in "TIRES" in "PERIODIC SERVICE" section.)
- Check tire pressure before commencing day-to-day operations.
- Do not use any liquids in the tires.
- Replace excessively worn tires with new tires before commencing operations.
- Only use identical wheels and tires with the same degree of wear on the same axle.
- Never exceed the specified max. load capacity.
- Only use KUBOTA-approved buckets, palette forks and fork arms.
- With more frequent loads at the thresholds, the durability of the axle suspension must be ensured through additional nuts (1) and bolts (2) on the front and rear axle. Please contact your KUBOTA dealer.

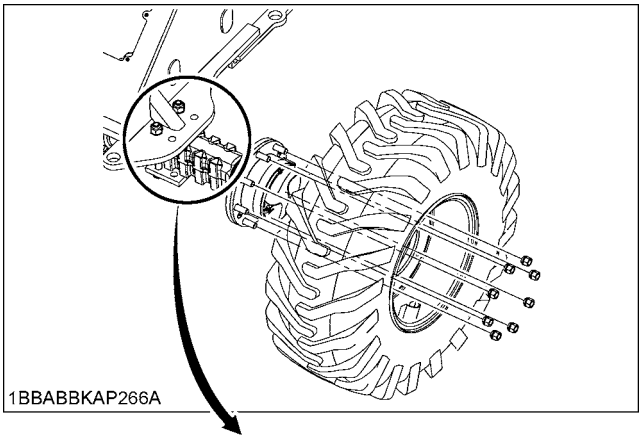

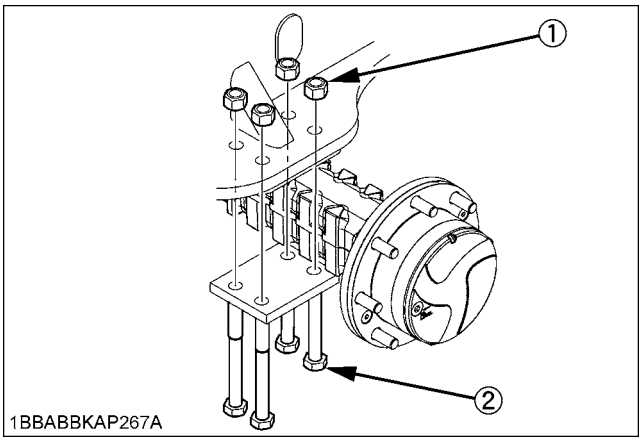

(1) Nut
(2) Bolt

https://truckmanualshub.com/

3. OPERATING THE MACHINE

1. Get on and off safely when entering or leaving the operator's cab. Face the machine. Always maintain a three point contact with the steps and handrails. Do not use control levers as handles.
   Do not jump on or off the machine. Never try to get on or off a moving machine.
2. Do not start engine or operate levers from anywhere other than the seat.
3. Before starting the engine, fasten the seat belt, make sure that the direction switch is set in the neutral position, the parking brake switch is actuated and the bucket is lowered to the ground.
4. Do not start engine by shorting across starter terminals.
5. Watch where you are going at all times. Watch for and avoid obstacles.
6. Never permit passengers on the machine. Keep bystanders away from the machine during operation.
7. When working around other machines, let the other operators know what you are doing at all times.
8. Never allow anyone to get under or near the bucket or attachment when it is raised.
9. When raising the bucket or attachment, take extra caution to prevent it from touching overhead wires or other obstacles. Contact with wires may cause fatal injuries.
10. Keep away from the muffler while the engine is running and immediately after it has stopped.
11. Hazardous operation such as on dangerous terrain, beyond the load capacity or contrary to the intended use of the machine must be avoided as it may cause the machine to tip over.
12. Do not drive the machine close to edges of ditches or banks which may collapse under the weight of the machine, especially when the ground is loose or wet.
13. Slow down for turns, uneven terrain and slopes to avoid tipping over.
14. When transporting a load, keep the loader bucket as low as possible to avoid tipping over. Be extremely careful when working on inclines.
15. Operation on slopes can be dangerous. Rain, snow, gravel soft ground, etc. will change the ground conditions. Do not operate the machine in questionable ground conditions. If operating on a slope or ramp, always slow down, travel straight up and down the incline and not across. Keep the bucket as low as possible. If you do not follow these instructions, the machine can go out of control and tip over.
16. Avoid turning on a slope.
17. Never perform digging or shoveling with the machine in the articulated condition, or the machine may tip over.
18. Never dig or shovel at high speed. Such operation can cause the machine to lose stability and its rear wheels to lift off the ground, which may lead to serious personal injury or fatal accidents.
19. Do not go up or down a 30° or steeper hill. Otherwise, the machine may skid sideways or turn on its side.
    If the ground is not level or is soft, limit the slope below 15°.
20. To avoid tipping over, do not operate the machine on any site where the terrain cannot be ascertained, such as ground covered with seeds or snow and check for hidden projections, dips, road shoulders, etc. beforehand, and take care not to approach them during work.
21. Be sure to ease off the accelerator pedal at the end of filling in trenches or areas at the edge of a steep slope or pond bank or at the brow of a hill. When the external load is reduced, the machine speed will automatically increase, therefore reduce speed to avoid entering ditches or tipping over.
22. To avoid the machine slipping or tipping over, do not operate the machine on ungraded or soft terrain, such as land fills. Grade and compact the site beforehand at all times.
23. Do not run the engine indoors. Carbon monoxide gas from exhaust is colorless, odorless and deadly.
24. Check that no one is near the machine before starting the engine to avoid danger from the machine.
    Check that there are no flammable objects, such as dead leaves, sheets of paper, or pieces of cloth near to the engine before starting the engine.
25. Be especially careful when reversing and watch the area behind the loader exactly before starting to drive.
26. Do not get a load on the bucket at the position as the below figure.

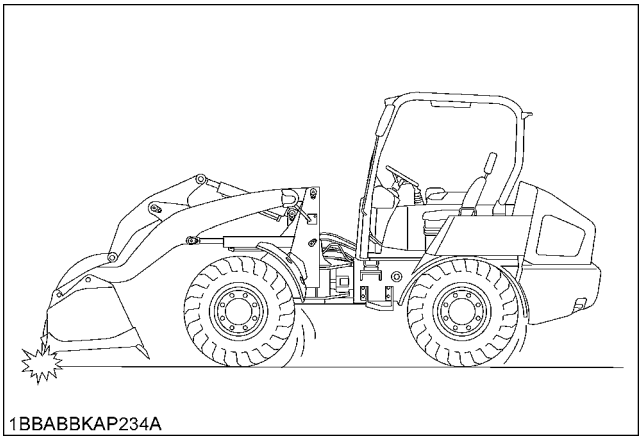
1BBABBKAP234A

◆ Safety for children

Serious accidents can occur if the operator does not pay attention to children in the vicinity of the machine. Children are unpredictable!

27. Always keep an eye on children as they change their location continuously.
28. Make sure no children are within the working range of the machine.
29. Be extremely cautious when children approach the working area; stop working, if necessary.
30. Do not carry children on the machine.

https://truckmanualshub.com/

31. Do not allow children to operate the machine.
32. Do not allow children to play around the machine.

◆ **Avoiding crystalline silica (quartz) dust**

To avoid serious injury or death from silica dust:

Avoid exposure to dust containing crystalline silica particles.

This dust can cause serious injury to the lungs (silicosis). Because crystalline silica is a basic component of sand and granite, many activities at construction sites produce dust containing crystalline silica.

Trenching, sawing and boring of material containing crystalline silica can produce dust containing crystalline silica.

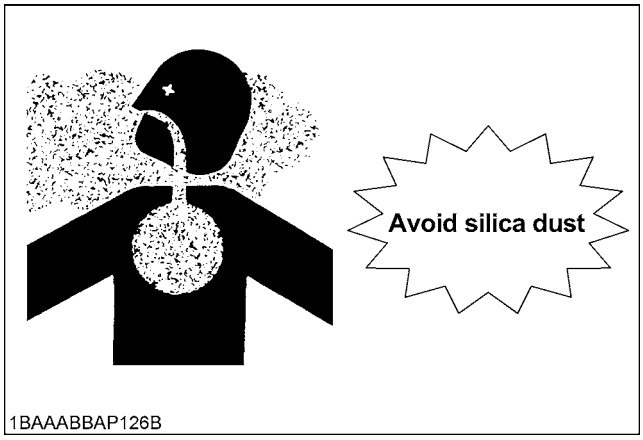

If dust which contains crystalline silica is present, there are guidelines which should be followed:

1. Be aware of the potential health effects of crystalline silica and that smoking may add to the damage.
2. Be aware of and follow OSHA (or other local, State or Federal) guidelines for exposure to airborne crystalline silica.
3. Know the work operations where exposure to crystalline silica may occur.
4. Participate in air monitoring or training programs offered by the employer.
5. Be aware of and use optional equipment controls such as water sprays, local exhaust ventilation, and enclosed cabs with positive pressure air conditioning if the machine has such equipment. Otherwise respirators shall be worn.
6. Where respirators are required, wear a respirator approved for protection against crystalline silica containing dust. Do not alter the respirator in any way. Workers who use tight-fitting respirators cannot have beards/mustaches which interfere with the respirator seal to the face.
7. If possible, change into disposable or washable work clothes at the work site; shower and change into clean clothing before leaving the work site.
8. Do not eat, drink, use tobacco products, or apply cosmetics in areas where there is dust containing crystalline silica.
9. Store food, drink and personal belongings away from the work area.
10. Wash hands and face before eating, drinking, smoking, or applying cosmetics after leaving the exposure area.

4. TRAVELING

1. Before traveling on the public road, observe all local and state traffic regulations. Use SMV emblem and warning flashers as required.
   (SMV: Slow Moving Vehicle)

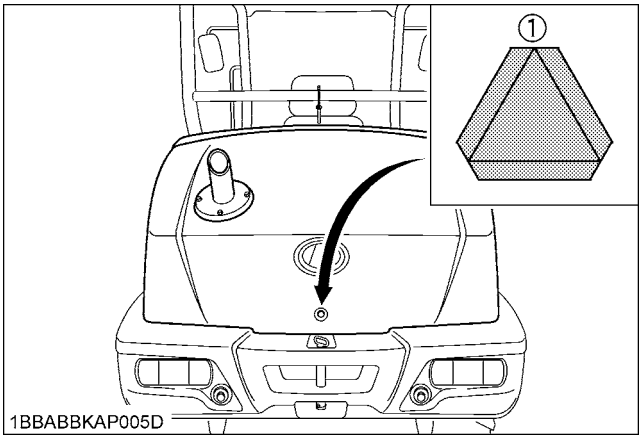

(1) SMV emblem

2. Traveling on the public road
   Please note the following points:
   (1) Raise the lift arm.
   (2) Fully tilt the bucket.
   (3) **[R530]**
   Lock the control lever and the auxiliary port lever by pulling the control lever lock and the auxiliary port lever lock.
   [R630]
   Lock the control lever by pressing the hydraulic lock switch.
3. When traveling on a public road, lock the bucket and attachments securely so that they cannot lower, even if any control lever is operated. Lift the bucket about 40 cm (16 in.) above the ground and set it in the proper position for travel, then lock the control lever.
4. First check the area around the machine, then gradually increase the engine rpm and slowly move the machine. Do not move the machine abruptly. To move the machine on a steep slope, press the accelerator pedal gradually while releasing the inching and brake pedal so that the machine does not move backwards.
5. The steering wheel for this machine will not return to the starting position after turning a bend. Be sure to turn the wheel to the starting position by yourself.
6. When operating the machine, obey all safety signals and traffic signs.
7. Use the brake when the machine begins to accelerate by itself.

https://truckmanualshub.com/

8. If the engine should stall on a slope, apply the brake to hold the machine in its present position and then lower the bucket to the ground and attempt to restart the engine.
9. When operating over an obstacle such as a rock, cross slowly at a right angle. Trying to cross over it diagonally or at high speed may tip the machine over.
10. If there is the risk of the machine slipping excessively on frozen ground, install chains on the front wheels; for operation on snow, install chains on both front and rear wheels or change into winter tires.
11. Do not take bends at high speed, or the machine may tip over.
12. Steering effort will increase if the engine stops. Do not stop the engine during travel.
13. If a tire has blown, the machine may slip or turn over. In such cases do not brake or steer hard, brake slowly to stop the machine and prevent tipping over.

◆ Precautions at overheating of the engine

Take the following actions in the event the coolant temperature increases too much. This condition is called "Overheating".

1. Park the machine in a safe place and keep the engine idling.
2. Do not stop the engine until after about 5 minutes of idling.
3. Keep yourself well away from the machine for a further 10 minutes or while the steam blows out.
4. When there is no longer any danger of scalding, try to find the cause of overheating according to the manual, see "Troubleshooting" section and then start again the engine.

5. AFTER OPERATION

1. When getting off the machine, always stop the engine, lower the bucket and attachment to the ground, release the hydraulic pressure in the hydraulic system by operating the control levers (For details, refer to "HOW TO RELEASE PRESSURE TRAPPED IN THE HYDRAULIC SYSTEM".), lock all control levers in neutral and remove the key. If the machine has to be parked on a slope, be sure to block the wheels securely.

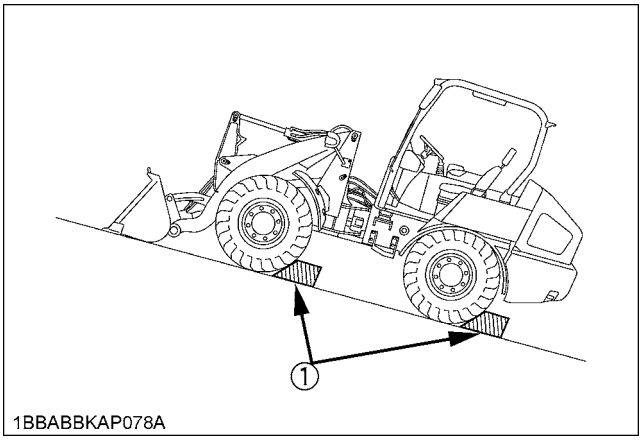

(1) Wheel chock

2. All equipment left unattended at night adjacent to a highway in normal use, or adjacent to construction areas where work is in progress, shall have appropriate hazard warning lights or reflectors, or barricades equipped with appropriate warning lights or reflectors to identify the location of the equipment.
3. For storage, be sure not to cover the machine until after all the heated parts have cooled down.
4. Before storing the machine for long periods of time, do the following.
   - Stop the engine.
   - Lower the bucket and attachments to the ground.
   - Release the hydraulic pressure in the hydraulic system by operating the control levers. Lock all control levers in neutral.
   - Remove the key.

https://truckmanualshub.com/

6. SAFE LOADING AND TRANSPORT

1. When loading or unloading the machine on or from a truck or trailer, be sure to use strong ramps. Never use wet lumber, etc.
2. Keep the ramps at an angle such that the machine cannot slip (10 to 15°). Never try to change direction while on the ramps.
3. When loading or unloading, keep the bucket low and drive at low speed.
4. It is dangerous to alter the direction once already on the ramps. If direction needs correction, bring the machine down off the ramps first and make the directional correction.
5. If a steering handle is operated while the machine is loaded or unloaded, the machine may move at an angle. Be sure to stop the machine before using another control.
   While loading or unloading the machine, block the truck wheels and apply the truck parking brake. If necessary, place a support under the truck bed behind the rear wheels to prevent the truck front from lifting.

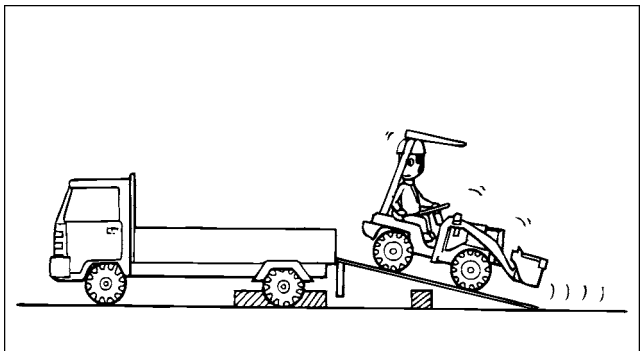

1BBABBKAP206A

6. After loading the machine on the truck bed, do the following.
   - Check to see that the machine's center of gravity aligns with that of the truck bed.
   - Secure the steering frame lock on the machine.
   - Stop the engine.
   - Lower the bucket and attachment to the truck bed.
   - Release the hydraulic pressure in the hydraulic system by operating the control levers.
   - Lock all control levers in neutral.
   - Remove the key.
   - Block the machine's wheels.
   - Secure the machine with chains or belts.

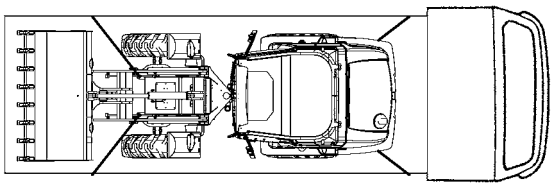

1BBABBKAP042A

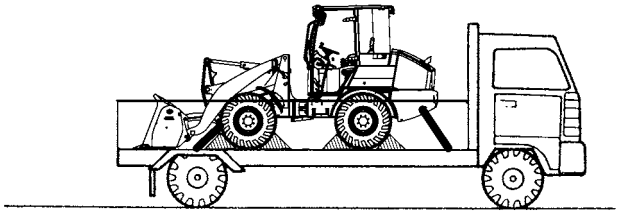

1BBABBKAP043A

7. While traveling with the machine loaded on the truck, do not start with a jerk, stop suddenly or make sharp turns at bends so as to prevent the machine from shifting on the truck bed.

https://truckmanualshub.com/

7. SERVICING THE MACHINE SAFELY

1. Before checking, adjusting or cleaning the machine parts, or leaving the machine, observe the following items.
   - Stop the engine.
   - Lower the bucket and attachment to the ground.
   - Release the hydraulic pressure in the hydraulic system by operating the control levers.
     (For details, refer to "HOW TO RELEASE PRESSURE TRAPPED IN THE HYDRAULIC SYSTEM".)
   - Lock all control levers in neutral.
   - Remove the key.
2. Never be under the machine while it is being lifted with only the bucket. If servicing or checking underneath, support it firmly with strong jackstands.
3. Secure the articulated steering with the steering frame lock.
4. Keep clear of articulation area when servicing.
5. When checking or servicing the electrical system, disconnect the battery cables.
6. It is dangerous to drain oil or coolant and to replace the filter just after stopping the engine. Wait for the engine to cool.
7. Do not allow an unauthorized person to service the engine. Do not perform any work on the machine that is not authorized. Do not try to do any repairs yourself. Follow the Maintenance and Service procedures.
8. Do not service or check the engine until it has completely cooled off.
9. When you drive connecting pins in or out, guard against injury from flying pieces of metal. Use eye or face protection.
10. Safety covers, shields, and guards may not be modified or removed.
11. Always stop the engine before refueling. Keep away from sparks and naked flames, while refueling. Avoid fuel spills and overfilling the fuel tank. Keep first aid kit and fire extinguisher nearby at all times.

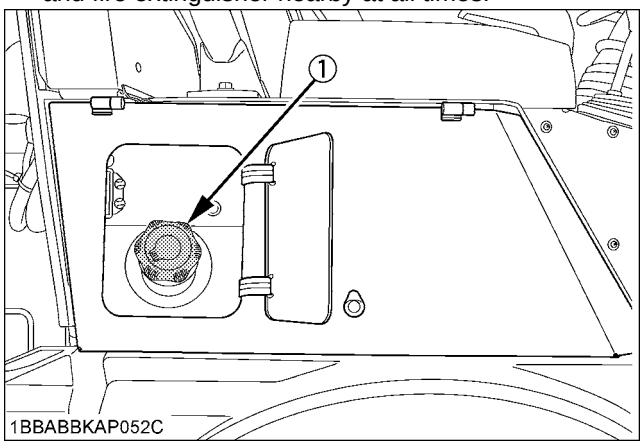

(1) Fuel tank cap

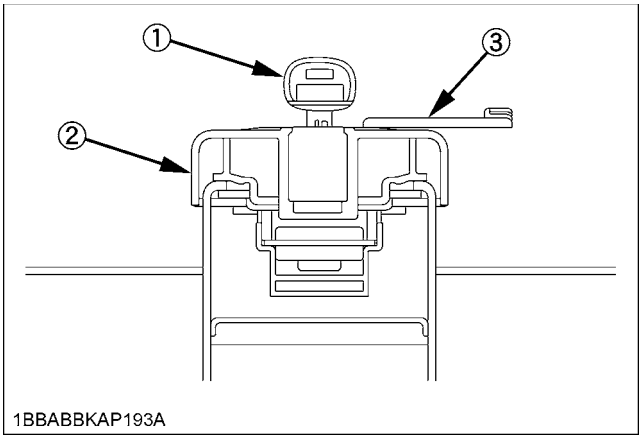

(1) Starter key
(2) Fuel tank cap
(3) Tank cap cover

12. A battery, especially when charging, will give off hydrogen and oxygen gases that are very explosive. Keep away from sparks and naked flames at all times. To avoid sparks from an accidental short circuit, always disconnect the battery ground cable first and always reconnect the ground cable last. (See “STARTING WITH AN AUXILIARY BATTERY” in the "OPERATING OF THE ENGINE" section.)

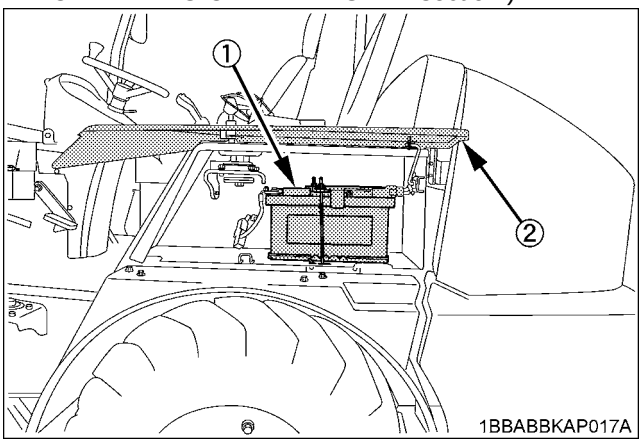

(1) Battery

https://truckmanualshub.com/

13. Never remove the engine/hydraulic oil plug or the radiator cap right after the engine has been stopped, or oil or hot water may gush out. Wait for the water or oil to cool, loosen the plug or cap just a little to release pressure, and then check the level. This is especially important for opening the radiator.

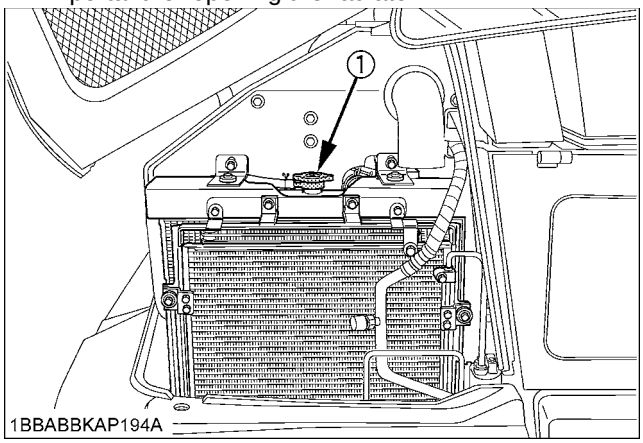

(1) Radiator cap

14. Escaping hydraulic fluid under pressure can cause serious injury. Before applying pressure to the system, be sure that all connections are tight and that lines, pipes and hoses are not damaged. Fluid escaping from a very small hole can be almost invisible. Do not use your hands to search for suspected leaks, use a piece of cardboard or wood. If injured by escaping fluid, see a doctor at once. Serious infection or reaction may result if proper medical treatment is not administered immediately.

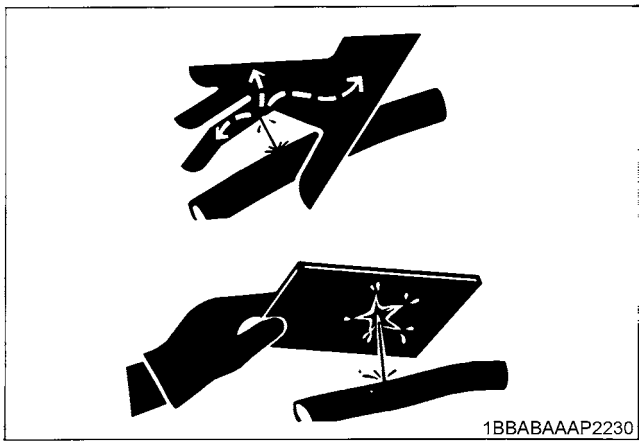

(1) Cardboard
(2) Hydraulic line
(3) Magnifying glass

15. TOWING IN CASE OF DEFECTS

If the loader breaks down and must be towed, call your nearest KUBOTA dealer. Proceed as follows in case of an emergency.

(1) Before towing

1.1 To release the negative brake, loosen the two bolts on the rear axle cover and remove the spacer.

1.2 Tighten both bolts by hand until both are in contact the internal pusher plate. After tightening both bolts, alternatively, for a quarter of turn on each side, with a wrench until they are completely tightened.

1.3 Remove the caps of the two high pressure relief valves that are located at the top and bottom of the pump. Loosen the M8 nuts and tighten the adjust bolts by 6 turns.
(Be careful never to loosen the M8 nuts too much.)

(2) Towing

2.1 Make sure the foot brake is ready.

2.2 The towing speed should be less than 1km/h (0.6MPH).

2.3 Towing should never be performed over long distance.

NOTE :

- When towing backward, the machine should be pulled by the towing hitch.

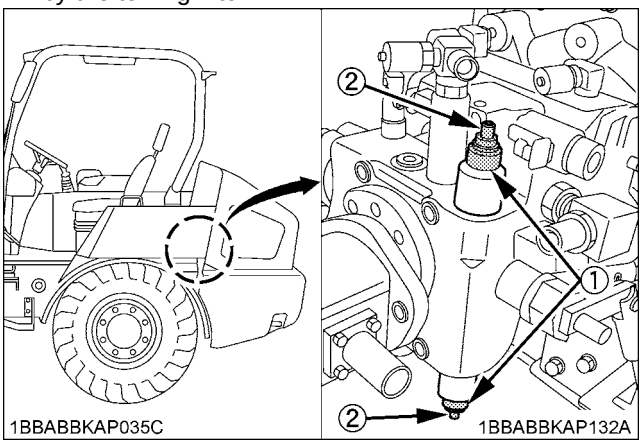

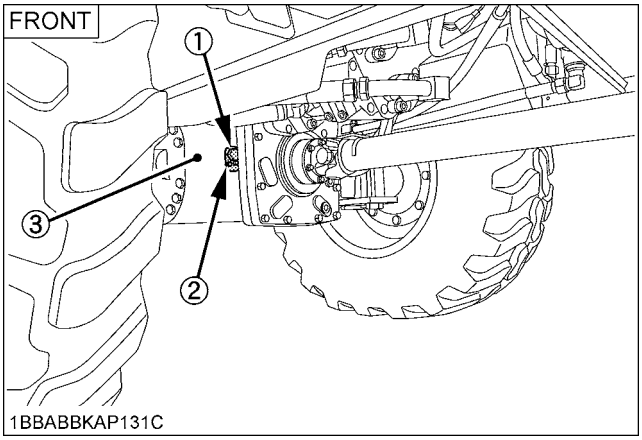

(1) Bolt
(2) Spacer
(3) Rear axle cover

https://truckmanualshub.com/

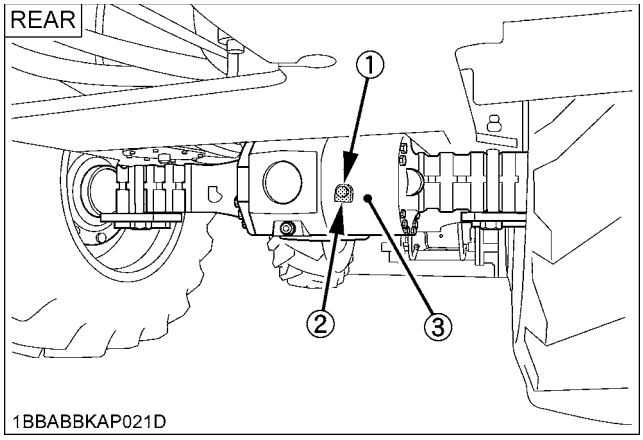

(1) Bolt
(2) Spacer
(3) Rear axle cover

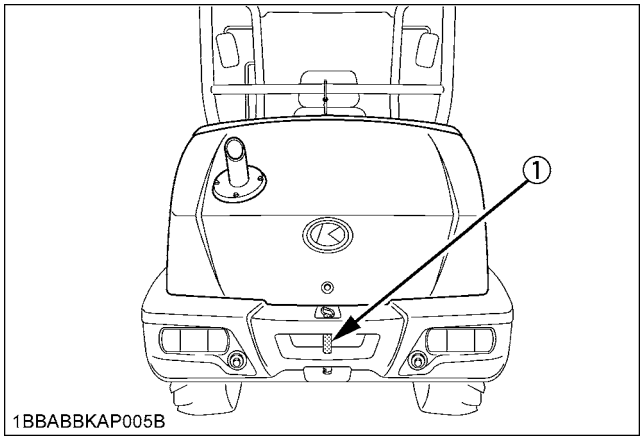

(1) Towing pin

16. Do not install any tires on the rims yourself as serious or fatal accidents could happen. Have the tires mounted by your KUBOTA dealer.

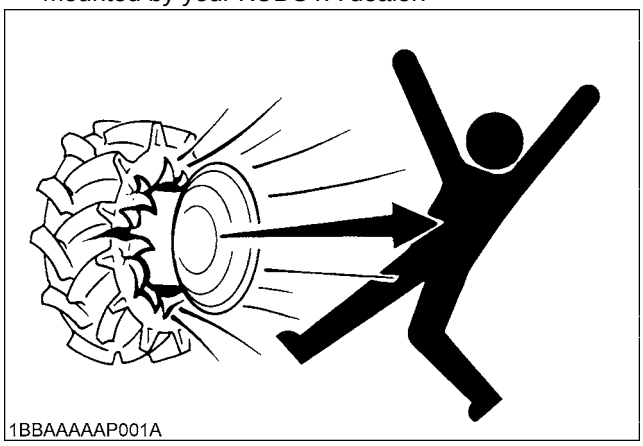

17. Use an eye or mouth protector when working with compressed air or in a dusty environment.

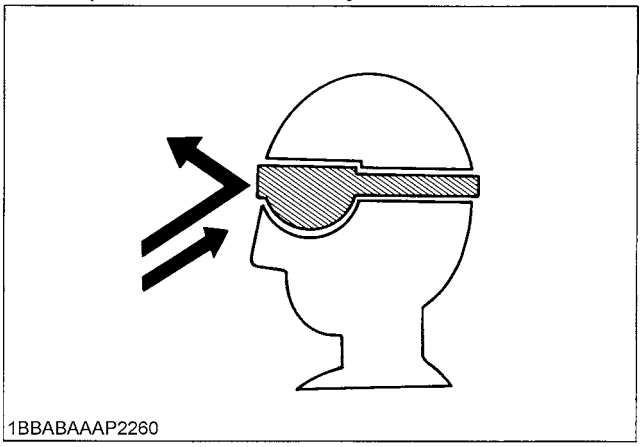

18. Refuse such as old oil, fuel, hydraulic fluid, coolant and batteries comes under the category of toxic waste and can be a hazard to the environment, people and animals.
19. Disposal must be undertaken in an appropriate way, according to legally prescribed pollution control and safety regulations.
20. If you have questions about the correct disposal or storage of refuse and toxic waste, contact your KUBOTA dealer or a local waste management contractor.
21. Do not open high-pressure fuel system. High-pressure fluid remaining in fuel lines can cause serious injury.
    Do not disconnect nor attempt to repair fuel lines, sensors, or any other components between the high-pressure fuel pump and injectors on engines with high-pressure common rail fuel system.
22. To avoid hazardous high voltage, turn the key switch to the OFF position if it is necessary to check to repair the computer, harness or connectors.
23. During Diesel Particulate Filter (hereinafter called DPF) regenerating operations, exhaust gases and exhaust filter components reach temperatures hot enough to burn people, or ignite or melt common materials.
24. Keep the Wheel Loader away from people, animals or structures which may be susceptible to harm or damage from hot exhaust gases.
25. To prevent fires, keep the DPF muffler and its surroundings clear of anything flammable and keep clean at all times.
26. During regeneration, white exhaust gas may be visible. Do not allow regeneration in a non-ventilated space.
27. During regeneration, do not leave the Wheel Loader.

https://truckmanualshub.com/

28. Fire prevention

Wheel Loader and some attachments have components that are at high temperatures under normal operating conditions. The primary source of high temperatures is the engine and exhaust system. The electrical system, if damaged or incorrectly maintained, can be a source of arcing or sparks. The following fire prevention guidelines will help to keep your equipment up and running efficiently and keep the risk of fire to a minimum.

- Blow off all accumulated debris near hot engine exhaust components such as turbocharger and exhaust manifold as well as EGR tube, exhaust pipes and muffler more frequently when working in severe conditions.
- Clean out all accumulated flammable debris such as leaves, straw, pine needles, branches, bark, small wood chips and any other combustible materials from inside the machine belly pans or lower unit structures as well as from area in proximity to the engine.
- Inspect all fuel lines and hydraulic hoses for wear or for deterioration. Replace them immediately if they begin to leak.
- Examine electrical wiring and connectors frequently for damage. Repair any wires that are loose or frayed before operating the machine. Clean all electrical connections and tighten all electrical connections as necessary.
- Inspect the exhaust system daily for any signs of leakage. Check for broken pipes and muffler and also for loose or missing bolts, nuts and clamps. If any exhaust leaks or fractured parts are found, repairs must be completed prior to operation.
- Always keep a multipurpose fire extinguisher on or near the machine. Be familiar with the operation of the fire extinguisher.

https://truckmanualshub.com/

8. DANGER AND WARNING LABELS

(1) Part No. R5611-5721-0
Start the engine only from the operator's seat.
Do not start the engine by bridging the starter terminals.

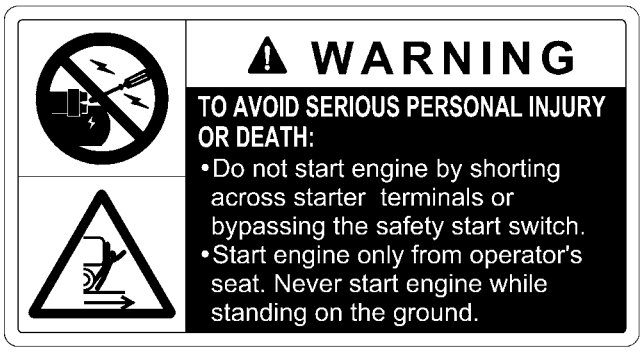

1BBABBKAP196A

(2) Part No. R5611-5722-0
Do not enter the swing area.

1BBABBKAP200A

(3) Part No. R5611-5723-0
Always attach the lifting cylinder lock for performing maintenance work with raised lifting gear.

1BBABBKAP197A

(4) Part No. R5611-5725-0
Do not touch hot parts such as exhaust muffler etc.

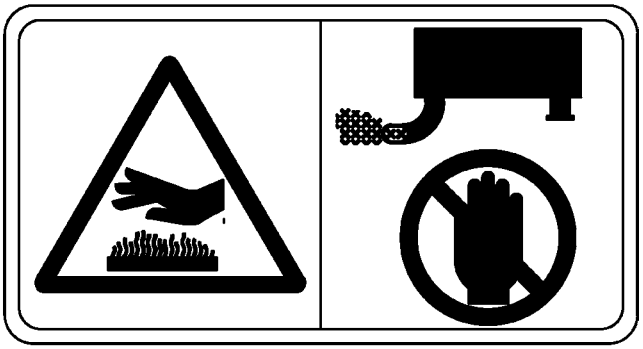

1BAAACDAP206A

(5) Part No. RG158-5732-0
Risk of burns from hot components!

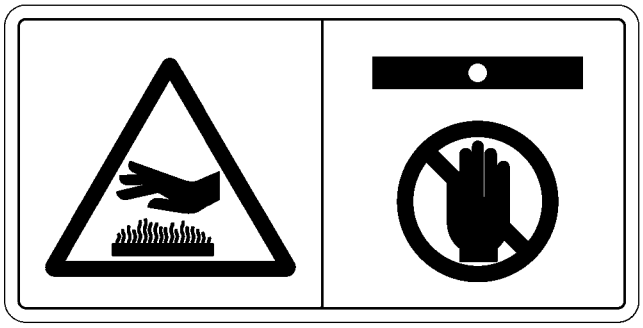

1BBABBKAP111A

(6) Part No. RG158-5785-0
Do not touch hot parts such as exhaust muffler etc.

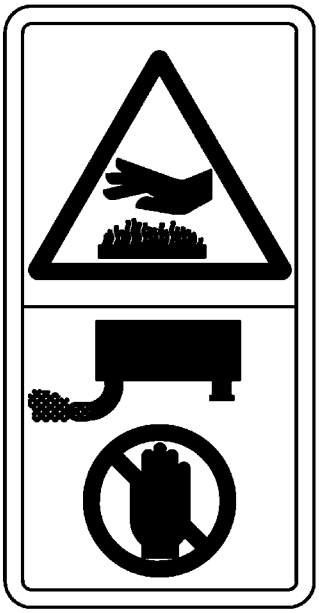

1BAAACDAP204A

https://truckmanualshub.com/

(7) Part No. RG158-5789-0
Keep away from fan and fan belt.

1BAAACDAP203A

(8) Part No. RG158-5724-0
Radiator: Risk of scalding.

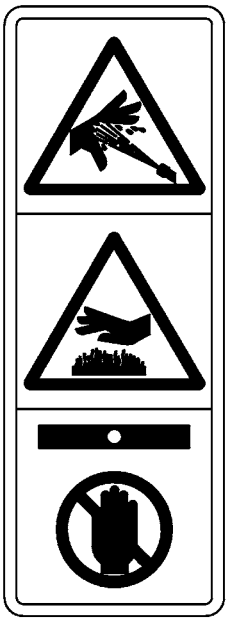

1BAAACDAP201A

(9) Part No. R5611-5726-0
Open the engine compartment cover only with the engine stopped.

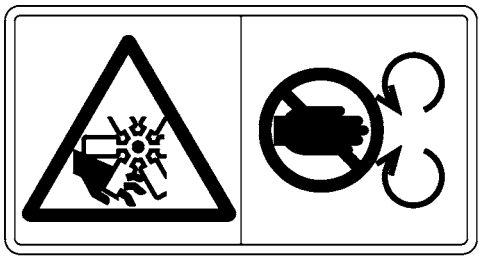

1BAAACDAP205A

(10) Part No. RG158-5737-0
Do not open flames in the area of the fuel tank.

1BBABBKAP201A

(11) Part No. R5611-5727-0
Always buckle up

1BBABBKAP193A

(12) Part No. RG158-5734-0
Risk of injury when entering or leaving the machine!
- When entering or leaving the machine without a secure Whalt, you can slip and fall down.
- Do not jump on or out of the machine.
- Always hold the hand rail tightly with one hand.
- Make sure that you have a secure footing.

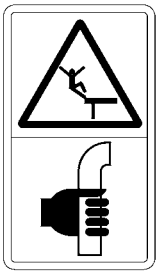

1BBABBKAP199A

https://truckmanualshub.com/

(13) Part No. R5611-5789-0

Please read the operating instructions before commissioning.

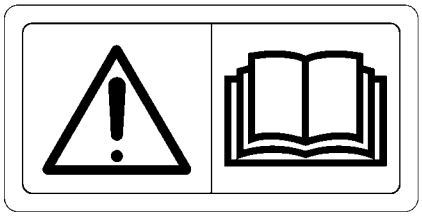

1BBABBKAP143A

(14) Part No. RG158-5765-0

DANGER EXPLOSIVE GASES
Cigarettes, flames or sparks could cause battery to explode. Always shield eyes and face from battery. Do not charge or use booster cables or adjust post connections without proper instruction and training.
KEEP VENT CAPS TIGHT AND LEVEL
POISON CAUSES SEVERE BURNS
Contains sulfuric acid. Avoid contact with skin, eyes or clothing. In event of accident flush with water and call a physician immediately.
KEEP OUT OF REACH OF CHILDREN

1BBABACAP011A

(15) Part No. R5611-5728-0

⚠ WARNING

TO AVOID SERIOUS PERSONAL INJURY OR DEATH:
When the Diesel Particulate Filter (DPF) is in the regenerating mode, the exhaust gas and the DPF muffler become hot, During regeneration, take into account that the muffler will be very hot and keep the machine away from other people, animals,plants,and flammable material. Also keep the area near the DPF muffler clean and away from flammable material.

1BBABBKAP202A

(16) Part No. R5513-5784-0

1BBABBKAP248A

(17) Part No. RH418-5835-0

Lead Acid Battery (SLI)

⚠ **WARNING:** Cancer and Reproductive Harm - www.P65Warnings.ca.gov.

⚠ DANGER/POISON

SHIELD EYES. EXPLOSIVE GASES CAN CAUSE BLINDNESS OR INJURY.

NO
•SPARKS
•FLAMES
•SMOKING

SULFURIC ACID CAN CAUSE BLINDNESS OR SEVERE BURNS.

FLUSH EYES IMMEDIATLY WITH WATER. GET MEDICAL HELP FAST.

KEEP OUT OF THE REACH OF CHILDREN.

READ INSTRUCTIONS.

DO NOT TIP OR OPEN.

Manufactured by: Banner Gmbh, Bannerstraße 1, A-4030 Linz, + 43 732 3888 - 0

Made in Austria

1BBABBKAP257A

(18) Part No. RH418-5837-0

California Proposition 65

⚠ WARNING ⚠

Engine exhaust, some of its constituents, certain vehicle components and fluids, contain or emit chemicals known to the State of California to cause cancer and birth defects or other reproductive harm.

1BBABBKAP258A

(19) Part No. RH418-5899-0

⚠ WARNING

TO AVOID EXPOSURE TO DUST CONTAINING SILICA PARTICLES:

- This dust can cause serious injury to the lungs under some exposure levels.
- Be aware of and follow the OSHA (or other regulatory body) guidelines for exposure to airborne crystalline silica.
- To meet OSHA silica guidelines, use appropriate Personal Protective Equipment and dust abatement systems, such as waterspray systems.

1AGAIJHAP174A

https://truckmanualshub.com/

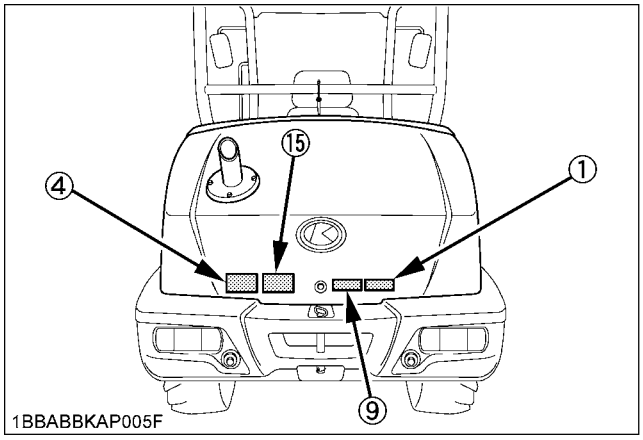

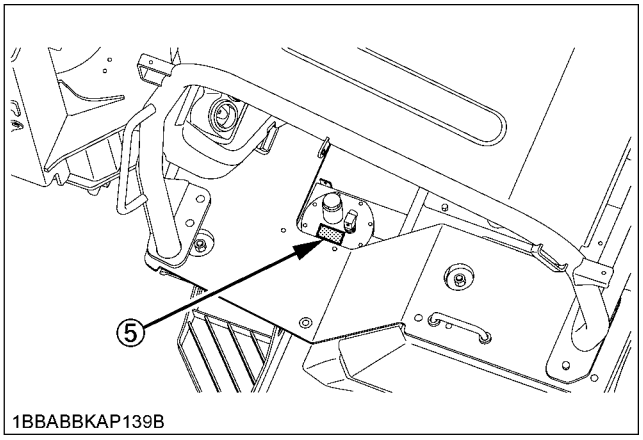

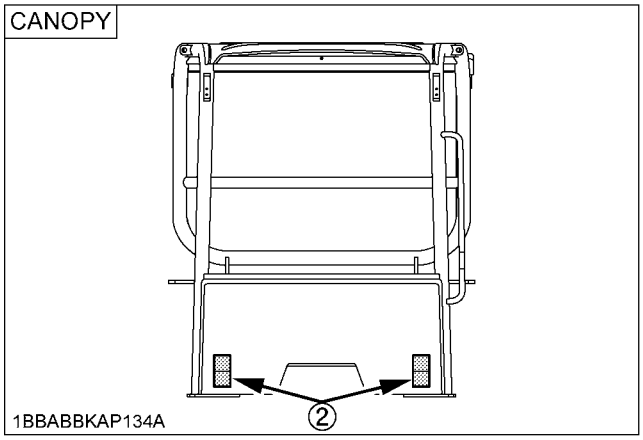

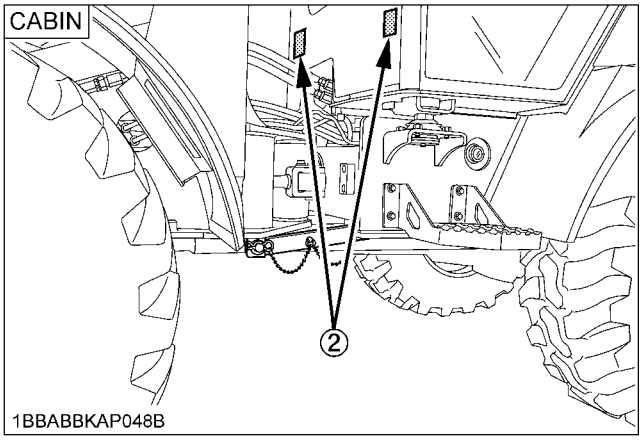

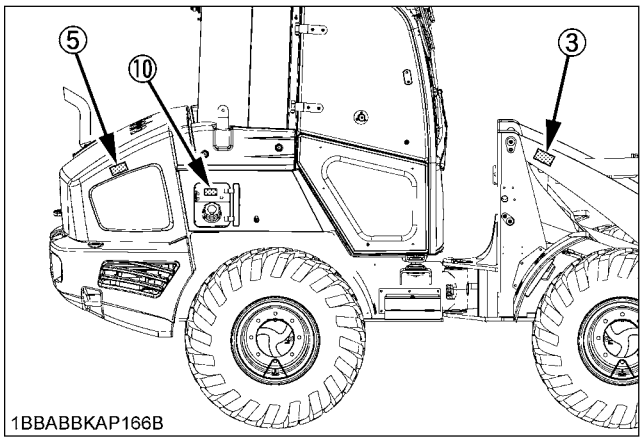

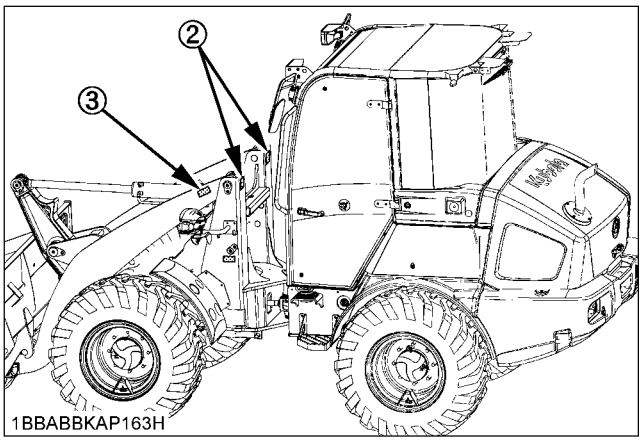

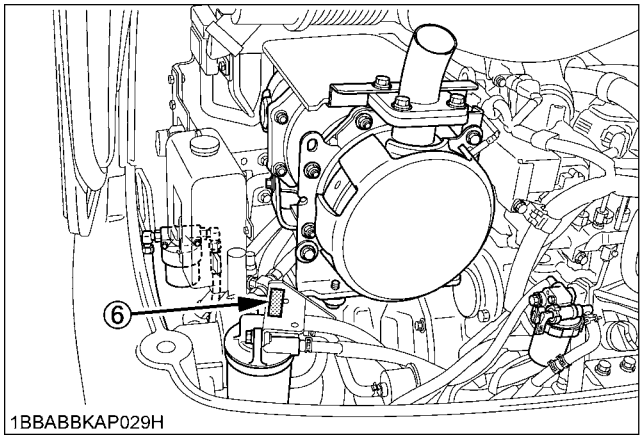

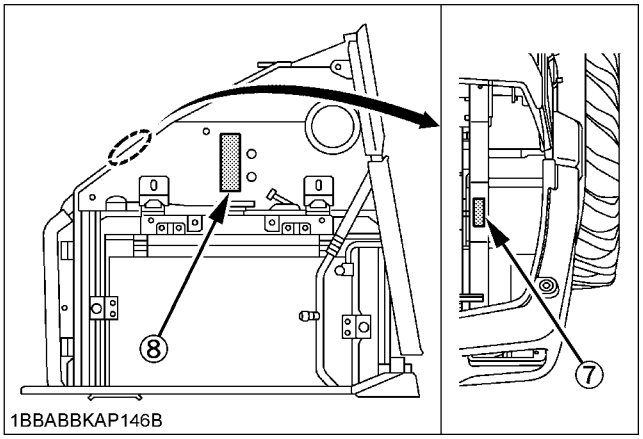

https://truckmanualshub.com/

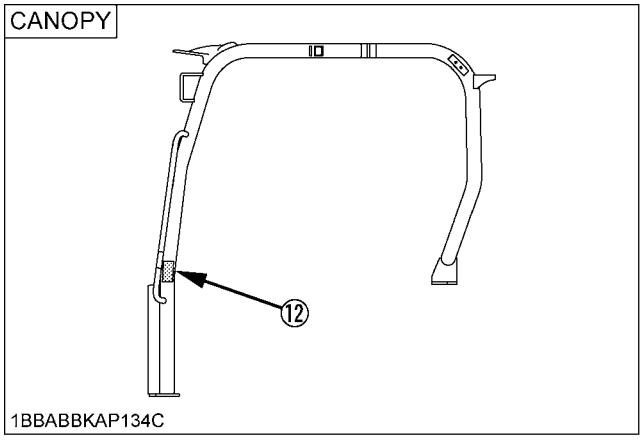

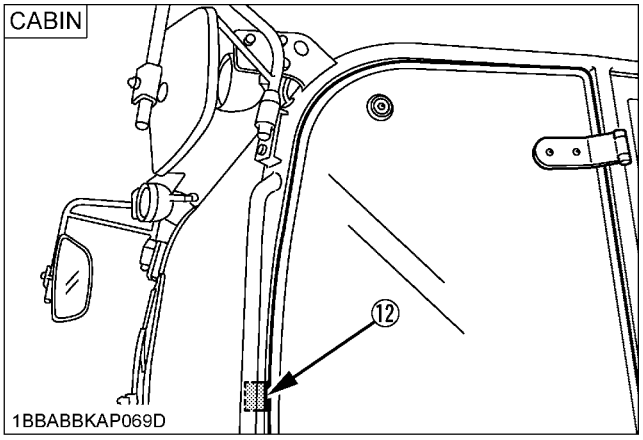

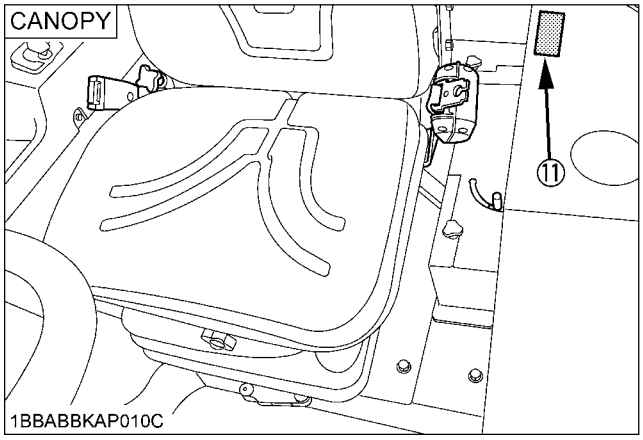

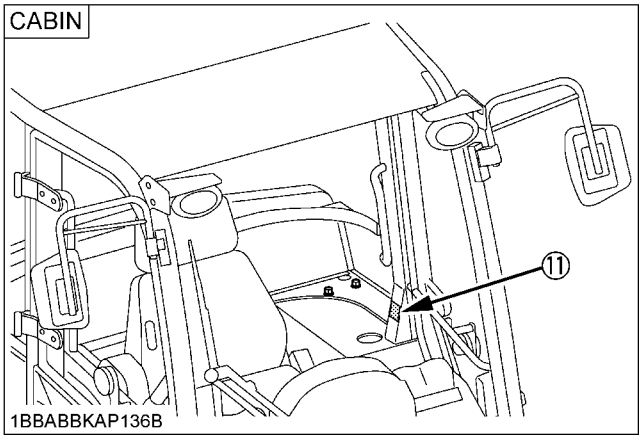

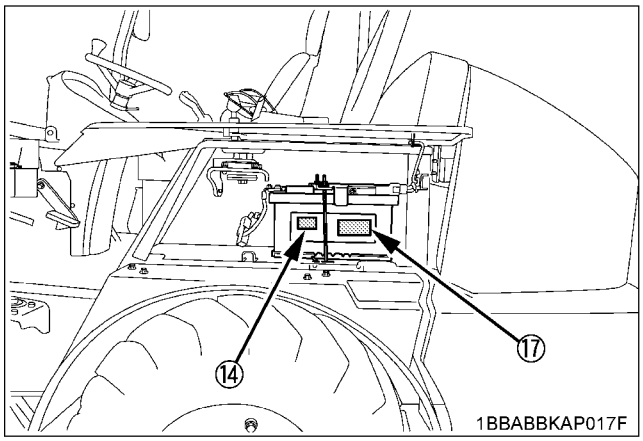

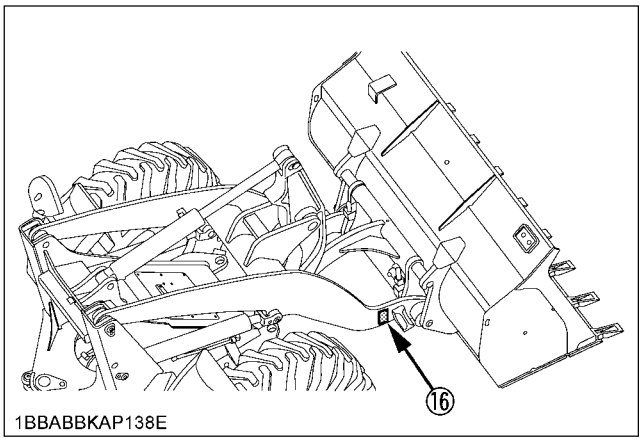

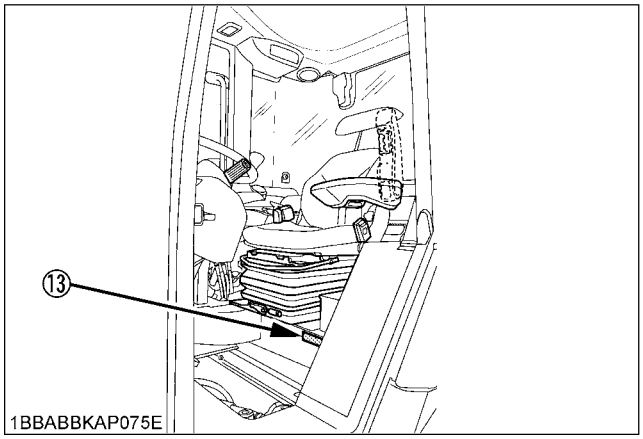

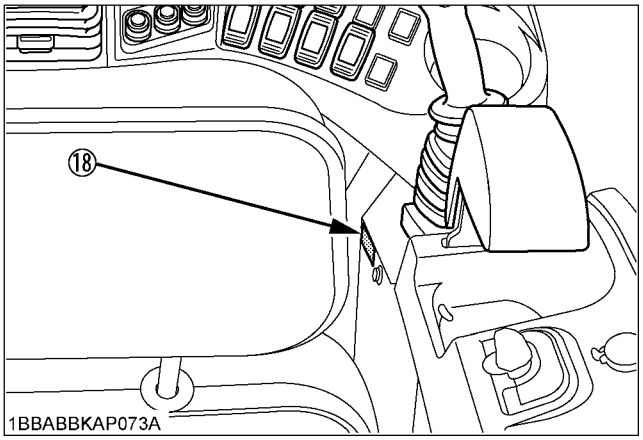

https://truckmanualshub.com/

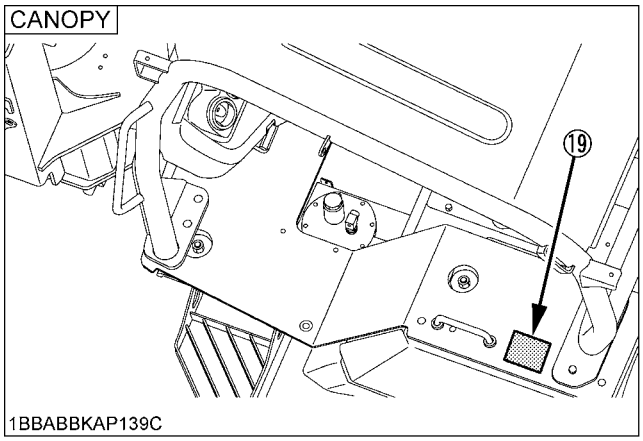

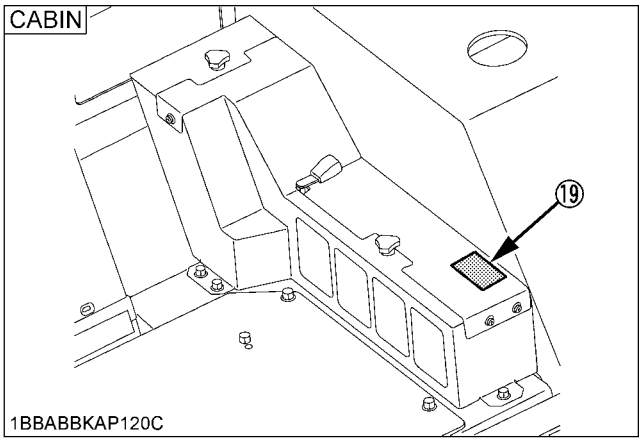

CARE OF DANGER, WARNING AND CAUTION LABELS

1. Keep danger, warning and caution labels clean and make sure they are not obstructed by any objects.
2. Clean danger, warning and caution labels with soap and water, dry with a soft cloth.
3. Replace damaged or missing danger, warning and caution labels with new labels from your local KUBOTA dealer.
4. If a component with a danger, warning and caution label affixed is replaced with new part, make sure a new label is attached in the same location as the replaced component.
5. Mount new danger, warning and caution labels by applying on a clean dry surface and pressing any bubbles to outside edge.

https://truckmanualshub.com/

https://truckmanualshub.com/

SERVICING OF WHEEL LOADER

Your KUBOTA dealer is always ready to help so that your wheel loader offers the best performance. After having carefully read these instructions, you will realize that much of the routine maintenance can be done by yourself. Your KUBOTA dealer is responsible for servicing and the delivery of spare parts. When ordering spare parts from your KUBOTA dealer, always mention the product identification number of the wheel loader and the serial number of the engine.
Note these numbers right away in the supplied lines.

Wheel loader Product identification number	
Dealer's name (To be filled in through the owner)	
Date of purchase	

	Model	Serial No.
Engine		

◆ **Warranty policy**
This product is warranted under the KUBOTA Limited Express Warranty, a copy of which may be obtained from your selling dealer. No warranty shall, however, apply if the product has not been handled according to the instruction given in the Operator's Manual even it is within the warranty period.
The Product(s) described in this Operator's Manual are designed and manufactured only for the country in which they are initially wholesaled by KUBOTA or one of its affiliated companies. Neither KUBOTA Corporation nor its affiliated companies provide warranty for any Product which is re-sold or retailed in any country other than the country for which the Product(s) were designed or manufactured.

◆ **Scrapping the product and its procedure**
To put the product out of service, correctly follow the local rules and regulations of the country or territory where you reside. If you have questions, consult your local KUBOTA Dealer.

[For KCL only]
This product is equipped with an electronic key (see "ANTI-THEFT DEVICE" section) as a theft-prevention measure. This device restrains a theft, but does not guarantee that the machine will not be stolen.

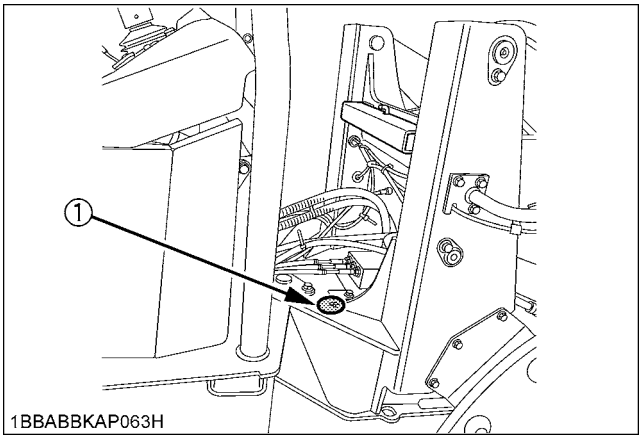

(1) Product identification number

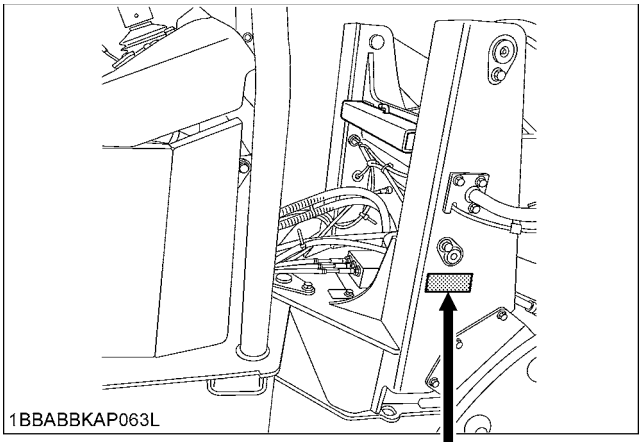

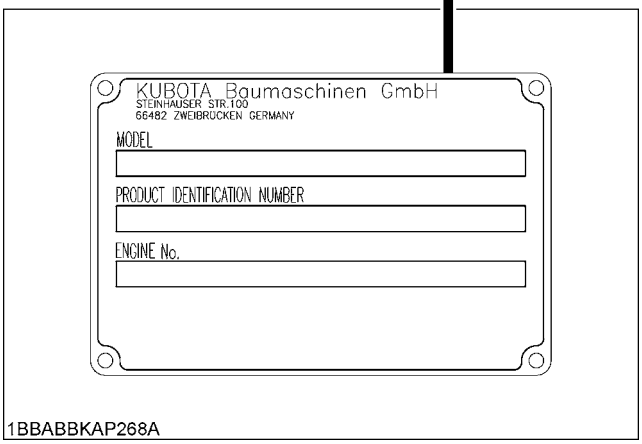

https://truckmanualshub.com/

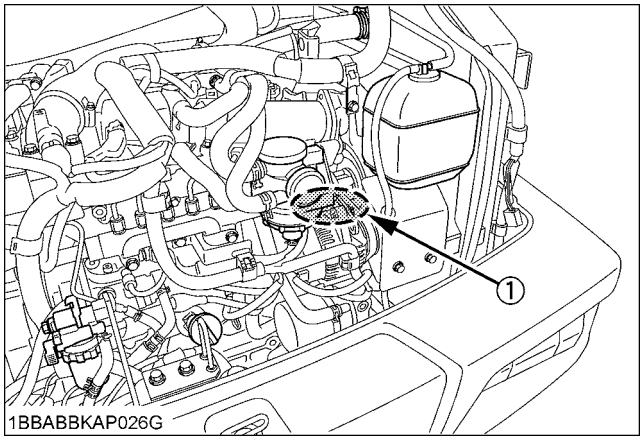

(1) Engine serial No.

https://truckmanualshub.com/

SPECIFICATIONS

SPECIFICATION TABLE

Model				**R530**	
Type				Canopy	CAB
*Operating weight			kg (lbs.)	4330 (9546)	4505 (9932)
Bucket capacity			m^3 (cu.yd.)	0.65 (0.85)	
Engine	Manufacturer			KUBOTA	
	Model			Water-cooled V2607-CR-E4	
	Horse power (SAE J1995)		kW/rpm (HP/rpm)	38.0 / 2400 (51.0 / 2400)	
	Horse power (ISO 9249, SAE J1349)		kW/rpm (HP/rpm)	35.7 / 2400 (47.9 / 2400)	
	Number of cylinders			4	
	Displacement		cc (cu.in.)	2615 (160)	
	Starter		V/kW	12 / 2	
	Battery		V/Ah	12 / 95	
Dimensions	Overall length		mm (ft in.)	5295 (17 ft 4 in.)	
	Overall width (without bucket)		mm (ft in.)	1721 (5 ft 8 in.)	
	Overall height		mm (ft in.)	2455 (8 ft 1 in.)	2475 (8 ft 1 in.)
	Min. ground clearance		mm (in.)	325 (12.8)	
	Wheel base		mm (ft in.)	1950 (6 ft 5 in.)	
	Tread		mm (ft in.)	1356 (4 ft 5 in.)	
	Angle of articulation		Deg	40 each	
	Angle of oscillation		Deg	8 each	
	Loader clearance circle		mm (ft in.)	7220 (25 ft 4 in.)	
Bucket	Hinge pin height		mm (ft in.)	3225 (10 ft 7 in.)	
	Dump height (w/cutting edge)		mm (ft in.)	2430 (8 ft 0 in.)	
	Reach fully raised (w/cutting edge)		mm (ft in.)	830 (2 ft 9 in.)	
	Tipping load, straight (ISO 14397-1)		kg (lbs.)	2730 (6019)	2955 (6515)
	Tipping load, full turn (ISO 14397-1)		kg (lbs.)	2300 (5071)	2500 (5512)
	Rated operating capacity (ISO 14397-1)		kg (lbs)	1150 (2535)	1250 (2756)
	Lifting capacity at ground level		kN (lbf)	25.1 (5646)	
	Breakout force (ISO 14397-2)		kN (lbf)	34.5 (7761)	
Fork	Tipping load, full turn (ISO 14397-1)		kg (lbs.)	1790 (3946)	1940 (4277)
	Rated operating capacity (SAE J1197) 48 in. tines		kg (lbs.)	895 (1973)	970 (2138)
Traveling	Drive system			4 WD	
	Tire			365 / 70 R18	
	Traveling speed	Forward	km/h (mph)	0 to 20 (0 to 12.4)	
		Reverse	km/h (mph)	0 to 20 (0 to 12.4)	
	Traction force		kN (lbf)	29.1 (6540)	
Auxiliary	Max. flow rate (theoretical)		L/min (gpm)	53.8 (14.2)	
	Max. pressure		Mpa (kgf/cm^2) [psi]	18.6 (190) [2700]	
Others	Fuel tank		L (U.S.gal.)	70 (18.5)	
	Hydraulic oil tank		L (U.S.gal.)	39 (10.3)	
	Hydraulic oil system		L (U.S.gal.)	55 (14.5)	

NOTE: The above dimensions are based on the machine with std. tires, skid steer type quick coupler, standard bucket and ROPS/FOPS-canopy/cabin.
Mean value and value for use on concrete roads are given for tipping load and operating capacity.
Specifications subject to change without notice
*Operating weight: with 75 kg (165 lbs) operator, 315 kg (695 lbs) standard general purpose bucket and fully served.

https://truckmanualshub.com/

Model			**R630**	
Type			Canopy	CAB
*Operating weight		kg (lbs.)	4755 (10483)	4930 (10869)
Bucket capacity		m^3 (cu.yd.)	0.77 (1.0)	
Engine	Manufacturer		KUBOTA	
	Model		Water-cooled V2607-CR-TE4	
	Horse power (SAE J1995)	kW/rpm (HP/rpm)	48.0 / 2400 (64.4 / 2400)	
	Horse power (ISO 9249, SAE J1349)	kW/rpm (HP/rpm)	45.6 / 2400 (61.2 / 2400)	
	Number of cylinders		4	
	Displacement	cc (cu.in.)	2615 (160)	
	Starter	V/kW	12 / 2	
	Battery	V/Ah	12 / 95	
Dimensions	Overall length	mm (ft in.)	5380 (17 ft 8 in.)	
	Overall width (without bucket)	mm (ft in.)	1805 (5 ft 11 in.)	
	Overall height	mm (ft in.)	2480 (8 ft 2 in.)	2500 (8 ft 2 in.)
	Min. ground clearance	mm (in.)	350 (13.8)	
	Wheel base	mm (ft in.)	2000 (6 ft 7 in.)	
	Tread	mm (ft in.)	1400 (4 ft 7 in.)	
	Angle of articulation	Deg	40 each	
	Angle of oscillation	Deg	8 each	
	Loader clearance circle	mm (ft in.)	8425 (27 ft 8 in.)	
Bucket	Hinge pin height	mm (ft in.)	3250 (10 ft 8 in.)	
	Dump height (w/cutting edge)	mm (ft in.)	2385 (7 ft 10 in.)	
	Reach fully raised (w/cutting edge)	mm (ft in.)	825 (2 ft 8 in.)	
	Tipping load, straight (ISO 14397-1)	kg (lbs.)	3180 (7011)	3400 (7496)
	Tipping load, full turn (ISO 14397-1)	kg (lbs.)	2690 (5930)	2890 (6371)
	Rated operating capacity (ISO 14397-1)	kg (lbs.)	1345(2965)	1445 (3186)
	Lifting capacity at ground level	kN (lbf)	34.7 (7806)	
	Breakout force (ISO 14397-2)	kN (lbf)	37.9 (8526)	
Fork	Tipping load, full turn (ISO 14397-1)	kg (lbs.)	2095 (4619)	2290 (5049)
	Rated operating capacity (SAE J1197) 48 in. tines	kg (lbs.)	1047 (2309)	1145 (2524)
Traveling	Drive system		4 WD	
	Tire		405 / 70 R18	
	Traveling speed — Forward	km/h (mph)	0 to 20 (0 to 12.4)	
	Traveling speed — Reverse	km/h (mph)	0 to 20 (0 to 12.4)	
	Traction force	kN (lbf)	38.2 (8593)	
Auxiliary	Max. flow rate (theoretical)	L/min (gpm)	67.2 (17.8)	
	Max. pressure	Mpa (kgf/cm^2) [psi]	20.6 (210) [3000]	
Others	Fuel tank	L (U.S.gal.)	70 (18.5)	
	Hydraulic oil tank	L (U.S.gal.)	39 (10.3)	
	Hydraulic oil system	L (U.S.gal.)	57 (15.1)	

NOTE: The above dimensions are based on the machine with std. tires, skid steer type quick coupler, standard bucket and ROPS/FOPS-canopy/cabin.
Mean value and value for use on concrete roads are given for tipping load and operating capacity.
Specifications subject to change without notice
*Operating weight: with 75 kg (165 lbs) operator, 340 kg (750 lbs) standard general purpose bucket and fully served.

https://truckmanualshub.com/

DESCRIPTION OF MACHINE PARTS

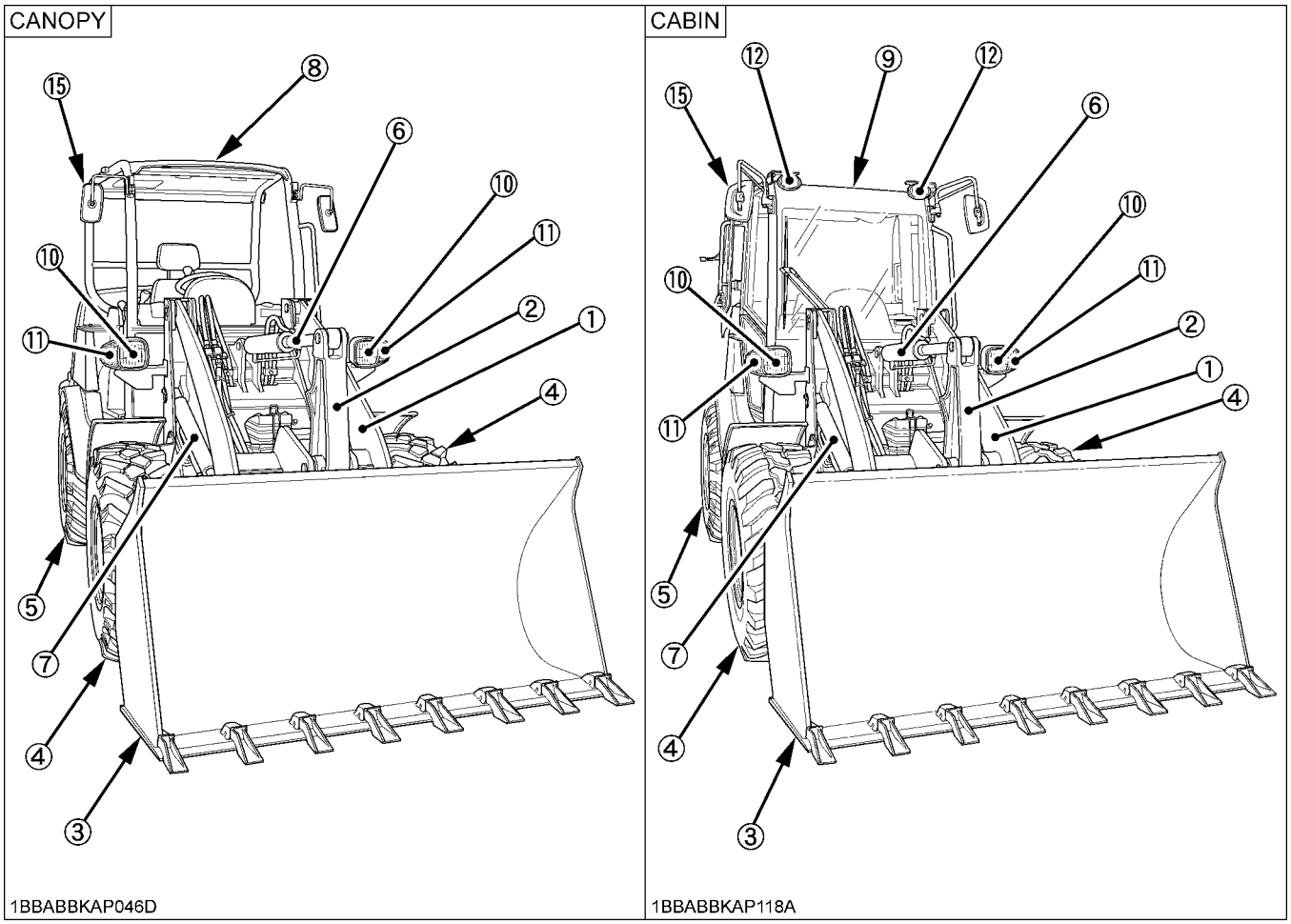

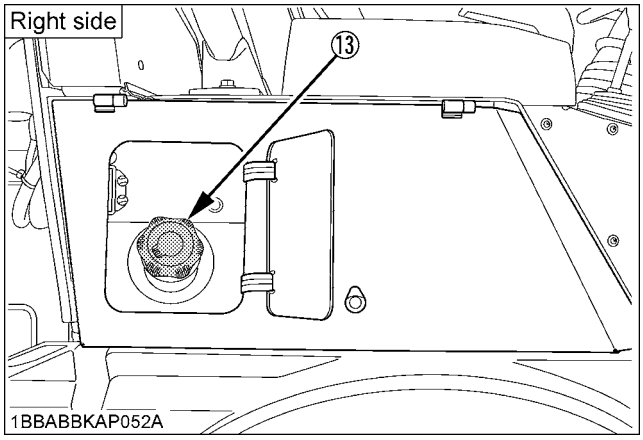

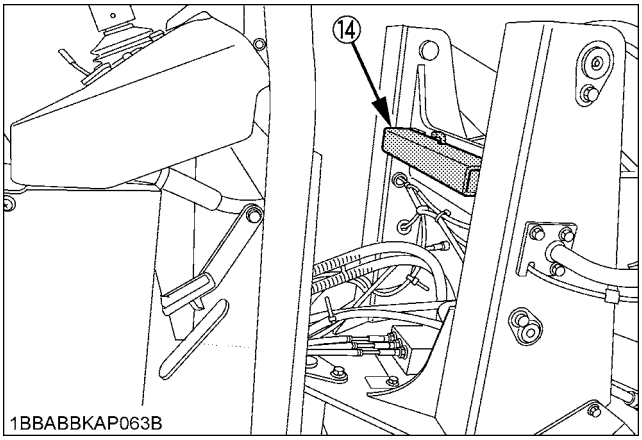

DEPICTED CONTENTS

(1) Lift arm
(2) Bell crank
(3) Bucket
(4) Front wheel
(5) Rear wheel
(6) Bucket cylinder
(7) Lift cylinder
(8) ROPS/FOPS CANOPY
(9) ROPS/FOPS CABIN
(10) Headlight
(11) Turn signal light / Clearance light
(12) Working light
(13) Fuel tank cap
(14) Lift arm support
(15) Rearview mirror

https://truckmanualshub.com/

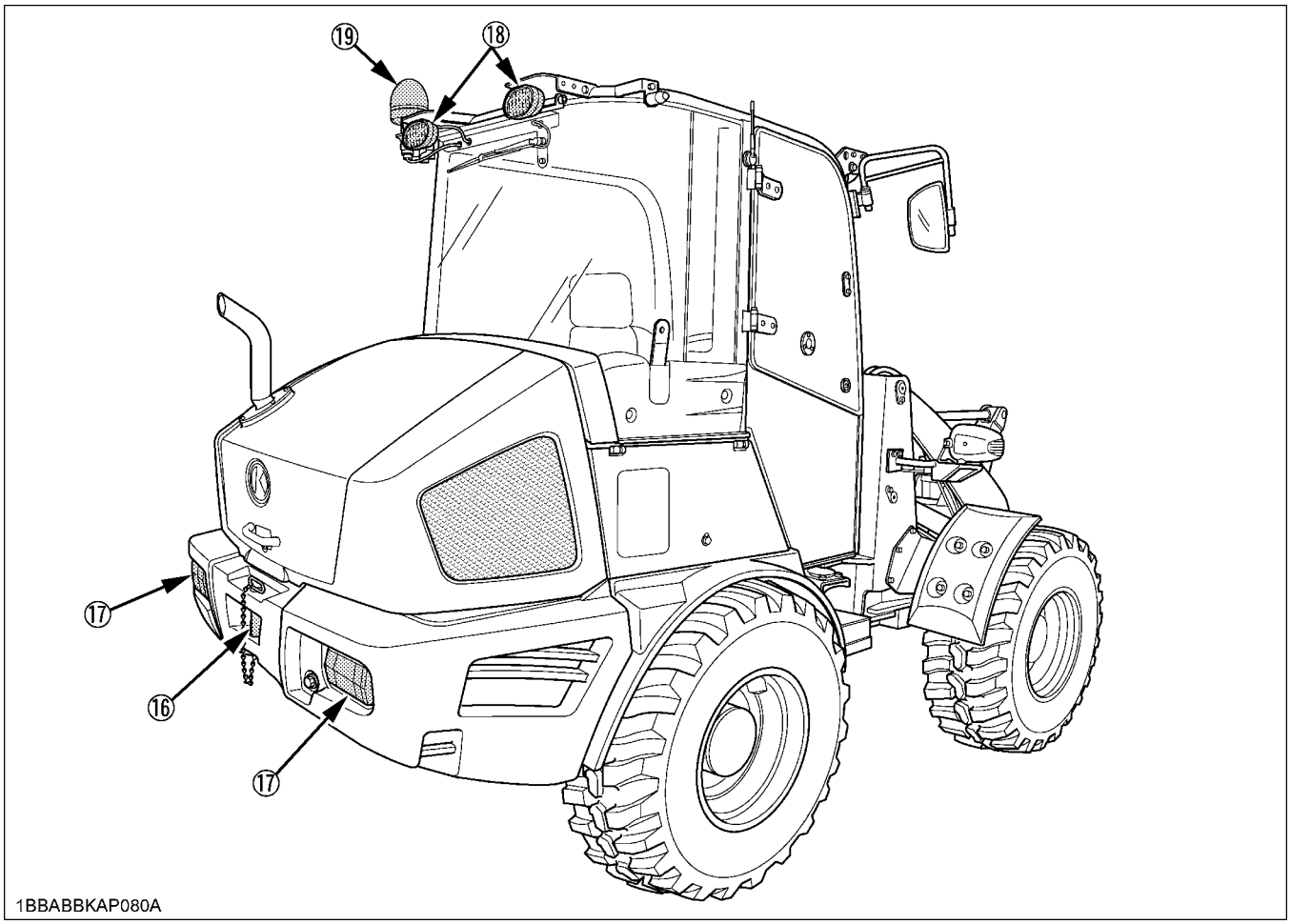

DEPICTED CONTENTS
(16) Towing pin
(17) Rear combination light
(Turn signal, Tail light, Brake light, Back light)
(18) Rear working light (option)
(19) Rotary beacon (option)

https://truckmanualshub.com/

INSTRUMENT PANEL AND CONTROL ELEMENTS

■ Switch

[R530]

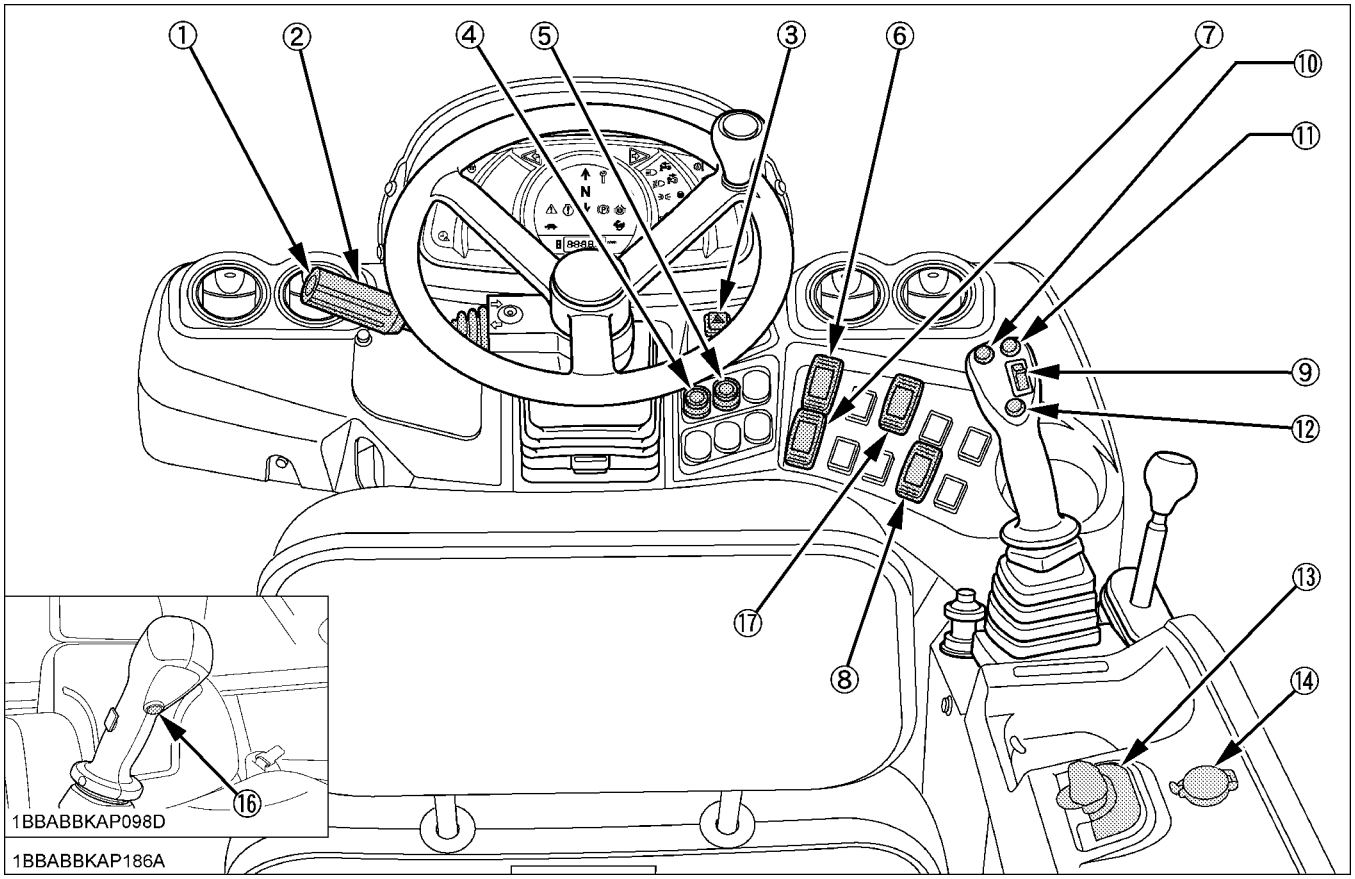

DEPICTED CONTENTS

(1) Horn switch
(2) Turn signal switch
(3) Hazard light switch
(4) User setting switch
(5) Display selector switch
(6) Parking brake switch
(7) Headlight switch
(8) Attachment unlock switch
(9) Direction switch
(10) Speed control switch (down)
(11) Speed control switch (up)
(12) Neutral switch
(13) Starter switch
(14) Electrical outlet
(15) Engine stop knob
(16) Differential lock switch
(17) DPF switch (Inhibit / Parked Regeneratioin)

[Cabin type only]

(2) Front wiper / Washer switch (Refer to page 27)
(18) Working light switch
(19) Rear Wiper / Washer switch
(20) Blower switch
(21) Temperature control dial
(22) Air-conditioner switch

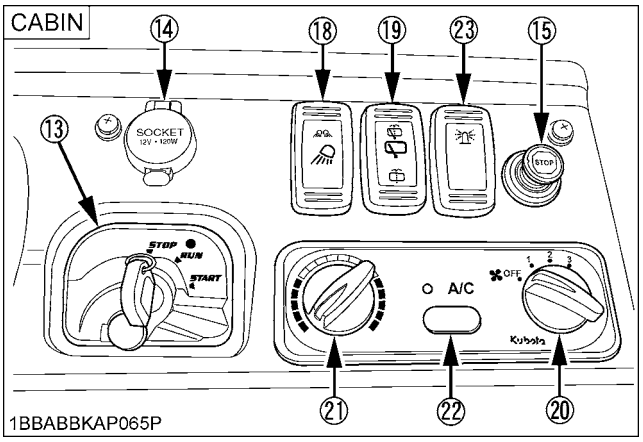

[Option]

(23) Beacon light switch

https://truckmanualshub.com/

[R630]

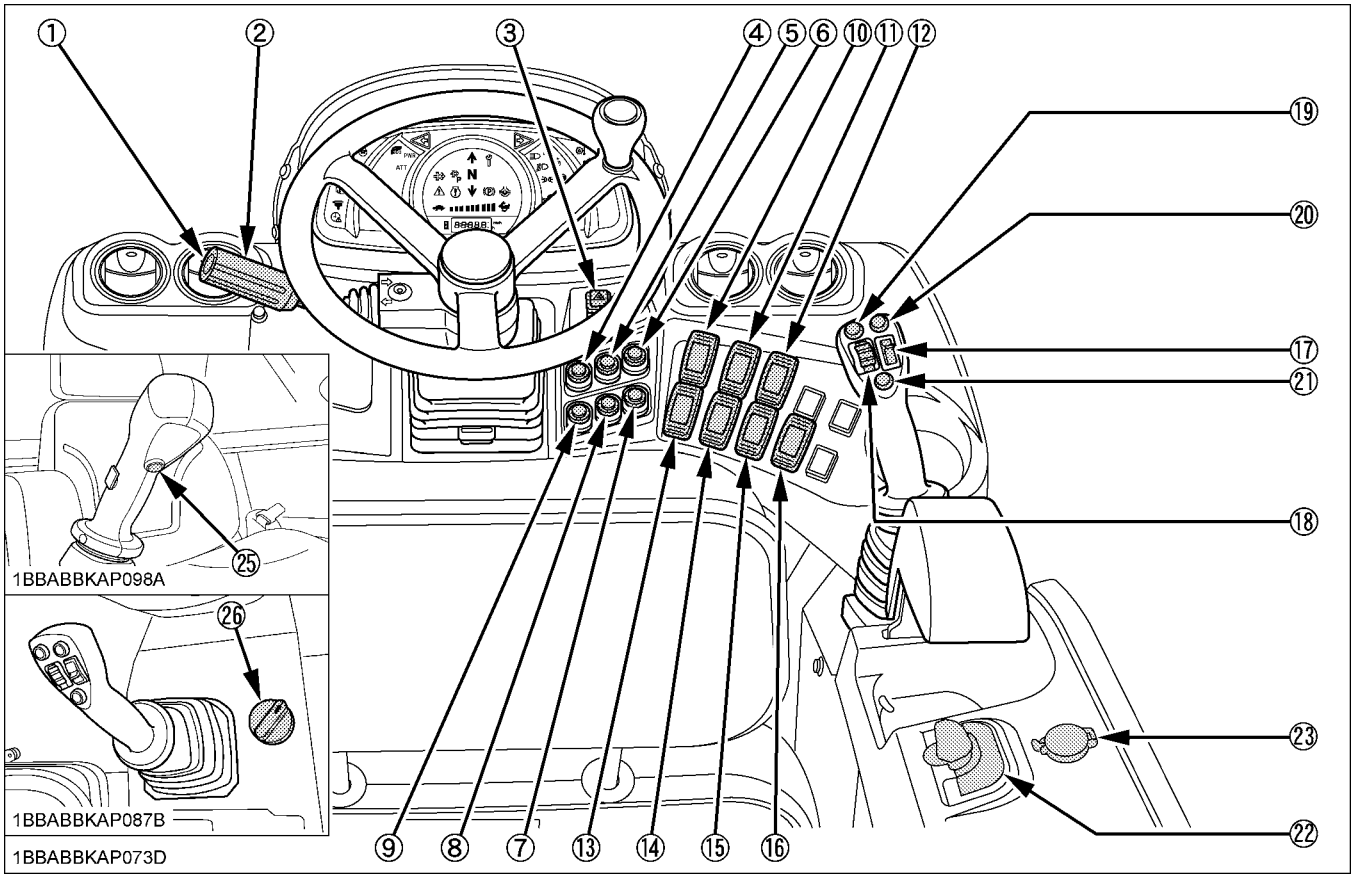

DEPICTED CONTENTS

(1) Horn switch
(2) Turn signal switch
(3) Hazard light switch
(4) User setting switch
(5) Display selector switch
(6) AUX port enable switch
(7) P mode switch
(8) ECO mode switch
(9) ATT mode switch
(10) Parking brake switch
(11) Hydraulic lock switch
(12) DPF switch (Inhibit / Parked Regeneration)
(13) Headlight switch
(14) Float switch
(15) AUX hold switch
(16) Attachment unlock switch
(17) Direction switch
(18) AUX port variable switch
(19) Speed control switch (down)
(20) Speed control switch (up)
(21) Neutral switch
(22) Starter switch
(23) Electrical outlet
(24) Engine stop knob
(25) Differential lock switch
(26) Engine speed (AUX flow) control dial

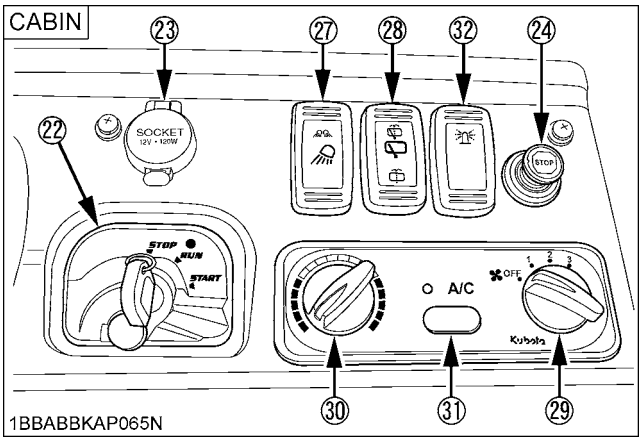

[Cabin type]

(2) Front wiper / Washer switch (Refer to page 27)
(27) Working light switch
(28) Rear wiper / Washer switch
(29) Blower switch
(30) Temperature control dial
(31) Air-conditioner switch

[Option]

(32) Beacon light switch

https://truckmanualshub.com/

■ Control Pedals and Levers

[R530]

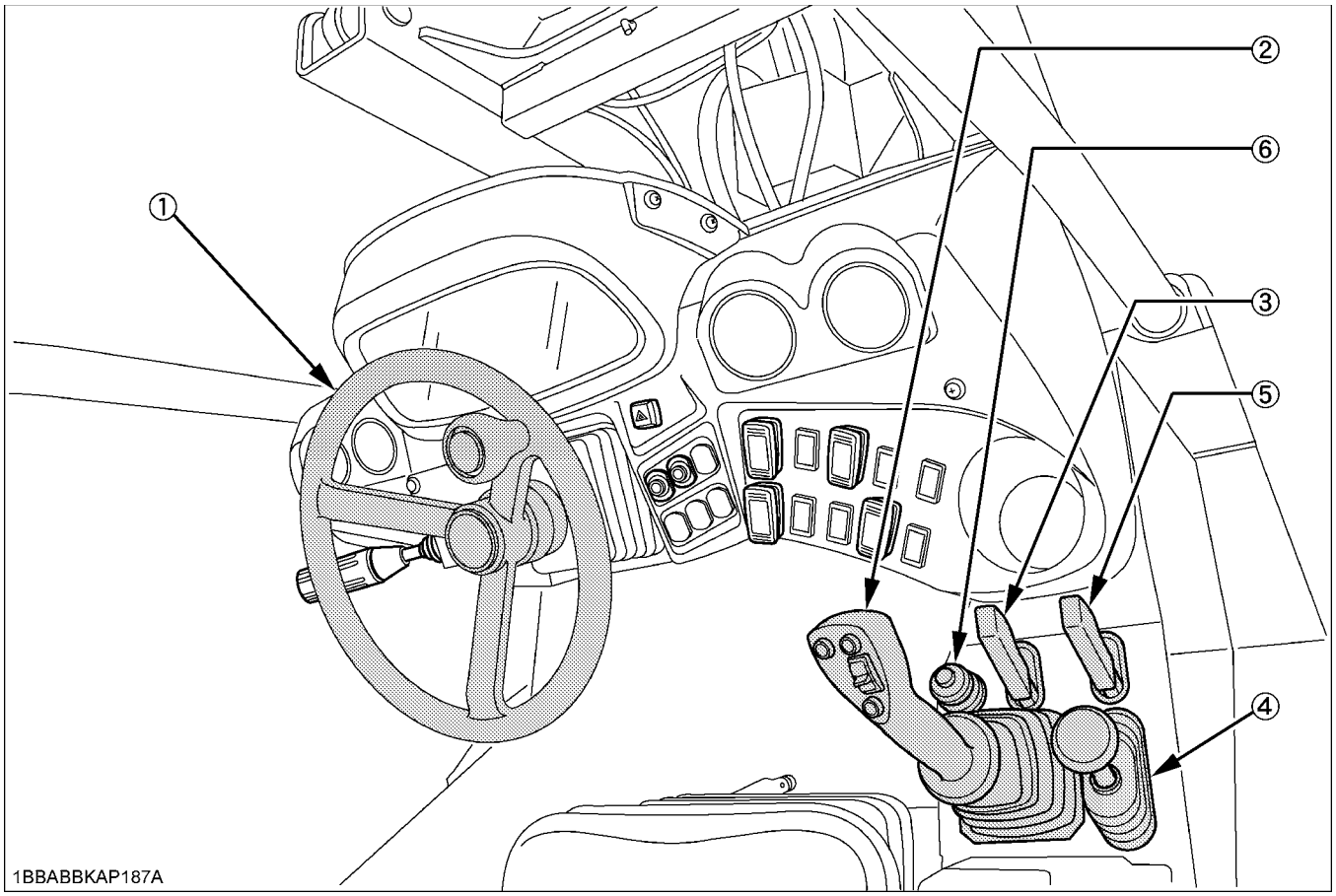

DEPICTED CONTENTS
(1) Steering wheel
(2) Multi function operating lelver (control lever)
(3) Control lever lock
(4) Auxiliary port lever
(5) Auxiliary port lever lock
(6) Engine speed control knob
(7) Inching and brake pedal
(8) Accelerator pedal

[Option]
(9) Brake pedal

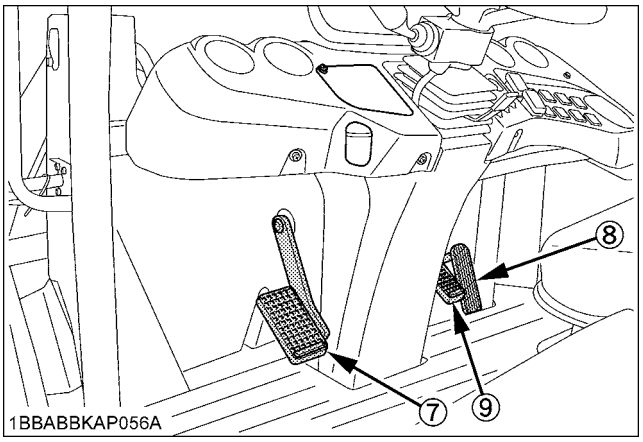

https://truckmanualshub.com/

[R630]

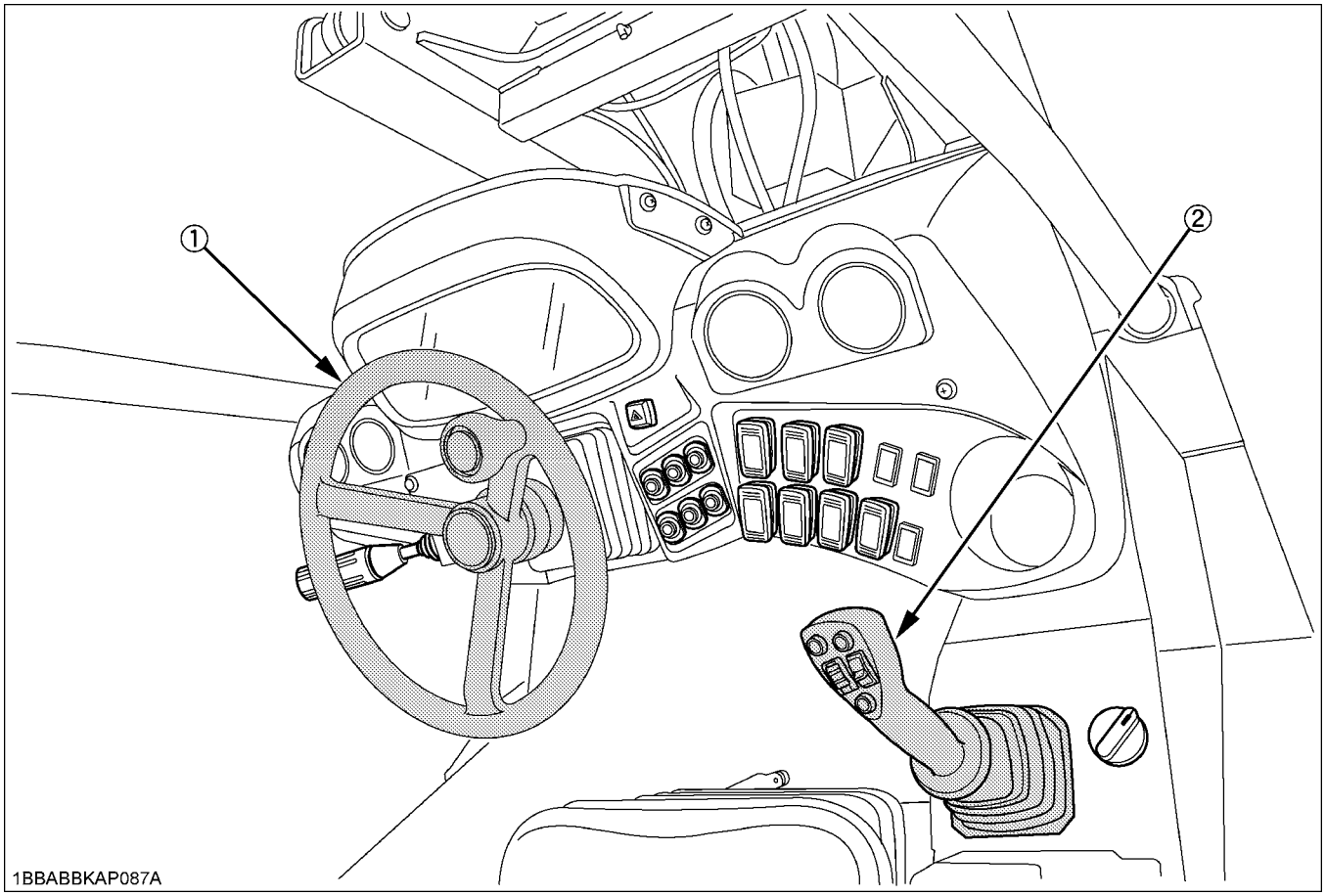

DEPICTED CONTENTS
(1) Steering wheel
(2) Multi function operating lever (control lever)
(3) Inching and brake pedal
(4) Accelerator pedal

[Option]
(5) Brake pedal

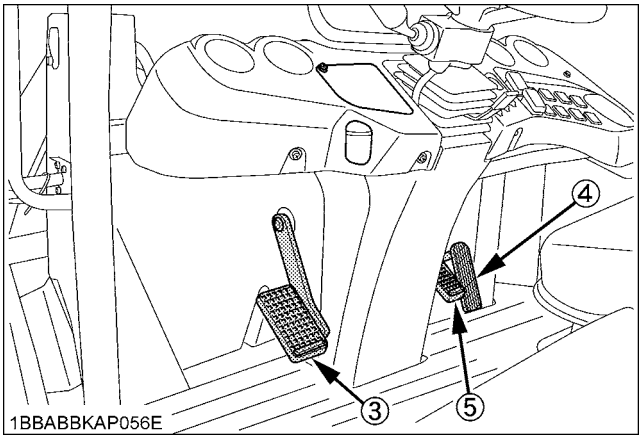

https://truckmanualshub.com/

■ Instrument Panel

[R530]

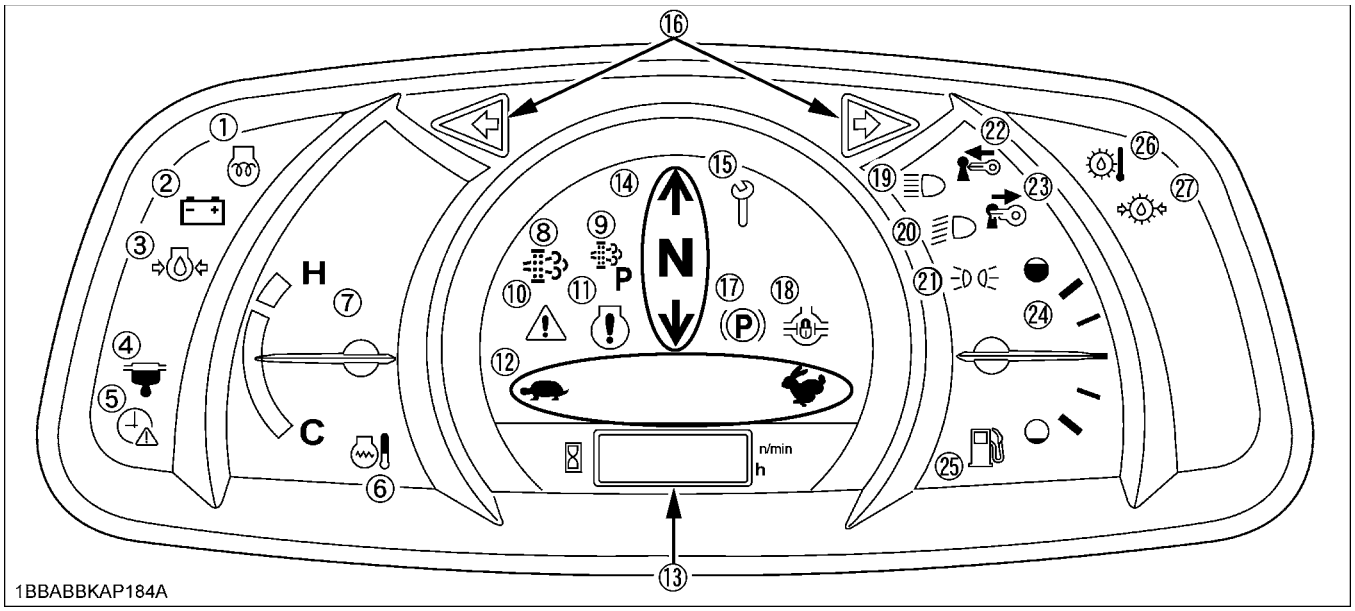

DEPICTED CONTENTS

(1) Glow plug indicator
(2) Battery charge indicator
(3) Engine oil pressure warning indicator
(4) Water separator filled-up indicator
(5) Clock setting request indicator
(6) Coolant temperature indicator
(7) Coolant temperature gauge
(8) Regeneration indicator
(9) Parked regeneration indicator
(10) Warning indicator
(11) Engine warning indicator
(12) Speed mode indicator
(13) LCD
(14) Forward, backward and neutral indicator
(15) Periodic check indicator
(16) Hazard / Turn signal indicator
(17) Parking brake indicator
(18) Differential lock indicator
(19) Headlight-high beam indicator
(20) Headlight-low beam indicator
(21) Clearance light indicator
(22) Insert key indicator (for KCL)
(23) Pull-out key indicator (for KCL)
(24) Fuel gauge
(25) Fuel stock indicator
(26) HST oil-temperature warning indicator
(27) HST charge-pressure-warning indicator

https://truckmanualshub.com/

[R630]

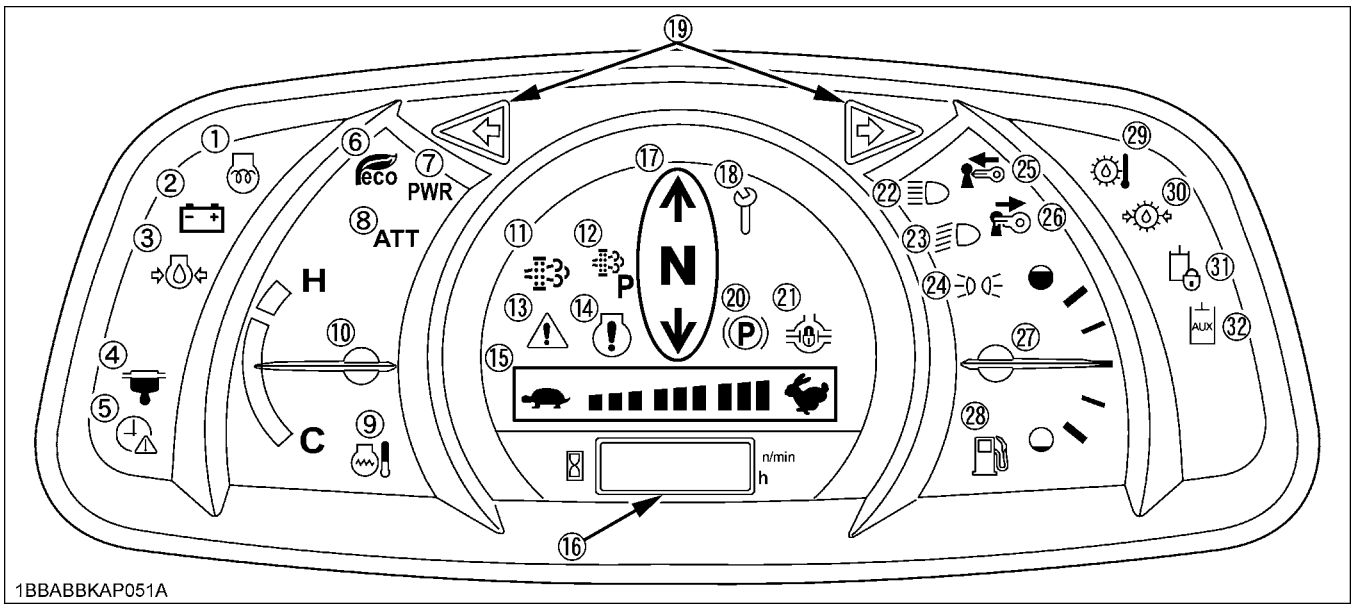

DEPICTED CONTENTS
(1) Glow plug indicator
(2) Battery charge indicator
(3) Engine oil pressure warning indicator
(4) Water separator filled-up indicator
(5) Clock setting request indicator
(6) ECO mode indicator
(7) Power mode indicator
(8) Attachment mode indicator
(9) Coolant temperature indicator
(10) Coolant temperature gauge
(11) Regeneration indicator
(12) Parked regeneration indicator
(13) Warning indicator
(14) Engine warning indicator
(15) Speed mode indicator
(16) LCD
(17) Forward, backward and neutral indicator
(18) Periodic check indicator
(19) Hazard / Turn signal indicator
(20) Parking brake indicator
(21) Differential lock indicator
(22) Headlight high-beam indicator
(23) Headlight low-beam indicator
(24) Clearance light indicator
(25) Insert key indicator (for KCL)
(26) Pull-out key indicator (for KCL)
(27) Fuel gauge
(28) Fuel stock indicator
(29) HST oil-temperature warning indicator
(30) HST charge-pressure-warning indicator
(31) Hydraulic lock indicator
(32) AUX operation indicator

https://truckmanualshub.com/

CHECKS BEFORE START

DAILY CHECKS

In order to avoid damage, it is important to check the condition of the machine before starting.

WARNING

To avoid personal injury or death:

- **Be sure to check and service the machine on a level surface with the engine shut off.**

Checks

- Go around the machine and check for visual damage and wear.
- Check coolant level. (See "DAILY CHECK" in "PERIODIC SERVICE" section.)
- Check fuel level.
- Check engine oil level.
- Check hydraulic fluid level.
- Check dust indicator of air cleaner. (See "DAILY CHECK" in "PERIODIC SERVICE" section).
- Check all control lamps, indicators and hour meter.
- Check the light system.
- Check the seat belt and the ROPS/FOPS safety device.
- Check Diesel Particulate Filter (DPF) muffler.
- Check the condition of the safety and warning labels. (See "DANGER AND WARNING LABELS" in "SAFE OPERATION" section.)

CHECKING THE SWITCHES

■Parking Brake Switch

The parking brake is to be used when parking the machine.

1. When the parking brake switch is pressed on "Ⓟ" marked side, the parking brake is applied and the "Ⓟ" mark on the instrument panel appears.
2. When the switch is pressed, the parking brake is released and the "Ⓟ" mark on the instrument panel lights off.

[R530]

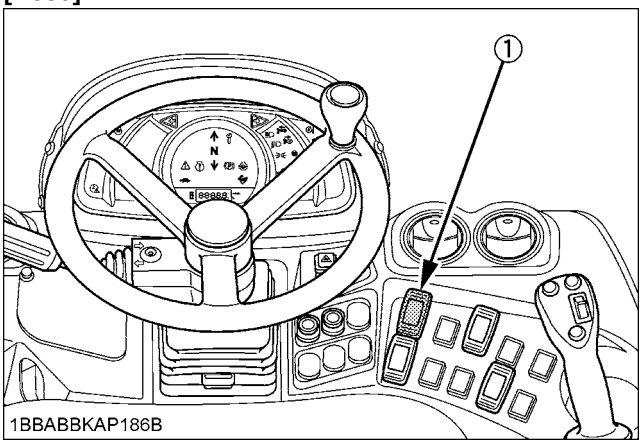

[R630]

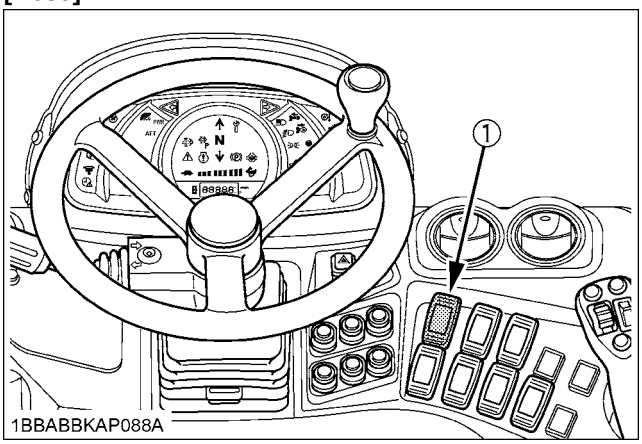

(1) Parking brake switch

https://truckmanualshub.com/

■Starter Switch

- **[STOP]**
  The key can be inserted at the "STOP" position.
- **[RUN]**
  Turn the key one click from the "STOP" position to the "RUN" position. All the circuitry gets energized to start preheating. The glow indicator is displayed.
  To check for any lamp breakage, however, the lamp lights up and stays on for about 1 second.
- **[START]**
  Turn the key from the "RUN" position another click to the "START" position. The starter motor is then activated to get the engine started.
  Release your hand from the key, and the key returns itself to the "RUN" position. In other words, once the engine has started, be sure to free the key.

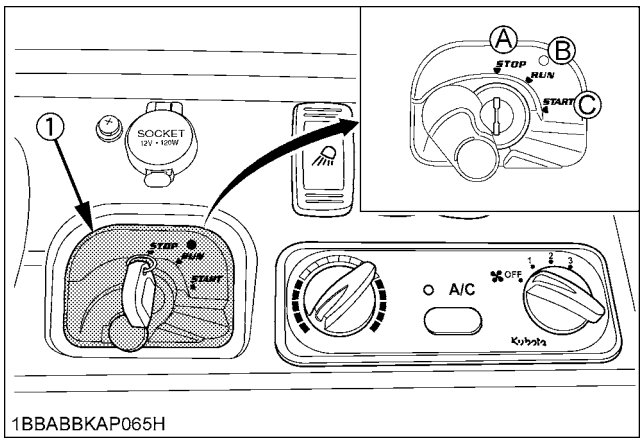

(1) Starter switch

(A) "STOP"
(B) "RUN"
(C) "START"

■Horn Switch

Even when the starter key is in "STOP" position, the horn will be beeped by pressing the horn switch.

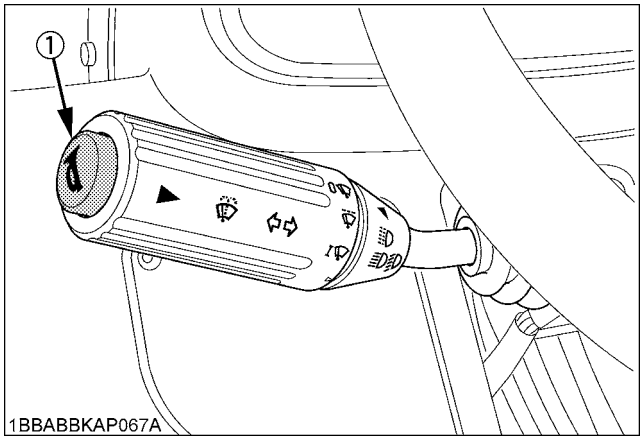

(1) Horn switch

■Turn Signal Switch

Operate the turn signal switch to the right or left according to the direction in which the machine is to be turned. The corresponding turn signal will blink.
Be sure to return the switch to the center position after the turn.

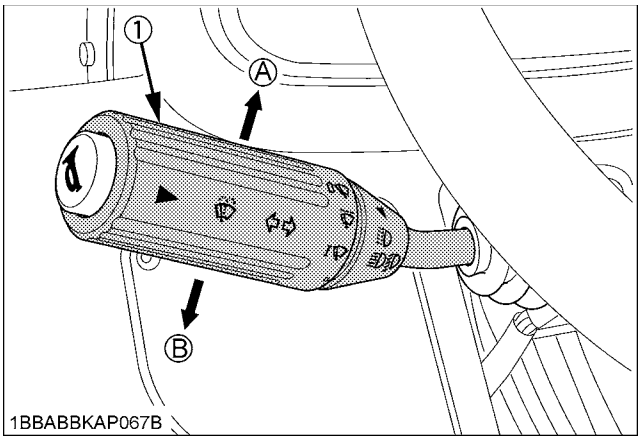

(1) Turn signal switch

(A) To blink right turn signal
(B) To blink left turn signal

■High-Low Beam Changing Switch

Pull up the switch toward the steering wheel, and the high beams light up. The high and low beams can be switched each other by moving up and down the switch.

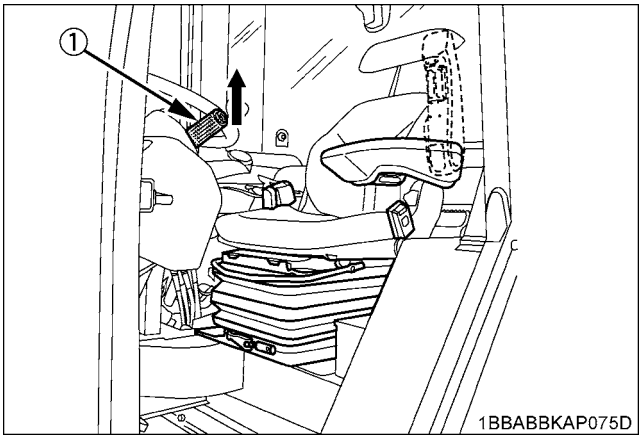

(1) High-Low beam changing switch

https://truckmanualshub.com/

■Headlight Switch

WARNING

To avoid personal injury or death:

- **For night operation, keep all machine mounted lights operating. Check for burned out lights and replace immediately.**

The switch has 3 positions. When positioned on your side, the lights stay off. Move the switch to the first position to turn on the clearance light, and to the second position to turn on both the front working lights and rear working lights.

[R530]

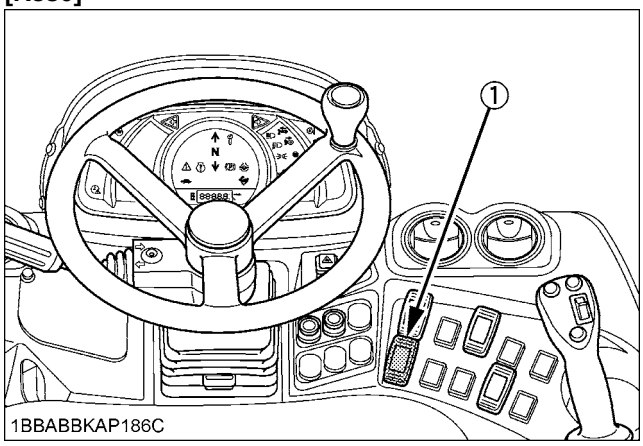

[R630]

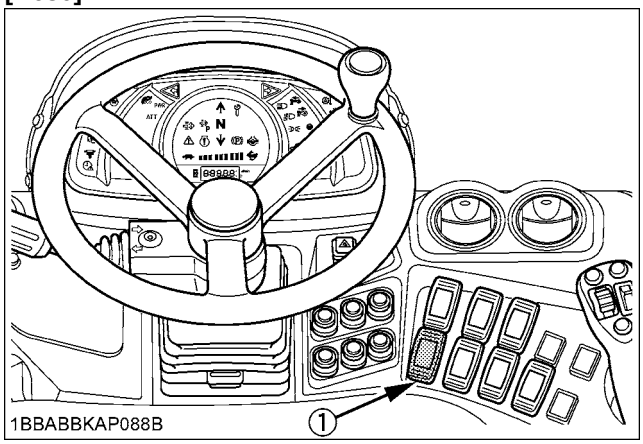

(1) Headlight switch

■Hazard Lamp Switch

Press the hazard lamp switch for the hazard lamps to blink.

[R530]

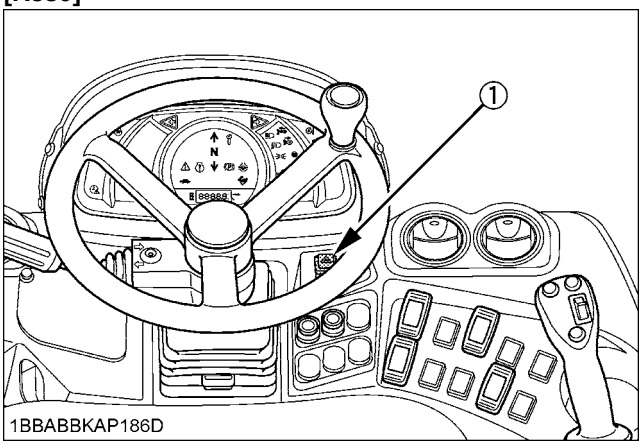

[R630]

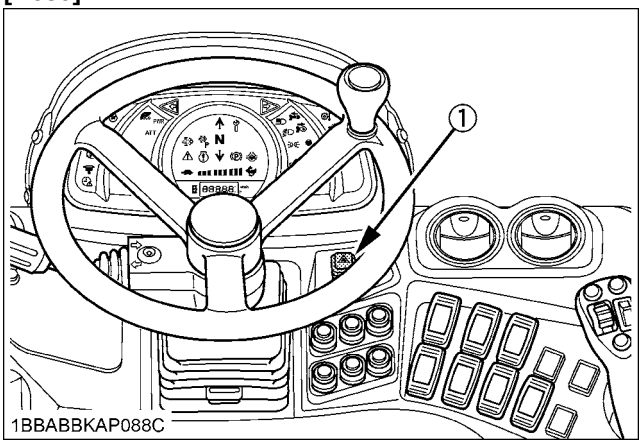

(1) Hazard lamp switch

https://truckmanualshub.com/

■Attachment Unlock Switch

The attachment unlock switch is applied for hydraulic quick coupler. This switch must be applied for safety reason when the attachment locking shall be unlocked. The quick coupler is ready for unlocking only while the switch is depressed. For detail procedure, refer to page 66 to 68.

[R530]

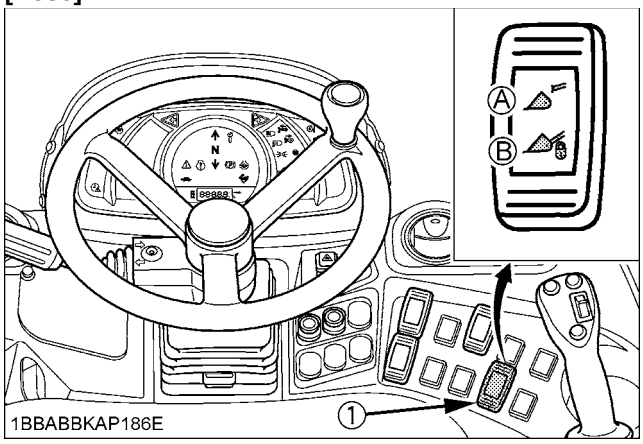

[R630]

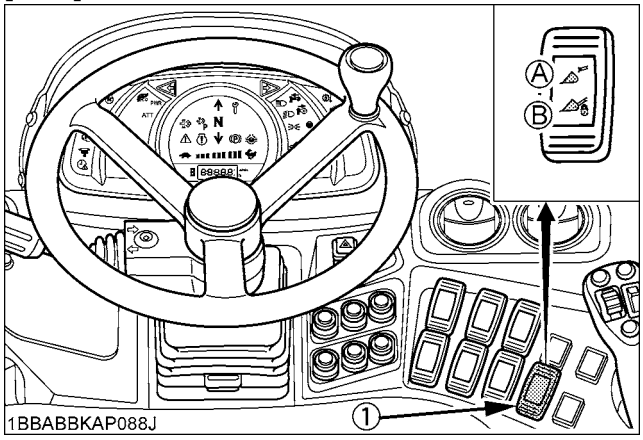

(1) Attachment unlock switch *(A) UNLOCK*
(B) LOCK

■Diesel Particulate Filter (DPF) Switch (Inhibit / Parked Regeneration)

This switch serves to change the DPF regeneration between the Inhibit mode and the Parked Regeneration mode. For detail procedure, refer to page 35 to 39.

[R530]

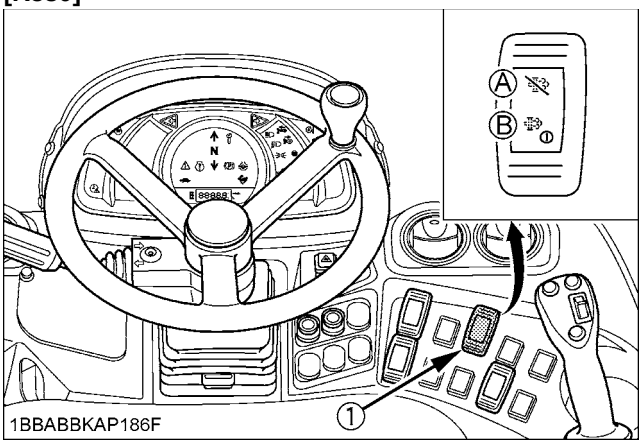

[R630]

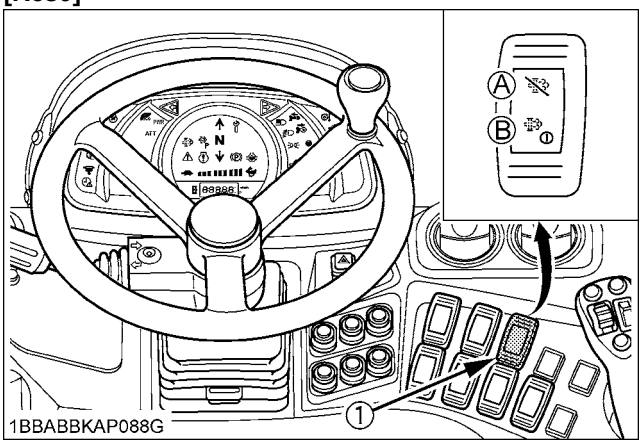

(1) DPF switch *(A) "Inhibit" side*
(B) "Parked Regeneration" side

https://truckmanualshub.com/

■Differential Lock Switch

WARNING

To avoid personal injury or death due to loss of steering control:

- **Do not lock/unlock the differential while the vehicle is working**
- **Do not operate the wheel loader exceed 4.6 km/h (2.9 mph) with differential lock engaged.**
- **Do not lock/unlock the differential when the wheels are spinning, slipping or loosing traction.**
- **Always unlock the differential as soon as the need for maximum traction has passed and the vehicle is travelling on a good road or highway.**

If one of the wheels should slip, release the accelerator pedal and press the differential lock switch. Both wheels will turn together, then reduce slippage.
Differential lock is available only while the switch is depressed.

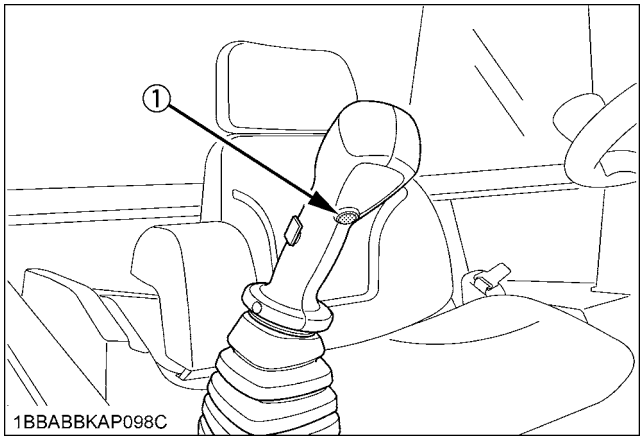

(1) Differential lock switch

IMPORTANT :

- The differential lock switch can not be activated at high speed mode.

■Display Selector Switch

Press the display selector switch. The electronic meter's LCD will change from one indication mode to the other. Change the 3-mode display according to your jobs.

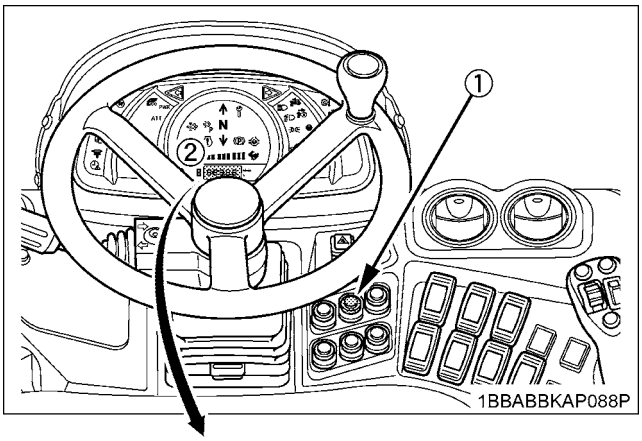

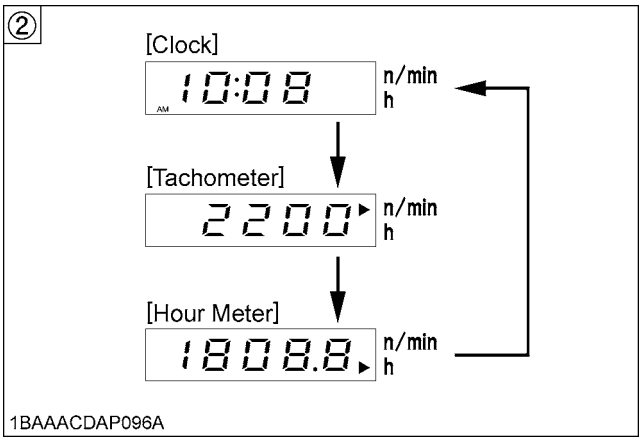

(1) Display selector switch
(2) LCD

NOTE :

- With the starter key at the **"STOP"** position, press the electronic meter's display selector switch, and the LCD shows the hour meter for 15 seconds.

https://truckmanualshub.com/

◆ **Setting the clock**

[Selecting the clock setting mode]

1. Press the user setting switch.
2. Select the clock setting mode by pressing the display selector switch and the clock setting request indicator "" on the instrument panel lights up.

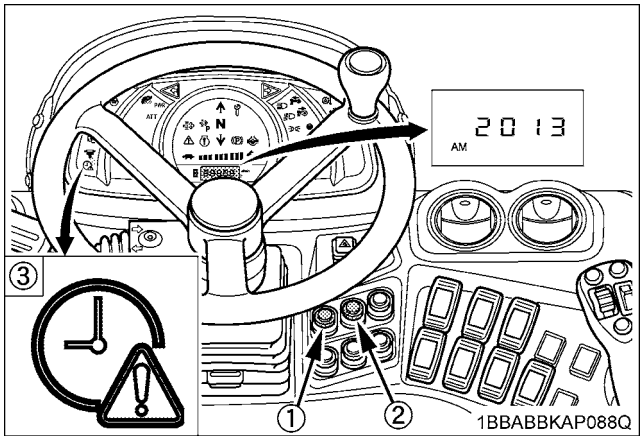

(1) User setting switch
(2) Display selector switch
(3) Clock setting request indicator

NOTE :

- Press the display selector switch for a long time and the year, month, day, hour and minute will be selected in this order.

[Setting the year]

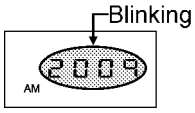

Press user setting switch and the numeric setting will be smaller.
Press display selector switch and the numeric setting will be larger.

User setting switch	Display selector switch
2008 ⬇ 2007 ⬇ 2006	2010 ⬆ 2009 ⬆ 2008

NOTE :

- While setting the clock, the clock setting request indicator "" on the instrument panel is blinking.

[Setting the month]

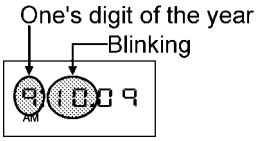

Press user setting switch and the numeric setting will be smaller.
Press display selector switch and the numeric setting will be larger.

User setting switch	Display selector switch
10 ⬇ 9 ⬇ 8	11 ⬆ 10 ⬆ 9

[Setting the day]

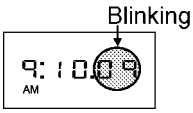

Press user setting switch and the numeric setting will be smaller.
Press display selector switch and the numeric setting will be larger.

User setting switch	Display selector switch
09 ⬇ 08 ⬇ 07	11 ⬆ 10 ⬆ 9

[Changing the AM/PM system to the 24-hour system]

Select the AM/PM system or 24-hour system by pressing display selector switch.

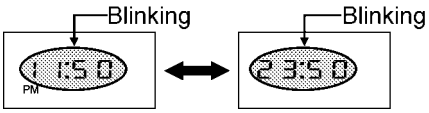

https://truckmanualshub.com/

[Setting the hour]

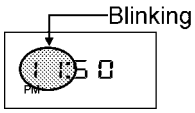

Press user setting switch and the numeric setting will be smaller.
Press display selector switch and the numeric setting will be larger.

User setting switch	Display selector switch
11 ⬇ 10 ⬇ 9	12 ⬆ 11 ⬆ 10

[Setting the minute]

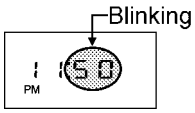

Press user setting switch and the numeric setting will be smaller.
Press display selector switch and the numeric setting will be larger.

User setting switch	Display selector switch
50 ⬇ 49 ⬇ 48	52 ⬆ 51 ⬆ 50

If display selector switch is pressed for a long time, the new settings will be made.

NOTE :

- If the battery is disconnected, the clock setting request lamp "" (yellow) will blink for requesting the setting the clock.

■Battery Charge Indicator

This warning indicator lights up if the charging system fails with the engine running. When the starter switch is turned to **"RUN"** with the engine off, the indicator lights up, and when the engine starts, the indicator goes out. If the indicator stays on with the engine running, stop the engine and check the fan belt.

NOTE :

- If there is disconnection or failure in the charging system when the key is turned to **"RUN"**, the following symbol will appear.

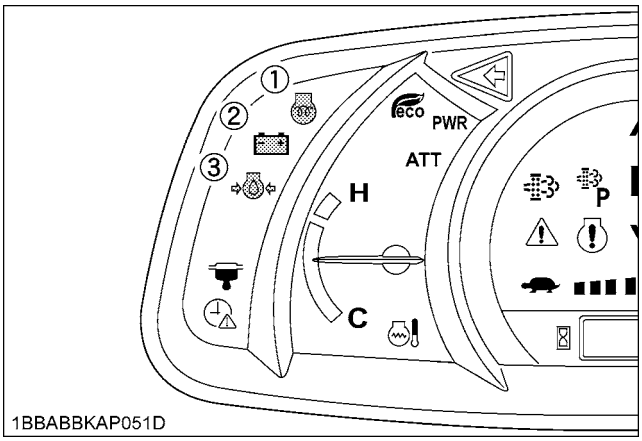

(1) Glow plug indicator
(2) Battery charge indicator
(3) Engine oil pressure indicator

https://truckmanualshub.com/

■Engine Oil Pressure Indicator

The engine oil pressure warning indicator lights up due to failure of the lubricating system with the engine running. When the starter switch is turned to **"RUN"** with the engine off, this indicator lights up, and when the engine starts, the indicator goes out. If the indicator stays on with the engine running, stop the engine and check the engine oil level.

NOTE :

- If there is disconnection, failure or breakdown in the lubricating system when the key is turned to **"RUN"**, the following symbol will appear.

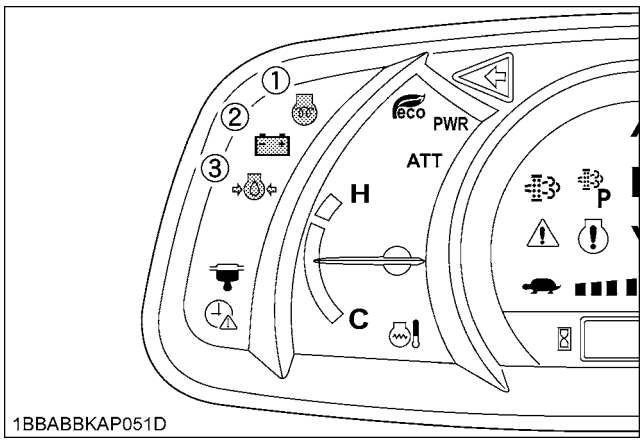

(1) Glow plug indicator
(2) Battery charge indicator
(3) Engine oil pressure indicator

■Grow Plug Indicator

With the starter key at the **"RUN"** position, the engine's preheat status is indicated.

NOTE :

- When the starter switch is turned to the **"RUN"** position, the engine will be preheated for a given period of time and the indicator will turn on.
- The above indication appears momentarily when the engine is started, but it does not indicate trouble. (This is because the oil charge sensor output fluctuates when the engine is started.)
- The following symbol appears momentarily as the engine starts. This is not an error.

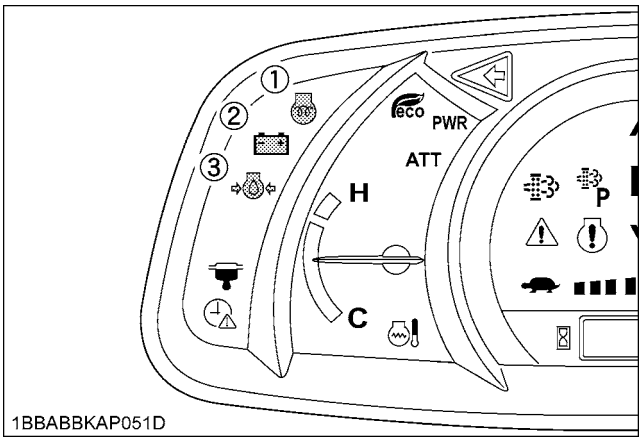

(1) Glow plug indicator
(2) Battery charge indicator
(3) Engine oil pressure indicator

■Water Separator Filled-Up Indicator

When the water separator is filled up, the indicator lights up.

In such case, drain the water separator referring to "Draining water separator" in "DAILY CHECK" section.

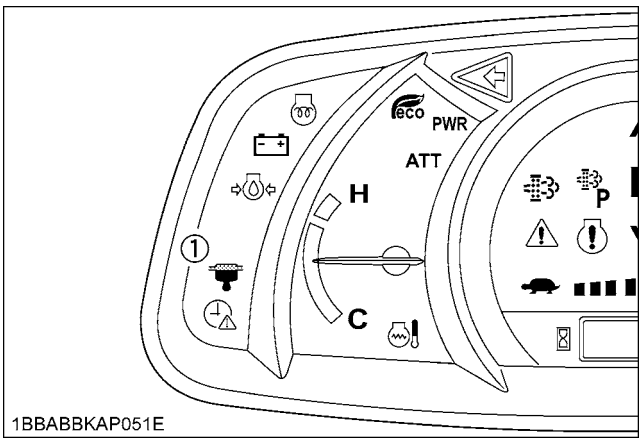

(1) Water separator filled-up indicator

https://truckmanualshub.com/

■LCD for Normal Operation

◆ **Fuel gauge**

WARNING

To avoid personal injury or death:

- **Before adding fuel, be sure to stop the engine.**
- **Be sure to keep open flame away from the machine. Otherwise a fire may result.**

If the fuel in the tank goes below the prescribed level, the fuel stock indicator will turn on.
If this should happen during operation, refuel as soon as possible.

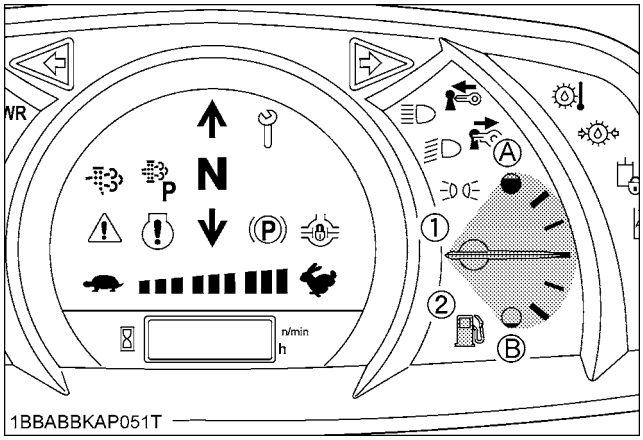

(1) Fuel gauge *(A) "FULL"*
(2) Fuel stock indicator *(B) "EMPTY"*

IMPORTANT :

- If the fuel gauge indicator is near the "◯", add fuel as soon as possible. If the indicator is near "◯" and the machine operates on a slope, the engine may run out of fuel.

◆ **Fuel level audible indication switch (when refueling)**

1. With the starter key at the **"STOP"** position, press the fuel level audible indication buzzer, and the fuel level can be checked with buzzer sound.
2. Start refueling the machine. The buzzer beeping intervals vary according to how much fuel is poured into the tank. As the machine becomes filled up, the buzzer sounds almost continuously.
3. While refueling the machine, listen to the buzzer sound to know how much the fuel tank is filled.
4. If fuel is poured too slowly, the buzzer sound gets interrupted. When it is poured again as usual, the buzzer restarts sounding.
5. To stop refueling halfway (before filling up), press the fuel level audible indication buzzer or leave as it is (not refueling) for a while. The buzzer stops sounding.

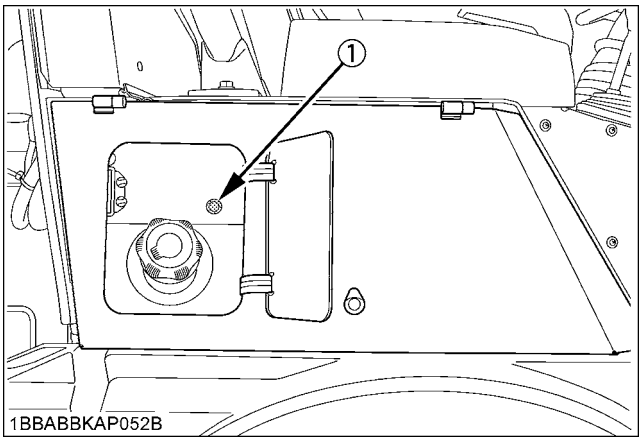

(1) Fuel level audible indication buzzer

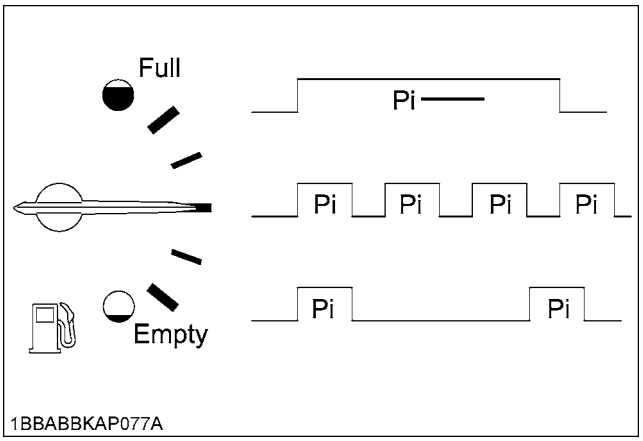

https://truckmanualshub.com/

◆ **Coolant Temperature Gauge**

WARNING

To avoid personal injury or death:

- **Do not open the radiator cap during or just after operation. Hot coolant may gush out and scald you. Wait for the coolant to cool down before opening the cap.**

With the starter key at the **"RUN"** position, the cooling water temperature is indicated.

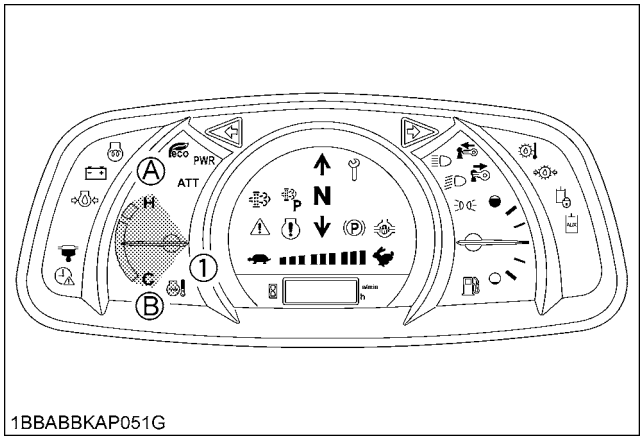

(1) Coolant temperature gauge *(A) "HOT"*
(B) "COOL"

◆ **Hour-meter**

Indicates the total operating hours of the machine.

How the indicator works

- The meter advances one hour after an hour of operation regardless of the engine rpm.

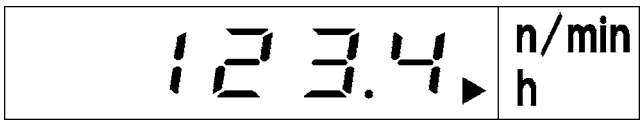

1BAAACDAP288A

◆ **Engine tachometer**

Indicates the current rpm of the engine.

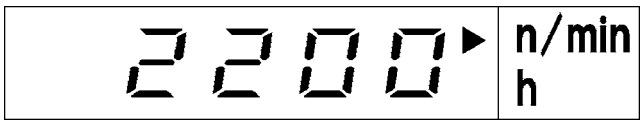

1BAAACDAP098A

NOTE :

- The LCD may be illegible when viewed from a certain angle. This is not a display failure.

■LCD for Warning

◆ **Engine oil pressure warning indicator**

The engine oil pressure warning indicator lights up due to failure of the lubricating system with the engine running.
When the starter key is turned to **"RUN"** position with the engine off, this engine oil pressure warning indicator lights up, warning indicator blinks and when the engine starts, the indicators go out.
If the indicator stays on with the engine running, stop the engine and check the engine oil level.

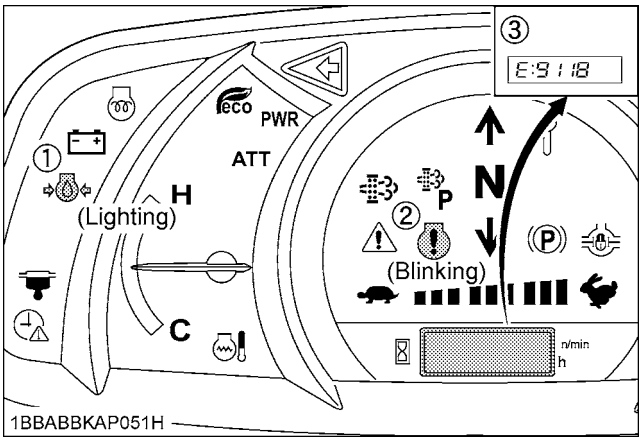

(1) Engine oil pressure warning indicator
(2) Engine warning indicator (red)
(3) Warning message

◆ **Battery charge indicator**

This battery charge indicator lights up if the charging system fails with the engine running.
When the starter key is turned to **"RUN"** position with the engine off, the battery charge indicator lights up, warning indicator blinks and when the engine starts, the indicators go out.
If the indicator stays on with the engine running, stop the engine and check the V-belt.

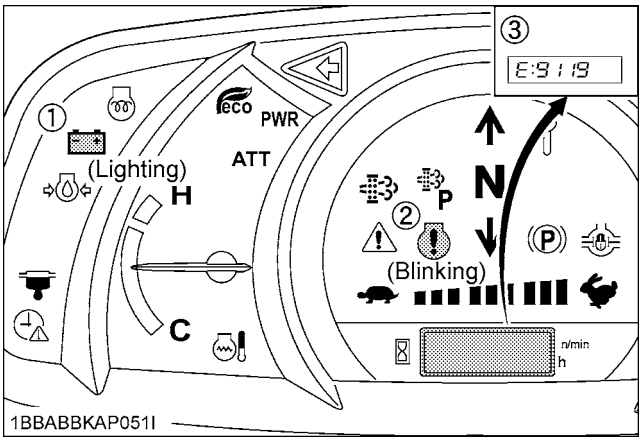

(1) Battery charge indicator
(2) Engine warning indicator (red)
(3) Warning message

https://truckmanualshub.com/

■Warning Indicator

The warning indicator is used to indicate broken wire, short-circuit, fuel shortage and other problems.

IMPORTANT :

- Do not just look at the meter, but also carry out the inspection and correction accordingly.

NOTE :

- The warning indicator starts flashing in red if a serious problem occurs. If the system gets in warning signal, the warning indicator starts flashing in yellow.
- Warnings and errors are displayed and an alarm buzzer beeps.
- Let your KUBOTA dealer inform you of details concerning care and maintenance.

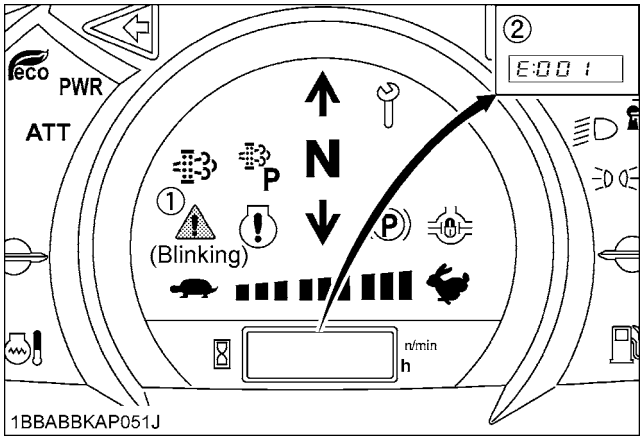

(1) Warning indicator (red)
(2) Warning message

◆ **Overheat warning**

If the coolant temperature becomes elevated, the coolant temperature indicator blinks and the warning message (E:9114) appears on LCD as long as the temperature remains elevated.

If the coolant temperature further increases, the coolant temperature indicator lights up, the engine warning indicator blinks and the warning message (E:9115) appears on LCD as long as the temperature remains elevated.

Operate the machine only with reduced loads until the operating temperature is normal again.

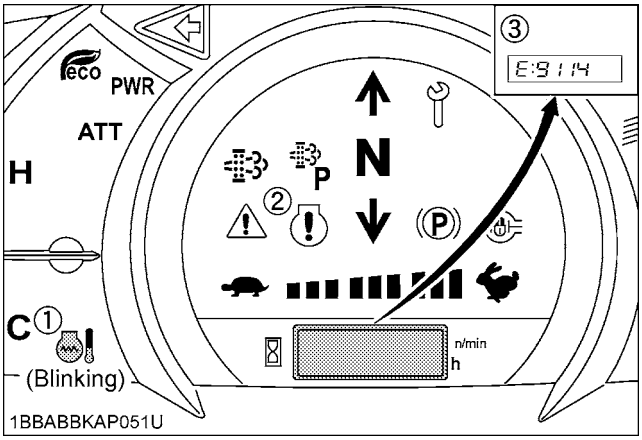

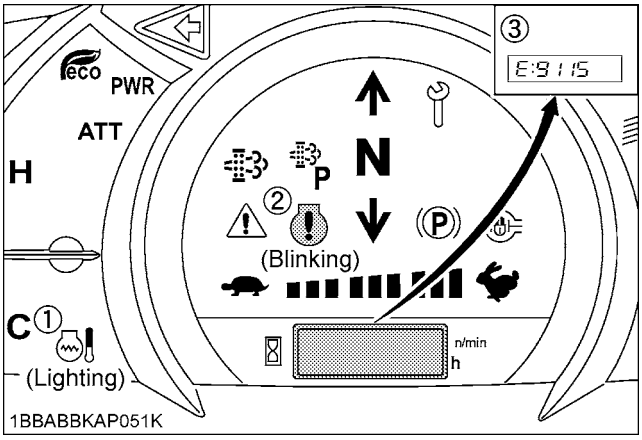

(1) Coolant temperature warning indicator
(2) Engine warning indicator
(3) Warning message

https://truckmanualshub.com/

[R630]

■Hydraulic Lock Switch

WARNING

To avoid personal injury or death:

- **To avoid injuries, check safety aspects all around the machine.**

When the hydraulic lock switch is pressed on, the hydraulic lock indicator on the instrument panel goes on and the lift arm and the bucket will not work even if operating the control lever.

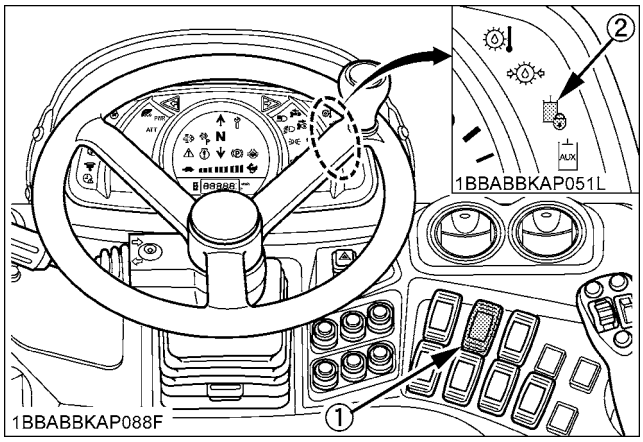

(1) Hydraulic lock switch *(2) Hydraulic lock indicator*

■AUX Port Enable Switch

This switch is used to enable the AUX port.
Press the switch once, and the AUX port is unlocked and the AUX operation indicator on the instrument panel lights up. By pressing it again, the AUX port now gets locked.
The AUX port enable switch can be used only when the AUX port variable switch on the control lever is in the neutral position.

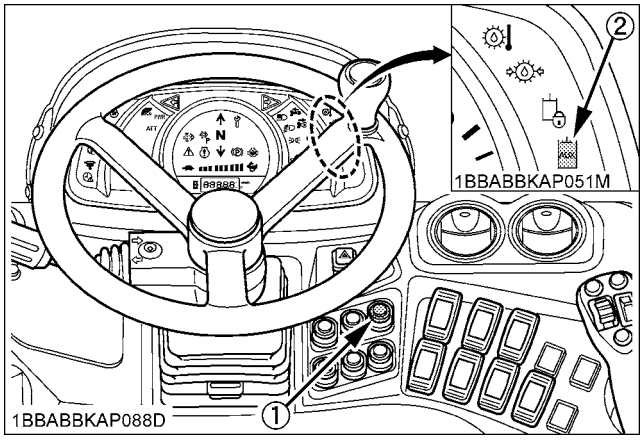

(1) AUX port enable switch *(2) AUX operation indicator*

■AUX Port Variable Switch

With the AUX port unlocked, the hydraulic oil flow rate varies depending on the tilt angle of the switch.

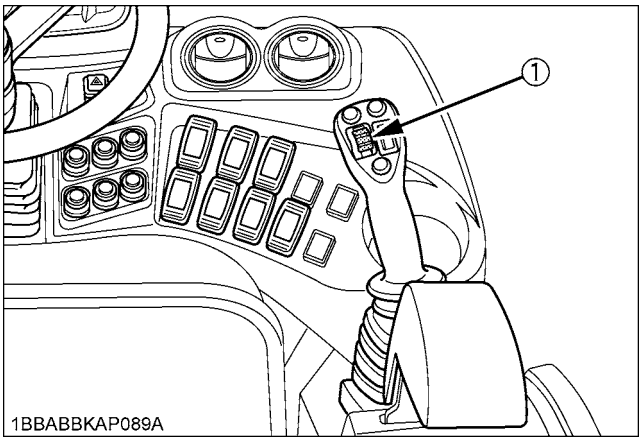

(1) AUX port variable switch

■AUX Hold Switch

Operating the aux hold switch results a maximum oil flow to the port "A".
When you operate it again, the oil flow discontinues.
Thus, you can operate, for example a sweeper without having to continuously hold the aux port variable switch forward port "A".

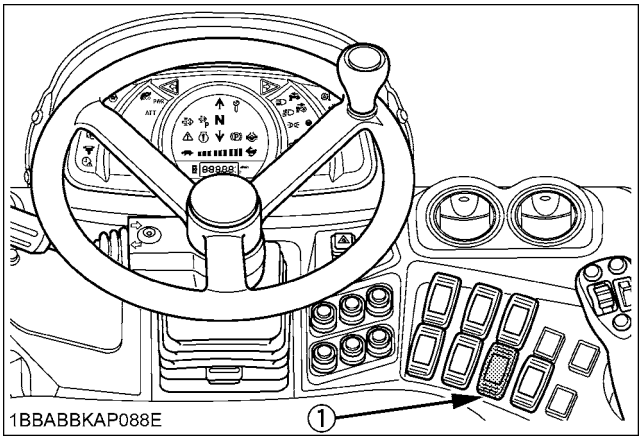

(1) Aux hold switch

https://truckmanualshub.com/

NOTE :
- Aux hold switch will be cancelled, if you operate AUX port variable switch when press aux hold switch.

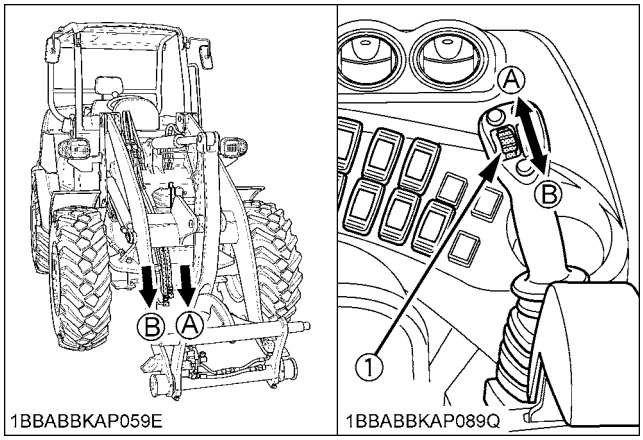

(1) Aux port variable switch

(A) "Port A"
(B) "Port B"

■Float Switch

WARNING

To avoid personal injury or death:
- **Make sure the bucket is lowered to the ground before putting the lift arms in the "FLOAT" position. Putting the lift arms in the "FLOAT" position while they are off the ground will cause the bucket and lift arms to fall and is extremely dangerous.**
- **Do not drive the machine forward with the lift arms in the "FLOAT" position.**

To fix the float position, press the float switch and the control lever can be held in the float position.

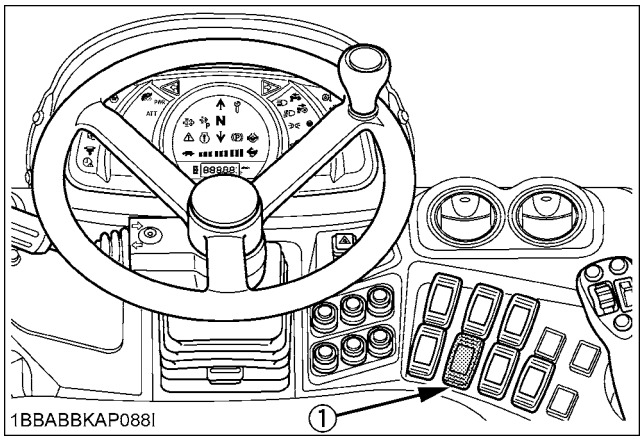

(1) Float switch

SAFETY LEVERS AND APPLIANCE

■Safety Key Start System

This is the safety system to prevent the machine from moving suddenly.
The direction switch is to be set to the neutral position before stopping the engine.
The safety key start system does not allow the engine to start when the parking brake is released.

■Lift Arm Support

WARNING

To avoid personal injury or death:
- **Before installing the lift arm support, remove the front attachment set the direction switch to the neutral position, lock all control levers in neutral, and remove the key.**

The lift arm support is used to prevent the loader lift arms from falling when servicing the machine.
Install as follows.
1. Remove the front attachment.
2. Raise the loader lift arms completely.
3. Stop the engine and remove the key.
4. Insert the lift arm support onto the lift cylinder rod.
5. Install the pin and snap pin in the lift arm support.
6. Slowly lower the loader lift arms onto the lift arm support.

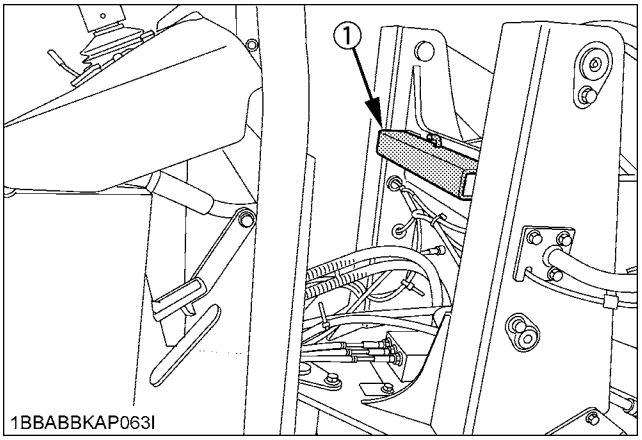

(1) Lift arm support device (Storage position)

https://truckmanualshub.com/

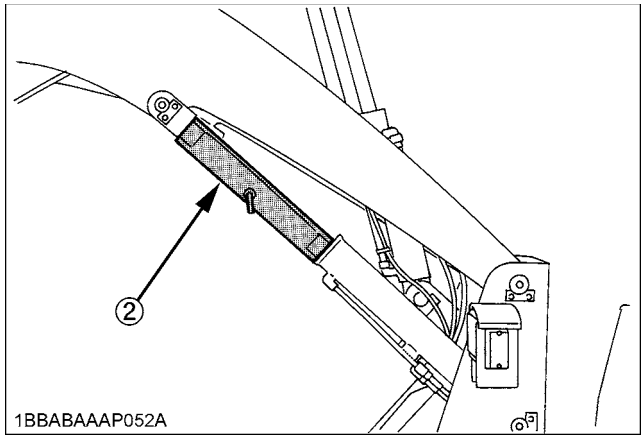

(2) Lift arm support device (Installed position)

■Steering Frame Lock

WARNING

To avoid personal injury or death:

- **Secure steering frame lock before servicing, hauling or transporting the machine.**

This is used to lock the front and rear frames together to prevent the frames from articulating unexpectedly during servicing or hauling or transporting.

To attach the steering frame lock:

1. Align front and rear frames.
2. Shut off the engine and remove the key.
3. Attach steering frame lock with snap pins.
4. If holes are not aligned, move the steering wheel slightly with the engine off.

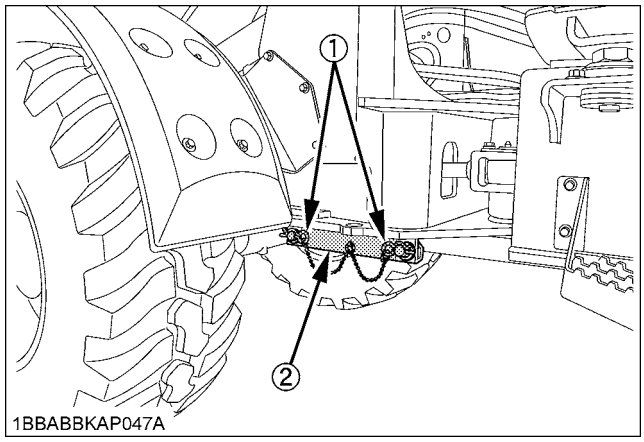

(1) Snap pin
(2) Steering frame lock [Steering frame lock in lock position]

IMPORTANT :

- Store the steering frame lock securely after use.

[R530]

■Control Lever Lock

WARNING

To avoid personal injury or death:

- **When dismounting the machine or when servicing the machine, be sure to stop the engine, lower the bucket and the attachment to the ground, release the hydraulic pressure in the hydraulic system by operating control levers. Lock all control levers in neutral, and remove the key.**

This lock is used to lock the control lever. With the control lever in neutral, operate the lock.

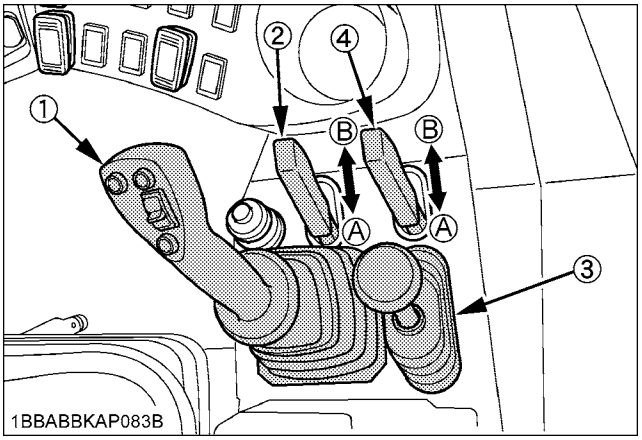

(1) Control lever
(2) Control lever lock
(3) Auxiliary port lever
(4) Auxiliary port lever lock
(A) "LOCK"
(B) "UNLOCK"

https://truckmanualshub.com/

■Auxiliary Port Lever Lock

WARNING

To avoid personal injury or death:

- **When dismounting the machine or when servicing the machine, be sure to stop the engine, lower the bucket and the attachment to the ground, release the hydraulic pressure in the hydraulic system by operating control levers. Lock all control levers in neutral, and remove the key.**
- **In case of the auxiliary port lever is used for the hydraulic quick coupler, always lock the auxiliary port lever after installing front attachment (bucket etc.) to the hydraulic quick coupler. If the machine is operated without the lock, it causes sever injury or death.**

This lock is used to lock the auxiliary port lever. With the auxiliary port lever in neutral, forward or backward position, operate the lock.

[R530]

CABIN TYPE MACHINE

■Front Wiper / Washer Switch

Before moving the windscreen wiper, make sure the starter key is at the **"RUN"** position and then turn on the windscreen wiper switch.

Position 0: The wiper is in neutral.

Position : The wiper moves at regular intervals.

Position I: The wiper moves at normal speed.

Push the ring toward the steering wheel, and the washer system gets started.

- Do not activate the washer switch if the tank for the cleaning fluid is empty; the pump can be damaged.
- Do not activate the wiper switch if the window is dry. In this case, make sure that cleaning fluid is applied to the window pane before activating the wiper.
- In frosty conditions, make sure that the wiper blade is not frozen to the glass before switching-on. The motor can be damaged if the wiper system is used under such conditions.

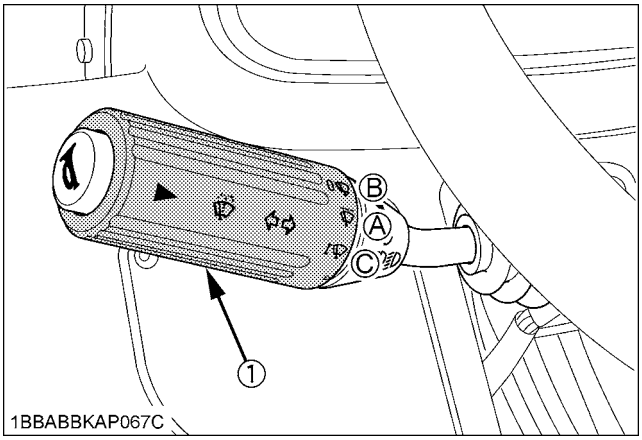

(1) Front wiper / washer switch (A) "Position "
(B) "Position 0"
(C) "Position I"

https://truckmanualshub.com/

■Rear Wiper/ Washer Switch

To move the rear wiper, turn on the switch for the rear wiper when the starter key in position **"RUN"**. A further push on the switch will activate the washer system. Even when the wiper switch is in position **"OFF"**, the washer switch functions if it is pressed.

- Do not activate the washer switch if the tank for the cleaning fluid is empty; the pump can be damaged.
- Do not activate the wiper switch if the window is dry. In this case, make sure that cleaning fluid is applied to the window pane before activating the wiper.
- In frosty conditions, make sure that the wiper blade is not frozen to the glass before switching-on. The motor can be damaged if the wiper system is used under such conditions.

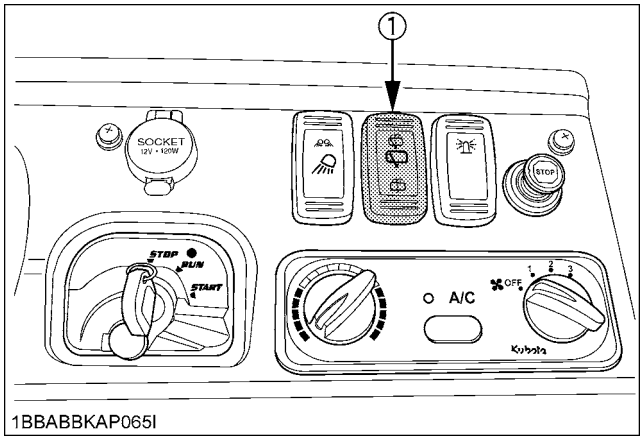

(1) Rear wiper / Washer switch

■Interior Lamp

Press the lamp itself, and the lamp lights up. Press the lamp again to turn it off.

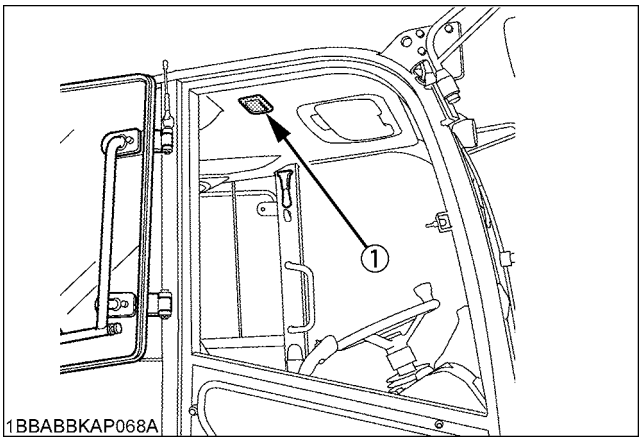

(1) Interior lamp

■Working Light Switch

This switch is operative with the starter key in the ON position.

The switch has 3 positions. When positioned on your side, the lights stay off. Move the switch to the first position to turn on the front working light, and to the second position to turn on both the front working lights and rear working lights.

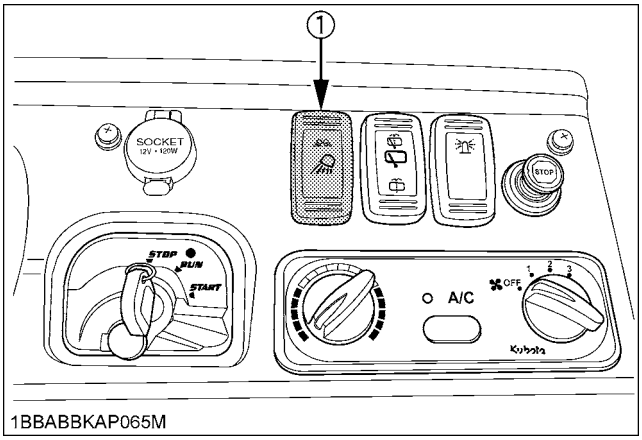

(1) Working light switch

https://truckmanualshub.com/

■Opening/Closing of CABIN Door

1. Unlock the CABIN door and pull the knob. Open the CABIN door fully until fixed into place.
2. To close the CABIN door, push the release lever down and close the door.

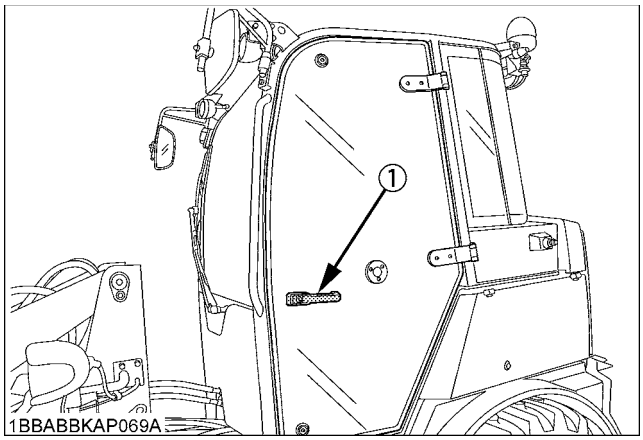

(1) Door knob (outside)

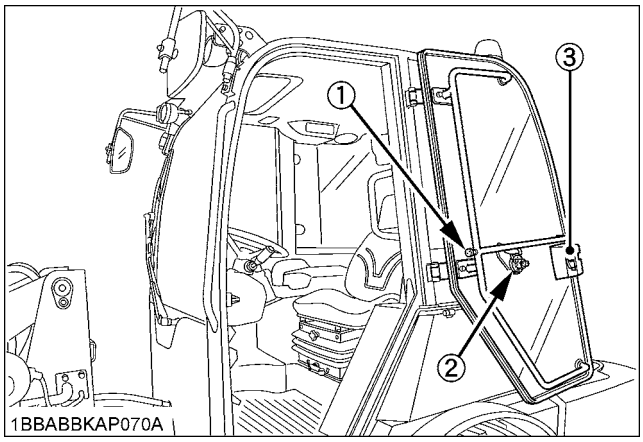

(1) Release lever
(2) Release button
(3) Door knob (inside)

3. When leaving the wheel loader, always lock the door.

■Opening/Closing of Side CABIN Window

1. Press the release button and pull the grip to unlock the side CABIN window and push it by release lever to open.
2. To close the side CABIN window, pull it by the release lever until the lock snaps in at the window frame.

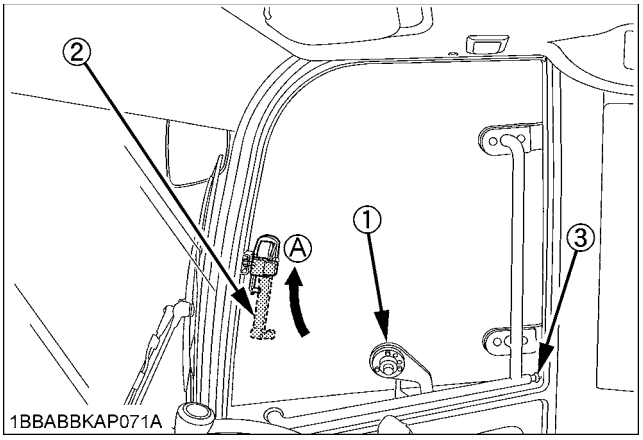

(1) Release button
(2) Grip
(3) Release lever
(A) Pull

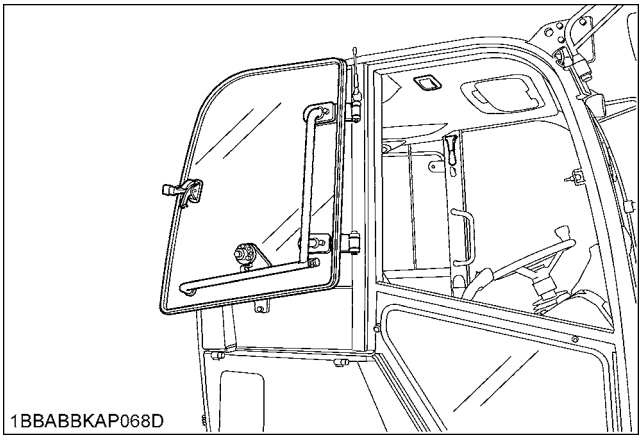

https://truckmanualshub.com/

■Emergency Hammer

WARNING

To avoid personal injury or death:

- **When breaking the window pane, close your eyes and cover them with an arm.**

Emergency hammer is for breaking window pane to escape from wheel loader should the window rail locking mechanism fail.

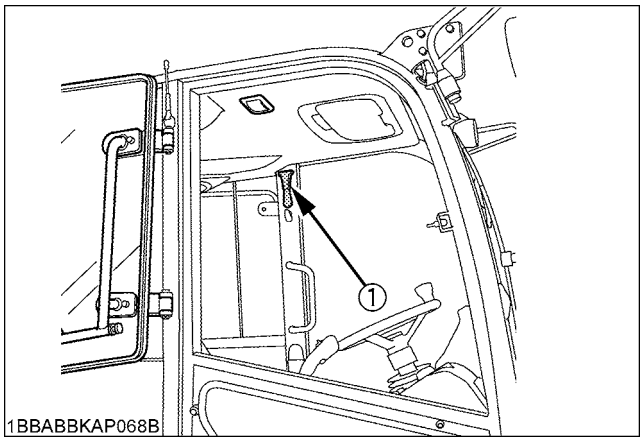

(1) Emergency hammer

■Sun visor

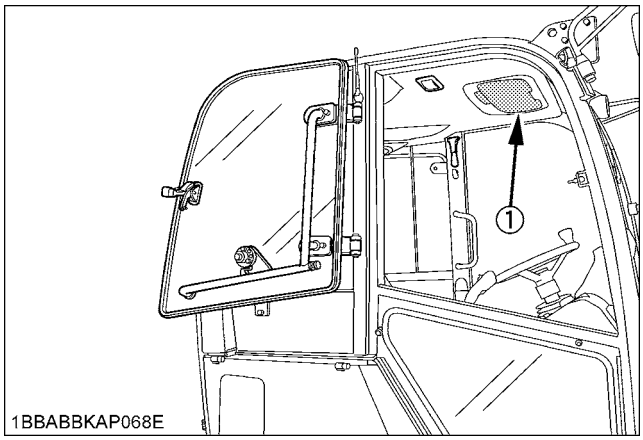

(1) Sun visor

AIR CONDITIONER

■Airflow

Air in the CABIN and fresh air introduced into the CABIN flow as shown below. Adjust the eleven air ports to obtain the desired condition.

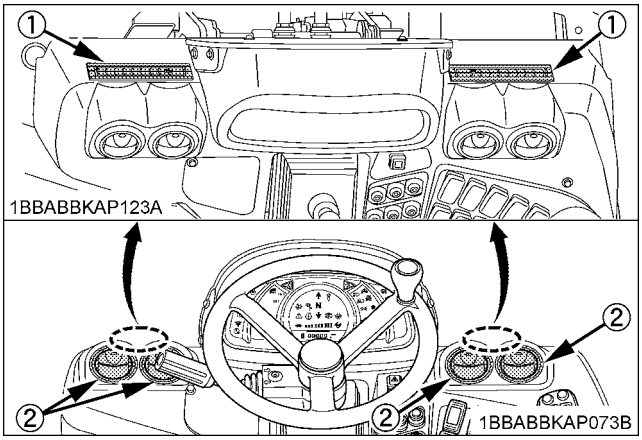

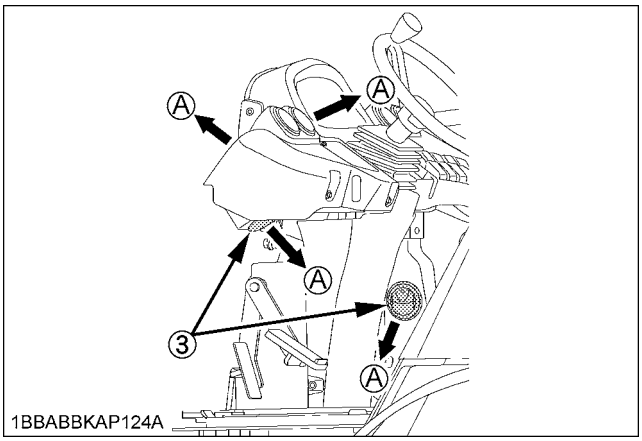

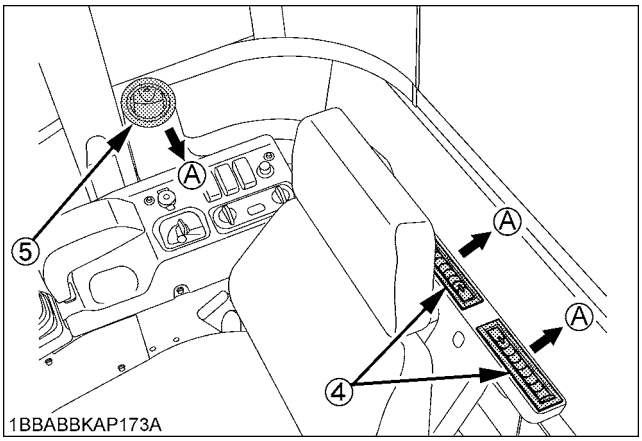

(1) Wind shield (for defrost of front window)
(2) Chest area
(3) Foot area
(4) Wind shield (for defrost of rear window)
(5) Chest area (rear)
(A) Air direction

https://truckmanualshub.com/

IMPORTANT :
- Do not pour water directly into the fresh air port while washing the vehicle.
- During the summer, turn the heater valve clockwise to close the valve.

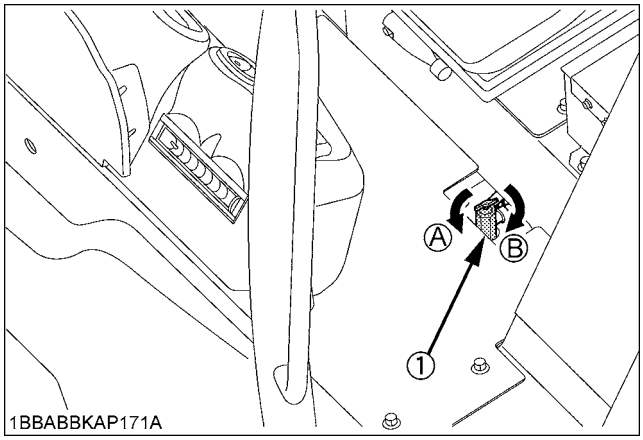

(1) Heater valve (A) Open
(B) Close

◆ **RECIRCULATION / FRESH AIR selection lever**

Turn this lever 90°, and "RECIRCULATION" and "FRESH AIR" can be switched each other.

FRESH AIR: Fresh air will flow into the CABIN. This is helpful when you work in dusty condition or if the glass windows get foggy.

RECIRCULATION: In-CABIN air will be recirculated. This is useful for cooling or heating the CABIN quickly or keeping it extra cool or warm.

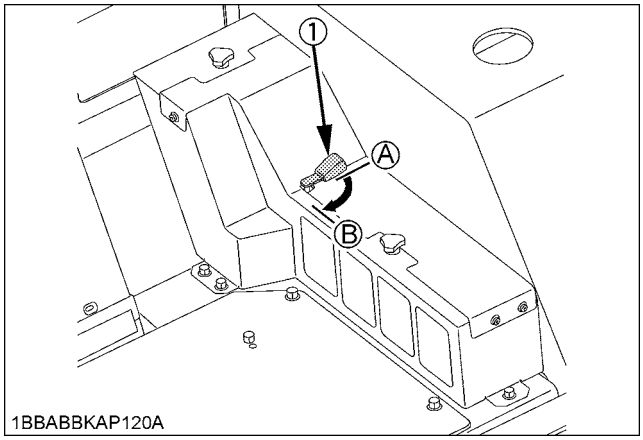

(1) Recirculation / fresh air selection lever
(A) "RECIRCULATION" position
(B) "FRESH AIR" position

◆ **How to change the filter**

There are 3 filters: 2 for RECIRCULATION and 1 for FRESH AIR. To replace these filters, loosen the knob bolts first and then remove the covers as shown below.

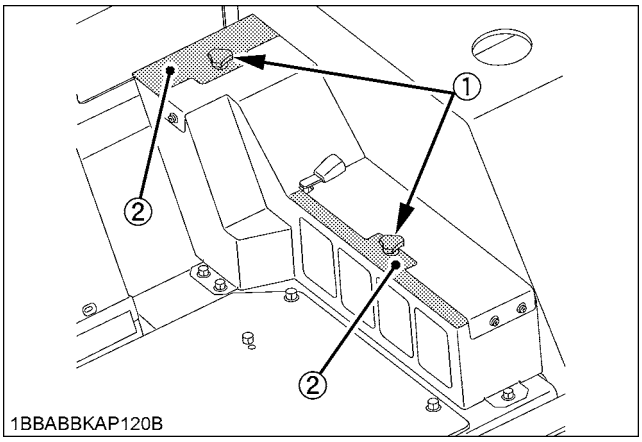

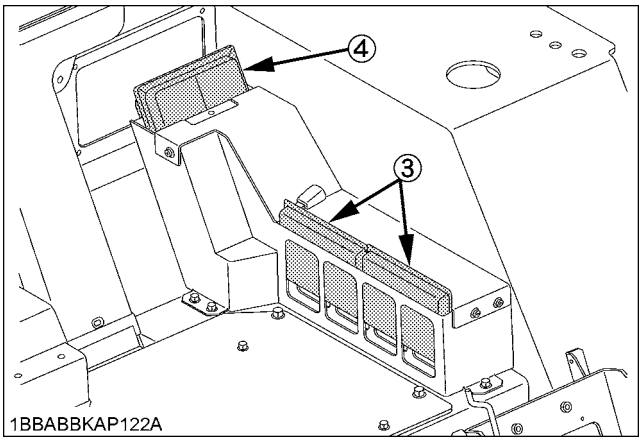

(1) Knob bolt
(2) Cover
(3) RECIRCULATION filter
(4) FRESH AIR filter

IMPORTANT :
- Do not use air conditioner without filters.

https://truckmanualshub.com/

■Air Control Vent

◆ **Dashboard air outlet**

The dashboard air outlets can be independently adjusted as required.

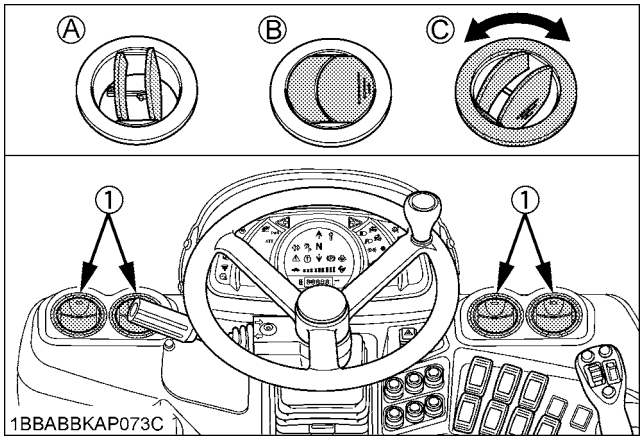

(1) Air outlets

(A) "OPEN"
(B) "SHUT"
(C) "TURN"

WARNING

To avoid personal injury or death:

- **Daily inspection**
  Have the wheel loader repaired immediately if any of the following malfunctions are discovered.
  (Such malfunctions may cause burns or injury. They may also cause engine seizure or other serious failure.)
  - **Scratches, cracks or swelling in water hoses.**
  - **Water leakage at water hose joints.**
  - **Missing or damaged water hose protective wrap or grommets.**
  - **Loose mounting bolts, damaged brackets.**
- **Do not touch the water hoses and the heater with your hand. You may get burned.**
- **If the window fails to defrost in extreme conditions or becomes cloudy when dehumidifying the CABIN, wipe off moisture with a soft cloth.**

IMPORTANT :

- Replace the water hoses every 2 years.
- Do not block all the air outlets of the air conditioner. A problem could occur.

■Control panel

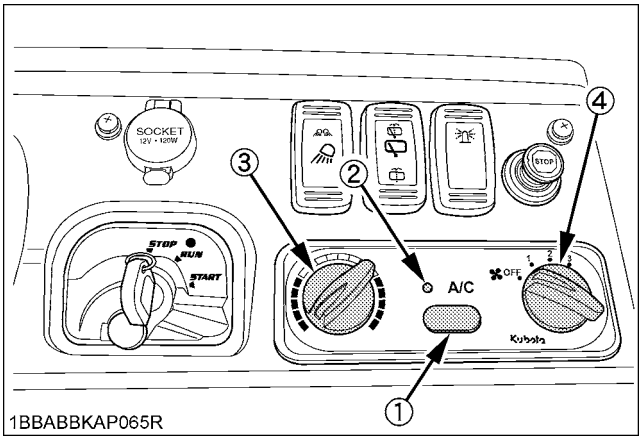

(1) Air conditioner switch
(2) Indicator light
(3) Temperature control dial
(4) Blower switch

◆ **Air Conditioner Switch and Indicator Light**

Push this switch to activate the air conditioner. An indicator light will light up when the switch is set to **"ON"**. Push switch again to turn air conditioner off, the indicator light will go off.

◆ **Temperature Control Dial**

Set this dial at the desired position to obtain the desired air temperature. Turn the dial to the left to obtain cooler air. Turn it to the right to obtain warmer air.

◆ **Blower Switch**

Air volume can be changed in 3 steps. At the **"3"** position, the largest air volume is obtained.

https://truckmanualshub.com/

■Operation

◆ Heating

1. Adjust the blower (1/2/3) switch and the temperature control dial to achieve the desired temperature level.

◆ Dehumidifying-heating

1. Press and turn on the air-conditioner switch.
2. Turn on the blower (1/2/3) switch.
3. Adjust the temperature control dial to achieve the desired temperature level.

NOTE :

- Be sure to close the door while the air conditioner is ON otherwise, you may overload the compressor.

◆ Cooling

1. Press and turn on the air-conditioner switch.
2. Turn on the blower (1/2/3) switch.
3. Adjust the temperature control dial to achieve the desired temperature level.

NOTE :

- If the vehicle has been not used for a long time (longer than 1 week) and the air conditioner will be not used, turn on the air conditioner switch under the engine idling. This is to protect the compressor.

◆ Defrosting or demisting

To defrost or demist the windshield, take the following steps.

1. Open the front air outlet and direct it to the windshield.
2. Set the blower switch and the temperature control dial to the **"3"** and **"WARM"** (rightmost) positions, respectively.

https://truckmanualshub.com/

OPERATION OF THE ENGINE

WARNING

To avoid personal injury or death:

- **To avoid the danger of exhaust fume (carbon monoxide) poisoning, do not operate the machine in a closed building without proper ventilation.**
- **Always start the engine from the operator's seat. Do not start the engine while standing next to the machine. Before starting the engine, sound the horn to get the attention of persons standing nearby.**

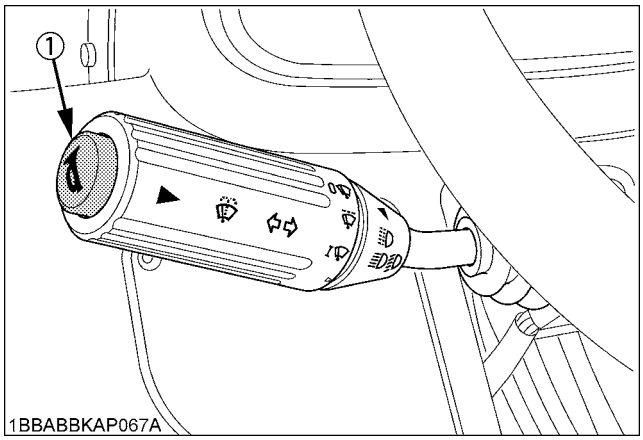

(1) Horn switch

IMPORTANT :

- Do not use starting fluid or ether.
- In order not to overload the battery and starter, avoid start-ups of more than 10 sec.
- When engine does not start in 10 sec., please wait 20 sec. or more, before attempting to restart.

EXHAUST AFTERTREATMENT DEVICES

WARNING

To avoid personal injury or death:

- **During Diesel Particulate Filter (DPF) regenerating operations, exhaust gases and exhaust filter components reach temperatures hot enough to burn people, or ignite or melt common materials.**
- **Keep machine away from people, animals or structures which may be susceptible to harm or damage from hot exhaust gases.**
- **During regeneration, white exhaust gases may be visible. Do not allow regeneration in a non ventilated garage or confined area.**
- **During regeneration, do not leave the machine.**

■Diesel Oxidation Catalyst and Diesel Particulate Filter (DPF) Muffler

The Diesel Oxidation Catalyst and Diesel Particular Filter (Hereinafter called DPF) serves to reduce hydrocarbons, carbon monoxide and other toxic gases, all of which are contained in diesel engine emissions, to harmless carbon dioxide and water. The DPF also traps Particulate Matter (PM).

To meet the emission regulations in your country, the DPF is installed on your wheel loader.

Be sure to read this operator's manual before running in your machine.

It is imperative for the machine owner and operator to handle the DPF in a safe and environmentally responsible manner.

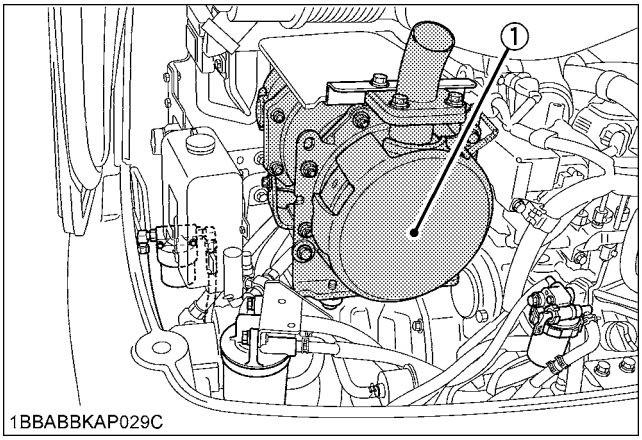

(1) Diesel Particulate Filter (DPF)

https://truckmanualshub.com/

NOTE :
- When the DPF has trapped a specific amount of particulate matter (PM), the engine computer starts the process of regeneration or burning of soot collected by the filter.
  This burning process is called regeneration.

■Handling Points

◆ **Fuel**

Be sure to use Ultra Low Sulfur Fuel (S15).

IMPORTANT :
- By temperatures over -5°C (23°F), use No.2-D diesel fuel, when temperatures are under -5°C (23°F), use No.1-D diesel fuel.
- Use of diesel fuel other than Ultra Low Sulfur Fuel may adversely affect the engine and DPF performance.
  Use of fuels other than Ultra Low Sulfur Fuel (S15) may not meet regulations for your region.

◆ **Engine oil**

Use DPF-compatible oil (CJ-4 or CK-4) for the engine.

IMPORTANT :
- If any engine oil other than CJ-4 or CK-4 is used, the DPF may become clogged earlier than expected and the fuel economy may drop.

■DPF Regeneration Process

This system has "Parked Regeneration" in which the DPF regenerates while the machine is parked and "Automatic Regeneration" which the DPF can regenerate automatically while working.
When key switch is turned ON, the machine will be in the "Auto Regeneration Mode". By pressing the DPF switch, the mode can be switched to the "Inhibit Mode" or "Parked Regeneration Mode".
Choose from them according to your job condition, usage environment and other factors.

◆ **Auto Regeneration Mode;**

The machine has been set to Auto Regeneration Mode by default.
When an amount of PM more than specified has built up in the DPF muffler, the DPF is automatically regenerated whether the machine is in motion or parked.
For jobs not affected by hot gases emitted out of the DPF muffler during regeneration, the Auto Mode is advisable.

◆ **Parked Regeneration Mode;**

When an amount of PM more than specified has built up in the DPF, the indicator starts flashing to notify the operator that Regeneration is required. Therefore, park the machine in a safe place and carry out the regeneration.

◆ **Inhibit Mode;**

Press the inhibit side of the DPF switch and the Inhibit Mode is activated.
Even if an amount of PM more than specified has built up in the DPF muffler, the DPF does not regenerate. When the regeneration is needed, the indicator starts flashing to notify the operator to active either Auto Regeneration Mode or conduct a Parked Regeneration Mode, once in a safe area.
For jobs that are done in poorly ventilated area or in area that may affect plants and animals because of hot gases that will be emitted, the Inhibit Mode is recommended.

https://truckmanualshub.com/

Operating Procedure for Auto Regeneration Mode

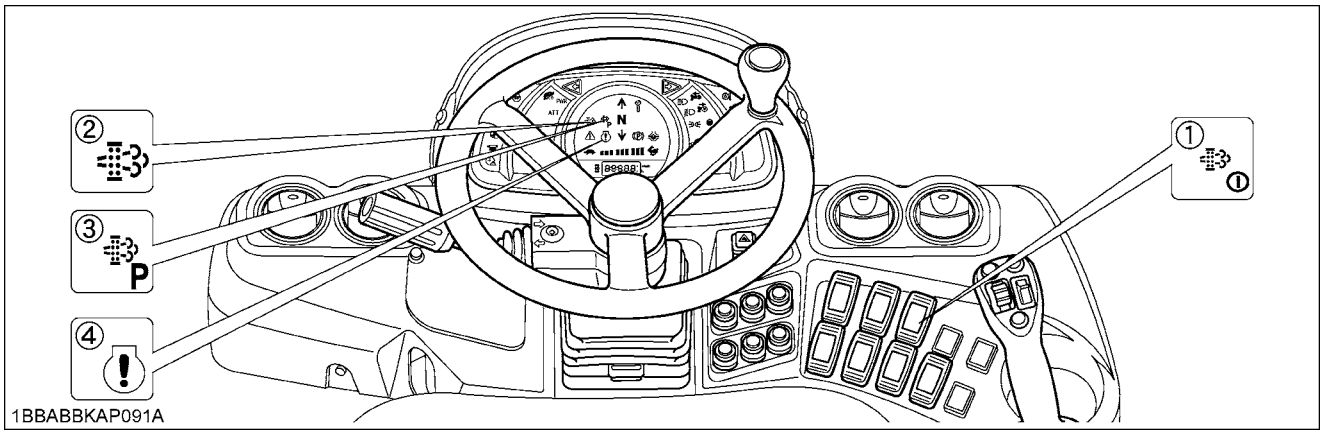

(1) DPF switch
(2) Regeneration indicator
(3) Parked regeneration indicator
(4) Engine warning indicator

■Regeneration Operating Procedure

1. The machine has been set to Auto Regeneration Mode by default..

Switch lamp OFF: Auto Regeneration Mode activated.
Switch lamp ON: Inhibit Mode activated.

2.

When the regeneration indicator starts flashing:
A specific amount of PM has built up in the DPF.
Continue to operate the wheel loader, and the regeneration process will begin automatically, make sure you are working in a safe area as DPF and exhaust temperature will rise.

NOTE :
- Even if the Auto Regeneration Mode is selected, DPF regeneration may not begin because system requirements have not been satisfied.
- If the engine load is light, regeneration may not begin.

3.

When the regeneration conditions are satisfied:
The regeneration indicator stops flashing and remains constant "ON".
The regeneration starts automatically whether the wheel loader is in motion or stationary.
When the regeneration cycle has completed, the indicator turns "OFF".

NOTE :
- If you press the inhibit side of the DPF switch during regeneration, the regeneration cycle will be interrupted. (The Inhibit Mode is now activated.
- During regeneration, if the engine rpm is lowered, the regeneration cycle may be interrupted.

https://truckmanualshub.com/

■PM Warning Level and Required Procedures

During Auto Regeneration Mode when the PM level has built up in the DPF, the regeneration cycle will begin automatically. If the regeneration cycle is interrupted or the regeneration conditions are not satisfied, the buzzer starts sounding and the indicator display changes in response to the PM level in order to prompt the operator to perform the required procedure listed below.

IMPORTANT :

- Once the regeneration level has been reached, immediately perform the required procedure for regeneration. Interrupting the regeneration cycle or continued operation by ignoring the warning signs may cause DPF and engine damage.

Auto Regeneration Mode		
DPF system status		Required procedure
PM warning level: 1 Buzzer: every 60 seconds sounding	The regeneration indicator starts flashing.	A specific amount of PM has accumulated in the DPF muffler. Continue to work the machine to raise the DPF temperature.
	The regeneration indicator will stop flashing and remain "ON" constantly.	The regeneration cycle begins until cycle is complete then the indicator will turn "OFF".
PM warning level: 2 Buzzer: Sounding every 60 seconds	If the regeneration cycle was interrupted or conditions are not satisfied for regeneration then DPF system in now in Level 2.	
	The regeneration indicator starts flashing. The parked regeneration indicator starts flashing.	Start the regeneration, referring to "PM warning level: 1" above. Now the parked regeneration indicator starts flashing, and the parked regeneration can also be started. If the regeneration conditions are not met, perform the parked regeneration. ● For the procedure, refer to "Operating Procedure for Parked Regeneration".
PM warning level: 3 Buzzer: Constantly Sounds Engine output: 50% E:9001	If the regeneration fails in the warning level 2:	
	The regeneration indicator starts flashing. The engine warning indicator starts flashing. The parked regeneration indicator starts flashing.	Immediately discontinue working the machine and begin the parked regeneration cycle process. ● For the procedure, refer to "Operating Procedure for Parked Regeneration". ● At this PM warning level, the Auto Regeneration Mode does not function. If the machine is operated further, then regeneration will be disabled.
PM warning level: 4 Buzzer: Constantly Sounds Engine output: 50% E:9003	If the parked regeneration is interrupted or the machine is continuously operated in the warning level 3:	
	The engine warning indicator remains constantly "ON".	Immediately move the machine to a safe place and place in park, turn "OFF" engine. Contact your local KUBOTA Dealer. ● At this level, never continue to operate the machine otherwise damage may result to the DPF and engine.

https://truckmanualshub.com/

Operating Procedure for Parked Regeneration

1. Park the machine in a safe area away from buildings, people, and animals.
2. Push the parking brake switch.
3. **[R530]**
   Lock the control lever.
   Set the AUX port lever to neutral position.
   [R630]
   Activate the hydraulic lock switch.
4. Make sure the Inhibit mode is disabled.
5. Return the engine rpm to the idle speed.
6. Once the parked regeneration switch lamp starts flashing.
7. Press the parked regeneration side of the DPF switch to start the regeneration cycle.
   (The switch light will remain "ON" constantly during the cycle.)
8. The engine rpm will automatically rise, and the regeneration process will begin.
9. Make sure the indicators stay "ON" while regenerating the DPF. They turn "OFF" when the cycle is complete.

During the regeneration cycle, do not touch the above levers, and switches, nor change the engine rpm. Otherwise, the regeneration will be interrupted. Never leave the machine when parked regeneration process is activated. Once Regeneration process is complete, the machine may be moved and returned to work.

NOTE :

- If the parked regeneration cycle is interrupted, the engine rpm is fixed at the idling level for about 30 seconds. For this period, keep the accelerator pedal at the idle position. Do not move them. They will function again in 30 seconds.

https://truckmanualshub.com/

Operating Procedure for Inhibit Mode

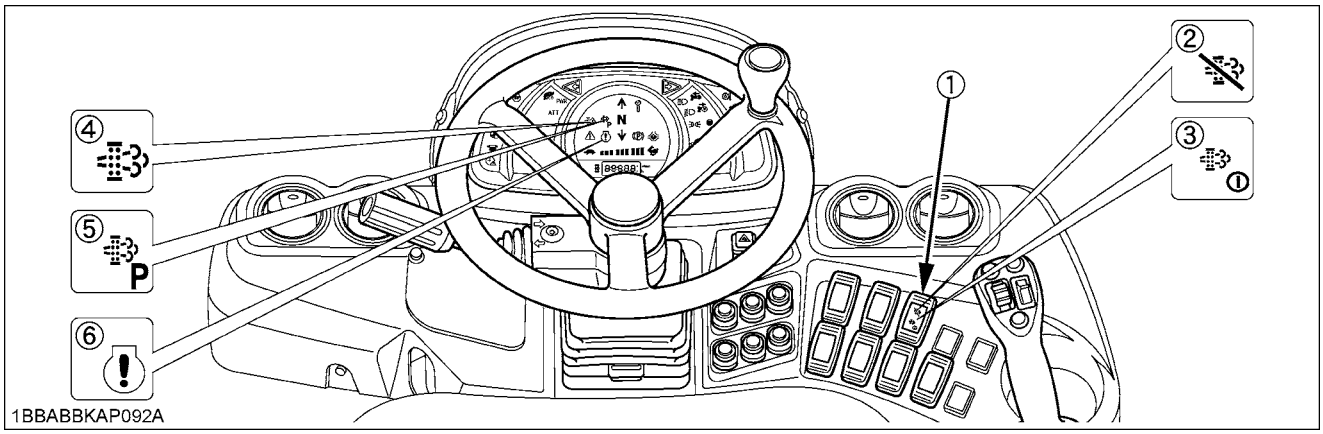

(1) DPF switch
(2) Inhibit lamp
(3) Parked regeneration switch
(4) Regeneration indicator
(5) Parked regeneration indicator
(6) Engine warning indicator

■Regeneration Operating Procedure

1. The machine has been set to Auto Regeneration Mode by default..

Switch lamp ON: Inhibit Mode activated.
Switch lamp OFF: Auto Regeneration Mode activated.

2.

When the parked regeneration indicator starts flashing, follow the "Operating Procedure for Parked Regeneration" procedure.

https://truckmanualshub.com/

■PM Warning Level and Required Procedures

In the Inhibit Mode, the buzzer starts sounding and the indicator display changes in response to the PM level in order to prompt the operator to perform the required procedure listed below.

IMPORTANT :

- Once the regeneration level has been reached, immediately perform the required procedure for regeneration. Interrupting the regeneration cycle or continued operation by ignoring the warning signs may cause DPF and engine damage.

Inhibit Mode		
DPF system status		Required procedure
PM warning level: 1 Buzzer: Not sounding	The regeneration indicator starts flashing.	A specific level of PM has built up in the DPF muffler.
PM warning level: 2 Buzzer: Not sounding	The regeneration indicator starts flashing. Parked regeneration indicator starts flashing.	Move the machine to a safe area, then follow the "Operating Procedure for Parked Regeneration". At PM warning levels range from 1 to 2, it is also possible to change DPF switch to auto regeneration mode then perform regeneration. Refer to "Operating Procedure for Auto Regeneration Mode".
PM warning level: 3 Buzzer: Constantly Sounds Engine output: 50% E:9001	If the parked regeneration cycle is interrupted or the machine is continuously operated in the PM warning level 2:	
	The regeneration indicator starts flashing. The engine warning indicator starts flashing. The parked regeneration indicator starts flashing.	Immediately stop working the machine, move the machine to a safe area, then follow the "Operating Procedure for Parked Regeneration". If the machine is operated further and the operator ignores the warning signs, then regeneration will be disabled.
PM warning level: 4 Buzzer: Constantly Sounds Engine output: 50% E:9003	If the regeneration cycle is interrupted or the machine is continuously operated ignoring the warning signs, in the PM warning level 3:	
	The engine warning indicator remains constantly "ON".	Immediately move the machine to a safe place and place in park, turn "OFF" engine. Contact your local KUBOTA Dealer. ● At this level, never continue to operate the machine otherwise damage may result to the DPF and engine.

https://truckmanualshub.com/

■Tips on DPF Regeneration

- **Operation**
  The higher in speed or load the engine operates, the higher the exhaust temperature rises. As a result, particulate matter (PM) inside the DPF is consumed, therefore the regeneration process occurs less frequently over time.
  The lower in speed or load the engine operates, the lower the exhaust temperature. Accordingly, less particulate matter (PM) inside the DPF is consumed, therefore more accumulation of PM will occur, which requires frequent regeneration, therefore avoid prolonged idling if possible.

- **Necessary conditions for "Regeneration"**
  When conditions below are all satisfied, regeneration will start. However, if even one condition is deviated during the process, the regeneration will be interrupted.
  (1) The engine coolant temperature.
  (2) The DPF temperature.
  (3) The engine speed is around 1200 rpm or higher.

- Usually it takes 15-20 minutes to complete the regeneration cycle.
  Actual regeneration time may depend on ambient temperature, exhaust temperature and engine speed.

- It is recommended to do the regenerating while the engine is warm.

- Do not unnecessarily start and interrupt the regeneration process. Otherwise, a small amount of fuel becomes mixed with the engine oil, which degrades the oil quality.

- While the DPF is being regenerated, the engine air flow rate is automatically limited to keep up the exhaust temperature. Because of this the engine may sound differently, this is normal for this engine.

- Just after the regeneration has ended, the DPF muffler remains hot. It is advisable to keep the engine running for about 5 minutes to allow cooling of the exhaust components.

STARTING THE ENGINE

[R530]

1. Lock the control lever and the auxiliary port lever.

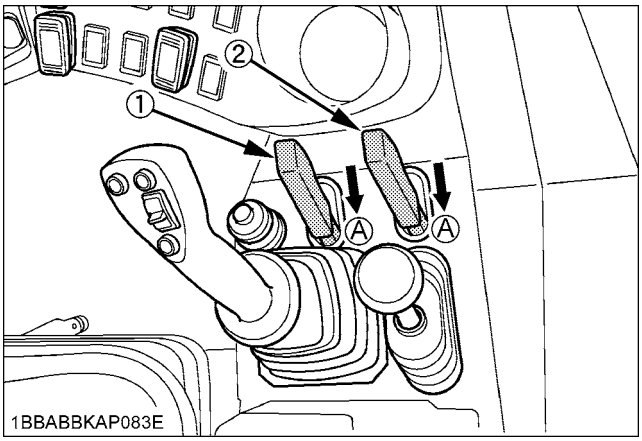

(1) Control lever lock *(A) "LOCK"*
(2) Auxiliary port lever lock

[R530]

[R630]

1. Activate the hydraulic lock switch by pressing forward.

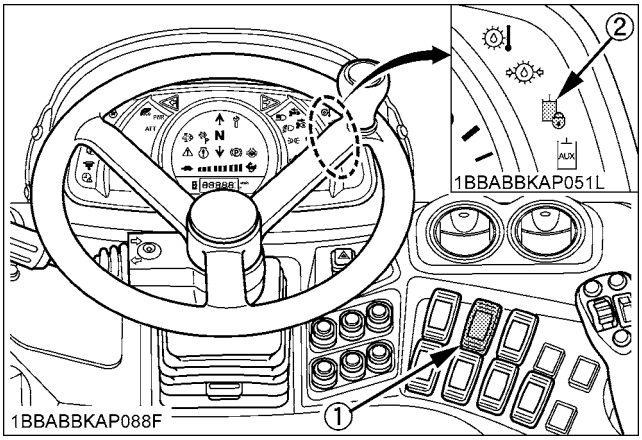

(1) Hydraulic lock switch
(2) Hydraulic lock indicator

[R630]

https://truckmanualshub.com/

2. Insert the key into the starter switch and turn it to the **"RUN"** position. The glow plug indicator will light up while the engine is preheated and will go out automatically after preheating is finished.

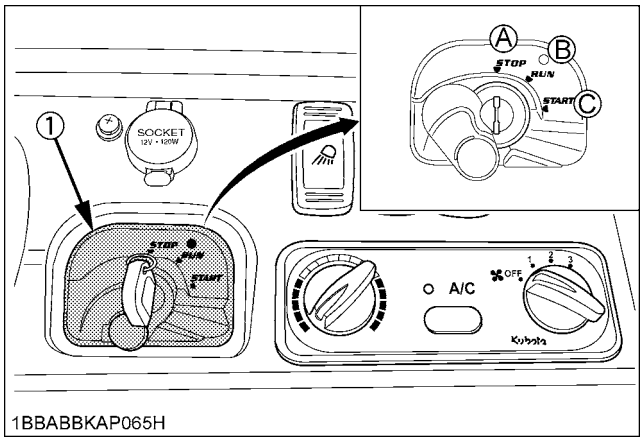

(1) Starter switch

(A) "STOP"
(B) "RUN"
(C) "START"

3. Make sure the "" and "" marks appear on the instrument panel.
   If not, the system is malfunctioned. Contact your local dealer.

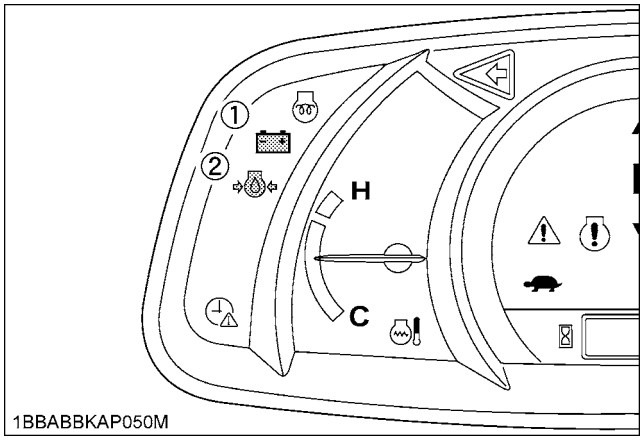

(1) Battery charge indicator
(2) Engine oil pressure warning indicator

4. Turn the key to the "START" position and release after the engine has started.
5. **[R530]**
   Check if all warning indicators (except parking brake indicator) have gone out. Should a warning indicator still be lit up, stop the engine then remove the key and check for the cause.
   [R630]
   Check if all warning indicators (except hydraulic lock indicator and parking brake indicator) have gone out. Should a warning indicator still be lit up, stop the engine then remove the key and check for the cause.

IMPORTANT :
- **[R530]**
  When the auxiliary port lever is not in the neutral position, the engine does not start.
- The starter motor consumes large current. Avoid running it longer than 10 seconds continuously.
  If the engine fails to start within 10 seconds, once set the key to the "STOP" position, wait for 20 seconds or longer, and repeat the above step 2 through 5.
- If the battery is dead and must be connected to another battery with jumper cable, be sure to use a 12V battery. Never use any 24V batteries.

■Checkpoints after Starting the Engine

After starting the engine, but before starting operation, check the following points:

1. The engine idle allows the engine lubricant to warm up and penetrate every part of the engine.

NOTE :
- This idling is usually called "Warm-up".

2. Once the engine has warmed up, check:
   - the "Engine oil pressure warning indicator" has gone out.
   - the "Battery charge indicator" goes out when engine speed is increased.
   - the color of the exhaust is normal and no abnormal noises or vibrations are heard or felt.
   - no fluid is leaking from pipes or hoses.

◆ **Should any following conditions occur, stop the engine immediately.**
- The engine rpm's increases or decreases suddenly.
- Sudden abnormal noises are heard.
- Exhaust is black.
- Warning indicator for engine oil lights up during operation.

IMPORTANT :
- In these cases, the machine must be checked and serviced by your local KUBOTA dealer.

https://truckmanualshub.com/

STARTING THE ENGINE UNDER COLD CONDITIONS

Start the engine in the following manner;

1. Turn the starter switch to the "RUN" position (glow position) and hold until the indicator lamp has gone out.
2. Move the starter switch to the "START" position; to crank and start engine.
3. Release the starter switch after the engine has started; it will automatically return to the "RUN " position.

IMPORTANT :

- Let the engine warm up after start-up for approx. 10 minutes under no load conditions. If the hydraulic fluid temperature is too low, the operations or the function of the pressure sensors will be affected.
  Do not operate the machine under full load before the engine has warmed up enough.

STOPPING THE ENGINE

WARNING

To avoid personal injury or death:

- **Do not keep the bucket or attachments in the lifted position, as a person could accidentally touch the levers and cause serious accidents.**
- **Place the machine on the flat ground.**

1. After slowing the engine to idle, turn the key to "STOP" position.
2. Remove the key.

IMPORTANT :

- Do not stop the engine by shutting down the battery power directly with a battery switch or by other means. Doing so may cause failure or malfunction.

■Engine Stop Knob

IMPORTANT :

- Be sure to return the stop knob to former position after the engine stops.

The engine stops when the starter key is turned off. If the engine does not stop, pull the stop knob to stop the engine.

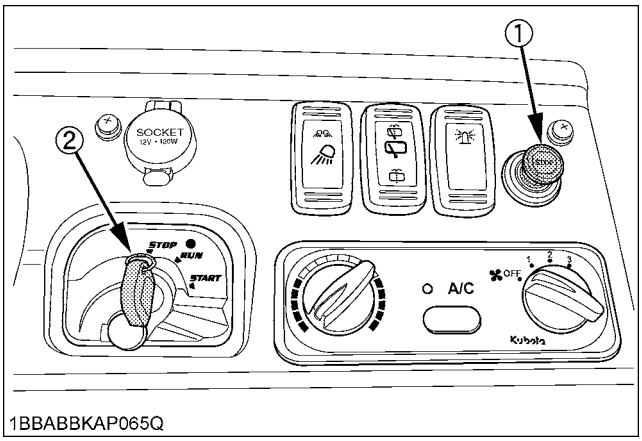

(1) Stop knob
(2) Starter key

https://truckmanualshub.com/

STARTING WITH AN AUXILIARY BATTERY

WARNING

To avoid personal injury or death:

- **Battery gases can explode.**
  Do not smoke and keep sparks and flames away.
- **Do not start the engine with an auxiliary battery if machine battery is frozen.**
- **Do not connect the black jumper cable to the negative (-) terminal of the machine battery.**

■Observe Following Guidelines when Starting with an Auxiliary Battery

1. Bring the helping machine with the same battery voltage as near as possible to the machine.
   THE MACHINES MUST NOT COME IN CONTACT WITH EACH OTHER.
2. Bring the levers and pedal of both machines in the neutral position.
3. Wear eye protection and rubber gloves.
4. Ensure the vent caps are securely in place (if equipped).
5. Connect the terminal of the red jumper cable with the plus (+) terminal of the low battery and connect the other end of the cable to the plus (+) terminal of the auxiliary battery.
6. Connect the black negative cable to the minus (-) terminal of the auxiliary battery.
7. Connect the other end of the black cable (coming from the auxiliary battery) to the conductive part of the machine frame as far away as possible from the low battery.
8. Start the engine of the helping machine and let it run for a while. Start the machine with the low battery.
9. Disconnect the jumper cables in the reverse sequence.

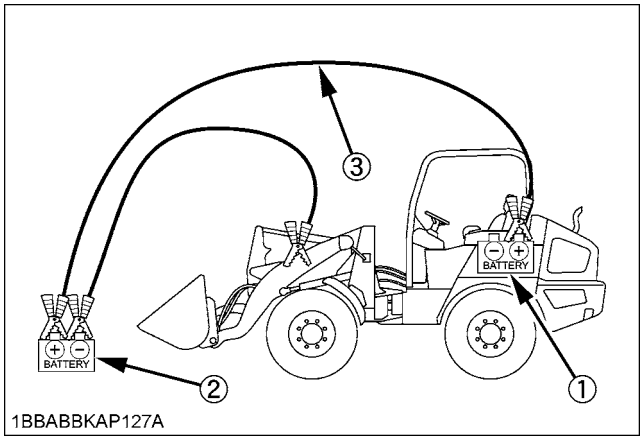

(1) Low battery
(2) Auxiliary battery
(3) Jumper cables

IMPORTANT :

- This machine has a negative (-) ground 12 Volt starting system.
- Only use the same voltage when using an auxiliary battery.
- Using a higher voltage will cause serious damage to the electrical system. When using an auxiliary battery, only the compatible (same) voltage is permissible.

https://truckmanualshub.com/

OPERATION OF THE MACHINE

WARNING

To avoid personal injury or death:

- **The safety instructions (page ⚠-) must be followed.**
- **The wheel loader may only be operated according to its approved use (page ⚠-).**
- **The wheel loader may only be operated by trained personnel (page ⚠-).**

GUIDING THE OPERATOR

- If the operator's working and driving area is obscured, the operator must be supported by a guide.
- The guide must be capable of performing this kind of work.
- Before starting work, the guide and the operator must agree the necessary signals.
- The guide's position must be clearly visible by the operator.
- The operator must stop the wheel loader immediately if the eye contact to the guide is interrupted.
  →As a rule, either the wheel loader or the guide may move, never both at once!

WORKING IN THE VICINITY OF OVERHEAD POWER LINES

When working with the wheel loader in the vicinity of overhead power lines and tram lines, a minimum distance as specified in the following table must be maintained between the wheel loader and its attachments and the power line.

Rated voltage [V]		Safe distance [m] (in.)
	up to 1 kV	1.0 (3 ft 3 in.)
over 1 kV	up to 110 kV	3.0 (9 ft 10 in.)
over 110 kV	up to 220 kV	4.0 (13 ft 1 in.)
over 220 kV	up to 380 kV or when rated voltage is unknown	5.0 (16 ft 5 in.)

If safe distances can not be maintained, the power lines must be switched off in coordination with their owner or provider and secured against making them live again.
When approaching overhead power lines, any possible movements of the wheel loader must be taken into consideration.
Unevenness of the ground or sloping the wheel loader can reduce the safe distance.
Wind can cause the overhead power lines to sway, thus reducing the safe distance.

In case of a power cross-over, leave the danger zone with the wheel loader, if possible, by taking suitable measures. If this is not possible, do not leave the operator's place, warn any approaching persons of the danger, and have the power switched off.

RUNNING-IN OF THE MACHINE

The operation and care of the new machine influences its life span. Your new machine has been carefully checked and tested before leaving the factory. In spite of this, all movable components must run-in during the first 50 work hours. Do not work with full rpm's and full loads during this period. It is most important to run-in your machine properly in order to achieve its full performance and longevity. During the running-in, the following points should be adhered to in all cases.

■Do not Work with Full Engine Rpm's or Full Loads during the First 50 Working Hours

- Let the engine warm up sufficiently in the cold season.
- Do not let the engine rev-up more than necessary.

■Oil Change in the Run-in Stage

The lubrication oil plays a specific and important role during the run-in phase of the machine. The numerous movable parts are not yet run-in, so many fine metal particles can be generated and may cause damage and shorten the life of many components. Pay attention to the oil-change intervals and complete them sooner than later. See "MAINTENANCE INTERVALS" in "MAINTENANCE" section for more details on the oil-change intervals.

https://truckmanualshub.com/

STARTING

WARNING

To avoid personal injury or death:

- **Mount the machine and dismount the machine only at locations that have steps and/or handholds.**
  Before you mount the machine, clean the steps and the handholds.
- **Start engine only from the operator's seat.**
  Never short across the starter terminals or across the batteries.
- **Inspect the condition of the seat belt and the mounting hardware.**
  Replace any parts that are worn or damaged.
  Do not use a seat belt extension on a retractable seat belt.
- **Adjust the seat so that full pedal travel can be achieved with the operator's body against back of the seat.**
- **Make sure the machine is equipped with a lighting system that is adequate for the job conditions.**
  Make sure all machine lights are working properly.
- **Before you start the engine and before you move the machine, make sure that no one is underneath, or on, or close to the machine.**

■Adjusting the Operator's Seat

WARNING

To avoid personal injury or death:

- **Make sure that the seat is completely secured after each adjustment.**

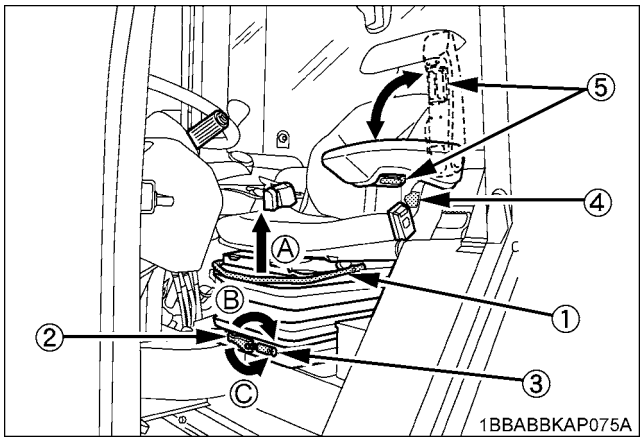

(1) Horizontal seat adjustment lever
(2) Spring adjustment toggle
(3) Weight indicator
(4) Backrest adjustment lever
(5) Armrest adjustment dial

(A) Pull up
(B) Turn clockwise
(C) Turn anticlockwise

◆ **Horizontal seat adjustment**
Pull the horizontal seat adjustment lever up (A) and move the seat to the desired position by moving it forward or back, then release the lever.

◆ **Seat height adjustment**
The seat height can be adjusted to several stop positions. To adjust the seat height, slowly raise the seat until it automatically engages in the next stop. When the seat is raised over the highest stop, it will be lowered automatically to the lowest position again.

IMPORTANT :

- Adjust the seat height in relation to its horizontal position so that the foot controls can be operated safely.
- Make sure that the seat adjuster is engaged.

◆ **Spring adjustment (operator's weight)**
The seat can be set to the weight of the operator using the spring adjustment toggle. Refer to the weight indicator when choosing your setting.
Turning the grip clockwise (B) increases spring tension (heavy-weight operator), turning the grip anticlockwise (C) reduces spring tension (light-weight operator).
Adjust the seat so that a comfortable cushioning is achieved.

◆ **Backrest adjustment**
Take the load off the backrest and pull up the backrest adjustment lever. Set the backrest to the desired sitting position and release the lever.

IMPORTANT :

- The backrest should be adjusted so that the operator can safely operate the control levers with the back resting completely on the backrest.

◆ **Armrest adjustment**
Take the load off the armrest and rotate the armrest adjustment dial and move the armrest to the desired angle.

https://truckmanualshub.com/

■Seat Belt

WARNING

To avoid personal injury or death:

- **Always use the seat belt with a ROPS/FOPS protection structure. Adjust the seat to the optimal position and buckle up.**
- **Always fasten the seat belt securely before starting the engine.**

◆ **Fastening the seat belt**

1. Pull the seat belt from the retractable (right) side of the seat.
2. Insert the fixture into the socket at the left side of the seat until it clicks deep into position.

◆ **Releasing the seat belt**

1. Press the red button of the socket to release the seat belt.
2. The seat belt reels itself and gets retracted to the right side.

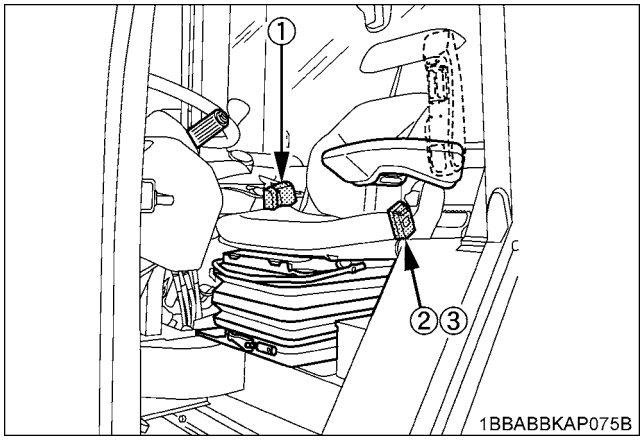

(1) Seat belt
(2) Socket
(3) Button

■Tilt Steering Adjustment

WARNING

To avoid personal injury or death:

- **Do not adjust the steering wheel while the machine is in motion.**

Press down the steering wheel tilt lever, to release the lock so the steering wheel can be adjusted to desired position.

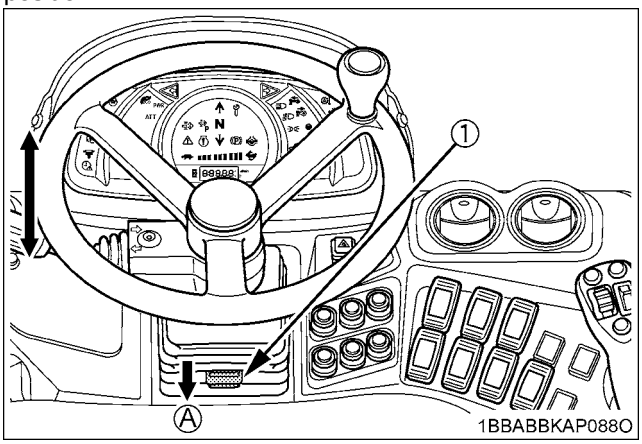

(1) Steering wheel tilt lever *(A) "PRESS DOWN"*

https://truckmanualshub.com/

[R630]

SELECTION OF THE DRIVING MODE

This machine has 4-type driving mode.
According to the type of job or your operating style, choose the best mode.

◆ **Normal mode (N mode)**
This mode is usually intended for general works. The traveling force and the digging force are well balanced for high performance. Normal mode is best suited for V shape loading, loading and carrying, sand/gravel gathering and similar jobs.

◆ **Power mode (P mode)**
The mode is used for digging and similar works that require greater traction force. In other words, the mode is highly applicable for excavating, piling, etc.

◆ **ECO mode (E mode)**
This mode is suitable for light-duty jobs such as material handling. With the engine rpm kept at low level, better fuel economy is achieved. The machine proves itself in traveling with any handling material. Even in the Eco mode, for example, the heavier the traveling load becomes on slopes, the higher the engine speed rises. In this way, the machine speed is kept at constant level.

◆ **Attachment mode (ATT mode)**
The ATT mode proves best with attachments, like sweepers and mowers, which need enough hydraulic flow but low traveling speed. In this mode, the hydraulic flow rate and traveling speed can be independently controlled. Turn on the engine speed (AUX flow) control dial on the right side of the operator's seat, and the engine rpm (namely, hydraulic flow rate) becomes adjustable. Using the speed control button, the traveling speed is presettable in 5 steps: 1.5 km/h (0.93 mph)., 2.0 km/h (1.24 mph)., 3.0 km/h (1.86 mph)., 4.0 km/h (2.48 mph). and 4.6 km/h (2.85 mph) at the max. engine rpm. Speeds from a start to maximum can be controlled with the accelerator pedal.

NOTE :
- Engine speed (AUX flow) control dial is available in case of only ATT mode.

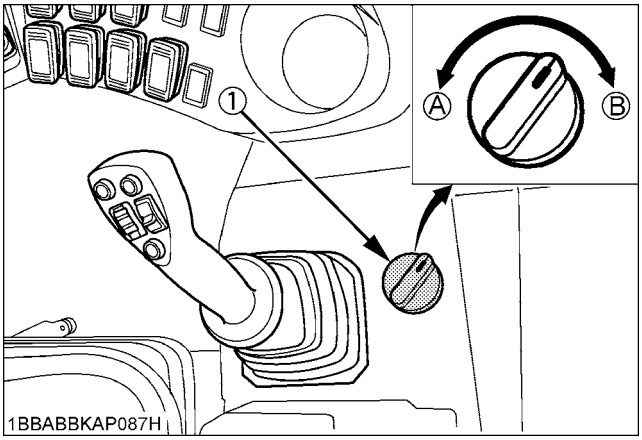

(1) Engine speed (AUX flow) control dial *(A) Min.* *(B) Max.*

https://truckmanualshub.com/

■Setting Procedure

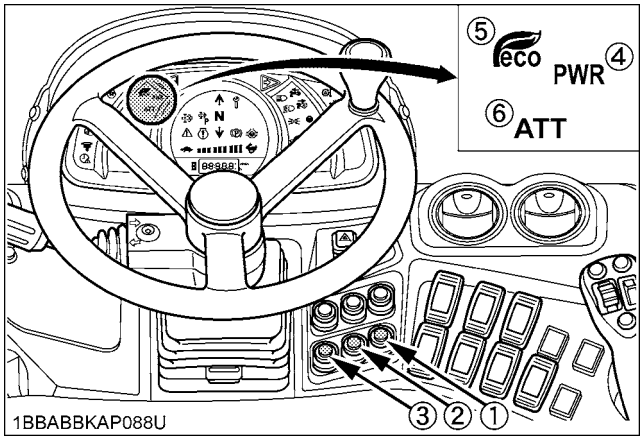

(1) Power mode switch
(2) ECO mode switch
(3) Attachment mode switch
(4) Power mode indicator
(5) ECO mode indicator
(6) Attachment mode indicator

◆ Normal mode (N mode)

When the engine gets started, the machine is always in the N mode.

◆ Power mode (P mode)

Press the P mode switch, and the power mode is selected. Now the P mode indicator lights up. Press it again, and the machine returns to the N mode and the P mode indicator goes out.

NOTE :
- It is possible to change directly from the Eco mode to the P mode.

◆ ECO mode (E mode)

Press the ECO mode switch, and the Eco mode is selected. Now the ECO mode indicator lights up. Press it again, and the machine returns to the N mode and the ECO mode indicator goes out.

NOTE :
- It is possible to change directly from the P mode to the Eco mode.

◆ Attachment mode (ATT mode)

Press the ATT mode switch, and the Attachment mode is selected. Now the Attachment mode indicator lights up. Press it again, and the machine returns to the N mode and the Attachment mode indicator goes out.

IMPORTANT :
- Before selecting the ATT mode, be sure to stop the machine and get it in the neutral position. If the direction switch is in the forward or backward position, the ATT mode is not achievable.

[R630]

TRAVELING

■Starting

WARNING

To avoid personal injury or death:
- **Fasten seat belt before operating the machine**
- **When transporting a load, keep the loader bucket as low as possible to avoid tip over. Be extra careful when working on inclines.**
- **Before operating, check operating area. Make sure no bystanders are near the machine. Sound the horn before moving.**

WARNING

To avoid personal injury or death:
- **To start the machine on a slope, press the accelerator pedal gradually while releasing the inching pedal so that the machine does not move backwards.**
- **Immediately after starting, check that the brake and the steering wheel work normally.**
- **If a tire has blown, the machine may slip or turnover. To avoid turnover, do not brake or steer hard, brake slowly to stop the machine gradually.**

1. **[R530]**
   Release the control lock lever.
   [R630]
   Deactivate the hydraulic lock switch.
2. Move the control lever to lift the bucket about 40 cm (16 in.) above the ground and set it in the proper position for travel.
3. Press the parking switch for releasing the parking brake. When the parking brake is released, the light on the parking switch comes off.
4. Set the direction switch to the desired position, gradually increase the engine rpm by pressing the accelerator pedal and the machine will move.

https://truckmanualshub.com/

■Accelerator Pedal

This pedal controls engine rpm. The more the pedal is pressed, the greater the engine rpm.

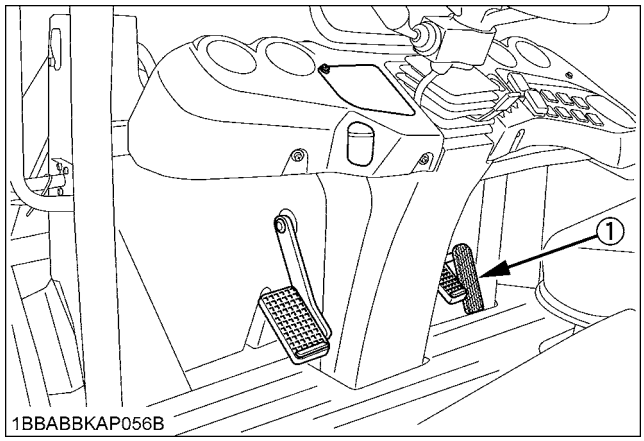

(1) Accelerator pedal

NOTE :

- When the pedal is released, the engine speed will drop.
- The engine rpm suitable for traveling the machine on a plain ground is about 1,100 to 1,200 rpm, though depending on the situations; i.e. ground condition, weather, etc.
  Press the accelerator pedal gradually when starting the machine.

■Inching and Brake Pedals

Press either pedal down slightly, then the HST pump comes in neutral and cuts off the engine power on the way of the transmission, that is so-called dynamic brake, unique to HST (Hydrostatic Transmission).
When pressing it further, the disc brake acts together to obtain strong braking effect.
For the details of inching and brake pedal, refer to the section "HOW TO USE THE INCHING AND BRAKE PEDAL".

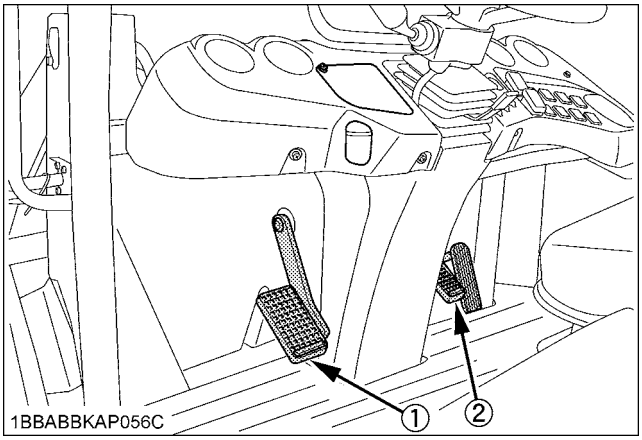

(1) Inching and brake pedal
(2) Brake pedal (option)

■Neutral Switch

When pressing this switch, the direction switch will be in the neutral position and the instrument panel **"N"** goes on.

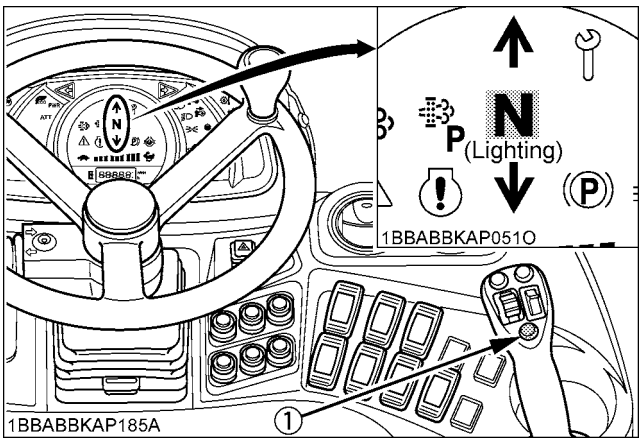

(1) Neutral switch

https://truckmanualshub.com/

■Direction Switch

This switch is used for changing the machine's running direction, forward or back.

◆ **To move forward:**

Move the direction switch forward and press the accelerator pedal.

NOTE :

- The instrument panel " ↑ " goes on.

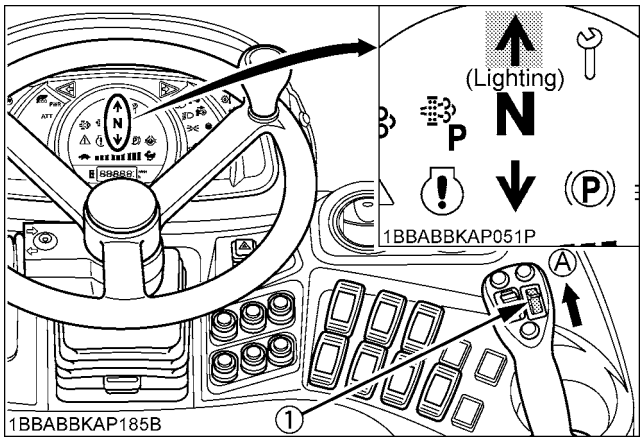

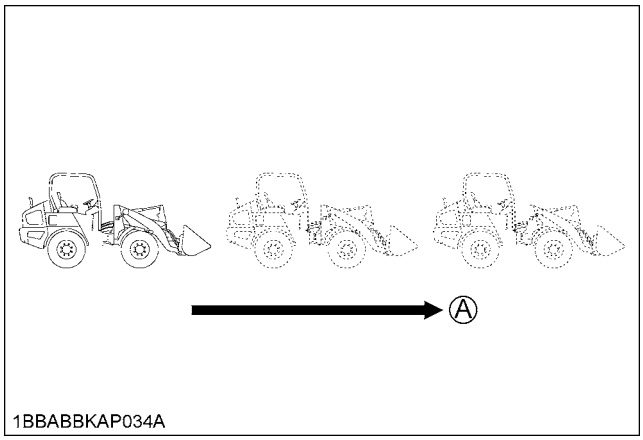

(1) Direction switch *(A) "FORWARD"*

◆ **To move backward:**

Move the direction switch backward and press the accelerator pedal.

NOTE :

- When the machine begins to travel "BACKWARD", the back buzzer starts sounding.
- The instrument panel " ↓ " goes on.

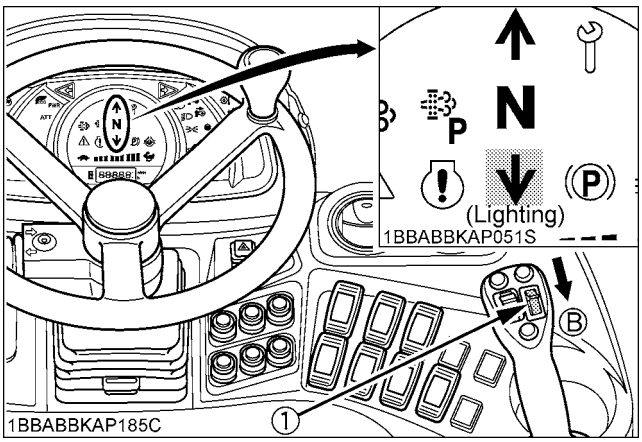

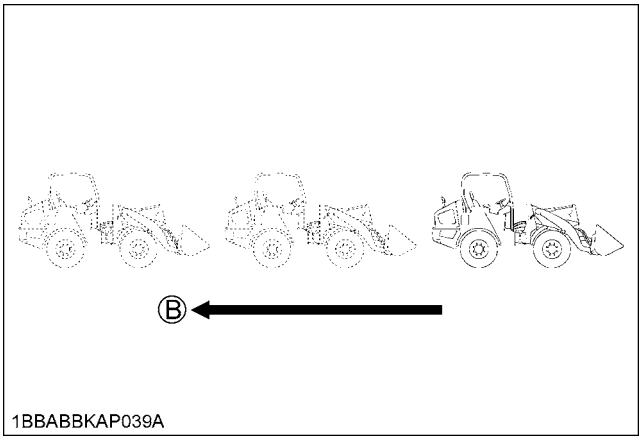

(1) Direction switch *(B) "BACKWARD"*

IMPORTANT :

- If the hydraulic oil temperature is too low, the reserve alarm may start sounding when switching from the backward to the forward travel. This is not a problem. Just make a warm-up run, and then the hydraulic oil temperature rises, this will stop the alarm. If the alarm still keeps sounding, contact your local dealer.

https://truckmanualshub.com/

■Speed Control Switch

[R530]

2 speed control switches serve to change maximum speed and low speed.

Press the right speed control switch and the maximum speed is 20 km/h (12.4 mph).

Press the left speed control switch, speed is limited to 4.6 km/h (2.9 mph).

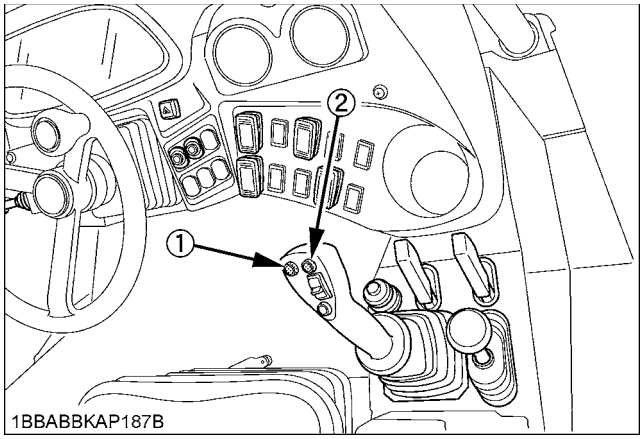

(1) Left speed control switch
(2) Right speed control switch

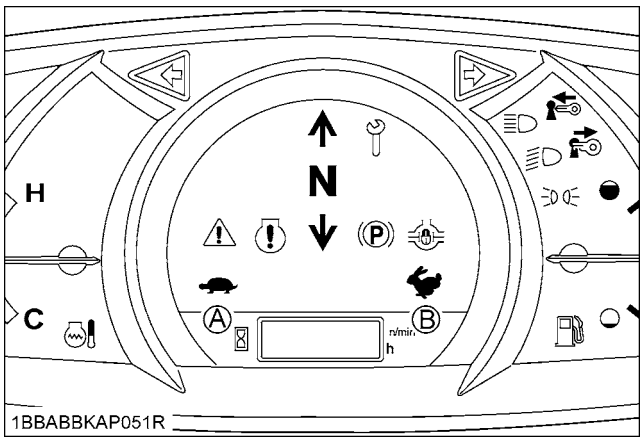

(A) 4.6 km/h (2.9 mph)
(B) 20 km/h (12.4 mph)

[R630]

Two speed control switches serve to change the top limit of maximum speed in 5 steps.

The maximum speed with the engine just started has been factory-set at 20 km/h (12.4 mph).

To control the maximum speed for works in limited space, the left speed control switch may be pressed to lower the maximum speed step by step (from 14 km/h (8.7 mph), 10 km/h (6.2 mph), 7 km/h (4.3 mph) to 4.6 km/h (2.9 mph)).

Press the right speed control switch and the maximum speed is raised stepwise (from 7 km/h (4.3 mph), 10 km/h (6.2 mph), 14 km/h (8.7 mph) to 20 km/h (12.4 mph)). Hold down either of the buttons, and the speed can also be switched directly from "🐓" to "🐢" and vice versa.

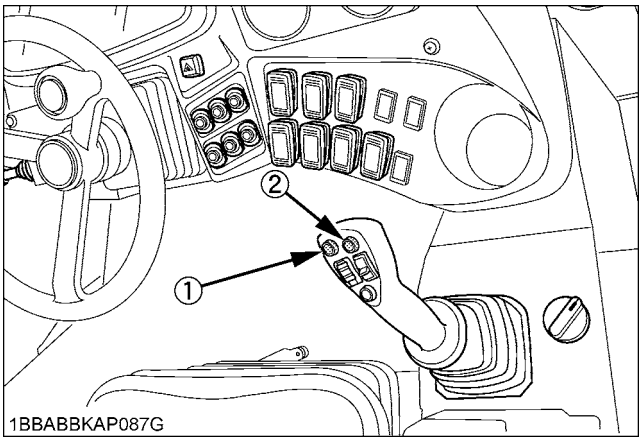

(1) Left speed control switch
(2) Right speed control switch

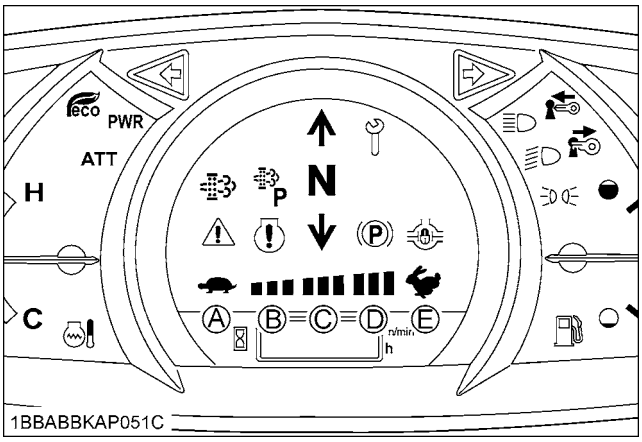

(A) 4.6 km/h (2.9 mph)
(B) 7 km/h (4.3 mph)
(C) 10 km/h (6.2 mph)
(D) 14 km/h (8.7 mph)
(E) 20 km/h (12.4 mph)

https://truckmanualshub.com/

[R530]

■Engine Speed Control Knob

1. Pull up the engine speed control knob and the engine revs up.
2. To stop the engine, push down the engine speed control knob fully and keep the engine at the idling speed. Then set the starter key to the **"STOP"** position.

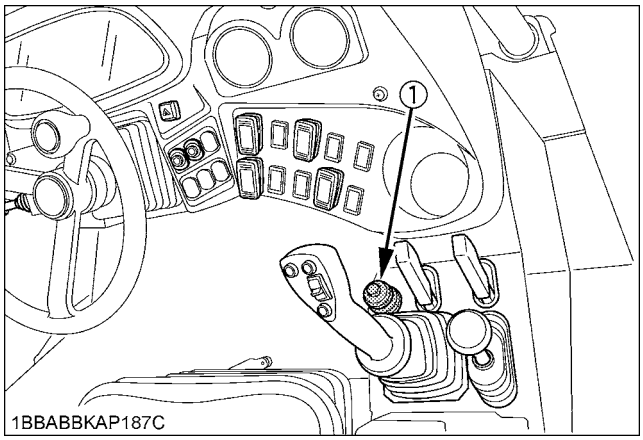

(1) Engine speed control knob

[R530]

■Turning

WARNING

To avoid personal injury or death:

- **Do not turn sharply at high speeds. It is dangerous. In the worst possible case, the machine may turn over.**
- **The steering wheel for this machine will not return of itself to the straight ahead position after turning. Be sure to return the wheel to the straight ahead position.**
- **Steering lose will result if the engine is stopped during travel.**
  Do not stop the engine during travel.

To steer the machine to either side, turn the steering wheel in the intended direction.

1. The front and rear frames of this machine bend at the center pin (the pin connecting the 2 frames) so that when the machine turns, the rear wheels follow the tracks of the front wheels.
2. Rotate the steering wheel to follow the turn of the machine. When turning fully, never attempt to rotate the steering wheel once it reaches its full stroke.

■Deceleration on a Slope

WARNING

To avoid personal injury or death:

- **Going up or down a slope diagonally is dangerous as the machine may skid. Always drive or operate straight up or down a slope, or the machine may slip side ways and tip over.**
- **Use foot brake together with engine brake if the machine tends to over-run when descending a slope.**

WARNING

To avoid personal injury or death:

- **When descending down along slope, use engine brake. Using the foot brake alone accelerates brake pad wear and cause heat buildup and will result in poor brake performance.**

https://truckmanualshub.com/

■Traveling on Rough Roads

WARNING

To avoid personal injury or death:

- **Slow down when turning on rough uneven terrain and slopes to avoid tip over.**

■Traveling on Snow

WARNING

To avoid personal injury or death:

- **There is the risk of the machine slipping excessively on frozen ground, install chains on the front wheels, for operation on snow install chains on both front and rear wheels.**

When traveling on snow, it is important to keep the wheels and their related parts in good condition.
After traveling, be sure to remove all snow and ice from those parts.

STOPPING

WARNING

To avoid personal injury or death:

- **Choose flat and level ground for parking the machine. It is important to lower the bucket to the ground.**
  If the machine must be parked on a slope, be sure to block the tires securely.
- **When dismounting the machine, stop the engine, lower the bucket and attachment to the ground release the hydraulic pressure in the hydraulic system by operating control levers, and lock all control levers in neutral, and remove the key.**

1. Remove foot from the accelerator pedal.
2. Depress the brake pedal and stop the machine.
3. Stop the engine.
4. Lower the bucket and attachment to the ground.
5. Release the hydraulic pressure in the hydraulic system.
6. Lock all control levers in neutral.
7. Remove the key.

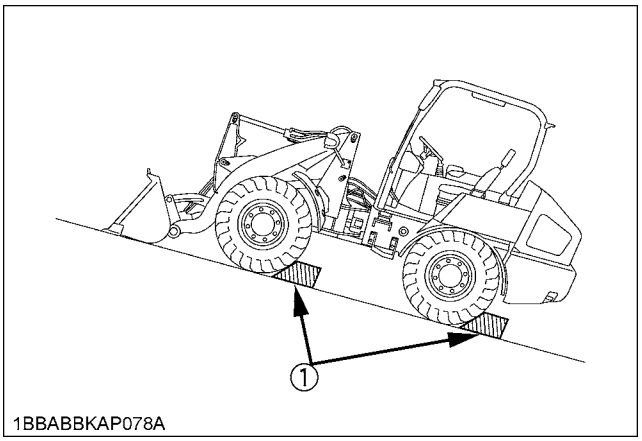

(1) Block the tires

https://truckmanualshub.com/

OPERATION OF THE LIFT ARM

◆ **To lower the lift arms:**

Push the control lever forward.

And push the control lever to B, fix the float position.

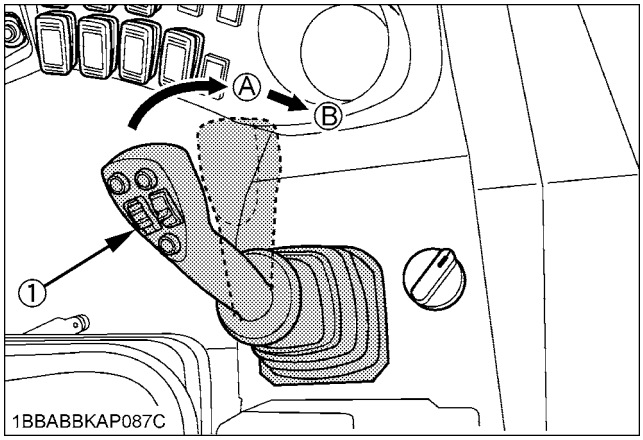

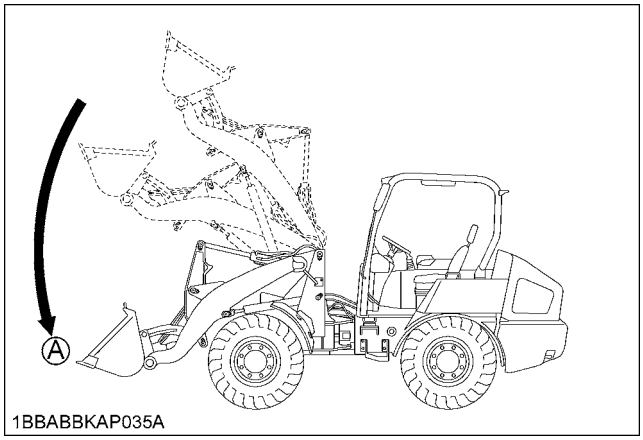

(1) Control lever *(A) "LOWER"*
(B) "FLOAT"

[R630]

To fix the float position, press the float switch.

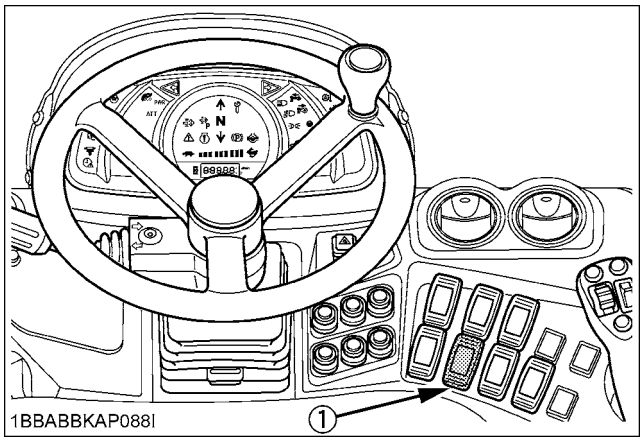

(1) Float switch

◆ **To raise the lift arms**

Pull the control lever backward.

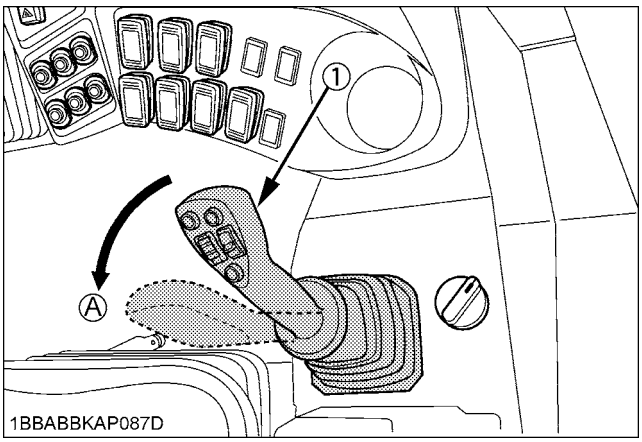

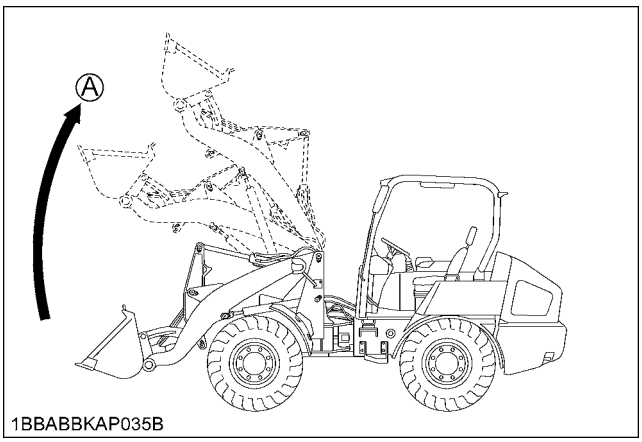

(1) Control lever *(A) "RAISE"*

NOTE :

- To stop the lift arm operation, return the control lever to the neutral position.

https://truckmanualshub.com/

OPERATION OF THE BUCKET

◆ **To roll back:**

Tilt the control lever to the left.

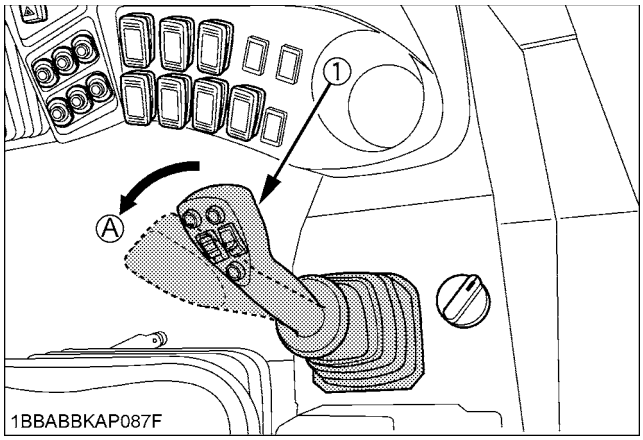

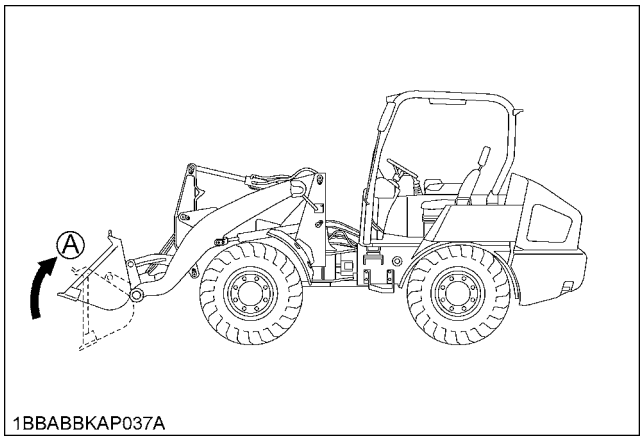

(1) Control lever *(A) "ROLL BACK"*

◆ **To dump:**

Tilt the control lever to the right.

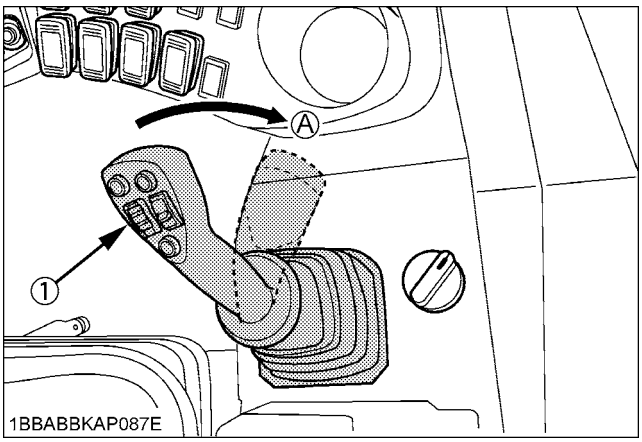

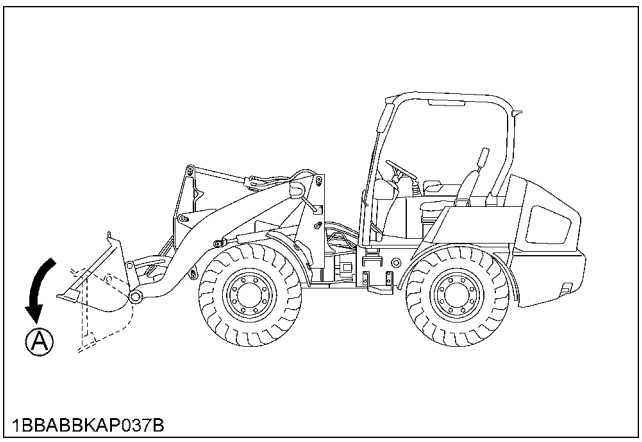

(1) Control lever *(A) "DUMP"*

NOTE :

- To stop the bucket operation, return the control lever to the neutral position.

⚠ WARNING

To avoid personal injury or death:

- **Do not exceed the rated operating capacity of the unit. If loads exceed this operating capacity, the unit can experience a hydraulic imbalance when half or medium "lift arms raise" and "bucket roll back" or "auxiliary hydraulic control" commands are input together, which can result in the lift arms lowering slowly. If you begin to experience this condition, either place the lift arms control in "neutral" or input full "raise" control, and lift arms lowering will cease.**

https://truckmanualshub.com/

[R530]

AUXILIARY PORT OPERATION

WARNING

To avoid personal injury or death:

- **When not using the auxiliary port, be sure to lock the auxiliary port lever by the auxiliary port lever lock.**

■Auxiliary Port Lever

This lever is used to operate hydraulic attachments such as 4in1 bucket.

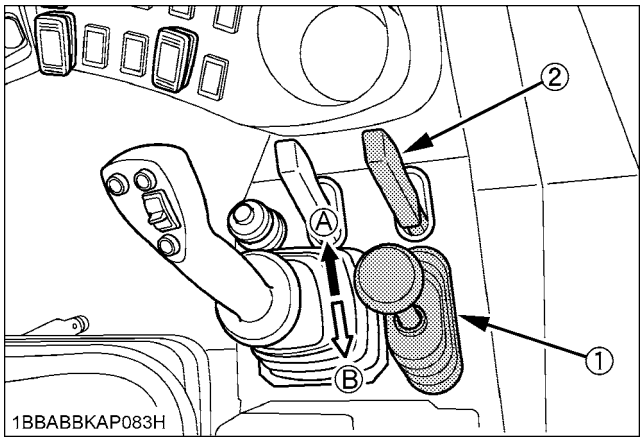

(1) Auxiliary port lever
(2) Auxiliary port lever lock

- Push the lever (A), send oil to the pipe (A).
- Pull the lever (B), send oil to the pipe (B).

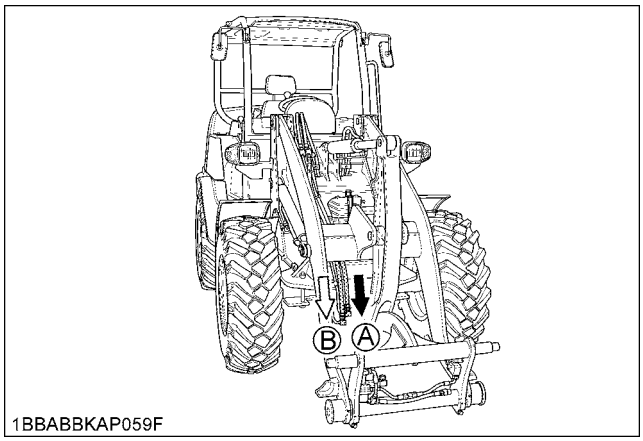

Max. Flow Volume Theoretical L/min. (U.S.gal./min.)	53.8 (14.2)
Max. Pressure MPa (kgf/cm²) [psi]	18.6 (190) [2700]

IMPORTANT :

- When the auxiliary port is not used for a long period, dirt particles can settle in the lower part of the auxiliary port lines.
  When the plugs on the auxiliary port lines are removed to connect attachments, drain approx. 0.1 L (0.03 U.S.gal.) of oil per side before making connections.

HOW TO RELEASE PRESSURE TRAPPED IN THE HYDRAULIC SYSTEM

1. Lower the attachments to the ground and pull the control lever lock and auxiliary port lever lock to lock.
2. Turn the key to **"STOP"** position and shut off the engine.
3. push the control lever lock and auxiliary port lever lock to unlock.

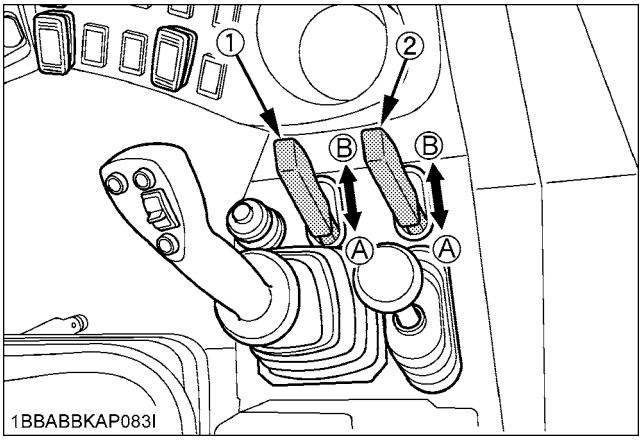

(1) Control lever lock *(A) "LOCK"*
(2) Auxiliary port lever lock *(B) "UNLOCK"*

4. Move the control lever to release pressure in the hydraulic system.

[R530]

https://truckmanualshub.com/

[R630]

AUXILIARY PORT OPERATION

The auxiliary port enable switch is used to operate hydraulic attachment such as 4in1 bucket.

■Selecting the Action Modes

The AUX port has been factory-set to only one mode (Mode 1). As necessary, up to six action modes can be preset. Each time the AUX port enable switch is pressed, the action modes change over one after another. And the icon and action mode number on the screen change accordingly.

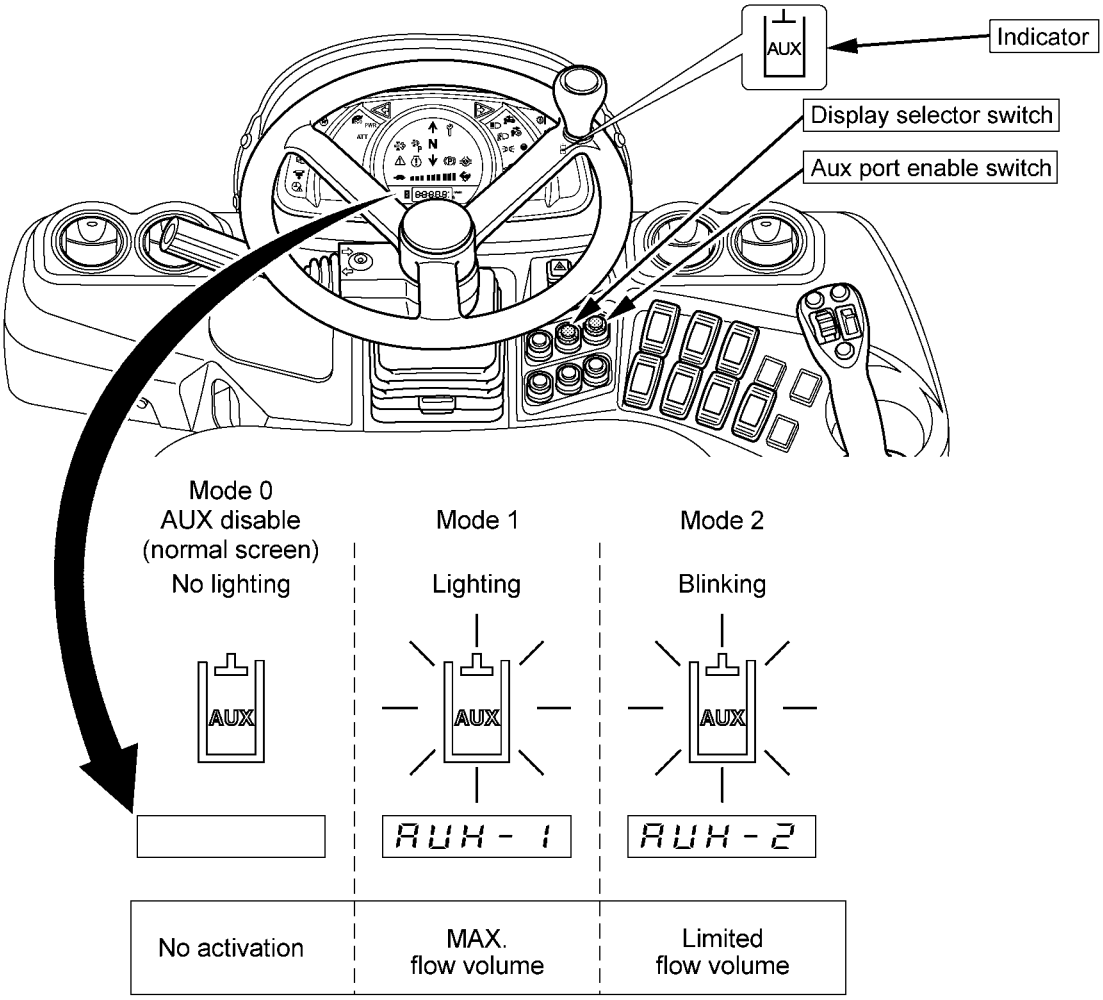

●Checking the setting volume
Pressing the display selector switch when the action mode number "AUX-1" is displayed on the screen, the screen will vary per second.

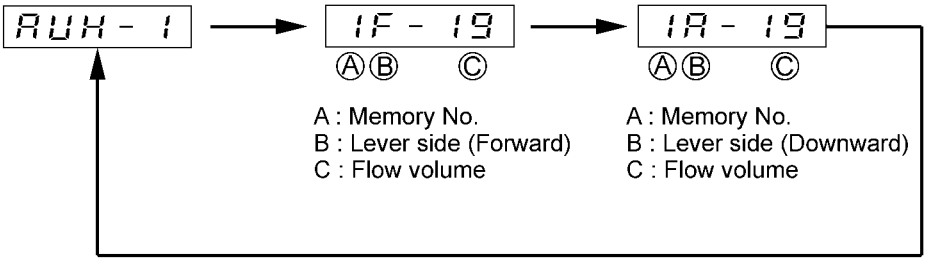

https://truckmanualshub.com/

■AUX Port Handling Procedure

1. Turn the starter key to the **"RUN"** position.
   Let the engine warm up after start-up for approx. 10 minutes under no load conditions.

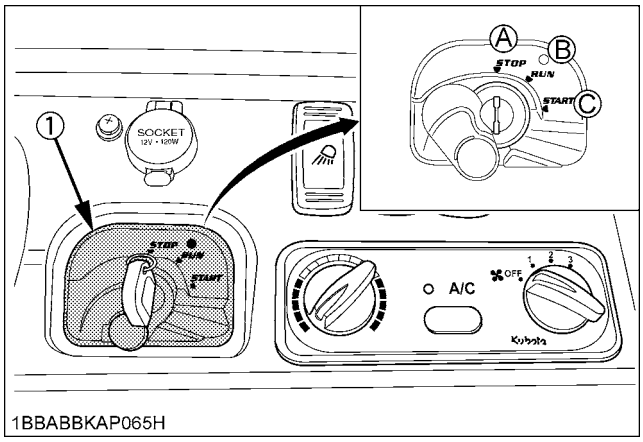

(1) Starter switch
(A) "STOP"
(B) "RUN"
(C) "START"

2. Release the hydraulic lock switch. (UNLOCK).

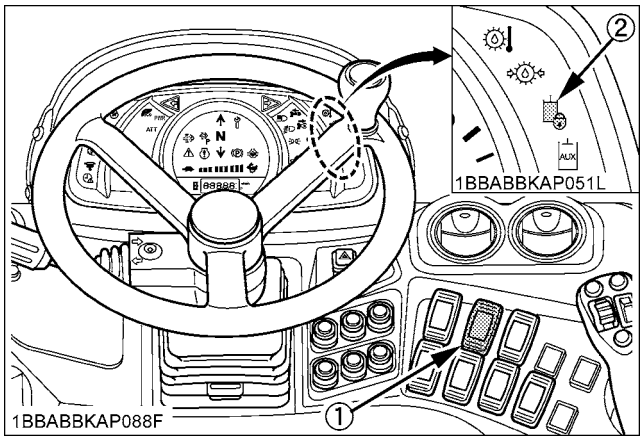

(1) Hydraulic lock switch
(2) Hydraulic lock indicator

3. Push the AUX port enable switch.

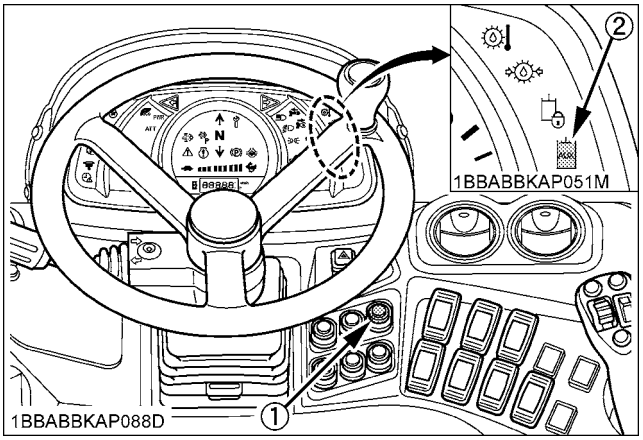

(1) AUX port enable switch
(2) AUX operation indicator

4. Move the AUX port variable switch forward to send oil to the port A.
   Move the AUX port variable switch downward to send oil to the port B.

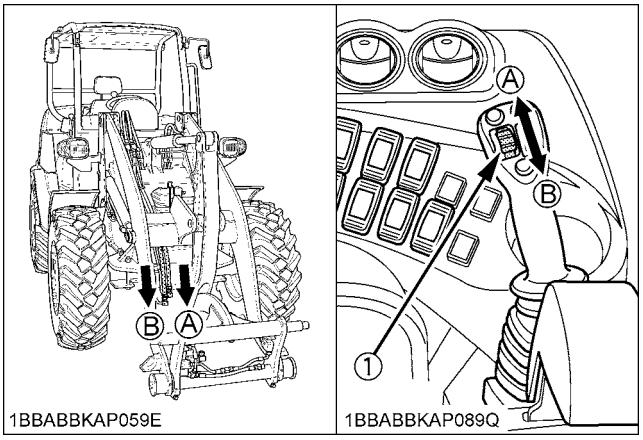

(1) AUX port variable switch
(A) "Port A"
(B) "Port B"

https://truckmanualshub.com/

■Setting the Maximum Flow Volume

The AUX port has been factory-set to one action mode. The action modes 2, 3, 4 and 5 can also be preset.

◆ **How to make the settings**

1. With the starter key at the **"RUN"** position, press the user setting switch.

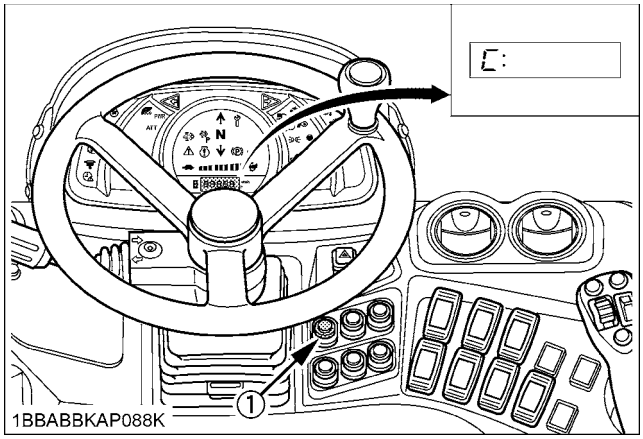

(1) User setting switch

2. Choose the AUX setting mode by pressing the display selector switch.

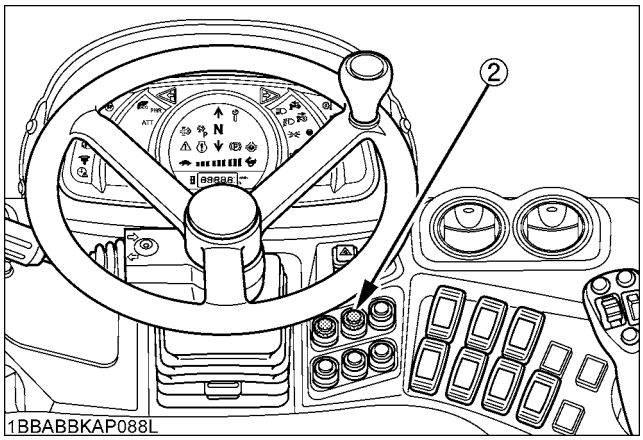

(2) Display selector switch

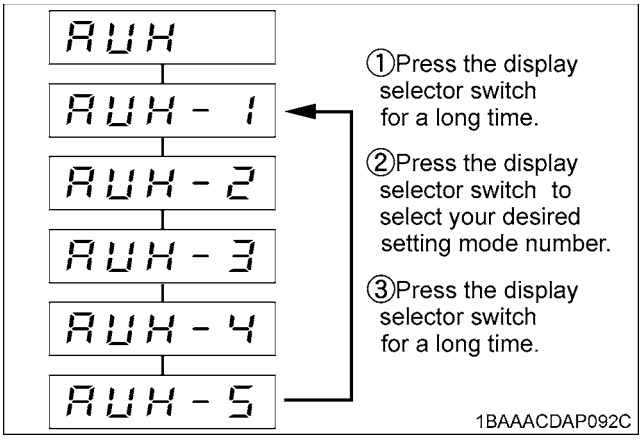

3. After setting the mode, press the user setting switch to decrease the volume or press the display selector switch to increase the volume.

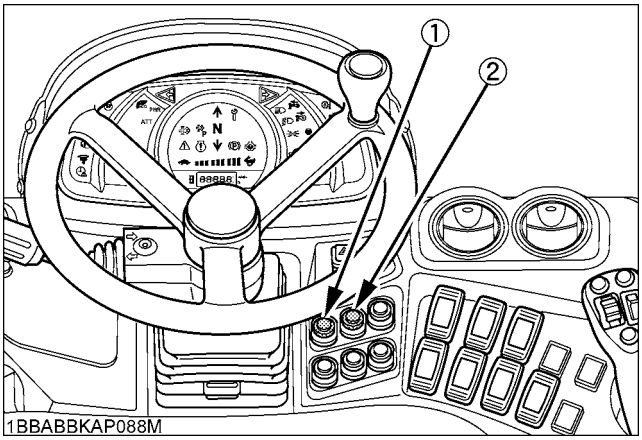

(1) User setting switch
(2) Display selector switch

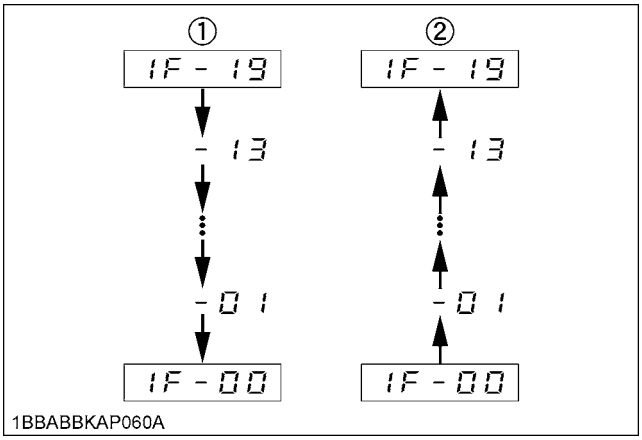

(1) User setting switch (to decrease the volume)
(2) Display selector switch (to increase the volume)

https://truckmanualshub.com/

4. Press the display selector switch for a long time to go to the next port and make the settings for this port.

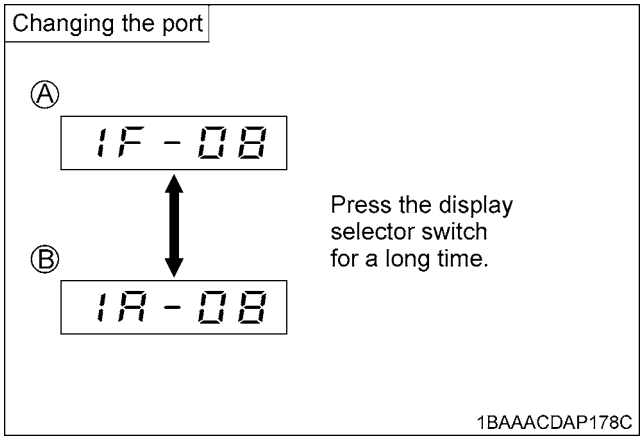

(A) "Left side port"
(B) "Right side port"

5. Press the user setting switch for a long time to go back to step 2 to make settings for the next action mode. When all the settings of all the action modes have been made, press the display selector switch for a long time to return to step 1 and press the user setting switch to return to the normal screen.

NOTE :
- In an action mode each volumes are set to zero, such action mode is skipped even if selected.

  Take an example of the following settings:
  Action mode 1 : 1F-14, 1R-14
  Action mode 2 : 1F-14, 1R-00
  Action mode 3 : 1F-00, 1R-00
  Action mode 4 : 1F-00, 1R-00
  Action mode 5 : 1F-00, 1R-00

  Each time the AUX port enable switch is pressed, the display changes from action mode 1, action mode 2 to normal mode in this order.

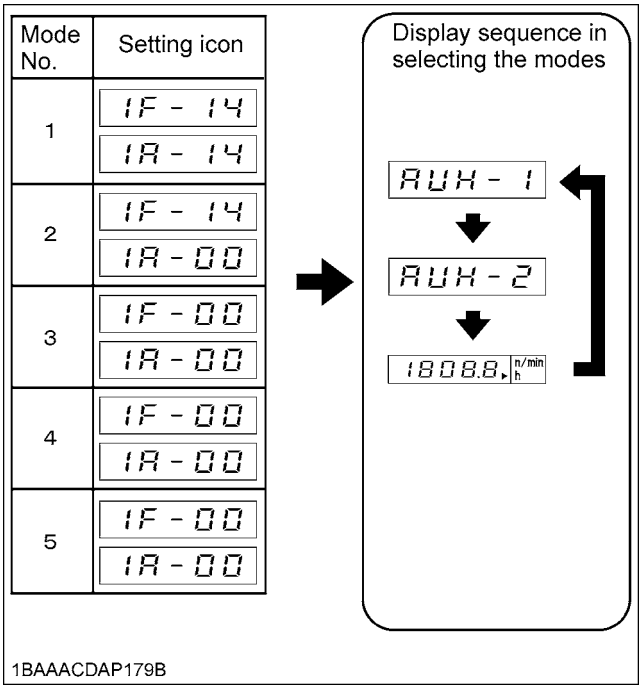

IMPORTANT :
- When the AUX port is not used for a long period, dirt particles can settle in the lower part of the AUX port lines. When the plugs on the AUX port lines are removed to connect attachments, drain approx. 100 cc (3.4 oz) of oil before making connections.

NOTE :
- Suppose that the same attachment is mounted on another machine. Even if the same limit setting is made, the same speed cannot be achieved. Make an optimum setting on each machine.
- The AUX port speed fluctuates by getting an attachment relieved at the limited flow volume. Determine the limit level with combined operations of attachments in mind.

https://truckmanualshub.com/

AUX port (LH and RH) maximum flow volume setting (flow chart)

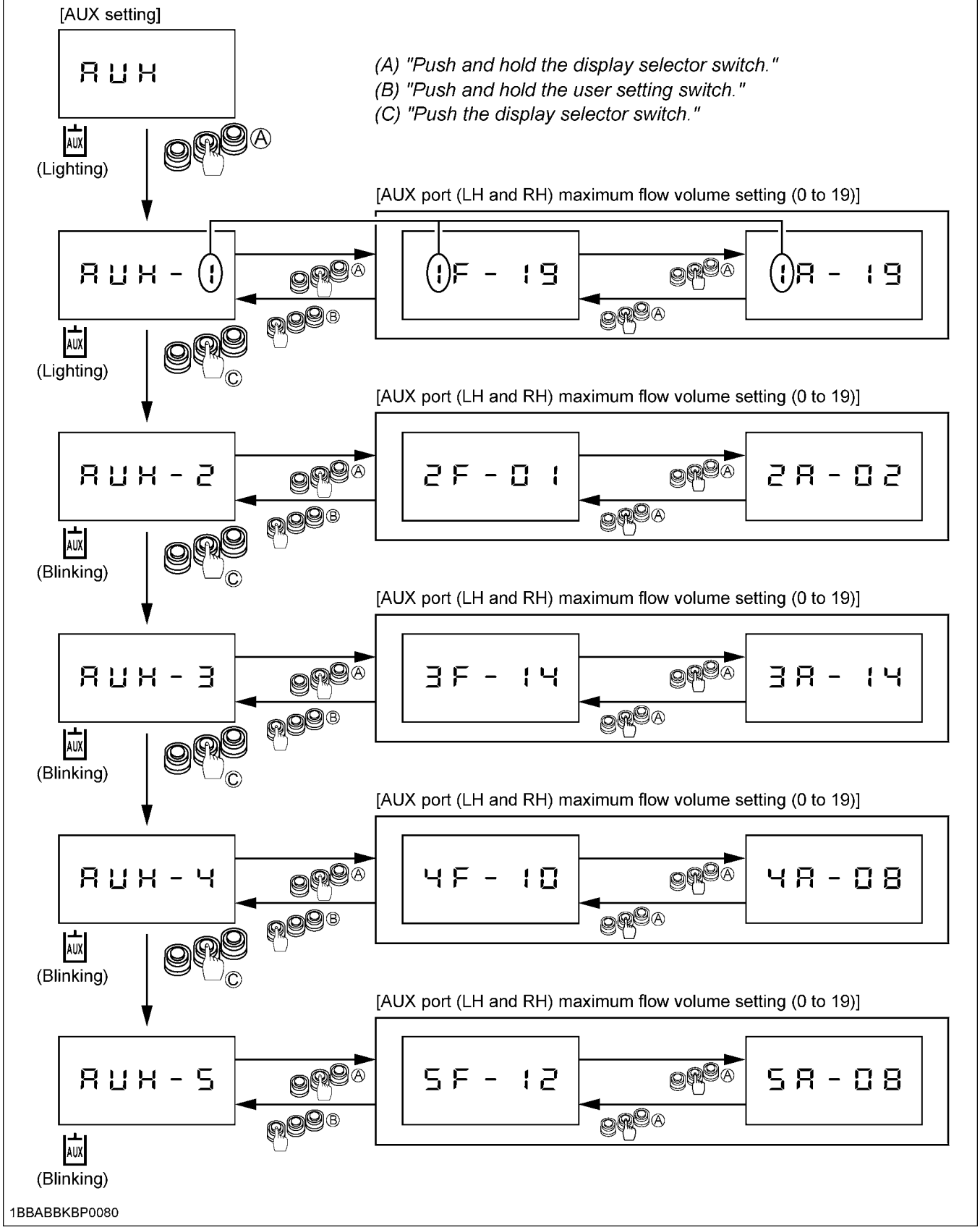

1BBABBKBP0080

https://truckmanualshub.com/

HOW TO RELEASE PRESSURE TRAPPED IN THE HYDRAULIC SYSTEM

1. Lower the attachments to the ground and activate the hydraulic lock switch.
2. Turn the key to **"STOP"** position and shut off the engine.
3. After stopping the engine, turn the key to **"RUN"** position.
4. Deactivate the hydraulic lock switch.

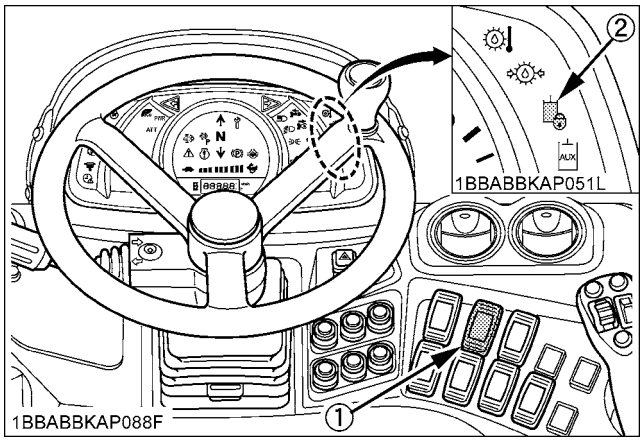

(1) Hydraulic lock switch *(2) Hydraulic lock indicator*

5. Move the operating lever to release pressure in the hydraulic system.

[How to release pressure trapped in the AUX port]

1. Perform the above operations of 1 to 4.
2. Turn "ON" the AUX port enable switch.

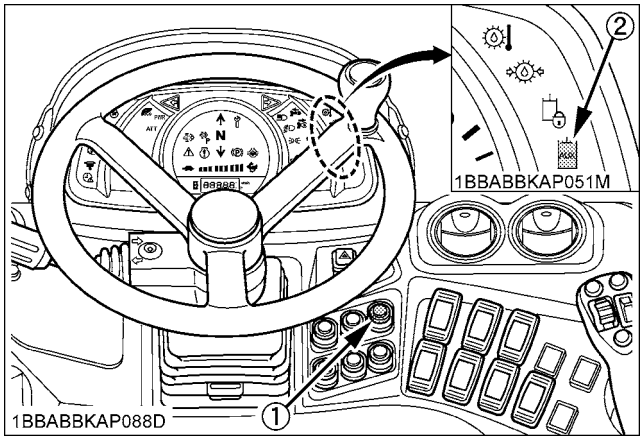

(1) AUX port enable switch *(2) AUX operation indicator*

3. Make sure that the flow volume in all the AUX ports is not minimized.
   If the pressure is removed after minimizing the flow volume in the AUX port, release pressure is not removed completely and the hose coupler may be unable to connect and disconnect.

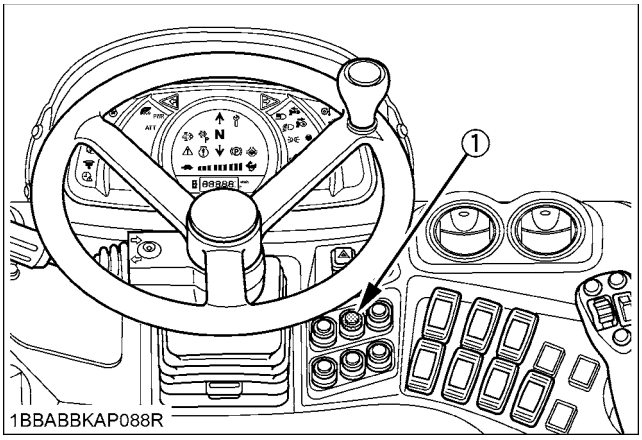

(1) Display selector switch

[R630]

https://truckmanualshub.com/

MECHANICAL QUICK-HITCH

■Attaching Attachments

This machine utilizes a quick-hitch for easy connection and disconnection of various attachments.
By replacing the front attachments, this machine can be used in agriculture, raising stock, landscaping, gardening and snow removal as well as general civil engineering and construction work.

DANGER

To avoid personal injury or death:

- **Use of attachments that do not comply with ISO24410 or the improper positioning of lever(s) or non-protrusion of pin(s) may result in detachment of the attachment or deformation, causing loss of performance, personal injury or death.**

WARNING

To avoid personal injury or death:

- **After doing these procedures, make sure the attachment is securely attached to the quick-hitch, or the attachment may be detached.**
- **When handling the control lever, you should do it after setting the parking brake switch to the parking position, lowering the lift arm, locking all control levers in neutral position.**

NOTE :

- Attachments should be located on a level, firm surface when attaching and detaching them from the quick-hitch.

1. To mount an attachment, pull the levers of the quick-hitch lock pins to the "UNLOCKED" position. The quick-hitch levers must be all the way up to ensure that the lock pins are fully retracted.
2. Position the machine squarely in front of the attachment and tilt the quick-hitch forward with the bucket cylinder.

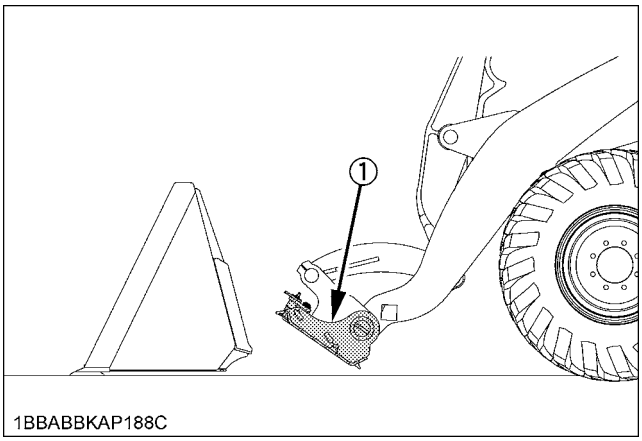

(1) Quick-hitch

3. Ease the quick-hitch mounting plate into the saddle of the attachment.
4. Roll the quick-hitch back using the bucket cylinder and raise the lift arm slightly. The back of the attachment should rest against the front of the quick-hitch mounting plate and the weight of the attachment should be supported by the lift arm.

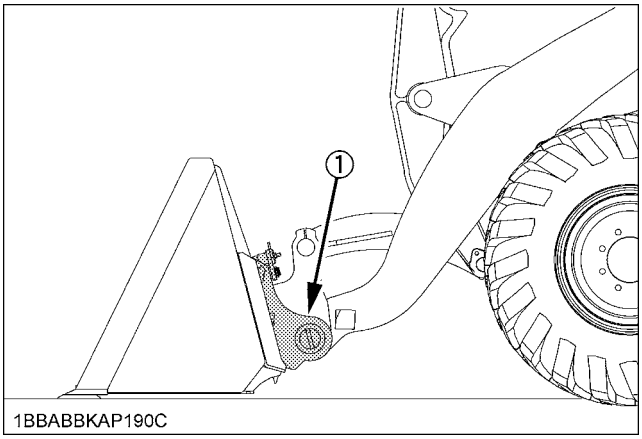

(1) Quick-hitch

5. When the attachment is properly seated in the saddle and against the front of the quick-hitch mounting plate, turn off the engine and set the parking brake. Push the quick-hitch levers to the fully "LOCKED" position. Verify both lock pins are completely engaged in the base of the attachment.

https://truckmanualshub.com/

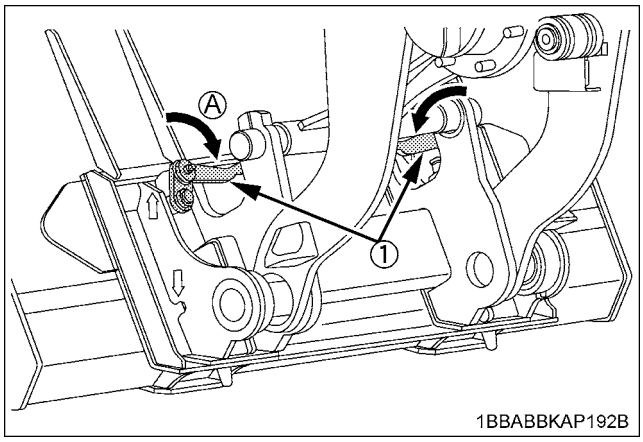

(1) Quick-hitch lever (A) "LOCK"

6. With an attachment in place, lift the lift arms and empty out the bucket. Tilt the bucket downwards and verify the lock pins are fully engaged.

DANGER

To avoid personal injury or death:

- **The following engagement points are critical.**
  1) **The lock pins of the quick-hitch have to protrude into and through the pin slots of the attachment on both sides.**
     It is critical that the pins are in good condition and without visible signs of wear or damage and that the operator align the quick-hitch with the attachment to allow the pins to go through the pin slots.
  2) **Both levers have to be pushed down until the levers contact the ear plates near the points where the pin bolt goes through the lever (A).**
  3) **Do not operate the machine or attachment unless all of the above conditions are met.**

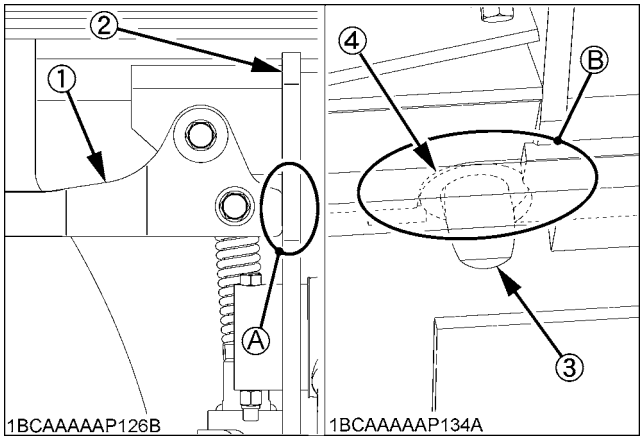

(1) Lever
(2) Ear plate
(3) Lock pin
(4) Pin slot
(A) "The lever contacts the ear plate at the points."
(B) "The pin protrudes through the slot."

7. Visually verify when pushing the quick-hitch levers into locked position that the lock pins protrude through the slot.
8. When attaching different attachments visually inspect for broken or damaged pins. If broken or damaged pins are found, replace before using. Use of broken pins may result in detachment or deformation, causing loss of performance, personal injury or death.
9. You are now ready to use the attachment.

WARNING

To avoid personal injury, death or machine damage:

- **Never operate or transport attachments which are not attached completely.**
- **Always replace damaged hardware immediately.**

■Detaching Attachments

1. Lower the attachment to ground level with the attachment slightly in the rolled back position. Stop the engine (the parking brake automatically engages.).
2. Disconnect the attachment's electrical harness and hydraulic lines from the lift arms if equipped.
3. Pull the quick-hitch lever up to the unlocked position to release the lock pins.
4. While sitting in the machine operator's seat, start the engine and slowly move the right control (front operating) lever to the "DUMP" position until the attachment is pushed away from the quick-hitch.
5. Lower the lift arm so that the quick-hitch mounting plate clears the attachment saddle.
6. Back away from the attachment slowly.
7. If an attachment is not going to be attached to the quick-hitch immediately, push the lever of the quick-hitch to the locked position to prevent damage to the lever assembly.

https://truckmanualshub.com/

QUICK COUPLER (HYDRAULIC)

This machine utilizes a multi-coupler for easy connection and disconnection of various attachments.
By replacing the front attachments, this machine can be used in agriculture, raising stock, landscaping, gardening and snow removal as well as general civil engineering and construction work.

■Attaching Attachments

WARNING

To avoid personal injury or death:

- **Keep people away from the machine during connecting and disconnection.**
- **After doing these procedures, make sure the attachment is securely attached to the quick-coupler.**
- **Installation and removal of the pins of quick-coupler are operated from the operator's seat.**
- **We will only assume reliability for wheel loader which are operated with the attachments and spare parts specified by KUBOTA.**

NOTE :

- Attachments should be located on a level, firm surface when connecting and disconnecting them from quick-coupler.

◆ Attaching

Connecting the front attachments as follows.

1. **[R530]**
   Pull the auxiliary port lever backward while pressing the attachment unlock switch forward in order to retract the locking pins.

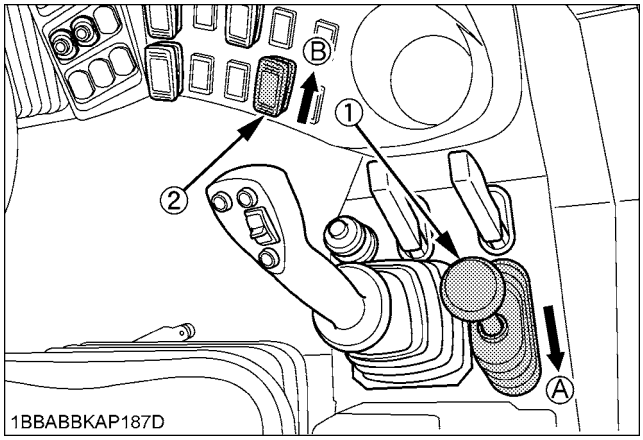

(1) Auxiliary port lever *(A) Pull backward*
(2) Attachment unlock *(B) Press forward*

   [R630]
   Press the auxiliary port enable switch.
   Move the auxiliary port variable switch backward while pressing the attachment unlock switch forward in order to retract the locking pins.

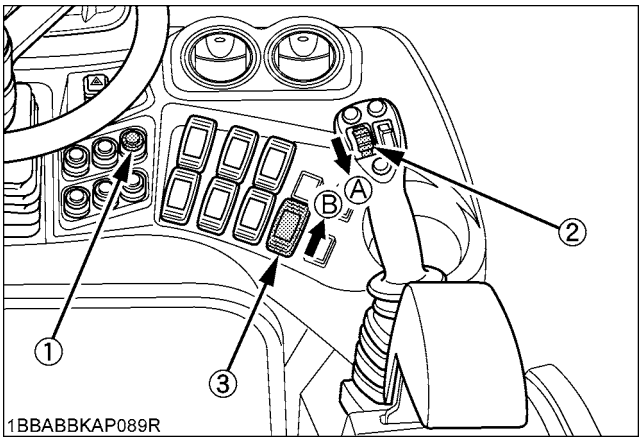

(1) Auxiliary port enable switch *(A) Move backward*
(2) Auxiliary port variable switch *(B) Press forward*
(3) Attachment unlock switch

2. Position the machine squarely in front of the attachment and tilt the quick-coupler forward approx. 15° and align the upper attachment points of the bracket.
3. Raise the lift arm until the attachment is lifted off the ground.
   Tilt the attachment bracket backwards to alien the locking pins with bores of the attachment bracket.

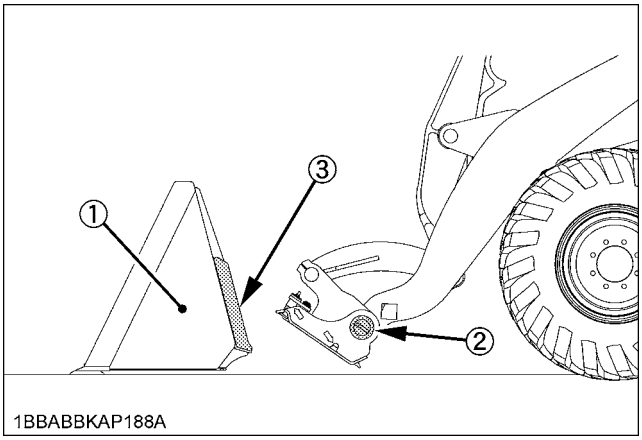

https://truckmanualshub.com/

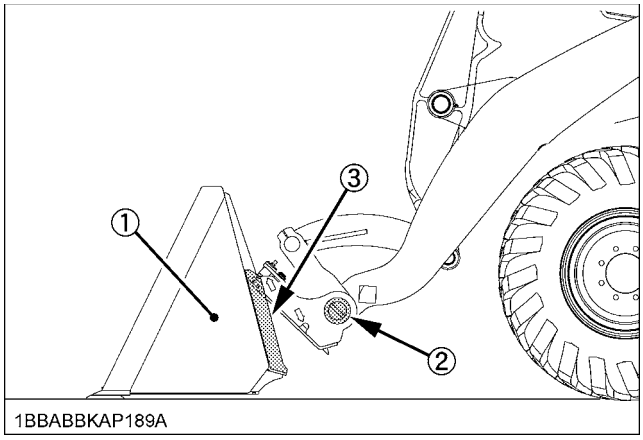

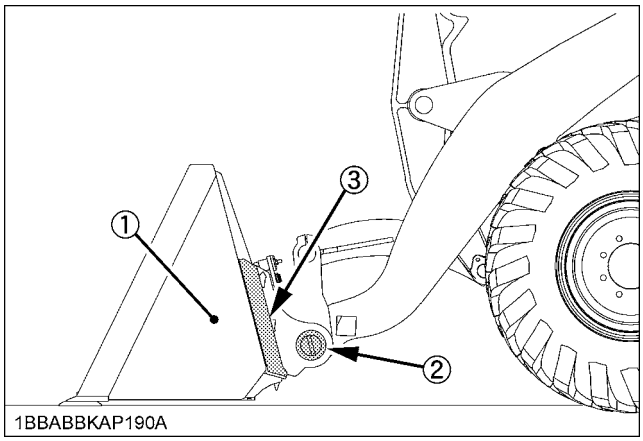

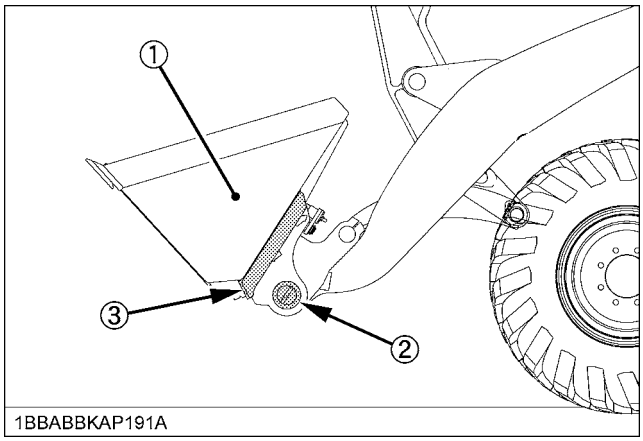

(1) Attachment
(2) Quick coupler
(3) Attachment bracket

4. **[R530]**
   Lock the attachment by pushing the auxiliary port lever forward in order to move the locking pins out into locking position.

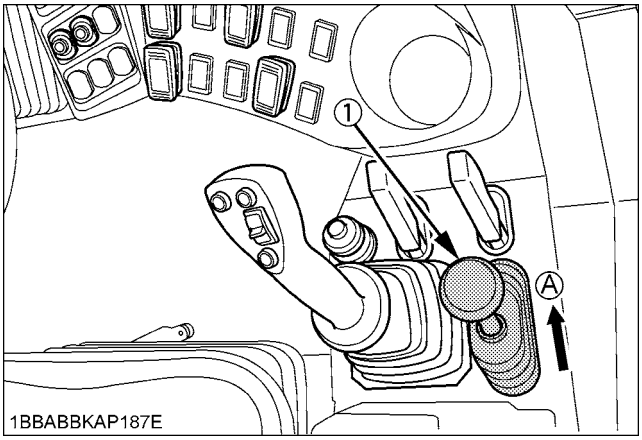

(1) Auxiliary port lever *(A) Push forward*

[R630]
Lock the attachment by moving the auxiliary port variable switch forward in order to move the locking pins out into locking position.

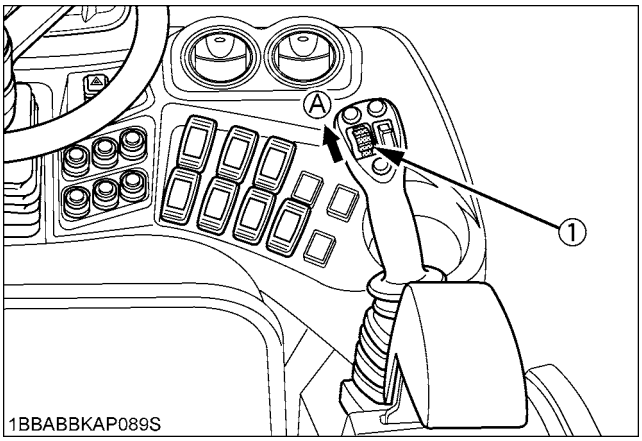

(1) Auxiliary port variable switch *(A) Move forward*

WARNING

To avoid personal injury or death:

- **When changing an attachment, the operator should make sure to check visually that the locking pins (left and right) of attachment bracket are in the lock position.**

https://truckmanualshub.com/

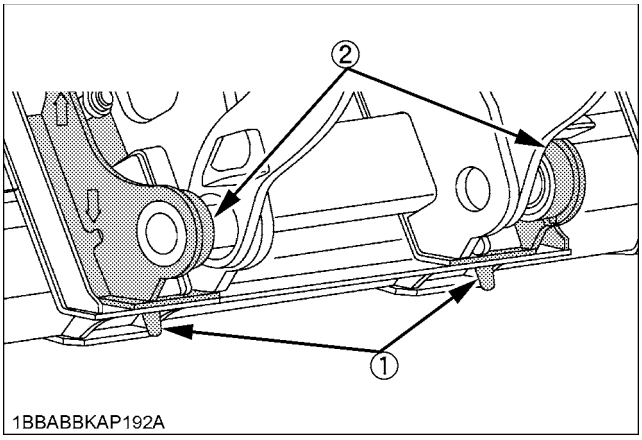

(1) Locking pin
(2) Attachment bracket

- **If you are uncertain as to whether the attachment is securely, be sure by pressing the edge of the attachment against the ground, so that the front end of machine rise slightly.**

◆ **Detaching**

Disconnecting the front attachments as follows.

1. **[R530]**
   Pull the auxiliary port lever backward while pressing the attachment unlock switch forward in order to retract the locking pins.

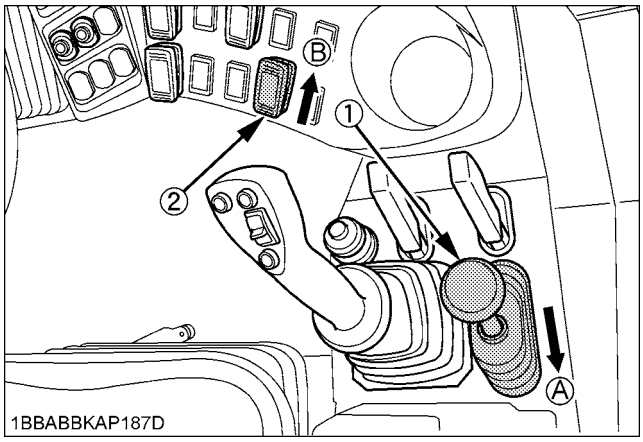

(1) Auxiliary port lever
(2) Attachment unlock switch
(A) Pull backward
(B) Press forward

   [R630]
   Press the auxiliary port enable switch.
   Move the auxiliary port variable switch backward while pressing the attachment unlock switch forward in order to retract the locking pins.

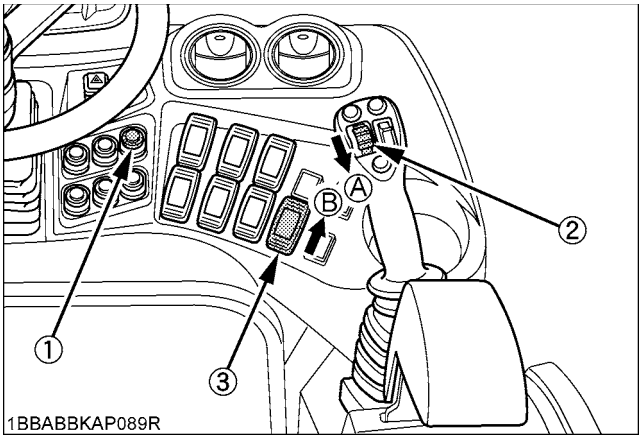

(1) Auxiliary port enable switch
(2) Auxiliary port variable switch
(3) Attachment unlock switch
(A) Move backward
(B) Press forward

2. Move the control lever to the left and then lower the lifting arm to disengage from the attachment.
3. Reverse away from the attachment.

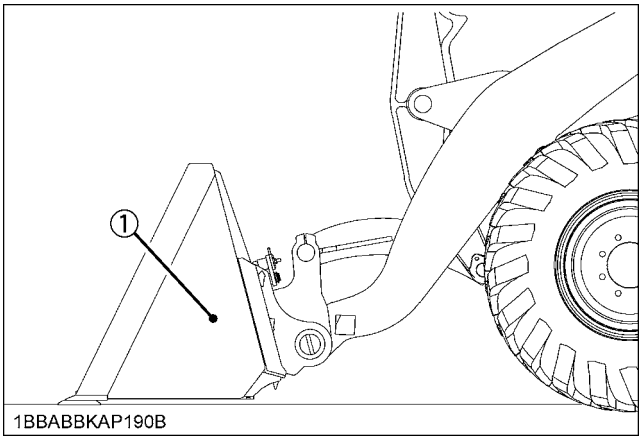

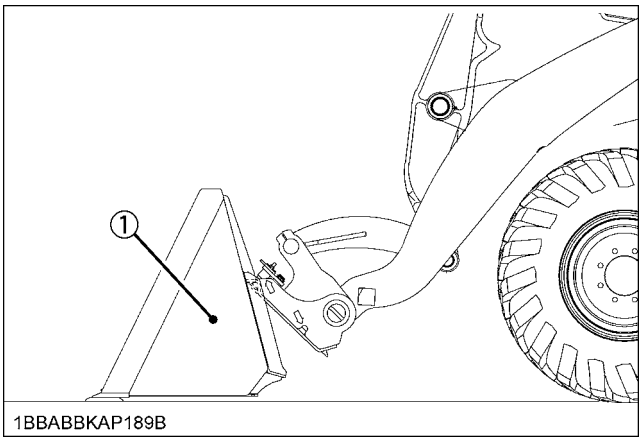

https://truckmanualshub.com/

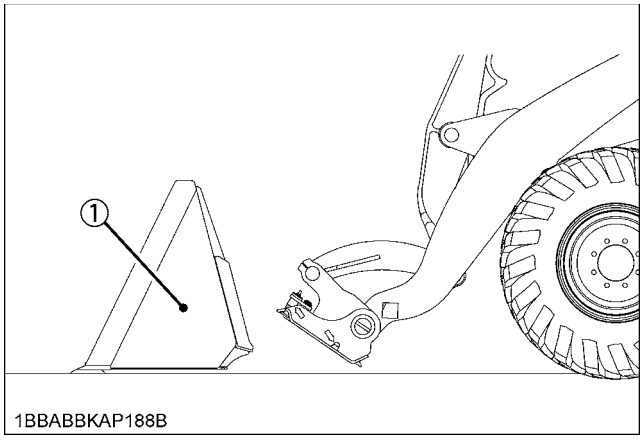

(1) Attachment

■Connecting and disconnecting the hydraulic hose

When activating an attachment with a hydraulic cylinder by using aux. port, hydraulic hoses must be connected or disconnected. At this time, connect or disconnect the hydraulic hoses as the procedures below.

1. Before starting to work, apply the parking brake and stop the engine.
2. Starter switch in RUN position.
3. **[R530]**
   Operate the auxiliary port lever several stroke to release any hydraulic pressure remaining in the circuits.
   [R630]
   Move the auxiliary port variable switch forward and backward several times to release any hydraulic pressure remaining in the circuits.

HOW TO USE THE INCHING AND BRAKE PEDAL

■Inching and Brake Pedal Operation

Operate the inching and brake pedal as follows according to the application.

◆ **To stop the machine**

1. The inching and brake pedal controls HST pump and brake.
2. To stop the machine completely during work, first press the pedal slightly. Oil flow from HST pump comes to zero and cuts the driving power to slow down or stop the machine.
3. Press the pedal completely.
   The disc brake will be applied to stop the machine completely.

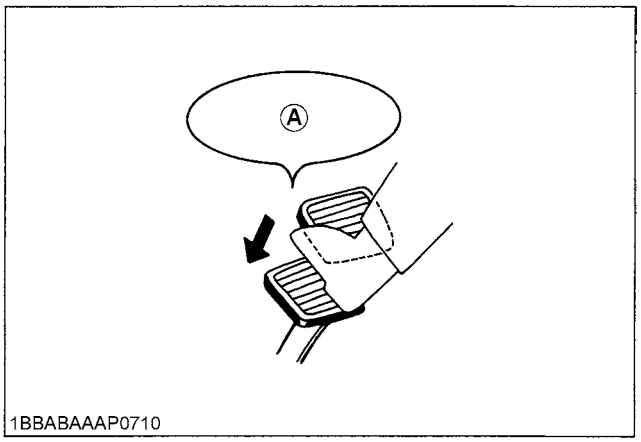

(A) Press the pedal with force

https://truckmanualshub.com/

◆ **To approach slowly**

1. Press the inching and brake pedal slightly while pressing the accelerator pedal. The machine approaches slowly.
2. The machine can slowly approach an object by accelerator pedal regulation only, without inching and brake pedal operation.

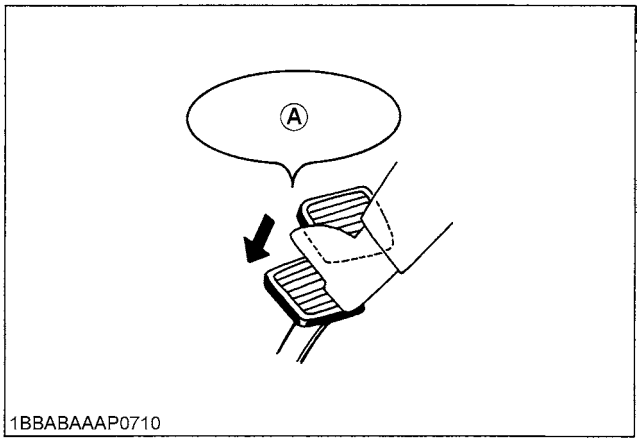

(A) Press the pedal slightly

◆ **To scoop during digging**

In case of the bucket does not raise up during digging, press the inching and brake pedal.
Traction force is reduced and lifting force is increased, if the inching and brake pedal is pressed.

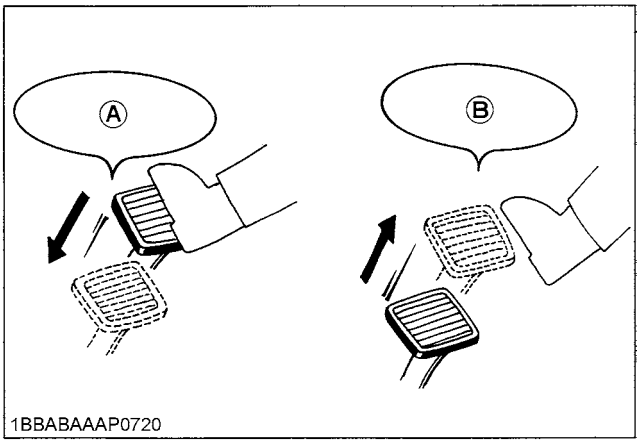

(A) Press the pedal fully
(B) Release the pedal

■Using the Inching and Brake Pedal According to the Job

WARNING

To avoid personal injury or death:

- **When traveling with a fully-loaded bucket, do not press the inching and brake pedal all the way. The machine will brake abruptly and cause dangerous loss of balance that may cause an accident.**

◆ **Loading**

1. Press the inching and brake pedal slightly while pressing the accelerator pedal to approach an object slowly.
   Slow approach can be done also by regulating accelerator pedal operation.
2. The bucket can be operated at the maximum engine rpm when the inching and brake pedal is used to approach slowly. Bucket operation speed is thus maintained.
3. Press the inching and brake pedal slightly to allow the machine to approach to the desired stop position.
   Then press the pedal all the way to stop the machine completely.

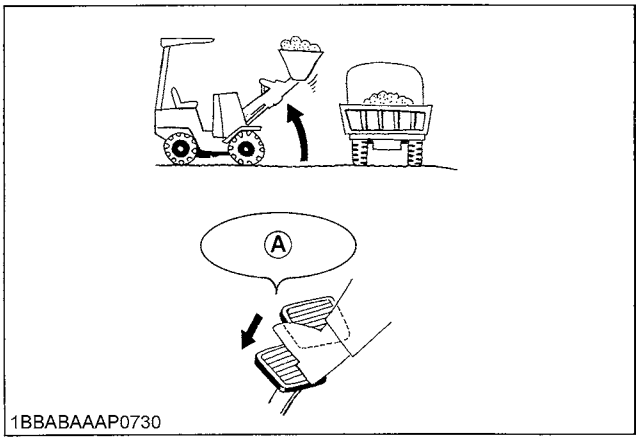

(A) Press the pedal slightly

https://truckmanualshub.com/

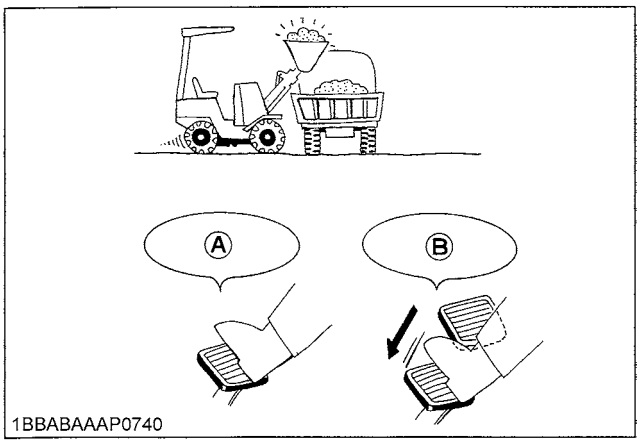

(A) Press the pedal slightly
(B) Press the pedal all the way

◆ **Refilling**

1. Press the inching and brake pedal slightly to approach the desired stop position, then press the pedal all the way to stop the machine at the exact position.
2. The traveling speed automatically decreases to prevent engine stalling as the external load increases.
3. During traveling with bucket operation, the traveling speed abruptly increases at the time of dumping operation since the external load changes at that time.
4. Use inching and brake pedal and concentrate the power to the attachment operation near holes or slopes.

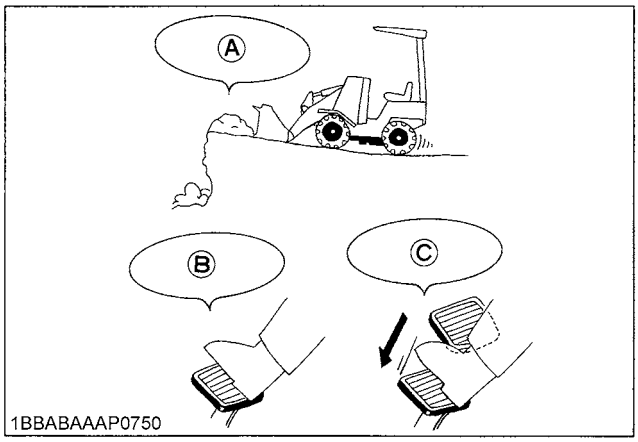

(A) Leave one pile
(B) Press the pedal slightly
(C) Press the pedal all the way

TYPICAL JOBS USING A WHEEL LOADER

Below are some typical jobs performed using a wheel loader. The machine can also be used to perform other jobs by connection with various attachments.

WARNING

To avoid personal injury or death:

- **When transporting a load, keep the loader bucket as low as possible to avoid tipping over. Be extremely careful when working on inclines.**
- **Unreasonable operation such as on dangerous terrain, beyond the load capacity or beyond the intended use of the machine must be avoided as it may cause the machine to tip over.**
- **Slow down before entering ungraded terrain.**
- **Do not drive the machine close to the edges of ditches or banks which may collapse under the weight of the machine especially when the ground is loose or wet.**
- **Operating on slopes can be dangerous, rain, snow, loose gravel, soft ground, etc., will change the ground conditions.**
  Do not operate this machine in questionable ground conditions.
- **Never perform digging or shoveling with the machine in the articulated condition.**
- **Never dig or shovel at high speed.**
  Such operation can cause the machine to lose balance and its rear wheels to lift off the ground, which may in turn cause a serious accident.
- **To avoid possible machine tip over, do not operate the machine in any site whose terrain cannot be ascertained, such as ground covered with weeds or snow and check for hidden projections, dents, road shoulders, etc., beforehand, and take care not to approach them during work.**
- **Be sure to ease up on the accelerator at the end of backfilling grooves, or areas at the edge of cliffs or pond banks, or at the end of an ascent: Upon removal of the external load, the machine speed will automatically increase, reduce speed to avoid entering grooves or tipping over.**
- **To avoid machine slip or tipping over, do not operate the machine on ungraded or soft terrain, such as landfills. Grade and compact the site beforehand at all times.**

https://truckmanualshub.com/

■Digging and Loading

◆ **Loading a sand pile**

1. Direct the bucket blade parallel to the ground and advance the machine to drive the bucket into the sand pile.

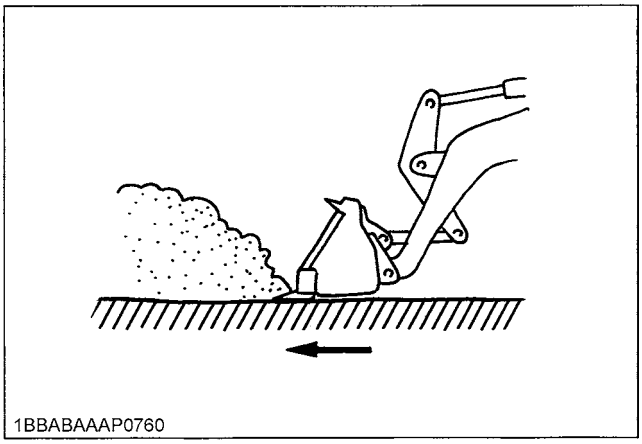

2. When the bucket is sufficiently driven into the sand, lift the bucket while advancing the machine.

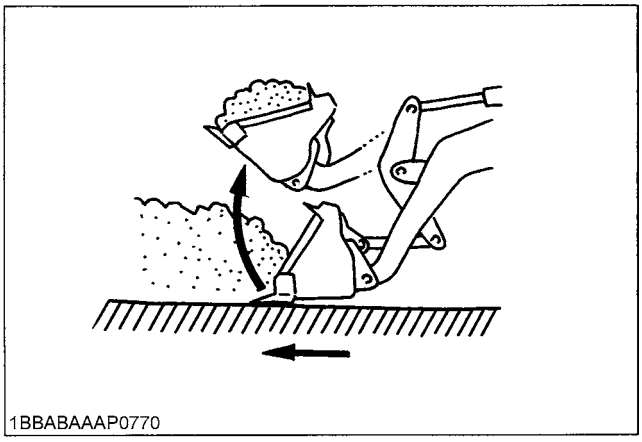

3. If the bucket is insufficiently driven into the sand, move the bucket blade up and down while moving forward.

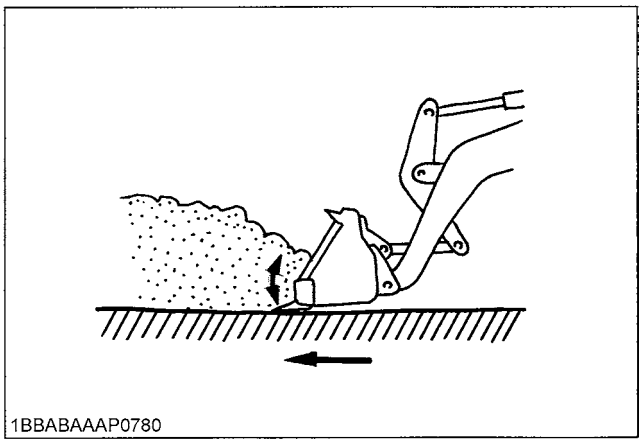

◆ **Digging and loading from flat ground**

1. Direct the bucket blade slightly downward and lower the bucket as you advance the machine.
   The recommended digging depth per pass is between 10 and 15cm (4-6").

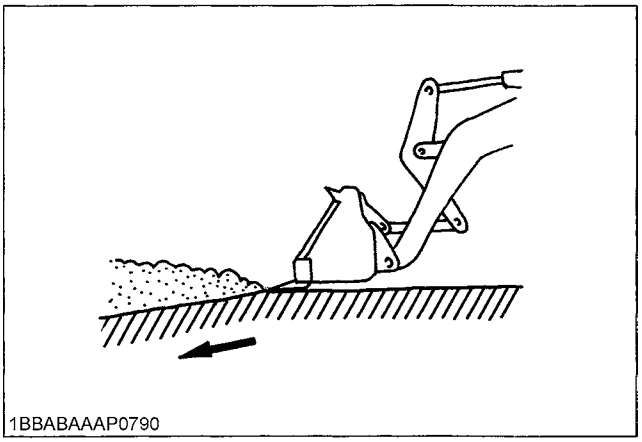

2. While adjusting the vertical movement of the bucket, lift the bucket so that sand can be removed by layers. Continue in this manner as you advance the machine.

https://truckmanualshub.com/

■Refilling

1. Direct the bucket horizontally and push the piled sand toward the ditch.
2. When the bucket reaches the ditch, dump the bucket to discharge the sand into the ditch.

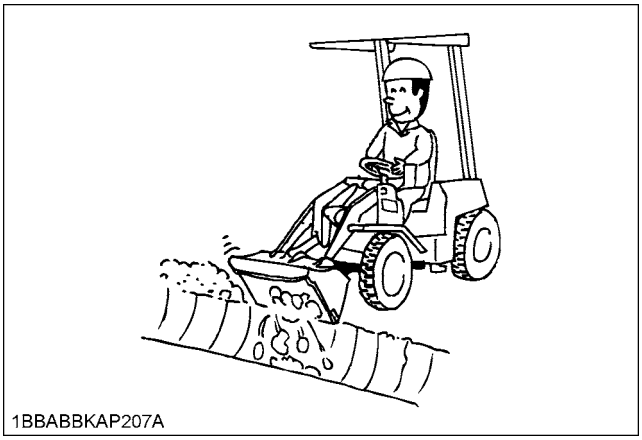
1BBABBKAP207A

■Leveling Ground

1. Dump and tilt the bucket alternately to distribute the soil from the bucket over the ground as you move the machine backward.
2. Then, dump the bucket, lower the bucket and move the machine backward so that the blade scratches the ground surface.
3. Direct the bucket horizontally, set the lift arms in the "floating" position using the control lever and level the ground while backing the machine.

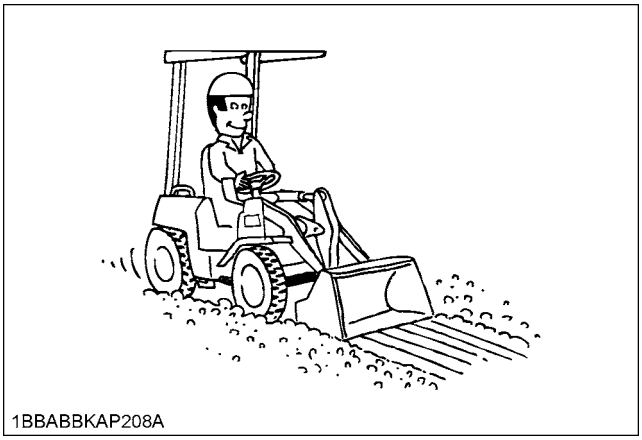
1BBABBKAP208A

■Loading onto a Truck

Examine the job site situation and choose the efficient loading method that minimizes the swivel angle and moving distance.

◆ **Cross loading method**

1. Position a truck perpendicular (90 °) to the shoveling direction of the machine.
2. After digging and shoveling with the bucket, move the machine backward. Then drive the truck to a point between the machine and the piled sand. Then, load the sand onto the truck.
3. This method is the fastest and leads to the shortest cycle time.

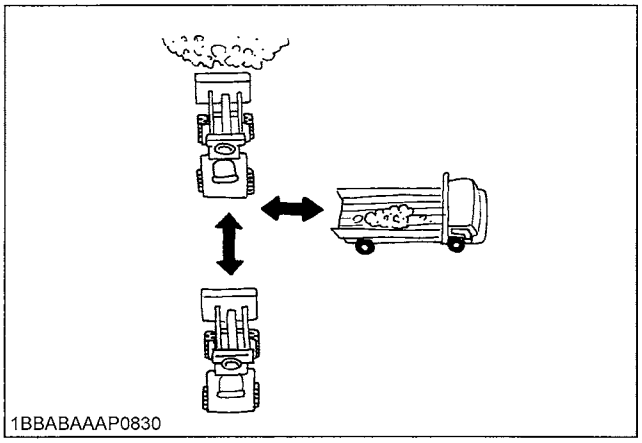
1BBABAAAP0830

◆ **V-shift loading method**

1. Position a truck at an angle of about 60 ° from the shoveling direction of the machine.
2. After digging and shoveling with the bucket, move the machine backward and turn the steering wheel to position the machine perpendicular (90 °) to the truck. Then move the machine forward to load sand onto the truck.
3. A smaller angle between the machine and truck will provide a shorter cycle time and more efficient operation.

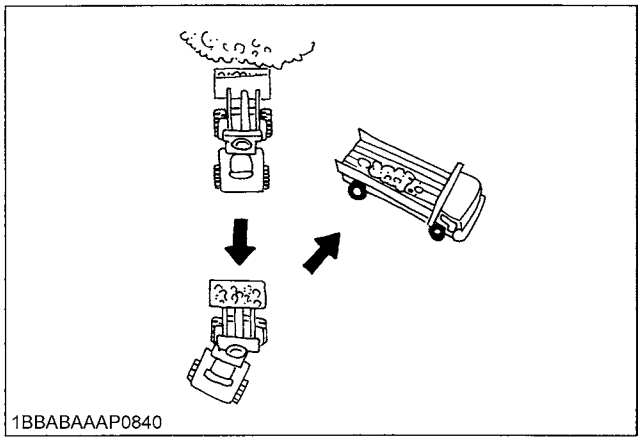
1BBABAAAP0840

https://truckmanualshub.com/

ANTI-THEFT DEVICE (FOR KCL ONLY)

■Anti-Theft Device

This machine is equipped with an anti-theft device, which allows you to start the engine with the registered key alone.
If a registered key is stolen, the stolen key can be unregistered. It prevents this key from starting the engine to protect the machine against theft.

With the key at **"STOP"**, the "anti-theft indicator" stays on to tell that the anti-theft function is enabled. Be sure that this indicator is on before leaving the machine.

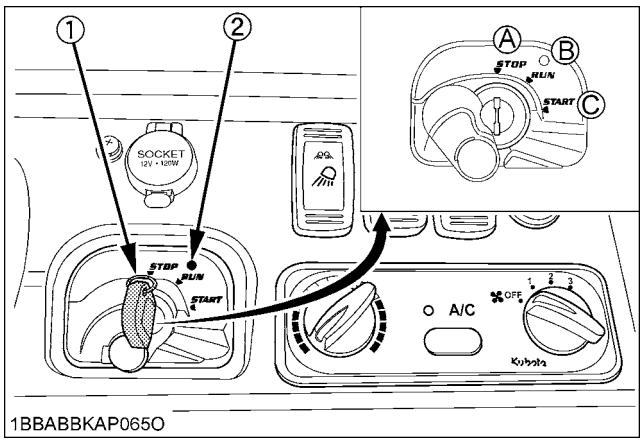

(1) Starter key
(2) Anti-theft indicator
(A) "STOP"
(B) "RUN"
(C) "START"

◆ **The machine comes with two different types of keys.**

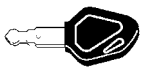 1BAABAUAP230D	Black key (individual key)	This key is used to start the engine. It is possible to start the engine as before by inserting the key and turning it to the **[START]** position. Registering a black key with the machine by using the red key will allow the black key to start the engine. A key not registered with the machine cannot be used to start the engine. ✻ Initially two keys including a spare key are supplied. The two accompanying keys have been already registered. Up to four keys can be registered.
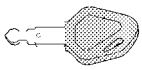 1BAABAUAP229E	Red key (registration key)	If a black key for starting the engine should be lost, the red key is used to register another black key with the machine. The engine cannot be started with this key. For the method of using the red key, refer to "How to register a black key with the machine".

◆ **How to register a black key (individual key) with the machine (When a black key is lost)**

WARNING

To avoid personal injury or death:

- **Before programming an anti-theft key, be sure to sit on the operator's seat and make sure all the control levers are in the "Neutral" position. If this is neglected, the machine may get moving as soon as the engine is started, which could lead to a dangerous situation.**
- **The exhaust gas from the engine includes harmful substances such as carbon monoxide. Be careful not to make this setting in a room where the exhaust gases easily build up or in an ill-ventilated place.**

1. Insert the red key into the key switch.
   (*Do not turn the inserted key. If the key is turned to the **"RUN"** position, return it to the **"STOP"** position.)

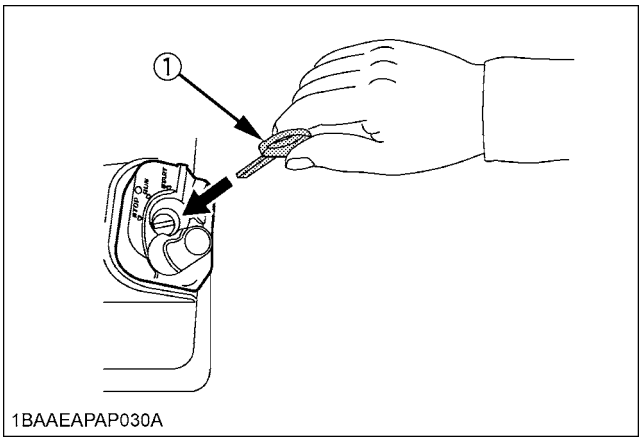

(1) Red key

2. Press the display selector switch once. Then the LED indicator **"Pull off"** blinks.

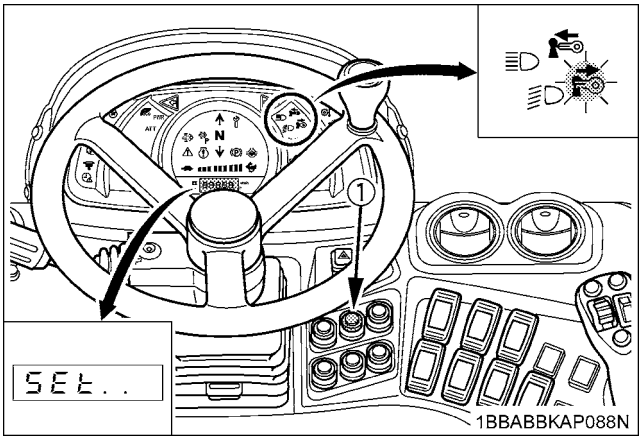

(1) Display selector switch

https://truckmanualshub.com/

3. Pull out the red key from the key switch. Then the LED indicator **"Insert"** blinks.

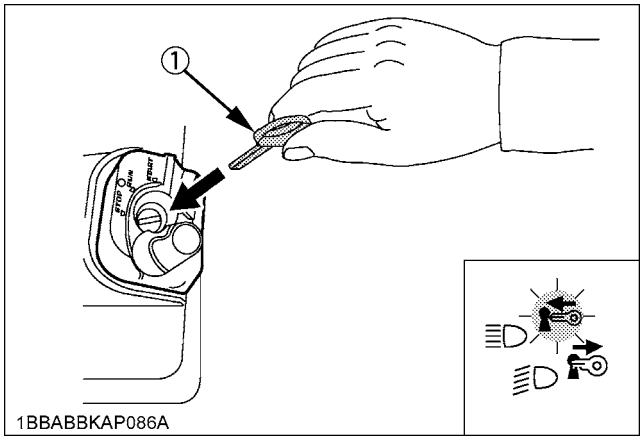

(1) Red key

4. Insert the black key into the key switch.
   (* Do not turn the inserted key. If the key is turned to the **"RUN"** position, return it to the **"STOP"** position and return to the step 1.)
   Then the LED indicator **"Pull off"** blinks.

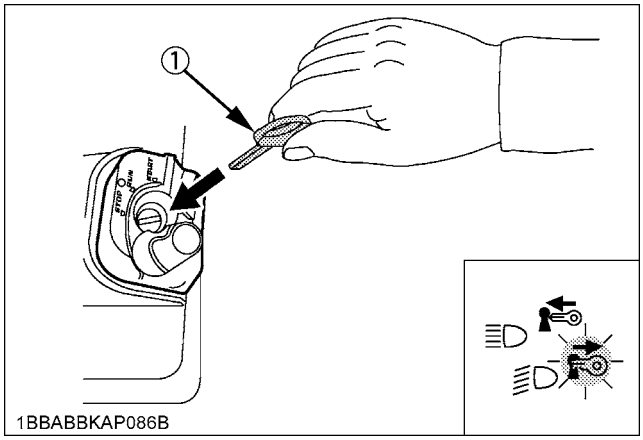

(1) Black key

5. Pull out the black key.
   When all registration operation has been finished, turn the black key to the **"RUN"** position.

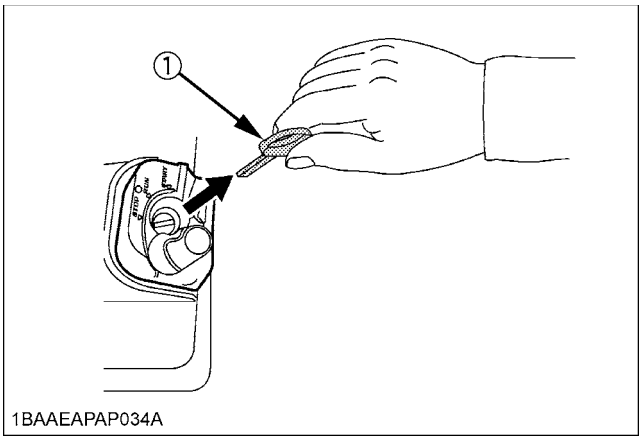

(1) Black key

NOTE :

- If a registered black key is stolen or lost, re-register the remaining black key. When re-registering is performed, the stolen or lost black key is unregistered and it becomes impossible to start the engine with that key.
- If the red key is stolen or lost, it becomes impossible to register or re-register a black key (for starting the engine) and the peripheral devices should be replaced. Therefore store the red key with great care. If by any chance it gets lost, promptly contact your dealer.
- Use the Kubota-specified key ring to hold the black key or the red key. Any unspecified key rings may interfere with the signal transfer between the key and the key switch, possibly failing to start the engine or to register a key properly.
- Do not bundle two or more keys when using them. Doing so may cause electric wave interference, possibly failing to start the engine.
- Cut and remove the ring that is used to bundle the keys at the time of delivery. (If the keys remain bundled, the engine may start with the red key or re-registering could not be performed properly.)
- If an unregistered key is inserted and turned more than six times for one minute, the alarm sounds for 30 seconds. (The alarm keeps sounding even if the key is drawn out.)

∗ Insert and turn on the registered key, and the alarm stops itself.

- If something is wrong with the machine, immediately contact your dealer and have the machine inspected and repaired.

https://truckmanualshub.com/

TRANSPORT BY TRUCK

■ Loading on and from a truck

WARNING

To avoid personal injury or death:

- **When loading the machine on or unloading from a truck, be sure to use strong ramps. Never use wet lumber, etc.**
- **Keep the ramps at an angle such that the machine can be kept stable (10 to 15°).**
  Never try to change directions while on the ramps.
- **Do not alter the climbing direction once already on the ramps.**
  If direction of climb needs correcting, first bring the machine down off the ramps and make the directional correction.

1. Before loading the machine onto a truck, apply the parking brake of the truck, block the front and rear wheels.

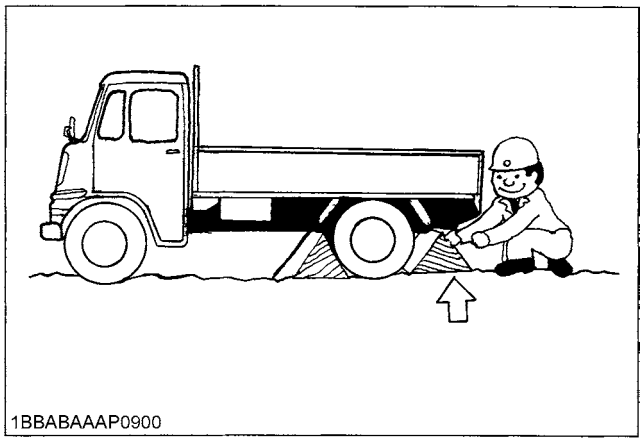

2. Fix the ramps securely to the truck so they cannot slip.

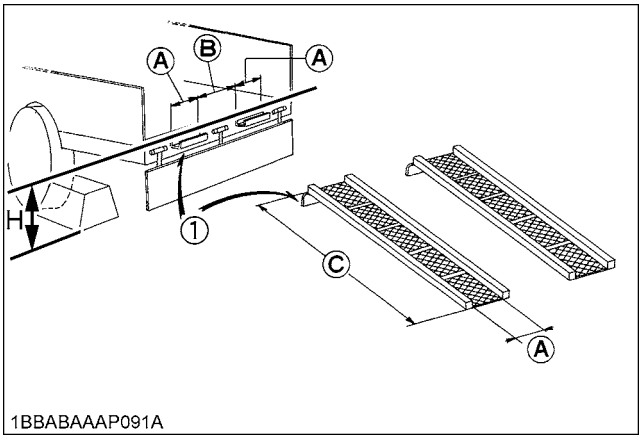

(1) Lock plate

(A) 500 to 600 mm (19.7 to 23.6 in.)
(B) 650 mm (25.6 in.)
(C) 4 x H or more

3. Support the rear end of the bed to prevent the truck front from rising.

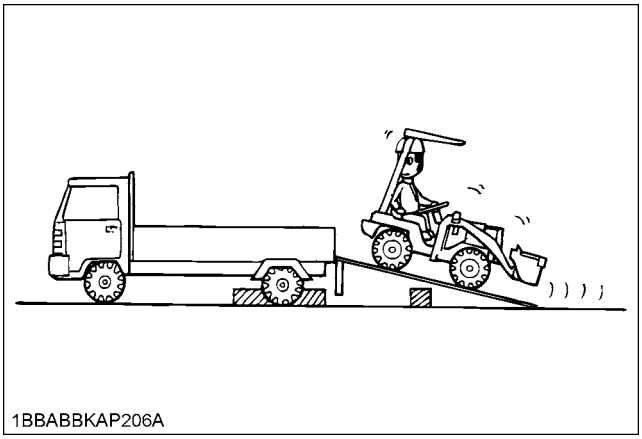

4. When loading or unloading the machine on or from a truck, keep the bucket about 40 cm (16 in.) up from the ground and reverse the machine at low speed or advance it at the same speed to unload it.

IMPORTANT :

- When advancing and reversing the machine on the truck bed, be careful not to hit the cabin and the gates.

https://truckmanualshub.com/

■ Transportation

WARNING

To avoid personal injury or death:

- **Before transportation, do the following to prevent the machine from moving during transportation.**
- **Check to see that the machine's longitudinal axis aligns with that of the truck bed.**
- **Stop the engine and remove the key.**
- **Lower the bucket and attachment to the truck bed.**
- **Release the hydraulic pressure in the hydraulic system by operating control levers.**
- **Lock all control levers in neutral.**
- **Secure the steering frame lock.**
- **Block the machine's wheels.**
- **Securely fasten the machine to the truck with straps or chains.**

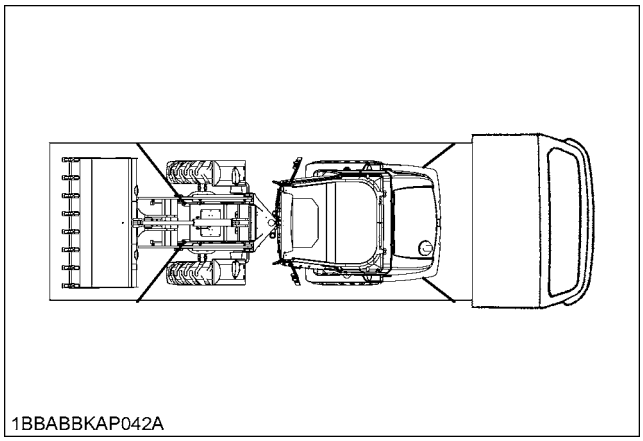

1BBABBKAP042A

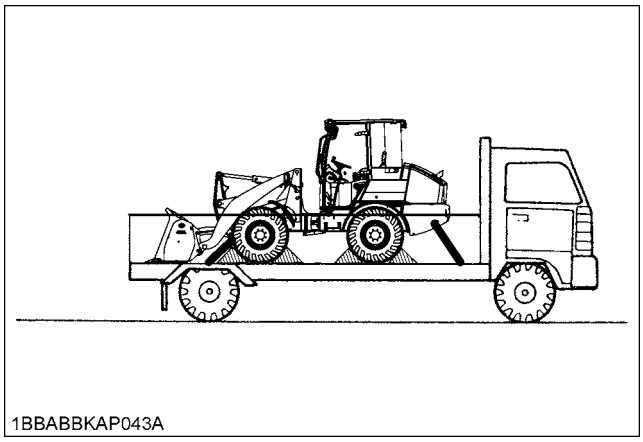

1BBABBKAP043A

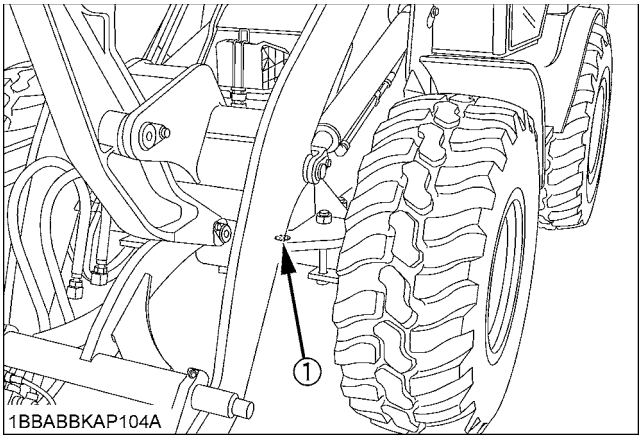

1BBABBKAP104A

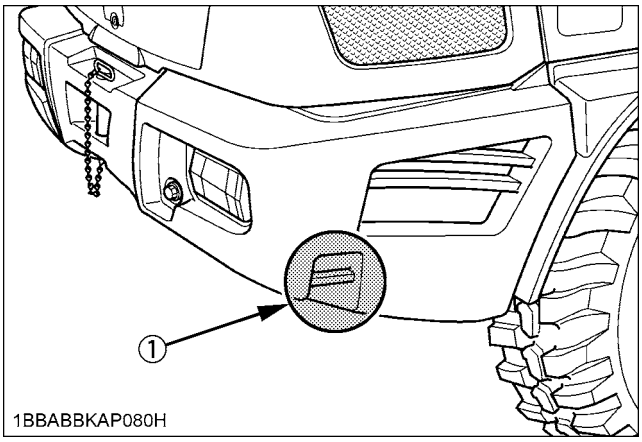

1BBABBKAP080H

(1) Lug (Both sides)

- Use the locations indicated by marks in the diagram to tie down the machine

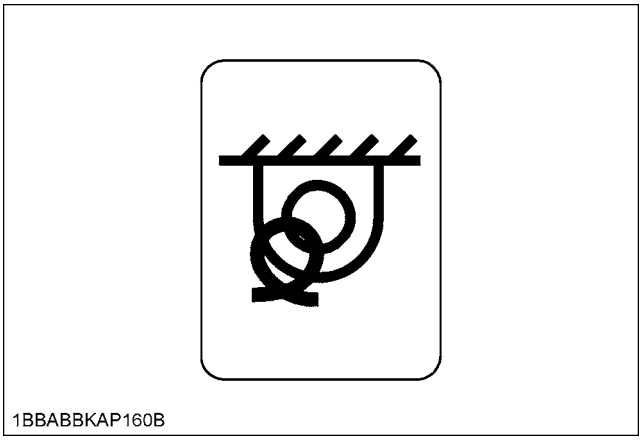

1BBABBKAP160B

https://truckmanualshub.com/

LIFTING THE MACHINE

DANGER

To avoid serious injury or death:

- **The instructions for safe lifting are described here. Read these instructions carefully before lifting the machine. Make sure that the operating personnel read the operator's manual carefully before lifting.**

IMPORTANT :

- Select a firm level surface, lower the working equipment to the ground, stop the engine and set the control lever lock and the auxiliary port lever lock to the **"LOCK"** position.
- Secure the front and rear frames using the steering lock frame so that the front and rear frames are not articulated.
- Do not lift loads that exceed the maximum rated capacity of the hoist and attaching hardware.
- See specifications for attaching hardware and choose hardware suitable for the weight, size and configuration of the load.
- Assess the center of gravity of the load, position the hook directly over the load and lift the load so that it remains horizontal.
- Do not enter and do not allow others to enter the working area under the suspended load and do not move the load over people. The load must only be moved in an area where the equilibrium can be maintained.
- Always inspect the attaching hardware, including chains, hooks and master links before each use. Do not use any worn or damaged attaching hardware or if the safety latch is missing.
- Make sure the lifting chains, hooks and master links are strong enough to withstand the load being lifted.

Lifting

- Set the control lever lock and the auxiliary port lever lock to the **"LOCK"** position.
- Make sure the steering frame lock is attached.
- Stop the engine. Remove the key from the starter switch.
- Use the specified lifting position as shown below to lift the machine.

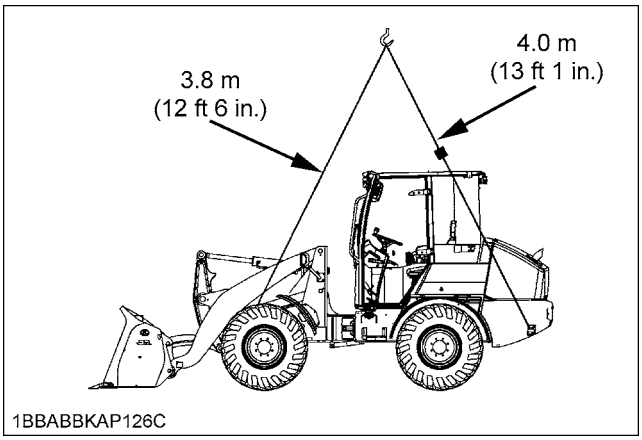

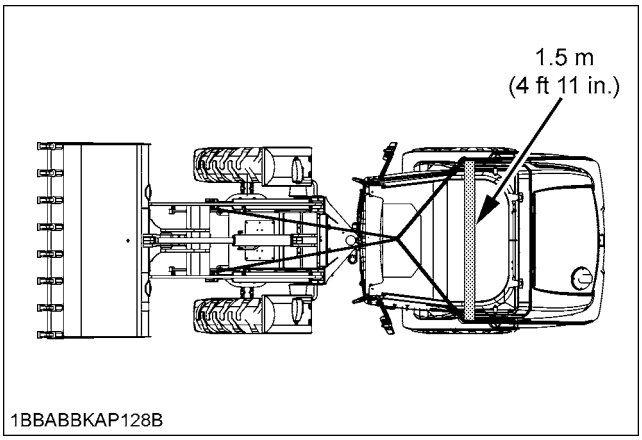

- Use the locations indicated by marks in the diagram to lift the machine

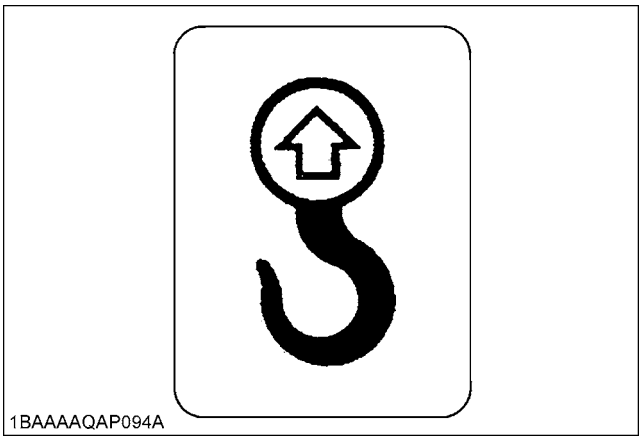

https://truckmanualshub.com/

HANDLING LOADER IN COLD WEATHER

PREPARATIONS FOR COLD WEATHER

1. Change engine oil to one of low viscosity suitable for use in cold weather.
2. In cold weather, battery power drops, and electrolyte may freeze if the battery is not sufficiently charged. To prevent electrolyte from freezing, be sure to keep the battery charged at 75 % capacity or more. It is also recommended to keep the battery in closed or heated rooms to facilitate next starting. If the battery electrolyte level is too low, do not add distilled water after operating, do it before starting the next operation while the engine can be running.
3. Add anti-freeze to cooling water in the radiator and recovery tank while machine is out of operation if ambient temperature drops below 0℃. The mixing ratio between water and anti-freeze is determined by the ambient temperature.

- Mixing ratio between water and anti-freeze

Ambient temperature ℃ ℉	-5 (23)	-10 (14)	-15 (5)	-20 (-4)	-25 (-13)	-30 (-22)	-35 (-31)	-40 (-40)
Anti-freeze %	30	30	30	35	40	45	50	55
Water %	70	70	70	65	60	55	50	45

IMPORTANT :
- Use a permanent-type anti-freeze or long-life coolant.
- Be sure to drain cooling water and deposits completely from the radiator interior before adding a new mixture of water and anti-freeze.
- Anti-freeze contains anticorrosive, it is not necessary to add a cleaner to the coolant.
- Engine coolant capacity

Capacity	7.6 L (2 U.S.gal.)

NOTE :
- Add 1.2 L (0.3 U.S.gal) coolant for wheel loaders with a cabin.

AFTER-OPERATION DIRECTIONS

After operation, be sure to remove mud or water from the machine's body.
Then park the machine on concrete or where ground is dry.
Lay planks or mats on the ground and park the machine on them. If the machine should be parked on the ground and the tires freeze during the night, driving will be impossible.
It is also important to wipe the piston rod surface of the hydraulic cylinders carefully. If mud should enter the seal with frozen water, it may be damaged.
Water in the fuel system should be drained to prevent freezing at night.

https://truckmanualshub.com/

MAINTENANCE

■ Maintenance

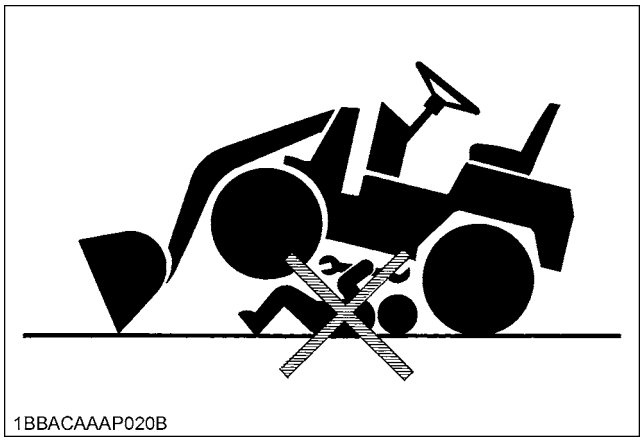
1BBACAAAP020B

WARNING

To avoid personal injury or death:

- **Place the machine on the flat ground.**
- **Before servicing or checking the machine, do the following procedures.**
  - **Stop the engine.**
  - **Set the direction switch to the neutral position.**
  - **Lower the bucket and attachment to the ground.**
  - **Release the hydraulic pressure in the hydraulic system. (For details, refer to "HOW TO RELEASE PRESSURE TRAPPED IN THE HYDRAULIC SYSTEM".)**
  - **Activate the hydraulic lock switch.**
  - **Remove the key.**
  - **Secure the articulation joint with the steering frame lock.**
- **Never get under the machine while it is being lifted with only the bucket. If servicing or checking underneath, support it firmly with strong blocks, etc.**
  If you do not follow this instruction, serious injury or death can result.
- **Keep clear of articulation area when servicing.**
- **Keep sparks and naked flames away.**
- **To avoid the danger of exhaust fume poisoning, do not operate the machine in a closed building without proper ventilation.**
- **When servicing or checking the electrical system, disconnect the battery cables.**
- **Wear safety gear such as a hardhat, glasses and safety shoes.**
- **Do not carry out any work or modifications on hydraulic components.**

1. To safely use the machine and prevent any trouble from occurring, be sure to conduct daily inspections and periodic servicing.
2. The 12V socket can be used as a source of power for illumination if you have to check the machine at night.

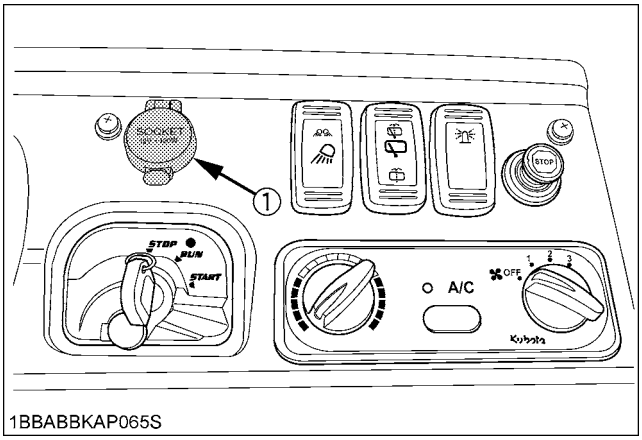

1BBABBKAP065S

(1) Power socket 12V

IMPORTANT :

- If the machine cannot be operated and must be towed, please contact your local KUBOTA dealer for information about correct towing procedures.
- Major maintenance and service requires a specialist, please contact your KUBOTA dealer.
- Clean the machine so that it is easy to find what is wrong.
- Clean the parts of the hydraulic system and the oil level gauge in particular to keep them free of dust and other foreign matter.
- When washing, be careful not to get the electrical parts wet.
- Check or replenish the oil in a place where there is little dust and use a clean oil container to prevent dust from permeating the oil.
- Check or replenish oil when the machine is level.
  Use the same brand when replenishing oil.
- After greasing the machine, wipe off all old grease, especially from those parts where sand and dust can accelerate wear.
- When changing the oil check whether the old oil is abnormally permeated with metal fillings or foreign matter.
- Only use commercially available, noncombustible washing agents. Only wash at the designated places (oil, grease traps available).

https://truckmanualshub.com/

MAINTENANCE INTERVALS

No.	Check points		Measure	Hour meter indicator									Interval	Ref. page		
				50	100	150	200	250	300	350	400	450				
1	Coolant		check	Daily check										89		
			change										every 2 years	107		
2	Fuel		check	Daily check										88		
3	Engine oil		check	Daily check										86		
			change										every 500 hrs	99	*3	
4	Hydraulic oil		check	Daily check										87		
			replace										every 1000 hrs	104	*3	
5	Radiator and oil Cooler		check	Daily check										91		
6	Engine and electrical wiring		check	Daily check										94		
			check										every 1 year	106		
7	Washer liquid **[CABIN type only]**		check	Daily check										94		
8	Water separator		drain	Daily check										92		
9	Tire air pressure		check	Daily check										91		
10	Brake		check	Daily check										92		
11	Fan belt tension		check	Daily check										92		
			adjust					○					every 250 hrs	97		
12	Lubrication points		grease	Daily check										90		
13	Battery condition		check	○	○	○	○	○	○	○	○	○	every50 hrs	95		
14	Air filter **[CABIN type only]**		clean					○					every 250 hrs	98		
			replace										every 1000 hrs			
15	Air conditioner condenser **[CABIN type only]**		clean					○					every 250 hrs	-		
16	Water separator filter element		replace					○					every 250 hrs	99		
17	Propeller shaft		grease					○					every 250 hrs	96		
18	Radiator hoses and clamps		check					○					every 250 hrs	97		
			replace										every 2 years	108		
19	Air cleaner element	Outer element	clean					○					every 250 hrs	98		@
			replace										every 1000 hrs	105	*3	
		Inner element	replace										every 1000 hrs	105	*3	
20	Fuel line and intake air line		check					○					every 250 hrs	98		@
			replace										every 2 years	108	*1	
21	Air conditioner pipes and hoses **[CABIN type only]**		check										every 1 year	-		
			replace										every 2 years	108	*2	
22	Wheel nuts		check tighten	◉				○					every 250 hrs	98		
23	Fuel filter		replace										every 500 hrs	102	*3	@
24	Engine oil filter		replace										every 500 hrs	100	*3	
25	Hydraulic return filter element		replace										every 500 hrs	101	*3	
26	Oil for front/rear axle differential case		check										every 500 hrs	101		
			change										every 1000 hrs	101	*3	
27	HST oil filter		change										every 1000 hrs	103	*3	
28	Hydraulic suction filter element		replace										every 1000 hrs	104	*3	
29	Engine valve clearance		adjust										every 1000 hrs	105	*2	
30	Injector tip		check										every 1500 hrs	105	*2	@
31	Oil separator element		replace										every 1500 hrs	105		@
32	EGR cooler		check										every 1500 hrs	106	*2	@

https://truckmanualshub.com/

No.	Check points	Measure	Hour meter indicator									Interval	Ref. page		
			50	100	150	200	250	300	350	400	450				
33	Alternator and starter motor	check										every 2000 hrs	106		
34	EGR system	check										every 3000 hrs	106	*2	@
35	Turbo charger (R630)	check										every 3000 hrs	106	*2	@
36	DPF	clean										every 3000 hrs	106	*3	@
37	AFS (Air flow sensor)	check										every 1 year	106	*2	
38	Boost sensor (R630)	check										every 1 year	106	*2	
39	Condition of DPF muffler	check										every 1 year	106	*2	
40	DPF differential pressure sensor and piping for gas leak	check										every 1 year	106	*2	
41	DPF exhaust gas temperature	check										every 1 year	106	*2	
42	EGR and piping for gas leak	check										every 1 year	106	*2	
43	Radiator system	rinse										every 2 years	-		
44	Oil separator related rubber piping	replace										every 2 years	108	*2	
45	DPF differential pressure sensor rubber piping (Front and back)	replace										every 2 years	108	*2	
46	Suction pipe downstream the AFS (Air flow sensor)	replace										every 2 years	108	*2	
47	Boost sensor pressure rubber piping (R630)	replace										every 2 years	108	*2	
48	EGR cooler hose	replace										every 2 years	108	*2	
49	Coolant hoses and hose clamps	replace										every 2 years	-		
50	Hydraulic hoses	replace										every 2 years	-		
51	Refrigerant (gas) **[CABIN type only]**	check										service as required	-		

◉ First operation

∗ 500 thru 1000 continued to the following table.

https://truckmanualshub.com/

No.	Check points		Measure	Hour meter indicator								Interval	Ref. page		
				500	550	600	650	700	750	800	1000				
1	Coolant		check	Daily check									89		
			change									every 2 years	107		
2	Fuel		check	Daily check									88		
3	Engine oil		check	Daily check									86		
			change	○							○	every 500 hrs	99	*3	
4	Hydraulic oil		check	Daily check									87		
			change								○	every 1000 hrs	104	*3	
5	Radiator and oil Cooler		check	Daily check									91		
6	Engine and electrical wiring		check	Daily check									94		
			check									every 1 year	106		
7	Washer liquid **[CABIN type only]**		check	Daily check									94		
8	Water separator		drain	Daily check									92		
9	Tire air pressure		check	Daily check									91		
10	Brake		check	Daily check									92		
11	Fan belt tension		check	Daily check									92		
			adjust	○					○		○	every 250 hrs	97		
12	Lubrication points		grease	Daily check									90		
13	Battery condition		check	○	○	○	○	○	○	○	○	every50 hrs	95		
14	Air filter **[CABIN type only]**		clean	○					○		○	every 250 hrs	98		
			replace								○	every 1000 hrs			
15	Air conditioner condenser **[CABIN type only]**		clean	○					○		○	every 250 hrs	-		
16	Water separator filter element		replace	○					○		○	every 250 hrs	99		
17	Propeller shaft		grease	○					○		○	every 250 hrs	96		
18	Radiator hoses and clamps		check	○					○		○	every 250 hrs	97		
			replace									every 2 years	108		
19	Air cleaner element	Outer element	clean	○					○		○	every 250 hrs	98		@
			replace								○	every 1000 hrs	105	*3	
		Inner element	replace								○	every 1000 hrs	105	*3	
20	Fuel line and intake air line		check	○					○		○	every 250 hrs	98		@
			replace									every 2 years	108	*1	
21	Air conditioner pipes and hoses **[CABIN type only]**		check									every 1 year	-		
			replace									every 2 years	108	*2	
22	Wheel nuts		check tighten	○					○		○	every 250 hrs	98		
23	Fuel filter		replace	○							○	every 500 hrs	102	*3	@
24	Engine oil filter		replace	○							○	every 500 hrs	100	*3	
25	Hydraulic return filter element		replace	○							○	every 500 hrs	101	*3	
26	Oil for front/rear axle differential case		check	○							○	every 500 hrs	101		
			change								○	every 1000 hrs	101	*3	
27	HST oil filter		change								○	every 1000 hrs	103	*3	
28	Hydraulic suction filter element		replace								○	every 1000 hrs	104	*3	
29	Engine valve clearance		adjust								○	every 1000 hrs	105	*2	
30	Injector tip		check									every 1500 hrs	105	*2	@
31	Oil separator element		replace									every 1500 hrs	105		@
32	EGR cooler		check									every 1500 hrs	106	*2	@
33	Alternator and starter motor		check									every 2000 hrs	106		

https://truckmanualshub.com/

No.	Check points	Measure	Hour meter indicator								Interval	Ref. page		
			500	550	600	650	700	750	800	1000				
34	EGR system	check									every 3000 hrs	106	*2	@
35	Turbo charger (R630)	check									every 3000 hrs	106	*2	@
36	DPF	clean									every 3000 hrs	106	*3	@
37	AFS (Air flow sensor)	check									every 1 year	106	*2	
38	Boost sensor (R630)	check									every 1 year	106	*2	
39	Condition of DPF muffler	check									every 1 year	106	*2	
40	DPF differential pressure sensor and piping for gas leak	check									every 1 year	106	*2	
41	DPF exhaust gas temperature	check									every 1 year	106	*2	
42	EGR and piping for gas leak	check									every 1 year	106	*2	
43	Radiator system	rinse									every 2 years	-		
44	Oil separator related rubber piping	replace									every 2 years	108	*2	
45	DPF differential pressure sensor rubber piping (Front and back)	replace									every 2 years	108	*2	
46	Suction pipe downstream the AFS (Air flow sensor)	replace									every 2 years	108	*2	
47	Boost sensor pressure rubber piping (R630)	replace									every 2 years	108	*2	
48	EGR cooler hose	replace									every 2 years	108	*2	
49	Coolant hoses and hose clamps	replace									every 2 years	-		
50	Hydraulic hoses	replace									every 2 years	-		
51	Refrigerant (gas) **[CABIN type only]**	check									service as required	-		

IMPORTANT :

- The listed items (@ marked) are registered as emission related critical parts by KUBOTA in the U.S.EPA non-road emission regulation.
  As the engine owner, you are responsible for the performance of the required maintenance on the engine according to the preceding instruction.
  Please see the Warranty Statement in detail.
- When using biodiesel, be sure to check the maintenance requirements of biodiesel fuel as the intervals will change in some of the items.

*1 Replace only if necessary.
*2 Consult your local KUBOTA Dealer for this service.
*3 The maintenance identified with "*3" is appeared on the meter panel at each specified maintenance hours.

https://truckmanualshub.com/

PERIODIC SERVICE

OPENING AND CLOSING OF COVERS

WARNING

To avoid personal injury or death from contact with moving parts:

- **Never open the engine cover while the engine is running.**
- **Do not touch muffler or exhaust pipes while they are hot; Severe burns could result.**

■Engine cover

Insert the key into the key hole, turn it clockwise to unlock the engine cover and push the key hole. And pull up the hood until it will be held.

To close it, release the lock of the gas damper and lower the hood and hold it down tightly. Turn the key counterclockwise to lock the engine cover.

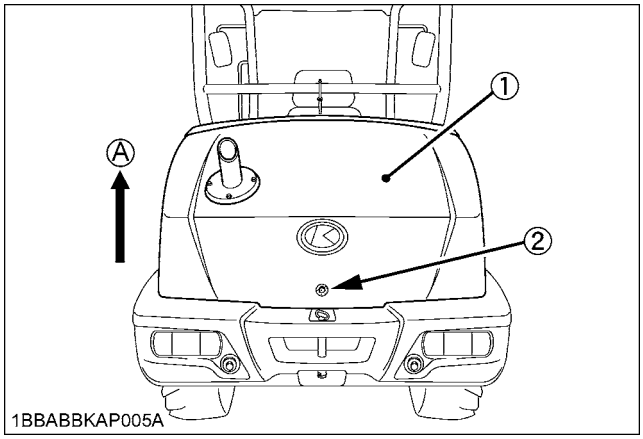

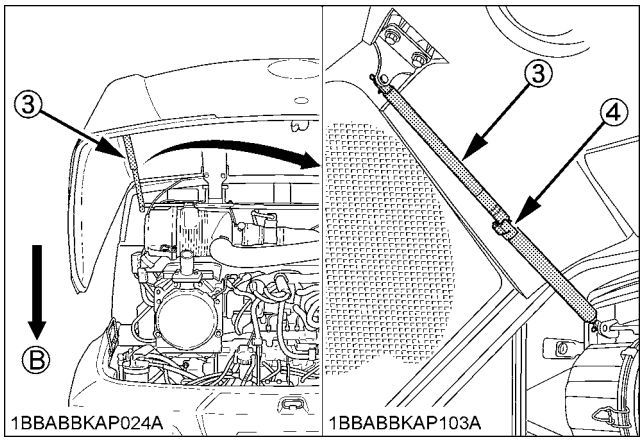

(1) Engine cover
(2) Key hole
(3) Gas damper
(4) Lock

(A) "OPEN"
(B) "CLOSE"

■Side cover

Insert the key into the key hole, turn it clockwise to unlock the side cover and pull up until it will be held.

[Left side]

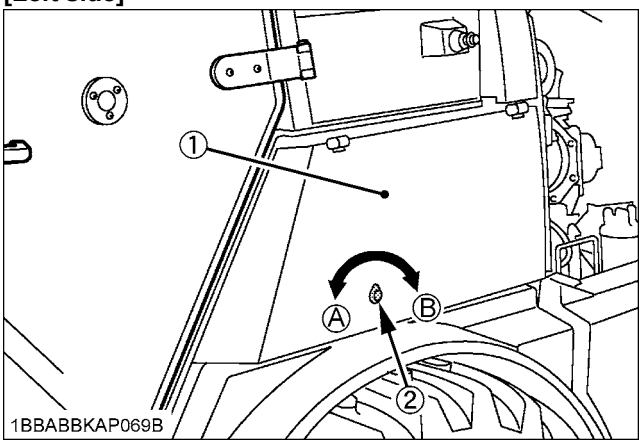

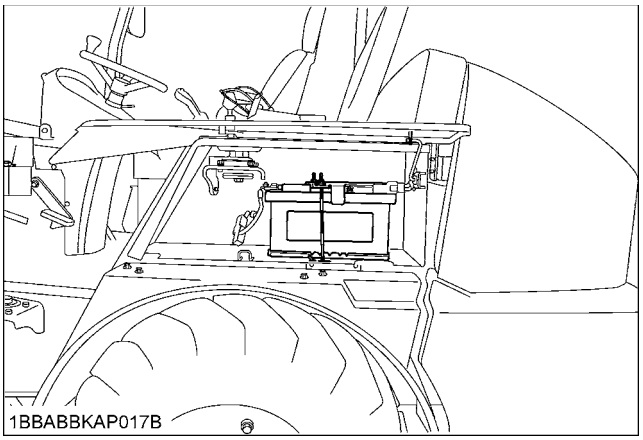

(1) Left side cover
(2) Key hole

(A) "LOCK"
(B) "UNLOCK"

https://truckmanualshub.com/

[Right side]

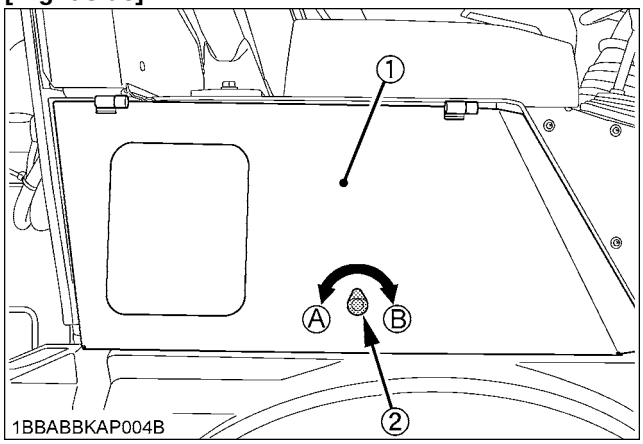

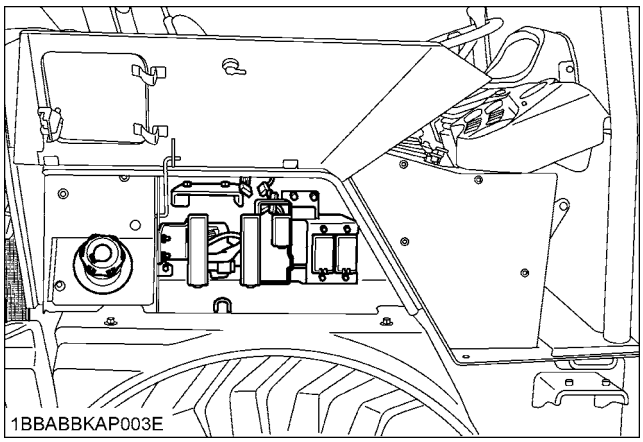

(1) Right side cover *(A) "LOCK"*
(2) Key hole *(B) "UNLOCK"*

DAILY CHECK

It is extremely important to maintain your machine properly to prevent trouble.

1. Walk around the machine and carefully check all hydraulic hoses and connections, the hydraulic cylinders and the fuel pipes for leaked oil, fuel or water. If there are any leaks, take proper measures to stop them. If repair is impossible, contact your KUBOTA dealer.
2. Check for loose bolts, nuts and tighten if necessary, especially wheel nuts.
3. Check the electrical circuit for any damage, shorts or loose connections.

■Checking the engine oil

WARNING

To avoid personal injury or death:

- **Be sure to stop the engine before checking the oil level.**

Insert the oil dipstick all the way into the oil port, take it out, check the oil level, and add oil if necessary. When checking engine oil level, make sure that the machine body is level.

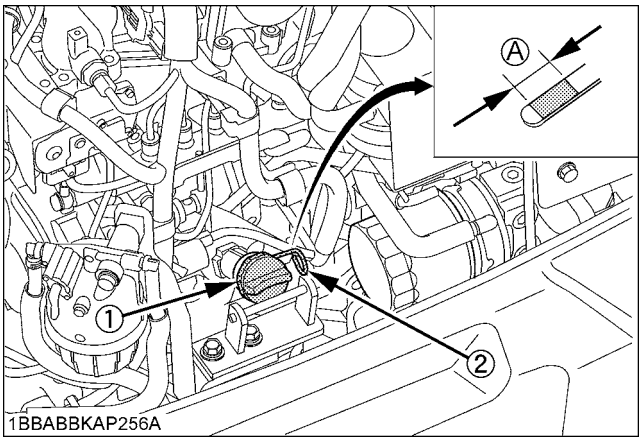

(1) Oil port *(A) Proper oil level*
(2) Oil dipstick

IMPORTANT :

- Use engine oil with the correct viscosity. (according to the outside temperature)
- After stopping the engine and remove the key, wait 5 minutes, then check the oil level. (Machine must be on level ground.)
- A small amount of fuel used for DPF-regeneration may get mixed with the engine oil, which can increase the oil level slightly.
- Do not attempt to repeat or interrupt the regeneration process unnecessarily. Doing so can increase the small amount of fuel that gets mixed with the engine oil, thereby degrading it.
- If the oil rises above the oil level gauge upper limit, it means the oil has been diluted too much, resulting in a trouble. In such case, immediately change the oil for new one.

https://truckmanualshub.com/

■Checking hydraulic oil level

WARNING

To avoid personal injury or death:

- **Never open the oil port immediately after the engine has stopped or hydraulic oil may rush out, causing scalding.**

1. Stop the machine on flat ground and lower the bucket to the ground and roll back the bucket.
2. Check the hydraulic oil level in the oil level gauge.
3. If the oil level is between the upper and lower marks, the amount of the oil is appropriate.
4. If the hydraulic oil level is below the bottom mark, add oil through the oil port.

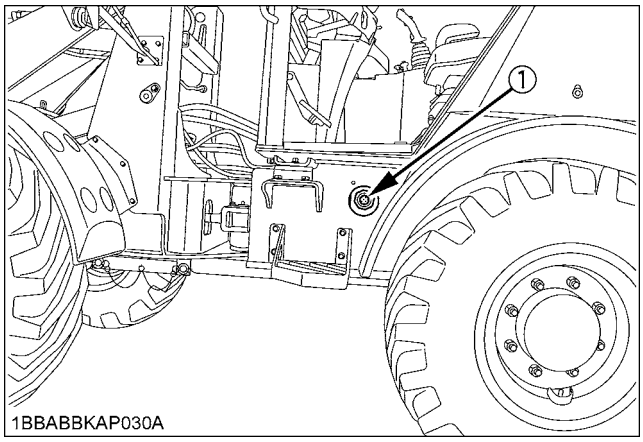

(1) Oil level gauge

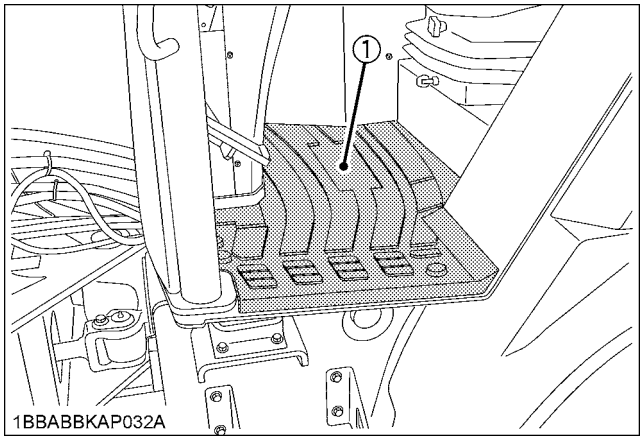

(1) Mat

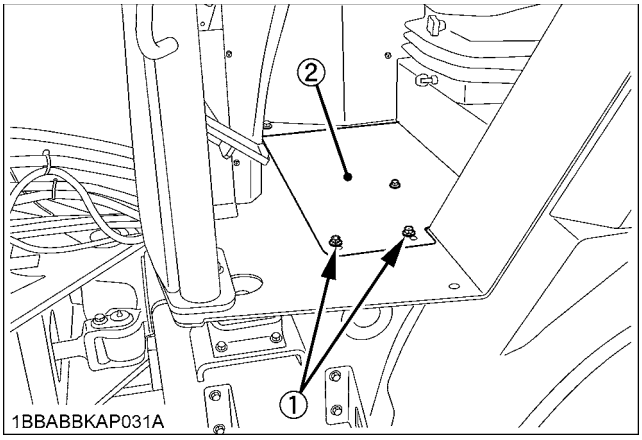

(1) Bolts
(2) Cover

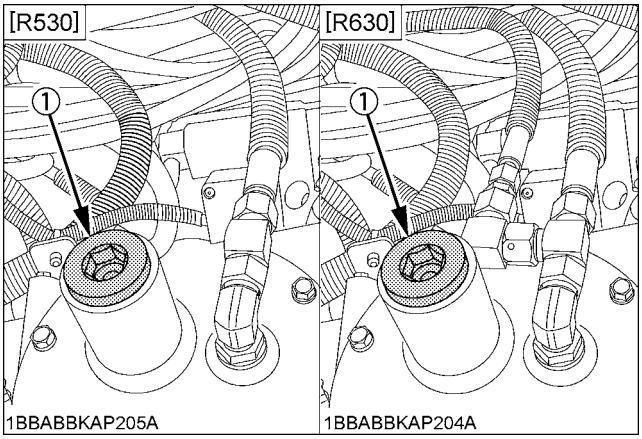

(1) Oil port cap

IMPORTANT :

- When refilling the hydraulic oil, clean the area around the oil port and use the same brand of oil of the same manufacturer.
- Never mix hydraulic oils of different manufacturers.

https://truckmanualshub.com/

■Checking the fuel and replenishing the wheel loader

WARNING

To avoid personal injury or death:

- **Before refueling, always stop the engine, lower the bucket and attachment to the ground, release the hydraulic pressure in the hydraulic system by operating the control levers. Lock all control levers in neutral, and remove the key.**
- **While refueling the wheel loader, smoking, naked flames and operation of other sources of ignition are prohibited. Serious personal injury or death could result.**

IMPORTANT :

- By temperatures over -5°C (23°F), use No.2-D diesel fuel, when temperatures are under -5°C (23°F), use No.1-D diesel fuel.
- Make sure that the fuel tank is not run empty. Air will enter the fuel system, and must be purged before restarting. See "Bleeding the fuel system" in "SERVICE AS REQUIRED" in "PERIODIC SERVICE" section.
- To prevent condensation (water) accumulations in the fuel tank, fill the fuel into the tank before parking overnight.

1. Turn the starter switch to the "RUN" position.
2. Check the fuel level by the fuel gauge.
3. Open the cover, remove the cap and add the fuel if necessary.

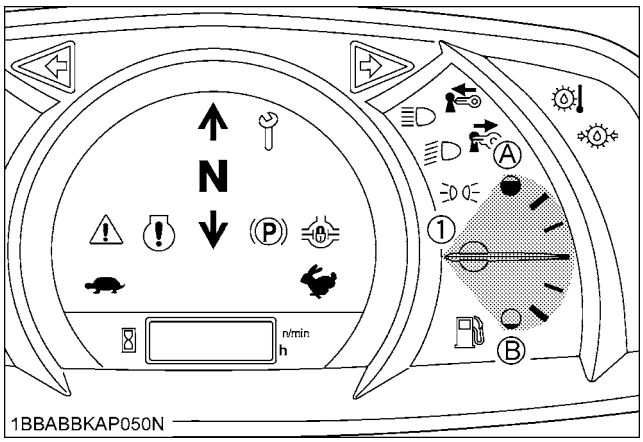

(1) Fuel gauge *(A) "FULL"* *(B) "EMPTY"*

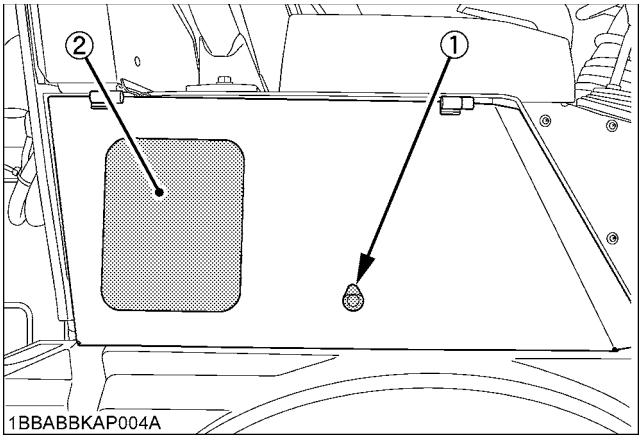

(1) Key hole *(2) Cover*

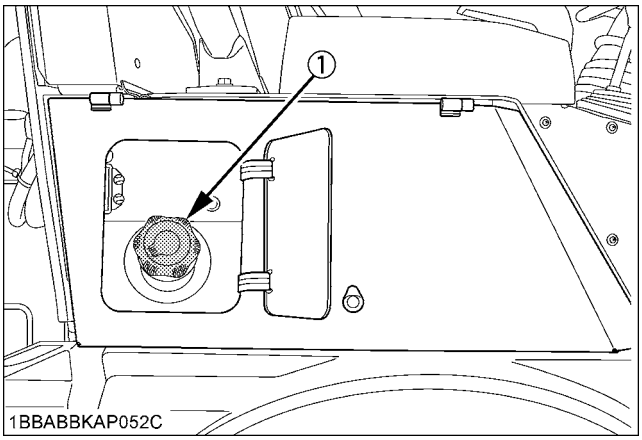

(1) Fuel tank cap

Fuel tank capacity	70 L (18.5 U.S.gal.)

IMPORTANT :

- Avoid fuel spills and overfilling the fuel tank.
- Every time after operation is over, fill the fuel tank fully and be sure to replace the cap and lock the cover.
- To open the fuel cap, keep the key inserted.

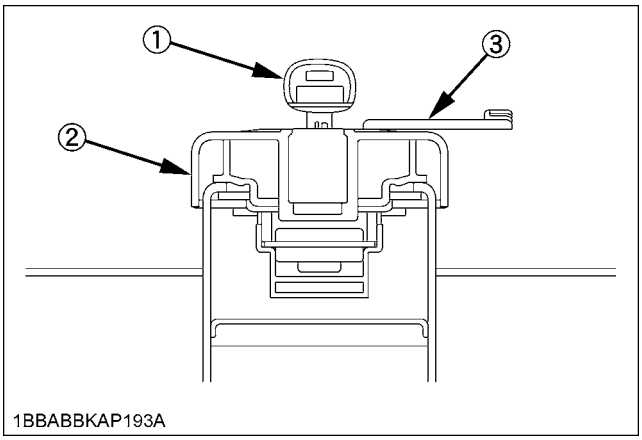

(1) Starter key *(3) Tank cap cover*
(2) Fuel tank cap

https://truckmanualshub.com/

■Checking coolant level and replenishing

WARNING

To avoid personal injury or death:

- **Do not remove radiator cap while coolant is hot. When cool, rotate the cap to the first stop to allow excessive pressure to escape. Then remove the cap completely.**

The radiator is equipped with a recovery tank. When the coolant level drops in the radiator, coolant is added automatically from the recovery tank. It is necessary to check the water level in the recovery tank and refill coolant if necessary.
Do not disconnect the hose but remove the cap. If the coolant level is between **"FULL"** and **"LOW"**, the condition is normal. If it drops quickly, water may be leaking somewhere, be sure to find the cause of leakage.

IMPORTANT :

- Do not fill the recovery tank above the **"FULL"** mark.
- Add only coolant (mixture of water and anti-freeze).

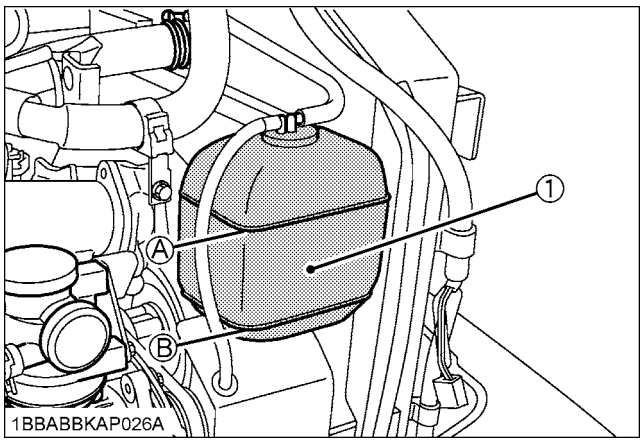

(1) Recovery tank *(A) "FULL"* *(B) "LOW"*

■Checking and replenishment of oil in the brake fluid reservoir

WARNING

To avoid personal injury or death:

- **Only use hydraulic oil that meets ISO VG 32. Use of incorrect oil will cause damage to the brake system and potential brake failure.**

Check the brake fluid level. The level must be between the upper and lower marks on the brake fluid reservoir.

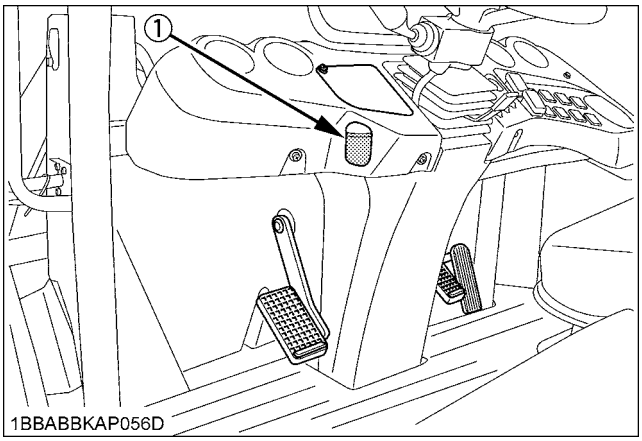

(1) Brake fluid reservoir

IMPORTANT :

- If a large amount of brake fluid has to be replenished, check the brake system for leaks before using the machine again.

https://truckmanualshub.com/

■Grease fittings

DANGER

To avoid serious personal injury or death:

- **Keep clear of articulation joint during service work.**

WARNING

To avoid personal injury or death:

- **Before greasing, always stop the engine, lower the bucket and attachment to the ground, release the hydraulic pressure in the hydraulic system by operating the control levers, lock all control levers in neutral, and remove the key.**
- **Always remove the bucket and attachment and use the lift arm support when servicing the machine with the loader lift arms raised.**

◆ Greasing the front attachments

Apply grease to the fittings on the front attachments indicated by the arrows in the illustration.

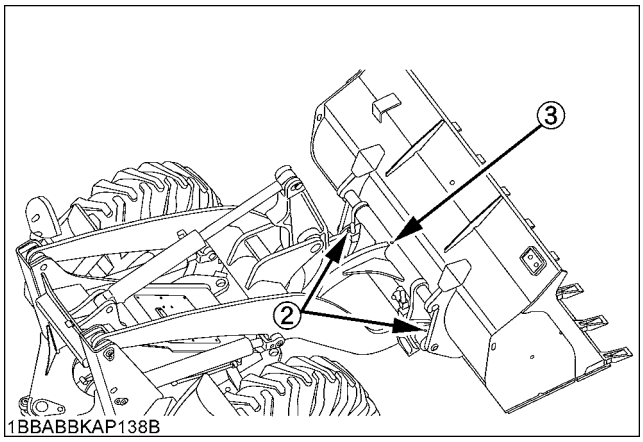

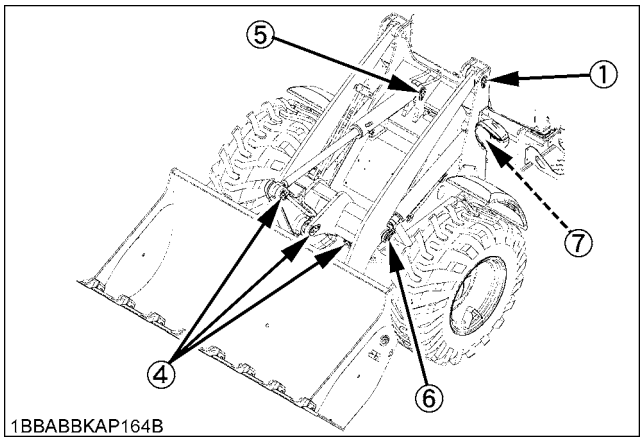

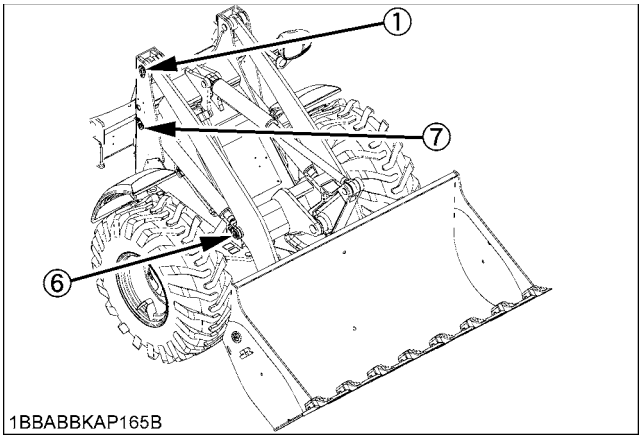

(1) Lift arm attachment pin (2 places)
(2) Quick coupler pin (2 places)
(3) Bucket link pin (1 place)
(4) Bell crank arm pin (3 places)
(5) Bucket cylinder bottom pin (1 place)
(6) Lift cylinder rod pin (2 places)
(7) Lift cylinder bottom pin (2 places)

◆ Greasing the rear frame

Apply grease to the rear frame at one grease fitting.

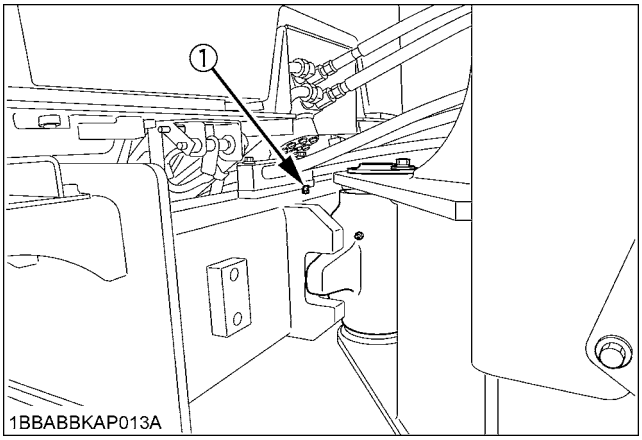

(1) Grease fitting

https://truckmanualshub.com/

◆ **Greasing the articulation joint**

Apply grease to the articulation joint at one grease fitting.

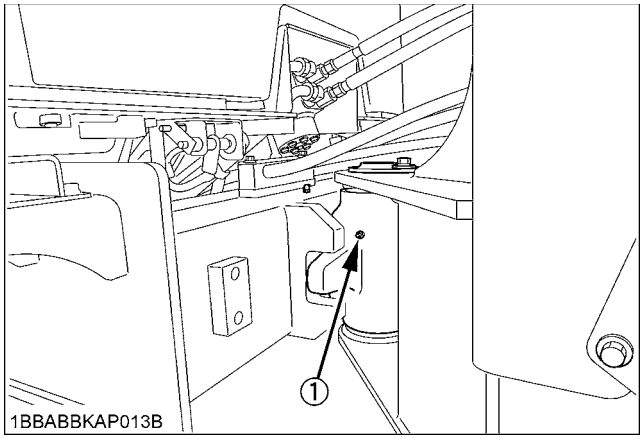

(1) Grease fitting

◆ **Greasing the steering cylinder bearing**

Apply grease to the steering cylinder bearing at the two grease fittings.

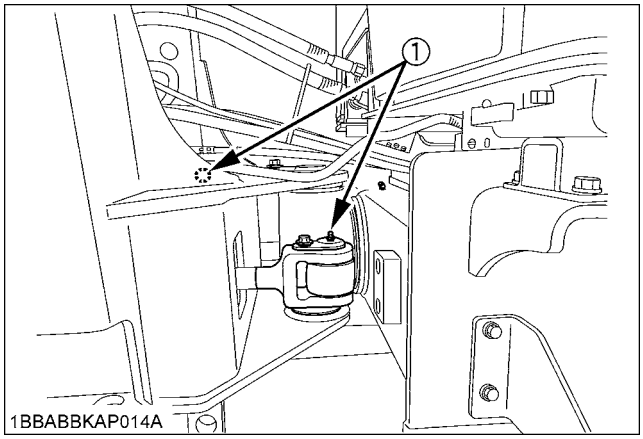

(1) Grease fittings

■Checking tire pressure, wear and wheel nuts

Refer to the section on "TIRES".

■Checking and cleaning the radiator and oil cooler

1. Open the engine cover.
2. Check the fins and ribs for clogging. If clogged, they should be cleaned out with a jet of compressed air or water.
3. Check the cooling water hoses for damage. If broken or cracked, change them. Also, check to see that the hose clamps are tight.

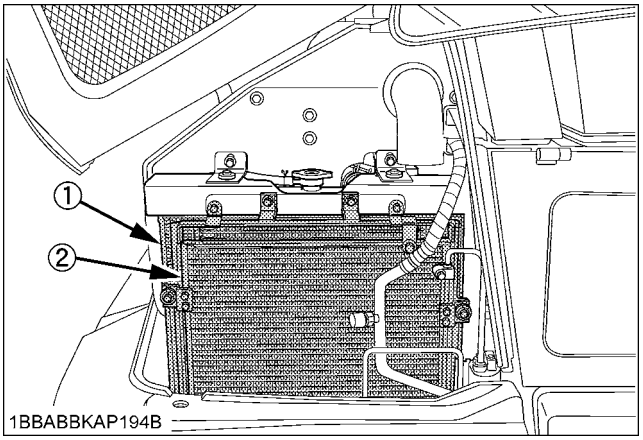

(1) Radiator grill
(2) Oil cooler

NOTE :

- Radiator and oil cooler fins and ribs must be clean in order not to overheat the engine and allow free flow of air through the cooling elements.
- Pressure of compressed air must be under 205 kPa (2.1 kgf.cm^2, 30 psi)
- When cleaning the radiator and oil cooler with compressed air, the fins can be damaged. Pay attention not to damage

■Checking the steering

1. Start the engine, turn the steering wheel left and right and check the operation.
2. If any abnormality is found, have the steering inspected further by your KUBOTA dealer.

https://truckmanualshub.com/

■Checking Gear Locked Parking Brake

WARNING

To avoid personal injury or death:

- **Do not dismount the machine while checking the parking brake.**

Confirm the machine (wheel loader unit only) can surely be parked on the slope of about 15 degrees (Slope that rises by 2.7 meters (8 ft 3 in.) every 10 meters (32 ft 10 in.)).
If the machine moves, consult your local KUBOTA Dealer.
Always engage the parking brake before dismounting the wheel loader.

■Checking the disc brake

1. Actuate the inching and brake pedal during operation so that the machine's disc brake brakes.
2. If the brake fails to work effectively, it must be adjusted by your KUBOTA dealer.

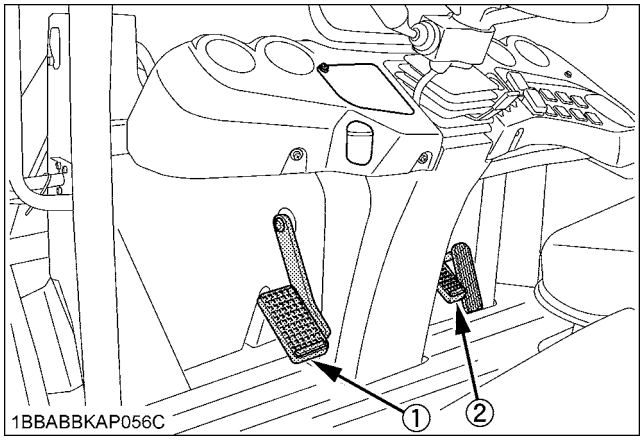

(1) Inching and brake pedal
(2) Brake pedal (option)

■Checking and cleaning engine and electrical wiring

WARNING

To avoid personal injury or death:

- **Always stop the engine and remove the key before cleaning the wiring, cables and engine.**

Before starting, check whether flammable substances have gathered on the battery, the cables and wiring, the muffler or on the engine. Remove thoroughly.
Check the electrical circuitry for disconnections, shorts or loose terminals.

■Checking V-belt

WARNING

To avoid personal injury or death:

- **Stop the engine and remove the key before checking the V-belt.**

Check the V-belt for cracks and proper tension. (See "Checking fan belt tension" in "EVERY 250 HOURS SERVICE" in "PERIODIC SERVICE" section.)

■Washing whole machine

IMPORTANT :

- Do not wash the machine with the engine running. Water could enter the air cleaner and damage the engine.
  Make sure that the air cleaner is kept dry.
- Remove the mud before washing the machine.

■Draining water separator

1. Open the engine cover.
2. When the separated water is entering the sediment cup, the red float moves upwards.
   When the float moves upwards, close the shutoff-valve so that no fuel can run out. Now loosen the drain plug, and drain the water.
   Collect drain water in an oil pan or the like.
3. Finally, do not forget to open the shutoff-valve after drain of the water was over.

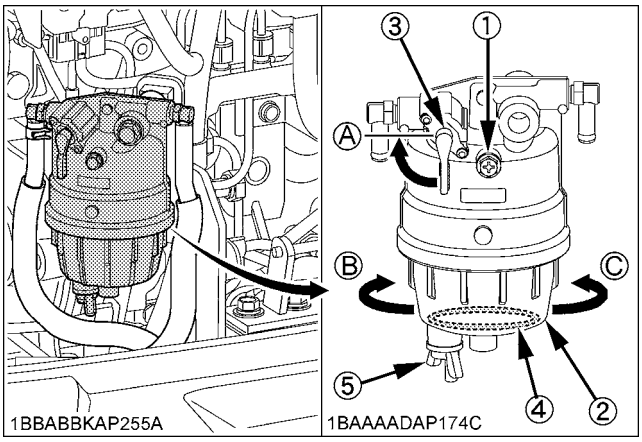

(1) Screw
(2) Cup
(3) Shutoff-valve
(4) Float
(5) Drain plug
(A) "CLOSE"
(B) "OPEN"
(C) Loosen
(D) Tighten

IMPORTANT :

- If the water separator is full with water, it means that there may be water in the fuel filter. In such case, drain the fuel filter.
  (See "Draining the fuel filter" in "SERVICE AS REQUIRED" in "PERIODIC SERVICE" section.)
- Collect drain water in an oil pan or the like.

https://truckmanualshub.com/

■Cleaning evacuator valve

Open the evacuator valve to get rid of large particles of dust and dirt.

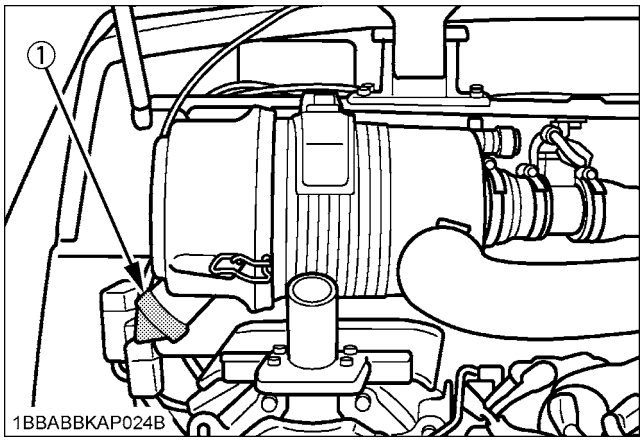

(1) Evacuator valve

■Checking dust indicator

There is a dust indicator on the air cleaner body. If the red signal on the dust indicator is visible, clean the element immediately. (See "Cleaning and checking air cleaner element" in "EVERY 250 HOURS SERVICE" in "PERIODIC SERVICE" section.) Reset the red signal by pushing a "RESET" button after cleaning.

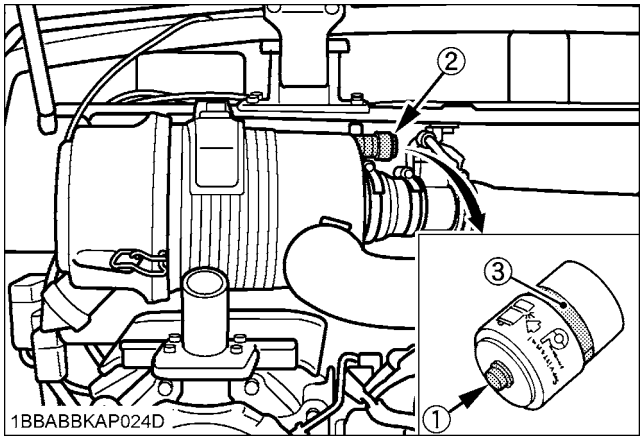

(1) "RESET" button
(2) Dust indicator
(3) Red signal

■Checking Diesel Particulate Filter (DPF) Muffler

WARNING

To avoid personal injury or death:

- **Before checking or cleaning the DPF muffler, stop the engine and wait long enough until it is cooled down.**

Check to see if nothing flammable is deposited around the DPF muffler. Otherwise a fire may result.

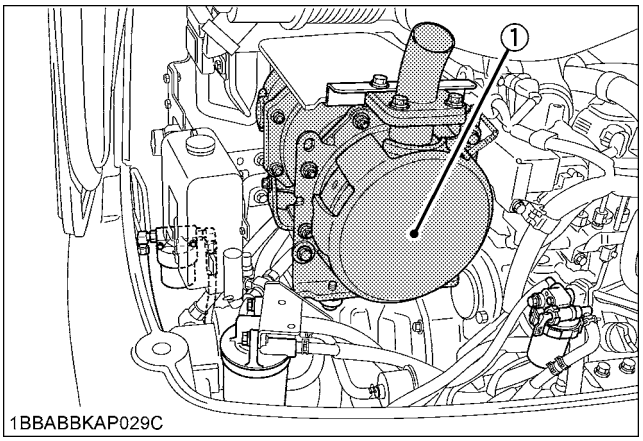

(1) DPF muffler

https://truckmanualshub.com/

■Checking washer liquid [CABIN TYPE ONLY]

If the windows washer is switched on with the washer liquid tank empty, the motor may be damaged. Always keep the tank filled.

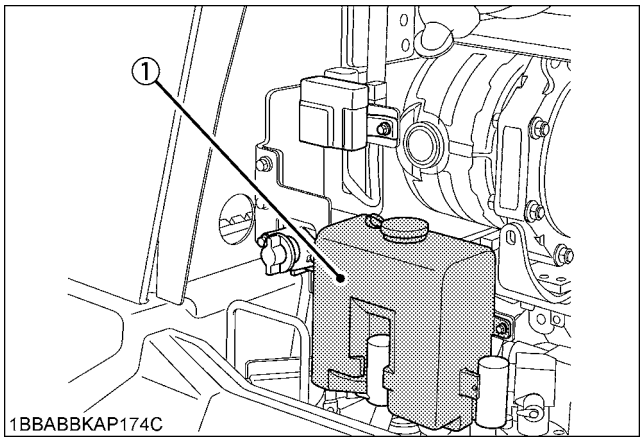

(1) Washer liquid tank

IMPORTANT :

- Get the washer liquid tank half filled (about 0.8 liter (0.2 U.S.gal.)) before working on a slope or a rough ground. The liquid may leak out when the machine bounces.

■Checking and tightening loose bolts and nuts

Check the bolts and nuts and tighten them if necessary.

■Checking electrical wiring for short-circuits and loose terminals

WARNING

To avoid personal injury or death:

- **Never wear metal rings or metal watch bands. You can make a ground for the electric circuit and get a burn on your hand or arm.**
- **Know the electrical circuit before you connect or disconnect an electrical component. A wrong connection can cause injury or damage. Only qualified electricians are allowed to work on the electrical system.**

Check the electrical system carefully, since any faults will cause malfunctions or serious damage.

■Checking the lamps and instruments

1. Check that the lamps flash and light normally.
2. Check that the instruments, alarm lamps and warning lights work normally.

■Testing the horn

Check that the horn works.

■Checking the machine for leaks

Check the machine for leaks in the fuel system, the radiator, the hydraulic system and the engine.

■Checking and cleaning after operating in muddy areas

1. If the machine is used in muddy areas, immediately wash it with water to remove the mud and dirt.
2. After washing it, check and lubricate the joints of the propeller shaft. (Refer to page 96.)

https://truckmanualshub.com/

EVERY 50 HOURS SERVICE

■Checking the battery condition

DANGER

To avoid the possibility of a battery explosion:
For refillable type battery, follow the instructions below.

- **Do not use or charge the refillable type battery if the fluid level is below the LOWER (lower limit level) mark. Otherwise, the battery component parts may prematurely deteriorate, which may shorten the battery's service life or cause an explosion. Check the fluid level regularly and add distilled water as required so that the fluid level is between the UPPER and LOWER levels.**

WARNING

To avoid personal injury or death:

- **Never remove the vent caps while the engine is running.**
- **Keep electrolyte away from eyes, hands and clothes. If you are spattered with it, wash it away completely with water immediately and get medical attention.**
- **Wear eye protection and rubber gloves when working around the battery.**
- **Before inspection or dismounting the battery, be sure to turn off the engine and turn the starter switch to the "STOP" position.**
- **When removing the battery, always disconnect the negative ground cable first. When installing a battery, always connect the ground cable last. This prevents a possible explosion caused by sparks.**
- **Always wear eye protection when working with the battery.**

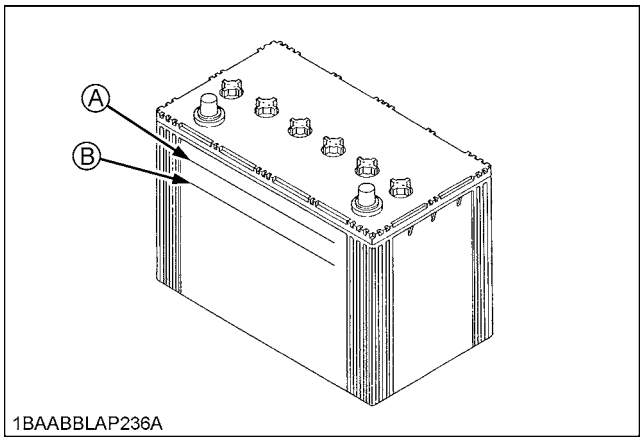

(A) "Upper level"
(B) "Lower level"

The factory-installed battery is of non-refillable type. If the indicator turns white, do not quick charge the battery but replace it with new one.

Mishandling the battery shortens the service life and adds to maintenance costs.
The original battery is maintenance free, but needs some servicing.
If the battery is weak, the engine will be difficult to start and the lights will be dim. It is important to check the battery periodically.
The battery is in the left side cover. Refer to page 85 for how to open it.

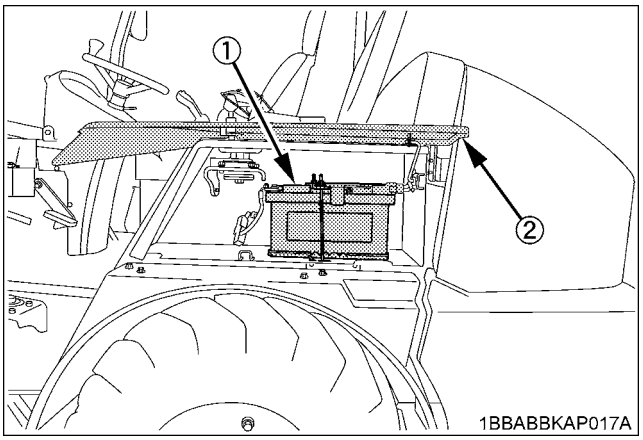

(1) Battery
(2) Left side cover

◆ **Battery Charging**

WARNING

To avoid personal injury or death:

- **When the battery is being activated, hydrogen and oxygen gases in the battery are extremely explosive. Keep open sparks and flames away from the battery at all times, especially when charging the battery.**
- **When charging the battery, ensure the vent caps are securely in place. (if equipped)**
- **When disconnecting the cable from the battery, start with the negative terminal first.**
  When connecting the cable to the battery, start with the positive terminal first.
- **Never check battery charge by placing a metal object across the posts.**
  Use a voltmeter or hydrometer.

https://truckmanualshub.com/

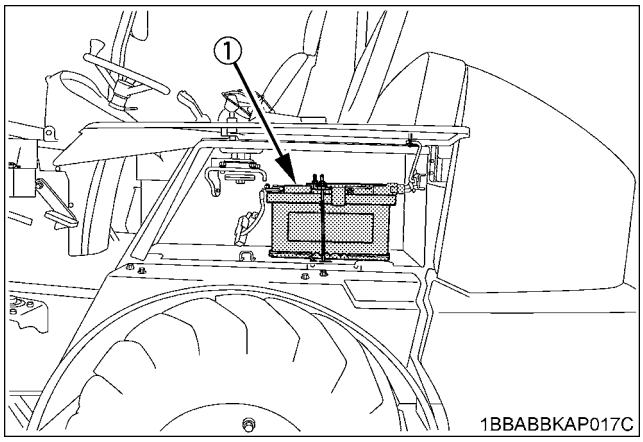

(1) Battery

1. To slow charge the battery, connect the battery positive terminal to the charger positive terminal and the negative to the negative, then recharge in the standard fashion.
2. A boost charge is only for emergencies. It will partially charge the battery at a high rate and in a short time.
   When using a boost-charged battery, it is necessary to recharge the battery as early as possible.
   Failure to do this will shorten the battery's service life.
3. The battery is charged if the indicator display turns green from black.
4. When exchanging an old battery for a new one, a battery of equal specification.

Battery Type	Volts (V)	Capacity
59533	12	95 (at 20H.R(A.H))

Battery Type	Reserve Capacity (min)	Cold Cranking Amps	Normal Charging Rate (A)
59533	165	720	6.5

◆ **Direction for Storage**

1. When storing the machine for long periods of time, remove the battery from machine, adjust the electrolyte to the proper level and store in a dry place out of direct sunlight.
2. The battery self-discharges while it is stored.
   Recharge it once every three months in hot seasons and once every six months in cold seasons.

EVERY 250 HOURS SERVICE

Perform inspection and servicing for every 50 hours of operation at the same time.

■Grease fittings

DANGER

To avoid serious personal injury or death:

- **Keep clear of articulation joint during service work.**

WARNING

To avoid personal injury or death:

- **Before greasing, always stop the engine, lower the bucket and attachment to the ground, release the hydraulic pressure in the hydraulic system by operating the control levers. lock all control levers in neutral, and remove the key.**
- **Always remove the bucket and attachment and use the lift arm support when servicing the machine with the loader lift arms raised.**

◆ **Greasing the propeller shaft**

Apply grease to the universal joints and shaft at three grease fittings.

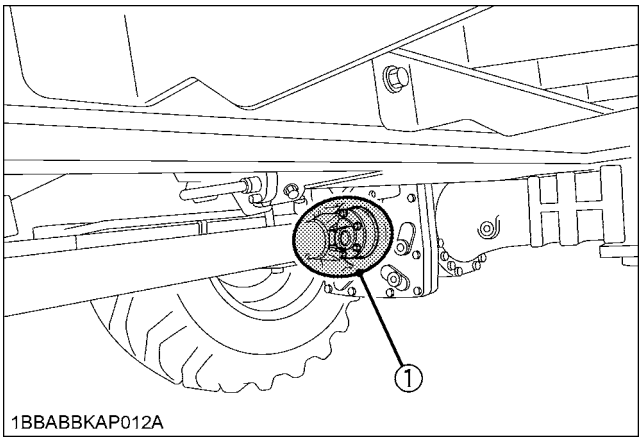

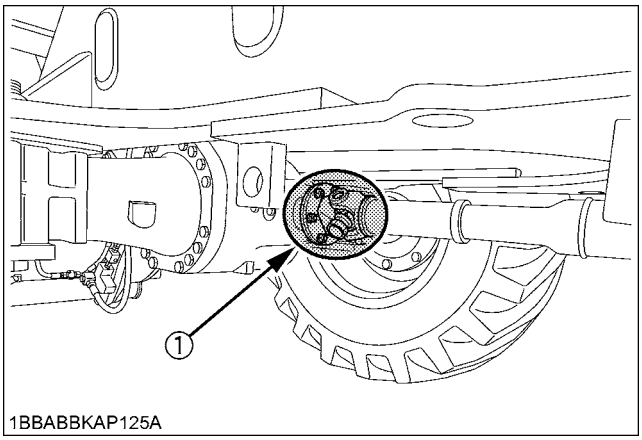

https://truckmanualshub.com/

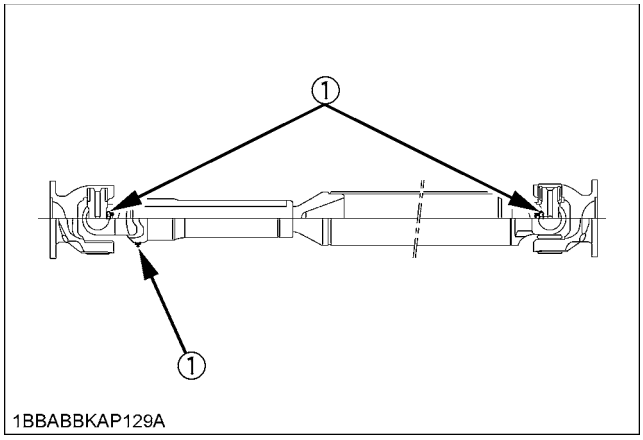

(1) Grease fittings

■Checking fan belt tension

WARNING

To avoid personal injury or death:

- **Only check the fan belt with the engine off and the key removed.**

1. Press the fan belt in the middle with a fingertip by a force of about 10 kg (22.5 lbs.). The belt tension is proper if the belt deflects about 7 mm (0.3 in.). If the tension is improper, adjust the tension by loosening bolts and shifting alternator.
2. Check the pulleys and the V-belts for damage and wear.
   Carefully check to see if the V-belts fit snugly into the V-belt grooves.
3. If the V-belt has been stretched too much, nicked or cracked, replace it.

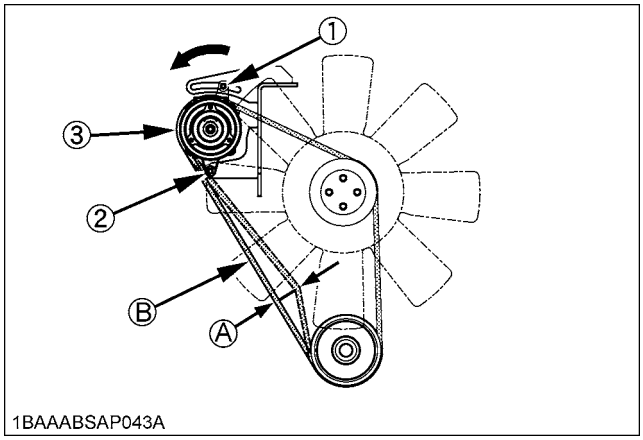

(1) Bolt
(2) Bolt
(3) Alternator
(A) about 7 mm (0.3 in.)
(B) approx. 10 kg (22.5 lbs.)

IMPORTANT :

- If the engine is running with a loose fan belt, the belt may slip, causing engine overheating or insufficient battery recharging.
  Always keep the fan belt properly tightened.
- If the fan belt should break, the battery charge lamp lights up.
  Immediately stop the engine.

■Checking radiator hoses and clips

WARNING

To avoid personal injury or death:

- **Do not check radiator hoses until the engine has cooled down.**

Check to see if radiator hoses are in good condition and the clips are properly fixed every 250 hours of operation or six months, whichever comes first.

1. If clips are loose or water leaks, tighten the clips securely.
2. Replace hoses and hose clamps every 2 years or earlier if checked and found that hoses are swollen, hardened or cracked.

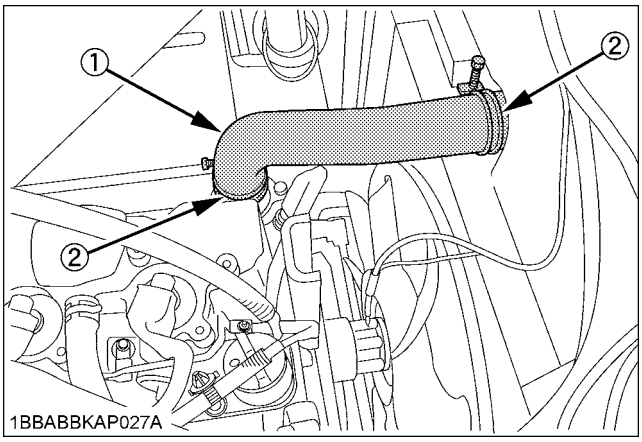

(1) Radiator hoses
(2) Clips

https://truckmanualshub.com/

■Cleaning and checking air cleaner element

Open the engine cover and remove the cover and the outer filter element, clean the filter element, case interior without removing the inner element and reassemble the filter element and cover.
During reassembly, take care to install the cover so that its TOP mark (arrow) faces upwards.

IMPORTANT :
- If the machine is used in an excessively dusty environment, the air filter elements must be inspected and cleaned / replaced more often than indicated in the maintenance chart.
- The air filter elements are dry elements. Do not oil them.
- Do not operate the machine without the air filter installed.

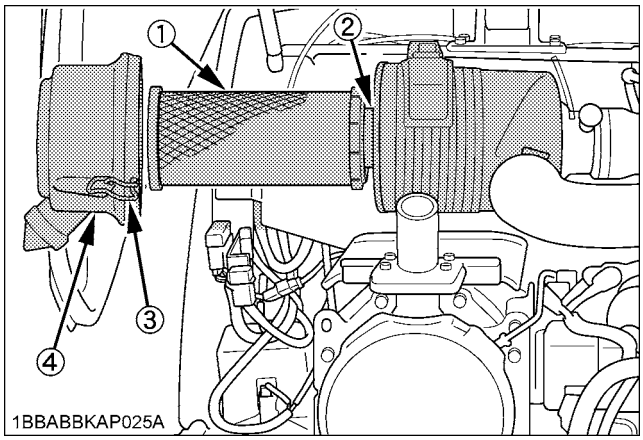

(1) Outer element
(2) Inner element
(3) Clamp
(4) Cover

■Checking Fuel Line and Intake Air Line

1. Check to see that all lines and hose clamps are tight and not damaged.
2. If hoses and clamps are found worn or damaged, replace or repair them at once.

■Checking wheel nuts

Refer to the "Tire" section.

■Cleaning the filter element

If the filter element is heavily clogged or oily, change it. If it is only dusty, you can clean it with compressed air.

WARNING

To avoid personal injury or death:
- **Wear eye protectors when cleaning with compressed air.**

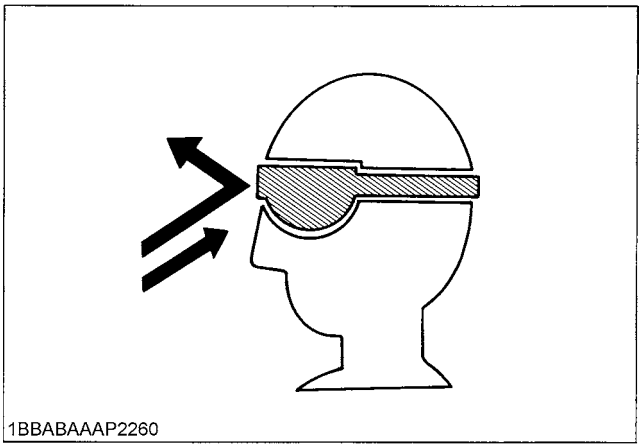

◆ **Blowing with compressed air**

The pressure should not exceed 43 psi and the cartridge should be blown clean from inside to outside until the dust deposits are removed.

IMPORTANT :
- If the engine performance is still too low after cleaning the air filter elements or the exhaust is colored black, replace the air filter elements.

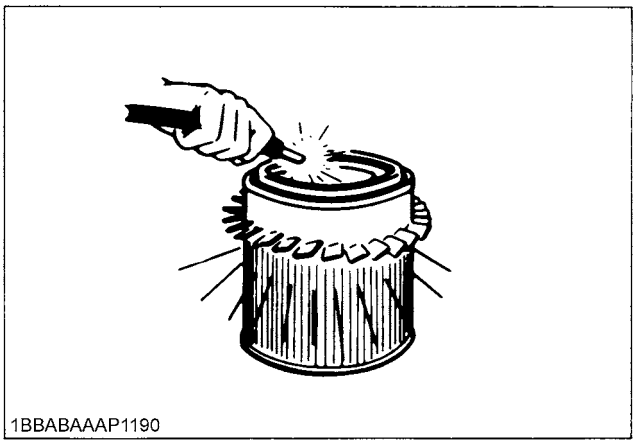

https://truckmanualshub.com/

■Replacing water separator filter element

1. Set the water shutoff-valve to the **"CLOSE"** position.
2. Loosen and remove the cup properly and replace the filter element.
3. Check the condition of the O-ring and replace if necessary.
4. Tighten up the cup properly.
5. Set the shutoff-valve to the **"OPEN"** position.

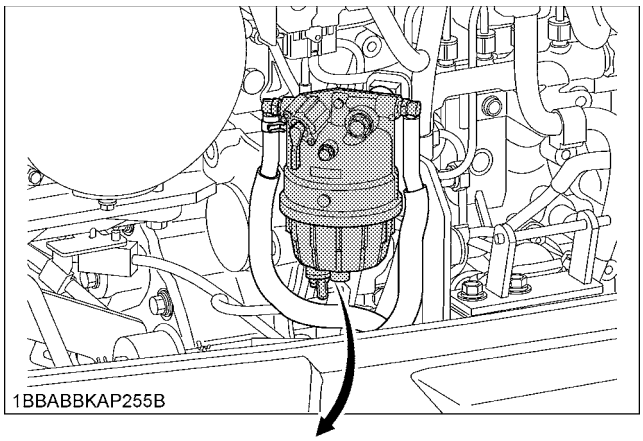

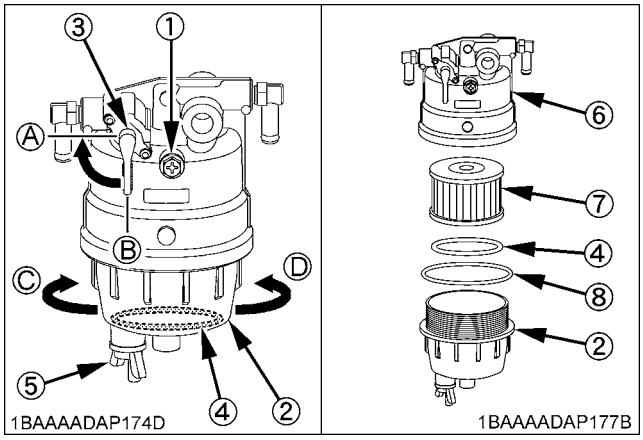

(1) Screw
(2) Cup
(3) Shutoff-valve
(4) Float
(5) Drain plug
(6) Head cover
(7) Filter element
(8) O-ring

(A) "CLOSE"
(B) "OPEN"
(C) Loosen
(D) Tighten

IMPORTANT :

- In reattaching the filter element, be careful to keep off dust and dirt.
- After exchange of the filter, the fuel system must be purged of air.
- Collect drain water in an oil pan or the like.

EVERY 500 HOURS SERVICE

Perform inspection and servicing for every 50 and 250 hours of operation at the same time.

■Changing engine oil

WARNING

To avoid personal injury or death:

- **Always stop the engine before changing the engine oil.**
- **Never open the drain plug immediately after the engine has stopped, or hot engine oil may rush out, causing scalding.**

1. Unscrew the oil drain plug (WOF 22 mm (0.9 in.)) at the engine oil drain and drain the engine oil.
   After the engine oil is fully drained, refit the oil drain plug with a new seal.

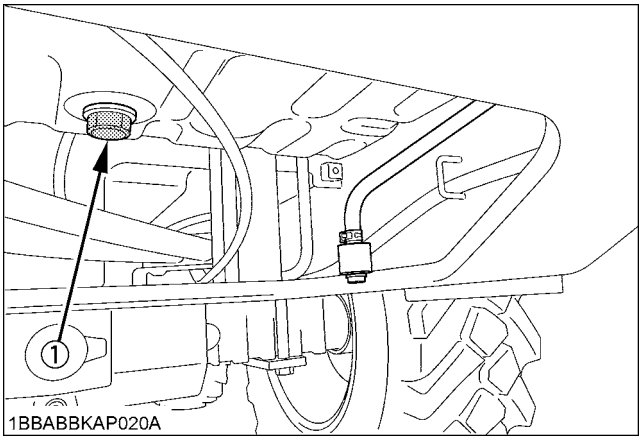

(1) Drain plug

https://truckmanualshub.com/

2. Fill engine oil into the oil port up to the correct level.
3. Idle the engine for a short while. About 5 minutes after stopping the engine, check the oil level with the oil dipstick.

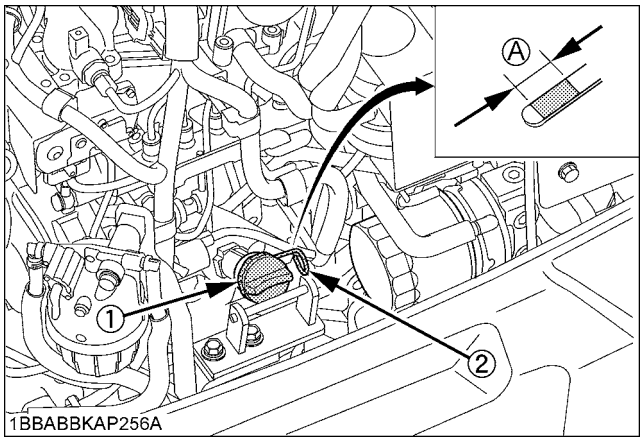

(1) Oil port *(A) Proper oil level*
(2) Oil dipstick

IMPORTANT :
- Use engine oil of appropriate viscosity according to ambient temperature.
- Change the engine oil once every 6 months regardless of the running time on the machine.
- Change the oil filter when you change the oil.

	Oil capacity
Engine oil	9.0 L (2.4 U.S.gal.)

■Replacing the engine oil filter cartridge

WARNING

To avoid personal injury or death:
- **Always stop the engine before replacing the engine oil filter cartridge.**
- **Never remove the oil filter immediately after the engine has stopped, or hot engine oil may rush out, causing scalding.**

1. Replace the engine oil filter cartridge at the same time engine oil is changed.
2. Use the supplied filter wrench to remove the oil filter.

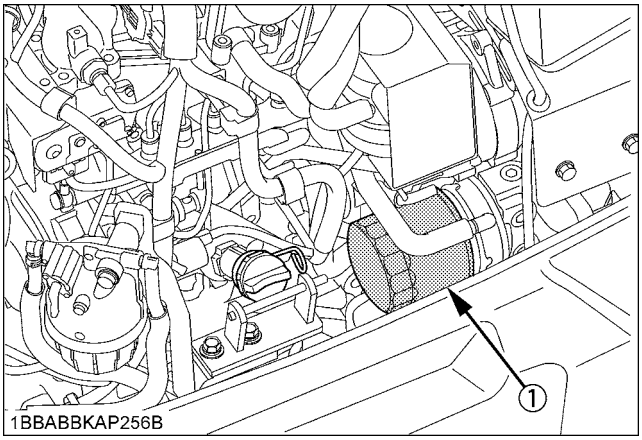

(1) Engine oil filter cartridge

3. Apply a thin layer of oil to the gasket of the oil filter and firmly tighten it in place by hand.
4. Top up oil if necessary.
5. Idle the engine briefly.
6. Check the oil level about 5 minutes after switching off the engine with the oil dipstick.

https://truckmanualshub.com/

■Checking and replenishing oil in the front and rear axle, reduction gear case

WARNING

To avoid personal injury or death:

- **Before changing oil in the front and rear axle differential case, always stop the engine and lock the direction switch in neutral.**
- **Always remove the bucket and attachment, and use the lift arm support device when servicing the machine with the loader lift arms raised to avoid serious personal injury.**

1. Remove the oil port plug, check the oil level. The oil level must be at the lower rim of the thread.
2. Add oil if necessary.
3. Screw in and tighten the oil port plug.

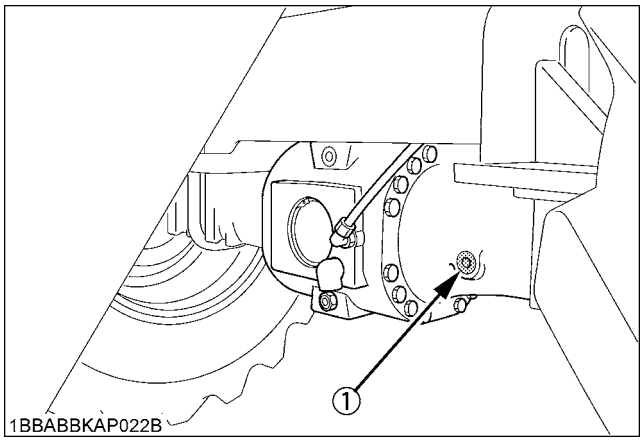

(1) Oil port plug front axle

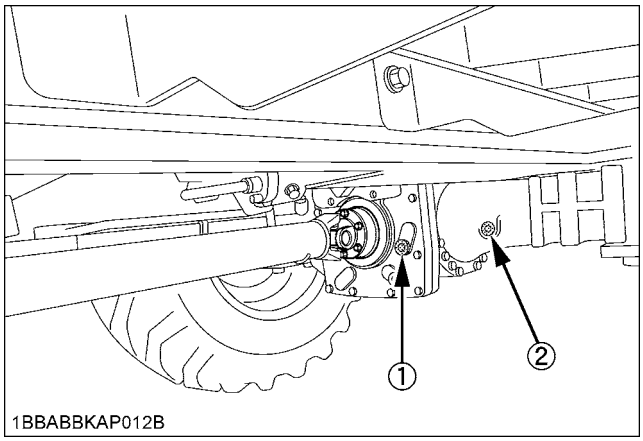

(1) Oil port plug reduction gear case
(2) Oil port plug rear axle

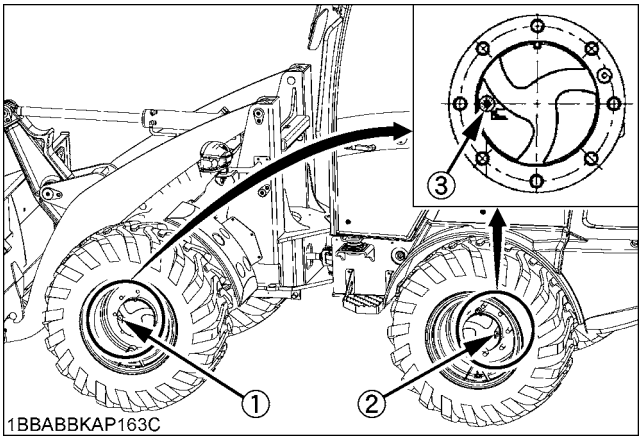

(1) Oil port plug front axle (both side)
(2) Oil port plug rear axle (both side)
(3) Oil plug

■Replacing return filter

WARNING

To avoid personal injury or death:

- **Never remove the filter immediately after the engine has stopped, or hot hydraulic oil may rush out, causing scalding.**

1. Remove the cover on the hydraulic oil tank.
2. Loosen the filter with a wrench and remove the filter.
3. Tighten the new return filter.

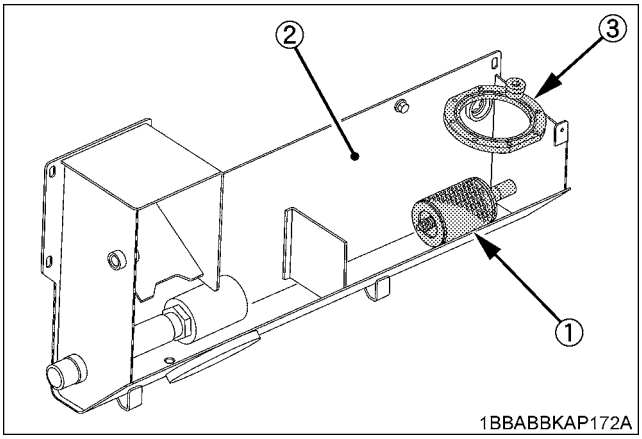

(1) Return filter
(2) Hydraulic oil tank
(3) Cover

IMPORTANT :

- After changing the filter, start the hydraulic system briefly and then check the oil level.

https://truckmanualshub.com/

■Changing the fuel filter

WARNING

To avoid personal injury or death:

- **Always stop the engine before changing the fuel filter.**
- **Keep sparks and flames away from the diesel fuel, or serious personal injury results. Allow the engine to cool completely.**

1. Close the shutoff-valve at the fuel filter.
2. Unscrew the ring nut, remove the filter bowl. Clean the inside of the filter bowl with diesel fuel.
3. Replace the filter element.
4. Fasten the filter bowl with the ring nut, hand tighten the ring nut.
5. Open the shutoff-valve.

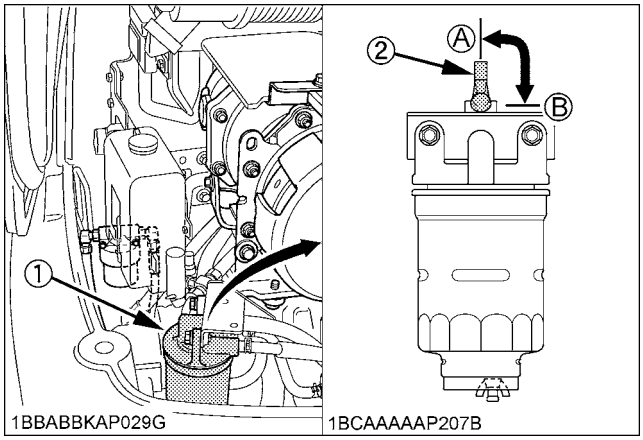

(1) Fuel filter
(2) Shutoff-valve
(A) "Open"
(B) "Close"

EVERY 1000 HOURS SERVICE

Perform inspection and servicing for every 50, 250 and 500 hours of operation at the same time.

■Changing oil for the front and rear axle case

WARNING

To avoid personal injury or death:

- **Before changing oil in the front and rear axle differential case, always stop the engine and lock the direction switch in neutral.**
- **Always remove the bucket and attachment, and use the lift arm support device when servicing the machine with the loader lift arms raised to avoid serious personal injury.**

1. Place a collection vessel with a capacity of 5 liters (1.3 U.S.gal.) under the axle. Remove the drain plug (10 mm (0.4 in.) socket head) and drain the oil.

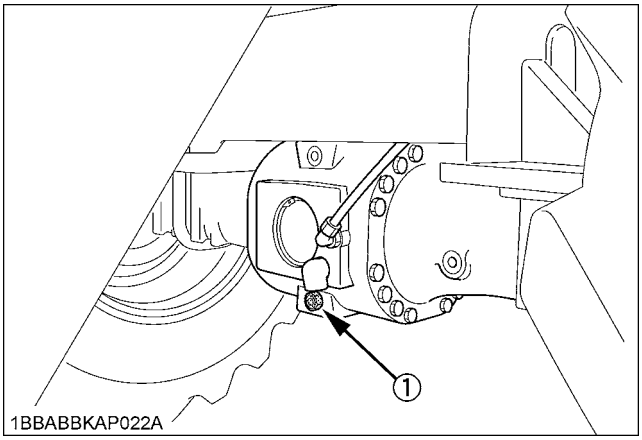

(1) Drain plug front axle

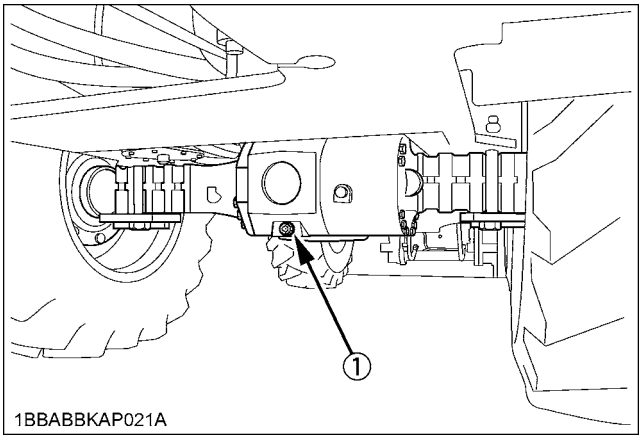

(1) Drain plug rear axle

https://truckmanualshub.com/

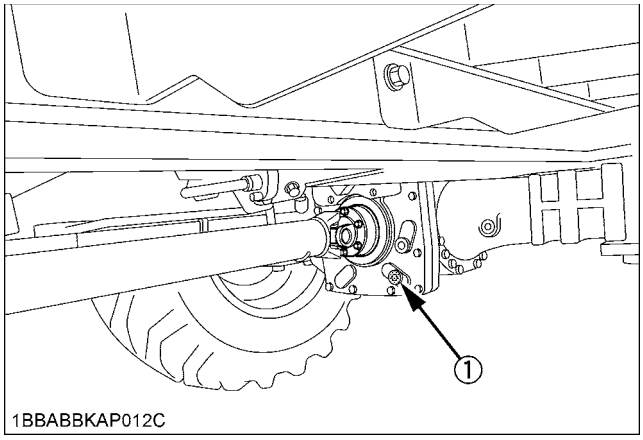

(1) Drain plug reduction gear case

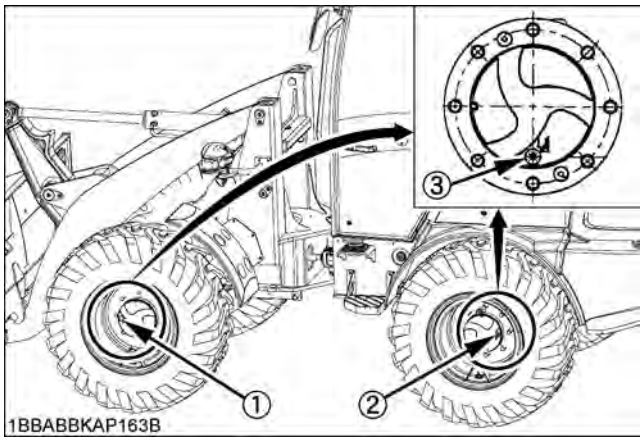

(1) Oil port plug front axle (both side)
(2) Oil port plug rear axle (both side)
(3) Oil plug

2. Turn the wheel by 90˚, so that the oil plug (3) is in the middle position.
3. Fill in oil to the bottom edge of the thread hole on the oil port.
4. Screw in and tighten oil port plug.

	Oil capacity
Front/rear axle	4.5 L (1.2 U.S.gal.)
Reduction gear case	0.6 L (0.16 U.S.gal.)
Reduction gear case at wheel	0.9 L (0.24 U.S.gal.) each

■Replacing HST oil filter

WARNING

To avoid personal injury or death:

- **Never remove the filter immediately after the engine has stopped, or hot hydraulic oil may rush out, causing scalding.**

1. Loosen the nut located the bottom of the filter and remove the filter.
   [The hexagon nut: 27 mm (1.1 in.)]
2. Replace it to new one.
   Tightening torque: 73.6 to 83.4 N-m
   (54.5 to 61.5 ft-lbs)

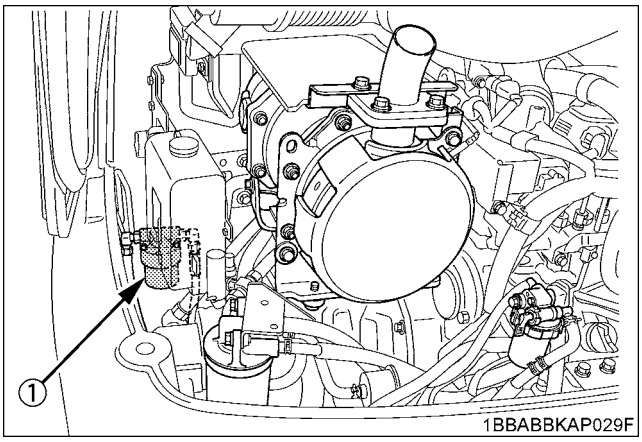

(1) HST oil filter

IMPORTANT :

- After changing the filter, start the hydraulic system briefly and then check the oil level.

https://truckmanualshub.com/

■Changing hydraulic oil and the suction filter

WARNING

To avoid personal injury or death:

- **Always stop the engine before changing oil.**
- **Never open the drain plug immediately after the engine has stopped, hot hydraulic oil may rush out, causing scalding.**

1. Remove the drain plug (hexagon head screws 8 mm (0.3 in.)) from the bottom of the tank and drain the oil.
2. Remove the bolt from the tank bottom cover and then remove the cover.
3. Replace the suction filter.
   (Hexagon nut: 60 mm (2.4 in.)).

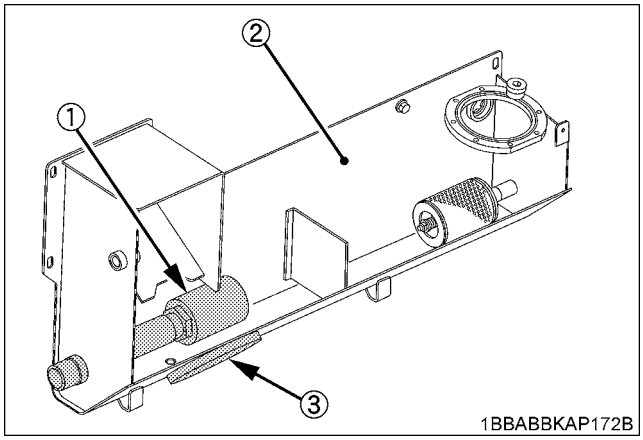

(1) Suction filter
(2) Hydraulic oil tank
(3) Bottom cover

4. Check the gasket for damage and replace gasket if necessary.
5. Retighten the drain plug, and attach the tank bottom cover.
6. Open the access flap and the oil port cap for the hydraulic oil tank and fill hydraulic oil up to the specified amount and then close the oil port cap and the flap.
7. Run the engine at idle speed, set the direction switch to the neutral position.Then operate the control lever and the steering wheel for about five minutes.
   Stop the engine and make sure that the oil quantity is sufficient through the oil level gauge.
   Hydraulic oil port is under the floor. Take up the mat, remove the bolts and detach the cover.

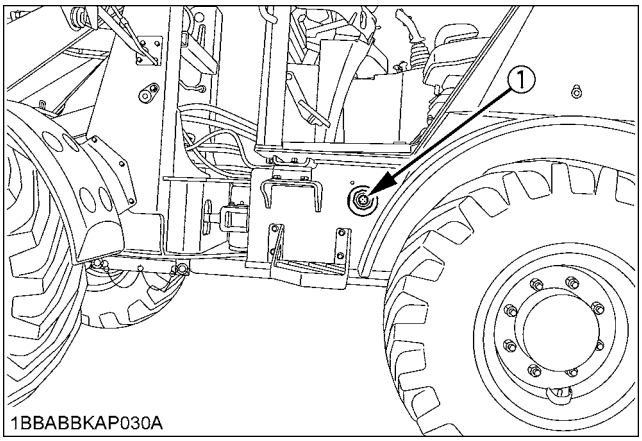

(1) Oil level gauge

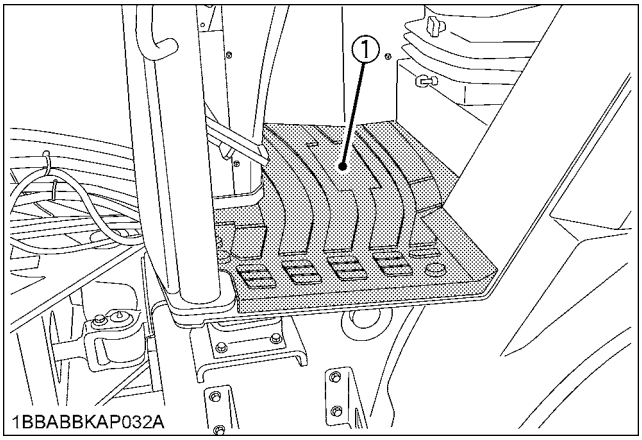

(1) Mat

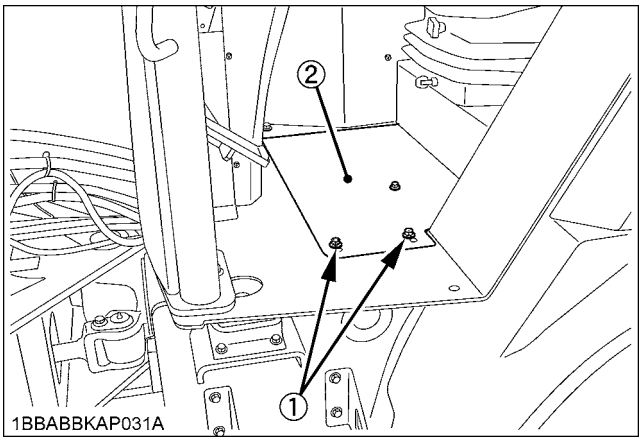

(1) Bolts
(2) Cover

https://truckmanualshub.com/

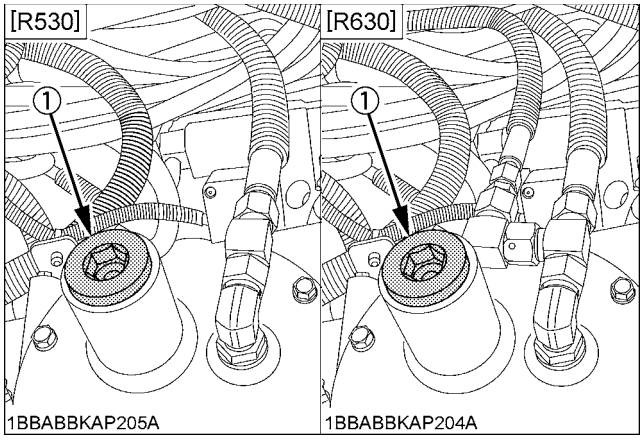

(1) Oil port cap

Hydraulic oil volumes	Hydraulic tank	39 L (10.3 U.S.gal.)
	Whole oil volumes	60 L (15.9 U.S.gal.)

IMPORTANT :
- If there are deposits in the tank, wipe them all with a clean rag and diesel oil.
- Use great caution not to admit any foreign particles into the tank.

■Replacing air cleaner element

Open the hood, and remove the cover and both filter elements, change both filter elements and clean the inside of the case. Reinstall the filter elements and the cover being careful to install the cover so that its TOP mark (arrow) faces upwards.

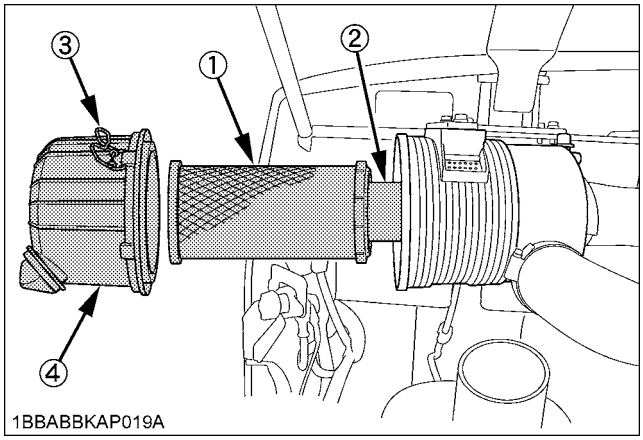

(1) Outer element
(2) Inner element
(3) Cramp
(4) Cover

■Adjusting Engine Valve Clearance

Consult your local KUBOTA dealer for this service.

EVERY 1500 SERVICE HOURS

Perform inspection and servicing for every 50, 250 and 500 hours of operation at the same time.

■Checking Injector Tip

Consult your local KUBOTA dealer for this service.

■Replacing Oil Separator Element

WARNING

To avoid personal injury or death:
- **Be sure to stop the engine before replacing the oil separator element.**

1. Remove the cover and take out the element. Wipe off oil and the carbon in the case with a clean rag.
2. Fit a new oil separator element and O ring.
3. Tighten the cover until a cover comes in contact with body.

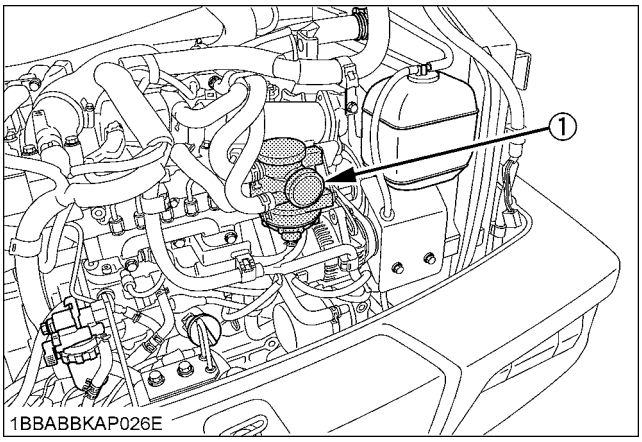

(1) Oil separator

https://truckmanualshub.com/

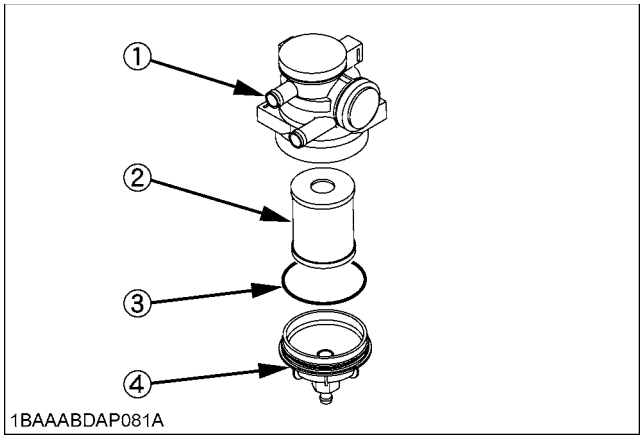

(1) Body
(2) Oil separator element
(3) O ring
(4) Cover

■Checking EGR Cooler

Consult your local KUBOTA dealer for this service.

EVERY 2000 HOURS SERVICE

Perform inspection and servicing for every 50, 250, 500 and 1000 hours of operation at the same time.

■Checking alternator and starter motor

After every 2000 hours of use, check and maintain the alternator and starter motor. It is just about the time the brushes would become worn.
It is recommended to have the test and overhaul done by your KUBOTA dealer.
If the lights are often used during work, inspect the alternator every 1000 hours.

EVERY 3000 SERVICE HOURS

Perform inspection and servicing for every 50, 250, 500, 1000 and 1500 hours of operation at the same time.

■Checking EGR System

Consult your local KUBOTA dealer for this service.

■Checking Turbocharger

Consult your local KUBOTA dealer for this service.

■Cleaning Diesel Particulate Filter (DPF)

The longer the DPF operates, the more ash (burnt residue) is collected in the filter. Too much ash build-up adversely affects the DPF performance. Consult your local KUBOTA Dealer to clean up the filter.

IMPORTANT :

- To clean up the DPF, a specific machine is required. Do not attempt to clean it in any other way, such as disassembling, shaking and heating as toxic chemicals may be present inside of the DPF.

ANNUAL SERVICE

■Checking electrical leads and terminals

- Check the good condition and firm fit of all accessible electrical leads, connectors and terminals.
- Repair or replace damaged parts.
- Check fuse box and fuse holders for oxidation and soiling and clean if necessary.

■Checking Exhaust Manifold (Cracks, Gas, Leakage and Mounting Screw)

Consult your local KUBOTA dealer for this service.

■Checking Intake Air Line for Air Leaks

Consult your local KUBOTA dealer for this service.

■Checking Boost Sensor and AFS (Air Flow Sensor)

Consult your local KUBOTA dealer for this service.

■Checking Condition of Diesel Particulate Filter (DPF) Muffler

Consult your local KUBOTA dealer for this service.

■Checking Diesel Particulate Filter (DPF) Differential Pressure Sensor and Piping for Gas Leak

Consult your local KUBOTA dealer for this service.

■Checking Diesel Particulate Filter (DPF) Exhaust Gas Temperature Sensor

Consult your local KUBOTA dealer for this service.

■Checking EGR Piping for Gas Leak

Consult your local KUBOTA dealer for this service.

https://truckmanualshub.com/

BIENNIAL SERVICE

Perform inspection and servicing for annual operation at the same time.

■Replacing fuel hoses and clamps

WARNING

To avoid personal injury or death:

- **A broken fuel line will cause fuel to leak. Be sure to check the line. Fire or injuries may result if a fuel line is leaking.**
- **Make sure the engine is cool before disconnecting fuel lines.**

Rubber parts like the fuel lines are likely to age even if the engine is not used regularly. Therefore, it is necessary to replace these parts with new ones once every two years or sooner if they are damaged.

1. Regularly check that the lines and clamps are not loose or damaged.
2. When the fuel line has been replaced, be sure to bleed air from the line.

IMPORTANT :

- When replacing the fuel lines, take special care to prevent dirt and other foreign matter from entering the fuel system. Entry of foreign matter in the fuel system will likely cause serious damage.

■Changing coolant

WARNING

To avoid personal injury or death:

- **Never open the plug immediately after the engine has stopped, or hot coolant may rush out, causing scalding.**

1. Open the plug under the radiator to drain the coolant.

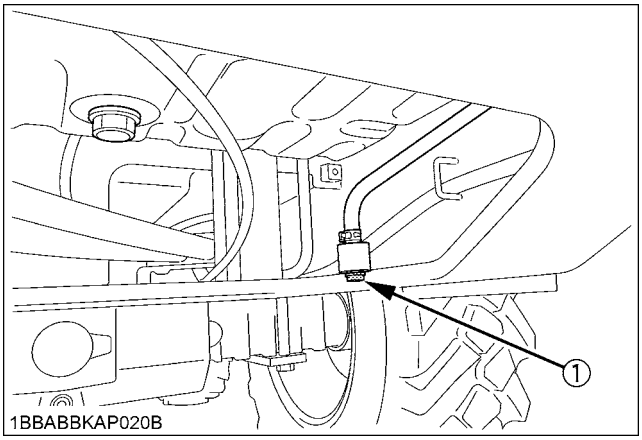

(1) Plug

2. To drain the recovery tank, disconnect the pipe at the bottom of the recovery tank.
3. Clean the radiator interior by pouring water into the supply port and keeping the plug open until clean water flows out of it.
4. Close the plug and fill the radiator and recovery tank with a mixture of anti-freeze and water (50%/50%). After filling, idle the engine for about five minutes, stop the engine and make sure that the coolant level is up to the filling nozzle of the radiator.

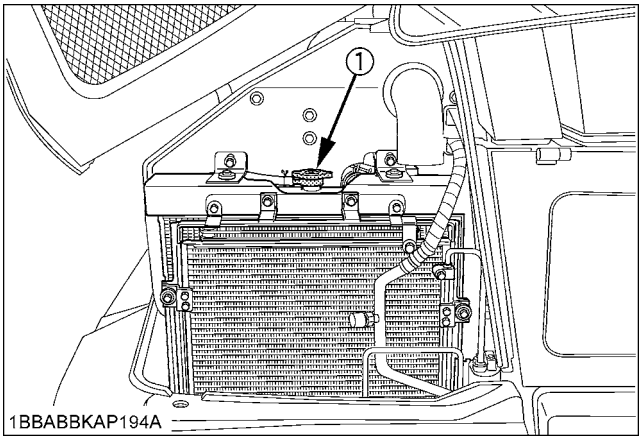

(1) Radiator cap

https://truckmanualshub.com/

■Replacing Intake Air line

Replace the hoses and clamps, if necessary.
(See "Checking Fuel and Intake Air Line" in "EVERY 250 HOURS SERVICE")

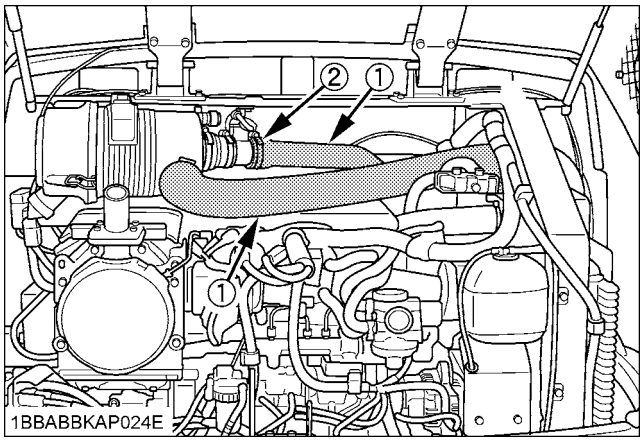

(1) Hoses
(2) Hose clamps

■Replacing Rubber Piping Related Oil Separator

Consult your local KUBOTA dealer for this service.

■Replacing Diesel Particulate Filter (DPF) Differential Pressure Sensor Rubber Piping (Front and Back)

Consult your local KUBOTA dealer for this service.

■Replacing Suction pipe downstream the AFS (Air Flow Sensor)

Consult your local KUBOTA dealer for this service.

■Replacing Boost Sensor Pressure Rubber Piping

Consult your local KUBOTA dealer for this service.

■Replacing EGR Cooler Hose

Consult your local KUBOTA dealer for this service.

■Replacing Radiator Hoses (Water pipes)

Replace the hoses and clips.
(See "Checking Radiator Hoses and Clips" in "EVERY 250 HOURS SERVICE" in "PERIODIC SERVICE" section.)

PERIODIC PARTS REPLACEMENT

■Replacing Air-Conditioner Pipes and Hoses [CABIN type only]

CAUTION

To avoid personal injury:

- **Do not touch the water hoses or the heater with your hand. You may get burned.**

Replace air-conditioner pipes and hoses every two years. If the hoses or pipes are swollen, hard or cracked, they should be replaced. (Consult your local KUBOTA Dealer for this service.)

https://truckmanualshub.com/

SERVICE AS REQUIRED

■Electrical system

Damage to cables and loose connections cause malfunctioning and lead to short circuits, leakage and fires. Replace and repair as quickly as possible.

◆ Replacing the fuses

WARNING

To avoid personal injury or death:

- **Before replacing a fuse, be sure to turn off the starter switch.**

1. Open the right side cover.
2. Remove the cover of the fuse box.
3. Replace the blown fuse using a new one of the same capacity.

◆ Fuse capacities and their circuits

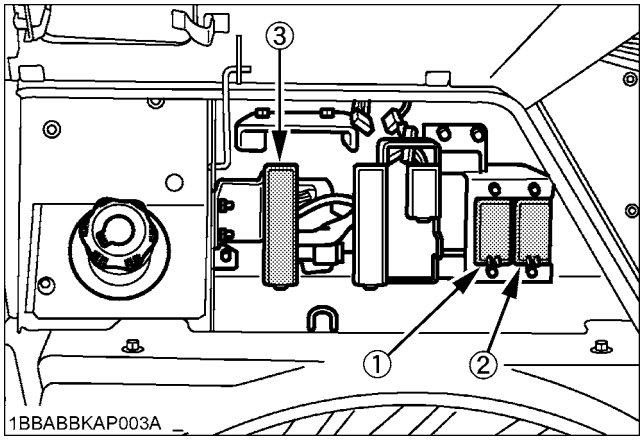

(1) Fuse box A
(2) Fuse box B
(3) Fuse box C

[Fuse box A]

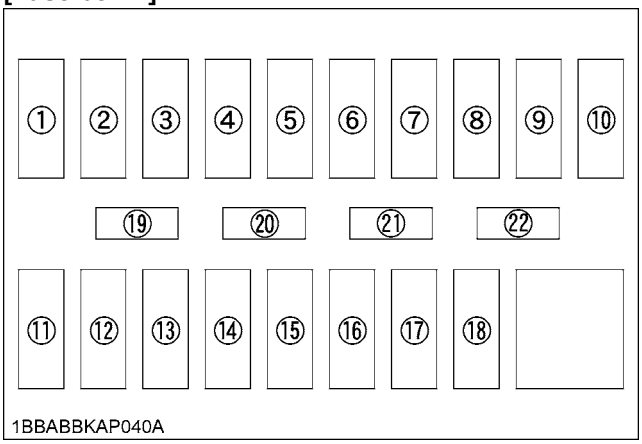

	Rating	Applied Circuit
1	30A	Front wiper switch, Horn switch
2	30A	Blower motor
3	5A	Meter (+B)
4	20A	Main ECU (power)
5	10A	Horn
6	15A	Beacon
7	15A	HST ECU (only R630)
8	5A	Room lamp
9		Blank
10	30A	Front wiper
11	10A	Headlamp LH
12	10A	Headlamp RH
13	5A	Clearance lamp LH, Tail lamp LH
14	5A	Clearance lamp RH, Tail lamp RH
15	5A	Starter signal
16	5A	Horn (sub)
17		Blank
18		Blank
19	5A	Spare
20	10A	Spare
21	15A	Spare
22	20A	Spare

https://truckmanualshub.com/

[Fuse box B]

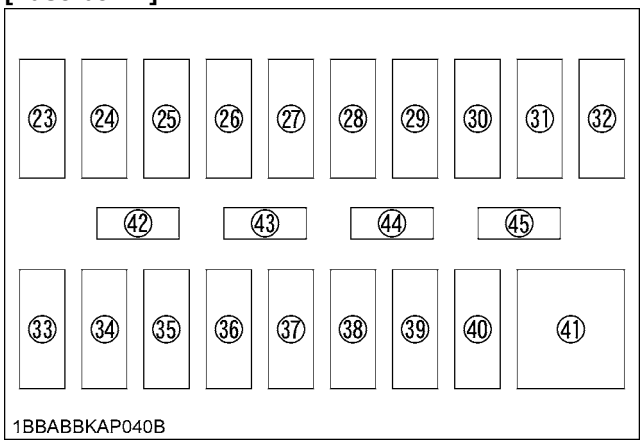

	Rating	Applied Circuit
23	15A	Rear wiper, Rear washer
24	15A	Radio AC
25	15A	Electrical outlet
26	10A	Compressor
27	5A	Quick coupler locking
28	10A	Stop lamp
29	20A	Highbeam
30	15A	Hazard
31	20A	Head lamp
32		Blank
33	5A	Flasher
34	5A	Fuel pump
35	5A	Relay, Float
36	5A	Main ECU (AC)
37	10A	Alternator
38	30A	Work lamp CABIN
39	30A	Electrical outlet (sub, +B)
40	5A	Headlamp switch
41		Fuse puller
42	5A	Spare
43	10A	Spare
44	15A	Spare
45	30A	Spare

[Fuse box C]

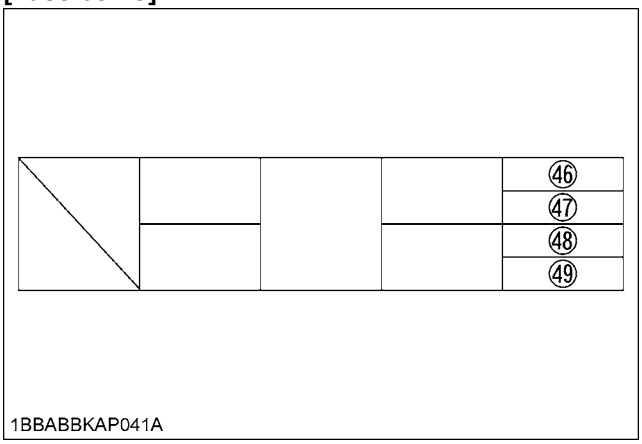

	Rating	Applied Circuit
46	5A	Engine ECU
47		Blank
48		Blank
49	10A	Reverse lamp, Reverse buzzer

[Slow blow fuse]

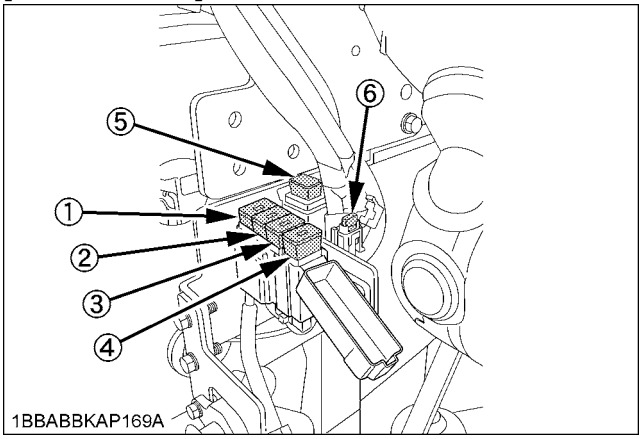

	Rating	Applied Circuit
1	100A	Alternator
2	60A	Main 1
3	50A	Main 2
4	50A	Main 3
5	30A	Engine ECU
6	10A	Main ECU (+B)

IMPORTANT :

- The main fuse protects the entire electrical system. If the main fuse or another fuse has blown, determine why it blew and make any necessary repairs.
  Never bridge fuses, always replace them with a new fuse of the same rating.

https://truckmanualshub.com/

◆ **Replacement procedure**

1. Disconnect the negative cord of the battery.
2. Remove the slow blow fuse case.
3. Open the slow blow fuse case cap and cover then remove the bolts and draw out the slow blow fuse (1) and (2).

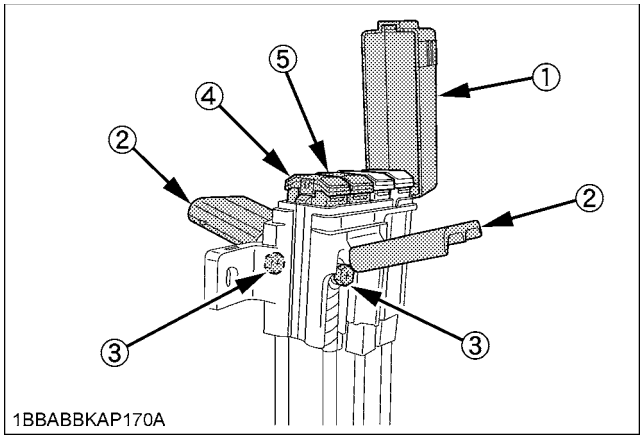

(1) Slow blow fuse case cap
(2) Cover
(3) Bolt
(4) Slow blow fuse (1) [100A: Alternator]
(5) Slow blow fuse (2) [60A: Main 1]

■Draining the fuel filter

If the Water separator filled-up indicator lights up and the error code (E:9120) appears on the meter panel, immediately take the following steps to drain the filter after stopping the engine.

1. Remove the drain bolt. Take much care not to lose it.
2. Open the shutoff-valve and drain the water.
3. After draining the water completely, close the shutoff-valve and then attach the drain bolt.

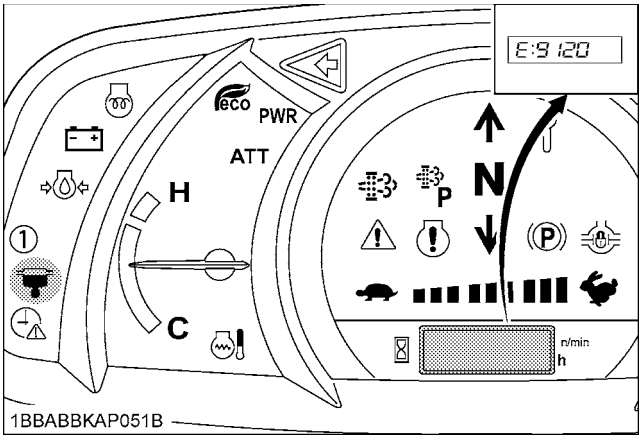

(1) Water separator filled-up indicator

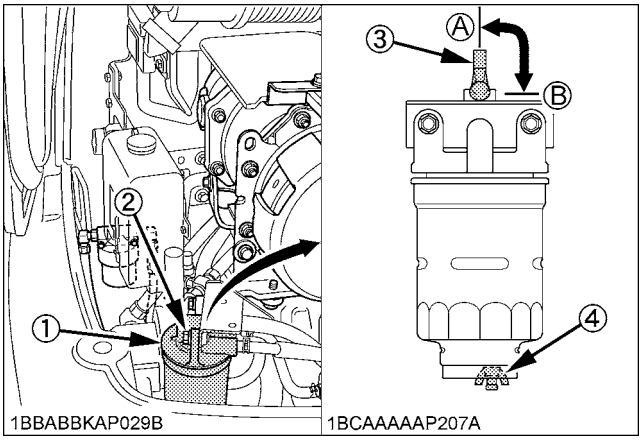

(1) Fuel filter
(2) Bolt
(3) Shutoff-valve
(4) Drain bolt

(A) "OPEN"
(B) "CLOSE

IMPORTANT :

- If you don't drain the fuel filter immediately after the alarm, the engine may be seriously damaged.
- After draining the fuel filter, drain the water separator as soon as possible.
- Without the fuel filter drained, the cleaning efficiency of the DPF (3000 hours) will be reduced and the DPF longevity will be shorter than expected.

https://truckmanualshub.com/

■Bleeding the fuel system

WARNING

To avoid personal injury or death:

- **Keep sparks and flames away from the fuel, or serious personal injury may result.**

After the fuel tank has been run empty or maintenance and service work has been carried out, the engine cannot be started again after refueling. This is because air has entered the fuel system. It is thus necessary to bleed the fuel system in the following manner:

1. Fill the fuel tank with fuel.
2. Turn the starter switch to the **"RUN"** position. The fuel pump starts working to supply fuel into the line. About 10 seconds later, the air will be bled out from the line.
3. Start the engine.

NOTE :

- The engine may sometimes stall after starting if air bleeding was not complete. If this should occur, repeat step (2) and step (3).

TIRES

■Handling tires

WARNING

To avoid personal injury or death:

- **Before changing tires, stop the engine, lower the bucket and attachment to the ground, release the hydraulic pressure in the hydraulic system by operating the control levers, lock all control levers in neutral, and remove the key.**
- **To change tires, place the machine on blocks suitable for the weight of the machine.**
- **Before adding air, have the tire correctly installed on the machine or put the tire in a retaining device (tire inflation cage). Do not blow up tires with greater pressure than specified in the table as a blown tire can cause serious injury.**

■Tire pressure

If the air pressure in the tire is too high or too low, the life of the tire will be shortened. Make routine checks of the air pressure in tires. Check the tires and rims for damage and eliminate defects before starting operation.

◆ **Tire pressure**

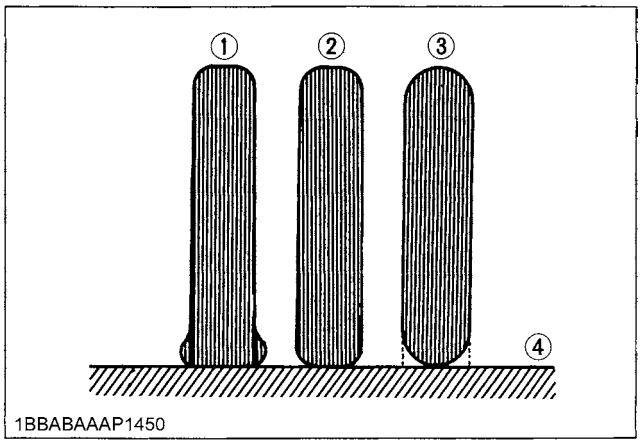

(1) Deficient
(2) Correct
(3) Excessive
(4) Ground level

Type	R530			
Tire size	Bucket		Pallet forks	
	front	rear	front	rear
365 / 70 R18	3.0 bar (43 psi)	2.0 bar (29 psi)	3.5 bar (50 psi)	2.0 bar (29 psi)
340 / 80 R18	2.6 bar (38 psi)	2.0 bar (29 psi)	3.2 bar (46 psi)	2.0 bar (29 psi)
360 / 80 R20	2.5 bar (36 psi)	2.0 bar (29 psi)	3.0 bar (43 psi)	2.0 bar (29 psi)

Type	R630			
Tire size	Bucket		Pallet forks	
	front	rear	front	rear
405 / 70 R18	3.0 bar (43 psi)	2.0 bar (29 psi)	3.5 bar (50 psi)	2.0 bar (29 psi)
400 / 70 R20	2.6 bar (38 psi)	2.0 bar (29 psi)	3.2 bar (46 psi)	2.0 bar (29 psi)
360 / 80 R20	3.0 bar (43 psi)	2.0 bar (29 psi)	3.5 bar (50 psi)	2.0 bar (29 psi)

https://truckmanualshub.com/

1. Insufficient tire pressure.
   Too small an amount of air in the tire can cause it to have excessive slack, which makes for faster wearing down of the tread.
2. Correct tire pressure.
3. Excessively high tire pressure.
   Too high a tire pressure causes the tractive force of the machine to decrease, or the tire to slip. There is also the risk of a blow out.

■Changing tires

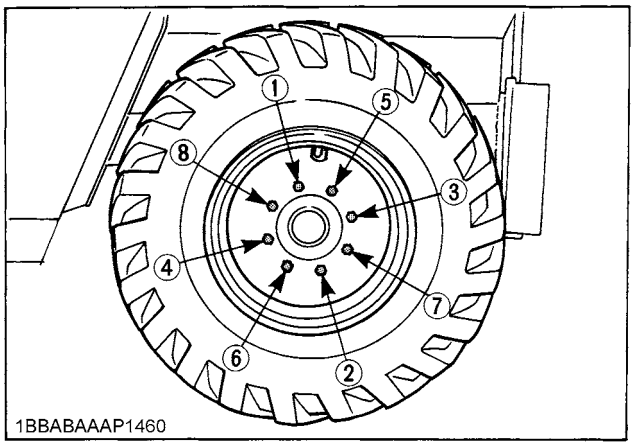

◆ **Removal**

1. Loosen the wheel nuts, each by one turn on the wheel to be removed.
2. Lift the machine so that the wheel to be removed is just raised off the ground. Place the machine on jackstands. Then remove the wheel nuts and remove the wheel from the axle.

◆ **Fitting**

1. Mount wheel on axle and lightly tighten the wheel nuts.
2. Lower the machine to the ground, and tighten the wheel nuts to the specified torque in the order shown above.

Tightening torque	490 N-m (360 ft-lbs)

■Mounting tires

Off-road tires are used to provide strong traction and buoyancy on soft ground. When mounting them, take care to position their tread pattern in the proper direction. They must be mounted by a qualified personnel.

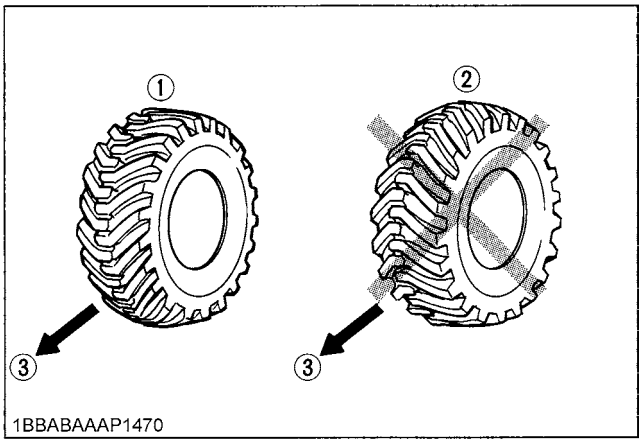

(1) Correct
(2) Incorrect
(3) Forward

■Tire chains

Tire chains are not applicable for 20 inches size tire.

https://truckmanualshub.com/

TAKING OUT OF OPERATION AND STORAGE

WARNING

To avoid personal injury or death:

- **Before storing, do the following.**
  Stop the engine, lower the bucket and attachment to the ground, release the hydraulic pressure in the hydraulic system by operating the control levers, lock all control levers in neutral, and remove the key.

◆ **Measures prior to taking out of operation:**

1. Wash and clean each part of the machine, and store the machine indoors: never leave it outdoors. If it must be stored outdoors, choose a flat place, lay planks, park the machine, and cover it completely.
2. Add oil and grease, and change oil.
3. Apply grease sufficiently to the piston rods of the hydraulic cylinders where they are exposed.
4. Remove and store the battery separately.
5. Check the anti-freeze in the coolant. Add anti-freeze for adequate protection down to -25°C (-13°F).

◆ **Measures during storing**

1. Recharge the battery regularly.

◆ **Restarting after storing**

1. Remove the grease applied to the piston rods of the hydraulic cylinders.
2. Check all oil levels, the sediment trap of the fuel system, the tire pressure and the functioning of the disc brake and the parking brake.
3. Run the engine with no load and operate all the functions of the hydraulic system.

CAUTION WHEN WASHING THE MACHINE

Stop the engine before washing the machine. If you wash the machine while running the engine, splashing water will get into the air cleaner through its intake and cause engine trouble. Wash carefully and do not splash water over the air cleaner.

https://truckmanualshub.com/

RECOMMENDED OILS

IMPORTANT :
1. The hydraulic oil used from the factory was ROWE Hightec Fomula GT.
2. Use engine oil API service classification CJ-4 or CK-4.
3. Use TOTAL TRANSMISSION T.H.F.I. as front and rear axle cases for all seasons.

	Application	Viscosity	KTC recommends	Shell	ExxonMobil
Gear oil	All-weather gear oil	80W API GL-4	TOTAL DYNATRANS FR		
Hydraulic oil	In winter or by low temperatures	SAE 5W SAE 10W			
	In summer or by high ambient temperatures	SAE 30 SAE 40 SAE 50			
	All-weather hydraulic oil	SAE 10W-40			
Grease				Shell Alvania EP2	Mobilux EP2
Fuel				Diesel Fuel No. 2-D S15	
Fuel under -5℃				Diesel Fuel No. 1-D S15	

NOTE :

◆ **Engine Oil:**

- Oil used in the engine should have an American Petroleum Institute (API) service classification and Proper SAE Engine Oil according to the ambient temperatures.

Above 25℃ (77℉)	SAE 30 or SAE 10W-30, SAE 15W-40
0℃ to 25℃ (32℉ to 77℉)	SAE 20 or SAE 10W-30, SAE 15W-40
Below 0℃ (32℉)	SAE 10W or SAE 10W-30, SAE 15W-40

- Refer to the following table for the suitable API classification engine oil and the fuel.

Fuel used	Engine oil classification (API classification)
	Oil class of engines except external DPF
Ultra Low Sulfur Fuel [<0.0015% (15 ppm)]	**CJ-4** or **CK-4**

◆ **Fuel:**

- Use the ultra low sulfur diesel fuel only [below 0.0015 % (15 ppm)] for these engines.
- Cetane number of 45 minimum. Cetane number greater than 50 is preferred, especially for temperatures below -20℃ (-4℉) or elevations above 1500 m (5000 ft).
- Diesel fuels specified to EN 590 or ASTM D975 are recommended.
- No. 2-D is a distillate fuel of lower volatility for engines in industrial and heavy mobile service. (SAE J313 JUN87)

- Indicated capacities of water and oil are manufacture's estimate.

IMPORTANT :

- If you use different fuel or engine oil, the cleaning efficiency of the DPF (3000 hours) will be reduced and the DPF longevity will be shorter than expected.
- Filters must trap fuel and lubricant sulfate additives (Zn, Pb, Na, K, Ca, Mg, Cu, Ba, P, etc.) as ash during combustion. Fuel must be controlled carefully to prevent the additives being mixed into fuel such as fuel tank anti-oxidants, water remover, anti-freeze and so on.

https://truckmanualshub.com/

BIODIESEL FUEL (BDF)

B0-B20 Biodiesel fuels (BDF): mixed diesel fuels containing 20% or less biodiesel can be utilized under the following conditions.

IMPORTANT :

- Refueling and handling fuel should be done with caution in order to avoid contact with the fuel and spillage that could create a potential environmental or fire hazard. Wear appropriate protective equipment when refueling.

◆ Applicable BDF:

1. Blended diesel fuels containing 6% through 20% BDF (B6 - B20) which comply with American Society for Testing and Materials (ASTM) D7467 Standard, as revised, can be used without adversely affecting the performance and durability of the engine and fuel system components.
2. Any mineral oil diesel fuel, if used, must conform to ASTM D975 (or the European EN590) Standard, as revised.
   B100 fuel used to make Biodiesel blended fuels must meet ASTM D6751 (or EN14214) Standard, as revised.
   The final blended fuel B20 must conform to ASTM D7467 Standard, as revised.
   Straight vegetable oil is NOT allowed in any blended fuel.
3. Allowable blended fuel is mineral oil diesel fuel blended with B100 (i.e. 100% BDF).
   The blended fuel ratio shall be less than 20% B100 and 80% or more diesel fuel.
   The B100 source used for Biodiesel blends must be purchased from an accredited BQ-9000 marketer or producer.
   More information about qualified marketer(s) and producer(s) can be found at http://www.bq-9000.org .

◆ Preparation:

1. Before using BDF concentrations greater than B5, you are advised to replace the engine oil, engine oil filter and fuel filter with new oil and filters. For replacement procedures, refer to the "PERIODIC SERVICE" section.

◆ Product Warranty, Emission and Other Precautions:

1. The engine emission control system was certified according to current regulations based on the use of non-BDF. When using BDF, the owner is advised to check applicable local and federal emission regulations and comply with all of them.
2. BDF may cause restricted or clogged fuel filters during cold weather conditions, resulting in the engine not operating properly.
3. BDF encourages the growth of microorganisms which may cause degradation of the fuel.
   This in turn may cause fuel line corrosion or reduce fuel filter flow earlier than expected.
4. BDF inherently absorbs moisture which may cause degradation of the fuel earlier than expected.
   To avoid this, drain the water separator and fuel filter port often.
5. Do not use Biodiesel concentrations higher than 20% (i.e. greater than B20).
   Engine performance and fuel consumption will be affected, and degradation of the fuel system components may occur.
6. Do not readjust the engine fuel control system as this will violate emission control levels for which the equipment was approved.
7. Compared with soybean-based and rapeseed-based feedstock, palm oil-based feedstock has a thicker consistency (i.e. higher viscosity) at lower temperatures.
   Consequently, fuel filter performance may be reduced, particularly during cold weather conditions.
8. The KUBOTA Warranty, as specified in the Owner's Warranty Information Guide, only covers defects in product materials and workmanship. Accordingly, any problems that may arise due to the use of poor quality fuels that fail to meet the above requirements, whether biodiesel or mineral oil based, are not covered by the KUBOTA Warranty.

◆ Routine handling:

1. Avoid spilling BDF onto painted surfaces as this may damage the finish.
   If fuel is spilled immediately wipe clean and flush with soapy water to avoid permanent damage.
2. When using BDF, you are advised to maintain a full tank of fuel, especially overnight and during short term storage, to reduce condensation within the tank. Be sure to tighten the fuel cap after refueling to prevent moisture build up within the tank. Water in the Biodiesel mixture will damage fuel filters and may damage engine components.

https://truckmanualshub.com/

◆ Maintenance Requirements when using BDF B0 through B5:
Follow the oil change intervals recommended by referring to the "MAINTENANCE" section. Extended oil change intervals may result in premature wear or engine damage.

◆ Maintenance Requirements when using BDF B6 through B20:
The maintenance interval for fuel related parts changes.
See the table below for the new maintenance interval.

Items		Interval	Remarks
Water separator filter element	Replace	every 125 hrs	
Fuel filter	Replace	every 250 hrs	
Fuel line	Check	every 125 hrs	
	Replace	every 1 year	Consult your local KUBOTA Dealer for this service.

◆ Long Term Storage:
1. BDF easily deteriorates due to oxygen, water, heat and foreign substances.
   Do not store B6 through B20 longer than 1 month and B5 longer than 3 months.
2. When using B6 through B20 and storing the machine longer than 1 month, drain the fuel from the tanks and replace with light mineral oil diesel fuel.
   Subsequently, run the engine at least 30 minutes to remove all of the Biodiesel from the fuel lines.
3. When using B5 fuel and storing machine longer than 3 months, drain the fuel from the tanks and replace with light mineral oil diesel fuel.
   Subsequently, run the engine at least 30 minutes to remove all of the Biodiesel from the fuel lines.

https://truckmanualshub.com/

TROUBLE SHOOTING

If the machine does not show the desired performance, or when trouble arises, refer to the table below and undertake appropriate measures.

Trouble		Cause	Countermeasure
Engine	Starting difficulties	Fuel is too viscous.	* Check fuel tank and filter. * Remove impurities and water. * If necessary, replace filter and fuel.
		Air or water in the fuel system	* Remove water from the fuel tank. * Check fuel pipe joint bolts and nuts for looseness. * Purging of the fuel system (for fuel filter and supply pump, see "Bleeding the fuel system" in "SERVICE AS REQUIRED" in "PERIODIC SERVICE" section.)
		Fuse is blown out.	* Check the fuse and replace it with a same-capacity one as required.
		Oil viscosity is too high the engine runs sluggishly in winter.	* Use the engine block heater (option).
		Battery is almost dead; insufficient compression.	* Recharge or replace battery.
	Insufficient engine power	Low fuel level	* Check fuel and add if necessary.
		Clogged air cleaner	* Clean the air cleaner element.
	Engine suddenly stops.	Low fuel level	* Check fuel and add if necessary. * Purge the fuel system.
	Abnormal exhaust gas color	Poor fuel	* Use high quality fuel.
		Too much engine oil	* Drain engine oil to prescribed oil level.
	Water temperature in red zone (Overheating)	Damaged seal of the water pump	* Replace.
		Worn or torn V-belt	* Adjust or replace.
		Thermostat is damaged.	* Replace.
		Coolant level too low	* Fill to prescribed level.
		Radiator grill or fins are clogged.	* Clean.
		Coolant is contaminated with rust from the cylinder head or crank case.	* Replace coolant fluid and add anti-rust.
		Damaged radiator cap (Evaporation)	* Replace.
		Corroded coolant pipes	* Clean.
		Continuous operation under full load	* Reduce load.
		Cylinder head gasket is damaged (Coolant loss).	* Replace.
		Engine oil level too low	* Fill to prescribed level.
		Maladjustment of fuel injection	* Readjust ignition timing.
		Use of poor fuel	* Purge and use prescribed fuel.

https://truckmanualshub.com/

Trouble		Cause	Countermeasure
Hydraulic System	Lift arms, bucket, drive unit power is too low.	Hydraulic oil level too low	* Add oil.
		Leakages of hoses and / or joints	* Replace hose or joint.
		Hydraulic unlock switch is not pressed.	* Press the hydraulic unlock switch.
Electric system	"⚠" mark appears in the instrument panel.	Electric system is malfunction.	* Check the error code number of next page and contact your local dealer.

https://truckmanualshub.com/

List of Error Code Numbers

◎ : Sure to happen ○ : May happen

Error Code Number	Problem or Failure	Machine condition				Provisional measure and Correction
		Engine performance			Machine performance	
		Accele-ration limited	Engine output limited	Engine stopped		
E: 001	Meter CAN communication	-	-	-	---	Immediately contact your local dealer.
E: 014	Hydraulic oil temperature has reached a specified level.	-	-	-	---	Stop the engine and check the level in the hydraulic oil tank and for a hydraulic oil leak. Fill to proper level. If this error code number still appears,immediately contact your local dealer.
E: 016	Fuel sensor system	-	-	-	The fuel level indicator does not appear on the meter. The machine's other functions are still operative.	Immediately contact your local dealer.
E: 018	Hydraulic oil temperature sensor	-	-	-	---	Move the machine to a place suited for repair.Immediately contact your local dealer.
E: 019	Accelerator pedal sensor	○	-	-	The machine fails to move. (Except ATT mode, the engine speed is at idling.)	Immediately contact your local dealer.
E: 020	Inching and brake pedal sensor (R630)	-	-	-	The machine fails to move.	Immediately contact your local dealer.
E: 021	Engine speed control switch (R630)	○	-	-	In ATT mode, the engine speed is at idling.	Immediately contact your local dealer.
E: 022	Hydraulic lock (R630)	-	-	-	Lock is not active.	Move the machine to a place suited for repair.Immediately contact your local dealer.
E: 023	Speed control switch (R530)	-	-	-	It is impossible to change the speed setting by the speed control switch.	Immediately contact your local dealer.
E: 024	Differential lock	-	-	-	Differential lock does not work	Immediately contact your local dealer.
E: 025	Parking brake	-	-	-	Parking brake is not active. The machine would be in neutral.	Immediately contact your local dealer.
E: 026	Solenoid for traveling forward	-	-	-	Solenoid for traveling forward is not active and the machine would be in neutral. (Solenoid for traveling backward works normally.)	Immediately contact your local dealer.
E: 027	Solenoid for traveling backward	-	-	-	Solenoid for traveling backward is not active and the machine would be in neutral. (Solenoid for traveling forward works normally.)	Immediately contact your local dealer.
E: 028	Direction switch	-	-	-	The machine is locked in neutral.	Immediately contact your local dealer.

https://truckmanualshub.com/

Error Code Number	Problem or Failure	Machine condition				Provisional measure and Correction
		Engine performance			Machine performance	
		Accele-ration limited	Engine output limited	Engine stopped		
E: 029	AUX port knob (R630)	-	-	-	AUX port does not work.	Immediately contact your local dealer.
E: 031	Solenoid valve for AUX forward SW (R630)	-	-	-	AUX port is not active.	immediately contact your local dealer.
E: 032	Solenoid valve for AUX backward SW (R630)	-	-	-	AUX port is not active.	Immediately contact your local dealer.
E:033	Electrical power supply	-	-	-	AUX port is not active.	Immediately contact your local dealer.
E:034	The sensor's 5V power supply is short-circuited.	-	-	-	The majority of systems fail. The engine may be started and the machine may move. But do not try any jobs. (Just move the machine to a safe place.)	Immediately contact your local dealer.
E:035	Starting the engine	-	-	-		-
E:036	CRS CAN communication	◎	-	-	Engine speed is at idling and it is not possible to drive at any speed.	Immediately contact your local dealer.
E:037	Braking system	-	-	-	The machine will be in neutral and parking brake is not activated to prevent dragging.	Immediately contact your local dealer.
E:1001	HST CAN communication (R630)	○	-	-	The machine stops and engine speed is at idling.	Immediately contact your local dealer.
E:1002	EP motor (R630)	-	-	-	The machine moves slowly.	Immediately contact your local dealer.
E:1003	DE pump (R630)	-	-	-	The machine fails to move.	Immediately contact your local dealer.
E:1004	HST low voltage (R630)	-	-	-	The machine fails to move.	Immediately contact your local dealer.
E:1005	HST high voltage (R630)	-	-	-	The machine fails to move.	Immediately contact your local dealer.
E:9001	Requirement for DPF regeneration.	-	◎	-	DPF must be regenerated, but low engine rpm is unable to start DPF regeneration.	Rev up the engine rpm to start DPF regeneration or start the parked regeneration. If this error code number still appears, immediately contact your local dealer.
E:9003	Requirement for DPF regeneration.	-	◎	-	DPF must be regenerated, but unable to start regeneration.	Immediately contact your local dealer.
E:9004	Requirement for DPF replacement.	-	◎	-	DPF must be replaced.	Immediately contact your local dealer.
E:9100	Rpm sensor system	○	○	-	---	Immediately contact your local dealer.
E:9101	Fuel or rail pressure system	◎	◎	◎	---	Immediately contact your local dealer.

https://truckmanualshub.com/

Error Code Number	Problem or Failure	Machine condition				Provisional measure and Correction
		Engine performance			Machine performance	
		Accele-ration limited	Engine output limited	Engine stopped		
E:9102	SCV system	◎	◎	-	---	Immediately contact your local dealer.
E:9103	Intake air temperature sensor system	-	-	-	---	Immediately contact your local dealer.
E:9104	Coolant temperature system	◎	◎	-	---	Immediately contact your local dealer.
E:9105	Fuel temperature sensor system	-	-	-	---	Immediately contact your local dealer.
E:9106	Injector system	◎	◎	○	---	Immediately contact your local dealer.
E:9107	Intake air pressure sensor system	-	○	-	---	Immediately contact your local dealer.
E:9108	Battery voltage system	◎	◎	○	---	Immediately contact your local dealer.
E:9109	Sensor voltage system	◎	◎	○	---	Immediately contact your local dealer.
E:9110	Main relay system	-	-	-	---	Immediately contact your local dealer.
E:9112	Atmospheric pressure sensor system	-	○	-	---	Immediately contact your local dealer.
E:9113	EGR valve system	-	◎	-	---	Immediately contact your local dealer.
E:9114	Coolant temperature warning	-	-	-	---	For correction, refer to the Coolant Temperature Gauge section (page 22). If this error code number still appears, immediately contact your local dealer.
E:9115	Engine overheat warning	-	○	-	---	For correction, refer to the Coolant Temperature Gauge section (page 22). If this error code number still appears, immediately contact your local dealer.
E:9117	Air heater system	-	-	-	---	Immediately contact your local dealer.
E:9118	Engine oil pressure system	-	-	-	---	Stop the engine and check the engine oil level. If this error code number still appears, immediately contact your local dealer.
E:9119	Charging system failure	-	-	-	---	Stop the engine and check the V-belt. If this error code number still appears, immediately contact your local dealer.

https://truckmanualshub.com/

Error Code Number	Problem or Failure	Machine condition				Provisional measure and Correction
		Engine performance			Machine performance	
		Accele-ration limited	Engine output limited	Engine stopped		
E:9120	Fuel filter water warning	-	-	-	---	Stop the engine and check and drain the fuel filter. If this error code number still appears, immediately contact your local dealer.
E:9121	Engine ECU	○	○	○	---	Immediately contact your local dealer.
E:9122	ECU communication failure	○	○	-	---	Immediately contact your local dealer.
E:9200	Mass air flow sensor system	-	○	-	---	Immediately contact your local dealer.
E:9203	Intake air throttle	-	-	-	---	Immediately contact your local dealer.
E:9204	Differential pressure sensor system	-	-	-	---	Immediately contact your local dealer.
E:9205	Exhaust temperature sensor (DOC inlet)	-	-	-	---	Immediately contact your local dealer.
E:9206	Exhaust temperature sensor (DOC outlet)	-	-	-	---	Immediately contact your local dealer.
E:9207	Exhaust temperature sensor (DPF outlet)	-	-	-	---	Immediately contact your local dealer.
E:9208	All the exhaust temperature sensors break down at once.	-	-	-	---	Immediately contact your local dealer.
E:9211	DOC response is unusual.	◎	◎	-	---	Immediately contact your local dealer.
E:9212	DPF regeneration timeout	-	-	-	---	Immediately contact your local dealer.
E:9213	DPF regeneration Error (Water temperature is low)	-	-	-	---	Immediately contact your local dealer.
E:9214	DPF regeneration cycle occurs too often.	-	◎	-	---	Immediately contact your local dealer.
E:9300	Engine fuel system (P/L)	◎	◎	-	---	Check the fuel level and see if the fuel filter is clogged. If this error code number still appears, immediately contact your local dealer.
E:9301	Engine fuel system (rail pressure)	◎	◎	-	---	Check the fuel level and see if the fuel filter is clogged. If this error code number still appears, immediately contact your local dealer.
E:9302	Engine fuel system (leakage)	◎	◎	-	---	Check the fuel level and see if the fuel filter is clogged. If this error code number still appears, immediately contact your local dealer.

https://truckmanualshub.com/

Error Code Number	Problem or Failure	Machine condition				Provisional measure and Correction
		Engine performance			Machine performance	
		Accele-ration limited	Engine output limited	Engine stopped		
E:9303	Engine fuel system (SCV)	◎	◎	-	---	Check the fuel level and see if the fuel filter is clogged. If this error code number still appears, immediately contact your local dealer.
E:9304	Engine fuel system (supply pump).	◎	◎	-	---	Check the fuel level and see if the fuel filter is clogged. If this error code number still appears, immediately contact your local dealer.
E:9305	Engine air intake system (poor air intake)	◎	◎	-	---	Check to see if any air-intake hose is disconnected and if the air cleaner element is clogged. If this error code number still appears, immediately contact your local dealer.
E:9306	Engine air intake system (boost pressure too low)	◎	◎	-	---	Check to see if any air-intake hose is disconnected and if the air cleaner element is clogged. If this error code number still appears, immediately contact your local dealer.
E:9307	Engine exhaust temperature (DOC inlet) is not as specified.	-	-	◎	---	Check the fuel level and see if the fuel filter is clogged. Check to see if any air-intake hose is disconnected and if the air cleaner element is clogged. If this error code number still appears, immediately contact your local dealer.
E:9308	Engine exhaust temperature (DOC outlet) is not as specified.	-	-	◎	---	Check the fuel level and see if the fuel filter is clogged. Check to see if any air-intake hose is disconnected and if the air cleaner element is clogged. If this error code number still appears, immediately contact your local dealer.
E:9309	Engine exhaust temperature (DPF outlet) is not as specified.	-	-	◎	---	Check the fuel level and see if the fuel filter is clogged. Check to see if any air-intake hose is disconnected and if the air cleaner element is clogged. If this error code number still appears, immediately contact your local dealer.
E:9310	Starter turn-on limited	-	-	◎	---	The starter is limited for its activation in response to any other error
E:9400	Other failures	○	○	○	---	Immediately contact your local dealer.

https://truckmanualshub.com/

APPENDIX

SERVICE HOUR METER

When the hour meter has counted up to the hours circled in the maintenance list below, the message appears. The message shows up as follows.

No.	Check points		Measures	Hour meter indicator							Intervals
				50	100	250	500	600	750	1000	
1	Engine oil		change				○			○	every 500 hrs
2	Hydraulic oil									○	every 1000 hrs
3	Air cleaner element	Outer element	replace							○	every 1000 hrs
		Inner element								○	every 1000 hrs
4	Fuel filter cartridge		replace				○			○	every 500 hrs
5	Engine oil filter						○			○	every 500 hrs
6	Front/rear axle oil		change							○	every 1000 hrs
7	Hydraulic return filter		replace				○			○	every 500 hrs
8	Hydraulic suction filter									○	every 1000 hrs
9	HST oil filter									○	every 1000 hrs
10	DPF		clean								every 3000 hrs

The maintenance message appears. The message shows up as shown right.
(The maintenance message reappears on the hour meter designated next.)

NOTE :

- The maintenance (periodic check) message can be automatically disappeared.

◆ In case the service hour meter replaced due to any trouble with it, the meter is set to "0". Contact your KUBOTA dealer for details.